Engineering Release Notice (ERN)	Location	Change description	A=Added D=Deleted	V=Ves	Document release status
					DOC_REL_STATUS
ERN	XX	XX			Date XXXX-XX-XX / Modification count XX

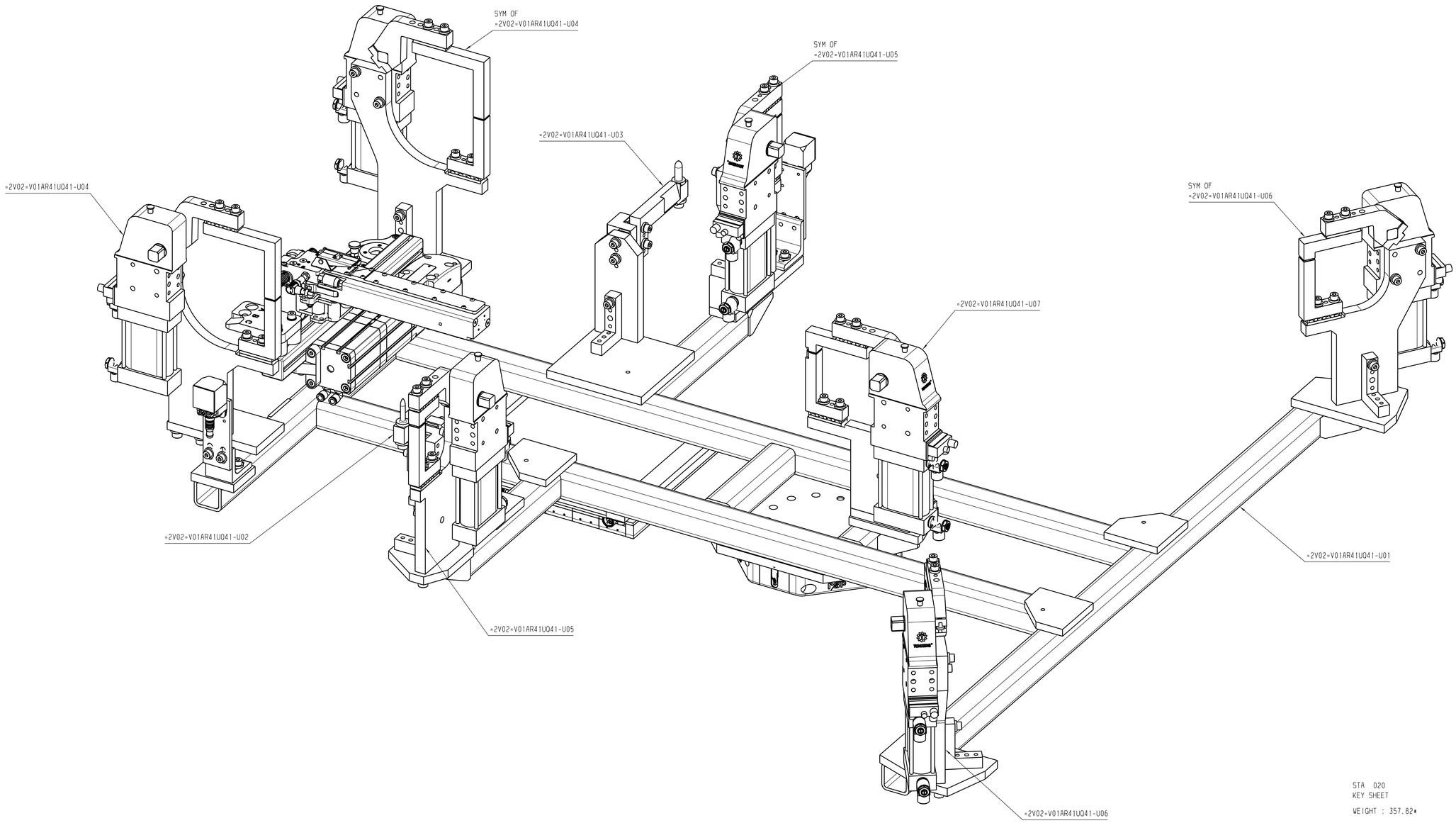

STA 020
KEY SHEET

WEIGHT : 357.82#

ISO VIEW

16151-1020-420-1

External Company	EXTERNAL_COMPANY
External Specification	EXTERNAL_SPECIFICATION
Material	MATERIAL
Surface Treatment	SURFACE_TREATMENT
DSM Number	DSM_NUMBER
Symbols, designations and general drawing method STD 101-0005	
Tolerance unless otherwise stated ISO 2768-m	Sharp edges broken when function allows

Drawn by	Date	Scale	Size
KK GmbH	5/20/2022	-	A0
Approved	Date	Projection	Request reference
XX	XX		REQ_REF

The copying, distribution and utilization of this document as well as the communication of its contents to others without expressed authorization is prohibited. Offenders will be held liable for payment of damages. All rights created by the patent, utility model or ornamental design registration.

Document title
UNDERBODY
MH EQAT
UB-020-MH1

Document type
-

Owner domain/Document prefix
XX

VOLVO
Volvo Truck Corporation

Document No	Version	Sheet No
2V02=V01AR41UQ41	01	1 / 1

VTC_STD FRAME E A0 02