Valiant TMS

Company / customer	Volvo Trucks NA
Project description	P6700 Underbody Mainline - Cell 2V04
drawing number	22-16151
Commission	Volvo Trucks North America
Manufacturer (company)	Valiant TMS
Project name	=2V04&EFS_EL
Type	P6700 Underbody Main Line - Cell 2V04

Created on 6/28/2022
Edit date 12/22/2022 by (short name) MKLEPADLO Number of pages 1630

			Date	12/22/2022	Volvo Trucks North America	Valiant TMS	Title page / cover sheet	Drawing name: =2V04&EFS-EL	=
			Ed.	MKLEPADLO	P6700 Underbody Mainline - Cell 2V04				+
			Appr					Document type: EAA / Project nr: 22-16151	Page 1 / 1630
Modification	Date	Name	Original		Replacement of / Replaced by	Scale 1:1			

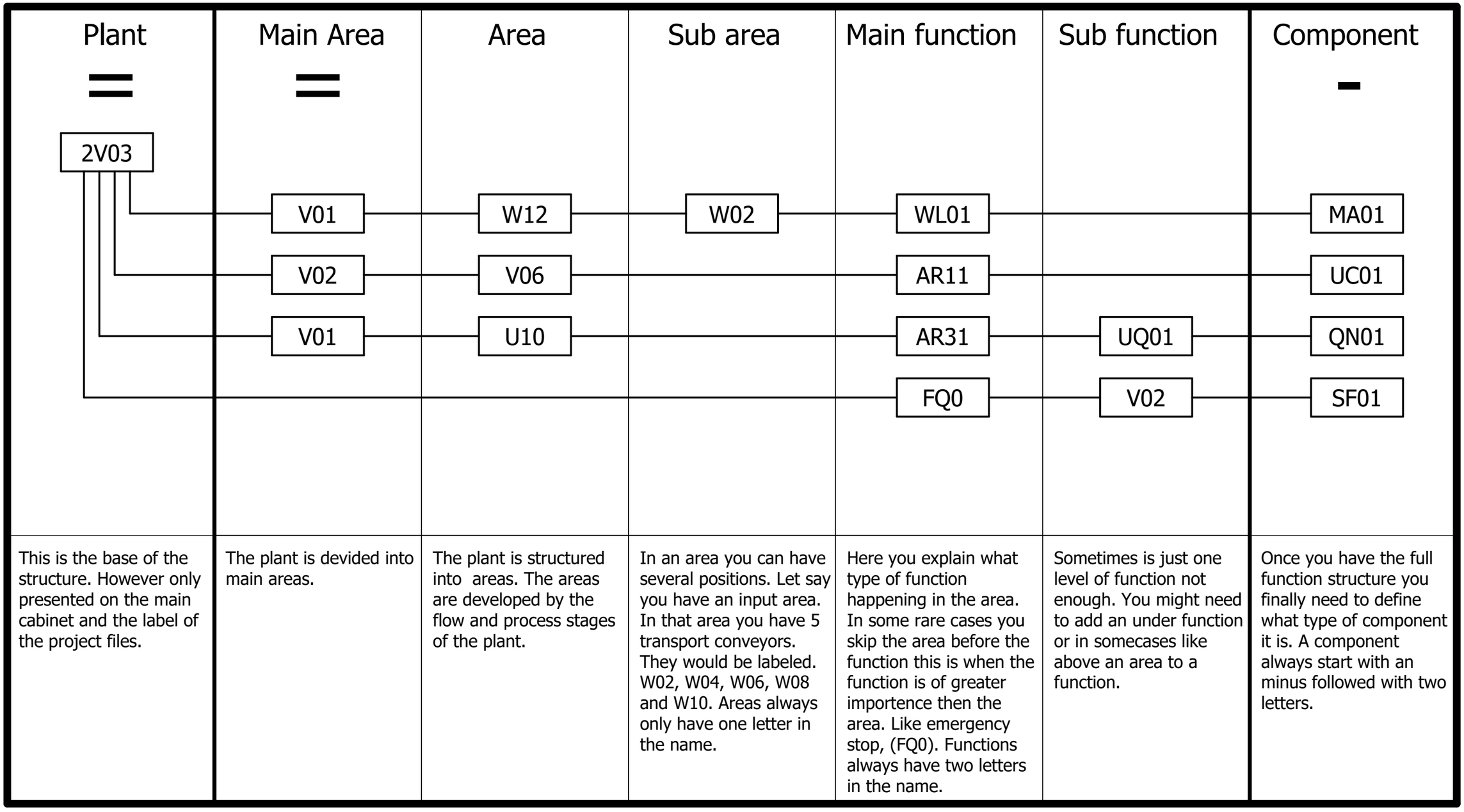

This is the base of the structure. However only presented on the main cabinet and the label of the project files.	The plant is devided into main areas.	The plant is structured into areas. The areas are developed by the flow and process stages of the plant.	In an area you can have several positions. Let say you have an input area. In that area you have 5 transport conveyors. They would be labeled. W02, W04, W06, W08 and W10. Areas always only have one letter in the name.

Here you explain what type of function happening in the area. In some rare cases you skip the area before the function this is when the function is of greater importence then the area. Like emergency stop, (FQ0). Functions always have two letters in the name.	Sometimes is just one level of function not enough. You might need to add an under function or in somecases like above an area to a function.	Once you have the full function structure you finally need to define what type of component it is. A component always start with an minus followed with two letters.

			Date	12/22/2022	Volvo Trucks North America	Valiant TMS	Project structure	Drawing name: =2V04&EFS-EL	=		
			Ed.	MKLEPADLO					+		
			Appr		P6700 Underbody Mainline - Cell 2V04	Scale 1:1		Document type: EAA	Project nr: 22-16151	Page	2
Modification	Date	Name	Original		Replacement of	Replaced by					1630

1. VLN letter codes.
• Our interpretation of IEC 81346-2 is presented in the Excel document: “F01_VLN_Interpretation__81346-2”

2. Wire color coding.
• Based on: "F01_VTNA_Equipment_Standards_Version_2021"

Description	**Color**	**IEC 60204**	**Minimum area**
Power circuits 480/120 VAC	Black	bk	14 AWG
Control circuits 120 VAC	Red	rd	16 AWG
Control circuits before main disconnect (internally supplied)	Yellow	ye	14 AWG
Control circuits before main disconnect (externally supplied)	Orange	og	14 AWG
Control circuits 24 VDC	Blue	bu	16 AWG
DC circuits before main disconnect (positive)	Blue/Orange	buog	16 AWG
DC circuits before main disconnect (common)	White/Orange	whog	16 AWG
Protective conductor PE (Earth)	Green/Yellow	gnye	14 AWG
Neutral	White	wh	14 AWG

			Date	12/22/2022	Volvo Trucks North America		Valiant TMS	Letter codes/colors	Drawing name: =2V04&EFS-EL	=
			Ed.	MKLEPADLO						+
			Appr		P6700 Underbody Mainline - Cell 2V04				Document type: EAA	Project nr: 22-16151
Modification	Date	Name	Original		Replacement of	Replaced by	Scale 1:1			Page 3 / 1630

Purpose

This document is made to avoid any misconcenptions about the standards we have to uphold regarding equipment grounding connections in compliance with the electrical regulations contained in NEC 250.119.

Fundemental principles

All equipment bonding connections originate from one grounding block, which is mounted either on the outside or directly on the main cabinet. This block is then connected with a minimum size 6 AWG green/yellow wire from the main cabinets grounding bar, this wire is labled (GND1).

From this block a network of green/yellow wiring is spread across the plant. At every bonding connection point a 10 AWG wire composed of a tapp-off clamp as well as a cableharness is used to connect the surface to the bonding network.

Equipment Bonding example

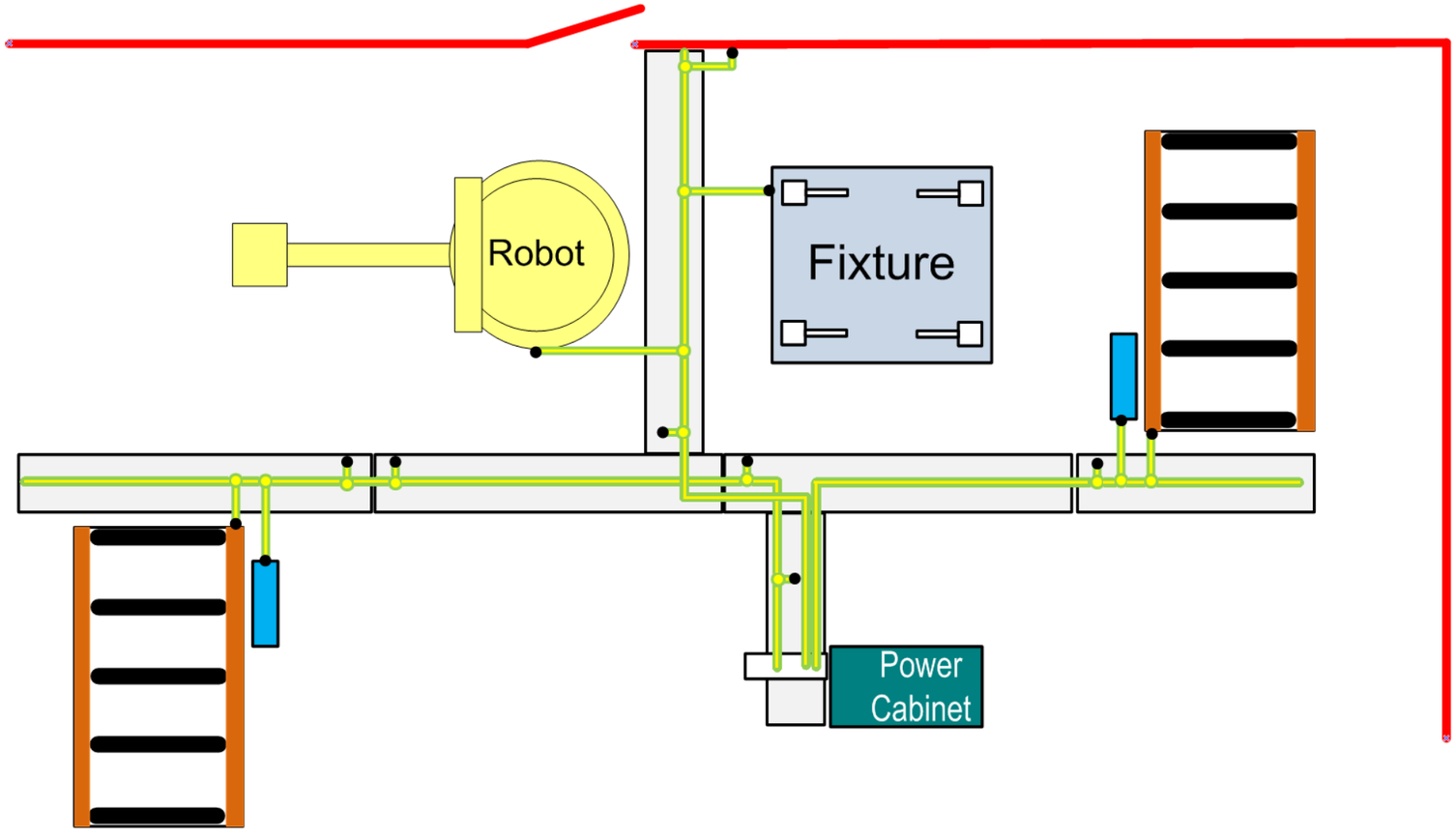

			Date	12/22/2022	Volvo Trucks North America	Valiant TMS	Equipment Grounding policy	Drawing name: =2V04&EFS-EL	=	
			Ed.	MKLEPADLO					+	
			Appr		P6700 Underbody Mainline - Cell 2V04			Document type: EAA	Project nr: 22-16151	Page 4
Modification	Date	Name	Original		Replacement of	Replaced by	Scale 1:1			1630

PLC Card Naming:

The following chart shall be used to cross-reference the naming of PLC cards in PDP & RIO enclosures. This chart is generic and not every enclosure will exist in this package.

Enc Type	Number	Slot 1	Slot 2	Slot 3	Slot 4	Slot 5	Slot 6	Slot 7	Slot 8	Slot 9	Slot 10	Slot 11	Slot 12	Slot 13	Slot 14
PDP	**UC11 PDP1**														
	UC11	KF11.11	KF11.12	KF11.13	KF11.14	KF11.31	KF11.32	KF11.21	KF11.41	KF11.42	KF11.51	KF11.52	KF11.53	KF11.54	
		DI x16	DI x16	DI x16	DI x16	F-DI x 8	F-DI x 8	DQ x16	F-DQ x 4	F-DQ x 4	F-RQ x 1	F-RQ x 1	F-RQ x 1	F-RQ x 1	
		IB 50..51	IB 52..53	IB 54..55	IB 56..57	IB 5050..5055	IB 5056..5061		IB 5062..5066	IB 5067..5071	IB 5072	IB 5073	IB 5074	IB 5075	
						QB 5050..5053	QB 5056..5059	QB 50..51	QB 5062..5066	QB 5067..5071					
	UC12 PDP2														
	UC12	KF12.11	KF12.12	KF12.13	KF12.14	KF12.31	KF12.32	KF12.21	KF12.41	KF12.42	KF12.51	KF12.52	KF12.53	KF12.54	
		DI x16	DI x16	DI x16	DI x16	F-DI x 8	F-DI x 8	DQ x16	F-DQ x 4	F-DQ x 4	F-RQ x 1	F-RQ x 1	F-RQ x 1	F-RQ x 1	
		IB 80..81	IB 82..83	IB 84..85	IB 86..87	IB 5080..5085	IB 5086..5091		IB 5092..5096	IB 5097..5101	IB 5102	IB 5103	IB 5104	IB 5105	
						QB 5080..5083	QB 5086..5089	QB 80..81	QB 5092..5096	QB 5097..5101					
	UC13 PDP3														
	UC13	KF13.11	KF13.12	KF13.13	KF13.14	KF13.31	KF13.32	KF13.21	KF13.41	KF13.42	KF13.51	KF13.52	KF13.53	KF13.54	
		DI x16	DI x16	DI x16	DI x16	F-DI x 8	F-DI x 8	DQ x16	F-DQ x 4	F-DQ x 4	F-RQ x 1	F-RQ x 1	F-RQ x 1	F-RQ x 1	
		IB 110..111	IB 112..113	IB 114..115	IB 116..117	IB 5110..5115	IB 5116..5121		IB 5122..5126	IB 5127..5131	IB 5132	IB 5133	IB 5134	IB 5135	
						QB 5110..5113	QB 5116..5119	QB 110..111	QB 5122..5126	QB 5127..5131					
RIO	**UC14 RIO1**														
	UC14	KF14.11	KF14.12	KF14.31	KF14.32	KF14.21	KF14.41	KF14.42	KF14.51	KF14.52	KF14.53	KF14.54			
		DI x16	DI x16	F-DI x 8	F-DI x 8	DQ x16	F-DQ x 4	F-DQ x 4	F-RQ x 1	F-RQ x 1	F-RQ x 1	F-RQ x 1			
		IB 200..201	IB 202..203	IB 5200..5205	IB 5206..5211		IB 5212..5216	IB 5217..5221	IB 5222	IB 5223	IB 5224	IB 5225			
				QB 5200..5203	QB 5206..5209	QB 200..201	QB 5212..5216	QB 5217..5221							
	UC15 RIO2														
	UC15	KF15.11	KF15.12	KF15.31	KF15.32	KF15.21	KF15.41	KF15.42	KF15.51	KF15.52	KF15.53	KF15.54			
		DI x16	DI x16	F-DI x 8	F-DI x 8	DQ x16	F-DQ x 4	F-DQ x 4	F-RQ x 1	F-RQ x 1	F-RQ x 1	F-RQ x 1			
		IB 230..231	IB 232..233	IB 5230..5235	IB 5236..5241		IB 5242..5246	IB 5247..5251	IB 5252	IB 5253	IB 5254	IB 5255			
				QB 5230..5233	QB 5236..5239	QB 230..231	QB 5242..5246	QB 5247..5251							
	UC16 RIO3														
	UC16	KF16.11	KF16.12	KF16.31	KF16.32	KF16.21	KF16.41	KF16.42	KF16.51	KF16.52	KF16.53	KF16.54			
		DI x16	DI x16	F-DI x 8	F-DI x 8	DQ x16	F-DQ x 4	F-DQ x 4	F-RQ x 1	F-RQ x 1	F-RQ x 1	F-RQ x 1			
		IB 260..261	IB 262..263	IB 5260..5265	IB 5266..5271		IB 5272..5276	IB 5277..5281	IB 5282	IB 5283	IB 5284	IB 5285			
				QB 5260..5263	QB 5266..5269	QB 260..261	QB 5272..5276	QB 5287..5281							
	UC17 RIO4														
	UC17	KF17.11	KF17.12	KF17.31	KF17.32	KF17.21	KF17.41	KF17.42	KF17.51	KF17.52	KF17.53	KF17.54			
		DI x16	DI x16	F-DI x 8	F-DI x 8	DQ x16	F-DQ x 4	F-DQ x 4	F-RQ x 1	F-RQ x 1	F-RQ x 1	F-RQ x 1			
		IB 290..291	IB 292..293	IB 5290..5295	IB 5296..5301		IB 5302..5306	IB 5307..5311	IB 5312	IB 5313	IB 5314	IB 5315			
				QB 5290..5293	QB 5296..5299	QB 290..291	QB 5302..5306	QB 5307..5311							

			Date	12/22/2022	Volvo Trucks North America	Valiant TMS	PLC Card Naming	Drawing name: =2V04&EFS-EL	=
			Ed.	MKLEPADLO					+
			Appr		P6700 Underbody Mainline - Cell 2V04	Scale 1:1		Document type: EAA	Project nr: 22-16151
Modification	Date	Name	Original		Replacement of	Replaced by			Page 5 / 1630

Table of contents

Column X: An automatically generated page was edited

F06_001

Page	Page description	supplementary page field	Date	Edited by	X
&EAA/1	Title page / cover sheet		12/21/2022	MKLEPADLO	
&EAA/2	Project structure		12/21/2022	MKLEPADLO	
&EAA/3	Letter codes/colors		12/21/2022	MKLEPADLO	
&EAA/4	Equipment Grounding policy		12/21/2022	MKLEPADLO	
&EAA/5	PLC Card Naming		12/21/2022	MKLEPADLO	
&EAB/1	Table of contents : &EAA/1 - &EAB/28		12/22/2022	MKLEPADLO	
&EAB/2	Table of contents : &EAB/29 - &EFA=FQ99V1+V1/11		12/21/2022	MKLEPADLO	
&EAB/3	Table of contents : &EFS=FQ0V1SF1S01+V1UC32/1 - &EFS=KH0+KH0/6		12/21/2022	MKLEPADLO	
&EAB/4	Table of contents : &EFS=KH0+KH0/7 - &EFS=V1AR11UQ41UQ13+V1AR11UQ41UQ13/1		12/21/2022	MKLEPADLO	
&EAB/5	Table of contents : &EFS=V1AR11UQ41UQ14+V1AR11UQ41UQ14/1 - &EFS=V1AR13UQ41KF1+V1AR13UQ41/1		12/21/2022	MKLEPADLO	
&EAB/6	Table of contents : &EFS=V1AR13UQ41KF1+V1AR13UQ41/2 - &EFS=V1AR14WC1+V1AR14UC01/1		12/21/2022	MKLEPADLO	
&EAB/7	Table of contents : &EFS=V1AR15KF1+V1AR15UC01/1 - &EFS=V1AR25XQ11WC1+V1AR25XQ11UC01/1		12/22/2022	MKLEPADLO	
&EAB/8	Table of contents : &EFS=V1AR26KF1+V1AR26UC01/1 - &EFS=V1AR192KF1+V1AR192UC01/1		12/22/2022	MKLEPADLO	
&EAB/9	Table of contents : &EFS=V1AR192WC1+V1AR192UC01/1 - &EFS=V1FQ1+V1UC14/4		12/22/2022	MKLEPADLO	
&EAB/10	Table of contents : &EFS=V1FQ1+V1UC15/1 - &EFS=V1GL12UQ51KF2+V1GL12UQ51/4		12/21/2022	MKLEPADLO	
&EAB/11	Table of contents : &EFS=V1GL12UQ51KF2+V1GL12UQ51/5 - &EFS=V1KF1+V1UC11/12		12/22/2022	MKLEPADLO	
&EAB/12	Table of contents : &EFS=V1KF1+V1UC11/13 - &EFS=V1KF1+V1UC14/3		12/22/2022	MKLEPADLO	
&EAB/13	Table of contents : &EFS=V1KF1+V1UC14/4 - &EFS=V1KF1+V1UC15/18		12/22/2022	MKLEPADLO	
&EAB/14	Table of contents : &EFS=V1KF1+V1UC32/1 - &EFS=V1UQ51UQ2+V1UQ51UQ2/1		12/22/2022	MKLEPADLO	
&EAB/15	Table of contents : &EFS=V1UQ51UQ3+V1UQ51UQ3/1 - &EFS=V1UQ52UQ6+V1UQ52UQ6/1		12/22/2022	MKLEPADLO	
&EAB/16	Table of contents : &EFS=V1UQ52WC4+V1UQ52/1 - &EFS=V1UQ55UQ8+V1UQ55UQ8/1		12/22/2022	MKLEPADLO	
&EAB/17	Table of contents : &EFS=V1UQ55UQ9+V1UQ55UQ9/1 - &EFS=V1WC3+V1UC11/1		12/22/2022	MKLEPADLO	
&EAB/18	Table of contents : &EFS=V1WC3+V1UC11/2 - &EFS=V1WC4+V1UC11/22		12/22/2022	MKLEPADLO	
&EAB/19	Table of contents : &EFS=V1WC4+V1UC11/23 - &EFS=V1WC4+V1UC14/1		12/22/2022	MKLEPADLO	
&EAB/20	Table of contents : &EFS=V1WC4+V1UC14/2 - &EFS=V1WC4+V1UC15/13		12/22/2022	MKLEPADLO	
&EAB/21	Table of contents : &EFS=V1WC4+V1UC15/14 - &ELU=KF0+UC31/1		12/22/2022	MKLEPADLO	
&EAB/22	Table of contents : &ELU=KF0+UC31/2 - &EMA=KH0+KH0/6		12/21/2022	MKLEPADLO	
&EAB/23	Table of contents : &EMA=KH0+KH0/7 - &EMA=V1AR11UQ41UQ6.1+V1AR11UQ41UQ6.1/1		12/21/2022	MKLEPADLO	
&EAB/24	Table of contents : &EMA=V1AR11UQ41UQ7.1+V1AR11UQ41UQ7.1/1 - &EMA=V1AR12UQ41BG0+V1AR12UQ41/2		12/21/2022	MKLEPADLO	
&EAB/25	Table of contents : &EMA=V1AR12UQ41BG0+V1AR12UQ41/3 - &EMA=V1AR13UQ41UQ7.1+V1AR13UQ41UQ7.1/1		12/21/2022	MKLEPADLO	
&EAB/26	Table of contents : &EMA=V1AR13UQ41UQ7.2+V1AR13UQ41UQ7.2/1 - &EMA=V1AR15UQ41KF1+V1AR15UQ41/2		12/21/2022	MKLEPADLO	
&EAB/27	Table of contents : &EMA=V1AR15UQ41UQ1.1+V1AR15UQ41UQ1.1/1 - &EMA=V1AR27KF1+V1AR27UC01/1		12/21/2022	MKLEPADLO	
&EAB/28	Table of contents : &EMA=V1AR27WC1+V1AR27UC01/1 - &EMA=V1AR211XQ11WC1+V1AR211XQ11UC01/1		12/21/2022	MKLEPADLO	

			Date	12/22/2022	Volvo Trucks North America	Valiant TMS	Table of contents : &EAA/1 - &EAB/28	Drawing name: =2V04&EFS-EL	=		
			Ed.	MKLEPADLO					+		
			Appr		P6700 Underbody Mainline - Cell 2V04			Document type: EAB	Project nr: 22-16151	Page	1
Modification	Date	Name	Original		Replacement of / Replaced by	Scale 1:1					1630

Table of contents

Column X: An automatically generated page was edited

F06_001

Page	Page description	supplementary page field	Date	Edited by	X
&EAB/29	Table of contents : &EMA=V1AR212KF1+V1AR212UC01/1 - &EMA=V1GL12UQ51UQ3.1+V1GL12UQ51UQ3.1/1		12/21/2022	MKLEPADLO	
&EAB/30	Table of contents : &EMA=V1GL12UQ51UQ3.1+V1GL12UQ51UQ3.1/2 - &EMA=V1KF1+V1UC11/9		12/21/2022	MKLEPADLO	
&EAB/31	Table of contents : &EMA=V1KF1+V1UC11/10 - &EMA=V1KF1+V1UC14/14		12/21/2022	MKLEPADLO	
&EAB/32	Table of contents : &EMA=V1KF1+V1UC15/1 - &EMA=V1UQ51UQ4.1+V1UQ51UQ4.1/1		12/21/2022	MKLEPADLO	
&EAB/33	Table of contents : &EMA=V1UQ51UQ4.2+V1UQ51UQ4.2/1 - &EMA=V1UQ51UQ17.1+V1UQ51UQ17.1/1		12/21/2022	MKLEPADLO	
&EAB/34	Table of contents : &EMA=V1UQ51UQ17.1+V1UQ51UQ17.1/2 - &EMA=V1UQ52UQ4.2+V1UQ52UQ4.2/1		12/21/2022	MKLEPADLO	
&EAB/35	Table of contents : &EMA=V1UQ52UQ5.1+V1UQ52UQ5.1/1 - &EMA=V1UQ54UQ3.1+V1UQ54UQ3.1/1		12/21/2022	MKLEPADLO	
&EAB/36	Table of contents : &EMA=V1UQ54UQ3.2+V1UQ54UQ3.2/1 - &EMA=V1WC3+V1UC15/1		12/21/2022	MKLEPADLO	
&EAB/37	Table of contents : &EMA=V1WC4+V1UC32/1 - &EMC/5		12/22/2022	MKLEPADLO	
&EAB/38	Table of contents : &EMC/6 - &EPB+V1AR11UQ41UQ7.1/1		12/22/2022	MKLEPADLO	
&EAB/39	Table of contents : &EPB+V1AR11UQ41UQ8.1/1 - &EPB+V1AR12UQ41UQ4.1/1		12/21/2022	MKLEPADLO	
&EAB/40	Table of contents : &EPB+V1AR12UQ41UQ5.1/1 - &EPB+V1AR14UQ41UQ6.1/1		12/21/2022	MKLEPADLO	
&EAB/41	Table of contents : &EPB+V1AR14UQ41UQ6.2/1 - &EPB+V1AR52XQ51UC01/1		12/21/2022	MKLEPADLO	
&EAB/42	Table of contents : &EPB+V1AR53XQ51UC01/1 - &EPB+V1GL13UQ51/1		12/21/2022	MKLEPADLO	
&EAB/43	Table of contents : &EPB+V1GL13UQ51UQ1.1/1 - &EPB+V1UQ51UQ7.4/1		12/21/2022	MKLEPADLO	
&EAB/44	Table of contents : &EPB+V1UQ51UQ7.5/1 - &EPB+V1UQ51UQ24.1/1		12/21/2022	MKLEPADLO	
&EAB/45	Table of contents : &EPB+V1UQ52/1 - &EPB+V1UQ55UQ1.1/1		12/21/2022	MKLEPADLO	
&EAB/46	Table of contents : &EPB+V1UQ55UQ1.2/1 - &EPB+V1WR1UQ51UQ6.1/1		12/21/2022	MKLEPADLO	
&EAB/47	Table of contents : &EPB+V1WR1UQ51UQ6.2/1 - &ETT/23		12/21/2022	MKLEPADLO	
&EAB/48	Table of contents : &ETT/24 - &ETT/56		12/21/2022	MKLEPADLO	
&EAB/49	Table of contents : &ETT/57 - &EXX/5		12/22/2022	MKLEPADLO	
&EAB/50	Table of contents : &EXX/6 - &EAZ/4		12/22/2022	MKLEPADLO	
&EFA=FQ99V1+V1/1	EQUIPMENT BONDING		12/21/2022	MKLEPADLO	
&EFA=FQ99V1+V1/2	EQUIPMENT BONDING		12/21/2022	MKLEPADLO	
&EFA=FQ99V1+V1/3	EQUIPMENT BONDING		12/21/2022	MKLEPADLO	
&EFA=FQ99V1+V1/4	EQUIPMENT BONDING		12/21/2022	MKLEPADLO	
&EFA=FQ99V1+V1/5	EQUIPMENT BONDING		12/21/2022	MKLEPADLO	
&EFA=FQ99V1+V1/6	EQUIPMENT BONDING		12/21/2022	MKLEPADLO	
&EFA=FQ99V1+V1/7	EQUIPMENT BONDING		12/21/2022	MKLEPADLO	
&EFA=FQ99V1+V1/8	EQUIPMENT BONDING		12/21/2022	MKLEPADLO	
&EFA=FQ99V1+V1/9	EQUIPMENT BONDING		12/21/2022	MKLEPADLO	
&EFA=FQ99V1+V1/10	EQUIPMENT BONDING		12/21/2022	MKLEPADLO	
&EFA=FQ99V1+V1/11	EQUIPMENT BONDING		12/21/2022	MKLEPADLO	

Table of contents

Column X: An automatically generated page was edited

F06_001

Page	Page description	supplementary page field	Date	Edited by	X
&EFS=FQ0V1SF1S01+V1UC32/1	Emergency stop +V1SF1S01UC32		12/21/2022	MKLEPADLO	
&EFS=FQ0V1SF2S01+V1UC33/1	Emergency stop +V1SF2S01UC33		12/21/2022	MKLEPADLO	
&EFS=KF0FQ0+UC31/1	Operating box UC91 MOP		12/21/2022	MKLEPADLO	
&EFS=KF0KF1+UC31/1	CPU 1517-F-3PN/DP, Failsafe		12/21/2022	MKLEPADLO	
&EFS=KF0KF1+UC31/2	Cell interface S615		12/21/2022	MKLEPADLO	
&EFS=KF0KF1+UC31/3	Switch, Scalance XC216		12/21/2022	MKLEPADLO	
&EFS=KF0KF1+UC31/6	MOP, PC		12/21/2022	MKLEPADLO	
&EFS=KF0KF1+UC31/10	Network overview		12/21/2022	MKLEPADLO	
&EFS=KF0KF1+UC31/11	IM 155 PN		12/21/2022	MKLEPADLO	
&EFS=KF0KF1+UC31/12	ET200S Wiring DI		12/21/2022	MKLEPADLO	
&EFS=KF0KF1+UC31/14	ET200S Wiring DO		12/21/2022	MKLEPADLO	
&EFS=KF0KF1+UC31/18	ET200S Wiring F-DI		12/21/2022	MKLEPADLO	
&EFS=KF0KF1+UC31/21	ET200S Cross-reference Input module		12/21/2022	MKLEPADLO	
&EFS=KF0KF1+UC31/41	ET200S Cross-reference Output module		12/21/2022	MKLEPADLO	
&EFS=KF0KF1+UC31/81	ET200S Cross-reference Safe input module		12/21/2022	MKLEPADLO	
&EFS=KF0PZ1+UC31/1	Indication column		12/21/2022	MKLEPADLO	
&EFS=KF0SF1+UC31/1	Operating box UC91 MOP		12/21/2022	MKLEPADLO	
&EFS=KF0SF1+UC31/2	Operating box UC92 MOP		12/21/2022	MKLEPADLO	
&EFS=KF0WC3+UC31/1	Incomming power supply 120 VAC		12/21/2022	MKLEPADLO	
&EFS=KF0WC3+UC31/2	Outlet PLC 120VAC		12/21/2022	MKLEPADLO	
&EFS=KF0WC3+UC31/3	Monitoring 120VAC		12/21/2022	MKLEPADLO	
&EFS=KF0WC4+UC31/1	Power distribution 24VDC		12/21/2022	MKLEPADLO	
&EFS=KF0WC4+UC31/2	Power distribution, UPS		12/21/2022	MKLEPADLO	
&EFS=KF0WC4+UC31/3	Power distribution 24VDC 1L+		12/21/2022	MKLEPADLO	
&EFS=KF0WC4+UC31/4	Power distribution 24VDC 2L+		12/21/2022	MKLEPADLO	
&EFS=KF0WC4+UC31/5	Power distribution 24VDC 3L+		12/21/2022	MKLEPADLO	
&EFS=KF0WC4+UC31/6	Power distribution 24VDC 4L+		12/21/2022	MKLEPADLO	
&EFS=KH0+KH0/1	Incoming air supply (Main)		12/21/2022	MKLEPADLO	
&EFS=KH0+KH0/2	Incoming air supply (S105 Fixture)		12/21/2022	MKLEPADLO	
&EFS=KH0+KH0/3	Incoming air supply (S110 Fixture)		12/21/2022	MKLEPADLO	
&EFS=KH0+KH0/4	Incoming air supply (S120 Fixture)		12/21/2022	MKLEPADLO	
&EFS=KH0+KH0/5	Incoming air supply (S130 Fixture)		12/21/2022	MKLEPADLO	
&EFS=KH0+KH0/6	Incoming air supply (S140 Fixture)		12/21/2022	MKLEPADLO	

			Date	12/22/2022	Volvo Trucks North America	Valiant TMS	Table of contents : &EFS=FQ0V1SF1S01+V1UC32/1 - &EFS=KH0+KH0/6	Drawing name: =2V04&EFS-EL	=
			Ed.	MKLEPADLO					+
			Appr		P6700 Underbody Mainline - Cell 2V04			Document type: EAB	Project nr: 22-16151	Page 3
Modification	Date	Name	Original		Replacement of	Replaced by	Scale 1:1			1630

Table of contents

Column X: An automatically generated page was edited

F06_001

Page	Page description	supplementary page field	Date	Edited by	X
&EFS=KH0+KH0/7	Incoming air supply (S150 Fixture)		12/21/2022	MKLEPADLO	
&EFS=KH0+KH0/8	Incoming air supply (S150 Conveyor At Load)		12/21/2022	MKLEPADLO	
&EFS=KH0+KH0/9	Incoming air supply (2V02-S060 Conveyor Unload)		12/21/2022	MKLEPADLO	
&EFS=KH3+KH3/1	Incoming water supply (Filter)		12/21/2022	MKLEPADLO	
&EFS=KH3+KH3/2	Incoming water supply		12/21/2022	MKLEPADLO	
&EFS=V1AR11KF1+V1AR11UC01/1	Incoming Profinet		12/21/2022	MKLEPADLO	
&EFS=V1AR11UQ41BG0+V1AR11UQ41/1	SENSORS		12/21/2022	MKLEPADLO	
&EFS=V1AR11UQ41KF1+V1AR11UQ41/1	24VDC SUPPLY AND PROFINET HANDLING MODULE		12/21/2022	MKLEPADLO	
&EFS=V1AR11UQ41KF1+V1AR11UQ41/2	CONNECTING MOD. FOR MPA MANIFOLD		12/21/2022	MKLEPADLO	
&EFS=V1AR11UQ41KF1+V1AR11UQ41/3	I/O MOD. DI16 (8 x M12) FOR MPA		12/21/2022	MKLEPADLO	
&EFS=V1AR11UQ41KF1+V1AR11UQ41/4	I/O MOD. DI16 (8 x M12) FOR MPA		12/21/2022	MKLEPADLO	
&EFS=V1AR11UQ41KF1+V1AR11UQ41/5	CONNECTING MOD. FOR FESTO DQ		12/21/2022	MKLEPADLO	
&EFS=V1AR11UQ41KF2+V1AR11UQ41/2	CONNECTING MOD. FOR MPA MANIFOLD		12/21/2022	MKLEPADLO	
&EFS=V1AR11UQ41KF2+V1AR11UQ41/3	I/O MOD. DI16 (8 x M12) FOR MPA		12/21/2022	MKLEPADLO	
&EFS=V1AR11UQ41KF2+V1AR11UQ41/4	I/O MOD. DI16 (8 x M12) FOR MPA		12/21/2022	MKLEPADLO	
&EFS=V1AR11UQ41KF2+V1AR11UQ41/5	CONNECTING MOD. FOR FESTO DQ		12/21/2022	MKLEPADLO	
&EFS=V1AR11UQ41KF3+V1AR11UQ41/2	CONNECTING MOD. FOR MPA MANIFOLD		12/21/2022	MKLEPADLO	
&EFS=V1AR11UQ41KF3+V1AR11UQ41/3	I/O MOD. DI16 (8 x M12) FOR MPA		12/21/2022	MKLEPADLO	
&EFS=V1AR11UQ41KF3+V1AR11UQ41/4	I/O MOD. DI16 (8 x M12) FOR MPA		12/21/2022	MKLEPADLO	
&EFS=V1AR11UQ41KF3+V1AR11UQ41/5	CONNECTING MOD. FOR FESTO DQ		12/21/2022	MKLEPADLO	
&EFS=V1AR11UQ41UQ1+V1AR11UQ41UE1/1	FESTO DQ CONNECTION QN1		12/21/2022	MKLEPADLO	
&EFS=V1AR11UQ41UQ2+V1AR11UQ41UE2/1	FESTO DQ CONNECTION QN2		12/21/2022	MKLEPADLO	
&EFS=V1AR11UQ41UQ3+V1AR11UQ41UE3/1	FESTO DQ CONNECTION QN3		12/21/2022	MKLEPADLO	
&EFS=V1AR11UQ41UQ4+V1AR11UQ41UE4/1	FESTO DQ CONNECTION QN4		12/21/2022	MKLEPADLO	
&EFS=V1AR11UQ41UQ5+V1AR11UQ41UE5/1	FESTO DQ CONNECTION QN5		12/21/2022	MKLEPADLO	
&EFS=V1AR11UQ41UQ6+V1AR11UQ41UE6/1	FESTO DQ CONNECTION QN6		12/21/2022	MKLEPADLO	
&EFS=V1AR11UQ41UQ7+V1AR11UQ41UE7/1	FESTO DQ CONNECTION QN7		12/21/2022	MKLEPADLO	
&EFS=V1AR11UQ41UQ8+V1AR11UQ41UE8/1	FESTO DQ CONNECTION QN8		12/21/2022	MKLEPADLO	
&EFS=V1AR11UQ41UQ9+V1AR11UQ41UE9/1	FESTO DQ CONNECTION QN9		12/21/2022	MKLEPADLO	
&EFS=V1AR11UQ41UQ10+V1AR11UQ41UE10/1	FESTO DQ CONNECTION QN10		12/21/2022	MKLEPADLO	
&EFS=V1AR11UQ41UQ11+V1AR11UQ41UE11/1	FESTO DQ CONNECTION QN11		12/21/2022	MKLEPADLO	
&EFS=V1AR11UQ41UQ12+V1AR11UQ41UE12/1	FESTO DQ CONNECTION QN12		12/21/2022	MKLEPADLO	
&EFS=V1AR11UQ41UQ13+V1AR11UQ41UE13/1	FESTO DQ CONNECTION QN13		12/21/2022	MKLEPADLO	

			Date	12/22/2022	Volvo Trucks North America	Valiant TMS	Table of contents : &EFS=KH0+KH0/7 - &EFS=V1AR11UQ41UQ13+V1AR11UQ41UQ13/1	Drawing name: =2V04&EFS-EL	=
			Ed.	MKLEPADLO					+
			Appr		P6700 Underbody Mainline - Cell 2V04			Document type: EAB	Project nr: 22-16151	Page 4
Modification	Date	Name	Original		Replacement of / Replaced by	Scale 1:1				1630

Table of contents

Column X: An automatically generated page was edited

F06_001

Page	Page description	supplementary page field	Date	Edited by	X
&EFS=V1AR11UQ41UQ14+V1AR11UQ41UQ14/1	FESTO DQ CONNECTION QN14		12/21/2022	MKLEPADLO	
&EFS=V1AR11UQ41UQ15+V1AR11UQ41UQ15/1	FESTO DQ CONNECTION QN15		12/21/2022	MKLEPADLO	
&EFS=V1AR11UQ41UQ16+V1AR11UQ41UQ16/1	FESTO DQ CONNECTION QN16		12/21/2022	MKLEPADLO	
&EFS=V1AR11UQ41UQ17+V1AR11UQ41UQ17/1	FESTO DQ CONNECTION QN17		12/21/2022	MKLEPADLO	
&EFS=V1AR11UQ41UQ18+V1AR11UQ41UQ18/1	FESTO DQ CONNECTION QN18		12/21/2022	MKLEPADLO	
&EFS=V1AR11UQ41UQ19+V1AR11UQ41UQ19/1	FESTO DQ CONNECTION QN19		12/21/2022	MKLEPADLO	
&EFS=V1AR11UQ41UQ20+V1AR11UQ41UQ20/1	FESTO DQ CONNECTION QN20		12/21/2022	MKLEPADLO	
&EFS=V1AR11UQ41UQ21+V1AR11UQ41UQ21/1	FESTO DQ CONNECTION QN21		12/21/2022	MKLEPADLO	
&EFS=V1AR11UQ41UQ22+V1AR11UQ41UQ22/1	FESTO DQ CONNECTION QN22		12/21/2022	MKLEPADLO	
&EFS=V1AR11UQ41UQ23+V1AR11UQ41UQ23/1	FESTO DQ CONNECTION QN23		12/21/2022	MKLEPADLO	
&EFS=V1AR11UQ41UQ24+V1AR11UQ41UQ24/1	FESTO DQ CONNECTION QN24		12/21/2022	MKLEPADLO	
&EFS=V1AR11WC1+V1AR11UC01/1	Incoming power		12/21/2022	MKLEPADLO	
&EFS=V1AR12KF1+V1AR12UC01/1	Incoming Profinet		12/21/2022	MKLEPADLO	
&EFS=V1AR12UQ41BG0+V1AR12UQ41/1	SENSORS		12/21/2022	MKLEPADLO	
&EFS=V1AR12UQ41KF1+V1AR12UQ41/1	24VDC SUPPLY AND PROFINET HANDLING MODULE		12/21/2022	MKLEPADLO	
&EFS=V1AR12UQ41KF1+V1AR12UQ41/2	CONNECTING MOD. FOR MPA MANIFOLD		12/21/2022	MKLEPADLO	
&EFS=V1AR12UQ41KF1+V1AR12UQ41/3	I/O MOD. DI16 (8 x M12) FOR MPA		12/21/2022	MKLEPADLO	
&EFS=V1AR12UQ41KF1+V1AR12UQ41/4	I/O MOD. DI16 (8 x M12) FOR MPA		12/21/2022	MKLEPADLO	
&EFS=V1AR12UQ41KF1+V1AR12UQ41/5	CONNECTING MOD. FOR FESTO DQ		12/21/2022	MKLEPADLO	
&EFS=V1AR12UQ41UQ1+V1AR12UQ41UQ1/1	FESTO DQ CONNECTION QN1		12/21/2022	MKLEPADLO	
&EFS=V1AR12UQ41UQ2+V1AR12UQ41UQ2/1	FESTO DQ CONNECTION QN2		12/21/2022	MKLEPADLO	
&EFS=V1AR12UQ41UQ3+V1AR12UQ41UQ3/1	FESTO DQ CONNECTION QN3		12/21/2022	MKLEPADLO	
&EFS=V1AR12UQ41UQ4+V1AR12UQ41UQ4/1	FESTO DQ CONNECTION QN4		12/21/2022	MKLEPADLO	
&EFS=V1AR12UQ41UQ5+V1AR12UQ41UQ5/1	FESTO DQ CONNECTION QN5		12/21/2022	MKLEPADLO	
&EFS=V1AR12UQ41UQ6+V1AR12UQ41UQ6/1	FESTO DQ CONNECTION QN6		12/21/2022	MKLEPADLO	
&EFS=V1AR12UQ41UQ7+V1AR12UQ41UQ7/1	FESTO DQ CONNECTION QN7		12/21/2022	MKLEPADLO	
&EFS=V1AR12UQ41UQ8+V1AR12UQ41UQ8/1	FESTO DQ CONNECTION QN8		12/21/2022	MKLEPADLO	
&EFS=V1AR12UQ41UQ9+V1AR12UQ41UQ9/1	FESTO DQ CONNECTION QN9		12/21/2022	MKLEPADLO	
&EFS=V1AR12UQ41UQ10+V1AR12UQ41UQ10/1	FESTO DQ CONNECTION QN10		12/21/2022	MKLEPADLO	
&EFS=V1AR12WC1+V1AR12UC01/1	Incoming power		12/21/2022	MKLEPADLO	
&EFS=V1AR13KF1+V1AR13UC01/1	Incoming Profinet		12/21/2022	MKLEPADLO	
&EFS=V1AR13UQ41BG0+V1AR13UQ41/1	SENSORS		12/21/2022	MKLEPADLO	
&EFS=V1AR13UQ41KF1+V1AR13UQ41/1	24VDC SUPPLY AND PROFINET HANDLING MODULE		12/21/2022	MKLEPADLO	

			Date	12/22/2022	Volvo Trucks North America	Valiant TMS	Table of contents : &EFS=V1AR11UQ41UQ14+V1AR11UQ41UQ14/1 - &EFS=V1AR13UQ41KF1+V1AR13UQ41/1	Drawing name: =2V04&EFS-EL	=
			Ed.	MKLEPADLO					+
			Appr		P6700 Underbody Mainline - Cell 2V04	Scale 1:1		Document type: EAB	Project nr: 22-16151
Modification	Date	Name	Original		Replacement of / Replaced by				Page 5 / 1630

Table of contents

Column X: An automatically generated page was edited

F06_001

Page	Page description	supplementary page field	Date	Edited by	X
&EFS=V1AR13UQ41KF1+V1AR13UQ41/2	CONNECTING MOD. FOR MPA MANIFOLD		12/21/2022	MKLEPADLO	
&EFS=V1AR13UQ41KF1+V1AR13UQ41/3	I/O MOD. DI16 (8 x M12) FOR MPA		12/21/2022	MKLEPADLO	
&EFS=V1AR13UQ41KF1+V1AR13UQ41/4	I/O MOD. DI16 (8 x M12) FOR MPA		12/21/2022	MKLEPADLO	
&EFS=V1AR13UQ41KF1+V1AR13UQ41/5	CONNECTING MOD. FOR FESTO DQ		12/21/2022	MKLEPADLO	
&EFS=V1AR13UQ41UQ1+V1AR13UQ41UE1/1	FESTO DQ CONNECTION QN1		12/21/2022	MKLEPADLO	
&EFS=V1AR13UQ41UQ2+V1AR13UQ41UE2/1	FESTO DQ CONNECTION QN2		12/21/2022	MKLEPADLO	
&EFS=V1AR13UQ41UQ3+V1AR13UQ41UE3/1	FESTO DQ CONNECTION QN3		12/21/2022	MKLEPADLO	
&EFS=V1AR13UQ41UQ4+V1AR13UQ41UE4/1	FESTO DQ CONNECTION QN4		12/21/2022	MKLEPADLO	
&EFS=V1AR13UQ41UQ5+V1AR13UQ41UE5/1	FESTO DQ CONNECTION QN5		12/21/2022	MKLEPADLO	
&EFS=V1AR13UQ41UQ6+V1AR13UQ41UE6/1	FESTO DQ CONNECTION QN6		12/21/2022	MKLEPADLO	
&EFS=V1AR13UQ41UQ7+V1AR13UQ41UE7/1	FESTO DQ CONNECTION QN7		12/21/2022	MKLEPADLO	
&EFS=V1AR13UQ41UQ8+V1AR13UQ41UE8/1	FESTO DQ CONNECTION QN8		12/21/2022	MKLEPADLO	
&EFS=V1AR13UQ41UQ9+V1AR13UQ41UE9/1	FESTO DQ CONNECTION QN9		12/21/2022	MKLEPADLO	
&EFS=V1AR13UQ41UQ10+V1AR13UQ41UE10/1	FESTO DQ CONNECTION QN10		12/21/2022	MKLEPADLO	
&EFS=V1AR13WC1+V1AR13UC01/1	Incoming power		12/21/2022	MKLEPADLO	
&EFS=V1AR14KF1+V1AR14UC01/1	Incoming Profinet		12/21/2022	MKLEPADLO	
&EFS=V1AR14UQ41BG0+V1AR14UQ41/1	SENSORS		12/21/2022	MKLEPADLO	
&EFS=V1AR14UQ41KF1+V1AR14UQ41/1	24VDC SUPPLY AND PROFINET HANDLING MODULE		12/21/2022	MKLEPADLO	
&EFS=V1AR14UQ41KF1+V1AR14UQ41/2	CONNECTING MOD. FOR MPA MANIFOLD		12/21/2022	MKLEPADLO	
&EFS=V1AR14UQ41KF1+V1AR14UQ41/3	I/O MOD. DI16 (8 x M12) FOR MPA		12/21/2022	MKLEPADLO	
&EFS=V1AR14UQ41KF1+V1AR14UQ41/4	I/O MOD. DI16 (8 x M12) FOR MPA		12/21/2022	MKLEPADLO	
&EFS=V1AR14UQ41KF1+V1AR14UQ41/5	CONNECTING MOD. FOR FESTO DQ		12/21/2022	MKLEPADLO	
&EFS=V1AR14UQ41UQ1+V1AR14UQ41UE1/1	FESTO DQ CONNECTION QN1		12/21/2022	MKLEPADLO	
&EFS=V1AR14UQ41UQ2+V1AR14UQ41UE2/1	FESTO DQ CONNECTION QN2		12/21/2022	MKLEPADLO	
&EFS=V1AR14UQ41UQ3+V1AR14UQ41UE3/1	FESTO DQ CONNECTION QN3		12/21/2022	MKLEPADLO	
&EFS=V1AR14UQ41UQ4+V1AR14UQ41UE4/1	FESTO DQ CONNECTION QN4		12/21/2022	MKLEPADLO	
&EFS=V1AR14UQ41UQ5+V1AR14UQ41UE5/1	FESTO DQ CONNECTION QN5		12/21/2022	MKLEPADLO	
&EFS=V1AR14UQ41UQ6+V1AR14UQ41UE6/1	FESTO DQ CONNECTION QN6		12/21/2022	MKLEPADLO	
&EFS=V1AR14UQ41UQ7+V1AR14UQ41UE7/1	FESTO DQ CONNECTION QN7		12/21/2022	MKLEPADLO	
&EFS=V1AR14UQ41UQ8+V1AR14UQ41UE8/1	FESTO DQ CONNECTION QN8		12/21/2022	MKLEPADLO	
&EFS=V1AR14UQ41UQ9+V1AR14UQ41UE9/1	FESTO DQ CONNECTION QN9		12/21/2022	MKLEPADLO	
&EFS=V1AR14UQ41UQ10+V1AR14UQ41UE10/1	FESTO DQ CONNECTION QN10		12/21/2022	MKLEPADLO	
&EFS=V1AR14WC1+V1AR14UC01/1	Incoming power		12/21/2022	MKLEPADLO	

			Date	12/22/2022	Volvo Trucks North America	Valiant TMS	Table of contents : &EFS=V1AR13UQ41KF1+V1AR13UQ41/2 - &EFS=V1AR14WC1+V1AR14UC01/1	Drawing name: =2V04&EFS-EL	=
			Ed.	MKLEPADLO					+
			Appr		P6700 Underbody Mainline - Cell 2V04	Scale 1:1		Document type: EAB	Project nr: 22-16151
Modification	Date	Name	Original		Replacement of / Replaced by				Page 6 / 1630

Table of contents

Column X: An automatically generated page was edited

F06_001

Page	Page description	supplementary page field	Date	Edited by	X
&EFS=V1AR15KF1+V1AR15UC01/1	Incoming Profinet		12/21/2022	MKLEPADLO	
&EFS=V1AR15UQ41BG0+V1AR15UQ41/1	SENSORS		12/21/2022	MKLEPADLO	
&EFS=V1AR15UQ41KF1+V1AR15UQ41/1	24VDC SUPPLY AND PROFINET HANDLING MODULE		12/21/2022	MKLEPADLO	
&EFS=V1AR15UQ41KF1+V1AR15UQ41/2	CONNECTING MOD. FOR MPA MANIFOLD		12/21/2022	MKLEPADLO	
&EFS=V1AR15UQ41KF1+V1AR15UQ41/3	I/O MOD. DI16 (8 x M12) FOR MPA		12/21/2022	MKLEPADLO	
&EFS=V1AR15UQ41KF1+V1AR15UQ41/4	I/O MOD. DI16 (8 x M12) FOR MPA		12/21/2022	MKLEPADLO	
&EFS=V1AR15UQ41KF1+V1AR15UQ41/5	CONNECTING MOD. FOR FESTO DQ		12/21/2022	MKLEPADLO	
&EFS=V1AR15UQ41UQ1+V1AR15UQ41UE1/1	FESTO DQ CONNECTION QN1		12/21/2022	MKLEPADLO	
&EFS=V1AR15UQ41UQ2+V1AR15UQ41UE2/1	FESTO DQ CONNECTION QN2		12/21/2022	MKLEPADLO	
&EFS=V1AR15UQ41UQ3+V1AR15UQ41UE3/1	FESTO DQ CONNECTION QN3		12/21/2022	MKLEPADLO	
&EFS=V1AR15UQ41UQ4+V1AR15UQ41UE4/1	FESTO DQ CONNECTION QN4		12/21/2022	MKLEPADLO	
&EFS=V1AR15UQ41UQ5+V1AR15UQ41UE5/1	FESTO DQ CONNECTION QN5		12/21/2022	MKLEPADLO	
&EFS=V1AR15UQ41UQ6+V1AR15UQ41UE6/1	FESTO DQ CONNECTION QN6		12/21/2022	MKLEPADLO	
&EFS=V1AR15UQ41UQ7+V1AR15UQ41UE7/1	FESTO DQ CONNECTION QN7		12/21/2022	MKLEPADLO	
&EFS=V1AR15UQ41UQ8+V1AR15UQ41UE8/1	FESTO DQ CONNECTION QN8		12/21/2022	MKLEPADLO	
&EFS=V1AR15UQ41UQ9+V1AR15UQ41UE9/1	FESTO DQ CONNECTION QN9		12/21/2022	MKLEPADLO	
&EFS=V1AR15UQ41UQ10+V1AR15UQ41UE10/1	FESTO DQ CONNECTION QN10		12/21/2022	MKLEPADLO	
&EFS=V1AR15WC1+V1AR15UC01/1	Incoming power		12/21/2022	MKLEPADLO	
&EFS=V1AR21KF1+V1AR21UC01/1	Incoming Profinet		12/21/2022	MKLEPADLO	
&EFS=V1AR21WC1+V1AR21UC01/1	Incoming power		12/21/2022	MKLEPADLO	
&EFS=V1AR21XQ11WC1+V1AR21XQ11UC01/1	Incoming power		12/22/2022	MKLEPADLO	
&EFS=V1AR22KF1+V1AR22UC01/1	Incoming Profinet		12/21/2022	MKLEPADLO	
&EFS=V1AR22WC1+V1AR22UC01/1	Incoming power		12/21/2022	MKLEPADLO	
&EFS=V1AR22XQ11WC1+V1AR22XQ11UC01/1	Incoming power		12/22/2022	MKLEPADLO	
&EFS=V1AR23KF1+V1AR23UC01/1	Incoming Profinet		12/21/2022	MKLEPADLO	
&EFS=V1AR23WC1+V1AR23UC01/1	Incoming power		12/21/2022	MKLEPADLO	
&EFS=V1AR23XQ11WC1+V1AR23XQ11UC01/1	Incoming power		12/22/2022	MKLEPADLO	
&EFS=V1AR24KF1+V1AR24UC01/1	Incoming Profinet		12/21/2022	MKLEPADLO	
&EFS=V1AR24WC1+V1AR24UC01/1	Incoming power		12/21/2022	MKLEPADLO	
&EFS=V1AR24XQ11WC1+V1AR24XQ11UC01/1	Incoming power		12/22/2022	MKLEPADLO	
&EFS=V1AR25KF1+V1AR25UC01/1	Incoming Profinet		12/21/2022	MKLEPADLO	
&EFS=V1AR25WC1+V1AR25UC01/1	Incoming power		12/21/2022	MKLEPADLO	
&EFS=V1AR25XQ11WC1+V1AR25XQ11UC01/1	Incoming power		12/22/2022	MKLEPADLO	

			Date	12/22/2022	Volvo Trucks North America	Valiant TMS	Table of contents : &EFS=V1AR15KF1+V1AR15UC01/1 - &EFS=V1AR25XQ11WC1+V1AR25XQ11UC01/1	Drawing name: =2V04&EFS-EL
			Ed.	MKLEPADLO				Document type: EAB
			Appr		P6700 Underbody Mainline - Cell 2V04	Scale 1:1		Project nr: 22-16151
Modification	Date	Name	Original		Replacement of / Replaced by			Page 7 / 1630

Table of contents

Column X: An automatically generated page was edited

F06_001

Page	Page description	supplementary page field	Date	Edited by	X
&EFS=V1AR26KF1+V1AR26UC01/1	Incoming Profinet		12/21/2022	MKLEPADLO	
&EFS=V1AR26WC1+V1AR26UC01/1	Incoming power		12/21/2022	MKLEPADLO	
&EFS=V1AR26XQ11WC1+V1AR26XQ11UC01/1	Incoming power		12/22/2022	MKLEPADLO	
&EFS=V1AR27KF1+V1AR27UC01/1	Incoming Profinet		12/21/2022	MKLEPADLO	
&EFS=V1AR27WC1+V1AR27UC01/1	Incoming power		12/21/2022	MKLEPADLO	
&EFS=V1AR27XQ11WC1+V1AR27XQ11UC01/1	Incoming power		12/22/2022	MKLEPADLO	
&EFS=V1AR28KF1+V1AR28UC01/1	Incoming Profinet		12/21/2022	MKLEPADLO	
&EFS=V1AR28WC1+V1AR28UC01/1	Incoming power		12/21/2022	MKLEPADLO	
&EFS=V1AR28XQ11WC1+V1AR28XQ11UC01/1	Incoming power		12/22/2022	MKLEPADLO	
&EFS=V1AR29KF1+V1AR29UC01/1	Incoming Profinet		12/21/2022	MKLEPADLO	
&EFS=V1AR29WC1+V1AR29UC01/1	Incoming power		12/21/2022	MKLEPADLO	
&EFS=V1AR29XQ11WC1+V1AR29XQ11UC01/1	Incoming power		12/22/2022	MKLEPADLO	
&EFS=V1AR51KF1+V1AR51UC01/1	Incoming Profinet		12/21/2022	MKLEPADLO	
&EFS=V1AR51WC1+V1AR51UC01/1	Incoming power		12/21/2022	MKLEPADLO	
&EFS=V1AR51XQ51WC1+V1AR51XQ51UC01/1	Incoming power		12/21/2022	MKLEPADLO	
&EFS=V1AR52KF1+V1AR52UC01/1	Incoming Profinet		12/21/2022	MKLEPADLO	
&EFS=V1AR52WC1+V1AR52UC01/1	Incoming power		12/21/2022	MKLEPADLO	
&EFS=V1AR52XQ51WC1+V1AR52XQ51UC01/1	Incoming power		12/21/2022	MKLEPADLO	
&EFS=V1AR53KF1+V1AR53UC01/1	Incoming Profinet		12/21/2022	MKLEPADLO	
&EFS=V1AR53WC1+V1AR53UC01/1	Incoming power		12/21/2022	MKLEPADLO	
&EFS=V1AR53XQ51WC1+V1AR53XQ51UC01/1	Incoming power		12/21/2022	MKLEPADLO	
&EFS=V1AR54KF1+V1AR54UC01/1	Incoming Profinet		12/21/2022	MKLEPADLO	
&EFS=V1AR54WC1+V1AR54UC01/1	Incoming power		12/21/2022	MKLEPADLO	
&EFS=V1AR54XQ51WC1+V1AR54XQ51UC01/1	Incoming power		12/21/2022	MKLEPADLO	
&EFS=V1AR141KF1+V1AR141UC01/1	Incoming Profinet		12/21/2022	MKLEPADLO	
&EFS=V1AR141WC1+V1AR141UC01/1	Incoming power		12/21/2022	MKLEPADLO	
&EFS=V1AR141XQ41WC1+V1AR141XQ41UC01/1	Incoming power		12/21/2022	MKLEPADLO	
&EFS=V1AR142KF1+V1AR142UC01/1	Incoming Profinet		12/21/2022	MKLEPADLO	
&EFS=V1AR142WC1+V1AR142UC01/1	Incoming power		12/21/2022	MKLEPADLO	
&EFS=V1AR142XQ41WC1+V1AR142XQ41UC01/1	Incoming power		12/21/2022	MKLEPADLO	
&EFS=V1AR191KF1+V1AR191UC01/1	Incoming Profinet		12/21/2022	MKLEPADLO	
&EFS=V1AR191WC1+V1AR191UC01/1	Incoming power		12/21/2022	MKLEPADLO	
&EFS=V1AR192KF1+V1AR192UC01/1	Incoming Profinet		12/21/2022	MKLEPADLO	

			Date	12/22/2022	Volvo Trucks North America	Valiant TMS	Table of contents : &EFS=V1AR26KF1+V1AR26UC01/1 - &EFS=V1AR192KF1+V1AR192UC01/1	Drawing name: =2V04&EFS-EL	=
			Ed.	MKLEPADLO					+
			Appr		P6700 Underbody Mainline - Cell 2V04			Document type: EAB	Project nr: 22-16151	Page 8
Modification	Date	Name	Original		Replacement of / Replaced by	Scale 1:1				1630

Table of contents

Column X: An automatically generated page was edited

F06_001

Page	Page description	supplementary page field	Date	Edited by	X
&EFS=V1AR192WC1+V1AR192UC01/1	Incoming power		12/21/2022	MKLEPADLO	
&EFS=V1AR211KF1+V1AR211UC01/1	Incoming Profinet		12/21/2022	MKLEPADLO	
&EFS=V1AR211WC1+V1AR211UC01/1	Incoming power		12/21/2022	MKLEPADLO	
&EFS=V1AR211XQ11WC1+V1AR211XQ11UC01/1	Incoming power		12/22/2022	MKLEPADLO	
&EFS=V1AR212KF1+V1AR212UC01/1	Incoming Profinet		12/21/2022	MKLEPADLO	
&EFS=V1AR212WC1+V1AR212UC01/1	Incoming power		12/21/2022	MKLEPADLO	
&EFS=V1AR212XQ11WC1+V1AR212XQ11UC01/1	Incoming power		12/22/2022	MKLEPADLO	
&EFS=V1AR213KF1+V1AR213UC01/1	Incoming Profinet		12/21/2022	MKLEPADLO	
&EFS=V1AR213WC1+V1AR213UC01/1	Incoming power		12/21/2022	MKLEPADLO	
&EFS=V1AR213XQ11WC1+V1AR213XQ11UC01/1	Incoming power		12/22/2022	MKLEPADLO	
&EFS=V1BX11WC3+V1BX11UC01/1	Incoming power & profinet		12/21/2022	MKLEPADLO	
&EFS=V1FQ1+V1FQ1/1	Door lock sensor -BG1		12/21/2022	MKLEPADLO	
&EFS=V1FQ1+V1FQ1/2	Door lock sensor -BG2		12/21/2022	MKLEPADLO	
&EFS=V1FQ1+V1FQ1/3	Door lock sensor -BG3		12/21/2022	MKLEPADLO	
&EFS=V1FQ1+V1FQ1/4	Door lock sensor -BG4		12/21/2022	MKLEPADLO	
&EFS=V1FQ1+V1FQ1/5	Door lock sensor -BG5		12/21/2022	MKLEPADLO	
&EFS=V1FQ1+V1FQ1/6	Door lock sensor -BG6		12/21/2022	MKLEPADLO	
&EFS=V1FQ1+V1FQ1/7	Door lock sensor -BG7		12/21/2022	MKLEPADLO	
&EFS=V1FQ1+V1FQ1/8	Door lock sensor -BG8		12/21/2022	MKLEPADLO	
&EFS=V1FQ1+V1FQ1/9	2V03/2V04 S100 Conveyor Light Curtain		12/21/2022	MKLEPADLO	
&EFS=V1FQ1+V1FQ1/10	2V04/2V01 S150 Conveyor Light Curtain		12/21/2022	MKLEPADLO	
&EFS=V1FQ1+V1UC11/1	Safety power monitoring RQ - KF11.51		12/21/2022	MKLEPADLO	
&EFS=V1FQ1+V1UC11/2	Safety power monitoring RQ - KF11.52		12/21/2022	MKLEPADLO	
&EFS=V1FQ1+V1UC11/3	Safety power monitoring RQ - KF11.53		12/21/2022	MKLEPADLO	
&EFS=V1FQ1+V1UC11/4	Safety power monitoring RQ - KF11.54		12/21/2022	MKLEPADLO	
&EFS=V1FQ1+V1UC12/1	Safety power monitoring RQ - KF12.51		12/21/2022	MKLEPADLO	
&EFS=V1FQ1+V1UC12/2	Safety power monitoring RQ - KF12.52		12/21/2022	MKLEPADLO	
&EFS=V1FQ1+V1UC12/3	Safety power monitoring RQ - KF12.53		12/21/2022	MKLEPADLO	
&EFS=V1FQ1+V1UC12/4	Safety power monitoring RQ - KF12.54		12/21/2022	MKLEPADLO	
&EFS=V1FQ1+V1UC14/1	Safety power monitoring RQ - KF14.51		12/21/2022	MKLEPADLO	
&EFS=V1FQ1+V1UC14/2	Safety power monitoring RQ - KF14.52		12/21/2022	MKLEPADLO	
&EFS=V1FQ1+V1UC14/3	Safety power monitoring RQ - KF14.53		12/21/2022	MKLEPADLO	
&EFS=V1FQ1+V1UC14/4	Safety power monitoring RQ - KF14.54		12/21/2022	MKLEPADLO	

			Date	12/22/2022	Volvo Trucks North America	Valiant TMS	Table of contents : &EFS=V1AR192WC1+V1AR192UC01/1 - &EFS=V1FQ1+V1UC14/4	Drawing name: =2V04&EFS-EL	=
			Ed.	MKLEPADLO					+
			Appr		P6700 Underbody Mainline - Cell 2V04			Document type: EAB	Project nr: 22-16151	Page 9 / 1630
Modification	Date	Name	Original		Replacement of	Replaced by	Scale 1:1		

Table of contents

Column X: An automatically generated page was edited

F06_001

Page	Page description	supplementary page field	Date	Edited by	X
&EFS=V1FQ1+V1UC15/1	Safety power monitoring RQ - KF15.51		12/21/2022	MKLEPADLO	
&EFS=V1FQ1+V1UC15/2	Safety power monitoring RQ - KF15.52		12/21/2022	MKLEPADLO	
&EFS=V1FQ1+V1UC15/3	Safety power monitoring RQ - KF15.53		12/21/2022	MKLEPADLO	
&EFS=V1FQ1+V1UC15/4	Safety power monitoring RQ - KF15.54		12/21/2022	MKLEPADLO	
&EFS=V1GL11KF2+V1GL11KF2/1	RFID Communication Module		12/21/2022	MKLEPADLO	
&EFS=V1GL11KF2+V1GL11KF2/10	G120D Control Unit		12/21/2022	MKLEPADLO	
&EFS=V1GL11UQ51BG0+V1GL11UQ51/1	SENSORS		12/21/2022	MKLEPADLO	
&EFS=V1GL11UQ51BG0+V1GL11UQ51/2	SENSORS		12/21/2022	MKLEPADLO	
&EFS=V1GL11UQ51BG0+V1GL11UQ51/3	SENSORS		12/21/2022	MKLEPADLO	
&EFS=V1GL11UQ51KF2+V1GL11UQ51/1	CONNECTING MOD. FOR VTSA MANIFOLD		12/21/2022	MKLEPADLO	
&EFS=V1GL11UQ51KF2+V1GL11UQ51/2	I/O MOD. DI16 (8 x M12) FOR VTSA-F		12/21/2022	MKLEPADLO	
&EFS=V1GL11UQ51KF2+V1GL11UQ51/3	I/O MOD. DI16 (8 x M12) FOR VTSA-F		12/21/2022	MKLEPADLO	
&EFS=V1GL11UQ51KF2+V1GL11UQ51/4	I/O MOD. DI16 (8 x M12) FOR VTSA-F		12/21/2022	MKLEPADLO	
&EFS=V1GL11UQ51KF2+V1GL11UQ51/5	I/O MOD. DI16 (8 x M12) FOR VTSA-F		12/21/2022	MKLEPADLO	
&EFS=V1GL11UQ51KF2+V1GL11UQ51/6	CONNECTING MOD. FOR FESTO DQ		12/21/2022	MKLEPADLO	
&EFS=V1GL11UQ51UQ2+V1GL11UQ51UQ2/1	FESTO DQ CONNECTION QN1		12/21/2022	MKLEPADLO	
&EFS=V1GL11UQ51UQ3+V1GL11UQ51UQ3/1	FESTO DQ CONNECTION QN2		12/21/2022	MKLEPADLO	
&EFS=V1GL11UQ51UQ4+V1GL11UQ51UQ4/1	FESTO DQ CONNECTION QN3		12/21/2022	MKLEPADLO	
&EFS=V1GL11UQ51UQ5+V1GL11UQ51UQ5/1	FESTO DQ CONNECTION QN4		12/21/2022	MKLEPADLO	
&EFS=V1GL11UQ51UQ6+V1GL11UQ51UQ6/1	FESTO DQ CONNECTION QN5		12/21/2022	MKLEPADLO	
&EFS=V1GL11UQ51UQ7+V1GL11UQ51UQ7/1	FESTO DQ CONNECTION QN6		12/21/2022	MKLEPADLO	
&EFS=V1GL11UQ51UQ8+V1GL11UQ51UQ8/1	FESTO DQ CONNECTION QN7		12/21/2022	MKLEPADLO	
&EFS=V1GL11UQ51UQ12+V1GL11UQ51UQ12/1	FESTO DQ CONNECTION QN8		12/21/2022	MKLEPADLO	
&EFS=V1GL11WC1+V1GL11UC01/1	Incoming power		12/21/2022	MKLEPADLO	
&EFS=V1GL12KF2+V1GL12KF2/1	RFID Communication Module		12/21/2022	MKLEPADLO	
&EFS=V1GL12KF2+V1GL12KF2/10	G120D Control Unit		12/21/2022	MKLEPADLO	
&EFS=V1GL12UQ51BG0+V1GL12UQ51/1	SENSORS		12/21/2022	MKLEPADLO	
&EFS=V1GL12UQ51BG0+V1GL12UQ51/2	SENSORS		12/21/2022	MKLEPADLO	
&EFS=V1GL12UQ51BG0+V1GL12UQ51/3	SENSORS		12/21/2022	MKLEPADLO	
&EFS=V1GL12UQ51KF2+V1GL12UQ51/1	CONNECTING MOD. FOR VTSA MANIFOLD		12/21/2022	MKLEPADLO	
&EFS=V1GL12UQ51KF2+V1GL12UQ51/2	I/O MOD. DI16 (8 x M12) FOR VTSA-F		12/21/2022	MKLEPADLO	
&EFS=V1GL12UQ51KF2+V1GL12UQ51/3	I/O MOD. DI16 (8 x M12) FOR VTSA-F		12/21/2022	MKLEPADLO	
&EFS=V1GL12UQ51KF2+V1GL12UQ51/4	I/O MOD. DI16 (8 x M12) FOR VTSA-F		12/21/2022	MKLEPADLO	

			Date	12/22/2022	Volvo Trucks North America	Valiant TMS	Table of contents : &EFS=V1FQ1+V1UC15/1 - &EFS=V1GL12UQ51KF2+V1GL12UQ51/4	Drawing name: =2V04&EFS-EL	=
			Ed.	MKLEPADLO					+
			Appr		P6700 Underbody Mainline - Cell 2V04			Document type: EAB	Project nr: 22-16151
Modification	Date	Name	Original		Replacement of / Replaced by	Scale 1:1			Page 10 / 1630

Table of contents

Column X: An automatically generated page was edited F06_001

Page	Page description	supplementary page field	Date	Edited by	X
&EFS=V1GL12UQ51KF2+V1GL12UQ51/5	CONNECTING MOD. FOR FESTO DQ		12/21/2022	MKLEPADLO	
&EFS=V1GL12UQ51UQ3+V1GL12UQ51UQ3$1	FESTO DQ CONNECTION QN1		12/21/2022	MKLEPADLO	
&EFS=V1GL12UQ51UQ4+V1GL12UQ51UQ4$1	FESTO DQ CONNECTION QN2		12/21/2022	MKLEPADLO	
&EFS=V1GL12UQ51UQ5+V1GL12UQ51UQ5$1	FESTO DQ CONNECTION QN3		12/21/2022	MKLEPADLO	
&EFS=V1GL12UQ51UQ6+V1GL12UQ51UQ6$1	FESTO DQ CONNECTION QN4		12/21/2022	MKLEPADLO	
&EFS=V1GL12UQ51UQ11+V1GL12UQ51UQ11$1	FESTO DQ CONNECTION QN5		12/21/2022	MKLEPADLO	
&EFS=V1GL12WC1+V1GL12UC01/1	Incoming power		12/21/2022	MKLEPADLO	
&EFS=V1GL13KF1+V1GL13KF1/1	RFID Communication Module		12/21/2022	MKLEPADLO	
&EFS=V1GL13UQ51BG0+V1GL13UQ51/1	SENSORS		12/21/2022	MKLEPADLO	
&EFS=V1GL13UQ51BG0+V1GL13UQ51/2	SENSORS		12/21/2022	MKLEPADLO	
&EFS=V1GL13UQ51KF1+V1GL13UQ51/1	CONNECTING MOD. FOR VTSA MANIFOLD		12/21/2022	MKLEPADLO	
&EFS=V1GL13UQ51KF1+V1GL13UQ51/2	I/O MOD. DI16 (8 x M12) FOR VTSA-F		12/21/2022	MKLEPADLO	
&EFS=V1GL13UQ51KF1+V1GL13UQ51/3	I/O MOD. DI16 (8 x M12) FOR VTSA-F		12/21/2022	MKLEPADLO	
&EFS=V1GL13UQ51KF1+V1GL13UQ51/4	I/O MOD. DI16 (8 x M12) FOR VTSA-F		12/21/2022	MKLEPADLO	
&EFS=V1GL13UQ51KF1+V1GL13UQ51/5	CONNECTING MOD. FOR FESTO DQ		12/21/2022	MKLEPADLO	
&EFS=V1GL13UQ51UQ1+V1GL13UQ51UQ1$1	FESTO DQ CONNECTION QN1		12/21/2022	MKLEPADLO	
&EFS=V1GL13UQ51UQ2+V1GL13UQ51UQ2$1	FESTO DQ CONNECTION QN2		12/21/2022	MKLEPADLO	
&EFS=V1GL13UQ51UQ3+V1GL13UQ51UQ3$1	FESTO DQ CONNECTION QN3		12/21/2022	MKLEPADLO	
&EFS=V1GL13UQ51UQ4+V1GL13UQ51UQ4$1	FESTO DQ CONNECTION QN4		12/21/2022	MKLEPADLO	
&EFS=V1GL13UQ51UQ8+V1GL13UQ51UQ8$1	FESTO DQ CONNECTION QN5		12/21/2022	MKLEPADLO	
&EFS=V1GL13UQ51WC4+V1GL13UQ51/1	24VDC		12/21/2022	MKLEPADLO	
&EFS=V1KF1+V1UC11/1	Switch, Scalance XC216		12/21/2022	MKLEPADLO	
&EFS=V1KF1+V1UC11/2	Network Overview		12/21/2022	MKLEPADLO	
&EFS=V1KF1+V1UC11/3	IM 155 PN		12/21/2022	MKLEPADLO	
&EFS=V1KF1+V1UC11/4	ET200S Wiring DI		12/21/2022	MKLEPADLO	
&EFS=V1KF1+V1UC11/5	ET200S Wiring DI		12/21/2022	MKLEPADLO	
&EFS=V1KF1+V1UC11/6	ET200S Wiring F-DI		12/21/2022	MKLEPADLO	
&EFS=V1KF1+V1UC11/7	ET200S Wiring DQ		12/21/2022	MKLEPADLO	
&EFS=V1KF1+V1UC11/8	ET200S Wiring F-DQ		12/21/2022	MKLEPADLO	
&EFS=V1KF1+V1UC11/9	ET200S DI Overview KF11.11		12/21/2022	MKLEPADLO	
&EFS=V1KF1+V1UC11/10	ET200S DI Overview KF11.12		12/21/2022	MKLEPADLO	
&EFS=V1KF1+V1UC11/11	ET200S DI Overview KF11.13		12/21/2022	MKLEPADLO	
&EFS=V1KF1+V1UC11/12	ET200S DI Overview KF11.14		12/21/2022	MKLEPADLO	

			Date	12/22/2022	Volvo Trucks North America	Valiant TMS	Table of contents : &EFS=V1GL12UQ51KF2+V1GL12UQ51/5 - &EFS=V1KF1+V1UC11/12	Drawing name: =2V04&EFS-EL	=
			Ed.	MKLEPADLO					+
			Appr		P6700 Underbody Mainline - Cell 2V04			Document type: EAB	Project nr: 22-16151
Modification	Date	Name	Original		Replacement of / Replaced by	Scale 1:1			Page 11 / 1630

Table of contents

Column X: An automatically generated page was edited

F06_001

Page	Page description	supplementary page field	Date	Edited by	X
&EFS=V1KF1+V1UC11/13	ET200S DQ Overview KF11.21		12/21/2022	MKLEPADLO	
&EFS=V1KF1+V1UC11/14	ET200S F-DI Overview KF11.31		12/21/2022	MKLEPADLO	
&EFS=V1KF1+V1UC11/15	ET200S F-DI Overview KF11.32		12/21/2022	MKLEPADLO	
&EFS=V1KF1+V1UC11/16	ET200S F-DQ Overview KF11.41		12/21/2022	MKLEPADLO	
&EFS=V1KF1+V1UC11/17	ET200S F-DQ Overview KF11.42		12/21/2022	MKLEPADLO	
&EFS=V1KF1+V1UC11/18	ET200S F-RQ Overview KF11.51		12/21/2022	MKLEPADLO	
&EFS=V1KF1+V1UC11/19	ET200S F-RQ Overview KF11.52		12/21/2022	MKLEPADLO	
&EFS=V1KF1+V1UC11/20	ET200S F-RQ Overview KF11.53		12/21/2022	MKLEPADLO	
&EFS=V1KF1+V1UC11/21	ET200S F-RQ Overview KF11.54		12/21/2022	MKLEPADLO	
&EFS=V1KF1+V1UC12/1	Switch, Scalance XC216		12/21/2022	MKLEPADLO	
&EFS=V1KF1+V1UC12/2	Network Overview		12/21/2022	MKLEPADLO	
&EFS=V1KF1+V1UC12/3	IM 155 PN		12/21/2022	MKLEPADLO	
&EFS=V1KF1+V1UC12/4	ET200S Wiring DI		12/21/2022	MKLEPADLO	
&EFS=V1KF1+V1UC12/5	ET200S Wiring DI		12/21/2022	MKLEPADLO	
&EFS=V1KF1+V1UC12/6	ET200S Wiring F-DI		12/21/2022	MKLEPADLO	
&EFS=V1KF1+V1UC12/7	ET200S Wiring DQ		12/21/2022	MKLEPADLO	
&EFS=V1KF1+V1UC12/8	ET200S Wiring F-DQ		12/21/2022	MKLEPADLO	
&EFS=V1KF1+V1UC12/9	ET200S DI Overview KF12.11		12/21/2022	MKLEPADLO	
&EFS=V1KF1+V1UC12/10	ET200S DI Overview KF12.12		12/21/2022	MKLEPADLO	
&EFS=V1KF1+V1UC12/11	ET200S DI Overview KF12.13		12/21/2022	MKLEPADLO	
&EFS=V1KF1+V1UC12/12	ET200S DI Overview KF12.14		12/21/2022	MKLEPADLO	
&EFS=V1KF1+V1UC12/13	ET200S DQ Overview KF12.21		12/21/2022	MKLEPADLO	
&EFS=V1KF1+V1UC12/14	ET200S F-DI Overview KF12.31		12/21/2022	MKLEPADLO	
&EFS=V1KF1+V1UC12/15	ET200S F-DI Overview KF12.32		12/21/2022	MKLEPADLO	
&EFS=V1KF1+V1UC12/16	ET200S F-DQ Overview KF12.41		12/21/2022	MKLEPADLO	
&EFS=V1KF1+V1UC12/17	ET200S F-DQ Overview KF12.42		12/21/2022	MKLEPADLO	
&EFS=V1KF1+V1UC12/18	ET200S F-RQ Overview KF12.51		12/21/2022	MKLEPADLO	
&EFS=V1KF1+V1UC12/19	ET200S F-RQ Overview KF12.52		12/21/2022	MKLEPADLO	
&EFS=V1KF1+V1UC12/20	ET200S F-RQ Overview KF12.53		12/21/2022	MKLEPADLO	
&EFS=V1KF1+V1UC12/21	ET200S F-RQ Overview KF12.54		12/21/2022	MKLEPADLO	
&EFS=V1KF1+V1UC14/1	Switch, Scalance XC216		12/21/2022	MKLEPADLO	
&EFS=V1KF1+V1UC14/2	Network Overview		12/21/2022	MKLEPADLO	
&EFS=V1KF1+V1UC14/3	IM 155 PN		12/21/2022	MKLEPADLO	

			Date	12/22/2022	Volvo Trucks North America	Valiant TMS	Table of contents : &EFS=V1KF1+V1UC11/13 - &EFS=V1KF1+V1UC14/3	Drawing name: =2V04&EFS-EL	=
			Ed.	MKLEPADLO					+
			Appr		P6700 Underbody Mainline - Cell 2V04			Document type: EAB	Project nr: 22-16151	Page 12
Modification	Date	Name	Original		Replacement of	Replaced by	Scale 1:1			1630

Table of contents

Column X: An automatically generated page was edited F06_001

Page	Page description	supplementary page field	Date	Edited by	X
&EFS=V1KF1+V1UC14/4	ET200S Wiring DI		12/21/2022	MKLEPADLO	
&EFS=V1KF1+V1UC14/5	ET200S Wiring F-DI		12/21/2022	MKLEPADLO	
&EFS=V1KF1+V1UC14/6	ET200S Wiring DQ		12/21/2022	MKLEPADLO	
&EFS=V1KF1+V1UC14/7	ET200S Wiring F-DQ		12/21/2022	MKLEPADLO	
&EFS=V1KF1+V1UC14/8	ET200S DI Overview KF14.11		12/21/2022	MKLEPADLO	
&EFS=V1KF1+V1UC14/9	ET200S DI Overview KF14.12		12/21/2022	MKLEPADLO	
&EFS=V1KF1+V1UC14/10	ET200S DQ Overview KF14.21		12/21/2022	MKLEPADLO	
&EFS=V1KF1+V1UC14/11	ET200S F-DI Overview KF14.31		12/21/2022	MKLEPADLO	
&EFS=V1KF1+V1UC14/12	ET200S F-DI Overview KF14.32		12/21/2022	MKLEPADLO	
&EFS=V1KF1+V1UC14/13	ET200S F-DQ Overview KF14.41		12/21/2022	MKLEPADLO	
&EFS=V1KF1+V1UC14/14	ET200S F-DQ Overview KF14.42		12/21/2022	MKLEPADLO	
&EFS=V1KF1+V1UC14/15	ET200S F-RQ Overview KF14.51		12/21/2022	MKLEPADLO	
&EFS=V1KF1+V1UC14/16	ET200S F-RQ Overview KF14.52		12/21/2022	MKLEPADLO	
&EFS=V1KF1+V1UC14/17	ET200S F-RQ Overview KF14.53		12/21/2022	MKLEPADLO	
&EFS=V1KF1+V1UC14/18	ET200S F-RQ Overview KF14.54		12/21/2022	MKLEPADLO	
&EFS=V1KF1+V1UC15/1	Switch, Scalance XC216		12/21/2022	MKLEPADLO	
&EFS=V1KF1+V1UC15/2	Network Overview		12/21/2022	MKLEPADLO	
&EFS=V1KF1+V1UC15/3	IM 155 PN		12/21/2022	MKLEPADLO	
&EFS=V1KF1+V1UC15/4	ET200S Wiring DI		12/21/2022	MKLEPADLO	
&EFS=V1KF1+V1UC15/5	ET200S Wiring F-DI		12/21/2022	MKLEPADLO	
&EFS=V1KF1+V1UC15/6	ET200S Wiring DQ		12/21/2022	MKLEPADLO	
&EFS=V1KF1+V1UC15/7	ET200S Wiring F-DQ		12/21/2022	MKLEPADLO	
&EFS=V1KF1+V1UC15/8	ET200S DI Overview KF15.11		12/21/2022	MKLEPADLO	
&EFS=V1KF1+V1UC15/9	ET200S DI Overview KF15.12		12/21/2022	MKLEPADLO	
&EFS=V1KF1+V1UC15/10	ET200S DQ Overview KF15.21		12/21/2022	MKLEPADLO	
&EFS=V1KF1+V1UC15/11	ET200S F-DI Overview KF15.31		12/21/2022	MKLEPADLO	
&EFS=V1KF1+V1UC15/12	ET200S F-DI Overview KF15.32		12/21/2022	MKLEPADLO	
&EFS=V1KF1+V1UC15/13	ET200S F-DQ Overview KF15.41		12/21/2022	MKLEPADLO	
&EFS=V1KF1+V1UC15/14	ET200S F-DQ Overview KF15.42		12/21/2022	MKLEPADLO	
&EFS=V1KF1+V1UC15/15	ET200S F-RQ Overview KF15.51		12/21/2022	MKLEPADLO	
&EFS=V1KF1+V1UC15/16	ET200S F-RQ Overview KF15.52		12/21/2022	MKLEPADLO	
&EFS=V1KF1+V1UC15/17	ET200S F-RQ Overview KF15.53		12/21/2022	MKLEPADLO	
&EFS=V1KF1+V1UC15/18	ET200S F-RQ Overview KF15.54		12/21/2022	MKLEPADLO	

			Date	12/22/2022	Volvo Trucks North America	Valiant TMS	Table of contents : &EFS=V1KF1+V1UC14/4 - &EFS=V1KF1+V1UC15/18	Drawing name: =2V04&EFS-EL	=
			Ed.	MKLEPADLO					+
			Appr		P6700 Underbody Mainline - Cell 2V04			Document type: EAB	Project nr: 22-16151	Page 13
Modification	Date	Name	Original		Replacement of / Replaced by	Scale 1:1				1630

Table of contents

Column X: An automatically generated page was edited

F06_001

Page	Page description	supplementary page field	Date	Edited by	X
&EFS=V1KF1+V1UC32/1	IM 155 PN		12/21/2022	MKLEPADLO	
&EFS=V1KF1+V1UC32/2	ET200S Wiring DI		12/21/2022	MKLEPADLO	
&EFS=V1KF1+V1UC32/3	ET200S Wiring DO		12/21/2022	MKLEPADLO	
&EFS=V1KF1+V1UC32/4	ET200S Wiring F-DI		12/21/2022	MKLEPADLO	
&EFS=V1KF1+V1UC32/5	ET200S Cross-reference Input module		12/21/2022	MKLEPADLO	
&EFS=V1KF1+V1UC32/6	ET200S Cross-reference Output module		12/21/2022	MKLEPADLO	
&EFS=V1KF1+V1UC32/7	ET200S Cross-reference Safe input module		12/21/2022	MKLEPADLO	
&EFS=V1KF1+V1UC33/1	IM 155 PN		12/21/2022	MKLEPADLO	
&EFS=V1KF1+V1UC33/2	ET200S Wiring DI		12/21/2022	MKLEPADLO	
&EFS=V1KF1+V1UC33/3	ET200S Wiring DO		12/21/2022	MKLEPADLO	
&EFS=V1KF1+V1UC33/4	ET200S Wiring F-DI		12/21/2022	MKLEPADLO	
&EFS=V1KF1+V1UC33/5	ET200S Cross-reference Input module		12/21/2022	MKLEPADLO	
&EFS=V1KF1+V1UC33/6	ET200S Cross-reference Output module		12/21/2022	MKLEPADLO	
&EFS=V1KF1+V1UC33/7	ET200S Cross-reference Safe input module		12/21/2022	MKLEPADLO	
&EFS=V1SF0PG1+V1UC32/1	TP1500: SOP Display		12/21/2022	MKLEPADLO	
&EFS=V1SF0PG1+V1UC32/2	Operating box SOP		12/21/2022	MKLEPADLO	
&EFS=V1SF0PG2+V1UC33/1	TP1500: SOP Display		12/21/2022	MKLEPADLO	
&EFS=V1SF0PG2+V1UC33/2	Operating box SOP		12/21/2022	MKLEPADLO	
&EFS=V1UQ51BG0+V1UQ51/1	SENSORS		12/21/2022	MKLEPADLO	
&EFS=V1UQ51KF1+V1UQ51/1	CONNECTING MOD. FOR VTSA MANIFOLD		12/21/2022	MKLEPADLO	
&EFS=V1UQ51KF1+V1UQ51/2	I/O MOD. DI16 (8 x M12) FOR VTSA-F		12/21/2022	MKLEPADLO	
&EFS=V1UQ51KF1+V1UQ51/3	I/O MOD. DI16 (8 x M12) FOR VTSA-F		12/21/2022	MKLEPADLO	
&EFS=V1UQ51KF1+V1UQ51/4	CONNECTING MOD. FOR FESTO DQ		12/21/2022	MKLEPADLO	
&EFS=V1UQ51KF2+V1UQ51/1	CONNECTING MOD. FOR VTSA MANIFOLD		12/21/2022	MKLEPADLO	
&EFS=V1UQ51KF2+V1UQ51/2	I/O MOD. DI16 (8 x M12) FOR VTSA-F		12/21/2022	MKLEPADLO	
&EFS=V1UQ51KF2+V1UQ51/3	I/O MOD. DI16 (8 x M12) FOR VTSA-F		12/21/2022	MKLEPADLO	
&EFS=V1UQ51KF2+V1UQ51/4	CONNECTING MOD. FOR FESTO DQ		12/21/2022	MKLEPADLO	
&EFS=V1UQ51KF3+V1UQ51/1	CONNECTING MOD. FOR VTSA MANIFOLD		12/21/2022	MKLEPADLO	
&EFS=V1UQ51KF3+V1UQ51/2	I/O MOD. DI16 (8 x M12) FOR VTSA-F		12/21/2022	MKLEPADLO	
&EFS=V1UQ51KF3+V1UQ51/3	I/O MOD. DI16 (8 x M12) FOR VTSA-F		12/21/2022	MKLEPADLO	
&EFS=V1UQ51KF3+V1UQ51/4	CONNECTING MOD. FOR FESTO DQ		12/21/2022	MKLEPADLO	
&EFS=V1UQ51UQ1+V1UQ51UQ1/1	FESTO DQ CONNECTION QN1		12/21/2022	MKLEPADLO	
&EFS=V1UQ51UQ2+V1UQ51UQ2/1	FESTO DQ CONNECTION QN2		12/21/2022	MKLEPADLO	

			Date	12/22/2022	Volvo Trucks North America	Valiant TMS	Table of contents : &EFS=V1KF1+V1UC32/1 - &EFS=V1UQ51UQ2+V1UQ51UQ2/1	Drawing name: =2V04&EFS-EL	=
			Ed.	MKLEPADLO					+
			Appr		P6700 Underbody Mainline - Cell 2V04	Scale 1:1		Document type: EAB	Project nr: 22-16151
Modification	Date	Name	Original		Replacement of	Replaced by			Page 14 / 1630

Table of contents

Column X: An automatically generated page was edited

F06_001

Page	Page description	supplementary page field	Date	Edited by	X
&EFS=V1UQ51UQ3+V1UQ51UQ3/1	FESTO DQ CONNECTION QN3		12/21/2022	MKLEPADLO	
&EFS=V1UQ51UQ4+V1UQ51UQ4/1	FESTO DQ CONNECTION QN4		12/21/2022	MKLEPADLO	
&EFS=V1UQ51UQ5+V1UQ51UQ5/1	FESTO DQ CONNECTION QN5		12/21/2022	MKLEPADLO	
&EFS=V1UQ51UQ6+V1UQ51UQ6/1	FESTO DQ CONNECTION QN6		12/21/2022	MKLEPADLO	
&EFS=V1UQ51UQ7+V1UQ51UQ7/1	FESTO DQ CONNECTION QN7		12/21/2022	MKLEPADLO	
&EFS=V1UQ51UQ8+V1UQ51UQ8/1	FESTO DQ CONNECTION QN8		12/21/2022	MKLEPADLO	
&EFS=V1UQ51UQ9+V1UQ51UQ9/1	FESTO DQ CONNECTION QN9		12/21/2022	MKLEPADLO	
&EFS=V1UQ51UQ10+V1UQ51UQ10/1	FESTO DQ CONNECTION QN10		12/21/2022	MKLEPADLO	
&EFS=V1UQ51UQ11+V1UQ51UQ11/1	FESTO DQ CONNECTION QN11		12/21/2022	MKLEPADLO	
&EFS=V1UQ51UQ12+V1UQ51UQ12/1	FESTO DQ CONNECTION QN12		12/21/2022	MKLEPADLO	
&EFS=V1UQ51UQ13+V1UQ51UQ13/1	FESTO DQ CONNECTION QN13		12/21/2022	MKLEPADLO	
&EFS=V1UQ51UQ14+V1UQ51UQ14/1	FESTO DQ CONNECTION QN14		12/21/2022	MKLEPADLO	
&EFS=V1UQ51UQ15+V1UQ51UQ15/1	FESTO DQ CONNECTION QN15		12/21/2022	MKLEPADLO	
&EFS=V1UQ51UQ16+V1UQ51UQ16/1	FESTO DQ CONNECTION QN16		12/21/2022	MKLEPADLO	
&EFS=V1UQ51UQ17+V1UQ51UQ17/1	FESTO DQ CONNECTION QN17		12/21/2022	MKLEPADLO	
&EFS=V1UQ51UQ18+V1UQ51UQ18/1	FESTO DQ CONNECTION QN18		12/21/2022	MKLEPADLO	
&EFS=V1UQ51UQ19+V1UQ51UQ19/1	FESTO DQ CONNECTION QN19		12/21/2022	MKLEPADLO	
&EFS=V1UQ51UQ20+V1UQ51UQ20/1	FESTO DQ CONNECTION QN20		12/21/2022	MKLEPADLO	
&EFS=V1UQ51UQ21+V1UQ51UQ21/1	FESTO DQ CONNECTION QN21		12/21/2022	MKLEPADLO	
&EFS=V1UQ51UQ22+V1UQ51UQ22/1	FESTO DQ CONNECTION QN22		12/21/2022	MKLEPADLO	
&EFS=V1UQ51UQ23+V1UQ51UQ23/1	FESTO DQ CONNECTION QN23		12/21/2022	MKLEPADLO	
&EFS=V1UQ51UQ24+V1UQ51UQ24/1	FESTO DQ CONNECTION QN24		12/21/2022	MKLEPADLO	
&EFS=V1UQ51WC4+V1UQ51/1	24VDC		12/21/2022	MKLEPADLO	
&EFS=V1UQ52BG0+V1UQ52/1	SENSORS		12/21/2022	MKLEPADLO	
&EFS=V1UQ52KF1+V1UQ52/1	CONNECTING MOD. FOR VTSA MANIFOLD		12/21/2022	MKLEPADLO	
&EFS=V1UQ52KF1+V1UQ52/2	I/O MOD. DI16 (8 x M12) FOR VTSA-F		12/21/2022	MKLEPADLO	
&EFS=V1UQ52KF1+V1UQ52/3	CONNECTING MOD. FOR FESTO DQ		12/21/2022	MKLEPADLO	
&EFS=V1UQ52UQ1+V1UQ52UQ1/1	FESTO DQ CONNECTION QN1		12/21/2022	MKLEPADLO	
&EFS=V1UQ52UQ2+V1UQ52UQ2/1	FESTO DQ CONNECTION QN2		12/21/2022	MKLEPADLO	
&EFS=V1UQ52UQ3+V1UQ52UQ3/1	FESTO DQ CONNECTION QN3		12/21/2022	MKLEPADLO	
&EFS=V1UQ52UQ4+V1UQ52UQ4/1	FESTO DQ CONNECTION QN4		12/21/2022	MKLEPADLO	
&EFS=V1UQ52UQ5+V1UQ52UQ5/1	FESTO DQ CONNECTION QN5		12/21/2022	MKLEPADLO	
&EFS=V1UQ52UQ6+V1UQ52UQ6/1	FESTO DQ CONNECTION QN6		12/21/2022	MKLEPADLO	

			Date	12/22/2022	Volvo Trucks North America	Valiant TMS	Table of contents : &EFS=V1UQ51UQ3+V1UQ51UQ3/1 - &EFS=V1UQ52UQ6+V1UQ52UQ6/1	Drawing name: =2V04&EFS-EL	=
			Ed.	MKLEPADLO					+
			Appr		P6700 Underbody Mainline - Cell 2V04			Document type: EAB	Project nr: 22-16151	Page 15
Modification	Date	Name	Original		Replacement of / Replaced by	Scale 1:1				1630

Table of contents

Column X: An automatically generated page was edited

F06_001

Page	Page description	supplementary page field	Date	Edited by	X
&EFS=V1UQ52WC4+V1UQ52/1	24VDC		12/21/2022	MKLEPADLO	
&EFS=V1UQ53BG0+V1UQ53/1	SENSORS		12/21/2022	MKLEPADLO	
&EFS=V1UQ53KF1+V1UQ53/1	CONNECTING MOD. FOR VTSA MANIFOLD		12/21/2022	MKLEPADLO	
&EFS=V1UQ53KF1+V1UQ53/2	I/O MOD. DI16 (8 x M12) FOR VTSA-F		12/21/2022	MKLEPADLO	
&EFS=V1UQ53KF1+V1UQ53/3	CONNECTING MOD. FOR FESTO DQ		12/21/2022	MKLEPADLO	
&EFS=V1UQ53UQ1+V1UQ53UQ1/1	FESTO DQ CONNECTION QN1		12/21/2022	MKLEPADLO	
&EFS=V1UQ53UQ2+V1UQ53UQ2/1	FESTO DQ CONNECTION QN2		12/21/2022	MKLEPADLO	
&EFS=V1UQ53UQ3+V1UQ53UQ3/1	FESTO DQ CONNECTION QN3		12/21/2022	MKLEPADLO	
&EFS=V1UQ53UQ4+V1UQ53UQ4/1	FESTO DQ CONNECTION QN4		12/21/2022	MKLEPADLO	
&EFS=V1UQ53UQ5+V1UQ53UQ5/1	FESTO DQ CONNECTION QN5		12/21/2022	MKLEPADLO	
&EFS=V1UQ53UQ6+V1UQ53UQ6/1	FESTO DQ CONNECTION QN6		12/21/2022	MKLEPADLO	
&EFS=V1UQ53WC4+V1UQ53/1	24VDC		12/21/2022	MKLEPADLO	
&EFS=V1UQ54BG0+V1UQ54/1	SENSORS		12/21/2022	MKLEPADLO	
&EFS=V1UQ54KF1+V1UQ54/1	CONNECTING MOD. FOR VTSA MANIFOLD		12/21/2022	MKLEPADLO	
&EFS=V1UQ54KF1+V1UQ54/2	CONNECTING MOD. FOR FESTO DQ		12/21/2022	MKLEPADLO	
&EFS=V1UQ54UQ1+V1UQ54UQ1/1	FESTO DQ CONNECTION QN1		12/21/2022	MKLEPADLO	
&EFS=V1UQ54UQ2+V1UQ54UQ2/1	FESTO DQ CONNECTION QN2		12/21/2022	MKLEPADLO	
&EFS=V1UQ54UQ3+V1UQ54UQ3/1	FESTO DQ CONNECTION QN3		12/21/2022	MKLEPADLO	
&EFS=V1UQ54UQ4+V1UQ54UQ4/1	FESTO DQ CONNECTION QN4		12/21/2022	MKLEPADLO	
&EFS=V1UQ54WC4+V1UQ54/1	24VDC		12/21/2022	MKLEPADLO	
&EFS=V1UQ55BG0+V1UQ55/1	SENSORS		12/21/2022	MKLEPADLO	
&EFS=V1UQ55KF1+V1UQ55/1	CONNECTING MOD. FOR VTSA MANIFOLD		12/21/2022	MKLEPADLO	
&EFS=V1UQ55KF1+V1UQ55/2	I/O MOD. DI16 (8 x M12) FOR VTSA-F		12/21/2022	MKLEPADLO	
&EFS=V1UQ55KF1+V1UQ55/3	I/O MOD. DI16 (8 x M12) FOR VTSA-F		12/21/2022	MKLEPADLO	
&EFS=V1UQ55KF1+V1UQ55/4	CONNECTING MOD. FOR FESTO DQ		12/21/2022	MKLEPADLO	
&EFS=V1UQ55UQ1+V1UQ55UQ1/1	FESTO DQ CONNECTION QN1		12/21/2022	MKLEPADLO	
&EFS=V1UQ55UQ2+V1UQ55UQ2/1	FESTO DQ CONNECTION QN2		12/21/2022	MKLEPADLO	
&EFS=V1UQ55UQ3+V1UQ55UQ3/1	FESTO DQ CONNECTION QN3		12/21/2022	MKLEPADLO	
&EFS=V1UQ55UQ4+V1UQ55UQ4/1	FESTO DQ CONNECTION QN4		12/21/2022	MKLEPADLO	
&EFS=V1UQ55UQ5+V1UQ55UQ5/1	FESTO DQ CONNECTION QN5		12/21/2022	MKLEPADLO	
&EFS=V1UQ55UQ6+V1UQ55UQ6/1	FESTO DQ CONNECTION QN6		12/21/2022	MKLEPADLO	
&EFS=V1UQ55UQ7+V1UQ55UQ7/1	FESTO DQ CONNECTION QN7		12/21/2022	MKLEPADLO	
&EFS=V1UQ55UQ8+V1UQ55UQ8/1	FESTO DQ CONNECTION QN8		12/21/2022	MKLEPADLO	

			Date	12/22/2022	Volvo Trucks North America	Valiant TMS	Table of contents : &EFS=V1UQ52WC4+V1UQ52/1 - &EFS=V1UQ55UQ8+V1UQ55UQ8/1	Drawing name: =2V04&EFS-EL	=
			Ed.	MKLEPADLO					+
			Appr		P6700 Underbody Mainline - Cell 2V04			Document type: EAB	Project nr: 22-16151
Modification	Date	Name	Original		Replacement of / Replaced by	Scale 1:1			Page 16 / 1630

Table of contents

Column X: An automatically generated page was edited

F06_001

Page	Page description	supplementary page field	Date	Edited by	X
&EFS=V1UQ55UQ9+V1UQ55UQ9/1	FESTO DQ CONNECTION QN9		12/21/2022	MKLEPADLO	
&EFS=V1UQ55WC4+V1UQ55/1	24VDC		12/21/2022	MKLEPADLO	
&EFS=V1WC1+V1UC11/1	Incoming power supply 480 VAC		12/21/2022	MKLEPADLO	
&EFS=V1WC1+V1UC12/1	Incoming power supply 480 VAC		12/21/2022	MKLEPADLO	
&EFS=V1WC1+V1UC161/1	Incoming weld power supply 480 VAC		12/21/2022	MKLEPADLO	
&EFS=V1WC1+V1UC162/1	Incoming weld power supply 480 VAC		12/21/2022	MKLEPADLO	
&EFS=V1WC1+V1UC163/1	Incoming weld power supply 480 VAC		12/21/2022	MKLEPADLO	
&EFS=V1WC1+V1UC164/1	Incoming weld power supply 480 VAC		12/21/2022	MKLEPADLO	
&EFS=V1WC2+V1UC11/10	Power distribution 480 VAC		12/21/2022	MKLEPADLO	
&EFS=V1WC2+V1UC11/11	Power distribution 480 VAC		12/21/2022	MKLEPADLO	
&EFS=V1WC2+V1UC11/12	Power distribution 480 VAC		12/21/2022	MKLEPADLO	
&EFS=V1WC2+V1UC11/13	Power distribution 480 VAC		12/21/2022	MKLEPADLO	
&EFS=V1WC2+V1UC11/14	Power distribution 480 VAC		12/21/2022	MKLEPADLO	
&EFS=V1WC2+V1UC11/15	Power distribution 480 VAC		12/21/2022	MKLEPADLO	
&EFS=V1WC2+V1UC11/16	Power distribution 480 VAC		12/21/2022	MKLEPADLO	
&EFS=V1WC2+V1UC11/41	Power distribution 480 VAC monitoring		12/21/2022	MKLEPADLO	
&EFS=V1WC2+V1UC11/42	Power distribution 480 VAC monitoring		12/21/2022	MKLEPADLO	
&EFS=V1WC2+V1UC11/43	Power distribution 480 VAC monitoring		12/21/2022	MKLEPADLO	
&EFS=V1WC2+V1UC12/10	Power distribution 480 VAC		12/21/2022	MKLEPADLO	
&EFS=V1WC2+V1UC12/11	Power distribution 480 VAC		12/21/2022	MKLEPADLO	
&EFS=V1WC2+V1UC12/12	Power distribution 480 VAC		12/21/2022	MKLEPADLO	
&EFS=V1WC2+V1UC12/13	Power distribution 480 VAC		12/21/2022	MKLEPADLO	
&EFS=V1WC2+V1UC12/14	Power distribution 480 VAC		12/21/2022	MKLEPADLO	
&EFS=V1WC2+V1UC12/15	Power distribution 480 VAC		12/21/2022	MKLEPADLO	
&EFS=V1WC2+V1UC12/16	Power distribution 480 VAC		12/21/2022	MKLEPADLO	
&EFS=V1WC2+V1UC12/41	Power distribution 480 VAC monitoring		12/21/2022	MKLEPADLO	
&EFS=V1WC2+V1UC12/42	Power distribution 480 VAC monitoring		12/21/2022	MKLEPADLO	
&EFS=V1WC2+V1UC12/43	Power distribution 480 VAC monitoring		12/21/2022	MKLEPADLO	
&EFS=V1WC2+V1UC161/10	Weld power distribution 480 VAC		12/22/2022	MKLEPADLO	
&EFS=V1WC2+V1UC162/10	Weld power distribution 480 VAC		12/22/2022	MKLEPADLO	
&EFS=V1WC2+V1UC163/10	Weld power distribution 480 VAC		12/22/2022	MKLEPADLO	
&EFS=V1WC2+V1UC164/10	Weld power distribution 480 VAC		12/22/2022	MKLEPADLO	
&EFS=V1WC3+V1UC11/1	Power Distribution 120 VAC (Above Disconnect)		12/21/2022	MKLEPADLO	

			Date	12/22/2022	Volvo Trucks North America	Valiant TMS	Table of contents : &EFS=V1UQ55UQ9+V1UQ55UQ9/1 - &EFS=V1WC3+V1UC11/1	Drawing name: =2V04&EFS-EL	=
			Ed.	MKLEPADLO					+
			Appr		P6700 Underbody Mainline - Cell 2V04	Scale 1:1		Document type: EAB	Project nr: 22-16151	Page 17 / 1630
Modification	Date	Name	Original		Replacement of / Replaced by				

Table of contents

Column X: An automatically generated page was edited

F06_001

Page	Page description	supplementary page field	Date	Edited by	X
&EFS=V1WC3+V1UC11/2	Power Distribution 120 VAC (Below Disconnect)		12/21/2022	MKLEPADLO	
&EFS=V1WC3+V1UC11/3	Power Distribution 120 VAC (Below Disconnect)		12/21/2022	MKLEPADLO	
&EFS=V1WC3+V1UC11/4	Power distribution 120 VAC monitoring (Above Disconnect)		12/21/2022	MKLEPADLO	
&EFS=V1WC3+V1UC12/1	Power Distribution 120 VAC (Above Disconnect)		12/21/2022	MKLEPADLO	
&EFS=V1WC3+V1UC12/2	Power Distribution 120 VAC (Below Disconnect)		12/21/2022	MKLEPADLO	
&EFS=V1WC3+V1UC12/3	Power Distribution 120 VAC (Below Disconnect)		12/21/2022	MKLEPADLO	
&EFS=V1WC3+V1UC12/4	Power distribution 120 VAC monitoring (Above Disconnect)		12/21/2022	MKLEPADLO	
&EFS=V1WC3+V1UC14/1	Power distribution 120 VAC		12/21/2022	MKLEPADLO	
&EFS=V1WC3+V1UC14/2	Monitoring 120VAC		12/21/2022	MKLEPADLO	
&EFS=V1WC3+V1UC15/1	Power distribution 120 VAC		12/21/2022	MKLEPADLO	
&EFS=V1WC3+V1UC15/2	Monitoring 120VAC		12/21/2022	MKLEPADLO	
&EFS=V1WC4+V1UC11/1	Power distribution 24VDC (Above Disconnect)		12/21/2022	MKLEPADLO	
&EFS=V1WC4+V1UC11/2	Power distribution 24VDC HL+		12/21/2022	MKLEPADLO	
&EFS=V1WC4+V1UC11/3	Power distribution 24VDC 1L+		12/21/2022	MKLEPADLO	
&EFS=V1WC4+V1UC11/4	Power distribution 24VDC 2L+		12/21/2022	MKLEPADLO	
&EFS=V1WC4+V1UC11/5	Power distribution 24VDC 3L+		12/21/2022	MKLEPADLO	
&EFS=V1WC4+V1UC11/6	Power distribution 24VDC 4L+		12/21/2022	MKLEPADLO	
&EFS=V1WC4+V1UC11/7	Power distribution 24VDC 5L+		12/21/2022	MKLEPADLO	
&EFS=V1WC4+V1UC11/8	Power distribution 24VDC 6L+		12/21/2022	MKLEPADLO	
&EFS=V1WC4+V1UC11/9	Power distribution 24VDC 7L+		12/21/2022	MKLEPADLO	
&EFS=V1WC4+V1UC11/10	Power distribution 24VDC 8L+		12/21/2022	MKLEPADLO	
&EFS=V1WC4+V1UC11/11	Power distribution 24VDC (Below Disconnect)		12/21/2022	MKLEPADLO	
&EFS=V1WC4+V1UC11/12	Power distribution 24VDC 11L+		12/21/2022	MKLEPADLO	
&EFS=V1WC4+V1UC11/13	Power distribution 24VDC 12L+		12/21/2022	MKLEPADLO	
&EFS=V1WC4+V1UC11/14	Power distribution 24VDC 13L+		12/21/2022	MKLEPADLO	
&EFS=V1WC4+V1UC11/15	Power distribution 24VDC 14L+		12/21/2022	MKLEPADLO	
&EFS=V1WC4+V1UC11/16	Power distribution 24VDC 15L+		12/21/2022	MKLEPADLO	
&EFS=V1WC4+V1UC11/17	Power distribution 24VDC 16L+		12/21/2022	MKLEPADLO	
&EFS=V1WC4+V1UC11/18	Power distribution 24VDC 17L+		12/21/2022	MKLEPADLO	
&EFS=V1WC4+V1UC11/19	Power distribution 24VDC 18L+		12/21/2022	MKLEPADLO	
&EFS=V1WC4+V1UC11/20	24VDC Unswitched Power 1		12/21/2022	MKLEPADLO	
&EFS=V1WC4+V1UC11/21	24VDC Unswitched Power 2		12/21/2022	MKLEPADLO	
&EFS=V1WC4+V1UC11/22	24VDC Unswitched Power 3		12/21/2022	MKLEPADLO	

			Date	12/22/2022	Volvo Trucks North America	Valiant TMS	Table of contents : &EFS=V1WC3+V1UC11/2 - &EFS=V1WC4+V1UC11/22	Drawing name: =2V04&EFS-EL	=
			Ed.	MKLEPADLO					+
			Appr		P6700 Underbody Mainline - Cell 2V04			Document type: EAB	Project nr: 22-16151	Page 18
Modification	Date	Name	Original		Replacement of / Replaced by	Scale 1:1				1630

Table of contents

Column X: An automatically generated page was edited

F06_001

Page	Page description	supplementary page field	Date	Edited by	X
&EFS=V1WC4+V1UC11/23	24VDC Unswitched Power 4		12/21/2022	MKLEPADLO	
&EFS=V1WC4+V1UC11/24	24VDC Switched Power 1		12/21/2022	MKLEPADLO	
&EFS=V1WC4+V1UC11/25	24VDC Switched Power 2		12/21/2022	MKLEPADLO	
&EFS=V1WC4+V1UC11/26	24VDC Switched Power 3		12/21/2022	MKLEPADLO	
&EFS=V1WC4+V1UC11/27	24VDC Switched Power 4		12/21/2022	MKLEPADLO	
&EFS=V1WC4+V1UC12/1	Power distribution 24VDC (Above Disconnect)		12/21/2022	MKLEPADLO	
&EFS=V1WC4+V1UC12/2	Power distribution 24VDC HL+		12/21/2022	MKLEPADLO	
&EFS=V1WC4+V1UC12/3	Power distribution 24VDC 1L+		12/21/2022	MKLEPADLO	
&EFS=V1WC4+V1UC12/4	Power distribution 24VDC 2L+		12/21/2022	MKLEPADLO	
&EFS=V1WC4+V1UC12/5	Power distribution 24VDC 3L+		12/21/2022	MKLEPADLO	
&EFS=V1WC4+V1UC12/6	Power distribution 24VDC 4L+		12/21/2022	MKLEPADLO	
&EFS=V1WC4+V1UC12/7	Power distribution 24VDC 5L+		12/21/2022	MKLEPADLO	
&EFS=V1WC4+V1UC12/8	Power distribution 24VDC 6L+		12/21/2022	MKLEPADLO	
&EFS=V1WC4+V1UC12/9	Power distribution 24VDC 7L+		12/21/2022	MKLEPADLO	
&EFS=V1WC4+V1UC12/10	Power distribution 24VDC 8L+		12/21/2022	MKLEPADLO	
&EFS=V1WC4+V1UC12/11	Power distribution 24VDC (Below Disconnect)		12/21/2022	MKLEPADLO	
&EFS=V1WC4+V1UC12/12	Power distribution 24VDC 11L+		12/21/2022	MKLEPADLO	
&EFS=V1WC4+V1UC12/13	Power distribution 24VDC 12L+		12/21/2022	MKLEPADLO	
&EFS=V1WC4+V1UC12/14	Power distribution 24VDC 13L+		12/21/2022	MKLEPADLO	
&EFS=V1WC4+V1UC12/15	Power distribution 24VDC 14L+		12/21/2022	MKLEPADLO	
&EFS=V1WC4+V1UC12/16	Power distribution 24VDC 15L+		12/21/2022	MKLEPADLO	
&EFS=V1WC4+V1UC12/17	Power distribution 24VDC 16L+		12/21/2022	MKLEPADLO	
&EFS=V1WC4+V1UC12/18	Power distribution 24VDC 17L+		12/21/2022	MKLEPADLO	
&EFS=V1WC4+V1UC12/19	Power distribution 24VDC 18L+		12/21/2022	MKLEPADLO	
&EFS=V1WC4+V1UC12/20	24VDC Unswitched Power 1		12/21/2022	MKLEPADLO	
&EFS=V1WC4+V1UC12/21	24VDC Unswitched Power 2		12/21/2022	MKLEPADLO	
&EFS=V1WC4+V1UC12/22	24VDC Unswitched Power 3		12/21/2022	MKLEPADLO	
&EFS=V1WC4+V1UC12/23	24VDC Unswitched Power 4		12/21/2022	MKLEPADLO	
&EFS=V1WC4+V1UC12/24	24VDC Switched Power 1		12/21/2022	MKLEPADLO	
&EFS=V1WC4+V1UC12/25	24VDC Switched Power 2		12/21/2022	MKLEPADLO	
&EFS=V1WC4+V1UC12/26	24VDC Switched Power 3		12/21/2022	MKLEPADLO	
&EFS=V1WC4+V1UC12/27	24VDC Switched Power 4		12/21/2022	MKLEPADLO	
&EFS=V1WC4+V1UC14/1	Power distribution 24VDC for Inputs		12/21/2022	MKLEPADLO	

			Date	12/22/2022	Volvo Trucks North America	Valiant TMS	Table of contents : &EFS=V1WC4+V1UC11/23 - &EFS=V1WC4+V1UC14/1	Drawing name: =2V04&EFS-EL	=
			Ed.	MKLEPADLO					+
			Appr		P6700 Underbody Mainline - Cell 2V04			Document type: EAB	Project nr: 22-16151
Modification	Date	Name	Original		Replacement of / Replaced by	Scale 1:1			Page 19 / 1630

Table of contents

Column X: An automatically generated page was edited

F06_001

Page	Page description	supplementary page field	Date	Edited by	X
&EFS=V1WC4+V1UC14/2	Power distribution 24VDC 1L+		12/21/2022	MKLEPADLO	
&EFS=V1WC4+V1UC14/3	Power distribution 24VDC 2L+		12/21/2022	MKLEPADLO	
&EFS=V1WC4+V1UC14/4	Power distribution 24VDC 3L+		12/21/2022	MKLEPADLO	
&EFS=V1WC4+V1UC14/5	Power distribution 24VDC 4L+		12/21/2022	MKLEPADLO	
&EFS=V1WC4+V1UC14/6	Power distribution 24VDC 5L+		12/21/2022	MKLEPADLO	
&EFS=V1WC4+V1UC14/7	Power distribution 24VDC 6L+		12/21/2022	MKLEPADLO	
&EFS=V1WC4+V1UC14/8	Power distribution 24VDC 7L+		12/21/2022	MKLEPADLO	
&EFS=V1WC4+V1UC14/9	Power distribution 24VDC 8L+		12/21/2022	MKLEPADLO	
&EFS=V1WC4+V1UC14/11	Power distribution 24VDC (Below Disconnect)		12/21/2022	MKLEPADLO	
&EFS=V1WC4+V1UC14/12	Power distribution 24VDC 11L+		12/21/2022	MKLEPADLO	
&EFS=V1WC4+V1UC14/13	Power distribution 24VDC 12L+		12/21/2022	MKLEPADLO	
&EFS=V1WC4+V1UC14/14	Power distribution 24VDC 13L+		12/21/2022	MKLEPADLO	
&EFS=V1WC4+V1UC14/15	Power distribution 24VDC 14L+		12/21/2022	MKLEPADLO	
&EFS=V1WC4+V1UC14/16	Power distribution 24VDC 15L+		12/21/2022	MKLEPADLO	
&EFS=V1WC4+V1UC14/17	Power distribution 24VDC 16L+		12/21/2022	MKLEPADLO	
&EFS=V1WC4+V1UC14/18	Power distribution 24VDC 17L+		12/21/2022	MKLEPADLO	
&EFS=V1WC4+V1UC14/19	Power distribution 24VDC 18L+		12/21/2022	MKLEPADLO	
&EFS=V1WC4+V1UC14/20	24VDC Switched Power 1		12/21/2022	MKLEPADLO	
&EFS=V1WC4+V1UC14/21	24VDC Switched Power 2		12/21/2022	MKLEPADLO	
&EFS=V1WC4+V1UC14/22	24VDC Switched Power 3		12/21/2022	MKLEPADLO	
&EFS=V1WC4+V1UC14/23	24VDC Switched Power 4		12/21/2022	MKLEPADLO	
&EFS=V1WC4+V1UC15/1	Power distribution 24VDC for Inputs		12/21/2022	MKLEPADLO	
&EFS=V1WC4+V1UC15/2	Power distribution 24VDC 1L+		12/21/2022	MKLEPADLO	
&EFS=V1WC4+V1UC15/3	Power distribution 24VDC 2L+		12/21/2022	MKLEPADLO	
&EFS=V1WC4+V1UC15/4	Power distribution 24VDC 3L+		12/21/2022	MKLEPADLO	
&EFS=V1WC4+V1UC15/5	Power distribution 24VDC 4L+		12/21/2022	MKLEPADLO	
&EFS=V1WC4+V1UC15/6	Power distribution 24VDC 5L+		12/21/2022	MKLEPADLO	
&EFS=V1WC4+V1UC15/7	Power distribution 24VDC 6L+		12/21/2022	MKLEPADLO	
&EFS=V1WC4+V1UC15/8	Power distribution 24VDC 7L+		12/21/2022	MKLEPADLO	
&EFS=V1WC4+V1UC15/9	Power distribution 24VDC 8L+		12/21/2022	MKLEPADLO	
&EFS=V1WC4+V1UC15/11	Power distribution 24VDC (Below Disconnect)		12/21/2022	MKLEPADLO	
&EFS=V1WC4+V1UC15/12	Power distribution 24VDC 11L+		12/21/2022	MKLEPADLO	
&EFS=V1WC4+V1UC15/13	Power distribution 24VDC 12L+		12/21/2022	MKLEPADLO	

			Date	12/22/2022	Volvo Trucks North America	Valiant TMS	Table of contents : &EFS=V1WC4+V1UC14/2 - &EFS=V1WC4+V1UC15/13	Drawing name: =2V04&EFS-EL	=
			Ed.	MKLEPADLO					+
			Appr		P6700 Underbody Mainline - Cell 2V04			Document type: EAB	Project nr: 22-16151	Page 20
Modification	Date	Name	Original		Replacement of / Replaced by	Scale 1:1				1630

Table of contents

Column X: An automatically generated page was edited

F06_001

Page	Page description	supplementary page field	Date	Edited by	X
&EFS=V1WC4+V1UC15/14	Power distribution 24VDC 13L+		12/21/2022	MKLEPADLO	
&EFS=V1WC4+V1UC15/15	Power distribution 24VDC 14L+		12/21/2022	MKLEPADLO	
&EFS=V1WC4+V1UC15/16	Power distribution 24VDC 15L+		12/21/2022	MKLEPADLO	
&EFS=V1WC4+V1UC15/17	Power distribution 24VDC 16L+		12/21/2022	MKLEPADLO	
&EFS=V1WC4+V1UC15/18	Power distribution 24VDC 17L+		12/21/2022	MKLEPADLO	
&EFS=V1WC4+V1UC15/19	Power distribution 24VDC 18L+		12/21/2022	MKLEPADLO	
&EFS=V1WC4+V1UC15/20	24VDC Switched Power 1		12/21/2022	MKLEPADLO	
&EFS=V1WC4+V1UC15/21	24VDC Switched Power 2		12/21/2022	MKLEPADLO	
&EFS=V1WC4+V1UC15/22	24VDC Switched Power 3		12/21/2022	MKLEPADLO	
&EFS=V1WC4+V1UC15/23	24VDC Switched Power 4		12/21/2022	MKLEPADLO	
&EFS=V1WC4+V1UC32/1	Incomming power supply 24 VDC		12/21/2022	MKLEPADLO	
&EFS=V1WC4+V1UC32/2	Power distribution 24VDC 1L+		12/21/2022	MKLEPADLO	
&EFS=V1WC4+V1UC32/3	Monitoring 24VDC		12/21/2022	MKLEPADLO	
&EFS=V1WC4+V1UC33/1	Incomming power supply 24 VDC		12/21/2022	MKLEPADLO	
&EFS=V1WC4+V1UC33/2	Power distribution 24VDC 1L+		12/21/2022	MKLEPADLO	
&EFS=V1WC4+V1UC33/3	Monitoring 24VDC		12/21/2022	MKLEPADLO	
&EFS=V1WR1UQ51BG0+V1WR1UQ51/1	SENSORS		12/21/2022	MKLEPADLO	
&EFS=V1WR1UQ51KF1+V1WR1UQ51/1	CONNECTING MOD. FOR VTSA MANIFOLD		12/21/2022	MKLEPADLO	
&EFS=V1WR1UQ51KF1+V1WR1UQ51/2	I/O MOD. DI16 (8 x M12) FOR VTSA-F		12/21/2022	MKLEPADLO	
&EFS=V1WR1UQ51KF1+V1WR1UQ51/3	I/O MOD. DI16 (8 x M12) FOR VTSA-F		12/21/2022	MKLEPADLO	
&EFS=V1WR1UQ51KF1+V1WR1UQ51/4	CONNECTING MOD. FOR FESTO DQ		12/21/2022	MKLEPADLO	
&EFS=V1WR1UQ51UQ1+V1WR1UQ51UQ1/1	FESTO DQ CONNECTION QN1		12/21/2022	MKLEPADLO	
&EFS=V1WR1UQ51UQ2+V1WR1UQ51UQ2/1	FESTO DQ CONNECTION QN2		12/21/2022	MKLEPADLO	
&EFS=V1WR1UQ51UQ3+V1WR1UQ51UQ3/1	FESTO DQ CONNECTION QN3		12/21/2022	MKLEPADLO	
&EFS=V1WR1UQ51UQ4+V1WR1UQ51UQ4/1	FESTO DQ CONNECTION QN4		12/21/2022	MKLEPADLO	
&EFS=V1WR1UQ51UQ5+V1WR1UQ51UQ5/1	FESTO DQ CONNECTION QN5		12/21/2022	MKLEPADLO	
&EFS=V1WR1UQ51UQ6+V1WR1UQ51UQ6/1	FESTO DQ CONNECTION QN6		12/21/2022	MKLEPADLO	
&EFS=V1WR1UQ51UQ7+V1WR1UQ51UQ7/1	FESTO DQ CONNECTION QN7		12/21/2022	MKLEPADLO	
&EFS=V1WR1UQ51UQ8+V1WR1UQ51UQ8/1	FESTO DQ CONNECTION QN8		12/21/2022	MKLEPADLO	
&EFS=V1WR1UQ51UQ9+V1WR1UQ51UQ9/1	FESTO DQ CONNECTION QN9		12/21/2022	MKLEPADLO	
&EFS=V1WR1UQ51WC4+V1WR1UQ51/1	24VDC		12/21/2022	MKLEPADLO	
&EFS=V1WR1WC1+V1WR1UC01/1	Incoming power & profinet		12/22/2022	MKLEPADLO	
&ELU=KF0+UC31/1	Layout UC31 MOP		12/21/2022	MKLEPADLO	

			Date	12/22/2022	Volvo Trucks North America	Valiant TMS	Table of contents : &EFS=V1WC4+V1UC15/14 - &ELU=KF0+UC31/1	Drawing name: =2V04&EFS-EL	=
			Ed.	MKLEPADLO					+
			Appr		P6700 Underbody Mainline - Cell 2V04			Document type: EAB	Project nr: 22-16151
Modification	Date	Name	Original		Replacement of / Replaced by	Scale 1:1			Page 21 / 1630

Table of contents

Column X: An automatically generated page was edited

F06_001

Page	Page description	supplementary page field	Date	Edited by	X
&ELU=KF0+UC31/2	Layout UC31 MOP External View		12/21/2022	MKLEPADLO	
&ELU=KF0+UC31/3	Layout UC31 MOP Internal View		12/21/2022	MKLEPADLO	
&ELU=V1SF0PG1+V1UC32/1	Layout UC32 SOP External View		12/21/2022	MKLEPADLO	
&ELU=V1SF0PG1+V1UC32/2	Layout UC32 SOP Internal View		12/21/2022	MKLEPADLO	
&ELU=V1SF0PG2+V1UC33/1	Layout UC33 SOP External View		12/21/2022	MKLEPADLO	
&ELU=V1SF0PG2+V1UC33/2	Layout UC33 SOP Internal View		12/21/2022	MKLEPADLO	
&ELU=V1UC11+V1UC11/1	Layout UC11 PDP External View		12/21/2022	MKLEPADLO	
&ELU=V1UC11+V1UC11/2	Layout UC11 PDP Internal View		12/21/2022	MKLEPADLO	
&ELU=V1UC12+V1UC12/1	Layout UC12 PDP External View		12/21/2022	MKLEPADLO	
&ELU=V1UC12+V1UC12/2	Layout UC12 PDP Internal View		12/21/2022	MKLEPADLO	
&ELU=V1UC14+V1UC14/1	Layout UC14 RIO External View		12/21/2022	MKLEPADLO	
&ELU=V1UC14+V1UC14/2	Layout UC14 RIO Internal Controls View		12/21/2022	MKLEPADLO	
&ELU=V1UC15+V1UC15/1	Layout UC15 RIO External View		12/21/2022	MKLEPADLO	
&ELU=V1UC15+V1UC15/2	Layout UC15 RIO Internal Controls View		12/21/2022	MKLEPADLO	
&EMA=KF0KF1+UC31/1	Cable diagram =KF0KF1+UC31-KF100-P1		12/21/2022	MKLEPADLO	
&EMA=KF0KF1+UC31/2	Cable diagram =KF0KF1+UC31-KF100.31-P6		12/21/2022	MKLEPADLO	
&EMA=KF0KF1+UC31/3	Cable diagram =KF0KF1+UC31-KF100.31-P7		12/21/2022	MKLEPADLO	
&EMA=KF0KF1+UC31/4	Cable diagram =KF0KF1+UC31-KF100.31-P8		12/21/2022	MKLEPADLO	
&EMA=KF0KF1+UC31/5	Cable diagram =KF0KF1+UC31-KF100.31-P9		12/21/2022	MKLEPADLO	
&EMA=KF0KF1+UC31/6	Cable diagram =KF0KF1+UC31-KF100.31-P10		12/21/2022	MKLEPADLO	
&EMA=KF0KF1+UC31/7	Cable diagram =KF0KF1+UC31-KF100.31-P11		12/21/2022	MKLEPADLO	
&EMA=KF0KF1+UC31/8	Cable diagram =KF0KF1+UC31-KF100.31-P12		12/21/2022	MKLEPADLO	
&EMA=KF0KF1+UC31/9	Cable diagram =KF0KF1+UC31-KF100.31-P13		12/21/2022	MKLEPADLO	
&EMA=KF0KF1+UC31/10	Cable diagram =KF0KF1+UC31-KF100.31-P14		12/21/2022	MKLEPADLO	
&EMA=KF0KF1+UC31/11	Cable diagram =KF0KF1+UC31-KF100.31-P15		12/21/2022	MKLEPADLO	
&EMA=KF0KF1+UC31/12	Cable diagram =KF0KF1+UC31-KF100.31-P16		12/21/2022	MKLEPADLO	
&EMA=KF0WC3+UC31/1	Cable diagram =KF0WC3+UC31-W1		12/21/2022	MKLEPADLO	
&EMA=KH0+KH0/1	Cable diagram =KH0+KH0-W1		12/21/2022	MKLEPADLO	
&EMA=KH0+KH0/2	Cable diagram =KH0+KH0-W3		12/21/2022	MKLEPADLO	
&EMA=KH0+KH0/3	Cable diagram =KH0+KH0-W4		12/21/2022	MKLEPADLO	
&EMA=KH0+KH0/4	Cable diagram =KH0+KH0-W5		12/21/2022	MKLEPADLO	
&EMA=KH0+KH0/5	Cable diagram =KH0+KH0-W6		12/21/2022	MKLEPADLO	
&EMA=KH0+KH0/6	Cable diagram =KH0+KH0-W7		12/21/2022	MKLEPADLO	

			Date	12/22/2022	Volvo Trucks North America	Valiant TMS	Table of contents : &ELU=KF0+UC31/2 - &EMA=KH0+KH0/6	Drawing name: =2V04&EFS-EL	=
			Ed.	MKLEPADLO					+
			Appr		P6700 Underbody Mainline - Cell 2V04			Document type: EAB	Project nr: 22-16151
Modification	Date	Name	Original		Replacement of	Replaced by	Scale 1:1		Page 22 / 1630

Table of contents

Column X: An automatically generated page was edited

F06_001

Page	Page description	supplementary page field	Date	Edited by	X
&EMA=KH0+KH0/7	Cable diagram =KH0+KH0-W8		12/21/2022	MKLEPADLO	
&EMA=KH0+KH0/8	Cable diagram =KH0+KH0-W9		12/21/2022	MKLEPADLO	
&EMA=KH0+KH0/9	Cable diagram =KH0+KH0-W10		12/21/2022	MKLEPADLO	
&EMA=KH3+KH3/1	Cable diagram =KH3+KH3-W1		12/21/2022	MKLEPADLO	
&EMA=KH3+KH3/2	Cable diagram =KH3+KH3-W2		12/21/2022	MKLEPADLO	
&EMA=V1AR11KF1+V1AR11UC01/1	Cable diagram =V1AR11KF1+V1AR11UC01-KF100.11-P6		12/21/2022	MKLEPADLO	
&EMA=V1AR11UQ41BG0+V1AR11UQ41/1	Cable diagram =V1AR11UQ41BG0+V1AR11UQ41-W1		12/21/2022	MKLEPADLO	
&EMA=V1AR11UQ41BG0+V1AR11UQ41/2	Cable diagram =V1AR11UQ41BG0+V1AR11UQ41-W1.1		12/21/2022	MKLEPADLO	
&EMA=V1AR11UQ41BG0+V1AR11UQ41/3	Cable diagram =V1AR11UQ41BG0+V1AR11UQ41-W1.2		12/21/2022	MKLEPADLO	
&EMA=V1AR11UQ41BG0+V1AR11UQ41/4	Cable diagram =V1AR11UQ41BG0+V1AR11UQ41-W2		12/21/2022	MKLEPADLO	
&EMA=V1AR11UQ41BG0+V1AR11UQ41/5	Cable diagram =V1AR11UQ41BG0+V1AR11UQ41-W2.1		12/21/2022	MKLEPADLO	
&EMA=V1AR11UQ41BG0+V1AR11UQ41/6	Cable diagram =V1AR11UQ41BG0+V1AR11UQ41-W2.2		12/21/2022	MKLEPADLO	
&EMA=V1AR11UQ41KF1+V1AR11UQ41/1	Cable diagram =V1AR11UQ41KF1+V1AR11UQ41-W1		12/21/2022	MKLEPADLO	
&EMA=V1AR11UQ41KF1+V1AR11UQ41/2	Cable diagram =V1AR11UQ41KF1+V1AR11UQ41-W1.1		12/21/2022	MKLEPADLO	
&EMA=V1AR11UQ41KF1+V1AR11UQ41/3	Cable diagram =V1AR11UQ41KF1+V1AR11UQ41-W1.2		12/21/2022	MKLEPADLO	
&EMA=V1AR11UQ41KF1+V1AR11UQ41/4	Cable diagram =V1AR11UQ41KF1+V1AR11UQ41-WF1		12/21/2022	MKLEPADLO	
&EMA=V1AR11UQ41KF2+V1AR11UQ41/1	Cable diagram =V1AR11UQ41KF2+V1AR11UQ41-W1.1		12/21/2022	MKLEPADLO	
&EMA=V1AR11UQ41KF2+V1AR11UQ41/2	Cable diagram =V1AR11UQ41KF2+V1AR11UQ41-WF2		12/21/2022	MKLEPADLO	
&EMA=V1AR11UQ41KF3+V1AR11UQ41/1	Cable diagram =V1AR11UQ41KF3+V1AR11UQ41-W2.2		12/21/2022	MKLEPADLO	
&EMA=V1AR11UQ41KF3+V1AR11UQ41/2	Cable diagram =V1AR11UQ41KF3+V1AR11UQ41-WF3		12/21/2022	MKLEPADLO	
&EMA=V1AR11UQ41UQ1.1+V1AR11UQ41UQ1.1/1	Cable diagram =V1AR11UQ41UQ1.1+V1AR11UQ41UQ1.1-W1		12/21/2022	MKLEPADLO	
&EMA=V1AR11UQ41UQ2.1+V1AR11UQ41UQ2.1/1	Cable diagram =V1AR11UQ41UQ2.1+V1AR11UQ41UQ2.1-W1		12/21/2022	MKLEPADLO	
&EMA=V1AR11UQ41UQ3.1+V1AR11UQ41UQ3.1/1	Cable diagram =V1AR11UQ41UQ3.1+V1AR11UQ41UQ3.1-W1		12/21/2022	MKLEPADLO	
&EMA=V1AR11UQ41UQ3.2+V1AR11UQ41UQ3.2/1	Cable diagram =V1AR11UQ41UQ3.2+V1AR11UQ41UQ3.2-W1		12/21/2022	MKLEPADLO	
&EMA=V1AR11UQ41UQ4.1+V1AR11UQ41UQ4.1/1	Cable diagram =V1AR11UQ41UQ4.1+V1AR11UQ41UQ4.1-W1		12/21/2022	MKLEPADLO	
&EMA=V1AR11UQ41UQ4.2+V1AR11UQ41UQ4.2/1	Cable diagram =V1AR11UQ41UQ4.2+V1AR11UQ41UQ4.2-W1		12/21/2022	MKLEPADLO	
&EMA=V1AR11UQ41UQ4.3+V1AR11UQ41UQ4.3/1	Cable diagram =V1AR11UQ41UQ4.3+V1AR11UQ41UQ4.3-W1		12/21/2022	MKLEPADLO	
&EMA=V1AR11UQ41UQ4.4+V1AR11UQ41UQ4.4/1	Cable diagram =V1AR11UQ41UQ4.4+V1AR11UQ41UQ4.4-W1		12/21/2022	MKLEPADLO	
&EMA=V1AR11UQ41UQ5.1+V1AR11UQ41UQ5.1/1	Cable diagram =V1AR11UQ41UQ5.1+V1AR11UQ41UQ5.1-W1		12/21/2022	MKLEPADLO	
&EMA=V1AR11UQ41UQ5.2+V1AR11UQ41UQ5.2/1	Cable diagram =V1AR11UQ41UQ5.2+V1AR11UQ41UQ5.2-W1		12/21/2022	MKLEPADLO	
&EMA=V1AR11UQ41UQ5.3+V1AR11UQ41UQ5.3/1	Cable diagram =V1AR11UQ41UQ5.3+V1AR11UQ41UQ5.3-W1		12/21/2022	MKLEPADLO	
&EMA=V1AR11UQ41UQ5.4+V1AR11UQ41UQ5.4/1	Cable diagram =V1AR11UQ41UQ5.4+V1AR11UQ41UQ5.4-W1		12/21/2022	MKLEPADLO	
&EMA=V1AR11UQ41UQ6.1+V1AR11UQ41UQ6.1/1	Cable diagram =V1AR11UQ41UQ6.1+V1AR11UQ41UQ6.1-W1		12/21/2022	MKLEPADLO	

			Date	12/22/2022	Volvo Trucks North America	Valiant TMS	Table of contents : &EMA=KH0+KH0/7 - &EMA=V1AR11UQ41UQ6.1+V1AR11UQ41UQ6.1/1	Drawing name: =2V04&EFS-EL	=
			Ed.	MKLEPADLO					+
			Appr		P6700 Underbody Mainline - Cell 2V04			Document type: EAB	Project nr: 22-16151
Modification	Date	Name	Original		Replacement of / Replaced by	Scale 1:1			Page 23 / 1630

Table of contents

Column X: An automatically generated page was edited

F06_001

Page	Page description	supplementary page field	Date	Edited by	X
&EMA=V1AR11UQ41UQ7.1+V1AR11UQ41UQ7.1/1	Cable diagram =V1AR11UQ41UQ7.1+V1AR11UQ41UQ7.1-W1		12/21/2022	MKLEPADLO	
&EMA=V1AR11UQ41UQ8.1+V1AR11UQ41UQ8.1/1	Cable diagram =V1AR11UQ41UQ8.1+V1AR11UQ41UQ8.1-W1		12/21/2022	MKLEPADLO	
&EMA=V1AR11UQ41UQ8.2+V1AR11UQ41UQ8.2/1	Cable diagram =V1AR11UQ41UQ8.2+V1AR11UQ41UQ8.2-W1		12/21/2022	MKLEPADLO	
&EMA=V1AR11UQ41UQ8.3+V1AR11UQ41UQ8.3/1	Cable diagram =V1AR11UQ41UQ8.3+V1AR11UQ41UQ8.3-W1		12/21/2022	MKLEPADLO	
&EMA=V1AR11UQ41UQ8.4+V1AR11UQ41UQ8.4/1	Cable diagram =V1AR11UQ41UQ8.4+V1AR11UQ41UQ8.4-W1		12/21/2022	MKLEPADLO	
&EMA=V1AR11UQ41UQ9.1+V1AR11UQ41UQ9.1/1	Cable diagram =V1AR11UQ41UQ9.1+V1AR11UQ41UQ9.1-W1		12/21/2022	MKLEPADLO	
&EMA=V1AR11UQ41UQ9.2+V1AR11UQ41UQ9.2/1	Cable diagram =V1AR11UQ41UQ9.2+V1AR11UQ41UQ9.2-W1		12/21/2022	MKLEPADLO	
&EMA=V1AR11UQ41UQ10.1+V1AR11UQ41UQ10.1/1	Cable diagram =V1AR11UQ41UQ10.1+V1AR11UQ41UQ10.1-W1		12/21/2022	MKLEPADLO	
&EMA=V1AR11UQ41UQ10.2+V1AR11UQ41UQ10.2/1	Cable diagram =V1AR11UQ41UQ10.2+V1AR11UQ41UQ10.2-W1		12/21/2022	MKLEPADLO	
&EMA=V1AR11UQ41UQ11.1+V1AR11UQ41UQ11.1/1	Cable diagram =V1AR11UQ41UQ11.1+V1AR11UQ41UQ11.1-W1		12/21/2022	MKLEPADLO	
&EMA=V1AR11UQ41UQ12.1+V1AR11UQ41UQ12.1/1	Cable diagram =V1AR11UQ41UQ12.1+V1AR11UQ41UQ12.1-W1		12/21/2022	MKLEPADLO	
&EMA=V1AR11UQ41UQ13.1+V1AR11UQ41UQ13.1/1	Cable diagram =V1AR11UQ41UQ13.1+V1AR11UQ41UQ13.1-W1		12/21/2022	MKLEPADLO	
&EMA=V1AR11UQ41UQ14.1+V1AR11UQ41UQ14.1/1	Cable diagram =V1AR11UQ41UQ14.1+V1AR11UQ41UQ14.1-W1		12/21/2022	MKLEPADLO	
&EMA=V1AR11UQ41UQ14.2+V1AR11UQ41UQ14.2/1	Cable diagram =V1AR11UQ41UQ14.2+V1AR11UQ41UQ14.2-W1		12/21/2022	MKLEPADLO	
&EMA=V1AR11UQ41UQ15.1+V1AR11UQ41UQ15.1/1	Cable diagram =V1AR11UQ41UQ15.1+V1AR11UQ41UQ15.1-W1		12/21/2022	MKLEPADLO	
&EMA=V1AR11UQ41UQ15.2+V1AR11UQ41UQ15.2/1	Cable diagram =V1AR11UQ41UQ15.2+V1AR11UQ41UQ15.2-W1		12/21/2022	MKLEPADLO	
&EMA=V1AR11UQ41UQ16.1+V1AR11UQ41UQ16.1/1	Cable diagram =V1AR11UQ41UQ16.1+V1AR11UQ41UQ16.1-W1		12/21/2022	MKLEPADLO	
&EMA=V1AR11UQ41UQ16.2+V1AR11UQ41UQ16.2/1	Cable diagram =V1AR11UQ41UQ16.2+V1AR11UQ41UQ16.2-W1		12/21/2022	MKLEPADLO	
&EMA=V1AR11UQ41UQ17.1+V1AR11UQ41UQ17.1/1	Cable diagram =V1AR11UQ41UQ17.1+V1AR11UQ41UQ17.1-W1		12/21/2022	MKLEPADLO	
&EMA=V1AR11UQ41UQ18.1+V1AR11UQ41UQ18.1/1	Cable diagram =V1AR11UQ41UQ18.1+V1AR11UQ41UQ18.1-W1		12/21/2022	MKLEPADLO	
&EMA=V1AR11UQ41UQ19.1+V1AR11UQ41UQ19.1/1	Cable diagram =V1AR11UQ41UQ19.1+V1AR11UQ41UQ19.1-W1		12/21/2022	MKLEPADLO	
&EMA=V1AR11UQ41UQ20.1+V1AR11UQ41UQ20.1/1	Cable diagram =V1AR11UQ41UQ20.1+V1AR11UQ41UQ20.1-W1		12/21/2022	MKLEPADLO	
&EMA=V1AR11UQ41UQ20.2+V1AR11UQ41UQ20.2/1	Cable diagram =V1AR11UQ41UQ20.2+V1AR11UQ41UQ20.2-W1		12/21/2022	MKLEPADLO	
&EMA=V1AR11UQ41UQ21.1+V1AR11UQ41UQ21.1/1	Cable diagram =V1AR11UQ41UQ21.1+V1AR11UQ41UQ21.1-W1		12/21/2022	MKLEPADLO	
&EMA=V1AR11UQ41UQ21.2+V1AR11UQ41UQ21.2/1	Cable diagram =V1AR11UQ41UQ21.2+V1AR11UQ41UQ21.2-W1		12/21/2022	MKLEPADLO	
&EMA=V1AR11UQ41UQ22.1+V1AR11UQ41UQ22.1/1	Cable diagram =V1AR11UQ41UQ22.1+V1AR11UQ41UQ22.1-W1		12/21/2022	MKLEPADLO	
&EMA=V1AR11UQ41UQ23.1+V1AR11UQ41UQ23.1/1	Cable diagram =V1AR11UQ41UQ23.1+V1AR11UQ41UQ23.1-W1		12/21/2022	MKLEPADLO	
&EMA=V1AR11UQ41UQ24.1+V1AR11UQ41UQ24.1/1	Cable diagram =V1AR11UQ41UQ24.1+V1AR11UQ41UQ24.1-W1		12/21/2022	MKLEPADLO	
&EMA=V1AR11UQ41UQ24.2+V1AR11UQ41UQ24.2/1	Cable diagram =V1AR11UQ41UQ24.2+V1AR11UQ41UQ24.2-W1		12/21/2022	MKLEPADLO	
&EMA=V1AR11WC1+V1AR11UC01/1	Cable diagram =V1AR11WC1+V1AR11UC01-W1		12/21/2022	MKLEPADLO	
&EMA=V1AR12KF1+V1AR12UC01/1	Cable diagram =V1AR12KF1+V1AR12UC01-KF100.15-P8		12/21/2022	MKLEPADLO	
&EMA=V1AR12UQ41BG0+V1AR12UQ41/1	Cable diagram =V1AR12UQ41BG0+V1AR12UQ41-W1		12/21/2022	MKLEPADLO	
&EMA=V1AR12UQ41BG0+V1AR12UQ41/2	Cable diagram =V1AR12UQ41BG0+V1AR12UQ41-W1.1		12/21/2022	MKLEPADLO	

			Date	12/22/2022	Volvo Trucks North America	Valiant TMS	Table of contents : &EMA=V1AR11UQ41UQ7.1+V1AR11UQ41UQ7.1/1 - &EMA=V1AR12UQ41BG0+V1AR12UQ41/2	Drawing name: =2V04&EFS-EL	=	
			Ed.	MKLEPADLO					+	
			Appr		P6700 Underbody Mainline - Cell 2V04	Scale 1:1		Document type: EAB	Project nr: 22-16151	Page 24 / 1630
Modification	Date	Name	Original		Replacement of	Replaced by				

Table of contents

Column X: An automatically generated page was edited F06_001

Page	Page description	supplementary page field	Date	Edited by	X
&EMA=V1AR12UQ41BG0+V1AR12UQ41/3	Cable diagram =V1AR12UQ41BG0+V1AR12UQ41-W1.2		12/21/2022	MKLEPADLO	
&EMA=V1AR12UQ41KF1+V1AR12UQ41/1	Cable diagram =V1AR12UQ41KF1+V1AR12UQ41-W1		12/21/2022	MKLEPADLO	
&EMA=V1AR12UQ41KF1+V1AR12UQ41/2	Cable diagram =V1AR12UQ41KF1+V1AR12UQ41-WF1		12/21/2022	MKLEPADLO	
&EMA=V1AR12UQ41UQ1.1+V1AR12UQ41UQ1.1/1	Cable diagram =V1AR12UQ41UQ1.1+V1AR12UQ41UQ1.1-W1		12/21/2022	MKLEPADLO	
&EMA=V1AR12UQ41UQ2.1+V1AR12UQ41UQ2.1/1	Cable diagram =V1AR12UQ41UQ2.1+V1AR12UQ41UQ2.1-W1		12/21/2022	MKLEPADLO	
&EMA=V1AR12UQ41UQ3.1+V1AR12UQ41UQ3.1/1	Cable diagram =V1AR12UQ41UQ3.1+V1AR12UQ41UQ3.1-W1		12/21/2022	MKLEPADLO	
&EMA=V1AR12UQ41UQ4.1+V1AR12UQ41UQ4.1/1	Cable diagram =V1AR12UQ41UQ4.1+V1AR12UQ41UQ4.1-W1		12/21/2022	MKLEPADLO	
&EMA=V1AR12UQ41UQ5.1+V1AR12UQ41UQ5.1/1	Cable diagram =V1AR12UQ41UQ5.1+V1AR12UQ41UQ5.1-W1		12/21/2022	MKLEPADLO	
&EMA=V1AR12UQ41UQ5.2+V1AR12UQ41UQ5.2/1	Cable diagram =V1AR12UQ41UQ5.2+V1AR12UQ41UQ5.2-W1		12/21/2022	MKLEPADLO	
&EMA=V1AR12UQ41UQ6.1+V1AR12UQ41UQ6.1/1	Cable diagram =V1AR12UQ41UQ6.1+V1AR12UQ41UQ6.1-W1		12/21/2022	MKLEPADLO	
&EMA=V1AR12UQ41UQ6.2+V1AR12UQ41UQ6.2/1	Cable diagram =V1AR12UQ41UQ6.2+V1AR12UQ41UQ6.2-W1		12/21/2022	MKLEPADLO	
&EMA=V1AR12UQ41UQ7.1+V1AR12UQ41UQ7.1/1	Cable diagram =V1AR12UQ41UQ7.1+V1AR12UQ41UQ7.1-W1		12/21/2022	MKLEPADLO	
&EMA=V1AR12UQ41UQ7.2+V1AR12UQ41UQ7.2/1	Cable diagram =V1AR12UQ41UQ7.2+V1AR12UQ41UQ7.2-W1		12/21/2022	MKLEPADLO	
&EMA=V1AR12UQ41UQ8.1+V1AR12UQ41UQ8.1/1	Cable diagram =V1AR12UQ41UQ8.1+V1AR12UQ41UQ8.1-W1		12/21/2022	MKLEPADLO	
&EMA=V1AR12UQ41UQ8.2+V1AR12UQ41UQ8.2/1	Cable diagram =V1AR12UQ41UQ8.2+V1AR12UQ41UQ8.2-W1		12/21/2022	MKLEPADLO	
&EMA=V1AR12UQ41UQ9.1+V1AR12UQ41UQ9.1/1	Cable diagram =V1AR12UQ41UQ9.1+V1AR12UQ41UQ9.1-W1		12/21/2022	MKLEPADLO	
&EMA=V1AR12UQ41UQ9.2+V1AR12UQ41UQ9.2/1	Cable diagram =V1AR12UQ41UQ9.2+V1AR12UQ41UQ9.2-W1		12/21/2022	MKLEPADLO	
&EMA=V1AR12WC1+V1AR12UC01/1	Cable diagram =V1AR12WC1+V1AR12UC01-W1		12/21/2022	MKLEPADLO	
&EMA=V1AR13KF1+V1AR13UC01/1	Cable diagram =V1AR13KF1+V1AR13UC01-KF100.15-P10		12/21/2022	MKLEPADLO	
&EMA=V1AR13UQ41BG0+V1AR13UQ41/1	Cable diagram =V1AR13UQ41BG0+V1AR13UQ41-W1		12/21/2022	MKLEPADLO	
&EMA=V1AR13UQ41BG0+V1AR13UQ41/2	Cable diagram =V1AR13UQ41BG0+V1AR13UQ41-W1.1		12/21/2022	MKLEPADLO	
&EMA=V1AR13UQ41BG0+V1AR13UQ41/3	Cable diagram =V1AR13UQ41BG0+V1AR13UQ41-W1.2		12/21/2022	MKLEPADLO	
&EMA=V1AR13UQ41KF1+V1AR13UQ41/1	Cable diagram =V1AR13UQ41KF1+V1AR13UQ41-W1		12/21/2022	MKLEPADLO	
&EMA=V1AR13UQ41KF1+V1AR13UQ41/2	Cable diagram =V1AR13UQ41KF1+V1AR13UQ41-WF1		12/21/2022	MKLEPADLO	
&EMA=V1AR13UQ41UQ1.1+V1AR13UQ41UQ1.1/1	Cable diagram =V1AR13UQ41UQ1.1+V1AR13UQ41UQ1.1-W1		12/21/2022	MKLEPADLO	
&EMA=V1AR13UQ41UQ2.1+V1AR13UQ41UQ2.1/1	Cable diagram =V1AR13UQ41UQ2.1+V1AR13UQ41UQ2.1-W1		12/21/2022	MKLEPADLO	
&EMA=V1AR13UQ41UQ3.1+V1AR13UQ41UQ3.1/1	Cable diagram =V1AR13UQ41UQ3.1+V1AR13UQ41UQ3.1-W1		12/21/2022	MKLEPADLO	
&EMA=V1AR13UQ41UQ4.1+V1AR13UQ41UQ4.1/1	Cable diagram =V1AR13UQ41UQ4.1+V1AR13UQ41UQ4.1-W1		12/21/2022	MKLEPADLO	
&EMA=V1AR13UQ41UQ5.1+V1AR13UQ41UQ5.1/1	Cable diagram =V1AR13UQ41UQ5.1+V1AR13UQ41UQ5.1-W1		12/21/2022	MKLEPADLO	
&EMA=V1AR13UQ41UQ5.2+V1AR13UQ41UQ5.2/1	Cable diagram =V1AR13UQ41UQ5.2+V1AR13UQ41UQ5.2-W1		12/21/2022	MKLEPADLO	
&EMA=V1AR13UQ41UQ6.1+V1AR13UQ41UQ6.1/1	Cable diagram =V1AR13UQ41UQ6.1+V1AR13UQ41UQ6.1-W1		12/21/2022	MKLEPADLO	
&EMA=V1AR13UQ41UQ6.2+V1AR13UQ41UQ6.2/1	Cable diagram =V1AR13UQ41UQ6.2+V1AR13UQ41UQ6.2-W1		12/21/2022	MKLEPADLO	
&EMA=V1AR13UQ41UQ7.1+V1AR13UQ41UQ7.1/1	Cable diagram =V1AR13UQ41UQ7.1+V1AR13UQ41UQ7.1-W1		12/21/2022	MKLEPADLO	

			Date	12/22/2022	Volvo Trucks North America	Valiant TMS	Table of contents : &EMA=V1AR12UQ41BG0+V1AR12UQ41/3 - &EMA=V1AR13UQ41UQ7.1+V1AR13UQ41UQ7.1/1	Drawing name: =2V04&EFS-EL	=
			Ed.	MKLEPADLO					+
			Appr		P6700 Underbody Mainline - Cell 2V04			Document type: EAB	Project nr: 22-16151
Modification	Date	Name	Original		Replacement of	Replaced by	Scale 1:1		Page 25 / 1630

Table of contents

Column X: An automatically generated page was edited F06_001

Page	Page description	supplementary page field	Date	Edited by	X
&EMA=V1AR13UQ41UQ7.2+V1AR13UQ41UQ7.2/1	Cable diagram =V1AR13UQ41UQ7.2+V1AR13UQ41UQ7.2-W1		12/21/2022	MKLEPADLO	
&EMA=V1AR13UQ41UQ8.1+V1AR13UQ41UQ8.1/1	Cable diagram =V1AR13UQ41UQ8.1+V1AR13UQ41UQ8.1-W1		12/21/2022	MKLEPADLO	
&EMA=V1AR13UQ41UQ8.2+V1AR13UQ41UQ8.2/1	Cable diagram =V1AR13UQ41UQ8.2+V1AR13UQ41UQ8.2-W1		12/21/2022	MKLEPADLO	
&EMA=V1AR13UQ41UQ9.1+V1AR13UQ41UQ9.1/1	Cable diagram =V1AR13UQ41UQ9.1+V1AR13UQ41UQ9.1-W1		12/21/2022	MKLEPADLO	
&EMA=V1AR13UQ41UQ9.2+V1AR13UQ41UQ9.2/1	Cable diagram =V1AR13UQ41UQ9.2+V1AR13UQ41UQ9.2-W1		12/21/2022	MKLEPADLO	
&EMA=V1AR13WC1+V1AR13UC01/1	Cable diagram =V1AR13WC1+V1AR13UC01-W1		12/21/2022	MKLEPADLO	
&EMA=V1AR14KF1+V1AR14UC01/1	Cable diagram =V1AR14KF1+V1AR14UC01-KF100.15-P12		12/21/2022	MKLEPADLO	
&EMA=V1AR14UQ41BG0+V1AR14UQ41/1	Cable diagram =V1AR14UQ41BG0+V1AR14UQ41-W1		12/21/2022	MKLEPADLO	
&EMA=V1AR14UQ41BG0+V1AR14UQ41/2	Cable diagram =V1AR14UQ41BG0+V1AR14UQ41-W1.1		12/21/2022	MKLEPADLO	
&EMA=V1AR14UQ41BG0+V1AR14UQ41/3	Cable diagram =V1AR14UQ41BG0+V1AR14UQ41-W1.2		12/21/2022	MKLEPADLO	
&EMA=V1AR14UQ41KF1+V1AR14UQ41/1	Cable diagram =V1AR14UQ41KF1+V1AR14UQ41-W1		12/21/2022	MKLEPADLO	
&EMA=V1AR14UQ41KF1+V1AR14UQ41/2	Cable diagram =V1AR14UQ41KF1+V1AR14UQ41-WF1		12/21/2022	MKLEPADLO	
&EMA=V1AR14UQ41UQ1.1+V1AR14UQ41UQ1.1/1	Cable diagram =V1AR14UQ41UQ1.1+V1AR14UQ41UQ1.1-W1		12/21/2022	MKLEPADLO	
&EMA=V1AR14UQ41UQ2.1+V1AR14UQ41UQ2.1/1	Cable diagram =V1AR14UQ41UQ2.1+V1AR14UQ41UQ2.1-W1		12/21/2022	MKLEPADLO	
&EMA=V1AR14UQ41UQ3.1+V1AR14UQ41UQ3.1/1	Cable diagram =V1AR14UQ41UQ3.1+V1AR14UQ41UQ3.1-W1		12/21/2022	MKLEPADLO	
&EMA=V1AR14UQ41UQ4.1+V1AR14UQ41UQ4.1/1	Cable diagram =V1AR14UQ41UQ4.1+V1AR14UQ41UQ4.1-W1		12/21/2022	MKLEPADLO	
&EMA=V1AR14UQ41UQ5.1+V1AR14UQ41UQ5.1/1	Cable diagram =V1AR14UQ41UQ5.1+V1AR14UQ41UQ5.1-W1		12/21/2022	MKLEPADLO	
&EMA=V1AR14UQ41UQ5.2+V1AR14UQ41UQ5.2/1	Cable diagram =V1AR14UQ41UQ5.2+V1AR14UQ41UQ5.2-W1		12/21/2022	MKLEPADLO	
&EMA=V1AR14UQ41UQ6.1+V1AR14UQ41UQ6.1/1	Cable diagram =V1AR14UQ41UQ6.1+V1AR14UQ41UQ6.1-W1		12/21/2022	MKLEPADLO	
&EMA=V1AR14UQ41UQ6.2+V1AR14UQ41UQ6.2/1	Cable diagram =V1AR14UQ41UQ6.2+V1AR14UQ41UQ6.2-W1		12/21/2022	MKLEPADLO	
&EMA=V1AR14UQ41UQ7.1+V1AR14UQ41UQ7.1/1	Cable diagram =V1AR14UQ41UQ7.1+V1AR14UQ41UQ7.1-W1		12/21/2022	MKLEPADLO	
&EMA=V1AR14UQ41UQ7.2+V1AR14UQ41UQ7.2/1	Cable diagram =V1AR14UQ41UQ7.2+V1AR14UQ41UQ7.2-W1		12/21/2022	MKLEPADLO	
&EMA=V1AR14UQ41UQ8.1+V1AR14UQ41UQ8.1/1	Cable diagram =V1AR14UQ41UQ8.1+V1AR14UQ41UQ8.1-W1		12/21/2022	MKLEPADLO	
&EMA=V1AR14UQ41UQ8.2+V1AR14UQ41UQ8.2/1	Cable diagram =V1AR14UQ41UQ8.2+V1AR14UQ41UQ8.2-W1		12/21/2022	MKLEPADLO	
&EMA=V1AR14UQ41UQ9.1+V1AR14UQ41UQ9.1/1	Cable diagram =V1AR14UQ41UQ9.1+V1AR14UQ41UQ9.1-W1		12/21/2022	MKLEPADLO	
&EMA=V1AR14UQ41UQ9.2+V1AR14UQ41UQ9.2/1	Cable diagram =V1AR14UQ41UQ9.2+V1AR14UQ41UQ9.2-W1		12/21/2022	MKLEPADLO	
&EMA=V1AR14WC1+V1AR14UC01/1	Cable diagram =V1AR14WC1+V1AR14UC01-W1		12/21/2022	MKLEPADLO	
&EMA=V1AR15KF1+V1AR15UC01/1	Cable diagram =V1AR15KF1+V1AR15UC01-KF100.14-P8		12/21/2022	MKLEPADLO	
&EMA=V1AR15UQ41BG0+V1AR15UQ41/1	Cable diagram =V1AR15UQ41BG0+V1AR15UQ41-W1		12/21/2022	MKLEPADLO	
&EMA=V1AR15UQ41BG0+V1AR15UQ41/2	Cable diagram =V1AR15UQ41BG0+V1AR15UQ41-W1.1		12/21/2022	MKLEPADLO	
&EMA=V1AR15UQ41BG0+V1AR15UQ41/3	Cable diagram =V1AR15UQ41BG0+V1AR15UQ41-W1.2		12/21/2022	MKLEPADLO	
&EMA=V1AR15UQ41KF1+V1AR15UQ41/1	Cable diagram =V1AR15UQ41KF1+V1AR15UQ41-W1		12/21/2022	MKLEPADLO	
&EMA=V1AR15UQ41KF1+V1AR15UQ41/2	Cable diagram =V1AR15UQ41KF1+V1AR15UQ41-WF1		12/21/2022	MKLEPADLO	

Table of contents

Column X: An automatically generated page was edited

F06_001

Page	Page description	supplementary page field	Date	Edited by	X
&EMA=V1AR15UQ41UQ1.1+V1AR15UQ41UQ1.1/1	Cable diagram =V1AR15UQ41UQ1.1+V1AR15UQ41UQ1.1-W1		12/21/2022	MKLEPADLO	
&EMA=V1AR15UQ41UQ2.1+V1AR15UQ41UQ2.1/1	Cable diagram =V1AR15UQ41UQ2.1+V1AR15UQ41UQ2.1-W1		12/21/2022	MKLEPADLO	
&EMA=V1AR15UQ41UQ3.1+V1AR15UQ41UQ3.1/1	Cable diagram =V1AR15UQ41UQ3.1+V1AR15UQ41UQ3.1-W1		12/21/2022	MKLEPADLO	
&EMA=V1AR15UQ41UQ4.1+V1AR15UQ41UQ4.1/1	Cable diagram =V1AR15UQ41UQ4.1+V1AR15UQ41UQ4.1-W1		12/21/2022	MKLEPADLO	
&EMA=V1AR15UQ41UQ5.1+V1AR15UQ41UQ5.1/1	Cable diagram =V1AR15UQ41UQ5.1+V1AR15UQ41UQ5.1-W1		12/21/2022	MKLEPADLO	
&EMA=V1AR15UQ41UQ5.2+V1AR15UQ41UQ5.2/1	Cable diagram =V1AR15UQ41UQ5.2+V1AR15UQ41UQ5.2-W1		12/21/2022	MKLEPADLO	
&EMA=V1AR15UQ41UQ6.1+V1AR15UQ41UQ6.1/1	Cable diagram =V1AR15UQ41UQ6.1+V1AR15UQ41UQ6.1-W1		12/21/2022	MKLEPADLO	
&EMA=V1AR15UQ41UQ6.2+V1AR15UQ41UQ6.2/1	Cable diagram =V1AR15UQ41UQ6.2+V1AR15UQ41UQ6.2-W1		12/21/2022	MKLEPADLO	
&EMA=V1AR15UQ41UQ7.1+V1AR15UQ41UQ7.1/1	Cable diagram =V1AR15UQ41UQ7.1+V1AR15UQ41UQ7.1-W1		12/21/2022	MKLEPADLO	
&EMA=V1AR15UQ41UQ7.2+V1AR15UQ41UQ7.2/1	Cable diagram =V1AR15UQ41UQ7.2+V1AR15UQ41UQ7.2-W1		12/21/2022	MKLEPADLO	
&EMA=V1AR15UQ41UQ8.1+V1AR15UQ41UQ8.1/1	Cable diagram =V1AR15UQ41UQ8.1+V1AR15UQ41UQ8.1-W1		12/21/2022	MKLEPADLO	
&EMA=V1AR15UQ41UQ8.2+V1AR15UQ41UQ8.2/1	Cable diagram =V1AR15UQ41UQ8.2+V1AR15UQ41UQ8.2-W1		12/21/2022	MKLEPADLO	
&EMA=V1AR15UQ41UQ9.1+V1AR15UQ41UQ9.1/1	Cable diagram =V1AR15UQ41UQ9.1+V1AR15UQ41UQ9.1-W1		12/21/2022	MKLEPADLO	
&EMA=V1AR15UQ41UQ9.2+V1AR15UQ41UQ9.2/1	Cable diagram =V1AR15UQ41UQ9.2+V1AR15UQ41UQ9.2-W1		12/21/2022	MKLEPADLO	
&EMA=V1AR15WC1+V1AR15UC01/1	Cable diagram =V1AR15WC1+V1AR15UC01-W1		12/21/2022	MKLEPADLO	
&EMA=V1AR21KF1+V1AR21UC01/1	Cable diagram =V1AR21KF1+V1AR21UC01-KF100.11-P7		12/21/2022	MKLEPADLO	
&EMA=V1AR21WC1+V1AR21UC01/1	Cable diagram =V1AR21WC1+V1AR21UC01-W1		12/21/2022	MKLEPADLO	
&EMA=V1AR22KF1+V1AR22UC01/1	Cable diagram =V1AR22KF1+V1AR22UC01-KF100.15-P6		12/21/2022	MKLEPADLO	
&EMA=V1AR22WC1+V1AR22UC01/1	Cable diagram =V1AR22WC1+V1AR22UC01-W1		12/21/2022	MKLEPADLO	
&EMA=V1AR22XQ11WC1+V1AR22XQ11UC01/1	Cable diagram =V1AR22XQ11WC1+V1AR22XQ11UC01-W1		12/21/2022	MKLEPADLO	
&EMA=V1AR23KF1+V1AR23UC01/1	Cable diagram =V1AR23KF1+V1AR23UC01-KF100.11-P8		12/21/2022	MKLEPADLO	
&EMA=V1AR23WC1+V1AR23UC01/1	Cable diagram =V1AR23WC1+V1AR23UC01-W1		12/21/2022	MKLEPADLO	
&EMA=V1AR23XQ11WC1+V1AR23XQ11UC01/1	Cable diagram =V1AR23XQ11WC1+V1AR23XQ11UC01-W1		12/21/2022	MKLEPADLO	
&EMA=V1AR24KF1+V1AR24UC01/1	Cable diagram =V1AR24KF1+V1AR24UC01-KF100.15-P7		12/21/2022	MKLEPADLO	
&EMA=V1AR24WC1+V1AR24UC01/1	Cable diagram =V1AR24WC1+V1AR24UC01-W1		12/21/2022	MKLEPADLO	
&EMA=V1AR24XQ11WC1+V1AR24XQ11UC01/1	Cable diagram =V1AR24XQ11WC1+V1AR24XQ11UC01-W1		12/21/2022	MKLEPADLO	
&EMA=V1AR25KF1+V1AR25UC01/1	Cable diagram =V1AR25KF1+V1AR25UC01-KF100.15-P9		12/21/2022	MKLEPADLO	
&EMA=V1AR25WC1+V1AR25UC01/1	Cable diagram =V1AR25WC1+V1AR25UC01-W1		12/21/2022	MKLEPADLO	
&EMA=V1AR25XQ11WC1+V1AR25XQ11UC01/1	Cable diagram =V1AR25XQ11WC1+V1AR25XQ11UC01-W1		12/21/2022	MKLEPADLO	
&EMA=V1AR26KF1+V1AR26UC01/1	Cable diagram =V1AR26KF1+V1AR26UC01-KF100.11-P9		12/21/2022	MKLEPADLO	
&EMA=V1AR26WC1+V1AR26UC01/1	Cable diagram =V1AR26WC1+V1AR26UC01-W1		12/21/2022	MKLEPADLO	
&EMA=V1AR26XQ11WC1+V1AR26XQ11UC01/1	Cable diagram =V1AR26XQ11WC1+V1AR26XQ11UC01-W1		12/21/2022	MKLEPADLO	
&EMA=V1AR27KF1+V1AR27UC01/1	Cable diagram =V1AR27KF1+V1AR27UC01-KF100.15-P11		12/21/2022	MKLEPADLO	

			Date	12/22/2022	Volvo Trucks North America	Valiant TMS	Table of contents : &EMA=V1AR15UQ41UQ1.1+V1AR15UQ41UQ1.1/1 - &EMA=V1AR27KF1+V1AR27UC01/1	Drawing name: =2V04&EFS-EL	=
			Ed.	MKLEPADLO					+
			Appr		P6700 Underbody Mainline - Cell 2V04	Scale 1:1		Document type: EAB	Project nr: 22-16151
Modification	Date	Name	Original		Replacement of	Replaced by			Page 27 / 1630

Table of contents

Column X: An automatically generated page was edited

F06_001

Page	Page description	supplementary page field	Date	Edited by	X
&EMA=V1AR27WC1+V1AR27UC01/1	Cable diagram =V1AR27WC1+V1AR27UC01-W1		12/21/2022	MKLEPADLO	
&EMA=V1AR27XQ11WC1+V1AR27XQ11UC01/1	Cable diagram =V1AR27XQ11WC1+V1AR27XQ11UC01-W1		12/21/2022	MKLEPADLO	
&EMA=V1AR28KF1+V1AR28UC01/1	Cable diagram =V1AR28KF1+V1AR28UC01-KF100.11-P10		12/21/2022	MKLEPADLO	
&EMA=V1AR28WC1+V1AR28UC01/1	Cable diagram =V1AR28WC1+V1AR28UC01-W1		12/21/2022	MKLEPADLO	
&EMA=V1AR28XQ11WC1+V1AR28XQ11UC01/1	Cable diagram =V1AR28XQ11WC1+V1AR28XQ11UC01-W1		12/21/2022	MKLEPADLO	
&EMA=V1AR29KF1+V1AR29UC01/1	Cable diagram =V1AR29KF1+V1AR29UC01-KF100.15-P13		12/21/2022	MKLEPADLO	
&EMA=V1AR29WC1+V1AR29UC01/1	Cable diagram =V1AR29WC1+V1AR29UC01-W1		12/21/2022	MKLEPADLO	
&EMA=V1AR29XQ11WC1+V1AR29XQ11UC01/1	Cable diagram =V1AR29XQ11WC1+V1AR29XQ11UC01-W1		12/21/2022	MKLEPADLO	
&EMA=V1AR51KF1+V1AR51UC01/1	Cable diagram =V1AR51KF1+V1AR51UC01-KF100.12-P5		12/21/2022	MKLEPADLO	
&EMA=V1AR51WC1+V1AR51UC01/1	Cable diagram =V1AR51WC1+V1AR51UC01-W1		12/21/2022	MKLEPADLO	
&EMA=V1AR51XQ51WC1+V1AR51XQ51UC01/1	Cable diagram =V1AR51XQ51WC1+V1AR51XQ51UC01-W1		12/21/2022	MKLEPADLO	
&EMA=V1AR52KF1+V1AR52UC01/1	Cable diagram =V1AR52KF1+V1AR52UC01-KF100.14-P6		12/21/2022	MKLEPADLO	
&EMA=V1AR52WC1+V1AR52UC01/1	Cable diagram =V1AR52WC1+V1AR52UC01-W1		12/21/2022	MKLEPADLO	
&EMA=V1AR52XQ51WC1+V1AR52XQ51UC01/1	Cable diagram =V1AR52XQ51WC1+V1AR52XQ51UC01-W1		12/21/2022	MKLEPADLO	
&EMA=V1AR53KF1+V1AR53UC01/1	Cable diagram =V1AR53KF1+V1AR53UC01-KF100.12-P6		12/21/2022	MKLEPADLO	
&EMA=V1AR53WC1+V1AR53UC01/1	Cable diagram =V1AR53WC1+V1AR53UC01-W1		12/21/2022	MKLEPADLO	
&EMA=V1AR53XQ51WC1+V1AR53XQ51UC01/1	Cable diagram =V1AR53XQ51WC1+V1AR53XQ51UC01-W1		12/21/2022	MKLEPADLO	
&EMA=V1AR54KF1+V1AR54UC01/1	Cable diagram =V1AR54KF1+V1AR54UC01-KF100.14-P7		12/21/2022	MKLEPADLO	
&EMA=V1AR54WC1+V1AR54UC01/1	Cable diagram =V1AR54WC1+V1AR54UC01-W1		12/21/2022	MKLEPADLO	
&EMA=V1AR54XQ51WC1+V1AR54XQ51UC01/1	Cable diagram =V1AR54XQ51WC1+V1AR54XQ51UC01-W1		12/21/2022	MKLEPADLO	
&EMA=V1AR141KF1+V1AR141UC01/1	Cable diagram =V1AR141KF1+V1AR141UC01-KF100.15-P5		12/21/2022	MKLEPADLO	
&EMA=V1AR141WC1+V1AR141UC01/1	Cable diagram =V1AR141WC1+V1AR141UC01-W1		12/21/2022	MKLEPADLO	
&EMA=V1AR141XQ41WC1+V1AR141XQ41UC01/1	Cable diagram =V1AR141XQ41WC1+V1AR141XQ41UC01-W1		12/21/2022	MKLEPADLO	
&EMA=V1AR142KF1+V1AR142UC01/1	Cable diagram =V1AR142KF1+V1AR142UC01-KF100.11-P5		12/21/2022	MKLEPADLO	
&EMA=V1AR142WC1+V1AR142UC01/1	Cable diagram =V1AR142WC1+V1AR142UC01-W1		12/21/2022	MKLEPADLO	
&EMA=V1AR142XQ41WC1+V1AR142XQ41UC01/1	Cable diagram =V1AR142XQ41WC1+V1AR142XQ41UC01-W1		12/21/2022	MKLEPADLO	
&EMA=V1AR191KF1+V1AR191UC01/1	Cable diagram =V1AR191KF1+V1AR191UC01-KF100.12-P7		12/21/2022	MKLEPADLO	
&EMA=V1AR191WC1+V1AR191UC01/1	Cable diagram =V1AR191WC1+V1AR191UC01-W1		12/21/2022	MKLEPADLO	
&EMA=V1AR192KF1+V1AR192UC01/1	Cable diagram =V1AR192KF1+V1AR192UC01-KF100.12-P8		12/21/2022	MKLEPADLO	
&EMA=V1AR192WC1+V1AR192UC01/1	Cable diagram =V1AR192WC1+V1AR192UC01-W1		12/21/2022	MKLEPADLO	
&EMA=V1AR211KF1+V1AR211UC01/1	Cable diagram =V1AR211KF1+V1AR211UC01-KF100.31-P14		12/21/2022	MKLEPADLO	
&EMA=V1AR211WC1+V1AR211UC01/1	Cable diagram =V1AR211WC1+V1AR211UC01-W1		12/21/2022	MKLEPADLO	
&EMA=V1AR211XQ11WC1+V1AR211XQ11UC01/1	Cable diagram =V1AR211XQ11WC1+V1AR211XQ11UC01-W1		12/21/2022	MKLEPADLO	

			Date	12/22/2022	Volvo Trucks North America	Valiant TMS	Table of contents : &EMA=V1AR27WC1+V1AR27UC01/1 - &EMA=V1AR211XQ11WC1+V1AR211XQ11UC01/1	Drawing name: =2V04&EFS-EL	=
			Ed.	MKLEPADLO					+
			Appr		P6700 Underbody Mainline - Cell 2V04	Scale 1:1		Document type: EAB	Project nr: 22-16151
Modification	Date	Name	Original		Replacement of	Replaced by			Page 28 / 1630

Table of contents

Column X: An automatically generated page was edited F06_001

Page	Page description	supplementary page field	Date	Edited by	X
&EMA=V1AR212KF1+V1AR212UC01/1	Cable diagram =V1AR212KF1+V1AR212UC01-KF100.15-P14		12/21/2022	MKLEPADLO	
&EMA=V1AR212WC1+V1AR212UC01/1	Cable diagram =V1AR212WC1+V1AR212UC01-W1		12/21/2022	MKLEPADLO	
&EMA=V1AR212XQ11WC1+V1AR212XQ11UC01/1	Cable diagram =V1AR212XQ11WC1+V1AR212XQ11UC01-W1		12/21/2022	MKLEPADLO	
&EMA=V1AR213KF1+V1AR213UC01/1	Cable diagram =V1AR213KF1+V1AR213UC01-KF100.14-P5		12/21/2022	MKLEPADLO	
&EMA=V1AR213WC1+V1AR213UC01/1	Cable diagram =V1AR213WC1+V1AR213UC01-W1		12/21/2022	MKLEPADLO	
&EMA=V1AR213XQ11WC1+V1AR213XQ11UC01/1	Cable diagram =V1AR213XQ11WC1+V1AR213XQ11UC01-W1		12/21/2022	MKLEPADLO	
&EMA=V1FQ1+V1FQ1/1	Cable diagram =V1FQ1+V1FQ1-W1		12/21/2022	MKLEPADLO	
&EMA=V1FQ1+V1FQ1/2	Cable diagram =V1FQ1+V1FQ1-W7		12/21/2022	MKLEPADLO	
&EMA=V1FQ1+V1FQ1/3	Cable diagram =V1FQ1+V1FQ1-W8		12/21/2022	MKLEPADLO	
&EMA=V1FQ1+V1FQ1/4	Cable diagram =V1FQ1+V1FQ1-W11R		12/21/2022	MKLEPADLO	
&EMA=V1FQ1+V1FQ1/5	Cable diagram =V1FQ1+V1FQ1-W11T		12/21/2022	MKLEPADLO	
&EMA=V1GL11KF2+V1GL11KF2/1	Cable diagram =V1GL11KF2+V1GL11KF2-W1		12/21/2022	MKLEPADLO	
&EMA=V1GL11UQ51BG0+V1GL11UQ51/12	Cable diagram =V1GL11UQ51BG0+V1GL11UQ51-W7		12/21/2022	MKLEPADLO	
&EMA=V1GL11UQ51BG0+V1GL11UQ51/13	Cable diagram =V1GL11UQ51BG0+V1GL11UQ51-W8		12/21/2022	MKLEPADLO	
&EMA=V1GL11UQ51KF2+V1GL11UQ51/1	Cable diagram =V1GL11UQ51KF2+V1GL11UQ51-W1		12/21/2022	MKLEPADLO	
&EMA=V1GL11UQ51UQ4.1+V1GL11UQ51UQ4.1/1	Cable diagram =V1GL11UQ51UQ4.1+V1GL11UQ51UQ4.1-W1		12/21/2022	MKLEPADLO	
&EMA=V1GL11UQ51UQ4.1+V1GL11UQ51UQ4.1/2	Cable diagram =V1GL11UQ51UQ4.1+V1GL11UQ51UQ4.1-W1.1		12/21/2022	MKLEPADLO	
&EMA=V1GL11UQ51UQ4.1+V1GL11UQ51UQ4.1/3	Cable diagram =V1GL11UQ51UQ4.1+V1GL11UQ51UQ4.1-W1.2		12/21/2022	MKLEPADLO	
&EMA=V1GL11UQ51UQ5.1+V1GL11UQ51UQ5.1/1	Cable diagram =V1GL11UQ51UQ5.1+V1GL11UQ51UQ5.1-W1		12/21/2022	MKLEPADLO	
&EMA=V1GL11UQ51UQ5.1+V1GL11UQ51UQ5.1/2	Cable diagram =V1GL11UQ51UQ5.1+V1GL11UQ51UQ5.1-W1.1		12/21/2022	MKLEPADLO	
&EMA=V1GL11UQ51UQ5.1+V1GL11UQ51UQ5.1/3	Cable diagram =V1GL11UQ51UQ5.1+V1GL11UQ51UQ5.1-W1.2		12/21/2022	MKLEPADLO	
&EMA=V1GL11WC1+V1GL11UC01/1	Cable diagram =V1GL11WC1+V1GL11UC01-W2		12/21/2022	MKLEPADLO	
&EMA=V1GL12KF2+V1GL12KF2/1	Cable diagram =V1GL12KF2+V1GL12KF2-W1		12/21/2022	MKLEPADLO	
&EMA=V1GL12UQ51BG0+V1GL12UQ51/4	Cable diagram =V1GL12UQ51BG0+V1GL12UQ51-W5		12/21/2022	MKLEPADLO	
&EMA=V1GL12UQ51BG0+V1GL12UQ51/7	Cable diagram =V1GL12UQ51BG0+V1GL12UQ51-W6		12/21/2022	MKLEPADLO	
&EMA=V1GL12UQ51BG0+V1GL12UQ51/8	Cable diagram =V1GL12UQ51BG0+V1GL12UQ51-W6.1		12/21/2022	MKLEPADLO	
&EMA=V1GL12UQ51BG0+V1GL12UQ51/9	Cable diagram =V1GL12UQ51BG0+V1GL12UQ51-W6.2		12/21/2022	MKLEPADLO	
&EMA=V1GL12UQ51BG0+V1GL12UQ51/10	Cable diagram =V1GL12UQ51BG0+V1GL12UQ51-W7		12/21/2022	MKLEPADLO	
&EMA=V1GL12UQ51BG0+V1GL12UQ51/11	Cable diagram =V1GL12UQ51BG0+V1GL12UQ51-W7.1		12/21/2022	MKLEPADLO	
&EMA=V1GL12UQ51BG0+V1GL12UQ51/12	Cable diagram =V1GL12UQ51BG0+V1GL12UQ51-W7.2		12/21/2022	MKLEPADLO	
&EMA=V1GL12UQ51BG0+V1GL12UQ51/13	Cable diagram =V1GL12UQ51BG0+V1GL12UQ51-W8		12/21/2022	MKLEPADLO	
&EMA=V1GL12UQ51KF2+V1GL12UQ51/1	Cable diagram =V1GL12UQ51KF2+V1GL12UQ51-W1		12/21/2022	MKLEPADLO	
&EMA=V1GL12UQ51UQ3.1+V1GL12UQ51UQ3.1/1	Cable diagram =V1GL12UQ51UQ3.1+V1GL12UQ51UQ3.1-W1		12/21/2022	MKLEPADLO	

Table of contents

Column X: An automatically generated page was edited F06_001

Page	Page description	supplementary page field	Date	Edited by	X
&EMA=V1GL12UQ51UQ3.1+V1GL12UQ51UQ3.1/1	Cable diagram =V1GL12UQ51UQ3.1+V1GL12UQ51UQ3.1-W1.1		12/21/2022	MKLEPADLO	
&EMA=V1GL12UQ51UQ3.1+V1GL12UQ51UQ3.1/2	Cable diagram =V1GL12UQ51UQ3.1+V1GL12UQ51UQ3.1-W1.2		12/21/2022	MKLEPADLO	
&EMA=V1GL12UQ51UQ4.1+V1GL12UQ51UQ4.1/1	Cable diagram =V1GL12UQ51UQ4.1+V1GL12UQ51UQ4.1-W1		12/21/2022	MKLEPADLO	
&EMA=V1GL12UQ51UQ4.1+V1GL12UQ51UQ4.1/2	Cable diagram =V1GL12UQ51UQ4.1+V1GL12UQ51UQ4.1-W1.1		12/21/2022	MKLEPADLO	
&EMA=V1GL12UQ51UQ4.1+V1GL12UQ51UQ4.1/3	Cable diagram =V1GL12UQ51UQ4.1+V1GL12UQ51UQ4.1-W1.2		12/21/2022	MKLEPADLO	
&EMA=V1GL12UQ51UQ5.1+V1GL12UQ51UQ5.1/1	Cable diagram =V1GL12UQ51UQ5.1+V1GL12UQ51UQ5.1-W1		12/21/2022	MKLEPADLO	
&EMA=V1GL12UQ51UQ5.1+V1GL12UQ51UQ5.1/2	Cable diagram =V1GL12UQ51UQ5.1+V1GL12UQ51UQ5.1-W1.1		12/21/2022	MKLEPADLO	
&EMA=V1GL12UQ51UQ5.1+V1GL12UQ51UQ5.1/3	Cable diagram =V1GL12UQ51UQ5.1+V1GL12UQ51UQ5.1-W1.2		12/21/2022	MKLEPADLO	
&EMA=V1GL13UQ51BG0+V1GL13UQ51/1	Cable diagram =V1GL13UQ51BG0+V1GL13UQ51-W1		12/21/2022	MKLEPADLO	
&EMA=V1GL13UQ51BG0+V1GL13UQ51/2	Cable diagram =V1GL13UQ51BG0+V1GL13UQ51-W1.1		12/21/2022	MKLEPADLO	
&EMA=V1GL13UQ51BG0+V1GL13UQ51/3	Cable diagram =V1GL13UQ51BG0+V1GL13UQ51-W1.2		12/21/2022	MKLEPADLO	
&EMA=V1GL13UQ51BG0+V1GL13UQ51/4	Cable diagram =V1GL13UQ51BG0+V1GL13UQ51-W2		12/21/2022	MKLEPADLO	
&EMA=V1GL13UQ51BG0+V1GL13UQ51/5	Cable diagram =V1GL13UQ51BG0+V1GL13UQ51-W2.1		12/21/2022	MKLEPADLO	
&EMA=V1GL13UQ51BG0+V1GL13UQ51/6	Cable diagram =V1GL13UQ51BG0+V1GL13UQ51-W2.2		12/21/2022	MKLEPADLO	
&EMA=V1GL13UQ51BG0+V1GL13UQ51/7	Cable diagram =V1GL13UQ51BG0+V1GL13UQ51-W3		12/21/2022	MKLEPADLO	
&EMA=V1GL13UQ51BG0+V1GL13UQ51/8	Cable diagram =V1GL13UQ51BG0+V1GL13UQ51-W3.1		12/21/2022	MKLEPADLO	
&EMA=V1GL13UQ51BG0+V1GL13UQ51/9	Cable diagram =V1GL13UQ51BG0+V1GL13UQ51-W3.2		12/21/2022	MKLEPADLO	
&EMA=V1GL13UQ51KF1+V1GL13UQ51/1	Cable diagram =V1GL13UQ51KF1+V1GL13UQ51-KF100.14-P15		12/21/2022	MKLEPADLO	
&EMA=V1GL13UQ51UQ1.1+V1GL13UQ51UQ1.1/1	Cable diagram =V1GL13UQ51UQ1.1+V1GL13UQ51UQ1.1-W1		12/21/2022	MKLEPADLO	
&EMA=V1GL13UQ51UQ1.1+V1GL13UQ51UQ1.1/2	Cable diagram =V1GL13UQ51UQ1.1+V1GL13UQ51UQ1.1-W1.1		12/21/2022	MKLEPADLO	
&EMA=V1GL13UQ51UQ1.1+V1GL13UQ51UQ1.1/3	Cable diagram =V1GL13UQ51UQ1.1+V1GL13UQ51UQ1.1-W1.2		12/21/2022	MKLEPADLO	
&EMA=V1GL13UQ51UQ2.1+V1GL13UQ51UQ2.1/1	Cable diagram =V1GL13UQ51UQ2.1+V1GL13UQ51UQ2.1-W1		12/21/2022	MKLEPADLO	
&EMA=V1GL13UQ51UQ2.1+V1GL13UQ51UQ2.1/2	Cable diagram =V1GL13UQ51UQ2.1+V1GL13UQ51UQ2.1-W1.1		12/21/2022	MKLEPADLO	
&EMA=V1GL13UQ51UQ2.1+V1GL13UQ51UQ2.1/3	Cable diagram =V1GL13UQ51UQ2.1+V1GL13UQ51UQ2.1-W1.2		12/21/2022	MKLEPADLO	
&EMA=V1KF1+V1UC11/1	Cable diagram =V1KF1+V1UC11-KF100.11-P1		12/21/2022	MKLEPADLO	
&EMA=V1KF1+V1UC11/2	Cable diagram =V1KF1+V1UC11-KF100.11-P4		12/21/2022	MKLEPADLO	
&EMA=V1KF1+V1UC11/3	Cable diagram =V1KF1+V1UC11-KF100.11-P5		12/21/2022	MKLEPADLO	
&EMA=V1KF1+V1UC11/4	Cable diagram =V1KF1+V1UC11-KF100.11-P6		12/21/2022	MKLEPADLO	
&EMA=V1KF1+V1UC11/5	Cable diagram =V1KF1+V1UC11-KF100.11-P7		12/21/2022	MKLEPADLO	
&EMA=V1KF1+V1UC11/6	Cable diagram =V1KF1+V1UC11-KF100.11-P8		12/21/2022	MKLEPADLO	
&EMA=V1KF1+V1UC11/7	Cable diagram =V1KF1+V1UC11-KF100.11-P9		12/21/2022	MKLEPADLO	
&EMA=V1KF1+V1UC11/8	Cable diagram =V1KF1+V1UC11-KF100.11-P10		12/21/2022	MKLEPADLO	
&EMA=V1KF1+V1UC11/9	Cable diagram =V1KF1+V1UC11-KF100.11-P11		12/21/2022	MKLEPADLO	

Table of contents

Column X: An automatically generated page was edited F06_001

Page	Page description	supplementary page field	Date	Edited by	X
&EMA=V1KF1+V1UC11/10	Cable diagram =V1KF1+V1UC11-KF100.11-P12		12/21/2022	MKLEPADLO	
&EMA=V1KF1+V1UC11/11	Cable diagram =V1KF1+V1UC11-KF100.11-P13		12/21/2022	MKLEPADLO	
&EMA=V1KF1+V1UC11/12	Cable diagram =V1KF1+V1UC11-KF100.11-P14		12/21/2022	MKLEPADLO	
&EMA=V1KF1+V1UC11/13	Cable diagram =V1KF1+V1UC11-KF100.11-P15		12/21/2022	MKLEPADLO	
&EMA=V1KF1+V1UC11/14	Cable diagram =V1KF1+V1UC11-KF100.11-P16		12/21/2022	MKLEPADLO	
&EMA=V1KF1+V1UC12/1	Cable diagram =V1KF1+V1UC12-KF100.12-P1		12/21/2022	MKLEPADLO	
&EMA=V1KF1+V1UC12/2	Cable diagram =V1KF1+V1UC12-KF100.12-P4		12/21/2022	MKLEPADLO	
&EMA=V1KF1+V1UC12/3	Cable diagram =V1KF1+V1UC12-KF100.12-P5		12/21/2022	MKLEPADLO	
&EMA=V1KF1+V1UC12/4	Cable diagram =V1KF1+V1UC12-KF100.12-P6		12/21/2022	MKLEPADLO	
&EMA=V1KF1+V1UC12/5	Cable diagram =V1KF1+V1UC12-KF100.12-P7		12/21/2022	MKLEPADLO	
&EMA=V1KF1+V1UC12/6	Cable diagram =V1KF1+V1UC12-KF100.12-P8		12/21/2022	MKLEPADLO	
&EMA=V1KF1+V1UC12/7	Cable diagram =V1KF1+V1UC12-KF100.12-P9		12/21/2022	MKLEPADLO	
&EMA=V1KF1+V1UC12/8	Cable diagram =V1KF1+V1UC12-KF100.12-P10		12/21/2022	MKLEPADLO	
&EMA=V1KF1+V1UC12/9	Cable diagram =V1KF1+V1UC12-KF100.12-P11		12/21/2022	MKLEPADLO	
&EMA=V1KF1+V1UC12/10	Cable diagram =V1KF1+V1UC12-KF100.12-P12		12/21/2022	MKLEPADLO	
&EMA=V1KF1+V1UC12/11	Cable diagram =V1KF1+V1UC12-KF100.12-P13		12/21/2022	MKLEPADLO	
&EMA=V1KF1+V1UC12/12	Cable diagram =V1KF1+V1UC12-KF100.12-P14		12/21/2022	MKLEPADLO	
&EMA=V1KF1+V1UC12/13	Cable diagram =V1KF1+V1UC12-KF100.12-P15		12/21/2022	MKLEPADLO	
&EMA=V1KF1+V1UC12/14	Cable diagram =V1KF1+V1UC12-KF100.12-P16		12/21/2022	MKLEPADLO	
&EMA=V1KF1+V1UC14/1	Cable diagram =V1KF1+V1UC14-KF100.14-P1		12/21/2022	MKLEPADLO	
&EMA=V1KF1+V1UC14/2	Cable diagram =V1KF1+V1UC14-KF100.14-P4		12/21/2022	MKLEPADLO	
&EMA=V1KF1+V1UC14/3	Cable diagram =V1KF1+V1UC14-KF100.14-P5		12/21/2022	MKLEPADLO	
&EMA=V1KF1+V1UC14/4	Cable diagram =V1KF1+V1UC14-KF100.14-P6		12/21/2022	MKLEPADLO	
&EMA=V1KF1+V1UC14/5	Cable diagram =V1KF1+V1UC14-KF100.14-P7		12/21/2022	MKLEPADLO	
&EMA=V1KF1+V1UC14/6	Cable diagram =V1KF1+V1UC14-KF100.14-P8		12/21/2022	MKLEPADLO	
&EMA=V1KF1+V1UC14/7	Cable diagram =V1KF1+V1UC14-KF100.14-P9		12/21/2022	MKLEPADLO	
&EMA=V1KF1+V1UC14/8	Cable diagram =V1KF1+V1UC14-KF100.14-P10		12/21/2022	MKLEPADLO	
&EMA=V1KF1+V1UC14/9	Cable diagram =V1KF1+V1UC14-KF100.14-P11		12/21/2022	MKLEPADLO	
&EMA=V1KF1+V1UC14/10	Cable diagram =V1KF1+V1UC14-KF100.14-P12		12/21/2022	MKLEPADLO	
&EMA=V1KF1+V1UC14/11	Cable diagram =V1KF1+V1UC14-KF100.14-P13		12/21/2022	MKLEPADLO	
&EMA=V1KF1+V1UC14/12	Cable diagram =V1KF1+V1UC14-KF100.14-P14		12/21/2022	MKLEPADLO	
&EMA=V1KF1+V1UC14/13	Cable diagram =V1KF1+V1UC14-KF100.14-P15		12/21/2022	MKLEPADLO	
&EMA=V1KF1+V1UC14/14	Cable diagram =V1KF1+V1UC14-KF100.14-P16		12/21/2022	MKLEPADLO	

			Date	12/22/2022	Volvo Trucks North America	Valiant TMS	Table of contents : &EMA=V1KF1+V1UC11/10 - &EMA=V1KF1+V1UC14/14	Drawing name: =2V04&EFS-EL	=
			Ed.	MKLEPADLO					+
			Appr		P6700 Underbody Mainline - Cell 2V04			Document type: EAB	Project nr: 22-16151
Modification	Date	Name	Original		Replacement of / Replaced by	Scale 1:1			Page 31 / 1630

Table of contents

Column X: An automatically generated page was edited F06_001

Page	Page description	supplementary page field	Date	Edited by	X
&EMA=V1KF1+V1UC15/1	Cable diagram =V1KF1+V1UC15-KF100.15-P1		12/21/2022	MKLEPADLO	
&EMA=V1KF1+V1UC15/2	Cable diagram =V1KF1+V1UC15-KF100.15-P4		12/21/2022	MKLEPADLO	
&EMA=V1KF1+V1UC15/3	Cable diagram =V1KF1+V1UC15-KF100.15-P5		12/21/2022	MKLEPADLO	
&EMA=V1KF1+V1UC15/4	Cable diagram =V1KF1+V1UC15-KF100.15-P6		12/21/2022	MKLEPADLO	
&EMA=V1KF1+V1UC15/5	Cable diagram =V1KF1+V1UC15-KF100.15-P7		12/21/2022	MKLEPADLO	
&EMA=V1KF1+V1UC15/6	Cable diagram =V1KF1+V1UC15-KF100.15-P8		12/21/2022	MKLEPADLO	
&EMA=V1KF1+V1UC15/7	Cable diagram =V1KF1+V1UC15-KF100.15-P9		12/21/2022	MKLEPADLO	
&EMA=V1KF1+V1UC15/8	Cable diagram =V1KF1+V1UC15-KF100.15-P10		12/21/2022	MKLEPADLO	
&EMA=V1KF1+V1UC15/9	Cable diagram =V1KF1+V1UC15-KF100.15-P11		12/21/2022	MKLEPADLO	
&EMA=V1KF1+V1UC15/10	Cable diagram =V1KF1+V1UC15-KF100.15-P12		12/21/2022	MKLEPADLO	
&EMA=V1KF1+V1UC15/11	Cable diagram =V1KF1+V1UC15-KF100.15-P13		12/21/2022	MKLEPADLO	
&EMA=V1KF1+V1UC15/12	Cable diagram =V1KF1+V1UC15-KF100.15-P14		12/21/2022	MKLEPADLO	
&EMA=V1KF1+V1UC15/13	Cable diagram =V1KF1+V1UC15-KF100.15-P15		12/21/2022	MKLEPADLO	
&EMA=V1KF1+V1UC15/14	Cable diagram =V1KF1+V1UC15-KF100.15-P16		12/21/2022	MKLEPADLO	
&EMA=V1KF1+V1UC32/1	Cable diagram =V1KF1+V1UC32-KF100.12-P12		12/21/2022	MKLEPADLO	
&EMA=V1KF1+V1UC33/1	Cable diagram =V1KF1+V1UC33-KF100.12-P13		12/21/2022	MKLEPADLO	
&EMA=V1UQ51BG0+V1UQ51/1	Cable diagram =V1UQ51BG0+V1UQ51-W1		12/21/2022	MKLEPADLO	
&EMA=V1UQ51BG0+V1UQ51/2	Cable diagram =V1UQ51BG0+V1UQ51-W1.1		12/21/2022	MKLEPADLO	
&EMA=V1UQ51BG0+V1UQ51/3	Cable diagram =V1UQ51BG0+V1UQ51-W1.2		12/21/2022	MKLEPADLO	
&EMA=V1UQ51BG0+V1UQ51/4	Cable diagram =V1UQ51BG0+V1UQ51-W2		12/21/2022	MKLEPADLO	
&EMA=V1UQ51BG0+V1UQ51/5	Cable diagram =V1UQ51BG0+V1UQ51-W2.1		12/21/2022	MKLEPADLO	
&EMA=V1UQ51BG0+V1UQ51/6	Cable diagram =V1UQ51BG0+V1UQ51-W2.2		12/21/2022	MKLEPADLO	
&EMA=V1UQ51KF1+V1UQ51/1	Cable diagram =V1UQ51KF1+V1UQ51-W1.1		12/21/2022	MKLEPADLO	
&EMA=V1UQ51KF2+V1UQ51/1	Cable diagram =V1UQ51KF2+V1UQ51-W2.1		12/21/2022	MKLEPADLO	
&EMA=V1UQ51KF2+V1UQ51/2	Cable diagram =V1UQ51KF2+V1UQ51-WF2		12/21/2022	MKLEPADLO	
&EMA=V1UQ51KF3+V1UQ51/1	Cable diagram =V1UQ51KF3+V1UQ51-W2.2		12/21/2022	MKLEPADLO	
&EMA=V1UQ51KF3+V1UQ51/2	Cable diagram =V1UQ51KF3+V1UQ51-WF3		12/21/2022	MKLEPADLO	
&EMA=V1UQ51UQ1.1+V1UQ51UQ1.1/1	Cable diagram =V1UQ51UQ1.1+V1UQ51UQ1.1-W1		12/21/2022	MKLEPADLO	
&EMA=V1UQ51UQ1.2+V1UQ51UQ1.2/1	Cable diagram =V1UQ51UQ1.2+V1UQ51UQ1.2-W1		12/21/2022	MKLEPADLO	
&EMA=V1UQ51UQ2.1+V1UQ51UQ2.1/1	Cable diagram =V1UQ51UQ2.1+V1UQ51UQ2.1-W1		12/21/2022	MKLEPADLO	
&EMA=V1UQ51UQ3.1+V1UQ51UQ3.1/1	Cable diagram =V1UQ51UQ3.1+V1UQ51UQ3.1-W1		12/21/2022	MKLEPADLO	
&EMA=V1UQ51UQ3.2+V1UQ51UQ3.2/1	Cable diagram =V1UQ51UQ3.2+V1UQ51UQ3.2-W1		12/21/2022	MKLEPADLO	
&EMA=V1UQ51UQ4.1+V1UQ51UQ4.1/1	Cable diagram =V1UQ51UQ4.1+V1UQ51UQ4.1-W1		12/21/2022	MKLEPADLO	

			Date	12/22/2022	Volvo Trucks North America	Valiant TMS	Table of contents : &EMA=V1KF1+V1UC15/1 - &EMA=V1UQ51UQ4.1+V1UQ51UQ4.1/1	Drawing name: =2V04&EFS-EL	=
			Ed.	MKLEPADLO					+
			Appr		P6700 Underbody Mainline - Cell 2V04			Document type: EAB	Project nr: 22-16151	Page 32
Modification	Date	Name	Original		Replacement of / Replaced by	Scale 1:1				1630

Table of contents

Column X: An automatically generated page was edited

F06_001

Page	Page description	supplementary page field	Date	Edited by	X
&EMA=V1UQ51UQ4.2+V1UQ51UQ4.2/1	Cable diagram =V1UQ51UQ4.2+V1UQ51UQ4.2-W1		12/21/2022	MKLEPADLO	
&EMA=V1UQ51UQ5.1+V1UQ51UQ5.1/1	Cable diagram =V1UQ51UQ5.1+V1UQ51UQ5.1-W1		12/21/2022	MKLEPADLO	
&EMA=V1UQ51UQ5.1+V1UQ51UQ5.1/2	Cable diagram =V1UQ51UQ5.1+V1UQ51UQ5.1-W1.1		12/21/2022	MKLEPADLO	
&EMA=V1UQ51UQ5.1+V1UQ51UQ5.1/3	Cable diagram =V1UQ51UQ5.1+V1UQ51UQ5.1-W1.2		12/21/2022	MKLEPADLO	
&EMA=V1UQ51UQ5.2+V1UQ51UQ5.2/1	Cable diagram =V1UQ51UQ5.2+V1UQ51UQ5.2-W1		12/21/2022	MKLEPADLO	
&EMA=V1UQ51UQ5.2+V1UQ51UQ5.2/2	Cable diagram =V1UQ51UQ5.2+V1UQ51UQ5.2-W1.1		12/21/2022	MKLEPADLO	
&EMA=V1UQ51UQ5.2+V1UQ51UQ5.2/3	Cable diagram =V1UQ51UQ5.2+V1UQ51UQ5.2-W1.2		12/21/2022	MKLEPADLO	
&EMA=V1UQ51UQ6.1+V1UQ51UQ6.1/1	Cable diagram =V1UQ51UQ6.1+V1UQ51UQ6.1-W1		12/21/2022	MKLEPADLO	
&EMA=V1UQ51UQ6.2+V1UQ51UQ6.2/1	Cable diagram =V1UQ51UQ6.2+V1UQ51UQ6.2-W1		12/21/2022	MKLEPADLO	
&EMA=V1UQ51UQ7.1+V1UQ51UQ7.1/1	Cable diagram =V1UQ51UQ7.1+V1UQ51UQ7.1-W1		12/21/2022	MKLEPADLO	
&EMA=V1UQ51UQ7.2+V1UQ51UQ7.2/1	Cable diagram =V1UQ51UQ7.2+V1UQ51UQ7.2-W1		12/21/2022	MKLEPADLO	
&EMA=V1UQ51UQ7.3+V1UQ51UQ7.3/1	Cable diagram =V1UQ51UQ7.3+V1UQ51UQ7.3-W1		12/21/2022	MKLEPADLO	
&EMA=V1UQ51UQ7.4+V1UQ51UQ7.4/1	Cable diagram =V1UQ51UQ7.4+V1UQ51UQ7.4-W1		12/21/2022	MKLEPADLO	
&EMA=V1UQ51UQ7.5+V1UQ51UQ7.5/1	Cable diagram =V1UQ51UQ7.5+V1UQ51UQ7.5-W1		12/21/2022	MKLEPADLO	
&EMA=V1UQ51UQ7.6+V1UQ51UQ7.6/1	Cable diagram =V1UQ51UQ7.6+V1UQ51UQ7.6-W1		12/21/2022	MKLEPADLO	
&EMA=V1UQ51UQ7.7+V1UQ51UQ7.7/1	Cable diagram =V1UQ51UQ7.7+V1UQ51UQ7.7-W1		12/21/2022	MKLEPADLO	
&EMA=V1UQ51UQ8.1+V1UQ51UQ8.1/1	Cable diagram =V1UQ51UQ8.1+V1UQ51UQ8.1-W1		12/21/2022	MKLEPADLO	
&EMA=V1UQ51UQ8.2+V1UQ51UQ8.2/1	Cable diagram =V1UQ51UQ8.2+V1UQ51UQ8.2-W1		12/21/2022	MKLEPADLO	
&EMA=V1UQ51UQ9.1+V1UQ51UQ9.1/1	Cable diagram =V1UQ51UQ9.1+V1UQ51UQ9.1-W1		12/21/2022	MKLEPADLO	
&EMA=V1UQ51UQ9.2+V1UQ51UQ9.2/1	Cable diagram =V1UQ51UQ9.2+V1UQ51UQ9.2-W1		12/21/2022	MKLEPADLO	
&EMA=V1UQ51UQ9.3+V1UQ51UQ9.3/1	Cable diagram =V1UQ51UQ9.3+V1UQ51UQ9.3-W1		12/21/2022	MKLEPADLO	
&EMA=V1UQ51UQ9.4+V1UQ51UQ9.4/1	Cable diagram =V1UQ51UQ9.4+V1UQ51UQ9.4-W1		12/21/2022	MKLEPADLO	
&EMA=V1UQ51UQ10.1+V1UQ51UQ10.1/1	Cable diagram =V1UQ51UQ10.1+V1UQ51UQ10.1-W1		12/21/2022	MKLEPADLO	
&EMA=V1UQ51UQ10.2+V1UQ51UQ10.2/1	Cable diagram =V1UQ51UQ10.2+V1UQ51UQ10.2-W1		12/21/2022	MKLEPADLO	
&EMA=V1UQ51UQ11.1+V1UQ51UQ11.1/1	Cable diagram =V1UQ51UQ11.1+V1UQ51UQ11.1-W1		12/21/2022	MKLEPADLO	
&EMA=V1UQ51UQ12.1+V1UQ51UQ12.1/1	Cable diagram =V1UQ51UQ12.1+V1UQ51UQ12.1-W1		12/21/2022	MKLEPADLO	
&EMA=V1UQ51UQ13.1+V1UQ51UQ13.1/1	Cable diagram =V1UQ51UQ13.1+V1UQ51UQ13.1-W1		12/21/2022	MKLEPADLO	
&EMA=V1UQ51UQ14.1+V1UQ51UQ14.1/1	Cable diagram =V1UQ51UQ14.1+V1UQ51UQ14.1-W1		12/21/2022	MKLEPADLO	
&EMA=V1UQ51UQ14.2+V1UQ51UQ14.2/1	Cable diagram =V1UQ51UQ14.2+V1UQ51UQ14.2-W1		12/21/2022	MKLEPADLO	
&EMA=V1UQ51UQ15.1+V1UQ51UQ15.1/1	Cable diagram =V1UQ51UQ15.1+V1UQ51UQ15.1-W1		12/21/2022	MKLEPADLO	
&EMA=V1UQ51UQ15.2+V1UQ51UQ15.2/1	Cable diagram =V1UQ51UQ15.2+V1UQ51UQ15.2-W1		12/21/2022	MKLEPADLO	
&EMA=V1UQ51UQ16.1+V1UQ51UQ16.1/1	Cable diagram =V1UQ51UQ16.1+V1UQ51UQ16.1-W1		12/21/2022	MKLEPADLO	
&EMA=V1UQ51UQ17.1+V1UQ51UQ17.1/1	Cable diagram =V1UQ51UQ17.1+V1UQ51UQ17.1-W1		12/21/2022	MKLEPADLO	

Table of contents

Column X: An automatically generated page was edited F06_001

Page	Page description	supplementary page field	Date	Edited by	X
&EMA=V1UQ51UQ17.1+V1UQ51UQ17.1/2	Cable diagram =V1UQ51UQ17.1+V1UQ51UQ17.1-W1.1		12/21/2022	MKLEPADLO	
&EMA=V1UQ51UQ17.1+V1UQ51UQ17.1/3	Cable diagram =V1UQ51UQ17.1+V1UQ51UQ17.1-W1.2		12/21/2022	MKLEPADLO	
&EMA=V1UQ51UQ18.1+V1UQ51UQ18.1/1	Cable diagram =V1UQ51UQ18.1+V1UQ51UQ18.1-W1		12/21/2022	MKLEPADLO	
&EMA=V1UQ51UQ18.1+V1UQ51UQ18.1/2	Cable diagram =V1UQ51UQ18.1+V1UQ51UQ18.1-W1.1		12/21/2022	MKLEPADLO	
&EMA=V1UQ51UQ18.1+V1UQ51UQ18.1/3	Cable diagram =V1UQ51UQ18.1+V1UQ51UQ18.1-W1.2		12/21/2022	MKLEPADLO	
&EMA=V1UQ51UQ19.1+V1UQ51UQ19.1/1	Cable diagram =V1UQ51UQ19.1+V1UQ51UQ19.1-W1		12/21/2022	MKLEPADLO	
&EMA=V1UQ51UQ19.2+V1UQ51UQ19.2/1	Cable diagram =V1UQ51UQ19.2+V1UQ51UQ19.2-W1		12/21/2022	MKLEPADLO	
&EMA=V1UQ51UQ20.1+V1UQ51UQ20.1/1	Cable diagram =V1UQ51UQ20.1+V1UQ51UQ20.1-W1		12/21/2022	MKLEPADLO	
&EMA=V1UQ51UQ20.2+V1UQ51UQ20.2/1	Cable diagram =V1UQ51UQ20.2+V1UQ51UQ20.2-W1		12/21/2022	MKLEPADLO	
&EMA=V1UQ51UQ21.1+V1UQ51UQ21.1/1	Cable diagram =V1UQ51UQ21.1+V1UQ51UQ21.1-W1		12/21/2022	MKLEPADLO	
&EMA=V1UQ51UQ21.2+V1UQ51UQ21.2/1	Cable diagram =V1UQ51UQ21.2+V1UQ51UQ21.2-W1		12/21/2022	MKLEPADLO	
&EMA=V1UQ51UQ22.1+V1UQ51UQ22.1/1	Cable diagram =V1UQ51UQ22.1+V1UQ51UQ22.1-W1		12/21/2022	MKLEPADLO	
&EMA=V1UQ51UQ22.2+V1UQ51UQ22.2/1	Cable diagram =V1UQ51UQ22.2+V1UQ51UQ22.2-W1		12/21/2022	MKLEPADLO	
&EMA=V1UQ51UQ22.3+V1UQ51UQ22.3/1	Cable diagram =V1UQ51UQ22.3+V1UQ51UQ22.3-W1		12/21/2022	MKLEPADLO	
&EMA=V1UQ51UQ22.4+V1UQ51UQ22.4/1	Cable diagram =V1UQ51UQ22.4+V1UQ51UQ22.4-W1		12/21/2022	MKLEPADLO	
&EMA=V1UQ51UQ23.1+V1UQ51UQ23.1/1	Cable diagram =V1UQ51UQ23.1+V1UQ51UQ23.1-W1		12/21/2022	MKLEPADLO	
&EMA=V1UQ51UQ24.1+V1UQ51UQ24.1/1	Cable diagram =V1UQ51UQ24.1+V1UQ51UQ24.1-W1		12/21/2022	MKLEPADLO	
&EMA=V1UQ51WC4+V1UQ51/1	Cable diagram =V1UQ51WC4+V1UQ51-W1		12/21/2022	MKLEPADLO	
&EMA=V1UQ51WC4+V1UQ51/2	Cable diagram =V1UQ51WC4+V1UQ51-W1.1		12/21/2022	MKLEPADLO	
&EMA=V1UQ52BG0+V1UQ52/1	Cable diagram =V1UQ52BG0+V1UQ52-W1		12/21/2022	MKLEPADLO	
&EMA=V1UQ52BG0+V1UQ52/2	Cable diagram =V1UQ52BG0+V1UQ52-W1.1		12/21/2022	MKLEPADLO	
&EMA=V1UQ52BG0+V1UQ52/3	Cable diagram =V1UQ52BG0+V1UQ52-W1.2		12/21/2022	MKLEPADLO	
&EMA=V1UQ52KF1+V1UQ52/1	Cable diagram =V1UQ52KF1+V1UQ52-KF100.11-P12		12/21/2022	MKLEPADLO	
&EMA=V1UQ52KF1+V1UQ52/2	Cable diagram =V1UQ52KF1+V1UQ52-W1		12/21/2022	MKLEPADLO	
&EMA=V1UQ52UQ1.1+V1UQ52UQ1.1/1	Cable diagram =V1UQ52UQ1.1+V1UQ52UQ1.1-W1		12/21/2022	MKLEPADLO	
&EMA=V1UQ52UQ1.2+V1UQ52UQ1.2/1	Cable diagram =V1UQ52UQ1.2+V1UQ52UQ1.2-W1		12/21/2022	MKLEPADLO	
&EMA=V1UQ52UQ1.3+V1UQ52UQ1.3/1	Cable diagram =V1UQ52UQ1.3+V1UQ52UQ1.3-W1		12/21/2022	MKLEPADLO	
&EMA=V1UQ52UQ1.4+V1UQ52UQ1.4/1	Cable diagram =V1UQ52UQ1.4+V1UQ52UQ1.4-W1		12/21/2022	MKLEPADLO	
&EMA=V1UQ52UQ2.1+V1UQ52UQ2.1/1	Cable diagram =V1UQ52UQ2.1+V1UQ52UQ2.1-W1		12/21/2022	MKLEPADLO	
&EMA=V1UQ52UQ2.2+V1UQ52UQ2.2/1	Cable diagram =V1UQ52UQ2.2+V1UQ52UQ2.2-W1		12/21/2022	MKLEPADLO	
&EMA=V1UQ52UQ3.1+V1UQ52UQ3.1/1	Cable diagram =V1UQ52UQ3.1+V1UQ52UQ3.1-W1		12/21/2022	MKLEPADLO	
&EMA=V1UQ52UQ4.1+V1UQ52UQ4.1/1	Cable diagram =V1UQ52UQ4.1+V1UQ52UQ4.1-W1		12/21/2022	MKLEPADLO	
&EMA=V1UQ52UQ4.2+V1UQ52UQ4.2/1	Cable diagram =V1UQ52UQ4.2+V1UQ52UQ4.2-W1		12/21/2022	MKLEPADLO	

			Date	12/22/2022	Volvo Trucks North America	Valiant TMS	Table of contents : &EMA=V1UQ51UQ17.1+V1UQ51UQ17.1/2 - &EMA=V1UQ52UQ4.2+V1UQ52UQ4.2/1	Drawing name: =2V04&EFS-EL	=
			Ed.	MKLEPADLO					+
			Appr		P6700 Underbody Mainline - Cell 2V04	Scale 1:1		Document type: EAB	Project nr: 22-16151
Modification	Date	Name	Original		Replacement of / Replaced by				Page 34 / 1630

Table of contents

Column X: An automatically generated page was edited

F06_001

Page	Page description	supplementary page field	Date	Edited by	X
&EMA=V1UQ52UQ5.1+V1UQ52UQ5.1/1	Cable diagram =V1UQ52UQ5.1+V1UQ52UQ5.1-W1		12/21/2022	MKLEPADLO	
&EMA=V1UQ52UQ5.1+V1UQ52UQ5.1/2	Cable diagram =V1UQ52UQ5.1+V1UQ52UQ5.1-W1.1		12/21/2022	MKLEPADLO	
&EMA=V1UQ52UQ5.1+V1UQ52UQ5.1/3	Cable diagram =V1UQ52UQ5.1+V1UQ52UQ5.1-W1.2		12/21/2022	MKLEPADLO	
&EMA=V1UQ52UQ5.1+V1UQ52UQ5.1/4	Cable diagram =V1UQ52UQ5.1+V1UQ52UQ5.1-W2		12/21/2022	MKLEPADLO	
&EMA=V1UQ52UQ6.1+V1UQ52UQ6.1/1	Cable diagram =V1UQ52UQ6.1+V1UQ52UQ6.1-W1		12/21/2022	MKLEPADLO	
&EMA=V1UQ53BG0+V1UQ53/1	Cable diagram =V1UQ53BG0+V1UQ53-W1		12/21/2022	MKLEPADLO	
&EMA=V1UQ53BG0+V1UQ53/2	Cable diagram =V1UQ53BG0+V1UQ53-W1.1		12/21/2022	MKLEPADLO	
&EMA=V1UQ53BG0+V1UQ53/3	Cable diagram =V1UQ53BG0+V1UQ53-W1.2		12/21/2022	MKLEPADLO	
&EMA=V1UQ53KF1+V1UQ53/1	Cable diagram =V1UQ53KF1+V1UQ53-KF100.14-P13		12/21/2022	MKLEPADLO	
&EMA=V1UQ53KF1+V1UQ53/2	Cable diagram =V1UQ53KF1+V1UQ53-W1		12/21/2022	MKLEPADLO	
&EMA=V1UQ53UQ1.1+V1UQ53UQ1.1/1	Cable diagram =V1UQ53UQ1.1+V1UQ53UQ1.1-W1		12/21/2022	MKLEPADLO	
&EMA=V1UQ53UQ1.2+V1UQ53UQ1.2/1	Cable diagram =V1UQ53UQ1.2+V1UQ53UQ1.2-W1		12/21/2022	MKLEPADLO	
&EMA=V1UQ53UQ1.3+V1UQ53UQ1.3/1	Cable diagram =V1UQ53UQ1.3+V1UQ53UQ1.3-W1		12/21/2022	MKLEPADLO	
&EMA=V1UQ53UQ1.4+V1UQ53UQ1.4/1	Cable diagram =V1UQ53UQ1.4+V1UQ53UQ1.4-W1		12/21/2022	MKLEPADLO	
&EMA=V1UQ53UQ2.1+V1UQ53UQ2.1/1	Cable diagram =V1UQ53UQ2.1+V1UQ53UQ2.1-W1		12/21/2022	MKLEPADLO	
&EMA=V1UQ53UQ2.2+V1UQ53UQ2.2/1	Cable diagram =V1UQ53UQ2.2+V1UQ53UQ2.2-W1		12/21/2022	MKLEPADLO	
&EMA=V1UQ53UQ3.1+V1UQ53UQ3.1/1	Cable diagram =V1UQ53UQ3.1+V1UQ53UQ3.1-W1		12/21/2022	MKLEPADLO	
&EMA=V1UQ53UQ4.1+V1UQ53UQ4.1/1	Cable diagram =V1UQ53UQ4.1+V1UQ53UQ4.1-W1		12/21/2022	MKLEPADLO	
&EMA=V1UQ53UQ4.2+V1UQ53UQ4.2/1	Cable diagram =V1UQ53UQ4.2+V1UQ53UQ4.2-W1		12/21/2022	MKLEPADLO	
&EMA=V1UQ53UQ5.1+V1UQ53UQ5.1/1	Cable diagram =V1UQ53UQ5.1+V1UQ53UQ5.1-W1		12/21/2022	MKLEPADLO	
&EMA=V1UQ53UQ5.1+V1UQ53UQ5.1/2	Cable diagram =V1UQ53UQ5.1+V1UQ53UQ5.1-W1.1		12/21/2022	MKLEPADLO	
&EMA=V1UQ53UQ5.1+V1UQ53UQ5.1/3	Cable diagram =V1UQ53UQ5.1+V1UQ53UQ5.1-W1.2		12/21/2022	MKLEPADLO	
&EMA=V1UQ53UQ5.1+V1UQ53UQ5.1/4	Cable diagram =V1UQ53UQ5.1+V1UQ53UQ5.1-W2		12/21/2022	MKLEPADLO	
&EMA=V1UQ53UQ6.1+V1UQ53UQ6.1/1	Cable diagram =V1UQ53UQ6.1+V1UQ53UQ6.1-W1		12/21/2022	MKLEPADLO	
&EMA=V1UQ54BG0+V1UQ54/1	Cable diagram =V1UQ54BG0+V1UQ54-W1		12/21/2022	MKLEPADLO	
&EMA=V1UQ54BG0+V1UQ54/2	Cable diagram =V1UQ54BG0+V1UQ54-W1.1		12/21/2022	MKLEPADLO	
&EMA=V1UQ54BG0+V1UQ54/3	Cable diagram =V1UQ54BG0+V1UQ54-W1.2		12/21/2022	MKLEPADLO	
&EMA=V1UQ54KF1+V1UQ54/1	Cable diagram =V1UQ54KF1+V1UQ54-KF100.15-P16		12/21/2022	MKLEPADLO	
&EMA=V1UQ54KF1+V1UQ54/2	Cable diagram =V1UQ54KF1+V1UQ54-W1		12/21/2022	MKLEPADLO	
&EMA=V1UQ54UQ1.1+V1UQ54UQ1.1/1	Cable diagram =V1UQ54UQ1.1+V1UQ54UQ1.1-W1		12/21/2022	MKLEPADLO	
&EMA=V1UQ54UQ2.1+V1UQ54UQ2.1/1	Cable diagram =V1UQ54UQ2.1+V1UQ54UQ2.1-W1		12/21/2022	MKLEPADLO	
&EMA=V1UQ54UQ2.2+V1UQ54UQ2.2/1	Cable diagram =V1UQ54UQ2.2+V1UQ54UQ2.2-W1		12/21/2022	MKLEPADLO	
&EMA=V1UQ54UQ3.1+V1UQ54UQ3.1/1	Cable diagram =V1UQ54UQ3.1+V1UQ54UQ3.1-W1		12/21/2022	MKLEPADLO	

			Date	12/22/2022	Volvo Trucks North America	Valiant TMS	Table of contents : &EMA=V1UQ52UQ5.1+V1UQ52UQ5.1/1 - &EMA=V1UQ54UQ3.1+V1UQ54UQ3.1/1	Drawing name: =2V04&EFS-EL	=
			Ed.	MKLEPADLO					+
			Appr		P6700 Underbody Mainline - Cell 2V04	Scale 1:1		Document type: EAB	Project nr: 22-16151	Page 35 / 1630
Modification	Date	Name	Original		Replacement of / Replaced by				

Table of contents

Column X: An automatically generated page was edited

F06_001

Page	Page description	supplementary page field	Date	Edited by	X
&EMA=V1UQ54UQ3.2+V1UQ54UQ3.2/1	Cable diagram =V1UQ54UQ3.2+V1UQ54UQ3.2-W1		12/21/2022	MKLEPADLO	
&EMA=V1UQ54UQ4.1+V1UQ54UQ4.1/1	Cable diagram =V1UQ54UQ4.1+V1UQ54UQ4.1-W1		12/21/2022	MKLEPADLO	
&EMA=V1UQ55BG0+V1UQ55/1	Cable diagram =V1UQ55BG0+V1UQ55-W1		12/21/2022	MKLEPADLO	
&EMA=V1UQ55BG0+V1UQ55/2	Cable diagram =V1UQ55BG0+V1UQ55-W1.1		12/21/2022	MKLEPADLO	
&EMA=V1UQ55BG0+V1UQ55/3	Cable diagram =V1UQ55BG0+V1UQ55-W1.2		12/21/2022	MKLEPADLO	
&EMA=V1UQ55KF1+V1UQ55/1	Cable diagram =V1UQ55KF1+V1UQ55-KF100.14-P14		12/21/2022	MKLEPADLO	
&EMA=V1UQ55KF1+V1UQ55/2	Cable diagram =V1UQ55KF1+V1UQ55-W1		12/21/2022	MKLEPADLO	
&EMA=V1UQ55UQ1.1+V1UQ55UQ1.1/1	Cable diagram =V1UQ55UQ1.1+V1UQ55UQ1.1-W1		12/21/2022	MKLEPADLO	
&EMA=V1UQ55UQ1.2+V1UQ55UQ1.2/1	Cable diagram =V1UQ55UQ1.2+V1UQ55UQ1.2-W1		12/21/2022	MKLEPADLO	
&EMA=V1UQ55UQ1.3+V1UQ55UQ1.3/1	Cable diagram =V1UQ55UQ1.3+V1UQ55UQ1.3-W1		12/21/2022	MKLEPADLO	
&EMA=V1UQ55UQ1.4+V1UQ55UQ1.4/1	Cable diagram =V1UQ55UQ1.4+V1UQ55UQ1.4-W1		12/21/2022	MKLEPADLO	
&EMA=V1UQ55UQ2.1+V1UQ55UQ2.1/1	Cable diagram =V1UQ55UQ2.1+V1UQ55UQ2.1-W1		12/21/2022	MKLEPADLO	
&EMA=V1UQ55UQ2.2+V1UQ55UQ2.2/1	Cable diagram =V1UQ55UQ2.2+V1UQ55UQ2.2-W1		12/21/2022	MKLEPADLO	
&EMA=V1UQ55UQ3.1+V1UQ55UQ3.1/1	Cable diagram =V1UQ55UQ3.1+V1UQ55UQ3.1-W1		12/21/2022	MKLEPADLO	
&EMA=V1UQ55UQ3.2+V1UQ55UQ3.2/1	Cable diagram =V1UQ55UQ3.2+V1UQ55UQ3.2-W1		12/21/2022	MKLEPADLO	
&EMA=V1UQ55UQ4.1+V1UQ55UQ4.1/1	Cable diagram =V1UQ55UQ4.1+V1UQ55UQ4.1-W1		12/21/2022	MKLEPADLO	
&EMA=V1UQ55UQ4.2+V1UQ55UQ4.2/1	Cable diagram =V1UQ55UQ4.2+V1UQ55UQ4.2-W1		12/21/2022	MKLEPADLO	
&EMA=V1UQ55UQ5.1+V1UQ55UQ5.1/1	Cable diagram =V1UQ55UQ5.1+V1UQ55UQ5.1-W1		12/21/2022	MKLEPADLO	
&EMA=V1UQ55UQ5.2+V1UQ55UQ5.2/1	Cable diagram =V1UQ55UQ5.2+V1UQ55UQ5.2-W1		12/21/2022	MKLEPADLO	
&EMA=V1UQ55UQ6.1+V1UQ55UQ6.1/1	Cable diagram =V1UQ55UQ6.1+V1UQ55UQ6.1-W1		12/21/2022	MKLEPADLO	
&EMA=V1UQ55UQ6.2+V1UQ55UQ6.2/1	Cable diagram =V1UQ55UQ6.2+V1UQ55UQ6.2-W1		12/21/2022	MKLEPADLO	
&EMA=V1UQ55UQ7.1+V1UQ55UQ7.1/1	Cable diagram =V1UQ55UQ7.1+V1UQ55UQ7.1-W1		12/21/2022	MKLEPADLO	
&EMA=V1UQ55UQ7.2+V1UQ55UQ7.2/1	Cable diagram =V1UQ55UQ7.2+V1UQ55UQ7.2-W1		12/21/2022	MKLEPADLO	
&EMA=V1UQ55UQ8.1+V1UQ55UQ8.1/1	Cable diagram =V1UQ55UQ8.1+V1UQ55UQ8.1-W1		12/21/2022	MKLEPADLO	
&EMA=V1UQ55UQ8.2+V1UQ55UQ8.2/1	Cable diagram =V1UQ55UQ8.2+V1UQ55UQ8.2-W1		12/21/2022	MKLEPADLO	
&EMA=V1UQ55UQ9.1+V1UQ55UQ9.1/1	Cable diagram =V1UQ55UQ9.1+V1UQ55UQ9.1-W1		12/21/2022	MKLEPADLO	
&EMA=V1UQ55UQ9.2+V1UQ55UQ9.2/1	Cable diagram =V1UQ55UQ9.2+V1UQ55UQ9.2-W1		12/21/2022	MKLEPADLO	
&EMA=V1WC1+V1UC11/1	Cable diagram =V1WC1+V1UC11-GND1		12/21/2022	MKLEPADLO	
&EMA=V1WC1+V1UC11/2	Cable diagram =V1WC1+V1UC11-KF100.11-P2		12/21/2022	MKLEPADLO	
&EMA=V1WC1+V1UC12/1	Cable diagram =V1WC1+V1UC12-GND1		12/21/2022	MKLEPADLO	
&EMA=V1WC1+V1UC12/2	Cable diagram =V1WC1+V1UC12-KF100.12-P2		12/21/2022	MKLEPADLO	
&EMA=V1WC3+V1UC14/1	Cable diagram =V1WC3+V1UC14-W1		12/21/2022	MKLEPADLO	
&EMA=V1WC3+V1UC15/1	Cable diagram =V1WC3+V1UC15-W1		12/21/2022	MKLEPADLO	

			Date	12/22/2022	Volvo Trucks North America	Valiant TMS	Table of contents : &EMA=V1UQ54UQ3.2+V1UQ54UQ3.2/1 - &EMA=V1WC3+V1UC15/1	Drawing name: =2V04&EFS-EL	=
			Ed.	MKLEPADLO					+
			Appr		P6700 Underbody Mainline - Cell 2V04	Scale 1:1		Document type: EAB	Project nr: 22-16151	Page 36 / 1630
Modification	Date	Name	Original		Replacement of / Replaced by				

Table of contents

Column X: An automatically generated page was edited F06_001

Page	Page description	supplementary page field	Date	Edited by	X
&EMA=V1WC4+V1UC32/1	Cable diagram =V1WC4+V1UC32-W1		12/21/2022	MKLEPADLO	
&EMA=V1WC4+V1UC33/1	Cable diagram =V1WC4+V1UC33-W1		12/21/2022	MKLEPADLO	
&EMA=V1WR1UQ51BG0+V1WR1UQ51/1	Cable diagram =V1WR1UQ51BG0+V1WR1UQ51-W1		12/21/2022	MKLEPADLO	
&EMA=V1WR1UQ51BG0+V1WR1UQ51/2	Cable diagram =V1WR1UQ51BG0+V1WR1UQ51-W1.1		12/21/2022	MKLEPADLO	
&EMA=V1WR1UQ51BG0+V1WR1UQ51/3	Cable diagram =V1WR1UQ51BG0+V1WR1UQ51-W1.2		12/21/2022	MKLEPADLO	
&EMA=V1WR1UQ51KF1+V1WR1UQ51/1	Cable diagram =V1WR1UQ51KF1+V1WR1UQ51-W1		12/21/2022	MKLEPADLO	
&EMA=V1WR1UQ51UQ1.1+V1WR1UQ51UQ1.1/1	Cable diagram =V1WR1UQ51UQ1.1+V1WR1UQ51UQ1.1-W1		12/21/2022	MKLEPADLO	
&EMA=V1WR1UQ51UQ1.2+V1WR1UQ51UQ1.2/1	Cable diagram =V1WR1UQ51UQ1.2+V1WR1UQ51UQ1.2-W1		12/21/2022	MKLEPADLO	
&EMA=V1WR1UQ51UQ2.1+V1WR1UQ51UQ2.1/1	Cable diagram =V1WR1UQ51UQ2.1+V1WR1UQ51UQ2.1-W1		12/21/2022	MKLEPADLO	
&EMA=V1WR1UQ51UQ2.2+V1WR1UQ51UQ2.2/1	Cable diagram =V1WR1UQ51UQ2.2+V1WR1UQ51UQ2.2-W1		12/21/2022	MKLEPADLO	
&EMA=V1WR1UQ51UQ2.3+V1WR1UQ51UQ2.3/1	Cable diagram =V1WR1UQ51UQ2.3+V1WR1UQ51UQ2.3-W1		12/21/2022	MKLEPADLO	
&EMA=V1WR1UQ51UQ2.4+V1WR1UQ51UQ2.4/1	Cable diagram =V1WR1UQ51UQ2.4+V1WR1UQ51UQ2.4-W1		12/21/2022	MKLEPADLO	
&EMA=V1WR1UQ51UQ3.1+V1WR1UQ51UQ3.1/1	Cable diagram =V1WR1UQ51UQ3.1+V1WR1UQ51UQ3.1-W1		12/21/2022	MKLEPADLO	
&EMA=V1WR1UQ51UQ3.2+V1WR1UQ51UQ3.2/1	Cable diagram =V1WR1UQ51UQ3.2+V1WR1UQ51UQ3.2-W1		12/21/2022	MKLEPADLO	
&EMA=V1WR1UQ51UQ4.1+V1WR1UQ51UQ4.1/1	Cable diagram =V1WR1UQ51UQ4.1+V1WR1UQ51UQ4.1-W1		12/21/2022	MKLEPADLO	
&EMA=V1WR1UQ51UQ4.2+V1WR1UQ51UQ4.2/1	Cable diagram =V1WR1UQ51UQ4.2+V1WR1UQ51UQ4.2-W1		12/21/2022	MKLEPADLO	
&EMA=V1WR1UQ51UQ5.1+V1WR1UQ51UQ5.1/1	Cable diagram =V1WR1UQ51UQ5.1+V1WR1UQ51UQ5.1-W1		12/21/2022	MKLEPADLO	
&EMA=V1WR1UQ51UQ5.2+V1WR1UQ51UQ5.2/1	Cable diagram =V1WR1UQ51UQ5.2+V1WR1UQ51UQ5.2-W1		12/21/2022	MKLEPADLO	
&EMA=V1WR1UQ51UQ6.1+V1WR1UQ51UQ6.1/1	Cable diagram =V1WR1UQ51UQ6.1+V1WR1UQ51UQ6.1-W1		12/21/2022	MKLEPADLO	
&EMA=V1WR1UQ51UQ6.2+V1WR1UQ51UQ6.2/1	Cable diagram =V1WR1UQ51UQ6.2+V1WR1UQ51UQ6.2-W1		12/21/2022	MKLEPADLO	
&EMA=V1WR1UQ51UQ7.1+V1WR1UQ51UQ7.1/1	Cable diagram =V1WR1UQ51UQ7.1+V1WR1UQ51UQ7.1-W1		12/21/2022	MKLEPADLO	
&EMA=V1WR1UQ51UQ7.2+V1WR1UQ51UQ7.2/1	Cable diagram =V1WR1UQ51UQ7.2+V1WR1UQ51UQ7.2-W1		12/21/2022	MKLEPADLO	
&EMA=V1WR1UQ51UQ8.1+V1WR1UQ51UQ8.1/1	Cable diagram =V1WR1UQ51UQ8.1+V1WR1UQ51UQ8.1-W1		12/21/2022	MKLEPADLO	
&EMA=V1WR1UQ51UQ8.2+V1WR1UQ51UQ8.2/1	Cable diagram =V1WR1UQ51UQ8.2+V1WR1UQ51UQ8.2-W1		12/21/2022	MKLEPADLO	
&EMA=V1WR1UQ51UQ9.1+V1WR1UQ51UQ9.1/1	Cable diagram =V1WR1UQ51UQ9.1+V1WR1UQ51UQ9.1-W1		12/21/2022	MKLEPADLO	
&EMA=V1WR1UQ51UQ9.2+V1WR1UQ51UQ9.2/1	Cable diagram =V1WR1UQ51UQ9.2+V1WR1UQ51UQ9.2-W1		12/21/2022	MKLEPADLO	
&EMA=V1WR1WC1+V1WR1UC01/1	Cable diagram =V1WR1WC1+V1WR1UC01-KF100.14-P10		12/21/2022	MKLEPADLO	
&EMA=V1WR1WC1+V1WR1UC01/2	Cable diagram =V1WR1WC1+V1WR1UC01-W1		12/22/2022	MKLEPADLO	
&EMC/1	Cable overview		12/21/2022	MKLEPADLO	
&EMC/2	Cable overview		12/21/2022	MKLEPADLO	
&EMC/3	Cable overview		12/21/2022	MKLEPADLO	
&EMC/4	Cable overview		12/21/2022	MKLEPADLO	
&EMC/5	Cable overview		12/21/2022	MKLEPADLO	

Table of contents

Column X: An automatically generated page was edited

F06_001

Page	Page description	supplementary page field	Date	Edited by	X
&EMC/6	Cable overview		12/22/2022	MKLEPADLO	
&EMC/7	Cable overview		12/21/2022	MKLEPADLO	
&EMC/8	Cable overview		12/21/2022	MKLEPADLO	
&EMC/9	Cable overview		12/21/2022	MKLEPADLO	
&EMC/10	Cable overview		12/21/2022	MKLEPADLO	
&EMC/11	Cable overview		12/21/2022	MKLEPADLO	
&EMC/12	Cable overview		12/21/2022	MKLEPADLO	
&EMC/13	Cable overview		12/21/2022	MKLEPADLO	
&EMC/14	Cable overview		12/21/2022	MKLEPADLO	
&EMC/15	Cable overview		12/21/2022	MKLEPADLO	
&EMC/16	Cable overview		12/22/2022	MKLEPADLO	
&EPB/1	Parts list : TS 35_7,5 - TS 35_7,5		12/21/2022	MKLEPADLO	
&EPB+KH0/1	Parts list : TUR.BS 8251-0/PG9 - TUR.BS 8251-0/PG9		12/21/2022	MKLEPADLO	
&EPB+UC31/1	Parts list : US2.ECGB5 - SIE.6EP3336-7SB00-3AX0		12/21/2022	MKLEPADLO	
&EPB+UC31UC91/1	Parts list : ABB.1SFA619550R1051 - ABB.1SFA619100R1023		12/21/2022	MKLEPADLO	
&EPB+UC31UC92/1	Parts list : ABB.1SFA619100R1111 - ABB.1SFA619200R1016		12/21/2022	MKLEPADLO	
&EPB+UC32/1	Parts list : ABB.1SFA619550R1051 - ABB.1SFA616915R1005		12/21/2022	MKLEPADLO	
&EPB+UC33/1	Parts list : ABB.1SFA619550R1051 - ABB.1SFA616915R1005		12/21/2022	MKLEPADLO	
&EPB+V1AR11UQ41/1	Parts list : TUR.NI50U-CK40-AP6X2-H1141/S1590 W/BS4 - FES.549335		12/21/2022	MKLEPADLO	
&EPB+V1AR11UQ41UQ1.1/1	Parts list : WELKER.WWS001A - WELKER.WWS001A		12/21/2022	MKLEPADLO	
&EPB+V1AR11UQ41UQ2.1/1	Parts list : WELKER.WWS001A - WELKER.WWS001A		12/21/2022	MKLEPADLO	
&EPB+V1AR11UQ41UQ3.1/1	Parts list : WELKER.WWS001A - WELKER.WWS001A		12/21/2022	MKLEPADLO	
&EPB+V1AR11UQ41UQ3.2/1	Parts list : WELKER.WWS001A - WELKER.WWS001A		12/21/2022	MKLEPADLO	
&EPB+V1AR11UQ41UQ4.1/1	Parts list : TUN.1324633 - TUN.1324633		12/21/2022	MKLEPADLO	
&EPB+V1AR11UQ41UQ4.2/1	Parts list : TUN.1324633 - TUN.1324633		12/21/2022	MKLEPADLO	
&EPB+V1AR11UQ41UQ4.3/1	Parts list : TUN.1324633 - TUN.1324633		12/21/2022	MKLEPADLO	
&EPB+V1AR11UQ41UQ4.4/1	Parts list : TUN.1324633 - TUN.1324633		12/21/2022	MKLEPADLO	
&EPB+V1AR11UQ41UQ5.1/1	Parts list : TUN.1324633 - TUN.1324633		12/21/2022	MKLEPADLO	
&EPB+V1AR11UQ41UQ5.2/1	Parts list : TUN.1324633 - TUN.1324633		12/21/2022	MKLEPADLO	
&EPB+V1AR11UQ41UQ5.3/1	Parts list : TUN.1324633 - TUN.1324633		12/21/2022	MKLEPADLO	
&EPB+V1AR11UQ41UQ5.4/1	Parts list : TUN.1324633 - TUN.1324633		12/21/2022	MKLEPADLO	
&EPB+V1AR11UQ41UQ6.1/1	Parts list : TUN.1324633 - TUN.1324633		12/21/2022	MKLEPADLO	
&EPB+V1AR11UQ41UQ7.1/1	Parts list : IFM.PN7094 - IFM.PN7094		12/21/2022	MKLEPADLO	

Table of contents

Column X: An automatically generated page was edited

F06_001

Page	Page description	supplementary page field	Date	Edited by	X
&EPB+V1AR11UQ41UQ8.1/1	Parts list : TUN.1324633 - TUN.1324633		12/21/2022	MKLEPADLO	
&EPB+V1AR11UQ41UQ8.2/1	Parts list : TUN.1324633 - TUN.1324633		12/21/2022	MKLEPADLO	
&EPB+V1AR11UQ41UQ8.3/1	Parts list : TUN.1324633 - TUN.1324633		12/21/2022	MKLEPADLO	
&EPB+V1AR11UQ41UQ8.4/1	Parts list : TUN.1324633 - TUN.1324633		12/21/2022	MKLEPADLO	
&EPB+V1AR11UQ41UQ9.1/1	Parts list : TUN.1324633 - TUN.1324633		12/21/2022	MKLEPADLO	
&EPB+V1AR11UQ41UQ9.2/1	Parts list : TUN.1324633 - TUN.1324633		12/21/2022	MKLEPADLO	
&EPB+V1AR11UQ41UQ10.1/1	Parts list : TUN.1324633 - TUN.1324633		12/21/2022	MKLEPADLO	
&EPB+V1AR11UQ41UQ10.2/1	Parts list : TUN.1324633 - TUN.1324633		12/21/2022	MKLEPADLO	
&EPB+V1AR11UQ41UQ11.1/1	Parts list : TUN.1324633 - TUN.1324633		12/21/2022	MKLEPADLO	
&EPB+V1AR11UQ41UQ12.1/1	Parts list : IFM.PN7094 - IFM.PN7094		12/21/2022	MKLEPADLO	
&EPB+V1AR11UQ41UQ13.1/1	Parts list : IFM.PN7094 - IFM.PN7094		12/21/2022	MKLEPADLO	
&EPB+V1AR11UQ41UQ14.1/1	Parts list : TUN.1324633 - TUN.1324633		12/21/2022	MKLEPADLO	
&EPB+V1AR11UQ41UQ14.2/1	Parts list : TUN.1324633 - TUN.1324633		12/21/2022	MKLEPADLO	
&EPB+V1AR11UQ41UQ15.1/1	Parts list : TUN.1324633 - TUN.1324633		12/21/2022	MKLEPADLO	
&EPB+V1AR11UQ41UQ15.2/1	Parts list : TUN.1324633 - TUN.1324633		12/21/2022	MKLEPADLO	
&EPB+V1AR11UQ41UQ16.1/1	Parts list : TUN.1324633 - TUN.1324633		12/21/2022	MKLEPADLO	
&EPB+V1AR11UQ41UQ16.2/1	Parts list : TUN.1324633 - TUN.1324633		12/21/2022	MKLEPADLO	
&EPB+V1AR11UQ41UQ17.1/1	Parts list : TUN.1324633 - TUN.1324633		12/21/2022	MKLEPADLO	
&EPB+V1AR11UQ41UQ18.1/1	Parts list : IFM.PN7094 - IFM.PN7094		12/21/2022	MKLEPADLO	
&EPB+V1AR11UQ41UQ19.1/1	Parts list : IFM.PN7094 - IFM.PN7094		12/21/2022	MKLEPADLO	
&EPB+V1AR11UQ41UQ20.1/1	Parts list : TUN.1324633 - TUN.1324633		12/21/2022	MKLEPADLO	
&EPB+V1AR11UQ41UQ20.2/1	Parts list : TUN.1324633 - TUN.1324633		12/21/2022	MKLEPADLO	
&EPB+V1AR11UQ41UQ21.1/1	Parts list : TUN.1324633 - TUN.1324633		12/21/2022	MKLEPADLO	
&EPB+V1AR11UQ41UQ21.2/1	Parts list : TUN.1324633 - TUN.1324633		12/21/2022	MKLEPADLO	
&EPB+V1AR11UQ41UQ22.1/1	Parts list : TUN.1324633 - TUN.1324633		12/21/2022	MKLEPADLO	
&EPB+V1AR11UQ41UQ23.1/1	Parts list : IFM.PN7094 - IFM.PN7094		12/21/2022	MKLEPADLO	
&EPB+V1AR11UQ41UQ24.1/1	Parts list : TUN.1324633 - TUN.1324633		12/21/2022	MKLEPADLO	
&EPB+V1AR11UQ41UQ24.2/1	Parts list : TUN.1324633 - TUN.1324633		12/21/2022	MKLEPADLO	
&EPB+V1AR12UQ41/1	Parts list : TUR.NI50U-CK40-AP6X2-H1141/S1590 W/BS4 - FES.549335		12/21/2022	MKLEPADLO	
&EPB+V1AR12UQ41UQ1.1/1	Parts list : IFM.PN7094 - IFM.PN7094		12/21/2022	MKLEPADLO	
&EPB+V1AR12UQ41UQ2.1/1	Parts list : IFM.PN7094 - IFM.PN7094		12/21/2022	MKLEPADLO	
&EPB+V1AR12UQ41UQ3.1/1	Parts list : IFM.PN7094 - IFM.PN7094		12/21/2022	MKLEPADLO	
&EPB+V1AR12UQ41UQ4.1/1	Parts list : IFM.PN7094 - IFM.PN7094		12/21/2022	MKLEPADLO	

			Date	12/22/2022	Volvo Trucks North America	Valiant TMS	Table of contents : &EPB+V1AR11UQ41UQ8.1/1 - &EPB+V1AR12UQ41UQ4.1/1	Drawing name: =2V04&EFS-EL	=
			Ed.	MKLEPADLO					+
			Appr		P6700 Underbody Mainline - Cell 2V04			Document type: EAB	Project nr: 22-16151	Page 39
Modification	Date	Name	Original		Replacement of	Replaced by	Scale 1:1			1630

Table of contents

Column X: An automatically generated page was edited

F06_001

Page	Page description	supplementary page field	Date	Edited by	X
&EPB+V1AR12UQ41UQ5.1/1	Parts list : TUN.1324638 - TUN.1324638		12/21/2022	MKLEPADLO	
&EPB+V1AR12UQ41UQ5.2/1	Parts list : TUN.1324638 - TUN.1324638		12/21/2022	MKLEPADLO	
&EPB+V1AR12UQ41UQ6.1/1	Parts list : TUN.1324638 - TUN.1324638		12/21/2022	MKLEPADLO	
&EPB+V1AR12UQ41UQ6.2/1	Parts list : TUN.1324638 - TUN.1324638		12/21/2022	MKLEPADLO	
&EPB+V1AR12UQ41UQ7.1/1	Parts list : TUN.1324638 - TUN.1324638		12/21/2022	MKLEPADLO	
&EPB+V1AR12UQ41UQ7.2/1	Parts list : TUN.1324638 - TUN.1324638		12/21/2022	MKLEPADLO	
&EPB+V1AR12UQ41UQ8.1/1	Parts list : TUN.1324638 - TUN.1324638		12/21/2022	MKLEPADLO	
&EPB+V1AR12UQ41UQ8.2/1	Parts list : TUN.1324638 - TUN.1324638		12/21/2022	MKLEPADLO	
&EPB+V1AR12UQ41UQ9.1/1	Parts list : TUN.1324638 - TUN.1324638		12/21/2022	MKLEPADLO	
&EPB+V1AR12UQ41UQ9.2/1	Parts list : TUN.1324638 - TUN.1324638		12/21/2022	MKLEPADLO	
&EPB+V1AR13UQ41/1	Parts list : TUR.NI50U-CK40-AP6X2-H1141/S1590 W/BS4 - FES.549335		12/21/2022	MKLEPADLO	
&EPB+V1AR13UQ41UQ1.1/1	Parts list : IFM.PN7094 - IFM.PN7094		12/21/2022	MKLEPADLO	
&EPB+V1AR13UQ41UQ2.1/1	Parts list : IFM.PN7094 - IFM.PN7094		12/21/2022	MKLEPADLO	
&EPB+V1AR13UQ41UQ3.1/1	Parts list : IFM.PN7094 - IFM.PN7094		12/21/2022	MKLEPADLO	
&EPB+V1AR13UQ41UQ4.1/1	Parts list : IFM.PN7094 - IFM.PN7094		12/21/2022	MKLEPADLO	
&EPB+V1AR13UQ41UQ5.1/1	Parts list : TUN.1324638 - TUN.1324638		12/21/2022	MKLEPADLO	
&EPB+V1AR13UQ41UQ5.2/1	Parts list : TUN.1324638 - TUN.1324638		12/21/2022	MKLEPADLO	
&EPB+V1AR13UQ41UQ6.1/1	Parts list : TUN.1324638 - TUN.1324638		12/21/2022	MKLEPADLO	
&EPB+V1AR13UQ41UQ6.2/1	Parts list : TUN.1324638 - TUN.1324638		12/21/2022	MKLEPADLO	
&EPB+V1AR13UQ41UQ7.1/1	Parts list : TUN.1324638 - TUN.1324638		12/21/2022	MKLEPADLO	
&EPB+V1AR13UQ41UQ7.2/1	Parts list : TUN.1324638 - TUN.1324638		12/21/2022	MKLEPADLO	
&EPB+V1AR13UQ41UQ8.1/1	Parts list : TUN.1324638 - TUN.1324638		12/21/2022	MKLEPADLO	
&EPB+V1AR13UQ41UQ8.2/1	Parts list : TUN.1324638 - TUN.1324638		12/21/2022	MKLEPADLO	
&EPB+V1AR13UQ41UQ9.1/1	Parts list : TUN.1324638 - TUN.1324638		12/21/2022	MKLEPADLO	
&EPB+V1AR13UQ41UQ9.2/1	Parts list : TUN.1324638 - TUN.1324638		12/21/2022	MKLEPADLO	
&EPB+V1AR14UQ41/1	Parts list : TUR.NI50U-CK40-AP6X2-H1141/S1590 W/BS4 - FES.549335		12/21/2022	MKLEPADLO	
&EPB+V1AR14UQ41UQ1.1/1	Parts list : IFM.PN7094 - IFM.PN7094		12/21/2022	MKLEPADLO	
&EPB+V1AR14UQ41UQ2.1/1	Parts list : IFM.PN7094 - IFM.PN7094		12/21/2022	MKLEPADLO	
&EPB+V1AR14UQ41UQ3.1/1	Parts list : IFM.PN7094 - IFM.PN7094		12/21/2022	MKLEPADLO	
&EPB+V1AR14UQ41UQ4.1/1	Parts list : IFM.PN7094 - IFM.PN7094		12/21/2022	MKLEPADLO	
&EPB+V1AR14UQ41UQ5.1/1	Parts list : TUN.1324638 - TUN.1324638		12/21/2022	MKLEPADLO	
&EPB+V1AR14UQ41UQ5.2/1	Parts list : TUN.1324638 - TUN.1324638		12/21/2022	MKLEPADLO	
&EPB+V1AR14UQ41UQ6.1/1	Parts list : TUN.1324638 - TUN.1324638		12/21/2022	MKLEPADLO	

			Date	12/22/2022	Volvo Trucks North America	Valiant TMS	Table of contents : &EPB+V1AR12UQ41UQ5.1/1 - &EPB+V1AR14UQ41UQ6.1/1	Drawing name: =2V04&EFS-EL	=
			Ed.	MKLEPADLO					+
			Appr		P6700 Underbody Mainline - Cell 2V04			Document type: EAB	Project nr: 22-16151
Modification	Date	Name	Original		Replacement of / Replaced by	Scale 1:1			Page 40 / 1630

Table of contents

Column X: An automatically generated page was edited

F06_001

Page	Page description	supplementary page field	Date	Edited by	X
&EPB+V1AR14UQ41UQ6.2/1	Parts list : TUN.1324638 - TUN.1324638		12/21/2022	MKLEPADLO	
&EPB+V1AR14UQ41UQ7.1/1	Parts list : TUN.1324638 - TUN.1324638		12/21/2022	MKLEPADLO	
&EPB+V1AR14UQ41UQ7.2/1	Parts list : TUN.1324638 - TUN.1324638		12/21/2022	MKLEPADLO	
&EPB+V1AR14UQ41UQ8.1/1	Parts list : TUN.1324638 - TUN.1324638		12/21/2022	MKLEPADLO	
&EPB+V1AR14UQ41UQ8.2/1	Parts list : TUN.1324638 - TUN.1324638		12/21/2022	MKLEPADLO	
&EPB+V1AR14UQ41UQ9.1/1	Parts list : TUN.1324638 - TUN.1324638		12/21/2022	MKLEPADLO	
&EPB+V1AR14UQ41UQ9.2/1	Parts list : TUN.1324638 - TUN.1324638		12/21/2022	MKLEPADLO	
&EPB+V1AR15UQ41/1	Parts list : TUR.NI50U-CK40-AP6X2-H1141/S1590 W/BS4 - FES.549335		12/21/2022	MKLEPADLO	
&EPB+V1AR15UQ41UQ1.1/1	Parts list : IFM.PN7094 - IFM.PN7094		12/21/2022	MKLEPADLO	
&EPB+V1AR15UQ41UQ2.1/1	Parts list : IFM.PN7094 - IFM.PN7094		12/21/2022	MKLEPADLO	
&EPB+V1AR15UQ41UQ3.1/1	Parts list : IFM.PN7094 - IFM.PN7094		12/21/2022	MKLEPADLO	
&EPB+V1AR15UQ41UQ4.1/1	Parts list : IFM.PN7094 - IFM.PN7094		12/21/2022	MKLEPADLO	
&EPB+V1AR15UQ41UQ5.1/1	Parts list : TUN.1324638 - TUN.1324638		12/21/2022	MKLEPADLO	
&EPB+V1AR15UQ41UQ5.2/1	Parts list : TUN.1324638 - TUN.1324638		12/21/2022	MKLEPADLO	
&EPB+V1AR15UQ41UQ6.1/1	Parts list : TUN.1324638 - TUN.1324638		12/21/2022	MKLEPADLO	
&EPB+V1AR15UQ41UQ6.2/1	Parts list : TUN.1324638 - TUN.1324638		12/21/2022	MKLEPADLO	
&EPB+V1AR15UQ41UQ7.1/1	Parts list : TUN.1324638 - TUN.1324638		12/21/2022	MKLEPADLO	
&EPB+V1AR15UQ41UQ7.2/1	Parts list : TUN.1324638 - TUN.1324638		12/21/2022	MKLEPADLO	
&EPB+V1AR15UQ41UQ8.1/1	Parts list : TUN.1324638 - TUN.1324638		12/21/2022	MKLEPADLO	
&EPB+V1AR15UQ41UQ8.2/1	Parts list : TUN.1324638 - TUN.1324638		12/21/2022	MKLEPADLO	
&EPB+V1AR15UQ41UQ9.1/1	Parts list : TUN.1324638 - TUN.1324638		12/21/2022	MKLEPADLO	
&EPB+V1AR15UQ41UQ9.2/1	Parts list : TUN.1324638 - TUN.1324638		12/21/2022	MKLEPADLO	
&EPB+V1AR21XQ11UC01/1	Parts list : ABB.2CMA193115R1000 - ABB.2CMA193115R1000		12/21/2022	MKLEPADLO	
&EPB+V1AR22XQ11UC01/1	Parts list : ABB.2CMA193115R1000 - ABB.2CMA193115R1000		12/21/2022	MKLEPADLO	
&EPB+V1AR23XQ11UC01/1	Parts list : ABB.2CMA193115R1000 - ABB.2CMA193115R1000		12/21/2022	MKLEPADLO	
&EPB+V1AR24XQ11UC01/1	Parts list : ABB.2CMA193115R1000 - ABB.2CMA193115R1000		12/21/2022	MKLEPADLO	
&EPB+V1AR25XQ11UC01/1	Parts list : ABB.2CMA193115R1000 - ABB.2CMA193115R1000		12/21/2022	MKLEPADLO	
&EPB+V1AR26XQ11UC01/1	Parts list : ABB.2CMA193115R1000 - ABB.2CMA193115R1000		12/21/2022	MKLEPADLO	
&EPB+V1AR27XQ11UC01/1	Parts list : ABB.2CMA193115R1000 - ABB.2CMA193115R1000		12/21/2022	MKLEPADLO	
&EPB+V1AR28XQ11UC01/1	Parts list : ABB.2CMA193115R1000 - ABB.2CMA193115R1000		12/21/2022	MKLEPADLO	
&EPB+V1AR29XQ11UC01/1	Parts list : ABB.2CMA193115R1000 - ABB.2CMA193115R1000		12/21/2022	MKLEPADLO	
&EPB+V1AR51XQ51UC01/1	Parts list : ABB.2CMA193115R1000 - ABB.2CMA193115R1000		12/21/2022	MKLEPADLO	
&EPB+V1AR52XQ51UC01/1	Parts list : ABB.2CMA193115R1000 - ABB.2CMA193115R1000		12/21/2022	MKLEPADLO	

			Date	12/22/2022	Volvo Trucks North America	Valiant TMS	Table of contents : &EPB+V1AR14UQ41UQ6.2/1 - &EPB+V1AR52XQ51UC01/1	Drawing name: =2V04&EFS-EL	=
			Ed.	MKLEPADLO	P6700 Underbody Mainline - Cell 2V04				+
			Appr			Scale 1:1		Document type: EAB	Project nr: 22-16151
Modification	Date	Name	Original		Replacement of	Replaced by			Page 41 / 1630

Table of contents

Column X: An automatically generated page was edited

F06_001

Page	Page description	supplementary page field	Date	Edited by	X
&EPB+V1AR53XQ51UC01/1	Parts list : ABB.2CMA193115R1000 - ABB.2CMA193115R1000		12/21/2022	MKLEPADLO	
&EPB+V1AR54XQ51UC01/1	Parts list : ABB.2CMA193115R1000 - ABB.2CMA193115R1000		12/21/2022	MKLEPADLO	
&EPB+V1AR141XQ41UC01/1	Parts list : ABB.2CMA193115R1000 - ABB.2CMA193115R1000		12/21/2022	MKLEPADLO	
&EPB+V1AR142XQ41UC01/1	Parts list : ABB.2CMA193115R1000 - ABB.2CMA193115R1000		12/21/2022	MKLEPADLO	
&EPB+V1AR211XQ11UC01/1	Parts list : ABB.2CMA193115R1000 - ABB.2CMA193115R1000		12/21/2022	MKLEPADLO	
&EPB+V1AR212XQ11UC01/1	Parts list : ABB.2CMA193115R1000 - ABB.2CMA193115R1000		12/21/2022	MKLEPADLO	
&EPB+V1AR213XQ11UC01/1	Parts list : ABB.2CMA193115R1000 - ABB.2CMA193115R1000		12/21/2022	MKLEPADLO	
&EPB+V1FQ1/1	Parts list : BAN.SLSCP30-1200P44NT - BAN.SLSCP30-1200P44NT		12/21/2022	MKLEPADLO	
&EPB+V1FQ1BG1/1	Parts list : EUC.MGB-L2B-PNA-L-121863 - EUC.MGB-E-A2-106051		12/21/2022	MKLEPADLO	
&EPB+V1FQ1BG2/1	Parts list : EUC.MGB-L2B-PNA-L-121863 - EUC.MGB-E-A2-106051		12/21/2022	MKLEPADLO	
&EPB+V1FQ1BG3/1	Parts list : EUC.MGB-L2B-PNA-L-121863 - EUC.MGB-E-A2-106051		12/21/2022	MKLEPADLO	
&EPB+V1FQ1BG4/1	Parts list : EUC.MGB-L2B-PNA-L-121863 - EUC.MGB-E-A2-106051		12/21/2022	MKLEPADLO	
&EPB+V1FQ1BG5/1	Parts list : EUC.MGB-L2B-PNA-R-121859 - EUC.MGB-E-A2-106051		12/21/2022	MKLEPADLO	
&EPB+V1FQ1BG6/1	Parts list : EUC.MGB-L2B-PNA-R-121859 - EUC.MGB-E-A2-106051		12/21/2022	MKLEPADLO	
&EPB+V1FQ1BG7/1	Parts list : EUC.MGB-L2B-PNA-R-121859 - EUC.MGB-E-A2-106051		12/21/2022	MKLEPADLO	
&EPB+V1FQ1BG8/1	Parts list : EUC.MGB-L2B-PNA-R-121859 - EUC.MGB-E-A2-106051		12/21/2022	MKLEPADLO	
&EPB+V1GL11KF2/1	Parts list : SIE.6GT2801-2BA10 - SIE.6GT2002-0JE10		12/21/2022	MKLEPADLO	
&EPB+V1GL11UC01/1	Parts list : SIE.6SL3525-0PE17-5AA1 - EM.EM3BMHANQ4SDCG10		12/21/2022	MKLEPADLO	
&EPB+V1GL11UQ51/1	Parts list : TUR.1644741 - FES.549335		12/21/2022	MKLEPADLO	
&EPB+V1GL11UQ51UQ3.1/1	Parts list : TUR.1644741 - TUR.VB2-FSM 4.4/2FKM 4/S3450		12/21/2022	MKLEPADLO	
&EPB+V1GL11UQ51UQ4.1/1	Parts list : TUR.1644741 - TUR.VB2-FSM 4.4/2FKM 4/S3450		12/21/2022	MKLEPADLO	
&EPB+V1GL11UQ51UQ5.1/1	Parts list : TUR.1644741 - TUR.VB2-FSM 4.4/2FKM 4/S3450		12/21/2022	MKLEPADLO	
&EPB+V1GL11UQ51UQ6.1/1	Parts list : TUR.1644741 - TUR.VB2-FSM 4.4/2FKM 4/S3450		12/21/2022	MKLEPADLO	
&EPB+V1GL11UQ51UQ7.1/1	Parts list : TUR.1644741 - TUR.VB2-FSM 4.4/2FKM 4/S3450		12/21/2022	MKLEPADLO	
&EPB+V1GL12KF2/1	Parts list : SIE.6GT2801-2BA10 - SIE.6GT2002-0JE10		12/21/2022	MKLEPADLO	
&EPB+V1GL12UC01/1	Parts list : SIE.6SL3525-0PE17-5AA1 - EM.EM3BMHANQ4SDCG10		12/21/2022	MKLEPADLO	
&EPB+V1GL12UQ51/1	Parts list : TUR.1644741 - FES.549335		12/21/2022	MKLEPADLO	
&EPB+V1GL12UQ51UQ3.1/1	Parts list : TUR.16447411 - TUR.VB2-FSM 4.4/2FKM 4/S3450		12/21/2022	MKLEPADLO	
&EPB+V1GL12UQ51UQ4.1/1	Parts list : TUR.16447411 - TUR.VB2-FSM 4.4/2FKM 4/S3450		12/21/2022	MKLEPADLO	
&EPB+V1GL12UQ51UQ4.2/1	Parts list : TUR.16447411 - TUR.VB2-FSM 4.4/2FKM 4/S3450		12/21/2022	MKLEPADLO	
&EPB+V1GL12UQ51UQ5.1/1	Parts list : TUR.16447411 - TUR.VB2-FSM 4.4/2FKM 4/S3450		12/21/2022	MKLEPADLO	
&EPB+V1GL12UQ51UQ6.1/1	Parts list : TUR.16447411 - TUR.VB2-FSM 4.4/2FKM 4/S3450		12/21/2022	MKLEPADLO	
&EPB+V1GL13UQ51/1	Parts list : TUR.1644741 - TUR.RSM-2RKM 50		12/21/2022	MKLEPADLO	

			Date	12/22/2022	Volvo Trucks North America	Valiant TMS	Table of contents : &EPB+V1AR53XQ51UC01/1 - &EPB+V1GL13UQ51/1	Drawing name: =2V04&EFS-EL	=
			Ed.	MKLEPADLO					+
			Appr		P6700 Underbody Mainline - Cell 2V04			Document type: EAB	Project nr: 22-16151
Modification	Date	Name	Original		Replacement of / Replaced by	Scale 1:1			Page 42 / 1630

Table of contents

Column X: An automatically generated page was edited

F06_001

Page	Page description	supplementary page field	Date	Edited by	X
&EPB+V1GL13UQ51UQ1.1/1	Parts list : TUR.16447411 - TUR.VB2-FSM 4.4/2FKM 4/S3450		12/21/2022	MKLEPADLO	
&EPB+V1GL13UQ51UQ2.1/1	Parts list : TUR.16447411 - TUR.VB2-FSM 4.4/2FKM 4/S3450		12/21/2022	MKLEPADLO	
&EPB+V1GL13UQ51UQ3.1/1	Parts list : TUR.16447411 - TUR.VB2-FSM 4.4/2FKM 4/S3450		12/21/2022	MKLEPADLO	
&EPB+V1GL13UQ51UQ7.1/1	Parts list : TUR.16447411 - TUR.VB2-FSM 4.4/2FKM 4/S3450		12/21/2022	MKLEPADLO	
&EPB+V1GL13UQ51UQ8.1/1	Parts list : TUR.16447411 - TUR.VB2-FSM 4.4/2FKM 4/S3450		12/21/2022	MKLEPADLO	
&EPB+V1UC11/1	Parts list : EMPD3FBCB-025A-M - SIE.5SJ4120-7HG41		12/21/2022	MKLEPADLO	
&EPB+V1UC11/2	Parts list : SIE.5ST3010-0HG - RIT.4115000		12/21/2022	MKLEPADLO	
&EPB+V1UC12/1	Parts list : EMPD3FBCB-025A-M - SIE.3VA5120-6ED31-0AA0		12/21/2022	MKLEPADLO	
&EPB+V1UC12/2	Parts list : SIE.3VA9978-0AA12 - RIT.4115000		12/21/2022	MKLEPADLO	
&EPB+V1UC14/1	Parts list : SIE.6ES7155-6AA01-0BN0_subassembly - SIE.6EP3336-7SB00-3AX0		12/21/2022	MKLEPADLO	
&EPB+V1UC15/1	Parts list : SIE.6ES7155-6AA01-0BN0_subassembly - TUR.BS 4151-0/9		12/21/2022	MKLEPADLO	
&EPB+V1UC32/1	Parts list : SIE.6ES7155-6AA01-0BN0_subassembly - TUR.RSF 50-1M/NPT		12/21/2022	MKLEPADLO	
&EPB+V1UC33/1	Parts list : SIE.6ES7155-6AA01-0BN0_subassembly - TUR.RSF 50-1M/NPT		12/21/2022	MKLEPADLO	
&EPB+V1UC161/1	Parts list : MB-231-03 - RIT.4115000		12/21/2022	MKLEPADLO	
&EPB+V1UC162/1	Parts list : CPB-E2G06-03 - RIT.4115000		12/21/2022	MKLEPADLO	
&EPB+V1UC163/1	Parts list : CPB-E2G06-03 - RIT.4115000		12/21/2022	MKLEPADLO	
&EPB+V1UC164/1	Parts list : MB-231-03 - RIT.4115000		12/21/2022	MKLEPADLO	
&EPB+V1UQ51/1	Parts list : TUR.BI20U-CA40-AP6X2-H1141/S1590W/BS2.0 - TUR.RSM-2RKM 50		12/21/2022	MKLEPADLO	
&EPB+V1UQ51UQ1.1/1	Parts list : WELKER.WWS001A - WELKER.WWS001A		12/21/2022	MKLEPADLO	
&EPB+V1UQ51UQ1.2/1	Parts list : WELKER.WWS001A - WELKER.WWS001A		12/21/2022	MKLEPADLO	
&EPB+V1UQ51UQ2.1/1	Parts list : WELKER.WWS001A - WELKER.WWS001A		12/21/2022	MKLEPADLO	
&EPB+V1UQ51UQ3.1/1	Parts list : WELKER.WWS001A - WELKER.WWS001A		12/21/2022	MKLEPADLO	
&EPB+V1UQ51UQ3.2/1	Parts list : WELKER.WWS001A - WELKER.WWS001A		12/21/2022	MKLEPADLO	
&EPB+V1UQ51UQ4.1/1	Parts list : TUN.1324638 - TUN.1324638		12/21/2022	MKLEPADLO	
&EPB+V1UQ51UQ4.2/1	Parts list : TUN.1324638 - TUN.1324638		12/21/2022	MKLEPADLO	
&EPB+V1UQ51UQ5.1/1	Parts list : TUR.BI20U-CA40-AP6X2-H1141/S1590W/BS2.0 - TUR.VB2-FSM 4.4/2FKM 4/S3450		12/21/2022	MKLEPADLO	
&EPB+V1UQ51UQ5.2/1	Parts list : TUR.BI20U-CA40-AP6X2-H1141/S1590W/BS2.0 - TUR.VB2-FSM 4.4/2FKM 4/S3450		12/21/2022	MKLEPADLO	
&EPB+V1UQ51UQ6.1/1	Parts list : WELKER.WWS001A - WELKER.WWS001A		12/21/2022	MKLEPADLO	
&EPB+V1UQ51UQ6.2/1	Parts list : WELKER.WWS001A - WELKER.WWS001A		12/21/2022	MKLEPADLO	
&EPB+V1UQ51UQ7.1/1	Parts list : TUN.1324638 - TUN.1324638		12/21/2022	MKLEPADLO	
&EPB+V1UQ51UQ7.2/1	Parts list : TUN.1324638 - TUN.1324638		12/21/2022	MKLEPADLO	
&EPB+V1UQ51UQ7.3/1	Parts list : TUN.1324638 - TUN.1324638		12/21/2022	MKLEPADLO	
&EPB+V1UQ51UQ7.4/1	Parts list : TUN.1324638 - TUN.1324638		12/21/2022	MKLEPADLO	

			Date	12/22/2022	Volvo Trucks North America	Valiant TMS	Table of contents : &EPB+V1GL13UQ51UQ1.1/1 - &EPB+V1UQ51UQ7.4/1	Drawing name: =2V04&EFS-EL	=	
			Ed.	MKLEPADLO					+	
			Appr		P6700 Underbody Mainline - Cell 2V04			Document type: EAB	Project nr: 22-16151	Page 43
Modification	Date	Name	Original		Replacement of / Replaced by	Scale 1:1				1630

Table of contents

Column X: An automatically generated page was edited

F06_001

Page	Page description	supplementary page field	Date	Edited by	X
&EPB+V1UQ51UQ7.5/1	Parts list : TUN.1324638 - TUN.1324638		12/21/2022	MKLEPADLO	
&EPB+V1UQ51UQ7.6/1	Parts list : TUN.1324638 - TUN.1324638		12/21/2022	MKLEPADLO	
&EPB+V1UQ51UQ7.7/1	Parts list : TUN.1324638 - TUN.1324638		12/21/2022	MKLEPADLO	
&EPB+V1UQ51UQ8.1/1	Parts list : TUN.1324638 - TUN.1324638		12/21/2022	MKLEPADLO	
&EPB+V1UQ51UQ8.2/1	Parts list : TUN.1324638 - TUN.1324638		12/21/2022	MKLEPADLO	
&EPB+V1UQ51UQ9.1/1	Parts list : TUN.1324638 - TUN.1324638		12/21/2022	MKLEPADLO	
&EPB+V1UQ51UQ9.2/1	Parts list : TUN.1324638 - TUN.1324638		12/21/2022	MKLEPADLO	
&EPB+V1UQ51UQ9.3/1	Parts list : TUN.1324638 - TUN.1324638		12/21/2022	MKLEPADLO	
&EPB+V1UQ51UQ9.4/1	Parts list : TUN.1324638 - TUN.1324638		12/21/2022	MKLEPADLO	
&EPB+V1UQ51UQ10.1/1	Parts list : TUN.1324638 - TUN.1324638		12/21/2022	MKLEPADLO	
&EPB+V1UQ51UQ10.2/1	Parts list : TUN.1324638 - TUN.1324638		12/21/2022	MKLEPADLO	
&EPB+V1UQ51UQ11.1/1	Parts list : TUN.1324638 - TUN.1324638		12/21/2022	MKLEPADLO	
&EPB+V1UQ51UQ12.1/1	Parts list : WELKER.WWS001A - WELKER.WWS001A		12/21/2022	MKLEPADLO	
&EPB+V1UQ51UQ13.1/1	Parts list : WELKER.WWS001A - WELKER.WWS001A		12/21/2022	MKLEPADLO	
&EPB+V1UQ51UQ14.1/1	Parts list : TUN.1324638 - TUN.1324638		12/21/2022	MKLEPADLO	
&EPB+V1UQ51UQ14.2/1	Parts list : TUN.1324638 - TUN.1324638		12/21/2022	MKLEPADLO	
&EPB+V1UQ51UQ15.1/1	Parts list : TUN.1324638 - TUN.1324638		12/21/2022	MKLEPADLO	
&EPB+V1UQ51UQ15.2/1	Parts list : TUN.1324638 - TUN.1324638		12/21/2022	MKLEPADLO	
&EPB+V1UQ51UQ16.1/1	Parts list : TUN.1324638 - TUN.1324638		12/21/2022	MKLEPADLO	
&EPB+V1UQ51UQ17.1/1	Parts list : TUR.BI20U-CA40-AP6X2-H1141/S1590W/BS2.0 - TUR.VB2-FSM 4.4/2FKM 4/S3450		12/21/2022	MKLEPADLO	
&EPB+V1UQ51UQ18.1/1	Parts list : TUR.BI20U-CA40-AP6X2-H1141/S1590W/BS2.0 - TUR.VB2-FSM 4.4/2FKM 4/S3450		12/21/2022	MKLEPADLO	
&EPB+V1UQ51UQ19.1/1	Parts list : TUN.1324638 - TUN.1324638		12/21/2022	MKLEPADLO	
&EPB+V1UQ51UQ19.2/1	Parts list : TUN.1324638 - TUN.1324638		12/21/2022	MKLEPADLO	
&EPB+V1UQ51UQ20.1/1	Parts list : WELKER.WWS001A - WELKER.WWS001A		12/21/2022	MKLEPADLO	
&EPB+V1UQ51UQ20.2/1	Parts list : WELKER.WWS001A - WELKER.WWS001A		12/21/2022	MKLEPADLO	
&EPB+V1UQ51UQ21.1/1	Parts list : TUN.1324638 - TUN.1324638		12/21/2022	MKLEPADLO	
&EPB+V1UQ51UQ21.2/1	Parts list : TUN.1324638 - TUN.1324638		12/21/2022	MKLEPADLO	
&EPB+V1UQ51UQ22.1/1	Parts list : TUN.1324638 - TUN.1324638		12/21/2022	MKLEPADLO	
&EPB+V1UQ51UQ22.2/1	Parts list : TUN.1324638 - TUN.1324638		12/21/2022	MKLEPADLO	
&EPB+V1UQ51UQ22.3/1	Parts list : TUN.1324638 - TUN.1324638		12/21/2022	MKLEPADLO	
&EPB+V1UQ51UQ22.4/1	Parts list : TUN.1324638 - TUN.1324638		12/21/2022	MKLEPADLO	
&EPB+V1UQ51UQ23.1/1	Parts list : TUN.285425 - TUN.285425		12/21/2022	MKLEPADLO	
&EPB+V1UQ51UQ24.1/1	Parts list : TUN.285425 - TUN.285425		12/21/2022	MKLEPADLO	

			Date	12/22/2022	Volvo Trucks North America	Valiant TMS	Table of contents : &EPB+V1UQ51UQ7.5/1 - &EPB+V1UQ51UQ24.1/1	Drawing name: =2V04&EFS-EL	=
			Ed.	MKLEPADLO					+
			Appr		P6700 Underbody Mainline - Cell 2V04			Document type: EAB	Project nr: 22-16151
Modification	Date	Name	Original		Replacement of	Replaced by	Scale 1:1		Page 44 / 1630

Table of contents

Column X: An automatically generated page was edited

F06_001

Page	Page description	supplementary page field	Date	Edited by	X
&EPB+V1UQ52/1	Parts list : TUR.BI20U-CA40-AP6X2-H1141/S1590W/BS2.0 - FES.549335		12/21/2022	MKLEPADLO	
&EPB+V1UQ52UQ1.1/1	Parts list : TUN.1324644 - TUN.1324644		12/21/2022	MKLEPADLO	
&EPB+V1UQ52UQ1.2/1	Parts list : TUN.1324644 - TUN.1324644		12/21/2022	MKLEPADLO	
&EPB+V1UQ52UQ1.3/1	Parts list : TUN.1324644 - TUN.1324644		12/21/2022	MKLEPADLO	
&EPB+V1UQ52UQ1.4/1	Parts list : TUN.1324644 - TUN.1324644		12/21/2022	MKLEPADLO	
&EPB+V1UQ52UQ2.1/1	Parts list : TUN.285425 - TUN.285425		12/21/2022	MKLEPADLO	
&EPB+V1UQ52UQ2.2/1	Parts list : TUN.285425 - TUN.285425		12/21/2022	MKLEPADLO	
&EPB+V1UQ52UQ3.1/1	Parts list : WELKER.WWS001A - WELKER.WWS001A		12/21/2022	MKLEPADLO	
&EPB+V1UQ52UQ4.1/1	Parts list : TUN.285425 - TUN.285425		12/21/2022	MKLEPADLO	
&EPB+V1UQ52UQ4.2/1	Parts list : TUN.285425 - TUN.285425		12/21/2022	MKLEPADLO	
&EPB+V1UQ52UQ5.1/1	Parts list : TUR.BI20U-CA40-AP6X2-H1141/S1590W/BS2.0 - TUR.VB2-FSM 4.4/2FKM 4/S3450		12/21/2022	MKLEPADLO	
&EPB+V1UQ52UQ6.1/1	Parts list : TUN.1324638 - TUN.1324638		12/21/2022	MKLEPADLO	
&EPB+V1UQ53/1	Parts list : TUR.BI20U-CA40-AP6X2-H1141/S1590W/BS2.0 - FES.549335		12/21/2022	MKLEPADLO	
&EPB+V1UQ53UQ1.1/1	Parts list : TUN.1324644 - TUN.1324644		12/21/2022	MKLEPADLO	
&EPB+V1UQ53UQ1.2/1	Parts list : TUN.1324644 - TUN.1324644		12/21/2022	MKLEPADLO	
&EPB+V1UQ53UQ1.3/1	Parts list : TUN.1324644 - TUN.1324644		12/21/2022	MKLEPADLO	
&EPB+V1UQ53UQ1.4/1	Parts list : TUN.1324644 - TUN.1324644		12/21/2022	MKLEPADLO	
&EPB+V1UQ53UQ2.1/1	Parts list : TUN.285425 - TUN.285425		12/21/2022	MKLEPADLO	
&EPB+V1UQ53UQ2.2/1	Parts list : TUN.285425 - TUN.285425		12/21/2022	MKLEPADLO	
&EPB+V1UQ53UQ3.1/1	Parts list : WELKER.WWS001A - WELKER.WWS001A		12/21/2022	MKLEPADLO	
&EPB+V1UQ53UQ4.1/1	Parts list : TUN.285425 - TUN.285425		12/21/2022	MKLEPADLO	
&EPB+V1UQ53UQ4.2/1	Parts list : TUN.285425 - TUN.285425		12/21/2022	MKLEPADLO	
&EPB+V1UQ53UQ5.1/1	Parts list : TUR.BI20U-CA40-AP6X2-H1141/S1590W/BS2.0 - TUR.VB2-FSM 4.4/2FKM 4/S3450		12/21/2022	MKLEPADLO	
&EPB+V1UQ53UQ6.1/1	Parts list : TUN.1324638 - TUN.1324638		12/21/2022	MKLEPADLO	
&EPB+V1UQ54/1	Parts list : TUR.BI20U-CA40-AP6X2-H1141/S1590W/BS2.0 - FES.549335		12/21/2022	MKLEPADLO	
&EPB+V1UQ54UQ1.1/1	Parts list : WELKER.WWS001A - WELKER.WWS001A		12/21/2022	MKLEPADLO	
&EPB+V1UQ54UQ2.1/1	Parts list : WELKER.WWS001A - WELKER.WWS001A		12/21/2022	MKLEPADLO	
&EPB+V1UQ54UQ2.2/1	Parts list : WELKER.WWS001A - WELKER.WWS001A		12/21/2022	MKLEPADLO	
&EPB+V1UQ54UQ3.1/1	Parts list : WELKER.WWS001A - WELKER.WWS001A		12/21/2022	MKLEPADLO	
&EPB+V1UQ54UQ3.2/1	Parts list : WELKER.WWS001A - WELKER.WWS001A		12/21/2022	MKLEPADLO	
&EPB+V1UQ54UQ4.1/1	Parts list : WELKER.WWS001A - WELKER.WWS001A		12/21/2022	MKLEPADLO	
&EPB+V1UQ55/1	Parts list : TUR.BI20U-CA40-AP6X2-H1141/S1590W/BS2.0 - FES.549335		12/21/2022	MKLEPADLO	
&EPB+V1UQ55UQ1.1/1	Parts list : TUN.1324644 - TUN.1324644		12/21/2022	MKLEPADLO	

			Date	12/22/2022	Volvo Trucks North America	Valiant TMS	Table of contents : &EPB+V1UQ52/1 - &EPB+V1UQ55UQ1.1/1	Drawing name: =2V04&EFS-EL	=
			Ed.	MKLEPADLO					+
			Appr		P6700 Underbody Mainline - Cell 2V04			Document type: EAB	Project nr: 22-16151
Modification	Date	Name	Original		Replacement of	Replaced by	Scale 1:1		Page 45 / 1630

Table of contents

Column X: An automatically generated page was edited

F06_001

Page	Page description	supplementary page field	Date	Edited by	X
&EPB+V1UQ55UQ1.2/1	Parts list : TUN.1324644 - TUN.1324644		12/21/2022	MKLEPADLO	
&EPB+V1UQ55UQ1.3/1	Parts list : TUN.1324644 - TUN.1324644		12/21/2022	MKLEPADLO	
&EPB+V1UQ55UQ1.4/1	Parts list : TUN.1324644 - TUN.1324644		12/21/2022	MKLEPADLO	
&EPB+V1UQ55UQ2.1/1	Parts list : WELKER.WWS001A - WELKER.WWS001A		12/21/2022	MKLEPADLO	
&EPB+V1UQ55UQ2.2/1	Parts list : WELKER.WWS001A - WELKER.WWS001A		12/21/2022	MKLEPADLO	
&EPB+V1UQ55UQ3.1/1	Parts list : TUN.285425 - TUN.285425		12/21/2022	MKLEPADLO	
&EPB+V1UQ55UQ3.2/1	Parts list : TUN.285425 - TUN.285425		12/21/2022	MKLEPADLO	
&EPB+V1UQ55UQ4.1/1	Parts list : WELKER.WWS001A - WELKER.WWS001A		12/21/2022	MKLEPADLO	
&EPB+V1UQ55UQ4.2/1	Parts list : WELKER.WWS001A - WELKER.WWS001A		12/21/2022	MKLEPADLO	
&EPB+V1UQ55UQ5.1/1	Parts list : TUN.285425 - TUN.285425		12/21/2022	MKLEPADLO	
&EPB+V1UQ55UQ5.2/1	Parts list : TUN.285425 - TUN.285425		12/21/2022	MKLEPADLO	
&EPB+V1UQ55UQ6.1/1	Parts list : WELKER.WWS001A - WELKER.WWS001A		12/21/2022	MKLEPADLO	
&EPB+V1UQ55UQ6.2/1	Parts list : WELKER.WWS001A - WELKER.WWS001A		12/21/2022	MKLEPADLO	
&EPB+V1UQ55UQ7.1/1	Parts list : TUN.285425 - TUN.285425		12/21/2022	MKLEPADLO	
&EPB+V1UQ55UQ7.2/1	Parts list : TUN.285425 - TUN.285425		12/21/2022	MKLEPADLO	
&EPB+V1UQ55UQ8.1/1	Parts list : WELKER.WWS001A - WELKER.WWS001A		12/21/2022	MKLEPADLO	
&EPB+V1UQ55UQ8.2/1	Parts list : WELKER.WWS001A - WELKER.WWS001A		12/21/2022	MKLEPADLO	
&EPB+V1UQ55UQ9.1/1	Parts list : TUN.285425 - TUN.285425		12/21/2022	MKLEPADLO	
&EPB+V1UQ55UQ9.2/1	Parts list : TUN.285425 - TUN.285425		12/21/2022	MKLEPADLO	
&EPB+V1WR1UQ51/1	Parts list : TUR.BI20U-CA40-AP6X2-H1141/S1590W/BS2.0 - FES.549335		12/21/2022	MKLEPADLO	
&EPB+V1WR1UQ51UQ1.1/1	Parts list : P+F.284395 - P+F.284395		12/21/2022	MKLEPADLO	
&EPB+V1WR1UQ51UQ1.2/1	Parts list : P+F.284395 - P+F.284395		12/21/2022	MKLEPADLO	
&EPB+V1WR1UQ51UQ2.1/1	Parts list : TUN.1324644 - TUN.1324644		12/21/2022	MKLEPADLO	
&EPB+V1WR1UQ51UQ2.2/1	Parts list : TUN.1324644 - TUN.1324644		12/21/2022	MKLEPADLO	
&EPB+V1WR1UQ51UQ2.3/1	Parts list : TUN.1324644 - TUN.1324644		12/21/2022	MKLEPADLO	
&EPB+V1WR1UQ51UQ2.4/1	Parts list : TUN.1324644 - TUN.1324644		12/21/2022	MKLEPADLO	
&EPB+V1WR1UQ51UQ3.1/1	Parts list : TUN.1324644 - TUN.1324644		12/21/2022	MKLEPADLO	
&EPB+V1WR1UQ51UQ3.2/1	Parts list : TUN.1324644 - TUN.1324644		12/21/2022	MKLEPADLO	
&EPB+V1WR1UQ51UQ4.1/1	Parts list : TUN.1324644 - TUN.1324644		12/21/2022	MKLEPADLO	
&EPB+V1WR1UQ51UQ4.2/1	Parts list : TUN.1324644 - TUN.1324644		12/21/2022	MKLEPADLO	
&EPB+V1WR1UQ51UQ5.1/1	Parts list : TUN.1324644 - TUN.1324644		12/21/2022	MKLEPADLO	
&EPB+V1WR1UQ51UQ5.2/1	Parts list : TUN.1324644 - TUN.1324644		12/21/2022	MKLEPADLO	
&EPB+V1WR1UQ51UQ6.1/1	Parts list : TUN.1324644 - TUN.1324644		12/21/2022	MKLEPADLO	

			Date	12/22/2022	Volvo Trucks North America	Valiant TMS	Table of contents : &EPB+V1UQ55UQ1.2/1 - &EPB+V1WR1UQ51UQ6.1/1	Drawing name: =2V04&EFS-EL	=
			Ed.	MKLEPADLO					+
			Appr		P6700 Underbody Mainline - Cell 2V04			Document type: EAB	Project nr: 22-16151
Modification	Date	Name	Original		Replacement of	Replaced by	Scale 1:1		Page 46 / 1630

Table of contents

Column X: An automatically generated page was edited

F06_001

Page	Page description	supplementary page field	Date	Edited by	X
&EPB+V1WR1UQ51UQ6.2/1	Parts list : TUN.1324644 - TUN.1324644		12/21/2022	MKLEPADLO	
&EPB+V1WR1UQ51UQ7.1/1	Parts list : WELKER.WWS001A - WELKER.WWS001A		12/21/2022	MKLEPADLO	
&EPB+V1WR1UQ51UQ7.2/1	Parts list : WELKER.WWS001A - WELKER.WWS001A		12/21/2022	MKLEPADLO	
&EPB+V1WR1UQ51UQ8.1/1	Parts list : WELKER.WWS001A - WELKER.WWS001A		12/21/2022	MKLEPADLO	
&EPB+V1WR1UQ51UQ8.2/1	Parts list : WELKER.WWS001A - WELKER.WWS001A		12/21/2022	MKLEPADLO	
&EPB+V1WR1UQ51UQ9.1/1	Parts list : WELKER.WWS001A - WELKER.WWS001A		12/21/2022	MKLEPADLO	
&EPB+V1WR1UQ51UQ9.2/1	Parts list : WELKER.WWS001A - WELKER.WWS001A		12/21/2022	MKLEPADLO	
&EPB+V1GL11UQ51UQ2.1/1	Parts list : TUR.1644741 - TUR.VB2-FSM 4.4/2FKM 4/S3450		12/21/2022	MKLEPADLO	
&EPB+V1GL11UQ51UQ8.1/1	Parts list : TUR.1644741 - TUR.VB2-FSM 4.4/2FKM 4/S3450		12/21/2022	MKLEPADLO	
&EPB+V1GL13KF1/1	Parts list : SIE.6GT2801-2BA10 - SIE.6GT2002-0JE10		12/21/2022	MKLEPADLO	
&ETT/1	Terminal line-up diagram =KF0KF1+UC31-PC1		12/21/2022	MKLEPADLO	
&ETT/2	Terminal line-up diagram =KF0KF1+UC31-PH1		12/21/2022	MKLEPADLO	
&ETT/3	Terminal line-up diagram =KF0WC3+UC31-XD1		12/21/2022	MKLEPADLO	
&ETT/4	Terminal line-up diagram =KF0WC3+UC31-XD2		12/21/2022	MKLEPADLO	
&ETT/5	Terminal line-up diagram =KF0WC4+UC31-XD11		12/21/2022	MKLEPADLO	
&ETT/6	Terminal line-up diagram =KF0WC4+UC31-XD12		12/21/2022	MKLEPADLO	
&ETT/7	Terminal line-up diagram =KF0WC4+UC31-XD13		12/21/2022	MKLEPADLO	
&ETT/8	Terminal line-up diagram =KF0WC4+UC31-XD14		12/21/2022	MKLEPADLO	
&ETT/9	Terminal line-up diagram =V1WC1+V1UC11-PE		12/21/2022	MKLEPADLO	
&ETT/10	Terminal line-up diagram =V1WC2+V1UC11-XD1		12/21/2022	MKLEPADLO	
&ETT/11	Terminal line-up diagram =V1WC2+V1UC11-XD2		12/21/2022	MKLEPADLO	
&ETT/12	Terminal line-up diagram =V1WC2+V1UC11-XD3		12/21/2022	MKLEPADLO	
&ETT/13	Terminal line-up diagram =V1WC3+V1UC11-XD1		12/21/2022	MKLEPADLO	
&ETT/14	Terminal line-up diagram =V1WC3+V1UC11-XD2		12/21/2022	MKLEPADLO	
&ETT/15	Terminal line-up diagram =V1WC3+V1UC11-XD3		12/21/2022	MKLEPADLO	
&ETT/16	Terminal line-up diagram =V1WC4+V1UC11-KF11.14		12/21/2022	MKLEPADLO	
&ETT/17	Terminal line-up diagram =V1WC4+V1UC11-XD5		12/21/2022	MKLEPADLO	
&ETT/18	Terminal line-up diagram =V1WC4+V1UC11-XD6		12/21/2022	MKLEPADLO	
&ETT/19	Terminal line-up diagram =V1WC4+V1UC11-XD10		12/21/2022	MKLEPADLO	
&ETT/20	Terminal line-up diagram =V1WC4+V1UC11-XD11		12/21/2022	MKLEPADLO	
&ETT/21	Terminal line-up diagram =V1WC4+V1UC11-XD12		12/21/2022	MKLEPADLO	
&ETT/22	Terminal line-up diagram =V1WC4+V1UC11-XD13		12/21/2022	MKLEPADLO	
&ETT/23	Terminal line-up diagram =V1WC4+V1UC11-XD14		12/21/2022	MKLEPADLO	

			Date	12/22/2022	Volvo Trucks North America	Valiant TMS	Table of contents : &EPB+V1WR1UQ51UQ6.2/1 - &ETT/23	Drawing name: =2V04&EFS-EL	=
			Ed.	MKLEPADLO					+
			Appr		P6700 Underbody Mainline - Cell 2V04			Document type: EAB	Project nr: 22-16151
Modification	Date	Name	Original		Replacement of	Replaced by	Scale 1:1		Page 47 / 1630

Table of contents

Column X: An automatically generated page was edited F06_001

Page	Page description	supplementary page field	Date	Edited by	X
&ETT/24	Terminal line-up diagram =V1WC4+V1UC11-XD20		12/21/2022	MKLEPADLO	
&ETT/25	Terminal line-up diagram =V1WC4+V1UC11-XD51		12/21/2022	MKLEPADLO	
&ETT/26	Terminal line-up diagram =V1WC4+V1UC11-XD52		12/21/2022	MKLEPADLO	
&ETT/27	Terminal line-up diagram =V1WC4+V1UC11-XD53		12/21/2022	MKLEPADLO	
&ETT/28	Terminal line-up diagram =V1WC4+V1UC11-XD54		12/21/2022	MKLEPADLO	
&ETT/29	Terminal line-up diagram =V1WC1+V1UC12-PE		12/21/2022	MKLEPADLO	
&ETT/30	Terminal line-up diagram =V1WC2+V1UC12-XD1		12/21/2022	MKLEPADLO	
&ETT/31	Terminal line-up diagram =V1WC2+V1UC12-XD2		12/21/2022	MKLEPADLO	
&ETT/32	Terminal line-up diagram =V1WC2+V1UC12-XD3		12/21/2022	MKLEPADLO	
&ETT/33	Terminal line-up diagram =V1WC3+V1UC12-XD1		12/21/2022	MKLEPADLO	
&ETT/34	Terminal line-up diagram =V1WC3+V1UC12-XD2		12/21/2022	MKLEPADLO	
&ETT/35	Terminal line-up diagram =V1WC3+V1UC12-XD3		12/21/2022	MKLEPADLO	
&ETT/36	Terminal line-up diagram =V1WC4+V1UC12-KF12.14		12/21/2022	MKLEPADLO	
&ETT/37	Terminal line-up diagram =V1WC4+V1UC12-XD5		12/21/2022	MKLEPADLO	
&ETT/38	Terminal line-up diagram =V1WC4+V1UC12-XD6		12/21/2022	MKLEPADLO	
&ETT/39	Terminal line-up diagram =V1WC4+V1UC12-XD10		12/21/2022	MKLEPADLO	
&ETT/40	Terminal line-up diagram =V1WC4+V1UC12-XD11		12/21/2022	MKLEPADLO	
&ETT/41	Terminal line-up diagram =V1WC4+V1UC12-XD12		12/21/2022	MKLEPADLO	
&ETT/42	Terminal line-up diagram =V1WC4+V1UC12-XD13		12/21/2022	MKLEPADLO	
&ETT/43	Terminal line-up diagram =V1WC4+V1UC12-XD14		12/21/2022	MKLEPADLO	
&ETT/44	Terminal line-up diagram =V1WC4+V1UC12-XD20		12/21/2022	MKLEPADLO	
&ETT/45	Terminal line-up diagram =V1WC4+V1UC12-XD51		12/21/2022	MKLEPADLO	
&ETT/46	Terminal line-up diagram =V1WC4+V1UC12-XD52		12/21/2022	MKLEPADLO	
&ETT/47	Terminal line-up diagram =V1WC4+V1UC12-XD53		12/21/2022	MKLEPADLO	
&ETT/48	Terminal line-up diagram =V1WC4+V1UC12-XD54		12/21/2022	MKLEPADLO	
&ETT/49	Terminal line-up diagram =V1WC3+V1UC14-XD1		12/21/2022	MKLEPADLO	
&ETT/50	Terminal line-up diagram =V1WC4+V1UC14-KF14.12		12/21/2022	MKLEPADLO	
&ETT/51	Terminal line-up diagram =V1WC4+V1UC14-XD5		12/21/2022	MKLEPADLO	
&ETT/52	Terminal line-up diagram =V1WC4+V1UC14-XD6		12/21/2022	MKLEPADLO	
&ETT/53	Terminal line-up diagram =V1WC4+V1UC14-XD10		12/21/2022	MKLEPADLO	
&ETT/54	Terminal line-up diagram =V1WC4+V1UC14-XD11		12/21/2022	MKLEPADLO	
&ETT/55	Terminal line-up diagram =V1WC4+V1UC14-XD12		12/21/2022	MKLEPADLO	
&ETT/56	Terminal line-up diagram =V1WC4+V1UC14-XD13		12/21/2022	MKLEPADLO	

			Date	12/22/2022	Volvo Trucks North America	Valiant TMS	Table of contents : &ETT/24 - &ETT/56	Drawing name: =2V04&EFS-EL	=	
			Ed.	MKLEPADLO					+	
			Appr		P6700 Underbody Mainline - Cell 2V04			Document type: EAB	Project nr: 22-16151	Page 48
Modification	Date	Name	Original		Replacement of	Replaced by	Scale 1:1			1630

Table of contents

Column X: An automatically generated page was edited

F06_001

Page	Page description	supplementary page field	Date	Edited by	X
&ETT/57	Terminal line-up diagram =V1WC4+V1UC14-XD14		12/21/2022	MKLEPADLO	
&ETT/58	Terminal line-up diagram =V1WC4+V1UC14-XD15		12/21/2022	MKLEPADLO	
&ETT/59	Terminal line-up diagram =V1WC4+V1UC14-XD16		12/21/2022	MKLEPADLO	
&ETT/60	Terminal line-up diagram =V1WC4+V1UC14-XD17		12/21/2022	MKLEPADLO	
&ETT/61	Terminal line-up diagram =V1WC4+V1UC14-XD18		12/21/2022	MKLEPADLO	
&ETT/62	Terminal line-up diagram =V1WC4+V1UC14-XD51		12/21/2022	MKLEPADLO	
&ETT/63	Terminal line-up diagram =V1WC4+V1UC14-XD52		12/21/2022	MKLEPADLO	
&ETT/64	Terminal line-up diagram =V1WC4+V1UC14-XD53		12/21/2022	MKLEPADLO	
&ETT/65	Terminal line-up diagram =V1WC4+V1UC14-XD54		12/21/2022	MKLEPADLO	
&ETT/66	Terminal line-up diagram =V1WC3+V1UC15-XD1		12/21/2022	MKLEPADLO	
&ETT/67	Terminal line-up diagram =V1WC4+V1UC15-KF15.12		12/21/2022	MKLEPADLO	
&ETT/68	Terminal line-up diagram =V1WC4+V1UC15-XD5		12/21/2022	MKLEPADLO	
&ETT/69	Terminal line-up diagram =V1WC4+V1UC15-XD6		12/21/2022	MKLEPADLO	
&ETT/70	Terminal line-up diagram =V1WC4+V1UC15-XD10		12/21/2022	MKLEPADLO	
&ETT/71	Terminal line-up diagram =V1WC4+V1UC15-XD11		12/21/2022	MKLEPADLO	
&ETT/72	Terminal line-up diagram =V1WC4+V1UC15-XD12		12/21/2022	MKLEPADLO	
&ETT/73	Terminal line-up diagram =V1WC4+V1UC15-XD13		12/21/2022	MKLEPADLO	
&ETT/74	Terminal line-up diagram =V1WC4+V1UC15-XD14		12/21/2022	MKLEPADLO	
&ETT/75	Terminal line-up diagram =V1WC4+V1UC15-XD15		12/21/2022	MKLEPADLO	
&ETT/76	Terminal line-up diagram =V1WC4+V1UC15-XD16		12/21/2022	MKLEPADLO	
&ETT/77	Terminal line-up diagram =V1WC4+V1UC15-XD17		12/21/2022	MKLEPADLO	
&ETT/78	Terminal line-up diagram =V1WC4+V1UC15-XD18		12/21/2022	MKLEPADLO	
&ETT/79	Terminal line-up diagram =V1WC4+V1UC15-XD51		12/21/2022	MKLEPADLO	
&ETT/80	Terminal line-up diagram =V1WC4+V1UC15-XD52		12/21/2022	MKLEPADLO	
&ETT/81	Terminal line-up diagram =V1WC4+V1UC15-XD53		12/21/2022	MKLEPADLO	
&ETT/82	Terminal line-up diagram =V1WC4+V1UC15-XD54		12/21/2022	MKLEPADLO	
&ETT/83	Terminal line-up diagram =V1WC4+V1UC32-XD11		12/21/2022	MKLEPADLO	
&ETT/84	Terminal line-up diagram =V1WC4+V1UC33-XD11		12/21/2022	MKLEPADLO	
&EXX/1	Summarized parts list : TS 35_7,5 - SIE.6ES7132-6BH01-0BA0		12/21/2022	MKLEPADLO	
&EXX/2	Summarized parts list : SIE.6ES7136-6BA01-0CA0 - SIE.6EP4134-3AB00-2AY0		12/21/2022	MKLEPADLO	
&EXX/3	Summarized parts list : SIE.6EP4134-0GB00-0AY0 - EUC.MGB-L2B-PNA-L-121863		12/21/2022	MKLEPADLO	
&EXX/4	Summarized parts list : EUC.MGB-H-AA1A2-L-106221 - SIE.6ES7136-6RA00-0BF0		12/22/2022	MKLEPADLO	
&EXX/5	Summarized parts list : SIE.6ES7193-6BP20-0BF0 - SIE.3VA9978-0AA12		12/22/2022	MKLEPADLO	

			Date	12/22/2022	Volvo Trucks North America	Valiant TMS	Table of contents : &ETT/57 - &EXX/5	Drawing name: =2V04&EFS-EL	=
			Ed.	MKLEPADLO					+
			Appr		P6700 Underbody Mainline - Cell 2V04			Document type: EAB	Project nr: 22-16151
Modification	Date	Name	Original		Replacement of	Replaced by	Scale 1:1		Page 49 / 1630

Table of contents

Column X: An automatically generated page was edited

F06_001

Page	Page description	supplementary page field	Date	Edited by	X
&EXX/6	Summarized parts list : PTN102-7.5K - P+F.284395		12/22/2022	MKLEPADLO	
&EXX/7	Summarized parts list : RIT.SETS8205SID5 - RIT.SETS8205SID5		12/21/2022	MKLEPADLO	
&EYY/1	Terminal-strip overview : =KF0KF1+UC31-PC1 - =KF0WC4+UC31-XD14		12/21/2022	MKLEPADLO	
&EYY/2	Terminal-strip overview : =V1WC1+V1UC11-PE - =V1WC4+V1UC11-XD54		12/21/2022	MKLEPADLO	
&EYY/3	Terminal-strip overview : =V1WC1+V1UC12-PE - =V1WC4+V1UC12-XD54		12/21/2022	MKLEPADLO	
&EYY/4	Terminal-strip overview : =V1WC3+V1UC14-XD1 - =V1WC4+V1UC14-XD54		12/21/2022	MKLEPADLO	
&EYY/5	Terminal-strip overview : =V1WC3+V1UC15-XD1 - =V1WC4+V1UC15-XD54		12/21/2022	MKLEPADLO	
&EYY/6	Terminal-strip overview : =V1WC4+V1UC32-XD11 - =V1WC4+V1UC32-XD11		12/21/2022	MKLEPADLO	
&EYY/7	Terminal-strip overview : =V1WC4+V1UC33-XD11 - =V1WC4+V1UC33-XD11		12/21/2022	MKLEPADLO	
&EAZ/1	Amendment page		12/21/2022	MKLEPADLO	
&EAZ/2	Amendment page		12/21/2022	MKLEPADLO	
&EAZ/3	Amendment page		12/21/2022	MKLEPADLO	
&EAZ/4	Amendment page		12/21/2022	MKLEPADLO	

			Date	12/22/2022	Volvo Trucks North America	Valiant TMS	Table of contents : &EXX/6 - &EAZ/4	Drawing name: =2V04&EFS-EL	=	
			Ed.	MKLEPADLO					+	
			Appr		P6700 Underbody Mainline - Cell 2V04			Document type: EAB	Project nr: 22-16151	Page 50
Modification	Date	Name	Original		Replacement of	Replaced by	Scale 1:1			1630

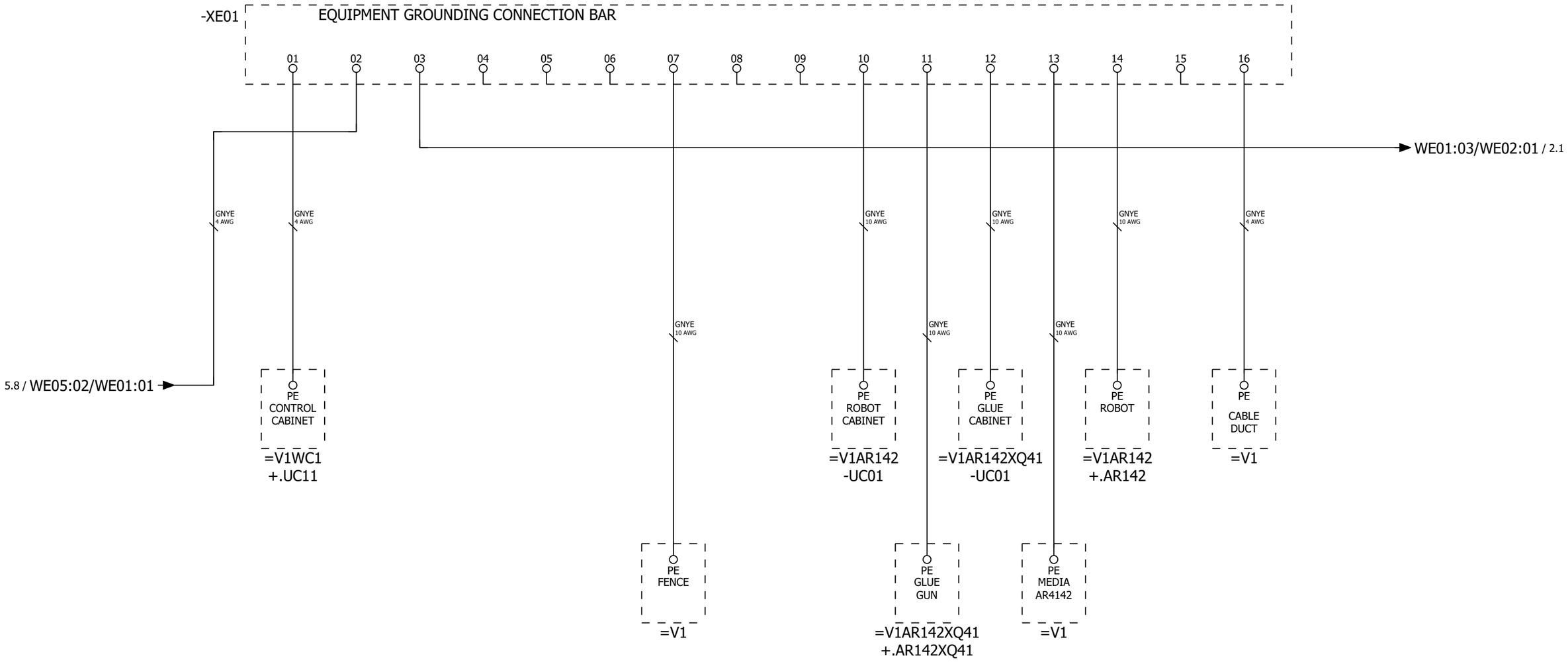

&EAB+/50

2

			Date	12/22/2022	Volvo Trucks North America	Valiant TMS	EQUIPMENT BONDING	Drawing name: =2V04&EFS-EL	= FQ99V1
			Ed.	MKLEPADLO					+ V1
			Appr		P6700 Underbody Mainline - Cell 2V04			Document type: EFA	Project nr: 22-16151
Modification	Date	Name	Original		Replacement of	Replaced by	Scale 1:1		Page 1 / 1630

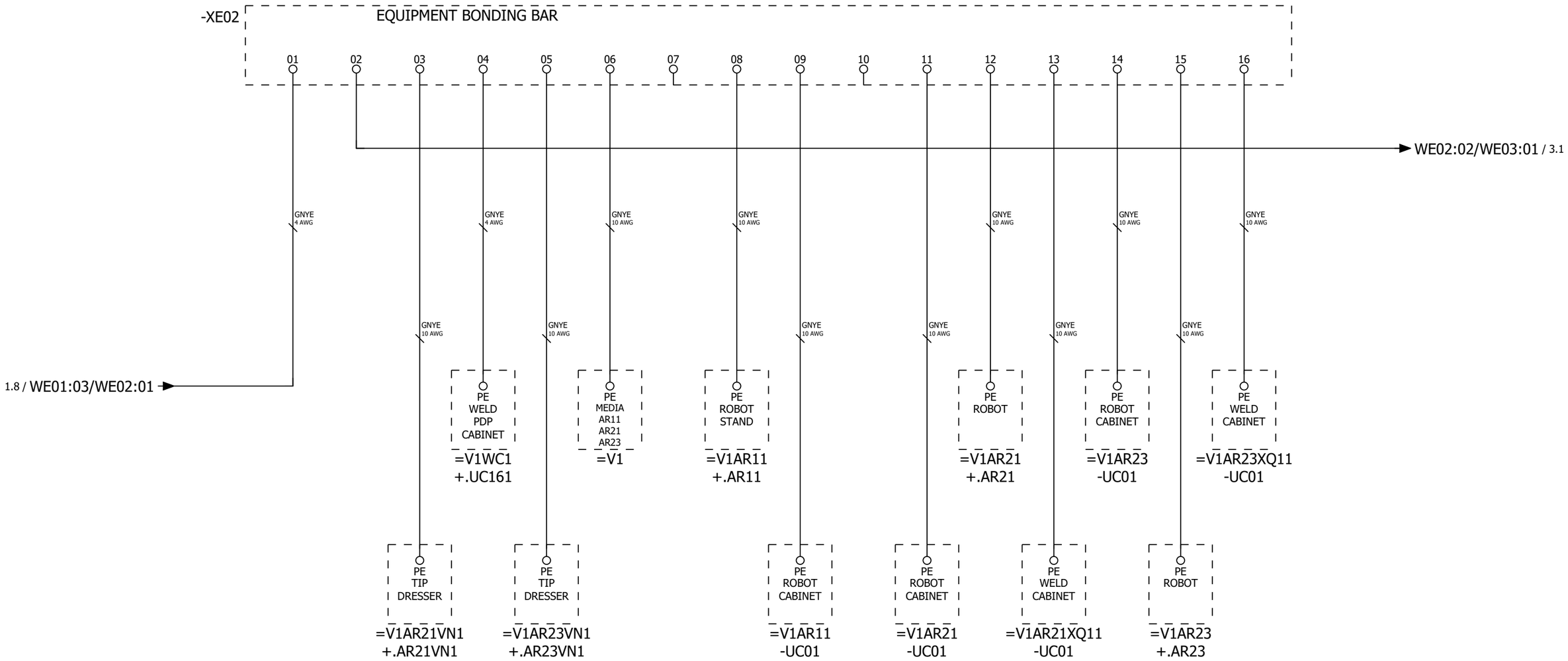

			Date	12/22/2022	Volvo Trucks North America	Valiant TMS	EQUIPMENT BONDING	Drawing name: =2V04&EFS-EL	= FQ99V1	
			Ed.	MKLEPADLO					+ V1	
			Appr		P6700 Underbody Mainline - Cell 2V04			Document type: EFA	Project nr: 22-16151	Page 2
Modification	Date	Name	Original		Replacement of / Replaced by	Scale 1:1				1630

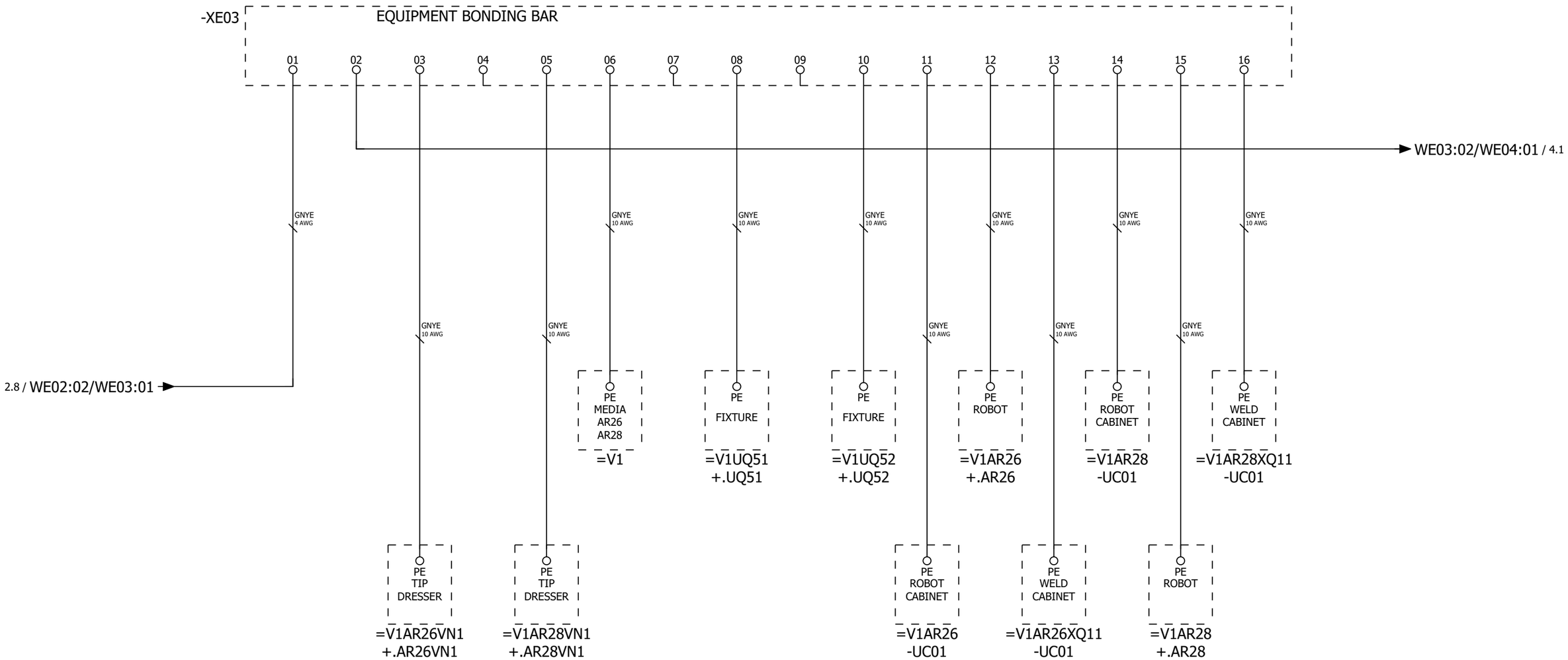

			Date	12/22/2022	Volvo Trucks North America		Valiant TMS	EQUIPMENT BONDING	Drawing name: =2V04&EFS-EL	= FQ99V1	
			Ed.	MKLEPADLO						+ V1	
			Appr		P6700 Underbody Mainline - Cell 2V04		Scale 1:1		Document type: EFA	Project nr: 22-16151	Page 3
Modification	Date	Name	Original		Replacement of	Replaced by					1630

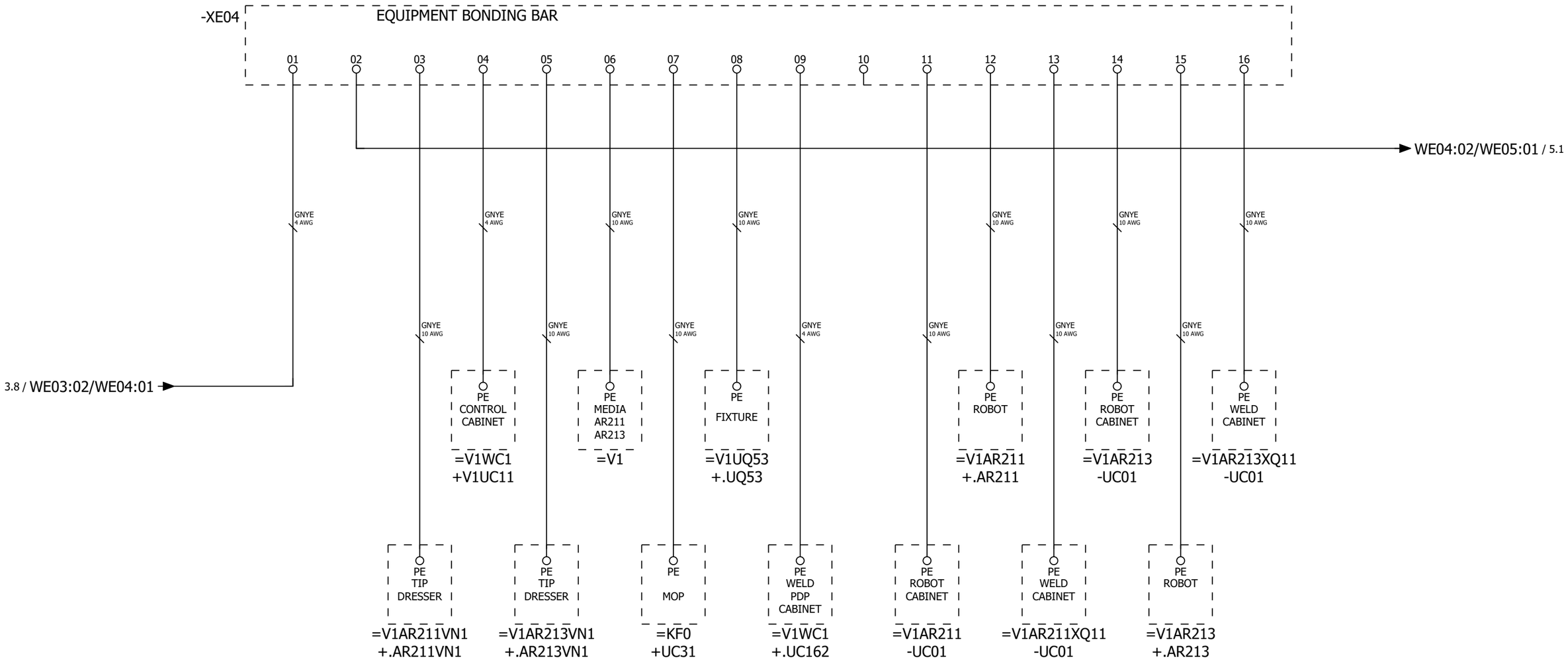

3 5

			Date	12/22/2022	Volvo Trucks North America	Valiant TMS	EQUIPMENT BONDING	Drawing name: =2V04&EFS-EL	= FQ99V1	
			Ed.	MKLEPADLO					+ V1	
			Appr		P6700 Underbody Mainline - Cell 2V04			Document type: EFA	Project nr: 22-16151	Page 4
Modification	Date	Name	Original		Replacement of	Replaced by	Scale 1:1			1630

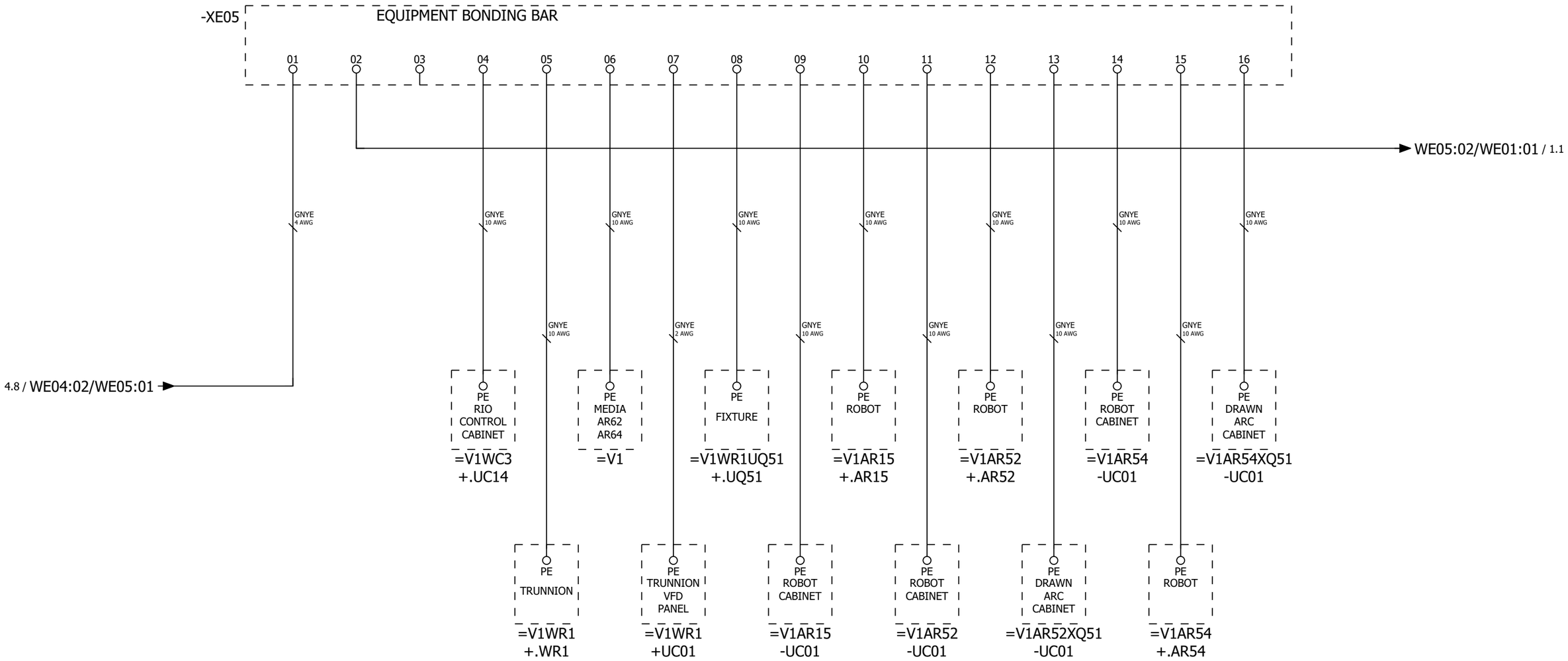

			Date	12/22/2022	Volvo Trucks North America	Valiant TMS	EQUIPMENT BONDING	Drawing name: =2V04&EFS-EL	= FQ99V1
			Ed.	MKLEPADLO					+ V1
			Appr		P6700 Underbody Mainline - Cell 2V04			Document type: EFA	Project nr: 22-16151
Modification	Date	Name	Original		Replacement of / Replaced by	Scale 1:1			Page 5 / 1630

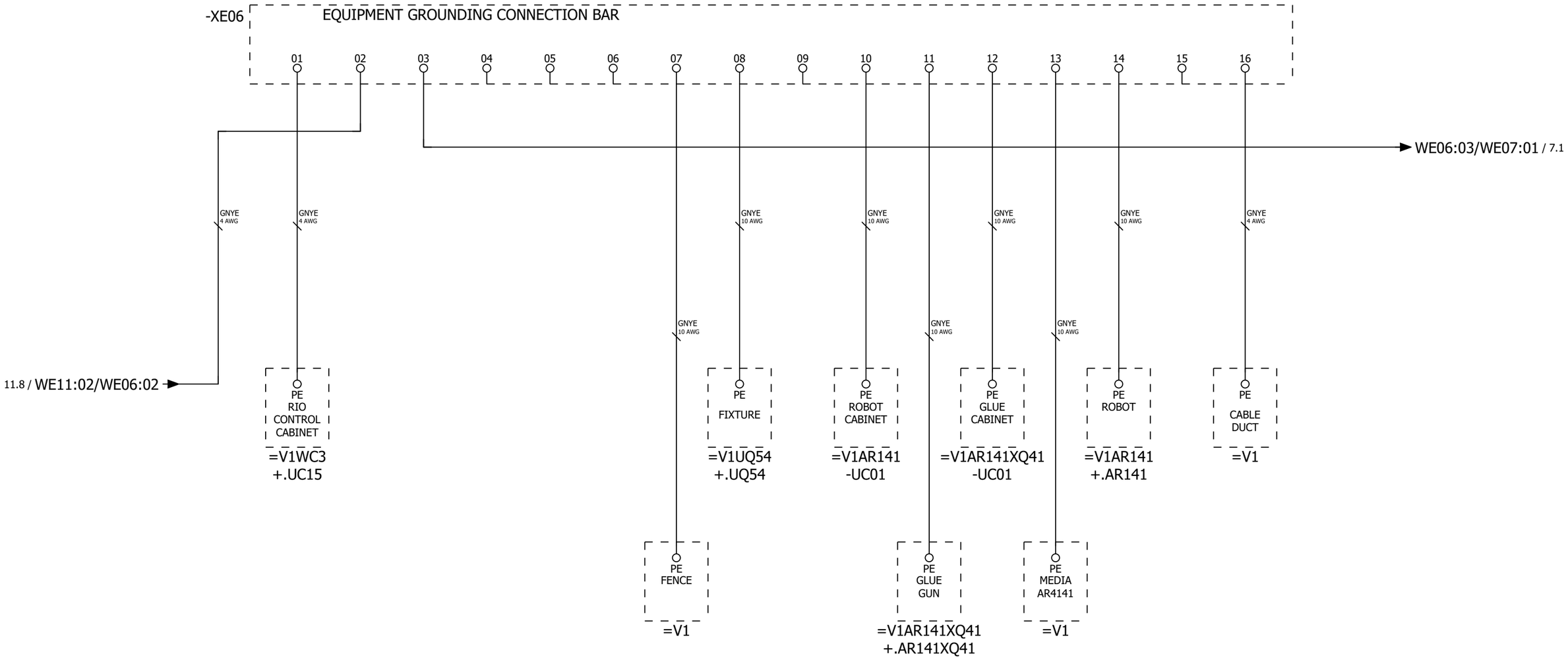

5 7

			Date	12/22/2022	Volvo Trucks North America	Valiant TMS	EQUIPMENT BONDING	Drawing name: =2V04&EFS-EL	= FQ99V1
			Ed.	MKLEPADLO					+ V1
			Appr		P6700 Underbody Mainline - Cell 2V04			Document type: EFA	Project nr: 22-16151
Modification	Date	Name	Original		Replacement of	Replaced by	Scale 1:1		Page 6 / 1630

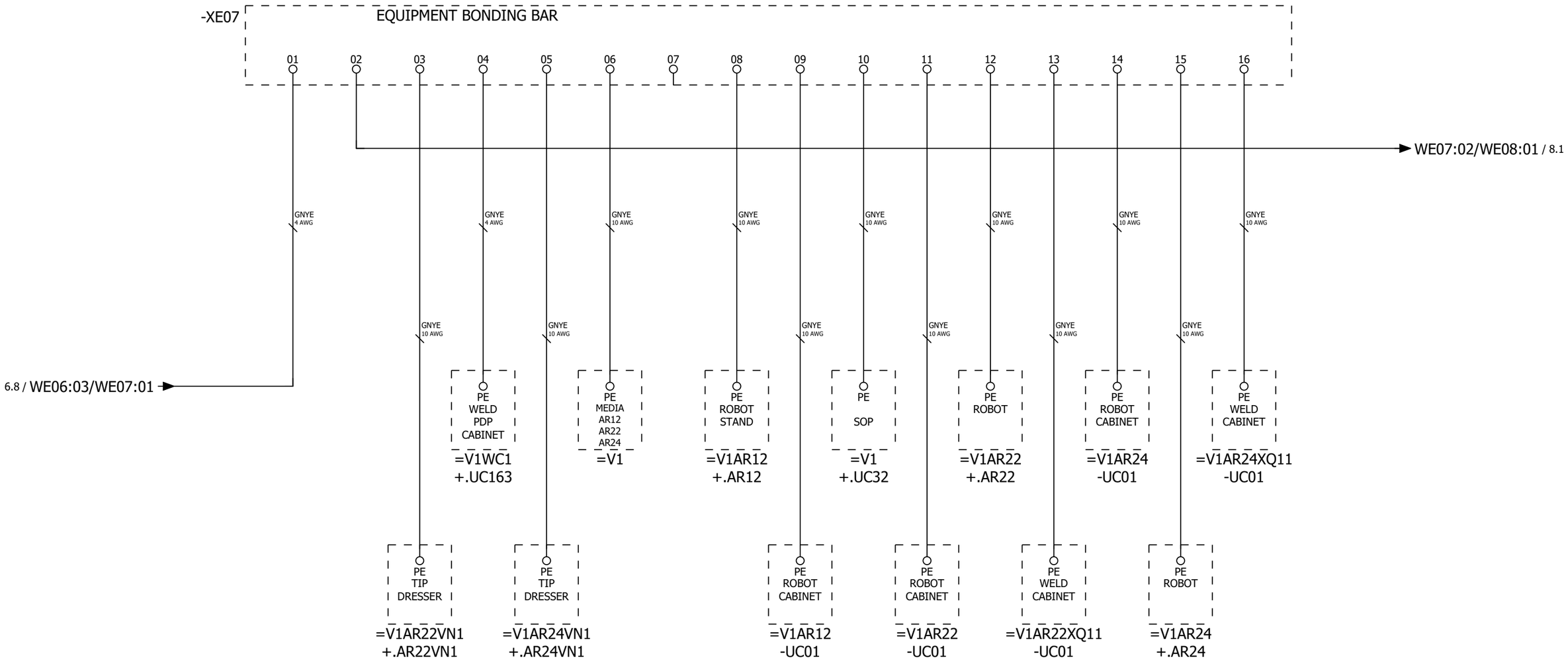

6 8

			Date	12/22/2022	Volvo Trucks North America	Valiant TMS	EQUIPMENT BONDING	Drawing name: =2V04&EFS-EL	= FQ99V1	
			Ed.	MKLEPADLO					+ V1	
			Appr		P6700 Underbody Mainline - Cell 2V04			Document type: EFA	Project nr: 22-16151	Page 7
Modification	Date	Name	Original		Replacement of / Replaced by	Scale 1:1				1630

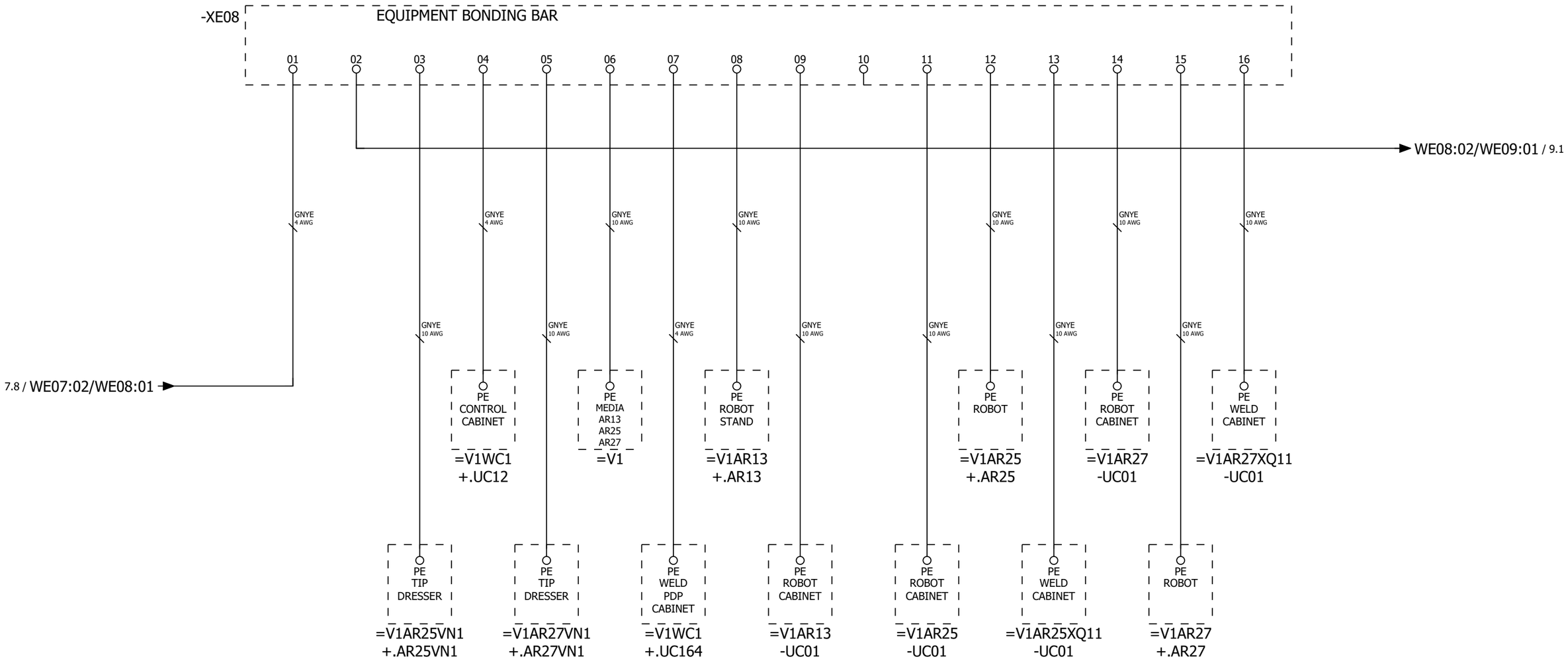

			Date	12/22/2022	Volvo Trucks North America	Valiant TMS	EQUIPMENT BONDING	Drawing name: =2V04&EFS-EL	= FQ99V1	
			Ed.	MKLEPADLO					+ V1	
			Appr		P6700 Underbody Mainline - Cell 2V04			Document type: EFA	Project nr: 22-16151	Page 8
Modification	Date	Name	Original		Replacement of / Replaced by	Scale 1:1				1630

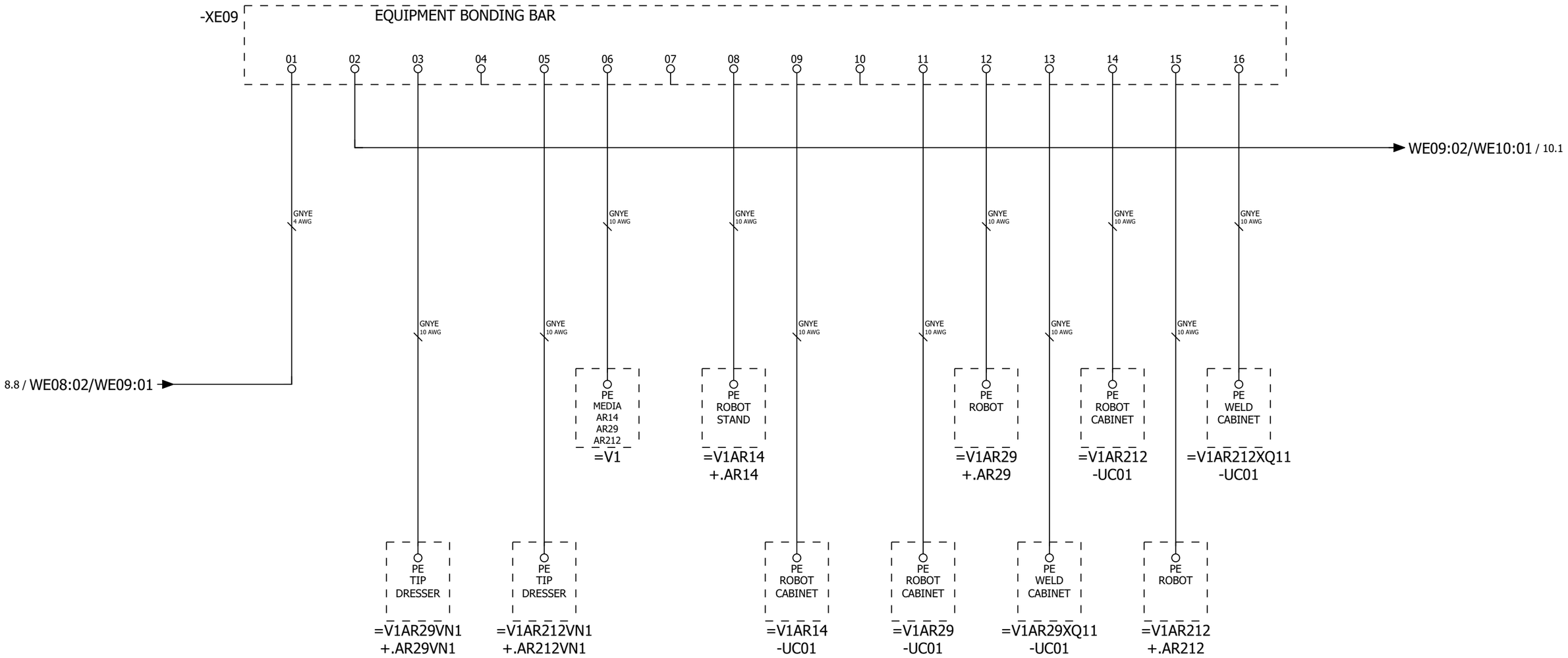

			Date	12/22/2022	Volvo Trucks North America	Valiant TMS	EQUIPMENT BONDING	Drawing name: =2V04&EFS-EL	= FQ99V1	
			Ed.	MKLEPADLO					+ V1	
			Appr		P6700 Underbody Mainline - Cell 2V04			Document type: EFA	Project nr: 22-16151	Page 9
Modification	Date	Name	Original		Replacement of	Replaced by	Scale 1:1			1630

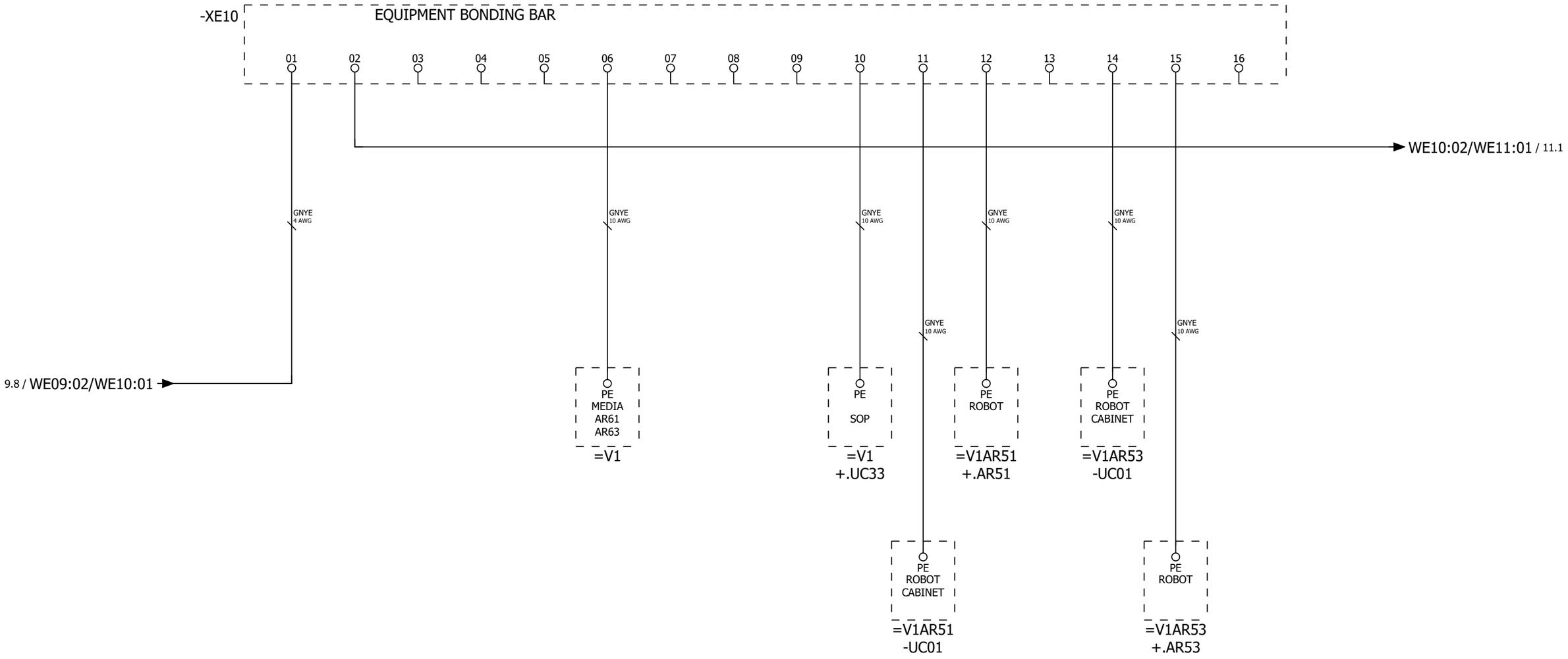

			Date	12/22/2022	Volvo Trucks North America	Valiant TMS	EQUIPMENT BONDING	Drawing name: =2V04&EFS-EL	= FQ99V1		
			Ed.	MKLEPADLO					+ V1		
			Appr		P6700 Underbody Mainline - Cell 2V04			Document type: EFA	Project nr: 22-16151	Page	10
Modification	Date	Name	Original		Replacement of / Replaced by	Scale 1:1					1630

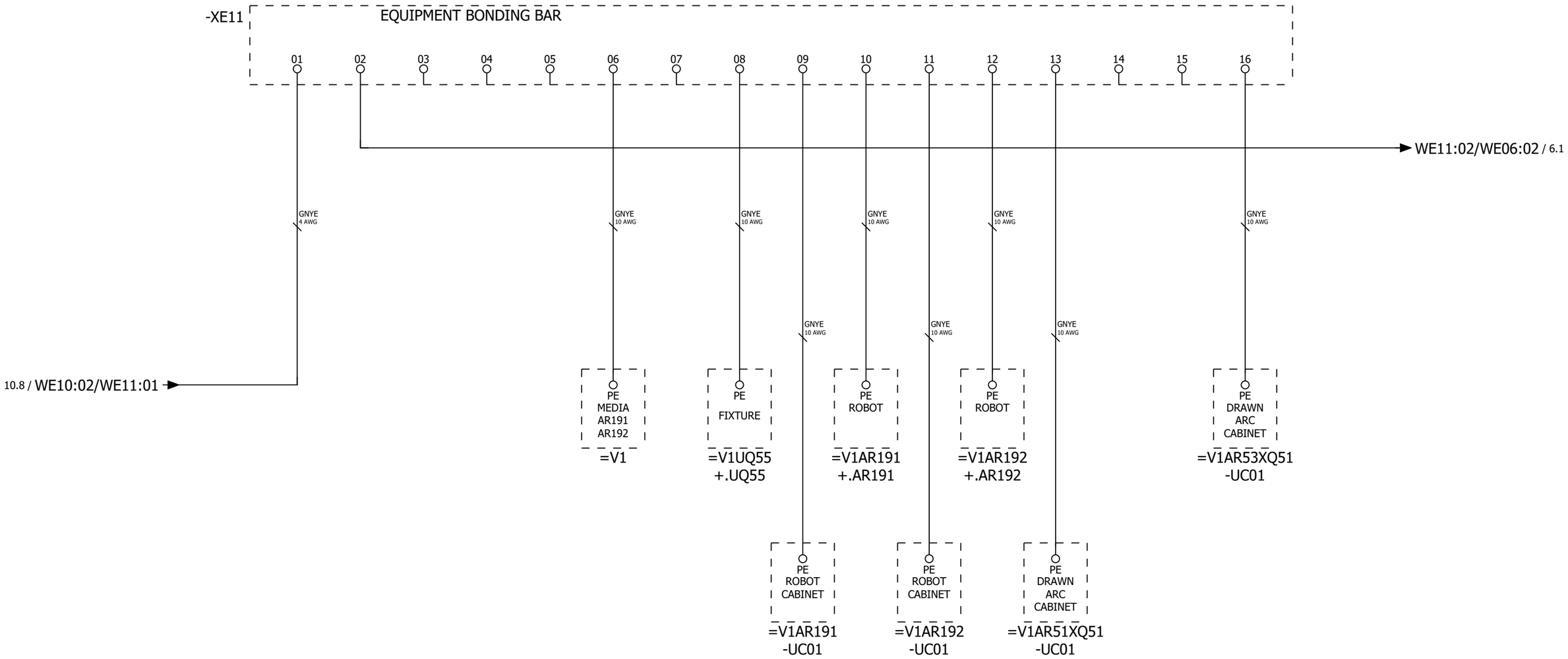

&EFS=FQ0V1SF1S01+.UC32/1

			Date	12/22/2022	Volvo Trucks North America		Valiant TMS	EQUIPMENT BONDING	Drawing name: =2V04&EFS-EL	= FQ99V1	
			Ed.	MKLEPADLO						+ V1	
			Appr		P6700 Underbody Mainline - Cell 2V04		Scale 1:1		Document type: EFA	Project nr: 22-16151	Page 11
Modification	Date	Name	Original		Replacement of	Replaced by					1630

0	1	2	3	4	5	6	7	8	9

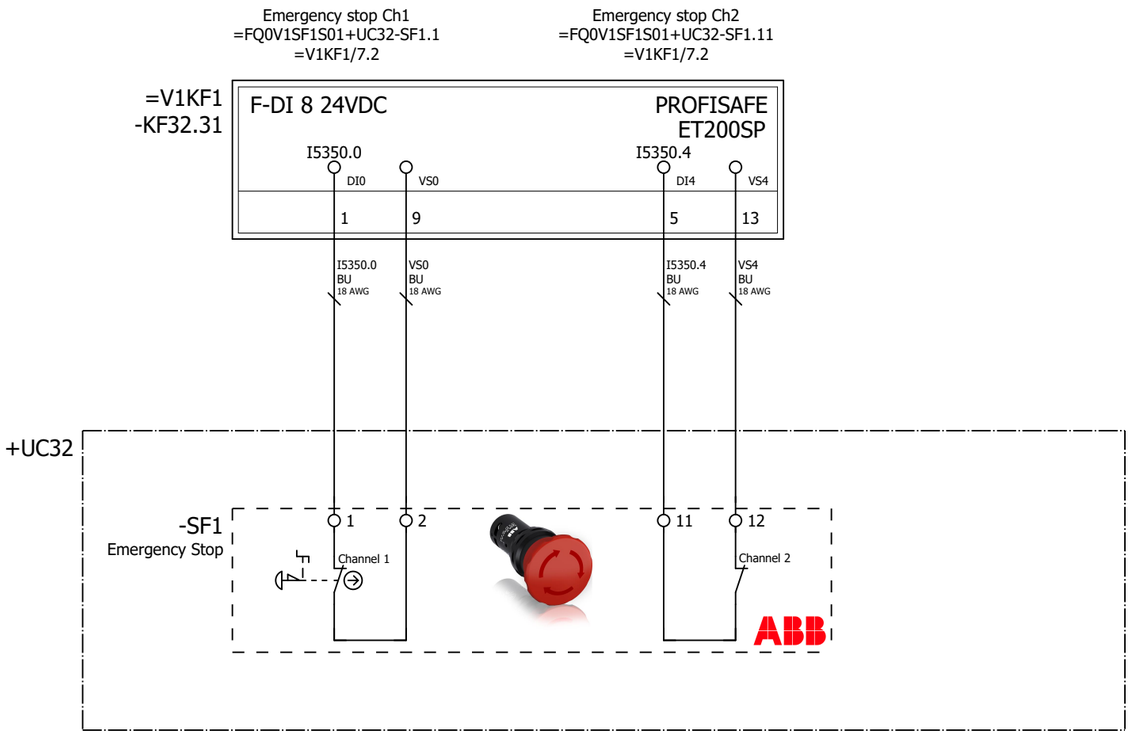

&EFA=FQ99V1+V1/11

=FQ0V1SF2S01+.UC33/1

			Date	12/22/2022	Volvo Trucks North America	Valiant TMS	Emergency stop +V1SF1S01UC32	Drawing name: =2V04&EFS-EL	= FQ0V1SF1S01
			Ed.	MKLEPADLO					+ V1UC32
			Appr		P6700 Underbody Mainline - Cell 2V04	Scale 1:1		Document type: EFS	Project nr: 22-16151
Modification	Date	Name	Original		Replacement of	Replaced by			Page 1 / 1630

0	1	2	3	4	5	6	7	8	9

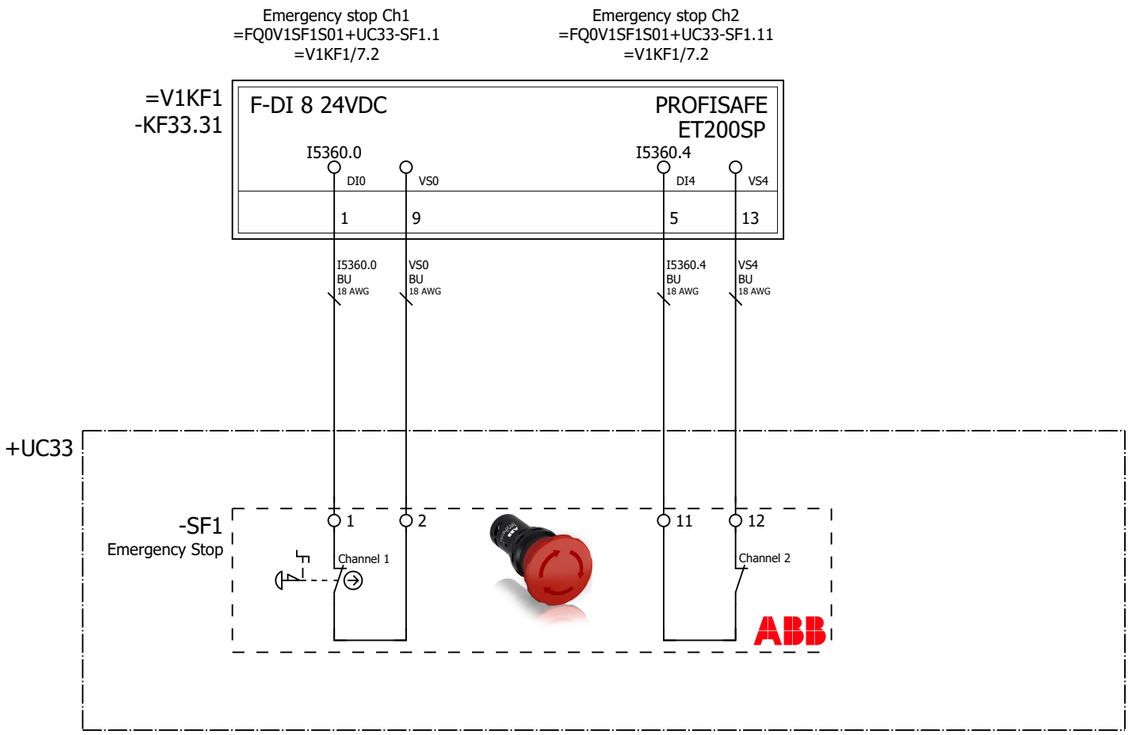

=FQ0V1SF1S01+.UC32/1

=KF0FQ0+UC31/1

			Date	12/22/2022	Volvo Trucks North America	Valiant TMS	Emergency stop +V1SF2S01UC33	Drawing name: =2V04&EFS-EL	= FQ0V1SF2S01
			Ed.	MKLEPADLO					+ V1UC33
			Appr		P6700 Underbody Mainline - Cell 2V04			Document type: EFS	Project nr: 22-16151
Modification	Date	Name	Original		Replacement of	Replaced by	Scale 1:1		Page 1 / 1630

0	1	2	3	4	5	6	7	8	9

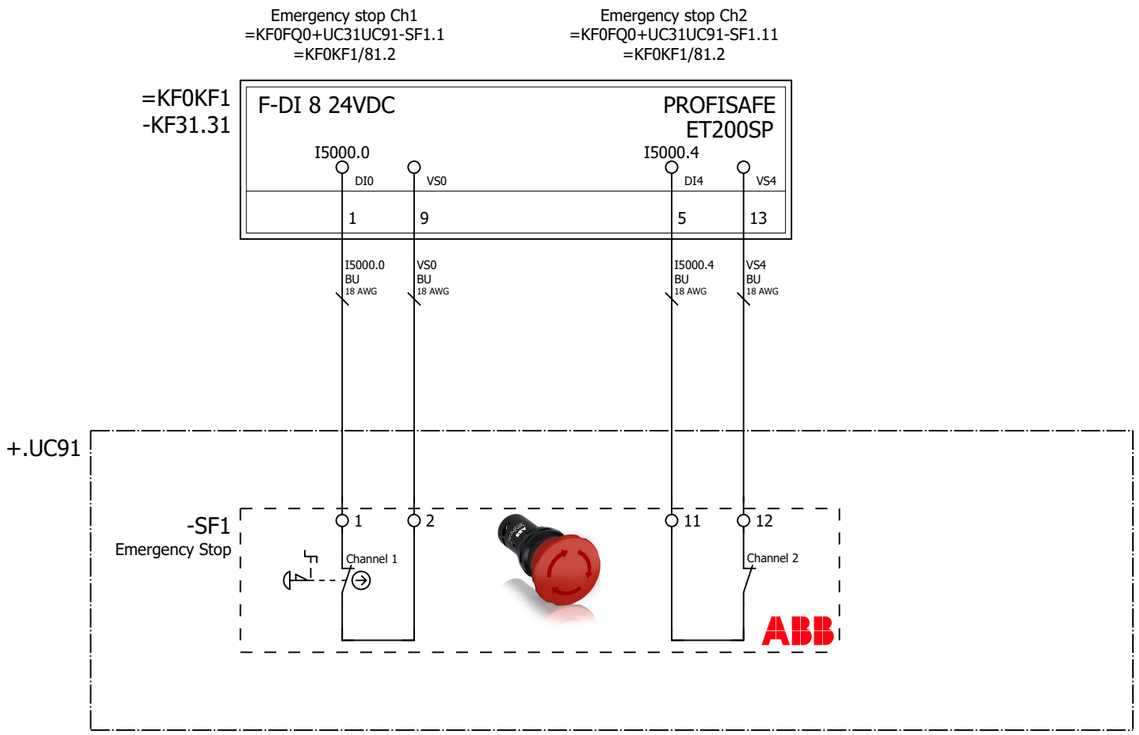

=FQ0V1SF2S01+V1UC33/1

=KF0KF1/1

			Date	12/22/2022	Volvo Trucks North America	Valiant TMS	Operating box UC91 MOP	Drawing name: =2V04&EFS-EL	= KF0FQ0
			Ed.	MKLEPADLO					+ UC31
			Appr		P6700 Underbody Mainline - Cell 2V04			Document type: EFS	Project nr: 22-16151
Modification	Date	Name	Original		Replacement of / Replaced by	Scale 1:1			Page 1 / 1630

0	1	2	3	4	5	6	7	8	9

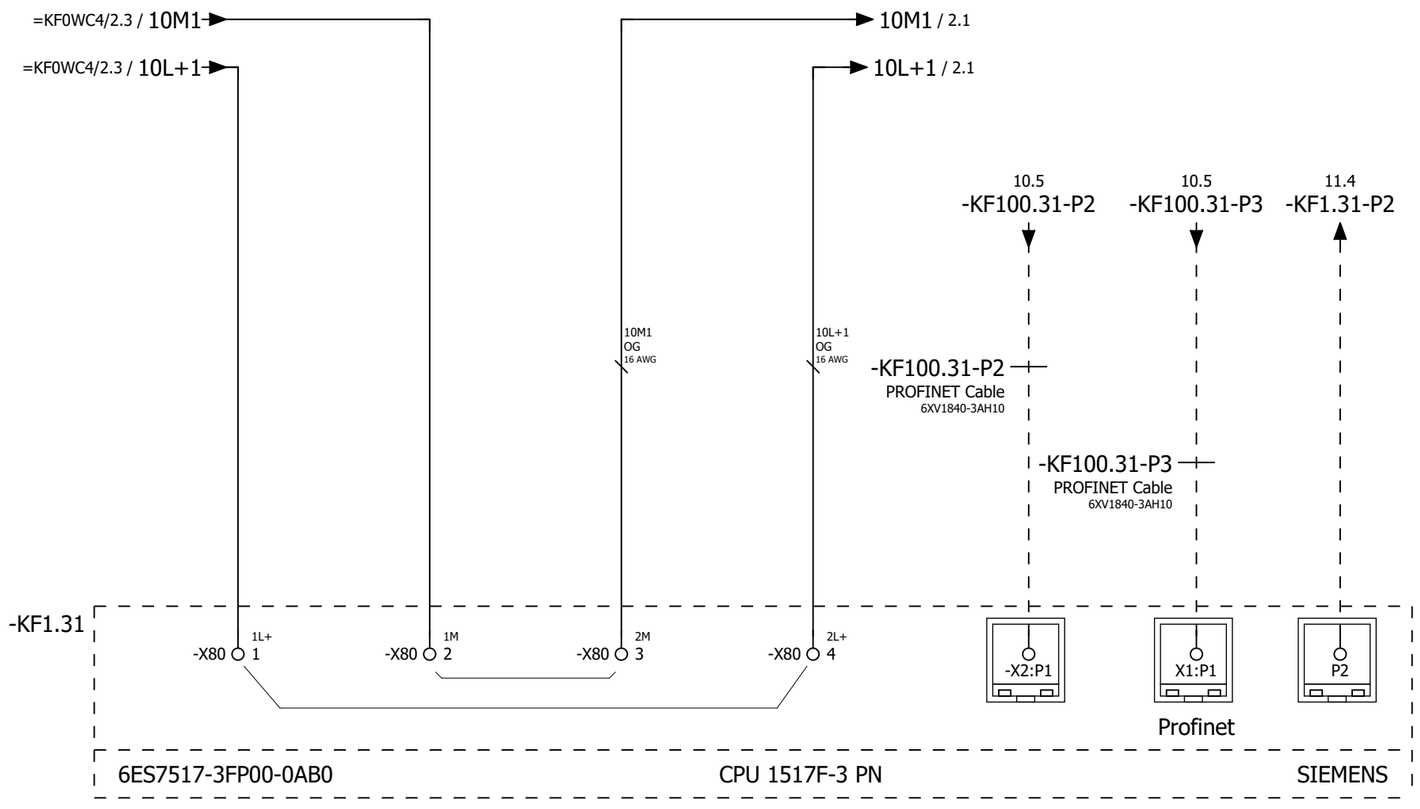

=KF0FQ0/1

2

			Date	12/22/2022	Volvo Trucks North America	Valiant TMS	CPU 1517-F-3PN/DP, Failsafe	Drawing name: =2V04&EFS-EL	= KF0KF1
			Ed.	MKLEPADLO					+ UC31
			Appr		P6700 Underbody Mainline - Cell 2V04			Document type: EFS	Project nr: 22-16151
Modification	Date	Name	Original		Replacement of	Replaced by	Scale 1:1		Page 1 / 1630

0	1	2	3	4	5	6	7	8	9

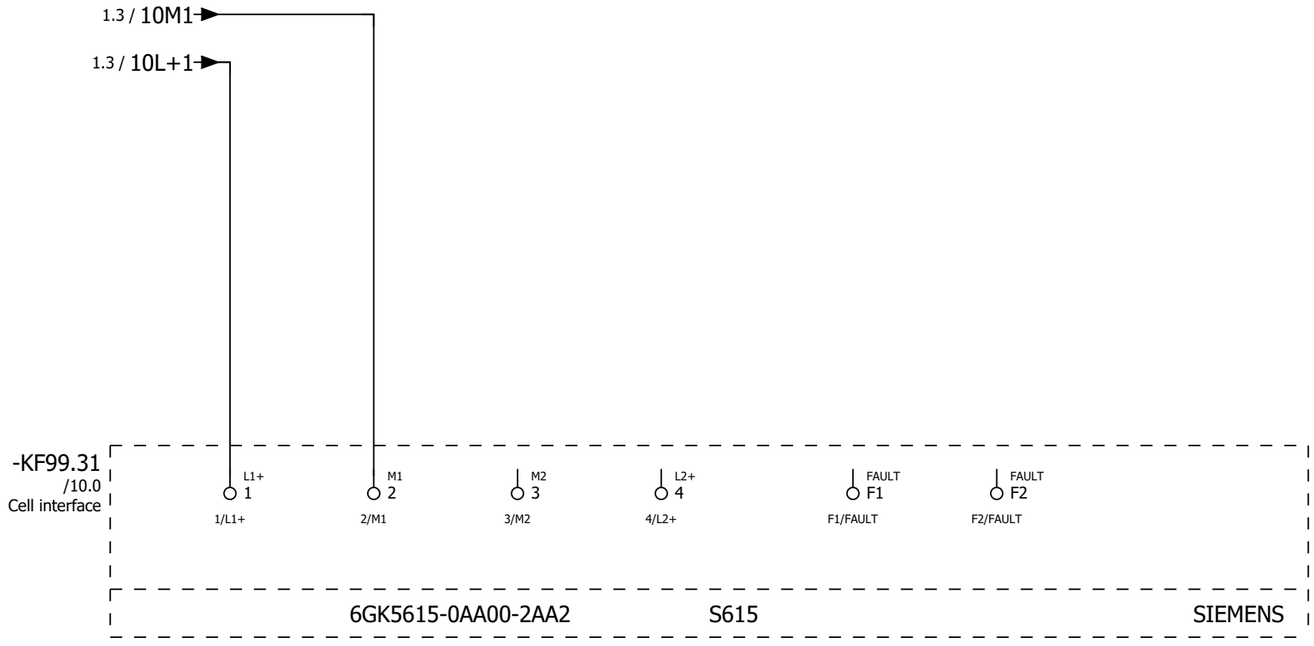

1 3

			Date	12/22/2022	Volvo Trucks North America		Valiant TMS	Cell interface S615	Drawing name: =2V04&EFS-EL	= KF0KF1	
			Ed.	MKLEPADLO						+ UC31	
			Appr		P6700 Underbody Mainline - Cell 2V04				Document type: EFS	Project nr: 22-16151	Page 2
Modification	Date	Name	Original		Replacement of	Replaced by	Scale 1:1				1630

0	1	2	3	4	5	6	7	8	9

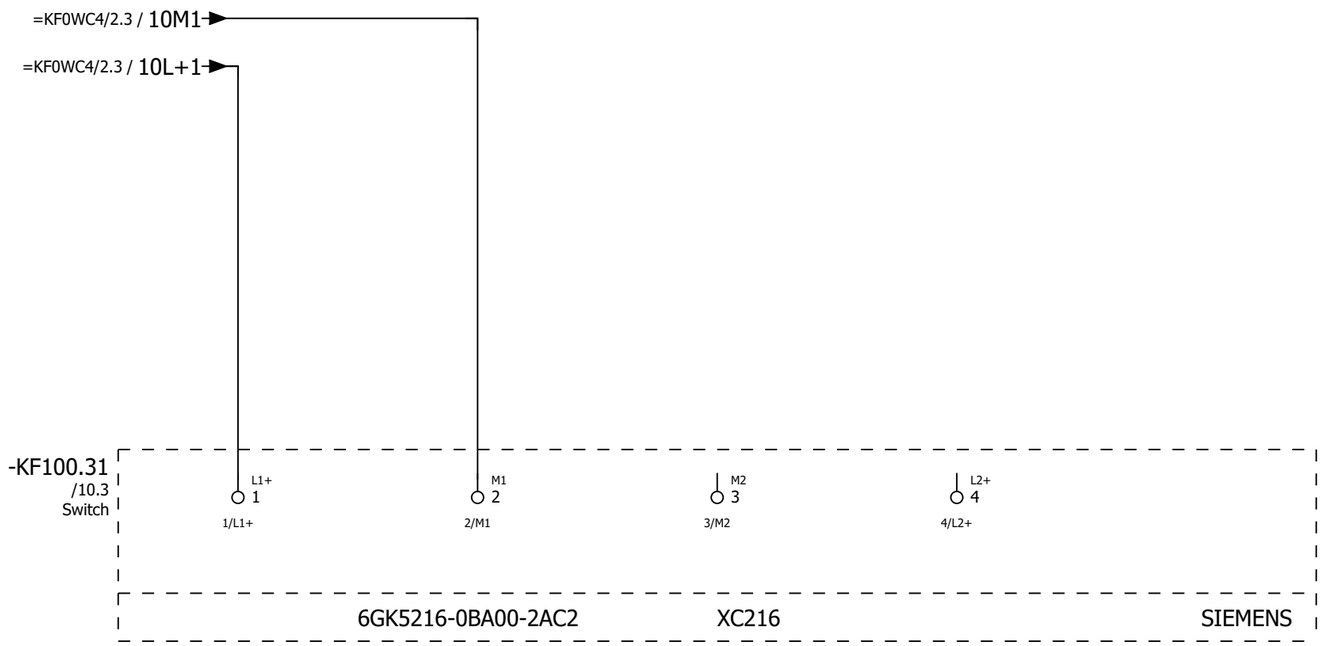

			Date	12/22/2022	Volvo Trucks North America	Valiant TMS	Switch, Scalance XC216	Drawing name: =2V04&EFS-EL	= KF0KF1	
			Ed.	MKLEPADLO					+ UC31	
			Appr		P6700 Underbody Mainline - Cell 2V04			Document type: EFS	Project nr: 22-16151	Page 3
Modification	Date	Name	Original		Replacement of / Replaced by	Scale 1:1				1630

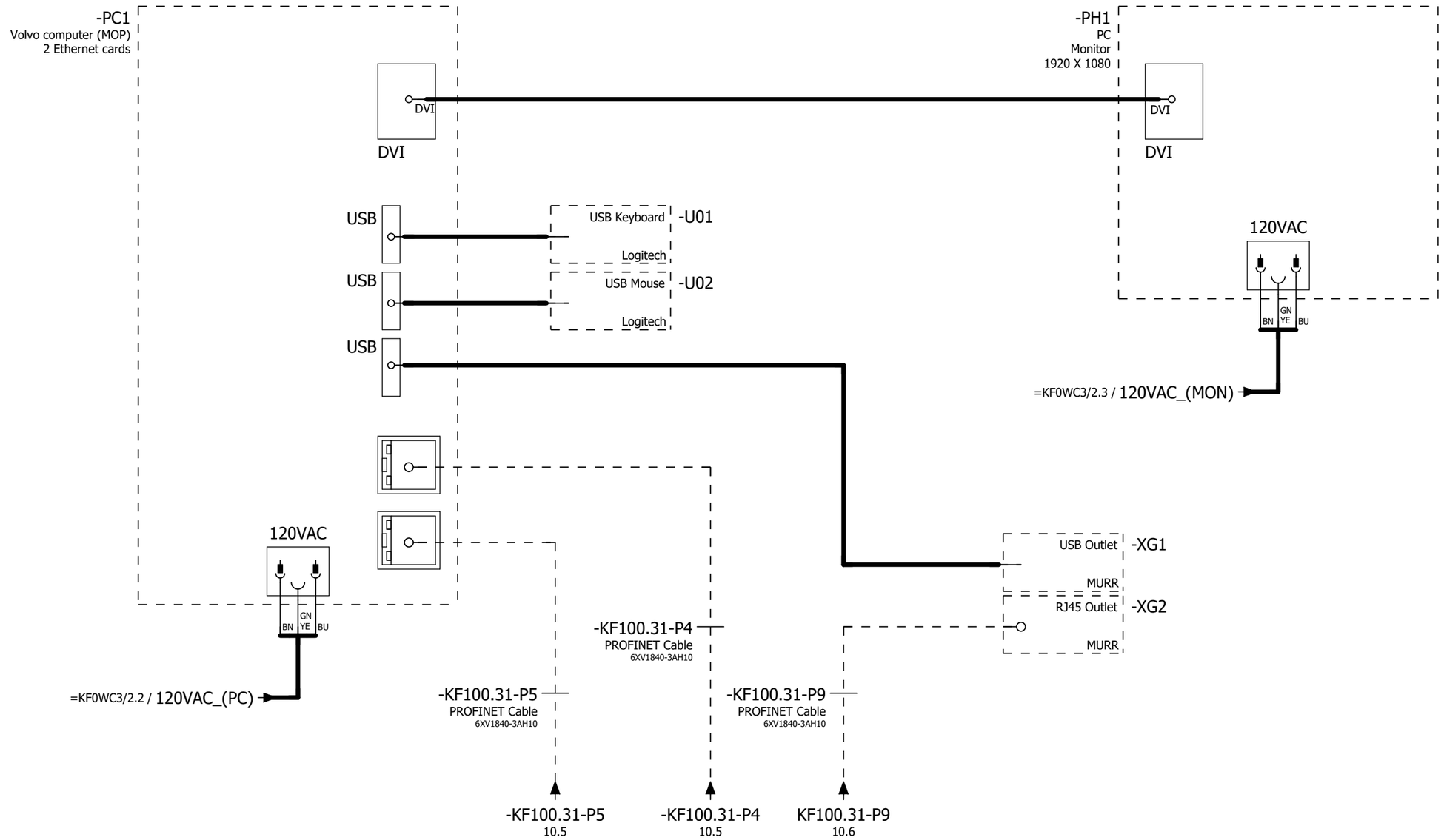

3 10

			Date	12/22/2022	Volvo Trucks North America	Valiant TMS	MOP, PC	Drawing name: =2V04&EFS-EL	= KF0KF1	
			Ed.	MKLEPADLO					+ UC31	
			Appr		P6700 Underbody Mainline - Cell 2V04			Document type: EFS	Project nr: 22-16151	Page 6
Modification	Date	Name	Original		Replacement of / Replaced by	Scale 1:1				1630

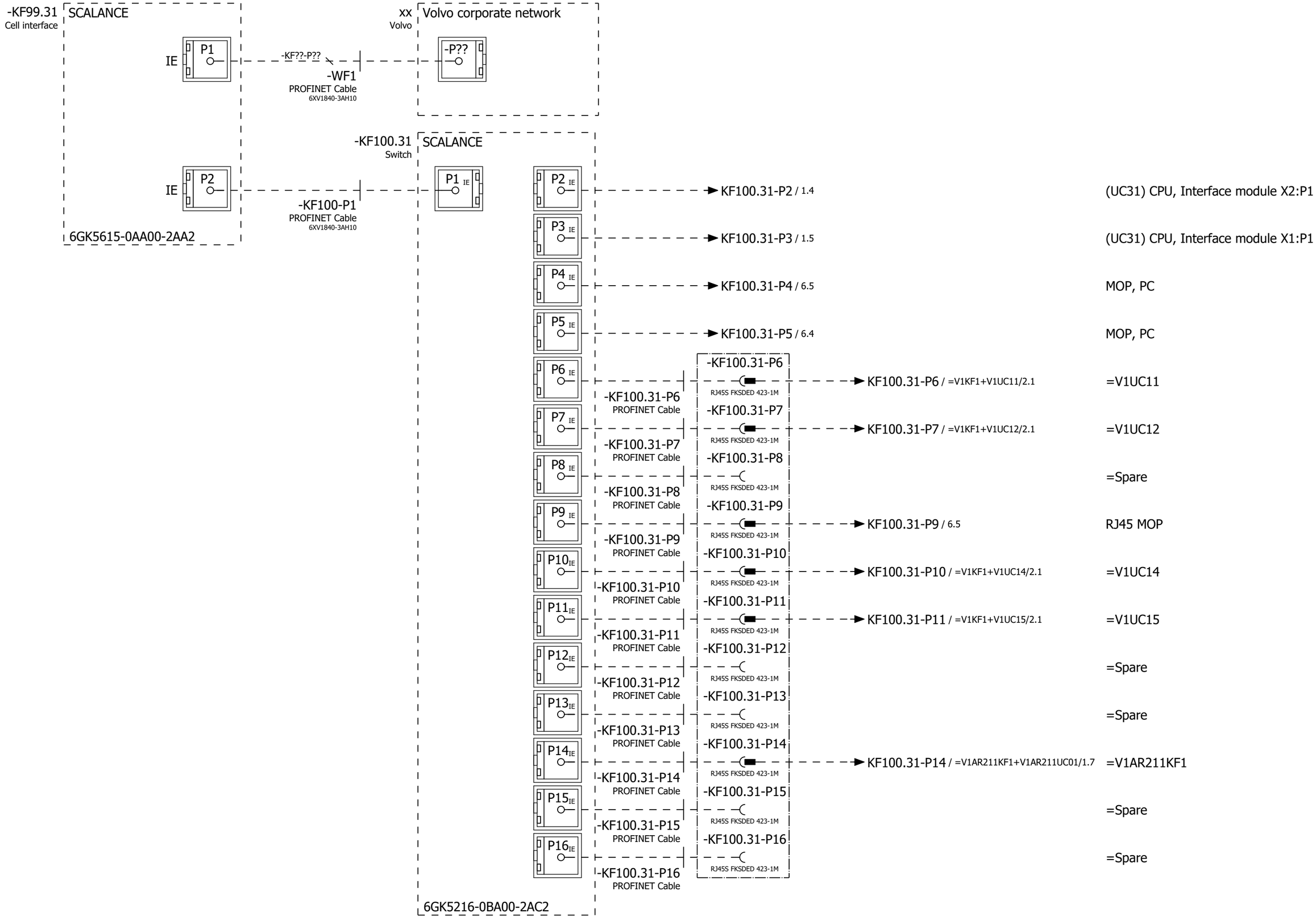

			Date	12/22/2022	Volvo Trucks North America	Valiant TMS	Network overview	Drawing name: =2V04&EFS-EL	= KF0KF1
			Ed.	MKLEPADLO					+ UC31
			Appr		P6700 Underbody Mainline - Cell 2V04			Document type: EFS	Project nr: 22-16151
Modification	Date	Name	Original		Replacement of / Replaced by	Scale 1:1			Page 10 / 1630

0	1	2	3	4	5	6	7	8	9

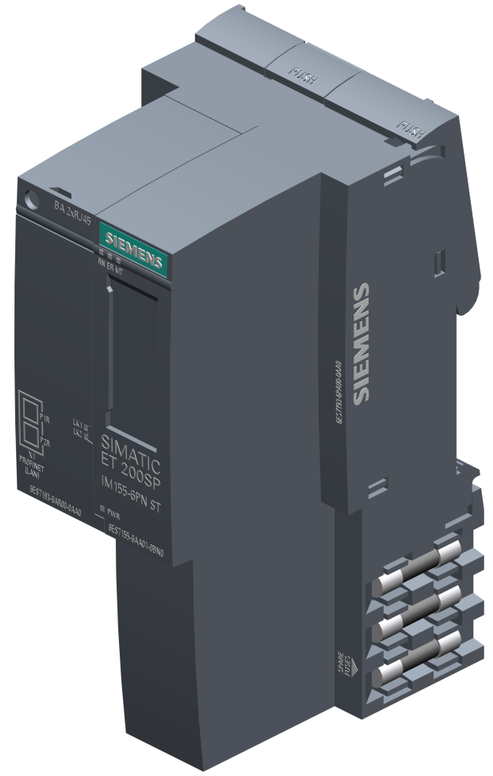

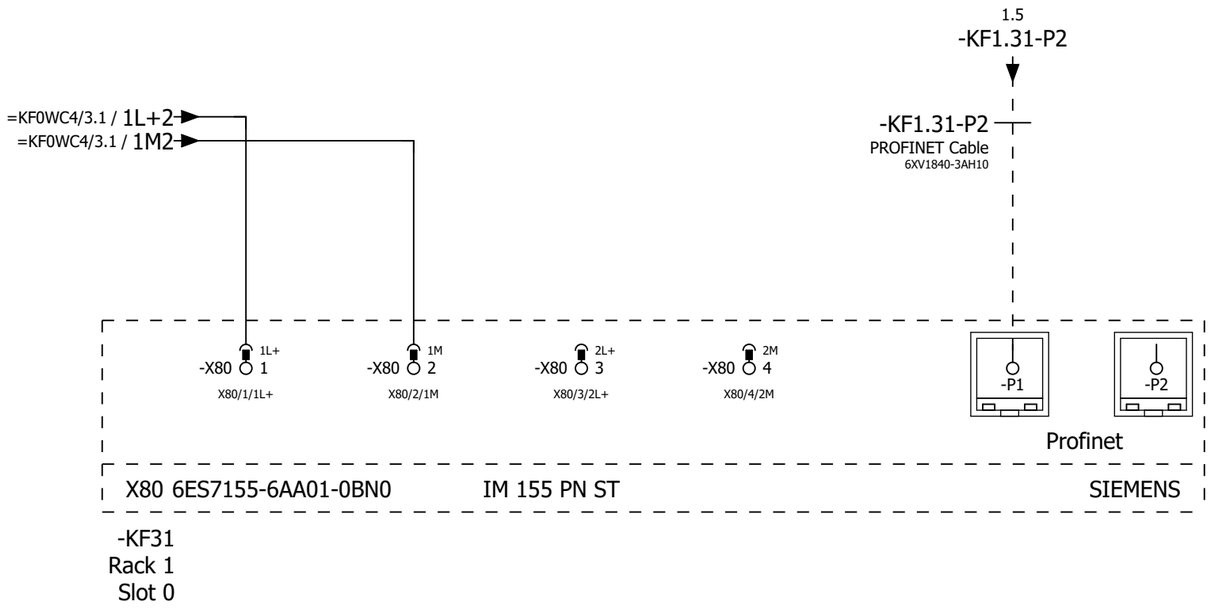

			Date	12/22/2022	Volvo Trucks North America	Valiant TMS	IM 155 PN	Drawing name: =2V04&EFS-EL	= KF0KF1	
			Ed.	MKLEPADLO					+ UC31	
			Appr		P6700 Underbody Mainline - Cell 2V04			Document type: EFS	Project nr: 22-16151	Page 11
Modification	Date	Name	Original		Replacement of	Replaced by	Scale 1:1			1630

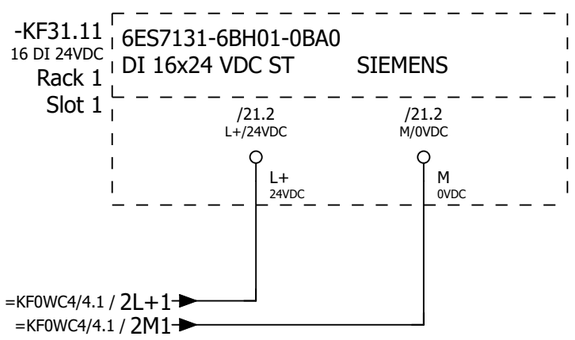

			Date	12/22/2022	Volvo Trucks North America	Valiant TMS	ET200S Wiring DI	Drawing name: =2V04&EFS-EL		= KF0KF1	
			Ed.	MKLEPADLO						+ UC31	
			Appr		P6700 Underbody Mainline - Cell 2V04			Document type: EFS	Project nr: 22-16151	Page	12
Modification	Date	Name	Original		Replacement of / Replaced by	Scale 1:1					1630

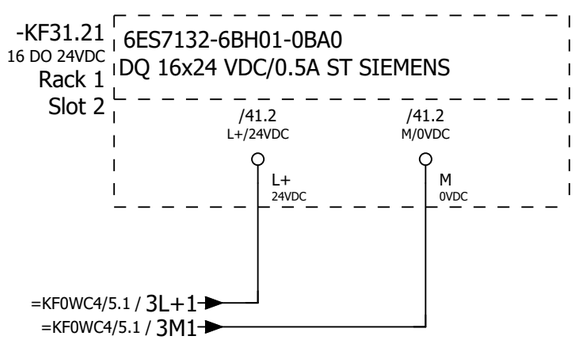

			Date	12/22/2022	Volvo Trucks North America		Valiant TMS	ET200S Wiring DO	Drawing name: =2V04&EFS-EL	= KF0KF1	
			Ed.	MKLEPADLO						+ UC31	
			Appr		P6700 Underbody Mainline - Cell 2V04				Document type: EFS	Project nr: 22-16151	Page 14
Modification	Date	Name	Original		Replacement of	Replaced by	Scale 1:1				1630

0	1	2	3	4	5	6	7	8	9

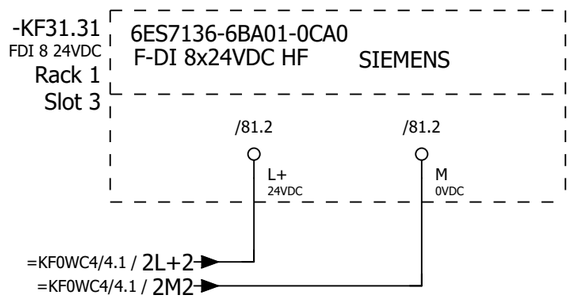

			Date	12/22/2022	Volvo Trucks North America		Valiant TMS	ET200S Wiring F-DI	Drawing name: =2V04&EFS-EL	= KF0KF1	
			Ed.	MKLEPADLO						+ UC31	
			Appr		P6700 Underbody Mainline - Cell 2V04		Scale 1:1		Document type: EFS	Project nr: 22-16151	Page 18 / 1630
Modification	Date	Name	Original		Replacement of	Replaced by					

-KF31.11

ET 200SP SIEMENS
DI 16x24 VDC ST

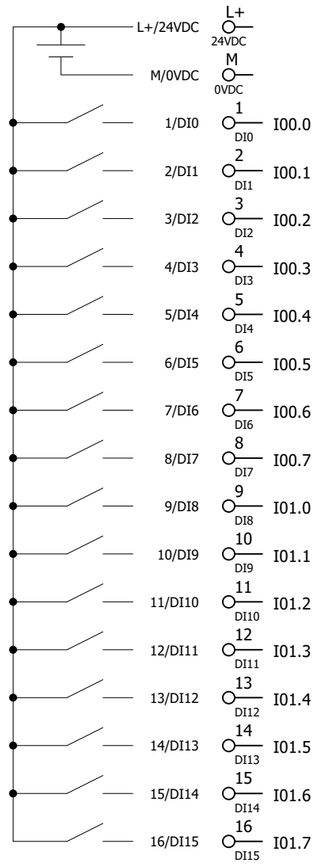

6ES7131-6BH01-0BA0

/12.1			
/12.2			
=KF0SF1/2.2	=KF0SF1+UC31UC92-SF1_I	Emergency stop tripped/reset PB	
=KF0SF1/2.5	=KF0SF1+UC31UC92-SF2_I	Enable power PB	
=KF0SF1/2.7	=KF0SF1+UC31UC92-SF3_I	Start auto PB	
=KF0SF1/2.7	=KF0SF1+UC31UC92-SF4_I	Man/Auto Sel Switch	
=KF0SF1/1.5	=KF0SF1+UC31UC91-SF5_I	Set PB	
=KF0SF1/1.2	=KF0SF1+UC31UC91-SF6_I	Reset PB	
	I00.6	Spare	
	I00.7	Spare	
=KF0WC4/2.6	=K0WC4-GA1.1	UPS Battery	
=KF0WC4/2.7	=K0WC4-GA1.2	UPS Alarm	
=KF0WC3/3.2	=KF0WC3+UC31-FC1	Monitoring 120 VAC	
=KF0WC3/3.4	=KF0WC3+UC31-FC2	Monitoring 120 VAC	
=KF0WC4/1.3	=KF0WC4+UC31-FC11_I	Monitoring 24 VDC	
	I01.5	Spare	
	I01.6	Spare	
	I01.7	Spare	

			Date	12/22/2022	Volvo Trucks North America		Valiant TMS	ET200S Cross-reference Input module	Drawing name: =2V04&EFS-EL	= KF0KF1	
			Ed.	MKLEPADLO						+ UC31	
			Appr		P6700 Underbody Mainline - Cell 2V04				Document type: EFS	Project nr: 22-16151	Page 21
Modification	Date	Name	Original		Replacement of	Replaced by	Scale 1:1				1630

0	1	2	3	4	5	6	7	8	9

-KF31.21

ET 200SP SIEMENS
DQ 16x24 VDC/0.5A ST

L+/24VDC	L+ 24VDC		/14.1		
M/0VDC	M 0VDC		/14.2		
1/DQ0	1 DQ0	Q00.0	=KF0SF1/2.3	=KF0SF1+UC31UC92-PF1_Q	Emergency stop tripped/reset LT
2/DQ1	2 DQ1	Q00.1	=KF0SF1/2.8	=KF0SF1+UC31UC92-PF3_Q	Start auto LT
3/DQ2	3 DQ2	Q00.2		Q00.2	Spare
4/DQ3	4 DQ3	Q00.3		Q00.3	Spare
5/DQ4	5 DQ4	Q00.4		Q00.4	Spare
6/DQ5	6 DQ5	Q00.5		Q00.5	Spare
7/DQ6	7 DQ6	Q00.6		Q00.6	Spare
8/DQ7	8 DQ7	Q00.7		Q00.7	Spare
9/DQ8	9 DQ8	Q01.0	=KF0PZ1/1.3	=KF0PZ1+UC31-PF1_1	Indication column Green
10/DQ9	10 DQ9	Q01.1	=KF0PZ1/1.3	=KF0PZ1+UC31-PF1_2	Indication column Red
11/DQ10	11 DQ10	Q01.2	=KF0PZ1/1.4	=KF0PZ1+UC31-PF1_3	Indication column Siren
12/DQ11	12 DQ11	Q01.3		Q01.3	Spare
13/DQ12	13 DQ12	Q01.4		Q01.4	Spare
14/DQ13	14 DQ13	Q01.5		Q01.5	Spare
15/DQ14	15 DQ14	Q01.6		Q01.6	Spare
16/DQ15	16 DQ15	Q01.7		Q01.7	Spare

6ES7132-6BH01-0BA0

			Date	12/22/2022	Volvo Trucks North America	Valiant TMS	ET200S Cross-reference Output module	Drawing name: =2V04&EFS-EL		= KF0KF1	
			Ed.	MKLEPADLO						+ UC31	
			Appr		P6700 Underbody Mainline - Cell 2V04	Scale 1:1		Document type: EFS	Project nr: 22-16151	Page	41
Modification	Date	Name	Original		Replacement of	Replaced by					1630

0	1	2	3	4	5	6	7	8	9

-KF31.31
/18.0

ET 200SP SIEMENS
F-DI 8x24VDC HF

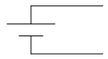

	L+ 24VDC	/18.1			
	M 0VDC	/18.2			
I5000.0	1 DI0	=KF0FQ0/1.3	=KF0FQ0+UC31UC91-SF1.1	Emergency stop Ch1	
	9 VS0	=KF0FQ0/1.3			
I5000.1	2 DI1		I5000.1	Spare	
	10 VS1				
I5000.2	3 DI2		I5000.2	Spare	
	11 VS2				
I5000.3	4 DI3		I5000.3	Spare	
	12 VS3				
I5000.4	5 DI4	=KF0FQ0/1.4	=KF0FQ0+UC31UC91-SF1.11	Emergency stop Ch2	
	13 VS4	=KF0FQ0/1.4			
I5000.5	6 DI5		I5000.5	Spare	
	14 VS5				
I5000.6	7 DI6		I5000.6	Spare	
	15 VS6				
I5000.7	8 DI7		I5000.7	Spare	
	16 VS7				

6ES7136-6BA01-0CA0

			Date	12/22/2022	Volvo Trucks North America	Valiant TMS	ET200S Cross-reference	Drawing name: =2V04&EFS-EL	= KF0KF1
			Ed.	MKLEPADLO			Safe input module		+ UC31
			Appr		P6700 Underbody Mainline - Cell 2V04			Document type: EFS	Project nr: 22-16151
Modification	Date	Name	Original		Replacement of / Replaced by	Scale 1:1			Page 81 / 1630

0	1	2	3	4	5	6	7	8	9

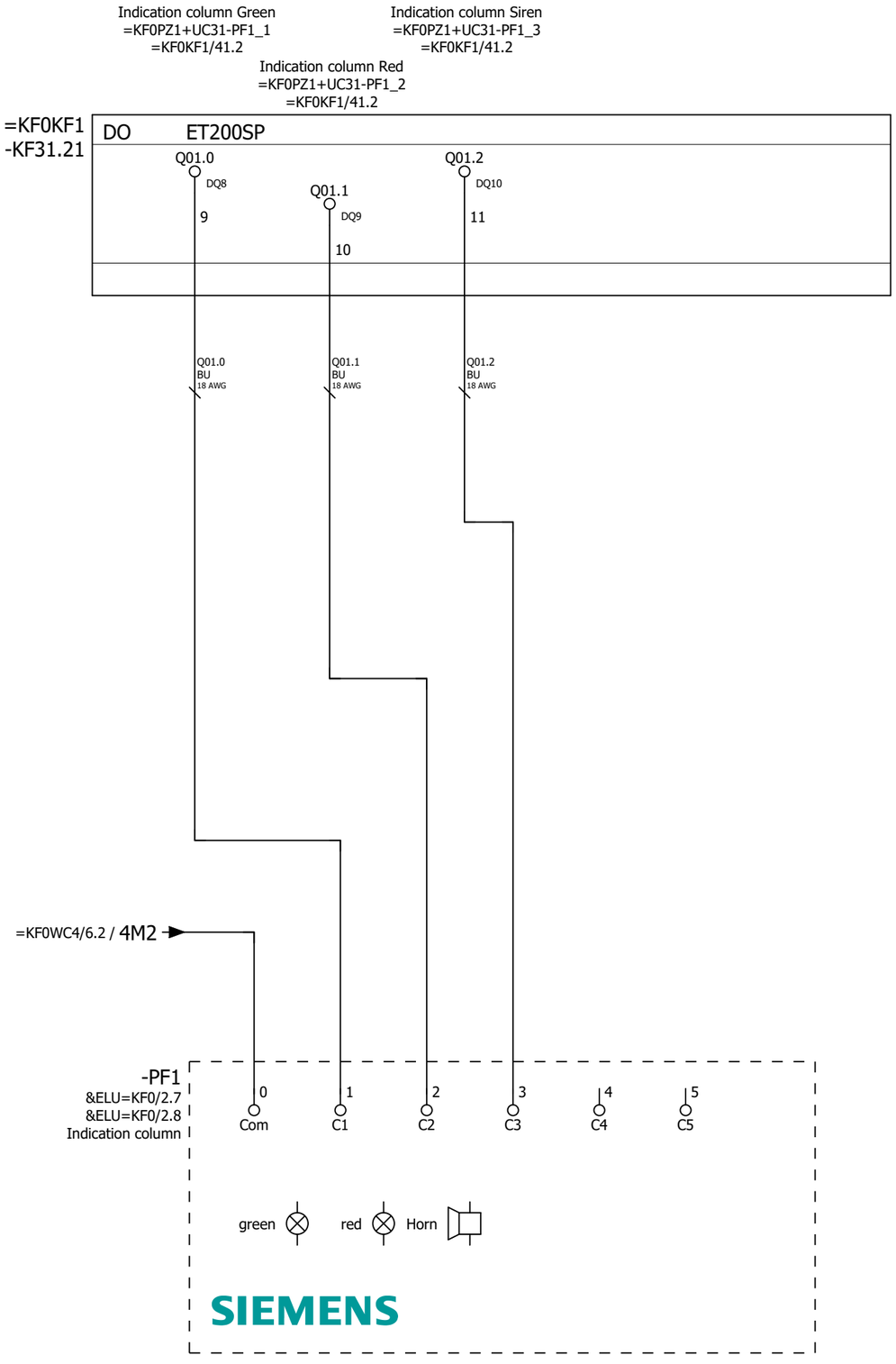

=KF0KF1/81

=KF0SF1/1

			Date	12/22/2022	Volvo Trucks North America	Valiant TMS	Indication column	Drawing name: =2V04&EFS-EL	= KF0PZ1
			Ed.	MKLEPADLO					+ UC31
			Appr		P6700 Underbody Mainline - Cell 2V04	Scale 1:1		Document type: EFS	Project nr: 22-16151
Modification	Date	Name	Original		Replacement of	Replaced by			Page 1 / 1630

Reset PB
=KF0SF1+UC31UC91-SF6_I
=KF0KF1/21.2

DI ET200SP
I00.5
DI5
6

=KF0KF1
-KF31.11

I00.5
BU
18 AWG

Set PB
=KF0SF1+UC31UC91-SF5_I
=KF0KF1/21.2

DI ET200SP
I00.4
DI4
5

=KF0KF1
-KF31.11

I00.4
BU
18 AWG

+.UC91

-SF6
&ELU=KF0/3.0
&ELU=KF0/3.1
CP1-10Y-20
Reset PB

4 E 3 14 13

1SFA619100R1023

-SF5
&ELU=KF0/3.0
CP1-10G-20
Set PB

4 E 3 14 13

1SFA619100R1022

=KF0WC4/6.2 / 4L+2

=KF0PZ1/1

2

			Date	12/22/2022	Volvo Trucks North America	Valiant TMS	Operating box UC91 MOP	Drawing name: =2V04&EFS-EL	= KF0SF1
			Ed.	MKLEPADLO					+ UC31
			Appr		P6700 Underbody Mainline - Cell 2V04	Scale 1:1		Document type: EFS	Project nr: 22-16151
Modification	Date	Name	Original		Replacement of	Replaced by			Page 1 / 1630

Emergency stop
tripped/reset PB
=KF0SF1+UC31UC92-SF1_I
=KF0KF1/21.2

DI ET200SP
I00.0
DI0
1

=KF0KF1
-KF31.11

I00.0
BU
18 AWG

Emergency stop
tripped/reset LT
=KF0SF1+UC31UC92-PF1_Q
=KF0KF1/41.2

DO ET200SP
Q00.0
DQ0
1

=KF0KF1
-KF31.21

Q00.0
BU
18 AWG

Enable power PB
=KF0SF1+UC31UC92-SF2_I
=KF0KF1/21.2

DI ET200SP
I00.1
DI1
2

=KF0KF1
-KF31.11

I00.1
BU
18 AWG

Start auto PB
=KF0SF1+UC31UC92-SF3_I
=KF0KF1/21.2

DI ET200SP
I00.2
DI2
3

=KF0KF1
-KF31.11

I00.2
BU
18 AWG

Start auto LT
=KF0SF1+UC31UC92-PF3_Q
=KF0KF1/41.2

DO ET200SP
Q00.1
DQ1
2

=KF0KF1
-KF31.21

Q00.1
BU
18 AWG

+.UC92

-SF1/PF1
&ELU=KF0/3.7
CP1-11R-10
Emergency stop
tripped/reset PBLT

4 E 3 1SFA619100R1111 x1 Red x2

-SF2
&ELU=KF0/3.7
CP1-10B-20
Enable power PB

4 E 3 1SFA619100R1026 14 13

-SF3/PF3
&ELU=KF0/3.7
CP1-11C-10
Start auto PBLT

4 E 3 1SFA619100R1118 x1 White x2

=KF0WC4/6.1 / 4L+2
=KF0WC4/6.1 / 4M2

-SF4
&ELU=KF0/3.7
C2SS1-10B-10
Man/Auto Sel Sw.

3 F 4 1SFA619200R1016

I00.3
BU
18 AWG

=KF0KF1
-KF31.11

4
DI3
I00.3
DI ET200SP

Man/Auto Sel Switch
=KF0SF1+UC31UC92-SF4_I
=KF0KF1/21.2

1

=KF0WC3/1

			Date	12/22/2022	Volvo Trucks North America	Valiant TMS	Operating box UC92 MOP	Drawing name: =2V04&EFS-EL	= KF0SF1
			Ed.	MKLEPADLO					+ UC31
			Appr		P6700 Underbody Mainline - Cell 2V04			Document type: EFS / Project nr: 22-16151	Page 2
Modification	Date	Name	Original		Replacement of / Replaced by	Scale 1:1			1630

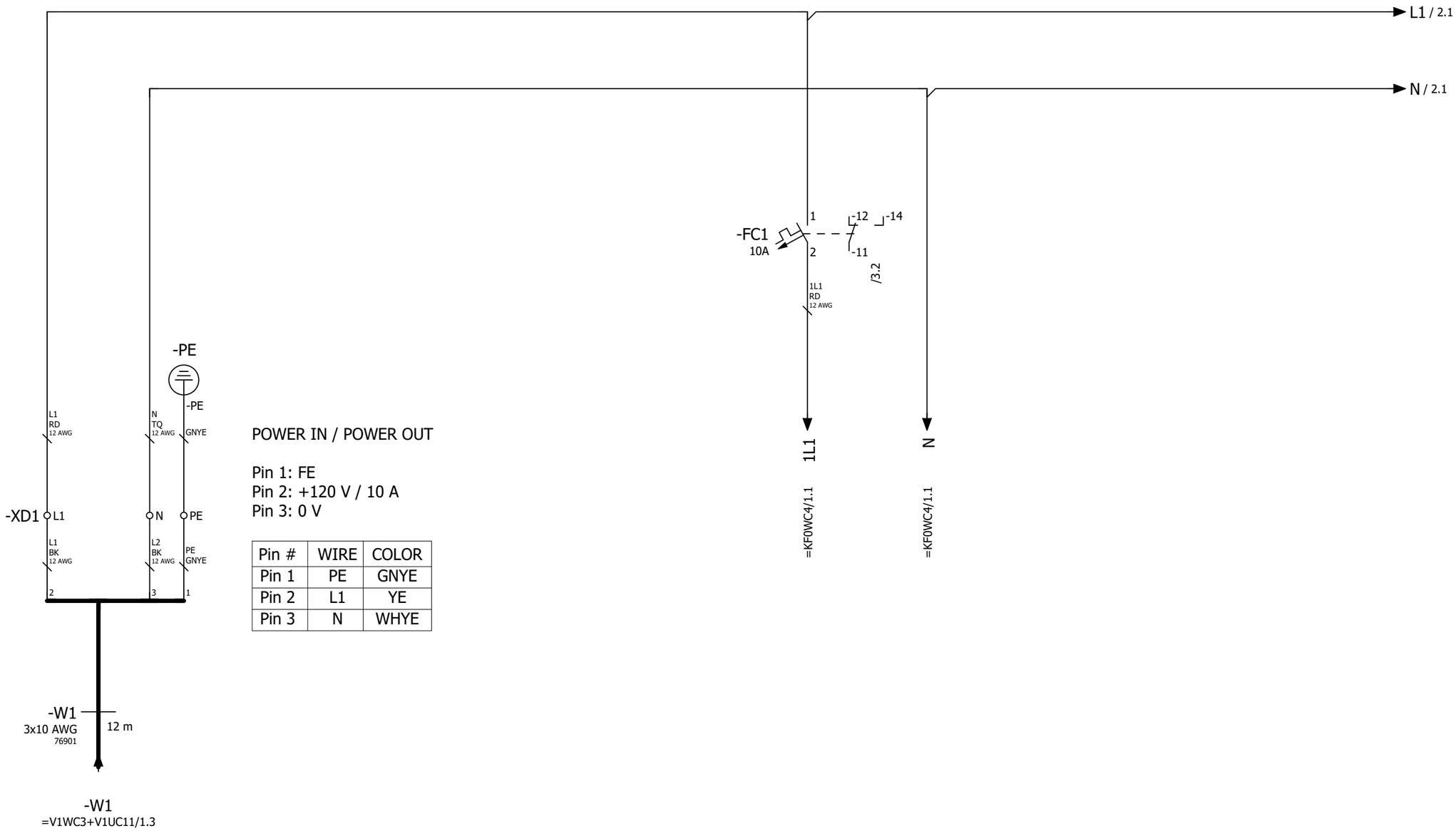

POWER IN / POWER OUT

Pin 1: FE
Pin 2: +120 V / 10 A
Pin 3: 0 V

Pin #	WIRE	COLOR
Pin 1	PE	GNYE
Pin 2	L1	YE
Pin 3	N	WHYE

Power
Distribution
24 VDC
Power Supply

=KF0SF1/2

2

			Date	12/22/2022	Volvo Trucks North America		Valiant TMS	Incomming power supply 120 VAC	Drawing name: =2V04&EFS-EL	= KF0WC3
			Ed.	MKLEPADLO						+ UC31
			Appr		P6700 Underbody Mainline - Cell 2V04				Document type: EFS	Project nr: 22-16151
Modification	Date	Name	Original		Replacement of	Replaced by	Scale 1:1			Page 1 / 1630

0	1	2	3	4	5	6	7	8	9

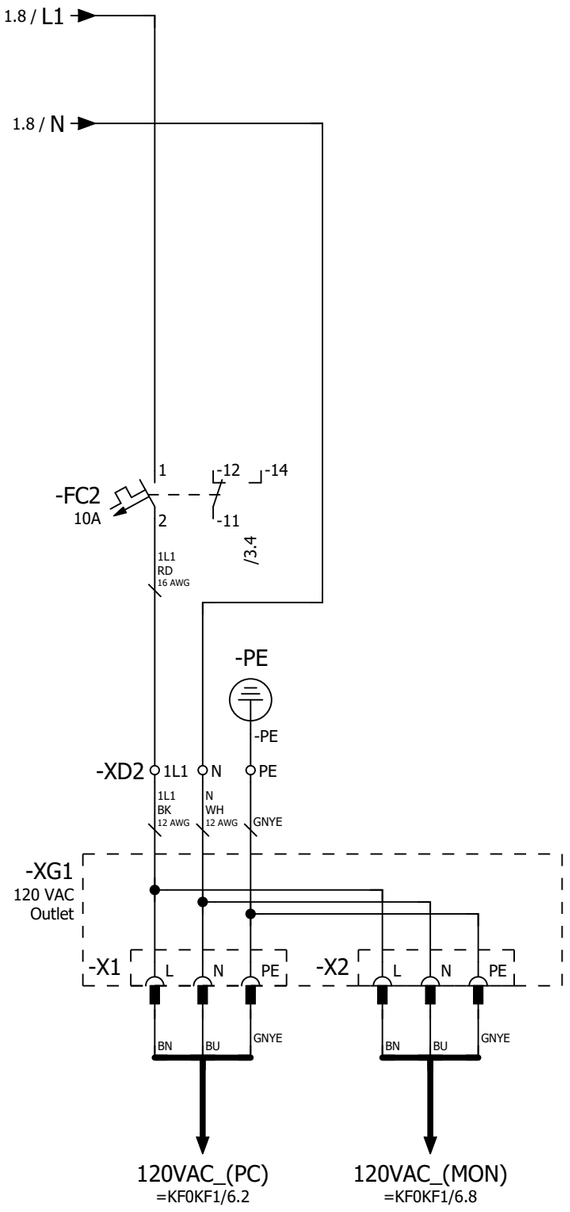

1

3

			Date	12/22/2022	Volvo Trucks North America		Valiant TMS	Outlet PLC 120VAC	Drawing name: =2V04&EFS-EL	= KF0WC3	
			Ed.	MKLEPADLO						+ UC31	
			Appr		P6700 Underbody Mainline - Cell 2V04				Document type: EFS	Project nr: 22-16151	Page 2
Modification	Date	Name	Original		Replacement of	Replaced by	Scale 1:1				1630

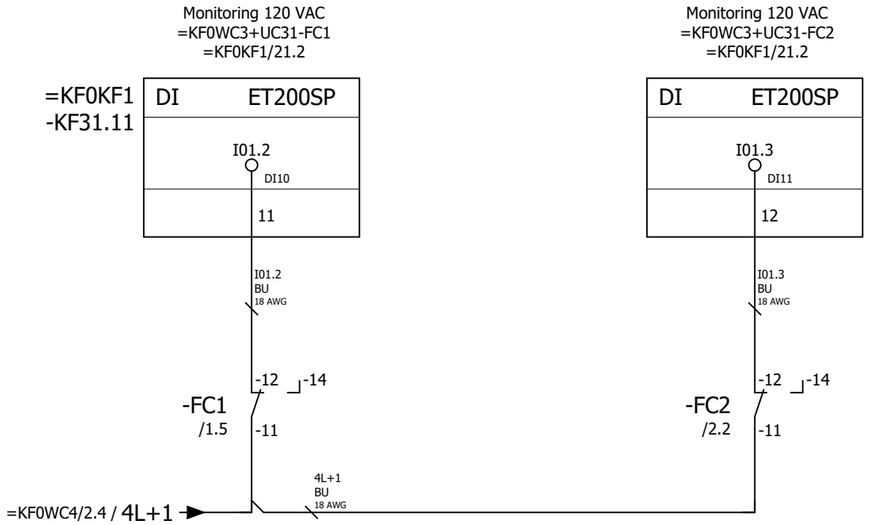

			Date	12/22/2022	Volvo Trucks North America	Valiant TMS	Monitoring 120VAC	Drawing name: =2V04&EFS-EL	= KF0WC3	
			Ed.	MKLEPADLO					+ UC31	
			Appr		P6700 Underbody Mainline - Cell 2V04			Document type: EFS	Project nr: 22-16151	Page 3
Modification	Date	Name	Original		Replacement of / Replaced by	Scale 1:1				1630

0	1	2	3	4	5	6	7	8	9

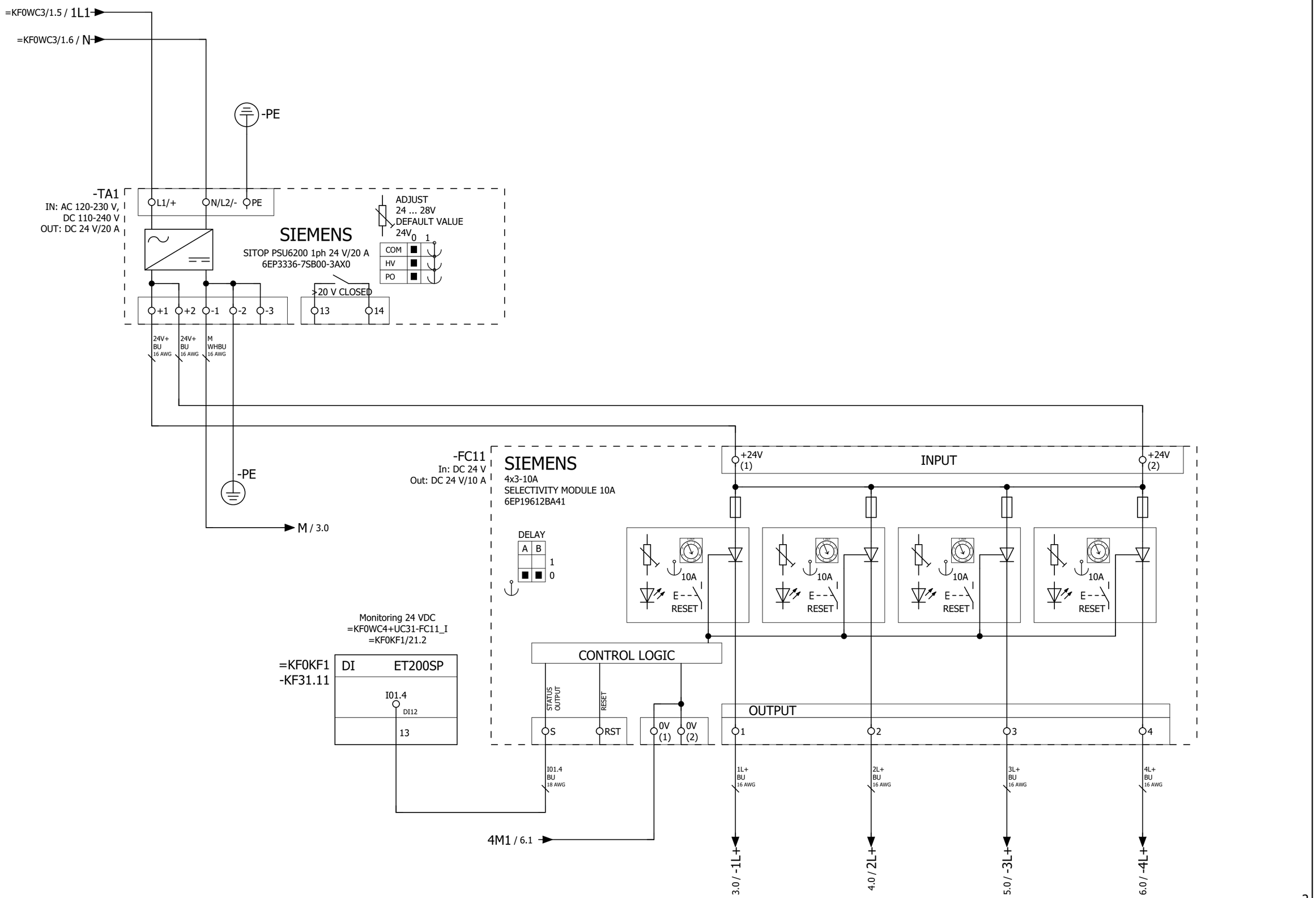

=KF0WC3/3

2

			Date	12/22/2022	Volvo Trucks North America	Valiant TMS	Power distribution 24VDC	Drawing name: =2V04&EFS-EL	= KF0WC4
			Ed.	MKLEPADLO					+ UC31
			Appr		P6700 Underbody Mainline - Cell 2V04			Document type: EFS	Project nr: 22-16151
Modification	Date	Name	Original		Replacement of	Replaced by	Scale 1:1		Page 1 / 1630

0	1	2	3	4	5	6	7	8	9

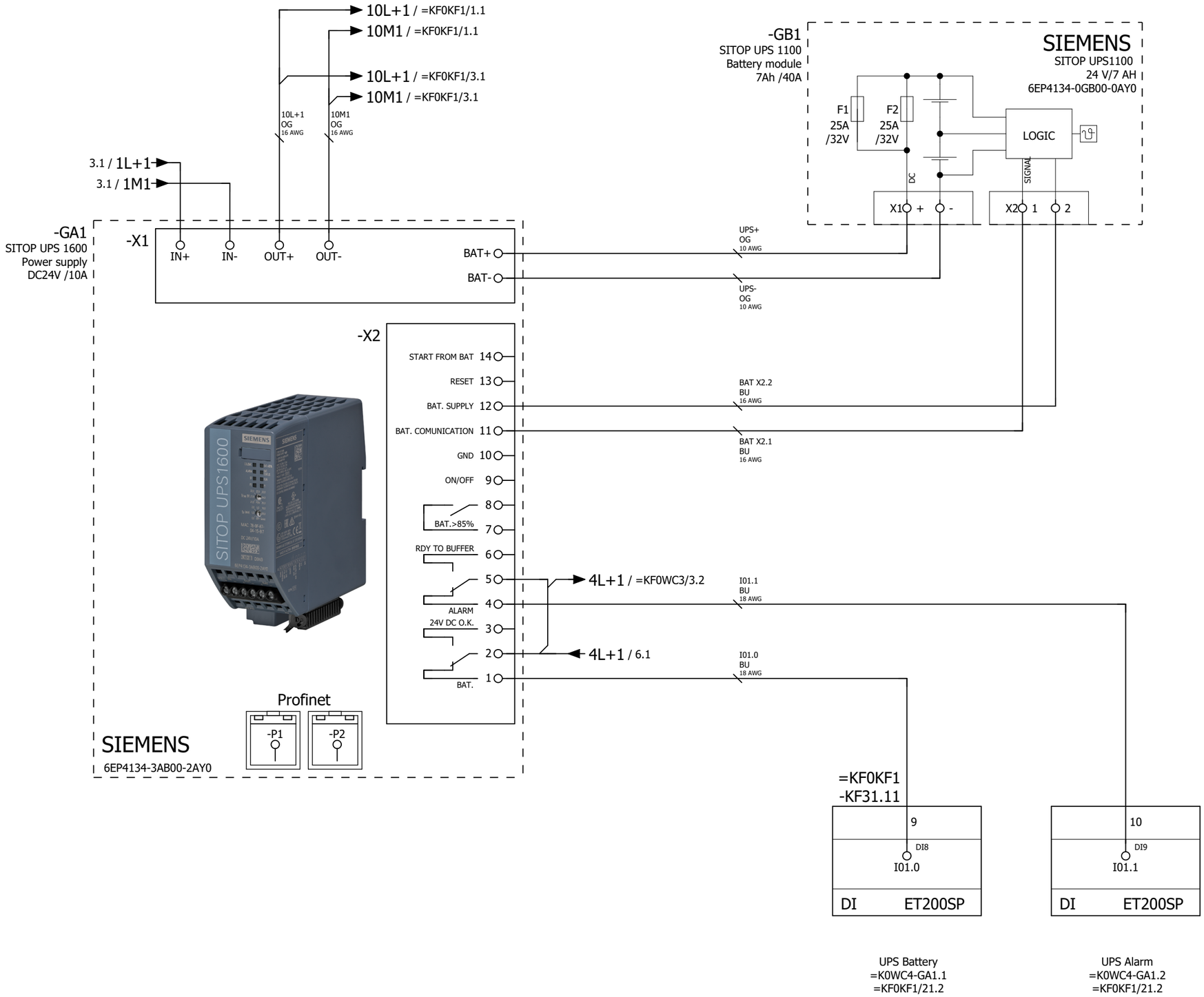

1 3

			Date	12/22/2022	Volvo Trucks North America		Valiant TMS	Power distribution, UPS	Drawing name: =2V04&EFS-EL	= KF0WC4	
			Ed.	MKLEPADLO						+ UC31	
			Appr		P6700 Underbody Mainline - Cell 2V04				Document type: EFS	Project nr: 22-16151	Page 2
Modification	Date	Name	Original		Replacement of	Replaced by	Scale 1:1				1630

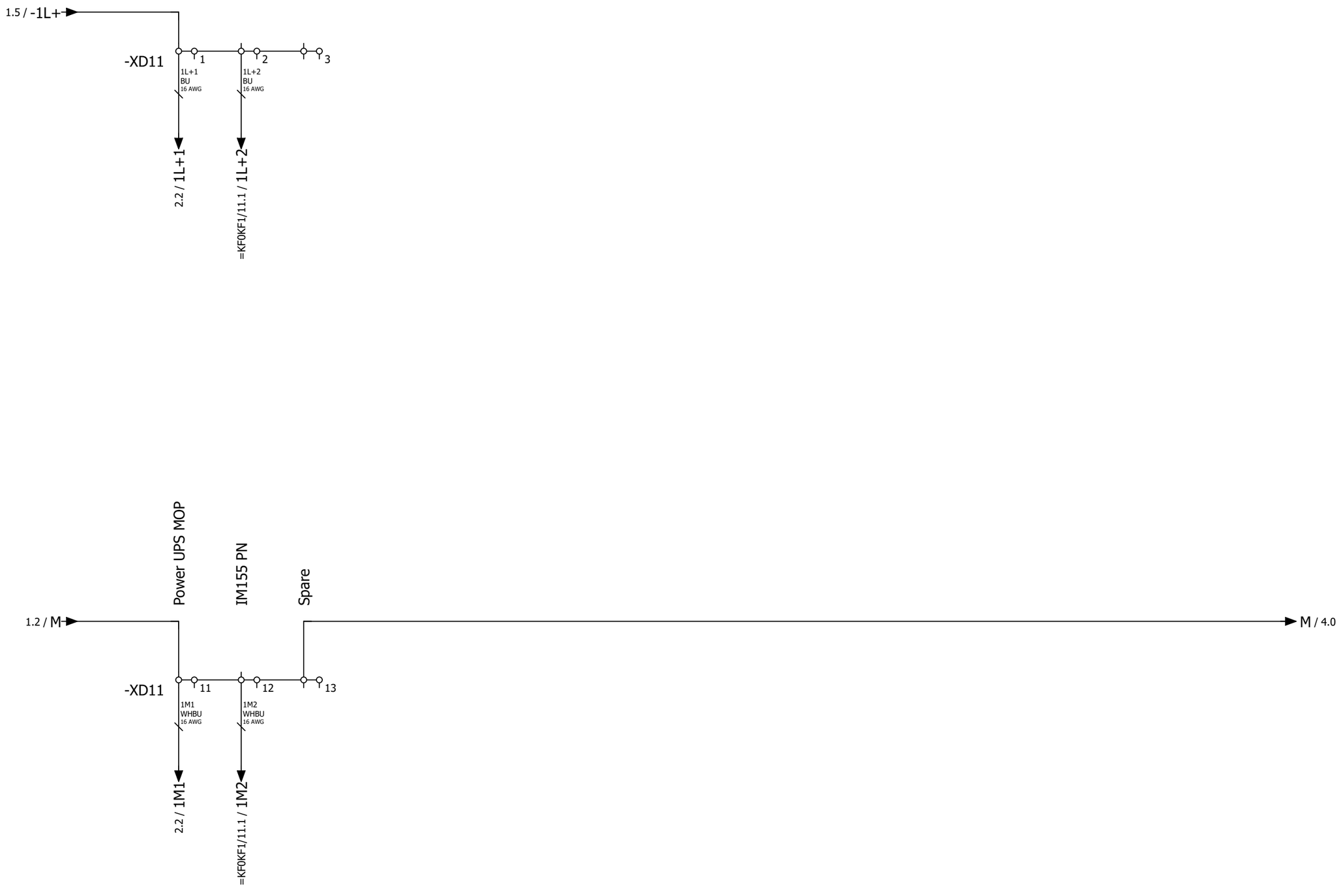

2 4

			Date	12/22/2022	Volvo Trucks North America	Valiant TMS	Power distribution 24VDC 1L+	Drawing name: =2V04&EFS-EL	= KF0WC4 + UC31
			Ed.	MKLEPADLO	P6700 Underbody Mainline - Cell 2V04				
			Appr					Document type: EFS	Project nr: 22-16151
Modification	Date	Name	Original		Replacement of / Replaced by	Scale 1:1			Page 3 / 1630

0	1	2	3	4	5	6	7	8	9

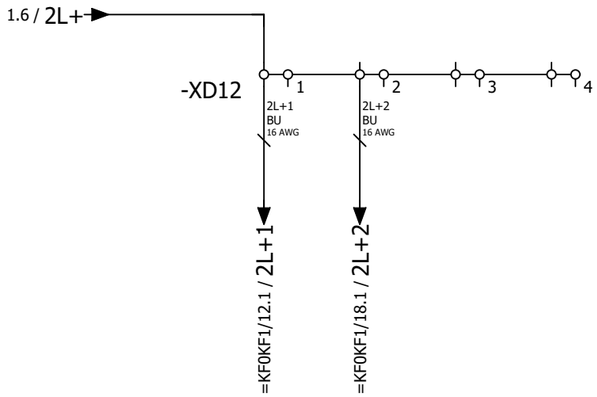

Power input cards (DI)

Power failsafe input cards (F-DI)

Spare

Spare

3

5

			Date	12/22/2022	Volvo Trucks North America		Valiant TMS	Power distribution 24VDC 2L+	Drawing name: =2V04&EFS-EL	= KF0WC4	
			Ed.	MKLEPADLO						+ UC31	
			Appr		P6700 Underbody Mainline - Cell 2V04				Document type: EFS	Project nr: 22-16151	Page 4
Modification	Date	Name	Original		Replacement of	Replaced by	Scale 1:1				1630

0	1	2	3	4	5	6	7	8	9

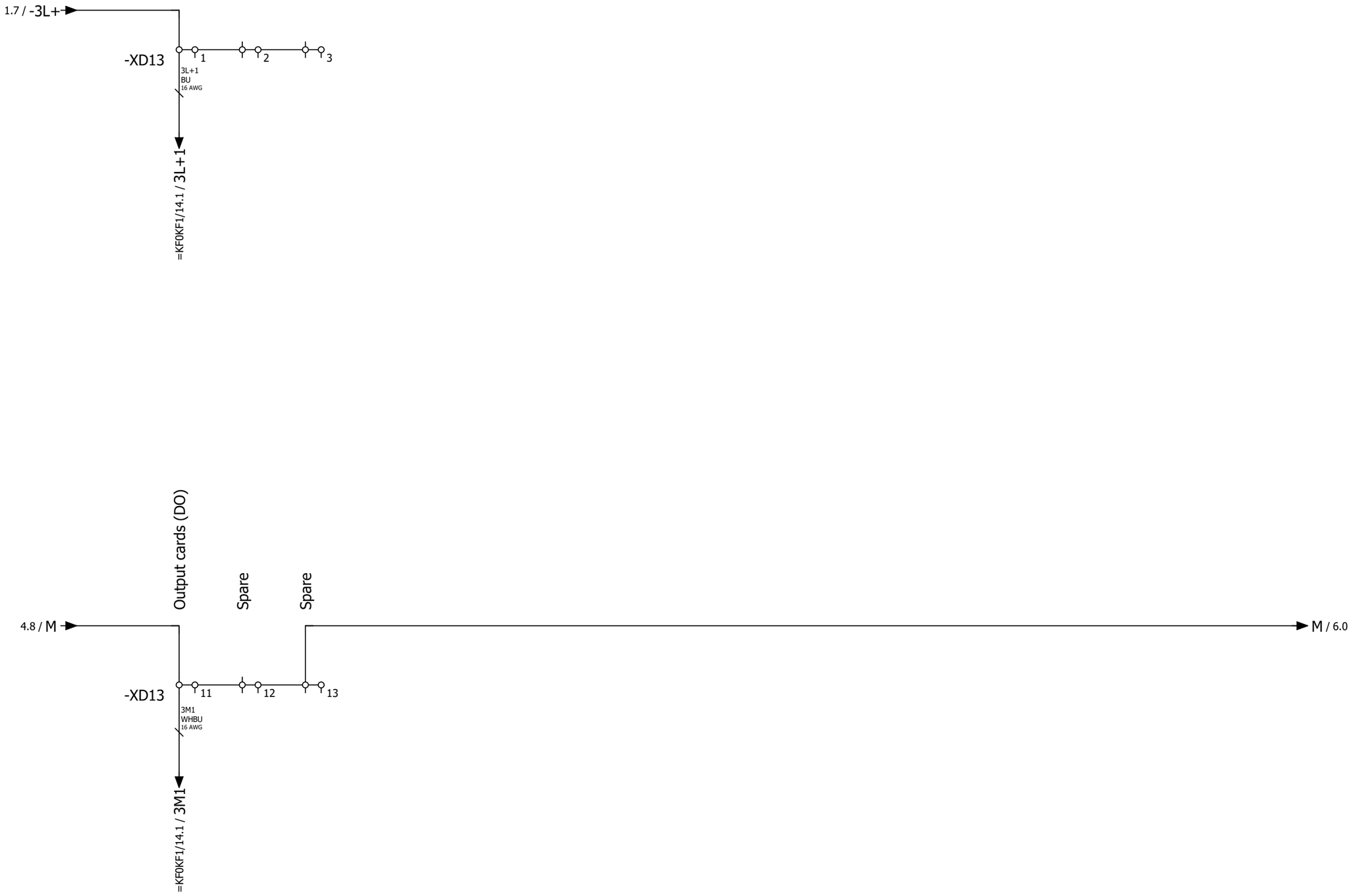

4 6

			Date	12/22/2022	Volvo Trucks North America		Valiant TMS	Power distribution 24VDC 3L+	Drawing name: =2V04&EFS-EL		= KF0WC4	
			Ed.	MKLEPADLO							+ UC31	
			Appr		P6700 Underbody Mainline - Cell 2V04				Document type: EFS	Project nr: 22-16151	Page	5
Modification	Date	Name	Original		Replacement of	Replaced by	Scale 1:1					1630

0	1	2	3	4	5	6	7	8	9

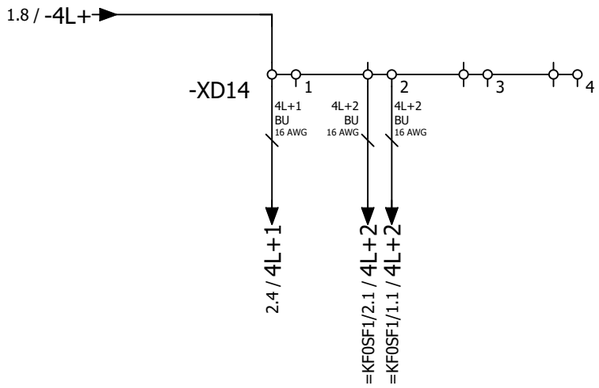

5

=KH0+KH0/1

			Date	12/22/2022	Volvo Trucks North America	Valiant TMS	Power distribution 24VDC 4L+	Drawing name: =2V04&EFS-EL	= KF0WC4
			Ed.	MKLEPADLO					+ UC31
			Appr		P6700 Underbody Mainline - Cell 2V04			Document type: EFS	Project nr: 22-16151
Modification	Date	Name	Original		Replacement of	Replaced by	Scale 1:1		Page 6 / 1630

0	1	2	3	4	5	6	7	8	9

=V1KF1+V1UC11

Monitoring Main AIR On
=KH0-BP1_I
=V1KF1+V1UC11/12.2

DI ET200SP

I56.6
DI6

7

=V1KF1
-KF11.14

I56.6
BUOG
16 AWG

=V1WC4+V1UC11/5.4 / 3L+7

=V1WC4+V1UC11/5.4 / 3M7

-KF11.14
7

BN WH BU BK

-W2
RKC 4.4T-12-RSC 4.4T/S3060
12m

BN WH BU BK

-W1-XD2
5-pin M12
Field Attachable
Connector
BS 8251-0/PG9

1-BN 4-BK 2-WH 3-BU

NEBS-L1G4-K-5-LE4
4x26AWG
5m

-W1

BN 26 AWG BK 26 AWG WH 26 AWG BU 26 AWG

-W1-XD1

1 2 3 4

1 2 3 4

BN +24V DC power supply
BK Output A
WH Output B
BU 0V DC

PNP NPN PNP NPN

p1

FESTO

-BP1

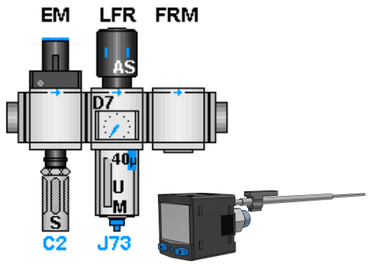

See drawing:
=2V04&MFS-PNEU

=KF0WC4+UC31/6

2

			Date	12/22/2022	Volvo Trucks North America	Valiant TMS	Incoming air supply (Main)	Drawing name: =2V04&EFS-EL	= KH0
			Ed.	MKLEPADLO					+ KH0
			Appr		P6700 Underbody Mainline - Cell 2V04			Document type: EFS	Project nr: 22-16151	Page 1
Modification	Date	Name	Original		Replacement of	Replaced by	Scale 1:1			1630

0	1	2	3	4	5	6	7	8	9

=V1KF1+V1UC15

Monitoring S105 Fixture AIR On
=KH0-BP2_I
=V1KF1+V1UC15/9.2

DI ET200SP

I232.6
DI6

7

=V1KF1
-KF15.12

I232.6
BUOG
16 AWG

=V1WC4+V1UC15/6.1 / 5L+1

=V1WC4+V1UC15/6.1 / 5M1

-KF15.12
7

bn wh bu bk

UPDATE WHEN RESOLVED
FRL location is known

-W3
RKC 4.4T-12-RSC 4.4T/S3060
12m

bn bu bk wh

-BP2
1 L+
3 L-
4 Out
2 n.c.

M12

P

FESTO

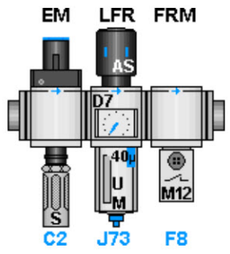

See drawing:
=2V04&MFS-PNEU

1

3

			Date	12/22/2022	Volvo Trucks North America		Valiant TMS	Incoming air supply (S105 Fixture)	Drawing name: =2V04&EFS-EL	= KH0
			Ed.	MKLEPADLO						+ KH0
			Appr		P6700 Underbody Mainline - Cell 2V04				Document type: EFS	Project nr: 22-16151
Modification	Date	Name	Original		Replacement of	Replaced by	Scale 1:1			Page 2 / 1630

0	1	2	3	4	5	6	7	8	9

=V1KF1+V1UC11

Monitoring S110 Fixture AIR On
=KH0-BP3_I
=V1KF1+V1UC11/12.2

DI	ET200SP
I56.4 DI4	
5	

=V1KF1
-KF11.14

I56.4
BUOG
16 AWG

=V1WC4+V1UC11/5.3 / 3L+6

=V1WC4+V1UC11/5.3 / 3M6

-KF11.14
5

bn wh bu bk

UPDATE WHEN RESOLVED
FRL location is known

-W4
RKC 4.4T-12-RSC 4.4T/S3060
12m

bn bu bk wh

-BP3
1 L+
3 L-
4 Out
2 n.c.

M12

P

FESTO

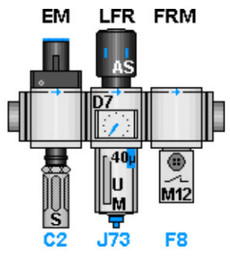

See drawing:
=2V04&MFS-PNEU

2

4

			Date	12/22/2022	Volvo Trucks North America	Valiant TMS	Incoming air supply (S110 Fixture)	Drawing name: =2V04&EFS-EL	= KH0
			Ed.	MKLEPADLO					+ KH0
			Appr		P6700 Underbody Mainline - Cell 2V04			Document type: EFS	Project nr: 22-16151
Modification	Date	Name	Original		Replacement of / Replaced by	Scale 1:1			Page 3 / 1630

0	1	2	3	4	5	6	7	8	9

=V1KF1+V1UC11

Monitoring S120 Fixture AIR On
=KH0-BP4_I
=V1KF1+V1UC11/12.2

DI	ET200SP
I56.5 DI5	
6	

=V1KF1
-KF11.14

I56.5
BUOG
16 AWG

=V1WC4+V1UC11/5.3 / 3L+6

=V1WC4+V1UC11/5.3 / 3M6

-KF11.14
6

bn wh bu bk

UPDATE WHEN RESOLVED
FRL location is known

-W5
RKC 4.4T-12-RSC 4.4T/S3060
12m

bn bu bk wh

-BP4
1 L+
3 L-
4 Out
2 n.c.
M12
P

FESTO

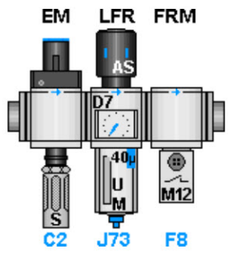

See drawing:
=2V04&MFS-PNEU

3

5

			Date	12/22/2022	Volvo Trucks North America	Valiant TMS	Incoming air supply (S120 Fixture)	Drawing name: =2V04&EFS-EL	= KH0
			Ed.	MKLEPADLO					+ KH0
			Appr		P6700 Underbody Mainline - Cell 2V04			Document type: EFS	Project nr: 22-16151
Modification	Date	Name	Original		Replacement of / Replaced by	Scale 1:1			Page 4 / 1630

0	1	2	3	4	5	6	7	8	9

=V1KF1+V1UC11

Monitoring S130 Fixture AIR On
=KH0-BP5_I
=V1KF1+V1UC11/12.2

DI ET200SP

I56.7
DI7

8

=V1KF1
-KF11.14

I56.7
BUOG
16 AWG

=V1WC4+V1UC11/5.4 / 3L+7

=V1WC4+V1UC11/5.4 / 3M7

-KF11.14
8

bn wh bu bk

UPDATE WHEN RESOLVED
FRL location is known

-W6
RKC 4.4T-10-RSC 4.4T/S3060
10m

bn bu bk wh

-BP5
1 L+
3 L-
4 Out
2 n.c.

M12

P

FESTO

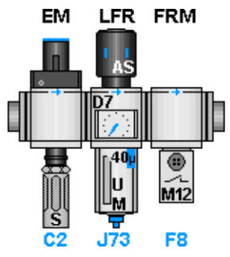

See drawing:
=2V04&MFS-PNEU

			Date	12/22/2022	Volvo Trucks North America		Valiant TMS	Incoming air supply (S130 Fixture)	Drawing name: =2V04&EFS-EL	= KH0
			Ed.	MKLEPADLO						+ KH0
			Appr		P6700 Underbody Mainline - Cell 2V04				Document type: EFS	Project nr: 22-16151	Page 5
Modification	Date	Name	Original		Replacement of	Replaced by	Scale 1:1				1630

0	1	2	3	4	5	6	7	8	9

=V1KF1+V1UC14

Monitoring S140 Fixture AIR On
=KH0-BP6_I
=V1KF1+V1UC14/9.2

DI ET200SP

I202.6
DI6

7

=V1KF1
-KF14.12

I202.6
BUOG
16 AWG

=V1WC4+V1UC14/6.1 / 5L+1

=V1WC4+V1UC14/6.1 / 5M1

-KF14.12
7

bn wh bu bk

UPDATE WHEN RESOLVED
FRL location is known

-W7
RKC 4.4T-12-RSC 4.4T/S3060
12m

bn bu bk wh

-BP6
1 L+
3 L-
4 Out
2 n.c.
M12
P

FESTO

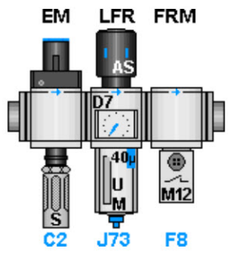

See drawing:
=2V04&MFS-PNEU

5

7

			Date	12/22/2022	Volvo Trucks North America	Valiant TMS	Incoming air supply (S140 Fixture)	Drawing name: =2V04&EFS-EL	= KH0
			Ed.	MKLEPADLO					+ KH0
			Appr		P6700 Underbody Mainline - Cell 2V04			Document type: EFS	Project nr: 22-16151
Modification	Date	Name	Original		Replacement of / Replaced by	Scale 1:1			Page 6 / 1630

0	1	2	3	4	5	6	7	8	9

=V1KF1+V1UC12

Monitoring S150 Fixture AIR On
=KH0-BP7_I
=V1KF1+V1UC12/12.2

DI	ET200SP
I86.6 DI6	
7	

=V1KF1
-KF12.14

I86.6
BUOG
16 AWG

=V1WC4+V1UC12/5.4 / 3L+7

=V1WC4+V1UC12/5.4 / 3M7

-KF12.14
7

bn wh bu bk

UPDATE WHEN RESOLVED
FRL location is known

-W8
RKC 4.4T-12-RSC 4.4T/S3060
12m

bn bu bk wh

-BP7
1 L+
3 L-
4 Out
2 n.c.
M12
P

FESTO

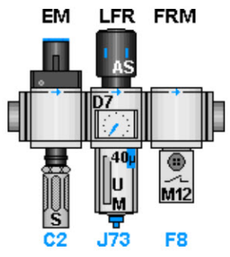

See drawing:
=2V04&MFS-PNEU

6 8

			Date	12/22/2022	Volvo Trucks North America		Valiant TMS	Incoming air supply (S150 Fixture)	Drawing name: =2V04&EFS-EL	= KH0
			Ed.	MKLEPADLO						+ KH0
			Appr		P6700 Underbody Mainline - Cell 2V04				Document type: EFS	Project nr: 22-16151
Modification	Date	Name	Original		Replacement of	Replaced by	Scale 1:1			Page 7 / 1630

0	1	2	3	4	5	6	7	8	9

=V1KF1+V1UC14

Monitoring S150 Conveyor At Load AIR On
=KH0-BP8_I
=V1KF1+V1UC14/9.2

DI	ET200SP
I202.7 DI7	
8	

=V1KF1
-KF14.12

I202.7
BUOG
16 AWG

=V1WC4+V1UC14/6.2 / 5L+1

=V1WC4+V1UC14/6.2 / 5M1

-KF14.12
8

bn wh bu bk

UPDATE WHEN RESOLVED
FRL location is known

-W9
RKC 4.4T-12-RSC 4.4T/S3060
12m

bn bu bk wh

-BP8
1 L+
3 L-
4 Out
2 n.c.
M12
P

FESTO

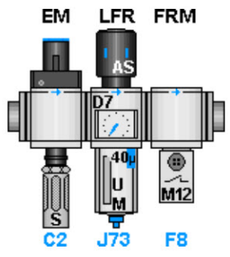

See drawing:
=2V04&MFS-PNEU

7

9

			Date	12/22/2022	Volvo Trucks North America		Valiant TMS	Incoming air supply (S150 Conveyor At Load)	Drawing name: =2V04&EFS-EL	= KH0
			Ed.	MKLEPADLO						+ KH0
			Appr		P6700 Underbody Mainline - Cell 2V04				Document type: EFS	Project nr: 22-16151
Modification	Date	Name	Original		Replacement of	Replaced by	Scale 1:1			Page 8 / 1630

0	1	2	3	4	5	6	7	8	9

=V1KF1+V1UC15

Monitoring 2V02-S060 Conveyor (Unload) AIR On
=KH0-BP9_I
=V1KF1+V1UC15/9.2

DI	ET200SP
I232.7 DI7	
8	

=V1KF1
-KF15.12

I232.7
BUOG
16 AWG

=V1WC4+V1UC15/6.2 / 5L+1

=V1WC4+V1UC15/6.2 / 5M1

-KF15.12
8

bn wh bu bk

UPDATE WHEN RESOLVED
FRL location is known

-W10
RKC 4.4T-12-RSC 4.4T/S3060
12m

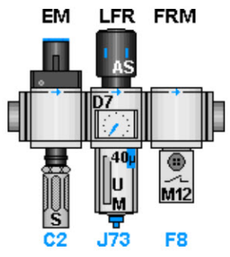

See drawing:
=2V04&MFS-PNEU

bn bu bk wh

-BP9
1 L+
3 L-
4 Out
2 n.c.
M12
P
FESTO

8

=KH3+KH3/1

			Date	12/22/2022	Volvo Trucks North America		Valiant TMS	Incoming air supply (2V02-S060 Conveyor Unload)	Drawing name: =2V04&EFS-EL	= KH0
			Ed.	MKLEPADLO						+ KH0
			Appr		P6700 Underbody Mainline - Cell 2V04				Document type: EFS	Project nr: 22-16151
Modification	Date	Name	Original		Replacement of	Replaced by	Scale 1:1			Page 9 / 1630

0	1	2	3	4	5	6	7	8	9

=V1KF1+V1UC11

Monitoring Main Water Filter Dirty
=KH3-BF1_I
=V1KF1+V1UC11/12.2

DI	ET200SP
I57.1 DI9	
	10

=V1KF1
-KF11.14

I57.1
BUOG
16 AWG

=V1WC4+V1UC11/5.3 / 3L+5

=V1WC4+V1UC11/5.3 / 3M5

-KF11.14
10

bn wh bu bk

-W1
RKC 4.4T-12-RSC 4.4T/S3060
12m

bn bu bk wh

-BF1
1 L+
3 L-
4 Out
2 n.c.

M12

P

See drawing:
=2V04&MFS-WATER

=KH0+KH0/9

2

			Date	12/22/2022	Volvo Trucks North America	Valiant TMS	Incoming water supply (Filter)	Drawing name: =2V04&EFS-EL	= KH3
			Ed.	MKLEPADLO					+ KH3
			Appr		P6700 Underbody Mainline - Cell 2V04			Document type: EFS	Project nr: 22-16151
Modification	Date	Name	Original		Replacement of / Replaced by	Scale 1:1			Page 1 / 1630

0	1	2	3	4	5	6	7	8	9

=V1KF1+V1UC11

Monitoring Main Water On
=KH3-BF2_I
=V1KF1+V1UC11/12.2

DI	ET200SP
I57.2 DI10	
11	

=V1KF1
-KF11.14

I57.2
BUOG
16 AWG

=V1WC4+V1UC11/5.3 / 3L+5

=V1WC4+V1UC11/5.3 / 3M5

-KF11.14
11

bn wh bu bk

-W2
RKC 4.4T-12-RSC 4.4T/S3060
12m

bn bu bk wh

-BF2
1 L+
3 L-
4 Out
2 n.c.
M12

TURCK

See drawing:
=2V04&MFS-WATER

1

=V1AR11KF1+V1AR11UC01/1

			Date	12/22/2022	Volvo Trucks North America	Valiant TMS	Incoming water supply	Drawing name: =2V04&EFS-EL	= KH3
			Ed.	MKLEPADLO					+ KH3
			Appr		P6700 Underbody Mainline - Cell 2V04			Document type: EFS	Project nr: 22-16151
Modification	Date	Name	Original		Replacement of / Replaced by	Scale 1:1			Page 2 / 1630

0	1	2	3	4	5	6	7	8	9

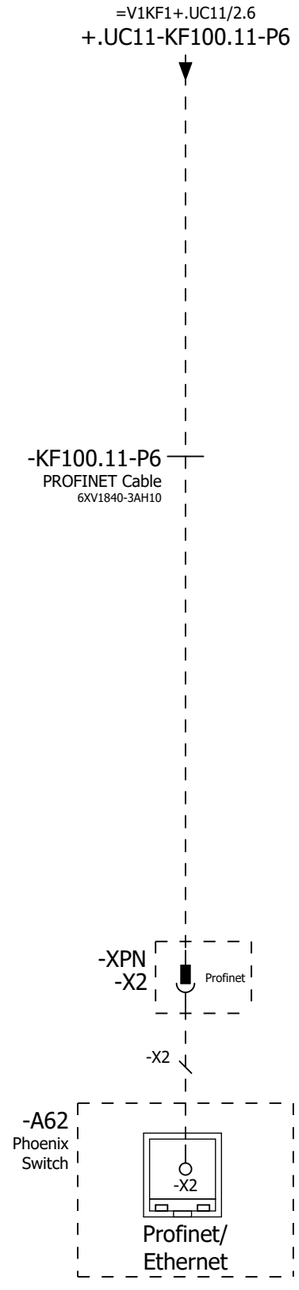

=KH3+KH3/2

=V1AR11UQ41BG0+.AR11UQ41/1

			Date	12/22/2022	Volvo Trucks North America	Valiant TMS	Incoming Profinet	Drawing name: =2V04&EFS-EL	= V1AR11KF1
			Ed.	MKLEPADLO					+ V1AR11UC01
			Appr		P6700 Underbody Mainline - Cell 2V04	Scale 1:1		Document type: EFS	Project nr: 22-16151
Modification	Date	Name	Original		Replacement of	Replaced by			Page 1 / 1630

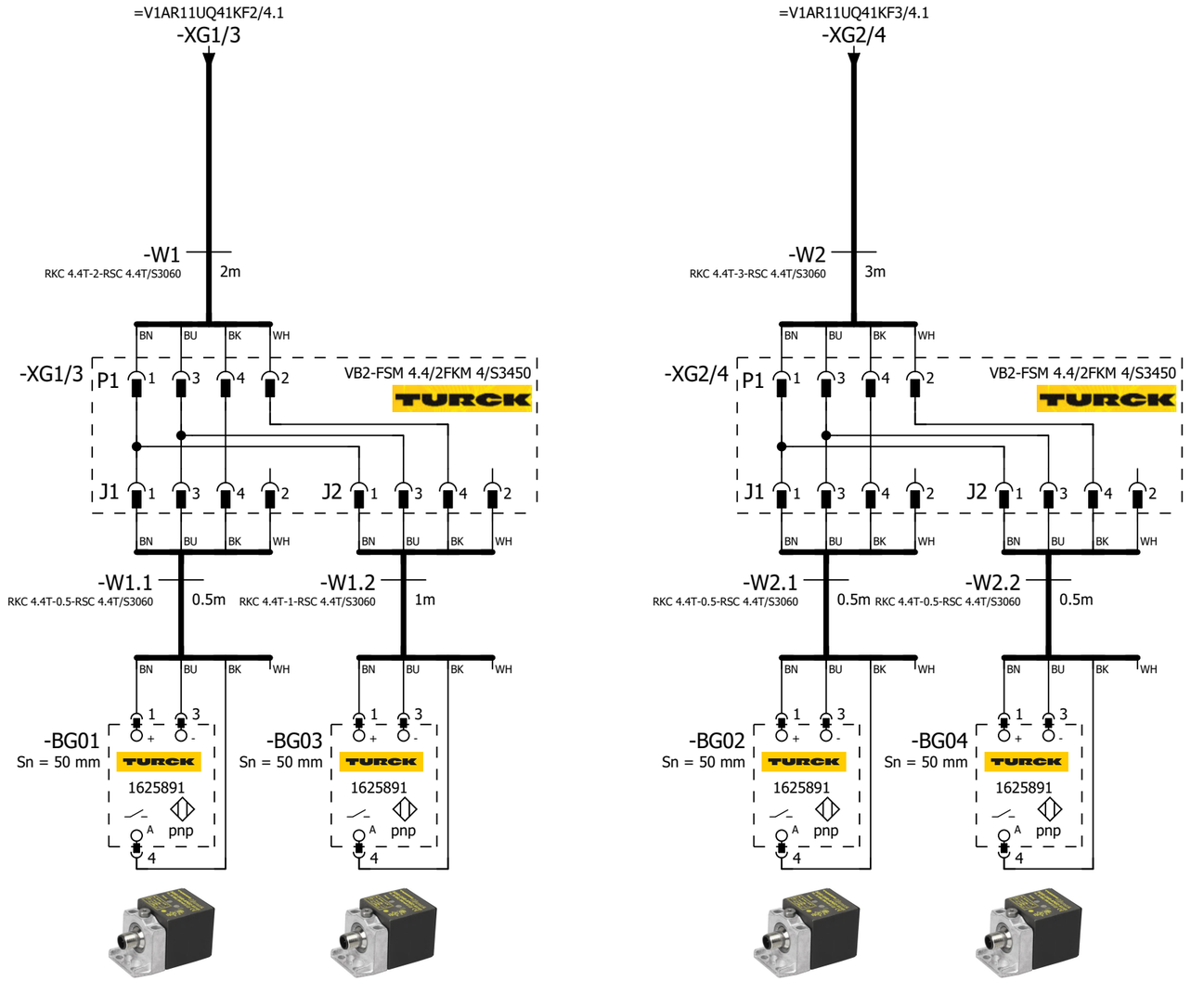

=V1AR11UQ41 -BG01 Floor Frame Assy (Common)	=V1AR11UQ41 -BG03 Floor Frame Assy (Common)	=V1AR11UQ41 -BG02 Floor Frame Assy (Common)	=V1AR11UQ41 -BG04 Floor Frame Assy (Common)

=V1AR11KF1+.AR11UC01/1

=V1AR11UQ41KF1/1

			Date	12/22/2022	Volvo Trucks North America		Valiant TMS	SENSORS	Drawing name: =2V04&EFS-EL	= V1AR11UQ41BG0
			Ed.	MKLEPADLO						+ V1AR11UQ41
			Appr		P6700 Underbody Mainline - Cell 2V04		Scale 1:1		Document type: EFS	Project nr: 22-16151
Modification	Date	Name	Original		Replacement of	Replaced by				Page 1 / 1630

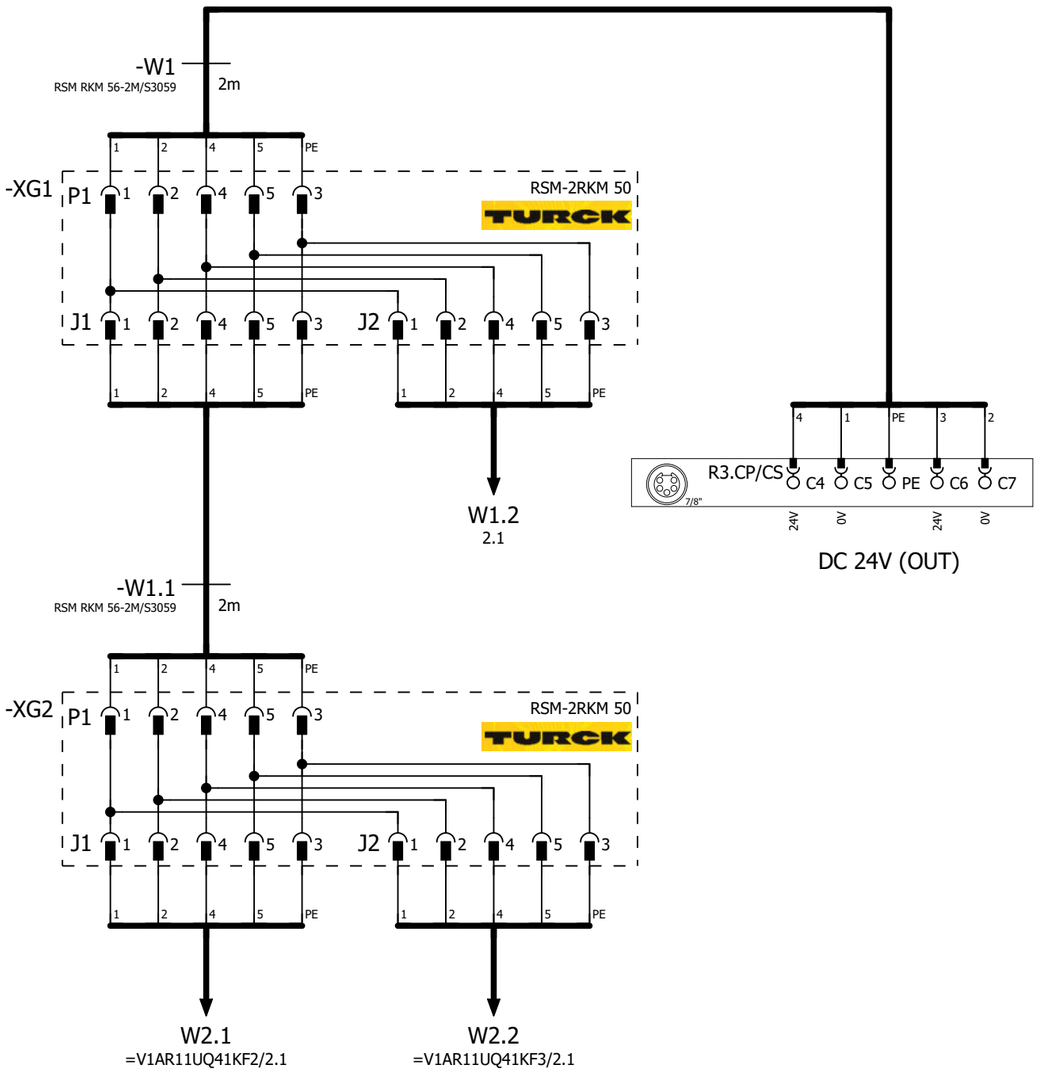

DC 24V (OUT)

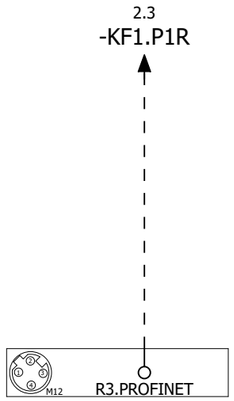

R3.ETHERNET

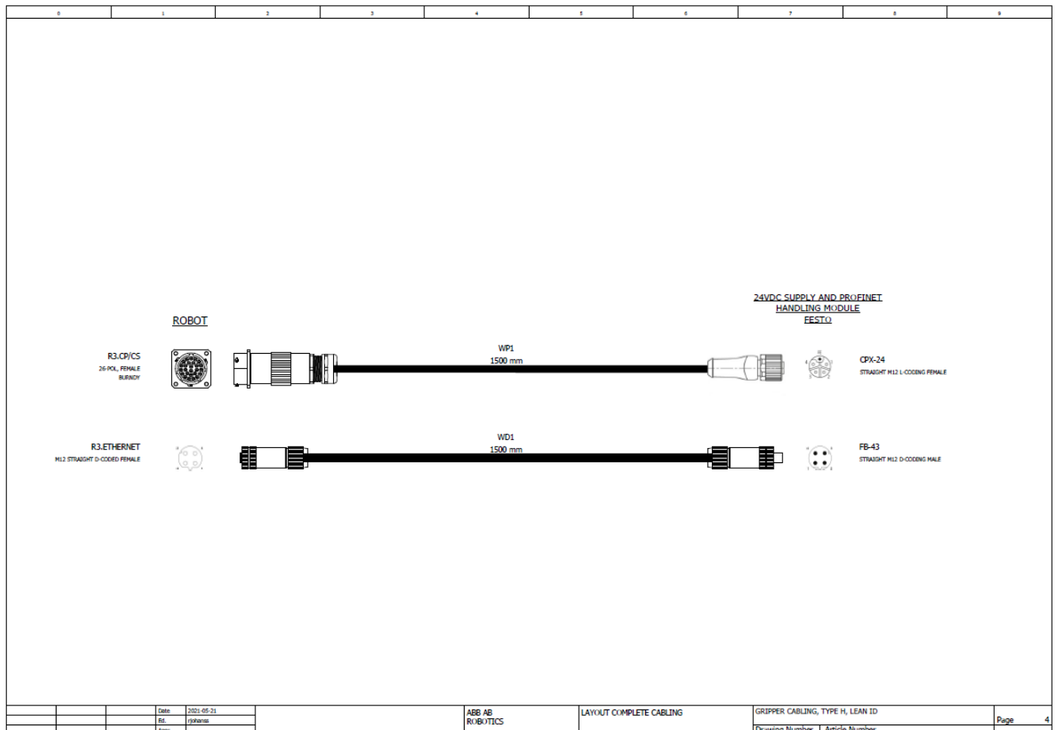

=V1AR11UQ41BG0/1

2

			Date	12/22/2022	Volvo Trucks North America	Valiant TMS	24VDC SUPPLY AND PROFINET HANDLING MODULE	Drawing name: =2V04&EFS-EL	= V1AR11UQ41KF1
			Ed.	MKLEPADLO					+ V1AR11UQ41
			Appr		P6700 Underbody Mainline - Cell 2V04	Scale 1:1		Document type: EFS	Project nr: 22-16151
Modification	Date	Name	Original		Replacement of	Replaced by			Page 1 / 1630

0	1	2	3	4	5	6	7	8	9

1.2 / -W1.2

-W1.2
RSM RKM 56-1M/S3059
1m

1.5 / -KF1.P1R

KF1-P2 / =V1AR11UQ41KF2/2.3

-WF1
PROFINET Cable
6XV1840-3AH10

-KF1

X20 7/8" 1 2 PE 3 4 5
0V_VAL / OUT
0V_EL / SEN
FE
24V_EL / SEN
24V_VAL / OUT

ON OFF 1 2 1 2

M12 -TP1

M12 -TP2

FESTO
Bus node + Interlinking block
548755 + 550208

DI:0	DI 0 X1:4	V1AR11UQ41UQ1.1-BGR	Common Shot Pin (RESET)
DI:1	DI 1 X1:2	V1AR11UQ41UQ1.1-BGS	Common Shot Pin (SET)
DI:2	DI 2 X2:4	V1AR11UQ41UQ2.1-BGR	L150/230 Model Shot Pin (RESET)
DI:3	DI 3 X2:2	V1AR11UQ41UQ2.1-BGS	L150/230 Model Shot Pin (SET)
DI:4	DI 4 X3:4	V1AR11UQ41UQ3.1-BGR	L150 Model Shot Pin (RESET)
DI:5	DI 5 X3:2	V1AR11UQ41UQ3.1-BGS	L150 Model Shot Pin (SET)
DI:6	DI 6 X4:4	V1AR11UQ41UQ3.2-BGR	L150 Model Shot Pin (RESET)
DI:7	DI 7 X4:2	V1AR11UQ41UQ3.2-BGS	L150 Model Shot Pin (SET)
DI:8	DI 8 X5:4	V1AR11UQ41UQ4.1-BGR	Common Clamp 1 (RESET)
DI:9	DI 9 X5:2	V1AR11UQ41UQ4.1-BGS	Common Clamp 1 (SET)
DI:10	DI 10 X6:4	V1AR11UQ41UQ4.2-BGR	Common Clamp 1 (RESET)
DI:11	DI 11 X6:2	V1AR11UQ41UQ4.2-BGS	Common Clamp 1 (SET)
DI:12	DI 12 X7:4	V1AR11UQ41UQ4.3-BGR	Common Clamp 1 (RESET)
DI:13	DI 13 X7:2	V1AR11UQ41UQ4.3-BGS	Common Clamp 1 (SET)
DI:14	DI 14 X8:4	V1AR11UQ41UQ4.4-BGR	Common Clamp 1 (RESET)
DI:15	DI 15 X8:2	V1AR11UQ41UQ4.4-BGS	Common Clamp 1 (SET)

-KF1.11

FESTO
CPX-M-AB-8-M12X2-5POL
549335

X1 M12: 24V 1 | DI 1 2 | 0V 3 | DI 0 4 | FE 5 — BN WH BU BK
X2 M12: 24V 1 | DI 3 2 | 0V 3 | DI 2 4 | FE 5 — BN WH BU BK
X3 M12: 24V 1 | DI 5 2 | 0V 3 | DI 4 4 | FE 5 — BN WH BU BK
X4 M12: 24V 1 | DI 7 2 | 0V 3 | DI 6 4 | FE 5 — BN WH BU BK
X5 M12: 24V 1 | DI 9 2 | 0V 3 | DI 8 4 | FE 5 — BN WH BU BK
X6 M12: 24V 1 | DI 11 2 | 0V 3 | DI 10 4 | FE 5 — BN WH BU BK
X7 M12: 24V 1 | DI 13 2 | 0V 3 | DI 12 4 | FE 5 — BN WH BU BK
X8 M12: 24V 1 | DI 15 2 | 0V 3 | DI 14 4 | FE 5 — BN WH BU BK

+.AR11UQ41UQ1.1-W1
=V1AR11UQ41UQ1+.AR11UQ41UQ1/1.1

+.AR11UQ41UQ2.1-W1
=V1AR11UQ41UQ2+.AR11UQ41UQ2/1.1

+.AR11UQ41UQ3.1-W1
=V1AR11UQ41UQ3+.AR11UQ41UQ3/1.1

+.AR11UQ41UQ3.2-W1
=V1AR11UQ41UQ3+.AR11UQ41UQ3/1.2

+.AR11UQ41UQ4.1-W1
=V1AR11UQ41UQ4+.AR11UQ41UQ4/1.1

+.AR11UQ41UQ4.2-W1
=V1AR11UQ41UQ4+.AR11UQ41UQ4/1.2

+.AR11UQ41UQ4.3-W1
=V1AR11UQ41UQ4+.AR11UQ41UQ4/1.4

+.AR11UQ41UQ4.4-W1
=V1AR11UQ41UQ4+.AR11UQ41UQ4/1.5

1 3

			Date	12/22/2022	Volvo Trucks North America	Valiant TMS	CONNECTING MOD. FOR MPA MANIFOLD	Drawing name: =2V04&EFS-EL	= V1AR11UQ41KF1	
			Ed.	MKLEPADLO					+ V1AR11UQ41	
			Appr		P6700 Underbody Mainline - Cell 2V04	Scale 1:1		Document type: EFS	Project nr: 22-16151	Page 2
Modification	Date	Name	Original		Replacement of	Replaced by				1630

0	1	2	3	4	5	6	7	8	9

-KF1.12

FESTO
CPX-M-AB-8-M12X2-5POL
549335

DI:16	DI 0 X1:4	V1AR11UQ41UQ5.1-BGR	Common Clamp 2 (RESET)
DI:17	DI 1 X1:2	V1AR11UQ41UQ5.1-BGS	Common Clamp 2 (SET)
DI:18	DI 2 X2:4	V1AR11UQ41UQ5.2-BGR	Common Clamp 2 (RESET)
DI:19	DI 3 X2:2	V1AR11UQ41UQ5.2-BGS	Common Clamp 2 (SET)
DI:20	DI 4 X3:4	V1AR11UQ41UQ5.3-BGR	Common Clamp 2 (RESET)
DI:21	DI 5 X3:2	V1AR11UQ41UQ5.3-BGS	Common Clamp 2 (SET)
DI:22	DI 6 X4:4	V1AR11UQ41UQ5.4-BGR	Common Clamp 2 (RESET)
DI:23	DI 7 X4:2	V1AR11UQ41UQ5.4-BGS	Common Clamp 2 (SET)
DI:24	DI 8 X5:4	V1AR11UQ41UQ6.1-BGR	Common Clamp 3 (RESET)
DI:25	DI 9 X5:2	V1AR11UQ41UQ6.1-BGS	Common Clamp 3 (SET)
DI:26	DI 10 X6:4	V1AR11UQ41UQ7.1-BGS	Common Vacuums (SET)
DI:27	DI 11 X6:2	DI:27	Spare
DI:28	DI 12 X7:4	V1AR11UQ41UQ8.1-BGR	Common Clamp 4 (RESET)
DI:29	DI 13 X7:2	V1AR11UQ41UQ8.1-BGS	Common Clamp 4 (SET)
DI:30	DI 14 X8:4	V1AR11UQ41UQ8.2-BGR	Common Clamp 4 (RESET)
DI:31	DI 15 X8:2	V1AR11UQ41UQ8.2-BGS	Common Clamp 4 (SET)

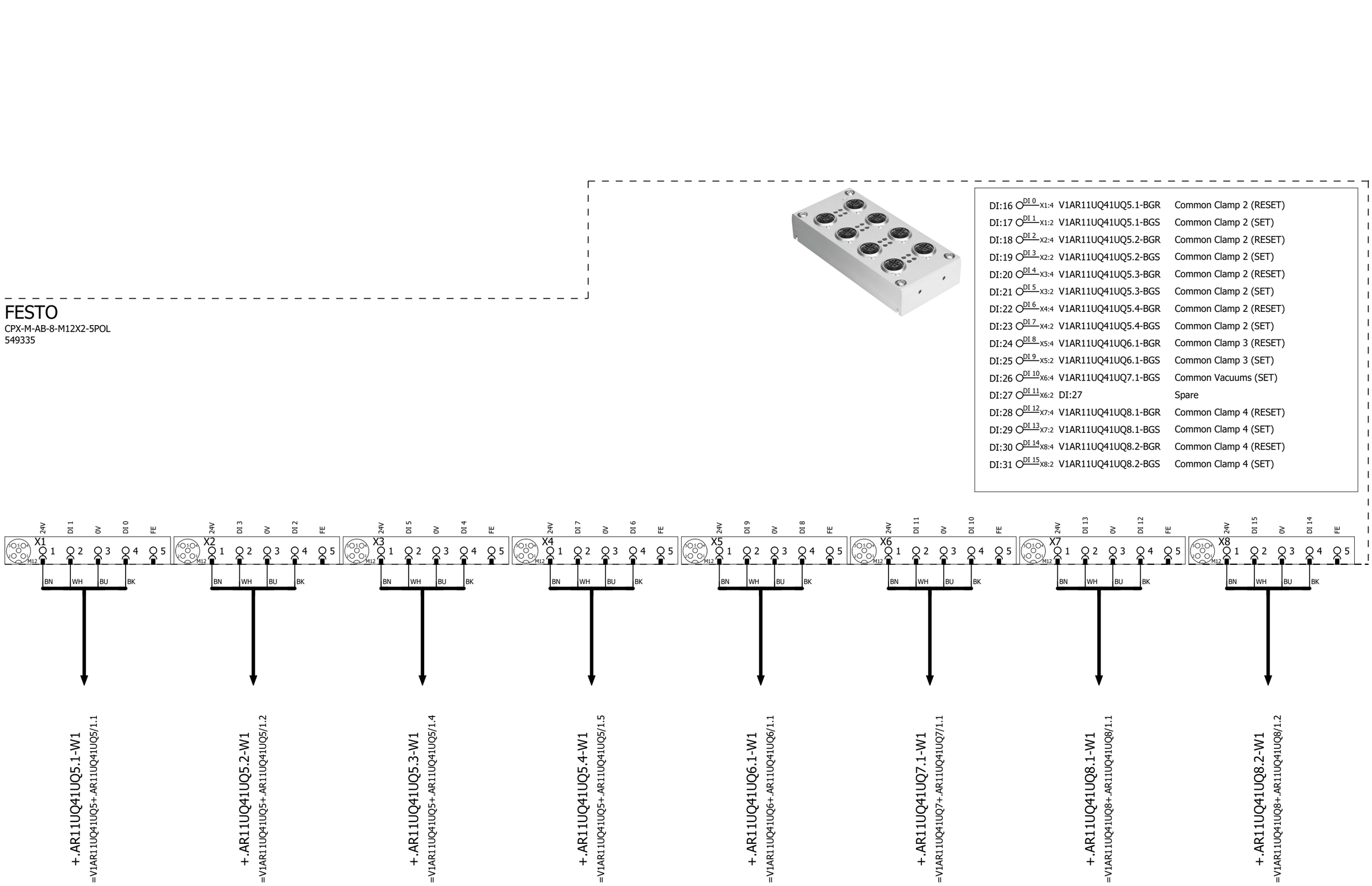

			Date	12/22/2022	Volvo Trucks North America	Valiant TMS	I/O MOD. DI16 (8 x M12) FOR MPA	Drawing name: =2V04&EFS-EL	= V1AR11UQ41KF1
			Ed.	MKLEPADLO					+ V1AR11UQ41
			Appr		P6700 Underbody Mainline - Cell 2V04	Scale 1:1		Document type: EFS	Project nr: 22-16151
Modification	Date	Name	Original		Replacement of	Replaced by			Page 3 / 1630

0	1	2	3	4	5	6	7	8	9

-KF1.13

FESTO
CPX-M-AB-8-M12X2-5POL
549335

DI:32	DI 0 X1:4	V1AR11UQ41UQ8.3-BGR	Common Clamp 4 (RESET)
DI:33	DI 1 X1:2	V1AR11UQ41UQ8.3-BGS	Common Clamp 4 (SET)
DI:34	DI 2 X2:4	V1AR11UQ41UQ8.4-BGR	Common Clamp 4 (RESET)
DI:35	DI 3 X2:2	V1AR11UQ41UQ8.4-BGS	Common Clamp 4 (SET)
DI:36	DI 4 X3:4	DI:36	Spare
DI:37	DI 5 X3:2	DI:37	Spare
DI:38	DI 6 X4:4	DI:38	Spare
DI:39	DI 7 X4:2	DI:39	Spare
DI:40	DI 8 X5:4	DI:40	Spare
DI:41	DI 9 X5:2	DI:41	Spare
DI:42	DI 10 X6:4	DI:42	Spare
DI:43	DI 11 X6:2	DI:43	Spare
DI:44	DI 12 X7:4	DI:44	Spare
DI:45	DI 13 X7:2	DI:45	Spare
DI:46	DI 14 X8:4	DI:46	Spare
DI:47	DI 15 X8:2	DI:47	Spare

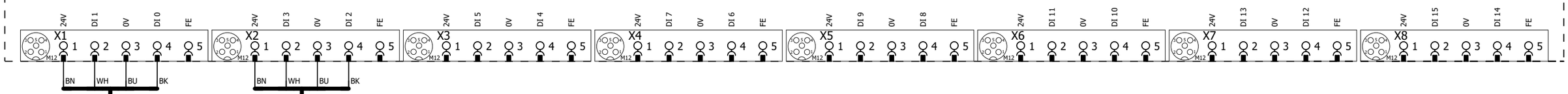

+.AR11UQ41UQ8.3-W1
=V1AR11UQ41UQ8+.AR11UQ41UQ8/1.4

+.AR11UQ41UQ8.4-W1
=V1AR11UQ41UQ8+.AR11UQ41UQ8/1.5

3 5

			Date	12/22/2022	Volvo Trucks North America		Valiant TMS	I/O MOD. DI16 (8 x M12) FOR MPA	Drawing name: =2V04&EFS-EL	= V1AR11UQ41KF1
			Ed.	MKLEPADLO						+ V1AR11UQ41
			Appr		P6700 Underbody Mainline - Cell 2V04				Document type: EFS	Project nr: 22-16151
Modification	Date	Name	Original		Replacement of	Replaced by	Scale 1:1			Page 4 / 1630

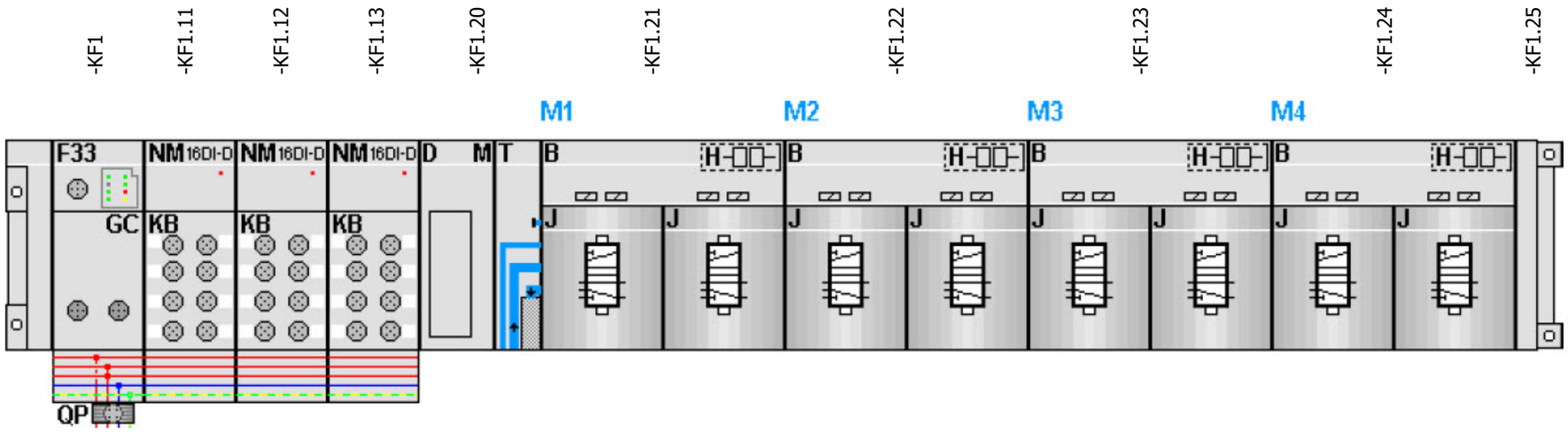

-KF1.21
=V1AR11UQ41UQ1+.AR11UQ41UQ1/1.3
=V1AR11UQ41UQ2+.AR11UQ41UQ2/1.3

FESTO

=V1AR11UQ41UQ1+.AR11UQ41UQ1/1.4	DO:0 DO 0 1.1	-QN1.1_Q	Common Shot Pin (RST)
=V1AR11UQ41UQ1+.AR11UQ41UQ1/1.4	DO:1 DO 1 1.2	-QN1.2_Q	Common Shot Pin (SET)
=V1AR11UQ41UQ2+.AR11UQ41UQ2/1.4	DO:2 DO 2 2.1	-QN2.1_Q	L150/230 Model Shot Pin (RST)
=V1AR11UQ41UQ2+.AR11UQ41UQ2/1.4	DO:3 DO 3 2.2	-QN2.2_Q	L150/230 Model Shot Pin (SET)

-KF1.22
=V1AR11UQ41UQ3+.AR11UQ41UQ3/1.3
=V1AR11UQ41UQ4+.AR11UQ41UQ4/1.3

FESTO

=V1AR11UQ41UQ3+.AR11UQ41UQ3/1.4	DO:4 DO 4 1.1	-QN3.1_Q	L150 Model Shot Pins (RST)
=V1AR11UQ41UQ3+.AR11UQ41UQ3/1.4	DO:5 DO 5 1.2	-QN3.2_Q	L150 Model Shot Pins (SET)
=V1AR11UQ41UQ4+.AR11UQ41UQ4/1.4	DO:6 DO 6 2.1	-QN4.1_Q	Common Clamps 1 (RST)
=V1AR11UQ41UQ4+.AR11UQ41UQ4/1.4	DO:7 DO 7 2.2	-QN4.2_Q	Common Clamps 1 (SET)

-KF1.23
=V1AR11UQ41UQ5+.AR11UQ41UQ5/1.3
=V1AR11UQ41UQ6+.AR11UQ41UQ6/1.3

FESTO

=V1AR11UQ41UQ5+.AR11UQ41UQ5/1.4	DO:8 DO 8 1.1	-QN5.1_Q	Common Clamps 2 (RST)
=V1AR11UQ41UQ5+.AR11UQ41UQ5/1.4	DO:9 DO 9 1.2	-QN5.2_Q	Common Clamps 2 (SET)
=V1AR11UQ41UQ6+.AR11UQ41UQ6/1.4	DO:10 DO 10 2.1	-QN6.1_Q	Common Clamp 3 (RST)
=V1AR11UQ41UQ6+.AR11UQ41UQ6/1.4	DO:11 DO 11 2.2	-QN6.2_Q	Common Clamp 3 (SET)

-KF1.24
=V1AR11UQ41UQ7+.AR11UQ41UQ7/1.3
=V1AR11UQ41UQ8+.AR11UQ41UQ8/1.3

FESTO

=V1AR11UQ41UQ7+.AR11UQ41UQ7/1.4	DO:12 DO 12 1.1	-QN7.1_Q	Common Vacuums (RST)
=V1AR11UQ41UQ7+.AR11UQ41UQ7/1.4	DO:13 DO 13 1.2	-QN7.2_Q	Common Vacuums (SET)
=V1AR11UQ41UQ8+.AR11UQ41UQ8/1.4	DO:14 DO 14 2.1	-QN8.1_Q	Common Clamps 4 (RST)
=V1AR11UQ41UQ8+.AR11UQ41UQ8/1.4	DO:15 DO 15 2.2	-QN8.2_Q	Common Clamps 4 (SET)

=V1AR11UQ41KF2/2

			Date	12/22/2022	Volvo Trucks North America	Valiant TMS	CONNECTING MOD. FOR FESTO DQ	Drawing name: =2V04&EFS-EL	= V1AR11UQ41KF1
			Ed.	MKLEPADLO					+ V1AR11UQ41
			Appr		P6700 Underbody Mainline - Cell 2V04	Scale 1:1		Document type: EFS	Project nr: 22-16151
Modification	Date	Name	Original		Replacement of	Replaced by			Page 5 / 1630

0	1	2	3	4	5	6	7	8	9

=V1AR11UQ41KF1/1.0 / -W2.1

-W1.1
RSM RKM 56-1M/S3059
1m

1 2 PE 3 4

X20 1 2 3 4 5
7/8"
0V_VAL / OUT
0V_EL / SEN
FE
24V_EL / SEN
24V_VAL / OUT

ON
OFF
1 2 1 2

=V1AR11UQ41KF1/2.4 / -KF1-P2

-WF2
PROFINET Cable
6XV1840-3AH10

KF2-P2 / =V1AR11UQ41KF3/2.3

M12 -TP1
M12 -TP2

-KF2

FESTO
Bus node + Interlinking block
548755 + 550208

-KF2.11

FESTO
CPX-M-AB-8-M12X2-5POL
549335

DI:48	DI 0 X1:4	V1AR11UQ41UQ9.1-BGR	L230/290/320 Model Clamp (RESET)
DI:49	DI 1 X1:2	V1AR11UQ41UQ9.1-BGS	L230/290/320 Model Clamp (SET)
DI:50	DI 2 X2:4	V1AR11UQ41UQ9.2-BGR	L230/290/320 Model Clamp (RESET)
DI:51	DI 3 X2:2	V1AR11UQ41UQ9.2-BGS	L230/290/320 Model Clamp (SET)
DI:52	DI 4 X3:4	V1AR11UQ41UQ10.1-BGR	L230/320 Model Clamp (RESET)
DI:53	DI 5 X3:2	V1AR11UQ41UQ10.1-BGS	L230/320 Model Clamp (SET)
DI:54	DI 6 X4:4	V1AR11UQ41UQ10.2-BGR	L230/320 Model Clamp (RESET)
DI:55	DI 7 X4:2	V1AR11UQ41UQ10.2-BGS	L230/320 Model Clamp (SET)
DI:56	DI 8 X5:4	V1AR11UQ41UQ11.1-BGR	L230 Model Clamp 1 (RESET)
DI:57	DI 9 X5:2	V1AR11UQ41UQ11.1-BGS	L230 Model Clamp 1 (SET)
DI:58	DI 10 X6:4	V1AR11UQ41UQ12.1-BGS	L230 Model Vacuums (SET)
DI:59	DI 11 X6:2	DI:59	Spare
DI:60	DI 12 X7:4	V1AR11UQ41UQ13.1-BGS	L230/290/320 Model Vacuum (SET)
DI:61	DI 13 X7:2	DI:61	Spare
DI:62	DI 14 X8:4	V1AR11UQ41UQ14.1-BGR	L230 Model Clamp 2 (RESET)
DI:63	DI 15 X8:2	V1AR11UQ41UQ14.1-BGS	L230 Model Clamp 2 (SET)

X1 M12: 24V DI 1 0V DI 0 FE — 1 2 3 4 5 — BN WH BU BK
X2 M12: 24V DI 3 0V DI 2 FE — 1 2 3 4 5 — BN WH BU BK
X3 M12: 24V DI 5 0V DI 4 FE — 1 2 3 4 5 — BN WH BU BK
X4 M12: 24V DI 7 0V DI 6 FE — 1 2 3 4 5 — BN WH BU BK
X5 M12: 24V DI 9 0V DI 8 FE — 1 2 3 4 5 — BN WH BU BK
X6 M12: 24V DI 11 0V DI 10 FE — 1 2 3 4 5 — BN WH BU BK
X7 M12: 24V DI 13 0V DI 12 FE — 1 2 3 4 5 — BN WH BU BK
X8 M12: 24V DI 15 0V DI 14 FE — 1 2 3 4 5 — BN WH BU BK

+.AR11UQ41UQ9.1-W1
=V1AR11UQ41UQ9+.AR11UQ41UQ9/1.1

+.AR11UQ41UQ9.2-W1
=V1AR11UQ41UQ9+.AR11UQ41UQ9/1.2

+.AR11UQ41UQ10.1-W1
=V1AR11UQ41UQ10+.AR11UQ41UQ10/1.1

+.AR11UQ41UQ10.2-W1
=V1AR11UQ41UQ10+.AR11UQ41UQ10/1.2

+.AR11UQ41UQ11.1-W1
=V1AR11UQ41UQ11+.AR11UQ41UQ11/1.1

+.AR11UQ41UQ12.1-W1
=V1AR11UQ41UQ12+.AR11UQ41UQ12/1.1

+.AR11UQ41UQ13.1-W1
=V1AR11UQ41UQ13+.AR11UQ41UQ13/1.1

+.AR11UQ41UQ14.1-W1
=V1AR11UQ41UQ14+.AR11UQ41UQ14/1.1

=V1AR11UQ41KF1/5

3

			Date	12/22/2022	Volvo Trucks North America	Valiant TMS	CONNECTING MOD. FOR MPA MANIFOLD	Drawing name: =2V04&EFS-EL	= V1AR11UQ41KF2	
			Ed.	MKLEPADLO					+ V1AR11UQ41	
			Appr		P6700 Underbody Mainline - Cell 2V04			Document type: EFS	Project nr: 22-16151	Page 2
Modification	Date	Name	Original		Replacement of	Replaced by	Scale 1:1			1630

0	1	2	3	4	5	6	7	8	9

-KF2.12

FESTO

CPX-M-AB-8-M12X2-5POL

549335

DI:64	DI 0 X1:4	V1AR11UQ41UQ14.2-BGR	L230 Model Clamp 2 (RESET)
DI:65	DI 1 X1:2	V1AR11UQ41UQ14.2-BGS	L230 Model Clamp 2 (SET)
DI:66	DI 2 X2:4	V1AR11UQ41UQ15.1-BGR	L290 Model Clamp 1 (RESET)
DI:67	DI 3 X2:2	V1AR11UQ41UQ15.1-BGS	L290 Model Clamp 1 (SET)
DI:68	DI 4 X3:4	V1AR11UQ41UQ15.2-BGR	L290 Model Clamp 1 (RESET)
DI:69	DI 5 X3:2	V1AR11UQ41UQ15.2-BGS	L290 Model Clamp 1 (SET)
DI:70	DI 6 X4:4	V1AR11UQ41UQ16.1-BGR	L230/320 Model Clamp (RESET)
DI:71	DI 7 X4:2	V1AR11UQ41UQ16.1-BGS	L230/320 Model Clamp (SET)
DI:72	DI 8 X5:4	V1AR11UQ41UQ16.2-BGR	L230/320 Model Clamp (RESET)
DI:73	DI 9 X5:2	V1AR11UQ41UQ16.2-BGS	L230/320 Model Clamp (SET)
DI:74	DI 10 X6:4	DI:74	Spare
DI:75	DI 11 X6:2	DI:75	Spare
DI:76	DI 12 X7:4	DI:76	Spare
DI:77	DI 13 X7:2	DI:77	Spare
DI:78	DI 14 X8:4	DI:78	Spare
DI:79	DI 15 X8:2	DI:79	Spare

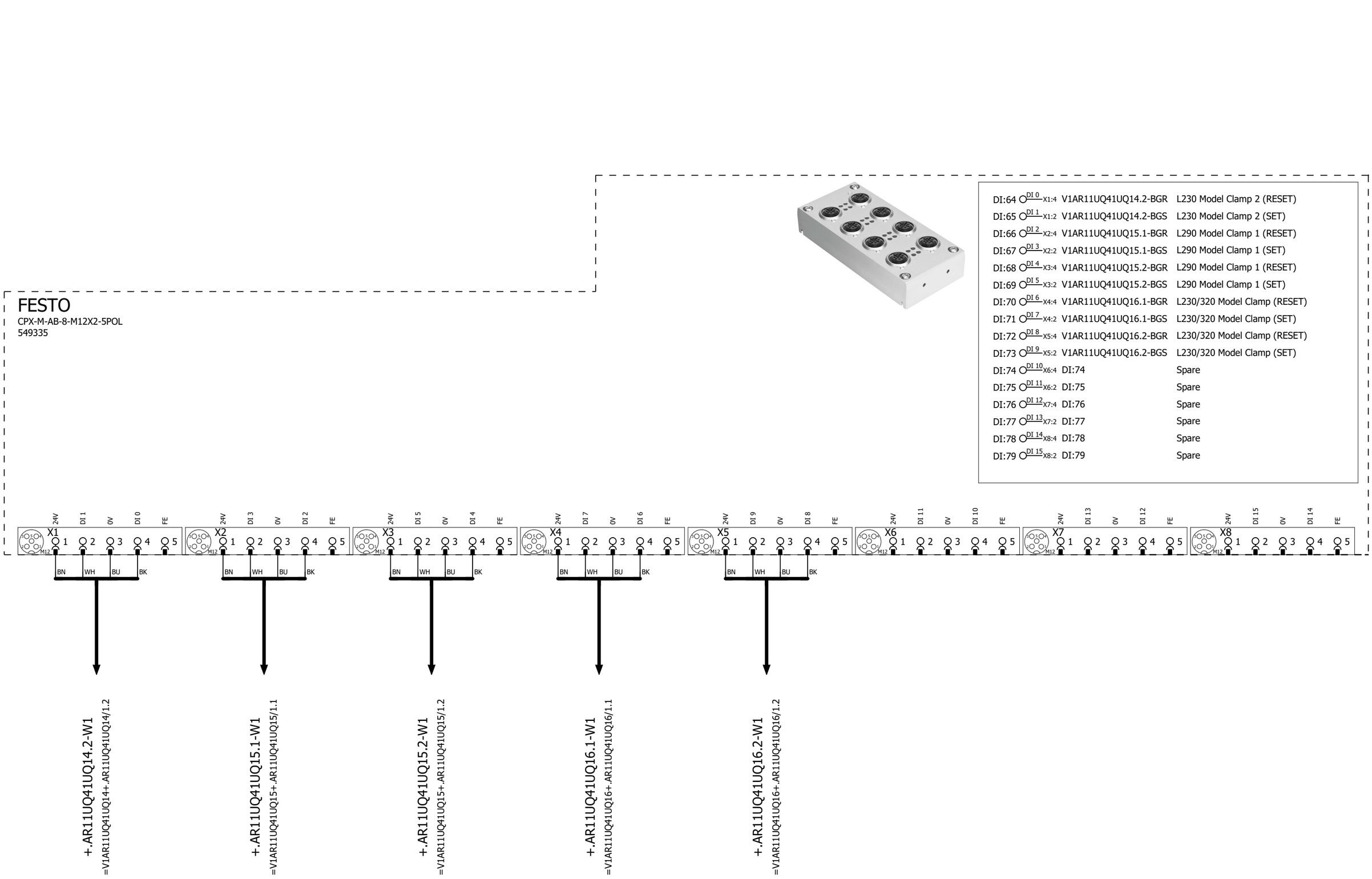

2 4

			Date	12/22/2022	Volvo Trucks North America	Valiant TMS	I/O MOD. DI16 (8 x M12) FOR MPA	Drawing name: =2V04&EFS-EL	= V1AR11UQ41KF2
			Ed.	MKLEPADLO					+ V1AR11UQ41
			Appr		P6700 Underbody Mainline - Cell 2V04			Document type: EFS	Project nr: 22-16151
Modification	Date	Name	Original		Replacement of	Replaced by	Scale 1:1		Page 3 / 1630

0	1	2	3	4	5	6	7	8	9

-KF2.13

FESTO
CPX-M-AB-8-M12X2-5POL
549335

DI:80	DI 0 X1:4	V1AR11UQ41-BG01	Sensor Floor Frame Assy (Common)
DI:81	DI 1 X1:2	V1AR11UQ41-BG03	Sensor Floor Frame Assy (Common)
DI:82	DI 2 X2:4	DI:82	Spare
DI:83	DI 3 X2:2	DI:83	Spare
DI:84	DI 4 X3:4	DI:84	Spare
DI:85	DI 5 X3:2	DI:85	Spare
DI:86	DI 6 X4:4	DI:86	Spare
DI:87	DI 7 X4:2	DI:87	Spare
DI:88	DI 8 X5:4	DI:88	Spare
DI:89	DI 9 X5:2	DI:89	Spare
DI:90	DI 10 X6:4	DI:90	Spare
DI:91	DI 11 X6:2	DI:91	Spare
DI:92	DI 12 X7:4	DI:92	Spare
DI:93	DI 13 X7:2	DI:93	Spare
DI:94	DI 14 X8:4	DI:94	Spare
DI:95	DI 15 X8:2	DI:95	Spare

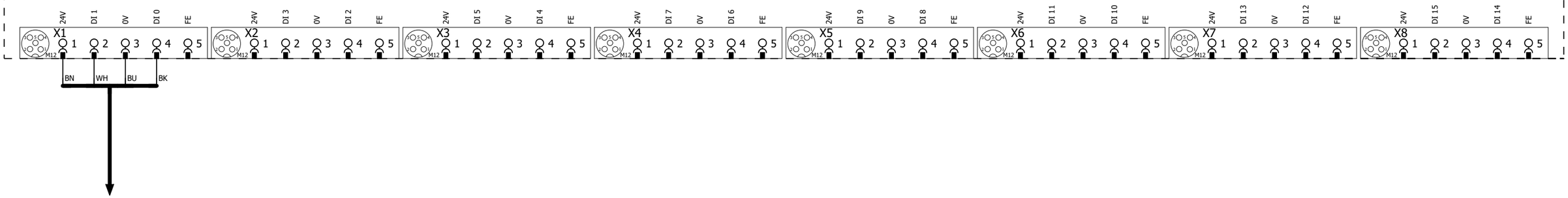

-XG1/3
=V1AR11UQ41BG0/1.1

3 5

			Date	12/22/2022	Volvo Trucks North America	Valiant TMS	I/O MOD. DI16 (8 x M12) FOR MPA	Drawing name: =2V04&EFS-EL	= V1AR11UQ41KF2
			Ed.	MKLEPADLO					+ V1AR11UQ41
			Appr		P6700 Underbody Mainline - Cell 2V04			Document type: EFS	Project nr: 22-16151
Modification	Date	Name	Original		Replacement of / Replaced by	Scale 1:1			Page 4 / 1630

0	1	2	3	4	5	6	7	8	9

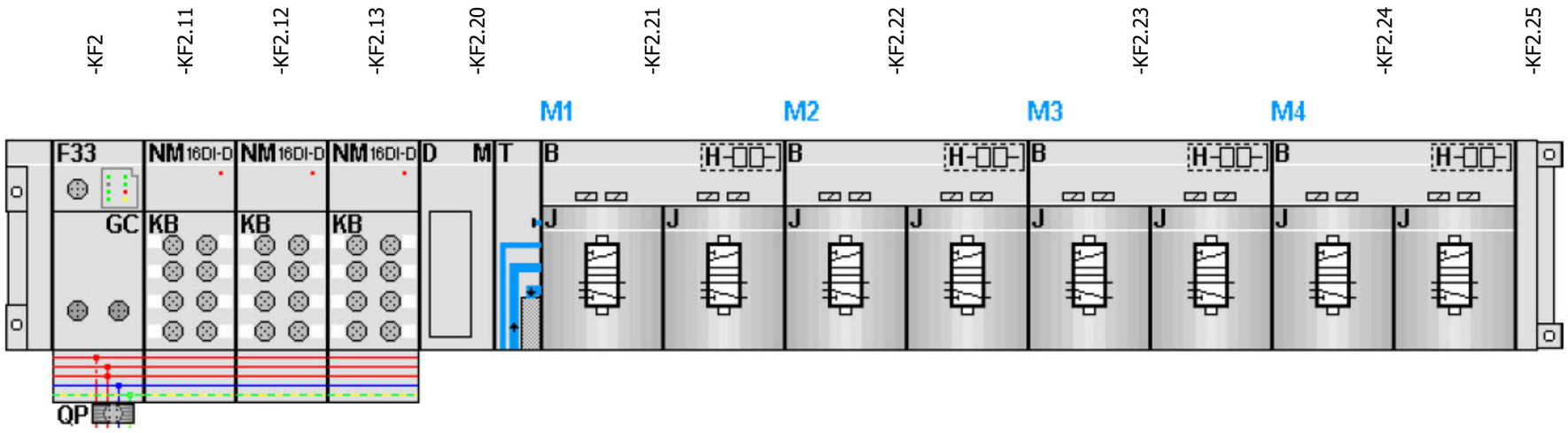

-KF2.21

=V1AR11UQ41UQ9+.AR11UQ41UQ9/1.3
=V1AR11UQ41UQ10+.AR11UQ41UQ10/1.3

FESTO

=V1AR11UQ41UQ9+.AR11UQ41UQ9/1.4	DO:16 DO 16 1.1	-QN9.1_Q	L230/290/320 Model Clamps (RST)
=V1AR11UQ41UQ9+.AR11UQ41UQ9/1.4	DO:17 DO 17 1.2	-QN9.2_Q	L230/290/320 Model Clamps (SET)
=V1AR11UQ41UQ10+.AR11UQ41UQ10/1.4	DO:18 DO 18 2.1	-QN10.1_Q	L230/320 Model Clamps (RST)
=V1AR11UQ41UQ10+.AR11UQ41UQ10/1.4	DO:19 DO 19 2.2	-QN10.2_Q	L230/320 Model Clamps (SET)

-KF2.22

=V1AR11UQ41UQ11+.AR11UQ41UQ11/1.3
=V1AR11UQ41UQ12+.AR11UQ41UQ12/1.3

FESTO

=V1AR11UQ41UQ11+.AR11UQ41UQ11/1.4	DO:20 DO 20 1.1	-QN11.1_Q	L230 Model Clamps 1 (RST)
=V1AR11UQ41UQ11+.AR11UQ41UQ11/1.4	DO:21 DO 21 1.2	-QN11.2_Q	L230 Model Clamps 1 (SET)
=V1AR11UQ41UQ12+.AR11UQ41UQ12/1.4	DO:22 DO 22 2.1	-QN12.1_Q	L230 Model Vacuums (RST)
=V1AR11UQ41UQ12+.AR11UQ41UQ12/1.4	DO:23 DO 23 2.2	-QN12.2_Q	L230 Model Vacuums (SET)

-KF2.23

=V1AR11UQ41UQ13+.AR11UQ41UQ13/1.3
=V1AR11UQ41UQ14+.AR11UQ41UQ14/1.3

FESTO

=V1AR11UQ41UQ13+.AR11UQ41UQ13/1.4	DO:24 DO 24 1.1	-QN13.1_Q	L230/290/320 Model Vacuum (RST)
=V1AR11UQ41UQ13+.AR11UQ41UQ13/1.4	DO:25 DO 25 1.2	-QN13.2_Q	L230/290/320 Model Vacuum (SET)
=V1AR11UQ41UQ14+.AR11UQ41UQ14/1.4	DO:26 DO 26 2.1	-QN14.1_Q	L230 Model Clamps 2 (RST)
=V1AR11UQ41UQ14+.AR11UQ41UQ14/1.4	DO:27 DO 27 2.2	-QN14.2_Q	L230 Model Clamps 2 (SET)

-KF2.24

=V1AR11UQ41UQ15+.AR11UQ41UQ15/1.3
=V1AR11UQ41UQ16+.AR11UQ41UQ16/1.3

FESTO

=V1AR11UQ41UQ15+.AR11UQ41UQ15/1.4	DO:28 DO 28 1.1	-QN15.1_Q	L290 Model Clamps 1 (RST)
=V1AR11UQ41UQ15+.AR11UQ41UQ15/1.4	DO:29 DO 29 1.2	-QN15.2_Q	L290 Model Clamps 1 (SET)
=V1AR11UQ41UQ16+.AR11UQ41UQ16/1.4	DO:30 DO 30 2.1	-QN16.1_Q	L290/320 Model Clamps (RST)
=V1AR11UQ41UQ16+.AR11UQ41UQ16/1.4	DO:31 DO 31 2.2	-QN16.2_Q	L290/320 Model Clamps (SET)

			Date	12/22/2022	Volvo Trucks North America	Valiant TMS	CONNECTING MOD. FOR FESTO DQ	Drawing name: =2V04&EFS-EL	= V1AR11UQ41KF2
			Ed.	MKLEPADLO					+ V1AR11UQ41
			Appr		P6700 Underbody Mainline - Cell 2V04	Scale 1:1		Document type: EFS	Project nr: 22-16151 / Page 5 / 1630
Modification	Date	Name	Original		Replacement of	Replaced by			

0	1	2	3	4	5	6	7	8	9

=V1AR11UQ41KF1/1.2 / -W2.2

-W2.2
RSM RKM 56-1M/S3059
1m

=V1AR11UQ41KF2/2.4 / -KF2-P2

-WF3
PROFINET Cable
6XV1840-3AH10

-KF3

X20 7/8" 1 2 PE 3 4 5
0V_VAL / OUT
0V_EL / SEN
FE
24V_EL / SEN
24V_VAL / OUT

ON
OFF
1 2 1 2

M12 -TP1
M12 -TP2

FESTO
Bus node + Interlinking block
548755 + 550208

DI:96	DI 0 X1:4	V1AR11UQ41UQ17.1-BGR	L290 Model Clamp 2 (RESET)
DI:97	DI 1 X1:2	V1AR11UQ41UQ17.1-BGS	L290 Model Clamp 2 (SET)
DI:98	DI 2 X2:4	V1AR11UQ41UQ18.1-BGS	L290 Model Vacuums (SET)
DI:99	DI 3 X2:2	DI:99	Spare
DI:100	DI 4 X3:4	V1AR11UQ41UQ19.1-BGS	L290/320 Model Vacuums (SET)
DI:101	DI 5 X3:2	DI:101	Spare
DI:102	DI 6 X4:4	V1AR11UQ41UQ20.1-BGR	L290 Model Clamp 3 (RESET)
DI:103	DI 7 X4:2	V1AR11UQ41UQ20.1-BGS	L290 Model Clamp 3 (SET)
DI:104	DI 8 X5:4	V1AR11UQ41UQ20.2-BGR	L290 Model Clamp 3 (RESET)
DI:105	DI 9 X5:2	V1AR11UQ41UQ20.2-BGS	L290 Model Clamp 3 (SET)
DI:106	DI 10 X6:4	V1AR11UQ41UQ21.1-BGR	L320 Model Clamp 1 (RESET)
DI:107	DI 11 X6:2	V1AR11UQ41UQ21.1-BGS	L320 Model Clamp 1 (SET)
DI:108	DI 12 X7:4	V1AR11UQ41UQ21.2-BGR	L320 Model Clamp 1 (RESET)
DI:109	DI 13 X7:2	V1AR11UQ41UQ21.2-BGS	L320 Model Clamp 1 (SET)
DI:110	DI 14 X8:4	V1AR11UQ41UQ22.1-BGR	L320 Model Clamp 2 (RESET)
DI:111	DI 15 X8:2	V1AR11UQ41UQ22.1-BGS	L320 Model Clamp 2 (SET)

-KF3.11

FESTO
CPX-M-AB-8-M12X2-5POL
549335

X1 X2 X3 X4 X5 X6 X7 X8
M12 connectors, pins 1 2 3 4 5
24V | DI 1 | 0V | DI 0 | FE
24V | DI 3 | 0V | DI 2 | FE
24V | DI 5 | 0V | DI 4 | FE
24V | DI 7 | 0V | DI 6 | FE
24V | DI 9 | 0V | DI 8 | FE
24V | DI 11 | 0V | DI 10 | FE
24V | DI 13 | 0V | DI 12 | FE
24V | DI 15 | 0V | DI 14 | FE
BN WH BU BK

+.AR11UQ41UQ17.1-W1
=V1AR11UQ41UQ17+.AR11UQ41UQ17/1.1

+.AR11UQ41UQ18.1-W1
=V1AR11UQ41UQ18+.AR11UQ41UQ18/1.1

+.AR11UQ41UQ19.1-W1
=V1AR11UQ41UQ19+.AR11UQ41UQ19/1.1

+.AR11UQ41UQ20.1-W1
=V1AR11UQ41UQ20+.AR11UQ41UQ20/1.1

+.AR11UQ41UQ20.2-W1
=V1AR11UQ41UQ20+.AR11UQ41UQ20/1.2

+.AR11UQ41UQ21.1-W1
=V1AR11UQ41UQ21+.AR11UQ41UQ21/1.1

+.AR11UQ41UQ21.2-W1
=V1AR11UQ41UQ21+.AR11UQ41UQ21/1.2

+.AR11UQ41UQ22.1-W1
=V1AR11UQ41UQ22+.AR11UQ41UQ22/1.1

=V1AR11UQ41KF2/5

			Date	12/22/2022	Volvo Trucks North America	Valiant TMS	CONNECTING MOD. FOR MPA MANIFOLD	Drawing name: =2V04&EFS-EL	= V1AR11UQ41KF3
			Ed.	MKLEPADLO					+ V1AR11UQ41
			Appr		P6700 Underbody Mainline - Cell 2V04	Scale 1:1		Document type: EFS	Project nr: 22-16151
Modification	Date	Name	Original		Replacement of	Replaced by			Page 2 / 1630

0	1	2	3	4	5	6	7	8	9

-KF3.12

FESTO

CPX-M-AB-8-M12X2-5POL

549335

DI:112	DI 0 X1:4	V1AR11UQ41UQ23.1-BGS	L320 Model Vacuums (SET)
DI:113	DI 1 X1:2	DI:113	Spare
DI:114	DI 2 X2:4	V1AR11UQ41UQ24.1-BGR	L320 Model Clamp 3 (RESET)
DI:115	DI 3 X2:2	V1AR11UQ41UQ24.1-BGS	L320 Model Clamp 3 (SET)
DI:116	DI 4 X3:4	V1AR11UQ41UQ24.2-BGR	L320 Model Clamp 3 (RESET)
DI:117	DI 5 X3:2	V1AR11UQ41UQ24.2-BGS	L320 Model Clamp 3 (SET)
DI:118	DI 6 X4:4	DI:118	Spare
DI:119	DI 7 X4:2	DI:119	Spare
DI:120	DI 8 X5:4	DI:120	Spare
DI:121	DI 9 X5:2	DI:121	Spare
DI:122	DI 10 X6:4	DI:122	Spare
DI:123	DI 11 X6:2	DI:123	Spare
DI:124	DI 12 X7:4	DI:124	Spare
DI:125	DI 13 X7:2	DI:125	Spare
DI:126	DI 14 X8:4	DI:126	Spare
DI:127	DI 15 X8:2	DI:127	Spare

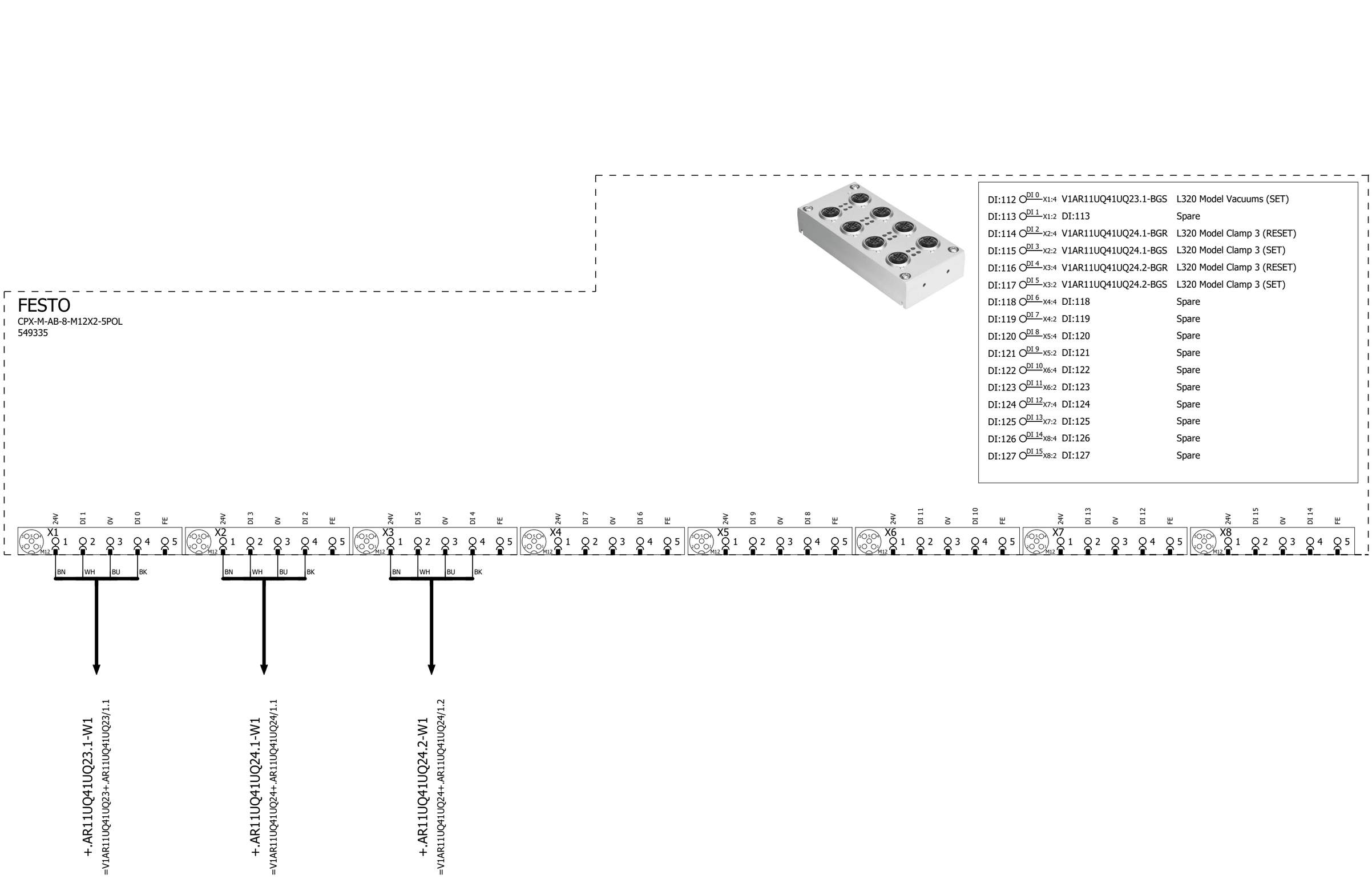

2 4

			Date	12/22/2022	Volvo Trucks North America	Valiant TMS	I/O MOD. DI16 (8 x M12) FOR MPA	Drawing name: =2V04&EFS-EL	= V1AR11UQ41KF3
			Ed.	MKLEPADLO					+ V1AR11UQ41
			Appr		P6700 Underbody Mainline - Cell 2V04	Scale 1:1		Document type: EFS	Project nr: 22-16151
Modification	Date	Name	Original		Replacement of	Replaced by			Page 3 / 1630

0	1	2	3	4	5	6	7	8	9

-KF3.13

FESTO
CPX-M-AB-8-M12X2-5POL
549335

DI:128	DI 0 X1:4	V1AR11UQ41-BG02	Sensor Floor Frame Assy (Common)
DI:129	DI 1 X1:2	V1AR11UQ41-BG04	Sensor Floor Frame Assy (Common)
DI:130	DI 2 X2:4	DI:130	Spare
DI:131	DI 3 X2:2	DI:131	Spare
DI:132	DI 4 X3:4	DI:132	Spare
DI:133	DI 5 X3:2	DI:133	Spare
DI:134	DI 6 X4:4	DI:134	Spare
DI:135	DI 7 X4:2	DI:135	Spare
DI:136	DI 8 X5:4	DI:136	Spare
DI:137	DI 9 X5:2	DI:137	Spare
DI:138	DI 10 X6:4	DI:138	Spare
DI:139	DI 11 X6:2	DI:139	Spare
DI:140	DI 12 X7:4	DI:140	Spare
DI:141	DI 13 X7:2	DI:141	Spare
DI:142	DI 14 X8:4	DI:142	Spare
DI:143	DI 15 X8:2	DI:143	Spare

-XG2/4
=V1AR11UQ41BG0/1.4

3 5

			Date	12/22/2022	Volvo Trucks North America		Valiant TMS	I/O MOD. DI16 (8 x M12) FOR MPA	Drawing name: =2V04&EFS-EL	= V1AR11UQ41KF3
			Ed.	MKLEPADLO						+ V1AR11UQ41
			Appr		P6700 Underbody Mainline - Cell 2V04				Document type: EFS	Project nr: 22-16151
Modification	Date	Name	Original		Replacement of	Replaced by	Scale 1:1			Page 4 / 1630

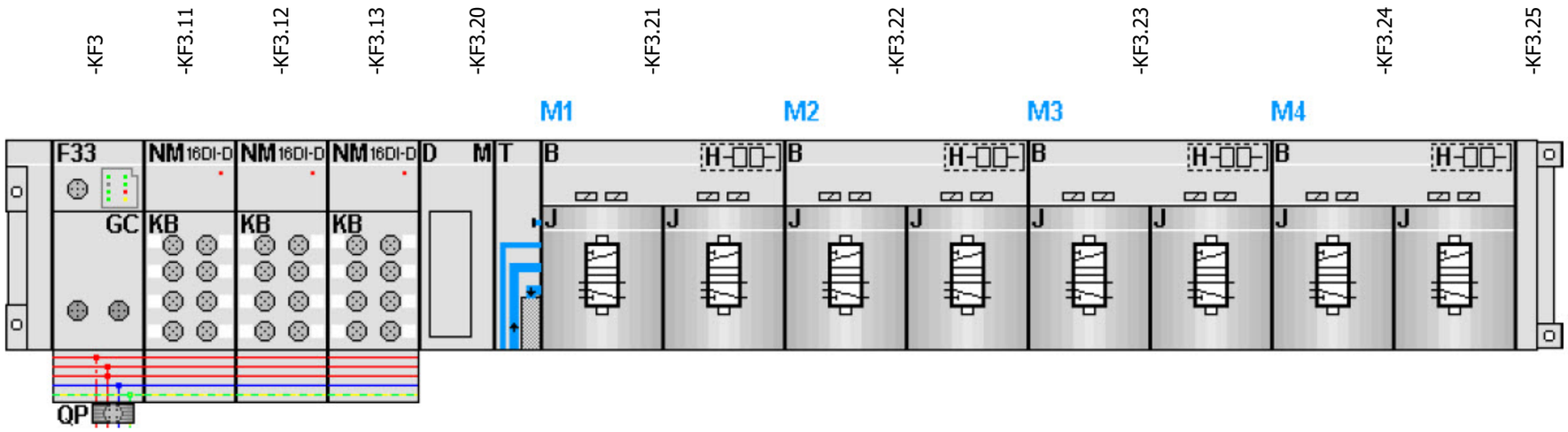

-KF3.21
=V1AR11UQ41UQ17+.AR11UQ41UQ17/1.3
=V1AR11UQ41UQ18+.AR11UQ41UQ18/1.3

FESTO

=V1AR11UQ41UQ17+.AR11UQ41UQ17/1.4	DO:32 DO 32 1.1	-QN17.1_Q	L290 Model Clamp 2 (RST)
=V1AR11UQ41UQ17+.AR11UQ41UQ17/1.4	DO:33 DO 33 1.2	-QN17.2_Q	L290 Model Clamp 2 (SET)
=V1AR11UQ41UQ18+.AR11UQ41UQ18/1.4	DO:34 DO 34 2.1	-QN18.1_Q	L290 Model Vacuums (RST)
=V1AR11UQ41UQ18+.AR11UQ41UQ18/1.4	DO:35 DO 35 2.2	-QN18.2_Q	L290 Model Vacuums (SET)

-KF3.22
=V1AR11UQ41UQ19+.AR11UQ41UQ19/1.3
=V1AR11UQ41UQ20+.AR11UQ41UQ20/1.3

FESTO

=V1AR11UQ41UQ19+.AR11UQ41UQ19/1.4	DO:36 DO 36 1.1	-QN19.1_Q	L290/320 Model Vacuums (RST)
=V1AR11UQ41UQ19+.AR11UQ41UQ19/1.4	DO:37 DO 37 1.2	-QN19.2_Q	L290/320 Model Vacuums (SET)
=V1AR11UQ41UQ20+.AR11UQ41UQ20/1.4	DO:38 DO 38 2.1	-QN20.1_Q	L290 Model Clamps 3 (RST)
=V1AR11UQ41UQ20+.AR11UQ41UQ20/1.4	DO:39 DO 39 2.2	-QN20.2_Q	L290 Model Clamps 3 (SET)

-KF3.23
=V1AR11UQ41UQ21+.AR11UQ41UQ21/1.3
=V1AR11UQ41UQ22+.AR11UQ41UQ22/1.3

FESTO

=V1AR11UQ41UQ21+.AR11UQ41UQ21/1.4	DO:40 DO 40 1.1	-QN21.1_Q	L320 Model Clamps 1 (RST)
=V1AR11UQ41UQ21+.AR11UQ41UQ21/1.4	DO:41 DO 41 1.2	-QN21.2_Q	L320 Model Clamps 1 (SET)
=V1AR11UQ41UQ22+.AR11UQ41UQ22/1.4	DO:42 DO 42 2.1	-QN22.1_Q	L320 Model Clamp 2 (RST)
=V1AR11UQ41UQ22+.AR11UQ41UQ22/1.4	DO:43 DO 43 2.2	-QN22.2_Q	L320 Model Clamp 2 (SET)

-KF3.24
=V1AR11UQ41UQ23+.AR11UQ41UQ23/1.3
=V1AR11UQ41UQ24+.AR11UQ41UQ24/1.3

FESTO

=V1AR11UQ41UQ23+.AR11UQ41UQ23/1.4	DO:44 DO 44 1.1	-QN23.1_Q	L320 Model Vacuums (RST)
=V1AR11UQ41UQ23+.AR11UQ41UQ23/1.4	DO:45 DO 45 1.2	-QN23.2_Q	L320 Model Vacuums (SET)
=V1AR11UQ41UQ24+.AR11UQ41UQ24/1.4	DO:46 DO 46 2.1	-QN24.1_Q	L320 Model Clamps 3 (RST)
=V1AR11UQ41UQ24+.AR11UQ41UQ24/1.4	DO:47 DO 47 2.2	-QN24.2_Q	L320 Model Clamps 3 (SET)

=V1AR11UQ41UQ1+.AR11UQ41UQ1/1

			Date	12/22/2022	Volvo Trucks North America	Valiant TMS	CONNECTING MOD. FOR FESTO DQ	Drawing name: =2V04&EFS-EL	= V1AR11UQ41KF3
			Ed.	MKLEPADLO					+ V1AR11UQ41
			Appr		P6700 Underbody Mainline - Cell 2V04			Document type: EFS	Project nr: 22-16151
Modification	Date	Name	Original		Replacement of	Replaced by	Scale 1:1		Page 5 / 1630

0	1	2	3	4	5	6	7	8	9

=V1AR11UQ41KF1
+.AR11UQ41

-KF1.21
=V1AR11UQ41KF1+V1AR11UQ41/5.1

Common Shot Pin (RST)
=V1AR11UQ41KF1
+V1AR11UQ41
-QN1.1_Q
=V1AR11UQ41KF1
+V1AR11UQ41/5.3
DO:0

Common Shot Pin (SET)
=V1AR11UQ41KF1
+V1AR11UQ41
-QN1.2_Q
=V1AR11UQ41KF1
+V1AR11UQ41/5.3
DO:1

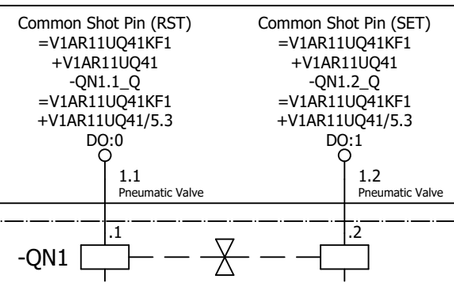

=V1AR11UQ41KF1+V1AR11UQ41/2.1
+.AR11UQ41UQ1.1-W1

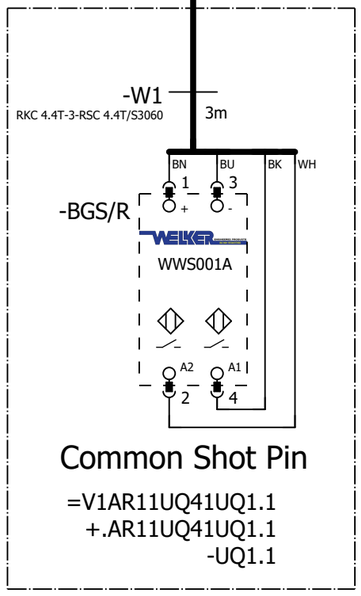

Common Shot Pin

=V1AR11UQ41UQ1.1
+.AR11UQ41UQ1.1
-UQ1.1

=V1AR11UQ41
-UQ1.1-BGS/R
Common
Shot Pin

=V1AR11UQ41KF3+V1AR11UQ41/5

=V1AR11UQ41UQ2+.AR11UQ41UQ2/1

			Date	12/22/2022	Volvo Trucks North America	Valiant TMS	FESTO DQ CONNECTION QN1	Drawing name: =2V04&EFS-EL	= V1AR11UQ41UQ1
			Ed.	MKLEPADLO					+ V1AR11UQ41UQ1
			Appr		P6700 Underbody Mainline - Cell 2V04			Document type: EFS	Project nr: 22-16151
Modification	Date	Name	Original		Replacement of	Replaced by	Scale 1:1		Page 1 / 1630

0	1	2	3	4	5	6	7	8	9

=V1AR11UQ41KF1
+.AR11UQ41

-KF1.21
=V1AR11UQ41KF1+V1AR11UQ41/5.1

L150/230 Model Shot Pin (RST)
=V1AR11UQ41KF1
+V1AR11UQ41
-QN2.1_Q
=V1AR11UQ41KF1
+V1AR11UQ41/5.3
DO:2

L150/230 Model Shot Pin (SET)
=V1AR11UQ41KF1
+V1AR11UQ41
-QN2.2_Q
=V1AR11UQ41KF1
+V1AR11UQ41/5.3
DO:3

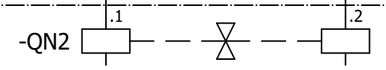

=V1AR11UQ41KF1+V1AR11UQ41/2.2
+.AR11UQ41UQ2.1-W1

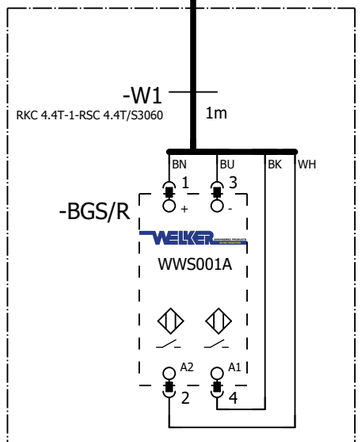

L150/230 Model Shot Pin

=V1AR11UQ41UQ2.1
+.AR11UQ41UQ2.1
-UQ2.1

=V1AR11UQ41
-UQ2.1-BGS/R
L150/230 Model
Shot Pin

=V1AR11UQ41UQ1+.AR11UQ41UQ1/1

=V1AR11UQ41UQ3+.AR11UQ41UQ3/1

			Date	12/22/2022	Volvo Trucks North America	Valiant TMS	FESTO DQ CONNECTION QN2	Drawing name: =2V04&EFS-EL	= V1AR11UQ41UQ2
			Ed.	MKLEPADLO					+ V1AR11UQ41UQ2
			Appr		P6700 Underbody Mainline - Cell 2V04			Document type: EFS	Project nr: 22-16151
Modification	Date	Name	Original		Replacement of	Replaced by	Scale 1:1		Page 1 / 1630

0	1	2	3	4	5	6	7	8	9

=V1AR11UQ41KF1
+.AR11UQ41

-KF1.22
=V1AR11UQ41KF1+V1AR11UQ41/5.1

L150 Model Shot Pins (RST)
=V1AR11UQ41KF1
+V1AR11UQ41
-QN3.1_Q
=V1AR11UQ41KF1
+V1AR11UQ41/5.3
DO:4

L150 Model Shot Pins (SET)
=V1AR11UQ41KF1
+V1AR11UQ41
-QN3.2_Q
=V1AR11UQ41KF1
+V1AR11UQ41/5.3
DO:5

1.1 Pneumatic Valve

1.2 Pneumatic Valve

-QN3 .1 .2

=V1AR11UQ41KF1+V1AR11UQ41/2.3
+.AR11UQ41UQ3.1-W1

-W1
RKC 4.4T-2-RSC 4.4T/S3060
2m

BN BU BK WH
1 3
+ -
-BGS/R
WELKER
WWS001A
A2 A1
2 4

L150 Model Shot Pin
=V1AR11UQ41UQ3.1
+.AR11UQ41UQ3.1
-UQ3.1

=V1AR11UQ41
-UQ3.1-BGS/R
L150 Model
Shot Pin

=V1AR11UQ41KF1+V1AR11UQ41/2.4
+.AR11UQ41UQ3.2-W1

-W1
RKC 4.4T-2-RSC 4.4T/S3060
2m

BN BU BK WH
1 3
+ -
-BGS/R
WELKER
WWS001A
A2 A1
2 4

L150 Model Shot Pin
=V1AR11UQ41UQ3.2
+.AR11UQ41UQ3.2
-UQ3.2

=V1AR11UQ41
-UQ3.2-BGS/R
L150 Model
Shot Pin

=V1AR11UQ41UQ2+.AR11UQ41UQ2/1

=V1AR11UQ41UQ4+.AR11UQ41UQ4/1

			Date	12/22/2022	Volvo Trucks North America	Valiant TMS	FESTO DQ CONNECTION QN3	Drawing name: =2V04&EFS-EL	= V1AR11UQ41UQ3
			Ed.	MKLEPADLO					+ V1AR11UQ41UQ3
			Appr		P6700 Underbody Mainline - Cell 2V04			Document type: EFS	Project nr: 22-16151
Modification	Date	Name	Original		Replacement of	Replaced by	Scale 1:1		Page 1 / 1630

0	1	2	3	4	5	6	7	8	9

=V1AR11UQ41KF1
+.AR11UQ41

-KF1.22
=V1AR11UQ41KF1+V1AR11UQ41/5.1

Common Clamps 1 (RST)
=V1AR11UQ41KF1
+V1AR11UQ41
-QN4.1_Q
=V1AR11UQ41KF1
+V1AR11UQ41/5.3
DO:6

Common Clamps 1 (SET)
=V1AR11UQ41KF1
+V1AR11UQ41
-QN4.2_Q
=V1AR11UQ41KF1
+V1AR11UQ41/5.3
DO:7

2.1 Pneumatic Valve
2.2 Pneumatic Valve

-QN4 .1 .2

=V1AR11UQ41KF1+V1AR11UQ41/2.5
+.AR11UQ41UQ4.1-W1

=V1AR11UQ41KF1+V1AR11UQ41/2.6
+.AR11UQ41UQ4.2-W1

=V1AR11UQ41KF1+V1AR11UQ41/2.8
+.AR11UQ41UQ4.3-W1

=V1AR11UQ41KF1+V1AR11UQ41/2.9
+.AR11UQ41UQ4.4-W1

-W1 RKC 4.4T-3-RSC 4.4T/S3060 3m
-BGS/R
BN BU BK WH
1 3
TÜNKERS
1324633
A2 A1
2 4

Common Clamp 1
=V1AR11UQ41UQ4.1
+.AR11UQ41UQ4.1
-UQ4.1

-W1 RKC 4.4T-3-RSC 4.4T/S3060 3m
-BGS/R
BN BU BK WH
1 3
TÜNKERS
1324633
A2 A1
2 4

Common Clamp 1
=V1AR11UQ41UQ4.2
+.AR11UQ41UQ4.2
-UQ4.2

-W1 RKC 4.4T-2-RSC 4.4T/S3060 2m
-BGS/R
BN BU BK WH
1 3
TÜNKERS
1324633
A2 A1
2 4

Common Clamp 1
=V1AR11UQ41UQ4.3
+.AR11UQ41UQ4.3
-UQ4.3

-W1 RKC 4.4T-2-RSC 4.4T/S3060 2m
-BGS/R
BN BU BK WH
1 3
TÜNKERS
1324633
A2 A1
2 4

Common Clamp 1
=V1AR11UQ41UQ4.4
+.AR11UQ41UQ4.4
-UQ4.4

=V1AR11UQ41
-UQ4.1-BGS/R
Common
Clamp 1

=V1AR11UQ41
-UQ4.2-BGS/R
Common
Clamp 1

=V1AR11UQ41
-UQ4.3-BGS/R
Common
Clamp 1

=V1AR11UQ41
-UQ4.4-BGS/R
Common
Clamp 1

=V1AR11UQ41UQ3+.AR11UQ41UQ3/1

=V1AR11UQ41UQ5+.AR11UQ41UQ5/1

			Date	12/22/2022	Volvo Trucks North America		Valiant TMS	FESTO DQ CONNECTION QN4	Drawing name: =2V04&EFS-EL	= V1AR11UQ41UQ4
			Ed.	MKLEPADLO						+ V1AR11UQ41UQ4
			Appr		P6700 Underbody Mainline - Cell 2V04				Document type: EFS	Project nr: 22-16151
Modification	Date	Name	Original		Replacement of	Replaced by	Scale 1:1			Page 1 / 1630

0	1	2	3	4	5	6	7	8	9

=V1AR11UQ41KF1
+.AR11UQ41

-KF1.23
=V1AR11UQ41KF1+V1AR11UQ41/5.1

Common Clamps 2 (RST)
=V1AR11UQ41KF1
+V1AR11UQ41
-QN5.1_Q
=V1AR11UQ41KF1
+V1AR11UQ41/5.3
DO:8

Common Clamps 2 (SET)
=V1AR11UQ41KF1
+V1AR11UQ41
-QN5.2_Q
=V1AR11UQ41KF1
+V1AR11UQ41/5.3
DO:9

1.1 Pneumatic Valve
1.2 Pneumatic Valve

-QN5 .1 .2

=V1AR11UQ41KF1+V1AR11UQ41/3.1
+.AR11UQ41UQ5.1-W1

=V1AR11UQ41KF1+V1AR11UQ41/3.2
+.AR11UQ41UQ5.2-W1

=V1AR11UQ41KF1+V1AR11UQ41/3.3
+.AR11UQ41UQ5.3-W1

=V1AR11UQ41KF1+V1AR11UQ41/3.4
+.AR11UQ41UQ5.4-W1

-W1 RKC 4.4T-1-RSC 4.4T/S3060 1m
-BGS/R
BN 1 +
BU 3 -
BK
WH
TÜNKERS
1324633
A2 2
A1 4

Common Clamp 2
=V1AR11UQ41UQ5.1
+.AR11UQ41UQ5.1
-UQ5.1

-W1 RKC 4.4T-1-RSC 4.4T/S3060 1m
-BGS/R
BN 1 +
BU 3 -
BK
WH
TÜNKERS
1324633
A2 2
A1 4

Common Clamp 2
=V1AR11UQ41UQ5.2
+.AR11UQ41UQ5.2
-UQ5.2

-W1 RKC 4.4T-2-RSC 4.4T/S3060 2m
-BGS/R
BN 1 +
BU 3 -
BK
WH
TÜNKERS
1324633
A2 2
A1 4

Common Clamp 2
=V1AR11UQ41UQ5.3
+.AR11UQ41UQ5.3
-UQ5.3

-W1 RKC 4.4T-2-RSC 4.4T/S3060 2m
-BGS/R
BN 1 +
BU 3 -
BK
WH
TÜNKERS
1324633
A2 2
A1 4

Common Clamp 2
=V1AR11UQ41UQ5.4
+.AR11UQ41UQ5.4
-UQ5.4

=V1AR11UQ41
-UQ5.1-BGS/R
Common
Clamp 2

=V1AR11UQ41
-UQ5.2-BGS/R
Common
Clamp 2

=V1AR11UQ41
-UQ5.3-BGS/R
Common
Clamp 2

=V1AR11UQ41
-UQ5.4-BGS/R
Common
Clamp 2

=V1AR11UQ41UQ4+.AR11UQ41UQ4/1

=V1AR11UQ41UQ6+.AR11UQ41UQ6/1

			Date	12/22/2022	Volvo Trucks North America		Valiant TMS	FESTO DQ CONNECTION QN5	Drawing name: =2V04&EFS-EL	= V1AR11UQ41UQ5
			Ed.	MKLEPADLO						+ V1AR11UQ41UQ5
			Appr		P6700 Underbody Mainline - Cell 2V04				Document type: EFS	Project nr: 22-16151
Modification	Date	Name	Original		Replacement of	Replaced by	Scale 1:1			Page 1 / 1630

0	1	2	3	4	5	6	7	8	9

=V1AR11UQ41KF1
+.AR11UQ41

-KF1.23
=V1AR11UQ41KF1+V1AR11UQ41/5.1

Common Clamp 3 (RST)
=V1AR11UQ41KF1
+V1AR11UQ41
-QN6.1_Q
=V1AR11UQ41KF1
+V1AR11UQ41/5.3
DO:10

Common Clamp 3 (SET)
=V1AR11UQ41KF1
+V1AR11UQ41
-QN6.2_Q
=V1AR11UQ41KF1
+V1AR11UQ41/5.3
DO:11

2.1 Pneumatic Valve
2.2 Pneumatic Valve

-QN6 .1 .2

=V1AR11UQ41KF1+V1AR11UQ41/3.5
+.AR11UQ41UQ6.1-W1

-W1
RKC 4.4T-2-RSC 4.4T/S3060
2m

BN BU BK WH

-BGS/R
1 3
+ -
TÜNKERS
1324633
A2 A1
2 4

Common Clamp 3

=V1AR11UQ41UQ6.1
+.AR11UQ41UQ6.1
-UQ6.1

=V1AR11UQ41
-UQ6.1-BGS/R
Common
Clamp 3

=V1AR11UQ41UQ5+.AR11UQ41UQ5/1

=V1AR11UQ41UQ7+.AR11UQ41UQ7/1

			Date	12/22/2022	Volvo Trucks North America	Valiant TMS	FESTO DQ CONNECTION QN6	Drawing name: =2V04&EFS-EL	= V1AR11UQ41UQ6
			Ed.	MKLEPADLO					+ V1AR11UQ41UQ6
			Appr		P6700 Underbody Mainline - Cell 2V04	Scale 1:1		Document type: EFS	Project nr: 22-16151
Modification	Date	Name	Original		Replacement of	Replaced by			Page 1 / 1630

0	1	2	3	4	5	6	7	8	9

=V1AR11UQ41KF1
+.AR11UQ41

-KF1.24
=V1AR11UQ41KF1+V1AR11UQ41/5.1

Common Vacuums (RST)	Common Vacuums (SET)
=V1AR11UQ41KF1	=V1AR11UQ41KF1
+V1AR11UQ41	+V1AR11UQ41
-QN7.1_Q	-QN7.2_Q
=V1AR11UQ41KF1	=V1AR11UQ41KF1
+V1AR11UQ41/5.3	+V1AR11UQ41/5.3
DO:12	DO:13
1.1 Pneumatic Valve	1.2 Pneumatic Valve

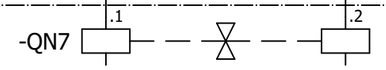

=V1AR11UQ41KF1+V1AR11UQ41/3.6
+.AR11UQ41UQ7.1-W1

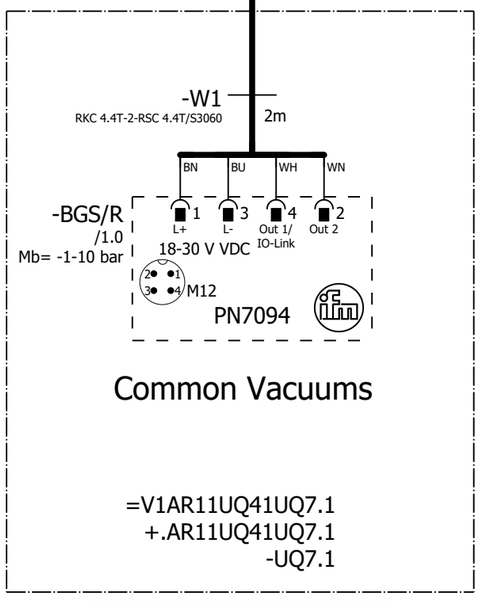

Common Vacuums

=V1AR11UQ41UQ7.1
+.AR11UQ41UQ7.1
-UQ7.1

=V1AR11UQ41 -UQ7.1-BGS/R Common Vacuums

=V1AR11UQ41UQ6+.AR11UQ41UQ6/1

=V1AR11UQ41UQ8+.AR11UQ41UQ8/1

			Date	12/22/2022	Volvo Trucks North America	Valiant TMS	FESTO DQ CONNECTION QN7	Drawing name: =2V04&EFS-EL	= V1AR11UQ41UQ7
			Ed.	MKLEPADLO					+ V1AR11UQ41UQ7
			Appr		P6700 Underbody Mainline - Cell 2V04			Document type: EFS / Project nr: 22-16151	Page 1
Modification	Date	Name	Original		Replacement of / Replaced by	Scale 1:1			1630

0	1	2	3	4	5	6	7	8	9

=V1AR11UQ41KF1
+.AR11UQ41

-KF1.24
=V1AR11UQ41KF1+V1AR11UQ41/5.1

Common Clamps 4 (RST)
=V1AR11UQ41KF1
+V1AR11UQ41
-QN8.1_Q
=V1AR11UQ41KF1
+V1AR11UQ41/5.3
DO:14

Common Clamps 4 (SET)
=V1AR11UQ41KF1
+V1AR11UQ41
-QN8.2_Q
=V1AR11UQ41KF1
+V1AR11UQ41/5.3
DO:15

2.1 Pneumatic Valve
2.2 Pneumatic Valve

-QN8 .1 .2

=V1AR11UQ41KF1+V1AR11UQ41/3.8
+.AR11UQ41UQ8.1-W1

=V1AR11UQ41KF1+V1AR11UQ41/3.9
+.AR11UQ41UQ8.2-W1

=V1AR11UQ41KF1+V1AR11UQ41/4.1
+.AR11UQ41UQ8.3-W1

=V1AR11UQ41KF1+V1AR11UQ41/4.2
+.AR11UQ41UQ8.4-W1

-W1 RKC 4.4T-2-RSC 4.4T/S3060 2m
-BGS/R
BN BU BK WH
1 3
TÜNKERS
1324633
A2 A1
2 4

Common Clamp 4
=V1AR11UQ41UQ8.1
+.AR11UQ41UQ8.1
-UQ8.1

-W1 RKC 4.4T-2-RSC 4.4T/S3060 2m
-BGS/R
BN BU BK WH
1 3
TÜNKERS
1324633
A2 A1
2 4

Common Clamp 4
=V1AR11UQ41UQ8.2
+.AR11UQ41UQ8.2
-UQ8.2

-W1 RKC 4.4T-1-RSC 4.4T/S3060 1m
-BGS/R
BN BU BK WH
1 3
TÜNKERS
1324633
A2 A1
2 4

Common Clamp 4
=V1AR11UQ41UQ8.3
+.AR11UQ41UQ8.3
-UQ8.3

-W1 RKC 4.4T-1-RSC 4.4T/S3060 1m
-BGS/R
BN BU BK WH
1 3
TÜNKERS
1324633
A2 A1
2 4

Common Clamp 4
=V1AR11UQ41UQ8.4
+.AR11UQ41UQ8.4
-UQ8.4

=V1AR11UQ41
-UQ8.1-BGS/R
Common
Clamp 4

=V1AR11UQ41
-UQ8.2-BGS/R
Common
Clamp 4

=V1AR11UQ41
-UQ8.3-BGS/R
Common
Clamp 4

=V1AR11UQ41
-UQ8.4-BGS/R
Common
Clamp 4

=V1AR11UQ41UQ7+.AR11UQ41UQ7/1

=V1AR11UQ41UQ9+.AR11UQ41UQ9/1

			Date	12/22/2022	Volvo Trucks North America		Valiant TMS	FESTO DQ CONNECTION QN8	Drawing name: =2V04&EFS-EL	= V1AR11UQ41UQ8
			Ed.	MKLEPADLO						+ V1AR11UQ41UQ8
			Appr		P6700 Underbody Mainline - Cell 2V04				Document type: EFS	Project nr: 22-16151
Modification	Date	Name	Original		Replacement of	Replaced by	Scale 1:1			Page 1 / 1630

0	1	2	3	4	5	6	7	8	9

=V1AR11UQ41KF2
+.AR11UQ41

-KF2.21
=V1AR11UQ41KF2+V1AR11UQ41/5.1

L230/290/320 Model Clamps (RST)
=V1AR11UQ41KF2
+V1AR11UQ41
-QN9.1_Q
=V1AR11UQ41KF2
+V1AR11UQ41/5.3
DO:16

L230/290/320 Model Clamps (SET)
=V1AR11UQ41KF2
+V1AR11UQ41
-QN9.2_Q
=V1AR11UQ41KF2
+V1AR11UQ41/5.3
DO:17

1.1 Pneumatic Valve

1.2 Pneumatic Valve

-QN9 .1 .2

=V1AR11UQ41KF2+V1AR11UQ41/2.1
+.AR11UQ41UQ9.1-W1

-W1 2m
RKC 4.4T-2-RSC 4.4T/S3060

-BGS/R
BN BU BK WH
1 3
TÜNKERS
1324633
A2 A1
2 4

L230/290/320 Model Clamp
=V1AR11UQ41UQ9.1
+.AR11UQ41UQ9.1
-UQ9.1

=V1AR11UQ41
-UQ9.1-BGS/R
L230/290/320
Model Clamp

=V1AR11UQ41KF2+V1AR11UQ41/2.2
+.AR11UQ41UQ9.2-W1

-W1 1m
RKC 4.4T-1-RSC 4.4T/S3060

-BGS/R
BN BU BK WH
1 3
TÜNKERS
1324633
A2 A1
2 4

L230/290/320 Model Clamp
=V1AR11UQ41UQ9.2
+.AR11UQ41UQ9.2
-UQ9.2

=V1AR11UQ41
-UQ9.2-BGS/R
L230/290/320
Model Clamp

=V1AR11UQ41UQ8+.AR11UQ41UQ8/1

=V1AR11UQ41UQ10+.AR11UQ41UQ10/1

			Date	12/22/2022	Volvo Trucks North America	Valiant TMS	FESTO DQ CONNECTION QN9	Drawing name: =2V04&EFS-EL	= V1AR11UQ41UQ9
			Ed.	MKLEPADLO					+ V1AR11UQ41UQ9
			Appr		P6700 Underbody Mainline - Cell 2V04			Document type: EFS	Project nr: 22-16151
Modification	Date	Name	Original		Replacement of / Replaced by	Scale 1:1			Page 1 / 1630

0	1	2	3	4	5	6	7	8	9

=V1AR11UQ41KF2
+.AR11UQ41

-KF2.21
=V1AR11UQ41KF2+V1AR11UQ41/5.1

L230/320 Model Clamps (RST)
=V1AR11UQ41KF2
+V1AR11UQ41
-QN10.1_Q
=V1AR11UQ41KF2
+V1AR11UQ41/5.3
DO:18

L230/320 Model Clamps (SET)
=V1AR11UQ41KF2
+V1AR11UQ41
-QN10.2_Q
=V1AR11UQ41KF2
+V1AR11UQ41/5.3
DO:19

2.1 Pneumatic Valve
2.2 Pneumatic Valve

-QN10 .1 .2

=V1AR11UQ41KF2+V1AR11UQ41/2.3
+.AR11UQ41UQ10.1-W1

=V1AR11UQ41KF2+V1AR11UQ41/2.4
+.AR11UQ41UQ10.2-W1

-W1
RKC 4.4T-2-RSC 4.4T/S3060
2m

BN BU BK WH
1 3
+ -
-BGS/R
TÜNKERS
1324633
A2 A1
2 4

L230/320 Model Clamp
=V1AR11UQ41UQ10.1
+.AR11UQ41UQ10.1
-UQ10.1

L230/320 Model Clamp
=V1AR11UQ41UQ10.2
+.AR11UQ41UQ10.2
-UQ10.2

=V1AR11UQ41
-UQ10.1-BGS/R
L230/320 Model
Clamp

=V1AR11UQ41
-UQ10.2-BGS/R
L230/320 Model
Clamp

=V1AR11UQ41UQ9+.AR11UQ41UQ9/1

=V1AR11UQ41UQ11+.AR11UQ41UQ11/1

			Date	12/22/2022	Volvo Trucks North America	Valiant TMS	FESTO DQ CONNECTION QN10	Drawing name: =2V04&EFS-EL	= V1AR11UQ41UQ10
			Ed.	MKLEPADLO					+ V1AR11UQ41UQ10
			Appr		P6700 Underbody Mainline - Cell 2V04			Document type: EFS	Project nr: 22-16151
Modification	Date	Name	Original		Replacement of	Replaced by	Scale 1:1		Page 1 / 1630

0	1	2	3	4	5	6	7	8	9

=V1AR11UQ41KF2
+.AR11UQ41

-KF2.22
=V1AR11UQ41KF2+V1AR11UQ41/5.1

L230 Model Clamps 1 (RST)
=V1AR11UQ41KF2
+V1AR11UQ41
-QN11.1_Q
=V1AR11UQ41KF2
+V1AR11UQ41/5.3
DO:20

L230 Model Clamps 1 (SET)
=V1AR11UQ41KF2
+V1AR11UQ41
-QN11.2_Q
=V1AR11UQ41KF2
+V1AR11UQ41/5.3
DO:21

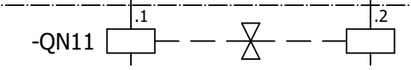

=V1AR11UQ41KF2+V1AR11UQ41/2.5
+.AR11UQ41UQ11.1-W1

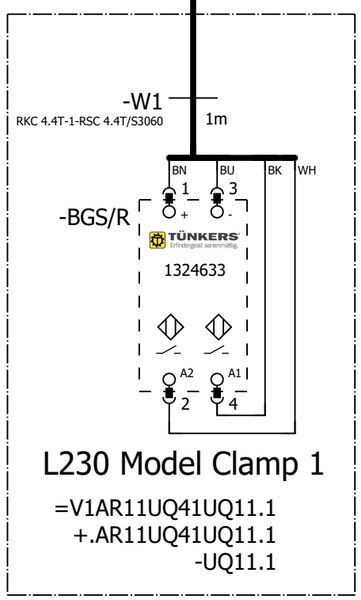

L230 Model Clamp 1

=V1AR11UQ41UQ11.1
+.AR11UQ41UQ11.1
-UQ11.1

=V1AR11UQ41 -UQ11.1-BGS/R L230 Model Clamp 1

=V1AR11UQ41UQ10+.AR11UQ41UQ10/1

=V1AR11UQ41UQ12+.AR11UQ41UQ12/1

			Date	12/22/2022	Volvo Trucks North America	Valiant TMS	FESTO DQ CONNECTION QN11	Drawing name: =2V04&EFS-EL	= V1AR11UQ41UQ11
			Ed.	MKLEPADLO					+ V1AR11UQ41UQ11
			Appr		P6700 Underbody Mainline - Cell 2V04			Document type: EFS	Project nr: 22-16151
Modification	Date	Name	Original		Replacement of	Replaced by	Scale 1:1		Page 1 / 1630

0	1	2	3	4	5	6	7	8	9

=V1AR11UQ41KF2
+.AR11UQ41

-KF2.22
=V1AR11UQ41KF2+V1AR11UQ41/5.1

L230 Model Vacuums (RST)	L230 Model Vacuums (SET)
=V1AR11UQ41KF2	=V1AR11UQ41KF2
+V1AR11UQ41	+V1AR11UQ41
-QN12.1_Q	-QN12.2_Q
=V1AR11UQ41KF2	=V1AR11UQ41KF2
+V1AR11UQ41/5.3	+V1AR11UQ41/5.3
DO:22	DO:23
2.1 Pneumatic Valve	2.2 Pneumatic Valve

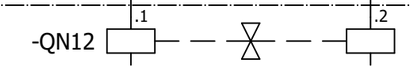

=V1AR11UQ41KF2+V1AR11UQ41/2.6
+.AR11UQ41UQ12.1-W1

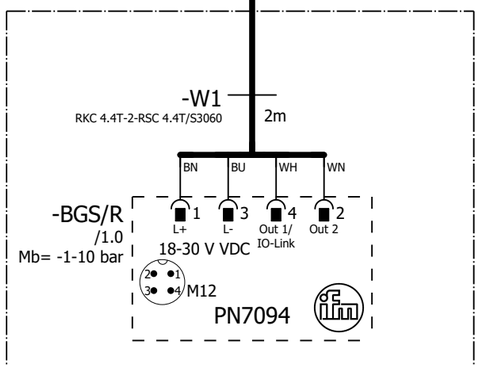

L230 Model Vacuums

=V1AR11UQ41UQ12.1
+.AR11UQ41UQ12.1
-UQ12.1

=V1AR11UQ41 -UQ12.1-BGS/R L230 Model Vacuums

=V1AR11UQ41UQ11+.AR11UQ41UQ11/1

=V1AR11UQ41UQ13+.AR11UQ41UQ13/1

			Date	12/22/2022	Volvo Trucks North America	Valiant TMS	FESTO DQ CONNECTION QN12	Drawing name: =2V04&EFS-EL	= V1AR11UQ41UQ12
			Ed.	MKLEPADLO					+ V1AR11UQ41UQ12
			Appr		P6700 Underbody Mainline - Cell 2V04			Document type: EFS	Project nr: 22-16151
Modification	Date	Name	Original		Replacement of	Replaced by	Scale 1:1		Page 1 / 1630

0	1	2	3	4	5	6	7	8	9

=V1AR11UQ41KF2
+.AR11UQ41

-KF2.23
=V1AR11UQ41KF2+V1AR11UQ41/5.1

L230/290/320 Model Vacuum (RST)
=V1AR11UQ41KF2
+V1AR11UQ41
-QN13.1_Q
=V1AR11UQ41KF2
+V1AR11UQ41/5.3
DO:24

L230/290/320 Model Vacuum (SET)
=V1AR11UQ41KF2
+V1AR11UQ41
-QN13.2_Q
=V1AR11UQ41KF2
+V1AR11UQ41/5.3
DO:25

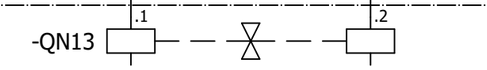

=V1AR11UQ41KF2+V1AR11UQ41/2.8
+.AR11UQ41UQ13.1-W1

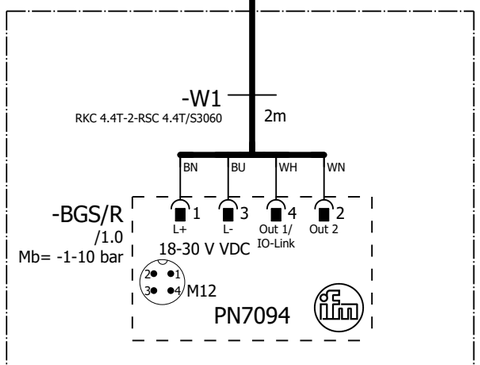

L230/290/320 Model Vacuum

=V1AR11UQ41UQ13.1
+.AR11UQ41UQ13.1
-UQ13.1

=V1AR11UQ41 -UQ13.1-BGS/R L230/290/320 Model Vacuum

=V1AR11UQ41UQ12+.AR11UQ41UQ12/1

=V1AR11UQ41UQ14+.AR11UQ41UQ14/1

			Date	12/22/2022	Volvo Trucks North America	Valiant TMS	FESTO DQ CONNECTION QN13	Drawing name: =2V04&EFS-EL	= V1AR11UQ41UQ13
			Ed.	MKLEPADLO					+ V1AR11UQ41UQ13
			Appr		P6700 Underbody Mainline - Cell 2V04			Document type: EFS / Project nr: 22-16151	Page 1
Modification	Date	Name	Original		Replacement of / Replaced by	Scale 1:1			1630

0	1	2	3	4	5	6	7	8	9

=V1AR11UQ41KF2
+.AR11UQ41

-KF2.23
=V1AR11UQ41KF2+V1AR11UQ41/5.1

L230 Model Clamps 2 (RST)	L230 Model Clamps 2 (SET)
=V1AR11UQ41KF2	=V1AR11UQ41KF2
+V1AR11UQ41	+V1AR11UQ41
-QN14.1_Q	-QN14.2_Q
=V1AR11UQ41KF2	=V1AR11UQ41KF2
+V1AR11UQ41/5.3	+V1AR11UQ41/5.3
DO:26	DO:27
2.1 Pneumatic Valve	2.2 Pneumatic Valve

-QN14 .1 .2

=V1AR11UQ41KF2+V1AR11UQ41/2.9
+.AR11UQ41UQ14.1-W1

-W1
RKC 4.4T-2-RSC 4.4T/S3060
2m

BN BU BK WH

-BGS/R
1 3
+ -
TÜNKERS
1324633
A2 A1
2 4

L230 Model Clamp 2

=V1AR11UQ41UQ14.1
+.AR11UQ41UQ14.1
-UQ14.1

=V1AR11UQ41
-UQ14.1-BGS/R
L230 Model
Clamp 2

=V1AR11UQ41KF2+V1AR11UQ41/3.1
+.AR11UQ41UQ14.2-W1

-W1
RKC 4.4T-2-RSC 4.4T/S3060
2m

BN BU BK WH

-BGS/R
1 3
+ -
TÜNKERS
1324633
A2 A1
2 4

L230 Model Clamp 2

=V1AR11UQ41UQ14.2
+.AR11UQ41UQ14.2
-UQ14.2

=V1AR11UQ41
-UQ14.2-BGS/R
L230 Model
Clamp 2

=V1AR11UQ41UQ13+.AR11UQ41UQ13/1

=V1AR11UQ41UQ15+.AR11UQ41UQ15/1

			Date	12/22/2022	Volvo Trucks North America	Valiant TMS	FESTO DQ CONNECTION QN14	Drawing name: =2V04&EFS-EL	= V1AR11UQ41UQ14
			Ed.	MKLEPADLO					+ V1AR11UQ41UQ14
			Appr		P6700 Underbody Mainline - Cell 2V04			Document type: EFS	Project nr: 22-16151
Modification	Date	Name	Original		Replacement of	Replaced by	Scale 1:1		Page 1 / 1630

0	1	2	3	4	5	6	7	8	9

=V1AR11UQ41KF2
+.AR11UQ41

-KF2.24
=V1AR11UQ41KF2+V1AR11UQ41/5.1

L290 Model Clamps 1 (RST)	L290 Model Clamps 1 (SET)
=V1AR11UQ41KF2	=V1AR11UQ41KF2
+V1AR11UQ41	+V1AR11UQ41
-QN15.1_Q	-QN15.2_Q
=V1AR11UQ41KF2	=V1AR11UQ41KF2
+V1AR11UQ41/5.3	+V1AR11UQ41/5.3
DO:28	DO:29
1.1 Pneumatic Valve	1.2 Pneumatic Valve

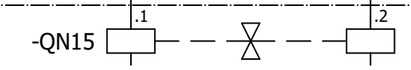

=V1AR11UQ41KF2+V1AR11UQ41/3.2
+.AR11UQ41UQ15.1-W1

=V1AR11UQ41KF2+V1AR11UQ41/3.3
+.AR11UQ41UQ15.2-W1

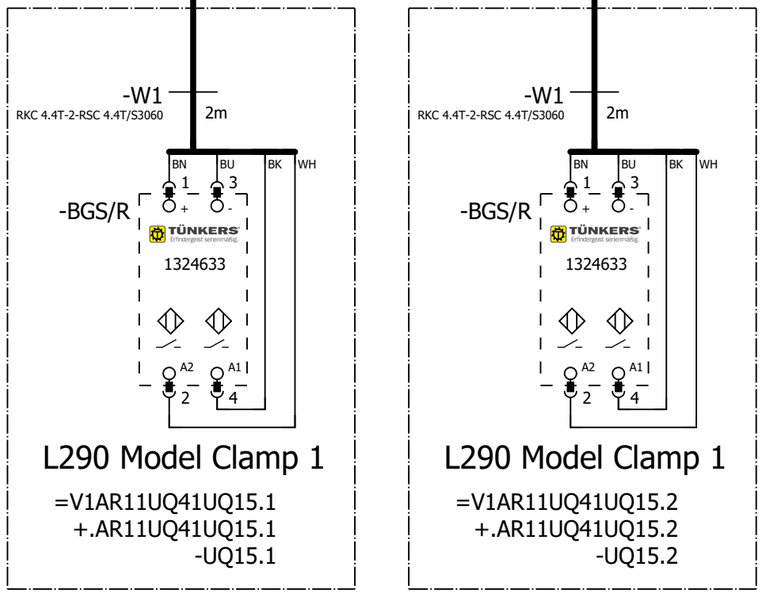

=V1AR11UQ41
-UQ15.1-BGS/R
L290 Model
Clamp 1

=V1AR11UQ41
-UQ15.2-BGS/R
L290 Model
Clamp 1

=V1AR11UQ41UQ14+.AR11UQ41UQ14/1

=V1AR11UQ41UQ16+.AR11UQ41UQ16/1

			Date	12/22/2022	Volvo Trucks North America	Valiant TMS	FESTO DQ CONNECTION QN15	Drawing name: =2V04&EFS-EL	= V1AR11UQ41UQ15
			Ed.	MKLEPADLO					+ V1AR11UQ41UQ15
			Appr		P6700 Underbody Mainline - Cell 2V04			Document type: EFS	Project nr: 22-16151
Modification	Date	Name	Original		Replacement of	Replaced by	Scale 1:1		Page 1 / 1630

0	1	2	3	4	5	6	7	8	9

=V1AR11UQ41KF2
+.AR11UQ41

-KF2.24
=V1AR11UQ41KF2+V1AR11UQ41/5.1

L290/320 Model Clamps (RST)	L290/320 Model Clamps (SET)
=V1AR11UQ41KF2	=V1AR11UQ41KF2
+V1AR11UQ41	+V1AR11UQ41
-QN16.1_Q	-QN16.2_Q
=V1AR11UQ41KF2	=V1AR11UQ41KF2
+V1AR11UQ41/5.3	+V1AR11UQ41/5.3
DO:30	DO:31
2.1 Pneumatic Valve	2.2 Pneumatic Valve

-QN16 .1 .2

=V1AR11UQ41KF2+V1AR11UQ41/3.4
+.AR11UQ41UQ16.1-W1

-W1
RKC 4.4T-2-RSC 4.4T/S3060
2m

-BGS/R
BN 1 +
BU 3 -
BK
WH
TÜNKERS
1324633
A2 2
A1 4

L290/320 Model Clamp

=V1AR11UQ41UQ16.1
+.AR11UQ41UQ16.1
-UQ16.1

=V1AR11UQ41
-UQ16.1-BGS/R
L290/320 Model
Clamp

=V1AR11UQ41KF2+V1AR11UQ41/3.5
+.AR11UQ41UQ16.2-W1

-W1
RKC 4.4T-2-RSC 4.4T/S3060
2m

-BGS/R
BN 1 +
BU 3 -
BK
WH
TÜNKERS
1324633
A2 2
A1 4

L290/320 Model Clamp

=V1AR11UQ41UQ16.2
+.AR11UQ41UQ16.2
-UQ16.2

=V1AR11UQ41
-UQ16.2-BGS/R
L290/320 Model
Clamp

=V1AR11UQ41UQ15+.AR11UQ41UQ15/1

=V1AR11UQ41UQ17+.AR11UQ41UQ17/1

			Date	12/22/2022	Volvo Trucks North America	Valiant TMS	FESTO DQ CONNECTION QN16	Drawing name: =2V04&EFS-EL	= V1AR11UQ41UQ16
			Ed.	MKLEPADLO					+ V1AR11UQ41UQ16
			Appr		P6700 Underbody Mainline - Cell 2V04			Document type: EFS	Project nr: 22-16151
Modification	Date	Name	Original		Replacement of	Replaced by	Scale 1:1		Page 1 / 1630

0	1	2	3	4	5	6	7	8	9

=V1AR11UQ41KF3
+.AR11UQ41

-KF3.21
=V1AR11UQ41KF3+V1AR11UQ41/5.1

L290 Model Clamp 2 (RST)	L290 Model Clamp 2 (SET)
=V1AR11UQ41KF3	=V1AR11UQ41KF3
+V1AR11UQ41	+V1AR11UQ41
-QN17.1_Q	-QN17.2_Q
=V1AR11UQ41KF3	=V1AR11UQ41KF3
+V1AR11UQ41/5.3	+V1AR11UQ41/5.3
DO:32	DO:33
1.1 Pneumatic Valve	1.2 Pneumatic Valve

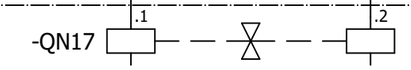

=V1AR11UQ41KF3+V1AR11UQ41/2.1
+.AR11UQ41UQ17.1-W1

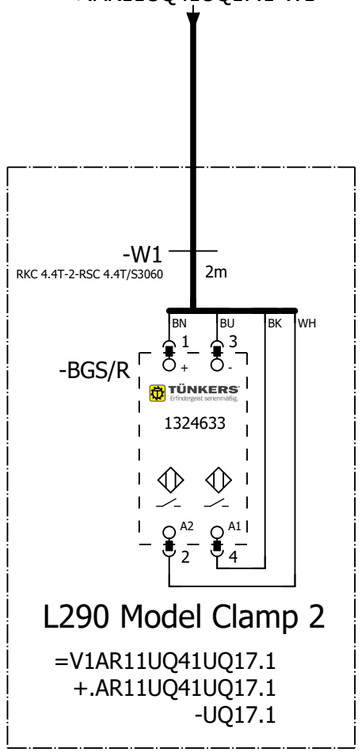

L290 Model Clamp 2

=V1AR11UQ41UQ17.1
+.AR11UQ41UQ17.1
-UQ17.1

=V1AR11UQ41 -UQ17.1-BGS/R L290 Model Clamp 2

=V1AR11UQ41UQ16+.AR11UQ41UQ16/1

=V1AR11UQ41UQ18+.AR11UQ41UQ18/1

			Date	12/22/2022	Volvo Trucks North America	Valiant TMS	FESTO DQ CONNECTION QN17	Drawing name: =2V04&EFS-EL	= V1AR11UQ41UQ17
			Ed.	MKLEPADLO					+ V1AR11UQ41UQ17
			Appr		P6700 Underbody Mainline - Cell 2V04	Scale 1:1		Document type: EFS	Project nr: 22-16151
Modification	Date	Name	Original		Replacement of	Replaced by			Page 1 / 1630

0	1	2	3	4	5	6	7	8	9

=V1AR11UQ41KF3
+.AR11UQ41

-KF3.21
=V1AR11UQ41KF3+V1AR11UQ41/5.1

L290 Model Vacuums (RST)	L290 Model Vacuums (SET)
=V1AR11UQ41KF2	=V1AR11UQ41KF2
+V1AR11UQ41	+V1AR11UQ41
-QN18.1_Q	-QN18.2_Q
=V1AR11UQ41KF3	=V1AR11UQ41KF3
+V1AR11UQ41/5.3	+V1AR11UQ41/5.3
DO:34	DO:35
2.1 Pneumatic Valve	2.2 Pneumatic Valve

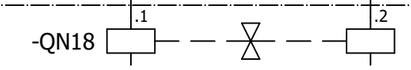

=V1AR11UQ41KF3+V1AR11UQ41/2.2
+.AR11UQ41UQ18.1-W1

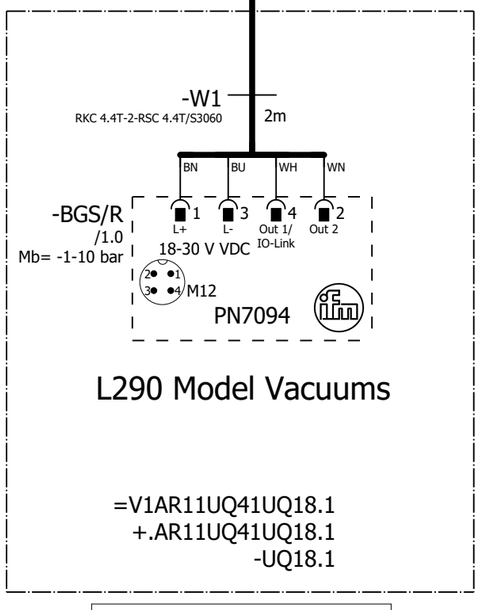

L290 Model Vacuums

=V1AR11UQ41UQ18.1
+.AR11UQ41UQ18.1
-UQ18.1

=V1AR11UQ41 -UQ18.1-BGS/R L290 Model Vacuums

=V1AR11UQ41UQ17+.AR11UQ41UQ17/1

=V1AR11UQ41UQ19+.AR11UQ41UQ19/1

			Date	12/22/2022	Volvo Trucks North America	Valiant TMS	FESTO DQ CONNECTION QN18	Drawing name: =2V04&EFS-EL	= V1AR11UQ41UQ18
			Ed.	MKLEPADLO					+ V1AR11UQ41UQ18
			Appr		P6700 Underbody Mainline - Cell 2V04			Document type: EFS	Project nr: 22-16151
Modification	Date	Name	Original		Replacement of	Replaced by	Scale 1:1		Page 1 / 1630

0	1	2	3	4	5	6	7	8	9

=V1AR11UQ41KF3
+.AR11UQ41

-KF3.22
=V1AR11UQ41KF3+V1AR11UQ41/5.1

L290/320 Model Vacuums (RST)	L290/320 Model Vacuums (SET)
=V1AR11UQ41KF3	=V1AR11UQ41KF3
+V1AR11UQ41	+V1AR11UQ41
-QN19.1_Q	-QN19.2_Q
=V1AR11UQ41KF3	=V1AR11UQ41KF3
+V1AR11UQ41/5.3	+V1AR11UQ41/5.3
DO:36	DO:37
1.1 Pneumatic Valve	1.2 Pneumatic Valve

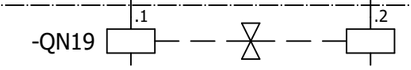

=V1AR11UQ41KF3+V1AR11UQ41/2.3
+.AR11UQ41UQ19.1-W1

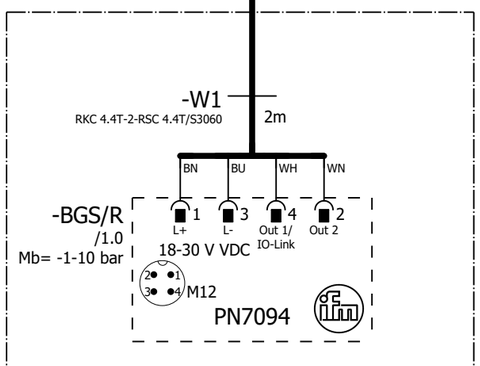

L290/320 Model Vacuums

=V1AR11UQ41UQ19.1
+.AR11UQ41UQ19.1
-UQ19.1

=V1AR11UQ41 -UQ19.1-BGS/R L290/320 Model Vacuums

=V1AR11UQ41UQ18+.AR11UQ41UQ18/1

=V1AR11UQ41UQ20+.AR11UQ41UQ20/1

			Date	12/22/2022	Volvo Trucks North America	Valiant TMS	FESTO DQ CONNECTION QN19	Drawing name: =2V04&EFS-EL	= V1AR11UQ41UQ19
			Ed.	MKLEPADLO					+ V1AR11UQ41UQ19
			Appr		P6700 Underbody Mainline - Cell 2V04			Document type: EFS	Project nr: 22-16151
Modification	Date	Name	Original		Replacement of	Replaced by	Scale 1:1		Page 1 / 1630

0	1	2	3	4	5	6	7	8	9

=V1AR11UQ41KF3
+.AR11UQ41

-KF3.22
=V1AR11UQ41KF3+V1AR11UQ41/5.1

L290 Model Clamps 3 (RST)	L290 Model Clamps 3 (SET)
=V1AR11UQ41KF3	=V1AR11UQ41KF3
+V1AR11UQ41	+V1AR11UQ41
-QN20.1_Q	-QN20.2_Q
=V1AR11UQ41KF3	=V1AR11UQ41KF3
+V1AR11UQ41/5.3	+V1AR11UQ41/5.3
DO:38	DO:39
2.1 Pneumatic Valve	2.2 Pneumatic Valve

-QN20 .1 .2

=V1AR11UQ41KF3+V1AR11UQ41/2.4
+.AR11UQ41UQ20.1-W1

-W1
RKC 4.4T-2-RSC 4.4T/S3060
2m

BN BU BK WH

-BGS/R
1 3
+ -
TÜNKERS
1324633
A2 A1
2 4

L290 Model Clamp 3

=V1AR11UQ41UQ20.1
+.AR11UQ41UQ20.1
-UQ20.1

=V1AR11UQ41
-UQ20.1-BGS/R
L290 Model
Clamp 3

=V1AR11UQ41KF3+V1AR11UQ41/2.5
+.AR11UQ41UQ20.2-W1

-W1
RKC 4.4T-2-RSC 4.4T/S3060
2m

BN BU BK WH

-BGS/R
1 3
+ -
TÜNKERS
1324633
A2 A1
2 4

L290 Model Clamp 3

=V1AR11UQ41UQ20.2
+.AR11UQ41UQ20.2
-UQ20.2

=V1AR11UQ41
-UQ20.2-BGS/R
L290 Model
Clamp 3

=V1AR11UQ41UQ19+.AR11UQ41UQ19/1

=V1AR11UQ41UQ21+.AR11UQ41UQ21/1

			Date	12/22/2022	Volvo Trucks North America	Valiant TMS	FESTO DQ CONNECTION QN20	Drawing name: =2V04&EFS-EL	= V1AR11UQ41UQ20
			Ed.	MKLEPADLO					+ V1AR11UQ41UQ20
			Appr		P6700 Underbody Mainline - Cell 2V04			Document type: EFS	Project nr: 22-16151
Modification	Date	Name	Original		Replacement of	Replaced by	Scale 1:1		Page 1 / 1630

0	1	2	3	4	5	6	7	8	9

=V1AR11UQ41KF3
+.AR11UQ41

-KF3.23
=V1AR11UQ41KF3+V1AR11UQ41/5.1

L320 Model Clamps 1 (RST)	L320 Model Clamps 1 (SET)
=V1AR11UQ41KF3	=V1AR11UQ41KF3
+V1AR11UQ41	+V1AR11UQ41
-QN21.1_Q	-QN21.2_Q
=V1AR11UQ41KF3	=V1AR11UQ41KF3
+V1AR11UQ41/5.3	+V1AR11UQ41/5.3
DO:40	DO:41
1.1 Pneumatic Valve	1.2 Pneumatic Valve

-QN21 .1 .2

=V1AR11UQ41KF3+V1AR11UQ41/2.6
+.AR11UQ41UQ21.1-W1

-W1
RKC 4.4T-3-RSC 4.4T/S3060
3m

BN BU BK WH

-BGS/R
1 3
+ -
TÜNKERS
1324633
A2 A1
2 4

L320 Model Clamp 1

=V1AR11UQ41UQ21.1
+.AR11UQ41UQ21.1
-UQ21.1

=V1AR11UQ41
-UQ21.1-BGS/R
L320 Model
Clamp 1

=V1AR11UQ41KF3+V1AR11UQ41/2.8
+.AR11UQ41UQ21.2-W1

-W1
RKC 4.4T-3-RSC 4.4T/S3060
3m

BN BU BK WH

-BGS/R
1 3
+ -
TÜNKERS
1324633
A2 A1
2 4

L320 Model Clamp 1

=V1AR11UQ41UQ21.2
+.AR11UQ41UQ21.2
-UQ21.2

=V1AR11UQ41
-UQ21.2-BGS/R
L320 Model
Clamp 1

=V1AR11UQ41UQ20+.AR11UQ41UQ20/1

=V1AR11UQ41UQ22+.AR11UQ41UQ22/1

			Date	12/22/2022	Volvo Trucks North America	Valiant TMS	FESTO DQ CONNECTION QN21	Drawing name: =2V04&EFS-EL	= V1AR11UQ41UQ21
			Ed.	MKLEPADLO					+ V1AR11UQ41UQ21
			Appr		P6700 Underbody Mainline - Cell 2V04			Document type: EFS	Project nr: 22-16151
Modification	Date	Name	Original		Replacement of	Replaced by	Scale 1:1		Page 1 / 1630

0	1	2	3	4	5	6	7	8	9

=V1AR11UQ41KF3
+.AR11UQ41

-KF3.23
=V1AR11UQ41KF3+V1AR11UQ41/5.1

L320 Model Clamp 2 (RST)	L320 Model Clamp 2 (SET)
=V1AR11UQ41KF3	=V1AR11UQ41KF3
+V1AR11UQ41	+V1AR11UQ41
-QN22.1_Q	-QN22.2_Q
=V1AR11UQ41KF3	=V1AR11UQ41KF3
+V1AR11UQ41/5.3	+V1AR11UQ41/5.3
DO:42	DO:43
2.1 Pneumatic Valve	2.2 Pneumatic Valve

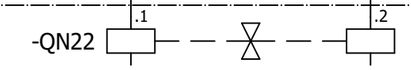

=V1AR11UQ41KF3+V1AR11UQ41/2.9
+.AR11UQ41UQ22.1-W1

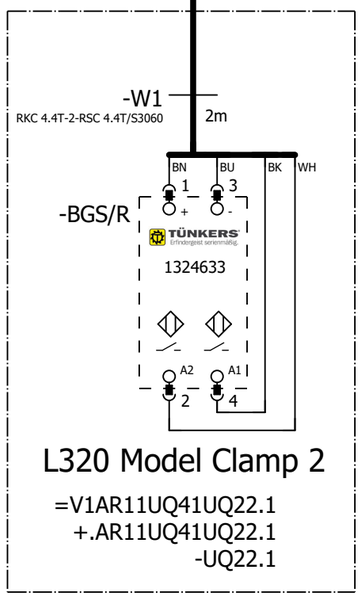

L320 Model Clamp 2

=V1AR11UQ41UQ22.1
+.AR11UQ41UQ22.1
-UQ22.1

=V1AR11UQ41 -UQ22.1-BGS/R L320 Model Clamp 2

=V1AR11UQ41UQ21+.AR11UQ41UQ21/1

=V1AR11UQ41UQ23+.AR11UQ41UQ23/1

			Date	12/22/2022	Volvo Trucks North America	Valiant TMS	FESTO DQ CONNECTION QN22	Drawing name: =2V04&EFS-EL	= V1AR11UQ41UQ22
			Ed.	MKLEPADLO					+ V1AR11UQ41UQ22
			Appr		P6700 Underbody Mainline - Cell 2V04			Document type: EFS	Project nr: 22-16151
Modification	Date	Name	Original		Replacement of	Replaced by	Scale 1:1		Page 1 / 1630

0	1	2	3	4	5	6	7	8	9

=V1AR11UQ41KF3
+.AR11UQ41

-KF3.24
=V1AR11UQ41KF3+V1AR11UQ41/5.1

L320 Model Vacuums (RST)
=V1AR11UQ41KF3
+V1AR11UQ41
-QN23.1_Q
=V1AR11UQ41KF3
+V1AR11UQ41/5.3
DO:44

L320 Model Vacuums (SET)
=V1AR11UQ41KF3
+V1AR11UQ41
-QN23.2_Q
=V1AR11UQ41KF3
+V1AR11UQ41/5.3
DO:45

1.1 Pneumatic Valve
1.2 Pneumatic Valve

-QN23 .1 .2

=V1AR11UQ41KF3+V1AR11UQ41/3.1
+.AR11UQ41UQ23.1-W1

-W1
RKC 4.4T-2-RSC 4.4T/S3060
2m

BN BU WH WN

-BGS/R
/1.0
Mb= -1-10 bar

1 L+
3 L-
4 Out 1/ IO-Link
2 Out 2

18-30 V VDC

M12
PN7094

L320 Model Vacuums

=V1AR11UQ41UQ23.1
+.AR11UQ41UQ23.1
-UQ23.1

=V1AR11UQ41 -UQ23.1-BGS/R L320 Model Vacuums

=V1AR11UQ41UQ22+.AR11UQ41UQ22/1

=V1AR11UQ41UQ24+.AR11UQ41UQ24/1

			Date	12/22/2022	Volvo Trucks North America	Valiant TMS	FESTO DQ CONNECTION QN23	Drawing name: =2V04&EFS-EL	= V1AR11UQ41UQ23
			Ed.	MKLEPADLO					+ V1AR11UQ41UQ23
			Appr		P6700 Underbody Mainline - Cell 2V04			Document type: EFS	Project nr: 22-16151
Modification	Date	Name	Original		Replacement of	Replaced by	Scale 1:1		Page 1 / 1630

0	1	2	3	4	5	6	7	8	9

=V1AR11UQ41KF3
+.AR11UQ41

-KF3.24
=V1AR11UQ41KF3+V1AR11UQ41/5.1

L320 Model Clamps 3 (RST)	L320 Model Clamps 3 (SET)
=V1AR11UQ41KF3	=V1AR11UQ41KF3
+V1AR11UQ41	+V1AR11UQ41
-QN24.1_Q	-QN24.2_Q
=V1AR11UQ41KF3	=V1AR11UQ41KF3
+V1AR11UQ41/5.3	+V1AR11UQ41/5.3
DO:46	DO:47
2.1 Pneumatic Valve	2.2 Pneumatic Valve

-QN24 .1 .2

=V1AR11UQ41KF3+V1AR11UQ41/3.2
+.AR11UQ41UQ24.1-W1

-W1
RKC 4.4T-3-RSC 4.4T/S3060
3m

BN BU BK WH

-BGS/R
1 3
+ -
TÜNKERS
1324633
A2 A1
2 4

L320 Model Clamp 3

=V1AR11UQ41UQ24.1
+.AR11UQ41UQ24.1
-UQ24.1

=V1AR11UQ41
-UQ24.1-BGS/R
L320 Model
Clamp 3

=V1AR11UQ41KF3+V1AR11UQ41/3.3
+.AR11UQ41UQ24.2-W1

-W1
RKC 4.4T-3-RSC 4.4T/S3060
3m

BN BU BK WH

-BGS/R
1 3
+ -
TÜNKERS
1324633
A2 A1
2 4

L320 Model Clamp 3

=V1AR11UQ41UQ24.2
+.AR11UQ41UQ24.2
-UQ24.2

=V1AR11UQ41
-UQ24.2-BGS/R
L320 Model
Clamp 3

=V1AR11UQ41UQ23+.AR11UQ41UQ23/1

=V1AR11WC1+.AR11UC01/1

			Date	12/22/2022	Volvo Trucks North America	Valiant TMS	FESTO DQ CONNECTION QN24	Drawing name: =2V04&EFS-EL	= V1AR11UQ41UQ24
			Ed.	MKLEPADLO					+ V1AR11UQ41UQ24
			Appr		P6700 Underbody Mainline - Cell 2V04	Scale 1:1		Document type: EFS	Project nr: 22-16151
Modification	Date	Name	Original		Replacement of	Replaced by			Page 1 / 1630

0	1	2	3	4	5	6	7	8	9

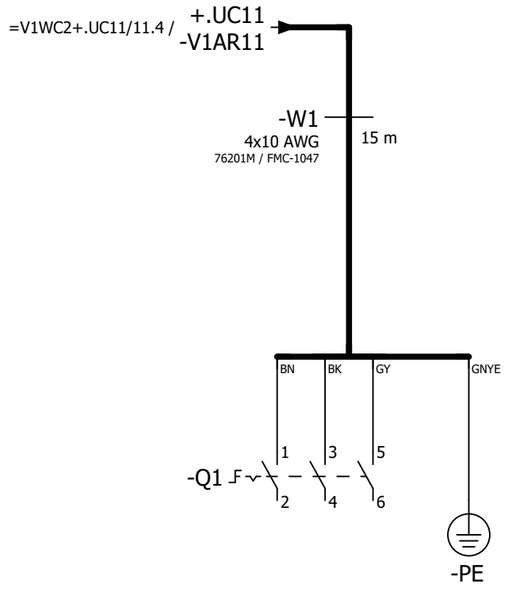

=V1AR11UQ41UQ24+.AR11UQ41UQ24/1

=V1AR12KF1+.AR12UC01/1

			Date	12/22/2022	Volvo Trucks North America		Valiant TMS	Incoming power	Drawing name: =2V04&EFS-EL	= V1AR11WC1
			Ed.	MKLEPADLO						+ V1AR11UC01
			Appr		P6700 Underbody Mainline - Cell 2V04				Document type: EFS	Project nr: 22-16151
Modification	Date	Name	Original		Replacement of	Replaced by	Scale 1:1			Page 1 / 1630

0	1	2	3	4	5	6	7	8	9

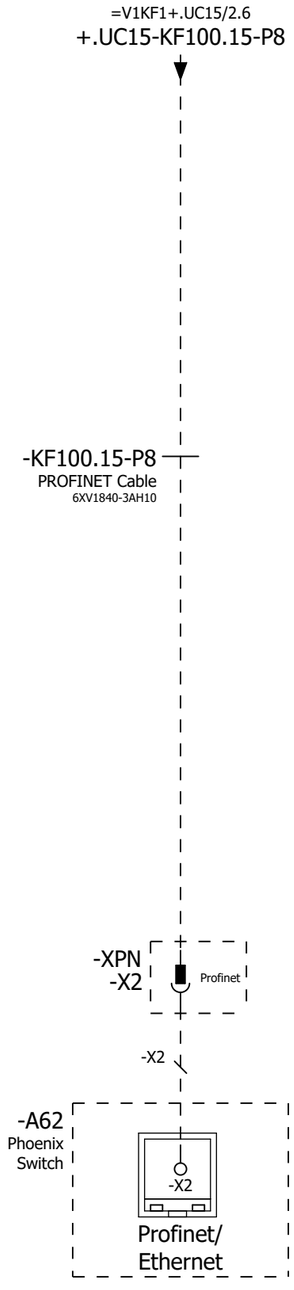

=V1AR11WC1+.AR11UC01/1

=V1AR12UQ41BG0+.AR12UQ41/1

			Date	12/22/2022	Volvo Trucks North America	Valiant TMS	Incoming Profinet	Drawing name: =2V04&EFS-EL	= V1AR12KF1
			Ed.	MKLEPADLO					+ V1AR12UC01
			Appr		P6700 Underbody Mainline - Cell 2V04	Scale 1:1		Document type: EFS	Project nr: 22-16151
Modification	Date	Name	Original		Replacement of	Replaced by			Page 1 / 1630

0	1	2	3	4	5	6	7	8	9

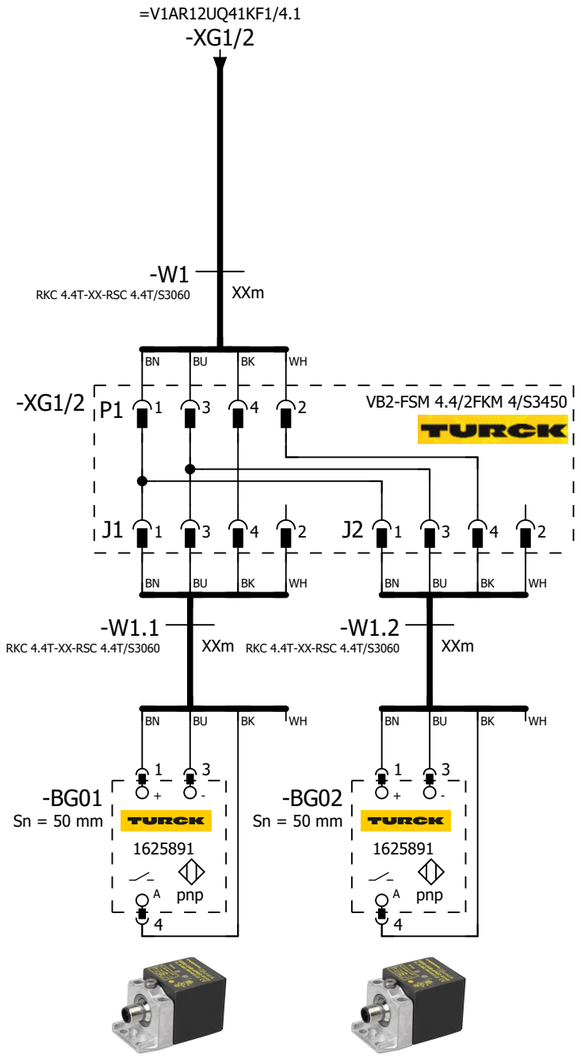

=V1AR12UQ41
-BG01
Floor Frame Assy
(Common)

=V1AR12UQ41
-BG02
Floor Frame Assy
(Common)

UPDATE CABLE LENGTH
WAITING FOR JT

=V1AR12KF1+.AR12UC01/1

=V1AR12UQ41KF1/1

			Date	12/22/2022	Volvo Trucks North America	Valiant TMS	SENSORS	Drawing name: =2V04&EFS-EL	= V1AR12UQ41BG0
			Ed.	MKLEPADLO					+ V1AR12UQ41
			Appr		P6700 Underbody Mainline - Cell 2V04			Document type: EFS	Project nr: 22-16151
Modification	Date	Name	Original		Replacement of / Replaced by	Scale 1:1			Page 1 / 1630

0	1	2	3	4	5	6	7	8	9

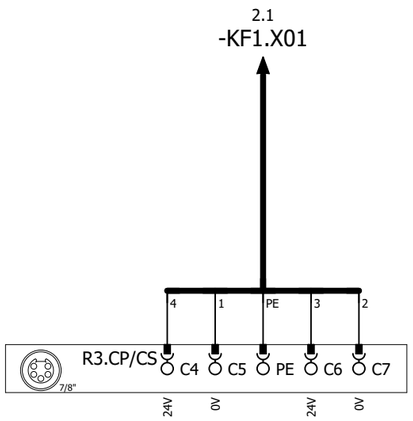

DC 24V (OUT)

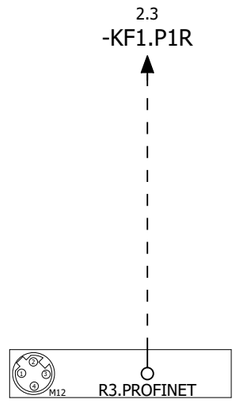

R3.ETHERNET

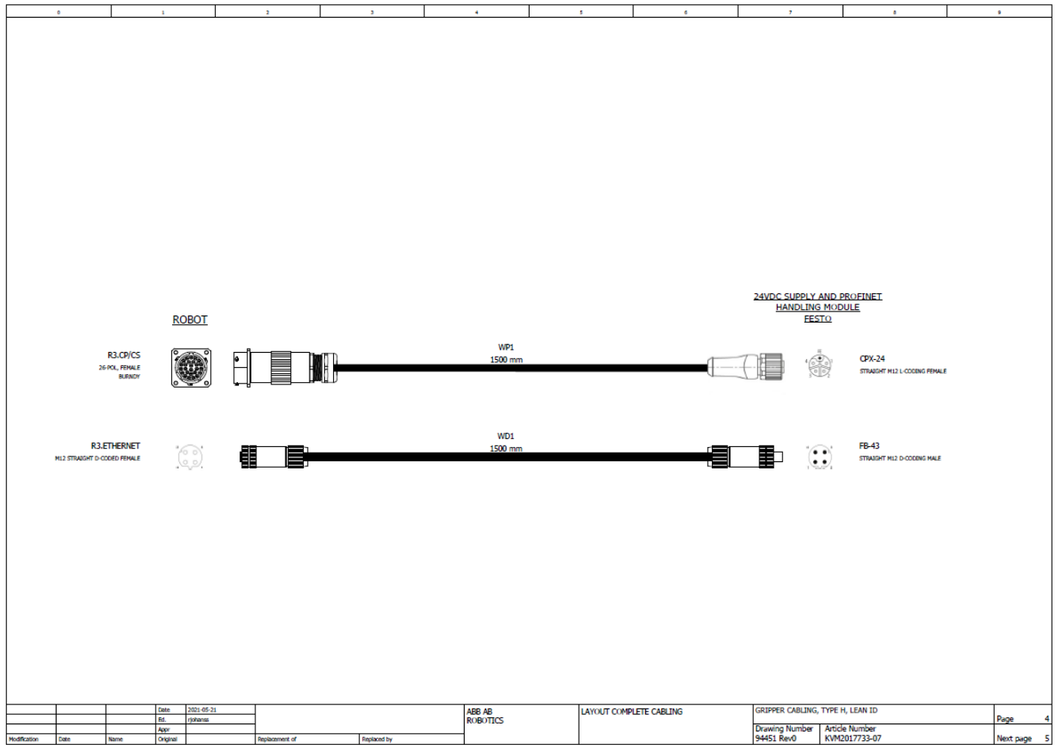

=V1AR12UQ41BG0/1

2

			Date	12/22/2022	Volvo Trucks North America		Valiant TMS	24VDC SUPPLY AND PROFINET HANDLING MODULE	Drawing name: =2V04&EFS-EL	= V1AR12UQ41KF1
			Ed.	MKLEPADLO						+ V1AR12UQ41
			Appr		P6700 Underbody Mainline - Cell 2V04				Document type: EFS	Project nr: 22-16151
Modification	Date	Name	Original		Replacement of	Replaced by	Scale 1:1			Page 1 / 1630

0	1	2	3	4	5	6	7	8	9

1.3 / -KF1.X01

-W1
RSM RKM 56-2M/S3059
2m

1.5 / -KF1.P1R

-WF1
PROFINET Cable
6XV1840-3AH10

-KF1

X20 7/8" 1 2 PE 3 4 5
0V_VAL / OUT
0V_EL / SEN
FE
24V_EL / SEN
24V_VAL / OUT

ON
OFF
1 2 1 2

M12 -TP1
M12 -TP2

FESTO
Bus node + Interlinking block
548755 + 550208

DI:0	DI 0 X1:4	V1AR12UQ41UQ1.1-BGS	Common Vacuums (SET)
DI:1	DI 1 X1:2	DI:1	Spare
DI:2	DI 2 X2:4	V1AR12UQ41UQ2.1-BGS	L230/320 Model Vacuums (SET)
DI:3	DI 3 X2:2	DI:3	Spare
DI:4	DI 4 X3:4	V1AR12UQ41UQ3.1-BGS	L290 Model Vacuums (SET)
DI:5	DI 5 X3:2	DI:5	Spare
DI:6	DI 6 X4:4	V1AR12UQ41UQ4.1-BGS	L320 Model Vacuums (SET)
DI:7	DI 7 X4:2	DI:7	Spare
DI:8	DI 8 X5:4	V1AR12UQ41UQ5.1-BGR	Common Clamp (RESET)
DI:9	DI 9 X5:2	V1AR12UQ41UQ5.1-BGS	Common Clamp (SET)
DI:10	DI 10 X6:4	V1AR12UQ41UQ5.2-BGR	Common Clamp (RESET)
DI:11	DI 11 X6:2	V1AR12UQ41UQ5.2-BGS	Common Clamp (SET)
DI:12	DI 12 X7:4	V1AR12UQ41UQ6.1-BGR	L150 Model Clamp (RESET)
DI:13	DI 13 X7:2	V1AR12UQ41UQ6.1-BGS	L150 Model Clamp (SET)
DI:14	DI 14 X8:4	V1AR12UQ41UQ6.2-BGR	L150 Model Clamp (RESET)
DI:15	DI 15 X8:2	V1AR12UQ41UQ6.2-BGS	L150 Model Clamp (SET)

-KF1.11

FESTO
CPX-M-AB-8-M12X2-5POL
549335

X1 X2 X3 X4 X5 X6 X7 X8
M12
24V | DI 1 | 0V | DI 0 | FE
24V | DI 3 | 0V | DI 2 | FE
24V | DI 5 | 0V | DI 4 | FE
24V | DI 7 | 0V | DI 6 | FE
24V | DI 9 | 0V | DI 8 | FE
24V | DI 11 | 0V | DI 10 | FE
24V | DI 13 | 0V | DI 12 | FE
24V | DI 15 | 0V | DI 14 | FE
1 2 3 4 5
BN WH BU BK

+.AR12UQ41UQ1.1-W1
=V1AR12UQ41UQ1+.AR12UQ41UQ1/1.1

+.AR12UQ41UQ2.1-W1
=V1AR12UQ41UQ2+.AR12UQ41UQ2/1.1

+.AR12UQ41UQ3.1-W1
=V1AR12UQ41UQ3+.AR12UQ41UQ3/1.1

+.AR12UQ41UQ4.1-W1
=V1AR12UQ41UQ4+.AR12UQ41UQ4/1.1

+.AR12UQ41UQ5.1-W1
=V1AR12UQ41UQ5+.AR12UQ41UQ5/1.1

+.AR12UQ41UQ5.2-W1
=V1AR12UQ41UQ5+.AR12UQ41UQ5/1.2

+.AR12UQ41UQ6.1-W1
=V1AR12UQ41UQ6+.AR12UQ41UQ6/1.1

+.AR12UQ41UQ6.2-W1
=V1AR12UQ41UQ6+.AR12UQ41UQ6/1.2

1 3

			Date	12/22/2022	Volvo Trucks North America	Valiant TMS	CONNECTING MOD. FOR MPA MANIFOLD	Drawing name: =2V04&EFS-EL	= V1AR12UQ41KF1
			Ed.	MKLEPADLO					+ V1AR12UQ41
			Appr		P6700 Underbody Mainline - Cell 2V04	Scale 1:1		Document type: EFS	Project nr: 22-16151
Modification	Date	Name	Original		Replacement of	Replaced by			Page 2 / 1630

0	1	2	3	4	5	6	7	8	9

-KF1.12

FESTO

CPX-M-AB-8-M12X2-5POL

549335

DI:16	DI 0 X1:4	V1AR12UQ41UQ7.1-BGR	L230 Model Clamp (RESET)
DI:17	DI 1 X1:2	V1AR12UQ41UQ7.1-BGS	L230 Model Clamp (SET)
DI:18	DI 2 X2:4	V1AR12UQ41UQ7.2-BGR	L230 Model Clamp (RESET)
DI:19	DI 3 X2:2	V1AR12UQ41UQ7.2-BGS	L230 Model Clamp (SET)
DI:20	DI 4 X3:4	V1AR12UQ41UQ8.1-BGR	L290 Model Clamp (RESET)
DI:21	DI 5 X3:2	V1AR12UQ41UQ8.1-BGS	L290 Model Clamp (SET)
DI:22	DI 6 X4:4	V1AR12UQ41UQ8.2-BGR	L290 Model Clamp (RESET)
DI:23	DI 7 X4:2	V1AR12UQ41UQ8.2-BGS	L290 Model Clamp (SET)
DI:24	DI 8 X5:4	V1AR12UQ41UQ9.1-BGR	L320 Model Clamp (RESET)
DI:25	DI 9 X5:2	V1AR12UQ41UQ9.1-BGS	L320 Model Clamp (SET)
DI:26	DI 10 X6:4	V1AR12UQ41UQ9.2-BGR	L320 Model Clamp (RESET)
DI:27	DI 11 X6:2	V1AR12UQ41UQ9.2-BGS	L320 Model Clamp (SET)
DI:28	DI 12 X7:4	DI:28	Spare
DI:29	DI 13 X7:2	DI:29	Spare
DI:30	DI 14 X8:4	DI:30	Spare
DI:31	DI 15 X8:2	DI:31	Spare

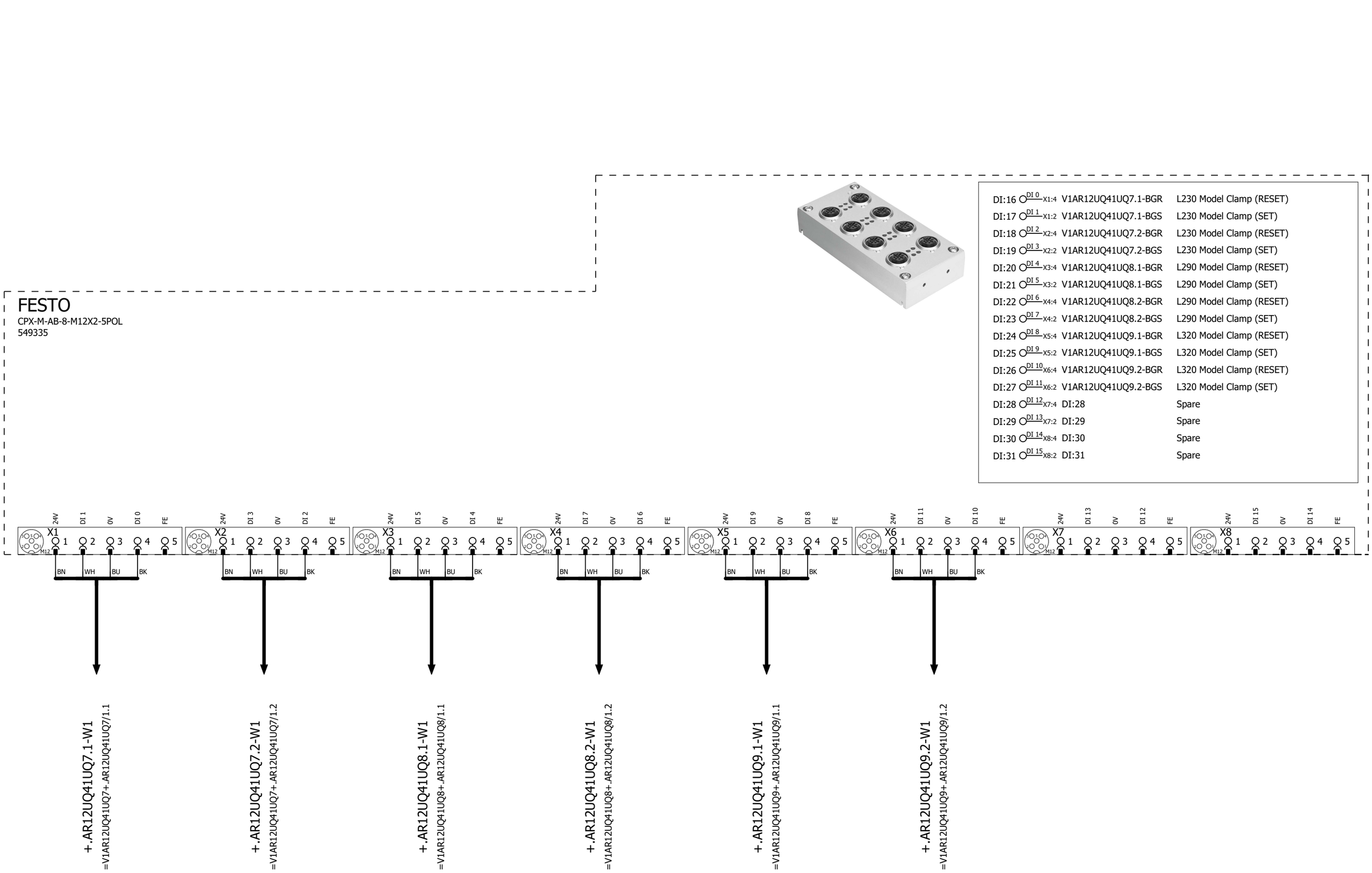

2 4

			Date	12/22/2022	Volvo Trucks North America	Valiant TMS	I/O MOD. DI16 (8 x M12) FOR MPA	Drawing name: =2V04&EFS-EL	= V1AR12UQ41KF1
			Ed.	MKLEPADLO					+ V1AR12UQ41
			Appr		P6700 Underbody Mainline - Cell 2V04			Document type: EFS	Project nr: 22-16151
Modification	Date	Name	Original		Replacement of	Replaced by	Scale 1:1		Page 3 / 1630

0	1	2	3	4	5	6	7	8	9

-KF1.13

FESTO
CPX-M-AB-8-M12X2-5POL
549335

DI:32	DI 0 X1:4	V1AR12UQ41-BG01	Sensor Floor Frame Assy (Common)
DI:33	DI 1 X1:2	V1AR12UQ41-BG02	Sensor Floor Frame Assy (Common)
DI:34	DI 2 X2:4	DI:34	Spare
DI:35	DI 3 X2:2	DI:35	Spare
DI:36	DI 4 X3:4	DI:36	Spare
DI:37	DI 5 X3:2	DI:37	Spare
DI:38	DI 6 X4:4	DI:38	Spare
DI:39	DI 7 X4:2	DI:39	Spare
DI:40	DI 8 X5:4	DI:40	Spare
DI:41	DI 9 X5:2	DI:41	Spare
DI:42	DI 10 X6:4	DI:42	Spare
DI:43	DI 11 X6:2	DI:43	Spare
DI:44	DI 12 X7:4	DI:44	Spare
DI:45	DI 13 X7:2	DI:45	Spare
DI:46	DI 14 X8:4	DI:46	Spare
DI:47	DI 15 X8:2	DI:47	Spare

-XG1/2
=V1AR12UQ41BG0/1.1

3 5

			Date	12/22/2022	Volvo Trucks North America		Valiant TMS	I/O MOD. DI16 (8 x M12) FOR MPA	Drawing name: =2V04&EFS-EL	= V1AR12UQ41KF1
			Ed.	MKLEPADLO						+ V1AR12UQ41
			Appr		P6700 Underbody Mainline - Cell 2V04				Document type: EFS	Project nr: 22-16151
Modification	Date	Name	Original		Replacement of	Replaced by	Scale 1:1			Page 4 / 1630

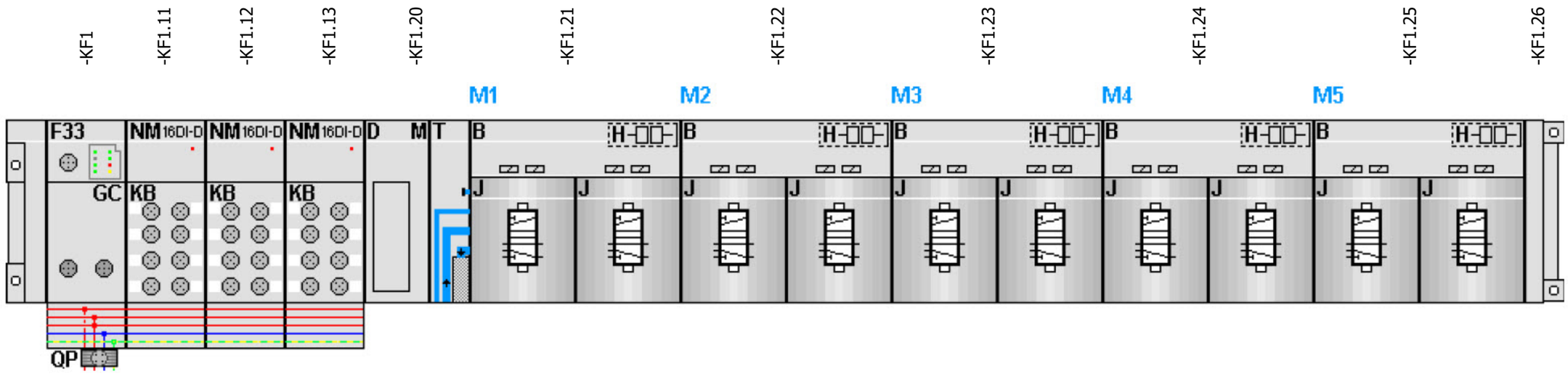

-KF1.21
=V1AR12UQ41UQ1+.AR12UQ41UQ1/1.3
=V1AR12UQ41UQ2+.AR12UQ41UQ2/1.3

FESTO

=V1AR12UQ41UQ1+.AR12UQ41UQ1/1.4	DO:0 DO 0 1.1	-QN1.1_Q	Common Vacuums (RST)
=V1AR12UQ41UQ1+.AR12UQ41UQ1/1.4	DO:1 DO 1 1.2	-QN1.2_Q	Common Vacuums (SET)
=V1AR12UQ41UQ2+.AR12UQ41UQ2/1.4	DO:2 DO 2 2.1	-QN2.1_Q	L230/320 Model Vacuums (RST)
=V1AR12UQ41UQ2+.AR12UQ41UQ2/1.4	DO:3 DO 3 2.2	-QN2.2_Q	L230/320 Model Vacuums (SET)

-KF1.22
=V1AR12UQ41UQ3+.AR12UQ41UQ3/1.3
=V1AR12UQ41UQ4+.AR12UQ41UQ4/1.3

FESTO

=V1AR12UQ41UQ3+.AR12UQ41UQ3/1.4	DO:4 DO 4 1.1	-QN3.1_Q	L290 Model Vacuums (RST)
=V1AR12UQ41UQ3+.AR12UQ41UQ3/1.4	DO:5 DO 5 1.2	-QN3.2_Q	L290 Model Vacuums (SET)
=V1AR12UQ41UQ4+.AR12UQ41UQ4/1.4	DO:6 DO 6 2.1	-QN4.1_Q	L320 Model Vacuums (RST)
=V1AR12UQ41UQ4+.AR12UQ41UQ4/1.4	DO:7 DO 7 2.2	-QN4.2_Q	L320 Model Vacuums (SET)

-KF1.23
=V1AR12UQ41UQ5+.AR12UQ41UQ5/1.3
=V1AR12UQ41UQ6+.AR12UQ41UQ6/1.3

FESTO

=V1AR12UQ41UQ5+.AR12UQ41UQ5/1.4	DO:8 DO 8 1.1	-QN5.1_Q	Common Clamps (RST)
=V1AR12UQ41UQ5+.AR12UQ41UQ5/1.4	DO:9 DO 9 1.2	-QN5.2_Q	Common Clamps (SET)
=V1AR12UQ41UQ6+.AR12UQ41UQ6/1.4	DO:10 DO 10 2.1	-QN6.1_Q	L150 Model Clamps (RST)
=V1AR12UQ41UQ6+.AR12UQ41UQ6/1.4	DO:11 DO 11 2.2	-QN6.2_Q	L150 Model Clamps (SET)

-KF1.24
=V1AR12UQ41UQ7+.AR12UQ41UQ7/1.3
=V1AR12UQ41UQ8+.AR12UQ41UQ8/1.3

FESTO

=V1AR12UQ41UQ7+.AR12UQ41UQ7/1.4	DO:12 DO 12 1.1	-QN7.1_Q	L230 Model Clamps (RST)
=V1AR12UQ41UQ7+.AR12UQ41UQ7/1.4	DO:13 DO 13 1.2	-QN7.2_Q	L230 Model Clamps (SET)
=V1AR12UQ41UQ8+.AR12UQ41UQ8/1.4	DO:14 DO 14 2.1	-QN8.1_Q	L290 Model Clamps (RST)
=V1AR12UQ41UQ8+.AR12UQ41UQ8/1.4	DO:15 DO 15 2.2	-QN8.2_Q	L290 Model Clamps (SET)

-KF1.25
=V1AR12UQ41UQ9+.AR12UQ41UQ9/1.3
=V1AR12UQ41UQ10+.AR12UQ41UQ10/1.3

FESTO

=V1AR12UQ41UQ9+.AR12UQ41UQ9/1.4	DO:16 DO 16 1.1	-QN9.1_Q	L320 Model Clamps (RST)
=V1AR12UQ41UQ9+.AR12UQ41UQ9/1.4	DO:17 DO 17 1.2	-QN9.2_Q	L320 Model Clamps (SET)
=V1AR12UQ41UQ10+.AR12UQ41UQ10/1.4	DO:18 DO 18 2.1	-QN10.1_Q	Spare (RST)
=V1AR12UQ41UQ10+.AR12UQ41UQ10/1.4	DO:19 DO 19 2.2	-QN10.2_Q	Spare (SET)

4

=V1AR12UQ41UQ1+.AR12UQ41UQ1/1

			Date	12/22/2022	Volvo Trucks North America	Valiant TMS	CONNECTING MOD. FOR FESTO DQ	Drawing name: =2V04&EFS-EL	= V1AR12UQ41KF1 + V1AR12UQ41
			Ed.	MKLEPADLO	P6700 Underbody Mainline - Cell 2V04				
			Appr					Document type: EFS	Project nr: 22-16151
Modification	Date	Name	Original		Replacement of / Replaced by	Scale 1:1			Page 5 / 1630

0	1	2	3	4	5	6	7	8	9

=V1AR12UQ41KF1
+.AR12UQ41

-KF1.21
=V1AR12UQ41KF1+V1AR12UQ41/5.1

Common Vacuums (RST)	Common Vacuums (SET)
=V1AR12UQ41KF1	=V1AR12UQ41KF1
+V1AR12UQ41	+V1AR12UQ41
-QN1.1_Q	-QN1.2_Q
=V1AR12UQ41KF1	=V1AR12UQ41KF1
+V1AR12UQ41/5.3	+V1AR12UQ41/5.3
DO:0	DO:1
1.1 Pneumatic Valve	1.2 Pneumatic Valve

-QN1 .1 .2

UPDATE CABLE LENGTH
WAITING FOR JT

=V1AR12UQ41KF1+V1AR12UQ41/2.1
+.AR12UQ41UQ1.1-W1

-W1
RKC 4.4T-XX-RSC 4.4T/S3060
XXm

BN BU WH WN

-BGS/R
/1.0
Mb= -1-10 bar

1 L+ | 3 L- | 4 Out 1/ IO-Link | 2 Out 2

18-30 V VDC

M12

PN7094

Common Vacuums

=V1AR12UQ41UQ1.1
+.AR12UQ41UQ1.1
-UQ1.1

=V1AR12UQ41
-UQ1.1-BGS/R
Common
Vacuums

=V1AR12UQ41KF1+V1AR12UQ41/5

=V1AR12UQ41UQ2+.AR12UQ41UQ2/1

			Date	12/22/2022	Volvo Trucks North America	Valiant TMS	FESTO DQ CONNECTION QN1	Drawing name: =2V04&EFS-EL	= V1AR12UQ41UQ1
			Ed.	MKLEPADLO					+ V1AR12UQ41UQ1
			Appr		P6700 Underbody Mainline - Cell 2V04	Scale 1:1		Document type: EFS	Project nr: 22-16151
Modification	Date	Name	Original		Replacement of	Replaced by			Page 1 / 1630

0	1	2	3	4	5	6	7	8	9

=V1AR12UQ41KF1
+.AR12UQ41

-KF1.21
=V1AR12UQ41KF1+V1AR12UQ41/5.1

L230/320 Model Vacuums (RST)
=V1AR12UQ41KF1
+V1AR12UQ41
-QN2.1_Q
=V1AR12UQ41KF1
+V1AR12UQ41/5.3
DO:2

L230/320 Model Vacuums (SET)
=V1AR12UQ41KF1
+V1AR12UQ41
-QN2.2_Q
=V1AR12UQ41KF1
+V1AR12UQ41/5.3
DO:3

2.1 Pneumatic Valve

2.2 Pneumatic Valve

-QN2 .1 .2

UPDATE CABLE LENGTH
WAITING FOR RWD

=V1AR12UQ41KF1+V1AR12UQ41/2.2
+.AR12UQ41UQ2.1-W1

-W1
RKC 4.4T-XX-RSC 4.4T/S3060
XXm

BN BU WH WN

-BGS/R
/1.0
Mb= -1-10 bar

1 L+
3 L-
4 Out 1/ IO-Link
2 Out 2

18-30 V VDC

M12

PN7094

L230/320 Model Vacuums

=V1AR12UQ41UQ2.1
+.AR12UQ41UQ2.1
-UQ2.1

=V1AR12UQ41
-UQ2.1-BGS/R
L230/320 Model
Vacuums

=V1AR12UQ41UQ1+.AR12UQ41UQ1/1

=V1AR12UQ41UQ3+.AR12UQ41UQ3/1

			Date	12/22/2022	Volvo Trucks North America	Valiant TMS	FESTO DQ CONNECTION QN2	Drawing name: =2V04&EFS-EL	= V1AR12UQ41UQ2
			Ed.	MKLEPADLO					+ V1AR12UQ41UQ2
			Appr		P6700 Underbody Mainline - Cell 2V04	Scale 1:1		Document type: EFS	Project nr: 22-16151
Modification	Date	Name	Original		Replacement of	Replaced by			Page 1 / 1630

0	1	2	3	4	5	6	7	8	9

=V1AR12UQ41KF1
+.AR12UQ41

-KF1.22
=V1AR12UQ41KF1+V1AR12UQ41/5.1

L290 Model Vacuums (RST)	L290 Model Vacuums (SET)
=V1AR12UQ41KF1	=V1AR12UQ41KF1
+V1AR12UQ41	+V1AR12UQ41
-QN3.1_Q	-QN3.2_Q
=V1AR12UQ41KF1	=V1AR12UQ41KF1
+V1AR12UQ41/5.3	+V1AR12UQ41/5.3
DO:4	DO:5
1.1 Pneumatic Valve	1.2 Pneumatic Valve

-QN3 .1 .2

UPDATE CABLE LENGTH
WAITING FOR JT

=V1AR12UQ41KF1+V1AR12UQ41/2.3
+.AR12UQ41UQ3.1-W1

-W1
RKC 4.4T-XX-RSC 4.4T/S3060
XXm

BN BU WH WN

-BGS/R
/1.0
Mb= -1-10 bar

1 L+ 3 L- 4 Out 1/ IO-Link 2 Out 2
18-30 V VDC
M12
PN7094

L290 Model Vacuums

=V1AR12UQ41UQ3.1
+.AR12UQ41UQ3.1
-UQ3.1

=V1AR12UQ41 -UQ3.1-BGS/R L290 Model Vacuums

=V1AR12UQ41UQ2+.AR12UQ41UQ2/1

=V1AR12UQ41UQ4+.AR12UQ41UQ4/1

			Date	12/22/2022	Volvo Trucks North America		Valiant TMS	FESTO DQ CONNECTION QN3	Drawing name: =2V04&EFS-EL	= V1AR12UQ41UQ3
			Ed.	MKLEPADLO						+ V1AR12UQ41UQ3
			Appr		P6700 Underbody Mainline - Cell 2V04				Document type: EFS	Project nr: 22-16151
Modification	Date	Name	Original		Replacement of	Replaced by	Scale 1:1			Page 1 / 1630

0	1	2	3	4	5	6	7	8	9

=V1AR12UQ41KF1
+.AR12UQ41

-KF1.22
=V1AR12UQ41KF1+V1AR12UQ41/5.1

L320 Model Vacuums (RST)	L320 Model Vacuums (SET)
=V1AR12UQ41KF1	=V1AR12UQ41KF1
+V1AR12UQ41	+V1AR12UQ41
-QN4.1_Q	-QN4.2_Q
=V1AR12UQ41KF1	=V1AR12UQ41KF1
+V1AR12UQ41/5.3	+V1AR12UQ41/5.3
DO:6	DO:7
2.1 Pneumatic Valve	2.2 Pneumatic Valve

-QN4 .1 .2

UPDATE CABLE LENGTH
WAITING FOR JT

=V1AR12UQ41KF1+V1AR12UQ41/2.4
+.AR12UQ41UQ4.1-W1

-W1
RKC 4.4T-XX-RSC 4.4T/S3060
XXm

BN BU WH WN

-BGS/R
/1.0
Mb= -1-10 bar

1 L+ | 3 L- | 4 Out 1/ IO-Link | 2 Out 2

18-30 V VDC

M12

PN7094

L320 Model Vacuums

=V1AR12UQ41UQ4.1
+.AR12UQ41UQ4.1
-UQ4.1

=V1AR12UQ41 -UQ4.1-BGS/R L320 Model Vacuums

=V1AR12UQ41UQ3+.AR12UQ41UQ3/1

=V1AR12UQ41UQ5+.AR12UQ41UQ5/1

			Date	12/22/2022	Volvo Trucks North America	Valiant TMS	FESTO DQ CONNECTION QN4	Drawing name: =2V04&EFS-EL	= V1AR12UQ41UQ4
			Ed.	MKLEPADLO					+ V1AR12UQ41UQ4
			Appr		P6700 Underbody Mainline - Cell 2V04			Document type: EFS	Project nr: 22-16151
Modification	Date	Name	Original		Replacement of	Replaced by	Scale 1:1		Page 1 / 1630

0	1	2	3	4	5	6	7	8	9

=V1AR12UQ41KF1
+.AR12UQ41

-KF1.23
=V1AR12UQ41KF1+V1AR12UQ41/5.1

Common Clamps (RST)
=V1AR12UQ41KF1
+V1AR12UQ41
-QN5.1_Q
=V1AR12UQ41KF1
+V1AR12UQ41/5.3
DO:8

Common Clamps (SET)
=V1AR12UQ41KF1
+V1AR12UQ41
-QN5.2_Q
=V1AR12UQ41KF1
+V1AR12UQ41/5.3
DO:9

1.1 Pneumatic Valve

1.2 Pneumatic Valve

-QN5 .1 .2

UPDATE CABLE LENGTH
WAITING FOR JT

=V1AR12UQ41KF1+V1AR12UQ41/2.5
+.AR12UQ41UQ5.1-W1

-W1
RKC 4.4T-XX-RSC 4.4T/S3060
XXm

BN BU BK WH

-BGS/R
1 3
+ -
TÜNKERS
1324638
A2 A1
2 4

Common Clamp

=V1AR12UQ41UQ5.1
+.AR12UQ41UQ5.1
-UQ5.1

=V1AR12UQ41
-UQ5.1-BGS/R
Common
Clamp

=V1AR12UQ41KF1+V1AR12UQ41/2.6
+.AR12UQ41UQ5.2-W1

-W1
RKC 4.4T-XX-RSC 4.4T/S3060
XXm

BN BU BK WH

-BGS/R
1 3
+ -
TÜNKERS
1324638
A2 A1
2 4

Common Clamp

=V1AR12UQ41UQ5.2
+.AR12UQ41UQ5.2
-UQ5.2

=V1AR12UQ41
-UQ5.2-BGS/R
Common
Clamp

=V1AR12UQ41UQ4+.AR12UQ41UQ4/1

=V1AR12UQ41UQ6+.AR12UQ41UQ6/1

			Date	12/22/2022	Volvo Trucks North America	Valiant TMS	FESTO DQ CONNECTION QN5	Drawing name: =2V04&EFS-EL	= V1AR12UQ41UQ5
			Ed.	MKLEPADLO					+ V1AR12UQ41UQ5
			Appr		P6700 Underbody Mainline - Cell 2V04			Document type: EFS	Project nr: 22-16151
Modification	Date	Name	Original		Replacement of	Replaced by	Scale 1:1		Page 1 / 1630

0	1	2	3	4	5	6	7	8	9

=V1AR12UQ41KF1
+.AR12UQ41

-KF1.23
=V1AR12UQ41KF1+V1AR12UQ41/5.1

L150 Model Clamps (RST)	L150 Model Clamps (SET)
=V1AR12UQ41KF1	=V1AR12UQ41KF1
+V1AR12UQ41	+V1AR12UQ41
-QN6.1_Q	-QN6.2_Q
=V1AR12UQ41KF1	=V1AR12UQ41KF1
+V1AR12UQ41/5.3	+V1AR12UQ41/5.3
DO:10	DO:11
2.1 Pneumatic Valve	2.2 Pneumatic Valve

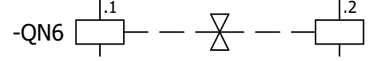

UPDATE CABLE LENGTH
WAITING FOR JT

=V1AR12UQ41KF1+V1AR12UQ41/2.8
+.AR12UQ41UQ6.1-W1

=V1AR12UQ41KF1+V1AR12UQ41/2.9
+.AR12UQ41UQ6.2-W1

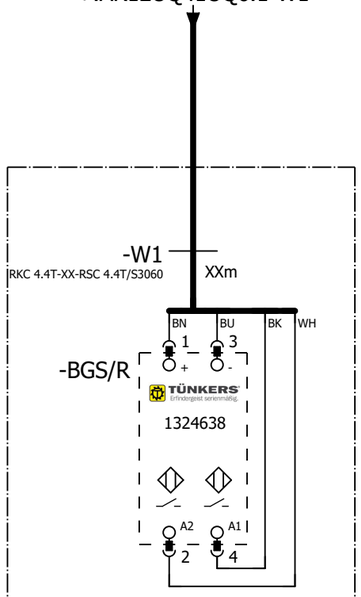

L150 Model Clamp
=V1AR12UQ41UQ6.1
+.AR12UQ41UQ6.1
-UQ6.1

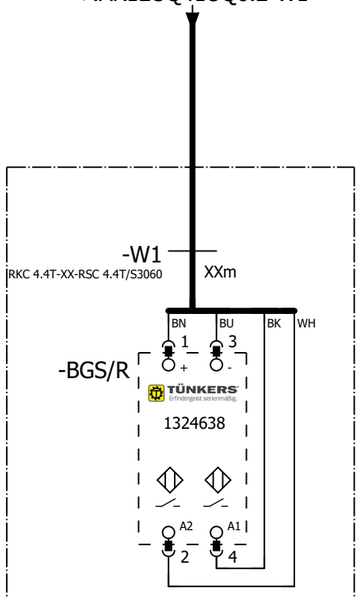

L150 Model Clamp
=V1AR12UQ41UQ6.2
+.AR12UQ41UQ6.2
-UQ6.2

=V1AR12UQ41
-UQ6.1-BGS/R
L150 Model
Clamp

=V1AR12UQ41
-UQ6.2-BGS/R
L150 Model
Clamp

=V1AR12UQ41UQ5+.AR12UQ41UQ5/1

=V1AR12UQ41UQ7+.AR12UQ41UQ7/1

			Date	12/22/2022	Volvo Trucks North America	Valiant TMS	FESTO DQ CONNECTION QN6	Drawing name: =2V04&EFS-EL	= V1AR12UQ41UQ6
			Ed.	MKLEPADLO					+ V1AR12UQ41UQ6
			Appr		P6700 Underbody Mainline - Cell 2V04			Document type: EFS	Project nr: 22-16151
Modification	Date	Name	Original		Replacement of	Replaced by	Scale 1:1		Page 1 / 1630

0	1	2	3	4	5	6	7	8	9

=V1AR12UQ41KF1
+.AR12UQ41

-KF1.24
=V1AR12UQ41KF1+V1AR12UQ41/5.1

L230 Model Clamps (RST)	L230 Model Clamps (SET)
=V1AR12UQ41KF1	=V1AR12UQ41KF1
+V1AR12UQ41	+V1AR12UQ41
-QN7.1_Q	-QN7.2_Q
=V1AR12UQ41KF1	=V1AR12UQ41KF1
+V1AR12UQ41/5.3	+V1AR12UQ41/5.3
DO:12	DO:13
1.1 Pneumatic Valve	1.2 Pneumatic Valve

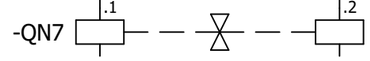

UPDATE CABLE LENGTH
WAITING FOR JT

=V1AR12UQ41KF1+V1AR12UQ41/3.1
+.AR12UQ41UQ7.1-W1

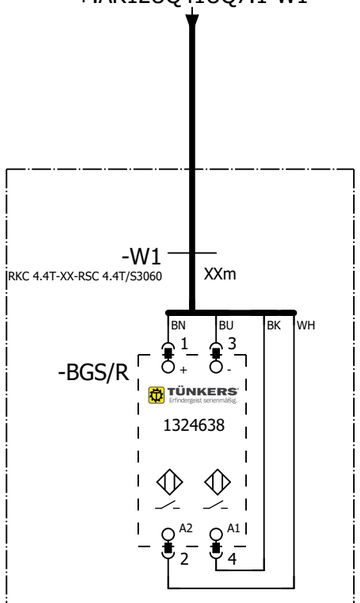

L230 Model Clamp
=V1AR12UQ41UQ7.1
+.AR12UQ41UQ7.1
-UQ7.1

=V1AR12UQ41
-UQ7.1-BGS/R
L230 Model
Clamp

=V1AR12UQ41KF1+V1AR12UQ41/3.2
+.AR12UQ41UQ7.2-W1

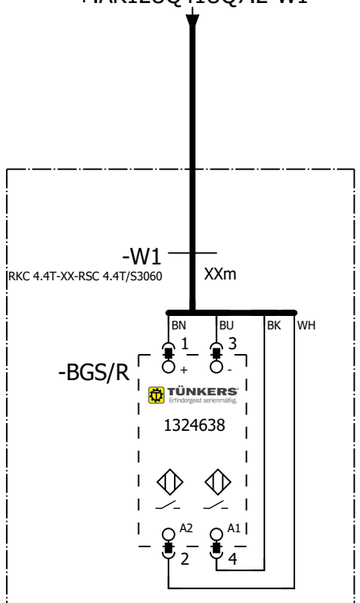

L230 Model Clamp
=V1AR12UQ41UQ7.2
+.AR12UQ41UQ7.2
-UQ7.2

=V1AR12UQ41
-UQ7.2-BGS/R
L230 Model
Clamp

=V1AR12UQ41UQ6+.AR12UQ41UQ6/1

=V1AR12UQ41UQ8+.AR12UQ41UQ8/1

			Date	12/22/2022	Volvo Trucks North America	Valiant TMS	FESTO DQ CONNECTION QN7	Drawing name: =2V04&EFS-EL	= V1AR12UQ41UQ7
			Ed.	MKLEPADLO					+ V1AR12UQ41UQ7
			Appr		P6700 Underbody Mainline - Cell 2V04			Document type: EFS	Project nr: 22-16151
Modification	Date	Name	Original		Replacement of	Replaced by	Scale 1:1		Page 1 / 1630

0	1	2	3	4	5	6	7	8	9

=V1AR12UQ41KF1
+.AR12UQ41

-KF1.24
=V1AR12UQ41KF1+V1AR12UQ41/5.1

L290 Model Clamps (RST)
=V1AR12UQ41KF1
+V1AR12UQ41
-QN8.1_Q
=V1AR12UQ41KF1
+V1AR12UQ41/5.3
DO:14

L290 Model Clamps (SET)
=V1AR12UQ41KF1
+V1AR12UQ41
-QN8.2_Q
=V1AR12UQ41KF1
+V1AR12UQ41/5.3
DO:15

2.1 Pneumatic Valve
2.2 Pneumatic Valve

-QN8 .1 .2

UPDATE CABLE LENGTH
WAITING FOR JT

=V1AR12UQ41KF1+V1AR12UQ41/3.3
+.AR12UQ41UQ8.1-W1

-W1
RKC 4.4T-XX-RSC 4.4T/S3060
XXm

BN BU BK WH
1 3
-BGS/R
TÜNKERS
1324638
A2 A1
2 4

L290 Model Clamp
=V1AR12UQ41UQ8.1
+.AR12UQ41UQ8.1
-UQ8.1

=V1AR12UQ41
-UQ8.1-BGS/R
L290 Model
Clamp

=V1AR12UQ41KF1+V1AR12UQ41/3.4
+.AR12UQ41UQ8.2-W1

-W1
RKC 4.4T-XX-RSC 4.4T/S3060
XXm

BN BU BK WH
1 3
-BGS/R
TÜNKERS
1324638
A2 A1
2 4

L290 Model Clamp
=V1AR12UQ41UQ8.2
+.AR12UQ41UQ8.2
-UQ8.2

=V1AR12UQ41
-UQ8.2-BGS/R
L290 Model
Clamp

=V1AR12UQ41UQ7+.AR12UQ41UQ7/1

=V1AR12UQ41UQ9+.AR12UQ41UQ9/1

			Date	12/22/2022	Volvo Trucks North America	Valiant TMS	FESTO DQ CONNECTION QN8	Drawing name: =2V04&EFS-EL	= V1AR12UQ41UQ8
			Ed.	MKLEPADLO					+ V1AR12UQ41UQ8
			Appr		P6700 Underbody Mainline - Cell 2V04	Scale 1:1		Document type: EFS	Project nr: 22-16151
Modification	Date	Name	Original		Replacement of	Replaced by			Page 1 / 1630

0	1	2	3	4	5	6	7	8	9

=V1AR12UQ41KF1
+.AR12UQ41

-KF1.25
=V1AR12UQ41KF1+V1AR12UQ41/5.1

L320 Model Clamps (RST)
=V1AR12UQ41KF1
+V1AR12UQ41
-QN9.1_Q
=V1AR12UQ41KF1
+V1AR12UQ41/5.3
DO:16

L320 Model Clamps (SET)
=V1AR12UQ41KF1
+V1AR12UQ41
-QN9.2_Q
=V1AR12UQ41KF1
+V1AR12UQ41/5.3
DO:17

1.1 Pneumatic Valve

1.2 Pneumatic Valve

-QN9 .1 .2

=V1AR12UQ41KF1+V1AR12UQ41/3.5
+.AR12UQ41UQ9.1-W1

-W1
RKC 4.4T-XX-RSC 4.4T/S3060
XXm

BN BU BK WH

-BGS/R
1 3
+ -
TÜNKERS
1324638
A2 A1
2 4

L320 Model Clamp
=V1AR12UQ41UQ9.1
+.AR12UQ41UQ9.1
-UQ9.1

=V1AR12UQ41
-UQ9.1-BGS/R
L320 Model
Clamp

=V1AR12UQ41KF1+V1AR12UQ41/3.6
+.AR12UQ41UQ9.2-W1

-W1
RKC 4.4T-XX-RSC 4.4T/S3060
XXm

BN BU BK WH

-BGS/R
1 3
+ -
TÜNKERS
1324638
A2 A1
2 4

L320 Model Clamp
=V1AR12UQ41UQ9.2
+.AR12UQ41UQ9.2
-UQ9.2

=V1AR12UQ41
-UQ9.2-BGS/R
L320 Model
Clamp

=V1AR12UQ41UQ8+.AR12UQ41UQ8/1

=V1AR12UQ41UQ10+.AR12UQ41UQ10/1

			Date	12/22/2022	Volvo Trucks North America	Valiant TMS	FESTO DQ CONNECTION QN9	Drawing name: =2V04&EFS-EL	= V1AR12UQ41UQ9
			Ed.	MKLEPADLO					+ V1AR12UQ41UQ9
			Appr		P6700 Underbody Mainline - Cell 2V04			Document type: EFS	Project nr: 22-16151
Modification	Date	Name	Original		Replacement of	Replaced by	Scale 1:1		Page 1 / 1630

0	1	2	3	4	5	6	7	8	9

=V1AR12UQ41KF1
+.AR12UQ41

-KF1.25
=V1AR12UQ41KF1+V1AR12UQ41/5.1

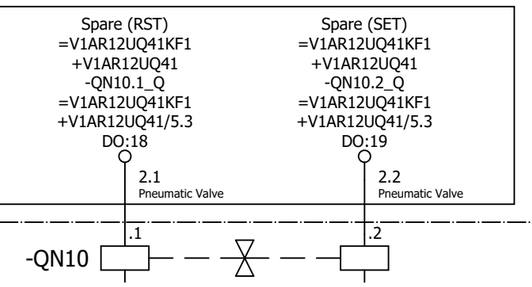

=V1AR12UQ41UQ9+.AR12UQ41UQ9/1

=V1AR12WC1+.AR12UC01/1

			Date	12/22/2022	Volvo Trucks North America	Valiant TMS	FESTO DQ CONNECTION QN10	Drawing name: =2V04&EFS-EL	= V1AR12UQ41UQ10
			Ed.	MKLEPADLO					+ V1AR12UQ41UQ10
			Appr		P6700 Underbody Mainline - Cell 2V04	Scale 1:1		Document type: EFS	Project nr: 22-16151
Modification	Date	Name	Original		Replacement of	Replaced by			Page 1 / 1630

0	1	2	3	4	5	6	7	8	9

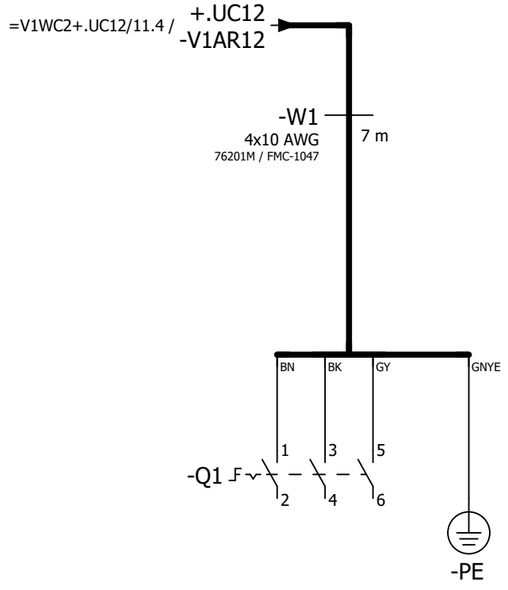

=V1AR12UQ41UQ10+.AR12UQ41UQ10/1

=V1AR13KF1+.AR13UC01/1

			Date	12/22/2022	Volvo Trucks North America		Valiant TMS	Incoming power	Drawing name: =2V04&EFS-EL	= V1AR12WC1
			Ed.	MKLEPADLO						+ V1AR12UC01
			Appr		P6700 Underbody Mainline - Cell 2V04				Document type: EFS / Project nr: 22-16151	Page 1
Modification	Date	Name	Original		Replacement of	Replaced by	Scale 1:1			1630

0	1	2	3	4	5	6	7	8	9

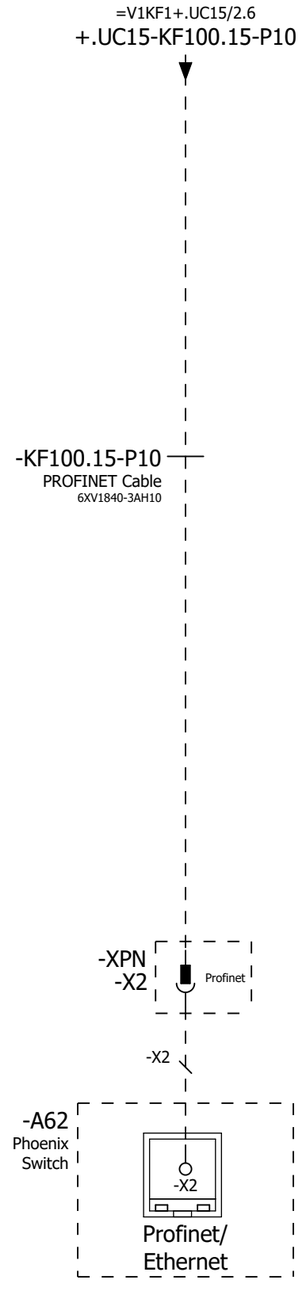

=V1AR12WC1+.AR12UC01/1

=V1AR13UQ41BG0+.AR13UQ41/1

			Date	12/22/2022	Volvo Trucks North America	Valiant TMS	Incoming Profinet	Drawing name: =2V04&EFS-EL	= V1AR13KF1
			Ed.	MKLEPADLO					+ V1AR13UC01
			Appr		P6700 Underbody Mainline - Cell 2V04			Document type: EFS	Project nr: 22-16151
Modification	Date	Name	Original		Replacement of	Replaced by	Scale 1:1		Page 1 / 1630

0	1	2	3	4	5	6	7	8	9

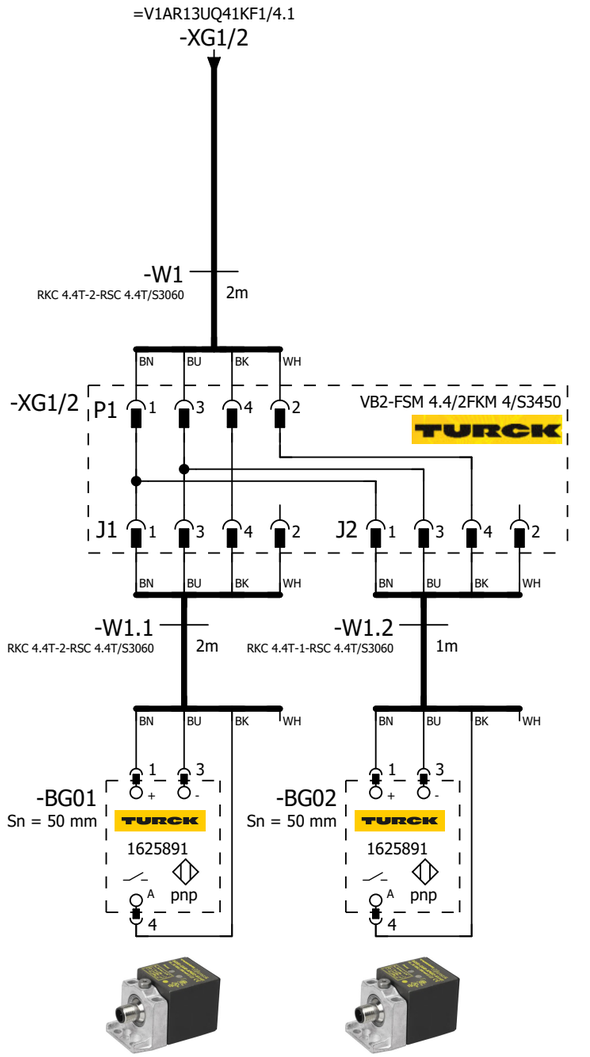

=V1AR13UQ41 -BG01 Floor Frame Assy (Common)	=V1AR13UQ41 -BG02 Floor Frame Assy (Common)

=V1AR13KF1+.AR13UC01/1

=V1AR13UQ41KF1/1

			Date	12/22/2022	Volvo Trucks North America	Valiant TMS	SENSORS	Drawing name: =2V04&EFS-EL	= V1AR13UQ41BG0
			Ed.	MKLEPADLO					+ V1AR13UQ41
			Appr		P6700 Underbody Mainline - Cell 2V04			Document type: EFS	Project nr: 22-16151
Modification	Date	Name	Original		Replacement of	Replaced by	Scale 1:1		Page 1 / 1630

0	1	2	3	4	5	6	7	8	9

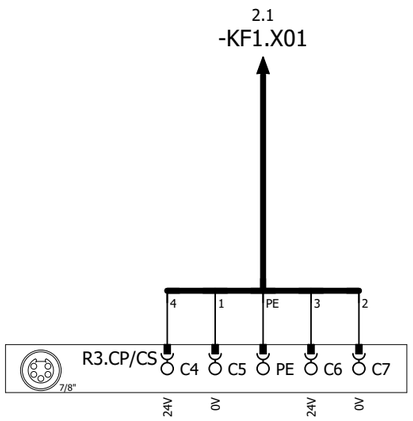

DC 24V (OUT)

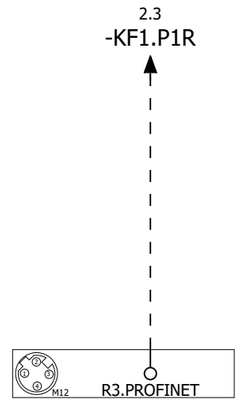

R3.ETHERNET

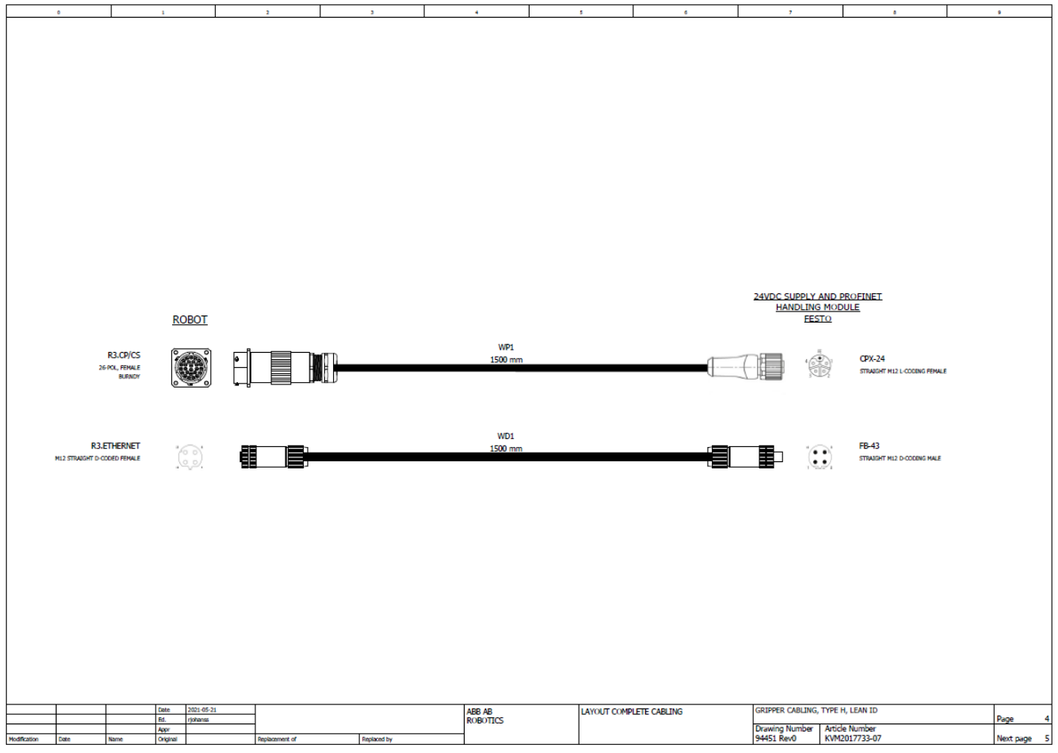

=V1AR13UQ41BG0/1

2

			Date	12/22/2022	Volvo Trucks North America		Valiant TMS	24VDC SUPPLY AND PROFINET HANDLING MODULE	Drawing name: =2V04&EFS-EL	= V1AR13UQ41KF1
			Ed.	MKLEPADLO						+ V1AR13UQ41
			Appr		P6700 Underbody Mainline - Cell 2V04		Scale 1:1		Document type: EFS	Project nr: 22-16151
Modification	Date	Name	Original		Replacement of	Replaced by				Page 1 / 1630

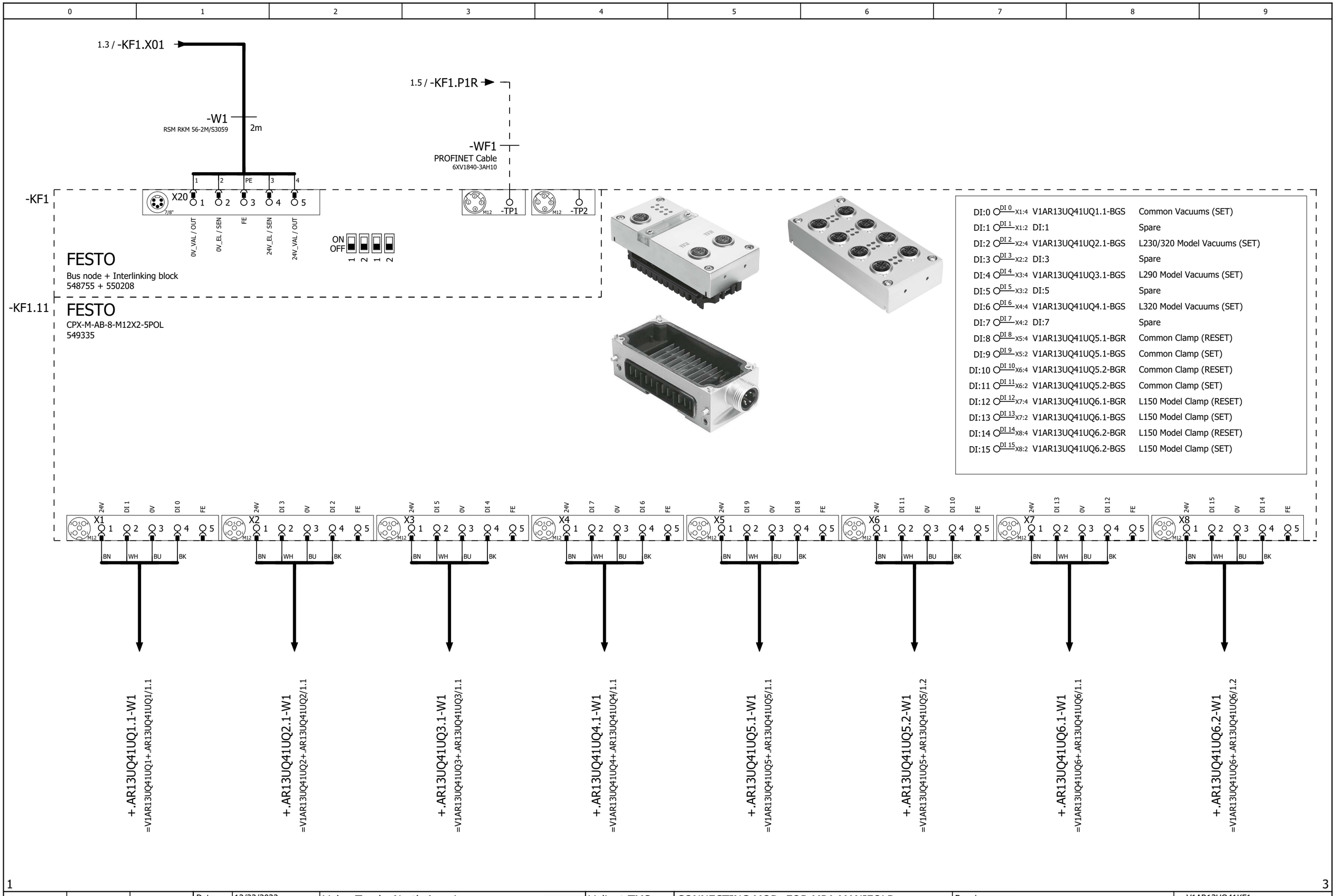

			Date	12/22/2022	Volvo Trucks North America	Valiant TMS	CONNECTING MOD. FOR MPA MANIFOLD	Drawing name: =2V04&EFS-EL	= V1AR13UQ41KF1 + V1AR13UQ41	
			Ed.	MKLEPADLO	P6700 Underbody Mainline - Cell 2V04					
			Appr					Document type: EFS	Project nr: 22-16151	Page 2
Modification	Date	Name	Original		Replacement of / Replaced by	Scale 1:1				1630

DI:16	DI 0 X1:4	V1AR13UQ41UQ7.1-BGR	L230 Model Clamp (RESET)
DI:17	DI 1 X1:2	V1AR13UQ41UQ7.1-BGS	L230 Model Clamp (SET)
DI:18	DI 2 X2:4	V1AR13UQ41UQ7.2-BGR	L230 Model Clamp (RESET)
DI:19	DI 3 X2:2	V1AR13UQ41UQ7.2-BGS	L230 Model Clamp (SET)
DI:20	DI 4 X3:4	V1AR13UQ41UQ8.1-BGR	L290 Model Clamp (RESET)
DI:21	DI 5 X3:2	V1AR13UQ41UQ8.1-BGS	L290 Model Clamp (SET)
DI:22	DI 6 X4:4	V1AR13UQ41UQ8.2-BGR	L290 Model Clamp (RESET)
DI:23	DI 7 X4:2	V1AR13UQ41UQ8.2-BGS	L290 Model Clamp (SET)
DI:24	DI 8 X5:4	V1AR13UQ41UQ9.1-BGR	L320 Model Clamp (RESET)
DI:25	DI 9 X5:2	V1AR13UQ41UQ9.1-BGS	L320 Model Clamp (SET)
DI:26	DI 10 X6:4	V1AR13UQ41UQ9.2-BGR	L320 Model Clamp (RESET)
DI:27	DI 11 X6:2	V1AR13UQ41UQ9.2-BGS	L320 Model Clamp (SET)
DI:28	DI 12 X7:4	DI:28	Spare
DI:29	DI 13 X7:2	DI:29	Spare
DI:30	DI 14 X8:4	DI:30	Spare
DI:31	DI 15 X8:2	DI:31	Spare

-KF1.12

FESTO

CPX-M-AB-8-M12X2-5POL

549335

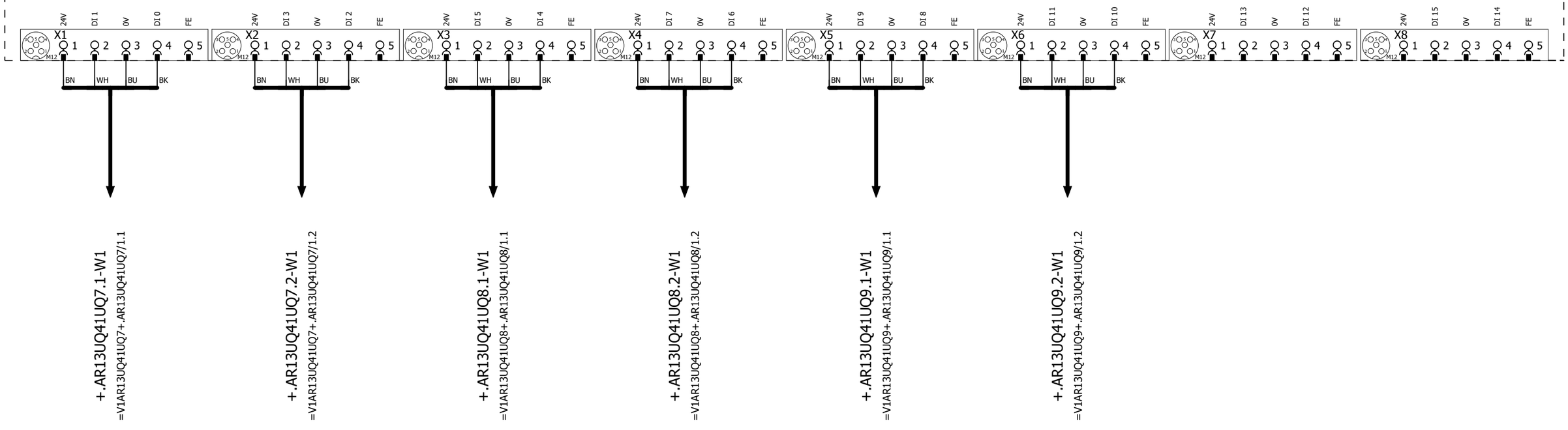

2 4

			Date	12/22/2022	Volvo Trucks North America	Valiant TMS	I/O MOD. DI16 (8 x M12) FOR MPA	Drawing name: =2V04&EFS-EL	= V1AR13UQ41KF1 + V1AR13UQ41
			Ed.	MKLEPADLO	P6700 Underbody Mainline - Cell 2V04			Document type: EFS	Project nr: 22-16151
			Appr						Page 3
Modification	Date	Name	Original		Replacement of / Replaced by	Scale 1:1			1630

0	1	2	3	4	5	6	7	8	9

-KF1.13

FESTO
CPX-M-AB-8-M12X2-5POL
549335

DI:32	DI 0 X1:4	V1AR13UQ41-BG01	Sensor Floor Frame Assy (Common)
DI:33	DI 1 X1:2	V1AR13UQ41-BG02	Sensor Floor Frame Assy (Common)
DI:34	DI 2 X2:4	DI:34	Spare
DI:35	DI 3 X2:2	DI:35	Spare
DI:36	DI 4 X3:4	DI:36	Spare
DI:37	DI 5 X3:2	DI:37	Spare
DI:38	DI 6 X4:4	DI:38	Spare
DI:39	DI 7 X4:2	DI:39	Spare
DI:40	DI 8 X5:4	DI:40	Spare
DI:41	DI 9 X5:2	DI:41	Spare
DI:42	DI 10 X6:4	DI:42	Spare
DI:43	DI 11 X6:2	DI:43	Spare
DI:44	DI 12 X7:4	DI:44	Spare
DI:45	DI 13 X7:2	DI:45	Spare
DI:46	DI 14 X8:4	DI:46	Spare
DI:47	DI 15 X8:2	DI:47	Spare

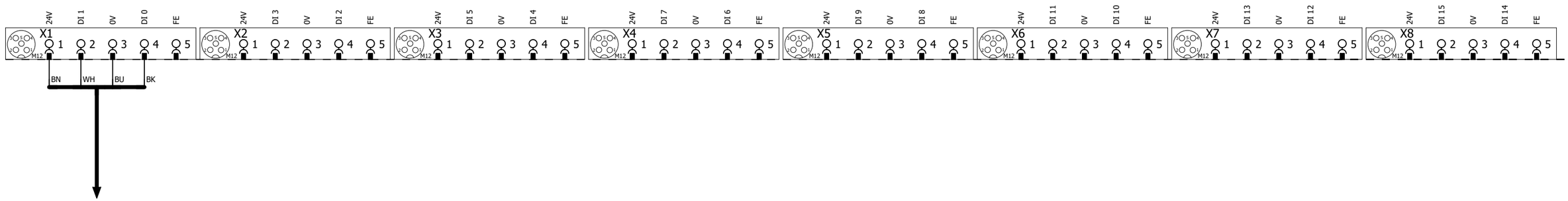

-XG1/2
=V1AR13UQ41BG0/1.1

3 5

			Date	12/22/2022	Volvo Trucks North America		Valiant TMS	I/O MOD. DI16 (8 x M12) FOR MPA	Drawing name: =2V04&EFS-EL	= V1AR13UQ41KF1
			Ed.	MKLEPADLO						+ V1AR13UQ41
			Appr		P6700 Underbody Mainline - Cell 2V04				Document type: EFS	Project nr: 22-16151
Modification	Date	Name	Original		Replacement of	Replaced by	Scale 1:1			Page 4 / 1630

0	1	2	3	4	5	6	7	8	9

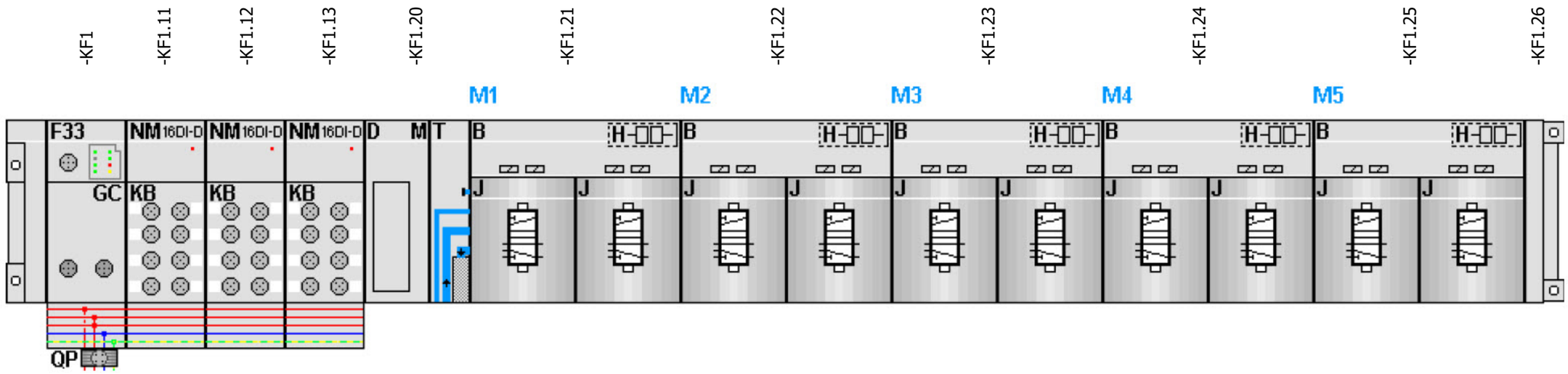

-KF1.21
=V1AR13UQ41UQ1+.AR13UQ41UQ1/1.3
=V1AR13UQ41UQ2+.AR13UQ41UQ2/1.3

FESTO

=V1AR13UQ41UQ1+.AR13UQ41UQ1/1.4	DO:0 DO 0 1.1	-QN1.1_Q	Common Vacuums (RST)
=V1AR13UQ41UQ1+.AR13UQ41UQ1/1.4	DO:1 DO 1 1.2	-QN1.2_Q	Common Vacuums (SET)
=V1AR13UQ41UQ2+.AR13UQ41UQ2/1.4	DO:2 DO 2 2.1	-QN2.1_Q	L230/320 Model Vacuums (RST)
=V1AR13UQ41UQ2+.AR13UQ41UQ2/1.4	DO:3 DO 3 2.2	-QN2.2_Q	L230/320 Model Vacuums (SET)

-KF1.22
=V1AR13UQ41UQ3+.AR13UQ41UQ3/1.3
=V1AR13UQ41UQ4+.AR13UQ41UQ4/1.3

FESTO

=V1AR13UQ41UQ3+.AR13UQ41UQ3/1.4	DO:4 DO 4 1.1	-QN3.1_Q	L290 Model Vacuums (RST)
=V1AR13UQ41UQ3+.AR13UQ41UQ3/1.4	DO:5 DO 5 1.2	-QN3.2_Q	L290 Model Vacuums (SET)
=V1AR13UQ41UQ4+.AR13UQ41UQ4/1.4	DO:6 DO 6 2.1	-QN4.1_Q	L320 Model Vacuums (RST)
=V1AR13UQ41UQ4+.AR13UQ41UQ4/1.4	DO:7 DO 7 2.2	-QN4.2_Q	L320 Model Vacuums (SET)

-KF1.23
=V1AR13UQ41UQ5+.AR13UQ41UQ5/1.3
=V1AR13UQ41UQ6+.AR13UQ41UQ6/1.3

FESTO

=V1AR13UQ41UQ5+.AR13UQ41UQ5/1.4	DO:8 DO 8 1.1	-QN5.1_Q	Common Clamps (RST)
=V1AR13UQ41UQ5+.AR13UQ41UQ5/1.4	DO:9 DO 9 1.2	-QN5.2_Q	Common Clamps (SET)
=V1AR13UQ41UQ6+.AR13UQ41UQ6/1.4	DO:10 DO 10 2.1	-QN6.1_Q	L150 Model Clamps (RST)
=V1AR13UQ41UQ6+.AR13UQ41UQ6/1.4	DO:11 DO 11 2.2	-QN6.2_Q	L150 Model Clamps (SET)

-KF1.24
=V1AR13UQ41UQ7+.AR13UQ41UQ7/1.3
=V1AR13UQ41UQ8+.AR13UQ41UQ8/1.3

FESTO

=V1AR13UQ41UQ7+.AR13UQ41UQ7/1.4	DO:12 DO 12 1.1	-QN7.1_Q	L230 Model Clamps (RST)
=V1AR13UQ41UQ7+.AR13UQ41UQ7/1.4	DO:13 DO 13 1.2	-QN7.2_Q	L230 Model Clamps (SET)
=V1AR13UQ41UQ8+.AR13UQ41UQ8/1.4	DO:14 DO 14 2.1	-QN8.1_Q	L290 Model Clamps (RST)
=V1AR13UQ41UQ8+.AR13UQ41UQ8/1.4	DO:15 DO 15 2.2	-QN8.2_Q	L290 Model Clamps (SET)

-KF1.25
=V1AR13UQ41UQ9+.AR13UQ41UQ9/1.3
=V1AR13UQ41UQ10+.AR13UQ41UQ10/1.3

FESTO

=V1AR13UQ41UQ9+.AR13UQ41UQ9/1.4	DO:16 DO 16 1.1	-QN9.1_Q	L320 Model Clamps (RST)
=V1AR13UQ41UQ9+.AR13UQ41UQ9/1.4	DO:17 DO 17 1.2	-QN9.2_Q	L320 Model Clamps (SET)
=V1AR13UQ41UQ10+.AR13UQ41UQ10/1.4	DO:18 DO 18 2.1	-QN10.1_Q	Spare (RST)
=V1AR13UQ41UQ10+.AR13UQ41UQ10/1.4	DO:19 DO 19 2.2	-QN10.2_Q	Spare (SET)

=V1AR13UQ41UQ1+.AR13UQ41UQ1/1

			Date	12/22/2022	Volvo Trucks North America	Valiant TMS	CONNECTING MOD. FOR FESTO DQ	Drawing name: =2V04&EFS-EL	= V1AR13UQ41KF1
			Ed.	MKLEPADLO					+ V1AR13UQ41
			Appr		P6700 Underbody Mainline - Cell 2V04	Scale 1:1		Document type: EFS	Project nr: 22-16151 / Page 5 / 1630
Modification	Date	Name	Original		Replacement of / Replaced by				

0	1	2	3	4	5	6	7	8	9

=V1AR13UQ41KF1
+.AR13UQ41

-KF1.21
=V1AR13UQ41KF1+V1AR13UQ41/5.1

Common Vacuums (RST)	Common Vacuums (SET)
=V1AR13UQ41KF1	=V1AR13UQ41KF1
+V1AR13UQ41	+V1AR13UQ41
-QN1.1_Q	-QN1.2_Q
=V1AR13UQ41KF1	=V1AR13UQ41KF1
+V1AR13UQ41/5.3	+V1AR13UQ41/5.3
DO:0	DO:1

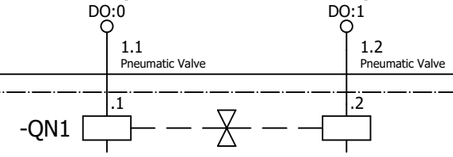

=V1AR13UQ41KF1+V1AR13UQ41/2.1
+.AR13UQ41UQ1.1-W1

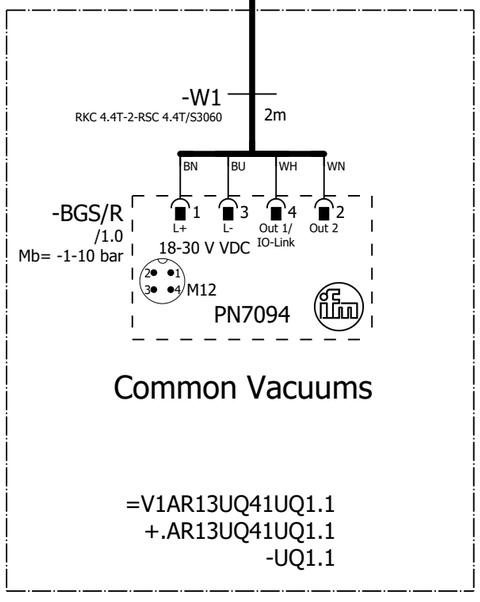

Common Vacuums

=V1AR13UQ41UQ1.1
+.AR13UQ41UQ1.1
-UQ1.1

=V1AR13UQ41
-UQ1.1-BGS/R
Common
Vacuums

=V1AR13UQ41KF1+V1AR13UQ41/5

=V1AR13UQ41UQ2+.AR13UQ41UQ2/1

			Date	12/22/2022	Volvo Trucks North America	Valiant TMS	FESTO DQ CONNECTION QN1	Drawing name: =2V04&EFS-EL	= V1AR13UQ41UQ1
			Ed.	MKLEPADLO					+ V1AR13UQ41UQ1
			Appr		P6700 Underbody Mainline - Cell 2V04			Document type: EFS	Project nr: 22-16151
Modification	Date	Name	Original		Replacement of	Replaced by	Scale 1:1		Page 1 / 1630

0	1	2	3	4	5	6	7	8	9

=V1AR13UQ41KF1
+.AR13UQ41

-KF1.21
=V1AR13UQ41KF1+V1AR13UQ41/5.1

L230/320 Model Vacuums (RST)
=V1AR13UQ41KF1
+V1AR13UQ41
-QN2.1_Q
=V1AR13UQ41KF1
+V1AR13UQ41/5.3
DO:2

L230/320 Model Vacuums (SET)
=V1AR13UQ41KF1
+V1AR13UQ41
-QN2.2_Q
=V1AR13UQ41KF1
+V1AR13UQ41/5.3
DO:3

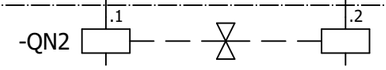

=V1AR13UQ41KF1+V1AR13UQ41/2.2
+.AR13UQ41UQ2.1-W1

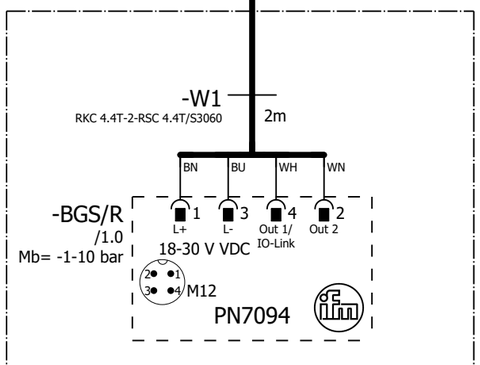

L230/320 Model Vacuums

=V1AR13UQ41UQ2.1
+.AR13UQ41UQ2.1
-UQ2.1

=V1AR13UQ41 -UQ2.1-BGS/R L230/320 Model Vacuums

=V1AR13UQ41UQ1+.AR13UQ41UQ1/1

=V1AR13UQ41UQ3+.AR13UQ41UQ3/1

			Date	12/22/2022	Volvo Trucks North America	Valiant TMS	FESTO DQ CONNECTION QN2	Drawing name: =2V04&EFS-EL	= V1AR13UQ41UQ2
			Ed.	MKLEPADLO					+ V1AR13UQ41UQ2
			Appr		P6700 Underbody Mainline - Cell 2V04			Document type: EFS	Project nr: 22-16151
Modification	Date	Name	Original		Replacement of	Replaced by	Scale 1:1		Page 1 / 1630

0	1	2	3	4	5	6	7	8	9

=V1AR13UQ41KF1
+.AR13UQ41

-KF1.22
=V1AR13UQ41KF1+V1AR13UQ41/5.1

L290 Model Vacuums (RST)	L290 Model Vacuums (SET)
=V1AR13UQ41KF1	=V1AR13UQ41KF1
+V1AR13UQ41	+V1AR13UQ41
-QN3.1_Q	-QN3.2_Q
=V1AR13UQ41KF1	=V1AR13UQ41KF1
+V1AR13UQ41/5.3	+V1AR13UQ41/5.3
DO:4	DO:5

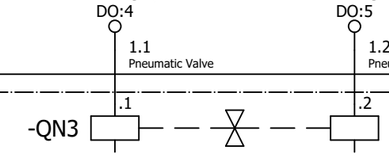

=V1AR13UQ41KF1+V1AR13UQ41/2.3
+.AR13UQ41UQ3.1-W1

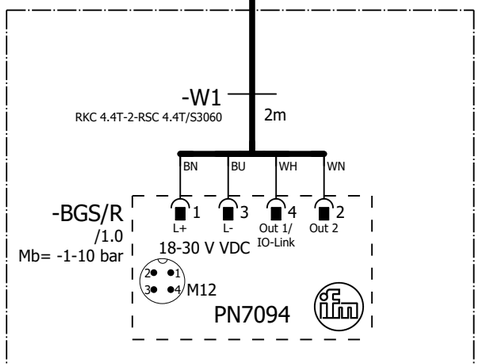

L290 Model Vacuums

=V1AR13UQ41UQ3.1
+.AR13UQ41UQ3.1
-UQ3.1

=V1AR13UQ41 -UQ3.1-BGS/R L290 Model Vacuums

=V1AR13UQ41UQ2+.AR13UQ41UQ2/1

=V1AR13UQ41UQ4+.AR13UQ41UQ4/1

			Date	12/22/2022	Volvo Trucks North America	Valiant TMS	FESTO DQ CONNECTION QN3	Drawing name: =2V04&EFS-EL	= V1AR13UQ41UQ3
			Ed.	MKLEPADLO					+ V1AR13UQ41UQ3
			Appr		P6700 Underbody Mainline - Cell 2V04			Document type: EFS	Project nr: 22-16151
Modification	Date	Name	Original		Replacement of	Replaced by	Scale 1:1		Page 1 / 1630

0	1	2	3	4	5	6	7	8	9

=V1AR13UQ41KF1
+.AR13UQ41

-KF1.22
=V1AR13UQ41KF1+V1AR13UQ41/5.1

L320 Model Vacuums (RST)	L320 Model Vacuums (SET)
=V1AR13UQ41KF1	=V1AR13UQ41KF1
+V1AR13UQ41	+V1AR13UQ41
-QN4.1_Q	-QN4.2_Q
=V1AR13UQ41KF1	=V1AR13UQ41KF1
+V1AR13UQ41/5.3	+V1AR13UQ41/5.3
DO:6	DO:7

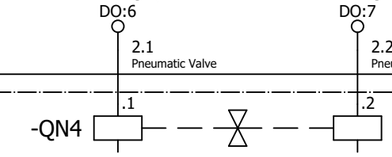

=V1AR13UQ41KF1+V1AR13UQ41/2.4
+.AR13UQ41UQ4.1-W1

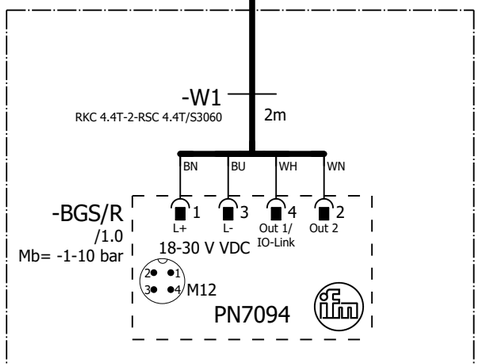

L320 Model Vacuums

=V1AR13UQ41UQ4.1
+.AR13UQ41UQ4.1
-UQ4.1

=V1AR13UQ41 -UQ4.1-BGS/R L320 Model Vacuums

=V1AR13UQ41UQ3+.AR13UQ41UQ3/1

=V1AR13UQ41UQ5+.AR13UQ41UQ5/1

			Date	12/22/2022	Volvo Trucks North America	Valiant TMS	FESTO DQ CONNECTION QN4	Drawing name: =2V04&EFS-EL	= V1AR13UQ41UQ4
			Ed.	MKLEPADLO					+ V1AR13UQ41UQ4
			Appr		P6700 Underbody Mainline - Cell 2V04			Document type: EFS	Project nr: 22-16151
Modification	Date	Name	Original		Replacement of	Replaced by	Scale 1:1		Page 1 / 1630

0	1	2	3	4	5	6	7	8	9

=V1AR13UQ41KF1
+.AR13UQ41

-KF1.23
=V1AR13UQ41KF1+V1AR13UQ41/5.1

Common Clamps (RST)
=V1AR13UQ41KF1
+V1AR13UQ41
-QN5.1_Q
=V1AR13UQ41KF1
+V1AR13UQ41/5.3
DO:8

Common Clamps (SET)
=V1AR13UQ41KF1
+V1AR13UQ41
-QN5.2_Q
=V1AR13UQ41KF1
+V1AR13UQ41/5.3
DO:9

1.1 Pneumatic Valve

1.2 Pneumatic Valve

-QN5 .1 .2

=V1AR13UQ41KF1+V1AR13UQ41/2.5
+.AR13UQ41UQ5.1-W1

-W1
RKC 4.4T-2-RSC 4.4T/S3060
2m

BN BU BK WH
1 3
-BGS/R
TÜNKERS
1324638
A2 A1
2 4

Common Clamp
=V1AR13UQ41UQ5.1
+.AR13UQ41UQ5.1
-UQ5.1

=V1AR13UQ41
-UQ5.1-BGS/R
Common
Clamp

=V1AR13UQ41KF1+V1AR13UQ41/2.6
+.AR13UQ41UQ5.2-W1

-W1
RKC 4.4T-3-RSC 4.4T/S3060
3m

BN BU BK WH
1 3
-BGS/R
TÜNKERS
1324638
A2 A1
2 4

Common Clamp
=V1AR13UQ41UQ5.2
+.AR13UQ41UQ5.2
-UQ5.2

=V1AR13UQ41
-UQ5.2-BGS/R
Common
Clamp

0	1	2	3	4	5	6	7	8	9

=V1AR13UQ41KF1
+.AR13UQ41

-KF1.23
=V1AR13UQ41KF1+V1AR13UQ41/5.1

L150 Model Clamps (RST)	L150 Model Clamps (SET)
=V1AR13UQ41KF1	=V1AR13UQ41KF1
+V1AR13UQ41	+V1AR13UQ41
-QN6.1_Q	-QN6.2_Q
=V1AR13UQ41KF1	=V1AR13UQ41KF1
+V1AR13UQ41/5.3	+V1AR13UQ41/5.3
DO:10	DO:11

2.1 Pneumatic Valve
2.2 Pneumatic Valve

-QN6 .1 .2

=V1AR13UQ41KF1+V1AR13UQ41/2.8
+.AR13UQ41UQ6.1-W1

-W1
RKC 4.4T-2-RSC 4.4T/S3060
2m

BN BU BK WH

-BGS/R
1 3
+ -
TÜNKERS
1324638
A2 A1
2 4

L150 Model Clamp
=V1AR13UQ41UQ6.1
+.AR13UQ41UQ6.1
-UQ6.1

=V1AR13UQ41
-UQ6.1-BGS/R
L150 Model
Clamp

=V1AR13UQ41KF1+V1AR13UQ41/2.9
+.AR13UQ41UQ6.2-W1

-W1
RKC 4.4T-2-RSC 4.4T/S3060
2m

BN BU BK WH

-BGS/R
1 3
+ -
TÜNKERS
1324638
A2 A1
2 4

L150 Model Clamp
=V1AR13UQ41UQ6.2
+.AR13UQ41UQ6.2
-UQ6.2

=V1AR13UQ41
-UQ6.2-BGS/R
L150 Model
Clamp

=V1AR13UQ41UQ5+.AR13UQ41UQ5/1

=V1AR13UQ41UQ7+.AR13UQ41UQ7/1

			Date	12/22/2022	Volvo Trucks North America	Valiant TMS	FESTO DQ CONNECTION QN6	Drawing name: =2V04&EFS-EL	= V1AR13UQ41UQ6
			Ed.	MKLEPADLO					+ V1AR13UQ41UQ6
			Appr		P6700 Underbody Mainline - Cell 2V04			Document type: EFS	Project nr: 22-16151
Modification	Date	Name	Original		Replacement of	Replaced by	Scale 1:1		Page 1 / 1630

0	1	2	3	4	5	6	7	8	9

=V1AR13UQ41KF1
+.AR13UQ41

-KF1.24
=V1AR13UQ41KF1+V1AR13UQ41/5.1

L230 Model Clamps (RST)
=V1AR13UQ41KF1
+V1AR13UQ41
-QN7.1_Q
=V1AR13UQ41KF1
+V1AR13UQ41/5.3
DO:12

L230 Model Clamps (SET)
=V1AR13UQ41KF1
+V1AR13UQ41
-QN7.2_Q
=V1AR13UQ41KF1
+V1AR13UQ41/5.3
DO:13

1.1 Pneumatic Valve

1.2 Pneumatic Valve

-QN7 .1 .2

=V1AR13UQ41KF1+V1AR13UQ41/3.1
+.AR13UQ41UQ7.1-W1

-W1 2m
RKC 4.4T-2-RSC 4.4T/S3060

BN BU BK WH
1 3
+ -
-BGS/R
TÜNKERS
1324638
A2 A1
2 4

L230 Model Clamp
=V1AR13UQ41UQ7.1
+.AR13UQ41UQ7.1
-UQ7.1

=V1AR13UQ41
-UQ7.1-BGS/R
L230 Model
Clamp

=V1AR13UQ41KF1+V1AR13UQ41/3.2
+.AR13UQ41UQ7.2-W1

-W1 2m
RKC 4.4T-2-RSC 4.4T/S3060

BN BU BK WH
1 3
+ -
-BGS/R
TÜNKERS
1324638
A2 A1
2 4

L230 Model Clamp
=V1AR13UQ41UQ7.2
+.AR13UQ41UQ7.2
-UQ7.2

=V1AR13UQ41
-UQ7.2-BGS/R
L230 Model
Clamp

=V1AR13UQ41UQ6+.AR13UQ41UQ6/1

=V1AR13UQ41UQ8+.AR13UQ41UQ8/1

			Date	12/22/2022	Volvo Trucks North America	Valiant TMS	FESTO DQ CONNECTION QN7	Drawing name: =2V04&EFS-EL	= V1AR13UQ41UQ7
			Ed.	MKLEPADLO					+ V1AR13UQ41UQ7
			Appr		P6700 Underbody Mainline - Cell 2V04			Document type: EFS	Project nr: 22-16151
Modification	Date	Name	Original		Replacement of	Replaced by	Scale 1:1		Page 1 / 1630

0	1	2	3	4	5	6	7	8	9

=V1AR13UQ41KF1
+.AR13UQ41

-KF1.24
=V1AR13UQ41KF1+V1AR13UQ41/5.1

L290 Model Clamps (RST)
=V1AR13UQ41KF1
+V1AR13UQ41
-QN8.1_Q
=V1AR13UQ41KF1
+V1AR13UQ41/5.3
DO:14

L290 Model Clamps (SET)
=V1AR13UQ41KF1
+V1AR13UQ41
-QN8.2_Q
=V1AR13UQ41KF1
+V1AR13UQ41/5.3
DO:15

2.1 Pneumatic Valve

2.2 Pneumatic Valve

-QN8 .1 .2

=V1AR13UQ41KF1+V1AR13UQ41/3.3
+.AR13UQ41UQ8.1-W1

-W1 1m
RKC 4.4T-1-RSC 4.4T/S3060

BN BU BK WH
1 3
-BGS/R
TÜNKERS
1324638
A2 A1
2 4

L290 Model Clamp
=V1AR13UQ41UQ8.1
+.AR13UQ41UQ8.1
-UQ8.1

=V1AR13UQ41
-UQ8.1-BGS/R
L290 Model
Clamp

=V1AR13UQ41KF1+V1AR13UQ41/3.4
+.AR13UQ41UQ8.2-W1

-W1 2m
RKC 4.4T-2-RSC 4.4T/S3060

BN BU BK WH
1 3
-BGS/R
TÜNKERS
1324638
A2 A1
2 4

L290 Model Clamp
=V1AR13UQ41UQ8.2
+.AR13UQ41UQ8.2
-UQ8.2

=V1AR13UQ41
-UQ8.2-BGS/R
L290 Model
Clamp

=V1AR13UQ41UQ7+.AR13UQ41UQ7/1

=V1AR13UQ41UQ9+.AR13UQ41UQ9/1

			Date	12/22/2022	Volvo Trucks North America	Valiant TMS	FESTO DQ CONNECTION QN8	Drawing name: =2V04&EFS-EL	= V1AR13UQ41UQ8
			Ed.	MKLEPADLO					+ V1AR13UQ41UQ8
			Appr		P6700 Underbody Mainline - Cell 2V04			Document type: EFS	Project nr: 22-16151
Modification	Date	Name	Original		Replacement of	Replaced by	Scale 1:1		Page 1 / 1630

0	1	2	3	4	5	6	7	8	9

=V1AR13UQ41KF1
+.AR13UQ41

-KF1.25
=V1AR13UQ41KF1+V1AR13UQ41/5.1

L320 Model Clamps (RST)
=V1AR13UQ41KF1
+V1AR13UQ41
-QN9.1_Q
=V1AR13UQ41KF1
+V1AR13UQ41/5.3
DO:16

L320 Model Clamps (SET)
=V1AR13UQ41KF1
+V1AR13UQ41
-QN9.2_Q
=V1AR13UQ41KF1
+V1AR13UQ41/5.3
DO:17

1.1 Pneumatic Valve

1.2 Pneumatic Valve

-QN9 .1 .2

=V1AR13UQ41KF1+V1AR13UQ41/3.5
+.AR13UQ41UQ9.1-W1

-W1
RKC 4.4T-2-RSC 4.4T/S3060
2m

BN BU BK WH

-BGS/R
1 3
+ -
TÜNKERS
1324638
A2 A1
2 4

L320 Model Clamp
=V1AR13UQ41UQ9.1
+.AR13UQ41UQ9.1
-UQ9.1

=V1AR13UQ41
-UQ9.1-BGS/R
L320 Model
Clamp

=V1AR13UQ41KF1+V1AR13UQ41/3.6
+.AR13UQ41UQ9.2-W1

-W1
RKC 4.4T-2-RSC 4.4T/S3060
2m

BN BU BK WH

-BGS/R
1 3
+ -
TÜNKERS
1324638
A2 A1
2 4

L320 Model Clamp
=V1AR13UQ41UQ9.2
+.AR13UQ41UQ9.2
-UQ9.2

=V1AR13UQ41
-UQ9.2-BGS/R
L320 Model
Clamp

=V1AR13UQ41UQ8+.AR13UQ41UQ8/1

=V1AR13UQ41UQ10+.AR13UQ41UQ10/1

			Date	12/22/2022	Volvo Trucks North America	Valiant TMS	FESTO DQ CONNECTION QN9	Drawing name: =2V04&EFS-EL	= V1AR13UQ41UQ9
			Ed.	MKLEPADLO					+ V1AR13UQ41UQ9
			Appr		P6700 Underbody Mainline - Cell 2V04			Document type: EFS	Project nr: 22-16151
Modification	Date	Name	Original		Replacement of	Replaced by	Scale 1:1		Page 1 / 1630

0	1	2	3	4	5	6	7	8	9

=V1AR13UQ41KF1
+.AR13UQ41

-KF1.25
=V1AR13UQ41KF1+V1AR13UQ41/5.1

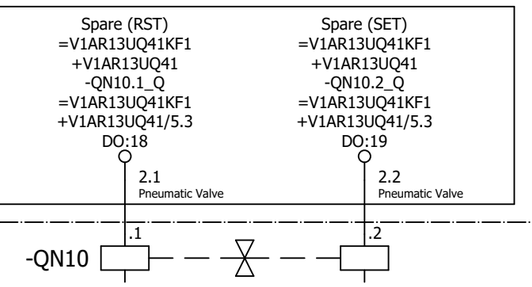

=V1AR13UQ41UQ9+.AR13UQ41UQ9/1

=V1AR13WC1+.AR13UC01/1

			Date	12/22/2022	Volvo Trucks North America	Valiant TMS	FESTO DQ CONNECTION QN10	Drawing name: =2V04&EFS-EL	= V1AR13UQ41UQ10
			Ed.	MKLEPADLO					+ V1AR13UQ41UQ10
			Appr		P6700 Underbody Mainline - Cell 2V04	Scale 1:1		Document type: EFS	Project nr: 22-16151
Modification	Date	Name	Original		Replacement of	Replaced by			Page 1 / 1630

0	1	2	3	4	5	6	7	8	9

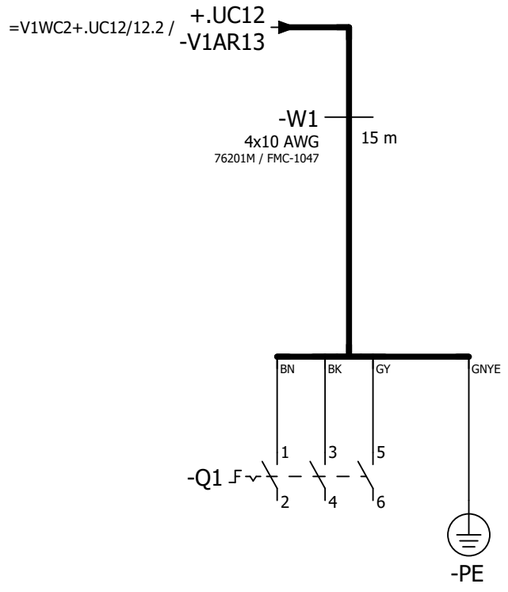

=V1AR13UQ41UQ10+.AR13UQ41UQ10/1

=V1AR14KF1+.AR14UC01/1

			Date	12/22/2022	Volvo Trucks North America		Valiant TMS	Incoming power	Drawing name: =2V04&EFS-EL	= V1AR13WC1	
			Ed.	MKLEPADLO						+ V1AR13UC01	
			Appr		P6700 Underbody Mainline - Cell 2V04				Document type: EFS	Project nr: 22-16151	Page 1
Modification	Date	Name	Original		Replacement of	Replaced by	Scale 1:1				1630

0	1	2	3	4	5	6	7	8	9

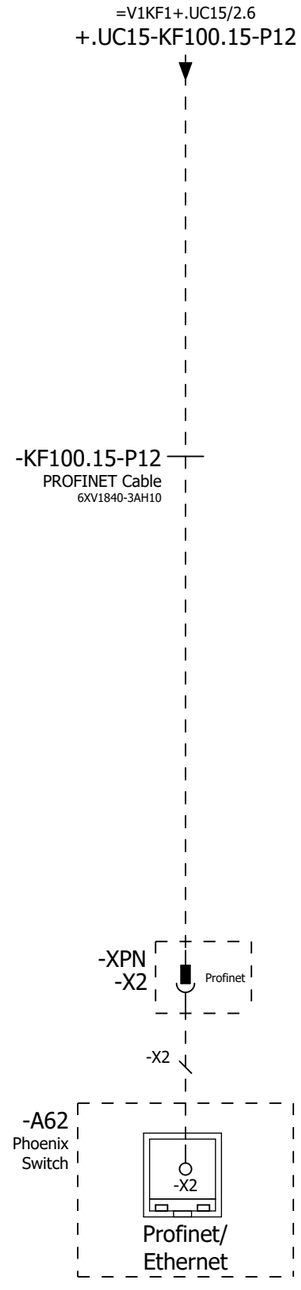

=V1AR13WC1+.AR13UC01/1

=V1AR14UQ41BG0+.AR14UQ41/1

			Date	12/22/2022	Volvo Trucks North America	Valiant TMS	Incoming Profinet	Drawing name: =2V04&EFS-EL	= V1AR14KF1
			Ed.	MKLEPADLO					+ V1AR14UC01
			Appr		P6700 Underbody Mainline - Cell 2V04			Document type: EFS	Project nr: 22-16151
Modification	Date	Name	Original		Replacement of	Replaced by	Scale 1:1		Page 1 / 1630

0	1	2	3	4	5	6	7	8	9

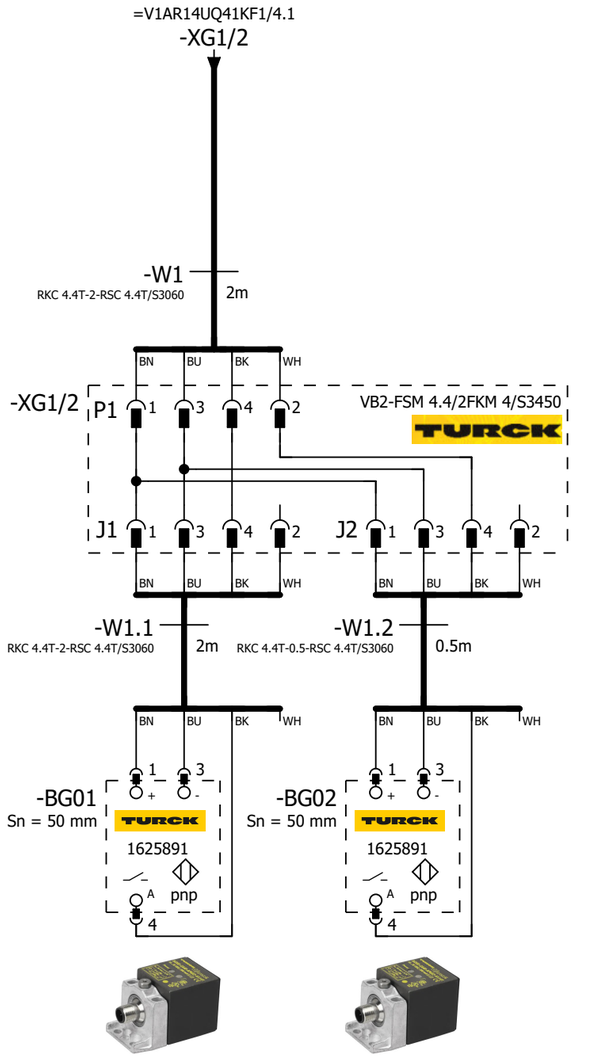

=V1AR14UQ41 -BG01 Floor Frame Assy (Common)	=V1AR14UQ41 -BG02 Floor Frame Assy (Common)

=V1AR14KF1+.AR14UC01/1

=V1AR14UQ41KF1/1

			Date	12/22/2022	Volvo Trucks North America		Valiant TMS	SENSORS	Drawing name: =2V04&EFS-EL	= V1AR14UQ41BG0
			Ed.	MKLEPADLO						+ V1AR14UQ41
			Appr		P6700 Underbody Mainline - Cell 2V04				Document type: EFS	Project nr: 22-16151	Page 1
Modification	Date	Name	Original		Replacement of	Replaced by	Scale 1:1				1630

0	1	2	3	4	5	6	7	8	9

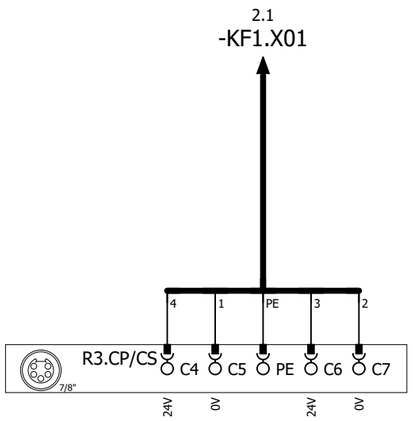

DC 24V (OUT)

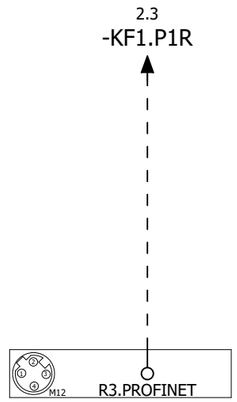

R3.ETHERNET

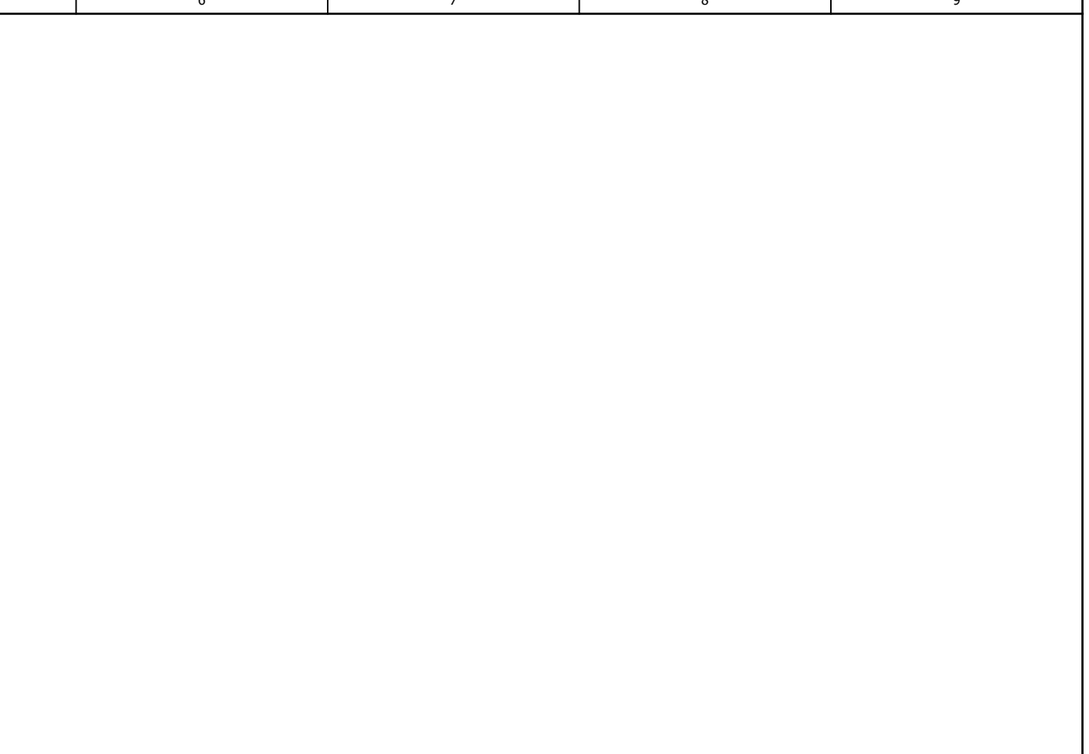

=V1AR14UQ41BG0/1

2

			Date	12/22/2022	Volvo Trucks North America		Valiant TMS	24VDC SUPPLY AND PROFINET HANDLING MODULE	Drawing name: =2V04&EFS-EL	= V1AR14UQ41KF1
			Ed.	MKLEPADLO						+ V1AR14UQ41
			Appr		P6700 Underbody Mainline - Cell 2V04				Document type: EFS	Project nr: 22-16151
Modification	Date	Name	Original		Replacement of	Replaced by	Scale 1:1			Page 1 / 1630

0	1	2	3	4	5	6	7	8	9

1.3 / -KF1.X01

-W1
RSM RKM 56-2M/S3059
2m

1.5 / -KF1.P1R

-WF1
PROFINET Cable
6XV1840-3AH10

-KF1

X20 (7/8") 1 2 PE 3 4
0V_VAL / OUT
0V_EL / SEN
FE
24V_EL / SEN
24V_VAL / OUT

ON / OFF 1 2 1 2

M12 -TP1
M12 -TP2

FESTO
Bus node + Interlinking block
548755 + 550208

DI:0	DI 0 X1:4	V1AR14UQ41UQ1.1-BGS	Common Vacuums (SET)
DI:1	DI 1 X1:2	DI:1	Spare
DI:2	DI 2 X2:4	V1AR14UQ41UQ2.1-BGS	L230/320 Model Vacuums (SET)
DI:3	DI 3 X2:2	DI:3	Spare
DI:4	DI 4 X3:4	V1AR14UQ41UQ3.1-BGS	L290 Model Vacuums (SET)
DI:5	DI 5 X3:2	DI:5	Spare
DI:6	DI 6 X4:4	V1AR14UQ41UQ4.1-BGS	L320 Model Vacuums (SET)
DI:7	DI 7 X4:2	DI:7	Spare
DI:8	DI 8 X5:4	V1AR14UQ41UQ5.1-BGR	Common Clamp (RESET)
DI:9	DI 9 X5:2	V1AR14UQ41UQ5.1-BGS	Common Clamp (SET)
DI:10	DI 10 X6:4	V1AR14UQ41UQ5.2-BGR	Common Clamp (RESET)
DI:11	DI 11 X6:2	V1AR14UQ41UQ5.2-BGS	Common Clamp (SET)
DI:12	DI 12 X7:4	V1AR14UQ41UQ6.1-BGR	L150 Model Clamp (RESET)
DI:13	DI 13 X7:2	V1AR14UQ41UQ6.1-BGS	L150 Model Clamp (SET)
DI:14	DI 14 X8:4	V1AR14UQ41UQ6.2-BGR	L150 Model Clamp (RESET)
DI:15	DI 15 X8:2	V1AR14UQ41UQ6.2-BGS	L150 Model Clamp (SET)

-KF1.11

FESTO
CPX-M-AB-8-M12X2-5POL
549335

X1 X2 X3 X4 X5 X6 X7 X8 (M12)
24V | DI 1 | 0V | DI 0 | FE
24V | DI 3 | 0V | DI 2 | FE
24V | DI 5 | 0V | DI 4 | FE
24V | DI 7 | 0V | DI 6 | FE
24V | DI 9 | 0V | DI 8 | FE
24V | DI 11 | 0V | DI 10 | FE
24V | DI 13 | 0V | DI 12 | FE
24V | DI 15 | 0V | DI 14 | FE
BN WH BU BK

+.AR14UQ41UQ1.1-W1
=V1AR14UQ41UQ1+.AR14UQ41UQ1/1.1

+.AR14UQ41UQ2.1-W1
=V1AR14UQ41UQ2+.AR14UQ41UQ2/1.1

+.AR14UQ41UQ3.1-W1
=V1AR14UQ41UQ3+.AR14UQ41UQ3/1.1

+.AR14UQ41UQ4.1-W1
=V1AR14UQ41UQ4+.AR14UQ41UQ4/1.1

+.AR14UQ41UQ5.1-W1
=V1AR14UQ41UQ5+.AR14UQ41UQ5/1.1

+.AR14UQ41UQ5.2-W1
=V1AR14UQ41UQ5+.AR14UQ41UQ5/1.2

+.AR14UQ41UQ6.1-W1
=V1AR14UQ41UQ6+.AR14UQ41UQ6/1.1

+.AR14UQ41UQ6.2-W1
=V1AR14UQ41UQ6+.AR14UQ41UQ6/1.2

1 3

			Date	12/22/2022	Volvo Trucks North America	Valiant TMS	CONNECTING MOD. FOR MPA MANIFOLD	Drawing name: =2V04&EFS-EL	= V1AR14UQ41KF1
			Ed.	MKLEPADLO					+ V1AR14UQ41
			Appr		P6700 Underbody Mainline - Cell 2V04	Scale 1:1		Document type: EFS	Project nr: 22-16151
Modification	Date	Name	Original		Replacement of	Replaced by			Page 2 / 1630

0	1	2	3	4	5	6	7	8	9

-KF1.12

FESTO

CPX-M-AB-8-M12X2-5POL

549335

DI:16	DI 0 X1:4	V1AR14UQ41UQ7.1-BGR	L230 Model Clamp (RESET)
DI:17	DI 1 X1:2	V1AR14UQ41UQ7.1-BGS	L230 Model Clamp (SET)
DI:18	DI 2 X2:4	V1AR14UQ41UQ7.2-BGR	L230 Model Clamp (RESET)
DI:19	DI 3 X2:2	V1AR14UQ41UQ7.2-BGS	L230 Model Clamp (SET)
DI:20	DI 4 X3:4	V1AR14UQ41UQ8.1-BGR	L290 Model Clamp (RESET)
DI:21	DI 5 X3:2	V1AR14UQ41UQ8.1-BGS	L290 Model Clamp (SET)
DI:22	DI 6 X4:4	V1AR14UQ41UQ8.2-BGR	L290 Model Clamp (RESET)
DI:23	DI 7 X4:2	V1AR14UQ41UQ8.2-BGS	L290 Model Clamp (SET)
DI:24	DI 8 X5:4	V1AR14UQ41UQ9.1-BGR	L320 Model Clamp (RESET)
DI:25	DI 9 X5:2	V1AR14UQ41UQ9.1-BGS	L320 Model Clamp (SET)
DI:26	DI 10 X6:4	V1AR14UQ41UQ9.2-BGR	L320 Model Clamp (RESET)
DI:27	DI 11 X6:2	V1AR14UQ41UQ9.2-BGS	L320 Model Clamp (SET)
DI:28	DI 12 X7:4	DI:28	Spare
DI:29	DI 13 X7:2	DI:29	Spare
DI:30	DI 14 X8:4	DI:30	Spare
DI:31	DI 15 X8:2	DI:31	Spare

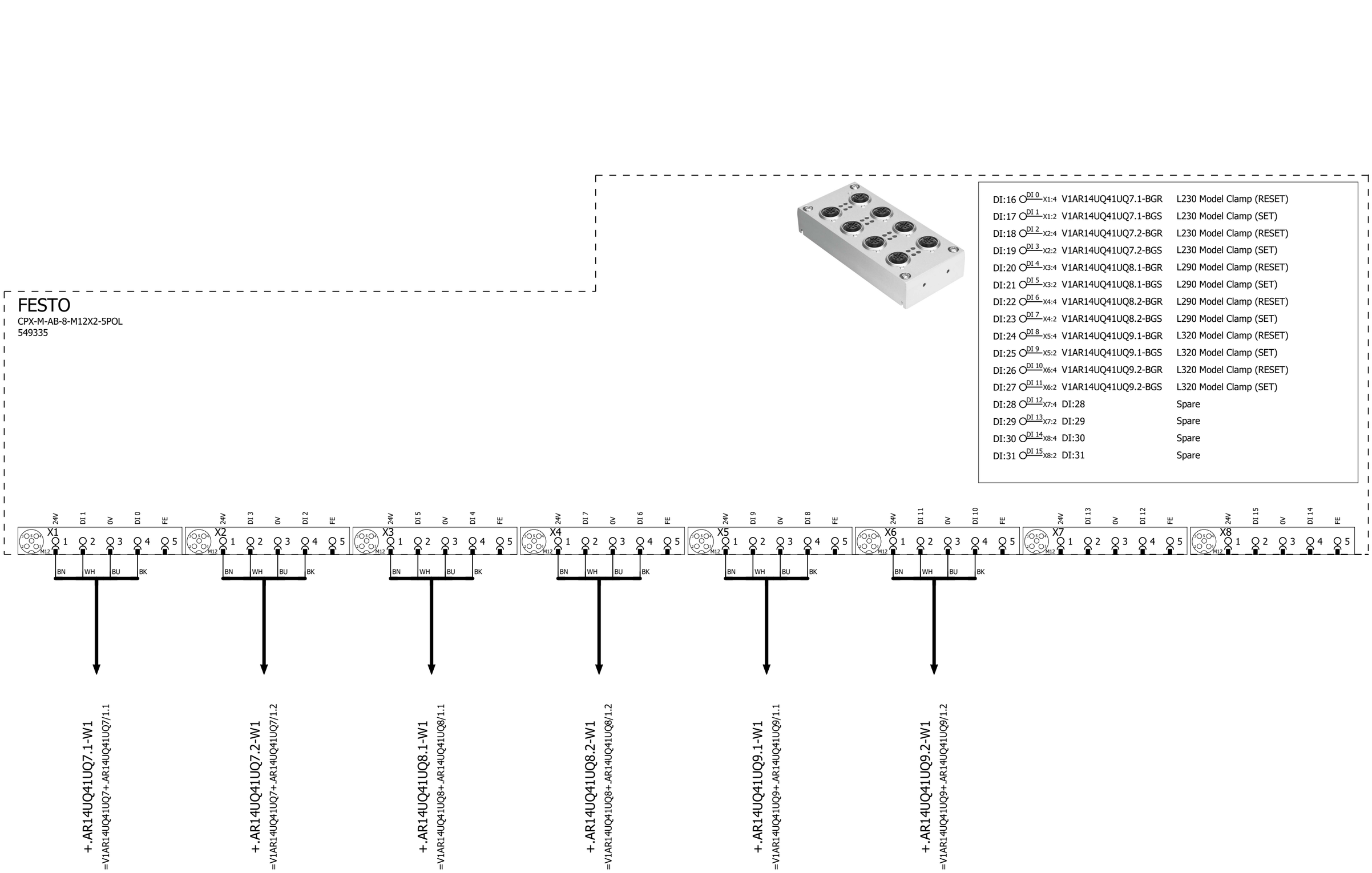

2 4

			Date	12/22/2022	Volvo Trucks North America	Valiant TMS	I/O MOD. DI16 (8 x M12) FOR MPA	Drawing name: =2V04&EFS-EL	= V1AR14UQ41KF1
			Ed.	MKLEPADLO					+ V1AR14UQ41
			Appr		P6700 Underbody Mainline - Cell 2V04			Document type: EFS	Project nr: 22-16151
Modification	Date	Name	Original		Replacement of	Replaced by	Scale 1:1		Page 3 / 1630

0	1	2	3	4	5	6	7	8	9

-KF1.13

FESTO
CPX-M-AB-8-M12X2-5POL
549335

DI:32	DI 0 X1:4	V1AR14UQ41-BG01 Sensor Floor Frame Assy (Common)
DI:33	DI 1 X1:2	V1AR14UQ41-BG02 Sensor Floor Frame Assy (Common)
DI:34	DI 2 X2:4	DI:34 Spare
DI:35	DI 3 X2:2	DI:35 Spare
DI:36	DI 4 X3:4	DI:36 Spare
DI:37	DI 5 X3:2	DI:37 Spare
DI:38	DI 6 X4:4	DI:38 Spare
DI:39	DI 7 X4:2	DI:39 Spare
DI:40	DI 8 X5:4	DI:40 Spare
DI:41	DI 9 X5:2	DI:41 Spare
DI:42	DI 10 X6:4	DI:42 Spare
DI:43	DI 11 X6:2	DI:43 Spare
DI:44	DI 12 X7:4	DI:44 Spare
DI:45	DI 13 X7:2	DI:45 Spare
DI:46	DI 14 X8:4	DI:46 Spare
DI:47	DI 15 X8:2	DI:47 Spare

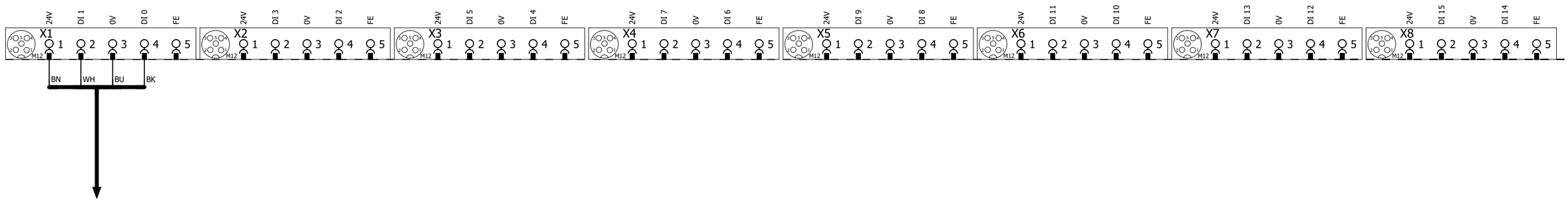

-XG1/2
=V1AR14UQ41BG0/1.1

3 5

			Date	12/22/2022	Volvo Trucks North America	Valiant TMS	I/O MOD. DI16 (8 x M12) FOR MPA	Drawing name: =2V04&EFS-EL	= V1AR14UQ41KF1
			Ed.	MKLEPADLO					+ V1AR14UQ41
			Appr		P6700 Underbody Mainline - Cell 2V04			Document type: EFS	Project nr: 22-16151
Modification	Date	Name	Original		Replacement of / Replaced by	Scale 1:1			Page 4 / 1630

0	1	2	3	4	5	6	7	8	9

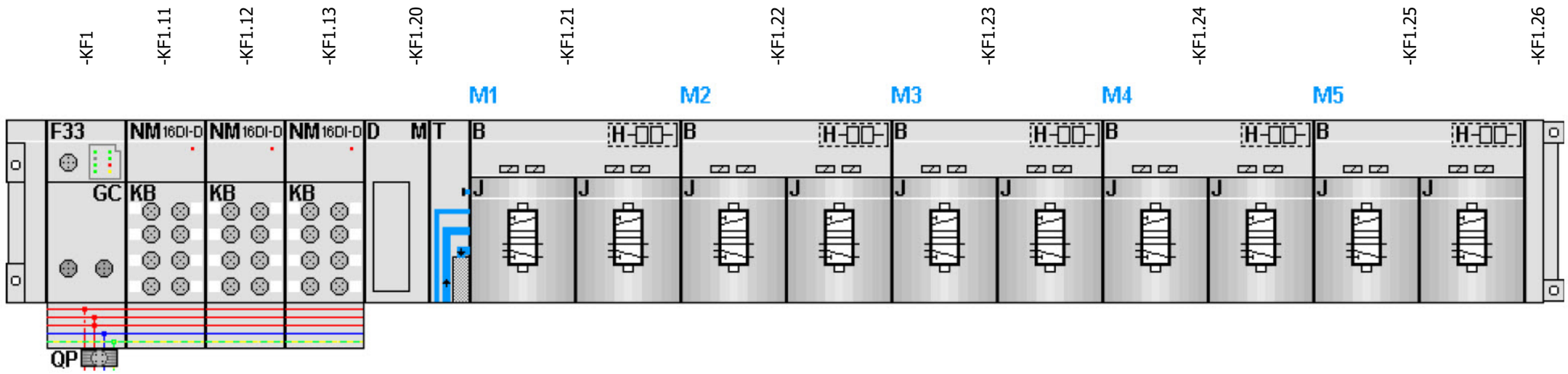

-KF1.21
=V1AR14UQ41UQ1+.AR14UQ41UQ1/1.3
=V1AR14UQ41UQ2+.AR14UQ41UQ2/1.3

FESTO

=V1AR14UQ41UQ1+.AR14UQ41UQ1/1.4	DO:0 DO 0 1.1	-QN1.1_Q	Common Vacuums (RST)
=V1AR14UQ41UQ1+.AR14UQ41UQ1/1.4	DO:1 DO 1 1.2	-QN1.2_Q	Common Vacuums (SET)
=V1AR14UQ41UQ2+.AR14UQ41UQ2/1.4	DO:2 DO 2 2.1	-QN2.1_Q	L230/320 Model Vacuums (RST)
=V1AR14UQ41UQ2+.AR14UQ41UQ2/1.4	DO:3 DO 3 2.2	-QN2.2_Q	L230/320 Model Vacuums (SET)

-KF1.22
=V1AR14UQ41UQ3+.AR14UQ41UQ3/1.3
=V1AR14UQ41UQ4+.AR14UQ41UQ4/1.3

FESTO

=V1AR14UQ41UQ3+.AR14UQ41UQ3/1.4	DO:4 DO 4 1.1	-QN3.1_Q	L290 Model Vacuums (RST)
=V1AR14UQ41UQ3+.AR14UQ41UQ3/1.4	DO:5 DO 5 1.2	-QN3.2_Q	L290 Model Vacuums (SET)
=V1AR14UQ41UQ4+.AR14UQ41UQ4/1.4	DO:6 DO 6 2.1	-QN4.1_Q	L320 Model Vacuums (RST)
=V1AR14UQ41UQ4+.AR14UQ41UQ4/1.4	DO:7 DO 7 2.2	-QN4.2_Q	L320 Model Vacuums (SET)

-KF1.23
=V1AR14UQ41UQ5+.AR14UQ41UQ5/1.3
=V1AR14UQ41UQ6+.AR14UQ41UQ6/1.3

FESTO

=V1AR14UQ41UQ5+.AR14UQ41UQ5/1.4	DO:8 DO 8 1.1	-QN5.1_Q	Common Clamps (RST)
=V1AR14UQ41UQ5+.AR14UQ41UQ5/1.4	DO:9 DO 9 1.2	-QN5.2_Q	Common Clamps (SET)
=V1AR14UQ41UQ6+.AR14UQ41UQ6/1.4	DO:10 DO 10 2.1	-QN6.1_Q	L150 Model Clamps (RST)
=V1AR14UQ41UQ6+.AR14UQ41UQ6/1.4	DO:11 DO 11 2.2	-QN6.2_Q	L150 Model Clamps (SET)

-KF1.24
=V1AR14UQ41UQ7+.AR14UQ41UQ7/1.3
=V1AR14UQ41UQ8+.AR14UQ41UQ8/1.3

FESTO

=V1AR14UQ41UQ7+.AR14UQ41UQ7/1.4	DO:12 DO 12 1.1	-QN7.1_Q	L230 Model Clamps (RST)
=V1AR14UQ41UQ7+.AR14UQ41UQ7/1.4	DO:13 DO 13 1.2	-QN7.2_Q	L230 Model Clamps (SET)
=V1AR14UQ41UQ8+.AR14UQ41UQ8/1.4	DO:14 DO 14 2.1	-QN8.1_Q	L290 Model Clamps (RST)
=V1AR14UQ41UQ8+.AR14UQ41UQ8/1.4	DO:15 DO 15 2.2	-QN8.2_Q	L290 Model Clamps (SET)

-KF1.25
=V1AR14UQ41UQ9+.AR14UQ41UQ9/1.3
=V1AR14UQ41UQ10+.AR14UQ41UQ10/1.3

FESTO

=V1AR14UQ41UQ9+.AR14UQ41UQ9/1.4	DO:16 DO 16 1.1	-QN9.1_Q	L320 Model Clamps (RST)
=V1AR14UQ41UQ9+.AR14UQ41UQ9/1.4	DO:17 DO 17 1.2	-QN9.2_Q	L320 Model Clamps (SET)
=V1AR14UQ41UQ10+.AR14UQ41UQ10/1.4	DO:18 DO 18 2.1	-QN10.1_Q	Spare (RST)
=V1AR14UQ41UQ10+.AR14UQ41UQ10/1.4	DO:19 DO 19 2.2	-QN10.2_Q	Spare (SET)

=V1AR14UQ41UQ1+.AR14UQ41UQ1/1

			Date	12/22/2022	Volvo Trucks North America	Valiant TMS	CONNECTING MOD. FOR FESTO DQ	Drawing name: =2V04&EFS-EL	= V1AR14UQ41KF1
			Ed.	MKLEPADLO					+ V1AR14UQ41
			Appr		P6700 Underbody Mainline - Cell 2V04			Document type: EFS	Project nr: 22-16151 / Page 5
Modification	Date	Name	Original		Replacement of / Replaced by	Scale 1:1			1630

0	1	2	3	4	5	6	7	8	9

=V1AR14UQ41KF1
+.AR14UQ41

-KF1.21
=V1AR14UQ41KF1+V1AR14UQ41/5.1

Common Vacuums (RST)
=V1AR14UQ41KF1
+V1AR14UQ41
-QN1.1_Q
=V1AR14UQ41KF1
+V1AR14UQ41/5.3
DO:0

Common Vacuums (SET)
=V1AR14UQ41KF1
+V1AR14UQ41
-QN1.2_Q
=V1AR14UQ41KF1
+V1AR14UQ41/5.3
DO:1

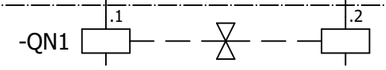

=V1AR14UQ41KF1+V1AR14UQ41/2.1
+.AR14UQ41UQ1.1-W1

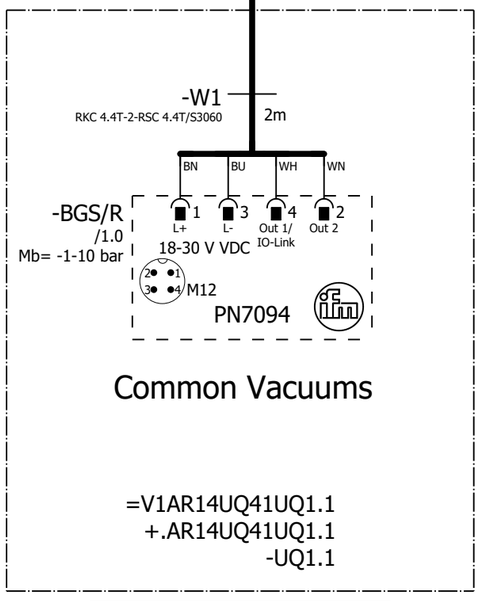

Common Vacuums

=V1AR14UQ41UQ1.1
+.AR14UQ41UQ1.1
-UQ1.1

=V1AR14UQ41
-UQ1.1-BGS/R
Common
Vacuums

=V1AR14UQ41KF1+V1AR14UQ41/5

=V1AR14UQ41UQ2+.AR14UQ41UQ2/1

			Date	12/22/2022	Volvo Trucks North America	Valiant TMS	FESTO DQ CONNECTION QN1	Drawing name: =2V04&EFS-EL	= V1AR14UQ41UQ1
			Ed.	MKLEPADLO					+ V1AR14UQ41UQ1
			Appr		P6700 Underbody Mainline - Cell 2V04			Document type: EFS	Project nr: 22-16151
Modification	Date	Name	Original		Replacement of	Replaced by	Scale 1:1		Page 1 / 1630

0	1	2	3	4	5	6	7	8	9

=V1AR14UQ41KF1
+.AR14UQ41

-KF1.21
=V1AR14UQ41KF1+V1AR14UQ41/5.1

L230/320 Model Vacuums (RST)	L230/320 Model Vacuums (SET)
=V1AR14UQ41KF1	=V1AR14UQ41KF1
+V1AR14UQ41	+V1AR14UQ41
-QN2.1_Q	-QN2.2_Q
=V1AR14UQ41KF1	=V1AR14UQ41KF1
+V1AR14UQ41/5.3	+V1AR14UQ41/5.3
DO:2	DO:3
2.1 Pneumatic Valve	2.2 Pneumatic Valve

-QN2 .1 .2

=V1AR14UQ41KF1+V1AR14UQ41/2.2
+.AR14UQ41UQ2.1-W1

-W1
RKC 4.4T-2-RSC 4.4T/S3060
2m

BN BU WH WN

-BGS/R
/1.0
Mb= -1-10 bar

1 L+ | 3 L- | 4 Out 1/ IO-Link | 2 Out 2

18-30 V VDC

M12

PN7094

L230/320 Model Vacuums

=V1AR14UQ41UQ2.1
+.AR14UQ41UQ2.1
-UQ2.1

=V1AR14UQ41 -UQ2.1-BGS/R L230/320 Model Vacuums

=V1AR14UQ41UQ1+.AR14UQ41UQ1/1

=V1AR14UQ41UQ3+.AR14UQ41UQ3/1

			Date	12/22/2022	Volvo Trucks North America	Valiant TMS	FESTO DQ CONNECTION QN2	Drawing name: =2V04&EFS-EL	= V1AR14UQ41UQ2
			Ed.	MKLEPADLO					+ V1AR14UQ41UQ2
			Appr		P6700 Underbody Mainline - Cell 2V04			Document type: EFS	Project nr: 22-16151
Modification	Date	Name	Original		Replacement of	Replaced by	Scale 1:1		Page 1 / 1630

0	1	2	3	4	5	6	7	8	9

=V1AR14UQ41KF1
+.AR14UQ41

-KF1.22
=V1AR14UQ41KF1+V1AR14UQ41/5.1

L290 Model Vacuums (RST)	L290 Model Vacuums (SET)
=V1AR14UQ41KF1	=V1AR14UQ41KF1
+V1AR14UQ41	+V1AR14UQ41
-QN3.1_Q	-QN3.2_Q
=V1AR14UQ41KF1	=V1AR14UQ41KF1
+V1AR14UQ41/5.3	+V1AR14UQ41/5.3
DO:4	DO:5

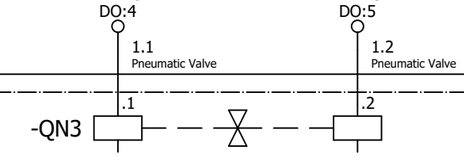

=V1AR14UQ41KF1+V1AR14UQ41/2.3
+.AR14UQ41UQ3.1-W1

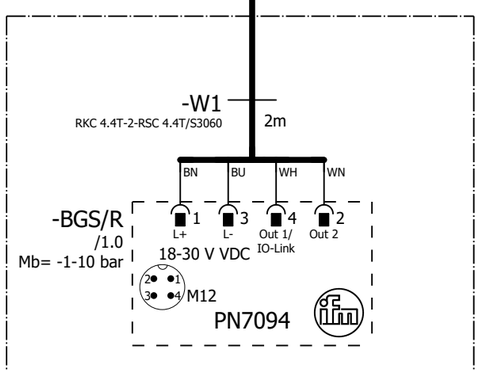

L290 Model Vacuums

=V1AR14UQ41UQ3.1
+.AR14UQ41UQ3.1
-UQ3.1

=V1AR14UQ41 -UQ3.1-BGS/R L290 Model Vacuums

=V1AR14UQ41UQ2+.AR14UQ41UQ2/1

=V1AR14UQ41UQ4+.AR14UQ41UQ4/1

			Date	12/22/2022	Volvo Trucks North America		Valiant TMS	FESTO DQ CONNECTION QN3	Drawing name: =2V04&EFS-EL	= V1AR14UQ41UQ3
			Ed.	MKLEPADLO						+ V1AR14UQ41UQ3
			Appr		P6700 Underbody Mainline - Cell 2V04				Document type: EFS	Project nr: 22-16151
Modification	Date	Name	Original		Replacement of	Replaced by	Scale 1:1			Page 1 / 1630

0	1	2	3	4	5	6	7	8	9

=V1AR14UQ41KF1
+.AR14UQ41

-KF1.22
=V1AR14UQ41KF1+V1AR14UQ41/5.1

L320 Model Vacuums (RST)	L320 Model Vacuums (SET)
=V1AR14UQ41KF1	=V1AR14UQ41KF1
+V1AR14UQ41	+V1AR14UQ41
-QN4.1_Q	-QN4.2_Q
=V1AR14UQ41KF1	=V1AR14UQ41KF1
+V1AR14UQ41/5.3	+V1AR14UQ41/5.3
DO:6	DO:7

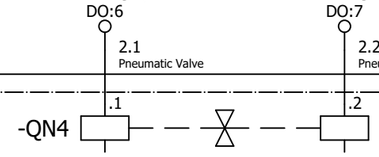

=V1AR14UQ41KF1+V1AR14UQ41/2.4
+.AR14UQ41UQ4.1-W1

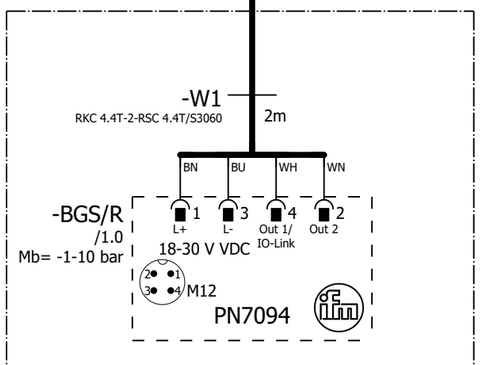

L320 Model Vacuums

=V1AR14UQ41UQ4.1
+.AR14UQ41UQ4.1
-UQ4.1

=V1AR14UQ41 -UQ4.1-BGS/R L320 Model Vacuums

=V1AR14UQ41UQ3+.AR14UQ41UQ3/1

=V1AR14UQ41UQ5+.AR14UQ41UQ5/1

			Date	12/22/2022	Volvo Trucks North America	Valiant TMS	FESTO DQ CONNECTION QN4	Drawing name: =2V04&EFS-EL	= V1AR14UQ41UQ4
			Ed.	MKLEPADLO					+ V1AR14UQ41UQ4
			Appr		P6700 Underbody Mainline - Cell 2V04	Scale 1:1		Document type: EFS	Project nr: 22-16151
Modification	Date	Name	Original		Replacement of	Replaced by			Page 1 / 1630

0	1	2	3	4	5	6	7	8	9

=V1AR14UQ41KF1
+.AR14UQ41

-KF1.23
=V1AR14UQ41KF1+V1AR14UQ41/5.1

Common Clamps (RST)
=V1AR14UQ41KF1
+V1AR14UQ41
-QN5.1_Q
=V1AR14UQ41KF1
+V1AR14UQ41/5.3
DO:8

Common Clamps (SET)
=V1AR14UQ41KF1
+V1AR14UQ41
-QN5.2_Q
=V1AR14UQ41KF1
+V1AR14UQ41/5.3
DO:9

1.1 Pneumatic Valve

1.2 Pneumatic Valve

-QN5 .1 .2

=V1AR14UQ41KF1+V1AR14UQ41/2.5
+.AR14UQ41UQ5.1-W1

-W1 3m
RKC 4.4T-3-RSC 4.4T/S3060

BN BU BK WH

-BGS/R
1 3
+ -
TÜNKERS
1324638
A2 A1
2 4

Common Clamp
=V1AR14UQ41UQ5.1
+.AR14UQ41UQ5.1
-UQ5.1

=V1AR14UQ41
-UQ5.1-BGS/R
Common
Clamp

=V1AR14UQ41KF1+V1AR14UQ41/2.6
+.AR14UQ41UQ5.2-W1

-W1 3m
RKC 4.4T-3-RSC 4.4T/S3060

BN BU BK WH

-BGS/R
1 3
+ -
TÜNKERS
1324638
A2 A1
2 4

Common Clamp
=V1AR14UQ41UQ5.2
+.AR14UQ41UQ5.2
-UQ5.2

=V1AR14UQ41
-UQ5.2-BGS/R
Common
Clamp

=V1AR14UQ41UQ4+.AR14UQ41UQ4/1

=V1AR14UQ41UQ6+.AR14UQ41UQ6/1

			Date	12/22/2022	Volvo Trucks North America	Valiant TMS	FESTO DQ CONNECTION QN5	Drawing name: =2V04&EFS-EL	= V1AR14UQ41UQ5
			Ed.	MKLEPADLO					+ V1AR14UQ41UQ5
			Appr		P6700 Underbody Mainline - Cell 2V04			Document type: EFS	Project nr: 22-16151
Modification	Date	Name	Original		Replacement of	Replaced by	Scale 1:1		Page 1 / 1630

0	1	2	3	4	5	6	7	8	9

=V1AR14UQ41KF1
+.AR14UQ41

-KF1.23
=V1AR14UQ41KF1+V1AR14UQ41/5.1

L150 Model Clamps (RST)
=V1AR14UQ41KF1
+V1AR14UQ41
-QN6.1_Q
=V1AR14UQ41KF1
+V1AR14UQ41/5.3
DO:10

L150 Model Clamps (SET)
=V1AR14UQ41KF1
+V1AR14UQ41
-QN6.2_Q
=V1AR14UQ41KF1
+V1AR14UQ41/5.3
DO:11

2.1 Pneumatic Valve

2.2 Pneumatic Valve

-QN6 .1 .2

=V1AR14UQ41KF1+V1AR14UQ41/2.8
+.AR14UQ41UQ6.1-W1

-W1 2m
RKC 4.4T-2-RSC 4.4T/S3060

BN BU BK WH

-BGS/R
1 3
+ -
TÜNKERS
1324638
A2 A1
2 4

L150 Model Clamp
=V1AR14UQ41UQ6.1
+.AR14UQ41UQ6.1
-UQ6.1

=V1AR14UQ41
-UQ6.1-BGS/R
L150 Model
Clamp

=V1AR14UQ41KF1+V1AR14UQ41/2.9
+.AR14UQ41UQ6.2-W1

-W1 2m
RKC 4.4T-2-RSC 4.4T/S3060

BN BU BK WH

-BGS/R
1 3
+ -
TÜNKERS
1324638
A2 A1
2 4

L150 Model Clamp
=V1AR14UQ41UQ6.2
+.AR14UQ41UQ6.2
-UQ6.2

=V1AR14UQ41
-UQ6.2-BGS/R
L150 Model
Clamp

=V1AR14UQ41UQ5+.AR14UQ41UQ5/1

=V1AR14UQ41UQ7+.AR14UQ41UQ7/1

			Date	12/22/2022	Volvo Trucks North America	Valiant TMS	FESTO DQ CONNECTION QN6	Drawing name: =2V04&EFS-EL	= V1AR14UQ41UQ6
			Ed.	MKLEPADLO					+ V1AR14UQ41UQ6
			Appr		P6700 Underbody Mainline - Cell 2V04			Document type: EFS	Project nr: 22-16151
Modification	Date	Name	Original		Replacement of	Replaced by	Scale 1:1		Page 1 / 1630

0	1	2	3	4	5	6	7	8	9

=V1AR14UQ41KF1
+.AR14UQ41

-KF1.24
=V1AR14UQ41KF1+V1AR14UQ41/5.1

L230 Model Clamps (RST)
=V1AR14UQ41KF1
+V1AR14UQ41
-QN7.1_Q
=V1AR14UQ41KF1
+V1AR14UQ41/5.3
DO:12

L230 Model Clamps (SET)
=V1AR14UQ41KF1
+V1AR14UQ41
-QN7.2_Q
=V1AR14UQ41KF1
+V1AR14UQ41/5.3
DO:13

1.1 Pneumatic Valve

1.2 Pneumatic Valve

-QN7 .1 .2

=V1AR14UQ41KF1+V1AR14UQ41/3.1
+.AR14UQ41UQ7.1-W1

-W1 1m
RKC 4.4T-1-RSC 4.4T/S3060

BN BU BK WH

-BGS/R
1 3
+ -
TÜNKERS
1324638
A2 A1
2 4

L230 Model Clamp
=V1AR14UQ41UQ7.1
+.AR14UQ41UQ7.1
-UQ7.1

=V1AR14UQ41
-UQ7.1-BGS/R
L230 Model
Clamp

=V1AR14UQ41KF1+V1AR14UQ41/3.2
+.AR14UQ41UQ7.2-W1

-W1 1m
RKC 4.4T-1-RSC 4.4T/S3060

BN BU BK WH

-BGS/R
1 3
+ -
TÜNKERS
1324638
A2 A1
2 4

L230 Model Clamp
=V1AR14UQ41UQ7.2
+.AR14UQ41UQ7.2
-UQ7.2

=V1AR14UQ41
-UQ7.2-BGS/R
L230 Model
Clamp

=V1AR14UQ41UQ6+.AR14UQ41UQ6/1

=V1AR14UQ41UQ8+.AR14UQ41UQ8/1

			Date	12/22/2022	Volvo Trucks North America	Valiant TMS	FESTO DQ CONNECTION QN7	Drawing name: =2V04&EFS-EL	= V1AR14UQ41UQ7
			Ed.	MKLEPADLO					+ V1AR14UQ41UQ7
			Appr		P6700 Underbody Mainline - Cell 2V04			Document type: EFS	Project nr: 22-16151
Modification	Date	Name	Original		Replacement of	Replaced by	Scale 1:1		Page 1 / 1630

0	1	2	3	4	5	6	7	8	9

=V1AR14UQ41KF1
+.AR14UQ41

-KF1.24
=V1AR14UQ41KF1+V1AR14UQ41/5.1

L290 Model Clamps (RST)
=V1AR14UQ41KF1
+V1AR14UQ41
-QN8.1_Q
=V1AR14UQ41KF1
+V1AR14UQ41/5.3
DO:14

L290 Model Clamps (SET)
=V1AR14UQ41KF1
+V1AR14UQ41
-QN8.2_Q
=V1AR14UQ41KF1
+V1AR14UQ41/5.3
DO:15

2.1 Pneumatic Valve
2.2 Pneumatic Valve

-QN8 .1 .2

=V1AR14UQ41KF1+V1AR14UQ41/3.3
+.AR14UQ41UQ8.1-W1

-W1
RKC 4.4T-2-RSC 4.4T/S3060
2m

BN BU BK WH
1 3
+ -
-BGS/R
TÜNKERS
1324638
A2 A1
2 4

L290 Model Clamp
=V1AR14UQ41UQ8.1
+.AR14UQ41UQ8.1
-UQ8.1

=V1AR14UQ41
-UQ8.1-BGS/R
L290 Model
Clamp

=V1AR14UQ41KF1+V1AR14UQ41/3.4
+.AR14UQ41UQ8.2-W1

-W1
RKC 4.4T-2-RSC 4.4T/S3060
2m

BN BU BK WH
1 3
+ -
-BGS/R
TÜNKERS
1324638
A2 A1
2 4

L290 Model Clamp
=V1AR14UQ41UQ8.2
+.AR14UQ41UQ8.2
-UQ8.2

=V1AR14UQ41
-UQ8.2-BGS/R
L290 Model
Clamp

=V1AR14UQ41UQ7+.AR14UQ41UQ7/1

=V1AR14UQ41UQ9+.AR14UQ41UQ9/1

			Date	12/22/2022	Volvo Trucks North America	Valiant TMS	FESTO DQ CONNECTION QN8	Drawing name: =2V04&EFS-EL	= V1AR14UQ41UQ8
			Ed.	MKLEPADLO					+ V1AR14UQ41UQ8
			Appr		P6700 Underbody Mainline - Cell 2V04	Scale 1:1		Document type: EFS	Project nr: 22-16151
Modification	Date	Name	Original		Replacement of	Replaced by			Page 1 / 1630

0	1	2	3	4	5	6	7	8	9

=V1AR14UQ41KF1
+.AR14UQ41

-KF1.25
=V1AR14UQ41KF1+V1AR14UQ41/5.1

L320 Model Clamps (RST)
=V1AR14UQ41KF1
+V1AR14UQ41
-QN9.1_Q
=V1AR14UQ41KF1
+V1AR14UQ41/5.3
DO:16

L320 Model Clamps (SET)
=V1AR14UQ41KF1
+V1AR14UQ41
-QN9.2_Q
=V1AR14UQ41KF1
+V1AR14UQ41/5.3
DO:17

1.1 Pneumatic Valve

1.2 Pneumatic Valve

-QN9 .1 .2

=V1AR14UQ41KF1+V1AR14UQ41/3.5
+.AR14UQ41UQ9.1-W1

-W1
RKC 4.4T-2-RSC 4.4T/S3060
2m

BN BU BK WH
1 3
-BGS/R
TÜNKERS
1324638
A2 A1
2 4

L320 Model Clamp
=V1AR14UQ41UQ9.1
+.AR14UQ41UQ9.1
-UQ9.1

=V1AR14UQ41
-UQ9.1-BGS/R
L320 Model
Clamp

=V1AR14UQ41KF1+V1AR14UQ41/3.6
+.AR14UQ41UQ9.2-W1

-W1
RKC 4.4T-2-RSC 4.4T/S3060
2m

BN BU BK WH
1 3
-BGS/R
TÜNKERS
1324638
A2 A1
2 4

L320 Model Clamp
=V1AR14UQ41UQ9.2
+.AR14UQ41UQ9.2
-UQ9.2

=V1AR14UQ41
-UQ9.2-BGS/R
L320 Model
Clamp

=V1AR14UQ41UQ8+.AR14UQ41UQ8/1

=V1AR14UQ41UQ10+.AR14UQ41UQ10/1

			Date	12/22/2022	Volvo Trucks North America	Valiant TMS	FESTO DQ CONNECTION QN9	Drawing name: =2V04&EFS-EL	= V1AR14UQ41UQ9
			Ed.	MKLEPADLO					+ V1AR14UQ41UQ9
			Appr		P6700 Underbody Mainline - Cell 2V04			Document type: EFS	Project nr: 22-16151
Modification	Date	Name	Original		Replacement of	Replaced by	Scale 1:1		Page 1 / 1630

0	1	2	3	4	5	6	7	8	9

=V1AR14UQ41KF1
+.AR14UQ41

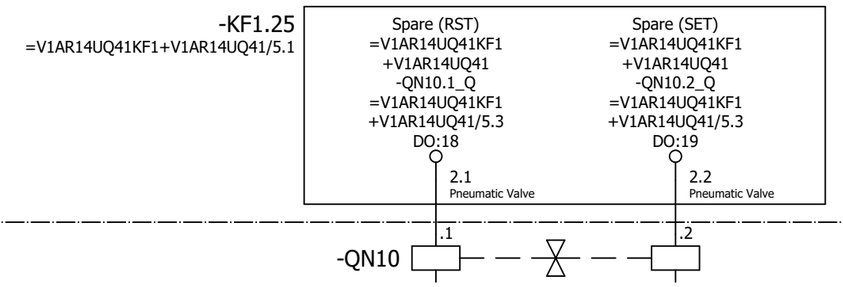

=V1AR14UQ41UQ9+.AR14UQ41UQ9/1

=V1AR14WC1+.AR14UC01/1

			Date	12/22/2022	Volvo Trucks North America	Valiant TMS	FESTO DQ CONNECTION QN10	Drawing name: =2V04&EFS-EL	= V1AR14UQ41UQ10
			Ed.	MKLEPADLO					+ V1AR14UQ41UQ10
			Appr		P6700 Underbody Mainline - Cell 2V04	Scale 1:1		Document type: EFS	Project nr: 22-16151
Modification	Date	Name	Original		Replacement of	Replaced by			Page 1 / 1630

0	1	2	3	4	5	6	7	8	9

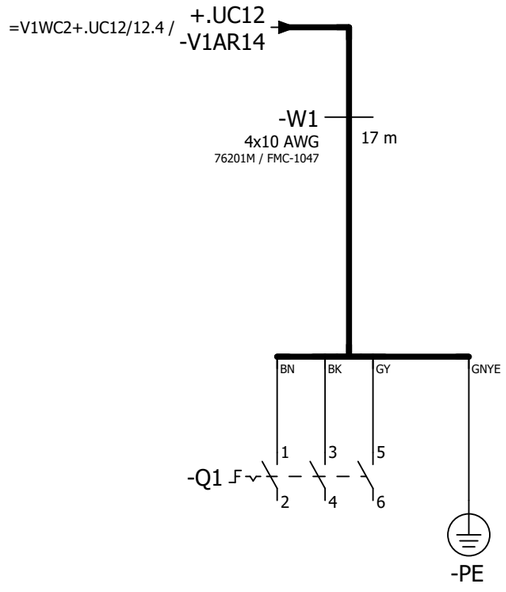

=V1AR14UQ41UQ10+.AR14UQ41UQ10/1

=V1AR15KF1+.AR15UC01/1

			Date	12/22/2022	Volvo Trucks North America		Valiant TMS	Incoming power	Drawing name: =2V04&EFS-EL	= V1AR14WC1	
			Ed.	MKLEPADLO						+ V1AR14UC01	
			Appr		P6700 Underbody Mainline - Cell 2V04				Document type: EFS	Project nr: 22-16151	Page 1
Modification	Date	Name	Original		Replacement of	Replaced by	Scale 1:1				1630

0	1	2	3	4	5	6	7	8	9

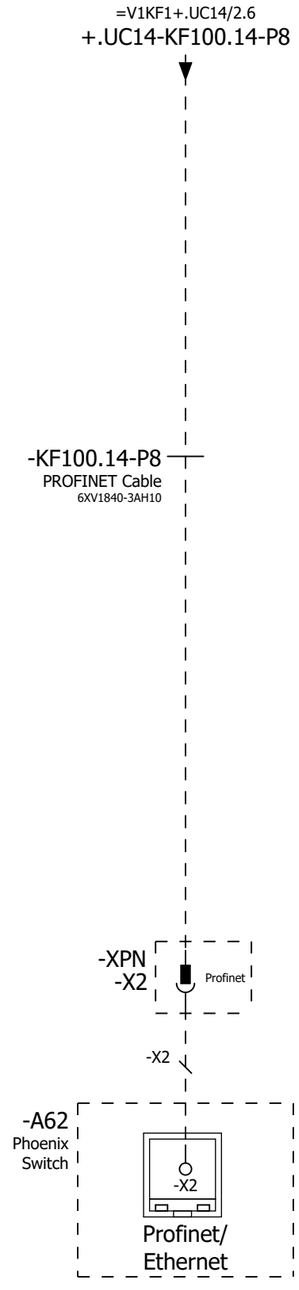

=V1AR14WC1+.AR14UC01/1

=V1AR15UQ41BG0+.AR15UQ41/1

			Date	12/22/2022	Volvo Trucks North America	Valiant TMS	Incoming Profinet	Drawing name: =2V04&EFS-EL	= V1AR15KF1
			Ed.	MKLEPADLO					+ V1AR15UC01
			Appr		P6700 Underbody Mainline - Cell 2V04			Document type: EFS	Project nr: 22-16151
Modification	Date	Name	Original		Replacement of	Replaced by	Scale 1:1		Page 1 / 1630

0	1	2	3	4	5	6	7	8	9

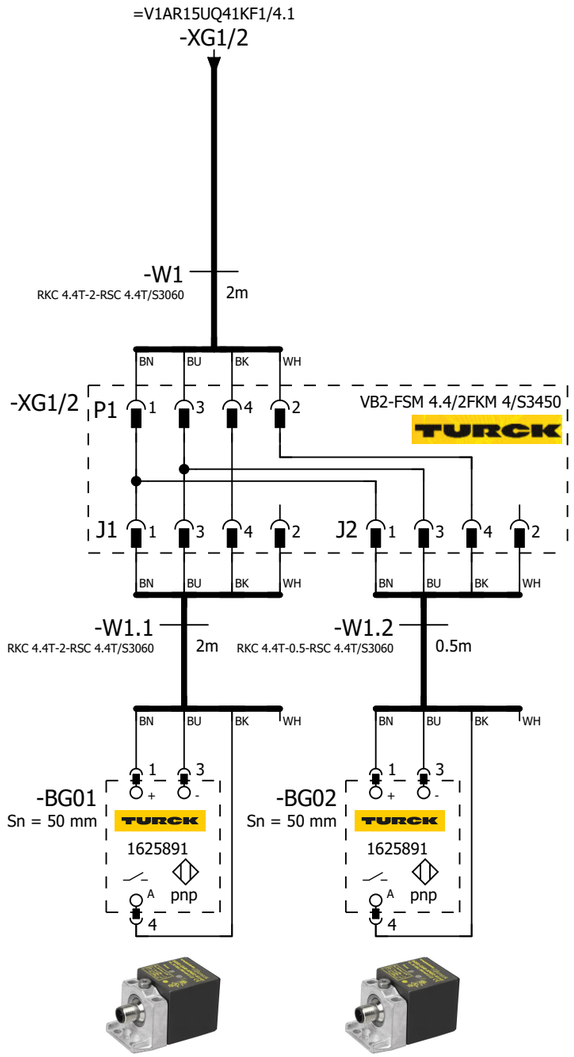

=V1AR15UQ41 -BG01 Floor Frame Assy (Common)	=V1AR15UQ41 -BG02 Floor Frame Assy (Common)

=V1AR15KF1+.AR15UC01/1

=V1AR15UQ41KF1/1

			Date	12/22/2022	Volvo Trucks North America		Valiant TMS	SENSORS	Drawing name: =2V04&EFS-EL	= V1AR15UQ41BG0
			Ed.	MKLEPADLO						+ V1AR15UQ41
			Appr		P6700 Underbody Mainline - Cell 2V04				Document type: EFS	Project nr: 22-16151	Page 1
Modification	Date	Name	Original		Replacement of	Replaced by	Scale 1:1				1630

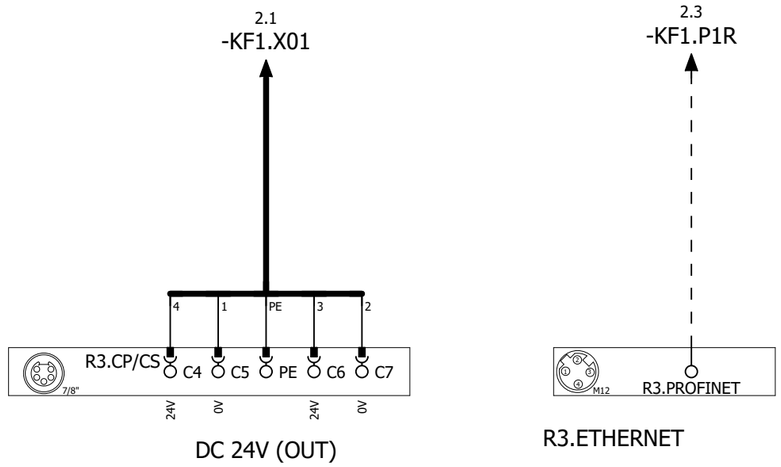

DC 24V (OUT)

R3.ETHERNET

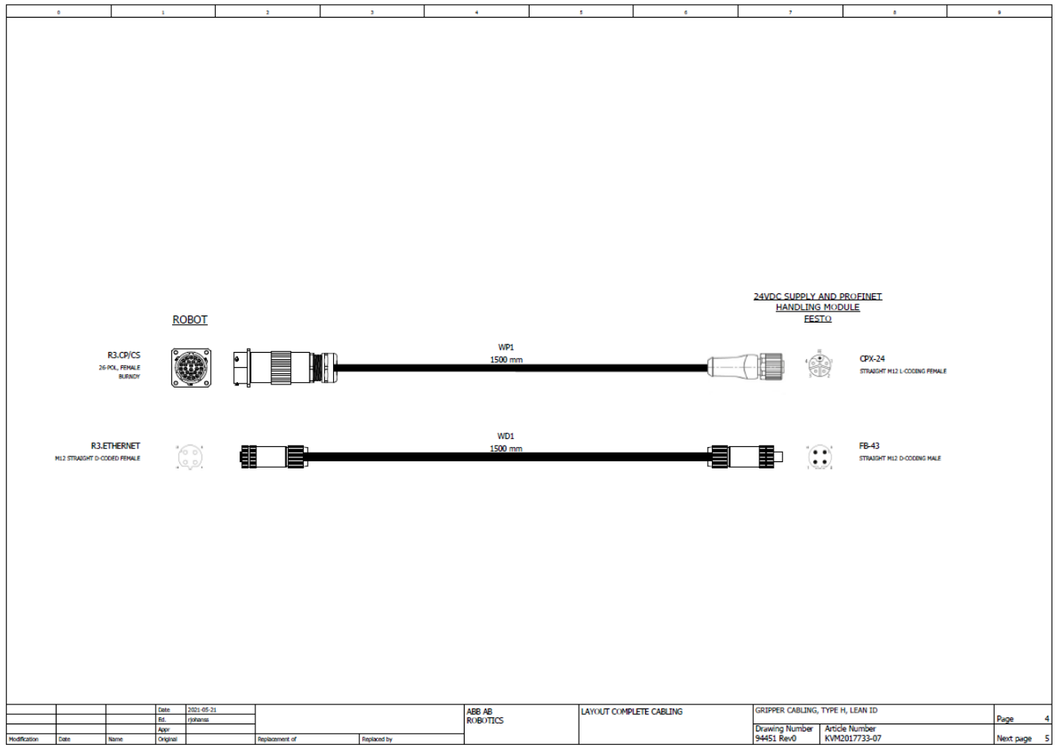

=V1AR15UQ41BG0/1

2

			Date	12/22/2022	Volvo Trucks North America	Valiant TMS	24VDC SUPPLY AND PROFINET HANDLING MODULE	Drawing name: =2V04&EFS-EL	= V1AR15UQ41KF1
			Ed.	MKLEPADLO					+ V1AR15UQ41
			Appr		P6700 Underbody Mainline - Cell 2V04			Document type: EFS	Project nr: 22-16151
Modification	Date	Name	Original		Replacement of	Replaced by	Scale 1:1		Page 1 / 1630

0	1	2	3	4	5	6	7	8	9

1.3 / -KF1.X01

-W1
RSM RKM 56-2M/S3059
2m

1.5 / -KF1.P1R

-WF1
PROFINET Cable
6XV1840-3AH10

-KF1

X20 (7/8") 1 2 PE 3 4
0V_VAL / OUT
0V_EL / SEN
FE
24V_EL / SEN
24V_VAL / OUT

ON / OFF 1 2 1 2

M12 -TP1
M12 -TP2

FESTO
Bus node + Interlinking block
548755 + 550208

DI:0	DI 0 X1:4	V1AR15UQ41UQ1.1-BGS	Common Vacuums (SET)
DI:1	DI 1 X1:2	DI:1	Spare
DI:2	DI 2 X2:4	V1AR15UQ41UQ2.1-BGS	L230/320 Model Vacuums (SET)
DI:3	DI 3 X2:2	DI:3	Spare
DI:4	DI 4 X3:4	V1AR15UQ41UQ3.1-BGS	L290 Model Vacuums (SET)
DI:5	DI 5 X3:2	DI:5	Spare
DI:6	DI 6 X4:4	V1AR15UQ41UQ4.1-BGS	L320 Model Vacuums (SET)
DI:7	DI 7 X4:2	DI:7	Spare
DI:8	DI 8 X5:4	V1AR15UQ41UQ5.1-BGR	Common Clamp (RESET)
DI:9	DI 9 X5:2	V1AR15UQ41UQ5.1-BGS	Common Clamp (SET)
DI:10	DI 10 X6:4	V1AR15UQ41UQ5.2-BGR	Common Clamp (RESET)
DI:11	DI 11 X6:2	V1AR15UQ41UQ5.2-BGS	Common Clamp (SET)
DI:12	DI 12 X7:4	V1AR15UQ41UQ6.1-BGR	L150 Model Clamp (RESET)
DI:13	DI 13 X7:2	V1AR15UQ41UQ6.1-BGS	L150 Model Clamp (SET)
DI:14	DI 14 X8:4	V1AR15UQ41UQ6.2-BGR	L150 Model Clamp (RESET)
DI:15	DI 15 X8:2	V1AR15UQ41UQ6.2-BGS	L150 Model Clamp (SET)

-KF1.11

FESTO
CPX-M-AB-8-M12X2-5POL
549335

X1 X2 X3 X4 X5 X6 X7 X8 (M12)
1: 24V
2: DI 1 / DI 3 / DI 5 / DI 7 / DI 9 / DI 11 / DI 13 / DI 15
3: 0V
4: DI 0 / DI 2 / DI 4 / DI 6 / DI 8 / DI 10 / DI 12 / DI 14
5: FE
BN WH BU BK

+.AR15UQ41UQ1.1-W1
=V1AR15UQ41UQ1+.AR15UQ41UQ1/1.1

+.AR15UQ41UQ2.1-W1
=V1AR15UQ41UQ2+.AR15UQ41UQ2/1.1

+.AR15UQ41UQ3.1-W1
=V1AR15UQ41UQ3+.AR15UQ41UQ3/1.1

+.AR15UQ41UQ4.1-W1
=V1AR15UQ41UQ4+.AR15UQ41UQ4/1.1

+.AR15UQ41UQ5.1-W1
=V1AR15UQ41UQ5+.AR15UQ41UQ5/1.1

+.AR15UQ41UQ5.2-W1
=V1AR15UQ41UQ5+.AR15UQ41UQ5/1.2

+.AR15UQ41UQ6.1-W1
=V1AR15UQ41UQ6+.AR15UQ41UQ6/1.1

+.AR15UQ41UQ6.2-W1
=V1AR15UQ41UQ6+.AR15UQ41UQ6/1.2

1 3

			Date	12/22/2022	Volvo Trucks North America	Valiant TMS	CONNECTING MOD. FOR MPA MANIFOLD	Drawing name: =2V04&EFS-EL	= V1AR15UQ41KF1
			Ed.	MKLEPADLO					+ V1AR15UQ41
			Appr		P6700 Underbody Mainline - Cell 2V04	Scale 1:1		Document type: EFS	Project nr: 22-16151
Modification	Date	Name	Original		Replacement of	Replaced by			Page 2 / 1630

0	1	2	3	4	5	6	7	8	9

-KF1.12

FESTO

CPX-M-AB-8-M12X2-5POL

549335

DI:16	DI 0 X1:4	V1AR15UQ41UQ7.1-BGR	L230 Model Clamp (RESET)
DI:17	DI 1 X1:2	V1AR15UQ41UQ7.1-BGS	L230 Model Clamp (SET)
DI:18	DI 2 X2:4	V1AR15UQ41UQ7.2-BGR	L230 Model Clamp (RESET)
DI:19	DI 3 X2:2	V1AR15UQ41UQ7.2-BGS	L230 Model Clamp (SET)
DI:20	DI 4 X3:4	V1AR15UQ41UQ8.1-BGR	L290 Model Clamp (RESET)
DI:21	DI 5 X3:2	V1AR15UQ41UQ8.1-BGS	L290 Model Clamp (SET)
DI:22	DI 6 X4:4	V1AR15UQ41UQ8.2-BGR	L290 Model Clamp (RESET)
DI:23	DI 7 X4:2	V1AR15UQ41UQ8.2-BGS	L290 Model Clamp (SET)
DI:24	DI 8 X5:4	V1AR15UQ41UQ9.1-BGR	L320 Model Clamp (RESET)
DI:25	DI 9 X5:2	V1AR15UQ41UQ9.1-BGS	L320 Model Clamp (SET)
DI:26	DI 10 X6:4	V1AR15UQ41UQ9.2-BGR	L320 Model Clamp (RESET)
DI:27	DI 11 X6:2	V1AR15UQ41UQ9.2-BGS	L320 Model Clamp (SET)
DI:28	DI 12 X7:4	DI:28	Spare
DI:29	DI 13 X7:2	DI:29	Spare
DI:30	DI 14 X8:4	DI:30	Spare
DI:31	DI 15 X8:2	DI:31	Spare

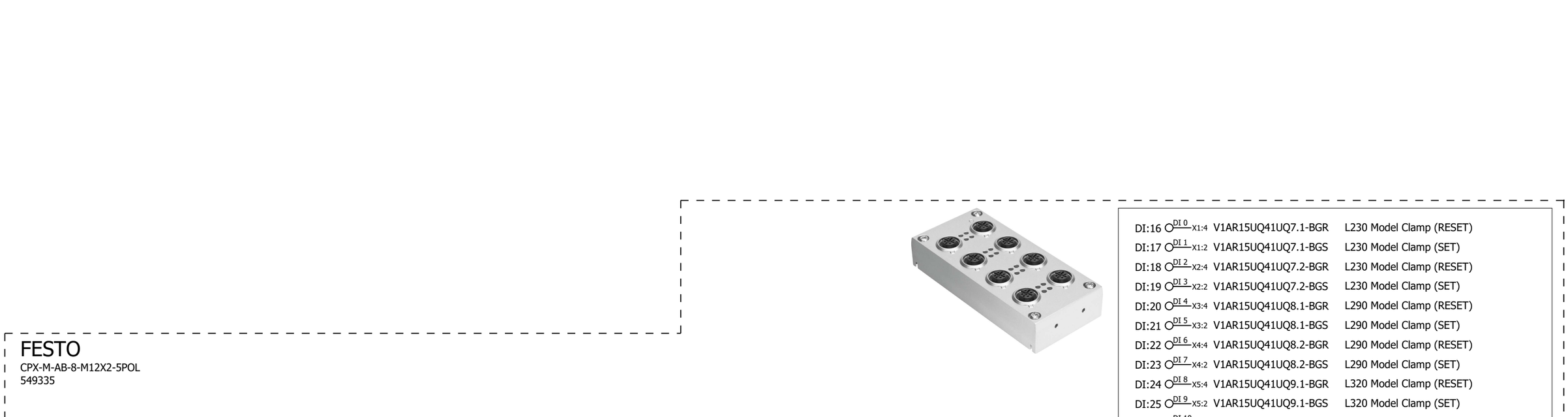

2 4

			Date	12/22/2022	Volvo Trucks North America	Valiant TMS	I/O MOD. DI16 (8 x M12) FOR MPA	Drawing name: =2V04&EFS-EL	= V1AR15UQ41KF1
			Ed.	MKLEPADLO					+ V1AR15UQ41
			Appr		P6700 Underbody Mainline - Cell 2V04			Document type: EFS	Project nr: 22-16151
Modification	Date	Name	Original		Replacement of	Replaced by	Scale 1:1		Page 3 / 1630

0	1	2	3	4	5	6	7	8	9

-KF1.13

FESTO
CPX-M-AB-8-M12X2-5POL
549335

DI:32	DI 0 X1:4	V1AR15UQ41-BG01	Sensor Floor Frame Assy (Common)
DI:33	DI 1 X1:2	V1AR15UQ41-BG02	Sensor Floor Frame Assy (Common)
DI:34	DI 2 X2:4	DI:34	Spare
DI:35	DI 3 X2:2	DI:35	Spare
DI:36	DI 4 X3:4	DI:36	Spare
DI:37	DI 5 X3:2	DI:37	Spare
DI:38	DI 6 X4:4	DI:38	Spare
DI:39	DI 7 X4:2	DI:39	Spare
DI:40	DI 8 X5:4	DI:40	Spare
DI:41	DI 9 X5:2	DI:41	Spare
DI:42	DI 10 X6:4	DI:42	Spare
DI:43	DI 11 X6:2	DI:43	Spare
DI:44	DI 12 X7:4	DI:44	Spare
DI:45	DI 13 X7:2	DI:45	Spare
DI:46	DI 14 X8:4	DI:46	Spare
DI:47	DI 15 X8:2	DI:47	Spare

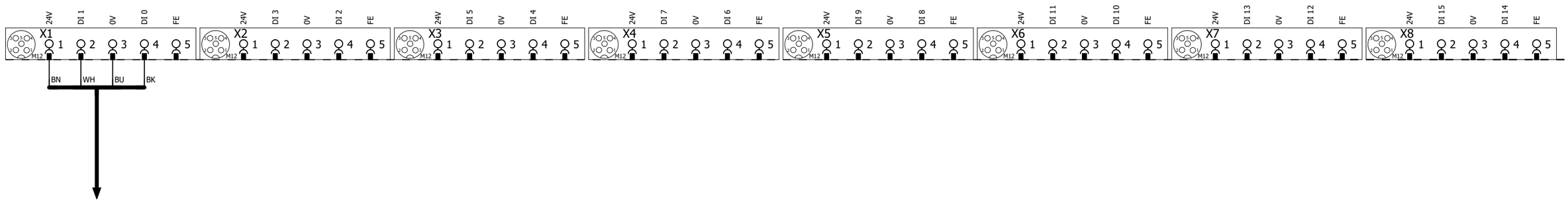

-XG1/2
=V1AR15UQ41BG0/1.1

3 5

			Date	12/22/2022	Volvo Trucks North America	Valiant TMS	I/O MOD. DI16 (8 x M12) FOR MPA	Drawing name: =2V04&EFS-EL	= V1AR15UQ41KF1
			Ed.	MKLEPADLO					+ V1AR15UQ41
			Appr		P6700 Underbody Mainline - Cell 2V04			Document type: EFS	Project nr: 22-16151
Modification	Date	Name	Original		Replacement of / Replaced by	Scale 1:1			Page 4 / 1630

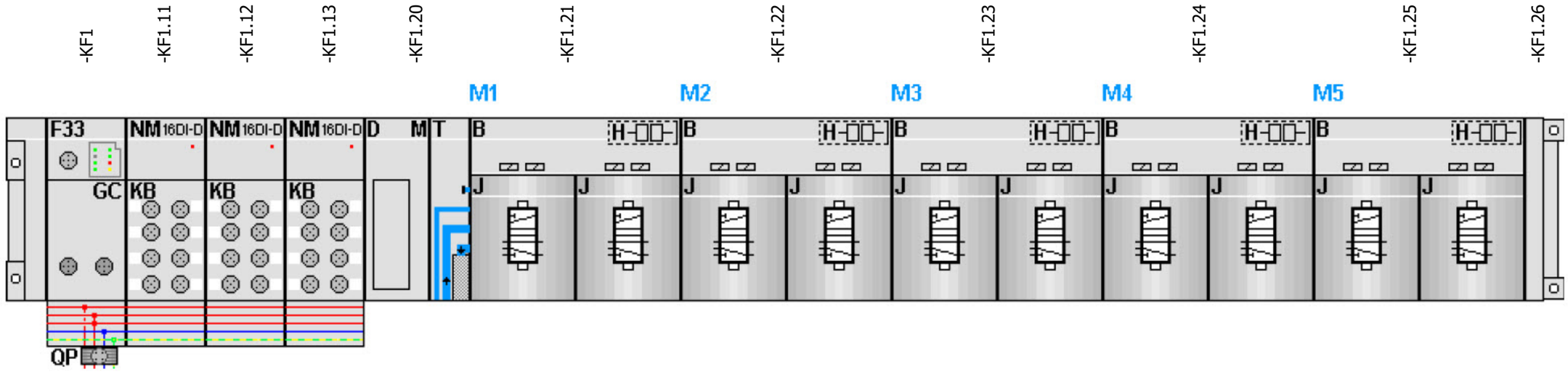

-KF1.21
=V1AR15UQ41UQ1+.AR15UQ41UQ1/1.3
=V1AR15UQ41UQ2+.AR15UQ41UQ2/1.3

FESTO

=V1AR15UQ41UQ1+.AR15UQ41UQ1/1.4	DO:0 DO 0 1.1	-QN1.1_Q	Common Vacuums (RST)
=V1AR15UQ41UQ1+.AR15UQ41UQ1/1.4	DO:1 DO 1 1.2	-QN1.2_Q	Common Vacuums (SET)
=V1AR15UQ41UQ2+.AR15UQ41UQ2/1.4	DO:2 DO 2 2.1	-QN2.1_Q	L230/320 Model Vacuums (RST)
=V1AR15UQ41UQ2+.AR15UQ41UQ2/1.4	DO:3 DO 3 2.2	-QN2.2_Q	L230/320 Model Vacuums (SET)

-KF1.22
=V1AR15UQ41UQ3+.AR15UQ41UQ3/1.3
=V1AR15UQ41UQ4+.AR15UQ41UQ4/1.3

FESTO

=V1AR15UQ41UQ3+.AR15UQ41UQ3/1.4	DO:4 DO 4 1.1	-QN3.1_Q	L290 Model Vacuums (RST)
=V1AR15UQ41UQ3+.AR15UQ41UQ3/1.4	DO:5 DO 5 1.2	-QN3.2_Q	L290 Model Vacuums (SET)
=V1AR15UQ41UQ4+.AR15UQ41UQ4/1.4	DO:6 DO 6 2.1	-QN4.1_Q	L320 Model Vacuums (RST)
=V1AR15UQ41UQ4+.AR15UQ41UQ4/1.4	DO:7 DO 7 2.2	-QN4.2_Q	L320 Model Vacuums (SET)

-KF1.23
=V1AR15UQ41UQ5+.AR15UQ41UQ5/1.3
=V1AR15UQ41UQ6+.AR15UQ41UQ6/1.3

FESTO

=V1AR15UQ41UQ5+.AR15UQ41UQ5/1.4	DO:8 DO 8 1.1	-QN5.1_Q	Common Clamps (RST)
=V1AR15UQ41UQ5+.AR15UQ41UQ5/1.4	DO:9 DO 9 1.2	-QN5.2_Q	Common Clamps (SET)
=V1AR15UQ41UQ6+.AR15UQ41UQ6/1.4	DO:10 DO 10 2.1	-QN6.1_Q	L150 Model Clamps (RST)
=V1AR15UQ41UQ6+.AR15UQ41UQ6/1.4	DO:11 DO 11 2.2	-QN6.2_Q	L150 Model Clamps (SET)

-KF1.24
=V1AR15UQ41UQ7+.AR15UQ41UQ7/1.3
=V1AR15UQ41UQ8+.AR15UQ41UQ8/1.3

FESTO

=V1AR15UQ41UQ7+.AR15UQ41UQ7/1.4	DO:12 DO 12 1.1	-QN7.1_Q	L230 Model Clamps (RST)
=V1AR15UQ41UQ7+.AR15UQ41UQ7/1.4	DO:13 DO 13 1.2	-QN7.2_Q	L230 Model Clamps (SET)
=V1AR15UQ41UQ8+.AR15UQ41UQ8/1.4	DO:14 DO 14 2.1	-QN8.1_Q	L290 Model Clamps (RST)
=V1AR15UQ41UQ8+.AR15UQ41UQ8/1.4	DO:15 DO 15 2.2	-QN8.2_Q	L290 Model Clamps (SET)

-KF1.25
=V1AR15UQ41UQ9+.AR15UQ41UQ9/1.3
=V1AR15UQ41UQ10+.AR15UQ41UQ10/1.3

FESTO

=V1AR15UQ41UQ9+.AR15UQ41UQ9/1.4	DO:16 DO 16 1.1	-QN9.1_Q	L320 Model Clamps (RST)
=V1AR15UQ41UQ9+.AR15UQ41UQ9/1.4	DO:17 DO 17 1.2	-QN9.2_Q	L320 Model Clamps (SET)
=V1AR15UQ41UQ10+.AR15UQ41UQ10/1.4	DO:18 DO 18 2.1	-QN10.1_Q	Spare (RST)
=V1AR15UQ41UQ10+.AR15UQ41UQ10/1.4	DO:19 DO 19 2.2	-QN10.2_Q	Spare (SET)

0	1	2	3	4	5	6	7	8	9

=V1AR15UQ41KF1
+.AR15UQ41

-KF1.21
=V1AR15UQ41KF1+V1AR15UQ41/5.1

Common Vacuums (RST)	Common Vacuums (SET)
=V1AR15UQ41KF1	=V1AR15UQ41KF1
+V1AR15UQ41	+V1AR15UQ41
-QN1.1_Q	-QN1.2_Q
=V1AR15UQ41KF1	=V1AR15UQ41KF1
+V1AR15UQ41/5.3	+V1AR15UQ41/5.3
DO:0	DO:1

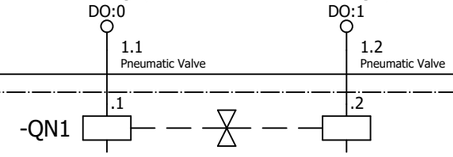

=V1AR15UQ41KF1+V1AR15UQ41/2.1
+.AR15UQ41UQ1.1-W1

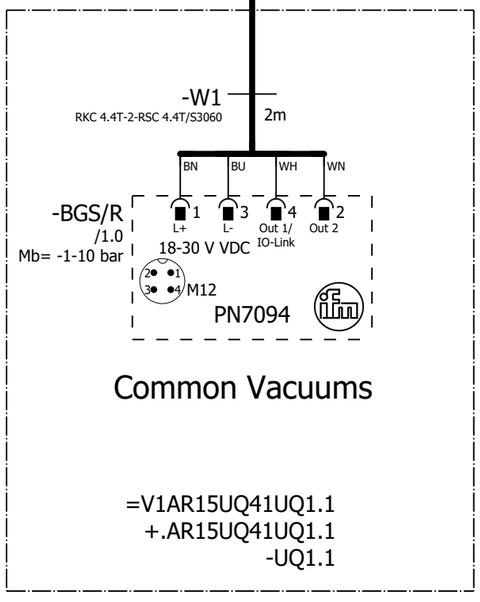

Common Vacuums

=V1AR15UQ41UQ1.1
+.AR15UQ41UQ1.1
-UQ1.1

=V1AR15UQ41
-UQ1.1-BGS/R
Common
Vacuums

=V1AR15UQ41KF1+V1AR15UQ41/5

=V1AR15UQ41UQ2+.AR15UQ41UQ2/1

			Date	12/22/2022	Volvo Trucks North America	Valiant TMS	FESTO DQ CONNECTION QN1	Drawing name: =2V04&EFS-EL	= V1AR15UQ41UQ1
			Ed.	MKLEPADLO					+ V1AR15UQ41UQ1
			Appr		P6700 Underbody Mainline - Cell 2V04			Document type: EFS	Project nr: 22-16151
Modification	Date	Name	Original		Replacement of	Replaced by	Scale 1:1		Page 1 / 1630

0	1	2	3	4	5	6	7	8	9

=V1AR15UQ41KF1
+.AR15UQ41

-KF1.21
=V1AR15UQ41KF1+V1AR15UQ41/5.1

L230/320 Model Vacuums (RST)
=V1AR15UQ41KF1
+V1AR15UQ41
-QN2.1_Q
=V1AR15UQ41KF1
+V1AR15UQ41/5.3
DO:2

L230/320 Model Vacuums (SET)
=V1AR15UQ41KF1
+V1AR15UQ41
-QN2.2_Q
=V1AR15UQ41KF1
+V1AR15UQ41/5.3
DO:3

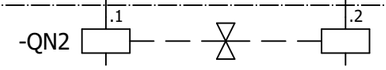

=V1AR15UQ41KF1+V1AR15UQ41/2.2
+.AR15UQ41UQ2.1-W1

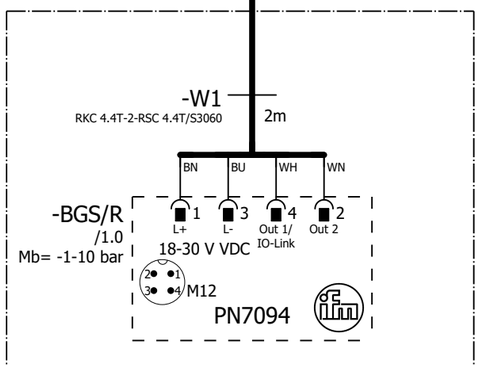

L230/320 Model Vacuums

=V1AR15UQ41UQ2.1
+.AR15UQ41UQ2.1
-UQ2.1

=V1AR15UQ41 -UQ2.1-BGS/R L230/320 Model Vacuums

=V1AR15UQ41UQ1+.AR15UQ41UQ1/1

=V1AR15UQ41UQ3+.AR15UQ41UQ3/1

			Date	12/22/2022	Volvo Trucks North America	Valiant TMS	FESTO DQ CONNECTION QN2	Drawing name: =2V04&EFS-EL	= V1AR15UQ41UQ2
			Ed.	MKLEPADLO					+ V1AR15UQ41UQ2
			Appr		P6700 Underbody Mainline - Cell 2V04			Document type: EFS	Project nr: 22-16151
Modification	Date	Name	Original		Replacement of	Replaced by	Scale 1:1		Page 1 / 1630

0	1	2	3	4	5	6	7	8	9

=V1AR15UQ41KF1
+.AR15UQ41

-KF1.22
=V1AR15UQ41KF1+V1AR15UQ41/5.1

L290 Model Vacuums (RST)	L290 Model Vacuums (SET)
=V1AR15UQ41KF1	=V1AR15UQ41KF1
+V1AR15UQ41	+V1AR15UQ41
-QN3.1_Q	-QN3.2_Q
=V1AR15UQ41KF1	=V1AR15UQ41KF1
+V1AR15UQ41/5.3	+V1AR15UQ41/5.3
DO:4	DO:5

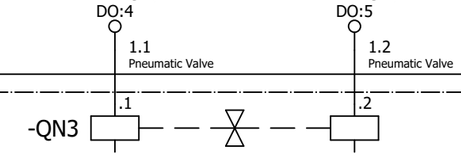

=V1AR15UQ41KF1+V1AR15UQ41/2.3
+.AR15UQ41UQ3.1-W1

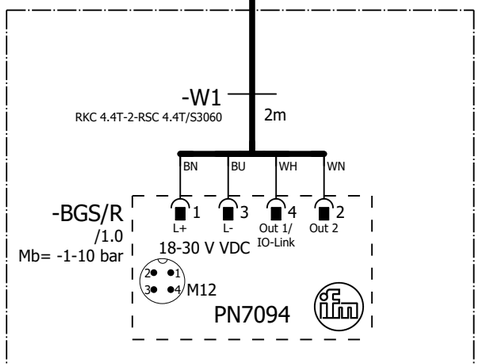

L290 Model Vacuums

=V1AR15UQ41UQ3.1
+.AR15UQ41UQ3.1
-UQ3.1

=V1AR15UQ41 -UQ3.1-BGS/R L290 Model Vacuums

=V1AR15UQ41UQ2+.AR15UQ41UQ2/1

=V1AR15UQ41UQ4+.AR15UQ41UQ4/1

			Date	12/22/2022	Volvo Trucks North America	Valiant TMS	FESTO DQ CONNECTION QN3	Drawing name: =2V04&EFS-EL	= V1AR15UQ41UQ3
			Ed.	MKLEPADLO					+ V1AR15UQ41UQ3
			Appr		P6700 Underbody Mainline - Cell 2V04			Document type: EFS	Project nr: 22-16151
Modification	Date	Name	Original		Replacement of	Replaced by	Scale 1:1		Page 1 / 1630

0	1	2	3	4	5	6	7	8	9

=V1AR15UQ41KF1
+.AR15UQ41

-KF1.22
=V1AR15UQ41KF1+V1AR15UQ41/5.1

L320 Model Vacuums (RST)	L320 Model Vacuums (SET)
=V1AR15UQ41KF1	=V1AR15UQ41KF1
+V1AR15UQ41	+V1AR15UQ41
-QN4.1_Q	-QN4.2_Q
=V1AR15UQ41KF1	=V1AR15UQ41KF1
+V1AR15UQ41/5.3	+V1AR15UQ41/5.3
DO:6	DO:7

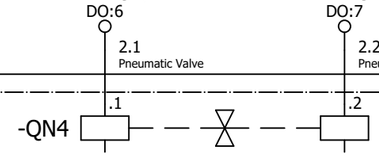

=V1AR15UQ41KF1+V1AR15UQ41/2.4
+.AR15UQ41UQ4.1-W1

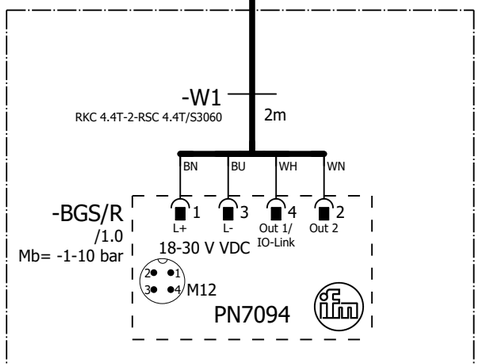

L320 Model Vacuums

=V1AR15UQ41UQ4.1
+.AR15UQ41UQ4.1
-UQ4.1

=V1AR15UQ41 -UQ4.1-BGS/R L320 Model Vacuums

=V1AR15UQ41UQ3+.AR15UQ41UQ3/1

=V1AR15UQ41UQ5+.AR15UQ41UQ5/1

			Date	12/22/2022	Volvo Trucks North America	Valiant TMS	FESTO DQ CONNECTION QN4	Drawing name: =2V04&EFS-EL	= V1AR15UQ41UQ4
			Ed.	MKLEPADLO					+ V1AR15UQ41UQ4
			Appr		P6700 Underbody Mainline - Cell 2V04			Document type: EFS	Project nr: 22-16151
Modification	Date	Name	Original		Replacement of	Replaced by	Scale 1:1		Page 1 / 1630

0	1	2	3	4	5	6	7	8	9

=V1AR15UQ41KF1
+.AR15UQ41

-KF1.23
=V1AR15UQ41KF1+V1AR15UQ41/5.1

Common Clamps (RST)
=V1AR15UQ41KF1
+V1AR15UQ41
-QN5.1_Q
=V1AR15UQ41KF1
+V1AR15UQ41/5.3
DO:8

Common Clamps (SET)
=V1AR15UQ41KF1
+V1AR15UQ41
-QN5.2_Q
=V1AR15UQ41KF1
+V1AR15UQ41/5.3
DO:9

1.1 Pneumatic Valve

1.2 Pneumatic Valve

-QN5 .1 .2

=V1AR15UQ41KF1+V1AR15UQ41/2.5
+.AR15UQ41UQ5.1-W1

=V1AR15UQ41KF1+V1AR15UQ41/2.6
+.AR15UQ41UQ5.2-W1

-W1 3m
RKC 4.4T-3-RSC 4.4T/S3060

-BGS/R
BN BU BK WH
1 3
TÜNKERS
1324638
A2 A1
2 4

Common Clamp
=V1AR15UQ41UQ5.1
+.AR15UQ41UQ5.1
-UQ5.1

Common Clamp
=V1AR15UQ41UQ5.2
+.AR15UQ41UQ5.2
-UQ5.2

=V1AR15UQ41
-UQ5.1-BGS/R
Common
Clamp

=V1AR15UQ41
-UQ5.2-BGS/R
Common
Clamp

=V1AR15UQ41UQ4+.AR15UQ41UQ4/1

=V1AR15UQ41UQ6+.AR15UQ41UQ6/1

			Date	12/22/2022	Volvo Trucks North America	Valiant TMS	FESTO DQ CONNECTION QN5	Drawing name: =2V04&EFS-EL	= V1AR15UQ41UQ5
			Ed.	MKLEPADLO					+ V1AR15UQ41UQ5
			Appr		P6700 Underbody Mainline - Cell 2V04			Document type: EFS	Project nr: 22-16151
Modification	Date	Name	Original		Replacement of	Replaced by	Scale 1:1		Page 1 / 1630

0	1	2	3	4	5	6	7	8	9

=V1AR15UQ41KF1
+.AR15UQ41

-KF1.23
=V1AR15UQ41KF1+V1AR15UQ41/5.1

L150 Model Clamps (RST)
=V1AR15UQ41KF1
+V1AR15UQ41
-QN6.1_Q
=V1AR15UQ41KF1
+V1AR15UQ41/5.3
DO:10

L150 Model Clamps (SET)
=V1AR15UQ41KF1
+V1AR15UQ41
-QN6.2_Q
=V1AR15UQ41KF1
+V1AR15UQ41/5.3
DO:11

2.1 Pneumatic Valve

2.2 Pneumatic Valve

-QN6 .1 .2

=V1AR15UQ41KF1+V1AR15UQ41/2.8
+.AR15UQ41UQ6.1-W1

-W1 2m
RKC 4.4T-2-RSC 4.4T/S3060

BN BU BK WH

-BGS/R
1 3
+ -
TÜNKERS
1324638
A2 A1
2 4

L150 Model Clamp
=V1AR15UQ41UQ6.1
+.AR15UQ41UQ6.1
-UQ6.1

=V1AR15UQ41
-UQ6.1-BGS/R
L150 Model
Clamp

=V1AR15UQ41KF1+V1AR15UQ41/2.9
+.AR15UQ41UQ6.2-W1

-W1 2m
RKC 4.4T-2-RSC 4.4T/S3060

BN BU BK WH

-BGS/R
1 3
+ -
TÜNKERS
1324638
A2 A1
2 4

L150 Model Clamp
=V1AR15UQ41UQ6.2
+.AR15UQ41UQ6.2
-UQ6.2

=V1AR15UQ41
-UQ6.2-BGS/R
L150 Model
Clamp

=V1AR15UQ41UQ5+.AR15UQ41UQ5/1

=V1AR15UQ41UQ7+.AR15UQ41UQ7/1

			Date	12/22/2022	Volvo Trucks North America	Valiant TMS	FESTO DQ CONNECTION QN6	Drawing name: =2V04&EFS-EL	= V1AR15UQ41UQ6
			Ed.	MKLEPADLO					+ V1AR15UQ41UQ6
			Appr		P6700 Underbody Mainline - Cell 2V04			Document type: EFS	Project nr: 22-16151
Modification	Date	Name	Original		Replacement of	Replaced by	Scale 1:1		Page 1 / 1630

0	1	2	3	4	5	6	7	8	9

=V1AR15UQ41KF1
+.AR15UQ41

-KF1.24
=V1AR15UQ41KF1+V1AR15UQ41/5.1

L230 Model Clamps (RST)
=V1AR15UQ41KF1
+V1AR15UQ41
-QN7.1_Q
=V1AR15UQ41KF1
+V1AR15UQ41/5.3
DO:12

L230 Model Clamps (SET)
=V1AR15UQ41KF1
+V1AR15UQ41
-QN7.2_Q
=V1AR15UQ41KF1
+V1AR15UQ41/5.3
DO:13

1.1 Pneumatic Valve

1.2 Pneumatic Valve

.1 -QN7 .2

=V1AR15UQ41KF1+V1AR15UQ41/3.1
+.AR15UQ41UQ7.1-W1

-W1 1m
RKC 4.4T-1-RSC 4.4T/S3060

BN BU BK WH
1 3
-BGS/R
TÜNKERS
1324638
A2 A1
2 4

L230 Model Clamp
=V1AR15UQ41UQ7.1
+.AR15UQ41UQ7.1
-UQ7.1

=V1AR15UQ41
-UQ7.1-BGS/R
L230 Model
Clamp

=V1AR15UQ41KF1+V1AR15UQ41/3.2
+.AR15UQ41UQ7.2-W1

-W1 2m
RKC 4.4T-2-RSC 4.4T/S3060

BN BU BK WH
1 3
-BGS/R
TÜNKERS
1324638
A2 A1
2 4

L230 Model Clamp
=V1AR15UQ41UQ7.2
+.AR15UQ41UQ7.2
-UQ7.2

=V1AR15UQ41
-UQ7.2-BGS/R
L230 Model
Clamp

=V1AR15UQ41UQ6+.AR15UQ41UQ6/1

=V1AR15UQ41UQ8+.AR15UQ41UQ8/1

			Date	12/22/2022	Volvo Trucks North America	Valiant TMS	FESTO DQ CONNECTION QN7	Drawing name: =2V04&EFS-EL	= V1AR15UQ41UQ7
			Ed.	MKLEPADLO					+ V1AR15UQ41UQ7
			Appr		P6700 Underbody Mainline - Cell 2V04			Document type: EFS	Project nr: 22-16151
Modification	Date	Name	Original		Replacement of	Replaced by	Scale 1:1		Page 1 / 1630

0	1	2	3	4	5	6	7	8	9

=V1AR15UQ41KF1
+.AR15UQ41

-KF1.24
=V1AR15UQ41KF1+V1AR15UQ41/5.1

L290 Model Clamps (RST)
=V1AR15UQ41KF1
+V1AR15UQ41
-QN8.1_Q
=V1AR15UQ41KF1
+V1AR15UQ41/5.3
DO:14

L290 Model Clamps (SET)
=V1AR15UQ41KF1
+V1AR15UQ41
-QN8.2_Q
=V1AR15UQ41KF1
+V1AR15UQ41/5.3
DO:15

2.1 Pneumatic Valve
2.2 Pneumatic Valve

-QN8 .1 .2

=V1AR15UQ41KF1+V1AR15UQ41/3.3
+.AR15UQ41UQ8.1-W1

-W1
RKC 4.4T-2-RSC 4.4T/S3060
2m

BN BU BK WH
1 3
+ -
-BGS/R
TÜNKERS
1324638
A2 A1
2 4

L290 Model Clamp
=V1AR15UQ41UQ8.1
+.AR15UQ41UQ8.1
-UQ8.1

=V1AR15UQ41
-UQ8.1-BGS/R
L290 Model
Clamp

=V1AR15UQ41KF1+V1AR15UQ41/3.4
+.AR15UQ41UQ8.2-W1

-W1
RKC 4.4T-2-RSC 4.4T/S3060
2m

BN BU BK WH
1 3
+ -
-BGS/R
TÜNKERS
1324638
A2 A1
2 4

L290 Model Clamp
=V1AR15UQ41UQ8.2
+.AR15UQ41UQ8.2
-UQ8.2

=V1AR15UQ41
-UQ8.2-BGS/R
L290 Model
Clamp

=V1AR15UQ41UQ7+.AR15UQ41UQ7/1

=V1AR15UQ41UQ9+.AR15UQ41UQ9/1

			Date	12/22/2022	Volvo Trucks North America	Valiant TMS	FESTO DQ CONNECTION QN8	Drawing name: =2V04&EFS-EL	= V1AR15UQ41UQ8
			Ed.	MKLEPADLO					+ V1AR15UQ41UQ8
			Appr		P6700 Underbody Mainline - Cell 2V04			Document type: EFS	Project nr: 22-16151
Modification	Date	Name	Original		Replacement of / Replaced by	Scale 1:1			Page 1 / 1630

0	1	2	3	4	5	6	7	8	9

=V1AR15UQ41KF1
+.AR15UQ41

-KF1.25
=V1AR15UQ41KF1+V1AR15UQ41/5.1

L320 Model Clamps (RST)
=V1AR15UQ41KF1
+V1AR15UQ41
-QN9.1_Q
=V1AR15UQ41KF1
+V1AR15UQ41/5.3
DO:16

L320 Model Clamps (SET)
=V1AR15UQ41KF1
+V1AR15UQ41
-QN9.2_Q
=V1AR15UQ41KF1
+V1AR15UQ41/5.3
DO:17

1.1 Pneumatic Valve

1.2 Pneumatic Valve

-QN9 .1 .2

=V1AR15UQ41KF1+V1AR15UQ41/3.5
+.AR15UQ41UQ9.1-W1

-W1 2m
RKC 4.4T-2-RSC 4.4T/S3060

BN BU BK WH

-BGS/R
1 3
+ -
TÜNKERS
1324638
A2 A1
2 4

L320 Model Clamp
=V1AR15UQ41UQ9.1
+.AR15UQ41UQ9.1
-UQ9.1

=V1AR15UQ41
-UQ9.1-BGS/R
L320 Model
Clamp

=V1AR15UQ41KF1+V1AR15UQ41/3.6
+.AR15UQ41UQ9.2-W1

-W1 3m
RKC 4.4T-3-RSC 4.4T/S3060

BN BU BK WH

-BGS/R
1 3
+ -
TÜNKERS
1324638
A2 A1
2 4

L320 Model Clamp
=V1AR15UQ41UQ9.2
+.AR15UQ41UQ9.2
-UQ9.2

=V1AR15UQ41
-UQ9.2-BGS/R
L320 Model
Clamp

=V1AR15UQ41UQ8+.AR15UQ41UQ8/1

=V1AR15UQ41UQ10+.AR15UQ41UQ10/1

			Date	12/22/2022	Volvo Trucks North America	Valiant TMS	FESTO DQ CONNECTION QN9	Drawing name: =2V04&EFS-EL	= V1AR15UQ41UQ9
			Ed.	MKLEPADLO					+ V1AR15UQ41UQ9
			Appr		P6700 Underbody Mainline - Cell 2V04			Document type: EFS	Project nr: 22-16151
Modification	Date	Name	Original		Replacement of	Replaced by	Scale 1:1		Page 1 / 1630

0	1	2	3	4	5	6	7	8	9

=V1AR15UQ41KF1
+.AR15UQ41

-KF1.25
=V1AR15UQ41KF1+V1AR15UQ41/5.1

Spare (RST)	Spare (SET)
=V1AR15UQ41KF1	=V1AR15UQ41KF1
+V1AR15UQ41	+V1AR15UQ41
-QN10.1_Q	-QN10.2_Q
=V1AR15UQ41KF1	=V1AR15UQ41KF1
+V1AR15UQ41/5.3	+V1AR15UQ41/5.3
DO:18	DO:19

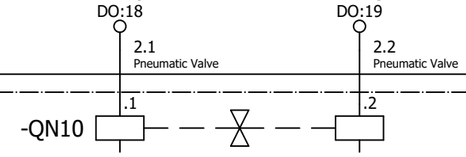

=V1AR15UQ41UQ9+.AR15UQ41UQ9/1

=V1AR15WC1+.AR15UC01/1

			Date	12/22/2022	Volvo Trucks North America	Valiant TMS	FESTO DQ CONNECTION QN10	Drawing name: =2V04&EFS-EL	= V1AR15UQ41UQ10
			Ed.	MKLEPADLO					+ V1AR15UQ41UQ10
			Appr		P6700 Underbody Mainline - Cell 2V04			Document type: EFS	Project nr: 22-16151
Modification	Date	Name	Original		Replacement of	Replaced by	Scale 1:1		Page 1 / 1630

0	1	2	3	4	5	6	7	8	9

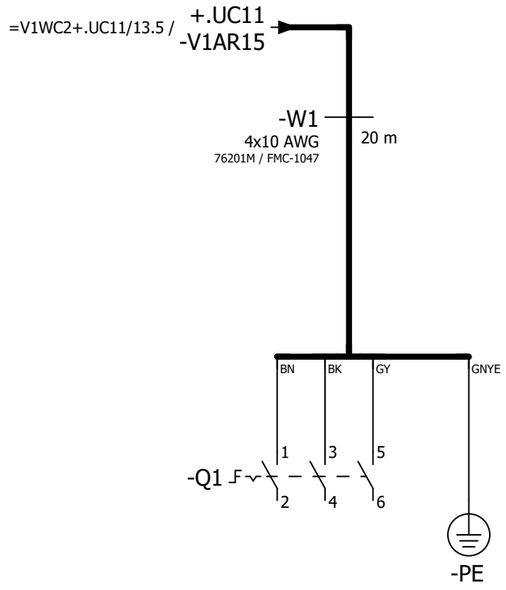

=V1AR15UQ41UQ10+.AR15UQ41UQ10/1

=V1AR21KF1+.AR21UC01/1

			Date	12/22/2022	Volvo Trucks North America		Valiant TMS	Incoming power	Drawing name: =2V04&EFS-EL	= V1AR15WC1
			Ed.	MKLEPADLO						+ V1AR15UC01
			Appr		P6700 Underbody Mainline - Cell 2V04				Document type: EFS	Project nr: 22-16151
Modification	Date	Name	Original		Replacement of	Replaced by	Scale 1:1			Page 1 / 1630

0	1	2	3	4	5	6	7	8	9

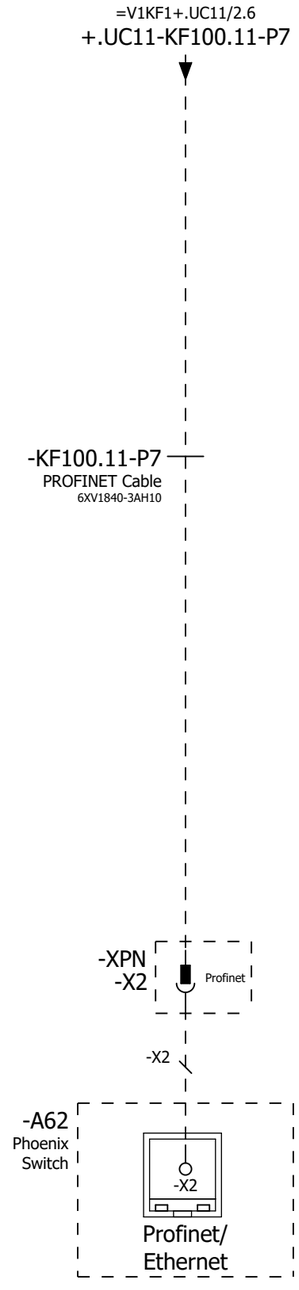

=V1AR15WC1+.AR15UC01/1

=V1AR21WC1/1

			Date	12/22/2022	Volvo Trucks North America	Valiant TMS	Incoming Profinet	Drawing name: =2V04&EFS-EL	= V1AR21KF1
			Ed.	MKLEPADLO					+ V1AR21UC01
			Appr		P6700 Underbody Mainline - Cell 2V04	Scale 1:1		Document type: EFS	Project nr: 22-16151
Modification	Date	Name	Original		Replacement of	Replaced by			Page 1 / 1630

0	1	2	3	4	5	6	7	8	9

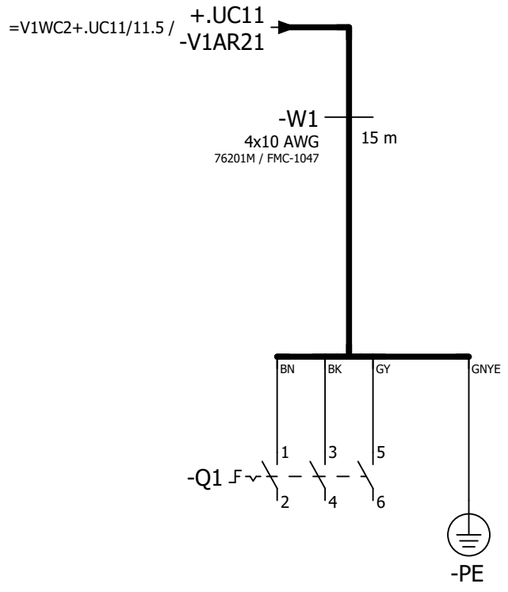

=V1AR21KF1/1

=V1AR21XQ11WC1+.AR21XQ11UC01/1

			Date	12/22/2022	Volvo Trucks North America		Valiant TMS	Incoming power	Drawing name: =2V04&EFS-EL	= V1AR21WC1
			Ed.	MKLEPADLO						+ V1AR21UC01
			Appr		P6700 Underbody Mainline - Cell 2V04				Document type: EFS	Project nr: 22-16151	Page 1
Modification	Date	Name	Original		Replacement of	Replaced by	Scale 1:1				1630

0	1	2	3	4	5	6	7	8	9

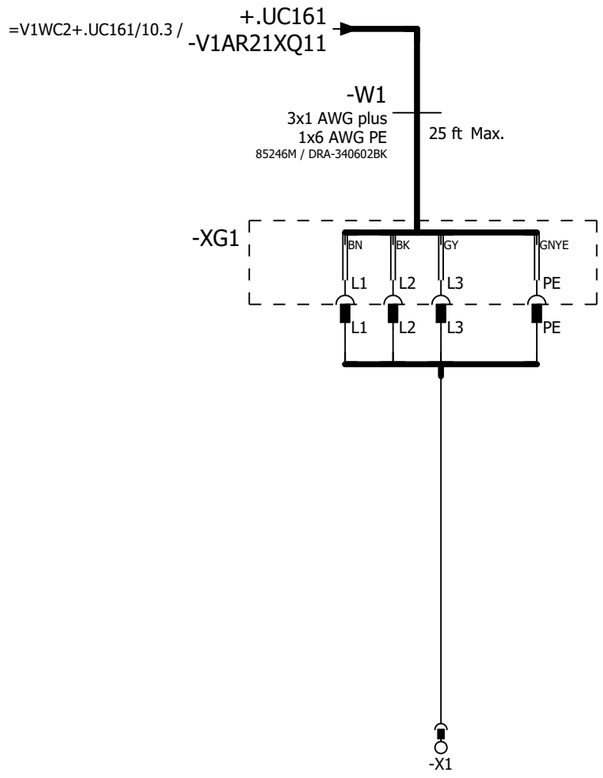

=V1AR21WC1+.AR21UC01/1

=V1AR22KF1+.AR22UC01/1

			Date	12/22/2022	Volvo Trucks North America		Valiant TMS	Incoming power	Drawing name: =2V04&EFS-EL	= V1AR21XQ11WC1
			Ed.	MKLEPADLO						+ V1AR21XQ11UC01
			Appr		P6700 Underbody Mainline - Cell 2V04				Document type: EFS	Project nr: 22-16151
Modification	Date	Name	Original		Replacement of	Replaced by	Scale 1:1			Page 1 / 1630

0	1	2	3	4	5	6	7	8	9

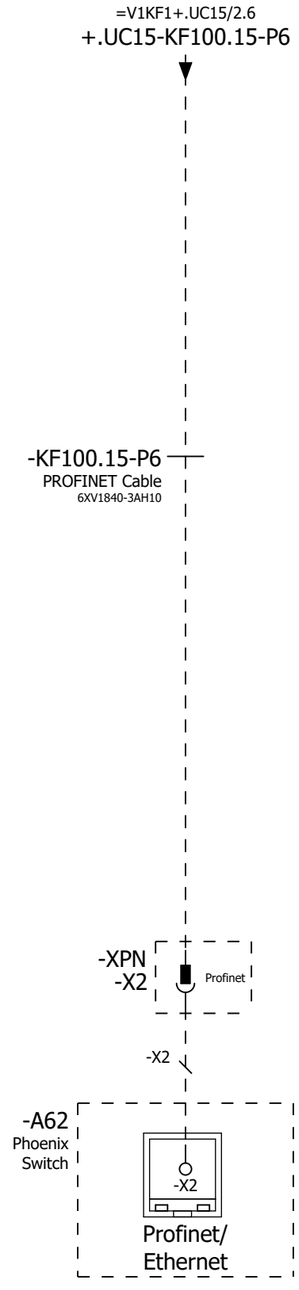

=V1AR21XQ11WC1+.AR21XQ11UC01/1

=V1AR22WC1/1

			Date	12/22/2022	Volvo Trucks North America	Valiant TMS	Incoming Profinet	Drawing name: =2V04&EFS-EL	= V1AR22KF1
			Ed.	MKLEPADLO					+ V1AR22UC01
			Appr		P6700 Underbody Mainline - Cell 2V04	Scale 1:1		Document type: EFS	Project nr: 22-16151
Modification	Date	Name	Original		Replacement of	Replaced by			Page 1 / 1630

0	1	2	3	4	5	6	7	8	9

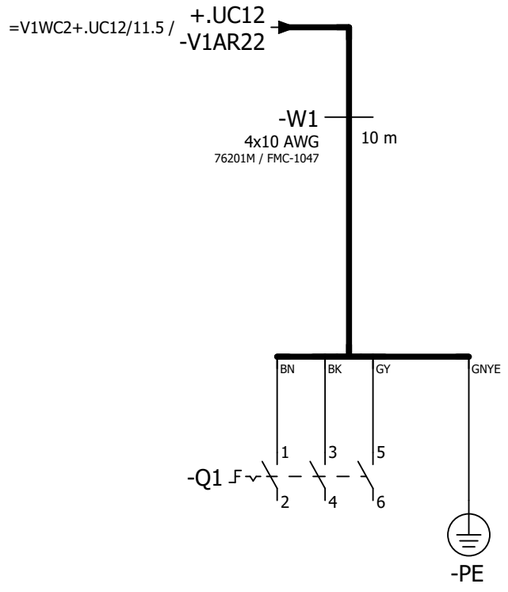

=V1AR22KF1/1

=V1AR22XQ11WC1+.AR22XQ11UC01/1

			Date	12/22/2022	Volvo Trucks North America		Valiant TMS	Incoming power	Drawing name: =2V04&EFS-EL	= V1AR22WC1
			Ed.	MKLEPADLO						+ V1AR22UC01
			Appr		P6700 Underbody Mainline - Cell 2V04				Document type: EFS	Project nr: 22-16151	Page 1
Modification	Date	Name	Original		Replacement of	Replaced by	Scale 1:1				1630

0	1	2	3	4	5	6	7	8	9

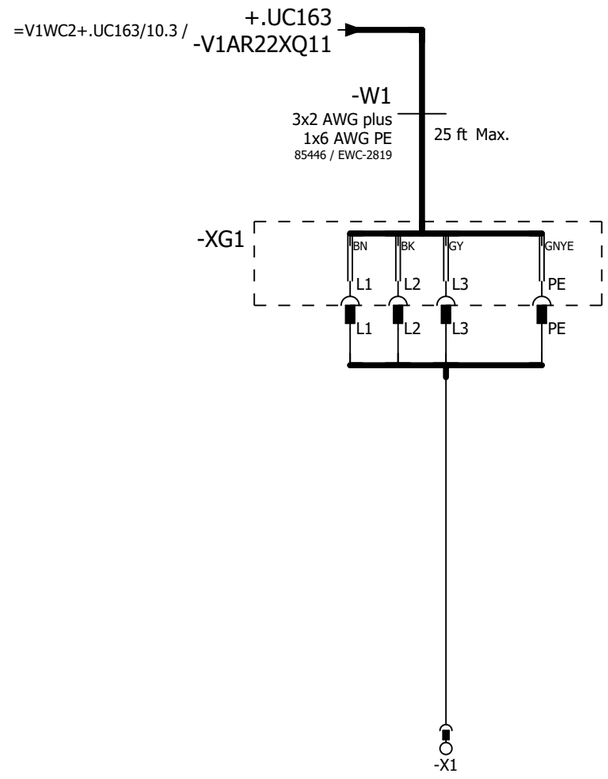

=V1AR22WC1+.AR22UC01/1

=V1AR23KF1+.AR23UC01/1

			Date	12/22/2022	Volvo Trucks North America	Valiant TMS	Incoming power	Drawing name: =2V04&EFS-EL	= V1AR22XQ11WC1
			Ed.	MKLEPADLO					+ V1AR22XQ11UC01
			Appr		P6700 Underbody Mainline - Cell 2V04			Document type: EFS / Project nr: 22-16151	Page 1
Modification	Date	Name	Original		Replacement of / Replaced by	Scale 1:1			1630

0	1	2	3	4	5	6	7	8	9

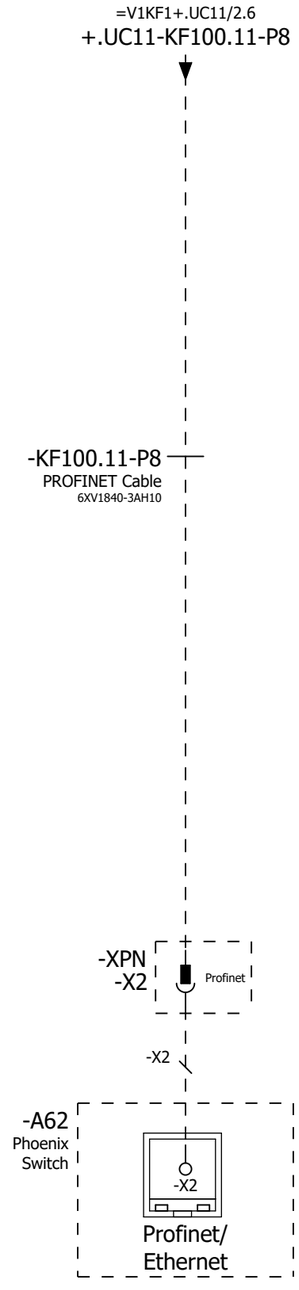

=V1AR22XQ11WC1+.AR22XQ11UC01/1

=V1AR23WC1/1

			Date	12/22/2022	Volvo Trucks North America	Valiant TMS	Incoming Profinet	Drawing name: =2V04&EFS-EL	= V1AR23KF1
			Ed.	MKLEPADLO					+ V1AR23UC01
			Appr		P6700 Underbody Mainline - Cell 2V04	Scale 1:1		Document type: EFS	Project nr: 22-16151
Modification	Date	Name	Original		Replacement of	Replaced by			Page 1 / 1630

0	1	2	3	4	5	6	7	8	9

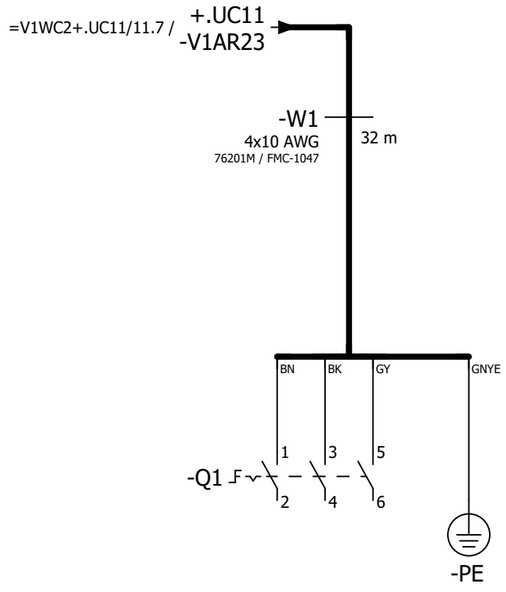

=V1AR23KF1/1

=V1AR23XQ11WC1+.AR23XQ11UC01/1

			Date	12/22/2022	Volvo Trucks North America		Valiant TMS	Incoming power	Drawing name: =2V04&EFS-EL	= V1AR23WC1
			Ed.	MKLEPADLO						+ V1AR23UC01
			Appr		P6700 Underbody Mainline - Cell 2V04				Document type: EFS	Project nr: 22-16151	Page 1
Modification	Date	Name	Original		Replacement of	Replaced by	Scale 1:1				1630

0	1	2	3	4	5	6	7	8	9

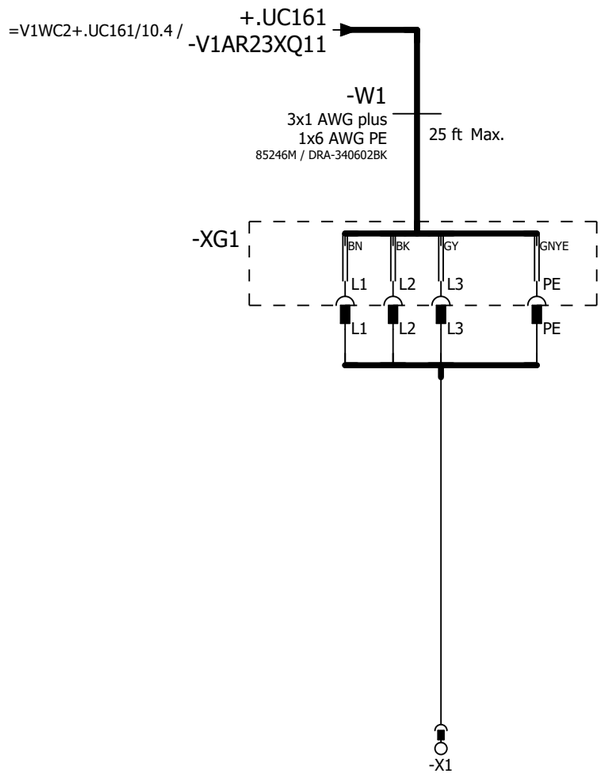

=V1AR23WC1+.AR23UC01/1

=V1AR24KF1+.AR24UC01/1

			Date	12/22/2022	Volvo Trucks North America	Valiant TMS	Incoming power	Drawing name: =2V04&EFS-EL	= V1AR23XQ11WC1
			Ed.	MKLEPADLO					+ V1AR23XQ11UC01
			Appr		P6700 Underbody Mainline - Cell 2V04			Document type: EFS / Project nr: 22-16151	Page 1
Modification	Date	Name	Original		Replacement of / Replaced by	Scale 1:1			1630

0	1	2	3	4	5	6	7	8	9

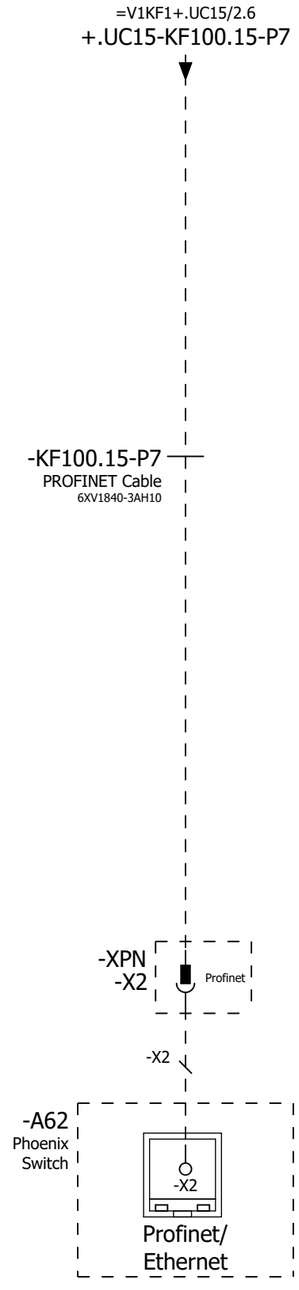

=V1AR23XQ11WC1+.AR23XQ11UC01/1

=V1AR24WC1/1

			Date	12/22/2022	Volvo Trucks North America	Valiant TMS	Incoming Profinet	Drawing name: =2V04&EFS-EL	= V1AR24KF1
			Ed.	MKLEPADLO					+ V1AR24UC01
			Appr		P6700 Underbody Mainline - Cell 2V04			Document type: EFS	Project nr: 22-16151
Modification	Date	Name	Original		Replacement of	Replaced by	Scale 1:1		Page 1 / 1630

0	1	2	3	4	5	6	7	8	9

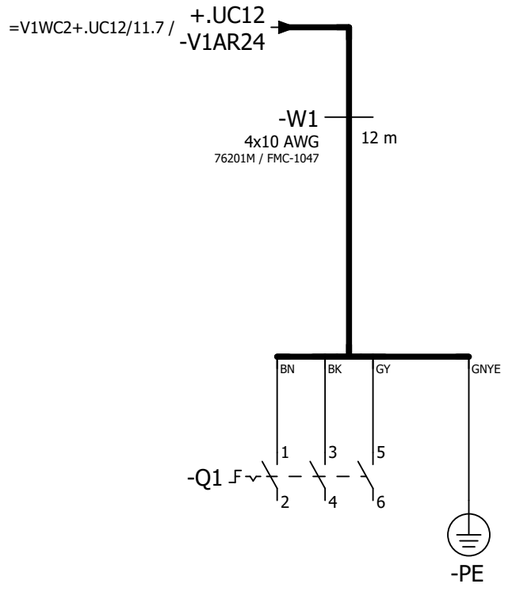

=V1AR24KF1/1

=V1AR24XQ11WC1+.AR24XQ11UC01/1

			Date	12/22/2022	Volvo Trucks North America		Valiant TMS	Incoming power	Drawing name: =2V04&EFS-EL	= V1AR24WC1
			Ed.	MKLEPADLO						+ V1AR24UC01
			Appr		P6700 Underbody Mainline - Cell 2V04				Document type: EFS	Project nr: 22-16151
Modification	Date	Name	Original		Replacement of	Replaced by	Scale 1:1			Page 1 / 1630

0	1	2	3	4	5	6	7	8	9

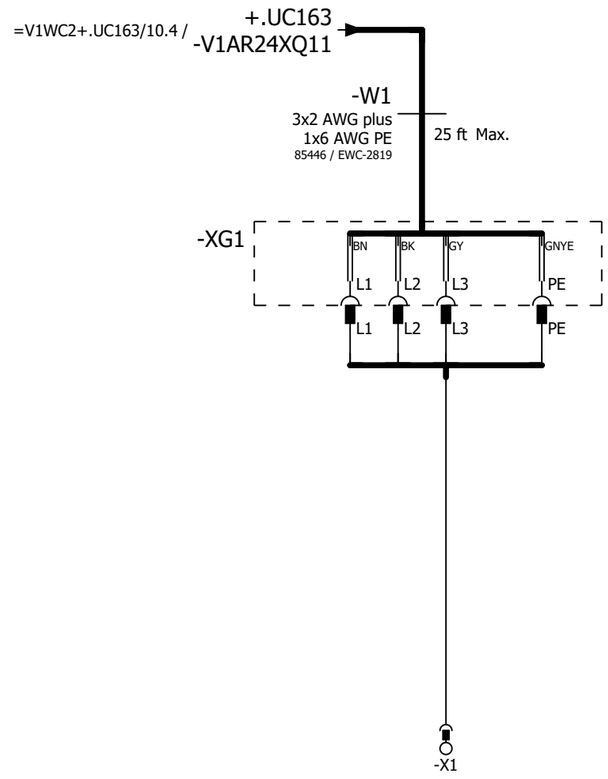

=V1AR24WC1+.AR24UC01/1

=V1AR25KF1+.AR25UC01/1

			Date	12/22/2022	Volvo Trucks North America		Valiant TMS	Incoming power	Drawing name: =2V04&EFS-EL	= V1AR24XQ11WC1	
			Ed.	MKLEPADLO						+ V1AR24XQ11UC01	
			Appr		P6700 Underbody Mainline - Cell 2V04		Scale 1:1		Document type: EFS	Project nr: 22-16151	Page 1 / 1630
Modification	Date	Name	Original		Replacement of	Replaced by					

0	1	2	3	4	5	6	7	8	9

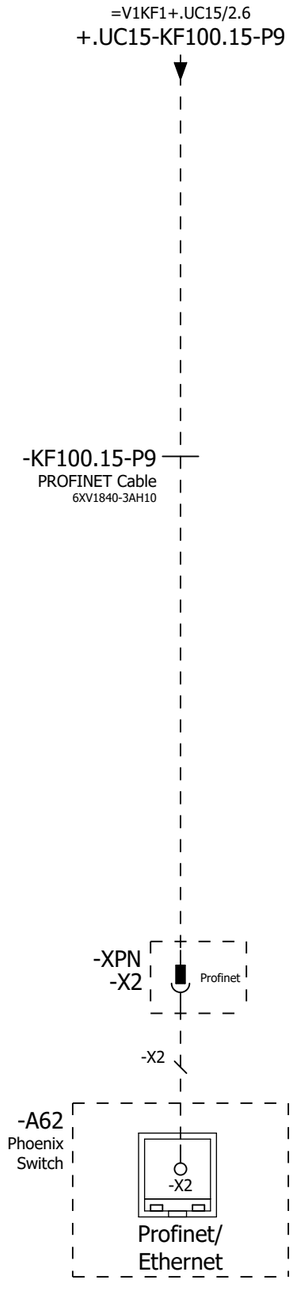

=V1AR24XQ11WC1+.AR24XQ11UC01/1

=V1AR25WC1/1

			Date	12/22/2022	Volvo Trucks North America	Valiant TMS	Incoming Profinet	Drawing name: =2V04&EFS-EL	= V1AR25KF1
			Ed.	MKLEPADLO					+ V1AR25UC01
			Appr		P6700 Underbody Mainline - Cell 2V04	Scale 1:1		Document type: EFS	Project nr: 22-16151
Modification	Date	Name	Original		Replacement of	Replaced by			Page 1 / 1630

0	1	2	3	4	5	6	7	8	9

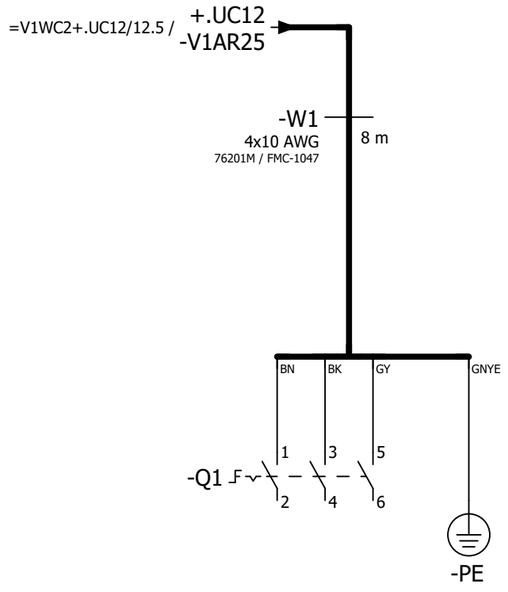

=V1AR25KF1/1

=V1AR25XQ11WC1+.AR25XQ11UC01/1

			Date	12/22/2022	Volvo Trucks North America		Valiant TMS	Incoming power	Drawing name: =2V04&EFS-EL	= V1AR25WC1
			Ed.	MKLEPADLO						+ V1AR25UC01
			Appr		P6700 Underbody Mainline - Cell 2V04				Document type: EFS	Project nr: 22-16151	Page 1
Modification	Date	Name	Original		Replacement of	Replaced by	Scale 1:1				1630

0	1	2	3	4	5	6	7	8	9

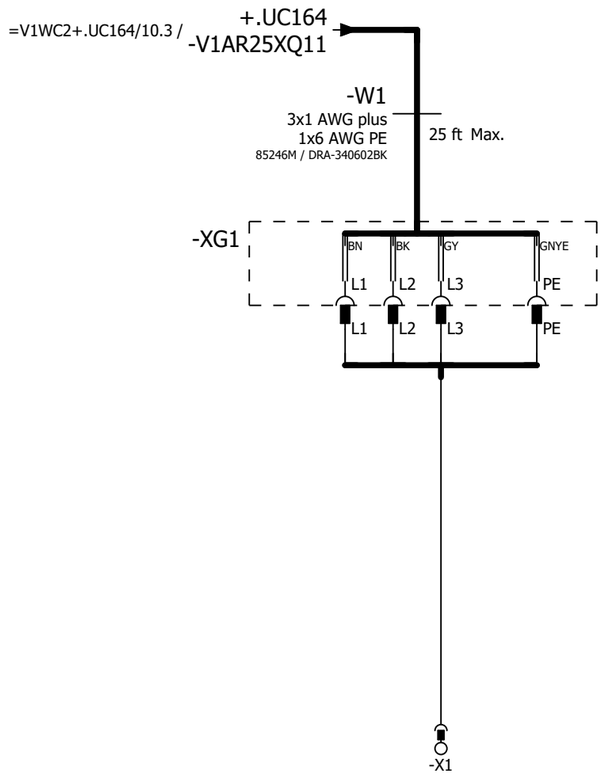

=V1AR25WC1+.AR25UC01/1

=V1AR26KF1+.AR26UC01/1

			Date	12/22/2022	Volvo Trucks North America	Valiant TMS	Incoming power	Drawing name: =2V04&EFS-EL	= V1AR25XQ11WC1
			Ed.	MKLEPADLO					+ V1AR25XQ11UC01
			Appr		P6700 Underbody Mainline - Cell 2V04			Document type: EFS	Project nr: 22-16151
Modification	Date	Name	Original		Replacement of	Replaced by	Scale 1:1		Page 1 / 1630

0	1	2	3	4	5	6	7	8	9

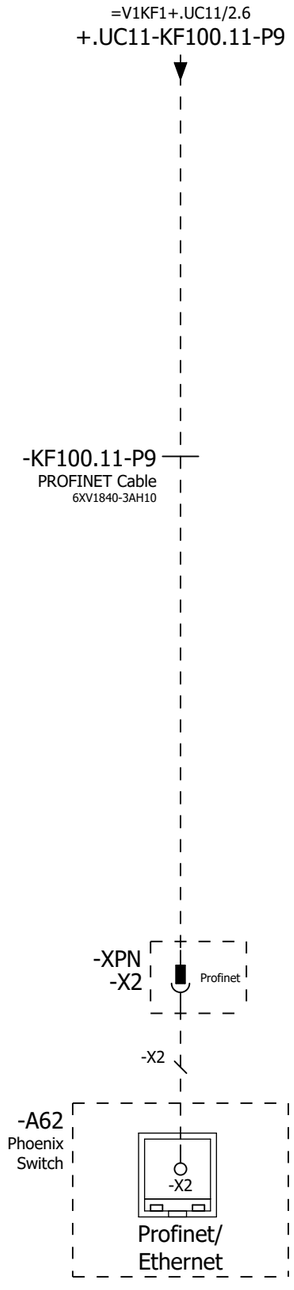

=V1AR25XQ11WC1+.AR25XQ11UC01/1

=V1AR26WC1/1

			Date	12/22/2022	Volvo Trucks North America	Valiant TMS	Incoming Profinet	Drawing name: =2V04&EFS-EL	= V1AR26KF1
			Ed.	MKLEPADLO					+ V1AR26UC01
			Appr		P6700 Underbody Mainline - Cell 2V04	Scale 1:1		Document type: EFS	Project nr: 22-16151
Modification	Date	Name	Original		Replacement of	Replaced by			Page 1 / 1630

0	1	2	3	4	5	6	7	8	9

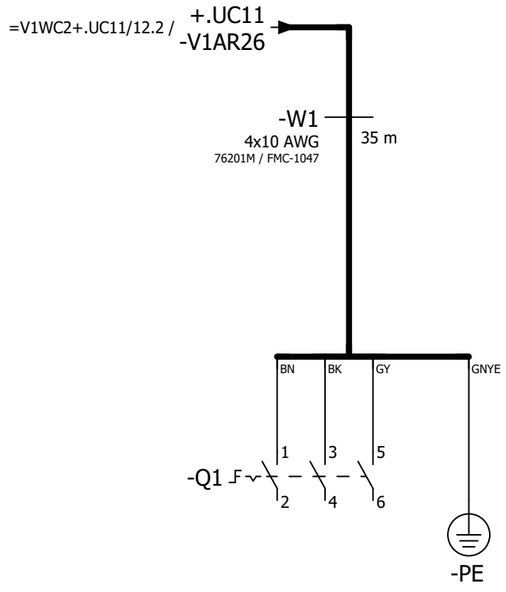

=V1AR26KF1/1

=V1AR26XQ11WC1+.AR26XQ11UC01/1

			Date	12/22/2022	Volvo Trucks North America		Valiant TMS	Incoming power	Drawing name: =2V04&EFS-EL	= V1AR26WC1
			Ed.	MKLEPADLO						+ V1AR26UC01
			Appr		P6700 Underbody Mainline - Cell 2V04				Document type: EFS	Project nr: 22-16151
Modification	Date	Name	Original		Replacement of	Replaced by	Scale 1:1			Page 1 / 1630

0	1	2	3	4	5	6	7	8	9

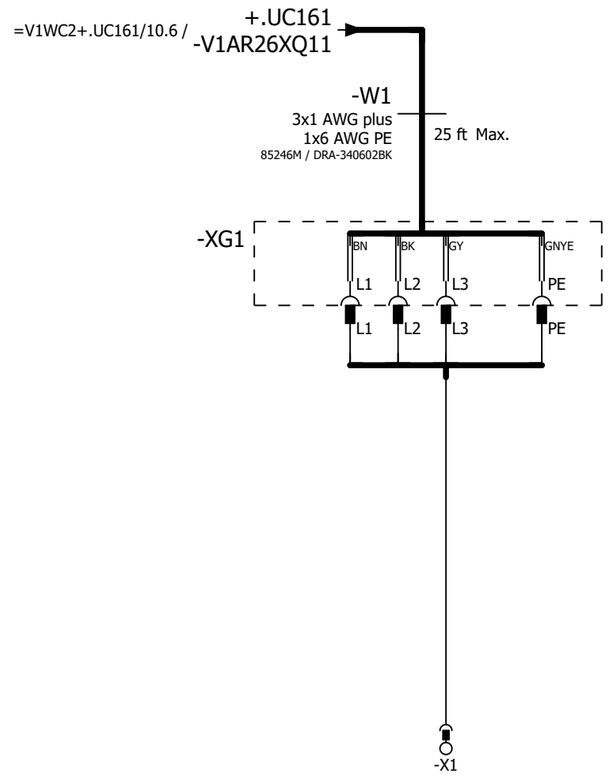

=V1AR26WC1+.AR26UC01/1

=V1AR27KF1+.AR27UC01/1

			Date	12/22/2022	Volvo Trucks North America	Valiant TMS	Incoming power	Drawing name: =2V04&EFS-EL	= V1AR26XQ11WC1
			Ed.	MKLEPADLO					+ V1AR26XQ11UC01
			Appr		P6700 Underbody Mainline - Cell 2V04			Document type: EFS	Project nr: 22-16151
Modification	Date	Name	Original		Replacement of	Replaced by	Scale 1:1		Page 1 / 1630

0	1	2	3	4	5	6	7	8	9

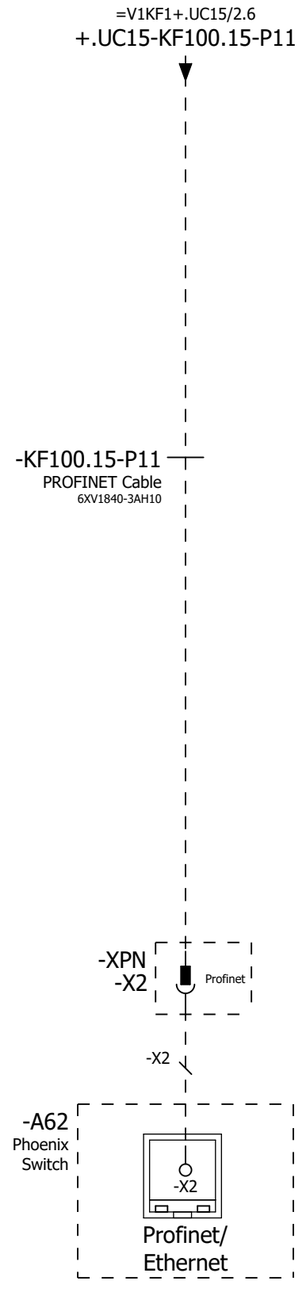

=V1AR26XQ11WC1+.AR26XQ11UC01/1

=V1AR27WC1/1

			Date	12/22/2022	Volvo Trucks North America	Valiant TMS	Incoming Profinet	Drawing name: =2V04&EFS-EL	= V1AR27KF1
			Ed.	MKLEPADLO					+ V1AR27UC01
			Appr		P6700 Underbody Mainline - Cell 2V04			Document type: EFS	Project nr: 22-16151
Modification	Date	Name	Original		Replacement of	Replaced by	Scale 1:1		Page 1 / 1630

0	1	2	3	4	5	6	7	8	9

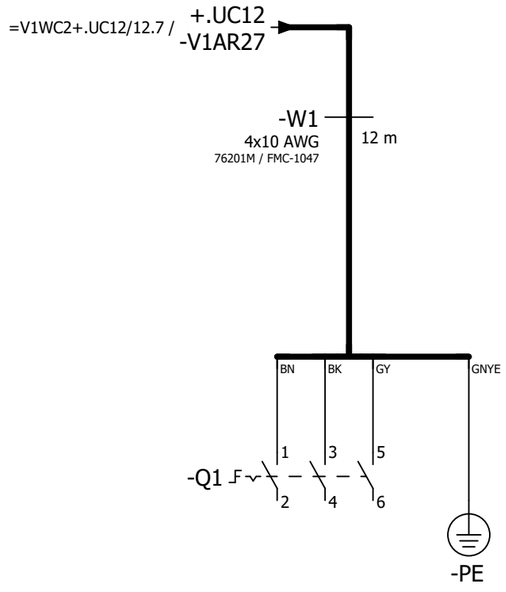

=V1AR27KF1/1

=V1AR27XQ11WC1+.AR27XQ11UC01/1

			Date	12/22/2022	Volvo Trucks North America		Valiant TMS	Incoming power	Drawing name: =2V04&EFS-EL	= V1AR27WC1
			Ed.	MKLEPADLO						+ V1AR27UC01
			Appr		P6700 Underbody Mainline - Cell 2V04				Document type: EFS	Project nr: 22-16151	Page 1
Modification	Date	Name	Original		Replacement of	Replaced by	Scale 1:1				1630

0	1	2	3	4	5	6	7	8	9

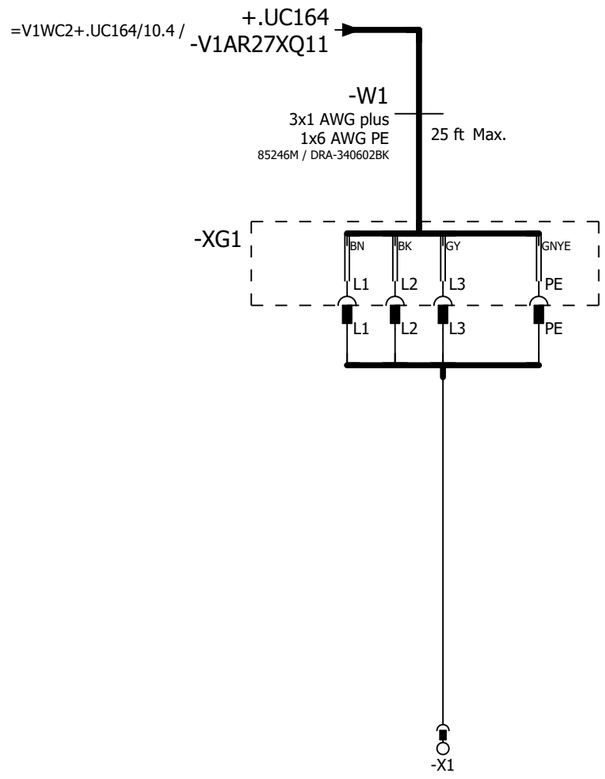

=V1AR27WC1+.AR27UC01/1

=V1AR28KF1+.AR28UC01/1

			Date	12/22/2022	Volvo Trucks North America	Valiant TMS	Incoming power	Drawing name: =2V04&EFS-EL	= V1AR27XQ11WC1
			Ed.	MKLEPADLO					+ V1AR27XQ11UC01
			Appr		P6700 Underbody Mainline - Cell 2V04	Scale 1:1		Document type: EFS / Project nr: 22-16151	Page 1 / 1630
Modification	Date	Name	Original		Replacement of / Replaced by				

0	1	2	3	4	5	6	7	8	9

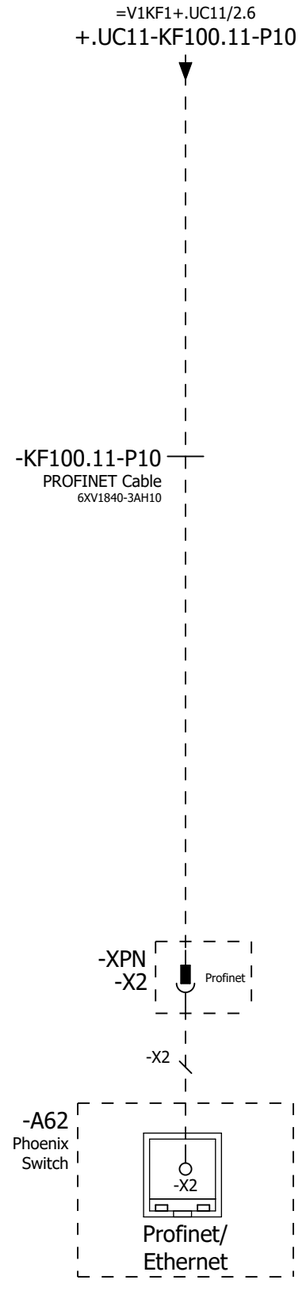

=V1AR27XQ11WC1+.AR27XQ11UC01/1

=V1AR28WC1/1

			Date	12/22/2022	Volvo Trucks North America	Valiant TMS	Incoming Profinet	Drawing name: =2V04&EFS-EL	= V1AR28KF1
			Ed.	MKLEPADLO					+ V1AR28UC01
			Appr		P6700 Underbody Mainline - Cell 2V04	Scale 1:1		Document type: EFS	Project nr: 22-16151
Modification	Date	Name	Original		Replacement of	Replaced by			Page 1 / 1630

0	1	2	3	4	5	6	7	8	9

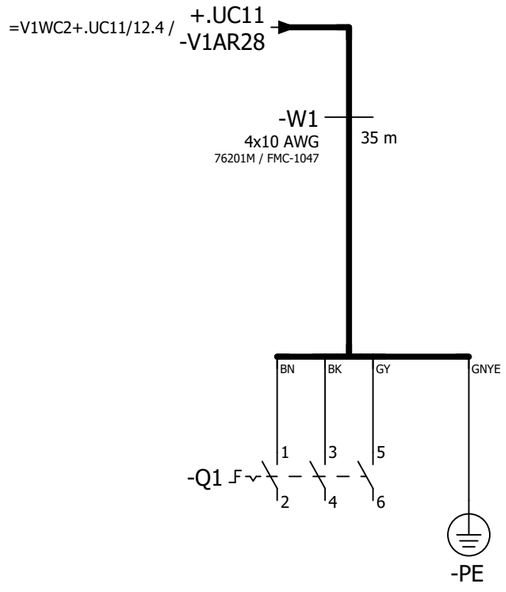

=V1AR28KF1/1

=V1AR28XQ11WC1+.AR28XQ11UC01/1

			Date	12/22/2022	Volvo Trucks North America		Valiant TMS	Incoming power	Drawing name: =2V04&EFS-EL	= V1AR28WC1
			Ed.	MKLEPADLO						+ V1AR28UC01
			Appr		P6700 Underbody Mainline - Cell 2V04				Document type: EFS	Project nr: 22-16151
Modification	Date	Name	Original		Replacement of	Replaced by	Scale 1:1			Page 1 / 1630

0	1	2	3	4	5	6	7	8	9

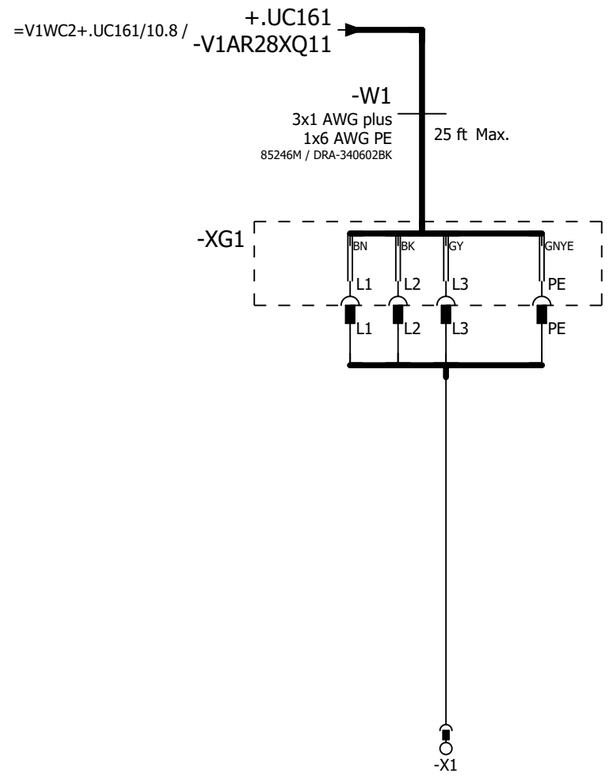

=V1AR28WC1+.AR28UC01/1

=V1AR29KF1+.AR29UC01/1

			Date	12/22/2022	Volvo Trucks North America		Valiant TMS	Incoming power	Drawing name: =2V04&EFS-EL	= V1AR28XQ11WC1
			Ed.	MKLEPADLO						+ V1AR28XQ11UC01
			Appr		P6700 Underbody Mainline - Cell 2V04				Document type: EFS	Project nr: 22-16151
Modification	Date	Name	Original		Replacement of	Replaced by	Scale 1:1			Page 1 / 1630

0	1	2	3	4	5	6	7	8	9

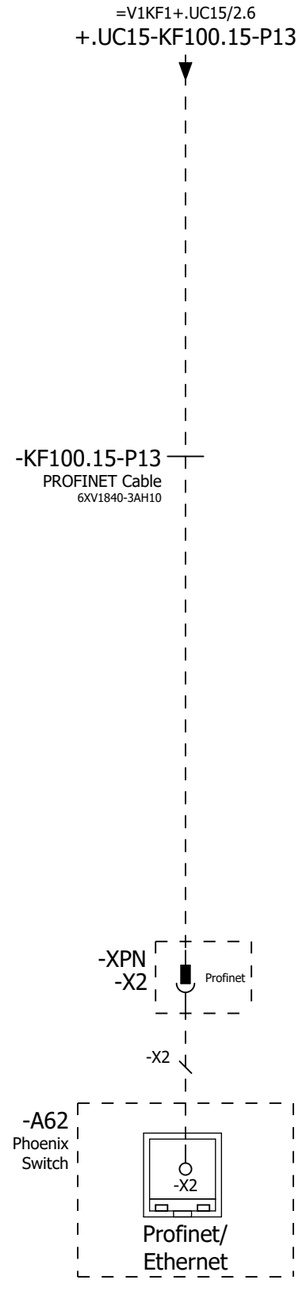

=V1AR28XQ11WC1+.AR28XQ11UC01/1

=V1AR29WC1/1

			Date	12/22/2022	Volvo Trucks North America	Valiant TMS	Incoming Profinet	Drawing name: =2V04&EFS-EL	= V1AR29KF1
			Ed.	MKLEPADLO					+ V1AR29UC01
			Appr		P6700 Underbody Mainline - Cell 2V04	Scale 1:1		Document type: EFS	Project nr: 22-16151
Modification	Date	Name	Original		Replacement of	Replaced by			Page 1 / 1630

0	1	2	3	4	5	6	7	8	9

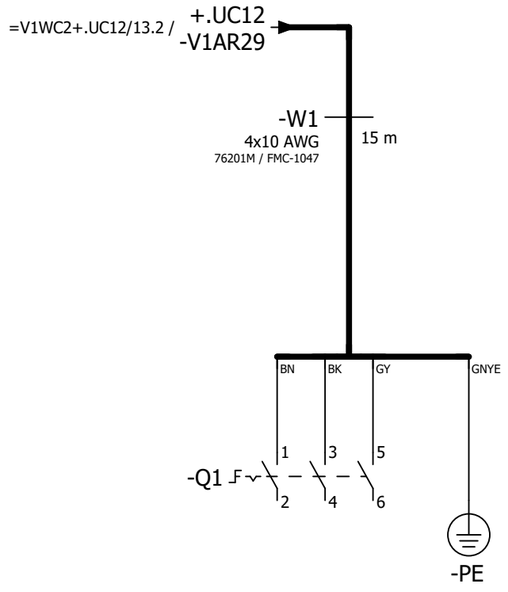

=V1AR29KF1/1

=V1AR29XQ11WC1+.AR29XQ11UC01/1

			Date	12/22/2022	Volvo Trucks North America		Valiant TMS	Incoming power	Drawing name: =2V04&EFS-EL	= V1AR29WC1
			Ed.	MKLEPADLO						+ V1AR29UC01
			Appr		P6700 Underbody Mainline - Cell 2V04				Document type: EFS	Project nr: 22-16151
Modification	Date	Name	Original		Replacement of	Replaced by	Scale 1:1			Page 1 / 1630

0	1	2	3	4	5	6	7	8	9

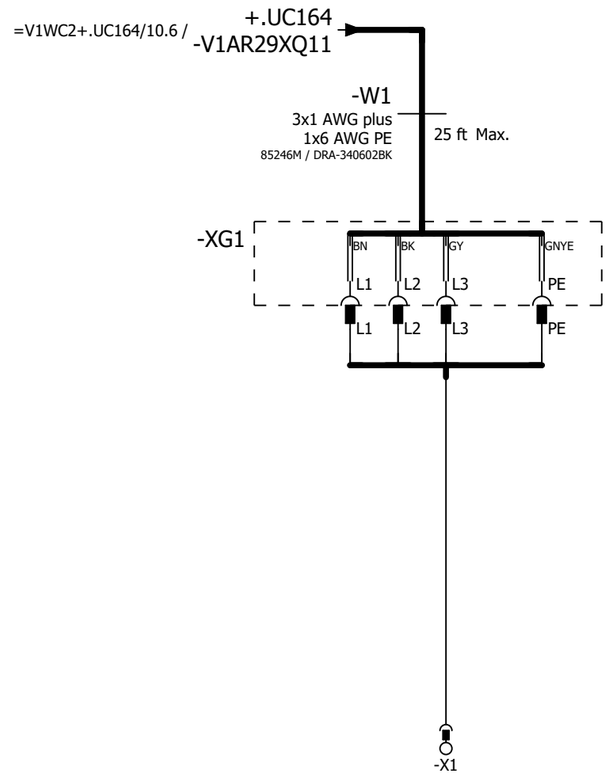

=V1AR29WC1+.AR29UC01/1

=V1AR51KF1+.AR51UC01/1

			Date	12/22/2022	Volvo Trucks North America	Valiant TMS	Incoming power	Drawing name: =2V04&EFS-EL	= V1AR29XQ11WC1
			Ed.	MKLEPADLO					+ V1AR29XQ11UC01
			Appr		P6700 Underbody Mainline - Cell 2V04	Scale 1:1		Document type: EFS	Project nr: 22-16151
Modification	Date	Name	Original		Replacement of	Replaced by			Page 1 / 1630

0	1	2	3	4	5	6	7	8	9

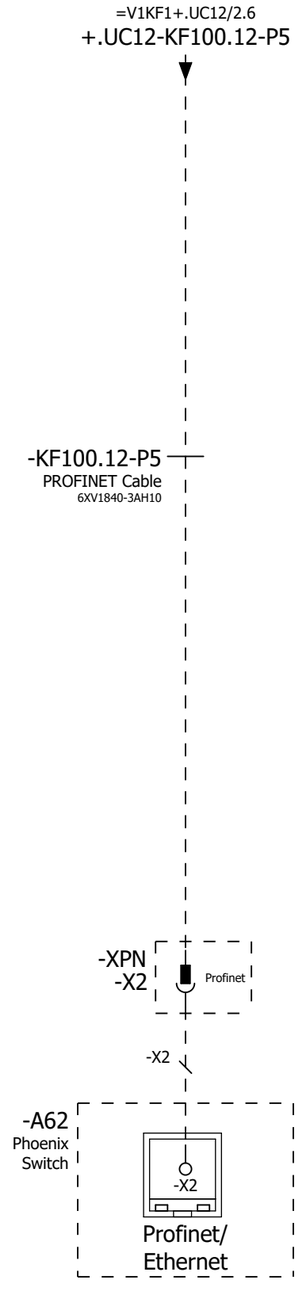

=V1AR29XQ11WC1+.AR29XQ11UC01/1

=V1AR51WC1/1

			Date	12/22/2022	Volvo Trucks North America	Valiant TMS	Incoming Profinet	Drawing name: =2V04&EFS-EL	= V1AR51KF1
			Ed.	MKLEPADLO					+ V1AR51UC01
			Appr		P6700 Underbody Mainline - Cell 2V04			Document type: EFS	Project nr: 22-16151
Modification	Date	Name	Original		Replacement of	Replaced by	Scale 1:1		Page 1 / 1630

0	1	2	3	4	5	6	7	8	9

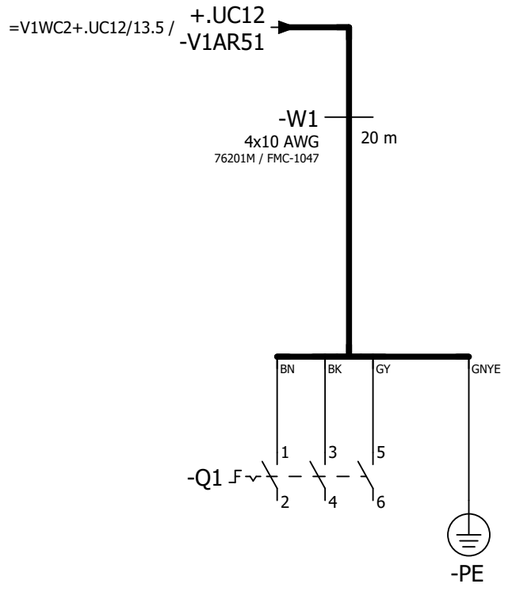

=V1AR51KF1/1

=V1AR51XQ51WC1+.AR51XQ51UC01/1

			Date	12/22/2022	Volvo Trucks North America	Valiant TMS	Incoming power	Drawing name: =2V04&EFS-EL	= V1AR51WC1
			Ed.	MKLEPADLO					+ V1AR51UC01
			Appr		P6700 Underbody Mainline - Cell 2V04	Scale 1:1		Document type: EFS	Project nr: 22-16151
Modification	Date	Name	Original		Replacement of	Replaced by			Page 1 / 1630

0	1	2	3	4	5	6	7	8	9

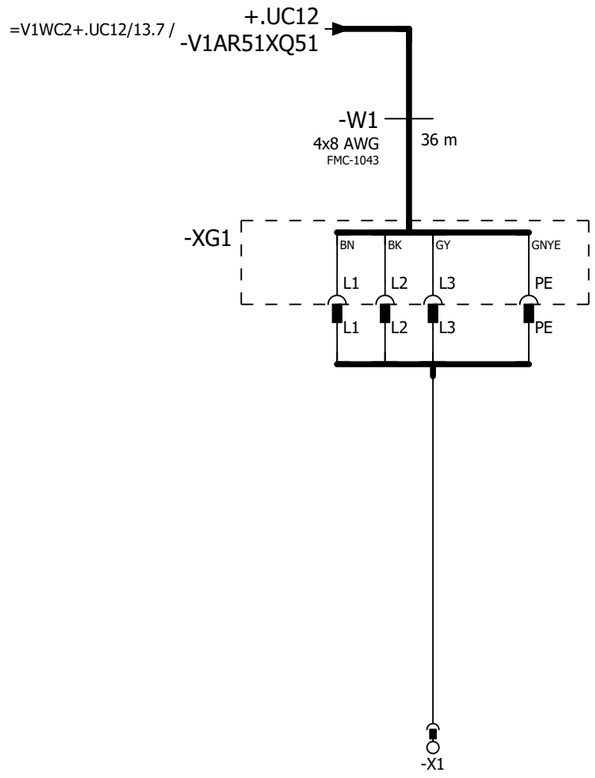

=V1AR51WC1+.AR51UC01/1

=V1AR52KF1+.AR52UC01/1

			Date	12/22/2022	Volvo Trucks North America		Valiant TMS	Incoming power	Drawing name: =2V04&EFS-EL	= V1AR51XQ51WC1
			Ed.	MKLEPADLO						+ V1AR51XQ51UC01
			Appr		P6700 Underbody Mainline - Cell 2V04				Document type: EFS	Project nr: 22-16151
Modification	Date	Name	Original		Replacement of	Replaced by	Scale 1:1			Page 1 / 1630

0	1	2	3	4	5	6	7	8	9

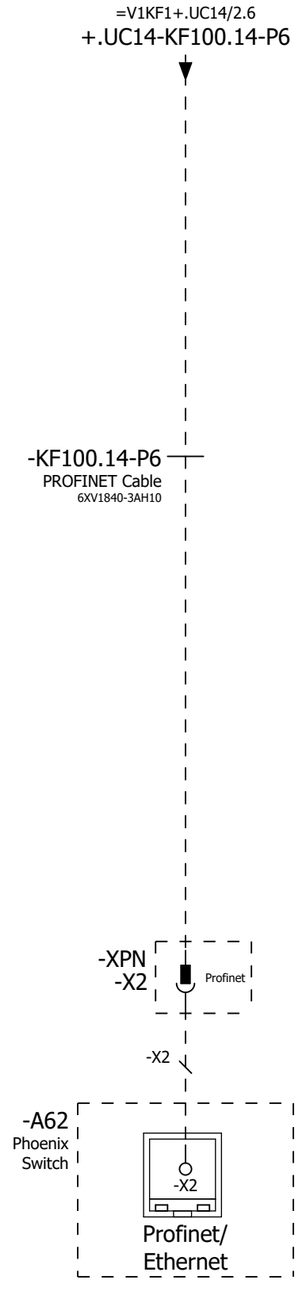

=V1AR51XQ51WC1+.AR51XQ51UC01/1

=V1AR52WC1/1

			Date	12/22/2022	Volvo Trucks North America	Valiant TMS	Incoming Profinet	Drawing name: =2V04&EFS-EL	= V1AR52KF1
			Ed.	MKLEPADLO					+ V1AR52UC01
			Appr		P6700 Underbody Mainline - Cell 2V04			Document type: EFS	Project nr: 22-16151
Modification	Date	Name	Original		Replacement of	Replaced by	Scale 1:1		Page 1 / 1630

0	1	2	3	4	5	6	7	8	9

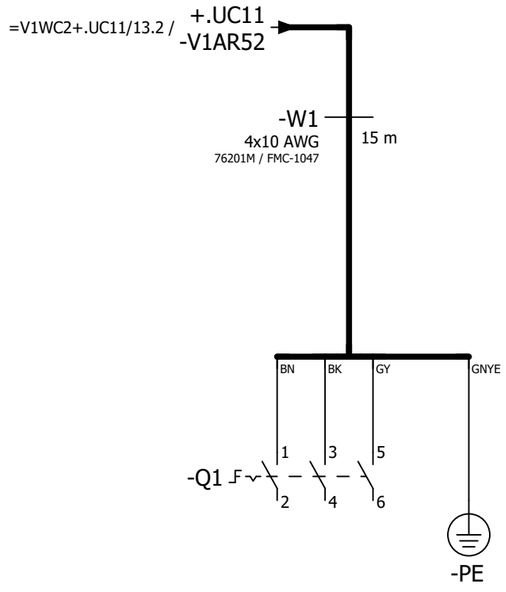

=V1AR52KF1/1

=V1AR52XQ51WC1+.AR52XQ51UC01/1

			Date	12/22/2022	Volvo Trucks North America		Valiant TMS	Incoming power	Drawing name: =2V04&EFS-EL	= V1AR52WC1
			Ed.	MKLEPADLO						+ V1AR52UC01
			Appr		P6700 Underbody Mainline - Cell 2V04				Document type: EFS	Project nr: 22-16151	Page 1
Modification	Date	Name	Original		Replacement of	Replaced by	Scale 1:1				1630

0	1	2	3	4	5	6	7	8	9

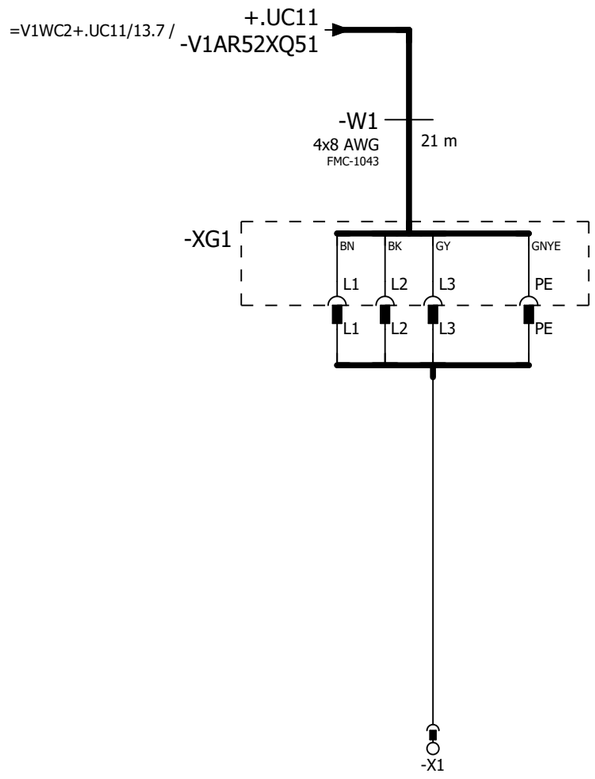

=V1AR52WC1+.AR52UC01/1

=V1AR53KF1+.AR53UC01/1

			Date	12/22/2022	Volvo Trucks North America	Valiant TMS	Incoming power	Drawing name: =2V04&EFS-EL	= V1AR52XQ51WC1
			Ed.	MKLEPADLO					+ V1AR52XQ51UC01
			Appr		P6700 Underbody Mainline - Cell 2V04	Scale 1:1		Document type: EFS	Project nr: 22-16151
Modification	Date	Name	Original		Replacement of	Replaced by			Page 1 / 1630

0	1	2	3	4	5	6	7	8	9

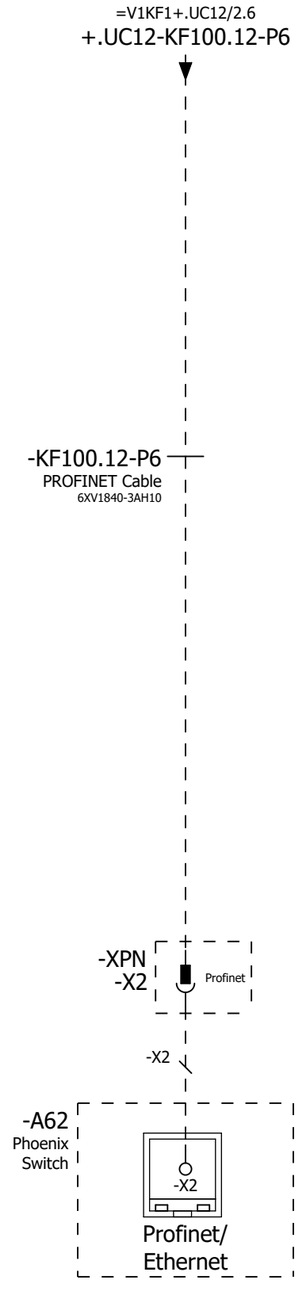

=V1AR52XQ51WC1+.AR52XQ51UC01/1

=V1AR53WC1/1

			Date	12/22/2022	Volvo Trucks North America	Valiant TMS	Incoming Profinet	Drawing name: =2V04&EFS-EL	= V1AR53KF1
			Ed.	MKLEPADLO					+ V1AR53UC01
			Appr		P6700 Underbody Mainline - Cell 2V04			Document type: EFS	Project nr: 22-16151
Modification	Date	Name	Original		Replacement of	Replaced by	Scale 1:1		Page 1 / 1630

0	1	2	3	4	5	6	7	8	9

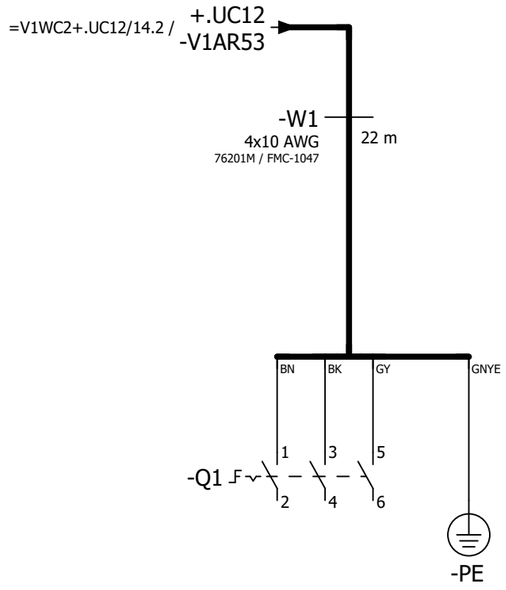

=V1AR53KF1/1

=V1AR53XQ51WC1+.AR53XQ51UC01/1

			Date	12/22/2022	Volvo Trucks North America		Valiant TMS	Incoming power	Drawing name: =2V04&EFS-EL	= V1AR53WC1
			Ed.	MKLEPADLO						+ V1AR53UC01
			Appr		P6700 Underbody Mainline - Cell 2V04				Document type: EFS	Project nr: 22-16151
Modification	Date	Name	Original		Replacement of	Replaced by	Scale 1:1			Page 1 / 1630

0	1	2	3	4	5	6	7	8	9

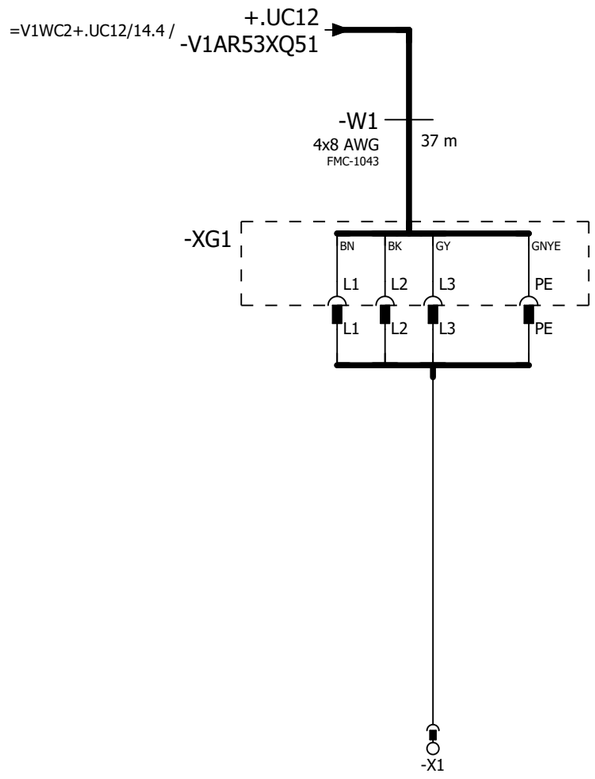

=V1AR53WC1+.AR53UC01/1

=V1AR54KF1+.AR54UC01/1

			Date	12/22/2022	Volvo Trucks North America	Valiant TMS	Incoming power	Drawing name: =2V04&EFS-EL	= V1AR53XQ51WC1
			Ed.	MKLEPADLO					+ V1AR53XQ51UC01
			Appr		P6700 Underbody Mainline - Cell 2V04	Scale 1:1		Document type: EFS	Project nr: 22-16151
Modification	Date	Name	Original		Replacement of	Replaced by			Page 1 / 1630

0	1	2	3	4	5	6	7	8	9

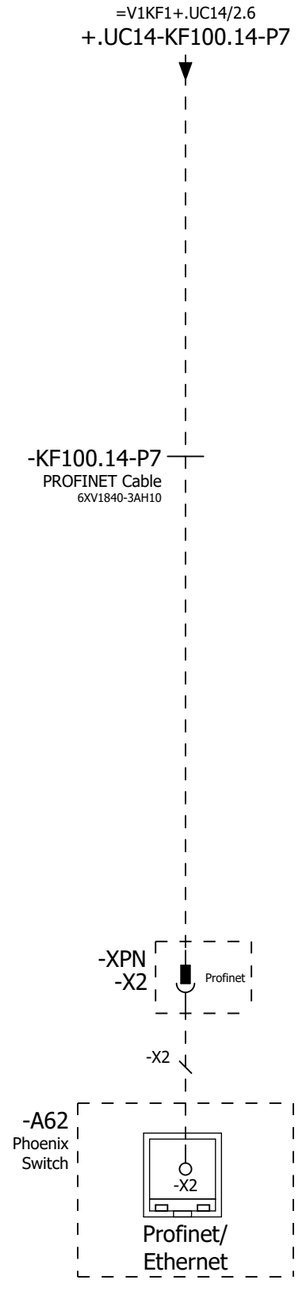

=V1AR53XQ51WC1+.AR53XQ51UC01/1

=V1AR54WC1/1

			Date	12/22/2022	Volvo Trucks North America	Valiant TMS	Incoming Profinet	Drawing name: =2V04&EFS-EL	= V1AR54KF1
			Ed.	MKLEPADLO					+ V1AR54UC01
			Appr		P6700 Underbody Mainline - Cell 2V04	Scale 1:1		Document type: EFS	Project nr: 22-16151
Modification	Date	Name	Original		Replacement of	Replaced by			Page 1 / 1630

0	1	2	3	4	5	6	7	8	9

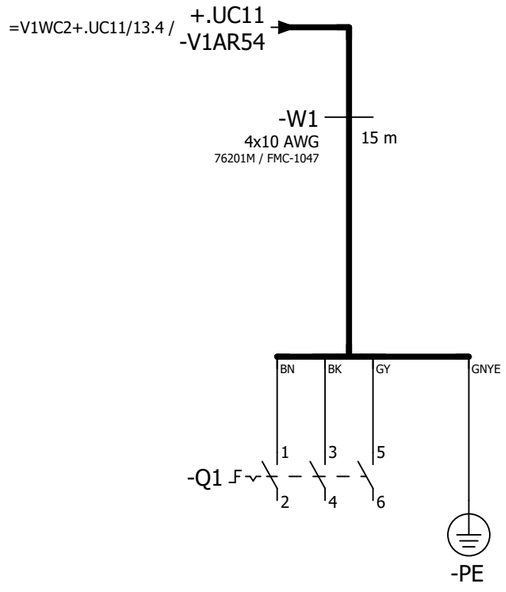

=V1AR54KF1/1

=V1AR54XQ51WC1+.AR54XQ51UC01/1

			Date	12/22/2022	Volvo Trucks North America		Valiant TMS	Incoming power	Drawing name: =2V04&EFS-EL	= V1AR54WC1
			Ed.	MKLEPADLO						+ V1AR54UC01
			Appr		P6700 Underbody Mainline - Cell 2V04				Document type: EFS	Project nr: 22-16151	Page 1
Modification	Date	Name	Original		Replacement of	Replaced by	Scale 1:1				1630

0	1	2	3	4	5	6	7	8	9

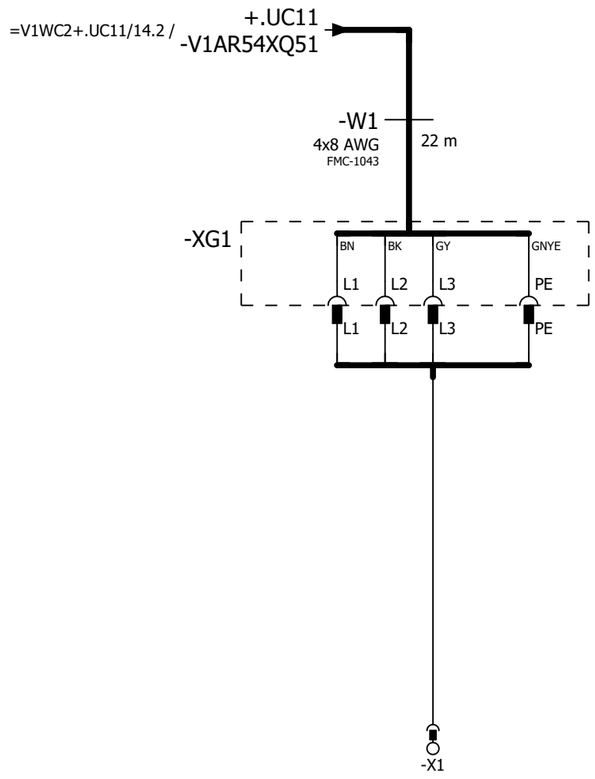

=V1AR54WC1+.AR54UC01/1

=V1AR141KF1+.AR141UC01/1

			Date	12/22/2022	Volvo Trucks North America	Valiant TMS	Incoming power	Drawing name: =2V04&EFS-EL	= V1AR54XQ51WC1
			Ed.	MKLEPADLO					+ V1AR54XQ51UC01
			Appr		P6700 Underbody Mainline - Cell 2V04	Scale 1:1		Document type: EFS	Project nr: 22-16151
Modification	Date	Name	Original		Replacement of	Replaced by			Page 1 / 1630

0	1	2	3	4	5	6	7	8	9

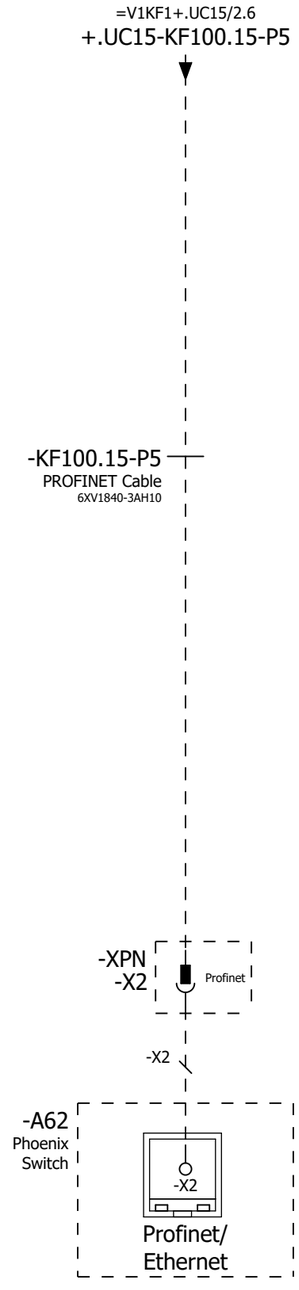

=V1AR54XQ51WC1+.AR54XQ51UC01/1

=V1AR141WC1/1

			Date	12/22/2022	Volvo Trucks North America	Valiant TMS	Incoming Profinet	Drawing name: =2V04&EFS-EL	= V1AR141KF1
			Ed.	MKLEPADLO					+ V1AR141UC01
			Appr		P6700 Underbody Mainline - Cell 2V04	Scale 1:1		Document type: EFS	Project nr: 22-16151
Modification	Date	Name	Original		Replacement of	Replaced by			Page 1 / 1630

0	1	2	3	4	5	6	7	8	9

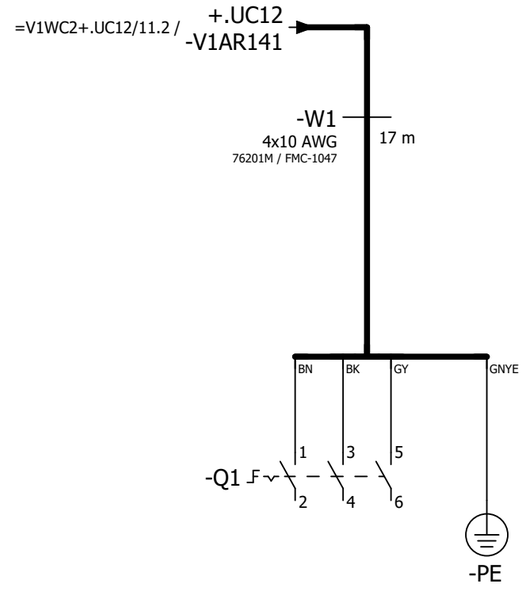

=V1AR141KF1/1

=V1AR141XQ41WC1+.AR141XQ41UC01/1

			Date	12/22/2022	Volvo Trucks North America		Valiant TMS	Incoming power	Drawing name: =2V04&EFS-EL	= V1AR141WC1
			Ed.	MKLEPADLO						+ V1AR141UC01
			Appr		P6700 Underbody Mainline - Cell 2V04				Document type: EFS	Project nr: 22-16151	Page 1
Modification	Date	Name	Original		Replacement of	Replaced by	Scale 1:1				1630

0	1	2	3	4	5	6	7	8	9

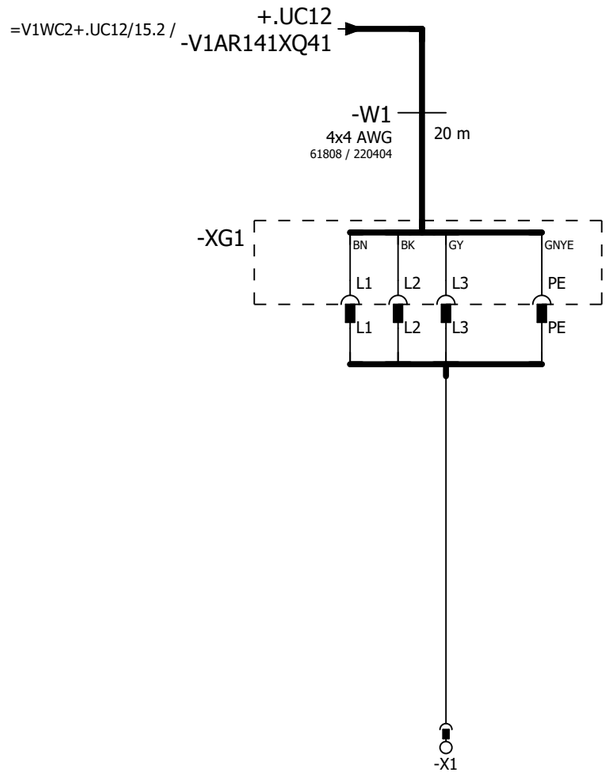

=V1AR141WC1+.AR141UC01/1

=V1AR142KF1+.AR142UC01/1

			Date	12/22/2022	Volvo Trucks North America		Valiant TMS	Incoming power	Drawing name: =2V04&EFS-EL	= V1AR141XQ41WC1
			Ed.	MKLEPADLO						+ V1AR141XQ41UC01
			Appr		P6700 Underbody Mainline - Cell 2V04				Document type: EFS	Project nr: 22-16151
Modification	Date	Name	Original		Replacement of	Replaced by	Scale 1:1			Page 1 / 1630

0	1	2	3	4	5	6	7	8	9

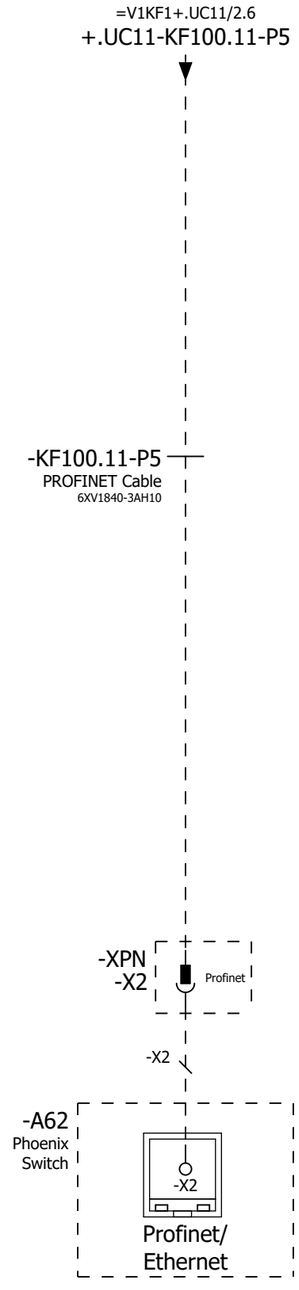

=V1AR141XQ41WC1+.AR141XQ41UC01/1

=V1AR142WC1/1

			Date	12/22/2022	Volvo Trucks North America	Valiant TMS	Incoming Profinet	Drawing name: =2V04&EFS-EL	= V1AR142KF1
			Ed.	MKLEPADLO					+ V1AR142UC01
			Appr		P6700 Underbody Mainline - Cell 2V04	Scale 1:1		Document type: EFS	Project nr: 22-16151
Modification	Date	Name	Original		Replacement of	Replaced by			Page 1 / 1630

0	1	2	3	4	5	6	7	8	9

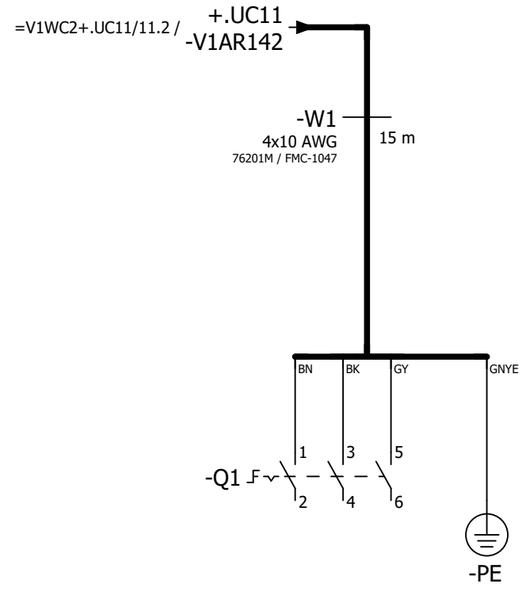

=V1AR142KF1/1

=V1AR142XQ41WC1+.AR142XQ41UC01/1

			Date	12/22/2022	Volvo Trucks North America	Valiant TMS	Incoming power	Drawing name: =2V04&EFS-EL	= V1AR142WC1
			Ed.	MKLEPADLO					+ V1AR142UC01
			Appr		P6700 Underbody Mainline - Cell 2V04	Scale 1:1		Document type: EFS	Project nr: 22-16151
Modification	Date	Name	Original		Replacement of	Replaced by			Page 1 / 1630

0	1	2	3	4	5	6	7	8	9

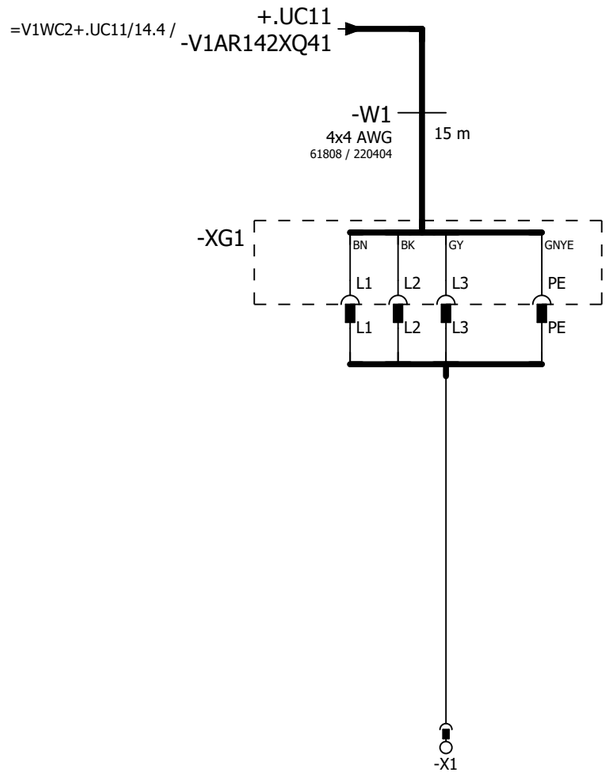

=V1AR142WC1+.AR142UC01/1

=V1AR191KF1+.AR191UC01/1

			Date	12/22/2022	Volvo Trucks North America		Valiant TMS	Incoming power	Drawing name: =2V04&EFS-EL	= V1AR142XQ41WC1
			Ed.	MKLEPADLO						+ V1AR142XQ41UC01
			Appr		P6700 Underbody Mainline - Cell 2V04				Document type: EFS	Project nr: 22-16151
Modification	Date	Name	Original		Replacement of	Replaced by	Scale 1:1			Page 1 / 1630

0	1	2	3	4	5	6	7	8	9

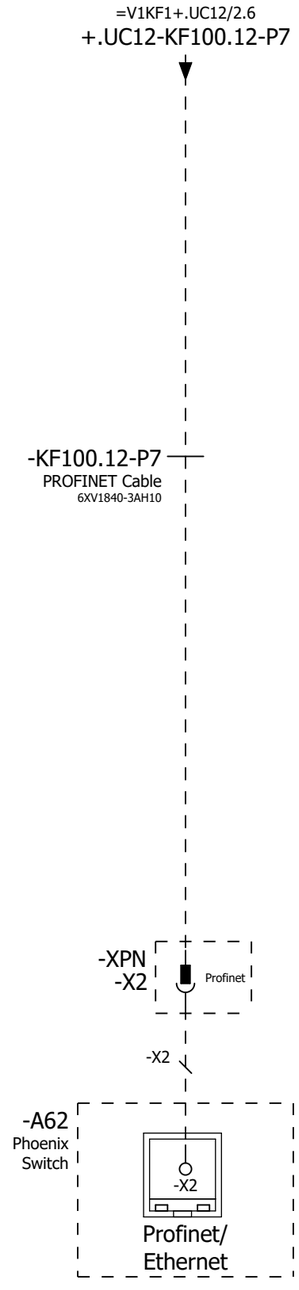

=V1AR142XQ41WC1+.AR142XQ41UC01/1

=V1AR191WC1/1

			Date	12/22/2022	Volvo Trucks North America	Valiant TMS	Incoming Profinet	Drawing name: =2V04&EFS-EL	= V1AR191KF1
			Ed.	MKLEPADLO					+ V1AR191UC01
			Appr		P6700 Underbody Mainline - Cell 2V04	Scale 1:1		Document type: EFS	Project nr: 22-16151
Modification	Date	Name	Original		Replacement of	Replaced by			Page 1 / 1630

0	1	2	3	4	5	6	7	8	9

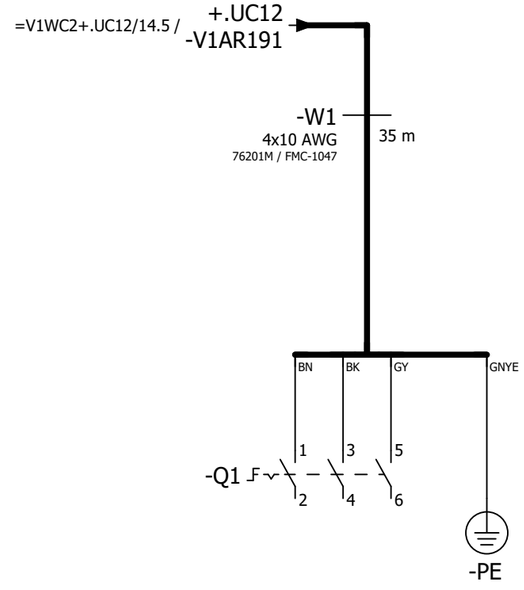

=V1AR191KF1/1

=V1AR192KF1+.AR192UC01/1

			Date	12/22/2022	Volvo Trucks North America		Valiant TMS	Incoming power	Drawing name: =2V04&EFS-EL	= V1AR191WC1
			Ed.	MKLEPADLO						+ V1AR191UC01
			Appr		P6700 Underbody Mainline - Cell 2V04				Document type: EFS	Project nr: 22-16151	Page 1
Modification	Date	Name	Original		Replacement of	Replaced by	Scale 1:1				1630

0	1	2	3	4	5	6	7	8	9

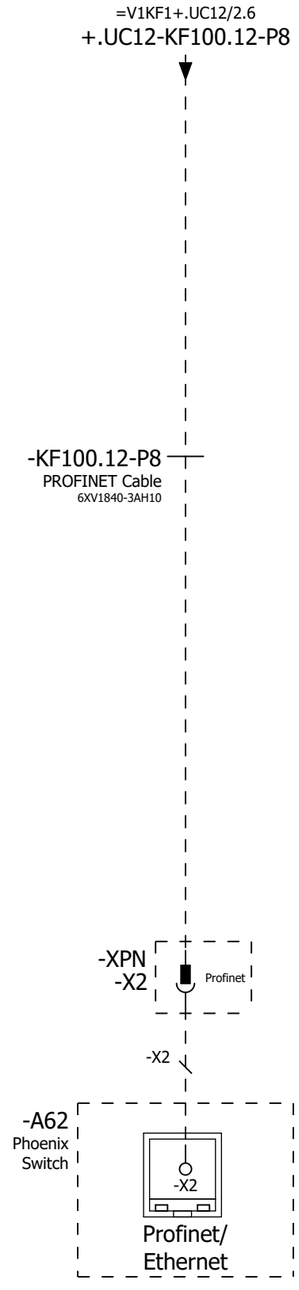

=V1AR191WC1+.AR191UC01/1

=V1AR192WC1/1

			Date	12/22/2022	Volvo Trucks North America	Valiant TMS	Incoming Profinet	Drawing name: =2V04&EFS-EL	= V1AR192KF1	
			Ed.	MKLEPADLO					+ V1AR192UC01	
			Appr		P6700 Underbody Mainline - Cell 2V04			Document type: EFS	Project nr: 22-16151	Page 1
Modification	Date	Name	Original		Replacement of	Replaced by	Scale 1:1			1630

0	1	2	3	4	5	6	7	8	9

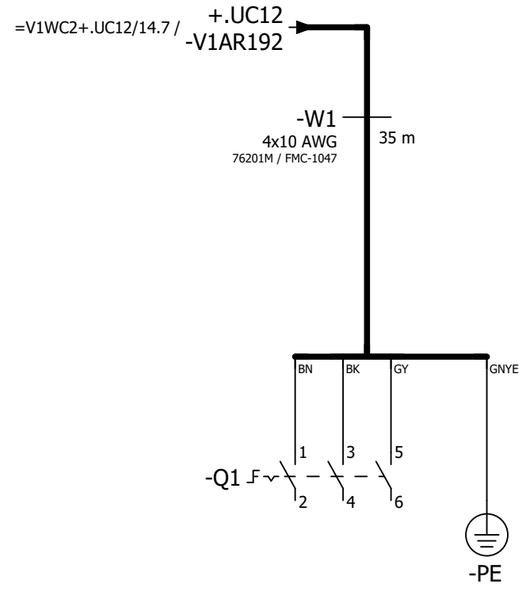

=V1AR192KF1/1

=V1AR211KF1+.AR211UC01/1

			Date	12/22/2022	Volvo Trucks North America		Valiant TMS	Incoming power	Drawing name: =2V04&EFS-EL	= V1AR192WC1
			Ed.	MKLEPADLO						+ V1AR192UC01
			Appr		P6700 Underbody Mainline - Cell 2V04				Document type: EFS	Project nr: 22-16151	Page 1
Modification	Date	Name	Original		Replacement of	Replaced by	Scale 1:1				1630

0	1	2	3	4	5	6	7	8	9

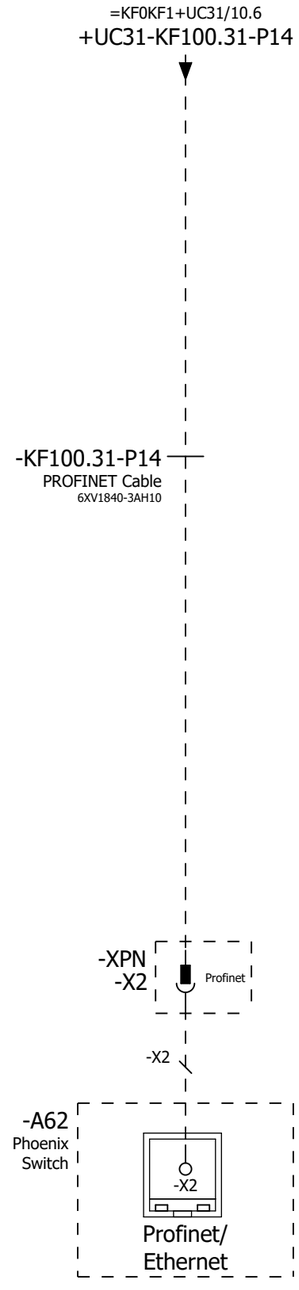

=V1AR192WC1+.AR192UC01/1

=V1AR211WC1/1

			Date	12/22/2022	Volvo Trucks North America	Valiant TMS	Incoming Profinet	Drawing name: =2V04&EFS-EL	= V1AR211KF1
			Ed.	MKLEPADLO					+ V1AR211UC01
			Appr		P6700 Underbody Mainline - Cell 2V04	Scale 1:1		Document type: EFS	Project nr: 22-16151
Modification	Date	Name	Original		Replacement of	Replaced by			Page 1 / 1630

0	1	2	3	4	5	6	7	8	9

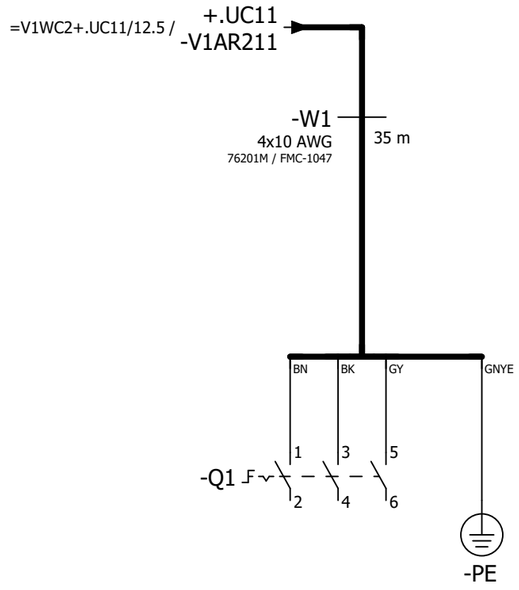

=V1AR211KF1/1

=V1AR211XQ11WC1+.AR211XQ11UC01/1

			Date	12/22/2022	Volvo Trucks North America		Valiant TMS	Incoming power	Drawing name: =2V04&EFS-EL	= V1AR211WC1
			Ed.	MKLEPADLO						+ V1AR211UC01
			Appr		P6700 Underbody Mainline - Cell 2V04				Document type: EFS	Project nr: 22-16151	Page 1
Modification	Date	Name	Original		Replacement of	Replaced by	Scale 1:1				1630

0	1	2	3	4	5	6	7	8	9

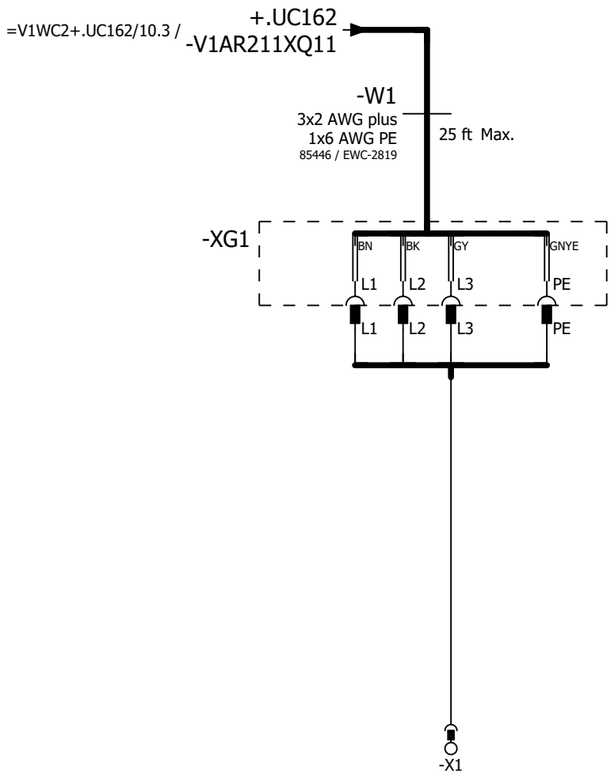

=V1AR211WC1+.AR211UC01/1

=V1AR212KF1+.AR212UC01/1

			Date	12/22/2022	Volvo Trucks North America	Valiant TMS	Incoming power	Drawing name: =2V04&EFS-EL	= V1AR211XQ11WC1	
			Ed.	MKLEPADLO					+ V1AR211XQ11UC01	
			Appr		P6700 Underbody Mainline - Cell 2V04	Scale 1:1		Document type: EFS	Project nr: 22-16151	Page 1
Modification	Date	Name	Original		Replacement of	Replaced by				1630

0	1	2	3	4	5	6	7	8	9

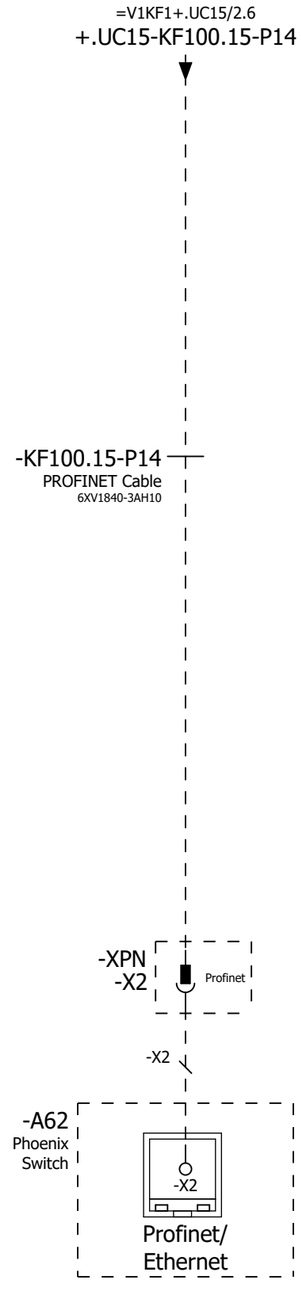

=V1AR211XQ11WC1+.AR211XQ11UC01/1

=V1AR212WC1/1

			Date	12/22/2022	Volvo Trucks North America	Valiant TMS	Incoming Profinet	Drawing name: =2V04&EFS-EL	= V1AR212KF1
			Ed.	MKLEPADLO					+ V1AR212UC01
			Appr		P6700 Underbody Mainline - Cell 2V04	Scale 1:1		Document type: EFS	Project nr: 22-16151
Modification	Date	Name	Original		Replacement of	Replaced by			Page 1 / 1630

0	1	2	3	4	5	6	7	8	9

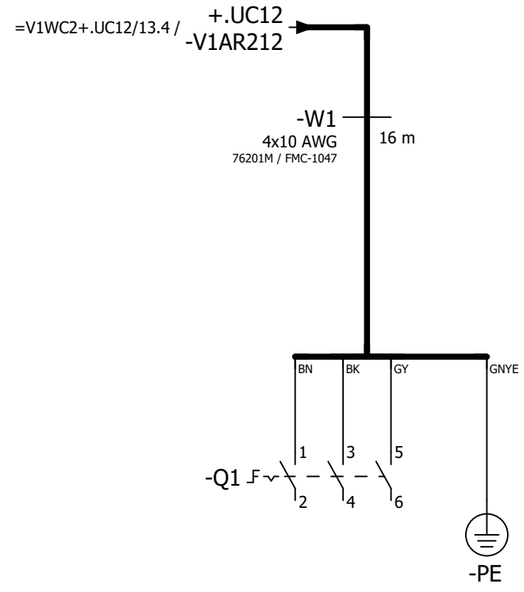

=V1AR212KF1/1

=V1AR212XQ11WC1+.AR212XQ11UC01/1

			Date	12/22/2022	Volvo Trucks North America		Valiant TMS	Incoming power	Drawing name: =2V04&EFS-EL	= V1AR212WC1
			Ed.	MKLEPADLO						+ V1AR212UC01
			Appr		P6700 Underbody Mainline - Cell 2V04				Document type: EFS	Project nr: 22-16151	Page 1
Modification	Date	Name	Original		Replacement of	Replaced by	Scale 1:1				1630

0	1	2	3	4	5	6	7	8	9

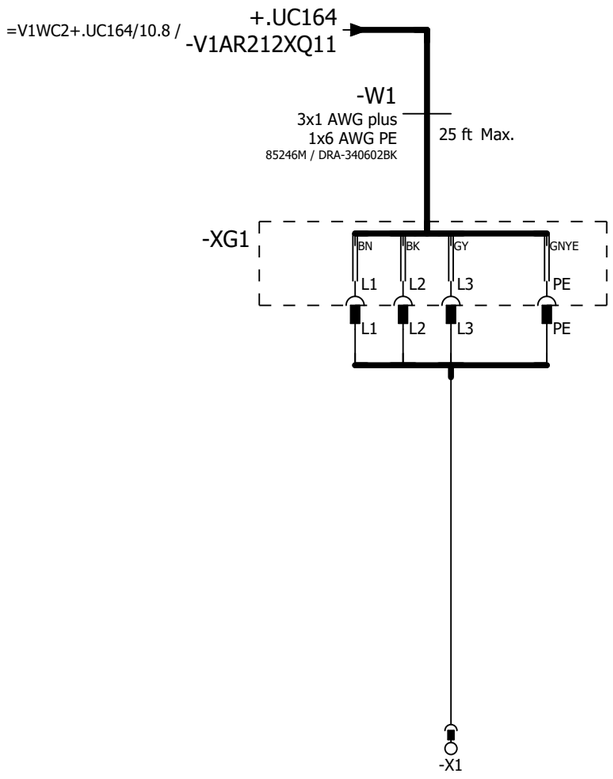

=V1AR212WC1+.AR212UC01/1

=V1AR213KF1+.AR213UC01/1

			Date	12/22/2022	Volvo Trucks North America	Valiant TMS	Incoming power	Drawing name: =2V04&EFS-EL	= V1AR212XQ11WC1
			Ed.	MKLEPADLO					+ V1AR212XQ11UC01
			Appr		P6700 Underbody Mainline - Cell 2V04	Scale 1:1		Document type: EFS	Project nr: 22-16151
Modification	Date	Name	Original		Replacement of	Replaced by			Page 1 / 1630

0	1	2	3	4	5	6	7	8	9

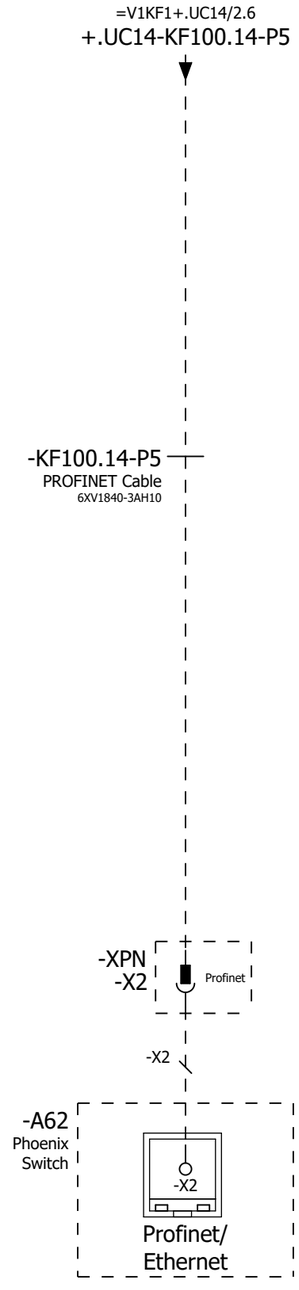

=V1AR212XQ11WC1+.AR212XQ11UC01/1

=V1AR213WC1/1

			Date	12/22/2022	Volvo Trucks North America	Valiant TMS	Incoming Profinet	Drawing name: =2V04&EFS-EL	= V1AR213KF1
			Ed.	MKLEPADLO					+ V1AR213UC01
			Appr		P6700 Underbody Mainline - Cell 2V04	Scale 1:1		Document type: EFS	Project nr: 22-16151
Modification	Date	Name	Original		Replacement of	Replaced by			Page 1 / 1630

0	1	2	3	4	5	6	7	8	9

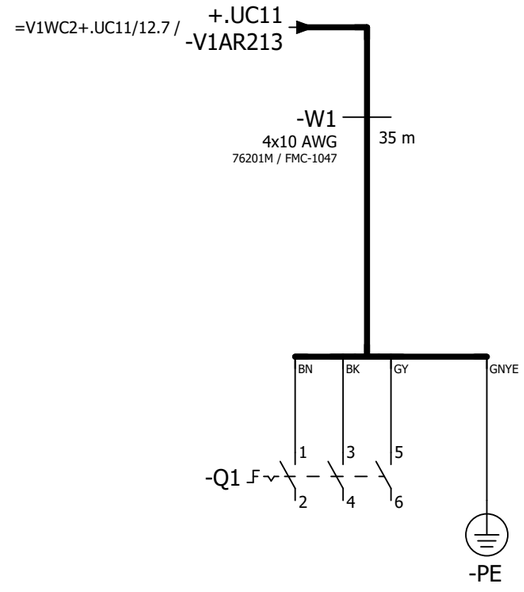

=V1AR213KF1/1

=V1AR213XQ11WC1+.AR213XQ11UC01/1

			Date	12/22/2022	Volvo Trucks North America		Valiant TMS	Incoming power	Drawing name: =2V04&EFS-EL	= V1AR213WC1
			Ed.	MKLEPADLO						+ V1AR213UC01
			Appr		P6700 Underbody Mainline - Cell 2V04				Document type: EFS	Project nr: 22-16151	Page 1
Modification	Date	Name	Original		Replacement of	Replaced by	Scale 1:1				1630

0	1	2	3	4	5	6	7	8	9

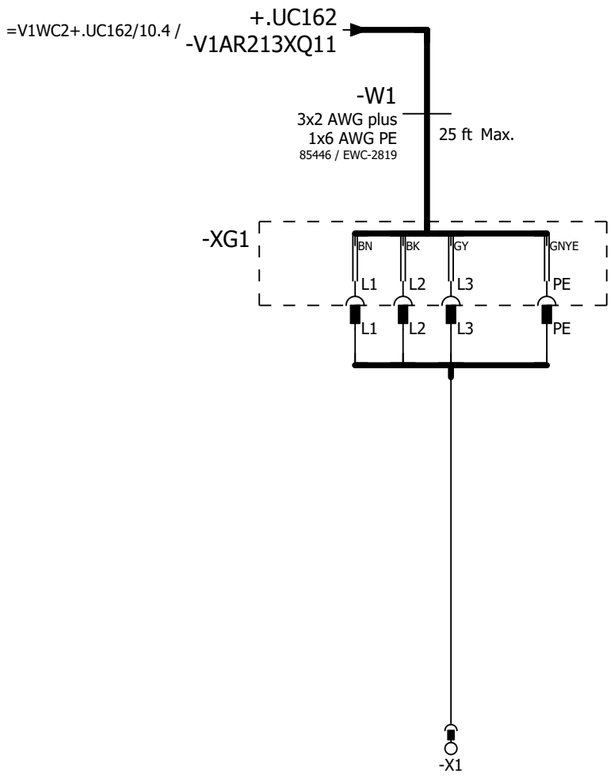

=V1AR213WC1+.AR213UC01/1

=V1BX11WC3+.BX11UC01/1

			Date	12/22/2022	Volvo Trucks North America	Valiant TMS	Incoming power	Drawing name: =2V04&EFS-EL	= V1AR213XQ11WC1	
			Ed.	MKLEPADLO					+ V1AR213XQ11UC01	
			Appr		P6700 Underbody Mainline - Cell 2V04	Scale 1:1		Document type: EFS	Project nr: 22-16151	Page 1
Modification	Date	Name	Original		Replacement of	Replaced by				1630

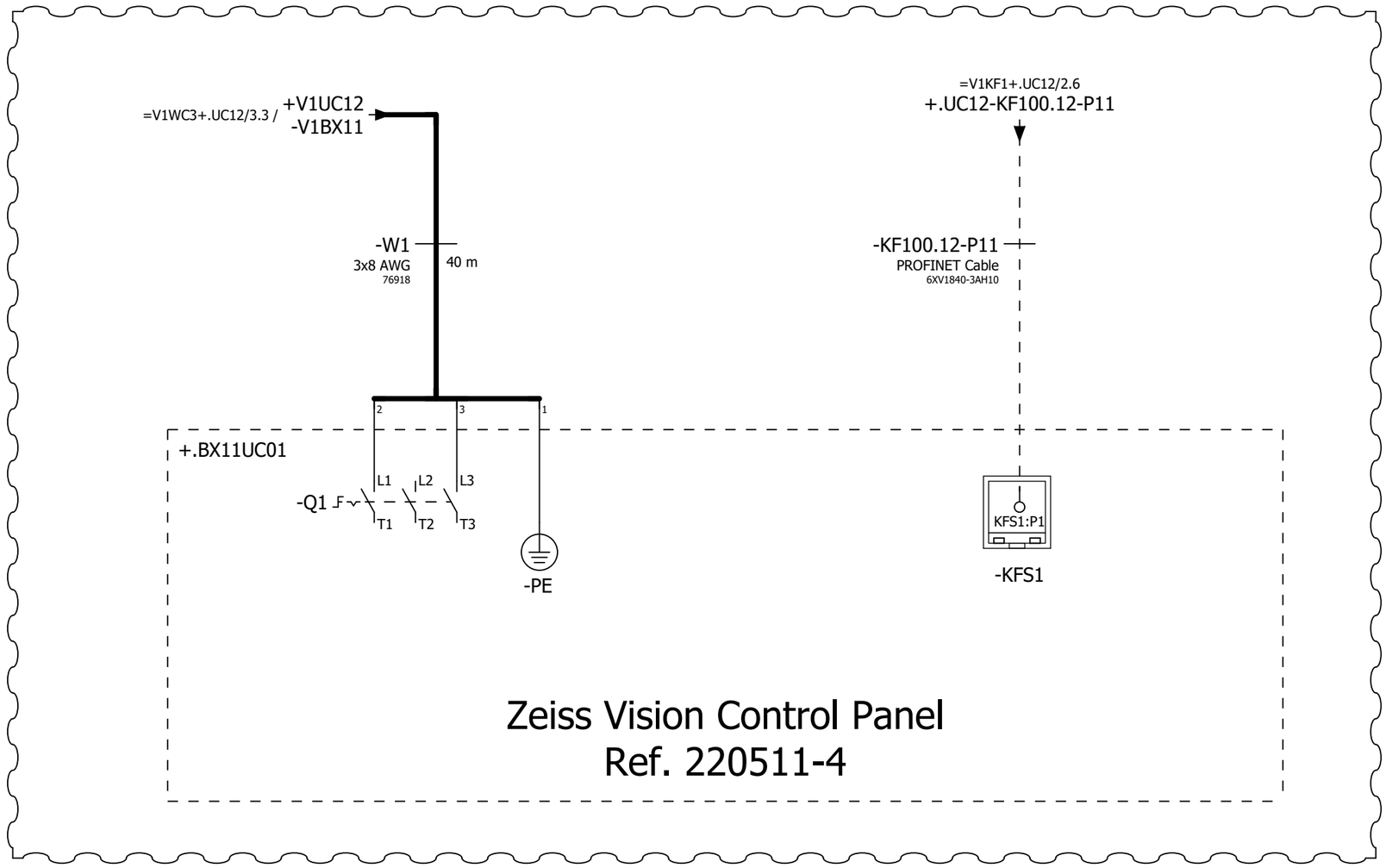

=V1AR213XQ11WC1+.AR213XQ11UC01/1

=V1FQ1+.FQ1/1

			Date	12/22/2022	Volvo Trucks North America	Valiant TMS	Incoming power & profinet	Drawing name: =2V04&EFS-EL	= V1BX11WC3	
			Ed.	MKLEPADLO					+ V1BX11UC01	
			Appr		P6700 Underbody Mainline - Cell 2V04			Document type: EFS	Project nr: 22-16151	Page 1
Modification	Date	Name	Original		Replacement of	Replaced by	Scale 1:1			1630

0	1	2	3	4	5	6	7	8	9

=V1KF1+V1UC11

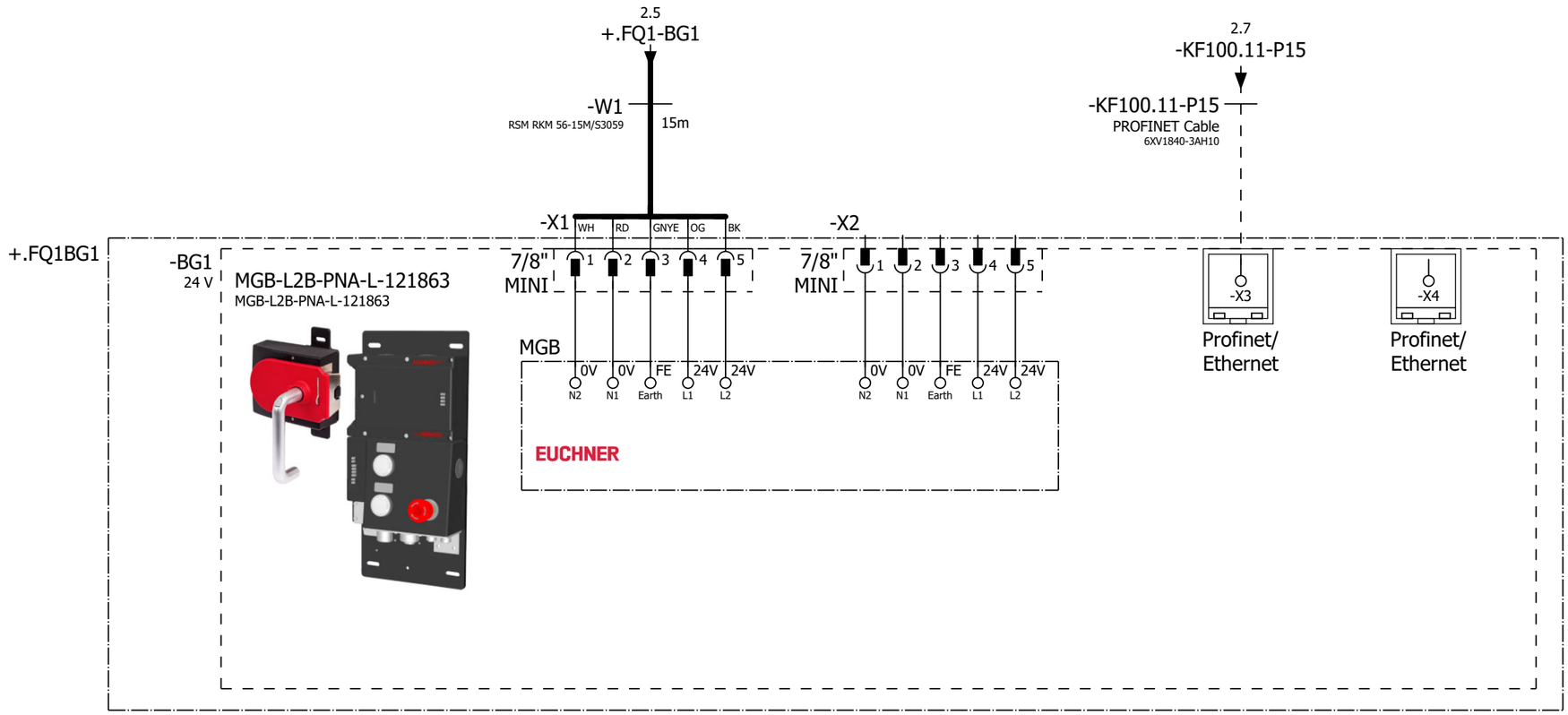

=V1BX11WC3+.BX11UC01/1

2

			Date	12/22/2022	Volvo Trucks North America	Valiant TMS	Door lock sensor -BG1	Drawing name: =2V04&EFS-EL	= V1FQ1
			Ed.	MKLEPADLO					+ V1FQ1
			Appr		P6700 Underbody Mainline - Cell 2V04	Scale 1:1		Document type: EFS	Project nr: 22-16151
Modification	Date	Name	Original		Replacement of	Replaced by			Page 1 / 1630

0	1	2	3	4	5	6	7	8	9

=V1KF1+V1UC11

=V1WC4+.UC11/20.5
+.FQ1-BG2

=V1KF1+.UC11/2.6
-KF100.11-P15

-KF100.11-P15
PROFINET Cable
6XV1840-3AH10

1.3
+.FQ1-BG1

1.6
-KF100.11-P15

-W2
RSM RKM 56-10M/S3059
10m

+.FQ1BG2

-BG2
24 V

MGB-L2B-PNA-L-121863
MGB-L2B-PNA-L-121863

-X1 WH RD GNYE OG BK
7/8" MINI 1 2 3 4 5

-X2 WH RD GNYE OG BK
7/8" MINI 1 2 3 4 5

MGB
0V 0V FE 24V 24V
N2 N1 Earth L1 L2

EUCHNER

-X3
Profinet/
Ethernet

-X4
Profinet/
Ethernet

1 3

			Date	12/22/2022	Volvo Trucks North America	Valiant TMS	Door lock sensor -BG2	Drawing name: =2V04&EFS-EL	= V1FQ1
			Ed.	MKLEPADLO					+ V1FQ1
			Appr		P6700 Underbody Mainline - Cell 2V04	Scale 1:1		Document type: EFS	Project nr: 22-16151
Modification	Date	Name	Original		Replacement of	Replaced by			Page 2 / 1630

=V1KF1+V1UC11

=V1WC4+.UC11/21.5
+.FQ1-BG3

=V1KF1+.UC11/2.6
-KF100.11-P16

-KF100.11-P16
PROFINET Cable
6XV1840-3AH10

-W3
RSM RKM 56-15M/S3059
15m

+.FQ1BG3

-BG3
24 V

MGB-L2B-PNA-L-121863
MGB-L2B-PNA-L-121863

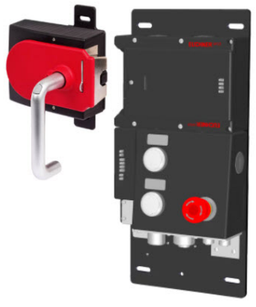

-X1 WH RD GNYE OG BK
7/8" MINI 1 2 3 4 5

-X2
7/8" MINI 1 2 3 4 5

MGB
0V 0V FE 24V 24V
N2 N1 Earth L1 L2

EUCHNER

-X3
Profinet/
Ethernet

-X4
Profinet/
Ethernet

			Date	12/22/2022	Volvo Trucks North America	Valiant TMS	Door lock sensor -BG3	Drawing name: =2V04&EFS-EL	= V1FQ1
			Ed.	MKLEPADLO					+ V1FQ1
			Appr		P6700 Underbody Mainline - Cell 2V04			Document type: EFS	Project nr: 22-16151
Modification	Date	Name	Original		Replacement of	Replaced by	Scale 1:1		Page 3 / 1630

=V1KF1+.UC14

=V1WC4+.UC12/20.5
+.FQ1-BG4

=V1KF1+.UC14/2.6
-KF100.14-P16

-KF100.14-P16
PROFINET Cable
6XV1840-3AH10

-W4
RSM RKM 56-8M/S3059
8m

+.FQ1BG4

-BG4
24 V
MGB-L2B-PNA-L-121863
MGB-L2B-PNA-L-121863

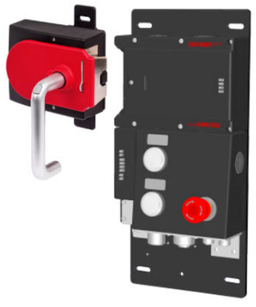

-X1 WH RD GNYE OG BK
7/8" MINI 1 2 3 4 5

-X2
7/8" MINI 1 2 3 4 5

MGB
0V 0V FE 24V 24V
N2 N1 Earth L1 L2

EUCHNER

-X3
Profinet/
Ethernet

-X4
Profinet/
Ethernet

3

5

			Date	12/22/2022	Volvo Trucks North America	Valiant TMS	Door lock sensor -BG4	Drawing name: =2V04&EFS-EL	= V1FQ1
			Ed.	MKLEPADLO					+ V1FQ1
			Appr		P6700 Underbody Mainline - Cell 2V04	Scale 1:1		Document type: EFS	Project nr: 22-16151
Modification	Date	Name	Original		Replacement of	Replaced by			Page 4 / 1630

=V1KF1+.UC12

=V1KF1+.UC12/2.6
-KF100.12-P15

+.FQ1-BG5

-KF100.12-P15
PROFINET Cable
6XV1840-3AH10

-W5
RSM RKM 56-15M/S3059
15m

+.FQ1BG5

-BG5
24 V
MGB-L2B-PNA-R-121859
MGB-L2B-PNA-R-121859

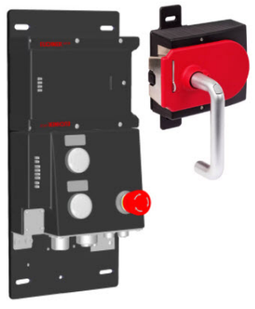

-X1 WH RD GNYE OG BK
7/8" MINI 1 2 3 4 5

-X2
7/8" MINI 1 2 3 4 5

MGB
0V 0V FE 24V 24V
N2 N1 Earth L1 L2

0V 0V FE 24V 24V
N2 N1 Earth L1 L2

EUCHNER

-X3
Profinet/ Ethernet

-X4
Profinet/ Ethernet

4 6

			Date	12/22/2022	Volvo Trucks North America	Valiant TMS	Door lock sensor -BG5	Drawing name: =2V04&EFS-EL	= V1FQ1
			Ed.	MKLEPADLO					+ V1FQ1
			Appr		P6700 Underbody Mainline - Cell 2V04	Scale 1:1		Document type: EFS	Project nr: 22-16151
Modification	Date	Name	Original		Replacement of	Replaced by			Page 5 / 1630

=V1KF1+.UC12

+.FQ1-BG6

=V1KF1+.UC12/2.6
-KF100.12-P16

-KF100.12-P16
PROFINET Cable
6XV1840-3AH10

7.3
+.FQ1-BG7

7.6
-KF100.12-P16

-W6
RSM RKM 56-10M/S3059
10m

+.FQ1BG6

-BG6
24 V

MGB-L2B-PNA-R-121859
MGB-L2B-PNA-R-121859

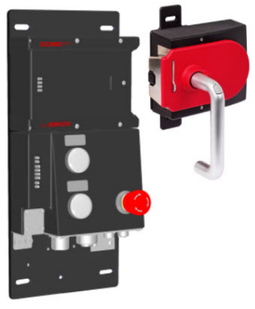

-X1 WH RD GNYE OG BK
7/8" MINI 1 2 3 4 5

-X2 WH RD GNYE OG BK
7/8" MINI 1 2 3 4 5

MGB
0V 0V FE 24V 24V
N2 N1 Earth L1 L2

EUCHNER

-X3
Profinet/ Ethernet

-X4
Profinet/ Ethernet

5 7

			Date	12/22/2022	Volvo Trucks North America	Valiant TMS	Door lock sensor -BG6	Drawing name: =2V04&EFS-EL	= V1FQ1	
			Ed.	MKLEPADLO					+ V1FQ1	
			Appr		P6700 Underbody Mainline - Cell 2V04	Scale 1:1		Document type: EFS	Project nr: 22-16151	Page 6 / 1630
Modification	Date	Name	Original		Replacement of	Replaced by				

0	1	2	3	4	5	6	7	8	9

=V1KF1+.UC12

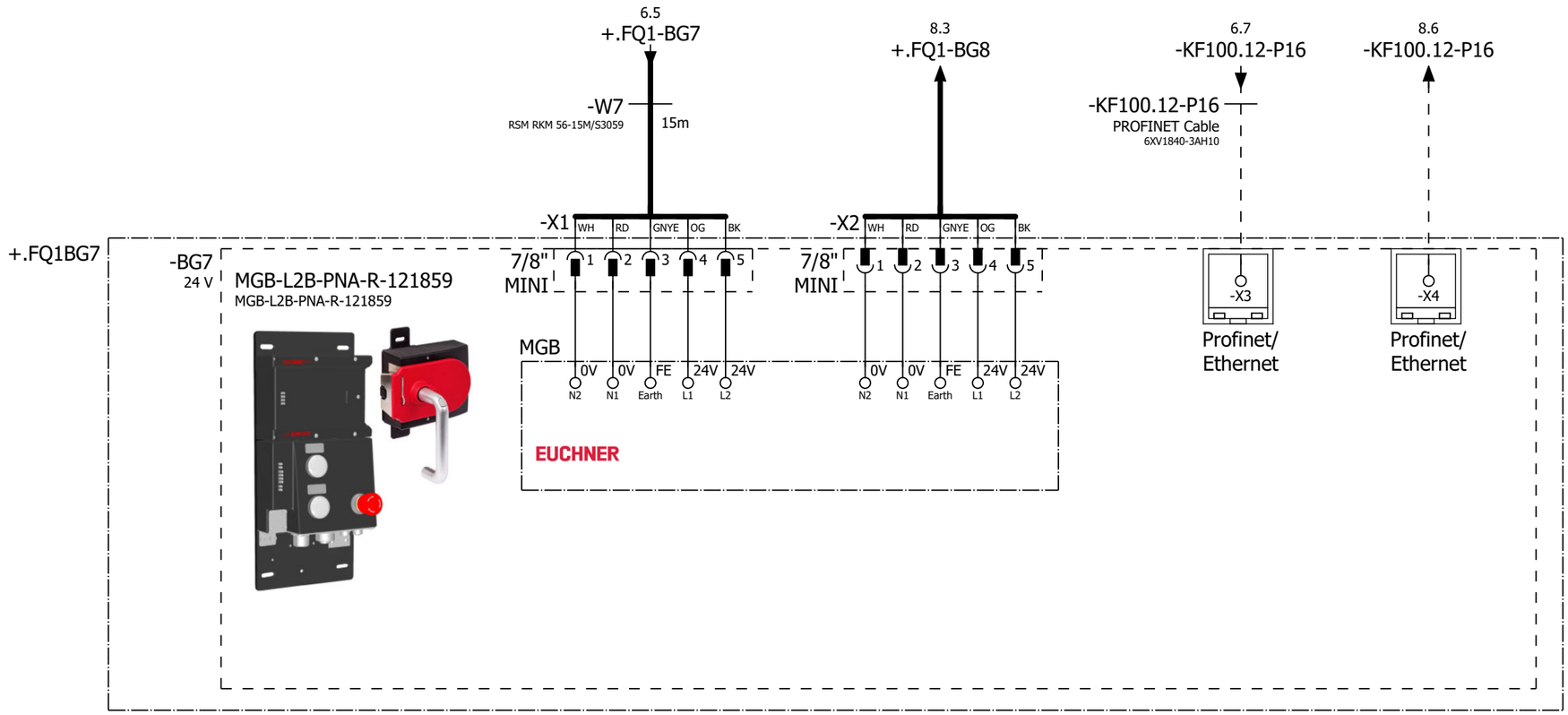

6 8

			Date	12/22/2022	Volvo Trucks North America	Valiant TMS	Door lock sensor -BG7	Drawing name: =2V04&EFS-EL	= V1FQ1	
			Ed.	MKLEPADLO					+ V1FQ1	
			Appr		P6700 Underbody Mainline - Cell 2V04	Scale 1:1		Document type: EFS	Project nr: 22-16151	Page 7 / 1630
Modification	Date	Name	Original		Replacement of	Replaced by				

=V1KF1+.UC12

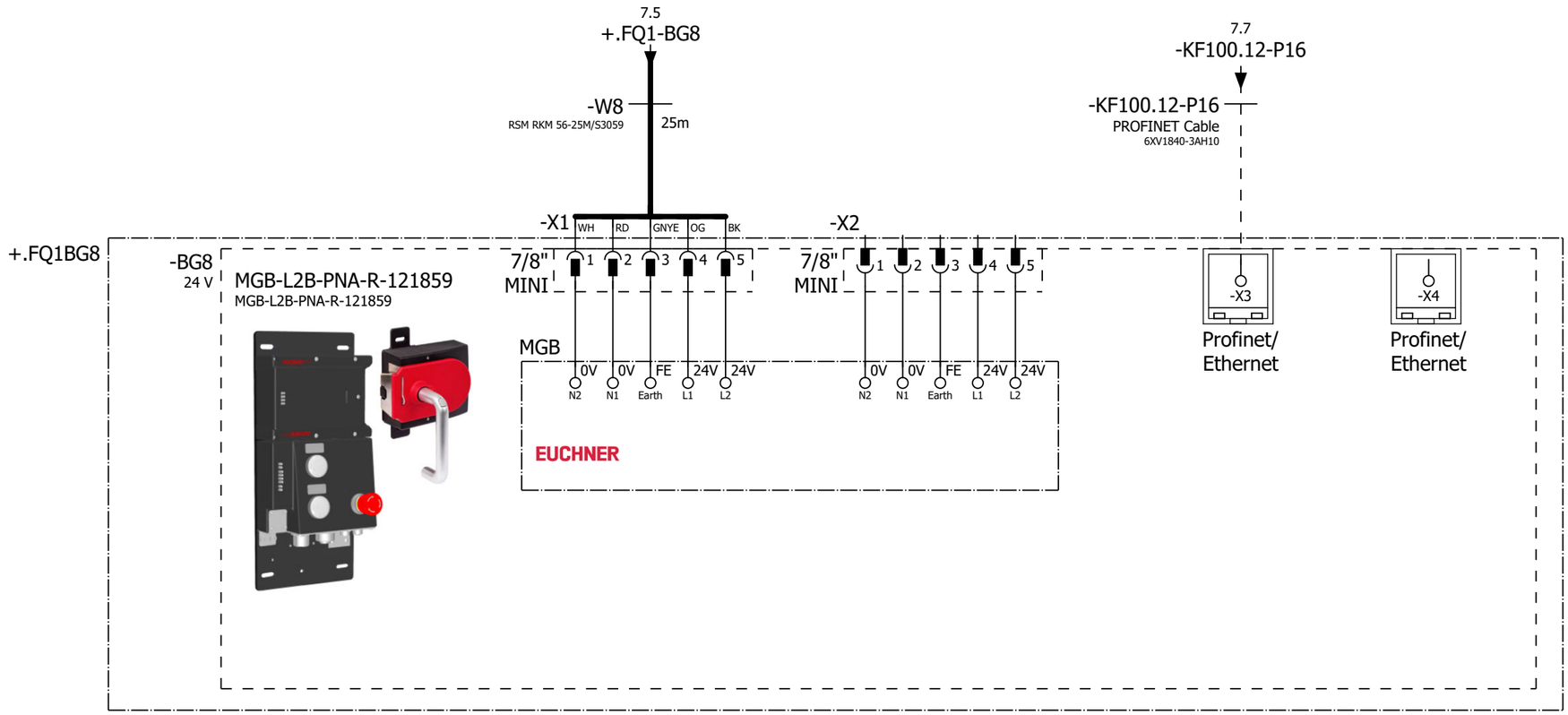

			Date	12/22/2022	Volvo Trucks North America	Valiant TMS	Door lock sensor -BG8	Drawing name: =2V04&EFS-EL	= V1FQ1
			Ed.	MKLEPADLO					+ V1FQ1
			Appr		P6700 Underbody Mainline - Cell 2V04	Scale 1:1		Document type: EFS	Project nr: 22-16151
Modification	Date	Name	Original		Replacement of	Replaced by			Page 8 / 1630

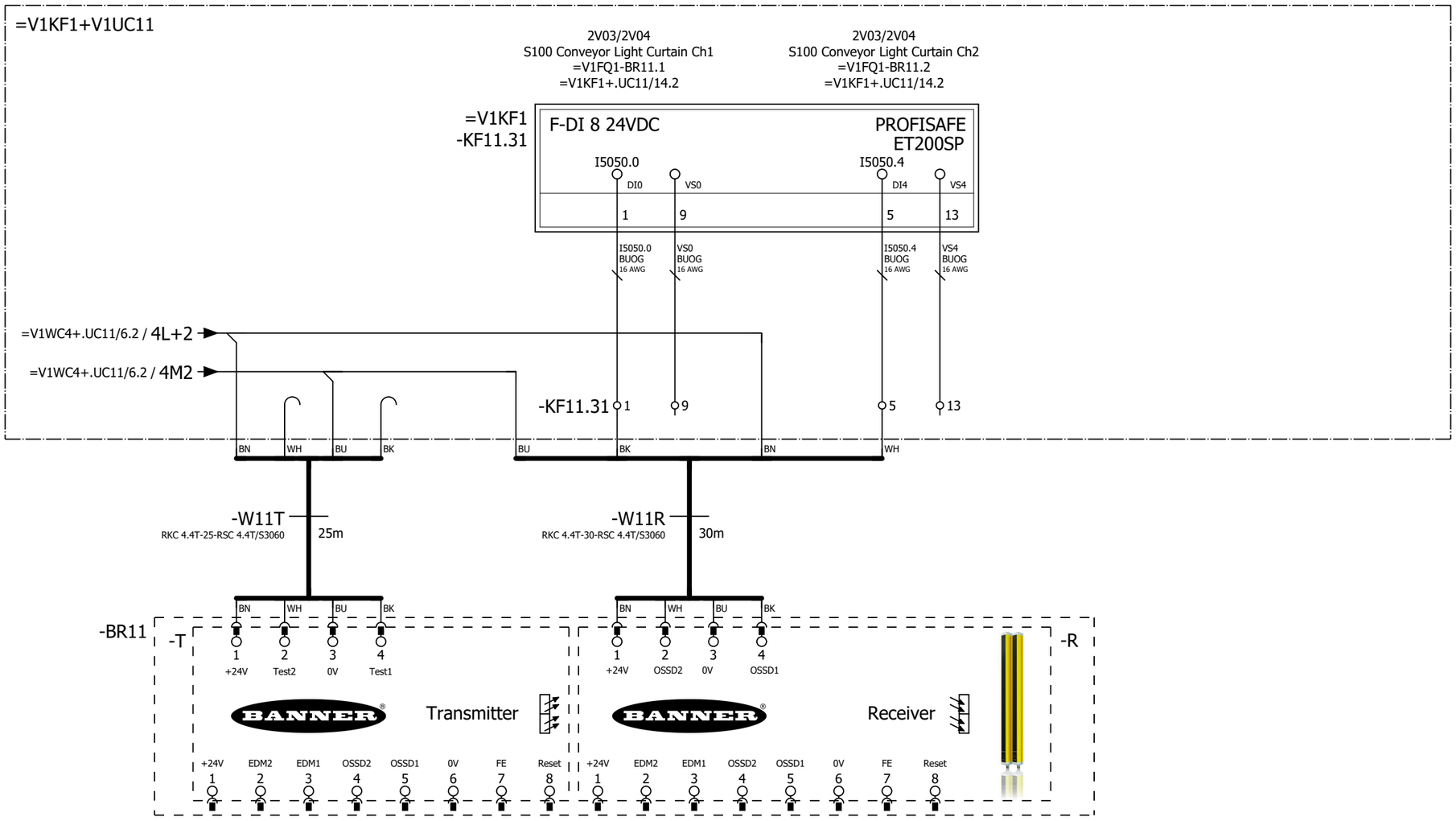

			Date	12/22/2022	Volvo Trucks North America	Valiant TMS	2V03/2V04 S100 Conveyor Light Curtain	Drawing name: =2V04&EFS-EL	= V1FQ1	
			Ed.	MKLEPADLO					+ V1FQ1	
			Appr		P6700 Underbody Mainline - Cell 2V04			Document type: EFS	Project nr: 22-16151	Page 9
Modification	Date	Name	Original		Replacement of	Replaced by	Scale 1:1			1630

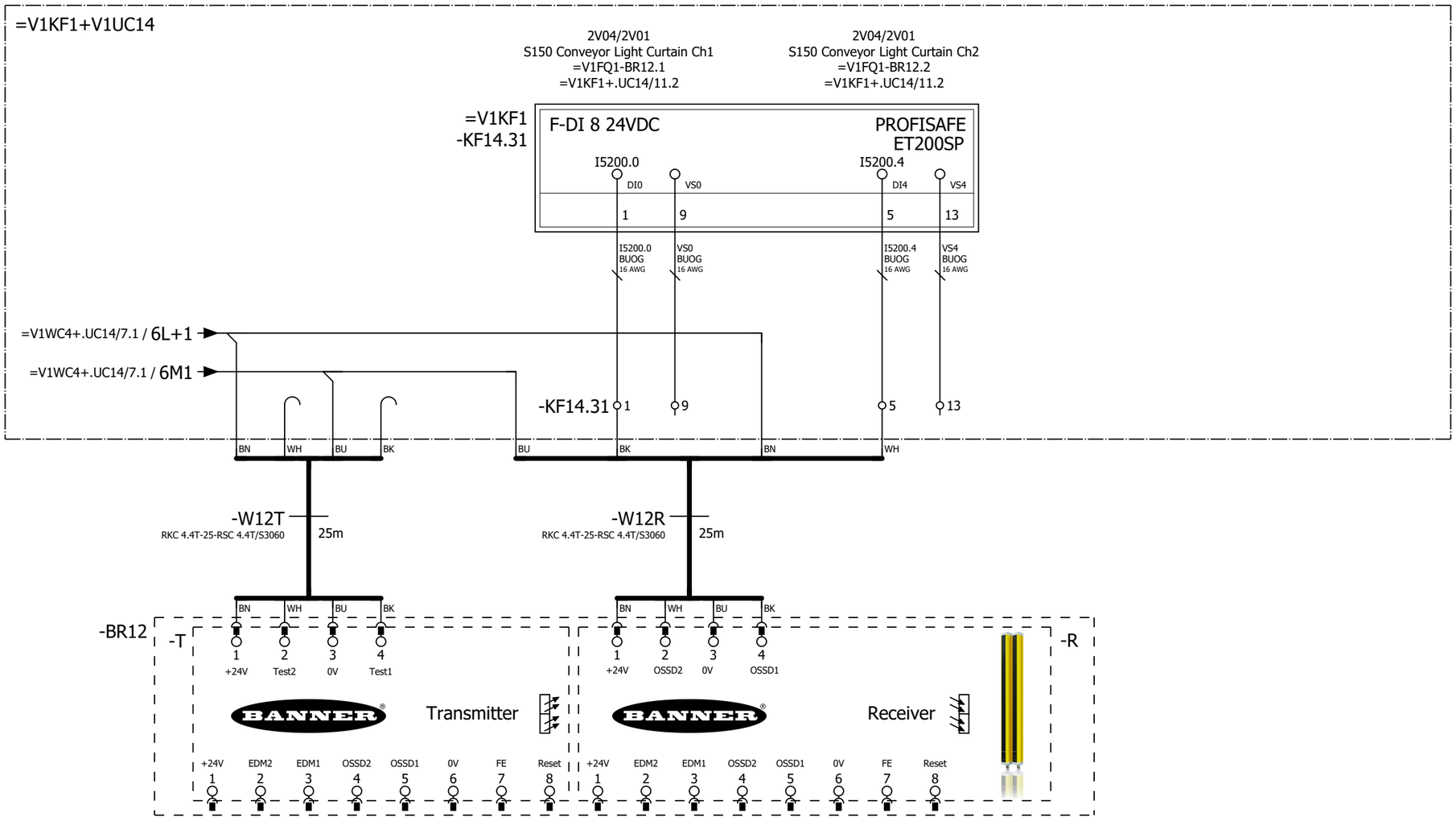

			Date	12/22/2022	Volvo Trucks North America	Valiant TMS	2V04/2V01 S150 Conveyor Light Curtain	Drawing name: =2V04&EFS-EL	= V1FQ1	
			Ed.	MKLEPADLO					+ V1FQ1	
			Appr		P6700 Underbody Mainline - Cell 2V04	Scale 1:1		Document type: EFS	Project nr: 22-16151	Page 10 / 1630
Modification	Date	Name	Original		Replacement of	Replaced by				

Switched Power 1 11.1L+
-KF11.51
=V1KF1/16.2

=V1KF1
-KF11.41

F 4DO 24 DC PROFISAFE
ET200SP

Q5062.0 QX.0

DQ-P0 DQ-M0

1 9

Q5062.0
BU
16 AWG

QX.0
BU
16 AWG

=V1KF1/18.2
Switched Power 1 11.1L+P

=V1KF1/18.2
SPARE

=V1KF1/18.2
Switched Power 1 11.1L+M

=V1KF1/18.2
SPARE

=V1KF1
-KF11.51
=V1KF1/18.1

F-RQ 1x24VDC/24..230VAC/5A PROFISAFE
ET200SP

9 IN P
10 OUT P
11 IN M
12 OUT M

Monitoring Safety contactors 11.1L+
-KF11.51RQ
=V1KF1/12.2

=V1KF1
-KF11.14

DI ET200SP

I56.0
DI0

1

=V1WC4/12.2 / -11.1L+1_2

+.FQ1/10

2

			Date	12/22/2022	Volvo Trucks North America	Valiant TMS	Safety power monitoring RQ - KF11.51	Drawing name: =2V04&EFS-EL	= V1FQ1	
			Ed.	MKLEPADLO					+ V1UC11	
			Appr		P6700 Underbody Mainline - Cell 2V04			Document type: EFS	Project nr: 22-16151	Page 1
Modification	Date	Name	Original		Replacement of	Replaced by	Scale 1:1			1630

Switched Power 2 12.1L+
-KF11.52
=V1KF1/16.2

=V1KF1
-KF11.41

F 4DO 24 DC PROFISAFE
ET200SP

Q5062.1 QX.1

DQ-P1 DQ-M1

2 10

Q5062.1
BU
16 AWG

QX.1
BU
16 AWG

=V1KF1/19.2
Switched Power 2 12.1L+P

=V1KF1/19.2
SPARE

=V1KF1/19.2
Switched Power 2 12.1L+M

=V1KF1/19.2
SPARE

=V1KF1
-KF11.52
=V1KF1/19.1

F-RQ 1x24VDC/24..230VAC/5A PROFISAFE
ET200SP

9 IN P | 10 OUT P | 11 IN M | 12 OUT M

Monitoring Safety contactors 12.1L+
-KF11.52RQ
=V1KF1/12.2

=V1KF1
-KF11.14

DI ET200SP

I56.1
DI1

2

=V1WC4/13.2 / -12.1L+1_2

1 3

			Date	12/22/2022	Volvo Trucks North America	Valiant TMS	Safety power monitoring RQ - KF11.52	Drawing name: =2V04&EFS-EL	= V1FQ1	
			Ed.	MKLEPADLO					+ V1UC11	
			Appr		P6700 Underbody Mainline - Cell 2V04			Document type: EFS	Project nr: 22-16151	Page 2
Modification	Date	Name	Original		Replacement of	Replaced by	Scale 1:1			1630

Switched Power 3 13.1L+
-KF11.53
=V1KF1/16.2

=V1KF1/20.2
Switched Power 3 13.1L+P

=V1KF1/20.2
SPARE

=V1KF1/20.2
Switched Power 3 13.1L+M

=V1KF1/20.2
SPARE

Monitoring Safety contactors 13.1L+
-KF11.53RQ
=V1KF1/12.2

=V1KF1
-KF11.41

F 4DO 24 DC PROFISAFE
ET200SP

Q5062.2 QX.2

DQ-P2 DQ-M2

3 11

=V1KF1
-KF11.53
=V1KF1/20.1

F-RQ 1x24VDC/24..230VAC/5A PROFISAFE
ET200SP

9 IN P | 10 OUT P | 11 IN M | 12 OUT M

Q5062.2
BU
16 AWG

QX.2
BU
16 AWG

=V1KF1
-KF11.14

DI ET200SP

I56.2

DI2

3

=V1WC4/14.2 / -13.1L+1_2

			Date	12/22/2022	Volvo Trucks North America	Valiant TMS	Safety power monitoring RQ - KF11.53	Drawing name: =2V04&EFS-EL	= V1FQ1	
			Ed.	MKLEPADLO					+ V1UC11	
			Appr		P6700 Underbody Mainline - Cell 2V04			Document type: EFS	Project nr: 22-16151	Page 3
Modification	Date	Name	Original		Replacement of / Replaced by	Scale 1:1				1630

Switched Power 4 14.1L+
-KF11.54
=V1KF1/16.2

=V1KF1
-KF11.41

F 4DO 24 DC PROFISAFE
ET200SP

Q5062.3 QX.3

DQ-P3 DQ-M3

4 12

=V1KF1/21.2
Switched Power 4 14.1L+P

=V1KF1/21.2
SPARE

=V1KF1/21.2
Switched Power 4 14.1L+M

=V1KF1/21.2
SPARE

=V1KF1
-KF11.54
=V1KF1/21.1

F-RQ 1x24VDC/24..230VAC/5A PROFISAFE
ET200SP

9 IN P | 10 OUT P | 11 IN M | 12 OUT M

Q5062.3
BU
16 AWG

QX.3
BU
16 AWG

Monitoring Safety contactors 14.1L+
-KF11.54RQ
=V1KF1/12.2

=V1KF1
-KF11.14

DI ET200SP

I56.3
DI3

4

=V1WC4/15.2 / -14.1L+1_2

3 +.UC12/1

			Date	12/22/2022	Volvo Trucks North America	Valiant TMS	Safety power monitoring RQ - KF11.54	Drawing name: =2V04&EFS-EL	= V1FQ1	
			Ed.	MKLEPADLO					+ V1UC11	
			Appr		P6700 Underbody Mainline - Cell 2V04	Scale 1:1		Document type: EFS	Project nr: 22-16151	Page 4 / 1630
Modification	Date	Name	Original		Replacement of	Replaced by				

Switched Power 1 11.1L+
-KF12.51
=V1KF1/16.2

=V1KF1
-KF12.41

F 4DO 24 DC PROFISAFE
ET200SP

Q5092.0 QX.0

DQ-P0 DQ-M0

1 9

Q5092.0
BU
16 AWG

QX.0
BU
16 AWG

=V1KF1/18.2
Switched Power 1 11.1L+P

=V1KF1/18.2
SPARE

=V1KF1/18.2
Switched Power 1 11.1L+M

=V1KF1/18.2
SPARE

=V1KF1
-KF12.51
=V1KF1/18.1

F-RQ 1x24VDC/24..230VAC/5A PROFISAFE
ET200SP

9 IN P
10 OUT P
11 IN M
12 OUT M

Monitoring Safety contactors 11.1L+
-KF12.51RQ
=V1KF1/12.2

=V1KF1
-KF12.14

DI ET200SP

I86.0
DI0

1

=V1WC4/12.2 / -11.1L+1_2

+.UC11/4

2

			Date	12/22/2022	Volvo Trucks North America	Valiant TMS	Safety power monitoring RQ - KF12.51	Drawing name: =2V04&EFS-EL	= V1FQ1	
			Ed.	MKLEPADLO					+ V1UC12	
			Appr		P6700 Underbody Mainline - Cell 2V04			Document type: EFS	Project nr: 22-16151	Page 1
Modification	Date	Name	Original		Replacement of	Replaced by	Scale 1:1			1630

Switched Power 2 12.1L+
-KF12.52
=V1KF1/16.2

=V1KF1
-KF12.41

F 4DO 24 DC PROFISAFE
ET200SP

Q5092.1 QX.1

DQ-P1 DQ-M1

2 10

Q5092.1
BU
16 AWG

QX.1
BU
16 AWG

=V1KF1/19.2
Switched Power 2 12.1L+P

=V1KF1/19.2
SPARE

=V1KF1/19.2
Switched Power 2 12.1L+M

=V1KF1/19.2
SPARE

=V1KF1
-KF12.52
=V1KF1/19.1

F-RQ 1x24VDC/24..230VAC/5A PROFISAFE
ET200SP

9 IN P
10 OUT P
11 IN M
12 OUT M

Monitoring Safety contactors 12.1L+
-KF12.52RQ
=V1KF1/12.2

=V1KF1
-KF12.14

DI ET200SP

I86.1
DI1

2

=V1WC4/13.2 / -12.1L+1_2

1 3

			Date	12/22/2022	Volvo Trucks North America	Valiant TMS	Safety power monitoring RQ - KF12.52	Drawing name: =2V04&EFS-EL	= V1FQ1	
			Ed.	MKLEPADLO					+ V1UC12	
			Appr		P6700 Underbody Mainline - Cell 2V04			Document type: EFS	Project nr: 22-16151	Page 2
Modification	Date	Name	Original		Replacement of	Replaced by	Scale 1:1			1630

Switched Power 3 13.1L+
-KF12.53
=V1KF1/16.2

=V1KF1
-KF12.41

F 4DO 24 DC PROFISAFE
ET200SP

Q5092.2 QX.2

DQ-P2 DQ-M2

3 11

Q5092.2
BU
16 AWG

QX.2
BU
16 AWG

=V1KF1/20.2
Switched Power 3 13.1L+P

=V1KF1/20.2
SPARE

=V1KF1/20.2
Switched Power 3 13.1L+M

=V1KF1/20.2
SPARE

=V1KF1
-KF12.53
=V1KF1/20.1

F-RQ 1x24VDC/24..230VAC/5A PROFISAFE
ET200SP

9 IN P | 10 OUT P | 11 IN M | 12 OUT M

Monitoring Safety contactors 13.1L+
-KF12.53RQ
=V1KF1/12.2

=V1KF1
-KF12.14

DI ET200SP

I86.2
DI2

3

=V1WC4/14.2 / -13.1L+1_2

			Date	12/22/2022	Volvo Trucks North America	Valiant TMS	Safety power monitoring RQ - KF12.53	Drawing name: =2V04&EFS-EL	= V1FQ1	
			Ed.	MKLEPADLO					+ V1UC12	
			Appr		P6700 Underbody Mainline - Cell 2V04			Document type: EFS	Project nr: 22-16151	Page 3
Modification	Date	Name	Original		Replacement of / Replaced by	Scale 1:1				1630

Switched Power 4 14.1L+
-KF12.54
=V1KF1/16.2

=V1KF1
-KF12.41

F 4DO 24 DC PROFISAFE
ET200SP

Q5092.3 QX.3

DQ-P3 DQ-M3

4 12

Q5092.3
BU
16 AWG

QX.3
BU
16 AWG

=V1KF1/21.2
Switched Power 4 14.1L+P

=V1KF1/21.2
SPARE

=V1KF1/21.2
Switched Power 4 14.1L+M

=V1KF1/21.2
SPARE

=V1KF1
-KF12.54
=V1KF1/21.1

F-RQ 1x24VDC/24..230VAC/5A PROFISAFE
ET200SP

9 IN P
10 OUT P
11 IN M
12 OUT M

Monitoring Safety contactors 14.1L+
-KF12.54RQ
=V1KF1/12.2

=V1KF1
-KF12.14

DI ET200SP

I86.3
DI3

4

=V1WC4/15.2 / -14.1L+1_2

			Date	12/22/2022	Volvo Trucks North America	Valiant TMS	Safety power monitoring RQ - KF12.54	Drawing name: =2V04&EFS-EL	= V1FQ1	
			Ed.	MKLEPADLO					+ V1UC12	
			Appr		P6700 Underbody Mainline - Cell 2V04			Document type: EFS	Project nr: 22-16151	Page 4
Modification	Date	Name	Original		Replacement of / Replaced by	Scale 1:1				1630

Switched Power 1 11.1L+
-KF14.51
=V1KF1/13.2

=V1KF1
-KF14.41

F 4DO 24 DC PROFISAFE
ET200SP

Q5212.0 QX.0
DQ-P0 DQ-M0
1 9

Q5212.1
BU
16 AWG

QX.0
BU
16 AWG

=V1KF1/15.2
Switched Power 1 11.1L+P

=V1KF1/15.2
SPARE

=V1KF1/15.2
Switched Power 1 11.1L+M

=V1KF1/15.2
SPARE

=V1KF1
-KF14.51
=V1KF1/15.1

F-RQ 1x24VDC/24..230VAC/5A PROFISAFE
ET200SP

9 IN P
10 OUT P
11 IN M
12 OUT M

Monitoring Safety contactors 11.1L+
-KF14.51RQ
=V1KF1/9.2

=V1KF1
-KF14.12

DI ET200SP
I202.0
DI0
1

=V1WC4/12.2 / -11.1L+1_2

+.UC12/4

2

			Date	12/22/2022	Volvo Trucks North America		Valiant TMS	Safety power monitoring RQ - KF14.51	Drawing name: =2V04&EFS-EL	= V1FQ1
			Ed.	MKLEPADLO						+ V1UC14
			Appr		P6700 Underbody Mainline - Cell 2V04				Document type: EFS	Project nr: 22-16151
Modification	Date	Name	Original		Replacement of	Replaced by	Scale 1:1			Page 1 / 1630

Switched Power 2 12.1L+
-KF14.52
=V1KF1/13.2

=V1KF1
-KF14.41

F 4DO 24 DC PROFISAFE
ET200SP

Q5212.1 QX.1

DQ-P1 DQ-M1

2 10

Q5212.1
BU
16 AWG

QX.1
BU
16 AWG

=V1KF1/16.2
Switched Power 2 12.1L+P

=V1KF1/16.2
SPARE

=V1KF1/16.2
Switched Power 2 12.1L+M

=V1KF1/16.2
SPARE

=V1KF1
-KF14.52
=V1KF1/16.1

F-RQ 1x24VDC/24..230VAC/5A PROFISAFE
ET200SP

9 IN P
10 OUT P
11 IN M
12 OUT M

Monitoring Safety contactors 12.1L+
-KF14.52RQ
=V1KF1/9.2

=V1KF1
-KF14.12

DI ET200SP

I202.1
DI1

2

=V1WC4/13.2 / -12.1L+1_2

			Date	12/22/2022	Volvo Trucks North America		Valiant TMS	Safety power monitoring RQ - KF14.52	Drawing name: =2V04&EFS-EL	= V1FQ1	
			Ed.	MKLEPADLO						+ V1UC14	
			Appr		P6700 Underbody Mainline - Cell 2V04				Document type: EFS	Project nr: 22-16151	Page 2
Modification	Date	Name	Original		Replacement of	Replaced by	Scale 1:1				1630

Switched Power 3 13.1L+
-KF14.53
=V1KF1/13.2

=V1KF1/17.2
Switched Power 3 13.1L+P

=V1KF1/17.2
SPARE

=V1KF1/17.2
Switched Power 3 13.1L+M

=V1KF1/17.2
SPARE

Monitoring Safety contactors 13.1L+
-KF14.53RQ
=V1KF1/9.2

=V1KF1
-KF14.41

F 4DO 24 DC PROFISAFE
ET200SP

Q5212.2 QX.2

DQ-P2 DQ-M2

3 11

=V1KF1
-KF14.53
=V1KF1/17.1

F-RQ 1x24VDC/24..230VAC/5A PROFISAFE
ET200SP

9 IN P | 10 OUT P | 11 IN M | 12 OUT M

Q5212.2
BU
16 AWG

QX.2
BU
16 AWG

=V1KF1
-KF14.12

DI ET200SP

I202.2
DI2

3

=V1WC4/14.2 / -13.1L+1_2

			Date	12/22/2022	Volvo Trucks North America	Valiant TMS	Safety power monitoring RQ - KF14.53	Drawing name: =2V04&EFS-EL	= V1FQ1	
			Ed.	MKLEPADLO					+ V1UC14	
			Appr		P6700 Underbody Mainline - Cell 2V04			Document type: EFS	Project nr: 22-16151	Page 3
Modification	Date	Name	Original		Replacement of / Replaced by	Scale 1:1				1630

Switched Power 4 14.1L+
-KF14.54
=V1KF1/13.2

=V1KF1
-KF14.41

F 4DO 24 DC PROFISAFE
ET200SP

Q5212.3 QX.3

DQ-P3 DQ-M3

4 12

Q5212.3
BU
16 AWG

QX.3
BU
16 AWG

=V1KF1/18.2
Switched Power 4 14.1L+P

=V1KF1/18.2
SPARE

=V1KF1/18.2
Switched Power 4 14.1L+M

=V1KF1/18.2
SPARE

=V1KF1
-KF14.54
=V1KF1/18.1

F-RQ 1x24VDC/24..230VAC/5A PROFISAFE
ET200SP

9 IN P
10 OUT P
11 IN M
12 OUT M

Monitoring Safety contactors 14.1L+
-KF14.54RQ
=V1KF1/9.2

=V1KF1
-KF14.12

DI ET200SP

I202.3
DI3

4

=V1WC4/15.2 / -14.1L+1_2

3

+.UC15/1

			Date	12/22/2022	Volvo Trucks North America	Valiant TMS	Safety power monitoring RQ - KF14.54	Drawing name: =2V04&EFS-EL	= V1FQ1	
			Ed.	MKLEPADLO					+ V1UC14	
			Appr		P6700 Underbody Mainline - Cell 2V04			Document type: EFS	Project nr: 22-16151	Page 4
Modification	Date	Name	Original		Replacement of	Replaced by	Scale 1:1			1630

Switched Power 1 11.1L+
-KF15.51
=V1KF1/13.2

=V1KF1/15.2
Switched Power 1 11.1L+P

=V1KF1/15.2
SPARE

=V1KF1/15.2
Switched Power 1 11.1L+M

=V1KF1/15.2
SPARE

Monitoring Safety contactors 11.1L+
-KF15.51RQ
=V1KF1/9.2

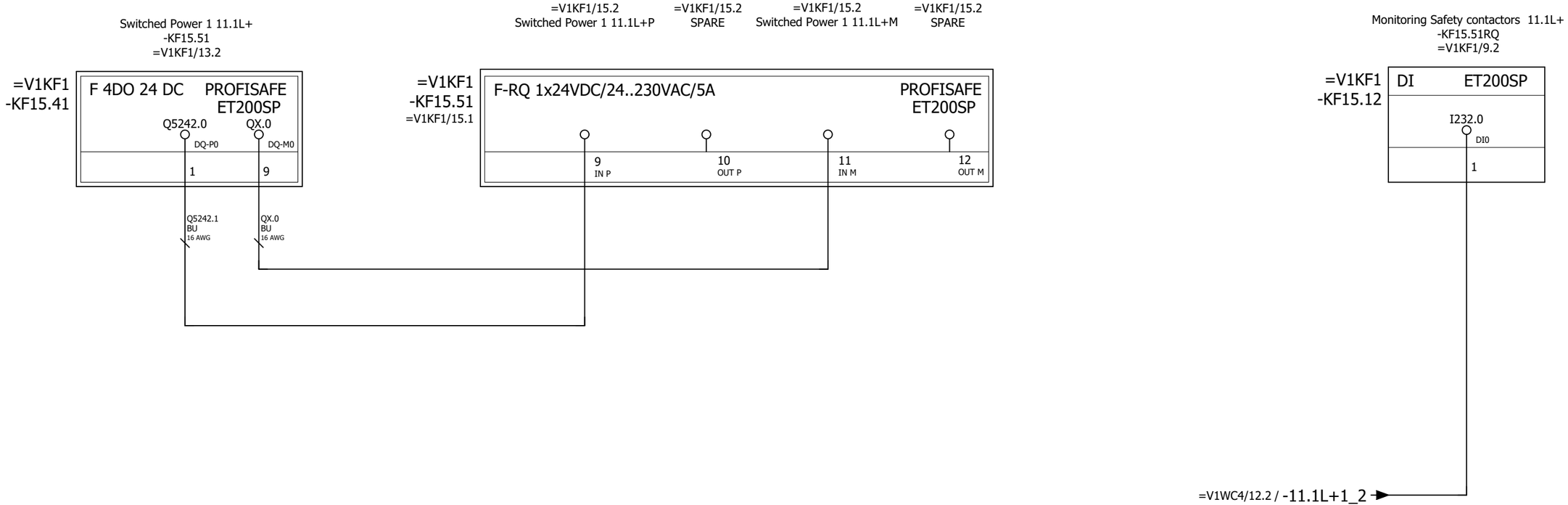

+.UC14/4

			Date	12/22/2022	Volvo Trucks North America	Valiant TMS	Safety power monitoring RQ - KF15.51	Drawing name: =2V04&EFS-EL	= V1FQ1	
			Ed.	MKLEPADLO					+ V1UC15	
			Appr		P6700 Underbody Mainline - Cell 2V04			Document type: EFS	Project nr: 22-16151	Page 1
Modification	Date	Name	Original		Replacement of / Replaced by	Scale 1:1				1630

Switched Power 2 12.1L+
-KF15.52
=V1KF1/13.2

=V1KF1
-KF15.41

F 4DO 24 DC PROFISAFE
ET200SP

Q5242.1 QX.1

DQ-P1 DQ-M1

2 10

Q5242.1
BU
16 AWG

QX.1
BU
16 AWG

=V1KF1/16.2
Switched Power 2 12.1L+P

=V1KF1/16.2
SPARE

=V1KF1/16.2
Switched Power 2 12.1L+M

=V1KF1/16.2
SPARE

=V1KF1
-KF15.52
=V1KF1/16.1

F-RQ 1x24VDC/24..230VAC/5A PROFISAFE
ET200SP

9 IN P
10 OUT P
11 IN M
12 OUT M

Monitoring Safety contactors 12.1L+
-KF15.52RQ
=V1KF1/9.2

=V1KF1
-KF15.12

DI ET200SP

I232.1
DI1

2

=V1WC4/13.2 / -12.1L+1_2

			Date	12/22/2022	Volvo Trucks North America	Valiant TMS	Safety power monitoring RQ - KF15.52	Drawing name: =2V04&EFS-EL	= V1FQ1	
			Ed.	MKLEPADLO					+ V1UC15	
			Appr		P6700 Underbody Mainline - Cell 2V04			Document type: EFS	Project nr: 22-16151	Page 2
Modification	Date	Name	Original		Replacement of / Replaced by	Scale 1:1				1630

Switched Power 3 13.1L+
-KF15.53
=V1KF1/13.2

=V1KF1/17.2
Switched Power 3 13.1L+P

=V1KF1/17.2
SPARE

=V1KF1/17.2
Switched Power 3 13.1L+M

=V1KF1/17.2
SPARE

Monitoring Safety contactors 13.1L+
-KF15.53RQ
=V1KF1/9.2

=V1KF1
-KF15.41

F 4DO 24 DC PROFISAFE
ET200SP

Q5242.2 QX.2

DQ-P2 DQ-M2

3 11

=V1KF1
-KF15.53
=V1KF1/17.1

F-RQ 1x24VDC/24..230VAC/5A PROFISAFE
ET200SP

9 IN P | 10 OUT P | 11 IN M | 12 OUT M

Q5242.2
BU
16 AWG

QX.2
BU
16 AWG

=V1KF1
-KF15.12

DI ET200SP

I232.2
DI2

3

=V1WC4/14.2 / -13.1L+1_2

			Date	12/22/2022	Volvo Trucks North America	Valiant TMS	Safety power monitoring RQ - KF15.53	Drawing name: =2V04&EFS-EL	= V1FQ1	
			Ed.	MKLEPADLO					+ V1UC15	
			Appr		P6700 Underbody Mainline - Cell 2V04			Document type: EFS	Project nr: 22-16151	Page 3
Modification	Date	Name	Original		Replacement of / Replaced by	Scale 1:1				1630

Switched Power 4 14.1L+
-KF15.54
=V1KF1/13.2

=V1KF1/18.2
Switched Power 4 14.1L+P

=V1KF1/18.2
SPARE

=V1KF1/18.2
Switched Power 4 14.1L+M

=V1KF1/18.2
SPARE

Monitoring Safety contactors 14.1L+
-KF15.54RQ
=V1KF1/9.2

=V1KF1
-KF15.41

F 4DO 24 DC PROFISAFE
ET200SP

Q5242.3 QX.3

DQ-P3 DQ-M3

4 12

=V1KF1
-KF15.54
=V1KF1/18.1

F-RQ 1x24VDC/24..230VAC/5A PROFISAFE
ET200SP

9 IN P | 10 OUT P | 11 IN M | 12 OUT M

Q5242.3
BU
16 AWG

QX.3
BU
16 AWG

=V1KF1
-KF15.12

DI ET200SP

I232.3

DI3

4

=V1WC4/15.2 / -14.1L+1_2

			Date	12/22/2022	Volvo Trucks North America	Valiant TMS	Safety power monitoring RQ - KF15.54	Drawing name: =2V04&EFS-EL	= V1FQ1	
			Ed.	MKLEPADLO					+ V1UC15	
			Appr		P6700 Underbody Mainline - Cell 2V04			Document type: EFS	Project nr: 22-16151	Page 4
Modification	Date	Name	Original		Replacement of / Replaced by	Scale 1:1				1630

0	1	2	3	4	5	6	7	8	9

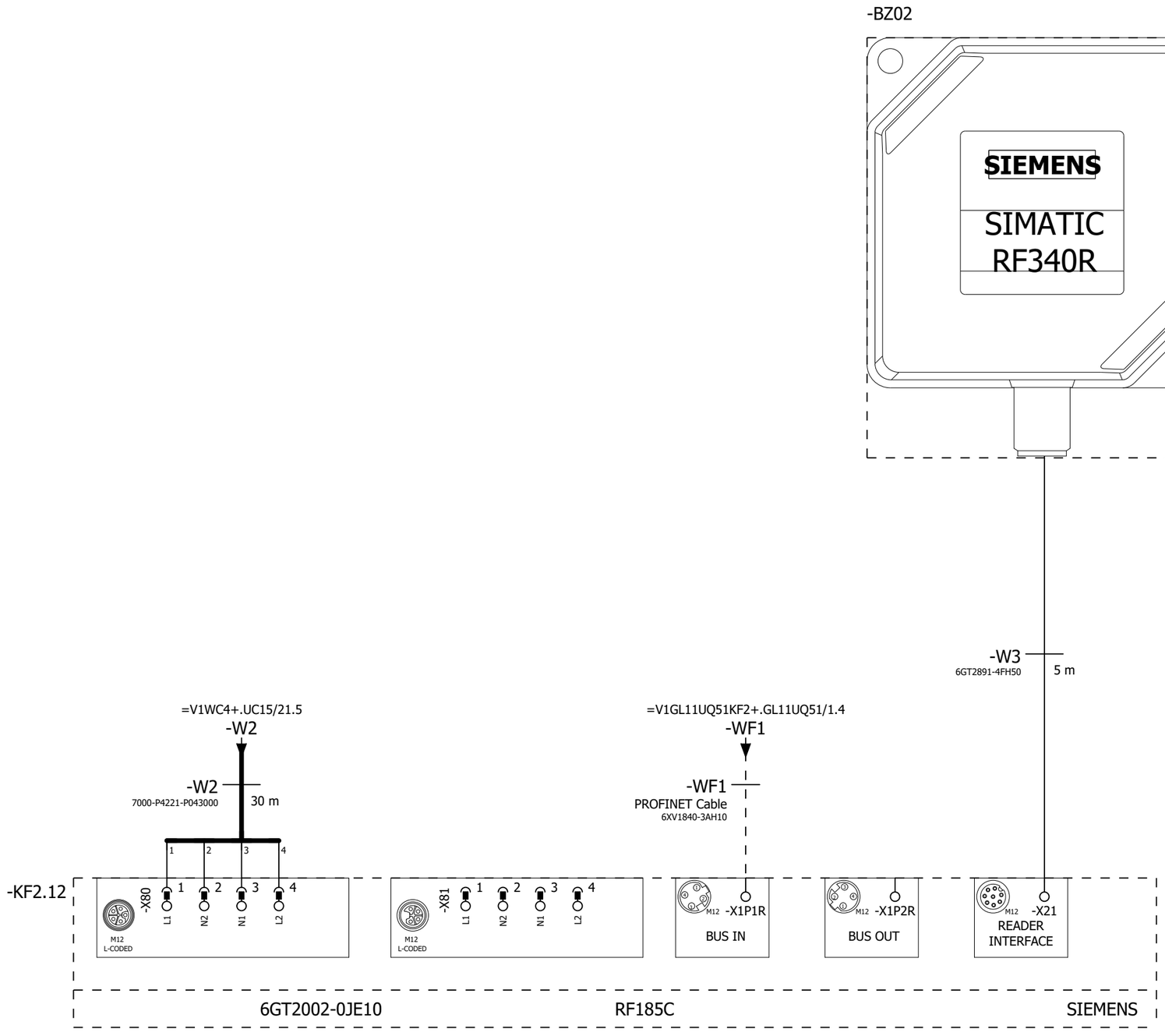

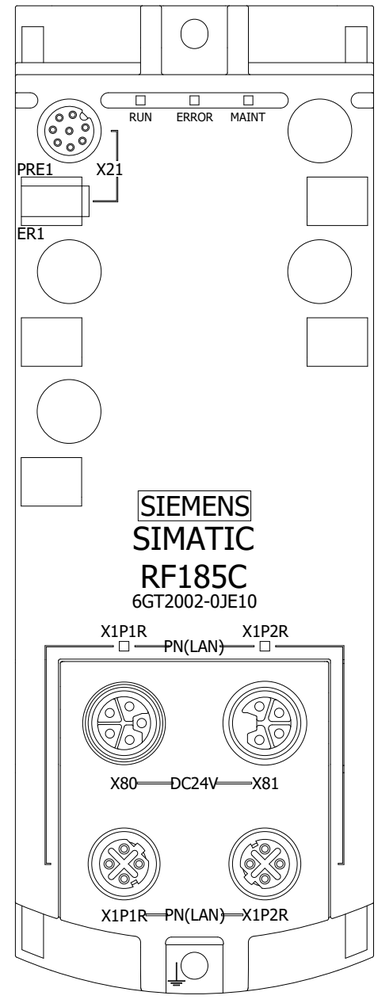

=V1FQ1+.UC15/4

10

			Date	12/22/2022	Volvo Trucks North America	Valiant TMS	RFID Communication Module	Drawing name: =2V04&EFS-EL	= V1GL11KF2
			Ed.	MKLEPADLO					+ V1GL11KF2
			Appr		P6700 Underbody Mainline - Cell 2V04	Scale 1:1		Document type: EFS	Project nr: 22-16151
Modification	Date	Name	Original		Replacement of	Replaced by			Page 1 / 1630

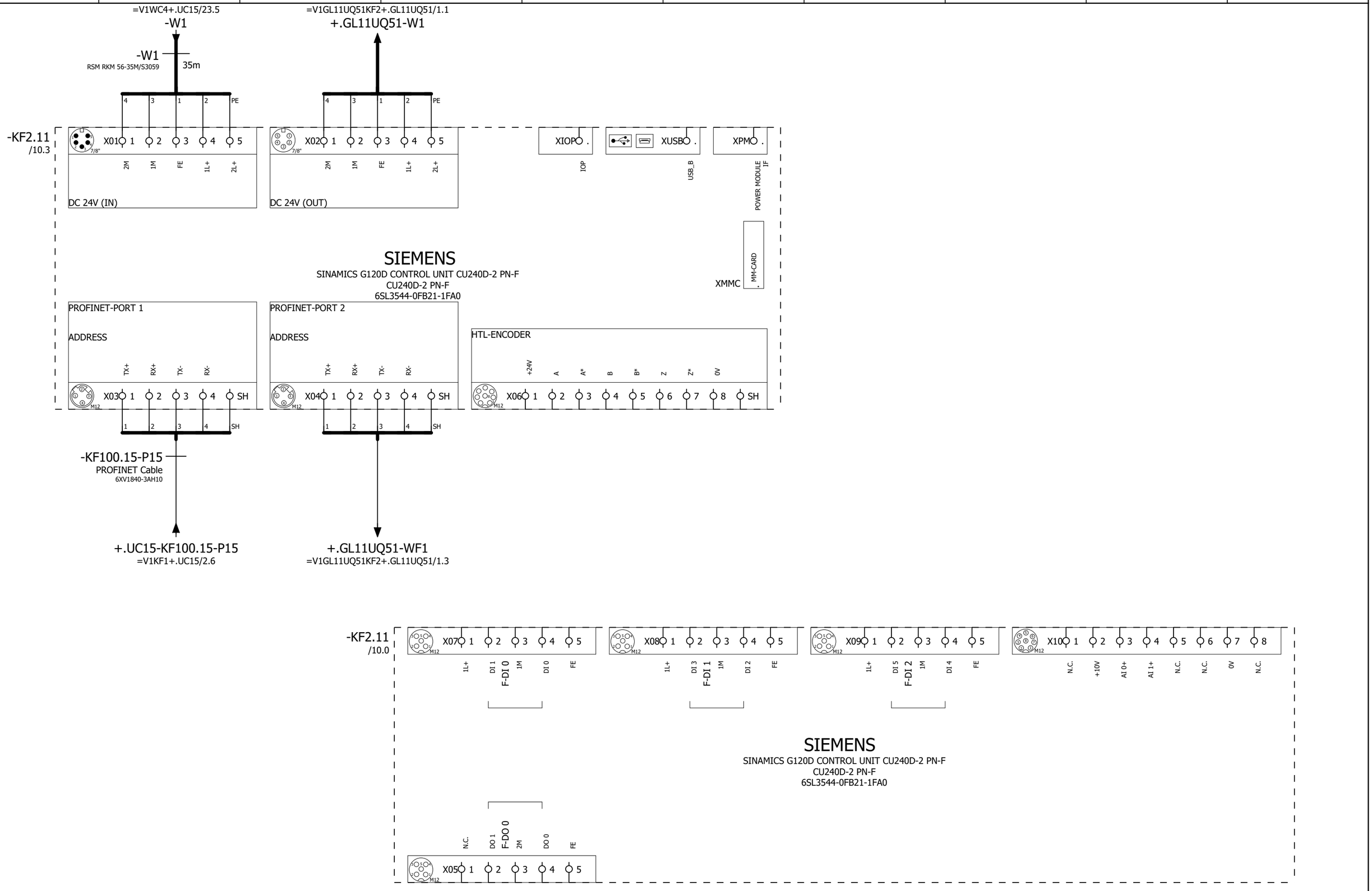

1

=V1GL11UQ51BG0+.GL11UQ51/1

			Date	12/22/2022	Volvo Trucks North America	Valiant TMS	G120D Control Unit	Drawing name: =2V04&EFS-EL	= V1GL11KF2
			Ed.	MKLEPADLO	P6700 Underbody Mainline - Cell 2V04				+ V1GL11KF2
			Appr					Document type: EFS	Project nr: 22-16151
Modification	Date	Name	Original		Replacement of / Replaced by	Scale 1:1			Page 10 / 1630

0	1	2	3	4	5	6	7	8	9

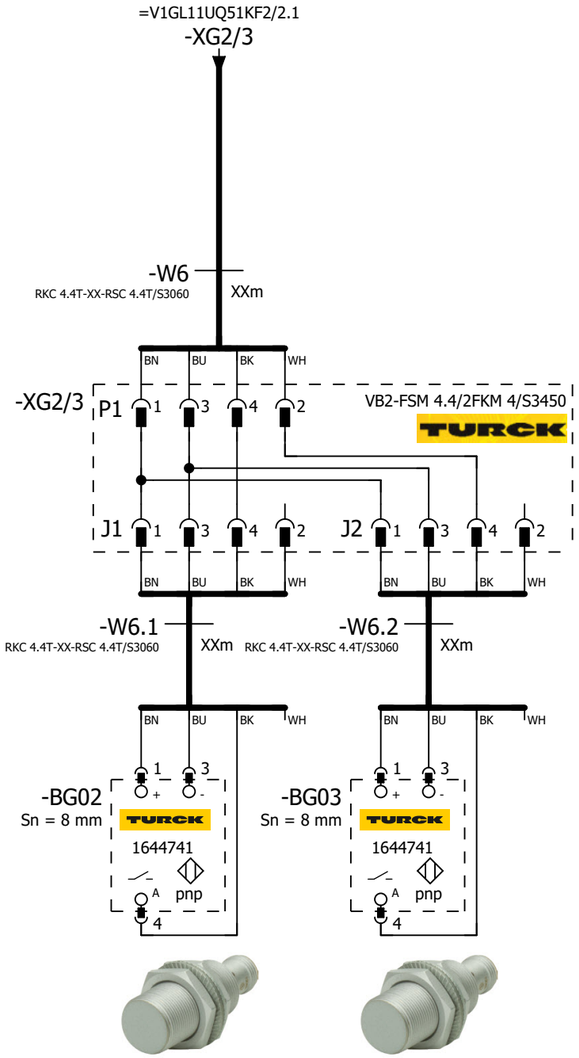

=V1GL11UQ51
-BG02
Pallet Present At
Mid-Stop#1 Sta#2

=V1GL11UQ51
-BG03
Pallet Present At
Mid-Stop#2 Sta#3

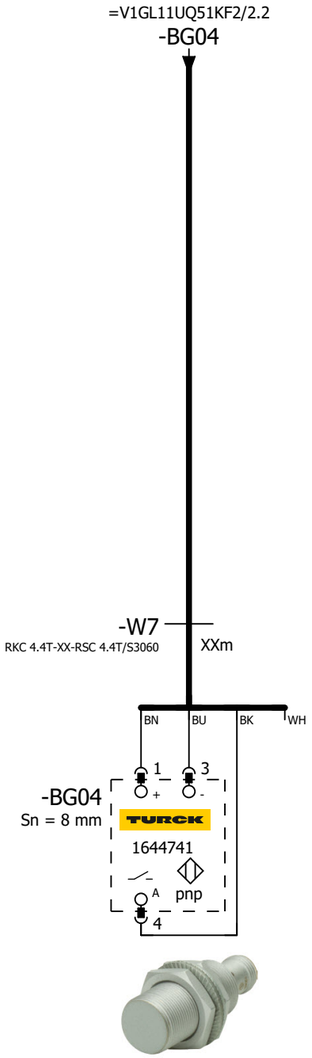

=V1GL11UQ51
-BG04
Pre-Unload Sta #4

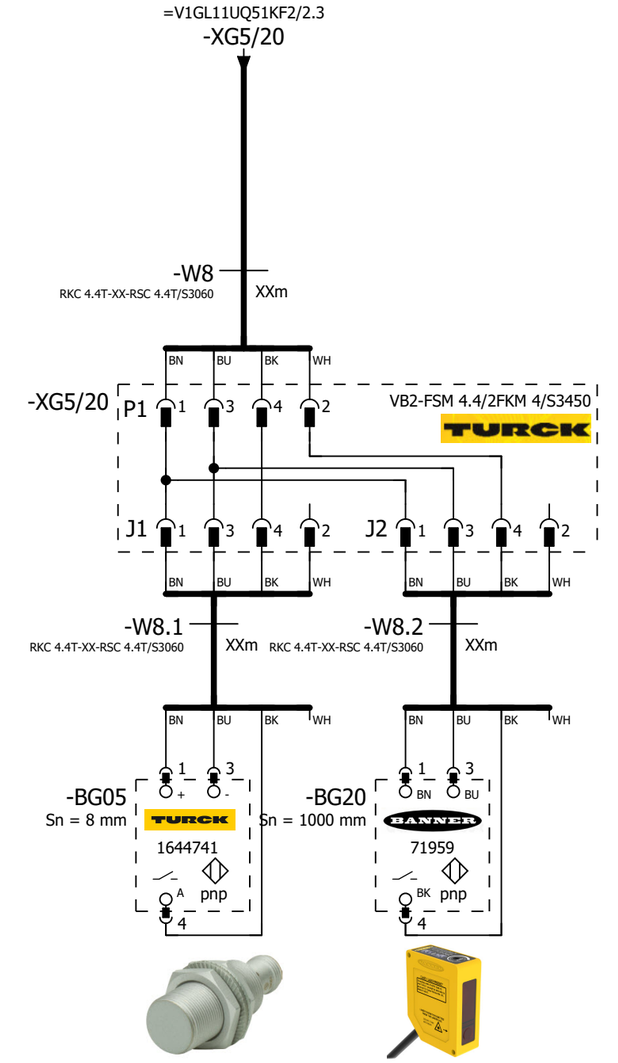

=V1GL11UQ51
-BG05
Pallet Present At
Unload Sta #5

=V1GL11UQ51
-BG20
Part Present
At Unload

=V1GL11KF2+.GL11KF2/10

			Date	12/22/2022	Volvo Trucks North America	Valiant TMS	SENSORS	Drawing name: =2V04&EFS-EL	= V1GL11UQ51BG0
			Ed.	MKLEPADLO					+ V1GL11UQ51
			Appr		P6700 Underbody Mainline - Cell 2V04	Scale 1:1		Document type: EFS	Project nr: 22-16151
Modification	Date	Name	Original		Replacement of / Replaced by				Page 1 / 1630

0	1	2	3	4	5	6	7	8	9

=V1GL11UQ51KF2/2.4
-XG6/7

-W9
RKC 4.4T-XX-RSC 4.4T/S3060
XXm

BN BU BK WH

-XG6/7 P1 1 3 4 2 VB2-FSM 4.4/2FKM 4/S3450

J1 1 3 4 2 J2 1 3 4 2

BN BU BK WH

-W9.1
RKC 4.4T-XX-RSC 4.4T/S3060
XXm

-W9.2
RKC 4.4T-XX-RSC 4.4T/S3060
XXm

BN BU BK WH

-BG06
Sn = 8 mm
TURCK
1644741
pnp
1 3 A 4

-BG07
Sn = 8 mm
TURCK
1644741
pnp
1 3 A 4

=V1GL11UQ51
-BG06
Pallet Clear Of
Unload Sta #5

=V1GL11UQ51
-BG07
Pallet Present At
Mid-Stop#3 Sta#6

=V1GL11UQ51KF2/2.5
-BG13

-W10
RKC 4.4T-XX-RSC 4.4T/S3060
XXm

BN BU BK WH

-BG13
Sn = 8 mm
TURCK
1644741
pnp
1 3 A 4

=V1GL11UQ51
-BG13
Drive Overtorque
Sensor At Unload

=V1GL11UQ51KF2/2.6
-BG08

-W11
RKC 4.4T-XX-RSC 4.4T/S3060
XXm

BN BU BK WH

-BG08
Sn = 8 mm
TURCK
1644741
pnp
1 3 A 4

=V1GL11UQ51
-BG08
Pallet Present At
Mid-Stop#4 Sta#7

1

3

			Date	12/22/2022	Volvo Trucks North America	Valiant TMS	SENSORS	Drawing name: =2V04&EFS-EL	= V1GL11UQ51BG0
			Ed.	MKLEPADLO					+ V1GL11UQ51
			Appr		P6700 Underbody Mainline - Cell 2V04	Scale 1:1		Document type: EFS	Project nr: 22-16151
Modification	Date	Name	Original		Replacement of / Replaced by				Page 2 / 1630

=V1GL11UQ51KF2/2.8
-XG9/22
-W12
RKC 4.4T-XX-RSC 4.4T/S3060
XXm
BN BU BK WH
-XG9/22 P1 1 3 4 2
VB2-FSM 4.4/2FKM 4/S3450
TURCK
J1 1 3 4 2
J2 1 3 4 2
BN BU BK WH
-W12.1
RKC 4.4T-XX-RSC 4.4T/S3060
XXm
-W12.2
RKC 4.4T-XX-RSC 4.4T/S3060
XXm
BN BU BK WH
-BG09
Sn = 8 mm
TURCK
1644741
pnp
1 3 4
-BG22
Sn = 8 mm
TURCK
1644741
pnp
1 3 4

=V1GL11UQ51
-BG09
Pallet Present At
Mid-Stop#5 Sta#8

=V1GL11UQ51
-BG22
Pallet Clear Of
Mid-Stop#5 Sta#8

=V1GL11UQ51KF2/2.9
-XG16/17
-W13
RKC 4.4T-XX-RSC 4.4T/S3060
XXm
BN BU BK WH
-XG16/17 P1 1 3 4 2
VB2-FSM 4.4/2FKM 4/S3450
TURCK
J1 1 3 4 2
J2 1 3 4 2
BN BU BK WH
-W13.1
RKC 4.4T-XX-RSC 4.4T/S3060
XXm
-W13.2
RKC 4.4T-XX-RSC 4.4T/S3060
XXm
BN BU BK WH
-BG16
Sn = 8 mm
TURCK
1644741
pnp
1 3 4
-BG17
Sn = 8 mm
TURCK
1644741
pnp
1 3 4

=V1GL11UQ51
-BG16
Chain Tension
Alert On Take-up

=V1GL11UQ51
-BG17
Broken Chain
Alert On Take-up

=V1GL11UQ51KF2/3.1
-BG18
-W14
RKC 4.4T-XX-RSC 4.4T/S3060
XXm
BN BU BK WH
-BG18
A-B.802T-AP
CW/CCW
1 3
NEMA
4 & 13
Limit
Switch
2 4

=V1GL11UQ51
-BG18
Part Overtravel

2

=V1GL11UQ51KF2/1

			Date	12/22/2022	Volvo Trucks North America	Valiant TMS	SENSORS	Drawing name: =2V04&EFS-EL	= V1GL11UQ51BG0	
			Ed.	MKLEPADLO					+ V1GL11UQ51	
			Appr		P6700 Underbody Mainline - Cell 2V04	Scale 1:1		Document type: EFS	Project nr: 22-16151	Page 3 / 1630
Modification	Date	Name	Original		Replacement of	Replaced by				

0	1	2	3	4	5	6	7	8	9

=V1GL11KF2+.GL11KF2/10.2 / W1

-W1
RSM RKM 56-20M/S3059
20m

1 2 PE 4 5

X20 M12, 7/8"
1 2 3 4 5

0V_VAL / OUT
0V_EL / SEN
FE
24V_EL / SEN
24V_VAL / OUT

ON
OFF
1 2 1 2

=V1GL11KF2+.GL11KF2/10.2 / -WF1

-WF1
PROFINET Cable
6XV1840-3AH10

M12 -TP1
M12 -TP2

+.GL11KF2-WF1 / =V1GL11KF2+.GL11KF2/1.4

-KF2

FESTO
Bus node + Interlinking block
548755 + 550208

-KF2.11

FESTO
CPX-M-AB-8-M12X2-5POL
549335

I2400.0	DI 0 X1:4	V1GL11UQ51UQ2.1-BGR	Pallet Stop Station #2 Mid-Stop #1 (RESET)
I2400.1	DI 1 X1:2	V1GL11UQ51UQ2.1-BGS	Pallet Stop Station #2 Mid-Stop #1 (SET)
I2400.2	DI 2 X2:4	V1GL11UQ51UQ3.1-BGR	Pallet Stop Station #3 Mid-Stop #2 (RESET)
I2400.3	DI 3 X2:2	V1GL11UQ51UQ3.1-BGS	Pallet Stop Station #3 Mid-Stop #2 (SET)
I2400.4	DI 4 X3:4	V1GL11UQ51UQ4.1-BGR	Pallet Stop Station #4 Pre-Unload (RESET)
I2400.5	DI 5 X3:2	V1GL11UQ51UQ4.1-BGS	Pallet Stop Station #4 Pre-Unload (SET)
I2400.6	DI 6 X4:4	V1GL11UQ51UQ5.1-BGR	Pallet Stop Station #5 Unload (RESET)
I2400.7	DI 7 X4:2	V1GL11UQ51UQ5.1-BGS	Pallet Stop Station #5 Unload (SET)
I2401.0	DI 8 X5:4	V1GL11UQ51UQ6.1-BGR	Pallet Stop Station #6 Mid-Stop #3 (RESET)
I2401.1	DI 9 X5:2	V1GL11UQ51UQ6.1-BGS	Pallet Stop Station #6 Mid-Stop #3 (SET)
I2401.2	DI 10 X6:4	V1GL11UQ51UQ7.1-BGR	Pallet Stop Station #7 Mid-Stop #4 (RESET)
I2401.3	DI 11 X6:2	V1GL11UQ51UQ7.1-BGS	Pallet Stop Station #7 Mid-Stop #4 (SET)
I2401.4	DI 12 X7:4	V1GL11UQ51UQ8.1-BGR	Pallet Stop Station #8 Mid-Stop #5 (RESET)
I2401.5	DI 13 X7:2	V1GL11UQ51UQ8.1-BGS	Pallet Stop Station #8 Mid-Stop #5 (SET)
I2401.6	DI 14 X8:4	I2401.6	SPARE
I2401.7	DI 15 X8:2	I2401.7	SPARE

X1 M12: 24V DI 1 0V DI 0 FE — 1 2 3 4 5 — BN WH BU BK
X2 M12: 24V DI 3 0V DI 2 FE — 1 2 3 4 5 — BN WH BU BK
X3 M12: 24V DI 5 0V DI 4 FE — 1 2 3 4 5 — BN WH BU BK
X4 M12: 24V DI 7 0V DI 6 FE — 1 2 3 4 5 — BN WH BU BK
X5 M12: 24V DI 9 0V DI 8 FE — 1 2 3 4 5 — BN WH BU BK
X6 M12: 24V DI 11 0V DI 10 FE — 1 2 3 4 5 — BN WH BU BK
X7 M12: 24V DI 13 0V DI 12 FE — 1 2 3 4 5 — BN WH BU BK
X8 M12: 24V DI 15 0V DI 14 FE — 1 2 3 4 5

+.GL11UQ51UQ2.1-W1
=V1GL11UQ51UQ2+.GL11UQ51UQ2/1.1

+.GL11UQ51UQ3.1-W1
=V1GL11UQ51UQ3+.GL11UQ51UQ3/1.1

+.GL11UQ51UQ4.1-W1
=V1GL11UQ51UQ4+.GL11UQ51UQ4/1.1

+.GL11UQ51UQ5.1-W1
=V1GL11UQ51UQ5+.GL11UQ51UQ5/1.1

+.GL11UQ51UQ6.1-W1
=V1GL11UQ51UQ6+.GL11UQ51UQ6/1.1

+.GL11UQ51UQ7.1-W1
=V1GL11UQ51UQ7+.GL11UQ51UQ7/1.1

+.GL11UQ51UQ8.1-W1
=V1GL11UQ51UQ8+.GL11UQ51UQ8/1.1

=V1GL11UQ51BG0/3

2

			Date	12/22/2022	Volvo Trucks North America	Valiant TMS	CONNECTING MOD. FOR VTSA MANIFOLD	Drawing name: =2V04&EFS-EL	= V1GL11UQ51KF2
			Ed.	MKLEPADLO					+ V1GL11UQ51
			Appr		P6700 Underbody Mainline - Cell 2V04	Scale 1:1		Document type: EFS	Project nr: 22-16151
Modification	Date	Name	Original		Replacement of	Replaced by			Page 1 / 1630

0	1	2	3	4	5	6	7	8	9

-KF2.12

FESTO

CPX-M-AB-8-M12X2-5POL

549335

I2402.0	DI 0 X1:4	V1GL11UQ51-BG02	Sensor Pallet Present At Mid-Stop #1 Sta #2
I2402.1	DI 1 X1:2	V1GL11UQ51-BG03	Sensor Pallet Present At Mid-Stop #2 Sta #3
I2402.2	DI 2 X2:4	V1GL11UQ51-BG04	Sensor Pallet Present At Pre-Unload Sta #4
I2402.3	DI 3 X2:2	I2402.3	SPARE
I2402.4	DI 4 X3:4	V1GL11UQ51-BG05	Sensor Pallet Present At Unload Sta #5
I2402.5	DI 5 X3:2	V1GL11UQ51-BG20	Sensor Part Present At Unload
I2402.6	DI 6 X4:4	V1GL11UQ51-BG06	Sensor Pallet Clear Of Unload Sta #5
I2402.7	DI 7 X4:2	V1GL11UQ51-BG07	Sensor Pallet Present At Mid-Stop #3 Sta #6
I2403.0	DI 8 X5:4	V1GL11UQ51-BG13	Sensor Drive Overtorque Sensor At Unload
I2403.1	DI 9 X5:2	I2403.1	SPARE
I2403.2	DI 10 X6:4	V1GL11UQ51-BG08	Sensor Pallet Present At Mid-Stop #4 Sta #7
I2403.3	DI 11 X6:2	I2403.3	SPARE
I2403.4	DI 12 X7:4	V1GL11UQ51-BG09	Sensor Pallet Present At Mid-Stop #5 Sta #8
I2403.5	DI 13 X7:2	V1GL11UQ51-BG22	Sensor Pallet Clear Of Mid-Stop #5 Sta #8
I2403.6	DI 14 X8:4	V1GL11UQ51-BG16	Sensor Chain Tension Alert On Take-up
I2403.7	DI 15 X8:2	V1GL11UQ51-BG17	Sensor Broken Chain Alert On Take-up

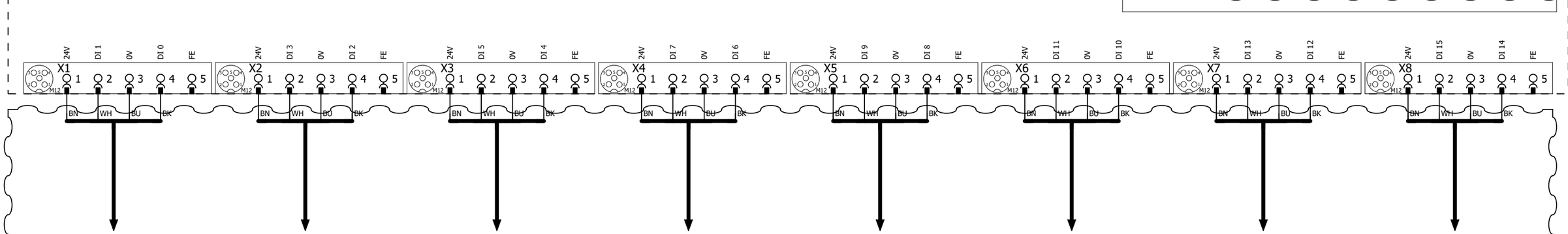

1

3

			Date	12/22/2022	Volvo Trucks North America	Valiant TMS	I/O MOD. DI16 (8 x M12) FOR VTSA-F	Drawing name: =2V04&EFS-EL	= V1GL11UQ51KF2
			Ed.	MKLEPADLO					+ V1GL11UQ51
			Appr		P6700 Underbody Mainline - Cell 2V04	Scale 1:1		Document type: EFS	Project nr: 22-16151
Modification	Date	Name	Original		Replacement of	Replaced by			Page 2 / 1630

0	1	2	3	4	5	6	7	8	9

-KF2.13

FESTO

CPX-M-AB-8-M12X2-5POL

549335

I2404.0	DI 0 X1:4	V1GL11UQ51-BG18	Part Overtravel N.O.
I2404.1	DI 1 X1:2	V1GL11UQ51-BG18	Part Overtravel N.C.
I2404.2	DI 2 X2:4	I2404.2	SPARE
I2404.3	DI 3 X2:2	I2404.3	SPARE
I2404.4	DI 4 X3:4	I2404.4	SPARE
I2404.5	DI 5 X3:2	I2404.5	SPARE
I2404.6	DI 6 X4:4	I2404.6	SPARE
I2404.7	DI 7 X4:2	I2404.7	SPARE
I2405.0	DI 8 X5:4	I2405.0	SPARE
I2405.1	DI 9 X5:2	I2405.1	SPARE
I2405.2	DI 10 X6:4	I2405.2	SPARE
I2405.3	DI 11 X6:2	I2405.3	SPARE
I2405.4	DI 12 X7:4	I2405.4	SPARE
I2405.5	DI 13 X7:2	I2405.5	SPARE
I2405.6	DI 14 X8:4	I2405.6	SPARE
I2405.7	DI 15 X8:2	I2405.7	SPARE

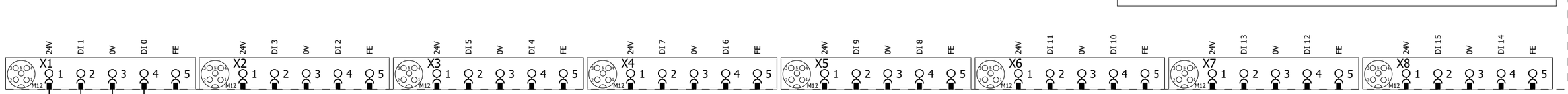

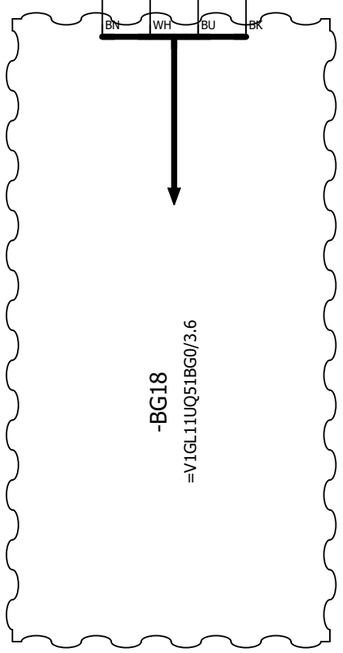

			Date	12/22/2022	Volvo Trucks North America		Valiant TMS	I/O MOD. DI16 (8 x M12) FOR VTSA-F	Drawing name: =2V04&EFS-EL	= V1GL11UQ51KF2
			Ed.	MKLEPADLO						+ V1GL11UQ51
			Appr		P6700 Underbody Mainline - Cell 2V04		Scale 1:1		Document type: EFS	Project nr: 22-16151	Page 3 / 1630
Modification	Date	Name	Original		Replacement of	Replaced by				

KF2.14

FESTO

CPX-M-AB-8-M12X2-5POL

549335

I2406.0	DI 0 X1:4	I2406.0	SPARE
I2406.1	DI 1 X1:2	I2406.1	SPARE
I2406.2	DI 2 X2:4	I2406.2	SPARE
I2406.3	DI 3 X2:2	I2406.3	SPARE
I2406.4	DI 4 X3:4	I2406.4	SPARE
I2406.5	DI 5 X3:2	I2406.5	SPARE
I2406.6	DI 6 X4:4	I2406.6	SPARE
I2406.7	DI 7 X4:2	I2406.7	SPARE
I2407.0	DI 8 X5:4	I2407.0	SPARE
I2407.1	DI 9 X5:2	I2407.1	SPARE
I2407.2	DI 10 X6:4	I2407.2	SPARE
I2407.3	DI 11 X6:2	I2407.3	SPARE
I2407.4	DI 12 X7:4	I2407.4	SPARE
I2407.5	DI 13 X7:2	I2407.5	SPARE
I2407.6	DI 14 X8:4	I2407.6	SPARE
I2407.7	DI 15 X8:2	I2407.7	SPARE

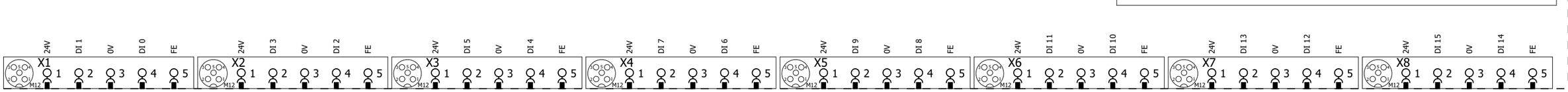

			Date	12/22/2022	Volvo Trucks North America	Valiant TMS	I/O MOD. DI16 (8 x M12) FOR VTSA-F	Drawing name: =2V04&EFS-EL	= V1GL11UQ51KF2
			Ed.	MKLEPADLO					+ V1GL11UQ51
			Appr		P6700 Underbody Mainline - Cell 2V04			Document type: EFS	Project nr: 22-16151
Modification	Date	Name	Original		Replacement of / Replaced by	Scale 1:1			Page 4 / 1630

0	1	2	3	4	5	6	7	8	9

KF2.15

FESTO

CPX-M-AB-8-M12X2-5POL

549335

I2408.0	DI 0 X1:4	I2408.0	SPARE
I2408.1	DI 1 X1:2	I2408.1	SPARE
I2408.2	DI 2 X2:4	I2408.2	SPARE
I2408.3	DI 3 X2:2	I2408.3	SPARE
I2408.4	DI 4 X3:4	I2408.4	SPARE
I2408.5	DI 5 X3:2	I2408.5	SPARE
I2408.6	DI 6 X4:4	I2408.6	SPARE
I2408.7	DI 7 X4:2	I2408.7	SPARE
I2409.0	DI 8 X5:4	I2409.0	SPARE
I2409.1	DI 9 X5:2	I2409.1	SPARE
I2409.2	DI 10 X6:4	I2409.2	SPARE
I2409.3	DI 11 X6:2	I2409.3	SPARE
I2409.4	DI 12 X7:4	I2409.4	SPARE
I2409.5	DI 13 X7:2	I2409.5	SPARE
I2409.6	DI 14 X8:4	I2409.6	SPARE
I2409.7	DI 15 X8:2	I2409.7	SPARE

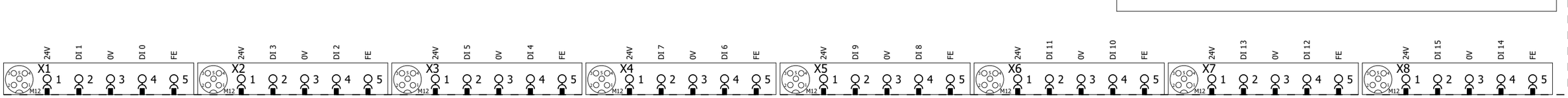

4 6

			Date	12/22/2022	Volvo Trucks North America	Valiant TMS	I/O MOD. DI16 (8 x M12) FOR VTSA-F	Drawing name: =2V04&EFS-EL	= V1GL11UQ51KF2	
			Ed.	MKLEPADLO					+ V1GL11UQ51	
			Appr		P6700 Underbody Mainline - Cell 2V04			Document type: EFS	Project nr: 22-16151	Page 5
Modification	Date	Name	Original		Replacement of / Replaced by	Scale 1:1				1630

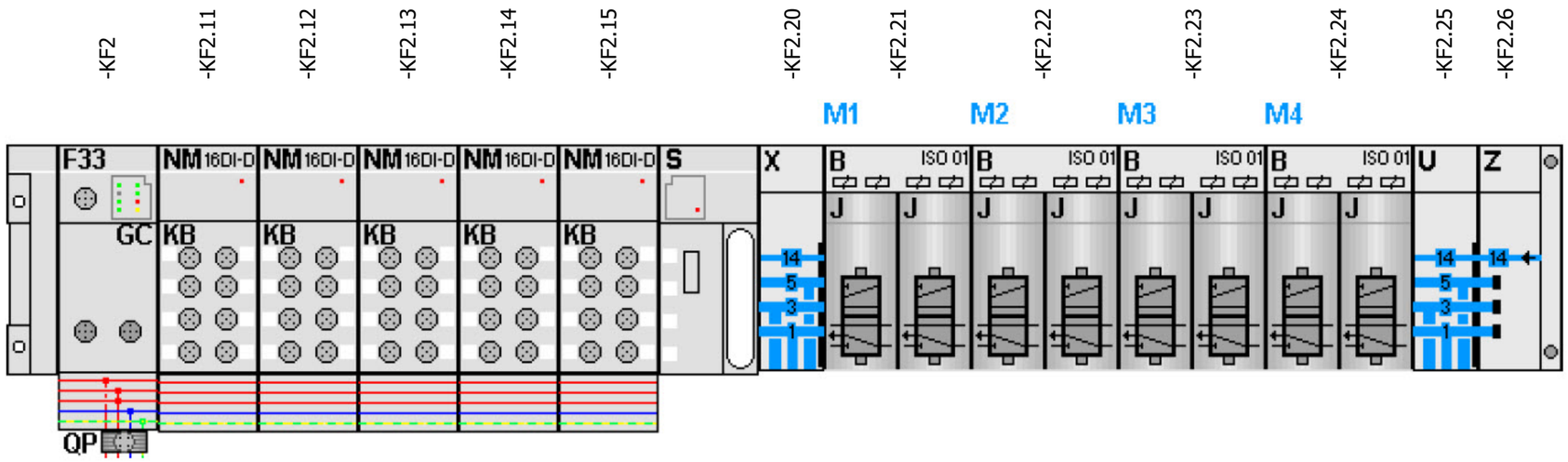

-KF2.21
=V1GL11UQ51UQ2+.GL11UQ51UQ2/1.3
=V1GL11UQ51UQ3+.GL11UQ51UQ3/1.3

FESTO

=V1GL11UQ51UQ2+.GL11UQ51UQ2/1.4	Q2400.0 DO 0 1.1	-QN1.1_Q	Pallet Stop Station #2 Mid-Stop #1 (RST)
=V1GL11UQ51UQ2+.GL11UQ51UQ2/1.4	Q2400.1 DO 1 1.2	-QN1.2_Q	Pallet Stop Station #2 Mid-Stop #1 (SET)
=V1GL11UQ51UQ3+.GL11UQ51UQ3/1.4	Q2400.2 DO 2 2.1	-QN2.1_Q	Pallet Stop Station #3 Mid-Stop #2 (RST)
=V1GL11UQ51UQ3+.GL11UQ51UQ3/1.4	Q2400.3 DO 3 2.2	-QN2.2_Q	Pallet Stop Station #3 Mid-Stop #2 (SET)

-KF2.22
=V1GL11UQ51UQ4+.GL11UQ51UQ4/1.3
=V1GL11UQ51UQ5+.GL11UQ51UQ5/1.3

FESTO

=V1GL11UQ51UQ4+.GL11UQ51UQ4/1.4	Q2400.4 DO 0 1.1	-QN3.1_Q	Pallet Stop Station #4 Pre-Unload (RST)
=V1GL11UQ51UQ4+.GL11UQ51UQ4/1.4	Q2400.5 DO 1 1.2	-QN3.2_Q	Pallet Stop Station #4 Pre-Unload (SET)
=V1GL11UQ51UQ5+.GL11UQ51UQ5/1.4	Q2400.6 DO 2 2.1	-QN4.1_Q	Pallet Stop Station #5 Unload (RST)
=V1GL11UQ51UQ5+.GL11UQ51UQ5/1.4	Q2400.7 DO 3 2.2	-QN4.2_Q	Pallet Stop Station #5 Unload (SET)

-KF2.23
=V1GL11UQ51UQ6+.GL11UQ51UQ6/1.3
=V1GL11UQ51UQ7+.GL11UQ51UQ7/1.3

FESTO

=V1GL11UQ51UQ6+.GL11UQ51UQ6/1.4	Q2401.0 DO 0 1.1	-QN5.1_Q	Pallet Stop Station #6 Mid-Stop #3 (RST)
=V1GL11UQ51UQ6+.GL11UQ51UQ6/1.4	Q2401.1 DO 1 1.2	-QN5.2_Q	Pallet Stop Station #6 Mid-Stop #3 (SET)
=V1GL11UQ51UQ7+.GL11UQ51UQ7/1.4	Q2401.2 DO 2 2.1	-QN6.1_Q	Pallet Stop Station #7 Mid-Stop #4 (RST)
=V1GL11UQ51UQ7+.GL11UQ51UQ7/1.4	Q2401.3 DO 3 2.2	-QN6.2_Q	Pallet Stop Station #7 Mid-Stop #4 (SET)

-KF2.24
=V1GL11UQ51UQ8+.GL11UQ51UQ8/1.3
=V1GL11UQ51UQ12+.GL11UQ51UQ12/1.3

FESTO

=V1GL11UQ51UQ8+.GL11UQ51UQ8/1.4	Q2401.4 DO 0 1.1	-QN7.1_Q	Pallet Stop Station #8 Mid-Stop #5 (RST)
=V1GL11UQ51UQ8+.GL11UQ51UQ8/1.4	Q2401.5 DO 1 1.2	-QN7.2_Q	Pallet Stop Station #8 Mid-Stop #5 (SET)
=V1GL11UQ51UQ12+.GL11UQ51UQ12/1.4	Q2401.6 DO 2 2.1	-QN8.1_Q	Spare (RST)
=V1GL11UQ51UQ12+.GL11UQ51UQ12/1.4	Q2401.7 DO 3 2.2	-QN8.2_Q	Spare (SET)

0	1	2	3	4	5	6	7	8	9

=V1GL11UQ51KF2
+.GL11UQ51

-KF2.21
=V1GL11UQ51KF2+V1GL11UQ51/6.1

Pallet Stop Station #2 Mid-Stop #1 (RST)	Pallet Stop Station #2 Mid-Stop #1 (SET)
=V1GL11UQ51KF1	=V1GL11UQ51KF1
+V1GL11UQ51	+V1GL11UQ51
-QN1.1_Q	-QN1.2_Q
=V1GL11UQ51KF2	=V1GL11UQ51KF2
+V1GL11UQ51/6.3	+V1GL11UQ51/6.3
Q2400.0	Q2400.1
1.1 Pneumatic Valve	1.2 Pneumatic Valve

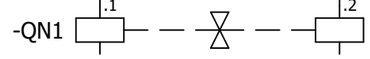

=V1GL11UQ51KF2+V1GL11UQ51/1.1
+.GL11UQ51UQ2.1-W1

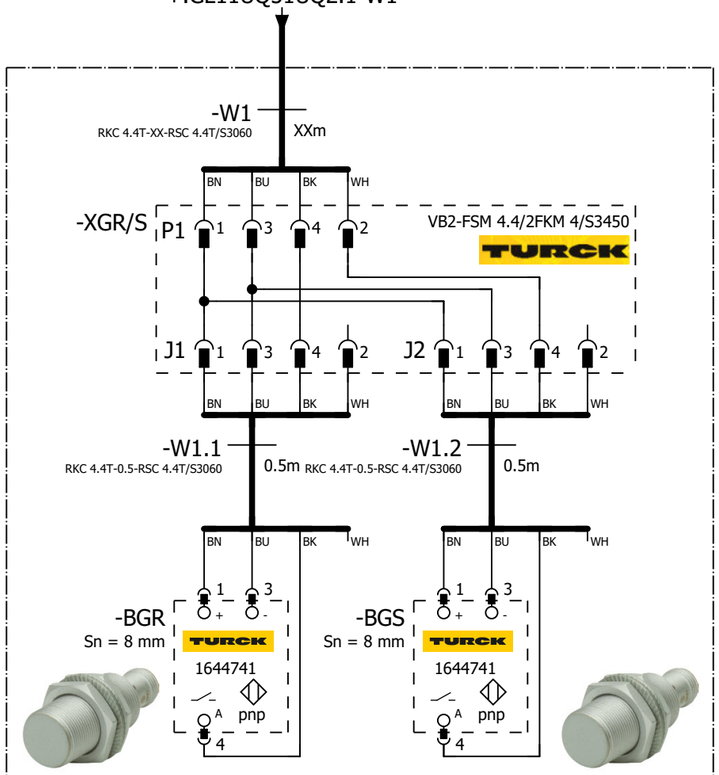

Pallet Stop Station #2 Mid-Stop #1

=V1GL11UQ51UQ2.1
+.GL11UQ51UQ2.1
-UQ2.1

=V1GL11UQ51 -UQ2.1-BGR Pallet Stop Station #2 Mid-Stop #1	=V1GL11UQ51 -UQ2.1-BGS Pallet Stop Station #2 Mid-Stop #1

=V1GL11UQ51KF2+V1GL11UQ51/6

=V1GL11UQ51UQ3+.GL11UQ51UQ3/1

			Date	12/22/2022	Volvo Trucks North America	Valiant TMS	FESTO DQ CONNECTION QN1	Drawing name: =2V04&EFS-EL	= V1GL11UQ51UQ2
			Ed.	MKLEPADLO					+ V1GL11UQ51UQ2
			Appr		P6700 Underbody Mainline - Cell 2V04			Document type: EFS	Project nr: 22-16151
Modification	Date	Name	Original		Replacement of	Replaced by	Scale 1:1		Page 1 / 1630

=V1GL11UQ51KF2
+.GL11UQ51

-KF2.21
=V1GL11UQ51KF2+V1GL11UQ51/6.1

Pallet Stop Station #3 Mid-Stop #2 (RST)	Pallet Stop Station #3 Mid-Stop #2 (SET)
=V1GL11UQ51KF1	=V1GL11UQ51KF1
+V1GL11UQ51	+V1GL11UQ51
-QN2.1_Q	-QN2.2_Q
=V1GL11UQ51KF2	=V1GL11UQ51KF2
+V1GL11UQ51/6.3	+V1GL11UQ51/6.3
Q2400.2	Q2400.3
2.1 Pneumatic Valve	2.2 Pneumatic Valve

-QN2 .1 .2

=V1GL11UQ51KF2+V1GL11UQ51/1.2
+.GL11UQ51UQ3.1-W1

-W1
RKC 4.4T-XX-RSC 4.4T/S3060
XXm

BN BU BK WH

-XGR/S P1 1 3 4 2 VB2-FSM 4.4/2FKM 4/S3450 TURCK

J1 1 3 4 2 J2 1 3 4 2

BN BU BK WH

-W1.1
RKC 4.4T-0.5-RSC 4.4T/S3060
0.5m

-W1.2
RKC 4.4T-0.5-RSC 4.4T/S3060
0.5m

BN BU BK WH

-BGR
Sn = 8 mm
TURCK
1644741
pnp
1 3 4

-BGS
Sn = 8 mm
TURCK
1644741
pnp
1 3 4

Pallet Stop Station #3 Mid-Stop #2
=V1GL11UQ51UQ3.1
+.GL11UQ51UQ3.1
-UQ3.1

=V1GL11UQ51 -UQ3.1-BGR Pallet Stop Station #3 Mid-Stop #2	=V1GL11UQ51 -UQ3.1-BGS Pallet Stop Station #3 Mid-Stop #2

=V1GL11UQ51UQ2+.GL11UQ51UQ2/1

=V1GL11UQ51UQ4+.GL11UQ51UQ4/1

			Date	12/22/2022	Volvo Trucks North America	Valiant TMS	FESTO DQ CONNECTION QN2	Drawing name: =2V04&EFS-EL	= V1GL11UQ51UQ3
			Ed.	MKLEPADLO					+ V1GL11UQ51UQ3
			Appr		P6700 Underbody Mainline - Cell 2V04			Document type: EFS	Project nr: 22-16151
Modification	Date	Name	Original		Replacement of	Replaced by	Scale 1:1		Page 1 / 1630

0	1	2	3	4	5	6	7	8	9

=V1GL11UQ51KF2
+.GL11UQ51

-KF2.22
=V1GL11UQ51KF2+V1GL11UQ51/6.1

Pallet Stop Station #4 Pre-Unload (RST) =V1GL11UQ51KF1 +V1GL11UQ51 -QN3.1_Q =V1GL11UQ51KF2 +V1GL11UQ51/6.3 Q2400.4	Pallet Stop Station #4 Pre-Unload (SET) =V1GL11UQ51KF1 +V1GL11UQ51 -QN3.2_Q =V1GL11UQ51KF2 +V1GL11UQ51/6.3 Q2400.5
1.1 Pneumatic Valve	1.2 Pneumatic Valve

-QN3 .1 .2

=V1GL11UQ51KF2+V1GL11UQ51/1.3
+.GL11UQ51UQ4.1-W1

-W1
RKC 4.4T-XX-RSC 4.4T/S3060
XXm

BN BU BK WH

-XGR/S P1 1 3 4 2 VB2-FSM 4.4/2FKM 4/S3450 TURCK

J1 1 3 4 2 J2 1 3 4 2

BN BU BK WH

-W1.1
RKC 4.4T-0.5-RSC 4.4T/S3060
0.5m

-W1.2
RKC 4.4T-0.5-RSC 4.4T/S3060
0.5m

BN BU BK WH

1 3

-BGR
Sn = 8 mm
TURCK
1644741
A pnp
4

-BGS
Sn = 8 mm
TURCK
1644741
A pnp
4

Pallet Stop Station #4 Pre-Unload

=V1GL11UQ51UQ4.1
+.GL11UQ51UQ4.1
-UQ4.1

=V1GL11UQ51 -UQ4.1-BGR Pallet Stop Station #4 Pre-Unload	=V1GL11UQ51 -UQ4.1-BGS Pallet Stop Station #4 Pre-Unload

=V1GL11UQ51UQ3+.GL11UQ51UQ3/1

=V1GL11UQ51UQ5+.GL11UQ51UQ5/1

			Date	12/22/2022	Volvo Trucks North America	Valiant TMS	FESTO DQ CONNECTION QN3	Drawing name: =2V04&EFS-EL	= V1GL11UQ51UQ4
			Ed.	MKLEPADLO					+ V1GL11UQ51UQ4
			Appr		P6700 Underbody Mainline - Cell 2V04			Document type: EFS	Project nr: 22-16151
Modification	Date	Name	Original		Replacement of	Replaced by	Scale 1:1		Page 1 / 1630

0	1	2	3	4	5	6	7	8	9

=V1GL11UQ51KF2
+.GL11UQ51

-KF2.22
=V1GL11UQ51KF2+V1GL11UQ51/6.1

Pallet Stop Station #5 Unload (RST)	Pallet Stop Station #5 Unload (SET)
=V1GL11UQ51KF1	=V1GL11UQ51KF1
+V1GL11UQ51	+V1GL11UQ51
-QN4.1_Q	-QN4.2_Q
=V1GL11UQ51KF2	=V1GL11UQ51KF2
+V1GL11UQ51/6.3	+V1GL11UQ51/6.3
Q2400.6	Q2400.7
2.1 Pneumatic Valve	2.2 Pneumatic Valve

-QN4 .1 .2

=V1GL11UQ51KF2+V1GL11UQ51/1.4
+.GL11UQ51UQ5.1-W1

-W1
RKC 4.4T-XX-RSC 4.4T/S3060
XXm

BN BU BK WH

-XGR/S
P1 1 3 4 2
VB2-FSM 4.4/2FKM 4/S3450
TURCK
J1 1 3 4 2
J2 1 3 4 2

BN BU BK WH

-W1.1
RKC 4.4T-0.5-RSC 4.4T/S3060
0.5m

-W1.2
RKC 4.4T-0.5-RSC 4.4T/S3060
0.5m

BN BU BK WH

-BGR
Sn = 8 mm
TURCK
1644741
pnp
1 3 4

-BGS
Sn = 8 mm
TURCK
1644741
pnp
1 3 4

Pallet Stop Station #5 Unload
=V1GL11UQ51UQ5.1
+.GL11UQ51UQ5.1
-UQ5.1

=V1GL11UQ51 -UQ5.1-BGR Pallet Stop Station #5 Unload	=V1GL11UQ51 -UQ5.1-BGS Pallet Stop Station #5 Unload

=V1GL11UQ51UQ4+.GL11UQ51UQ4/1

=V1GL11UQ51UQ6+.GL11UQ51UQ6/1

			Date	12/22/2022	Volvo Trucks North America	Valiant TMS	FESTO DQ CONNECTION QN4	Drawing name: =2V04&EFS-EL	= V1GL11UQ51UQ5
			Ed.	MKLEPADLO					+ V1GL11UQ51UQ5
			Appr		P6700 Underbody Mainline - Cell 2V04			Document type: EFS	Project nr: 22-16151
Modification	Date	Name	Original		Replacement of	Replaced by	Scale 1:1		Page 1 / 1630

0	1	2	3	4	5	6	7	8	9

=V1GL11UQ51KF2
+.GL11UQ51

-KF2.23
=V1GL11UQ51KF2+V1GL11UQ51/6.1

Pallet Stop Station #6 Mid-Stop #3 (RST)	Pallet Stop Station #6 Mid-Stop #3 (SET)
=V1GL11UQ51KF1	=V1GL11UQ51KF1
+V1GL11UQ51	+V1GL11UQ51
-QN5.1_Q	-QN5.2_Q
=V1GL11UQ51KF2	=V1GL11UQ51KF2
+V1GL11UQ51/6.3	+V1GL11UQ51/6.3
Q2401.0	Q2401.1
1.1 Pneumatic Valve	1.2 Pneumatic Valve

-QN5 .1 .2

=V1GL11UQ51KF2+V1GL11UQ51/1.5
+.GL11UQ51UQ6.1-W1

-W1
RKC 4.4T-XX-RSC 4.4T/S3060
XXm

BN BU BK WH

-XGR/S
P1 1 3 4 2
VB2-FSM 4.4/2FKM 4/S3450
TURCK
J1 1 3 4 2
J2 1 3 4 2

BN BU BK WH

-W1.1
RKC 4.4T-0.5-RSC 4.4T/S3060
0.5m

-W1.2
RKC 4.4T-0.5-RSC 4.4T/S3060
0.5m

BN BU BK WH

-BGR
Sn = 8 mm
TURCK
1644741
pnp
1 3 4

-BGS
Sn = 8 mm
TURCK
1644741
pnp
1 3 4

Pallet Stop Station #6 Mid-Stop #3
=V1GL11UQ51UQ6.1
+.GL11UQ51UQ6.1
-UQ6.1

=V1GL11UQ51 -UQ6.1-BGR Pallet Stop Station #6 Mid-Stop #3	=V1GL11UQ51 -UQ6.1-BGS Pallet Stop Station #6 Mid-Stop #3

=V1GL11UQ51UQ5+.GL11UQ51UQ5/1

=V1GL11UQ51UQ7+.GL11UQ51UQ7/1

			Date	12/22/2022	Volvo Trucks North America	Valiant TMS	FESTO DQ CONNECTION QN5	Drawing name: =2V04&EFS-EL	= V1GL11UQ51UQ6
			Ed.	MKLEPADLO					+ V1GL11UQ51UQ6
			Appr		P6700 Underbody Mainline - Cell 2V04			Document type: EFS	Project nr: 22-16151
Modification	Date	Name	Original		Replacement of	Replaced by	Scale 1:1		Page 1 / 1630

0	1	2	3	4	5	6	7	8	9

=V1GL11UQ51KF2
+.GL11UQ51

-KF2.23
=V1GL11UQ51KF2+V1GL11UQ51/6.1

Pallet Stop Station #7 Mid-Stop #4 (RST)	Pallet Stop Station #7 Mid-Stop #4 (SET)
=V1GL11UQ51KF2	=V1GL11UQ51KF2
+V1GL11UQ51	+V1GL11UQ51
-QN6.1_Q	-QN6.2_Q
=V1GL11UQ51KF2	=V1GL11UQ51KF2
+V1GL11UQ51/6.3	+V1GL11UQ51/6.3
Q2401.2	Q2401.3
2.1 Pneumatic Valve	2.2 Pneumatic Valve

-QN6 .1 .2

=V1GL11UQ51KF2+V1GL11UQ51/1.6
+.GL11UQ51UQ7.1-W1

-W1
RKC 4.4T-XX-RSC 4.4T/S3060
XXm

BN BU BK WH

-XGR/S P1 1 3 4 2 VB2-FSM 4.4/2FKM 4/S3450 TURCK

J1 1 3 4 2 J2 1 3 4 2

BN BU BK WH

-W1.1
RKC 4.4T-0.5-RSC 4.4T/S3060
0.5m

-W1.2
RKC 4.4T-0.5-RSC 4.4T/S3060
0.5m

BN BU BK WH

-BGR
Sn = 8 mm
TURCK
1644741
pnp
1 3 4

-BGS
Sn = 8 mm
TURCK
1644741
pnp
1 3 4

Pallet Stop Station #7 Mid-Stop #4
=V1GL11UQ51UQ7.1
+.GL11UQ51UQ7.1
-UQ7.1

=V1GL11UQ51 -UQ7.1-BGR Pallet Stop Station #7 Mid-Stop #4	=V1GL11UQ51 -UQ7.1-BGS Pallet Stop Station #7 Mid-Stop #4

=V1GL11UQ51UQ6+.GL11UQ51UQ6/1

=V1GL11UQ51UQ8+.GL11UQ51UQ8/1

			Date	12/22/2022	Volvo Trucks North America	Valiant TMS	FESTO DQ CONNECTION QN6	Drawing name: =2V04&EFS-EL	= V1GL11UQ51UQ7
			Ed.	MKLEPADLO					+ V1GL11UQ51UQ7
			Appr		P6700 Underbody Mainline - Cell 2V04			Document type: EFS	Project nr: 22-16151
Modification	Date	Name	Original		Replacement of	Replaced by	Scale 1:1		Page 1 / 1630

0	1	2	3	4	5	6	7	8	9

=V1GL11UQ51KF2
+.GL11UQ51

-KF2.24
=V1GL11UQ51KF2+V1GL11UQ51/6.1

Pallet Stop Station #8 Mid-Stop #5 (RST) =V1GL11UQ51KF1 +V1GL11UQ51 -QN7.1_Q =V1GL11UQ51KF2 +V1GL11UQ51/6.3 Q2401.4	Pallet Stop Station #8 Mid-Stop #5 (SET) =V1GL11UQ51KF1 +V1GL11UQ51 -QN7.2_Q =V1GL11UQ51KF2 +V1GL11UQ51/6.3 Q2401.5
1.1 Pneumatic Valve	1.2 Pneumatic Valve

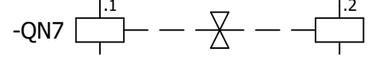

=V1GL11UQ51KF2+V1GL11UQ51/1.8
+.GL11UQ51UQ8.1-W1

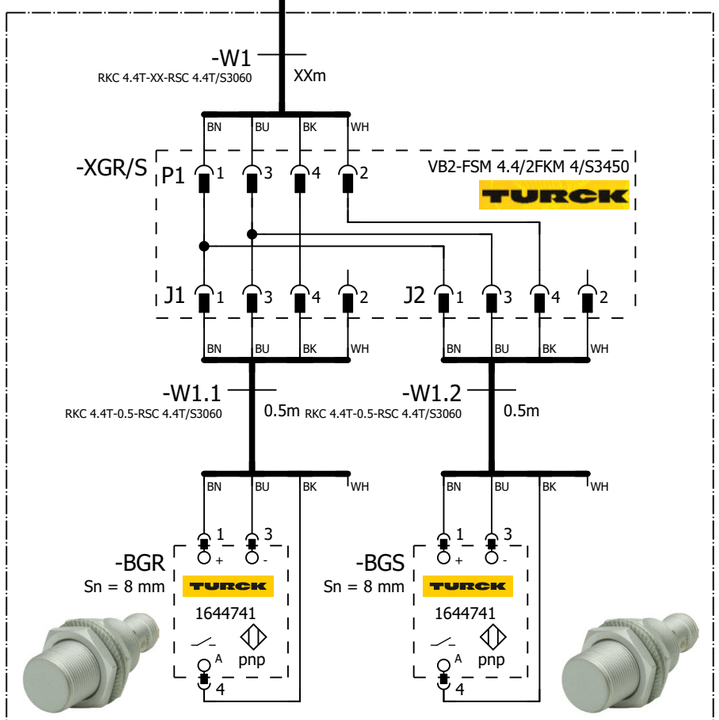

Pallet Stop Station #8 Mid-Stop #5
=V1GL11UQ51UQ8.1
+.GL11UQ51UQ8.1
-UQ8.1

=V1GL11UQ51 -UQ8.1-BGR Pallet Stop Station #8 Mid-Stop #5	=V1GL11UQ51 -UQ8.1-BGS Pallet Stop Station #8 Mid-Stop #5

=V1GL11UQ51UQ7+.GL11UQ51UQ7/1

=V1GL11UQ51UQ12+.GL11UQ51UQ12/1

			Date	12/22/2022	Volvo Trucks North America	Valiant TMS	FESTO DQ CONNECTION QN7	Drawing name: =2V04&EFS-EL	= V1GL11UQ51UQ8
			Ed.	MKLEPADLO					+ V1GL11UQ51UQ8
			Appr		P6700 Underbody Mainline - Cell 2V04			Document type: EFS	Project nr: 22-16151
Modification	Date	Name	Original		Replacement of	Replaced by	Scale 1:1		Page 1 / 1630

=V1GL11UQ51KF2
+.GL11UQ51

-KF2.24
=V1GL11UQ51KF2+V1GL11UQ51/6.1

Spare (RST)	Spare (SET)
=V1GL11UQ51KF1	=V1GL11UQ51KF1
+V1GL11UQ51	+V1GL11UQ51
-QN8.1_Q	-QN8.2_Q
=V1GL11UQ51KF2	=V1GL11UQ51KF2
+V1GL11UQ51/6.3	+V1GL11UQ51/6.3
Q2401.6	Q2401.7
2.1 Pneumatic Valve	2.2 Pneumatic Valve

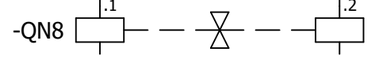

=V1GL11UQ51UQ8+.GL11UQ51UQ8/1

=V1GL11WC1+.GL11UC01/1

			Date	12/22/2022	Volvo Trucks North America	Valiant TMS	FESTO DQ CONNECTION QN8	Drawing name: =2V04&EFS-EL	= V1GL11UQ51UQ12	
			Ed.	MKLEPADLO					+ V1GL11UQ51UQ12	
			Appr		P6700 Underbody Mainline - Cell 2V04			Document type: EFS	Project nr: 22-16151	Page 1
Modification	Date	Name	Original		Replacement of / Replaced by	Scale 1:1				1630

0	1	2	3	4	5	6	7	8	9

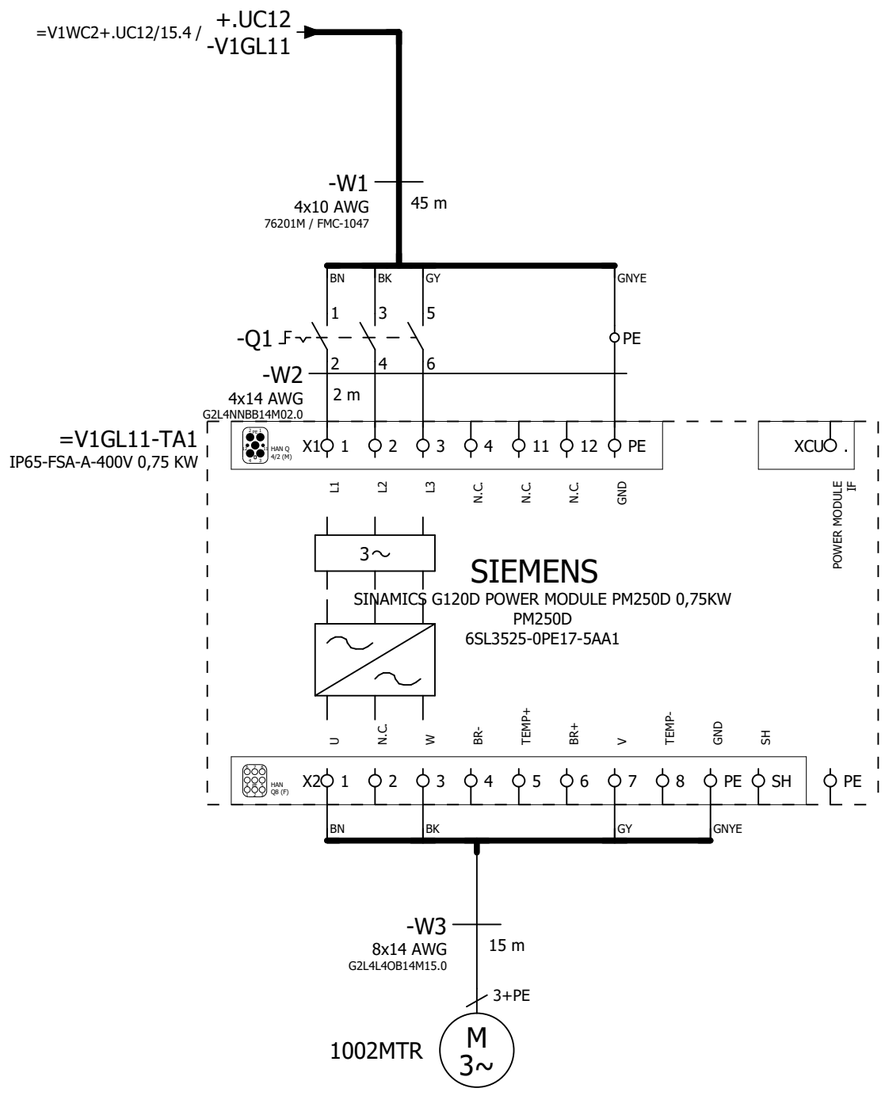

=V1GL11UQ51UQ12+.GL11UQ51UQ12/1

=V1GL12KF2+.GL12KF2/1

			Date	12/22/2022	Volvo Trucks North America		Valiant TMS	Incoming power	Drawing name: =2V04&EFS-EL	= V1GL11WC1
			Ed.	MKLEPADLO						+ V1GL11UC01
			Appr		P6700 Underbody Mainline - Cell 2V04		Scale 1:1		Document type: EFS	Project nr: 22-16151
Modification	Date	Name	Original		Replacement of	Replaced by				Page 1 / 1630

0	1	2	3	4	5	6	7	8	9

-BZ02

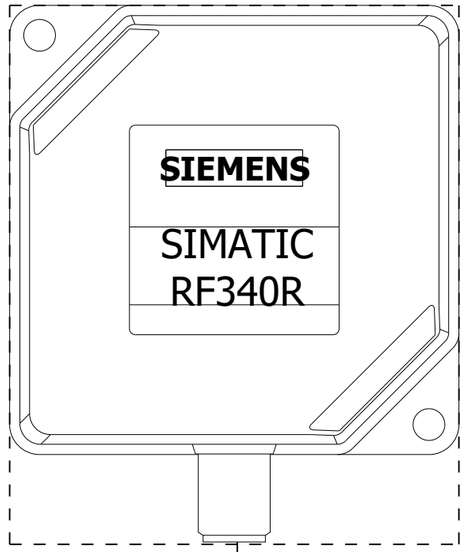

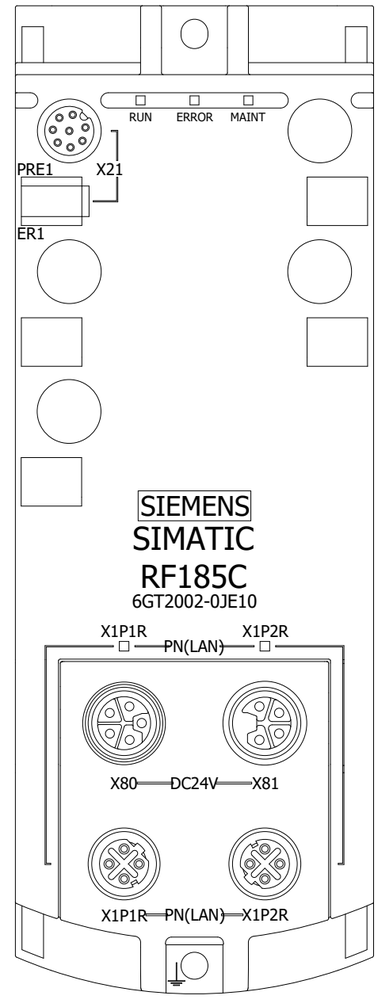

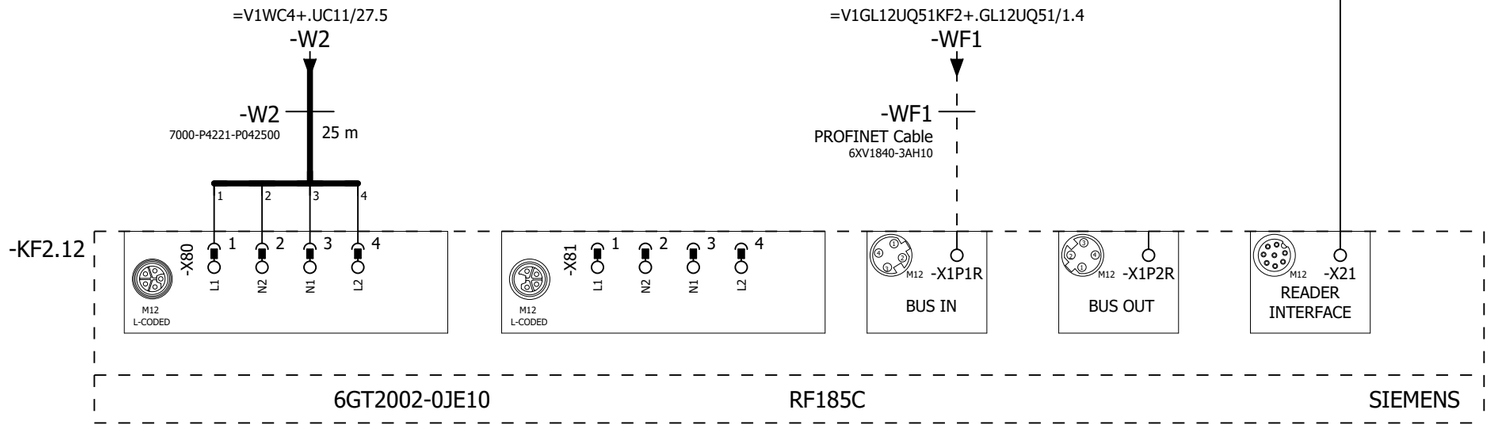

=V1GL11WC1+.GL11UC01/1

10

			Date	12/22/2022	Volvo Trucks North America	Valiant TMS	RFID Communication Module	Drawing name: =2V04&EFS-EL	= V1GL12KF2
			Ed.	MKLEPADLO					+ V1GL12KF2
			Appr		P6700 Underbody Mainline - Cell 2V04	Scale 1:1		Document type: EFS	Project nr: 22-16151
Modification	Date	Name	Original		Replacement of	Replaced by			Page 1 / 1630

0	1	2	3	4	5	6	7	8	9

=V1WC4+.UC11/26.5

-W1

-W1
RSM RKM 56-35M/S3059
35m

4 3 1 2 PE

=V1GL12UQ51KF2+.GL12UQ51/1.1

+.GL12UQ51-W1

4 3 1 2 PE

-KF2.11
/10.3

X01 1 2 3 4 5
7/8"
2M 1M FE 1L+ 2L+
DC 24V (IN)

X02 1 2 3 4 5
7/8"
2M 1M FE 1L+ 2L+
DC 24V (OUT)

XIOP .
IOP

XUSB .
USB_B

XPM .
POWER MODULE 1F

XMMC
MM-CARD

SIEMENS
SINAMICS G120D CONTROL UNIT CU240D-2 PN-F
CU240D-2 PN-F
6SL3544-0FB21-1FA0

PROFINET-PORT 1
ADDRESS
TX+ RX+ TX- RX-
X03 1 2 3 4 SH
M12
1 2 3 4 SH

PROFINET-PORT 2
ADDRESS
TX+ RX+ TX- RX-
X04 1 2 3 4 SH
M12
1 2 3 4 SH

HTL-ENCODER
+24V A A* B B* Z Z* 0V
X06 1 2 3 4 5 6 7 8 SH
M12

-KF100.11-P13
PROFINET Cable
6XV1840-3AH10

+.UC11-KF100.11-P13
=V1KF1+.UC11/2.6

+.GL12UQ51-WF1
=V1GL12UQ51KF2+.GL12UQ51/1.3

-KF2.11
/10.0

X07 1 2 3 4 5
M12
1L+ DI 1 F-DI 0 1M DI 0 FE

X08 1 2 3 4 5
M12
1L+ DI 3 F-DI 1 1M DI 2 FE

X09 1 2 3 4 5
M12
1L+ DI 5 F-DI 2 1M DI 4 FE

X10 1 2 3 4 5 6 7 8
M12
N.C. +10V AI 0+ AI 1+ N.C. N.C. 0V N.C.

SIEMENS
SINAMICS G120D CONTROL UNIT CU240D-2 PN-F
CU240D-2 PN-F
6SL3544-0FB21-1FA0

N.C. DO 1 F-DO 0 2M DO 0 FE
X05 1 2 3 4 5
M12

1

=V1GL12UQ51BG0+.GL12UQ51/1

			Date	12/22/2022	Volvo Trucks North America	Valiant TMS	G120D Control Unit	Drawing name: =2V04&EFS-EL	= V1GL12KF2
			Ed.	MKLEPADLO					+ V1GL12KF2
			Appr		P6700 Underbody Mainline - Cell 2V04	Scale 1:1		Document type: EFS	Project nr: 22-16151
Modification	Date	Name	Original		Replacement of	Replaced by			Page 10 / 1630

0	1	2	3	4	5	6	7	8	9

=V1GL12UQ51KF2/2.1
-BG05

-W5
RKC 4.4T-XX-RSC 4.4T/S3060
XXm

BN BU BK WH

-BG05
Sn = 8 mm
TURCK
1644741
pnp

=V1GL12UQ51
-BG05
Pallet Present At
Pre-Unload Sta #3

=V1GL12UQ51KF2/2.2
-XG6/19

-W6
RKC 4.4T-XX-RSC 4.4T/S3060
XXm

-XG6/19 P1 VB2-FSM 4.4/2FKM 4/S3450
TURCK
J1
J2

-W6.1
RKC 4.4T-XX-RSC 4.4T/S3060
XXm

-BG06
Sn = 8 mm
TURCK
1644741
pnp

-W6.2
RKC 4.4T-XX-RSC 4.4T/S3060
XXm

-BG19
Sn = 1000 mm
BANNER
71959
BK pnp

=V1GL12UQ51
-BG06
Pallet Present At
Unload Sta #4

=V1GL12UQ51
-BG19
Part Present
At Unload

=V1GL12UQ51KF2/2.3
-XG7/14

-W7
RKC 4.4T-XX-RSC 4.4T/S3060
XXm

-XG7/14 P1 VB2-FSM 4.4/2FKM 4/S3450
TURCK
J1
J2

-W7.1
RKC 4.4T-XX-RSC 4.4T/S3060
XXm

-BG07
Sn = 8 mm
TURCK
1644741
pnp

-W7.2
RKC 4.4T-XX-RSC 4.4T/S3060
XXm

-BG14
Sn = 8 mm
TURCK
1644741
pnp

=V1GL12UQ51
-BG07
Pallet Present At
Accum Zone 4-5

=V1GL12UQ51
-BG14
Drive Overtorque
Sensor

=V1GL12KF2+.GL12KF2/10

			Date	12/22/2022	Volvo Trucks North America	Valiant TMS	SENSORS	Drawing name: =2V04&EFS-EL	= V1GL12UQ51BG0
			Ed.	MKLEPADLO					+ V1GL12UQ51
			Appr		P6700 Underbody Mainline - Cell 2V04	Scale 1:1		Document type: EFS	Project nr: 22-16151
Modification	Date	Name	Original		Replacement of	Replaced by			Page 1 / 1630

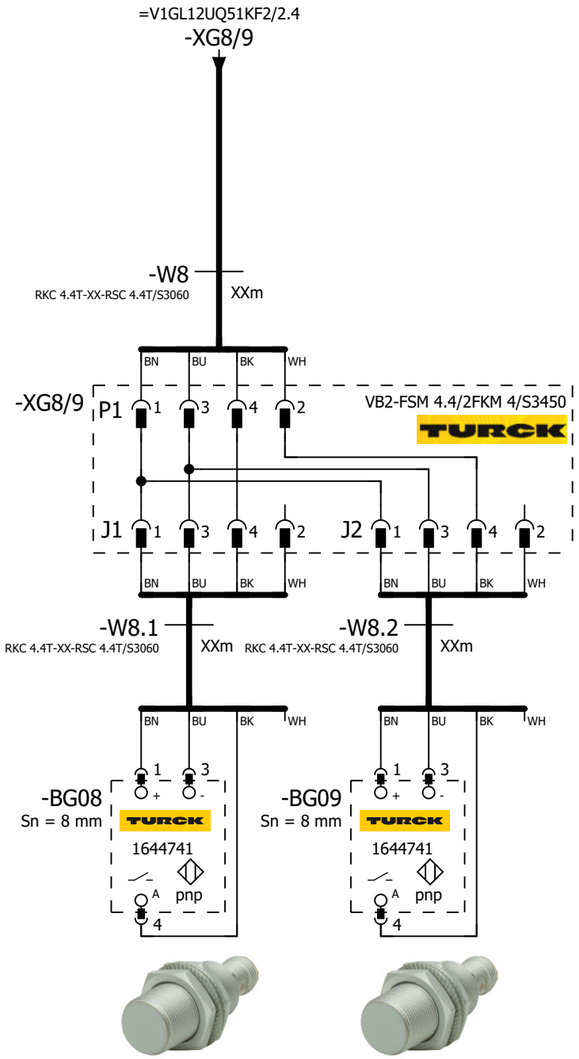

=V1GL12UQ51
-BG08
Pallet Present At
Mid-Stop#2 Sta#5

=V1GL12UQ51
-BG09
Pallet Present At
Accum Zone 5-6

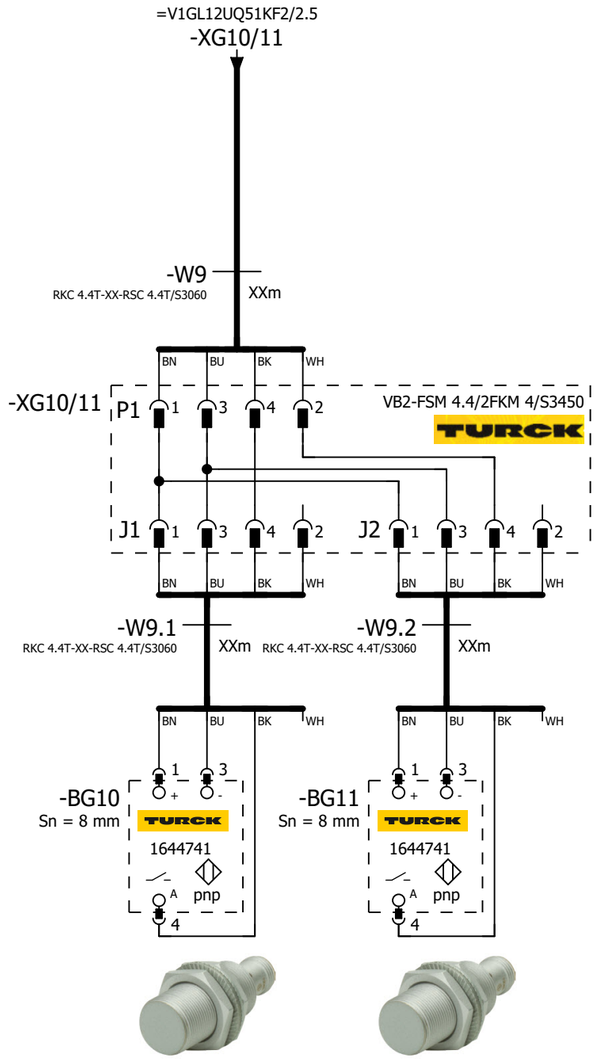

=V1GL12UQ51
-BG10
Pallet Present At
Mid-Stop#3 Sta#6

=V1GL12UQ51
-BG11
Pallet Present At
Accum Zone 6-7

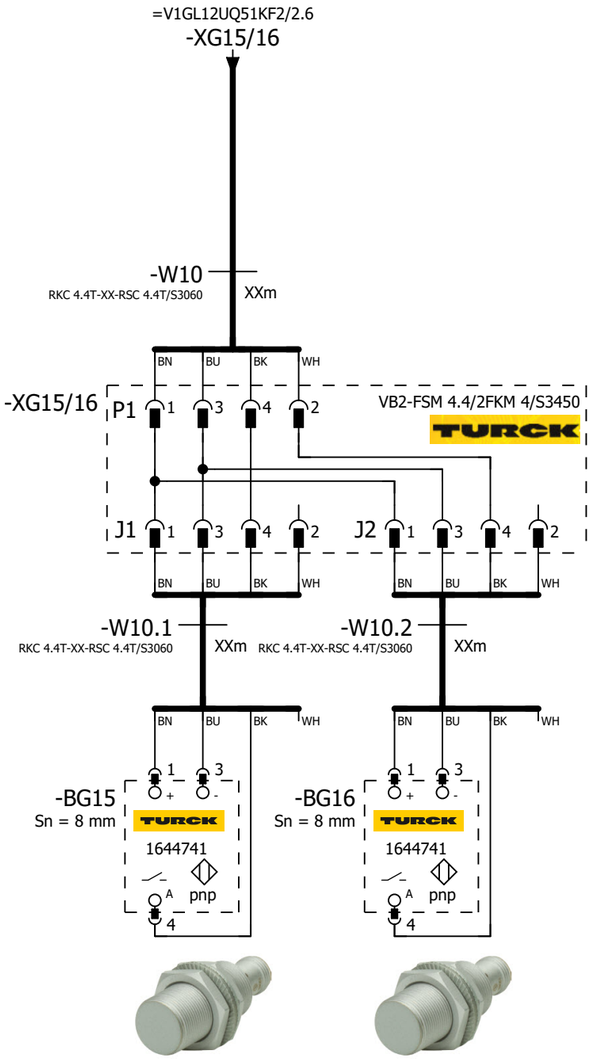

=V1GL12UQ51
-BG15
Chain Tension
Alert On Take-up

=V1GL12UQ51
-BG16
Broken Chain
Alert On Take-up

			Date	12/22/2022	Volvo Trucks North America	Valiant TMS	SENSORS	Drawing name: =2V04&EFS-EL	= V1GL12UQ51BG0
			Ed.	MKLEPADLO					+ V1GL12UQ51
			Appr		P6700 Underbody Mainline - Cell 2V04			Document type: EFS	Project nr: 22-16151
Modification	Date	Name	Original		Replacement of / Replaced by	Scale 1:1			Page 2 / 1630

0	1	2	3	4	5	6	7	8	9

=V1GL12UQ51KF2/2.8

-BG17

-W11

RKC 4.4T-XX-RSC 4.4T/S3060

XXm

BN BU BK WH

-BG17

A-B.802T-AP

CW/CCW

NEMA 4 & 13 Limit Switch

1 3 2 4

=V1GL12UQ51 -BG17 Part Overtravel

2

=V1GL12UQ51KF2/1

			Date	12/22/2022	Volvo Trucks North America		Valiant TMS	SENSORS	Drawing name: =2V04&EFS-EL	= V1GL12UQ51BG0	
			Ed.	MKLEPADLO						+ V1GL12UQ51	
			Appr		P6700 Underbody Mainline - Cell 2V04		Scale 1:1		Document type: EFS	Project nr: 22-16151	Page 3 / 1630
Modification	Date	Name	Original		Replacement of	Replaced by					

0	1	2	3	4	5	6	7	8	9

=V1GL12KF2+.GL12KF2/10.2 / W1

-W1
RSM RKM 56-20M/S3059
20m

=V1GL12KF2+.GL12KF2/10.2 / -WF1

-WF1
PROFINET Cable
6XV1840-3AH10

+.GL12KF2-WF1 / =V1GL12KF2+.GL12KF2/1.4

-KF2

X20 M12, 7/8" 1 2 PE 4 5
0V_VAL / OUT | 0V_EL / SEN | FE | 24V_EL / SEN | 24V_VAL / OUT

-TP1 -TP2

ON / OFF 1 2 1 2

FESTO
Bus node + Interlinking block
548755 + 550208

I2450.0	DI 0 X1:4	V1GL12UQ51UQ3.1-BGR	Pallet Stop Station #3 Pre-Unload (RESET)
I2450.1	DI 1 X1:2	V1GL12UQ51UQ3.1-BGS	Pallet Stop Station #3 Pre-Unload (SET)
I2450.2	DI 2 X2:4	V1GL12UQ51UQ4.1-BGR	Pallet Stop Station #4 Unload (RESET)
I2450.3	DI 3 X2:2	V1GL12UQ51UQ4.1-BGS	Pallet Stop Station #4 Unload (SET)
I2450.4	DI 4 X3:4	V1GL12UQ51UQ4.2-BGR	Pin Stabilizer Station #4 Unload (RESET)
I2450.5	DI 5 X3:2	V1GL12UQ51UQ4.2-BGS	Pin Stabilizer Station #4 Unload (SET)
I2450.6	DI 6 X4:4	V1GL12UQ51UQ5.1-BGR	Pallet Stop Station #5 Mid-Stop #2 (RESET)
I2450.7	DI 7 X4:2	V1GL12UQ51UQ5.1-BGS	Pallet Stop Station #5 Mid-Stop #2 (SET)
I2451.0	DI 8 X5:4	V1GL12UQ51UQ6.1-BGR	Pallet Stop Station #6 Mid-Stop #3 (RESET)
I2451.1	DI 9 X5:2	V1GL12UQ51UQ6.1-BGS	Pallet Stop Station #6 Mid-Stop #3 (SET)
I2451.2	DI 10 X6:4	I2451.2	SPARE
I2451.3	DI 11 X6:2	I2451.3	SPARE
I2451.4	DI 12 X7:4	I2451.4	SPARE
I2451.5	DI 13 X7:2	I2451.5	SPARE
I2451.6	DI 14 X8:4	I2451.6	SPARE
I2451.7	DI 15 X8:2	I2451.7	SPARE

-KF2.11

FESTO
CPX-M-AB-8-M12X2-5POL
549335

X1 X2 X3 X4 X5 X6 X7 X8 M12
24V | DI 1 | 0V | DI 0 | FE
24V | DI 3 | 0V | DI 2 | FE
24V | DI 5 | 0V | DI 4 | FE
24V | DI 7 | 0V | DI 6 | FE
24V | DI 9 | 0V | DI 8 | FE
24V | DI 11 | 0V | DI 10 | FE
24V | DI 13 | 0V | DI 12 | FE
24V | DI 15 | 0V | DI 14 | FE
BN WH BU BK

+.GL12UQ51UQ3.1-W1
=V1GL12UQ51UQ3+.GL12UQ51UQ3/1.1

+.GL12UQ51UQ4.1-W1
=V1GL12UQ51UQ4+.GL12UQ51UQ4/1.1

+.GL12UQ51UQ4.2-W1
=V1GL12UQ51UQ4+.GL12UQ51UQ4/1.4

+.GL12UQ51UQ5.1-W1
=V1GL12UQ51UQ5+.GL12UQ51UQ5/1.1

+.GL12UQ51UQ6.1-W1
=V1GL12UQ51UQ6+.GL12UQ51UQ6/1.1

=V1GL12UQ51BG0/3

2

			Date	12/22/2022	Volvo Trucks North America	Valiant TMS	CONNECTING MOD. FOR VTSA MANIFOLD	Drawing name: =2V04&EFS-EL	= V1GL12UQ51KF2
			Ed.	MKLEPADLO					+ V1GL12UQ51
			Appr		P6700 Underbody Mainline - Cell 2V04			Document type: EFS	Project nr: 22-16151
Modification	Date	Name	Original		Replacement of	Replaced by	Scale 1:1		Page 1 / 1630

0	1	2	3	4	5	6	7	8	9

-KF2.12

FESTO
CPX-M-AB-8-M12X2-5POL
549335

I2452.0	DI 0 X1:4	V1GL12UQ51-BG05	Sensor Pallet Present At Pre-Unload Sta #3
I2452.1	DI 1 X1:2	I2452.1	SPARE
I2452.2	DI 2 X2:4	V1GL12UQ51-BG06	Sensor Pallet Present At Unload Sta #4
I2452.3	DI 3 X2:2	V1GL12UQ51-BG19	Sensor Part Present At Unload
I2452.4	DI 4 X3:4	V1GL12UQ51-BG07	Sensor Pallet Present At Accum Zone 4-5
I2452.5	DI 5 X3:2	V1GL12UQ51-BG14	Sensor Drive Overtorque
I2452.6	DI 6 X4:4	V1GL12UQ51-BG08	Sensor Pallet Present At Mid-Stop #2 Sta #5
I2452.7	DI 7 X4:2	V1GL12UQ51-BG09	Sensor Pallet Present At Accum Zone 5-6
I2453.0	DI 8 X5:4	V1GL12UQ51-BG10	Sensor Pallet Present At Mid-Stop #3 Sta #6
I2453.1	DI 9 X5:2	V1GL12UQ51-BG11	Sensor Pallet Present At Accum Zone 6-7
I2453.2	DI 10 X6:4	V1GL12UQ51-BG15	Sensor Chain Tension Alert On Take-up
I2453.3	DI 11 X6:2	V1GL12UQ51-BG16	Sensor Broken Chain Alert On Take-up
I2453.4	DI 12 X7:4	V1GL12UQ51-BG17	Part Overtravel N.O.
I2453.5	DI 13 X7:2	V1GL12UQ51-BG17	Part Overtravel N.C.
I2453.6	DI 14 X8:4	I2453.6	SPARE
I2453.7	DI 15 X8:2	I2453.7	SPARE

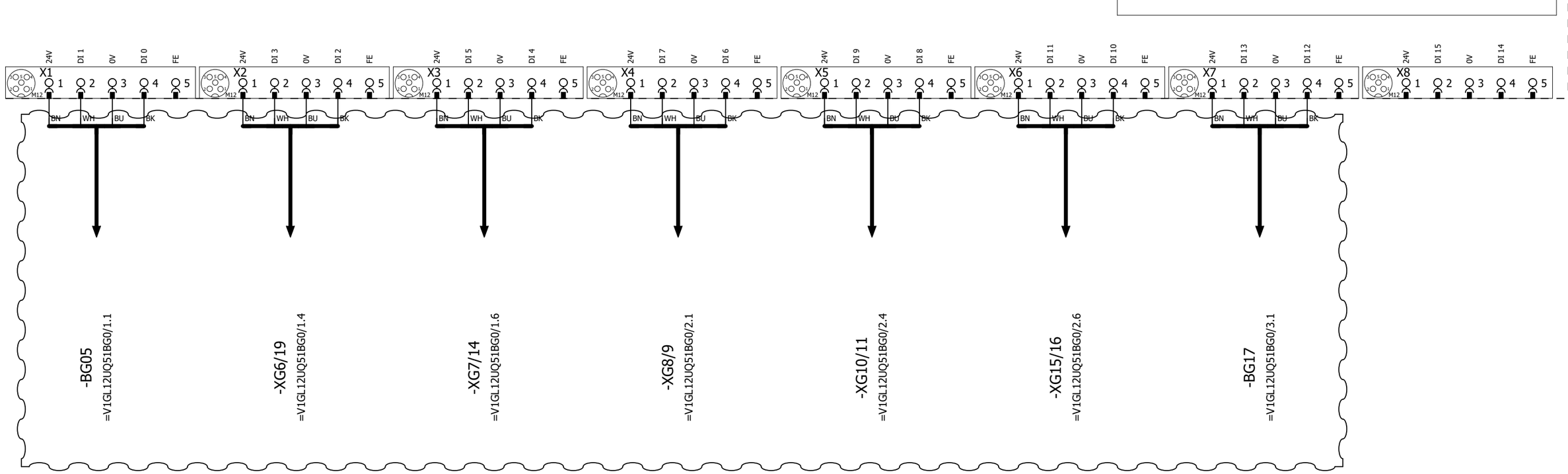

1 3

			Date	12/22/2022	Volvo Trucks North America	Valiant TMS	I/O MOD. DI16 (8 x M12) FOR VTSA-F	Drawing name: =2V04&EFS-EL	= V1GL12UQ51KF2
			Ed.	MKLEPADLO					+ V1GL12UQ51
			Appr		P6700 Underbody Mainline - Cell 2V04	Scale 1:1		Document type: EFS	Project nr: 22-16151
Modification	Date	Name	Original		Replacement of	Replaced by			Page 2 / 1630

0	1	2	3	4	5	6	7	8	9

-KF2.13

FESTO

CPX-M-AB-8-M12X2-5POL

549335

I2454.0	DI 0 X1:4	I2454.0	SPARE
I2454.1	DI 1 X1:2	I2454.1	SPARE
I2454.2	DI 2 X2:4	I2454.2	SPARE
I2454.3	DI 3 X2:2	I2454.3	SPARE
I2454.4	DI 4 X3:4	I2454.4	SPARE
I2454.5	DI 5 X3:2	I2454.5	SPARE
I2454.6	DI 6 X4:4	I2454.6	SPARE
I2454.7	DI 7 X4:2	I2454.7	SPARE
I2455.0	DI 8 X5:4	I2455.0	SPARE
I2455.1	DI 9 X5:2	I2455.1	SPARE
I2455.2	DI 10 X6:4	I2455.2	SPARE
I2455.3	DI 11 X6:2	I2455.3	SPARE
I2455.4	DI 12 X7:4	I2455.4	SPARE
I2455.5	DI 13 X7:2	I2455.5	SPARE
I2455.6	DI 14 X8:4	I2455.6	SPARE
I2455.7	DI 15 X8:2	I2455.7	SPARE

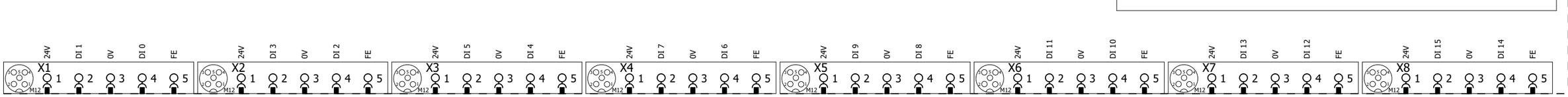

2

4

			Date	12/22/2022	Volvo Trucks North America	Valiant TMS	I/O MOD. DI16 (8 x M12) FOR VTSA-F	Drawing name: =2V04&EFS-EL	= V1GL12UQ51KF2	
			Ed.	MKLEPADLO					+ V1GL12UQ51	
			Appr		P6700 Underbody Mainline - Cell 2V04	Scale 1:1		Document type: EFS	Project nr: 22-16151	Page 3
Modification	Date	Name	Original		Replacement of	Replaced by				1630

0	1	2	3	4	5	6	7	8	9

KF2.14

FESTO

CPX-M-AB-8-M12X2-5POL

549335

I2456.0	DI 0 X1:4	I2456.0	SPARE
I2456.1	DI 1 X1:2	I2456.1	SPARE
I2456.2	DI 2 X2:4	I2456.2	SPARE
I2456.3	DI 3 X2:2	I2456.3	SPARE
I2456.4	DI 4 X3:4	I2456.4	SPARE
I2456.5	DI 5 X3:2	I2456.5	SPARE
I2456.6	DI 6 X4:4	I2456.6	SPARE
I2456.7	DI 7 X4:2	I2456.7	SPARE
I2457.0	DI 8 X5:4	I2457.0	SPARE
I2457.1	DI 9 X5:2	I2457.1	SPARE
I2457.2	DI 10 X6:4	I2457.2	SPARE
I2457.3	DI 11 X6:2	I2457.3	SPARE
I2457.4	DI 12 X7:4	I2457.4	SPARE
I2457.5	DI 13 X7:2	I2457.5	SPARE
I2457.6	DI 14 X8:4	I2457.6	SPARE
I2457.7	DI 15 X8:2	I2457.7	SPARE

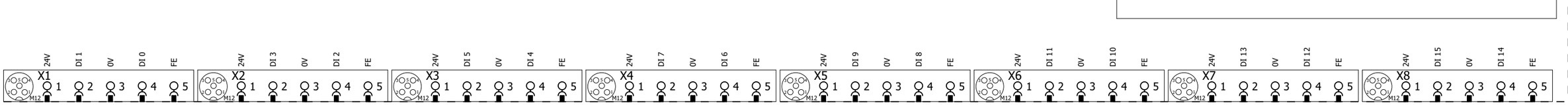

3

5

			Date	12/22/2022	Volvo Trucks North America	Valiant TMS	I/O MOD. DI16 (8 x M12) FOR VTSA-F	Drawing name: =2V04&EFS-EL	= V1GL12UQ51KF2
			Ed.	MKLEPADLO					+ V1GL12UQ51
			Appr		P6700 Underbody Mainline - Cell 2V04			Document type: EFS	Project nr: 22-16151
Modification	Date	Name	Original		Replacement of / Replaced by	Scale 1:1			Page 4 / 1630

-KF2 -KF2.11 -KF2.12 -KF2.13 -KF2.14 -KF2.20 -KF2.21 -KF2.22 -KF2.23 -KF2.24 -KF2.25

M1 M2 M3

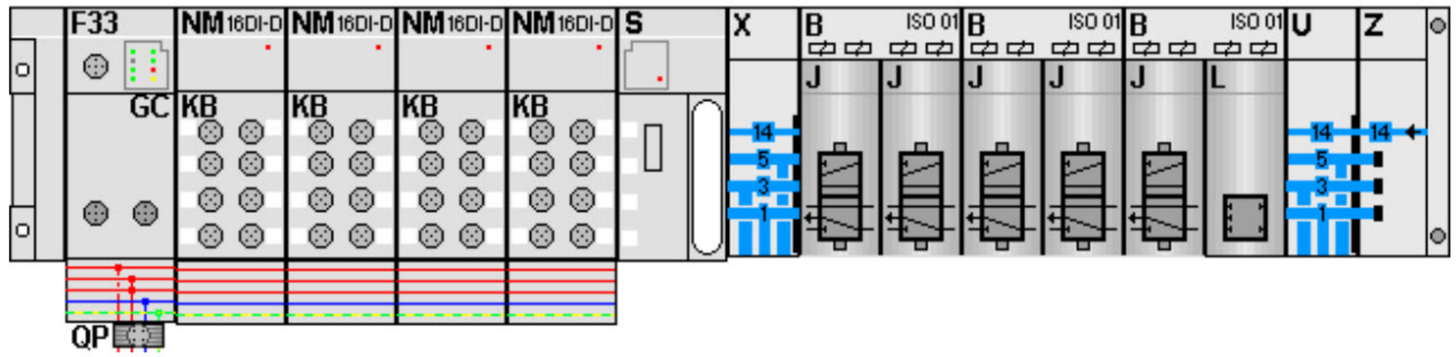

-KF2.21

=V1GL12UQ51UQ3+.GL12UQ51UQ3/1.3
=V1GL12UQ51UQ4+.GL12UQ51UQ4/1.3

FESTO

=V1GL12UQ51UQ3+.GL12UQ51UQ3/1.4	Q2450.0 DO 0 1.1	-QN1.1_Q	Pallet Stop Station #3 Pre-Unload (RST)
=V1GL12UQ51UQ3+.GL12UQ51UQ3/1.4	Q2450.1 DO 1 1.2	-QN1.2_Q	Pallet Stop Station #3 Pre-Unload (SET)
=V1GL12UQ51UQ4+.GL12UQ51UQ4/1.4	Q2450.2 DO 2 2.1	-QN2.1_Q	Pallet Stop/Pin Stabilizer Sta #4 Unload (RST)
=V1GL12UQ51UQ4+.GL12UQ51UQ4/1.4	Q2450.3 DO 3 2.2	-QN2.2_Q	Pallet Stop/Pin Stabilizer Sta #4 Unload (SET)

-KF2.22

=V1GL12UQ51UQ5+.GL12UQ51UQ5/1.3
=V1GL12UQ51UQ6+.GL12UQ51UQ6/1.3

FESTO

=V1GL12UQ51UQ5+.GL12UQ51UQ5/1.4	Q2450.4 DO 0 1.1	-QN3.1_Q	Pallet Stop Station #5 Mid-Stop #2 (RST)
=V1GL12UQ51UQ5+.GL12UQ51UQ5/1.4	Q2450.5 DO 1 1.2	-QN3.2_Q	Pallet Stop Station #5 Mid-Stop #2 (SET)
=V1GL12UQ51UQ6+.GL12UQ51UQ6/1.4	Q2450.6 DO 2 2.1	-QN4.1_Q	Pallet Stop Station #6 Mid-Stop #3 (RST)
=V1GL12UQ51UQ6+.GL12UQ51UQ6/1.4	Q2450.7 DO 3 2.2	-QN4.2_Q	Pallet Stop Station #6 Mid-Stop #3 (SET)

-KF2.23

=V1GL12UQ51UQ11+.GL12UQ51UQ11/1.3

FESTO

=V1GL12UQ51UQ11+.GL12UQ51UQ11/1.4	Q2451.0 DO 0 1.1	-QN5.1_Q	Spare (RST)
=V1GL12UQ51UQ11+.GL12UQ51UQ11/1.4	Q2451.1 DO 1 1.2	-QN5.2_Q	Spare (SET)
	Q2451.2 DO 2 2.1	-QN6.1_Q	Spare
	Q2451.3 DO 3 2.2	-QN6.2_Q	Spare

			Date	12/22/2022	Volvo Trucks North America	Valiant TMS	CONNECTING MOD. FOR FESTO DQ	Drawing name: =2V04&EFS-EL	= V1GL12UQ51KF2
			Ed.	MKLEPADLO					+ V1GL12UQ51
			Appr		P6700 Underbody Mainline - Cell 2V04			Document type: EFS	Project nr: 22-16151
Modification	Date	Name	Original		Replacement of / Replaced by	Scale 1:1			Page 5 / 1630

0	1	2	3	4	5	6	7	8	9

=V1GL12UQ51KF2
+.GL12UQ51

-KF2.21
=V1GL12UQ51KF2+V1GL12UQ51/5.1

Pallet Stop Station #3 Pre-Unload (RST) =V1GL12UQ51KF1 +V1GL12UQ51 -QN1.1_Q =V1GL12UQ51KF2 +V1GL12UQ51/5.3 Q2450.0	Pallet Stop Station #3 Pre-Unload (SET) =V1GL12UQ51KF1 +V1GL12UQ51 -QN1.2_Q =V1GL12UQ51KF2 +V1GL12UQ51/5.3 Q2450.1
1.1 Pneumatic Valve	1.2 Pneumatic Valve

=V1GL12UQ51KF2+V1GL12UQ51/1.1
+.GL12UQ51UQ3.1-W1

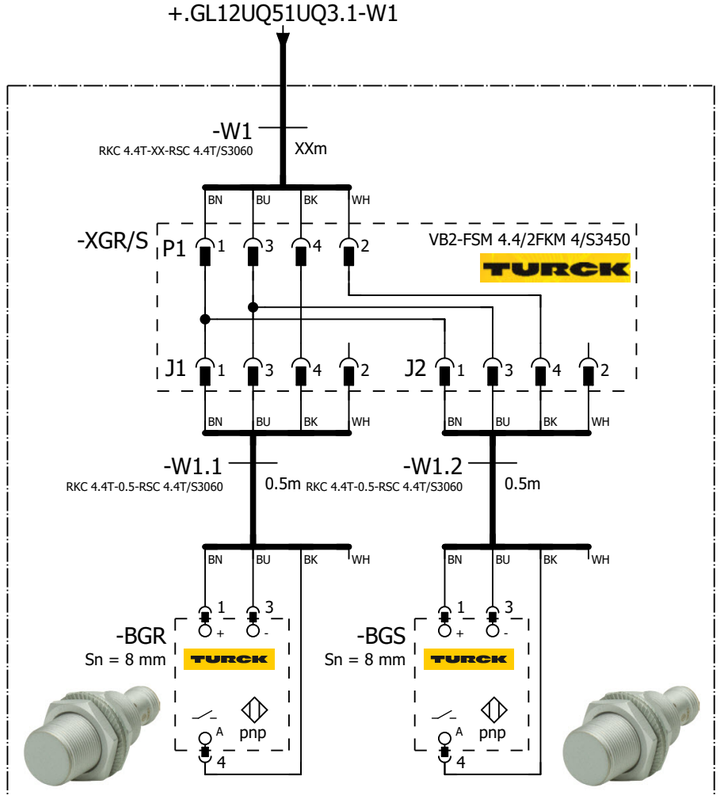

Pallet Stop Station #3 Pre-Unload
=V1GL12UQ51UQ3.1
+.GL12UQ51UQ3.1
-UQ3.1

=V1GL12UQ51 -UQ3.1-BGR Pallet Stop Station #3 Pre-Unload	=V1GL12UQ51 -UQ3.1-BGS Pallet Stop Station #3 Pre-Unload

=V1GL12UQ51KF2+V1GL12UQ51/5

=V1GL12UQ51UQ4+.GL12UQ51UQ4/1

			Date	12/22/2022	Volvo Trucks North America	Valiant TMS	FESTO DQ CONNECTION QN1	Drawing name: =2V04&EFS-EL	= V1GL12UQ51UQ3
			Ed.	MKLEPADLO					+ V1GL12UQ51UQ3
			Appr		P6700 Underbody Mainline - Cell 2V04			Document type: EFS	Project nr: 22-16151
Modification	Date	Name	Original		Replacement of / Replaced by	Scale 1:1			Page 1 / 1630

=V1GL12UQ51KF2
+.GL12UQ51

-KF2.21
=V1GL12UQ51KF2+V1GL12UQ51/5.1

Pallet Stop/Pin Stabilizer Sta #4 Unload (RST)	Pallet Stop/Pin Stabilizer Sta #4 Unload (SET)
=V1GL12UQ51KF1	=V1GL12UQ51KF1
+V1GL12UQ51	+V1GL12UQ51
-QN2.1_Q	-QN2.2_Q
=V1GL12UQ51KF2	=V1GL12UQ51KF2
+V1GL12UQ51/5.3	+V1GL12UQ51/5.3
Q2450.2	Q2450.3
2.1 Pneumatic Valve	2.2 Pneumatic Valve

-QN2 .1 .2

=V1GL12UQ51KF2+V1GL12UQ51/1.2
+.GL12UQ51UQ4.1-W1

-W1
RKC 4.4T-XX-RSC 4.4T/S3060
XXm

-XGR/S P1 1 3 4 2 VB2-FSM 4.4/2FKM 4/S3450 TURCK
J1 1 3 4 2
J2 1 3 4 2

BN BU BK WH

-W1.1
RKC 4.4T-0.5-RSC 4.4T/S3060
0.5m

-W1.2
RKC 4.4T-0.5-RSC 4.4T/S3060
0.5m

-BGR
Sn = 8 mm
TURCK
1 3
+ -
A pnp
4

-BGS
Sn = 8 mm
TURCK
1 3
+ -
A pnp
4

Pallet Stop Sta #4 Unload
=V1GL12UQ51UQ4.1
+.GL12UQ51UQ4.1
-UQ4.1

=V1GL12UQ51KF2+V1GL12UQ51/1.3
+.GL12UQ51UQ4.2-W1

-W1
RKC 4.4T-XX-RSC 4.4T/S3060
XXm

-XGR/S P1 1 3 4 2 VB2-FSM 4.4/2FKM 4/S3450 TURCK
J1 1 3 4 2
J2 1 3 4 2

BN BU BK WH

-W1.1
RKC 4.4T-0.5-RSC 4.4T/S3060
0.5m

-W1.2
RKC 4.4T-0.5-RSC 4.4T/S3060
0.5m

-BGR
Sn = 8 mm
TURCK
1 3
+ -
A pnp
4

-BGS
Sn = 8 mm
TURCK
1 3
+ -
A pnp
4

Pin Stabilizer Sta #4 Unload
=V1GL12UQ51UQ4.2
+.GL12UQ51UQ4.2
-UQ4.2

=V1GL12UQ51 -UQ4.1-BGR Pallet Stop Sta #4 Unload	=V1GL12UQ51 -UQ4.1-BGS Pallet Stop Sta #4 Unload	=V1GL12UQ51 -UQ4.2-BGR Pin Stabilizer Sta #4 Unload	=V1GL12UQ51 -UQ4.2-BGS Pin Stabilizer Sta #4 Unload

=V1GL12UQ51UQ3+.GL12UQ51UQ3/1

=V1GL12UQ51UQ5+.GL12UQ51UQ5/1

			Date	12/22/2022	Volvo Trucks North America	Valiant TMS	FESTO DQ CONNECTION QN2	Drawing name: =2V04&EFS-EL	= V1GL12UQ51UQ4	
			Ed.	MKLEPADLO					+ V1GL12UQ51UQ4	
			Appr		P6700 Underbody Mainline - Cell 2V04			Document type: EFS	Project nr: 22-16151	Page 1
Modification	Date	Name	Original		Replacement of	Replaced by	Scale 1:1			1630

0	1	2	3	4	5	6	7	8	9

=V1GL12UQ51KF2
+.GL12UQ51

-KF2.22
=V1GL12UQ51KF2+V1GL12UQ51/5.1

Pallet Stop Station #5 Mid-Stop #2 (RST) =V1GL12UQ51KF1 +V1GL12UQ51 -QN3.1_Q =V1GL12UQ51KF2 +V1GL12UQ51/5.3 Q2450.4	Pallet Stop Station #5 Mid-Stop #2 (SET) =V1GL12UQ51KF1 +V1GL12UQ51 -QN3.2_Q =V1GL12UQ51KF2 +V1GL12UQ51/5.3 Q2450.5
1.1 Pneumatic Valve	1.2 Pneumatic Valve

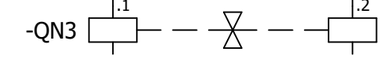

=V1GL12UQ51KF2+V1GL12UQ51/1.4
+.GL12UQ51UQ5.1-W1

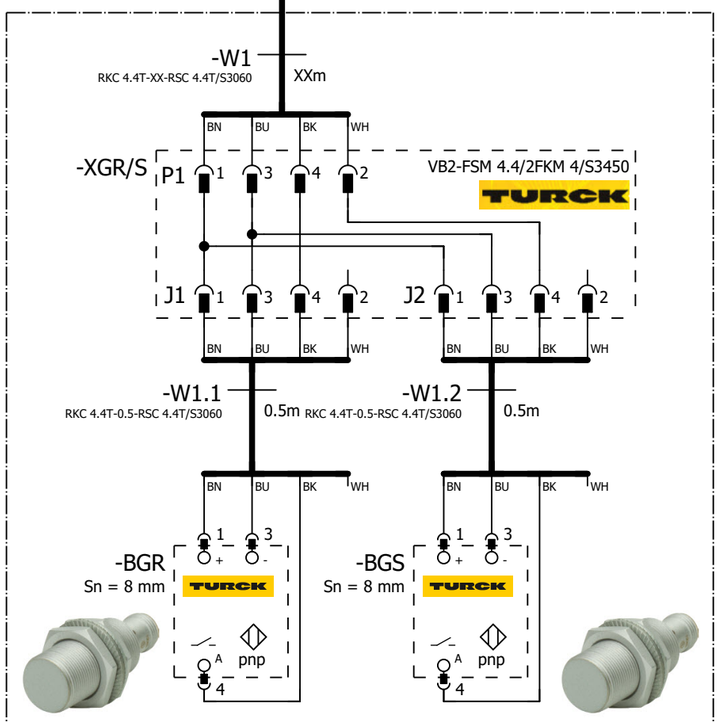

Pallet Stop Sta #5 Mid-Stop #2
=V1GL12UQ51UQ5.1
+.GL12UQ51UQ5.1
-UQ5.1

=V1GL12UQ51 -UQ5.1-BGR Pallet Stop Sta #5 Mid-Stop #2	=V1GL12UQ51 -UQ5.1-BGS Pallet Stop Sta #5 Mid-Stop #2

=V1GL12UQ51UQ4+.GL12UQ51UQ4/1

=V1GL12UQ51UQ6+.GL12UQ51UQ6/1

			Date	12/22/2022	Volvo Trucks North America	Valiant TMS	FESTO DQ CONNECTION QN3	Drawing name: =2V04&EFS-EL	= V1GL12UQ51UQ5
			Ed.	MKLEPADLO					+ V1GL12UQ51UQ5
			Appr		P6700 Underbody Mainline - Cell 2V04	Scale 1:1		Document type: EFS	Project nr: 22-16151
Modification	Date	Name	Original		Replacement of	Replaced by			Page 1 / 1630

0	1	2	3	4	5	6	7	8	9

=V1GL12UQ51KF2
+.GL12UQ51

-KF2.22
=V1GL12UQ51KF2+V1GL12UQ51/5.1

Pallet Stop Station #6 Mid-Stop #3 (RST)	Pallet Stop Station #6 Mid-Stop #3 (SET)
=V1GL12UQ51KF2	=V1GL12UQ51KF2
+V1GL12UQ51	+V1GL12UQ51
-QN4.1_Q	-QN4.2_Q
=V1GL12UQ51KF2	=V1GL12UQ51KF2
+V1GL12UQ51/5.3	+V1GL12UQ51/5.3
Q2450.6	Q2450.7
2.1 Pneumatic Valve	2.2 Pneumatic Valve

-QN4 .1 .2

=V1GL12UQ51KF2+V1GL12UQ51/1.5
+.GL12UQ51UQ6.1-W1

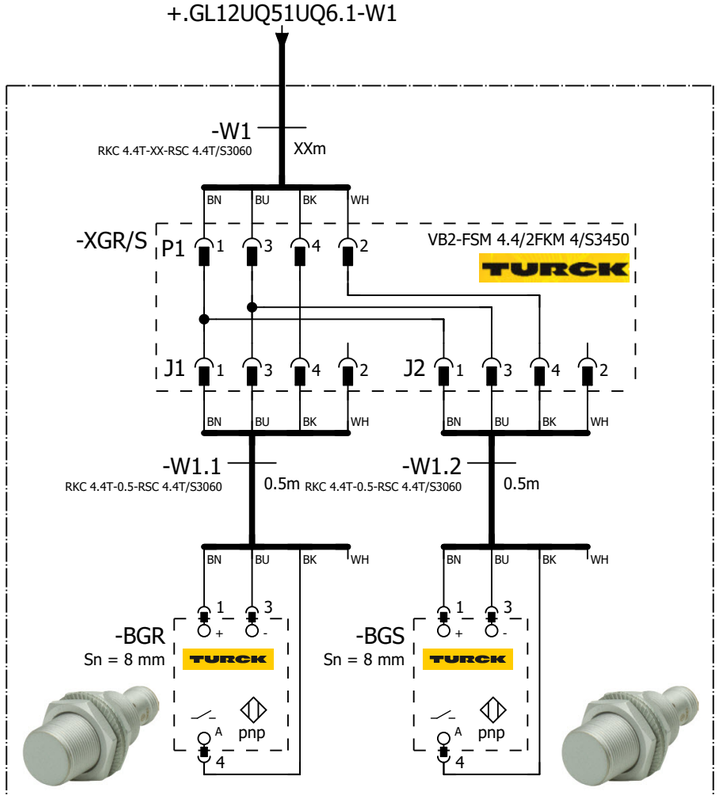

Pallet Stop Sta #6 Mid-Stop #3
=V1GL12UQ51UQ6.1
+.GL12UQ51UQ6.1
-UQ6.1

=V1GL12UQ51 -UQ6.1-BGR Pallet Stop Sta #6 Mid-Stop #3	=V1GL12UQ51 -UQ6.1-BGS Pallet Stop Sta #6 Mid-Stop #3

=V1GL12UQ51UQ5+.GL12UQ51UQ5/1

=V1GL12UQ51UQ11+.GL12UQ51UQ11/1

			Date	12/22/2022	Volvo Trucks North America	Valiant TMS	FESTO DQ CONNECTION QN4	Drawing name: =2V04&EFS-EL	= V1GL12UQ51UQ6
			Ed.	MKLEPADLO					+ V1GL12UQ51UQ6
			Appr		P6700 Underbody Mainline - Cell 2V04			Document type: EFS	Project nr: 22-16151
Modification	Date	Name	Original		Replacement of	Replaced by	Scale 1:1		Page 1 / 1630

=V1GL12UQ51KF2
+.GL12UQ51

-KF2.23
=V1GL12UQ51KF2+V1GL12UQ51/5.1

Spare (RST)	Spare (SET)
=V1GL12UQ51KF1	=V1GL12UQ51KF1
+V1GL12UQ51	+V1GL12UQ51
-QN5.1_Q	-QN5.2_Q
=V1GL12UQ51KF2	=V1GL12UQ51KF2
+V1GL12UQ51/5.3	+V1GL12UQ51/5.3
Q2451.0	Q2451.1
1.1 Pneumatic Valve	1.2 Pneumatic Valve

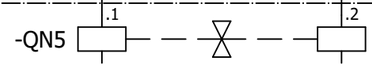

=V1GL12UQ51UQ6+.GL12UQ51UQ6/1

=V1GL12WC1+.GL12UC01/1

			Date	12/22/2022	Volvo Trucks North America	Valiant TMS	FESTO DQ CONNECTION QN5	Drawing name: =2V04&EFS-EL	= V1GL12UQ51UQ11	
			Ed.	MKLEPADLO					+ V1GL12UQ51UQ11	
			Appr		P6700 Underbody Mainline - Cell 2V04			Document type: EFS	Project nr: 22-16151	Page 1
Modification	Date	Name	Original		Replacement of / Replaced by	Scale 1:1				1630

0	1	2	3	4	5	6	7	8	9

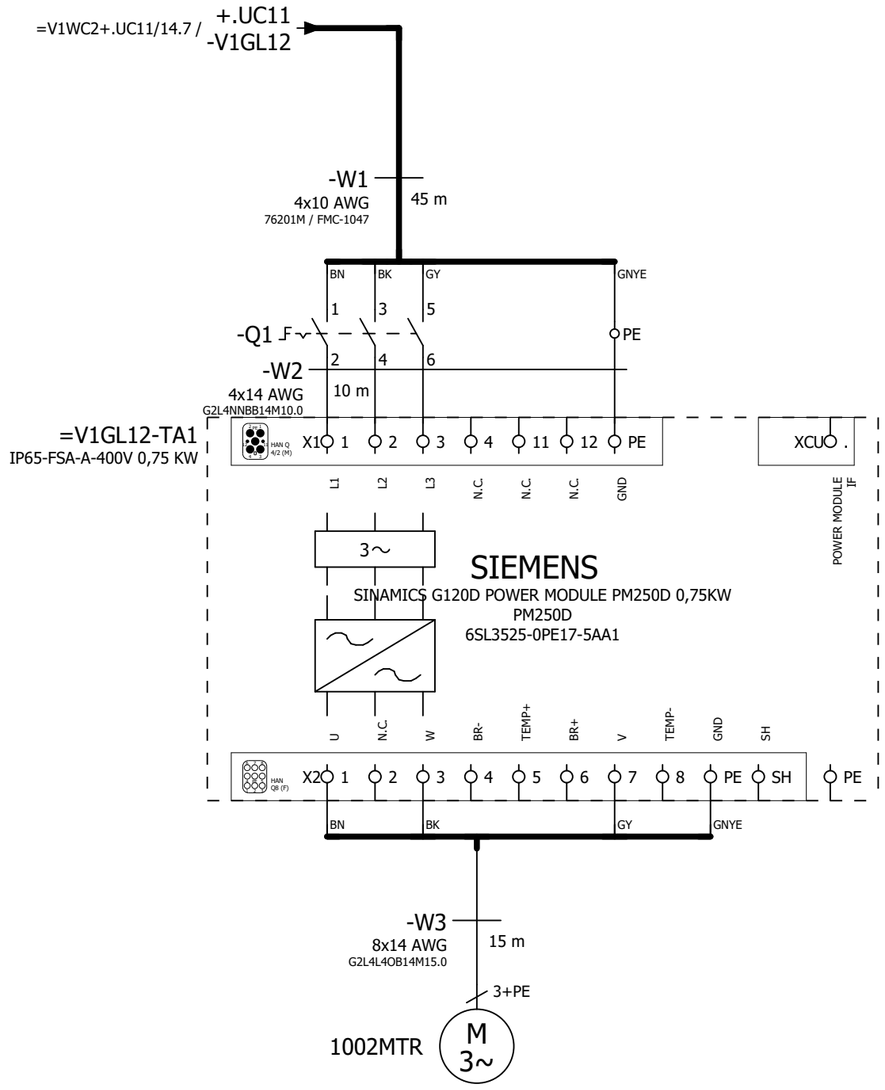

=V1GL12UQ51UQ11+.GL12UQ51UQ11/1

=V1GL13KF1+.GL13KF1/1

			Date	12/22/2022	Volvo Trucks North America		Valiant TMS	Incoming power	Drawing name: =2V04&EFS-EL	= V1GL12WC1
			Ed.	MKLEPADLO						+ V1GL12UC01
			Appr		P6700 Underbody Mainline - Cell 2V04		Scale 1:1		Document type: EFS	Project nr: 22-16151
Modification	Date	Name	Original		Replacement of	Replaced by				Page 1 / 1630

0	1	2	3	4	5	6	7	8	9

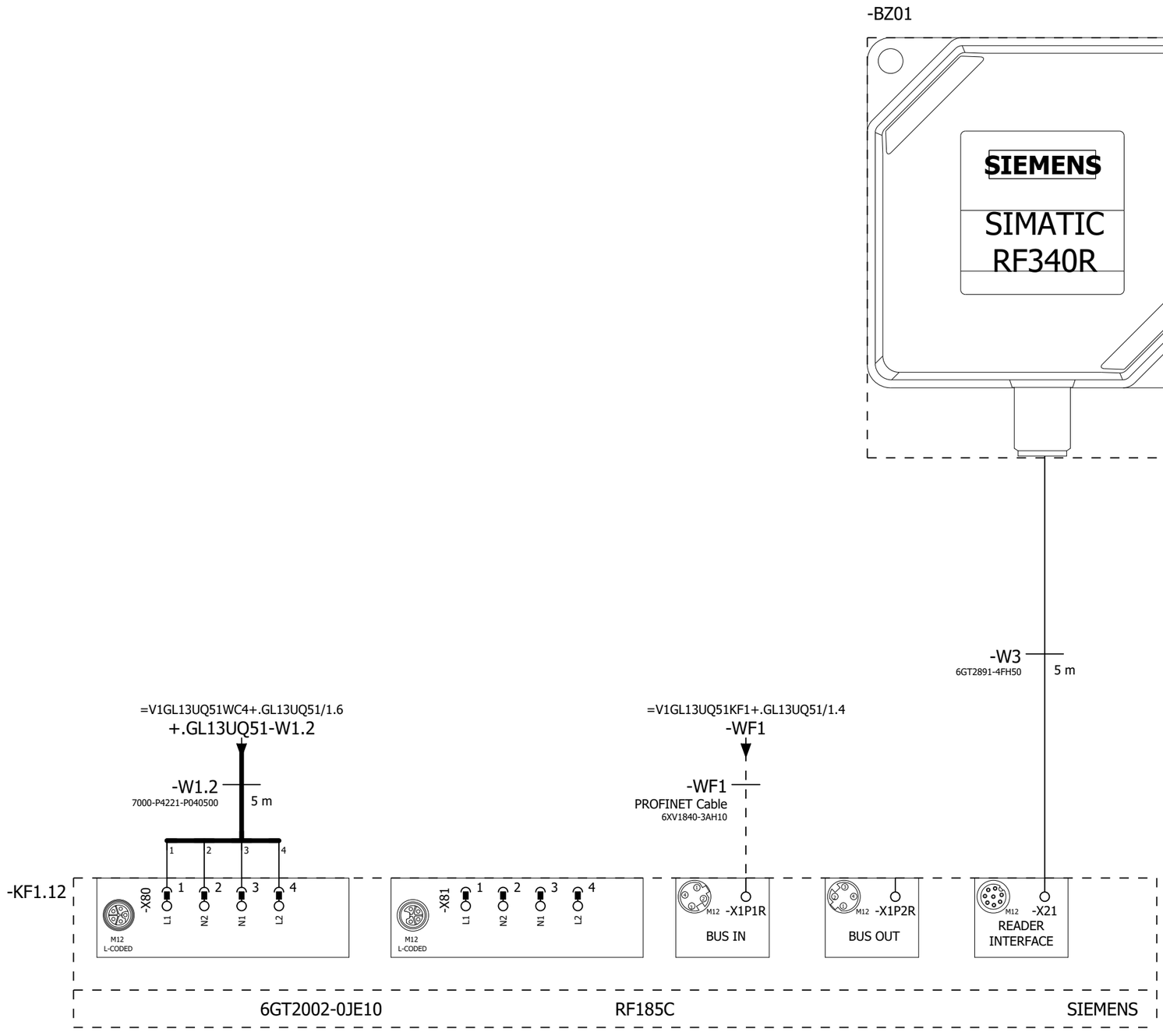

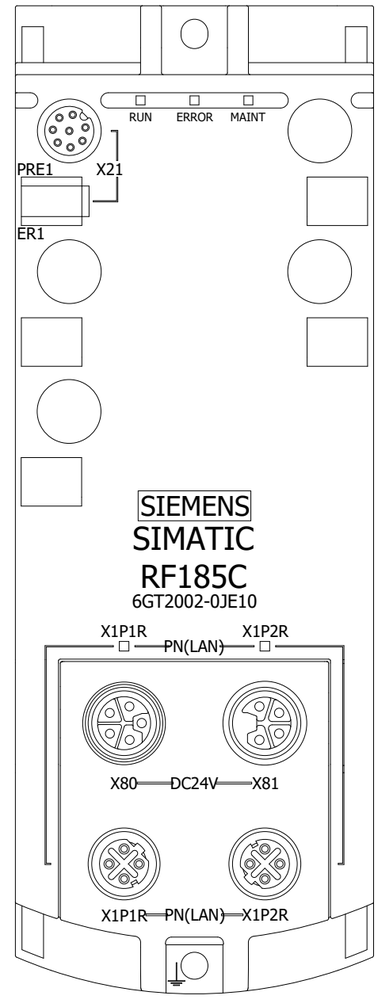

=V1GL12WC1+.GL12UC01/1

=V1GL13UQ51BG0+.GL13UQ51/1

			Date	12/22/2022	Volvo Trucks North America	Valiant TMS	RFID Communication Module	Drawing name: =2V04&EFS-EL	= V1GL13KF1
			Ed.	MKLEPADLO					+ V1GL13KF1
			Appr		P6700 Underbody Mainline - Cell 2V04	Scale 1:1		Document type: EFS	Project nr: 22-16151
Modification	Date	Name	Original		Replacement of	Replaced by			Page 1 / 1630

0	1	2	3	4	5	6	7	8	9

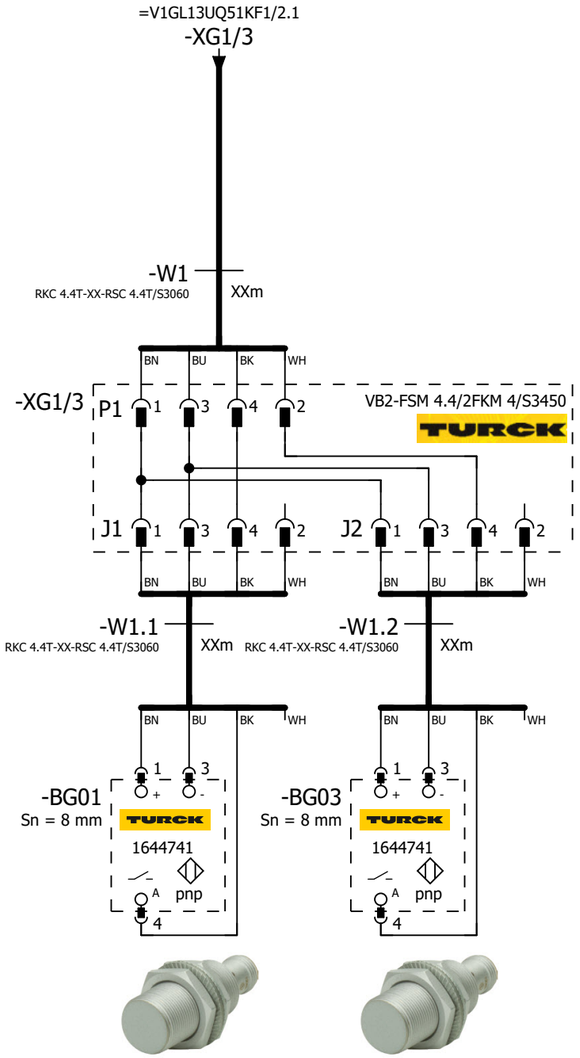

=V1GL13UQ51 -BG01 Pallet Present At Load Sta #1	=V1GL13UQ51 -BG03 Good Pallet Detected At Load

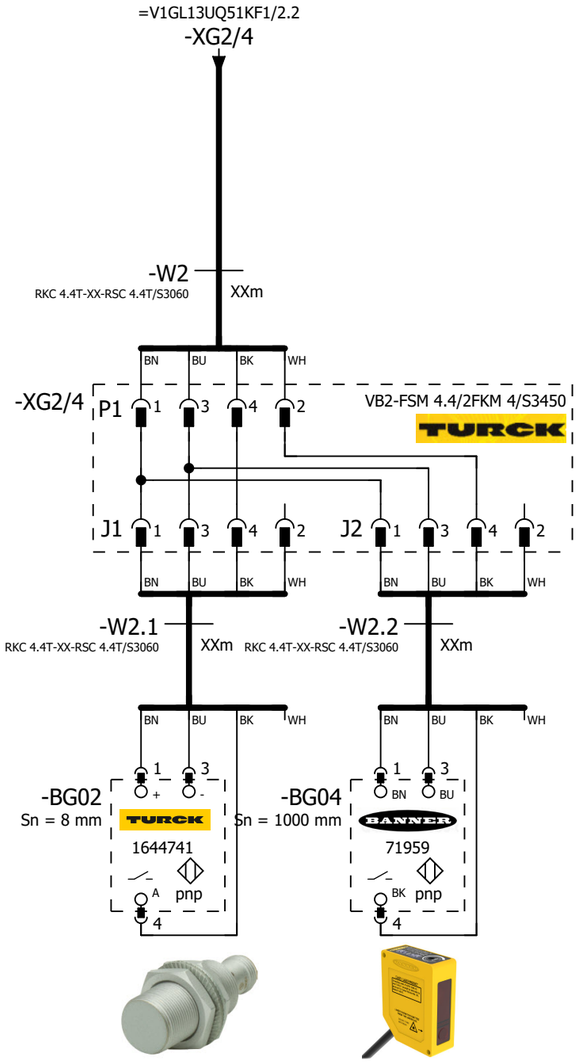

=V1GL13UQ51 -BG02 Pallet Clear Of Load Sta #1	=V1GL13UQ51 -BG04 Part Present At Load

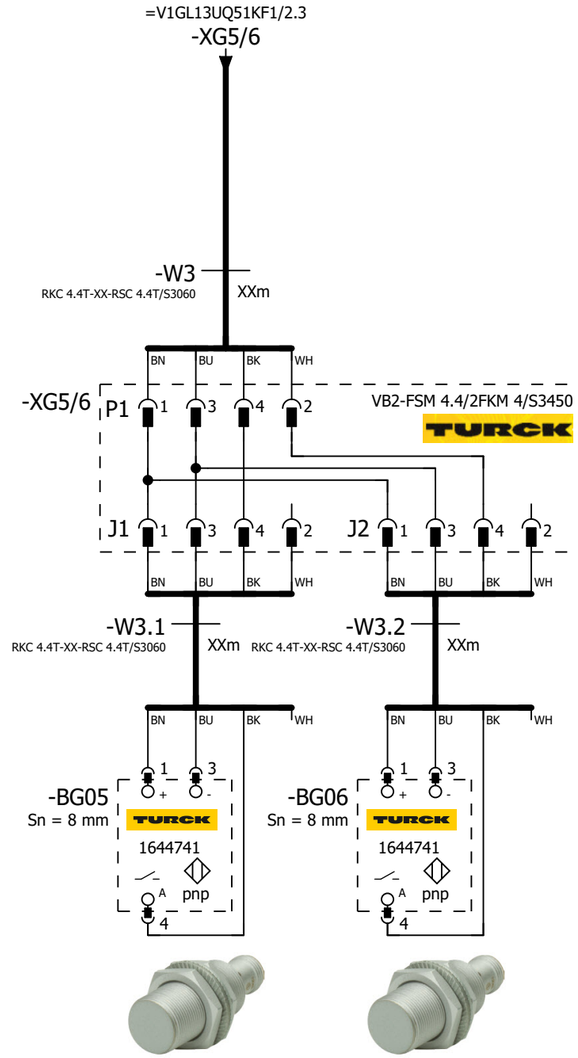

=V1GL13UQ51 -BG05 Pallet Present At Mid-Stop#1 Sta#2	=V1GL13UQ51 -BG06 Pallet Clear Of Mid-Stop#1 Sta#2

=V1GL13KF1+.GL13KF1/1

2

			Date	12/22/2022	Volvo Trucks North America		Valiant TMS	SENSORS	Drawing name: =2V04&EFS-EL	= V1GL13UQ51BG0
			Ed.	MKLEPADLO						+ V1GL13UQ51
			Appr		P6700 Underbody Mainline - Cell 2V04				Document type: EFS	Project nr: 22-16151	Page 1
Modification	Date	Name	Original		Replacement of	Replaced by	Scale 1:1				1630

0	1	2	3	4	5	6	7	8	9

=V1GL13UQ51KF1/2.4
-BG07

-W4
RKC 4.4T-XX-RSC 4.4T/S3060
XXm

BN BU BK WH

-BG07
Sn = 8 mm
TURCK
1644741
pnp

=V1GL13UQ51
-BG07
Pallet Present At
Mid-Stop#2 Sta#3

=V1GL13UQ51KF1/2.5
-XG8/9

-W5
RKC 4.4T-XX-RSC 4.4T/S3060
XXm

BN BU BK WH

-XG8/9 P1 1 3 4 2
VB2-FSM 4.4/2FKM 4/S3450
TURCK

J1 1 3 4 2
J2 1 3 4 2

BN BU BK WH

-W5.1
RKC 4.4T-XX-RSC 4.4T/S3060
XXm

-W5.2
RKC 4.4T-XX-RSC 4.4T/S3060
XXm

BN BU BK WH

-BG08
Sn = 8 mm
TURCK
1644741
pnp

-BG09
Sn = 8 mm
TURCK
1644741
pnp

=V1GL13UQ51
-BG08
Pallet Present At
Mid-Stop#3 Sta#4

=V1GL13UQ51
-BG09
Pallet Clear Of
Mid-Stop#3 Sta#4

=V1GL13UQ51KF1/2.6
-BG17

-W6
RKC 4.4T-XX-RSC 4.4T/S3060
XXm

BN BU BK WH

-BG17
Sn = 8 mm
TURCK
1644741
pnp

=V1GL13UQ51
-BG17
Pallet Present At
Pre-Load Sta#8

1

=V1GL13UQ51KF1/1

			Date	12/22/2022	Volvo Trucks North America		Valiant TMS	SENSORS	Drawing name: =2V04&EFS-EL	= V1GL13UQ51BG0
			Ed.	MKLEPADLO						+ V1GL13UQ51
			Appr		P6700 Underbody Mainline - Cell 2V04				Document type: EFS	Project nr: 22-16151	Page 2
Modification	Date	Name	Original		Replacement of	Replaced by	Scale 1:1				1630

0	1	2	3	4	5	6	7	8	9

=V1GL13UQ51WC4/1.5 / W1.1

-W1.1
RSM RKM 56-2M/S3059
2m

=V1KF1+.UC14/2.6 / +.UC14-KF100.14-P15

-KF100.14-P15
PROFINET Cable
6XV1840-3AH10

+.GL13KF1-WF1 / =V1GL13KF1+.GL13KF1/1.4

-KF1

X20 M12, 7/8" 1 2 PE 4 5

0V_VAL / OUT | 0V_EL / SEN | FE | 24V_EL / SEN | 24V_VAL / OUT

ON OFF 1 2 1 2

M12 -TP1 M12 -TP2

FESTO
Bus node + Interlinking block
548755 + 550208

I2350.0	DI 0 X1:4	V1GL13UQ51UQ1.1-BGR	Pallet Stop Station #1 Load (RESET)
I2350.1	DI 1 X1:2	V1GL13UQ51UQ1.1-BGS	Pallet Stop Station #1 Load (SET)
I2350.2	DI 2 X2:4	V1GL13UQ51UQ2.1-BGR	Pallet Stop Station #2 Mid-Stop #1 (RESET)
I2350.3	DI 3 X2:2	V1GL13UQ51UQ2.1-BGS	Pallet Stop Station #2 Mid-Stop #1 (SET)
I2350.4	DI 4 X3:4	V1GL13UQ51UQ3.1-BGR	Pallet Stop Station #3 Mid-Stop #2 (RESET)
I2350.5	DI 5 X3:2	V1GL13UQ51UQ3.1-BGS	Pallet Stop Station #3 Mid-Stop #2 (SET)
I2350.6	DI 6 X4:4	V1GL13UQ51UQ4.1-BGR	Pallet Stop Station #4 Mid-Stop #3 (RESET)
I2350.7	DI 7 X4:2	V1GL13UQ51UQ4.1-BGS	Pallet Stop Station #4 Mid-Stop #3 (SET)
I2351.0	DI 8 X5:4	V1GL13UQ51UQ8.1-BGR	Pallet Stop Station #8 Pre-Load (RESET)
I2351.1	DI 9 X5:2	V1GL13UQ51UQ8.1-BGS	Pallet Stop Station #8 Pre-Load (SET)
I2351.2	DI 10 X6:4	I2351.2	SPARE
I2351.3	DI 11 X6:2	I2351.3	SPARE
I2351.4	DI 12 X7:4	I2351.4	SPARE
I2351.5	DI 13 X7:2	I2351.5	SPARE
I2351.6	DI 14 X8:4	I2351.6	SPARE
I2351.7	DI 15 X8:2	I2351.7	SPARE

-KF1.11

FESTO
CPX-M-AB-8-M12X2-5POL
549335

X1 X2 X3 X4 X5 X6 X7 X8 M12

24V | DI 1 | 0V | DI 0 | FE
24V | DI 3 | 0V | DI 2 | FE
24V | DI 5 | 0V | DI 4 | FE
24V | DI 7 | 0V | DI 6 | FE
24V | DI 9 | 0V | DI 8 | FE
24V | DI 11 | 0V | DI 10 | FE
24V | DI 13 | 0V | DI 12 | FE
24V | DI 15 | 0V | DI 14 | FE

BN WH BU BK

+.GL13UQ51UQ1.1-W1
=V1GL13UQ51UQ1+.GL13UQ51UQ1/1.1

+.GL13UQ51UQ2.1-W1
=V1GL13UQ51UQ2+.GL13UQ51UQ2/1.1

+.GL13UQ51UQ3.1-W1
=V1GL13UQ51UQ3+.GL13UQ51UQ3/1.1

+.GL13UQ51UQ4.1-W1
=V1GL13UQ51UQ4+.GL13UQ51UQ4/1.1

+.GL13UQ51UQ8.1-W1
=V1GL13UQ51UQ8+.GL13UQ51UQ8/1.1

=V1GL13UQ51BG0/2

2

			Date	12/22/2022	Volvo Trucks North America	Valiant TMS	CONNECTING MOD. FOR VTSA MANIFOLD	Drawing name: =2V04&EFS-EL	= V1GL13UQ51KF1
			Ed.	MKLEPADLO					+ V1GL13UQ51
			Appr		P6700 Underbody Mainline - Cell 2V04			Document type: EFS	Project nr: 22-16151
Modification	Date	Name	Original		Replacement of	Replaced by	Scale 1:1		Page 1 / 1630

I2352.0	V1GL13UQ51-BG01	Sensor Pallet Present At Load Sta #1
I2352.1	V1GL13UQ51-BG03	Sensor Good Pallet Detected At Load
I2352.2	V1GL13UQ51-BG02	Sensor Pallet Clear Of Load Sta #1
I2352.3	V1GL13UQ51-BG04	Sensor Part Present At Load
I2352.4	V1GL13UQ51-BG05	Sensor Pallet Present At Mid-Stop #1 Sta #2
I2352.5	V1GL13UQ51-BG06	Sensor Pallet Clear Of Mid-Stop #1 Sta #2
I2352.6	V1GL13UQ51-BG07	Sensor Pallet Present At Mid-Stop #2 Sta #3
I2352.7	I2352.7	SPARE
I2353.0	V1GL13UQ51-BG08	Sensor Pallet Present At Mid-Stop #3 Sta #4
I2353.1	V1GL13UQ51-BG09	Sensor Pallet Clear Of Mid-Stop #3 Sta #4
I2353.2	V1GL13UQ51-BG17	Sensor Pallet Present At Pre-Load Sta #8
I2353.3	I2353.3	SPARE
I2353.4	I2353.4	SPARE
I2353.5	I2353.5	SPARE
I2353.6	I2353.6	SPARE
I2353.7	I2353.7	SPARE

-KF1.12

FESTO
CPX-M-AB-8-M12X2-5POL
549335

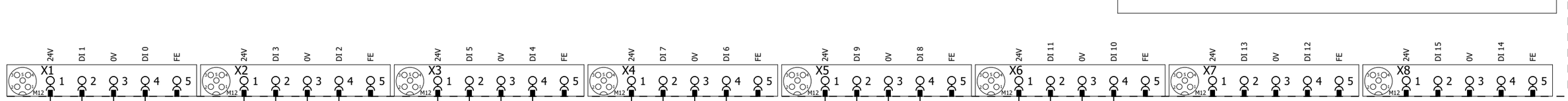

-XG1/3
=V1GL13UQ51BG0/1.1

-XG2/4
=V1GL13UQ51BG0/1.4

-XG5/6
=V1GL13UQ51BG0/1.6

-BG07
=V1GL13UQ51BG0/2.1

-XG8/9
=V1GL13UQ51BG0/2.4

-BG17
=V1GL13UQ51BG0/2.6

1 3

			Date	12/22/2022	Volvo Trucks North America	Valiant TMS	I/O MOD. DI16 (8 x M12) FOR VTSA-F	Drawing name: =2V04&EFS-EL	= V1GL13UQ51KF1	
			Ed.	MKLEPADLO					+ V1GL13UQ51	
			Appr		P6700 Underbody Mainline - Cell 2V04	Scale 1:1		Document type: EFS	Project nr: 22-16151	Page 2
Modification	Date	Name	Original		Replacement of	Replaced by				1630

0	1	2	3	4	5	6	7	8	9

-KF1.13

FESTO

CPX-M-AB-8-M12X2-5POL
549335

I2354.0	DI 0 X1:4	I2354.0	SPARE
I2354.1	DI 1 X1:2	I2354.1	SPARE
I2354.2	DI 2 X2:4	I2354.2	SPARE
I2354.3	DI 3 X2:2	I2354.3	SPARE
I2354.4	DI 4 X3:4	I2354.4	SPARE
I2354.5	DI 5 X3:2	I2354.5	SPARE
I2354.6	DI 6 X4:4	I2354.6	SPARE
I2354.7	DI 7 X4:2	I2354.7	SPARE
I2355.0	DI 8 X5:4	I2355.0	SPARE
I2355.1	DI 9 X5:2	I2355.1	SPARE
I2355.2	DI 10 X6:4	I2355.2	SPARE
I2355.3	DI 11 X6:2	I2355.3	SPARE
I2355.4	DI 12 X7:4	I2355.4	SPARE
I2355.5	DI 13 X7:2	I2355.5	SPARE
I2355.6	DI 14 X8:4	I2355.6	SPARE
I2355.7	DI 15 X8:2	I2355.7	SPARE

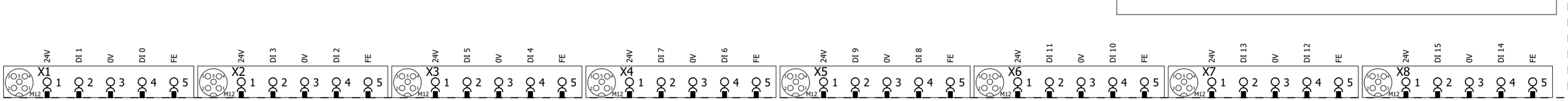

2 4

			Date	12/22/2022	Volvo Trucks North America	Valiant TMS	I/O MOD. DI16 (8 x M12) FOR VTSA-F	Drawing name: =2V04&EFS-EL	= V1GL13UQ51KF1
			Ed.	MKLEPADLO					+ V1GL13UQ51
			Appr		P6700 Underbody Mainline - Cell 2V04	Scale 1:1		Document type: EFS	Project nr: 22-16151 / Page 3 / 1630
Modification	Date	Name	Original		Replacement of / Replaced by				

KF1.14

FESTO

CPX-M-AB-8-M12X2-5POL

549335

I2356.0	DI 0 X1:4	I2356.0	SPARE
I2356.1	DI 1 X1:2	I2356.1	SPARE
I2356.2	DI 2 X2:4	I2356.2	SPARE
I2356.3	DI 3 X2:2	I2356.3	SPARE
I2356.4	DI 4 X3:4	I2356.4	SPARE
I2356.5	DI 5 X3:2	I2356.5	SPARE
I2356.6	DI 6 X4:4	I2356.6	SPARE
I2356.7	DI 7 X4:2	I2356.7	SPARE
I2357.0	DI 8 X5:4	I2357.0	SPARE
I2357.1	DI 9 X5:2	I2357.1	SPARE
I2357.2	DI 10 X6:4	I2357.2	SPARE
I2357.3	DI 11 X6:2	I2357.3	SPARE
I2357.4	DI 12 X7:4	I2357.4	SPARE
I2357.5	DI 13 X7:2	I2357.5	SPARE
I2357.6	DI 14 X8:4	I2357.6	SPARE
I2357.7	DI 15 X8:2	I2357.7	SPARE

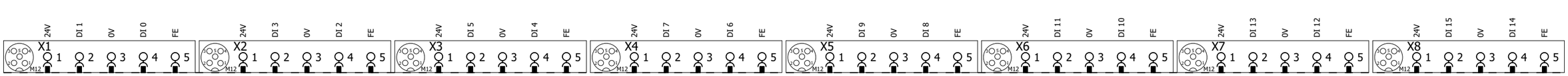

3 5

			Date	12/22/2022	Volvo Trucks North America	Valiant TMS	I/O MOD. DI16 (8 x M12) FOR VTSA-F	Drawing name: =2V04&EFS-EL	= V1GL13UQ51KF1	
			Ed.	MKLEPADLO					+ V1GL13UQ51	
			Appr		P6700 Underbody Mainline - Cell 2V04			Document type: EFS	Project nr: 22-16151	Page 4
Modification	Date	Name	Original		Replacement of / Replaced by	Scale 1:1				1630

-KF2 -KF2.11 -KF2.12 -KF2.13 -KF2.14 -KF2.20 -KF2.21 -KF2.22 -KF2.23 -KF2.24 -KF2.25

M1 M2 M3

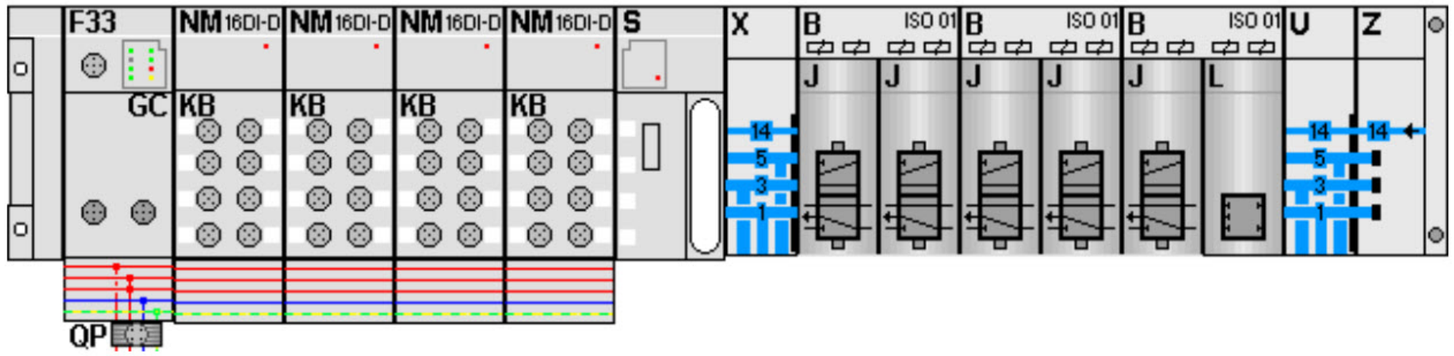

-KF1.21
=V1GL13UQ51UQ1+.GL13UQ51UQ1/1.3
=V1GL13UQ51UQ2+.GL13UQ51UQ2/1.3

FESTO

=V1GL13UQ51UQ1+.GL13UQ51UQ1/1.4	Q2350.0 DO 0 1.1	-QN1.1_Q	Pallet Stop Station #1 Load (RST)
=V1GL13UQ51UQ1+.GL13UQ51UQ1/1.4	Q2350.1 DO 1 1.2	-QN1.2_Q	Pallet Stop Station #1 Load (SET)
=V1GL13UQ51UQ2+.GL13UQ51UQ2/1.4	Q2350.2 DO 2 2.1	-QN2.1_Q	Pallet Stop Station #2 Mid-Stop #1 (RST)
=V1GL13UQ51UQ2+.GL13UQ51UQ2/1.4	Q2350.3 DO 3 2.2	-QN2.2_Q	Pallet Stop Station #2 Mid-Stop #1 (SET)

-KF1.22
=V1GL13UQ51UQ3+.GL13UQ51UQ3/1.3
=V1GL13UQ51UQ4+.GL13UQ51UQ4/1.3

FESTO

=V1GL13UQ51UQ3+.GL13UQ51UQ3/1.4	Q2350.4 DO 0 1.1	-QN3.1_Q	Pallet Stop Station #3 Mid-Stop #2 (RST)
=V1GL13UQ51UQ3+.GL13UQ51UQ3/1.4	Q2350.5 DO 1 1.2	-QN3.2_Q	Pallet Stop Station #3 Mid-Stop #2 (SET)
=V1GL13UQ51UQ4+.GL13UQ51UQ4/1.4	Q2350.6 DO 2 2.1	-QN4.1_Q	Pallet Stop Station #7 Mid-Stop #4 (RST)
=V1GL13UQ51UQ4+.GL13UQ51UQ4/1.4	Q2350.7 DO 3 2.2	-QN4.2_Q	Pallet Stop Station #7 Mid-Stop #4 (SET)

-KF1.23
=V1GL13UQ51UQ8+.GL13UQ51UQ8/1.3

FESTO

=V1GL13UQ51UQ8+.GL13UQ51UQ8/1.4	Q2351.0 DO 0 1.1	-QN5.1_Q	Pallet Stop Station #8 Pre-Load (RST)
=V1GL13UQ51UQ8+.GL13UQ51UQ8/1.4	Q2351.1 DO 1 1.2	-QN5.2_Q	Pallet Stop Station #8 Pre-Load (SET)
	Q2351.2 DO 2 2.1	-QN6.1_Q	Spare
	Q2351.3 DO 3 2.2	-QN6.2_Q	Spare

			Date	12/22/2022	Volvo Trucks North America	Valiant TMS	CONNECTING MOD. FOR FESTO DQ	Drawing name: =2V04&EFS-EL	= V1GL13UQ51KF1
			Ed.	MKLEPADLO					+ V1GL13UQ51
			Appr		P6700 Underbody Mainline - Cell 2V04			Document type: EFS	Project nr: 22-16151
Modification	Date	Name	Original		Replacement of / Replaced by	Scale 1:1			Page 5 / 1630

0	1	2	3	4	5	6	7	8	9

=V1GL13UQ51KF1
+.GL13UQ51

-KF1.21
=V1GL13UQ51KF1+V1GL13UQ51/5.1

Pallet Stop Station #1 Load (RST)	Pallet Stop Station #1 Load (SET)
=V1GL13UQ51KF1	=V1GL13UQ51KF1
+V1GL13UQ51	+V1GL13UQ51
-QN1.1_Q	-QN1.2_Q
=V1GL13UQ51KF1	=V1GL13UQ51KF1
+V1GL13UQ51/5.3	+V1GL13UQ51/5.3
Q2350.0	Q2350.1
1.1 Pneumatic Valve	1.2 Pneumatic Valve

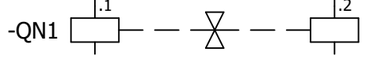

=V1GL13UQ51KF1+V1GL13UQ51/1.1
+.GL13UQ51UQ1.1-W1

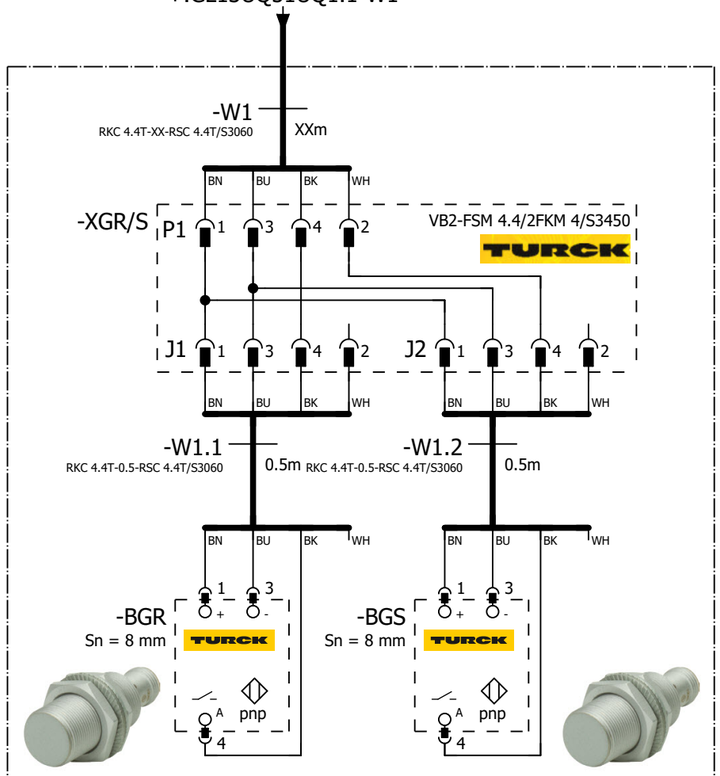

Pallet Stop Station #1 Load
=V1GL13UQ51UQ1.1
+.GL13UQ51UQ1.1
-UQ1.1

=V1GL13UQ51 -UQ1.1-BGR Pallet Stop Station #1 Load	=V1GL13UQ51 -UQ1.1-BGS Pallet Stop Station #1 Load

=V1GL13UQ51KF1+V1GL13UQ51/5

=V1GL13UQ51UQ2+.GL13UQ51UQ2/1

			Date	12/22/2022	Volvo Trucks North America	Valiant TMS	FESTO DQ CONNECTION QN1	Drawing name: =2V04&EFS-EL	= V1GL13UQ51UQ1
			Ed.	MKLEPADLO					+ V1GL13UQ51UQ1
			Appr		P6700 Underbody Mainline - Cell 2V04			Document type: EFS	Project nr: 22-16151
Modification	Date	Name	Original		Replacement of / Replaced by	Scale 1:1			Page 1 / 1630

0	1	2	3	4	5	6	7	8	9

=V1GL13UQ51KF1
+.GL13UQ51

-KF1.21
=V1GL13UQ51KF1+V1GL13UQ51/5.1

Pallet Stop Station #2 Mid-Stop #1 (RST) =V1GL13UQ51KF1 +V1GL13UQ51 -QN2.1_Q =V1GL13UQ51KF1 +V1GL13UQ51/5.3 Q2350.2	Pallet Stop Station #2 Mid-Stop #1 (SET) =V1GL13UQ51KF1 +V1GL13UQ51 -QN2.2_Q =V1GL13UQ51KF1 +V1GL13UQ51/5.3 Q2350.3
2.1 Pneumatic Valve	2.2 Pneumatic Valve

-QN2 .1 .2

=V1GL13UQ51KF1+V1GL13UQ51/1.2
+.GL13UQ51UQ2.1-W1

-W1
RKC 4.4T-XX-RSC 4.4T/S3060
XXm

BN BU BK WH

-XGR/S P1 1 3 4 2 VB2-FSM 4.4/2FKM 4/S3450 TURCK

J1 1 3 4 2 J2 1 3 4 2

BN BU BK WH BN BU BK WH

-W1.1
RKC 4.4T-0.5-RSC 4.4T/S3060
0.5m

-W1.2
RKC 4.4T-0.5-RSC 4.4T/S3060
0.5m

BN BU BK WH BN BU BK WH

-BGR
Sn = 8 mm
TURCK
1 3
+ -
A pnp
4

-BGS
Sn = 8 mm
TURCK
1 3
+ -
A pnp
4

Pallet Stop Station #2 Mid-Stop #1
=V1GL13UQ51UQ2.1
+.GL13UQ51UQ2.1
-UQ2.1

=V1GL13UQ51 -UQ2.1-BGR Pallet Stop Station #2 Mid-Stop #1	=V1GL13UQ51 -UQ2.1-BGS Pallet Stop Station #2 Mid-Stop #1

=V1GL13UQ51UQ1+.GL13UQ51UQ1/1

=V1GL13UQ51UQ3+.GL13UQ51UQ3/1

			Date	12/22/2022	Volvo Trucks North America	Valiant TMS	FESTO DQ CONNECTION QN2	Drawing name: =2V04&EFS-EL	= V1GL13UQ51UQ2
			Ed.	MKLEPADLO					+ V1GL13UQ51UQ2
			Appr		P6700 Underbody Mainline - Cell 2V04			Document type: EFS	Project nr: 22-16151
Modification	Date	Name	Original		Replacement of	Replaced by	Scale 1:1		Page 1 / 1630

0	1	2	3	4	5	6	7	8	9

=V1GL13UQ51KF1
+.GL13UQ51

-KF1.22
=V1GL13UQ51KF1+V1GL13UQ51/5.1

Pallet Stop Station #3 Mid-Stop #2 (RST) =V1GL13UQ51KF1 +V1GL13UQ51 -QN3.1_Q =V1GL13UQ51KF1 +V1GL13UQ51/5.3 Q2350.4	Pallet Stop Station #3 Mid-Stop #2 (SET) =V1GL13UQ51KF1 +V1GL13UQ51 -QN3.2_Q =V1GL13UQ51KF1 +V1GL13UQ51/5.3 Q2350.5
1.1 Pneumatic Valve	1.2 Pneumatic Valve

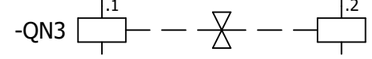

=V1GL13UQ51KF1+V1GL13UQ51/1.3
+.GL13UQ51UQ3.1-W1

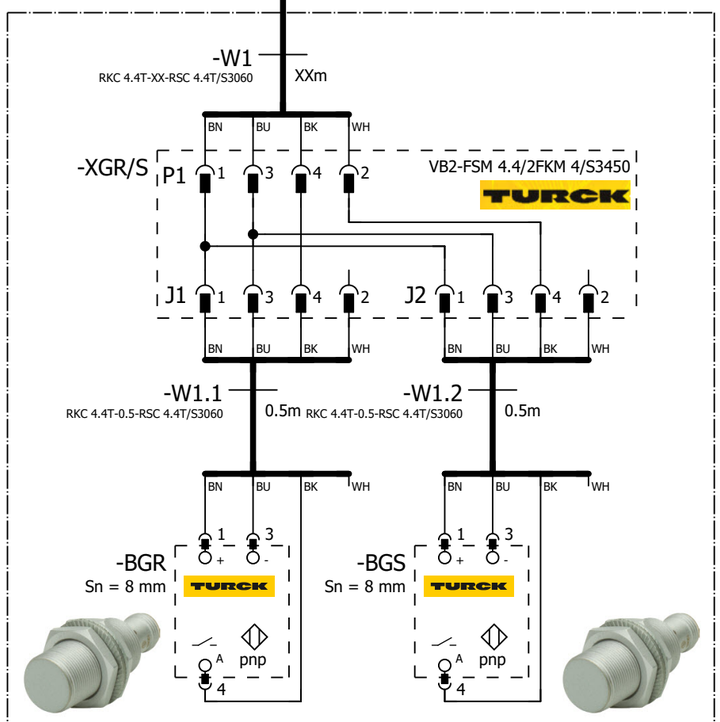

Pallet Stop Station #3 Mid-Stop #2
=V1GL13UQ51UQ3.1
+.GL13UQ51UQ3.1
-UQ3.1

=V1GL13UQ51 -UQ3.1-BGR Pallet Stop Station #3 Mid-Stop #2	=V1GL13UQ51 -UQ3.1-BGS Pallet Stop Station #3 Mid-Stop #2

=V1GL13UQ51UQ2+.GL13UQ51UQ2/1

=V1GL13UQ51UQ4+.GL13UQ51UQ4/1

			Date	12/22/2022	Volvo Trucks North America	Valiant TMS	FESTO DQ CONNECTION QN3	Drawing name: =2V04&EFS-EL	= V1GL13UQ51UQ3
			Ed.	MKLEPADLO					+ V1GL13UQ51UQ3
			Appr		P6700 Underbody Mainline - Cell 2V04			Document type: EFS	Project nr: 22-16151
Modification	Date	Name	Original		Replacement of	Replaced by	Scale 1:1		Page 1 / 1630

0	1	2	3	4	5	6	7	8	9

=V1GL13UQ51KF1
+.GL13UQ51

-KF1.22
=V1GL13UQ51KF1+V1GL13UQ51/5.1

Pallet Stop Station #7 Mid-Stop #4 (RST)	Pallet Stop Station #7 Mid-Stop #4 (SET)
=V1GL13UQ51KF1	=V1GL13UQ51KF1
+V1GL13UQ51	+V1GL13UQ51
-QN4.1_Q	-QN4.2_Q
=V1GL13UQ51KF1	=V1GL13UQ51KF1
+V1GL13UQ51/5.3	+V1GL13UQ51/5.3
Q2350.6	Q2350.7
2.1 Pneumatic Valve	2.2 Pneumatic Valve

-QN4 .1 .2

=V1GL13UQ51KF1+V1GL13UQ51/1.4
+.GL13UQ51UQ4.1-W1

-W1
RKC 4.4T-XX-RSC 4.4T/S3060
XXm

BN BU BK WH

-XGR/S P1 1 3 4 2 VB2-FSM 4.4/2FKM 4/S3450 TURCK

J1 1 3 4 2 J2 1 3 4 2

BN BU BK WH BN BU BK WH

-W1.1
RKC 4.4T-0.5-RSC 4.4T/S3060
0.5m

-W1.2
RKC 4.4T-0.5-RSC 4.4T/S3060
0.5m

BN BU BK WH BN BU BK WH

-BGR
Sn = 8 mm
TURCK
1 3
+ -
A pnp
4

-BGS
Sn = 8 mm
TURCK
1 3
+ -
A pnp
4

Pallet Stop Station #7 Mid-Stop #4
=V1GL13UQ51UQ7.1
+.GL13UQ51UQ7.1
-UQ7.1

=V1GL13UQ51 -UQ7.1-BGR Pallet Stop Station #7 Mid-Stop #4	=V1GL13UQ51 -UQ7.1-BGS Pallet Stop Station #7 Mid-Stop #4

=V1GL13UQ51UQ3+.GL13UQ51UQ3/1

=V1GL13UQ51UQ8+.GL13UQ51UQ8/1

			Date	12/22/2022	Volvo Trucks North America	Valiant TMS	FESTO DQ CONNECTION QN4	Drawing name: =2V04&EFS-EL	= V1GL13UQ51UQ4
			Ed.	MKLEPADLO					+ V1GL13UQ51UQ4
			Appr		P6700 Underbody Mainline - Cell 2V04			Document type: EFS	Project nr: 22-16151
Modification	Date	Name	Original		Replacement of	Replaced by	Scale 1:1		Page 1 / 1630

=V1GL13UQ51KF1
+.GL13UQ51

-KF1.23
=V1GL13UQ51KF1+V1GL13UQ51/5.1

Pallet Stop Station #8 Pre-Load (RST)	Pallet Stop Station #8 Pre-Load (SET)
=V1GL13UQ51KF1	=V1GL13UQ51KF1
+V1GL13UQ51	+V1GL13UQ51
-QN5.1_Q	-QN5.2_Q
=V1GL13UQ51KF1	=V1GL13UQ51KF1
+V1GL13UQ51/5.3	+V1GL13UQ51/5.3
Q2351.0	Q2351.1
1.1 Pneumatic Valve	1.2 Pneumatic Valve

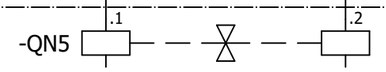

=V1GL13UQ51KF1+V1GL13UQ51/1.5
+.GL13UQ51UQ8.1-W1

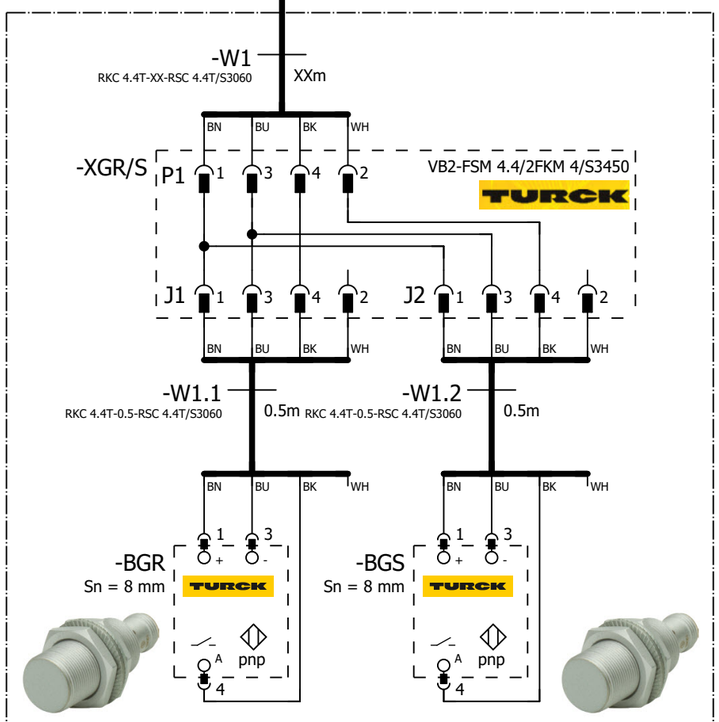

Pallet Stop Station #8 Pre-Load
=V1GL13UQ51UQ8.1
+.GL13UQ51UQ8.1
-UQ8.1

=V1GL13UQ51 -UQ8.1-BGR Pallet Stop Station #8 Pre-Load	=V1GL13UQ51 -UQ8.1-BGS Pallet Stop Station #8 Pre-Load

=V1GL13UQ51UQ4+.GL13UQ51UQ4/1

=V1GL13UQ51WC4+V1GL13UQ51/1

			Date	12/22/2022	Volvo Trucks North America	Valiant TMS	FESTO DQ CONNECTION QN5	Drawing name: =2V04&EFS-EL	= V1GL13UQ51UQ8
			Ed.	MKLEPADLO					+ V1GL13UQ51UQ8
			Appr		P6700 Underbody Mainline - Cell 2V04			Document type: EFS	Project nr: 22-16151
Modification	Date	Name	Original		Replacement of / Replaced by	Scale 1:1			Page 1 / 1630

0	1	2	3	4	5	6	7	8	9

+.UC14

-SWITCHEDPWR4 / =V1WC4+.UC14/23.5

-W1
RSM RKM 56-20M/S3059
20m

-XG51
P1 1 2 4 5 3
J1 1 2 4 5 3
J2 1 2 4 5 3
1 2 4 5 PE

RSM-2RKM 50
TURCK

-XD51.1
7/8" Mini Field Attachable Connector
BS 4151-0/9

W1.1
=V1GL13UQ51KF1/1.1

W1.2
=V1GL13KF1+.GL13KF1/1.1

=V1GL13UQ51UQ8+.GL13UQ51UQ8/1

=V1KF1+.UC11/1

			Date	12/22/2022	Volvo Trucks North America	Valiant TMS	24VDC	Drawing name: =2V04&EFS-EL	= V1GL13UQ51WC4
			Ed.	MKLEPADLO					+ V1GL13UQ51
			Appr		P6700 Underbody Mainline - Cell 2V04	Scale 1:1		Document type: EFS	Project nr: 22-16151
Modification	Date	Name	Original		Replacement of	Replaced by			Page 1 / 1630

0	1	2	3	4	5	6	7	8	9

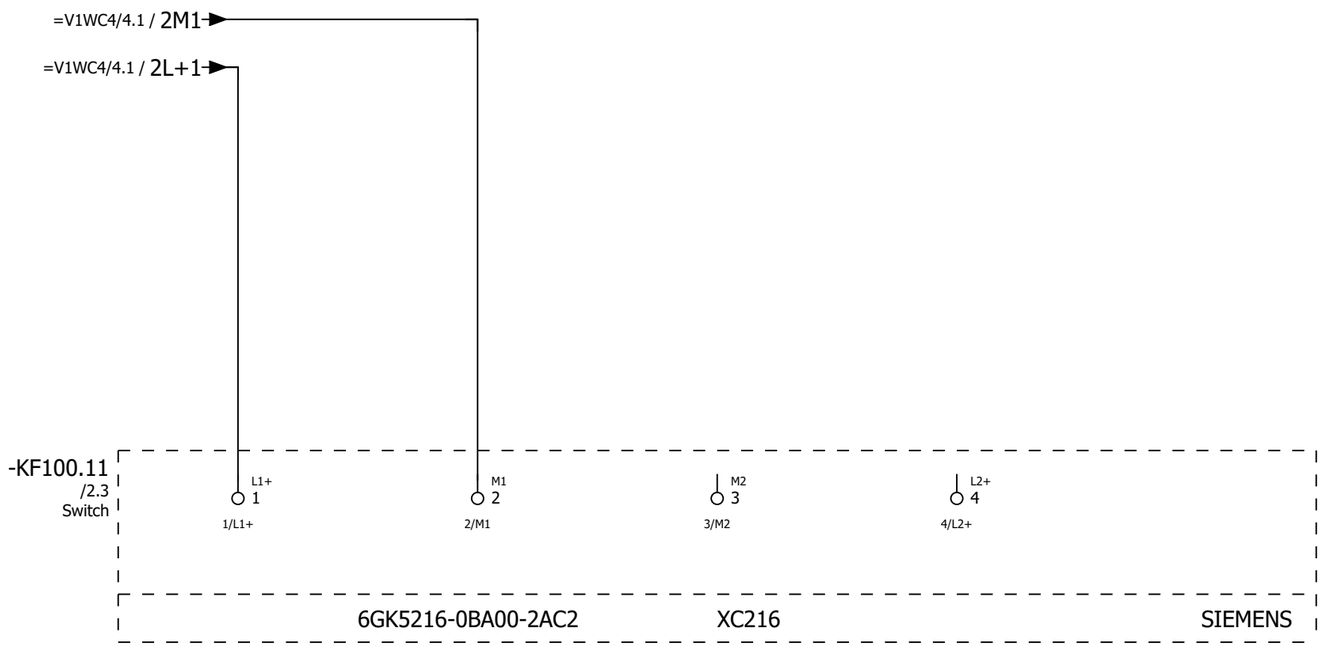

=V1GL13UQ51WC4+.GL13UQ51/1

2

			Date	12/22/2022	Volvo Trucks North America	Valiant TMS	Switch, Scalance XC216	Drawing name: =2V04&EFS-EL	= V1KF1
			Ed.	MKLEPADLO					+ V1UC11
			Appr		P6700 Underbody Mainline - Cell 2V04			Document type: EFS	Project nr: 22-16151
Modification	Date	Name	Original		Replacement of	Replaced by	Scale 1:1		Page 1 / 1630

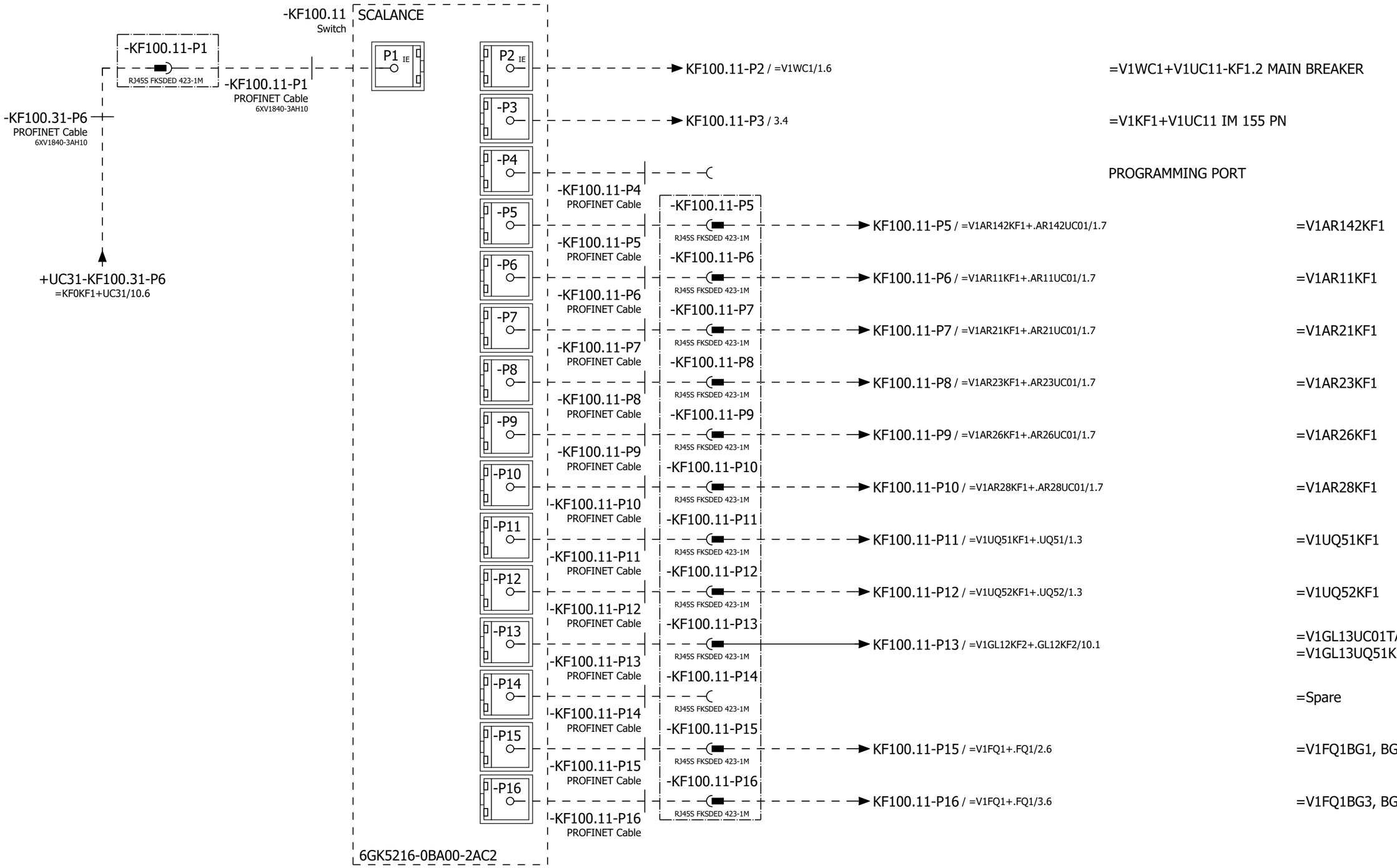

			Date	12/22/2022	Volvo Trucks North America	Valiant TMS	Network Overview	Drawing name: =2V04&EFS-EL	= V1KF1
			Ed.	MKLEPADLO					+ V1UC11
			Appr		P6700 Underbody Mainline - Cell 2V04			Document type: EFS	Project nr: 22-16151
Modification	Date	Name	Original		Replacement of / Replaced by	Scale 1:1			Page 2 / 1630

0	1	2	3	4	5	6	7	8	9

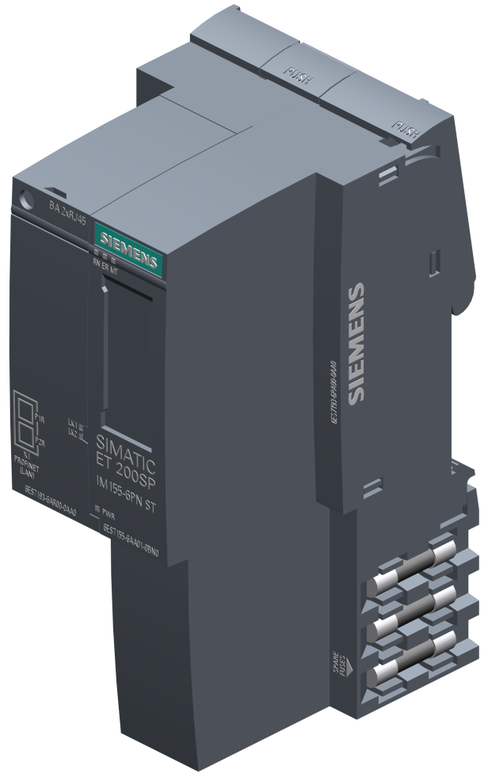

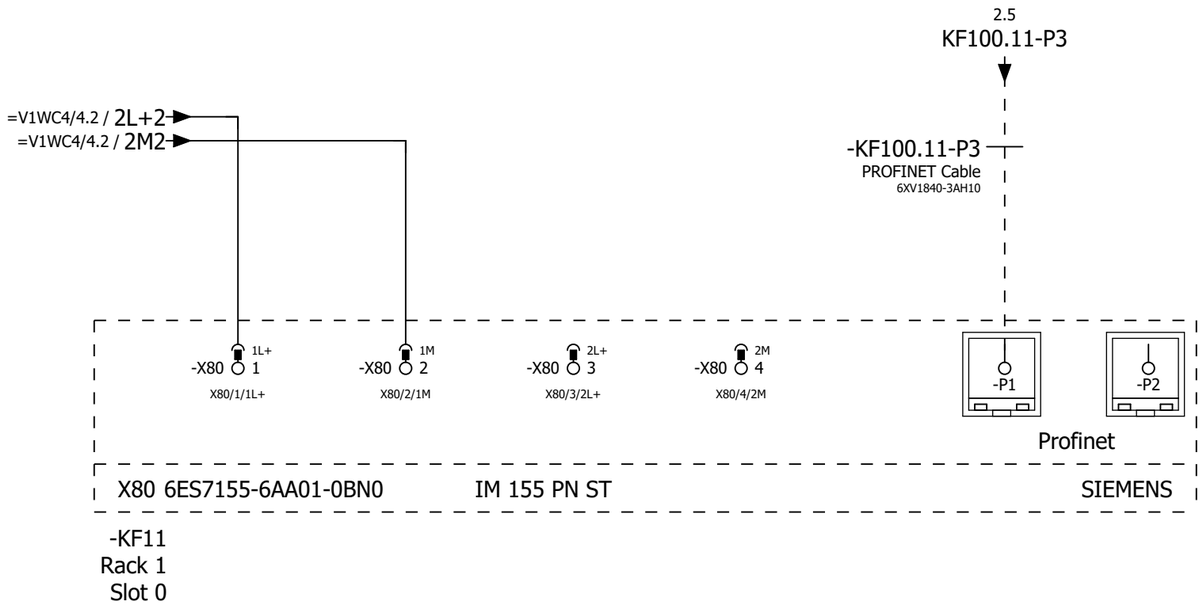

			Date	12/22/2022	Volvo Trucks North America	Valiant TMS	IM 155 PN	Drawing name: =2V04&EFS-EL	= V1KF1	
			Ed.	MKLEPADLO					+ V1UC11	
			Appr		P6700 Underbody Mainline - Cell 2V04			Document type: EFS	Project nr: 22-16151	Page 3
Modification	Date	Name	Original		Replacement of	Replaced by	Scale 1:1			1630

0	1	2	3	4	5	6	7	8	9

-KF11.11
16 DI 24VDC
Rack 1
Slot 1

6ES7131-6BH01-0BA0
DI 16x24 VDC ST SIEMENS

/9.2	/9.2
L+/24VDC	M/0VDC
L+ 24VDC	M 0VDC

=V1WC4/5.2 / 3L+2
=V1WC4/5.2 / 3M2

-KF11.12
16 DI 24VDC
Rack 1
Slot 2

6ES7131-6BH01-0BA0
DI 16x24 VDC ST SIEMENS

/10.2	/10.2
L+/24VDC	M/0VDC
L+ 24VDC	M 0VDC

-KF11.13
16 DI 24VDC
Rack 1
Slot 3

6ES7131-6BH01-0BA0
DI 16x24 VDC ST SIEMENS

/11.2	/11.2
L+/24VDC	M/0VDC
L+ 24VDC	M 0VDC

3

5

			Date	12/22/2022	Volvo Trucks North America	Valiant TMS	ET200S Wiring DI	Drawing name: =2V04&EFS-EL	= V1KF1
			Ed.	MKLEPADLO					+ V1UC11
			Appr		P6700 Underbody Mainline - Cell 2V04			Document type: EFS	Project nr: 22-16151
Modification	Date	Name	Original		Replacement of	Replaced by	Scale 1:1		Page 4 / 1630

0	1	2	3	4	5	6	7	8	9

-KF11.14
16 DI 24VDC
Rack 1
Slot 4

6ES7131-6BH01-0BA0
DI 16x24 VDC ST SIEMENS

/12.2	/12.2
L+/24VDC	M/0VDC
L+ 24VDC	M 0VDC

4 6

			Date	12/22/2022	Volvo Trucks North America	Valiant TMS	ET200S Wiring DI	Drawing name: =2V04&EFS-EL	= V1KF1
			Ed.	MKLEPADLO					+ V1UC11
			Appr		P6700 Underbody Mainline - Cell 2V04			Document type: EFS	Project nr: 22-16151
Modification	Date	Name	Original		Replacement of / Replaced by	Scale 1:1			Page 5 / 1630

-KF11.31
FDI 8 24VDC
Rack 1
Slot 5

6ES7136-6BA00-0CA0
F-DI 8x24VDC HF SIEMENS

/14.2 L+ 24VDC

/14.2 M 0VDC

-KF11.32
FDI 8 24VDC
Rack 1
Slot 6

6ES7136-6BA00-0CA0
F-DI 8x24VDC HF SIEMENS

/15.2 L+ 24VDC

/15.2 M 0VDC

5 7

			Date	12/22/2022	Volvo Trucks North America		Valiant TMS	ET200S Wiring F-DI	Drawing name: =2V04&EFS-EL	= V1KF1	
			Ed.	MKLEPADLO						+ V1UC11	
			Appr		P6700 Underbody Mainline - Cell 2V04		Scale 1:1		Document type: EFS	Project nr: 22-16151	Page 6
Modification	Date	Name	Original		Replacement of	Replaced by					1630

0	1	2	3	4	5	6	7	8	9

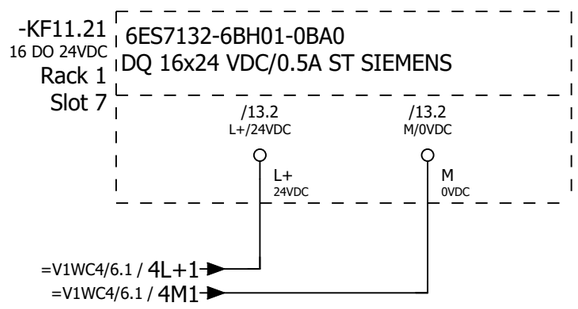

			Date	12/22/2022	Volvo Trucks North America	Valiant TMS	ET200S Wiring DQ	Drawing name: =2V04&EFS-EL	= V1KF1	
			Ed.	MKLEPADLO					+ V1UC11	
			Appr		P6700 Underbody Mainline - Cell 2V04			Document type: EFS	Project nr: 22-16151	Page 7
Modification	Date	Name	Original		Replacement of / Replaced by	Scale 1:1				1630

-KF11.41
=V1FQ1/1.0
=V1FQ1/2.0
=V1FQ1/3.0
=V1FQ1/4.0
/16.1
FDO 4 24VDC
Rack 1
Slot 8

6ES7136-6DB00-0CA0 + BU15-P16+A0+2B F-DQ 4X24VDC/2A PM HF SIEMENS

/16.2 L+ 24VDC

/16.2 M 0VDC

-KF11.42
/17.1
FDO 4 24VDC
Rack 1
Slot 9

6ES7136-6DB00-0CA0 + BU15-P16+A0+2B F-DQ 4X24VDC/2A PM HF SIEMENS

/17.2 L+ 24VDC

/17.2 M 0VDC

			Date	12/22/2022	Volvo Trucks North America	Valiant TMS	ET200S Wiring F-DQ	Drawing name: =2V04&EFS-EL	= V1KF1	
			Ed.	MKLEPADLO					+ V1UC11	
			Appr		P6700 Underbody Mainline - Cell 2V04			Document type: EFS	Project nr: 22-16151	Page 8
Modification	Date	Name	Original		Replacement of / Replaced by	Scale 1:1				1630

0	1	2	3	4	5	6	7	8	9

-KF11.11
/4.0

ET 200SP SIEMENS
DI 16x24 VDC ST

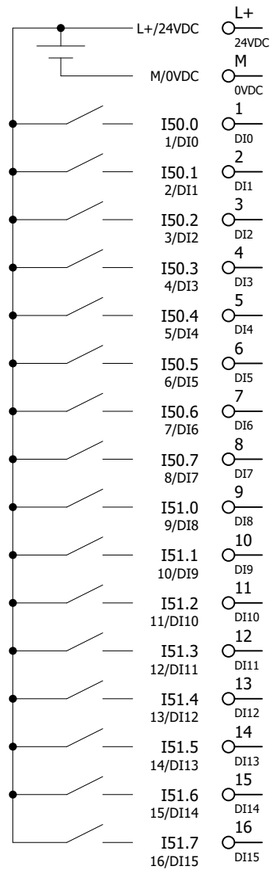

/4.1			
/4.2			
=V1WC2/41.2	I50.0	SPARE	
=V1WC2/41.3	=V1UC11-FC1	Monitoring 480 VAC	
=V1WC4/1.4	=V1WC4+V1UC11-TA1_I	Monitoring 24VDC	
=V1WC4/11.4	=V1WC4+V1UC11-TA2_I	Monitoring 24VDC	
=V1WC4/1.0	=V1WC4+V1UC11-FC11_I	Monitoring 24VDC	
=V1WC4/11.0	=V1WC4+V1UC11-FC12_I	Monitoring 24VDC	
=V1WC2/41.7	I50.6	SPARE	
=V1WC2/41.8	I50.7	SPARE	
=V1WC2/41.2	I51.0	SPARE	
=V1WC2/41.3	I51.1	SPARE	
=V1WC2/41.4	I51.2	SPARE	
=V1WC2/41.4	I51.3	SPARE	
=V1WC2/41.5	I51.4	SPARE	
=V1WC2/41.6	I51.5	SPARE	
=V1WC2/41.7	I51.6	SPARE	
=V1WC2/41.8	I51.7	SPARE	

6ES7131-6BH01-0BA0

			Date	12/22/2022	Volvo Trucks North America		Valiant TMS	ET200S DI Overview KF11.11	Drawing name: =2V04&EFS-EL	= V1KF1	
			Ed.	MKLEPADLO						+ V1UC11	
			Appr		P6700 Underbody Mainline - Cell 2V04				Document type: EFS	Project nr: 22-16151	Page 9
Modification	Date	Name	Original		Replacement of	Replaced by	Scale 1:1				1630

0	1	2	3	4	5	6	7	8	9

-KF11.12
/4.3

ET 200SP SIEMENS
DI 16x24 VDC ST

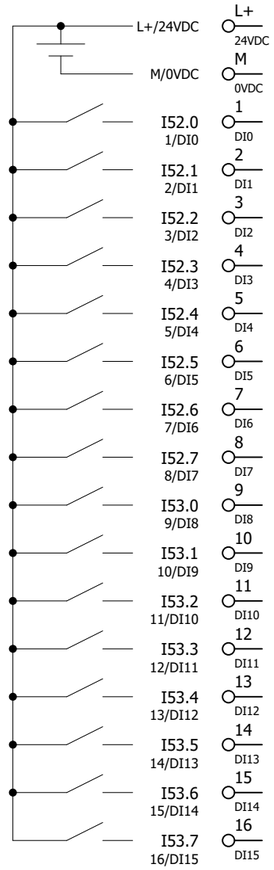

/4.3			
/4.4			
=V1WC2/42.2	=V1AR142-FC1	Monitoring 480 VAC	
=V1WC2/42.3	=V1AR11-FC1	Monitoring 480 VAC	
=V1WC2/42.4	=V1AR21-FC1	Monitoring 480 VAC	
=V1WC2/42.4	=V1AR23-FC1	Monitoring 480 VAC	
=V1WC2/42.5	=V1AR26-FC1	Monitoring 480 VAC	
=V1WC2/42.6	=V1AR28-FC1	Monitoring 480 VAC	
=V1WC2/42.7	=V1AR211-FC1	Monitoring 480 VAC	
=V1WC2/42.8	=V1AR213-FC1	Monitoring 480 VAC	
=V1WC2/42.2	=V1AR52-FC1	Monitoring 480 VAC	
=V1WC2/42.3	=V1AR54-FC1	Monitoring 480 VAC	
=V1WC2/42.4	=V1AR15-FC1	Monitoring 480 VAC	
=V1WC2/42.4	=V1AR52XQ51-FC1	Monitoring 480 VAC	
=V1WC2/42.5	=V1AR54XQ51-FC1	Monitoring 480 VAC	
=V1WC2/42.6	=V1AR142XQ41-FC1	Monitoring 480 VAC	
=V1WC2/42.7	=V1WR1-FC1	Monitoring 480 VAC	
=V1WC2/42.8	I53.7	Spare	

6ES7131-6BH01-0BA0

			Date	12/22/2022	Volvo Trucks North America	Valiant TMS	ET200S DI Overview KF11.12	Drawing name: =2V04&EFS-EL	= V1KF1
			Ed.	MKLEPADLO					+ V1UC11
			Appr		P6700 Underbody Mainline - Cell 2V04			Document type: EFS	Project nr: 22-16151
Modification	Date	Name	Original		Replacement of	Replaced by	Scale 1:1		Page 10 / 1630

0	1	2	3	4	5	6	7	8	9

-KF11.13
/4.5

ET 200SP SIEMENS
DI 16x24 VDC ST

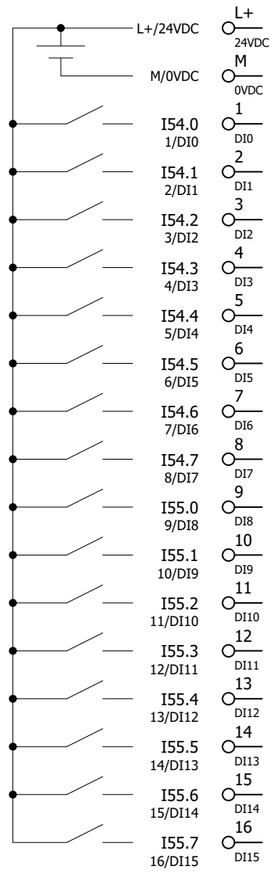

L+/24VDC	/4.6		
M/0VDC	/4.7		
I54.0 1/DI0	=V1WC2/43.2	I54.0	SPARE
I54.1 2/DI1	=V1WC2/43.3	I54.1	SPARE
I54.2 3/DI2	=V1WC2/43.4	I54.2	SPARE
I54.3 4/DI3	=V1WC2/43.4	I54.3	SPARE
I54.4 5/DI4	=V1WC2/43.5	I54.4	SPARE
I54.5 6/DI5	=V1WC2/43.6	I54.5	SPARE
I54.6 7/DI6	=V1WC2/43.7	I54.6	SPARE
I54.7 8/DI7	=V1WC2/43.8	I54.7	SPARE
I55.0 9/DI8	=V1WC3/4.2	=V1WC3+V1UC11-FC2	Monitoring 120 VAC
I55.1 10/DI9	=V1WC3/4.3	=V1WC3+V1UC11-FC3	Monitoring 120 VAC
I55.2 11/DI10	=V1WC3/4.4	=V1WC3+V1UC11-FC4	Monitoring 120 VAC
I55.3 12/DI11	=V1WC3/4.4	=V1WC3+V1UC11-FC6	Monitoring 120 VAC
I55.4 13/DI12	=V1WC3/4.5	=V1WC3+V1UC11-FC7	Monitoring 120 VAC
I55.5 14/DI13	=V1WC3/4.6	=V1WC3+V1UC11-FC8	Monitoring 120 VAC
I55.6 15/DI14	=V1WC3/4.7	=V1WC3+V1UC11-FC9	Monitoring 120 VAC
I55.7 16/DI15	=V1WC3/4.8	=V1WC3+V1UC11-FC10	Monitoring 120 VAC

6ES7131-6BH01-0BA0

10 12

			Date	12/22/2022	Volvo Trucks North America	Valiant TMS	ET200S DI Overview KF11.13	Drawing name: =2V04&EFS-EL	= V1KF1
			Ed.	MKLEPADLO					+ V1UC11
			Appr		P6700 Underbody Mainline - Cell 2V04			Document type: EFS	Project nr: 22-16151
Modification	Date	Name	Original		Replacement of	Replaced by	Scale 1:1		Page 11 / 1630

0	1	2	3	4	5	6	7	8	9

-KF11.14
/5.0

ET 200SP SIEMENS
DI 16x24 VDC ST

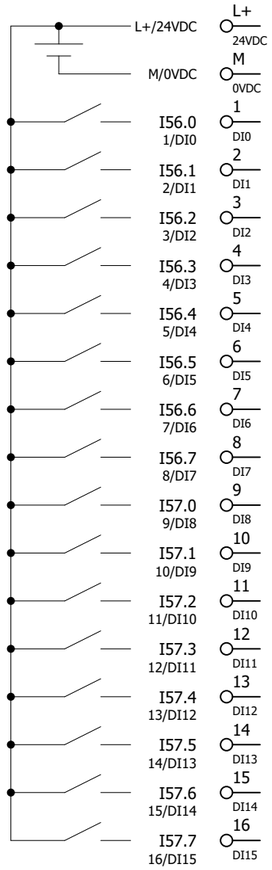

6ES7131-6BH01-0BA0

/5.1			
/5.2			
=V1FQ1/1.8	-KF11.51RQ	Monitoring Safety contactors 11.1L+	
=V1FQ1/2.8	-KF11.52RQ	Monitoring Safety contactors 12.1L+	
=V1FQ1/3.8	-KF11.53RQ	Monitoring Safety contactors 13.1L+	
=V1FQ1/4.8	-KF11.54RQ	Monitoring Safety contactors 14.1L+	
=KH0+KH0/3.6	=KH0-BP3_I	Monitoring S110 Fixture AIR On	
=KH0+KH0/4.6	=KH0-BP4_I	Monitoring S120 Fixture AIR On	
=KH0+KH0/1.6	=KH0-BP1_I	Monitoring Main AIR On	
=KH0+KH0/5.6	=KH0-BP5_I	Monitoring S130 Fixture AIR On	
=V1WC3/4.2	=V1WC3+V1UC11-FC11	Monitoring 120 VAC	
=KH3+KH3/1.6	=KH3-BF1_I	Monitoring Main Water Filter Dirty	
=KH3+KH3/2.6	=KH3-BF2_I	Monitoring Main Water On	
	I57.3	Spare	
	I57.4	Spare	
	I57.5	Spare	
	I57.6	Spare	
	I57.7	Spare	

			Date	12/22/2022	Volvo Trucks North America	Valiant TMS	ET200S DI Overview KF11.14	Drawing name: =2V04&EFS-EL	= V1KF1
			Ed.	MKLEPADLO					+ V1UC11
			Appr		P6700 Underbody Mainline - Cell 2V04			Document type: EFS	Project nr: 22-16151
Modification	Date	Name	Original		Replacement of	Replaced by	Scale 1:1		Page 12 / 1630

0	1	2	3	4	5	6	7	8	9

-KF11.21
/7.1
16 DO 24VDC

ET 200SP SIEMENS
DQ 16x24 VDC/0.5A ST

L+/24VDC	L+ 24VDC	/7.1			
M/0VDC	M 0VDC	/7.2			
Q50.0 1/DQ0	1 DQ0		Q50.0	Spare	
Q50.1 2/DQ1	2 DQ1		Q50.1	Spare	
Q50.2 3/DQ2	3 DQ2		Q50.2	Spare	
Q50.3 4/DQ3	4 DQ3		Q50.3	Spare	
Q50.4 5/DQ4	5 DQ4		Q50.4	Spare	
Q50.5 6/DQ5	6 DQ5		Q50.5	Spare	
Q50.6 7/DQ6	7 DQ6		Q50.6	Spare	
Q50.7 8/DQ7	8 DQ7		Q50.7	Spare	
Q51.0 9/DQ8	9 DQ8		Q51.0	Spare	
Q51.1 10/DQ9	10 DQ9		Q51.1	Spare	
Q51.2 11/DQ10	11 DQ10		Q51.2	Spare	
Q51.3 12/DQ11	12 DQ11		Q51.3	Spare	
Q51.4 13/DQ12	13 DQ12		Q51.4	Spare	
Q51.5 14/DQ13	14 DQ13		Q51.5	Spare	
Q51.6 15/DQ14	15 DQ14		Q51.6	Spare	
Q51.7 16/DQ15	16 DQ15		Q51.7	Spare	

6ES7132-6BH01-0BA0

			Date	12/22/2022	Volvo Trucks North America	Valiant TMS	ET200S DQ Overview KF11.21	Drawing name: =2V04&EFS-EL	= V1KF1	
			Ed.	MKLEPADLO					+ V1UC11	
			Appr		P6700 Underbody Mainline - Cell 2V04			Document type: EFS	Project nr: 22-16151	Page 13
Modification	Date	Name	Original		Replacement of	Replaced by	Scale 1:1			1630

0	1	2	3	4	5	6	7	8	9

-KF11.31
/6.0

ET 200SP SIEMENS
F-DI 8x24VDC HF

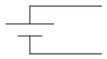

	L+ 24VDC	/6.1			
	M 0VDC	/6.2			
I5050.0	1 DI0	=V1FQ1+.FQ1/9.3	=V1FQ1-BR11.1	2V03/2V04 S100 Conveyor Light Curtain Ch1	
	9 VS0	=V1FQ1+.FQ1/9.3			
I5050.1	2 DI1		I5050.1	Spare	
	10 VS1				
I5050.2	3 DI2		I5050.2	Spare	
	11 VS2				
I5050.3	4 DI3		I5050.3	Spare	
	12 VS3				
I5050.4	5 DI4	=V1FQ1+.FQ1/9.4	=V1FQ1-BR11.2	2V03/2V04 S100 Conveyor Light Curtain Ch2	
	13 VS4	=V1FQ1+.FQ1/9.5			
I5050.5	6 DI5		I5050.5	Spare	
	14 VS5				
I5050.6	7 DI6		I5050.6	Spare	
	15 VS6				
I5050.7	8 DI7		I5050.7	Spare	
	16 VS7				

6ES7136-6BA00-0CA0

			Date	12/22/2022	Volvo Trucks North America	Valiant TMS	ET200S F-DI Overview KF11.31	Drawing name: =2V04&EFS-EL	= V1KF1
			Ed.	MKLEPADLO					+ V1UC11
			Appr		P6700 Underbody Mainline - Cell 2V04			Document type: EFS	Project nr: 22-16151
Modification	Date	Name	Original		Replacement of / Replaced by	Scale 1:1			Page 14 / 1630

0	1	2	3	4	5	6	7	8	9

-KF11.32
/6.3

ET 200SP SIEMENS
F-DI 8x24VDC HF

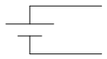

	L+ 24VDC	/6.3			
	M 0VDC	/6.4			
I5056.0	1 DI0		I5056.0	Spare	
	9 VS0				
I5056.1	2 DI1		I5056.1	Spare	
	10 VS1				
I5056.2	3 DI2		I5056.2	Spare	
	11 VS2				
I5056.3	4 DI3		I5056.3	Spare	
	12 VS3				
I5056.4	5 DI4		I5056.4	Spare	
	13 VS4				
I5056.5	6 DI5		I5056.5	Spare	
	14 VS5				
I5056.6	7 DI6		I5056.6	Spare	
	15 VS6				
I5056.7	8 DI7		I5056.7	Spare	
	16 VS7				

6ES7136-6BA00-0CA0

			Date	12/22/2022	Volvo Trucks North America	Valiant TMS	ET200S F-DI Overview KF11.32	Drawing name: =2V04&EFS-EL	= V1KF1	
			Ed.	MKLEPADLO					+ V1UC11	
			Appr		P6700 Underbody Mainline - Cell 2V04			Document type: EFS	Project nr: 22-16151	Page 15
Modification	Date	Name	Original		Replacement of / Replaced by	Scale 1:1				1630

0	1	2	3	4	5	6	7	8	9

-KF11.41
/8.0

ET 200SP SIEMENS
F-DQ 4X24VDC/2A PM HF

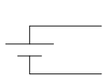

L+ 24VDC		/8.1			
M 0VDC		/8.2			
Q5062.0	1 DQ-P0	=V1FQ1/1.1	-KF11.51	Switched Power 1 11.1L+	
Q5062.0	5				
QX.0	9 DQ-M0	=V1FQ1/1.1			
QX.0	13				
Q5062.1	2 DQ-P1	=V1FQ1/2.1	-KF11.52	Switched Power 2 12.1L+	
Q5062.1	6				
QX.1	10 DQ-M1	=V1FQ1/2.1			
QX.1	14				
Q5062.2	3 DQ-P2	=V1FQ1/3.1	-KF11.53	Switched Power 3 13.1L+	
Q5062.2	7				
QX.2	11 DQ-M2	=V1FQ1/3.1			
QX.2	15				
Q5062.3	4 DQ-P3	=V1FQ1/4.1	-KF11.54	Switched Power 4 14.1L+	
Q5062.3	8				
QX.3	12 DQ-M3	=V1FQ1/4.1			
QX.3	16				

6ES7136-6DB00-0CA0 + BU15-P16+A0+2B

			Date	12/22/2022	Volvo Trucks North America	Valiant TMS	ET200S F-DQ Overview KF11.41	Drawing name: =2V04&EFS-EL	= V1KF1
			Ed.	MKLEPADLO					+ V1UC11
			Appr		P6700 Underbody Mainline - Cell 2V04			Document type: EFS	Project nr: 22-16151
Modification	Date	Name	Original		Replacement of / Replaced by	Scale 1:1			Page 16 / 1630

0	1	2	3	4	5	6	7	8	9

-KF11.42
/8.5

ET 200SP SIEMENS
F-DQ 4X24VDC/2A PM HF

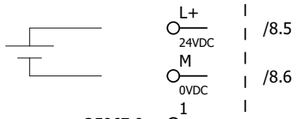

Q5067.0	Q5067.0	Spare
Q5067.1	Q5067.1	Spare
Q5067.2	Q5067.2	Spare
Q5067.3	Q5067.3	Spare

6ES7136-6DB00-0CA0 + BU15-P16+A0+2B

			Date	12/22/2022	Volvo Trucks North America	Valiant TMS	ET200S F-DQ Overview KF11.42	Drawing name: =2V04&EFS-EL	= V1KF1
			Ed.	MKLEPADLO					+ V1UC11
			Appr		P6700 Underbody Mainline - Cell 2V04			Document type: EFS	Project nr: 22-16151
Modification	Date	Name	Original		Replacement of / Replaced by	Scale 1:1			Page 17 / 1630

0	1	2	3	4	5	6	7	8	9

-KF11.51
=V1FQ1/1.2
=V1WC4/12.1

ET 200SP SIEMENS
F-RQ 1x24VDC/24..230VAC/5A

1 RQ01+	=V1WC4/12.2	11L+	
2 RQ01-	=V1WC4/12.2	11.1L+	
3 RQ02+	=V1WC4/12.3	11L+	
4 RQ02-	=V1WC4/12.4	11.1L+	
9 IN P	=V1FQ1/1.3	Switched Power 1 11.1L+P	
10 OUT P	=V1FQ1/1.4	SPARE	
11 IN M	=V1FQ1/1.4	Switched Power 1 11.1L+M	
12 OUT M	=V1FQ1/1.5	SPARE	
1A AUX			
2A AUX			
3A AUX			
4A AUX			

6ES7136-6RA00-0BF0 + BU20-P8+A4+0B

			Date	12/22/2022	Volvo Trucks North America	Valiant TMS	ET200S F-RQ Overview KF11.51	Drawing name: =2V04&EFS-EL	= V1KF1
			Ed.	MKLEPADLO					+ V1UC11
			Appr		P6700 Underbody Mainline - Cell 2V04			Document type: EFS	Project nr: 22-16151
Modification	Date	Name	Original		Replacement of / Replaced by	Scale 1:1			Page 18 / 1630

0	1	2	3	4	5	6	7	8	9

-KF11.52
=V1FQ1/2.2
=V1WC4/13.1

ET 200SP SIEMENS
F-RQ 1x24VDC/24..230VAC/5A

1 RQ01+	=V1WC4/13.2	12L+
2 RQ01-	=V1WC4/13.2	12.1L+
3 RQ02+	=V1WC4/13.3	12L+
4 RQ02-	=V1WC4/13.4	12.1L+
9 IN P	=V1FQ1/2.3	Switched Power 2 12.1L+P
10 OUT P	=V1FQ1/2.4	SPARE
11 IN M	=V1FQ1/2.4	Switched Power 2 12.1L+M
12 OUT M	=V1FQ1/2.5	SPARE

1A AUX
2A AUX
3A AUX
4A AUX

6ES7136-6RA00-0BF0 + BU20-P8+A4+0B

			Date	12/22/2022	Volvo Trucks North America	Valiant TMS	ET200S F-RQ Overview KF11.52	Drawing name: =2V04&EFS-EL	= V1KF1
			Ed.	MKLEPADLO					+ V1UC11
			Appr		P6700 Underbody Mainline - Cell 2V04			Document type: EFS	Project nr: 22-16151
Modification	Date	Name	Original		Replacement of / Replaced by	Scale 1:1			Page 19 / 1630

0	1	2	3	4	5	6	7	8	9

-KF11.53
=V1FQ1/3.2
=V1WC4/14.1

ET 200SP SIEMENS
F-RQ 1x24VDC/24..230VAC/5A

1 RQ01+	=V1WC4/14.2	13L+
2 RQ01-	=V1WC4/14.2	13.1L+
3 RQ02+	=V1WC4/14.3	13L+
4 RQ02-	=V1WC4/14.4	13.1L+
9 IN P	=V1FQ1/3.3	Switched Power 3 13.1L+P
10 OUT P	=V1FQ1/3.4	SPARE
11 IN M	=V1FQ1/3.4	Switched Power 3 13.1L+M
12 OUT M	=V1FQ1/3.5	SPARE

1A AUX
2A AUX
3A AUX
4A AUX

6ES7136-6RA00-0BF0 + BU20-P8+A4+0B

			Date	12/22/2022	Volvo Trucks North America	Valiant TMS	ET200S F-RQ Overview KF11.53	Drawing name: =2V04&EFS-EL	= V1KF1
			Ed.	MKLEPADLO					+ V1UC11
			Appr		P6700 Underbody Mainline - Cell 2V04			Document type: EFS	Project nr: 22-16151
Modification	Date	Name	Original		Replacement of / Replaced by	Scale 1:1			Page 20 / 1630

0	1	2	3	4	5	6	7	8	9

-KF11.54
=V1FQ1/4.2
=V1WC4/15.1

ET 200SP SIEMENS
F-RQ 1x24VDC/24..230VAC/5A

1 RQ01+	=V1WC4/15.2	14L+
2 RQ01-	=V1WC4/15.2	14.1L+
3 RQ02+	=V1WC4/15.3	14L+
4 RQ02-	=V1WC4/15.4	14.1L+
9 IN P	=V1FQ1/4.3	Switched Power 4 14.1L+P
10 OUT P	=V1FQ1/4.4	SPARE
11 IN M	=V1FQ1/4.4	Switched Power 4 14.1L+M
12 OUT M	=V1FQ1/4.5	SPARE

1A AUX
2A AUX
3A AUX
4A AUX

6ES7136-6RA00-0BF0 + BU20-P8+A4+0B

			Date	12/22/2022	Volvo Trucks North America	Valiant TMS	ET200S F-RQ Overview KF11.54	Drawing name: =2V04&EFS-EL	= V1KF1
			Ed.	MKLEPADLO					+ V1UC11
			Appr		P6700 Underbody Mainline - Cell 2V04			Document type: EFS	Project nr: 22-16151
Modification	Date	Name	Original		Replacement of / Replaced by	Scale 1:1			Page 21 / 1630

0	1	2	3	4	5	6	7	8	9

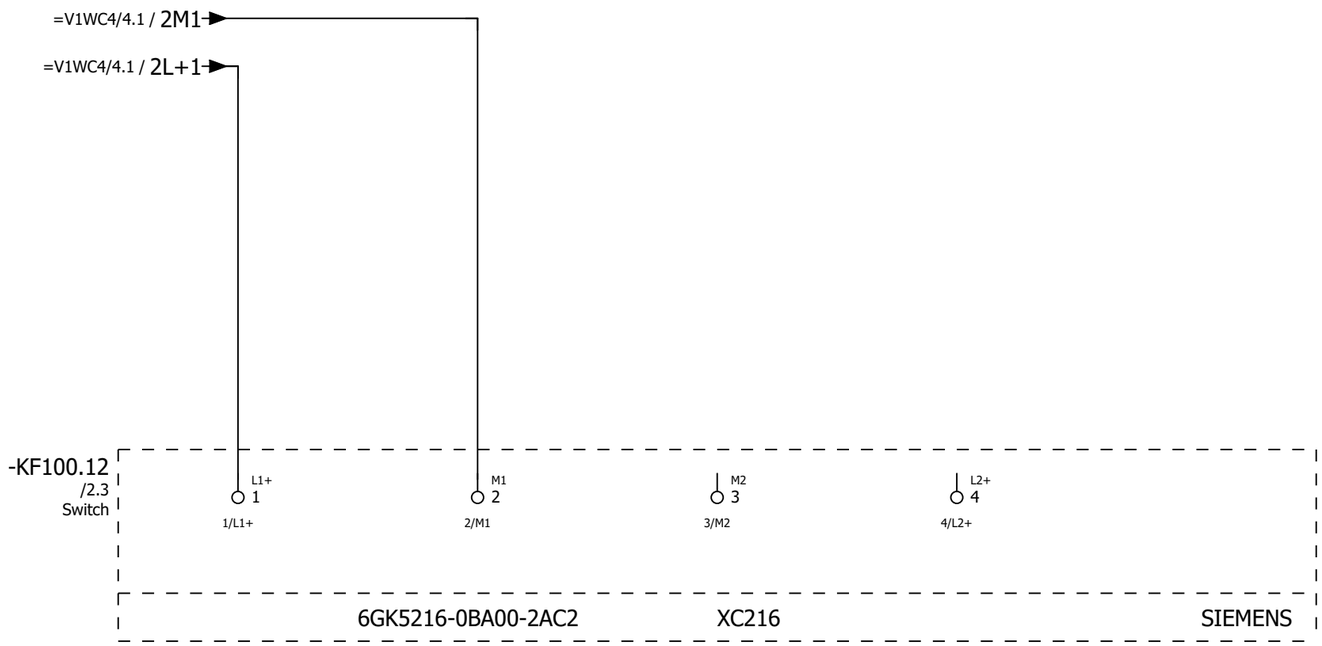

+.UC11/21

2

			Date	12/22/2022	Volvo Trucks North America	Valiant TMS	Switch, Scalance XC216	Drawing name: =2V04&EFS-EL	= V1KF1
			Ed.	MKLEPADLO					+ V1UC12
			Appr		P6700 Underbody Mainline - Cell 2V04			Document type: EFS	Project nr: 22-16151
Modification	Date	Name	Original		Replacement of / Replaced by	Scale 1:1			Page 1 / 1630

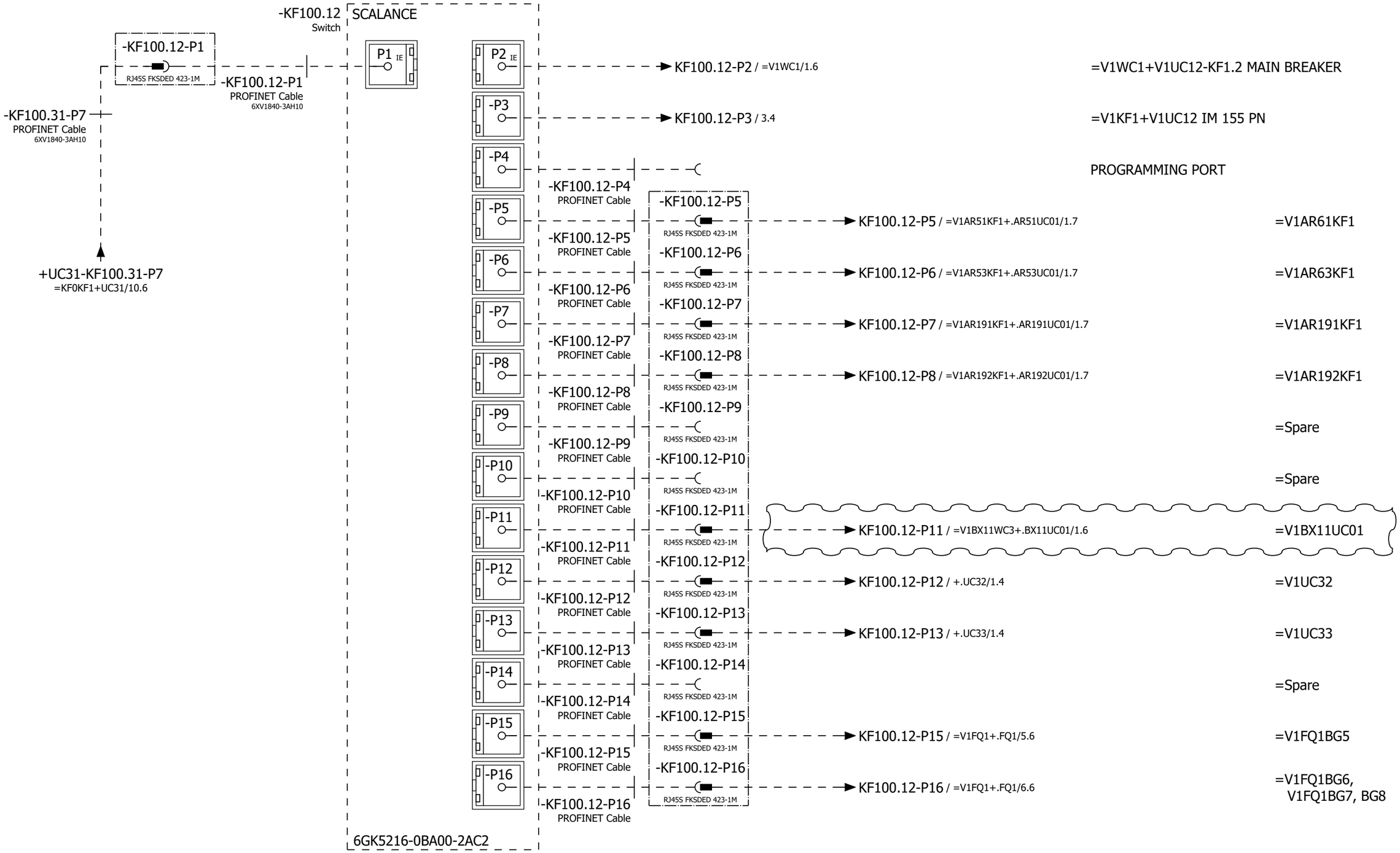

			Date	12/22/2022	Volvo Trucks North America	Valiant TMS	Network Overview	Drawing name: =2V04&EFS-EL	= V1KF1
			Ed.	MKLEPADLO					+ V1UC12
			Appr		P6700 Underbody Mainline - Cell 2V04			Document type: EFS	Project nr: 22-16151
Modification	Date	Name	Original		Replacement of / Replaced by	Scale 1:1			Page 2 / 1630

0	1	2	3	4	5	6	7	8	9

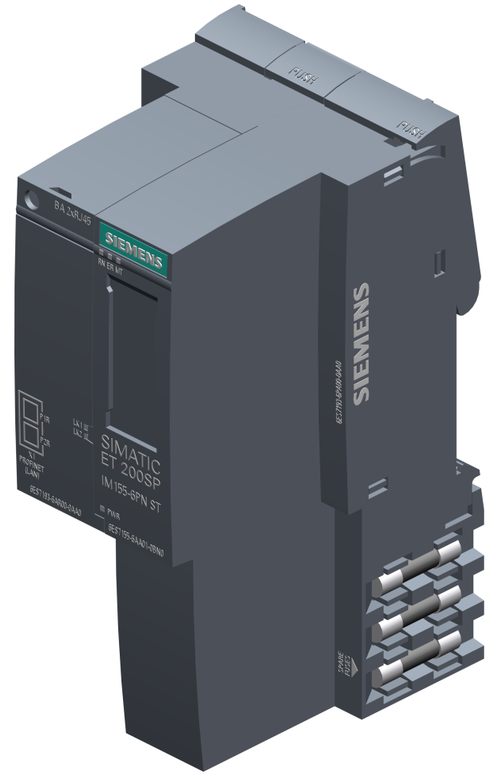

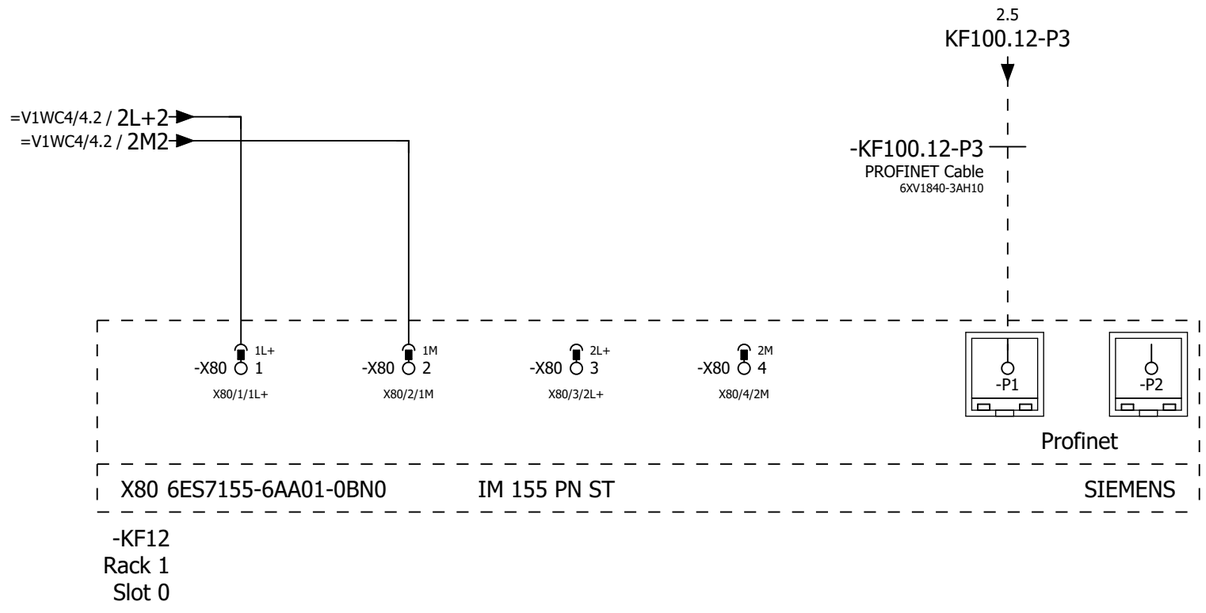

			Date	12/22/2022	Volvo Trucks North America	Valiant TMS	IM 155 PN	Drawing name: =2V04&EFS-EL	= V1KF1	
			Ed.	MKLEPADLO					+ V1UC12	
			Appr		P6700 Underbody Mainline - Cell 2V04			Document type: EFS	Project nr: 22-16151	Page 3
Modification	Date	Name	Original		Replacement of	Replaced by	Scale 1:1			1630

0	1	2	3	4	5	6	7	8	9

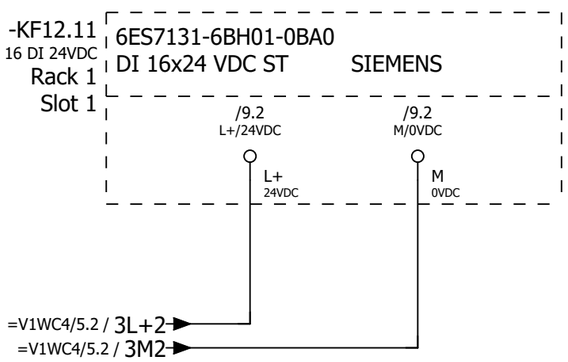

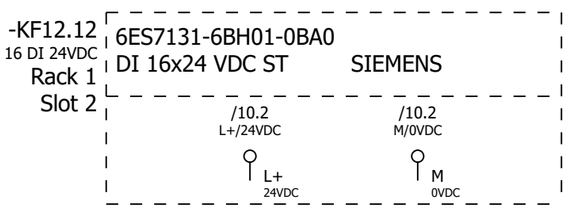

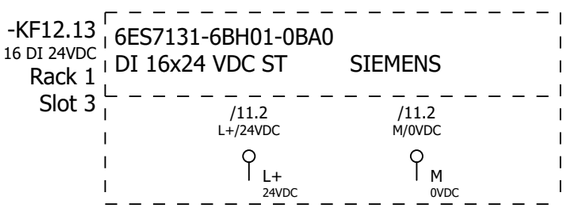

3

5

			Date	12/22/2022	Volvo Trucks North America	Valiant TMS	ET200S Wiring DI	Drawing name: =2V04&EFS-EL	= V1KF1
			Ed.	MKLEPADLO					+ V1UC12
			Appr		P6700 Underbody Mainline - Cell 2V04			Document type: EFS	Project nr: 22-16151
Modification	Date	Name	Original		Replacement of	Replaced by	Scale 1:1		Page 4 / 1630

0	1	2	3	4	5	6	7	8	9

-KF12.14
16 DI 24VDC
Rack 1
Slot 4

6ES7131-6BH01-0BA0
DI 16x24 VDC ST SIEMENS

/12.2	/12.2
L+/24VDC	M/0VDC
L+ 24VDC	M 0VDC

4 6

			Date	12/22/2022	Volvo Trucks North America	Valiant TMS	ET200S Wiring DI	Drawing name: =2V04&EFS-EL	= V1KF1
			Ed.	MKLEPADLO					+ V1UC12
			Appr		P6700 Underbody Mainline - Cell 2V04			Document type: EFS	Project nr: 22-16151
Modification	Date	Name	Original		Replacement of / Replaced by	Scale 1:1			Page 5 / 1630

0	1	2	3	4	5	6	7	8	9

-KF12.31
FDI 8 24VDC
Rack 1
Slot 5

6ES7136-6BA00-0CA0
F-DI 8x24VDC HF SIEMENS

/14.2 L+ 24VDC

/14.2 M 0VDC

-KF12.32
FDI 8 24VDC
Rack 1
Slot 6

6ES7136-6BA00-0CA0
F-DI 8x24VDC HF SIEMENS

/15.2 L+ 24VDC

/15.2 M 0VDC

5 7

			Date	12/22/2022	Volvo Trucks North America	Valiant TMS	ET200S Wiring F-DI	Drawing name: =2V04&EFS-EL	= V1KF1
			Ed.	MKLEPADLO					+ V1UC12
			Appr		P6700 Underbody Mainline - Cell 2V04			Document type: EFS	Project nr: 22-16151
Modification	Date	Name	Original		Replacement of	Replaced by	Scale 1:1		Page 6 / 1630

0	1	2	3	4	5	6	7	8	9

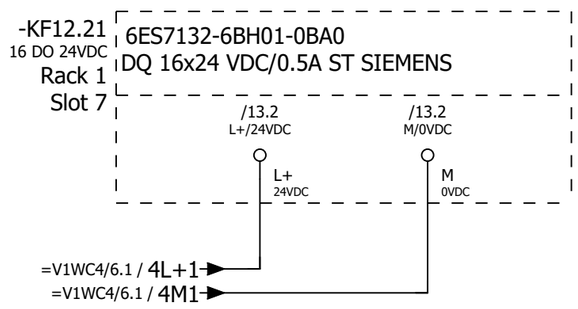

			Date	12/22/2022	Volvo Trucks North America	Valiant TMS	ET200S Wiring DQ	Drawing name: =2V04&EFS-EL	= V1KF1	
			Ed.	MKLEPADLO					+ V1UC12	
			Appr		P6700 Underbody Mainline - Cell 2V04			Document type: EFS	Project nr: 22-16151	Page 7
Modification	Date	Name	Original		Replacement of / Replaced by	Scale 1:1				1630

0	1	2	3	4	5	6	7	8	9

-KF12.41
=V1FQ1/1.0
=V1FQ1/2.0
=V1FQ1/3.0
=V1FQ1/4.0
/16.1
FDO 4 24VDC
Rack 1
Slot 8

6ES7136-6DB00-0CA0 + BU15-P16+A0+2B F-DQ 4X24VDC/2A PM HF SIEMENS

/16.2 L+ 24VDC

/16.2 M 0VDC

-KF12.42
/17.1
FDO 4 24VDC
Rack 1
Slot 9

6ES7136-6DB00-0CA0 + BU15-P16+A0+2B F-DQ 4X24VDC/2A PM HF SIEMENS

/17.2 L+ 24VDC

/17.2 M 0VDC

			Date	12/22/2022	Volvo Trucks North America	Valiant TMS	ET200S Wiring F-DQ	Drawing name: =2V04&EFS-EL	= V1KF1
			Ed.	MKLEPADLO					+ V1UC12
			Appr		P6700 Underbody Mainline - Cell 2V04			Document type: EFS	Project nr: 22-16151
Modification	Date	Name	Original		Replacement of / Replaced by	Scale 1:1			Page 8 / 1630

0	1	2	3	4	5	6	7	8	9

-KF12.11
/4.0

ET 200SP SIEMENS
DI 16x24 VDC ST

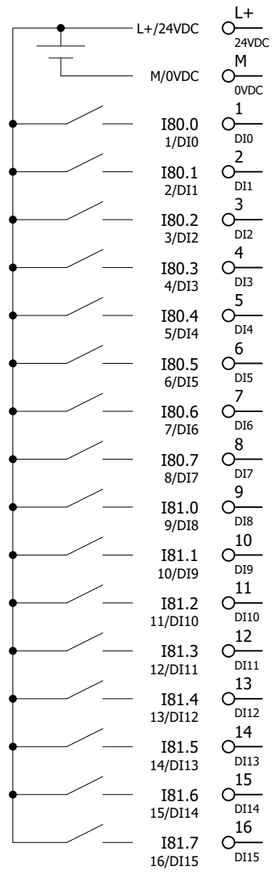

L+/24VDC	/4.1		
M/0VDC	/4.2		
I80.0 1/DI0	=V1WC2/41.2	I80.0	SPARE
I80.1 2/DI1	=V1WC2/41.3	=V1UC12-FC1	Monitoring 480 VAC
I80.2 3/DI2	=V1WC4/1.4	=V1WC4+V1UC12-TA1_I	Monitoring 24VDC
I80.3 4/DI3	=V1WC4/11.4	=V1WC4+V1UC12-TA2_I	Monitoring 24VDC
I80.4 5/DI4	=V1WC4/1.0	=V1WC4+V1UC12-FC11_I	Monitoring 24VDC
I80.5 6/DI5	=V1WC4/11.0	=V1WC4+V1UC12-FC12_I	Monitoring 24VDC
I80.6 7/DI6	=V1WC2/41.7	I80.6	SPARE
I80.7 8/DI7	=V1WC2/41.8	I80.7	SPARE
I81.0 9/DI8	=V1WC2/41.2	I81.0	SPARE
I81.1 10/DI9	=V1WC2/41.3	I81.1	SPARE
I81.2 11/DI10	=V1WC2/41.4	I81.2	SPARE
I81.3 12/DI11	=V1WC2/41.4	I81.3	SPARE
I81.4 13/DI12	=V1WC2/41.5	I81.4	SPARE
I81.5 14/DI13	=V1WC2/41.6	I81.5	SPARE
I81.6 15/DI14	=V1WC2/41.7	I81.6	SPARE
I81.7 16/DI15	=V1WC2/41.8	I81.7	SPARE

6ES7131-6BH01-0BA0

			Date	12/22/2022	Volvo Trucks North America	Valiant TMS	ET200S DI Overview KF12.11	Drawing name: =2V04&EFS-EL	= V1KF1
			Ed.	MKLEPADLO					+ V1UC12
			Appr		P6700 Underbody Mainline - Cell 2V04			Document type: EFS	Project nr: 22-16151
Modification	Date	Name	Original		Replacement of	Replaced by	Scale 1:1		Page 9 / 1630

0	1	2	3	4	5	6	7	8	9

-KF12.12
/4.3

ET 200SP SIEMENS
DI 16x24 VDC ST

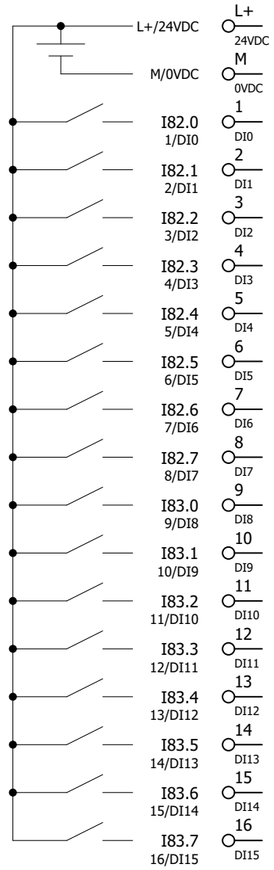

/4.3			
/4.4			
=V1WC2/42.2	=V1AR141-FC1	Monitoring 480 VAC	
=V1WC2/42.3	=V1AR12-FC1	Monitoring 480 VAC	
=V1WC2/42.4	=V1AR22-FC1	Monitoring 480 VAC	
=V1WC2/42.4	=V1AR24-FC1	Monitoring 480 VAC	
=V1WC2/42.5	=V1AR13-FC1	Monitoring 480 VAC	
=V1WC2/42.6	=V1AR14-FC1	Monitoring 480 VAC	
=V1WC2/42.7	=V1AR25-FC1	Monitoring 480 VAC	
=V1WC2/42.8	=V1AR27-FC1	Monitoring 480 VAC	
=V1WC2/42.2	=V1AR29-FC1	Monitoring 480 VAC	
=V1WC2/42.3	=V1AR212-FC1	Monitoring 480 VAC	
=V1WC2/42.4	=V1AR51-FC1	Monitoring 480 VAC	
=V1WC2/42.4	=V1AR51XQ21-FC1	Monitoring 480 VAC	
=V1WC2/42.5	=V1AR53-FC1	Monitoring 480 VAC	
=V1WC2/42.6	=V1AR53XQ21-FC1	Monitoring 480 VAC	
=V1WC2/42.7	=V1AR191-FC1	Monitoring 480 VAC	
=V1WC2/42.8	=V1AR192-FC1	Monitoring 480 VAC	

6ES7131-6BH01-0BA0

			Date	12/22/2022	Volvo Trucks North America	Valiant TMS	ET200S DI Overview KF12.12	Drawing name: =2V04&EFS-EL	= V1KF1
			Ed.	MKLEPADLO					+ V1UC12
			Appr		P6700 Underbody Mainline - Cell 2V04			Document type: EFS	Project nr: 22-16151
Modification	Date	Name	Original		Replacement of	Replaced by	Scale 1:1		Page 10 / 1630

0	1	2	3	4	5	6	7	8	9

-KF12.13
/4.5

ET 200SP SIEMENS
DI 16x24 VDC ST

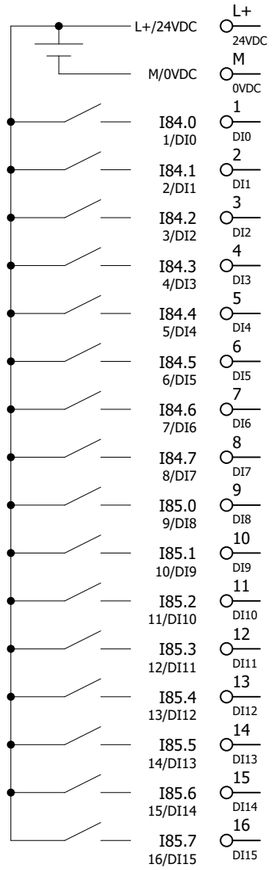

/4.6			
/4.7			
=V1WC2/43.2	I84.0	Monitoring 480 VAC	
=V1WC2/43.3	I84.1	SPARE	
=V1WC2/43.4	I84.2	SPARE	
=V1WC2/43.4	I84.3	SPARE	
=V1WC2/43.5	I84.4	SPARE	
=V1WC2/43.6	I84.5	SPARE	
=V1WC2/43.7	I84.6	SPARE	
=V1WC2/43.8	I84.7	SPARE	
=V1WC3/4.2	=V1WC3+V1UC12-FC2	Monitoring 120 VAC	
=V1WC3/4.3	=V1WC3+V1UC12-FC3	Monitoring 120 VAC	
=V1WC3/4.4	=V1WC3+V1UC12-FC4	Monitoring 120 VAC	
=V1WC3/4.4	=V1WC3+V1UC12-FC6	Monitoring 120 VAC	
=V1WC3/4.5	=V1WC3+V1UC12-FC7	Monitoring 120 VAC	
=V1WC3/4.6	=V1WC3+V1UC12-FC8	Monitoring 120 VAC	
=V1WC3/4.7	=V1WC3+V1UC12-FC9	Monitoring 120 VAC	
=V1WC3/4.8	=V1WC3+V1UC12-FC10	Monitoring 120 VAC	

6ES7131-6BH01-0BA0

			Date	12/22/2022	Volvo Trucks North America	Valiant TMS	ET200S DI Overview KF12.13	Drawing name: =2V04&EFS-EL	= V1KF1
			Ed.	MKLEPADLO					+ V1UC12
			Appr		P6700 Underbody Mainline - Cell 2V04	Scale 1:1		Document type: EFS	Project nr: 22-16151
Modification	Date	Name	Original		Replacement of	Replaced by			Page 11 / 1630

0	1	2	3	4	5	6	7	8	9

-KF12.14
/5.0

ET 200SP SIEMENS
DI 16x24 VDC ST

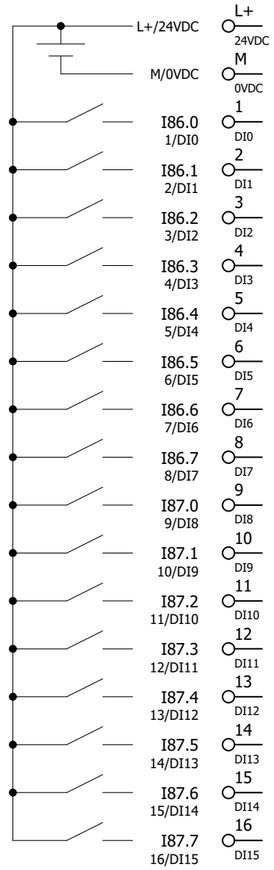

/5.1			
/5.2			
=V1FQ1/1.8	-KF12.51RQ	Monitoring Safety contactors 11.1L+	
=V1FQ1/2.8	-KF12.52RQ	Monitoring Safety contactors 12.1L+	
=V1FQ1/3.8	-KF12.53RQ	Monitoring Safety contactors 13.1L+	
=V1FQ1/4.8	-KF12.54RQ	Monitoring Safety contactors 14.1L+	
	I86.4	Spare	
	I86.5	Spare	
=KH0+KH0/7.6	=KH0-BP7_I	Monitoring S150 Fixture AIR On	
	I86.7	Spare	
=V1WC3/4.2	=V1WC3+V1UC12-FC11	Monitoring 120 VAC	
	I87.1	Spare	
	I87.2	Spare	
	I87.3	Spare	
	I87.4	Spare	
	I87.5	Spare	
	I87.6	Spare	
	I87.7	Spare	

6ES7131-6BH01-0BA0

11 13

			Date	12/22/2022	Volvo Trucks North America	Valiant TMS	ET200S DI Overview KF12.14	Drawing name: =2V04&EFS-EL	= V1KF1
			Ed.	MKLEPADLO					+ V1UC12
			Appr		P6700 Underbody Mainline - Cell 2V04			Document type: EFS	Project nr: 22-16151
Modification	Date	Name	Original		Replacement of	Replaced by	Scale 1:1		Page 12 / 1630

0	1	2	3	4	5	6	7	8	9

-KF12.21
/7.1
16 DO 24VDC

ET 200SP SIEMENS
DQ 16x24 VDC/0.5A ST

L+/24VDC	L+ 24VDC	/7.1	
M/0VDC	M 0VDC	/7.2	
Q80.0 1/DQ0	1 DQ0	Q80.0	Spare
Q80.1 2/DQ1	2 DQ1	Q80.1	Spare
Q80.2 3/DQ2	3 DQ2	Q80.2	Spare
Q80.3 4/DQ3	4 DQ3	Q80.3	Spare
Q80.4 5/DQ4	5 DQ4	Q80.4	Spare
Q80.5 6/DQ5	6 DQ5	Q80.5	Spare
Q80.6 7/DQ6	7 DQ6	Q80.6	Spare
Q80.7 8/DQ7	8 DQ7	Q80.7	Spare
Q81.0 9/DQ8	9 DQ8	Q81.0	Spare
Q81.1 10/DQ9	10 DQ9	Q81.1	Spare
Q81.2 11/DQ10	11 DQ10	Q81.2	Spare
Q81.3 12/DQ11	12 DQ11	Q81.3	Spare
Q81.4 13/DQ12	13 DQ12	Q81.4	Spare
Q81.5 14/DQ13	14 DQ13	Q81.5	Spare
Q81.6 15/DQ14	15 DQ14	Q81.6	Spare
Q81.7 16/DQ15	16 DQ15	Q81.7	Spare

6ES7132-6BH01-0BA0

			Date	12/22/2022	Volvo Trucks North America	Valiant TMS	ET200S DQ Overview KF12.21	Drawing name: =2V04&EFS-EL	= V1KF1
			Ed.	MKLEPADLO					+ V1UC12
			Appr		P6700 Underbody Mainline - Cell 2V04			Document type: EFS	Project nr: 22-16151
Modification	Date	Name	Original		Replacement of / Replaced by	Scale 1:1			Page 13 / 1630

0	1	2	3	4	5	6	7	8	9

-KF12.31
/6.0

ET 200SP SIEMENS
F-DI 8x24VDC HF

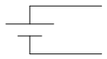

	L+ 24VDC	/6.1			
	M 0VDC	/6.2			
I5080.0	1 DI0		I5080.0	Spare	
	9 VS0				
I5080.1	2 DI1		I5080.1	Spare	
	10 VS1				
I5080.2	3 DI2		I5080.2	Spare	
	11 VS2				
I5080.3	4 DI3		I5080.3	Spare	
	12 VS3				
I5080.4	5 DI4		I5080.4	Spare	
	13 VS4				
I5080.5	6 DI5		I5080.5	Spare	
	14 VS5				
I5080.6	7 DI6		I5080.6	Spare	
	15 VS6				
I5080.7	8 DI7		I5080.7	Spare	
	16 VS7				

6ES7136-6BA00-0CA0

13 15

			Date	12/22/2022	Volvo Trucks North America	Valiant TMS	ET200S F-DI Overview KF12.31	Drawing name: =2V04&EFS-EL	= V1KF1
			Ed.	MKLEPADLO					+ V1UC12
			Appr		P6700 Underbody Mainline - Cell 2V04			Document type: EFS	Project nr: 22-16151
Modification	Date	Name	Original		Replacement of / Replaced by	Scale 1:1			Page 14 / 1630

0	1	2	3	4	5	6	7	8	9

-KF12.32
/6.3

ET 200SP SIEMENS
F-DI 8x24VDC HF

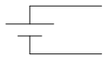

	L+ 24VDC	/6.3			
	M 0VDC	/6.4			
I5086.0	1 DI0		I5086.0	Spare	
	9 VS0				
I5086.1	2 DI1		I5086.1	Spare	
	10 VS1				
I5086.2	3 DI2		I5086.2	Spare	
	11 VS2				
I5086.3	4 DI3		I5086.3	Spare	
	12 VS3				
I5086.4	5 DI4		I5086.4	Spare	
	13 VS4				
I5086.5	6 DI5		I5086.5	Spare	
	14 VS5				
I5086.6	7 DI6		I5086.6	Spare	
	15 VS6				
I5086.7	8 DI7		I5086.7	Spare	
	16 VS7				

6ES7136-6BA00-0CA0

			Date	12/22/2022	Volvo Trucks North America	Valiant TMS	ET200S F-DI Overview KF12.32	Drawing name: =2V04&EFS-EL	= V1KF1	
			Ed.	MKLEPADLO					+ V1UC12	
			Appr		P6700 Underbody Mainline - Cell 2V04			Document type: EFS	Project nr: 22-16151	Page 15
Modification	Date	Name	Original		Replacement of / Replaced by	Scale 1:1				1630

0	1	2	3	4	5	6	7	8	9

-KF12.41
/8.0

ET 200SP SIEMENS
F-DQ 4X24VDC/2A PM HF

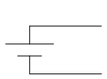

L+ 24VDC		/8.1			
M 0VDC		/8.2			
Q5092.0	1 DQ-P0	=V1FQ1/1.1	-KF12.51	Switched Power 1 11.1L+	
Q5092.0	5				
QX.0	9 DQ-M0	=V1FQ1/1.1			
QX.0	13				
Q5092.1	2 DQ-P1	=V1FQ1/2.1	-KF12.52	Switched Power 2 12.1L+	
Q5092.1	6				
QX.1	10 DQ-M1	=V1FQ1/2.1			
QX.1	14				
Q5092.2	3 DQ-P2	=V1FQ1/3.1	-KF12.53	Switched Power 3 13.1L+	
Q5092.2	7				
QX.2	11 DQ-M2	=V1FQ1/3.1			
QX.2	15				
Q5092.3	4 DQ-P3	=V1FQ1/4.1	-KF12.54	Switched Power 4 14.1L+	
Q5092.3	8				
QX.3	12 DQ-M3	=V1FQ1/4.1			
QX.3	16				

6ES7136-6DB00-0CA0 + BU15-P16+A0+2B

			Date	12/22/2022	Volvo Trucks North America	Valiant TMS	ET200S F-DQ Overview KF12.41	Drawing name: =2V04&EFS-EL	= V1KF1
			Ed.	MKLEPADLO					+ V1UC12
			Appr		P6700 Underbody Mainline - Cell 2V04			Document type: EFS	Project nr: 22-16151
Modification	Date	Name	Original		Replacement of / Replaced by	Scale 1:1			Page 16 / 1630

0	1	2	3	4	5	6	7	8	9

-KF12.42
/8.5

ET 200SP SIEMENS
F-DQ 4X24VDC/2A PM HF

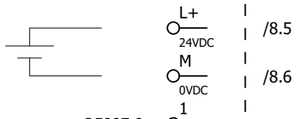

Q5097.0	Q5097.0	Spare
Q5097.1	Q5097.1	Spare
Q5097.2	Q5097.2	Spare
Q5097.3	Q5097.3	Spare

6ES7136-6DB00-0CA0 + BU15-P16+A0+2B

			Date	12/22/2022	Volvo Trucks North America	Valiant TMS	ET200S F-DQ Overview KF12.42	Drawing name: =2V04&EFS-EL	= V1KF1
			Ed.	MKLEPADLO					+ V1UC12
			Appr		P6700 Underbody Mainline - Cell 2V04			Document type: EFS	Project nr: 22-16151
Modification	Date	Name	Original		Replacement of / Replaced by	Scale 1:1			Page 17 / 1630

0	1	2	3	4	5	6	7	8	9

-KF12.51
=V1FQ1/1.2
=V1WC4/12.1

ET 200SP SIEMENS
F-RQ 1x24VDC/24..230VAC/5A

1 RQ01+	=V1WC4/12.2	11L+	
2 RQ01-	=V1WC4/12.2	11.1L+	
3 RQ02+	=V1WC4/12.3	11L+	
4 RQ02-	=V1WC4/12.4	11.1L+	
9 IN P	=V1FQ1/1.3	Switched Power 1 11.1L+P	
10 OUT P	=V1FQ1/1.4	SPARE	
11 IN M	=V1FQ1/1.4	Switched Power 1 11.1L+M	
12 OUT M	=V1FQ1/1.5	SPARE	
1A AUX			
2A AUX			
3A AUX			
4A AUX			

6ES7136-6RA00-0BF0 + BU20-P8+A4+0B

			Date	12/22/2022	Volvo Trucks North America	Valiant TMS	ET200S F-RQ Overview KF12.51	Drawing name: =2V04&EFS-EL	= V1KF1
			Ed.	MKLEPADLO					+ V1UC12
			Appr		P6700 Underbody Mainline - Cell 2V04			Document type: EFS	Project nr: 22-16151
Modification	Date	Name	Original		Replacement of / Replaced by	Scale 1:1			Page 18 / 1630

0	1	2	3	4	5	6	7	8	9

-KF12.52
=V1FQ1/2.2
=V1WC4/13.1

ET 200SP SIEMENS
F-RQ 1x24VDC/24..230VAC/5A

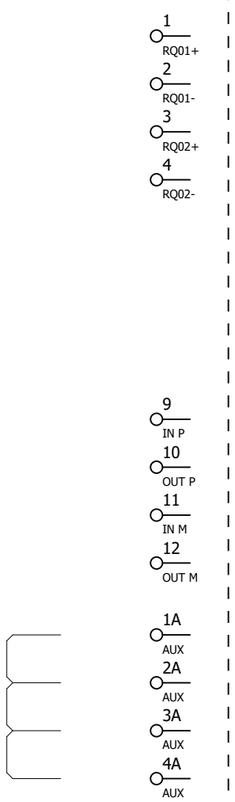

=V1WC4/13.2	12L+	
=V1WC4/13.2	12.1L+	
=V1WC4/13.3	12L+	
=V1WC4/13.4	12.1L+	
=V1FQ1/2.3	Switched Power 2 12.1L+P	
=V1FQ1/2.4	SPARE	
=V1FQ1/2.4	Switched Power 2 12.1L+M	
=V1FQ1/2.5	SPARE	

6ES7136-6RA00-0BF0 + BU20-P8+A4+0B

			Date	12/22/2022	Volvo Trucks North America	Valiant TMS	ET200S F-RQ Overview KF12.52	Drawing name: =2V04&EFS-EL		= V1KF1	
			Ed.	MKLEPADLO						+ V1UC12	
			Appr		P6700 Underbody Mainline - Cell 2V04			Document type: EFS	Project nr: 22-16151	Page	19
Modification	Date	Name	Original		Replacement of / Replaced by	Scale 1:1					1630

0	1	2	3	4	5	6	7	8	9

-KF12.53
=V1FQ1/3.2
=V1WC4/14.1

ET 200SP SIEMENS
F-RQ 1x24VDC/24..230VAC/5A

1 RQ01+	=V1WC4/14.2	13L+
2 RQ01-	=V1WC4/14.2	13.1L+
3 RQ02+	=V1WC4/14.3	13L+
4 RQ02-	=V1WC4/14.4	13.1L+
9 IN P	=V1FQ1/3.3	Switched Power 3 13.1L+P
10 OUT P	=V1FQ1/3.4	SPARE
11 IN M	=V1FQ1/3.4	Switched Power 3 13.1L+M
12 OUT M	=V1FQ1/3.5	SPARE

1A AUX
2A AUX
3A AUX
4A AUX

6ES7136-6RA00-0BF0 + BU20-P8+A4+0B

			Date	12/22/2022	Volvo Trucks North America	Valiant TMS	ET200S F-RQ Overview KF12.53	Drawing name: =2V04&EFS-EL	= V1KF1
			Ed.	MKLEPADLO					+ V1UC12
			Appr		P6700 Underbody Mainline - Cell 2V04			Document type: EFS	Project nr: 22-16151
Modification	Date	Name	Original		Replacement of / Replaced by	Scale 1:1			Page 20 / 1630

0	1	2	3	4	5	6	7	8	9

-KF12.54
=V1FQ1/4.2
=V1WC4/15.1

ET 200SP SIEMENS
F-RQ 1x24VDC/24..230VAC/5A

1 RQ01+	=V1WC4/15.2	14L+
2 RQ01-	=V1WC4/15.2	14.1L+
3 RQ02+	=V1WC4/15.3	14L+
4 RQ02-	=V1WC4/15.4	14.1L+
9 IN P	=V1FQ1/4.3	Switched Power 4 14.1L+P
10 OUT P	=V1FQ1/4.4	SPARE
11 IN M	=V1FQ1/4.4	Switched Power 4 14.1L+M
12 OUT M	=V1FQ1/4.5	SPARE

1A AUX
2A AUX
3A AUX
4A AUX

6ES7136-6RA00-0BF0 + BU20-P8+A4+0B

			Date	12/22/2022	Volvo Trucks North America	Valiant TMS	ET200S F-RQ Overview KF12.54	Drawing name: =2V04&EFS-EL	= V1KF1
			Ed.	MKLEPADLO					+ V1UC12
			Appr		P6700 Underbody Mainline - Cell 2V04			Document type: EFS	Project nr: 22-16151
Modification	Date	Name	Original		Replacement of / Replaced by	Scale 1:1			Page 21 / 1630

0	1	2	3	4	5	6	7	8	9

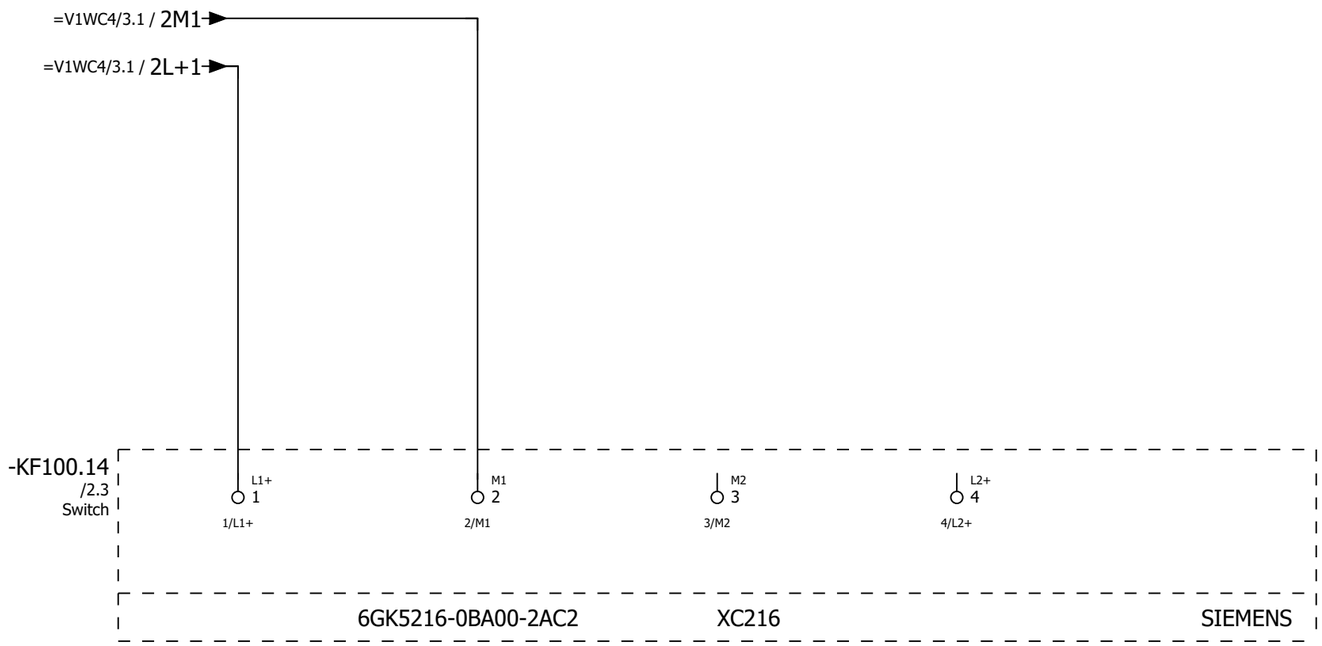

+.UC12/21

2

			Date	12/22/2022	Volvo Trucks North America	Valiant TMS	Switch, Scalance XC216	Drawing name: =2V04&EFS-EL	= V1KF1
			Ed.	MKLEPADLO					+ V1UC14
			Appr		P6700 Underbody Mainline - Cell 2V04			Document type: EFS	Project nr: 22-16151
Modification	Date	Name	Original		Replacement of	Replaced by	Scale 1:1		Page 1 / 1630

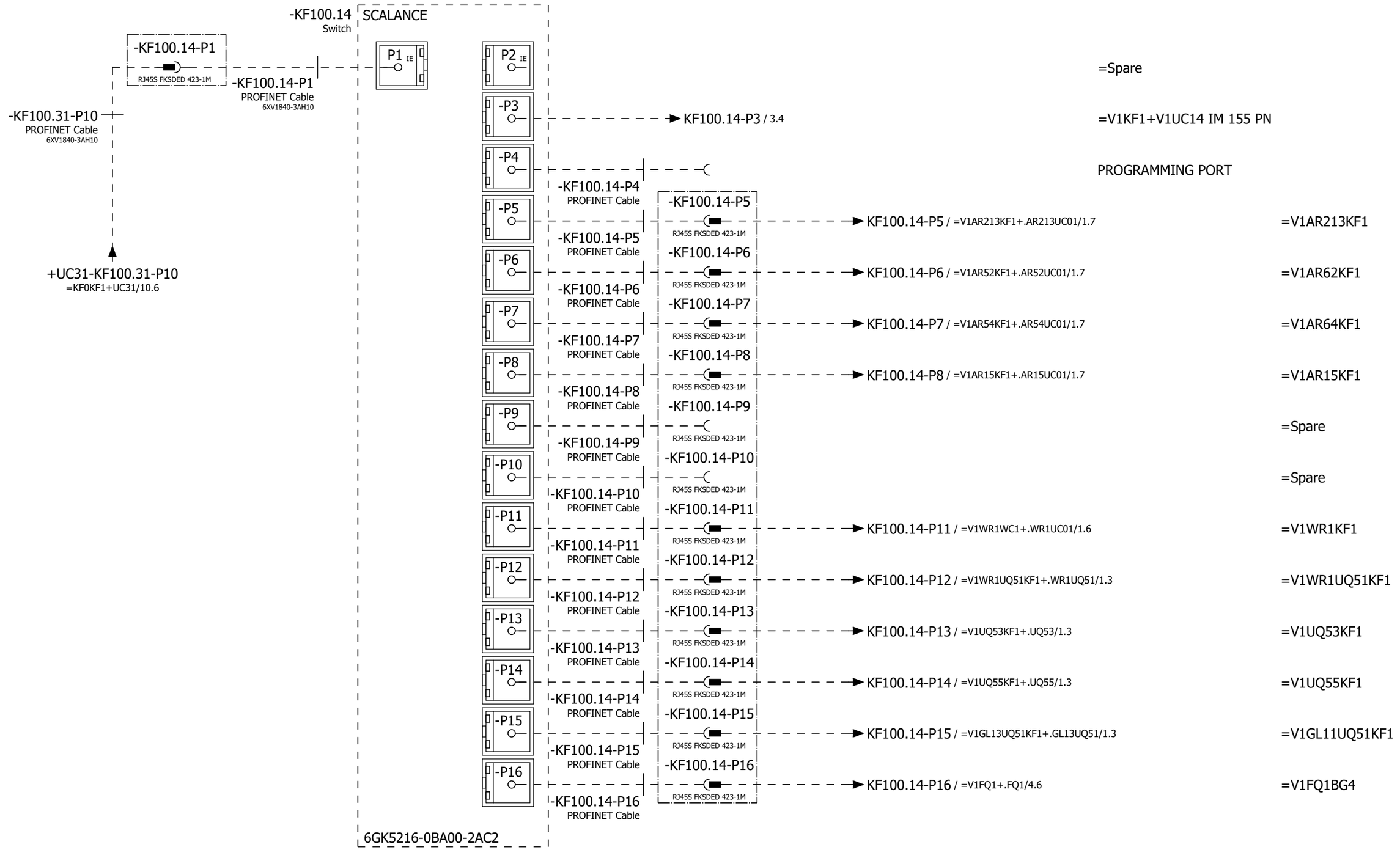

			Date	12/22/2022	Volvo Trucks North America		Valiant TMS	Network Overview	Drawing name: =2V04&EFS-EL	= V1KF1	
			Ed.	MKLEPADLO						+ V1UC14	
			Appr		P6700 Underbody Mainline - Cell 2V04				Document type: EFS	Project nr: 22-16151	Page 2
Modification	Date	Name	Original		Replacement of	Replaced by	Scale 1:1				1630

0	1	2	3	4	5	6	7	8	9

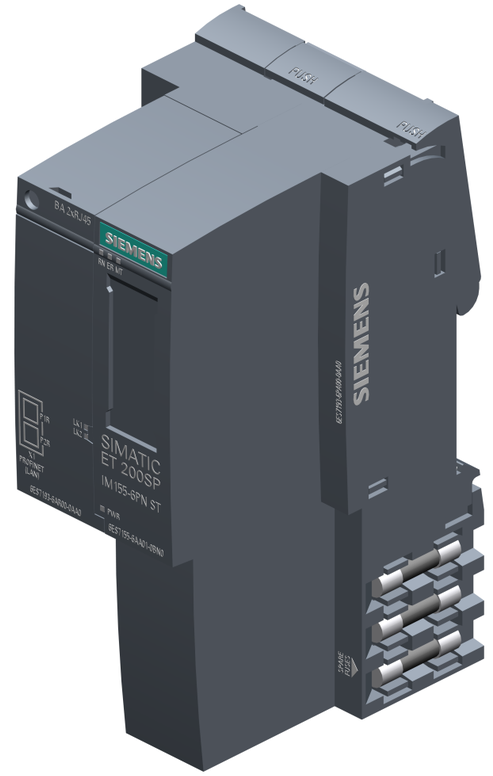

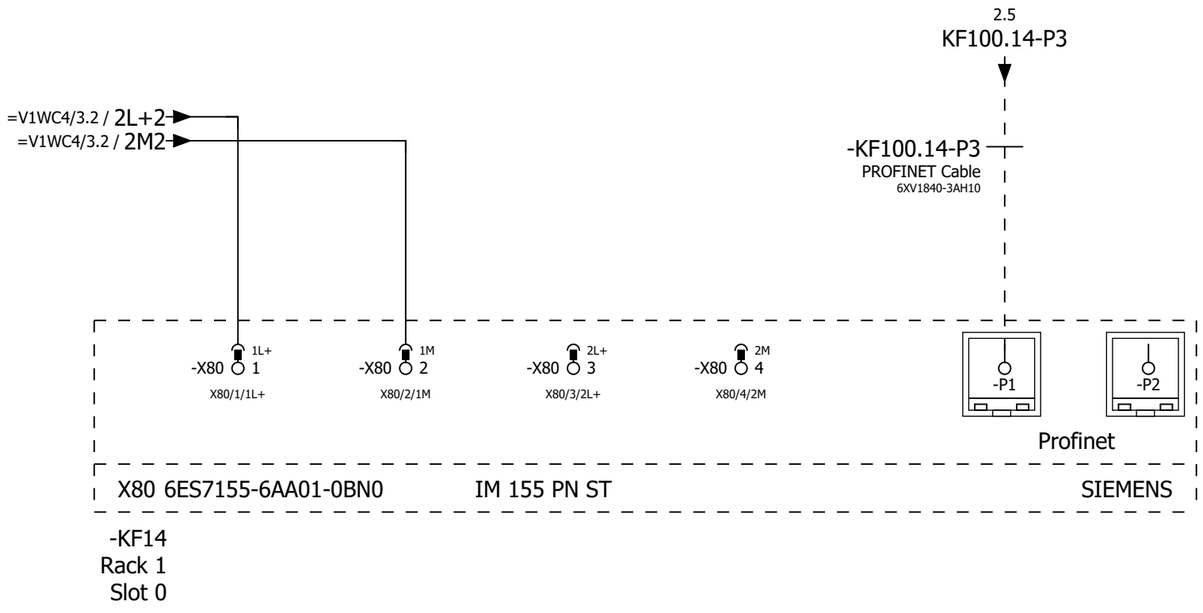

			Date	12/22/2022	Volvo Trucks North America	Valiant TMS	IM 155 PN	Drawing name: =2V04&EFS-EL	= V1KF1	
			Ed.	MKLEPADLO					+ V1UC14	
			Appr		P6700 Underbody Mainline - Cell 2V04			Document type: EFS	Project nr: 22-16151	Page 3
Modification	Date	Name	Original		Replacement of	Replaced by	Scale 1:1			1630

0	1	2	3	4	5	6	7	8	9

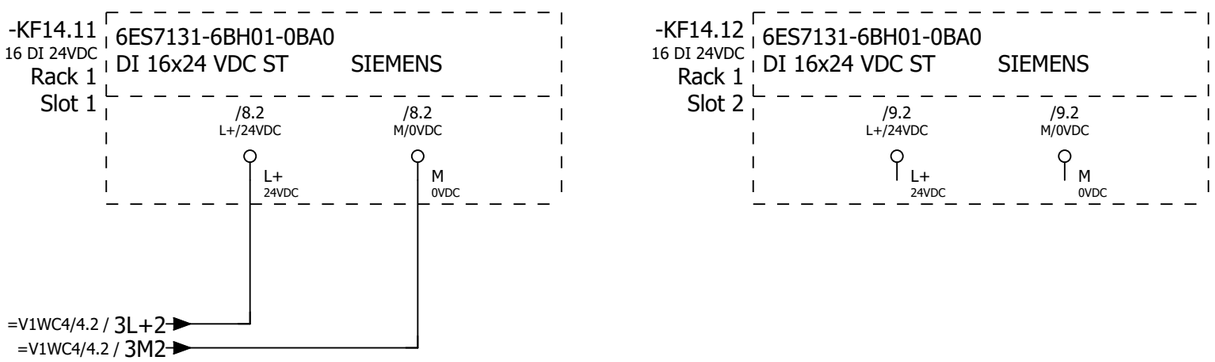

3 5

			Date	12/22/2022	Volvo Trucks North America	Valiant TMS	ET200S Wiring DI	Drawing name: =2V04&EFS-EL	= V1KF1
			Ed.	MKLEPADLO					+ V1UC14
			Appr		P6700 Underbody Mainline - Cell 2V04			Document type: EFS	Project nr: 22-16151
Modification	Date	Name	Original		Replacement of	Replaced by	Scale 1:1		Page 4 / 1630

0	1	2	3	4	5	6	7	8	9

-KF14.31
FDI 8 24VDC
Rack 1
Slot 3

6ES7136-6BA00-0CA0
F-DI 8x24VDC HF SIEMENS

/11.2 L+ 24VDC

/11.2 M 0VDC

-KF14.32
FDI 8 24VDC
Rack 1
Slot 4

6ES7136-6BA00-0CA0
F-DI 8x24VDC HF SIEMENS

/12.2 L+ 24VDC

/12.2 M 0VDC

4 6

			Date	12/22/2022	Volvo Trucks North America	Valiant TMS	ET200S Wiring F-DI	Drawing name: =2V04&EFS-EL	= V1KF1
			Ed.	MKLEPADLO					+ V1UC14
			Appr		P6700 Underbody Mainline - Cell 2V04			Document type: EFS	Project nr: 22-16151
Modification	Date	Name	Original		Replacement of / Replaced by	Scale 1:1			Page 5 / 1630

0	1	2	3	4	5	6	7	8	9

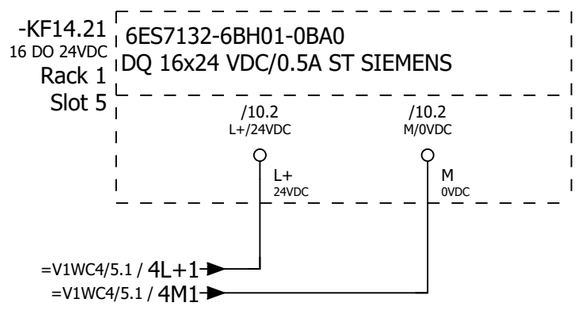

5 7

			Date	12/22/2022	Volvo Trucks North America	Valiant TMS	ET200S Wiring DQ	Drawing name: =2V04&EFS-EL	= V1KF1	
			Ed.	MKLEPADLO					+ V1UC14	
			Appr		P6700 Underbody Mainline - Cell 2V04			Document type: EFS	Project nr: 22-16151	Page 6
Modification	Date	Name	Original		Replacement of / Replaced by	Scale 1:1				1630

0	1	2	3	4	5	6	7	8	9

-KF14.41
=V1FQ1/1.0
=V1FQ1/2.0
=V1FQ1/3.0
=V1FQ1/4.0
/13.1
FDO 4 24VDC
Rack 1
Slot 6

6ES7136-6DB00-0CA0 + BU15-P16+A0+2B F-DQ 4X24VDC/2A PM HF SIEMENS

/13.2 L+ 24VDC

/13.2 M 0VDC

-KF14.42
/14.1
FDO 4 24VDC
Rack 1
Slot 7

6ES7136-6DB00-0CA0 + BU15-P16+A0+2B F-DQ 4X24VDC/2A PM HF SIEMENS

/14.2 L+ 24VDC

/14.2 M 0VDC

6

8

			Date	12/22/2022	Volvo Trucks North America	Valiant TMS	ET200S Wiring F-DQ	Drawing name: =2V04&EFS-EL	= V1KF1
			Ed.	MKLEPADLO					+ V1UC14
			Appr		P6700 Underbody Mainline - Cell 2V04			Document type: EFS	Project nr: 22-16151
Modification	Date	Name	Original		Replacement of / Replaced by	Scale 1:1			Page 7 / 1630

0	1	2	3	4	5	6	7	8	9

-KF14.11
/4.0

ET 200SP SIEMENS
DI 16x24 VDC ST

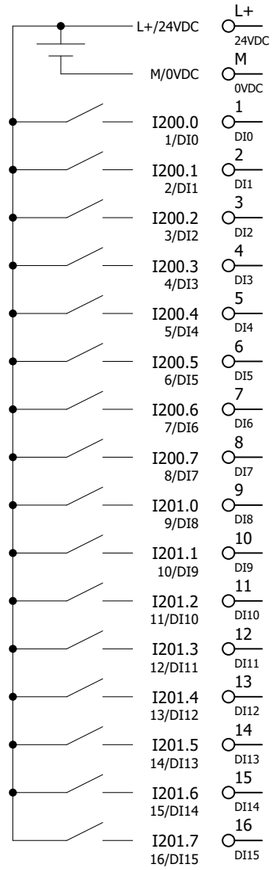

6ES7131-6BH01-0BA0

/4.1			
/4.2			
=V1WC3/2.2	=V1WC3+V1UC14-FC1	Monitoring 120 VAC	
=V1WC3/2.3	=V1WC3+V1UC14-FC2	Monitoring 120 VAC	
=V1WC4/1.4	=V1WC4+V1UC14-TA1_I	Monitoring 24VDC	
	I200.3	Spare	
=V1WC4/1.0	=V1WC4+V1UC14-FC11_I	Monitoring 24VDC	
=V1WC4/11.0	=V1WC4+V1UC14-FC12_I	Monitoring 24VDC	
	I200.6	Spare	
	I200.7	Spare	
	I201.0	Spare	
	I201.1	Spare	
	I201.2	Spare	
	I201.3	Spare	
	I201.4	Spare	
	I201.5	Spare	
	I201.6	Spare	
	I201.7	Spare	

0	1	2	3	4	5	6	7	8	9

-KF14.12
/4.3

ET 200SP SIEMENS
DI 16x24 VDC ST

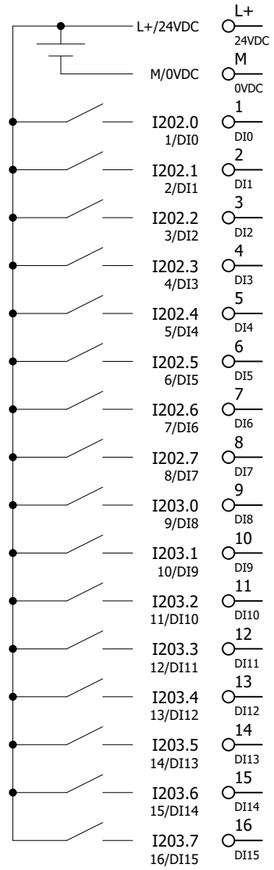

/4.3			
/4.4			
=V1FQ1/1.8	-KF14.51RQ	Monitoring Safety contactors 11.1L+	
=V1FQ1/2.8	-KF14.52RQ	Monitoring Safety contactors 12.1L+	
=V1FQ1/3.8	-KF14.53RQ	Monitoring Safety contactors 13.1L+	
=V1FQ1/4.8	-KF14.54RQ	Monitoring Safety contactors 14.1L+	
	I202.4	Spare	
	I202.5	Spare	
=KH0+KH0/6.6	=KH0-BP6_I	Monitoring S140 Fixture AIR On	
=KH0+KH0/8.6	I202.7	Spare	
	I203.0	Spare	
	I203.1	Spare	
	I203.2	Spare	
	I203.3	Spare	
	I203.4	Spare	
	I203.5	Spare	
	I203.6	Spare	
	I203.7	Spare	

6ES7131-6BH01-0BA0

8 10

			Date	12/22/2022	Volvo Trucks North America	Valiant TMS	ET200S DI Overview KF14.12	Drawing name: =2V04&EFS-EL	= V1KF1
			Ed.	MKLEPADLO					+ V1UC14
			Appr		P6700 Underbody Mainline - Cell 2V04			Document type: EFS	Project nr: 22-16151
Modification	Date	Name	Original		Replacement of	Replaced by	Scale 1:1		Page 9 / 1630

0	1	2	3	4	5	6	7	8	9

-KF14.21
/6.1
16 DO 24VDC

ET 200SP SIEMENS
DQ 16x24 VDC/0.5A ST

L+/24VDC	L+ 24VDC	/6.1			
M/0VDC	M 0VDC	/6.2			
Q200.0 1/DQ0	1 DQ0		Q200.0	Spare	
Q200.1 2/DQ1	2 DQ1		Q200.1	Spare	
Q200.2 3/DQ2	3 DQ2		Q200.2	Spare	
Q200.3 4/DQ3	4 DQ3		Q200.3	Spare	
Q200.4 5/DQ4	5 DQ4		Q200.4	Spare	
Q200.5 6/DQ5	6 DQ5		Q200.5	Spare	
Q200.6 7/DQ6	7 DQ6		Q200.6	Spare	
Q200.7 8/DQ7	8 DQ7		Q200.7	Spare	
Q201.0 9/DQ8	9 DQ8		Q201.0	Spare	
Q201.1 10/DQ9	10 DQ9		Q201.1	Spare	
Q201.2 11/DQ10	11 DQ10		Q201.2	Spare	
Q201.3 12/DQ11	12 DQ11		Q201.3	Spare	
Q201.4 13/DQ12	13 DQ12		Q201.4	Spare	
Q201.5 14/DQ13	14 DQ13		Q201.5	Spare	
Q201.6 15/DQ14	15 DQ14		Q201.6	Spare	
Q201.7 16/DQ15	16 DQ15		Q201.7	Spare	

6ES7132-6BH01-0BA0

			Date	12/22/2022	Volvo Trucks North America	Valiant TMS	ET200S DQ Overview KF14.21	Drawing name: =2V04&EFS-EL	= V1KF1
			Ed.	MKLEPADLO					+ V1UC14
			Appr		P6700 Underbody Mainline - Cell 2V04			Document type: EFS	Project nr: 22-16151
Modification	Date	Name	Original		Replacement of / Replaced by	Scale 1:1			Page 10 / 1630

0	1	2	3	4	5	6	7	8	9

-KF14.31
/5.0

ET 200SP SIEMENS
F-DI 8x24VDC HF

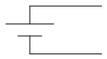

	L+ 24VDC	/5.1			
	M 0VDC	/5.2			
I5200.0	1 DI0	=V1FQ1+.FQ1/10.3	=V1FQ1-BR12.1	2V04/2V01 S150 Conveyor Light Curtain Ch1	
	9 VS0	=V1FQ1+.FQ1/10.3			
I5200.1	2 DI1		I5200.1	Spare	
	10 VS1				
I5200.2	3 DI2		I5200.2	Spare	
	11 VS2				
I5200.3	4 DI3		I5200.3	Spare	
	12 VS3				
I5200.4	5 DI4	=V1FQ1+.FQ1/10.4	=V1FQ1-BR12.2	2V04/2V01 S150 Conveyor Light Curtain Ch2	
	13 VS4	=V1FQ1+.FQ1/10.5			
I5200.5	6 DI5		I5200.5	Spare	
	14 VS5				
I5200.6	7 DI6		I5200.6	Spare	
	15 VS6				
I5200.7	8 DI7		I5200.7	Spare	
	16 VS7				

6ES7136-6BA00-0CA0

			Date	12/22/2022	Volvo Trucks North America	Valiant TMS	ET200S F-DI Overview KF14.31	Drawing name: =2V04&EFS-EL	= V1KF1
			Ed.	MKLEPADLO					+ V1UC14
			Appr		P6700 Underbody Mainline - Cell 2V04	Scale 1:1		Document type: EFS	Project nr: 22-16151
Modification	Date	Name	Original		Replacement of	Replaced by			Page 11 / 1630

0	1	2	3	4	5	6	7	8	9

-KF14.32
/5.3

ET 200SP SIEMENS
F-DI 8x24VDC HF

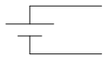

	L+ 24VDC	/5.3			
	M 0VDC	/5.4			
I5206.0	1 DI0		I5206.0	Spare	
	9 VS0				
I5206.1	2 DI1		I5206.1	Spare	
	10 VS1				
I5206.2	3 DI2		I5206.2	Spare	
	11 VS2				
I5206.3	4 DI3		I5206.3	Spare	
	12 VS3				
I5206.4	5 DI4		I5206.4	Spare	
	13 VS4				
I5206.5	6 DI5		I5206.5	Spare	
	14 VS5				
I5206.6	7 DI6		I5206.6	Spare	
	15 VS6				
I5206.7	8 DI7		I5206.7	Spare	
	16 VS7				

6ES7136-6BA00-0CA0

11 13

			Date	12/22/2022	Volvo Trucks North America	Valiant TMS	ET200S F-DI Overview KF14.32	Drawing name: =2V04&EFS-EL	= V1KF1	
			Ed.	MKLEPADLO					+ V1UC14	
			Appr		P6700 Underbody Mainline - Cell 2V04			Document type: EFS	Project nr: 22-16151	Page 12
Modification	Date	Name	Original		Replacement of	Replaced by	Scale 1:1			1630

0	1	2	3	4	5	6	7	8	9

-KF14.41
/7.0

ET 200SP SIEMENS
F-DQ 4X24VDC/2A PM HF

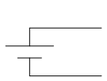

	L+ 24VDC	/7.1			
	M 0VDC	/7.2			
Q5212.0	1 DQ-P0	=V1FQ1/1.1	-KF14.51	Switched Power 1 11.1L+	
Q5212.0	5				
QX.0	9 DQ-M0	=V1FQ1/1.1			
QX.0	13				
Q5212.1	2 DQ-P1	=V1FQ1/2.1	-KF14.52	Switched Power 2 12.1L+	
Q5212.1	6				
QX.1	10 DQ-M1	=V1FQ1/2.1			
QX.1	14				
Q5212.2	3 DQ-P2	=V1FQ1/3.1	-KF14.53	Switched Power 3 13.1L+	
Q5212.2	7				
QX.2	11 DQ-M2	=V1FQ1/3.1			
QX.2	15				
Q5212.3	4 DQ-P3	=V1FQ1/4.1	-KF14.54	Switched Power 4 14.1L+	
Q5212.3	8				
QX.3	12 DQ-M3	=V1FQ1/4.1			
QX.3	16				

6ES7136-6DB00-0CA0 + BU15-P16+A0+2B

			Date	12/22/2022	Volvo Trucks North America	Valiant TMS	ET200S F-DQ Overview KF14.41	Drawing name: =2V04&EFS-EL	= V1KF1
			Ed.	MKLEPADLO					+ V1UC14
			Appr		P6700 Underbody Mainline - Cell 2V04			Document type: EFS	Project nr: 22-16151
Modification	Date	Name	Original		Replacement of / Replaced by	Scale 1:1			Page 13 / 1630

0	1	2	3	4	5	6	7	8	9

-KF14.42
/7.5

ET 200SP SIEMENS
F-DQ 4X24VDC/2A PM HF

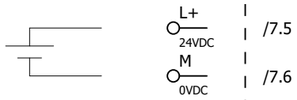

Q5217.0	Q5217.0	Spare
Q5217.1	Q5217.1	Spare
Q5217.2	Q5217.2	Spare
Q5217.3	Q5217.3	Spare

6ES7136-6DB00-0CA0 + BU15-P16+A0+2B

			Date	12/22/2022	Volvo Trucks North America	Valiant TMS	ET200S F-DQ Overview KF14.42	Drawing name: =2V04&EFS-EL	= V1KF1
			Ed.	MKLEPADLO					+ V1UC14
			Appr		P6700 Underbody Mainline - Cell 2V04			Document type: EFS	Project nr: 22-16151 / Page 14 / 1630
Modification	Date	Name	Original		Replacement of / Replaced by	Scale 1:1			

0	1	2	3	4	5	6	7	8	9

-KF14.51
=V1FQ1/1.2
=V1WC4/12.1

ET 200SP SIEMENS
F-RQ 1x24VDC/24..230VAC/5A

1 RQ01+	=V1WC4/12.2	11L+
2 RQ01-	=V1WC4/12.2	11.1L+
3 RQ02+	=V1WC4/12.3	11L+
4 RQ02-	=V1WC4/12.4	11.1L+
9 IN P	=V1FQ1/1.3	Switched Power 1 11.1L+P
10 OUT P	=V1FQ1/1.4	SPARE
11 IN M	=V1FQ1/1.4	Switched Power 1 11.1L+M
12 OUT M	=V1FQ1/1.5	SPARE

1A AUX
2A AUX
3A AUX
4A AUX

6ES7136-6RA00-0BF0 + BU20-P8+A4+0B

			Date	12/22/2022	Volvo Trucks North America	Valiant TMS	ET200S F-RQ Overview KF14.51	Drawing name: =2V04&EFS-EL	= V1KF1
			Ed.	MKLEPADLO					+ V1UC14
			Appr		P6700 Underbody Mainline - Cell 2V04			Document type: EFS	Project nr: 22-16151
Modification	Date	Name	Original		Replacement of / Replaced by	Scale 1:1			Page 15 / 1630

0	1	2	3	4	5	6	7	8	9

-KF14.52
=V1FQ1/2.2
=V1WC4/13.1

ET 200SP SIEMENS
F-RQ 1x24VDC/24..230VAC/5A

1 RQ01+	=V1WC4/13.2	12L+
2 RQ01-	=V1WC4/13.2	12.1L+
3 RQ02+	=V1WC4/13.3	12L+
4 RQ02-	=V1WC4/13.4	12.1L+
9 IN P	=V1FQ1/2.3	Switched Power 2 12.1L+P
10 OUT P	=V1FQ1/2.4	SPARE
11 IN M	=V1FQ1/2.4	Switched Power 2 12.1L+M
12 OUT M	=V1FQ1/2.5	SPARE

1A AUX
2A AUX
3A AUX
4A AUX

6ES7136-6RA00-0BF0 + BU20-P8+A4+0B

			Date	12/22/2022	Volvo Trucks North America	Valiant TMS	ET200S F-RQ Overview KF14.52	Drawing name: =2V04&EFS-EL	= V1KF1
			Ed.	MKLEPADLO					+ V1UC14
			Appr		P6700 Underbody Mainline - Cell 2V04			Document type: EFS	Project nr: 22-16151
Modification	Date	Name	Original		Replacement of / Replaced by	Scale 1:1			Page 16 / 1630

0	1	2	3	4	5	6	7	8	9

-KF14.53
=V1FQ1/3.2
=V1WC4/14.1

ET 200SP SIEMENS
F-RQ 1x24VDC/24..230VAC/5A

1 RQ01+	=V1WC4/14.2	13L+
2 RQ01-	=V1WC4/14.2	13.1L+
3 RQ02+	=V1WC4/14.3	13L+
4 RQ02-	=V1WC4/14.4	13.1L+
9 IN P	=V1FQ1/3.3	Switched Power 3 13.1L+P
10 OUT P	=V1FQ1/3.4	SPARE
11 IN M	=V1FQ1/3.4	Switched Power 3 13.1L+M
12 OUT M	=V1FQ1/3.5	SPARE

1A AUX
2A AUX
3A AUX
4A AUX

6ES7136-6RA00-0BF0 + BU20-P8+A4+0B

			Date	12/22/2022	Volvo Trucks North America	Valiant TMS	ET200S F-RQ Overview KF14.53	Drawing name: =2V04&EFS-EL	= V1KF1
			Ed.	MKLEPADLO					+ V1UC14
			Appr		P6700 Underbody Mainline - Cell 2V04			Document type: EFS	Project nr: 22-16151
Modification	Date	Name	Original		Replacement of / Replaced by	Scale 1:1			Page 17 / 1630

0	1	2	3	4	5	6	7	8	9

-KF14.54
=V1FQ1/4.2
=V1WC4/15.1

ET 200SP SIEMENS
F-RQ 1x24VDC/24..230VAC/5A

1 RQ01+	=V1WC4/15.2	14L+
2 RQ01-	=V1WC4/15.2	14.1L+
3 RQ02+	=V1WC4/15.3	14L+
4 RQ02-	=V1WC4/15.4	14.1L+
9 IN P	=V1FQ1/4.3	Switched Power 4 14.1L+P
10 OUT P	=V1FQ1/4.4	SPARE
11 IN M	=V1FQ1/4.4	Switched Power 4 14.1L+M
12 OUT M	=V1FQ1/4.5	SPARE

1A AUX
2A AUX
3A AUX
4A AUX

6ES7136-6RA00-0BF0 + BU20-P8+A4+0B

			Date	12/22/2022	Volvo Trucks North America	Valiant TMS	ET200S F-RQ Overview KF14.54	Drawing name: =2V04&EFS-EL	= V1KF1
			Ed.	MKLEPADLO					+ V1UC14
			Appr		P6700 Underbody Mainline - Cell 2V04			Document type: EFS / Project nr: 22-16151	Page 18 / 1630
Modification	Date	Name	Original		Replacement of / Replaced by	Scale 1:1			

0	1	2	3	4	5	6	7	8	9

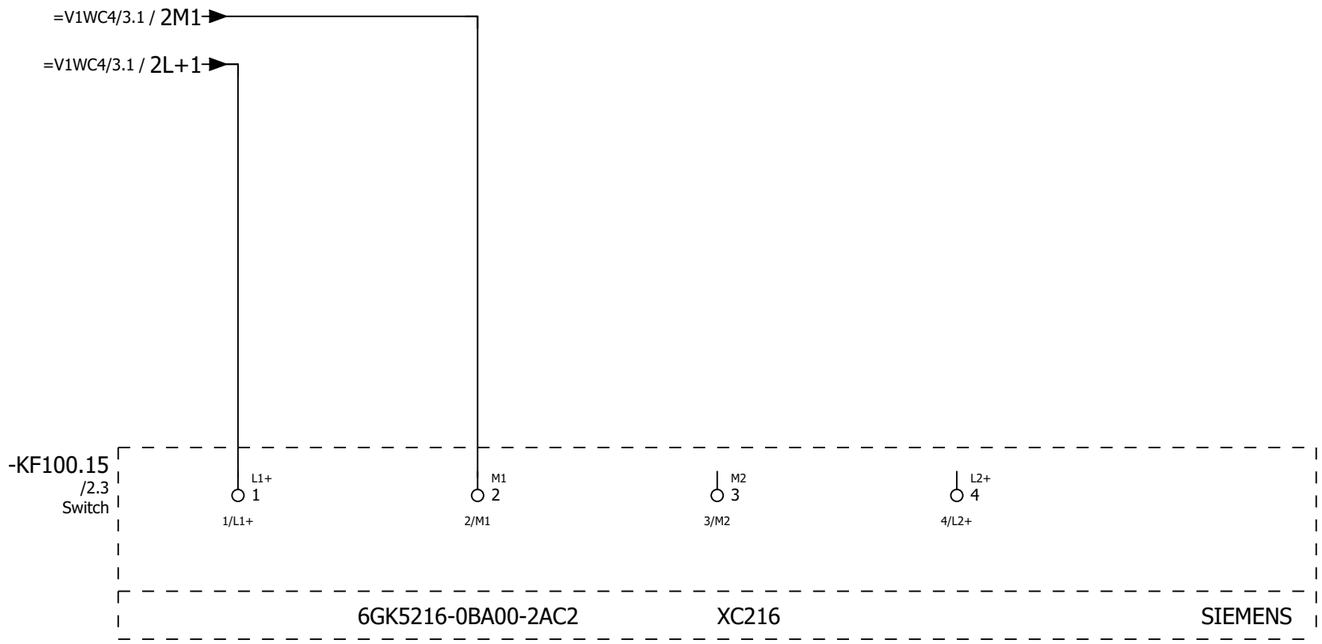

+.UC14/18

2

			Date	12/22/2022	Volvo Trucks North America	Valiant TMS	Switch, Scalance XC216	Drawing name: =2V04&EFS-EL	= V1KF1	
			Ed.	MKLEPADLO					+ V1UC15	
			Appr		P6700 Underbody Mainline - Cell 2V04			Document type: EFS	Project nr: 22-16151	Page 1
Modification	Date	Name	Original		Replacement of	Replaced by	Scale 1:1			1630

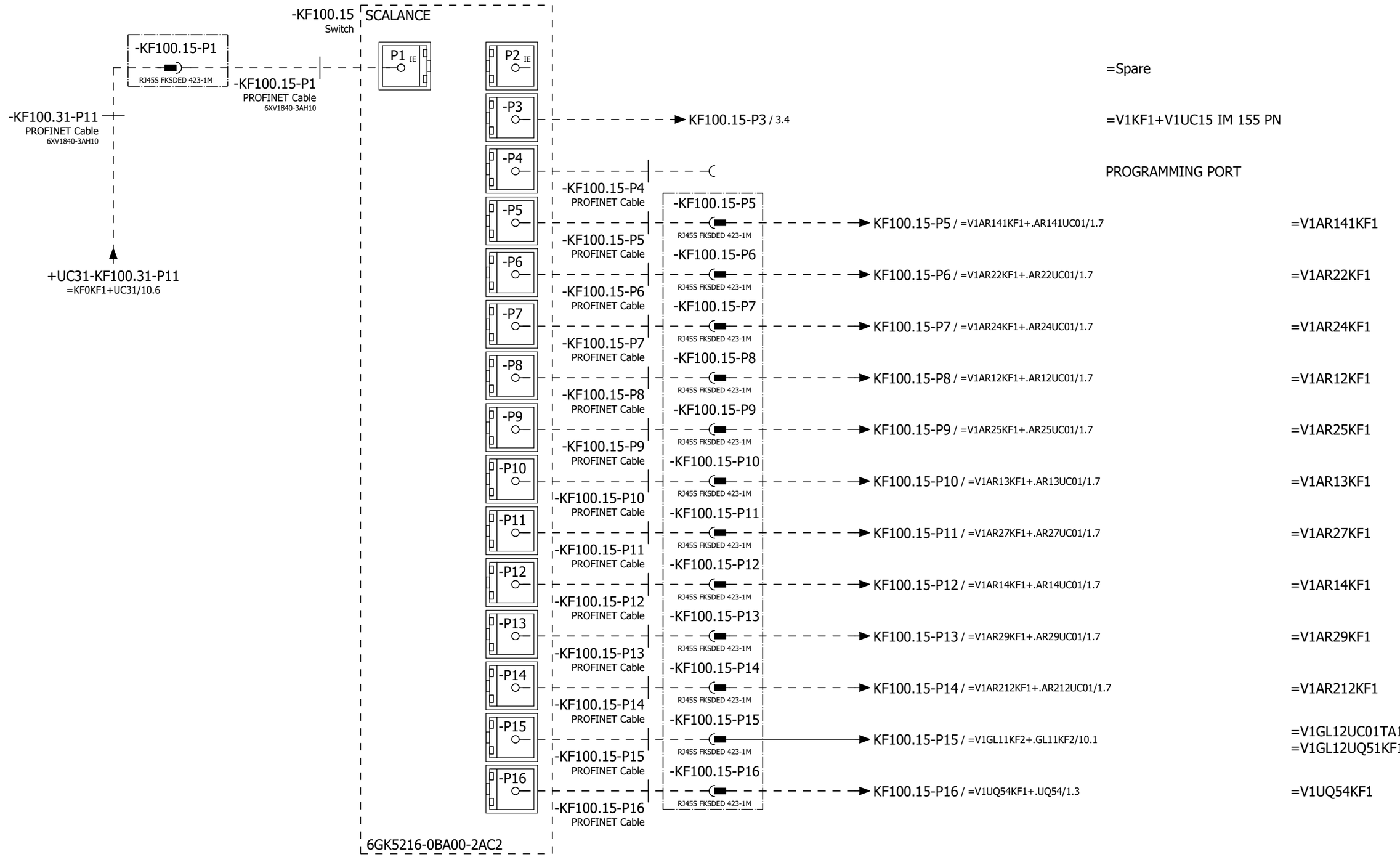

			Date	12/22/2022	Volvo Trucks North America	Valiant TMS	Network Overview	Drawing name: =2V04&EFS-EL	= V1KF1
			Ed.	MKLEPADLO					+ V1UC15
			Appr		P6700 Underbody Mainline - Cell 2V04			Document type: EFS	Project nr: 22-16151
Modification	Date	Name	Original		Replacement of / Replaced by	Scale 1:1			Page 2 / 1630

0	1	2	3	4	5	6	7	8	9

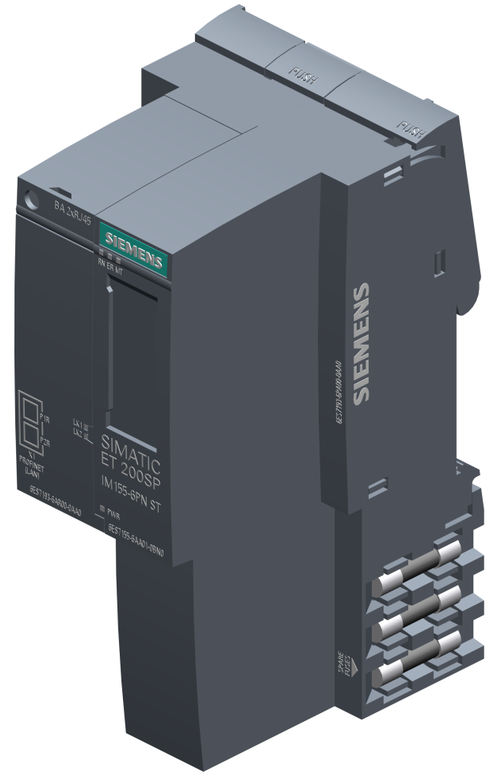

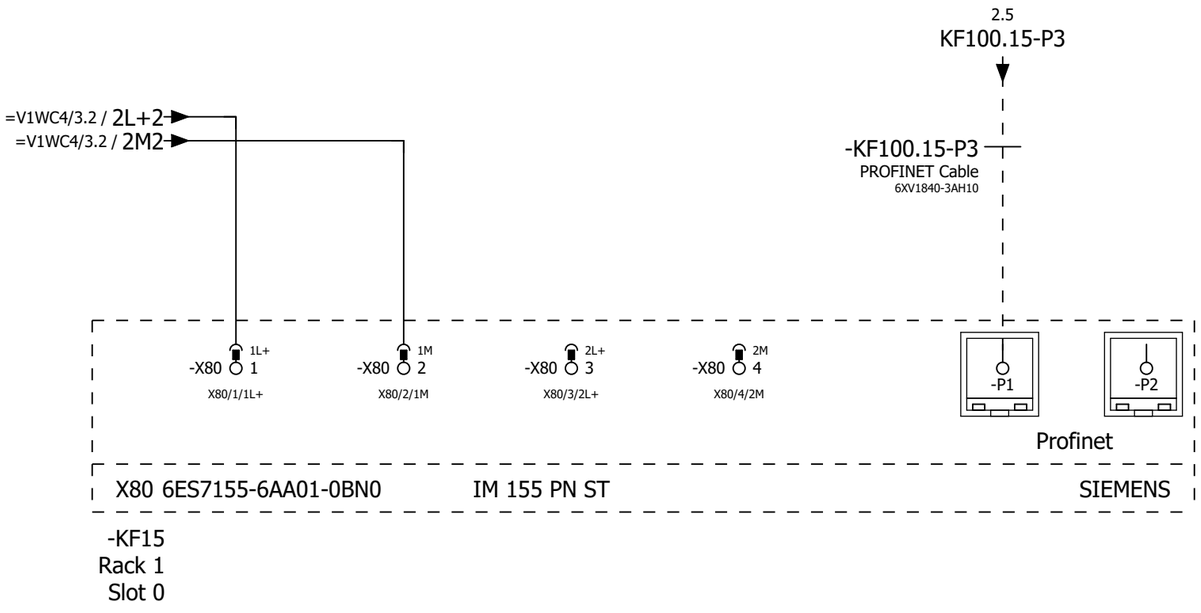

			Date	12/22/2022	Volvo Trucks North America	Valiant TMS	IM 155 PN	Drawing name: =2V04&EFS-EL	= V1KF1	
			Ed.	MKLEPADLO					+ V1UC15	
			Appr		P6700 Underbody Mainline - Cell 2V04			Document type: EFS	Project nr: 22-16151	Page 3
Modification	Date	Name	Original		Replacement of	Replaced by	Scale 1:1			1630

0	1	2	3	4	5	6	7	8	9

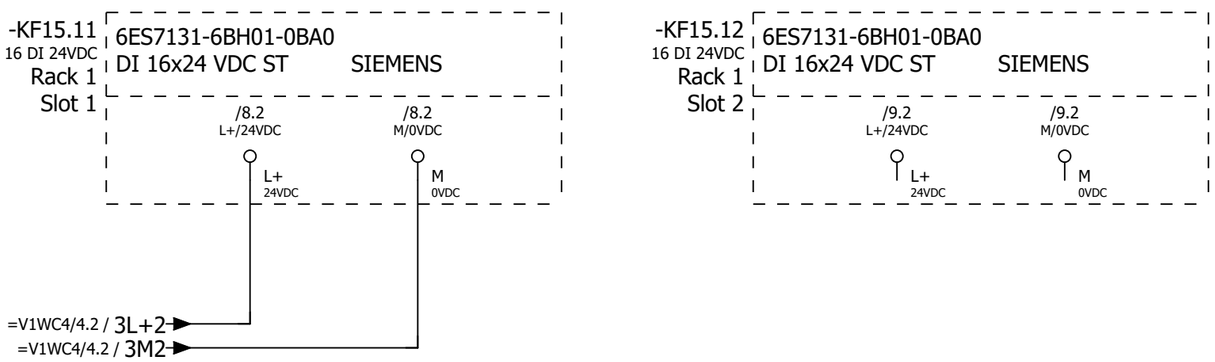

3

5

			Date	12/22/2022	Volvo Trucks North America	Valiant TMS	ET200S Wiring DI	Drawing name: =2V04&EFS-EL	= V1KF1
			Ed.	MKLEPADLO					+ V1UC15
			Appr		P6700 Underbody Mainline - Cell 2V04			Document type: EFS	Project nr: 22-16151
Modification	Date	Name	Original		Replacement of	Replaced by	Scale 1:1		Page 4 / 1630

0	1	2	3	4	5	6	7	8	9

-KF15.31
FDI 8 24VDC
Rack 1
Slot 3

6ES7136-6BA00-0CA0
F-DI 8x24VDC HF SIEMENS

/11.2 L+ 24VDC

/11.2 M 0VDC

-KF15.32
FDI 8 24VDC
Rack 1
Slot 4

6ES7136-6BA00-0CA0
F-DI 8x24VDC HF SIEMENS

/12.2 L+ 24VDC

/12.2 M 0VDC

4 6

			Date	12/22/2022	Volvo Trucks North America	Valiant TMS	ET200S Wiring F-DI	Drawing name: =2V04&EFS-EL	= V1KF1
			Ed.	MKLEPADLO					+ V1UC15
			Appr		P6700 Underbody Mainline - Cell 2V04			Document type: EFS	Project nr: 22-16151
Modification	Date	Name	Original		Replacement of	Replaced by	Scale 1:1		Page 5 / 1630

0	1	2	3	4	5	6	7	8	9

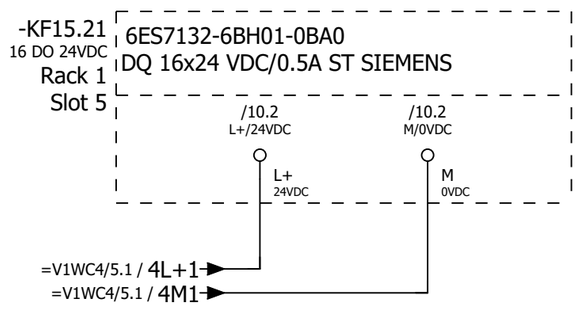

5 7

			Date	12/22/2022	Volvo Trucks North America	Valiant TMS	ET200S Wiring DQ	Drawing name: =2V04&EFS-EL	= V1KF1	
			Ed.	MKLEPADLO					+ V1UC15	
			Appr		P6700 Underbody Mainline - Cell 2V04			Document type: EFS	Project nr: 22-16151	Page 6
Modification	Date	Name	Original		Replacement of / Replaced by	Scale 1:1				1630

0	1	2	3	4	5	6	7	8	9

-KF15.41
=V1FQ1/1.0
=V1FQ1/2.0
=V1FQ1/3.0
=V1FQ1/4.0
/13.1
FDO 4 24VDC
Rack 1
Slot 6

6ES7136-6DB00-0CA0 + BU15-P16+A0+2B F-DQ 4X24VDC/2A PM HF SIEMENS

/13.2 L+ 24VDC

/13.2 M 0VDC

-KF15.42
/14.1
FDO 4 24VDC
Rack 1
Slot 7

6ES7136-6DB00-0CA0 + BU15-P16+A0+2B F-DQ 4X24VDC/2A PM HF SIEMENS

/14.2 L+ 24VDC

/14.2 M 0VDC

6

8

			Date	12/22/2022	Volvo Trucks North America	Valiant TMS	ET200S Wiring F-DQ	Drawing name: =2V04&EFS-EL	= V1KF1
			Ed.	MKLEPADLO					+ V1UC15
			Appr		P6700 Underbody Mainline - Cell 2V04			Document type: EFS	Project nr: 22-16151
Modification	Date	Name	Original		Replacement of / Replaced by	Scale 1:1			Page 7 / 1630

0	1	2	3	4	5	6	7	8	9

-KF15.11
/4.0

ET 200SP SIEMENS
DI 16x24 VDC ST

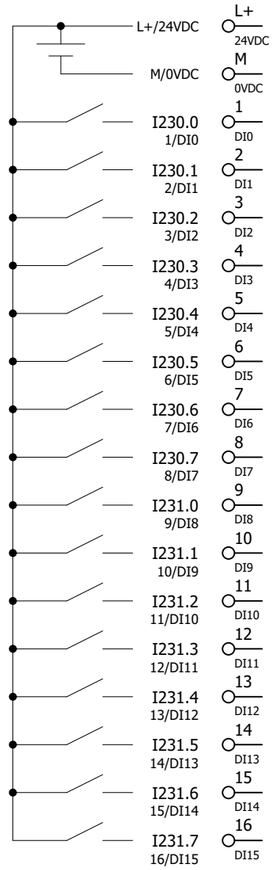

6ES7131-6BH01-0BA0

L+/24VDC	/4.1		
M/0VDC	/4.2		
I230.0 1/DI0	=V1WC3/2.2	=V1WC3+V1UC15-FC1	Monitoring 120 VAC
I230.1 2/DI1	=V1WC3/2.3	=V1WC3+V1UC15-FC2	Monitoring 120 VAC
I230.2 3/DI2	=V1WC4/1.4	=V1WC4+V1UC15-TA1_I	Monitoring 24VDC
I230.3 4/DI3		I230.3	Spare
I230.4 5/DI4	=V1WC4/1.0	=V1WC4+V1UC15-FC11_I	Monitoring 24VDC
I230.5 6/DI5	=V1WC4/11.0	=V1WC4+V1UC15-FC12_I	Monitoring 24VDC
I230.6 7/DI6		I230.6	Spare
I230.7 8/DI7		I230.7	Spare
I231.0 9/DI8		I231.0	Spare
I231.1 10/DI9		I231.1	Spare
I231.2 11/DI10		I231.2	Spare
I231.3 12/DI11		I231.3	Spare
I231.4 13/DI12		I231.4	Spare
I231.5 14/DI13		I231.5	Spare
I231.6 15/DI14		I231.6	Spare
I231.7 16/DI15		I231.7	Spare

			Date	12/22/2022	Volvo Trucks North America	Valiant TMS	ET200S DI Overview KF15.11	Drawing name: =2V04&EFS-EL	= V1KF1
			Ed.	MKLEPADLO					+ V1UC15
			Appr		P6700 Underbody Mainline - Cell 2V04			Document type: EFS	Project nr: 22-16151
Modification	Date	Name	Original		Replacement of	Replaced by	Scale 1:1		Page 8 / 1630

0	1	2	3	4	5	6	7	8	9

-KF15.12
/4.3

ET 200SP SIEMENS
DI 16x24 VDC ST

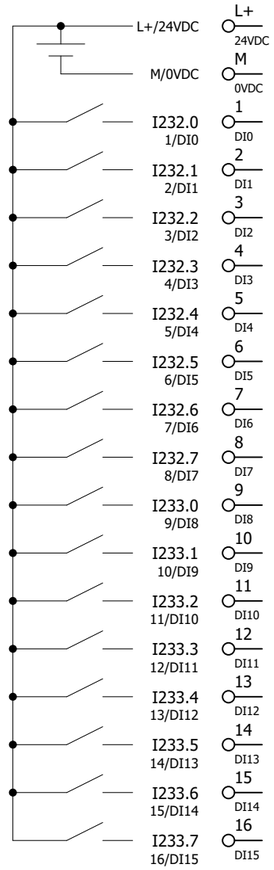

6ES7131-6BH01-0BA0

/4.3			
/4.4			
=V1FQ1/1.8	-KF15.51RQ	Monitoring Safety contactors 11.1L+	
=V1FQ1/2.8	-KF15.52RQ	Monitoring Safety contactors 12.1L+	
=V1FQ1/3.8	-KF15.53RQ	Monitoring Safety contactors 13.1L+	
=V1FQ1/4.8	-KF15.54RQ	Monitoring Safety contactors 14.1L+	
	I232.4	Spare	
	I232.5	Spare	
=KH0+KH0/2.6	=KH0-BP2_I	Monitoring S105 Fixture AIR On	
=KH0+KH0/9.6	=KH0-BP9_I	Monitoring 2V02-S060 Conveyor (Unload) AIR On	
	I233.0	Spare	
	I233.1	Spare	
	I233.2	Spare	
	I233.3	Spare	
	I233.4	Spare	
	I233.5	Spare	
	I233.6	Spare	
	I233.7	Spare	

			Date	12/22/2022	Volvo Trucks North America	Valiant TMS	ET200S DI Overview KF15.12	Drawing name: =2V04&EFS-EL	= V1KF1
			Ed.	MKLEPADLO					+ V1UC15
			Appr		P6700 Underbody Mainline - Cell 2V04	Scale 1:1		Document type: EFS	Project nr: 22-16151 / Page 9 / 1630
Modification	Date	Name	Original		Replacement of	Replaced by			

0	1	2	3	4	5	6	7	8	9

-KF15.21
/6.1
16 DO 24VDC

ET 200SP SIEMENS
DQ 16x24 VDC/0.5A ST

L+/24VDC	L+ 24VDC	/6.1			
M/0VDC	M 0VDC	/6.2			
Q230.0 1/DQ0	1 DQ0		Q230.0	Spare	
Q230.1 2/DQ1	2 DQ1		Q230.1	Spare	
Q230.2 3/DQ2	3 DQ2		Q230.2	Spare	
Q230.3 4/DQ3	4 DQ3		Q230.3	Spare	
Q230.4 5/DQ4	5 DQ4		Q230.4	Spare	
Q230.5 6/DQ5	6 DQ5		Q230.5	Spare	
Q230.6 7/DQ6	7 DQ6		Q230.6	Spare	
Q230.7 8/DQ7	8 DQ7		Q230.7	Spare	
Q231.0 9/DQ8	9 DQ8		Q231.0	Spare	
Q231.1 10/DQ9	10 DQ9		Q231.1	Spare	
Q231.2 11/DQ10	11 DQ10		Q231.2	Spare	
Q231.3 12/DQ11	12 DQ11		Q231.3	Spare	
Q231.4 13/DQ12	13 DQ12		Q231.4	Spare	
Q231.5 14/DQ13	14 DQ13		Q231.5	Spare	
Q231.6 15/DQ14	15 DQ14		Q231.6	Spare	
Q231.7 16/DQ15	16 DQ15		Q231.7	Spare	

6ES7132-6BH01-0BA0

			Date	12/22/2022	Volvo Trucks North America	Valiant TMS	ET200S DQ Overview KF15.21	Drawing name: =2V04&EFS-EL	= V1KF1
			Ed.	MKLEPADLO					+ V1UC15
			Appr		P6700 Underbody Mainline - Cell 2V04			Document type: EFS	Project nr: 22-16151
Modification	Date	Name	Original		Replacement of / Replaced by	Scale 1:1			Page 10 / 1630

0	1	2	3	4	5	6	7	8	9

-KF15.31
/5.0

ET 200SP SIEMENS
F-DI 8x24VDC HF

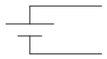

	L+ 24VDC	/5.1			
	M 0VDC	/5.2			
I5230.0	1 DI0		I5230.0	Spare	
	9 VS0				
I5230.1	2 DI1		I5230.1	Spare	
	10 VS1				
I5230.2	3 DI2		I5230.2	Spare	
	11 VS2				
I5230.3	4 DI3		I5230.3	Spare	
	12 VS3				
I5230.4	5 DI4		I5230.4	Spare	
	13 VS4				
I5230.5	6 DI5		I5230.5	Spare	
	14 VS5				
I5230.6	7 DI6		I5230.6	Spare	
	15 VS6				
I5230.7	8 DI7		I5230.7	Spare	
	16 VS7				

6ES7136-6BA00-0CA0

			Date	12/22/2022	Volvo Trucks North America	Valiant TMS	ET200S F-DI Overview KF15.31	Drawing name: =2V04&EFS-EL	= V1KF1
			Ed.	MKLEPADLO					+ V1UC15
			Appr		P6700 Underbody Mainline - Cell 2V04			Document type: EFS	Project nr: 22-16151
Modification	Date	Name	Original		Replacement of / Replaced by	Scale 1:1			Page 11 / 1630

0	1	2	3	4	5	6	7	8	9

-KF15.32
/5.3

ET 200SP SIEMENS
F-DI 8x24VDC HF

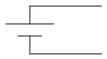

	L+ 24VDC	/5.3			
	M 0VDC	/5.4			
I5236.0	1 DI0		I5236.0	Spare	
	9 VS0				
I5236.1	2 DI1		I5236.1	Spare	
	10 VS1				
I5236.2	3 DI2		I5236.2	Spare	
	11 VS2				
I5236.3	4 DI3		I5236.3	Spare	
	12 VS3				
I5236.4	5 DI4		I5236.4	Spare	
	13 VS4				
I5236.5	6 DI5		I5236.5	Spare	
	14 VS5				
I5236.6	7 DI6		I5236.6	Spare	
	15 VS6				
I5236.7	8 DI7		I5236.7	Spare	
	16 VS7				

6ES7136-6BA00-0CA0

11 13

			Date	12/22/2022	Volvo Trucks North America	Valiant TMS	ET200S F-DI Overview KF15.32	Drawing name: =2V04&EFS-EL	= V1KF1
			Ed.	MKLEPADLO					+ V1UC15
			Appr		P6700 Underbody Mainline - Cell 2V04			Document type: EFS	Project nr: 22-16151
Modification	Date	Name	Original		Replacement of	Replaced by	Scale 1:1		Page 12 / 1630

0	1	2	3	4	5	6	7	8	9

-KF15.41
/7.0

ET 200SP SIEMENS
F-DQ 4X24VDC/2A PM HF

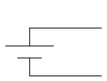

/7.1
/7.2

Q5242.0	1 DQ-P0	=V1FQ1/1.1	-KF15.51	Switched Power 1 11.1L+	
Q5242.0	5				
QX.0	9 DQ-M0	=V1FQ1/1.1			
QX.0	13				
Q5242.1	2 DQ-P1	=V1FQ1/2.1	-KF15.52	Switched Power 2 12.1L+	
Q5242.1	6				
QX.1	10 DQ-M1	=V1FQ1/2.1			
QX.1	14				
Q5242.2	3 DQ-P2	=V1FQ1/3.1	-KF15.53	Switched Power 3 13.1L+	
Q5242.2	7				
QX.2	11 DQ-M2	=V1FQ1/3.1			
QX.2	15				
Q5242.3	4 DQ-P3	=V1FQ1/4.1	-KF15.54	Switched Power 4 14.1L+	
Q5242.3	8				
QX.3	12 DQ-M3	=V1FQ1/4.1			
QX.3	16				

6ES7136-6DB00-0CA0 + BU15-P16+A0+2B

12 14

			Date	12/22/2022	Volvo Trucks North America	Valiant TMS	ET200S F-DQ Overview KF15.41	Drawing name: =2V04&EFS-EL	= V1KF1
			Ed.	MKLEPADLO					+ V1UC15
			Appr		P6700 Underbody Mainline - Cell 2V04			Document type: EFS	Project nr: 22-16151
Modification	Date	Name	Original		Replacement of / Replaced by	Scale 1:1			Page 13 / 1630

0	1	2	3	4	5	6	7	8	9

-KF15.42
/7.5

ET 200SP SIEMENS
F-DQ 4X24VDC/2A PM HF

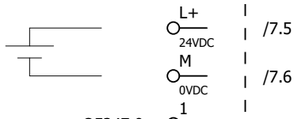

Q5247.0	Q5247.0	Spare
Q5247.1	Q5247.1	Spare
Q5247.2	Q5247.2	Spare
Q5247.3	Q5247.3	Spare

6ES7136-6DB00-0CA0 + BU15-P16+A0+2B

			Date	12/22/2022	Volvo Trucks North America	Valiant TMS	ET200S F-DQ Overview KF15.42	Drawing name: =2V04&EFS-EL	= V1KF1
			Ed.	MKLEPADLO					+ V1UC15
			Appr		P6700 Underbody Mainline - Cell 2V04			Document type: EFS	Project nr: 22-16151
Modification	Date	Name	Original		Replacement of / Replaced by	Scale 1:1			Page 14 / 1630

0	1	2	3	4	5	6	7	8	9

-KF15.51
=V1FQ1/1.2
=V1WC4/12.1

ET 200SP SIEMENS
F-RQ 1x24VDC/24..230VAC/5A

1 RQ01+	=V1WC4/12.2	11L+	
2 RQ01-	=V1WC4/12.2	11.1L+	
3 RQ02+	=V1WC4/12.3	11L+	
4 RQ02-	=V1WC4/12.4	11.1L+	
9 IN P	=V1FQ1/1.3	Switched Power 1 11.1L+P	
10 OUT P	=V1FQ1/1.4	SPARE	
11 IN M	=V1FQ1/1.4	Switched Power 1 11.1L+M	
12 OUT M	=V1FQ1/1.5	SPARE	
1A AUX			
2A AUX			
3A AUX			
4A AUX			

6ES7136-6RA00-0BF0 + BU20-P8+A4+0B

			Date	12/22/2022	Volvo Trucks North America	Valiant TMS	ET200S F-RQ Overview KF15.51	Drawing name: =2V04&EFS-EL	= V1KF1
			Ed.	MKLEPADLO					+ V1UC15
			Appr		P6700 Underbody Mainline - Cell 2V04			Document type: EFS	Project nr: 22-16151
Modification	Date	Name	Original		Replacement of / Replaced by	Scale 1:1			Page 15 / 1630

0	1	2	3	4	5	6	7	8	9

-KF15.52
=V1FQ1/2.2
=V1WC4/13.1

ET 200SP SIEMENS
F-RQ 1x24VDC/24..230VAC/5A

1 RQ01+	=V1WC4/13.2	12L+
2 RQ01-	=V1WC4/13.2	12.1L+
3 RQ02+	=V1WC4/13.3	12L+
4 RQ02-	=V1WC4/13.4	12.1L+
9 IN P	=V1FQ1/2.3	Switched Power 2 12.1L+P
10 OUT P	=V1FQ1/2.4	SPARE
11 IN M	=V1FQ1/2.4	Switched Power 2 12.1L+M
12 OUT M	=V1FQ1/2.5	SPARE

1A AUX
2A AUX
3A AUX
4A AUX

6ES7136-6RA00-0BF0 + BU20-P8+A4+0B

			Date	12/22/2022	Volvo Trucks North America	Valiant TMS	ET200S F-RQ Overview KF15.52	Drawing name: =2V04&EFS-EL	= V1KF1
			Ed.	MKLEPADLO					+ V1UC15
			Appr		P6700 Underbody Mainline - Cell 2V04			Document type: EFS	Project nr: 22-16151
Modification	Date	Name	Original		Replacement of / Replaced by	Scale 1:1			Page 16 / 1630

0	1	2	3	4	5	6	7	8	9

-KF15.53
=V1FQ1/3.2
=V1WC4/14.1

ET 200SP SIEMENS
F-RQ 1x24VDC/24..230VAC/5A

1 RQ01+	=V1WC4/14.2	13L+
2 RQ01-	=V1WC4/14.2	13.1L+
3 RQ02+	=V1WC4/14.3	13L+
4 RQ02-	=V1WC4/14.4	13.1L+
9 IN P	=V1FQ1/3.3	Switched Power 3 13.1L+P
10 OUT P	=V1FQ1/3.4	SPARE
11 IN M	=V1FQ1/3.4	Switched Power 3 13.1L+M
12 OUT M	=V1FQ1/3.5	SPARE

1A AUX
2A AUX
3A AUX
4A AUX

6ES7136-6RA00-0BF0 + BU20-P8+A4+0B

			Date	12/22/2022	Volvo Trucks North America	Valiant TMS	ET200S F-RQ Overview KF15.53	Drawing name: =2V04&EFS-EL	= V1KF1
			Ed.	MKLEPADLO					+ V1UC15
			Appr		P6700 Underbody Mainline - Cell 2V04			Document type: EFS	Project nr: 22-16151
Modification	Date	Name	Original		Replacement of / Replaced by	Scale 1:1			Page 17 / 1630

0	1	2	3	4	5	6	7	8	9

-KF15.54
=V1FQ1/4.2
=V1WC4/15.1

ET 200SP SIEMENS
F-RQ 1x24VDC/24..230VAC/5A

1 RQ01+	=V1WC4/15.2	14L+
2 RQ01-	=V1WC4/15.2	14.1L+
3 RQ02+	=V1WC4/15.3	14L+
4 RQ02-	=V1WC4/15.4	14.1L+
9 IN P	=V1FQ1/4.3	Switched Power 4 14.1L+P
10 OUT P	=V1FQ1/4.4	SPARE
11 IN M	=V1FQ1/4.4	Switched Power 4 14.1L+M
12 OUT M	=V1FQ1/4.5	SPARE

1A AUX
2A AUX
3A AUX
4A AUX

6ES7136-6RA00-0BF0 + BU20-P8+A4+0B

			Date	12/22/2022	Volvo Trucks North America	Valiant TMS	ET200S F-RQ Overview KF15.54	Drawing name: =2V04&EFS-EL	= V1KF1
			Ed.	MKLEPADLO					+ V1UC15
			Appr		P6700 Underbody Mainline - Cell 2V04			Document type: EFS	Project nr: 22-16151
Modification	Date	Name	Original		Replacement of / Replaced by	Scale 1:1			Page 18 / 1630

0	1	2	3	4	5	6	7	8	9

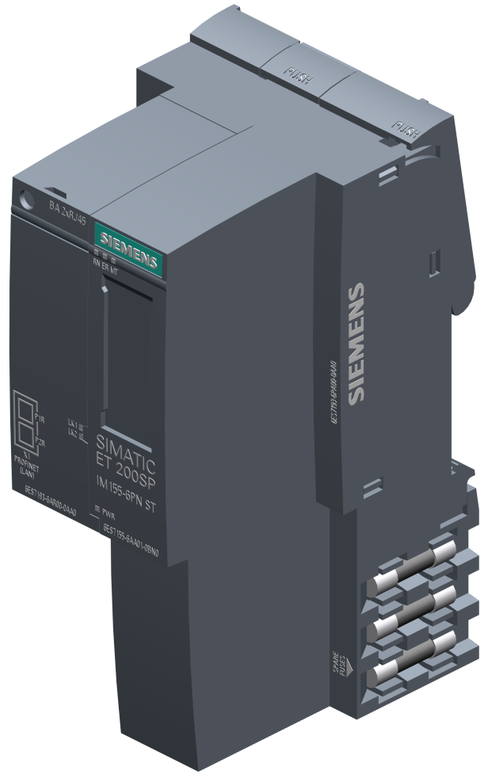

+.UC12/2.6
+.UC12-KF100.12-P12

-KF100.12-P12
PROFINET Cable
6XV1840-3AH10

UC32-PNET1

-PNET1
PROFINET Cable
6XV1840-3AH10

=V1SF0PG1/1.6
-KF32-P2

=V1WC4/2.1 / 1L+1_1
=V1WC4/2.1 / 1M1_1

-X80 1L+ 1 — X80/1/1L+
-X80 1M 2 — X80/2/1M
-X80 2L+ 3 — X80/3/2L+
-X80 2M 4 — X80/4/2M

-P1
-P2
Profinet

X80 6ES7155-6AA01-0BN0 IM 155 PN ST SIEMENS

-KF32
Rack 1
Slot 0

+.UC15/18

2

			Date	12/22/2022	Volvo Trucks North America		Valiant TMS	IM 155 PN	Drawing name: =2V04&EFS-EL	= V1KF1
			Ed.	MKLEPADLO						+ V1UC32
			Appr		P6700 Underbody Mainline - Cell 2V04				Document type: EFS	Project nr: 22-16151
Modification	Date	Name	Original		Replacement of	Replaced by	Scale 1:1			Page 1 / 1630

0	1	2	3	4	5	6	7	8	9

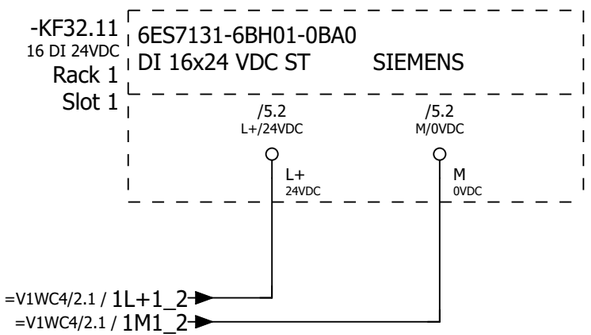

1 3

			Date	12/22/2022	Volvo Trucks North America		Valiant TMS	ET200S Wiring DI	Drawing name: =2V04&EFS-EL	= V1KF1	
			Ed.	MKLEPADLO						+ V1UC32	
			Appr		P6700 Underbody Mainline - Cell 2V04		Scale 1:1		Document type: EFS	Project nr: 22-16151	Page 2
Modification	Date	Name	Original		Replacement of	Replaced by					1630

0	1	2	3	4	5	6	7	8	9

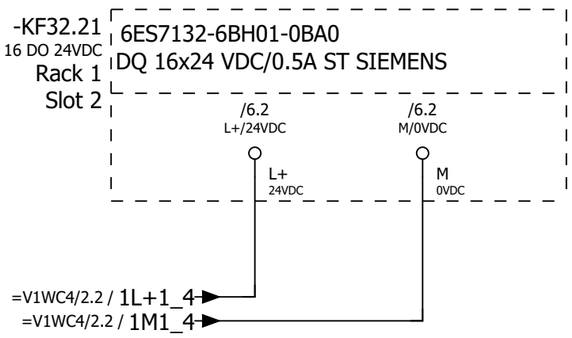

			Date	12/22/2022	Volvo Trucks North America	Valiant TMS	ET200S Wiring DO	Drawing name: =2V04&EFS-EL	= V1KF1	
			Ed.	MKLEPADLO					+ V1UC32	
			Appr		P6700 Underbody Mainline - Cell 2V04			Document type: EFS	Project nr: 22-16151	Page 3
Modification	Date	Name	Original		Replacement of	Replaced by	Scale 1:1			1630

0	1	2	3	4	5	6	7	8	9

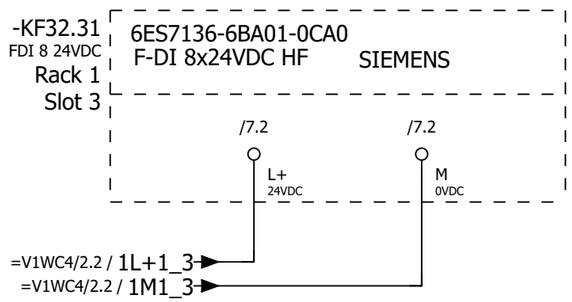

3 5

			Date	12/22/2022	Volvo Trucks North America	Valiant TMS	ET200S Wiring F-DI	Drawing name: =2V04&EFS-EL	= V1KF1	
			Ed.	MKLEPADLO					+ V1UC32	
			Appr		P6700 Underbody Mainline - Cell 2V04			Document type: EFS	Project nr: 22-16151	Page 4
Modification	Date	Name	Original		Replacement of / Replaced by	Scale 1:1				1630

0	1	2	3	4	5	6	7	8	9

-KF32.11

ET 200SP SIEMENS
DI 16x24 VDC ST

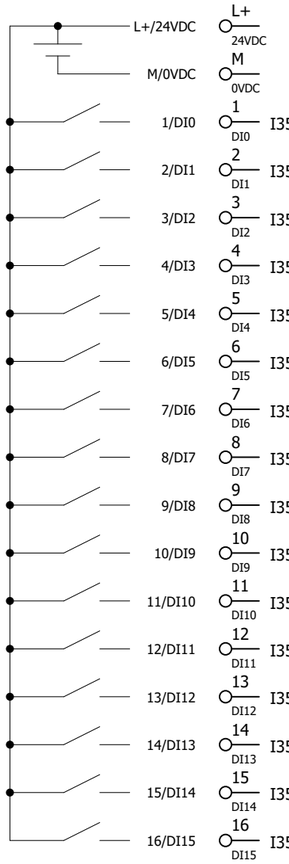

6ES7131-6BH01-0BA0

	/2.1		
	/2.2		
		I350.0	Spare
		I350.1	Spare
	=V1SF0PG1/2.7	=V1SF1+V1UC32-SF3_4	Start auto PB
		I350.3	Spare
	=V1SF0PG1/2.5	=V1SF1+V1UC32-SF1_4	Set PB
	=V1SF0PG1/2.2	=V1SF1+V1UC32-SF2_4	Reset PB
		I350.6	Spare
		I350.7	Spare
	=V1WC4/3.2	=V1WC4+V1UC32-FC1	Monitoring 24 VDC
	=V1WC4/3.4	=V1WC4+V1UC32-FC2	Monitoring 24 VDC
		I351.2	Spare
		I351.3	Spare
		I351.4	Spare
		I351.5	Spare
		I351.6	Spare
		I351.7	Spare

4 6

			Date	12/22/2022	Volvo Trucks North America	Valiant TMS	ET200S Cross-reference Input module	Drawing name: =2V04&EFS-EL	= V1KF1
			Ed.	MKLEPADLO					+ V1UC32
			Appr		P6700 Underbody Mainline - Cell 2V04			Document type: EFS	Project nr: 22-16151
Modification	Date	Name	Original		Replacement of	Replaced by	Scale 1:1		Page 5 / 1630

-KF32.21

ET 200SP SIEMENS
DQ 16x24 VDC/0.5A ST

L+/24VDC	L+ 24VDC		/3.1			
M/0VDC	M 0VDC		/3.2			
1/DQ0	1 DQ0	Q350.0		Q350.0	Spare	
2/DQ1	2 DQ1	Q350.1	=V1SF0PG1/2.8	=V1SF1+V1UC32-PF3_Q	Start auto LT	
3/DQ2	3 DQ2	Q350.2		Q350.2	Spare	
4/DQ3	4 DQ3	Q350.3		Q350.3	Spare	
5/DQ4	5 DQ4	Q350.4		Q350.4	Spare	
6/DQ5	6 DQ5	Q350.5		Q350.5	Spare	
7/DQ6	7 DQ6	Q350.6		Q350.6	Spare	
8/DQ7	8 DQ7	Q350.7		Q350.7	Spare	
9/DQ8	9 DQ8	Q351.0		Q351.0	Spare	
10/DQ9	10 DQ9	Q351.1		Q351.1	Spare	
11/DQ10	11 DQ10	Q351.2		Q351.2	Spare	
12/DQ11	12 DQ11	Q351.3		Q351.3	Spare	
13/DQ12	13 DQ12	Q351.4		Q351.4	Spare	
14/DQ13	14 DQ13	Q351.5		Q351.5	Spare	
15/DQ14	15 DQ14	Q351.6		Q351.6	Spare	
16/DQ15	16 DQ15	Q351.7		Q351.7	Spare	

6ES7132-6BH01-0BA0

			Date	12/22/2022	Volvo Trucks North America	Valiant TMS	ET200S Cross-reference Output module	Drawing name: =2V04&EFS-EL	= V1KF1	
			Ed.	MKLEPADLO					+ V1UC32	
			Appr		P6700 Underbody Mainline - Cell 2V04	Scale 1:1		Document type: EFS	Project nr: 22-16151	Page 6
Modification	Date	Name	Original		Replacement of / Replaced by					1630

0	1	2	3	4	5	6	7	8	9

-KF32.31
/4.0

ET 200SP SIEMENS
F-DI 8x24VDC HF

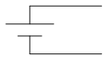

	L+ 24VDC	/4.1			
	M 0VDC	/4.2			
I5350.0	1 DI0	=FQ0V1SF1S01/1.3	=FQ0V1SF1S01+UC32-SF1.1	Emergency stop Ch1	
	9 VS0	=FQ0V1SF1S01/1.3			
I5350.1	2 DI1		I5350.1	Spare	
	10 VS1				
I5350.2	3 DI2		I5350.2	Spare	
	11 VS2				
I5350.3	4 DI3		I5350.3	Spare	
	12 VS3				
I5350.4	5 DI4	=FQ0V1SF1S01/1.4	=FQ0V1SF1S01+UC32-SF1.11	Emergency stop Ch2	
	13 VS4	=FQ0V1SF1S01/1.4			
I5350.5	6 DI5		I5350.5	Spare	
	14 VS5				
I5350.6	7 DI6		I5350.6	Spare	
	15 VS6				
I5350.7	8 DI7		I5350.7	Spare	
	16 VS7				

6ES7136-6BA01-0CA0

			Date	12/22/2022	Volvo Trucks North America	Valiant TMS	ET200S Cross-reference	Drawing name: =2V04&EFS-EL	= V1KF1
			Ed.	MKLEPADLO			Safe input module		+ V1UC32
			Appr		P6700 Underbody Mainline - Cell 2V04			Document type: EFS	Project nr: 22-16151
Modification	Date	Name	Original		Replacement of / Replaced by	Scale 1:1			Page 7 / 1630

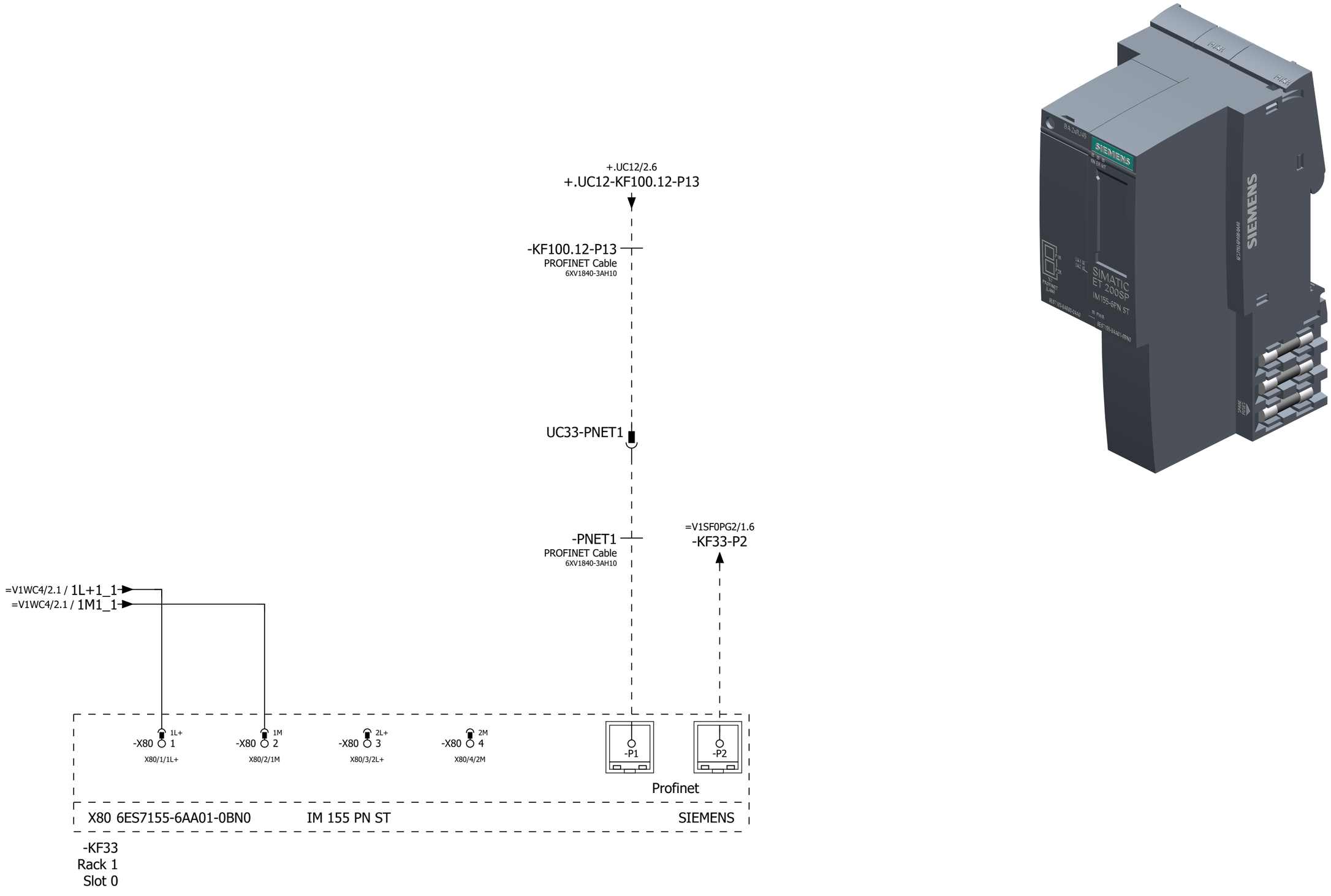

+.UC32/7

2

			Date	12/22/2022	Volvo Trucks North America	Valiant TMS	IM 155 PN	Drawing name: =2V04&EFS-EL	= V1KF1
			Ed.	MKLEPADLO					+ V1UC33
			Appr		P6700 Underbody Mainline - Cell 2V04			Document type: EFS	Project nr: 22-16151
Modification	Date	Name	Original		Replacement of / Replaced by	Scale 1:1			Page 1 / 1630

0	1	2	3	4	5	6	7	8	9

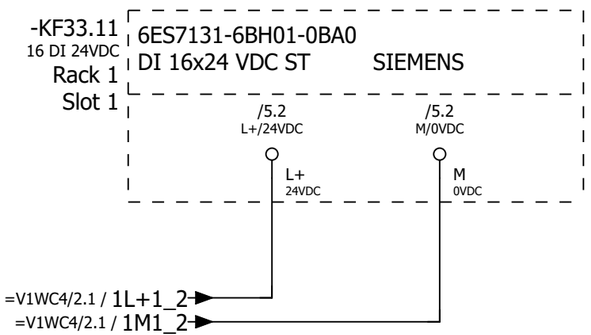

1 3

			Date	12/22/2022	Volvo Trucks North America	Valiant TMS	ET200S Wiring DI	Drawing name: =2V04&EFS-EL		= V1KF1	
			Ed.	MKLEPADLO						+ V1UC33	
			Appr		P6700 Underbody Mainline - Cell 2V04			Document type: EFS	Project nr: 22-16151	Page	2
Modification	Date	Name	Original		Replacement of	Replaced by	Scale 1:1				1630

0	1	2	3	4	5	6	7	8	9

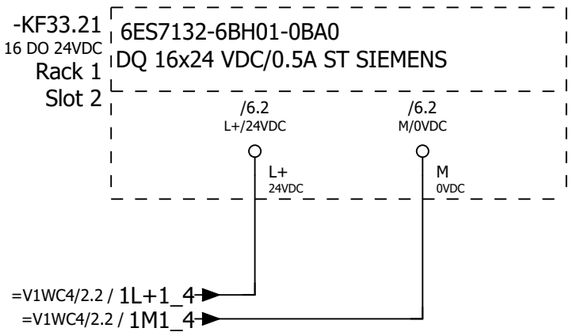

			Date	12/22/2022	Volvo Trucks North America	Valiant TMS	ET200S Wiring DO	Drawing name: =2V04&EFS-EL	= V1KF1	
			Ed.	MKLEPADLO					+ V1UC33	
			Appr		P6700 Underbody Mainline - Cell 2V04			Document type: EFS	Project nr: 22-16151	Page 3
Modification	Date	Name	Original		Replacement of	Replaced by	Scale 1:1			1630

0	1	2	3	4	5	6	7	8	9

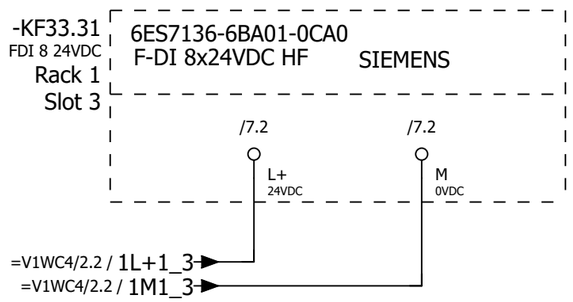

3 5

			Date	12/22/2022	Volvo Trucks North America		Valiant TMS	ET200S Wiring F-DI	Drawing name: =2V04&EFS-EL	= V1KF1	
			Ed.	MKLEPADLO						+ V1UC33	
			Appr		P6700 Underbody Mainline - Cell 2V04		Scale 1:1		Document type: EFS	Project nr: 22-16151	Page 4
Modification	Date	Name	Original		Replacement of	Replaced by					1630

-KF33.11

ET 200SP SIEMENS
DI 16x24 VDC ST

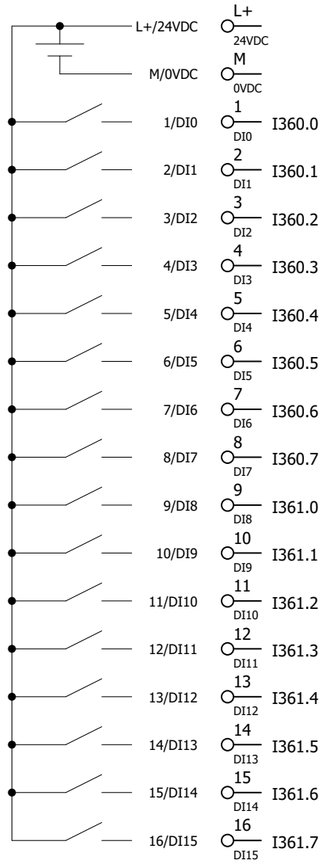

/2.1			
/2.2			
	I360.0	Spare	
	I360.1	Spare	
=V1SF0PG2/2.7	=V1SF1+V1UC33-SF3_4	Start auto PB	
	I360.3	Spare	
=V1SF0PG2/2.5	=V1SF1+V1UC33-SF1_4	Set PB	
=V1SF0PG2/2.2	=V1SF1+V1UC33-SF2_4	Reset PB	
	I360.6	Spare	
	I360.7	Spare	
=V1WC4/3.2	=V1WC4+V1UC33-FC1	Monitoring 24 VDC	
=V1WC4/3.4	=V1WC4+V1UC33-FC2	Monitoring 24 VDC	
	I361.2	Spare	
	I361.3	Spare	
	I361.4	Spare	
	I361.5	Spare	
	I361.6	Spare	
	I361.7	Spare	

6ES7131-6BH01-0BA0

			Date	12/22/2022	Volvo Trucks North America	Valiant TMS	ET200S Cross-reference Input module	Drawing name: =2V04&EFS-EL	= V1KF1
			Ed.	MKLEPADLO					+ V1UC33
			Appr		P6700 Underbody Mainline - Cell 2V04			Document type: EFS	Project nr: 22-16151
Modification	Date	Name	Original		Replacement of / Replaced by	Scale 1:1			Page 5 / 1630

0	1	2	3	4	5	6	7	8	9

-KF33.21

ET 200SP SIEMENS
DQ 16x24 VDC/0.5A ST

L+/24VDC	L+ 24VDC		/3.1		
M/0VDC	M 0VDC		/3.2		
1/DQ0	1 DQ0	Q360.0		Q360.0	Spare
2/DQ1	2 DQ1	Q360.1	=V1SF0PG2/2.8	=V1SF1+V1UC33-PF3_Q	Start auto LT
3/DQ2	3 DQ2	Q360.2		Q360.2	Spare
4/DQ3	4 DQ3	Q360.3		Q360.3	Spare
5/DQ4	5 DQ4	Q360.4		Q360.4	Spare
6/DQ5	6 DQ5	Q360.5		Q360.5	Spare
7/DQ6	7 DQ6	Q360.6		Q360.6	Spare
8/DQ7	8 DQ7	Q360.7		Q360.7	Spare
9/DQ8	9 DQ8	Q361.0		Q361.0	Spare
10/DQ9	10 DQ9	Q361.1		Q361.1	Spare
11/DQ10	11 DQ10	Q361.2		Q361.2	Spare
12/DQ11	12 DQ11	Q361.3		Q361.3	Spare
13/DQ12	13 DQ12	Q361.4		Q361.4	Spare
14/DQ13	14 DQ13	Q361.5		Q361.5	Spare
15/DQ14	15 DQ14	Q361.6		Q361.6	Spare
16/DQ15	16 DQ15	Q361.7		Q361.7	Spare

6ES7132-6BH01-0BA0

5 7

			Date	12/22/2022	Volvo Trucks North America	Valiant TMS	ET200S Cross-reference Output module	Drawing name: =2V04&EFS-EL	= V1KF1	
			Ed.	MKLEPADLO					+ V1UC33	
			Appr		P6700 Underbody Mainline - Cell 2V04	Scale 1:1		Document type: EFS	Project nr: 22-16151	Page 6
Modification	Date	Name	Original		Replacement of	Replaced by				1630

0	1	2	3	4	5	6	7	8	9

-KF33.31
/4.0

ET 200SP SIEMENS
F-DI 8x24VDC HF

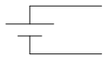

	L+ 24VDC	/4.1			
	M 0VDC	/4.2			
I5360.0	1 DI0	=FQ0V1SF2S01/1.3	=FQ0V1SF1S01+UC33-SF1.1	Emergency stop Ch1	
	9 VS0	=FQ0V1SF2S01/1.3			
I5360.1	2 DI1		I5360.1	Spare	
	10 VS1				
I5360.2	3 DI2		I5360.2	Spare	
	11 VS2				
I5360.3	4 DI3		I5360.3	Spare	
	12 VS3				
I5360.4	5 DI4	=FQ0V1SF2S01/1.4	=FQ0V1SF1S01+UC33-SF1.11	Emergency stop Ch2	
	13 VS4	=FQ0V1SF2S01/1.4			
I5360.5	6 DI5		I5360.5	Spare	
	14 VS5				
I5360.6	7 DI6		I5360.6	Spare	
	15 VS6				
I5360.7	8 DI7		I5360.7	Spare	
	16 VS7				

6ES7136-6BA01-0CA0

			Date	12/22/2022	Volvo Trucks North America	Valiant TMS	ET200S Cross-reference	Drawing name: =2V04&EFS-EL	= V1KF1
			Ed.	MKLEPADLO			Safe input module		+ V1UC33
			Appr		P6700 Underbody Mainline - Cell 2V04			Document type: EFS	Project nr: 22-16151
Modification	Date	Name	Original		Replacement of / Replaced by	Scale 1:1			Page 7 / 1630

0	1	2	3	4	5	6	7	8	9

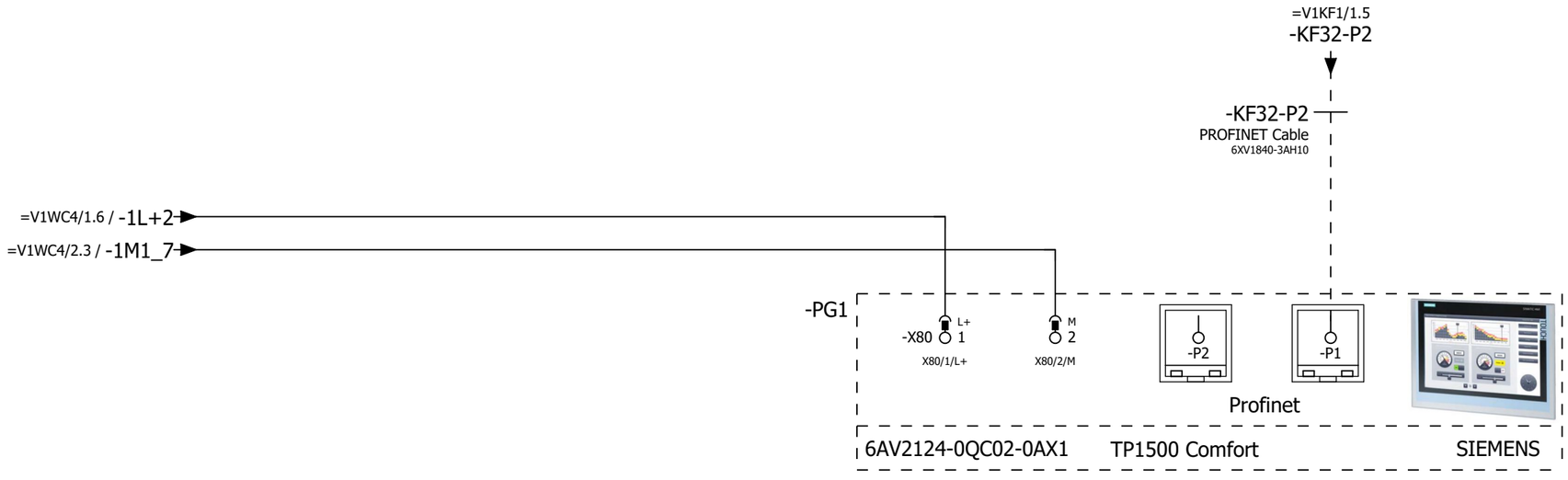

=V1KF1+.UC33/7

2

			Date	12/22/2022	Volvo Trucks North America	Valiant TMS	TP1500: SOP Display	Drawing name: =2V04&EFS-EL	= V1SF0PG1
			Ed.	MKLEPADLO					+ V1UC32
			Appr		P6700 Underbody Mainline - Cell 2V04			Document type: EFS	Project nr: 22-16151
Modification	Date	Name	Original		Replacement of	Replaced by	Scale 1:1		Page 1 / 1630

Reset PB
=V1SF1+V1UC32-SF2_4
=V1KF1/5.2

DI	ET200SP
I350.5 DI5	
6	

=V1KF1
-KF32.11
I350.5 BU 18 AWG

Set PB
=V1SF1+V1UC32-SF1_4
=V1KF1/5.2

DI	ET200SP
I350.4 DI4	
5	

=V1KF1
-KF32.11
I350.4 BU 18 AWG

Start auto PB
=V1SF1+V1UC32-SF3_4
=V1KF1/5.2

DI	ET200SP
I350.2 DI2	
3	

=V1KF1
-KF32.11
I350.2 BU 18 AWG

Start auto LT
=V1SF1+V1UC32-PF3_Q
=V1KF1/6.2

DO	ET200SP
Q350.1 DQ1	
2	

=V1KF1
-KF32.21
Q350.1 BU 18 AWG

-SF2
&ELU/1.3
&ELU/1.3
CP1-10Y-20
Reset PB
4 E 3 1SFA619100R1023 14 13

-SF1
&ELU/1.2
&ELU/1.2
CP1-10G-20
Set PB
4 E 3 1SFA619100R1022 14 13

-SF3/PF3
&ELU/1.3
&ELU/1.3
CP1-11C-10
Start auto PBLT
4 E 3 1SFA619100R1118 x1 White x2

=V1WC4/2.3 / 1L+1_5
=V1WC4/2.3 / 1M1_5

1 =V1SF0PG2+.UC33/1

			Date	12/22/2022	Volvo Trucks North America	Valiant TMS	Operating box SOP	Drawing name: =2V04&EFS-EL	= V1SF0PG1	
			Ed.	MKLEPADLO					+ V1UC32	
			Appr		P6700 Underbody Mainline - Cell 2V04	Scale 1:1		Document type: EFS	Project nr: 22-16151	Page 2 / 1630
Modification	Date	Name	Original		Replacement of	Replaced by				

0	1	2	3	4	5	6	7	8	9

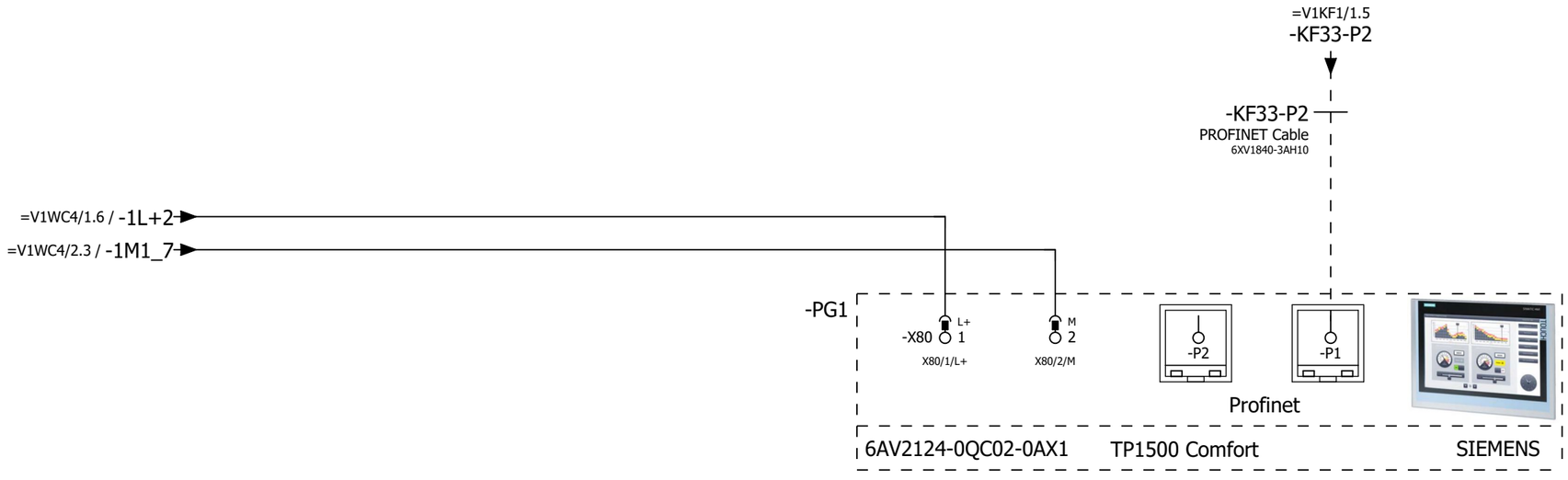

=V1SF0PG1+.UC32/2

2

			Date	12/22/2022	Volvo Trucks North America	Valiant TMS	TP1500: SOP Display	Drawing name: =2V04&EFS-EL	= V1SF0PG2
			Ed.	MKLEPADLO					+ V1UC33
			Appr		P6700 Underbody Mainline - Cell 2V04			Document type: EFS	Project nr: 22-16151
Modification	Date	Name	Original		Replacement of	Replaced by	Scale 1:1		Page 1 / 1630

Reset PB
=V1SF1+V1UC33-SF2_4
=V1KF1/5.2

DI	ET200SP
I360.5 DI5	
6	

=V1KF1
-KF33.11
I360.5 BU 18 AWG

Set PB
=V1SF1+V1UC33-SF1_4
=V1KF1/5.2

DI	ET200SP
I360.4 DI4	
5	

=V1KF1
-KF33.11
I360.4 BU 18 AWG

Start auto PB
=V1SF1+V1UC33-SF3_4
=V1KF1/5.2

DI	ET200SP
I360.2 DI2	
3	

=V1KF1
-KF33.11
I360.2 BU 18 AWG

Start auto LT
=V1SF1+V1UC33-PF3_Q
=V1KF1/6.2

DO	ET200SP
Q360.1 DQ1	
2	

=V1KF1
-KF33.21
Q360.1 BU 18 AWG

-SF2
&ELU/1.3
&ELU/1.3
CP1-10Y-20
Reset PB
4 E 3 1SFA619100R1023 14 13

-SF1
&ELU/1.2
&ELU/1.2
CP1-10G-20
Set PB
4 E 3 1SFA619100R1022 14 13

-SF3/PF3
&ELU/1.3
&ELU/1.3
CP1-11C-10
Start auto PBLT
4 E 3 1SFA619100R1118 x1 White x2

=V1WC4/2.3 / 1L+1_5
=V1WC4/2.3 / 1M1_5

1

=V1UQ51BG0+.UQ51/1

			Date	12/22/2022	Volvo Trucks North America	Valiant TMS	Operating box SOP	Drawing name: =2V04&EFS-EL	= V1SF0PG2
			Ed.	MKLEPADLO					+ V1UC33
			Appr		P6700 Underbody Mainline - Cell 2V04			Document type: EFS / Project nr: 22-16151	Page 2
Modification	Date	Name	Original		Replacement of / Replaced by	Scale 1:1			1630

0	1	2	3	4	5	6	7	8	9

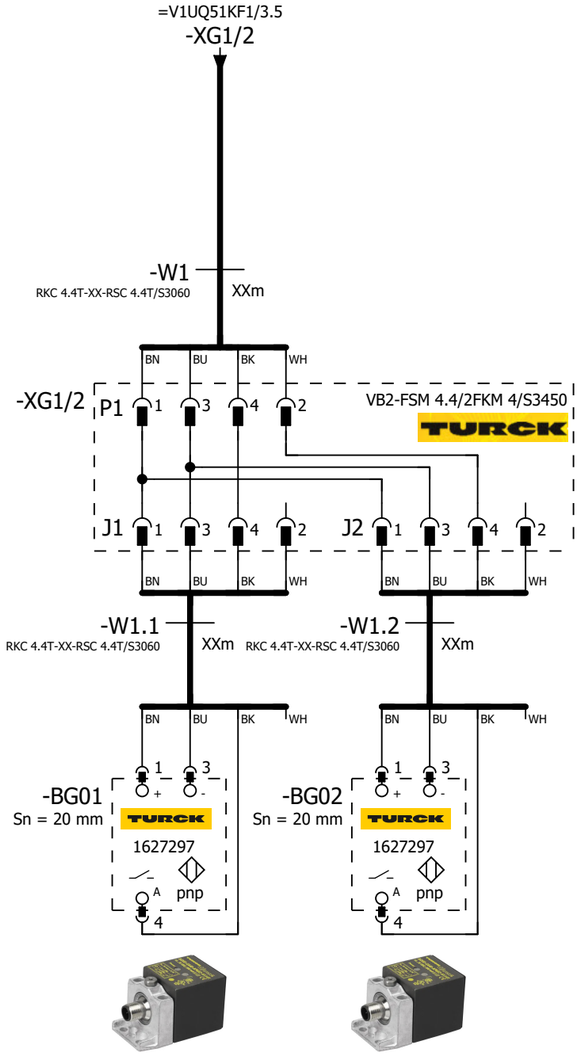

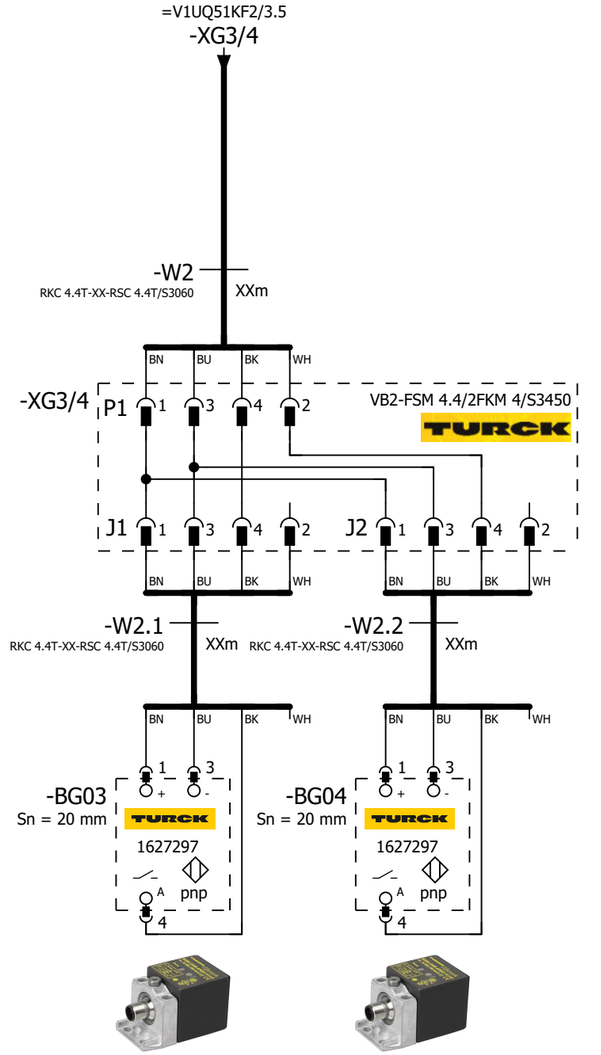

=V1UQ51 -BG01 Floor Frame Assy (Common)	=V1UQ51 -BG02 Floor Frame Assy (Common)	=V1UQ51 -BG03 Floor Frame Assy (Common)	=V1UQ51 -BG04 Floor Frame Assy (Common)

=V1SF0PG2+.UC33/2

=V1UQ51KF1/1

			Date	12/22/2022	Volvo Trucks North America		Valiant TMS	SENSORS	Drawing name: =2V04&EFS-EL	= V1UQ51BG0	
			Ed.	MKLEPADLO						+ V1UQ51	
			Appr		P6700 Underbody Mainline - Cell 2V04		Scale 1:1		Document type: EFS	Project nr: 22-16151	Page 1 / 1630
Modification	Date	Name	Original		Replacement of	Replaced by					

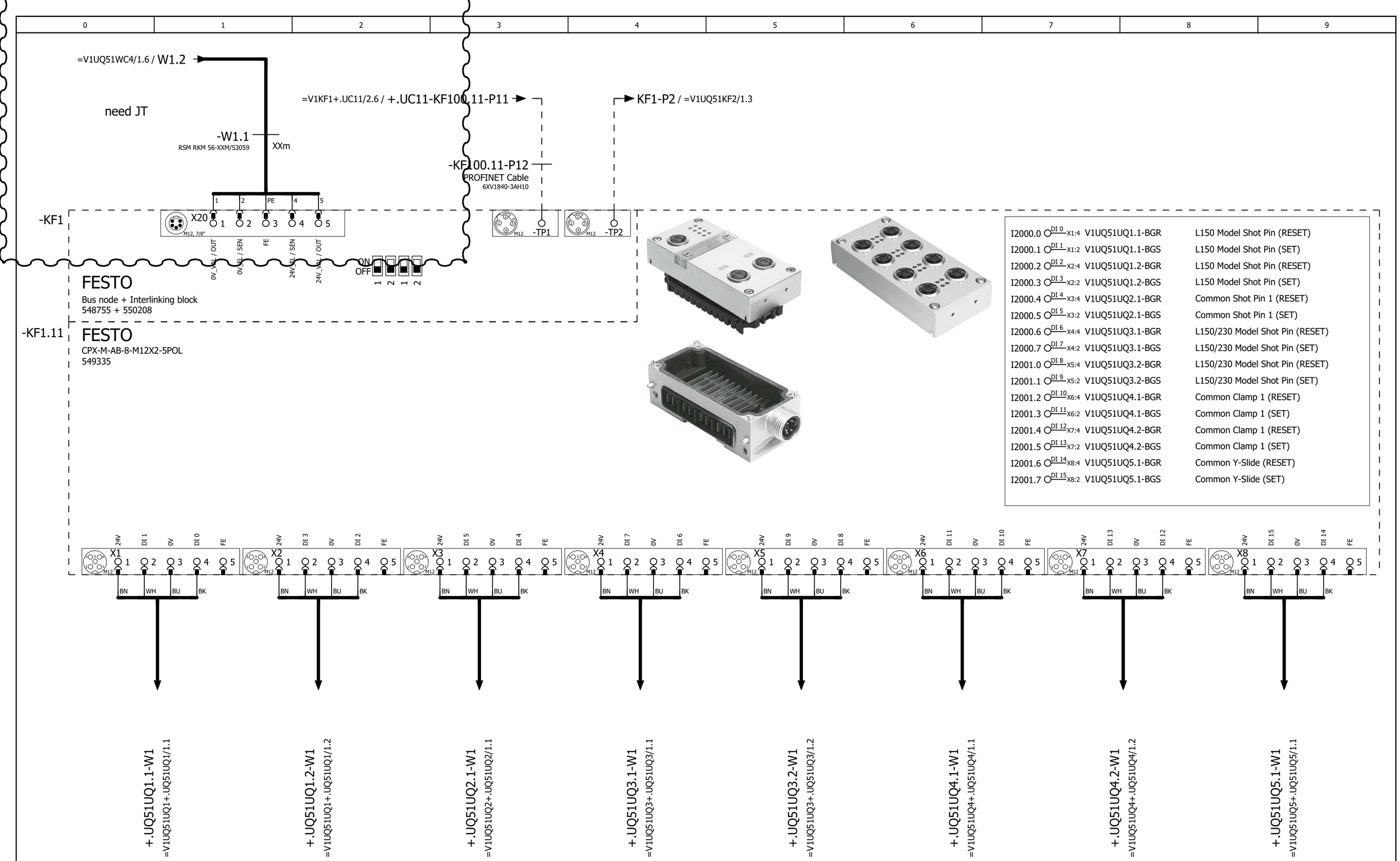

=V1UQ51BG0/1

2

			Date	12/22/2022	Volvo Trucks North America	Valiant TMS	CONNECTING MOD. FOR VTSA MANIFOLD	Drawing name: =2V04&EFS-EL	= V1UQ51KF1 + V1UQ51
			Ed.	MKLEPADLO	P6700 Underbody Mainline - Cell 2V04				
			Appr					Document type: EFS	Project nr: 22-16151
Modification	Date	Name	Original		Replacement of / Replaced by	Scale 1:1			Page 1 / 1630

0	1	2	3	4	5	6	7	8	9

NEED RWD TO COMPLETE

I2002.0	DI 0 X1:4	V1UQ51UQ5.2-BGR	Common Y-Slide (RESET)
I2002.1	DI 1 X1:2	V1UQ51UQ5.2-BGS	Common Y-Slide (SET)
I2002.2	DI 2 X2:4	V1UQ51UQ6.1-BGR	Common Shot Pin 2 (RESET)
I2002.3	DI 3 X2:2	V1UQ51UQ6.1-BGS	Common Shot Pin 2 (SET)
I2002.4	DI 4 X3:4	V1UQ51UQ6.2-BGR	Common Shot Pin 2 (RESET)
I2002.5	DI 5 X3:2	V1UQ51UQ6.2-BGS	Common Shot Pin 2 (SET)
I2002.6	DI 6 X4:4	V1UQ51UQ7.1-BGR	Common Clamp 2 (RESET)
I2002.7	DI 7 X4:2	V1UQ51UQ7.1-BGS	Common Clamp 2 (SET)
I2003.0	DI 8 X5:4	V1UQ51UQ7.2-BGR	Common Clamp 2 (RESET)
I2003.1	DI 9 X5:2	V1UQ51UQ7.2-BGS	Common Clamp 2 (SET)
I2003.2	DI 10 X6:4	V1UQ51UQ7.3-BGR	Common Clamp 2 (RESET)
I2003.3	DI 11 X6:2	V1UQ51UQ7.3-BGS	Common Clamp 2 (SET)
I2003.4	DI 12 X7:4	V1UQ51UQ7.4-BGR	Common Clamp 2 (RESET)
I2003.5	DI 13 X7:2	V1UQ51UQ7.4-BGS	Common Clamp 2 (SET)
I2003.6	DI 14 X8:4	V1UQ51UQ7.5-BGR	Common Clamp 2 (RESET)
I2003.7	DI 15 X8:2	V1UQ51UQ7.5-BGS	Common Clamp 2 (SET)

-KF1.12

FESTO

CPX-M-AB-8-M12X2-5POL

549335

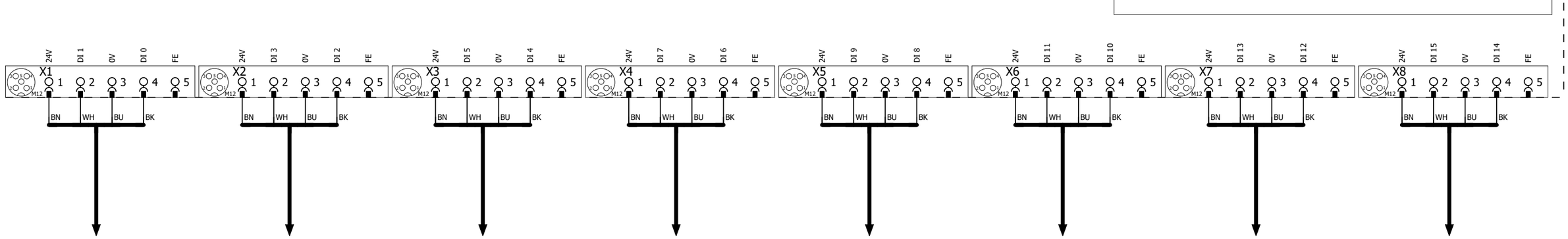

+.UQ51UQ5.2-W1
=V1UQ51UQ5+.UQ51UQ5/1.4

+.UQ51UQ6.1-W1
=V1UQ51UQ6+.UQ51UQ6/1.1

+.UQ51UQ6.2-W1
=V1UQ51UQ6+.UQ51UQ6/1.2

+.UQ51UQ7.1-W1
=V1UQ51UQ7+.UQ51UQ7/1.0

+.UQ51UQ7.2-W1
=V1UQ51UQ7+.UQ51UQ7/1.2

+.UQ51UQ7.3-W1
=V1UQ51UQ7+.UQ51UQ7/1.3

+.UQ51UQ7.4-W1
=V1UQ51UQ7+.UQ51UQ7/1.5

+.UQ51UQ7.5-W1
=V1UQ51UQ7+.UQ51UQ7/1.6

1 3

			Date	12/22/2022	Volvo Trucks North America	Valiant TMS	I/O MOD. DI16 (8 x M12) FOR VTSA-F	Drawing name: =2V04&EFS-EL	= V1UQ51KF1
			Ed.	MKLEPADLO					+ V1UQ51
			Appr		P6700 Underbody Mainline - Cell 2V04	Scale 1:1		Document type: EFS	Project nr: 22-16151
Modification	Date	Name	Original		Replacement of	Replaced by			Page 2 / 1630

0	1	2	3	4	5	6	7	8	9

-KF1.13

FESTO

CPX-M-AB-8-M12X2-5POL

549335

I2004.0	DI 0 X1:4	V1UQ51UQ7.6-BGR	Common Clamp 2 (RESET)
I2004.1	DI 1 X1:2	V1UQ51UQ7.6-BGS	Common Clamp 2 (SET)
I2004.2	DI 2 X2:4	V1UQ51UQ7.7-BGR	Common Clamp 2 (RESET)
I2004.3	DI 3 X2:2	V1UQ51UQ7.7-BGS	Common Clamp 2 (SET)
I2004.4	DI 4 X3:4	V1UQ51UQ8.1-BGR	L150 Model Clamp 1 (RESET)
I2004.5	DI 5 X3:2	V1UQ51UQ8.1-BGS	L150 Model Clamp 1 (SET)
I2004.6	DI 6 X4:4	V1UQ51UQ8.2-BGR	L150 Model Clamp 1 (RESET)
I2004.7	DI 7 X4:2	V1UQ51UQ8.2-BGS	L150 Model Clamp 1 (SET)
I2005.0	DI 8 X5:4	V1UQ51-BG01	Sensor Floor Frame Assy (Common)
I2005.1	DI 9 X5:2	V1UQ51-BG02	Sensor Floor Frame Assy (Common)
I2005.2	DI 10 X6:4	I2005.2	Spare
I2005.3	DI 11 X6:2	I2005.3	Spare
I2005.4	DI 12 X7:4	I2005.4	Spare
I2005.5	DI 13 X7:2	I2005.5	Spare
I2005.6	DI 14 X8:4	I2005.6	Spare
I2005.7	DI 15 X8:2	I2005.7	Spare

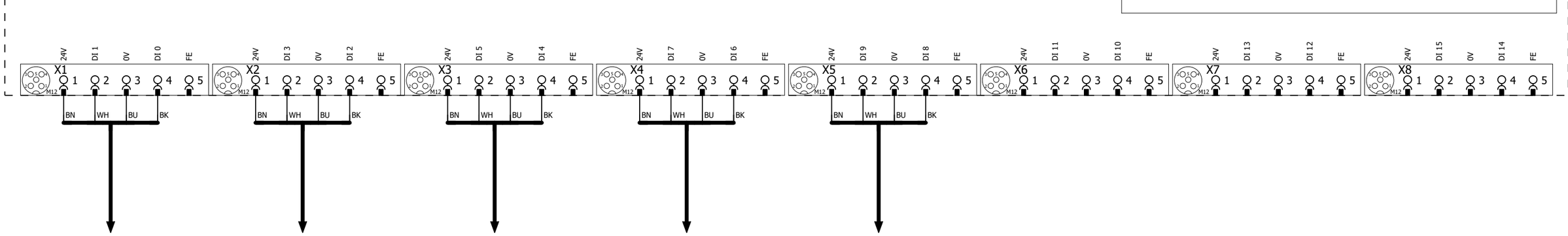

			Date	12/22/2022	Volvo Trucks North America	Valiant TMS	I/O MOD. DI16 (8 x M12) FOR VTSA-F	Drawing name: =2V04&EFS-EL	= V1UQ51KF1
			Ed.	MKLEPADLO					+ V1UQ51
			Appr		P6700 Underbody Mainline - Cell 2V04	Scale 1:1		Document type: EFS	Project nr: 22-16151
Modification	Date	Name	Original		Replacement of / Replaced by				Page 3 / 1630

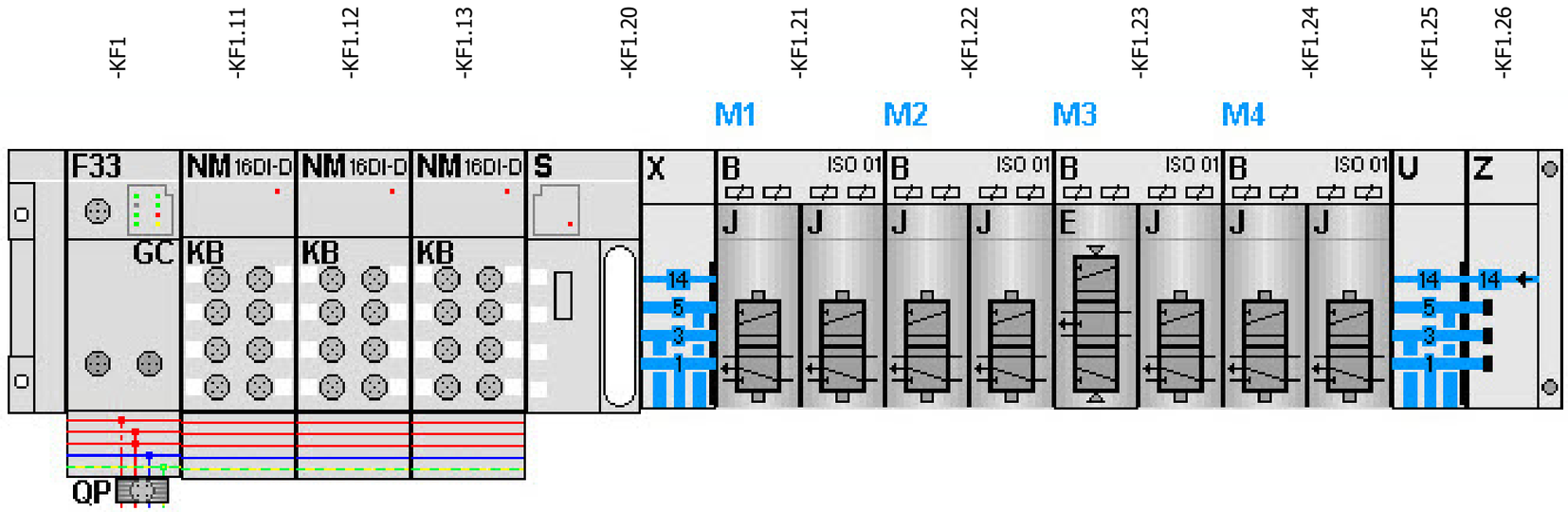

-KF1.21
=V1UQ51UQ1+.UQ51UQ1/1.3
=V1UQ51UQ2+.UQ51UQ2/1.3

FESTO

=V1UQ51UQ1+.UQ51UQ1/1.4	Q2000.0 DO 0 1.1	-QN1.1_Q	L150 Model Shot Pins (RST)
=V1UQ51UQ1+.UQ51UQ1/1.4	Q2000.1 DO 1 1.2	-QN1.2_Q	L150 Model Shot Pins (SET)
=V1UQ51UQ2+.UQ51UQ2/1.4	Q2000.2 DO 2 2.1	-QN2.1_Q	Common Shot Pin 1 (RST)
=V1UQ51UQ2+.UQ51UQ2/1.4	Q2000.3 DO 3 2.2	-QN2.2_Q	Common Shot Pin 1 (SET)

-KF1.22
=V1UQ51UQ3+.UQ51UQ3/1.3
=V1UQ51UQ4+.UQ51UQ4/1.3

FESTO

=V1UQ51UQ3+.UQ51UQ3/1.4	Q2000.4 DO 0 1.1	-QN3.1_Q	L150/230 Model Shot Pins (RST)
=V1UQ51UQ3+.UQ51UQ3/1.4	Q2000.5 DO 1 1.2	-QN3.2_Q	L150/230 Model Shot Pins (SET)
=V1UQ51UQ4+.UQ51UQ4/1.4	Q2000.6 DO 2 2.1	-QN4.1_Q	Common Clamps 1 (RST)
=V1UQ51UQ4+.UQ51UQ4/1.4	Q2000.7 DO 3 2.2	-QN4.2_Q	Common Clamps 1 (SET)

-KF1.23
=V1UQ51UQ5+.UQ51UQ5/1.3
=V1UQ51UQ6+.UQ51UQ6/1.3

FESTO

=V1UQ51UQ5+.UQ51UQ5/1.4	Q2001.0 DO 0 1.1	-QN5.1_Q	Common Y-Slides (RST)
=V1UQ51UQ5+.UQ51UQ5/1.4	Q2001.1 DO 1 1.2	-QN5.2_Q	Common Y-Slides (SET)
=V1UQ51UQ6+.UQ51UQ6/1.4	Q2001.2 DO 2 2.1	-QN6.1_Q	Common Shot Pins 2 (RST)
=V1UQ51UQ6+.UQ51UQ6/1.4	Q2001.3 DO 3 2.2	-QN6.2_Q	Common Shot Pins 2 (SET)

-KF1.24
=V1UQ51UQ7+.UQ51UQ7/1.3
=V1UQ51UQ8+.UQ51UQ8/1.3

FESTO

=V1UQ51UQ7+.UQ51UQ7/1.4	Q2001.4 DO 0 1.1	-QN7.1_Q	Common Clamps 2 (RST)
=V1UQ51UQ7+.UQ51UQ7/1.4	Q2001.5 DO 1 1.2	-QN7.2_Q	Common Clamps 2 (SET)
=V1UQ51UQ8+.UQ51UQ8/1.4	Q2001.6 DO 2 2.1	-QN8.1_Q	L150 Model Clamps 1 (RST)
=V1UQ51UQ8+.UQ51UQ8/1.4	Q2001.7 DO 3 2.2	-QN8.2_Q	L150 Model Clamps 1 (SET)

			Date	12/22/2022	Volvo Trucks North America	Valiant TMS	CONNECTING MOD. FOR FESTO DQ	Drawing name: =2V04&EFS-EL	= V1UQ51KF1
			Ed.	MKLEPADLO					+ V1UQ51
			Appr		P6700 Underbody Mainline - Cell 2V04			Document type: EFS	Project nr: 22-16151
Modification	Date	Name	Original		Replacement of	Replaced by	Scale 1:1		Page 4 / 1630

0	1	2	3	4	5	6	7	8	9

=V1UQ51WC4/1.5 / W2.1

need JT

-W2.1
RSM RKM 56-XXM/S3059
XXm

=V1UQ51KF1/1.4 / KF1-P2

KF2-P2 / =V1UQ51KF3/1.3

-WF2
PROFINET Cable
6XV1840-3AH10

-KF2

X20 M12, 7/8" 1 2 PE 4 5

0V_VAL / OUT | 0V_EL / SEN | FE | 24V_EL / SEN | 24V_VAL / OUT

ON OFF 1 2 1 2

-TP1 -TP2

FESTO
Bus node + Interlinking block
548755 + 550208

-KF2.11

FESTO
CPX-M-AB-8-M12X2-5POL
549335

I2025.0	DI 0 X1:4	V1UQ51UQ9.1-BGR	Common Clamp 3 (RESET)
I2025.1	DI 1 X1:2	V1UQ51UQ9.1-BGS	Common Clamp 3 (SET)
I2025.2	DI 2 X2:4	V1UQ51UQ9.2-BGR	Common Clamp 3 (RESET)
I2025.3	DI 3 X2:2	V1UQ51UQ9.2-BGS	Common Clamp 3 (SET)
I2025.4	DI 4 X3:4	V1UQ51UQ9.3-BGR	Common Clamp 3 (RESET)
I2025.5	DI 5 X3:2	V1UQ51UQ9.3-BGS	Common Clamp 3 (SET)
I2025.6	DI 6 X4:4	V1UQ51UQ9.4-BGR	Common Clamp 3 (RESET)
I2025.7	DI 7 X4:2	V1UQ51UQ9.4-BGS	Common Clamp 3 (SET)
I2026.0	DI 8 X5:4	V1UQ51UQ10.1-BGR	Common Clamp 4 (RESET)
I2026.1	DI 9 X5:2	V1UQ51UQ10.1-BGS	Common Clamp 4 (SET)
I2026.2	DI 10 X6:4	V1UQ51UQ10.2-BGR	Common Clamp 4 (RESET)
I2026.3	DI 11 X6:2	V1UQ51UQ10.2-BGS	Common Clamp 4 (SET)
I2026.4	DI 12 X7:4	V1UQ51UQ11.1-BGR	L150 Model Clamp 2 (RESET)
I2026.5	DI 13 X7:2	V1UQ51UQ11.1-BGS	L150 Model Clamp 2 (SET)
I2026.6	DI 14 X8:4	V1UQ51UQ12.1-BGR	L230 Model Shot Pin 1 (RESET)
I2026.7	DI 15 X8:2	V1UQ51UQ12.1-BGS	L230 Model Shot Pin 1 (SET)

X1 X2 X3 X4 X5 X6 X7 X8 M12

24V | DI 1 | 0V | DI 0 | FE
24V | DI 3 | 0V | DI 2 | FE
24V | DI 5 | 0V | DI 4 | FE
24V | DI 7 | 0V | DI 6 | FE
24V | DI 9 | 0V | DI 8 | FE
24V | DI 11 | 0V | DI 10 | FE
24V | DI 13 | 0V | DI 12 | FE
24V | DI 15 | 0V | DI 14 | FE

BN WH BU BK

+.UQ51UQ9.1-W1
=V1UQ51UQ9+.UQ51UQ9/1.1

+.UQ51UQ9.2-W1
=V1UQ51UQ9+.UQ51UQ9/1.2

+.UQ51UQ9.3-W1
=V1UQ51UQ9+.UQ51UQ9/1.4

+.UQ51UQ9.4-W1
=V1UQ51UQ9+.UQ51UQ9/1.5

+.UQ51UQ10.1-W1
=V1UQ51UQ10+.UQ51UQ10/1.1

+.UQ51UQ10.2-W1
=V1UQ51UQ10+.UQ51UQ10/1.2

+.UQ51UQ11.1-W1
=V1UQ51UQ11+.UQ51UQ11/1.1

+.UQ51UQ12.1-W1
=V1UQ51UQ12+.UQ51UQ12/1.1

=V1UQ51KF1/4

2

			Date	12/22/2022	Volvo Trucks North America	Valiant TMS	CONNECTING MOD. FOR VTSA MANIFOLD	Drawing name: =2V04&EFS-EL	= V1UQ51KF2
			Ed.	MKLEPADLO					+ V1UQ51
			Appr		P6700 Underbody Mainline - Cell 2V04			Document type: EFS	Project nr: 22-16151
Modification	Date	Name	Original		Replacement of	Replaced by	Scale 1:1		Page 1 / 1630

0	1	2	3	4	5	6	7	8	9

-KF2.12

FESTO

CPX-M-AB-8-M12X2-5POL

549335

I2027.0 DI 0 X1:4	V1UQ51UQ13.1-BGR	L230 Model Shot Pin 2 (RESET)
I2027.1 DI 1 X1:2	V1UQ51UQ13.1-BGS	L230 Model Shot Pin 2 (SET)
I2027.2 DI 2 X2:4	V1UQ51UQ14.1-BGR	L230/290 Model Clamp (RESET)
I2027.3 DI 3 X2:2	V1UQ51UQ14.1-BGS	L230/290 Model Clamp (SET)
I2027.4 DI 4 X3:4	V1UQ51UQ14.2-BGR	L230/290 Model Clamp (RESET)
I2027.5 DI 5 X3:2	V1UQ51UQ14.2-BGS	L230/290 Model Clamp (SET)
I2027.6 DI 6 X4:4	V1UQ51UQ15.1-BGR	L230/290/320 Model Clamp (RESET)
I2027.7 DI 7 X4:2	V1UQ51UQ15.1-BGS	L230/290/320 Model Clamp (SET)
I2028.0 DI 8 X5:4	V1UQ51UQ15.2-BGR	L230/290/320 Model Clamp (RESET)
I2028.1 DI 9 X5:2	V1UQ51UQ15.2-BGS	L230/290/320 Model Clamp (SET)
I2028.2 DI 10 X6:4	V1UQ51UQ16.1-BGR	L230 Model Clamp (RESET)
I2028.3 DI 11 X6:2	V1UQ51UQ16.1-BGS	L230 Model Clamp (SET)
I2028.4 DI 12 X7:4	I2028.4	Spare
I2028.5 DI 13 X7:2	I2028.5	Spare
I2028.6 DI 14 X8:4	I2028.6	Spare
I2028.7 DI 15 X8:2	I2028.7	Spare

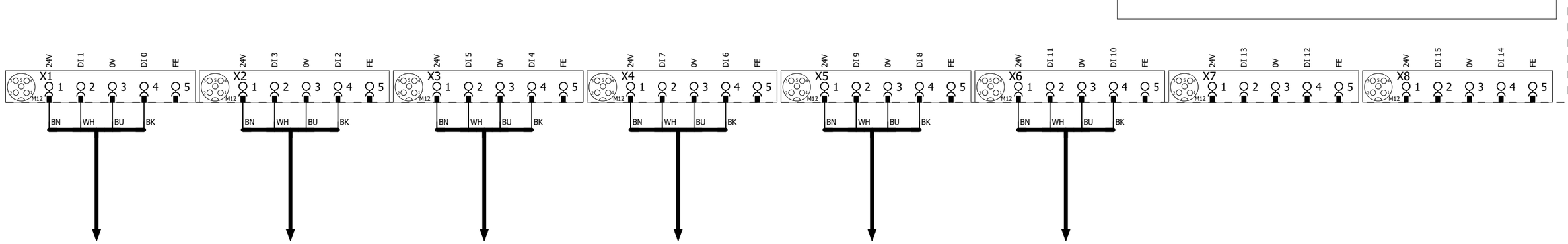

1 3

			Date	12/22/2022	Volvo Trucks North America	Valiant TMS	I/O MOD. DI16 (8 x M12) FOR VTSA-F	Drawing name: =2V04&EFS-EL	= V1UQ51KF2
			Ed.	MKLEPADLO					+ V1UQ51
			Appr		P6700 Underbody Mainline - Cell 2V04	Scale 1:1		Document type: EFS	Project nr: 22-16151
Modification	Date	Name	Original		Replacement of / Replaced by				Page 2 / 1630

0	1	2	3	4	5	6	7	8	9

-KF2.13

FESTO

CPX-M-AB-8-M12X2-5POL

549335

I2029.0	DI 0 X1:4	I2029.0	Spare
I2029.1	DI 1 X1:2	I2029.1	Spare
I2029.2	DI 2 X2:4	I2029.2	Spare
I2029.3	DI 3 X2:2	I2029.3	Spare
I2029.4	DI 4 X3:4	I2029.4	Spare
I2029.5	DI 5 X3:2	I2029.5	Spare
I2029.6	DI 6 X4:4	I2029.6	Spare
I2029.7	DI 7 X4:2	I2029.7	Spare
I2030.0	DI 8 X5:4	V1UQ51-BG03	Sensor Floor Frame Assy (Common)
I2030.1	DI 9 X5:2	V1UQ51-BG04	Sensor Floor Frame Assy (Common)
I2030.2	DI 10 X6:4	I2030.2	Spare
I2030.3	DI 11 X6:2	I2030.3	Spare
I2030.4	DI 12 X7:4	I2030.4	Spare
I2030.5	DI 13 X7:2	I2030.5	Spare
I2030.6	DI 14 X8:4	I2030.6	Spare
I2030.7	DI 15 X8:2	I2030.7	Spare

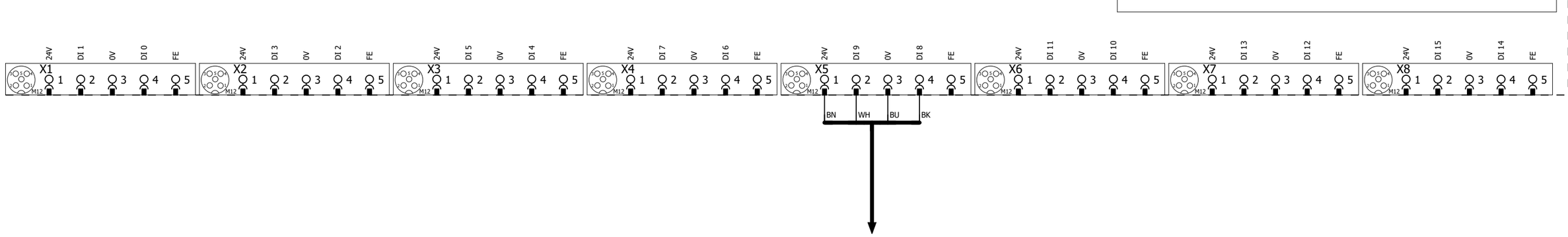

-XG3/4

=V1UQ51BG0/1.4

2 4

			Date	12/22/2022	Volvo Trucks North America	Valiant TMS	I/O MOD. DI16 (8 x M12) FOR VTSA-F	Drawing name: =2V04&EFS-EL	= V1UQ51KF2
			Ed.	MKLEPADLO					+ V1UQ51
			Appr		P6700 Underbody Mainline - Cell 2V04			Document type: EFS	Project nr: 22-16151
Modification	Date	Name	Original		Replacement of / Replaced by	Scale 1:1			Page 3 / 1630

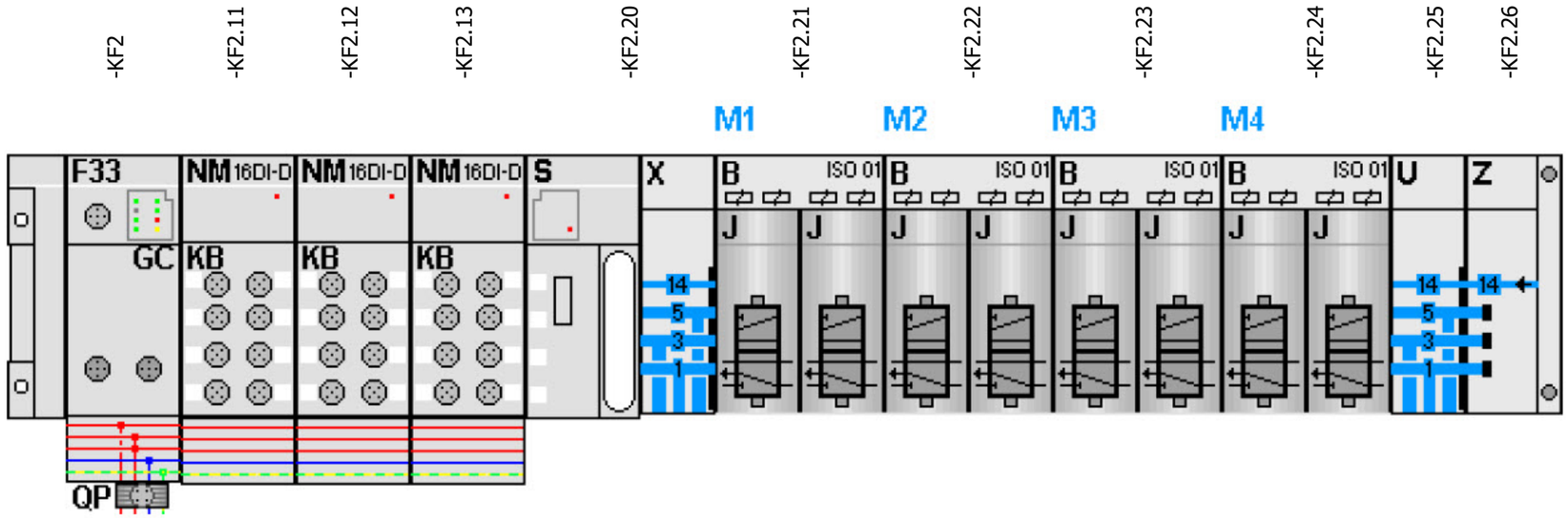

-KF2.21
=V1UQ51UQ9+.UQ51UQ9/1.3
=V1UQ51UQ10+.UQ51UQ10/1.3

FESTO

=V1UQ51UQ9+.UQ51UQ9/1.4	Q2025.0 DO 0 1.1	-QN9.1_Q	Common Clamps 3 (RST)
=V1UQ51UQ9+.UQ51UQ9/1.4	Q2025.1 DO 1 1.2	-QN9.2_Q	Common Clamps 3 (SET)
=V1UQ51UQ10+.UQ51UQ10/1.4	Q2025.2 DO 2 2.1	-QN10.1_Q	Common Clamps 4 (RST)
=V1UQ51UQ10+.UQ51UQ10/1.4	Q2025.3 DO 3 2.2	-QN10.2_Q	Common Clamps 4 (SET)

-KF2.22
=V1UQ51UQ11+.UQ51UQ11/1.3
=V1UQ51UQ12+.UQ51UQ12/1.3

FESTO

=V1UQ51UQ11+.UQ51UQ11/1.4	Q2025.4 DO 0 1.1	-QN11.1_Q	L150 Model Clamp 2 (RST)
=V1UQ51UQ11+.UQ51UQ11/1.4	Q2025.5 DO 1 1.2	-QN11.2_Q	L150 Model Clamp 2 (SET)
=V1UQ51UQ12+.UQ51UQ12/1.4	Q2025.6 DO 2 2.1	-QN12.1_Q	L230 Model Shot Pin 1 (RST)
=V1UQ51UQ12+.UQ51UQ12/1.4	Q2025.7 DO 3 2.2	-QN12.2_Q	L230 Model Shot Pin 1 (SET)

-KF2.23
=V1UQ51UQ13+.UQ51UQ13/1.3
=V1UQ51UQ14+.UQ51UQ14/1.3

FESTO

=V1UQ51UQ13+.UQ51UQ13/1.4	Q2026.0 DO 0 1.1	-QN13.1_Q	L230 Model Shot Pin 2 (RST)
=V1UQ51UQ13+.UQ51UQ13/1.4	Q2026.1 DO 1 1.2	-QN13.2_Q	L230 Model Shot Pin 2 (SET)
=V1UQ51UQ14+.UQ51UQ14/1.4	Q2026.2 DO 2 2.1	-QN14.1_Q	L230/290 Model Clamps (RST)
=V1UQ51UQ14+.UQ51UQ14/1.4	Q2026.3 DO 3 2.2	-QN14.2_Q	L230/290 Model Clamps (SET)

-KF2.24
=V1UQ51UQ15+.UQ51UQ15/1.3
=V1UQ51UQ16+.UQ51UQ16/1.3

FESTO

=V1UQ51UQ15+.UQ51UQ15/1.4	Q2026.4 DO 0 1.1	-QN15.1_Q	L230/290/320 Model Clamps (RST)
=V1UQ51UQ15+.UQ51UQ15/1.4	Q2026.5 DO 1 1.2	-QN15.2_Q	L230/290/320 Model Clamps (SET)
=V1UQ51UQ16+.UQ51UQ16/1.4	Q2026.6 DO 2 2.1	-QN16.1_Q	L230 Model Clamp (RST)
=V1UQ51UQ16+.UQ51UQ16/1.4	Q2026.7 DO 3 2.2	-QN16.2_Q	L230 Model Clamp (SET)

0	1	2	3	4	5	6	7	8	9

=V1UQ51WC4/1.6 / W2.2

need JT

-W2.2
RSM RKM 56-XXM/S3059
XXm

=V1UQ51KF2/1.4 / KF2-P2

-WF3
PROFINET Cable
6XV1840-3AH10

-KF3

X20 M12, 7/8" 1 2 PE 4 5

0V_VAL / OUT | 0V_EL / SEN | FE | 24V_EL / SEN | 24V_VAL / OUT

-TP1 M12 | -TP2 M12

ON OFF 1 2 1 2

FESTO
Bus node + Interlinking block
548755 + 550208

-KF3.11

FESTO
CPX-M-AB-8-M12X2-5POL
549335

I2050.0	DI 0 X1:4	V1UQ51UQ17.1-BGR	L290/320 Model X-Slide 1 (RESET)
I2050.1	DI 1 X1:2	V1UQ51UQ17.1-BGS	L290/320 Model X-Slide 1 (SET)
I2050.2	DI 2 X2:4	V1UQ51UQ18.1-BGR	L290/320 Model X-Slide 2 (RESET)
I2050.3	DI 3 X2:2	V1UQ51UQ18.1-BGS	L290/320 Model X-Slide 2 (SET)
I2050.4	DI 4 X3:4	V1UQ51UQ19.1-BGR	L290 Model Clamp 1 (RESET)
I2050.5	DI 5 X3:2	V1UQ51UQ19.1-BGS	L290 Model Clamp 1 (SET)
I2050.6	DI 6 X4:4	V1UQ51UQ19.2-BGR	L290 Model Clamp 1 (RESET)
I2050.7	DI 7 X4:2	V1UQ51UQ19.2-BGS	L290 Model Clamp 1 (SET)
I2051.0	DI 8 X5:4	V1UQ51UQ20.1-BGR	L320 Model Shot Pin (RESET)
I2051.1	DI 9 X5:2	V1UQ51UQ20.1-BGS	L320 Model Shot Pin (SET)
I2051.2	DI 10 X6:4	V1UQ51UQ20.2-BGR	L320 Model Shot Pin (RESET)
I2051.3	DI 11 X6:2	V1UQ51UQ20.2-BGS	L320 Model Shot Pin (SET)
I2051.4	DI 12 X7:4	V1UQ51UQ21.1-BGR	L290 Model Clamp 2 (RESET)
I2051.5	DI 13 X7:2	V1UQ51UQ21.1-BGS	L290 Model Clamp 2 (SET)
I2051.6	DI 14 X8:4	V1UQ51UQ21.2-BGR	L290 Model Clamp 2 (RESET)
I2051.7	DI 15 X8:2	V1UQ51UQ21.2-BGS	L290 Model Clamp 2 (SET)

X1 X2 X3 X4 X5 X6 X7 X8 M12

24V | DI 1 | 0V | DI 0 | FE
24V | DI 3 | 0V | DI 2 | FE
24V | DI 5 | 0V | DI 4 | FE
24V | DI 7 | 0V | DI 6 | FE
24V | DI 9 | 0V | DI 8 | FE
24V | DI 11 | 0V | DI 10 | FE
24V | DI 13 | 0V | DI 12 | FE
24V | DI 15 | 0V | DI 14 | FE

1 2 3 4 5

BN | WH | BU | BK

+.UQ51UQ17.1-W1
=V1UQ51UQ17+.UQ51UQ17/1.1

+.UQ51UQ18.1-W1
=V1UQ51UQ18+.UQ51UQ18/1.1

+.UQ51UQ19.1-W1
=V1UQ51UQ19+.UQ51UQ19/1.1

+.UQ51UQ19.2-W1
=V1UQ51UQ19+.UQ51UQ19/1.2

+.UQ51UQ20.1-W1
=V1UQ51UQ20+.UQ51UQ20/1.1

+.UQ51UQ20.2-W1
=V1UQ51UQ20+.UQ51UQ20/1.2

+.UQ51UQ21.1-W1
=V1UQ51UQ21+.UQ51UQ21/1.1

+.UQ51UQ21.2-W1
=V1UQ51UQ21+.UQ51UQ21/1.2

=V1UQ51KF2/4

2

			Date	12/22/2022	Volvo Trucks North America	Valiant TMS	CONNECTING MOD. FOR VTSA MANIFOLD	Drawing name: =2V04&EFS-EL	= V1UQ51KF3
			Ed.	MKLEPADLO					+ V1UQ51
			Appr		P6700 Underbody Mainline - Cell 2V04			Document type: EFS	Project nr: 22-16151
Modification	Date	Name	Original		Replacement of	Replaced by	Scale 1:1		Page 1 / 1630

0	1	2	3	4	5	6	7	8	9

-KF3.12

FESTO

CPX-M-AB-8-M12X2-5POL

549335

I2052.0	DI 0 X1:4	V1UQ51UQ22.1-BGR	L290/320 Model Clamp 1 (RESET)
I2052.1	DI 1 X1:2	V1UQ51UQ22.1-BGS	L290/320 Model Clamp 1 (SET)
I2052.2	DI 2 X2:4	V1UQ51UQ22.2-BGR	L290/320 Model Clamp 1 (RESET)
I2052.3	DI 3 X2:2	V1UQ51UQ22.2-BGS	L290/320 Model Clamp 1 (SET)
I2052.4	DI 4 X3:4	V1UQ51UQ22.3-BGR	L290/320 Model Clamp 1 (RESET)
I2052.5	DI 5 X3:2	V1UQ51UQ22.3-BGS	L290/320 Model Clamp 1 (SET)
I2052.6	DI 6 X4:4	V1UQ51UQ22.4-BGR	L290/320 Model Clamp 1 (RESET)
I2052.7	DI 7 X4:2	V1UQ51UQ22.4-BGS	L290/320 Model Clamp 1 (SET)
I2053.0	DI 8 X5:4	V1UQ51UQ23.1-BGR	L290 Model Clamp 3 (RESET)
I2053.1	DI 9 X5:2	V1UQ51UQ23.1-BGS	L290 Model Clamp 3 (SET)
I2053.2	DI 10 X6:4	V1UQ51UQ24.1-BGR	L290/320 Model Clamp 2 (RESET)
I2053.3	DI 11 X6:2	V1UQ51UQ24.1-BGS	L290/320 Model Clamp 2 (SET)
I2053.4	DI 12 X7:4	I2053.4	Spare
I2053.5	DI 13 X7:2	I2053.5	Spare
I2053.6	DI 14 X8:4	I2028.6	Spare
I2053.7	DI 15 X8:2	I2028.7	Spare

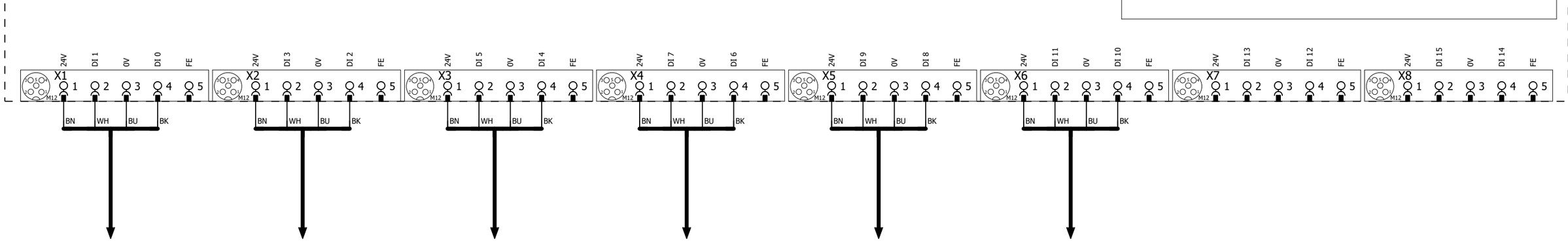

1 3

			Date	12/22/2022	Volvo Trucks North America	Valiant TMS	I/O MOD. DI16 (8 x M12) FOR VTSA-F	Drawing name: =2V04&EFS-EL	= V1UQ51KF3
			Ed.	MKLEPADLO					+ V1UQ51
			Appr		P6700 Underbody Mainline - Cell 2V04	Scale 1:1		Document type: EFS	Project nr: 22-16151
Modification	Date	Name	Original		Replacement of	Replaced by			Page 2 / 1630

0	1	2	3	4	5	6	7	8	9

-KF3.13

FESTO

CPX-M-AB-8-M12X2-5POL
549335

I2054.0	DI 0 X1:4	I2054.0	Spare
I2054.1	DI 1 X1:2	I2054.1	Spare
I2054.2	DI 2 X2:4	I2054.2	Spare
I2054.3	DI 3 X2:2	I2054.3	Spare
I2054.4	DI 4 X3:4	I2054.4	Spare
I2054.5	DI 5 X3:2	I2054.5	Spare
I2054.6	DI 6 X4:4	I2054.6	Spare
I2054.7	DI 7 X4:2	I2054.7	Spare
I2055.0	DI 8 X5:4	I2055.0	Spare
I2055.1	DI 9 X5:2	I2055.1	Spare
I2055.2	DI 10 X6:4	I2055.2	Spare
I2055.3	DI 11 X6:2	I2055.3	Spare
I2055.4	DI 12 X7:4	I2055.4	Spare
I2055.5	DI 13 X7:2	I2055.5	Spare
I2055.6	DI 14 X8:4	I2055.6	Spare
I2055.7	DI 15 X8:2	I2055.7	Spare

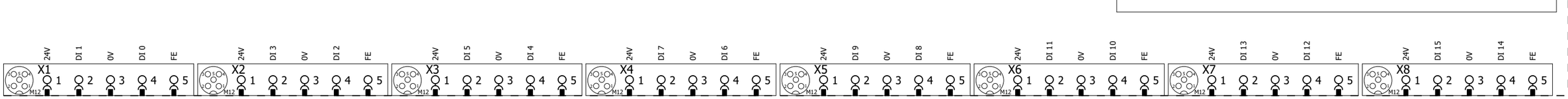

			Date	12/22/2022	Volvo Trucks North America	Valiant TMS	I/O MOD. DI16 (8 x M12) FOR VTSA-F	Drawing name: =2V04&EFS-EL	= V1UQ51KF3	
			Ed.	MKLEPADLO					+ V1UQ51	
			Appr		P6700 Underbody Mainline - Cell 2V04			Document type: EFS	Project nr: 22-16151	Page 3
Modification	Date	Name	Original		Replacement of / Replaced by	Scale 1:1				1630

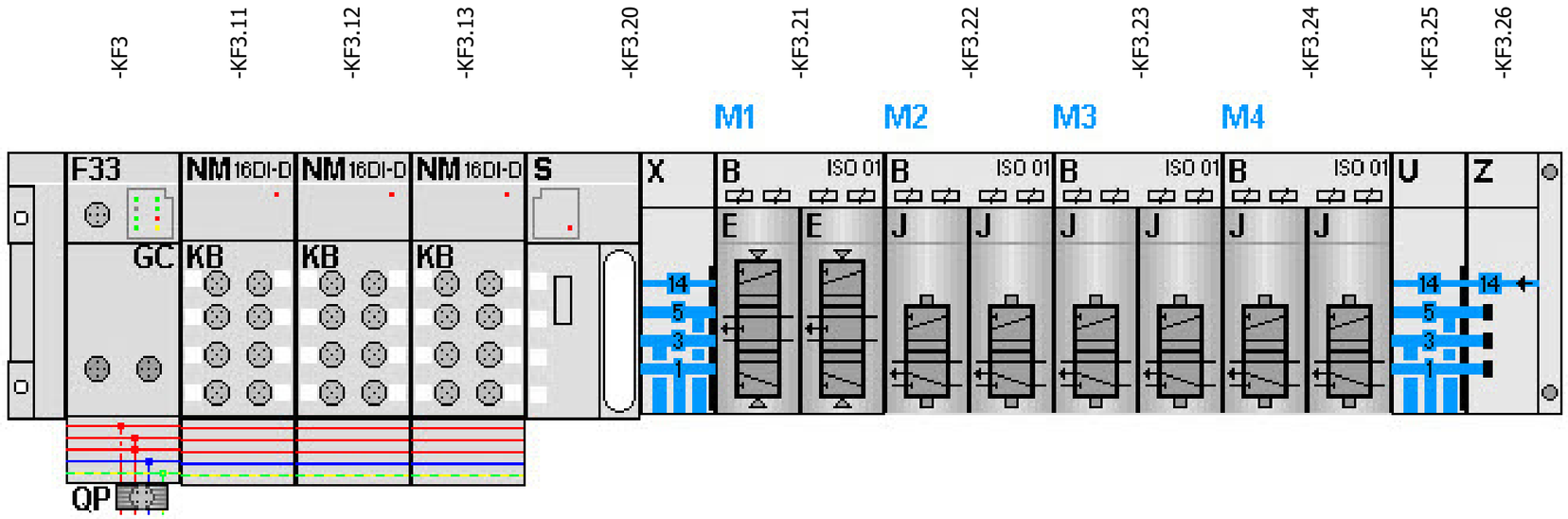

-KF3.21
=V1UQ51UQ17+.UQ51UQ17/1.3
=V1UQ51UQ18+.UQ51UQ18/1.3

FESTO

=V1UQ51UQ17+.UQ51UQ17/1.4	Q2050.0 DO 0 1.1	-QN17.1_Q	L290/320 Model X-Slide 1 (RST)
=V1UQ51UQ17+.UQ51UQ17/1.4	Q2050.1 DO 1 1.2	-QN17.2_Q	L290/320 Model X-Slide 1 (SET)
=V1UQ51UQ18+.UQ51UQ18/1.4	Q2050.2 DO 2 2.1	-QN18.1_Q	L290/320 Model X-Slide 2 (RST)
=V1UQ51UQ18+.UQ51UQ18/1.4	Q2050.3 DO 3 2.2	-QN18.2_Q	L290/320 Model X-Slide 2 (SET)

-KF3.22
=V1UQ51UQ19+.UQ51UQ19/1.3
=V1UQ51UQ20+.UQ51UQ20/1.3

FESTO

=V1UQ51UQ19+.UQ51UQ19/1.4	Q2050.4 DO 0 1.1	-QN19.1_Q	L290 Model Clamps 1 (RST)
=V1UQ51UQ19+.UQ51UQ19/1.4	Q2050.5 DO 1 1.2	-QN19.2_Q	L290 Model Clamps 1 (SET)
=V1UQ51UQ20+.UQ51UQ20/1.4	Q2050.6 DO 2 2.1	-QN20.1_Q	L320 Model Shot Pins (RST)
=V1UQ51UQ20+.UQ51UQ20/1.4	Q2050.7 DO 3 2.2	-QN20.2_Q	L320 Model Shot Pins (SET)

-KF3.23
=V1UQ51UQ21+.UQ51UQ21/1.3
=V1UQ51UQ22+.UQ51UQ22/1.3

FESTO

=V1UQ51UQ21+.UQ51UQ21/1.4	Q2051.0 DO 0 1.1	-QN21.1_Q	L290 Model Clamps 2 (RST)
=V1UQ51UQ21+.UQ51UQ21/1.4	Q2051.1 DO 1 1.2	-QN21.2_Q	L290 Model Clamps 2 (SET)
=V1UQ51UQ22+.UQ51UQ22/1.4	Q2051.2 DO 2 2.1	-QN22.1_Q	L290/320 Model Clamps 1 (RST)
=V1UQ51UQ22+.UQ51UQ22/1.4	Q2051.3 DO 3 2.2	-QN22.2_Q	L290/320 Model Clamps 1 (SET)

-KF3.24
=V1UQ51UQ23+.UQ51UQ23/1.3
=V1UQ51UQ24+.UQ51UQ24/1.3

FESTO

=V1UQ51UQ23+.UQ51UQ23/1.4	Q2051.4 DO 0 1.1	-QN23.1_Q	L290 Model Clamp 3 (RST)
=V1UQ51UQ23+.UQ51UQ23/1.4	Q2051.5 DO 1 1.2	-QN23.2_Q	L290 Model Clamp 3 (SET)
=V1UQ51UQ24+.UQ51UQ24/1.4	Q2051.6 DO 2 2.1	-QN24.1_Q	L290/320 Model Clamp 2 (RST)
=V1UQ51UQ24+.UQ51UQ24/1.4	Q2051.7 DO 3 2.2	-QN24.2_Q	L290/320 Model Clamp 2 (SET)

0	1	2	3	4	5	6	7	8	9

=V1UQ51KF1
+.UQ51

-KF1.21
=V1UQ51KF1+V1UQ51/4.1

L150 Model Shot Pins (RST)	L150 Model Shot Pins (SET)
=V1UQ51KF1	=V1UQ51KF1
+V1UQ51	+V1UQ51
-QN1.1_Q	-QN1.2_Q
=V1UQ51KF1	=V1UQ51KF1
+V1UQ51/4.3	+V1UQ51/4.3
Q2000.0	Q2000.1
1.1 Pneumatic Valve	1.2 Pneumatic Valve

-QN1 .1 .2

=V1UQ51KF1+V1UQ51/1.1
+.UQ51UQ1.1-W1

-W1
RKC 4.4T-XX-RSC 4.4T/S3060
XXm

-BGS/R
BN BU BK WH
1 3
WELKER
WWS001A
A2 A1
2 4

L150 Model Shot Pin

=V1UQ51UQ1.1
+.UQ51UQ1.1
-UQ1.1

=V1UQ51
-UQ1.1-BGS/R
L150 Model
Shot Pin

=V1UQ51KF1+V1UQ51/1.2
+.UQ51UQ1.2-W1

-W1
RKC 4.4T-XX-RSC 4.4T/S3060
XXm

-BGS/R
BN BU BK WH
1 3
WELKER
WWS001A
A2 A1
2 4

L150 Model Shot Pin

=V1UQ51UQ1.2
+.UQ51UQ1.2
-UQ1.2

=V1UQ51
-UQ1.2-BGS/R
L150 Model
Shot Pin

=V1UQ51KF3+V1UQ51/4

=V1UQ51UQ2+.UQ51UQ2/1

			Date	12/22/2022	Volvo Trucks North America	Valiant TMS	FESTO DQ CONNECTION QN1	Drawing name: =2V04&EFS-EL	= V1UQ51UQ1
			Ed.	MKLEPADLO					+ V1UQ51UQ1
			Appr		P6700 Underbody Mainline - Cell 2V04			Document type: EFS	Project nr: 22-16151
Modification	Date	Name	Original		Replacement of	Replaced by	Scale 1:1		Page 1 / 1630

0	1	2	3	4	5	6	7	8	9

=V1UQ51KF1
+.UQ51

-KF1.21
=V1UQ51KF1+V1UQ51/4.1

Common Shot Pin 1 (RST)	Common Shot Pin 1 (SET)
=V1UQ51KF1	=V1UQ51KF1
+V1UQ51	+V1UQ51
-QN2.1_Q	-QN2.2_Q
=V1UQ51KF1	=V1UQ51KF1
+V1UQ51/4.3	+V1UQ51/4.3
Q2000.2	Q2000.3
2.1 Pneumatic Valve	2.2 Pneumatic Valve

-QN2 .1 .2

=V1UQ51KF1+V1UQ51/1.3
+.UQ51UQ2.1-W1

-W1
RKC 4.4T-2-RSC 4.4T/S3060
2m

-BGS/R
BN 1 +
BU 3 -
BK
WH
WELKER
WWS001A
A2 2
A1 4

Common Shot Pin 1

=V1UQ51UQ2.1
+.UQ51UQ2.1
-UQ2.1

=V1UQ51 -UQ2.1-BGS/R Common Shot Pin 1

=V1UQ51UQ1+.UQ51UQ1/1

=V1UQ51UQ3+.UQ51UQ3/1

			Date	12/22/2022	Volvo Trucks North America	Valiant TMS	FESTO DQ CONNECTION QN2	Drawing name: =2V04&EFS-EL	= V1UQ51UQ2
			Ed.	MKLEPADLO					+ V1UQ51UQ2
			Appr		P6700 Underbody Mainline - Cell 2V04			Document type: EFS	Project nr: 22-16151
Modification	Date	Name	Original		Replacement of	Replaced by	Scale 1:1		Page 1 / 1630

0	1	2	3	4	5	6	7	8	9

=V1UQ51KF1
+.UQ51

-KF1.22
=V1UQ51KF1+V1UQ51/4.1

L150/230 Model Shot Pins (RST)
=V1UQ51KF1
+V1UQ51
-QN3.1_Q
=V1UQ51KF1
+V1UQ51/4.3
Q2000.4

L150/230 Model Shot Pins (SET)
=V1UQ51KF1
+V1UQ51
-QN3.2_Q
=V1UQ51KF1
+V1UQ51/4.3
Q2000.5

1.1
Pneumatic Valve

1.2
Pneumatic Valve

-QN3
.1
.2

=V1UQ51KF1+V1UQ51/1.4
+.UQ51UQ3.1-W1

=V1UQ51KF1+V1UQ51/1.5
+.UQ51UQ3.2-W1

-W1
RKC 4.4T-3-RSC 4.4T/S3060
3m

BN BU BK WH
1 3
+ -
A2 A1
2 4

-BGS/R
WELKER
WWS001A

L150/230 Model Shot Pin
=V1UQ51UQ3.1
+.UQ51UQ3.1
-UQ3.1

L150/230 Model Shot Pin
=V1UQ51UQ3.2
+.UQ51UQ3.2
-UQ3.2

=V1UQ51
-UQ3.1-BGS/R
L150/230 Model
Shot Pin

=V1UQ51
-UQ3.2-BGS/R
L150/230 Model
Shot Pin

=V1UQ51UQ2+.UQ51UQ2/1

=V1UQ51UQ4+.UQ51UQ4/1

			Date	12/22/2022	Volvo Trucks North America	Valiant TMS	FESTO DQ CONNECTION QN3	Drawing name: =2V04&EFS-EL	= V1UQ51UQ3
			Ed.	MKLEPADLO					+ V1UQ51UQ3
			Appr		P6700 Underbody Mainline - Cell 2V04	Scale 1:1		Document type: EFS	Project nr: 22-16151
Modification	Date	Name	Original		Replacement of	Replaced by			Page 1 / 1630

0	1	2	3	4	5	6	7	8	9

=V1UQ51KF1
+.UQ51

-KF1.22
=V1UQ51KF1+V1UQ51/4.1

Common Clamps 1 (RST)
=V1UQ51KF1
+V1UQ51
-QN4.1_Q
=V1UQ51KF1
+V1UQ51/4.3
Q2000.6

Common Clamps 1 (SET)
=V1UQ51KF1
+V1UQ51
-QN4.2_Q
=V1UQ51KF1
+V1UQ51/4.3
Q2000.7

2.1
Pneumatic Valve

2.2
Pneumatic Valve

-QN4 .1 .2

=V1UQ51KF1+V1UQ51/1.6
+.UQ51UQ4.1-W1

=V1UQ51KF1+V1UQ51/1.8
+.UQ51UQ4.2-W1

-W1
RKC 4.4T-XX-RSC 4.4T/S3060
XXm

BN BU BK WH

-BGS/R
1 3
+ -
TÜNKERS
1324638
A2 A1
2 4

Common Clamp 1
=V1UQ51UQ4.1
+.UQ51UQ4.1
-UQ4.1

Common Clamp 1
=V1UQ51UQ4.2
+.UQ51UQ4.2
-UQ4.2

=V1UQ51
-UQ4.1-BGS/R
Common
Clamp 1

=V1UQ51
-UQ4.2-BGS/R
Common
Clamp 1

=V1UQ51UQ3+.UQ51UQ3/1

=V1UQ51UQ5+.UQ51UQ5/1

			Date	12/22/2022	Volvo Trucks North America	Valiant TMS	FESTO DQ CONNECTION QN4	Drawing name: =2V04&EFS-EL	= V1UQ51UQ4
			Ed.	MKLEPADLO					+ V1UQ51UQ4
			Appr		P6700 Underbody Mainline - Cell 2V04			Document type: EFS	Project nr: 22-16151
Modification	Date	Name	Original		Replacement of	Replaced by	Scale 1:1		Page 1 / 1630

0	1	2	3	4	5	6	7	8	9

=V1UQ51KF1
+.UQ51

-KF1.23
=V1UQ51KF1+V1UQ51/4.1

Common Y-Slides (RST)
=V1UQ51KF1
+V1UQ51
-QN5.1_Q
=V1UQ51KF1
+V1UQ51/4.3
Q2001.0

Common Y-Slides (SET)
=V1UQ51KF1
+V1UQ51
-QN5.2_Q
=V1UQ51KF1
+V1UQ51/4.3
Q2001.1

1.1
Pneumatic Valve

1.2
Pneumatic Valve

-QN5 .1 .2

=V1UQ51KF1+V1UQ51/1.9
+.UQ51UQ5.1-W1

-W1
RKC 4.4T-XX-RSC 4.4T/S3060
XXm

BN BU BK WH

-XGR/S P1 1 3 4 2
VB2-FSM 4.4/2FKM 4/S3450
TURCK

J1 1 3 4 2 J2 1 3 4 2

BN BU BK WH

-W1.1
RKC 4.4T-XX-RSC 4.4T/S3060
XXm

-W1.2
RKC 4.4T-XX-RSC 4.4T/S3060
XXm

BN BU BK WH

-BGR
Sn = 20 mm
TURCK
1627297
pnp

-BGS
Sn = 20 mm
TURCK
1627297
pnp

Common Y-Slides
=V1UQ51UQ5.1
+.UQ51UQ5.1
-UQ5.1

=V1UQ51KF1+V1UQ51/2.1
+.UQ51UQ5.2-W1

-W1
RKC 4.4T-XX-RSC 4.4T/S3060
XXm

BN BU BK WH

-XGR/S P1 1 3 4 2
VB2-FSM 4.4/2FKM 4/S3450
TURCK

J1 1 3 4 2 J2 1 3 4 2

BN BU BK WH

-W1.1
RKC 4.4T-XX-RSC 4.4T/S3060
XXm

-W1.2
RKC 4.4T-XX-RSC 4.4T/S3060
XXm

BN BU BK WH

-BGR
Sn = 20 mm
TURCK
1627297
pnp

-BGS
Sn = 20 mm
TURCK
1627297
pnp

Common Y-Slides
=V1UQ51UQ5.2
+.UQ51UQ5.2
-UQ5.2

=V1UQ51 -UQ5.1-BGR Common Y-Slides	=V1UQ51 -UQ5.1-BGS Common Y-Slides
=V1UQ51 -UQ5.2-BGR Common Y-Slides	=V1UQ51 -UQ5.2-BGS Common Y-Slides

=V1UQ51UQ4+.UQ51UQ4/1

=V1UQ51UQ6+.UQ51UQ6/1

			Date	12/22/2022	Volvo Trucks North America	Valiant TMS	FESTO DQ CONNECTION QN5	Drawing name: =2V04&EFS-EL	= V1UQ51UQ5
			Ed.	MKLEPADLO					+ V1UQ51UQ5
			Appr		P6700 Underbody Mainline - Cell 2V04			Document type: EFS	Project nr: 22-16151
Modification	Date	Name	Original		Replacement of / Replaced by	Scale 1:1			Page 1 / 1630

0	1	2	3	4	5	6	7	8	9

=V1UQ51KF1
+.UQ51

-KF1.23
=V1UQ51KF1+V1UQ51/4.1

Common Shot Pins 2 (RST)
=V1UQ51KF1
+V1UQ51
-QN6.1_Q
=V1UQ51KF1
+V1UQ51/4.3
Q2001.2

Common Shot Pins 2 (SET)
=V1UQ51KF1
+V1UQ51
-QN6.2_Q
=V1UQ51KF1
+V1UQ51/4.3
Q2001.3

2.1
Pneumatic Valve

2.2
Pneumatic Valve

-QN6 .1 .2

=V1UQ51KF1+V1UQ51/2.2
+.UQ51UQ6.1-W1

-W1
RKC 4.4T-XX-RSC 4.4T/S3060
XXm

BN BU BK WH
1 3
-BGS/R
WWS001A
A2 A1
2 4

Common Shot Pin 2

=V1UQ51UQ6.1
+.UQ51UQ6.1
-UQ6.1

=V1UQ51
-UQ6.1-BGS/R
Common
Shot Pin 2

=V1UQ51KF1+V1UQ51/2.3
+.UQ51UQ6.2-W1

-W1
RKC 4.4T-XX-RSC 4.4T/S3060
XXm

BN BU BK WH
1 3
-BGS/R
WWS001A
A2 A1
2 4

Common Shot Pin 2

=V1UQ51UQ6.2
+.UQ51UQ6.2
-UQ6.2

=V1UQ51
-UQ6.2-BGS/R
Common
Shot Pin 2

=V1UQ51UQ5+.UQ51UQ5/1

=V1UQ51UQ7+.UQ51UQ7/1

			Date	12/22/2022	Volvo Trucks North America	Valiant TMS	FESTO DQ CONNECTION QN6	Drawing name: =2V04&EFS-EL	= V1UQ51UQ6
			Ed.	MKLEPADLO					+ V1UQ51UQ6
			Appr		P6700 Underbody Mainline - Cell 2V04			Document type: EFS	Project nr: 22-16151
Modification	Date	Name	Original		Replacement of	Replaced by	Scale 1:1		Page 1 / 1630

0	1	2	3	4	5	6	7	8	9

=V1UQ51KF1
+.UQ51

-KF1.24
=V1UQ51KF1+V1UQ51/4.1

Common Clamps 2 (RST)	Common Clamps 2 (SET)
=V1UQ51KF1	=V1UQ51KF1
+V1UQ51	+V1UQ51
-QN7.1_Q	-QN7.2_Q
=V1UQ51KF1	=V1UQ51KF1
+V1UQ51/4.3	+V1UQ51/4.3
Q2001.4	Q2001.5
1.1 Pneumatic Valve	1.2 Pneumatic Valve

-QN7 .1 .2

=V1UQ51KF1+V1UQ51/2.4
+.UQ51UQ7.1-W1

=V1UQ51KF1+V1UQ51/2.5
+.UQ51UQ7.2-W1

=V1UQ51KF1+V1UQ51/2.6
+.UQ51UQ7.3-W1

=V1UQ51KF1+V1UQ51/2.8
+.UQ51UQ7.4-W1

=V1UQ51KF1+V1UQ51/2.9
+.UQ51UQ7.5-W1

=V1UQ51KF1+V1UQ51/3.1
+.UQ51UQ7.6-W1

=V1UQ51KF1+V1UQ51/3.2
+.UQ51UQ7.7-W1

-W1 3m
RKC 4.4T-3-RSC 4.4T/S3060

-BGS/R
BN BU BK WH
1 3
TÜNKERS
1324638
A2 A1
2 4

Common Clamp 2

=V1UQ51UQ7.1
+.UQ51UQ7.1
-UQ7.1

=V1UQ51UQ7.2
+.UQ51UQ7.2
-UQ7.2

=V1UQ51UQ7.3
+.UQ51UQ7.3
-UQ7.3

=V1UQ51UQ7.4
+.UQ51UQ7.4
-UQ7.4

=V1UQ51UQ7.5
+.UQ51UQ7.5
-UQ7.5

=V1UQ51UQ7.6
+.UQ51UQ7.6
-UQ7.6

=V1UQ51UQ7.7
+.UQ51UQ7.7
-UQ7.7

=V1UQ51 -UQ7.1-BGS/R Common Clamp 2	=V1UQ51 -UQ7.2-BGS/R Common Clamp 2	=V1UQ51 -UQ7.3-BGS/R Common Clamp 2	=V1UQ51 -UQ7.4-BGS/R Common Clamp 2	=V1UQ51 -UQ7.5-BGS/R Common Clamp 2

=V1UQ51 -UQ7.6-BGS/R Common Clamp 2	=V1UQ51 -UQ7.7-BGS/R Common Clamp 2

=V1UQ51UQ6+.UQ51UQ6/1

=V1UQ51UQ8+.UQ51UQ8/1

			Date	12/22/2022	Volvo Trucks North America	Valiant TMS	FESTO DQ CONNECTION QN7	Drawing name: =2V04&EFS-EL	= V1UQ51UQ7
			Ed.	MKLEPADLO					+ V1UQ51UQ7
			Appr		P6700 Underbody Mainline - Cell 2V04	Scale 1:1		Document type: EFS	Project nr: 22-16151
Modification	Date	Name	Original		Replacement of	Replaced by			Page 1 / 1630

0	1	2	3	4	5	6	7	8	9

=V1UQ51KF1
+.UQ51

-KF1.24
=V1UQ51KF1+V1UQ51/4.1

L150 Model Clamps 1 (RST)	L150 Model Clamps 1 (SET)
=V1UQ51KF1	=V1UQ51KF1
+V1UQ51	+V1UQ51
-QN8.1_Q	-QN8.2_Q
=V1UQ51KF1	=V1UQ51KF1
+V1UQ51/4.3	+V1UQ51/4.3
Q2001.6	Q2001.7
2.1 Pneumatic Valve	2.2 Pneumatic Valve

-QN8 .1 .2

=V1UQ51KF1+V1UQ51/3.3
+.UQ51UQ8.1-W1

=V1UQ51KF1+V1UQ51/3.4
+.UQ51UQ8.2-W1

-W1
RKC 4.4T-XX-RSC 4.4T/S3060
XXm

-BGS/R
BN BU BK WH
1 3
+ -
TÜNKERS
1324638
A2 A1
2 4

L150 Model Clamp 1

=V1UQ51UQ8.1
+.UQ51UQ8.1
-UQ8.1

=V1UQ51
-UQ8.1-BGS/R
L150 Model
Clamp 1

L150 Model Clamp 1

=V1UQ51UQ8.2
+.UQ51UQ8.2
-UQ8.2

=V1UQ51
-UQ8.2-BGS/R
L150 Model
Clamp 1

=V1UQ51UQ7+.UQ51UQ7/1

=V1UQ51UQ9+.UQ51UQ9/1

			Date	12/22/2022	Volvo Trucks North America	Valiant TMS	FESTO DQ CONNECTION QN8	Drawing name: =2V04&EFS-EL	= V1UQ51UQ8
			Ed.	MKLEPADLO					+ V1UQ51UQ8
			Appr		P6700 Underbody Mainline - Cell 2V04			Document type: EFS	Project nr: 22-16151
Modification	Date	Name	Original		Replacement of	Replaced by	Scale 1:1		Page 1 / 1630

0	1	2	3	4	5	6	7	8	9

=V1UQ51KF2
+.UQ51

-KF2.21
=V1UQ51KF2+V1UQ51/4.1

Common Clamps 3 (RST)
=V1UQ51KF2
+V1UQ51
-QN9.1_Q
=V1UQ51KF2
+V1UQ51/4.3
Q2025.0

Common Clamps 3 (SET)
=V1UQ51KF2
+V1UQ51
-QN9.2_Q
=V1UQ51KF2
+V1UQ51/4.3
Q2025.1

1.1 Pneumatic Valve

1.2 Pneumatic Valve

-QN9 .1 .2

=V1UQ51KF2+V1UQ51/1.1
+.UQ51UQ9.1-W1

=V1UQ51KF2+V1UQ51/1.2
+.UQ51UQ9.2-W1

=V1UQ51KF2+V1UQ51/1.3
+.UQ51UQ9.3-W1

=V1UQ51KF2+V1UQ51/1.4
+.UQ51UQ9.4-W1

-W1
RKC 4.4T-XX-RSC 4.4T/S3060
XXm

BN BU BK WH
1 3
+ -
TÜNKERS
1324638
A2 A1
2 4

-BGS/R

Common Clamp 3

=V1UQ51UQ9.1
+.UQ51UQ9.1
-UQ9.1

=V1UQ51UQ9.2
+.UQ51UQ9.2
-UQ9.2

=V1UQ51UQ9.3
+.UQ51UQ9.3
-UQ9.3

=V1UQ51UQ9.4
+.UQ51UQ9.4
-UQ9.4

=V1UQ51
-UQ9.1-BGS/R
Common
Clamp 3

=V1UQ51
-UQ9.2-BGS/R
Common
Clamp 3

=V1UQ51
-UQ9.3-BGS/R
Common
Clamp 3

=V1UQ51
-UQ9.4-BGS/R
Common
Clamp 3

=V1UQ51UQ8+.UQ51UQ8/1

=V1UQ51UQ10+.UQ51UQ10/1

			Date	12/22/2022	Volvo Trucks North America		Valiant TMS	FESTO DQ CONNECTION QN9	Drawing name: =2V04&EFS-EL	= V1UQ51UQ9
			Ed.	MKLEPADLO						+ V1UQ51UQ9
			Appr		P6700 Underbody Mainline - Cell 2V04				Document type: EFS	Project nr: 22-16151
Modification	Date	Name	Original		Replacement of	Replaced by	Scale 1:1			Page 1 / 1630

0	1	2	3	4	5	6	7	8	9

=V1UQ51KF2
+.UQ51

-KF2.21
=V1UQ51KF2+V1UQ51/4.1

Common Clamps 4 (RST)	Common Clamps 4 (SET)
=V1UQ51KF2	=V1UQ51KF2
+V1UQ51	+V1UQ51
-QN10.1_Q	-QN10.2_Q
=V1UQ51KF2	=V1UQ51KF2
+V1UQ51/4.3	+V1UQ51/4.3
Q2025.2	Q2025.3
2.1 Pneumatic Valve	2.2 Pneumatic Valve

-QN10 .1 .2

=V1UQ51KF2+V1UQ51/1.5
+.UQ51UQ10.1-W1

=V1UQ51KF2+V1UQ51/1.6
+.UQ51UQ10.2-W1

-W1
RKC 4.4T-XX-RSC 4.4T/S3060
XXm

BN BU BK WH
1 3
+ -
-BGS/R
TÜNKERS
1324638
A2 A1
2 4

Common Clamp 4

=V1UQ51UQ10.1
+.UQ51UQ10.1
-UQ10.1

=V1UQ51
-UQ10.1-BGS/R
Common
Clamp 4

Common Clamp 4

=V1UQ51UQ10.2
+.UQ51UQ10.2
-UQ10.2

=V1UQ51
-UQ10.2-BGS/R
Common
Clamp 4

=V1UQ51UQ9+.UQ51UQ9/1

=V1UQ51UQ11+.UQ51UQ11/1

			Date	12/22/2022	Volvo Trucks North America		Valiant TMS	FESTO DQ CONNECTION QN10	Drawing name: =2V04&EFS-EL
			Ed.	MKLEPADLO					= V1UQ51UQ10
			Appr		P6700 Underbody Mainline - Cell 2V04				+ V1UQ51UQ10
Modification	Date	Name	Original		Replacement of	Replaced by	Scale 1:1		Document type: EFS / Project nr: 22-16151 / Page 1 / 1630

0	1	2	3	4	5	6	7	8	9

=V1UQ51KF2
+.UQ51

-KF2.22
=V1UQ51KF2+V1UQ51/4.1

L150 Model Clamp 2 (RST)	L150 Model Clamp 2 (SET)
=V1UQ51KF2	=V1UQ51KF2
+V1UQ51	+V1UQ51
-QN11.1_Q	-QN11.2_Q
=V1UQ51KF2	=V1UQ51KF2
+V1UQ51/4.3	+V1UQ51/4.3
Q2025.4	Q2025.5
1.1 Pneumatic Valve	1.2 Pneumatic Valve

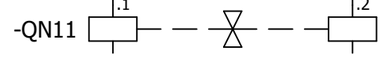

=V1UQ51KF2+V1UQ51/1.8
+.UQ51UQ11.1-W1

-W1
RKC 4.4T-XX-RSC 4.4T/S3060
XXm

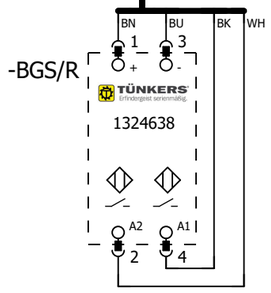

L150 Model Clamp 2

=V1UQ51UQ11.1
+.UQ51UQ11.1
-UQ11.1

=V1UQ51 -UQ11.1-BGS/R L150 Model Clamp 2

=V1UQ51UQ10+.UQ51UQ10/1

=V1UQ51UQ12+.UQ51UQ12/1

			Date	12/22/2022	Volvo Trucks North America	Valiant TMS	FESTO DQ CONNECTION QN11	Drawing name: =2V04&EFS-EL	= V1UQ51UQ11
			Ed.	MKLEPADLO					+ V1UQ51UQ11
			Appr		P6700 Underbody Mainline - Cell 2V04			Document type: EFS	Project nr: 22-16151
Modification	Date	Name	Original		Replacement of	Replaced by	Scale 1:1		Page 1 / 1630

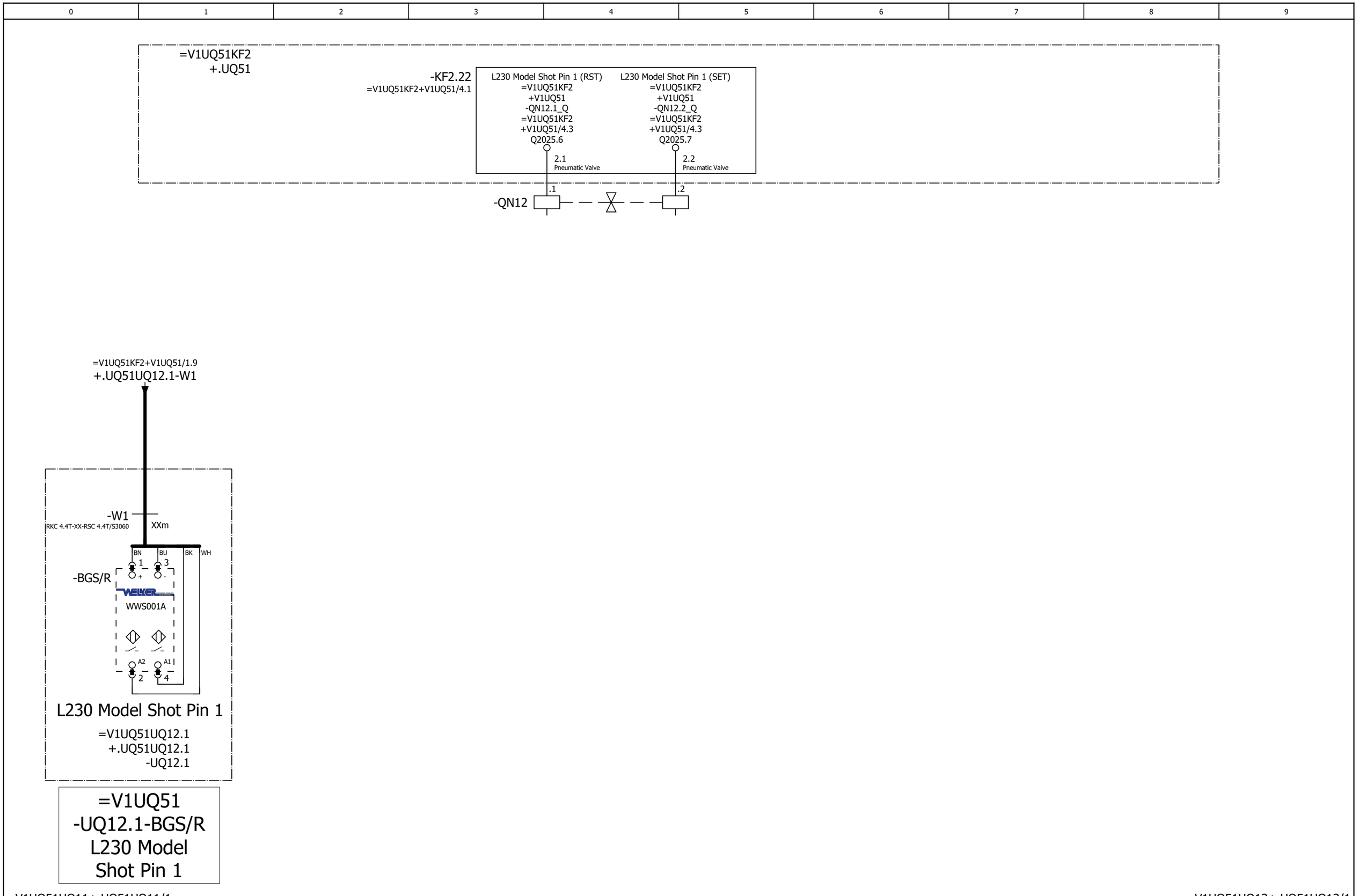

=V1UQ51UQ11+.UQ51UQ11/1

=V1UQ51UQ13+.UQ51UQ13/1

			Date	12/22/2022	Volvo Trucks North America	Valiant TMS	FESTO DQ CONNECTION QN12	Drawing name: =2V04&EFS-EL	= V1UQ51UQ12
			Ed.	MKLEPADLO					+ V1UQ51UQ12
			Appr		P6700 Underbody Mainline - Cell 2V04			Document type: EFS	Project nr: 22-16151
Modification	Date	Name	Original		Replacement of / Replaced by	Scale 1:1			Page 1 / 1630

0	1	2	3	4	5	6	7	8	9

=V1UQ51KF2
+.UQ51

-KF2.23
=V1UQ51KF2+V1UQ51/4.1

L230 Model Shot Pin 2 (RST)	L230 Model Shot Pin 2 (SET)
=V1UQ51KF2	=V1UQ51KF2
+V1UQ51	+V1UQ51
-QN13.1_Q	-QN13.2_Q
=V1UQ51KF2	=V1UQ51KF2
+V1UQ51/4.3	+V1UQ51/4.3
Q2026.0	Q2026.1
1.1 Pneumatic Valve	1.2 Pneumatic Valve

-QN13 .1 .2

=V1UQ51KF2+V1UQ51/2.1
+.UQ51UQ13.1-W1

-W1
RKC 4.4T-XX-RSC 4.4T/S3060
XXm

-BGS/R
BN 1 +
BU 3 -
BK
WH
WELKER
WWS001A
A2 2
A1 4

L230 Model Shot Pin 2

=V1UQ51UQ13.1
+.UQ51UQ13.1
-UQ13.1

=V1UQ51
-UQ13.1-BGS/R
L230 Model
Shot Pin 2

=V1UQ51UQ12+.UQ51UQ12/1

=V1UQ51UQ14+.UQ51UQ14/1

			Date	12/22/2022	Volvo Trucks North America	Valiant TMS	FESTO DQ CONNECTION QN13	Drawing name: =2V04&EFS-EL	= V1UQ51UQ13
			Ed.	MKLEPADLO					+ V1UQ51UQ13
			Appr		P6700 Underbody Mainline - Cell 2V04			Document type: EFS	Project nr: 22-16151
Modification	Date	Name	Original		Replacement of	Replaced by	Scale 1:1		Page 1 / 1630

0	1	2	3	4	5	6	7	8	9

=V1UQ51KF2
+.UQ51

-KF2.23
=V1UQ51KF2+V1UQ51/4.1

L230/290 Model Clamps (RST)	L230/290 Model Clamps (SET)
=V1UQ51KF2	=V1UQ51KF2
+V1UQ51	+V1UQ51
-QN14.1_Q	-QN14.2_Q
=V1UQ51KF2	=V1UQ51KF2
+V1UQ51/4.3	+V1UQ51/4.3
Q2026.2	Q2026.3
2.1 Pneumatic Valve	2.2 Pneumatic Valve

-QN14 .1 .2

=V1UQ51KF2+V1UQ51/2.2
+.UQ51UQ14.1-W1

-W1
RKC 4.4T-XX-RSC 4.4T/S3060
XXm

-BGS/R
BN BU BK WH
1 3
+ -
TÜNKERS
1324638
A2 A1
2 4

L230/290 Model Clamp
=V1UQ51UQ14.1
+.UQ51UQ14.1
-UQ14.1

=V1UQ51
-UQ14.1-BGS/R
L230/290 Model
Clamp

=V1UQ51KF2+V1UQ51/2.3
+.UQ51UQ14.2-W1

-W1
RKC 4.4T-XX-RSC 4.4T/S3060
XXm

-BGS/R
BN BU BK WH
1 3
+ -
TÜNKERS
1324638
A2 A1
2 4

L230/290 Model Clamp
=V1UQ51UQ14.2
+.UQ51UQ14.2
-UQ14.2

=V1UQ51
-UQ14.2-BGS/R
L230/290 Model
Clamp

=V1UQ51UQ13+.UQ51UQ13/1

=V1UQ51UQ15+.UQ51UQ15/1

			Date	12/22/2022	Volvo Trucks North America	Valiant TMS	FESTO DQ CONNECTION QN14	Drawing name: =2V04&EFS-EL	= V1UQ51UQ14
			Ed.	MKLEPADLO					+ V1UQ51UQ14
			Appr		P6700 Underbody Mainline - Cell 2V04			Document type: EFS	Project nr: 22-16151
Modification	Date	Name	Original		Replacement of	Replaced by	Scale 1:1		Page 1 / 1630

0	1	2	3	4	5	6	7	8	9

=V1UQ51KF2
+.UQ51

-KF2.24
=V1UQ51KF2+V1UQ51/4.1

L230/290/320 Model Clamps (RST)
=V1UQ51KF2
+V1UQ51
-QN15.1_Q
=V1UQ51KF2
+V1UQ51/4.3
Q2026.4

L230/290/320 Model Clamps (SET)
=V1UQ51KF2
+V1UQ51
-QN15.2_Q
=V1UQ51KF2
+V1UQ51/4.3
Q2026.5

1.1 Pneumatic Valve

1.2 Pneumatic Valve

-QN15 .1 .2

=V1UQ51KF2+V1UQ51/2.4
+.UQ51UQ15.1-W1

=V1UQ51KF2+V1UQ51/2.5
+.UQ51UQ15.2-W1

-W1
RKC 4.4T-XX-RSC 4.4T/S3060
XXm

BN BU BK WH
1 3
+ -
-BGS/R
TÜNKERS
1324638
A2 A1
2 4

L230/290/320 Clamp
=V1UQ51UQ15.1
+.UQ51UQ15.1
-UQ15.1

L230/290/320 Clamp
=V1UQ51UQ15.2
+.UQ51UQ15.2
-UQ15.2

=V1UQ51
-UQ15.1-BGS/R
L230/290/320
Clamp

=V1UQ51
-UQ15.2-BGS/R
L230/290/320
Clamp

=V1UQ51UQ14+.UQ51UQ14/1

=V1UQ51UQ16+.UQ51UQ16/1

			Date	12/22/2022	Volvo Trucks North America	Valiant TMS	FESTO DQ CONNECTION QN15	Drawing name: =2V04&EFS-EL	= V1UQ51UQ15
			Ed.	MKLEPADLO					+ V1UQ51UQ15
			Appr		P6700 Underbody Mainline - Cell 2V04	Scale 1:1		Document type: EFS	Project nr: 22-16151
Modification	Date	Name	Original		Replacement of	Replaced by			Page 1 / 1630

0	1	2	3	4	5	6	7	8	9

=V1UQ51KF2
+.UQ51

-KF2.24
=V1UQ51KF2+V1UQ51/4.1

L230 Model Clamp (RST)	L230 Model Clamp (SET)
=V1UQ51KF2	=V1UQ51KF2
+V1UQ51	+V1UQ51
-QN16.1_Q	-QN16.2_Q
=V1UQ51KF2	=V1UQ51KF2
+V1UQ51/4.3	+V1UQ51/4.3
Q2026.6	Q2026.7
2.1 Pneumatic Valve	2.2 Pneumatic Valve

-QN16 .1 .2

=V1UQ51KF2+V1UQ51/2.6
+.UQ51UQ16.1-W1

-W1
RKC 4.4T-XX-RSC 4.4T/S3060
XXm

BN BU BK WH

-BGS/R
1 3
+ -
TÜNKERS
1324638
A2 A1
2 4

L230 Model Clamp

=V1UQ51UQ16.1
+.UQ51UQ16.1
-UQ16.1

=V1UQ51
-UQ16.1-BGS/R
L230 Model Clamp

=V1UQ51UQ15+.UQ51UQ15/1

=V1UQ51UQ17+.UQ51UQ17/1

			Date	12/22/2022	Volvo Trucks North America	Valiant TMS	FESTO DQ CONNECTION QN16	Drawing name: =2V04&EFS-EL	= V1UQ51UQ16
			Ed.	MKLEPADLO					+ V1UQ51UQ16
			Appr		P6700 Underbody Mainline - Cell 2V04			Document type: EFS	Project nr: 22-16151
Modification	Date	Name	Original		Replacement of	Replaced by	Scale 1:1		Page 1 / 1630

0	1	2	3	4	5	6	7	8	9

=V1UQ51KF3
+.UQ51

-KF3.21
=V1UQ51KF3+V1UQ51/4.1

L290/320 Model X-Slide 1 (RST)
=V1UQ51KF3
+V1UQ51
-QN17.1_Q
=V1UQ51KF3
+V1UQ51/4.3
Q2050.0
1.1
Pneumatic Valve

L290/320 Model X-Slide 1 (SET)
=V1UQ51KF3
+V1UQ51
-QN17.2_Q
=V1UQ51KF3
+V1UQ51/4.3
Q2050.1
1.2
Pneumatic Valve

-QN17 .1 .2

=V1UQ51KF3+V1UQ51/1.1
+.UQ51UQ17.1-W1

-W1
RKC 4.4T-XX-RSC 4.4T/S3060
XXm

BN BU BK WH

-XGR/S
P1 1 3 4 2
VB2-FSM 4.4/2FKM 4/S3450
TURCK
J1 1 3 4 2
J2 1 3 4 2

BN BU BK WH

-W1.1
RKC 4.4T-XX-RSC 4.4T/S3060
XXm

-W1.2
RKC 4.4T-XX-RSC 4.4T/S3060
XXm

BN BU BK WH

-BGR
Sn = 20 mm
TURCK
1627297
pnp
1 3 A 4

-BGS
Sn = 20 mm
TURCK
1627297
pnp
1 3 A 4

L290/320 Model X-Slide 1
=V1UQ51UQ17.1
+.UQ51UQ17.1
-UQ17.1

=V1UQ51 -UQ17.1-BGR L290/320 Model X-Slide 1	=V1UQ51 -UQ17.1-BGS L290/320 Model X-Slide 1

=V1UQ51UQ16+.UQ51UQ16/1

=V1UQ51UQ18+.UQ51UQ18/1

			Date	12/22/2022	Volvo Trucks North America	Valiant TMS	FESTO DQ CONNECTION QN17	Drawing name: =2V04&EFS-EL	= V1UQ51UQ17
			Ed.	MKLEPADLO					+ V1UQ51UQ17
			Appr		P6700 Underbody Mainline - Cell 2V04			Document type: EFS	Project nr: 22-16151
Modification	Date	Name	Original		Replacement of	Replaced by	Scale 1:1		Page 1 / 1630

0	1	2	3	4	5	6	7	8	9

=V1UQ51KF3
+.UQ51

-KF3.21
=V1UQ51KF3+V1UQ51/4.1

L290/320 Model X-Slide 2 (RST)
=V1UQ51KF3
+V1UQ51
-QN18.1_Q
=V1UQ51KF3
+V1UQ51/4.3
Q2050.2

L290/320 Model X-Slide 2 (SET)
=V1UQ51KF3
+V1UQ51
-QN18.2_Q
=V1UQ51KF3
+V1UQ51/4.3
Q2050.3

2.1 Pneumatic Valve
2.2 Pneumatic Valve

-QN18 .1 .2

=V1UQ51KF3+V1UQ51/1.2
+.UQ51UQ18.1-W1

-W1
RKC 4.4T-XX-RSC 4.4T/S3060
XXm

BN BU BK WH

-XGR/S
P1 1 3 4 2
VB2-FSM 4.4/2FKM 4/S3450
TURCK

J1 1 3 4 2
J2 1 3 4 2

BN BU BK WH

-W1.1
RKC 4.4T-XX-RSC 4.4T/S3060
XXm

-W1.2
RKC 4.4T-XX-RSC 4.4T/S3060
XXm

BN BU BK WH

1 3

-BGR
Sn = 20 mm
TURCK
1627297
pnp
A
4

-BGS
Sn = 20 mm
TURCK
1627297
pnp
A
4

L290/320 Model X-Slide 2
=V1UQ51UQ18.1
+.UQ51UQ18.1
-UQ18.1

=V1UQ51
-UQ18.1-BGR
L290/320 Model
X-Slide 2

=V1UQ51
-UQ18.1-BGS
L290/320 Model
X-Slide 2

=V1UQ51UQ17+.UQ51UQ17/1

=V1UQ51UQ19+.UQ51UQ19/1

			Date	12/22/2022	Volvo Trucks North America	Valiant TMS	FESTO DQ CONNECTION QN18	Drawing name: =2V04&EFS-EL	= V1UQ51UQ18
			Ed.	MKLEPADLO					+ V1UQ51UQ18
			Appr		P6700 Underbody Mainline - Cell 2V04			Document type: EFS	Project nr: 22-16151
Modification	Date	Name	Original		Replacement of / Replaced by	Scale 1:1			Page 1 / 1630

0	1	2	3	4	5	6	7	8	9

=V1UQ51KF3
+.UQ51

-KF3.22
=V1UQ51KF3+V1UQ51/4.1

L290 Model Clamps 1 (RST)	L290 Model Clamps 1 (SET)
=V1UQ51KF3	=V1UQ51KF3
+V1UQ51	+V1UQ51
-QN19.1_Q	-QN19.2_Q
=V1UQ51KF3	=V1UQ51KF3
+V1UQ51/4.3	+V1UQ51/4.3
Q2050.4	Q2050.5
1.1 Pneumatic Valve	1.2 Pneumatic Valve

-QN19 .1 .2

=V1UQ51KF3+V1UQ51/1.3
+.UQ51UQ19.1-W1

-W1
RKC 4.4T-XX-RSC 4.4T/S3060 XXm

-BGS/R
BN 1 + BU 3 - BK WH
TÜNKERS
1324638
A2 2 A1 4

L290 Model Clamp 1

=V1UQ51UQ19.1
+.UQ51UQ19.1
-UQ19.1

=V1UQ51
-UQ19.1-BGS/R
L290 Model
Clamp 1

=V1UQ51KF3+V1UQ51/1.4
+.UQ51UQ19.2-W1

-W1
RKC 4.4T-XX-RSC 4.4T/S3060 XXm

-BGS/R
BN 1 + BU 3 - BK WH
TÜNKERS
1324638
A2 2 A1 4

L290 Model Clamp 1

=V1UQ51UQ19.2
+.UQ51UQ19.2
-UQ19.2

=V1UQ51
-UQ19.2-BGS/R
L290 Model
Clamp 1

=V1UQ51UQ18+.UQ51UQ18/1

=V1UQ51UQ20+.UQ51UQ20/1

			Date	12/22/2022	Volvo Trucks North America	Valiant TMS	FESTO DQ CONNECTION QN19	Drawing name: =2V04&EFS-EL	= V1UQ51UQ19
			Ed.	MKLEPADLO					+ V1UQ51UQ19
			Appr		P6700 Underbody Mainline - Cell 2V04			Document type: EFS	Project nr: 22-16151
Modification	Date	Name	Original		Replacement of	Replaced by	Scale 1:1		Page 1 / 1630

0	1	2	3	4	5	6	7	8	9

=V1UQ51KF3
+.UQ51

-KF3.22
=V1UQ51KF3+V1UQ51/4.1

L320 Model Shot Pins (RST)	L320 Model Shot Pins (SET)
=V1UQ51KF3	=V1UQ51KF3
+V1UQ51	+V1UQ51
-QN20.1_Q	-QN20.2_Q
=V1UQ51KF3	=V1UQ51KF3
+V1UQ51/4.3	+V1UQ51/4.3
Q2050.6	Q2050.7
2.1 Pneumatic Valve	2.2 Pneumatic Valve

-QN20 .1 .2

=V1UQ51KF3+V1UQ51/1.5
+.UQ51UQ20.1-W1

=V1UQ51KF3+V1UQ51/1.6
+.UQ51UQ20.2-W1

-W1
RKC 4.4T-XX-RSC 4.4T/S3060
XXm

-BGS/R
BN BU BK WH
1 3
WELKER WWS001A
A2 A1
2 4

L320 Model Shot Pin

=V1UQ51UQ20.1
+.UQ51UQ20.1
-UQ20.1

=V1UQ51
-UQ20.1-BGS/R
L320 Model
Shot Pin

L320 Model Shot Pin

=V1UQ51UQ20.2
+.UQ51UQ20.2
-UQ20.2

=V1UQ51
-UQ20.2-BGS/R
L320 Model
Shot Pin

=V1UQ51UQ19+.UQ51UQ19/1

=V1UQ51UQ21+.UQ51UQ21/1

			Date	12/22/2022	Volvo Trucks North America	Valiant TMS	FESTO DQ CONNECTION QN20	Drawing name: =2V04&EFS-EL	= V1UQ51UQ20
			Ed.	MKLEPADLO					+ V1UQ51UQ20
			Appr		P6700 Underbody Mainline - Cell 2V04			Document type: EFS	Project nr: 22-16151
Modification	Date	Name	Original		Replacement of	Replaced by	Scale 1:1		Page 1 / 1630

0	1	2	3	4	5	6	7	8	9

=V1UQ51KF3
+.UQ51

-KF3.23
=V1UQ51KF3+V1UQ51/4.1

L290 Model Clamps 2 (RST)	L290 Model Clamps 2 (SET)
=V1UQ51KF3	=V1UQ51KF3
+V1UQ51	+V1UQ51
-QN21.1_Q	-QN21.2_Q
=V1UQ51KF3	=V1UQ51KF3
+V1UQ51/4.3	+V1UQ51/4.3
Q2051.0	Q2051.1
1.1 Pneumatic Valve	1.2 Pneumatic Valve

-QN21 .1 .2

=V1UQ51KF3+V1UQ51/1.8
+.UQ51UQ21.1-W1

=V1UQ51KF3+V1UQ51/1.9
+.UQ51UQ21.2-W1

-W1
RKC 4.4T-XX-RSC 4.4T/S3060
XXm

-BGS/R
BN BU BK WH
1 3
+ -
TÜNKERS
1324638
A2 A1
2 4

L290 Model Clamp 2

=V1UQ51UQ21.1
+.UQ51UQ21.1
-UQ21.1

=V1UQ51
-UQ21.1-BGS/R
L290 Model
Clamp 2

L290 Model Clamp 2

=V1UQ51UQ21.2
+.UQ51UQ21.2
-UQ21.2

=V1UQ51
-UQ21.2-BGS/R
L290 Model
Clamp 2

=V1UQ51UQ20+.UQ51UQ20/1

=V1UQ51UQ22+.UQ51UQ22/1

			Date	12/22/2022	Volvo Trucks North America	Valiant TMS	FESTO DQ CONNECTION QN21	Drawing name: =2V04&EFS-EL	= V1UQ51UQ21
			Ed.	MKLEPADLO					+ V1UQ51UQ21
			Appr		P6700 Underbody Mainline - Cell 2V04			Document type: EFS	Project nr: 22-16151
Modification	Date	Name	Original		Replacement of	Replaced by	Scale 1:1		Page 1 / 1630

0	1	2	3	4	5	6	7	8	9

=V1UQ51KF3
+.UQ51

-KF3.23
=V1UQ51KF3+V1UQ51/4.1

L290/320 Model Clamps 1 (RST)
=V1UQ51KF3
+V1UQ51
-QN22.1_Q
=V1UQ51KF3
+V1UQ51/4.3
Q2051.2

L290/320 Model Clamps 1 (SET)
=V1UQ51KF3
+V1UQ51
-QN22.2_Q
=V1UQ51KF3
+V1UQ51/4.3
Q2051.3

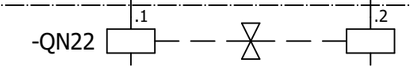

=V1UQ51KF3+V1UQ51/2.1
+.UQ51UQ22.1-W1

=V1UQ51KF3+V1UQ51/2.2
+.UQ51UQ22.2-W1

=V1UQ51KF3+V1UQ51/2.3
+.UQ51UQ22.3-W1

=V1UQ51KF3+V1UQ51/2.4
+.UQ51UQ22.4-W1

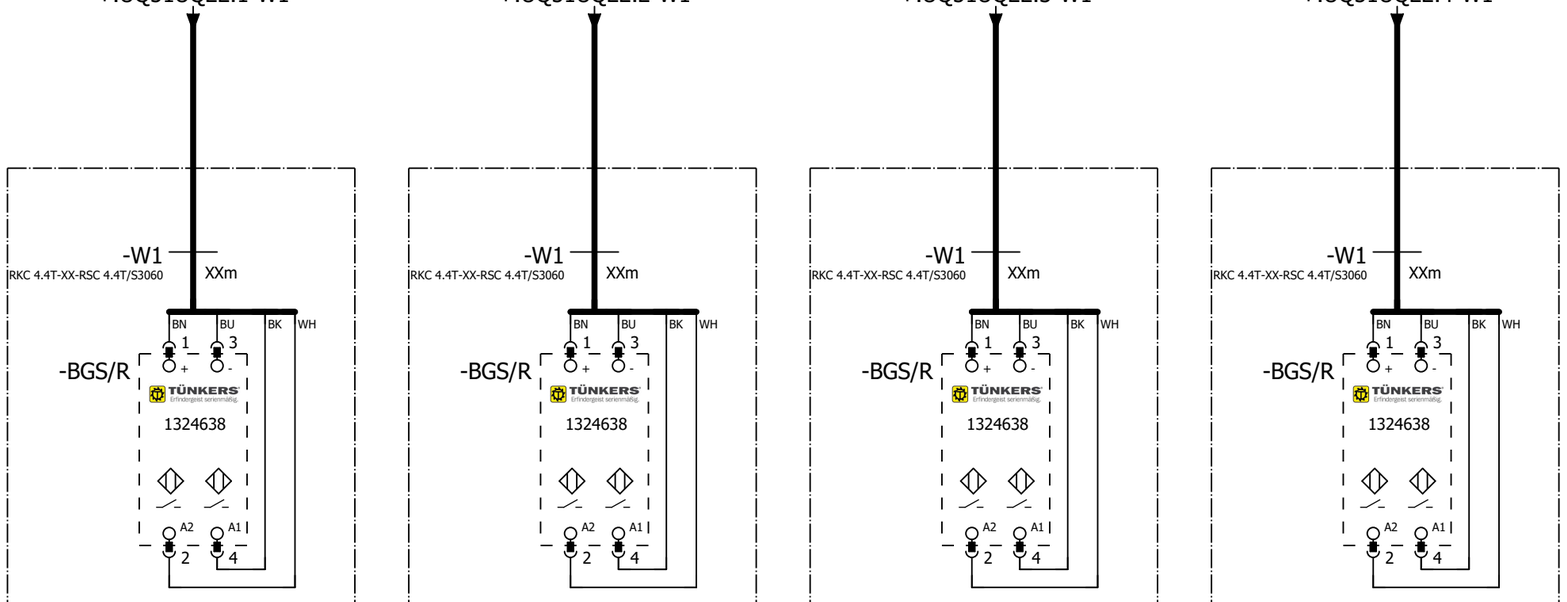

L290/320 Model Clamp 1
=V1UQ51UQ22.1
+.UQ51UQ22.1
-UQ22.1

L290/320 Model Clamp 1
=V1UQ51UQ22.2
+.UQ51UQ22.2
-UQ22.2

L290/320 Model Clamp 1
=V1UQ51UQ22.3
+.UQ51UQ22.3
-UQ22.3

L290/320 Model Clamp 1
=V1UQ51UQ22.4
+.UQ51UQ22.4
-UQ22.4

=V1UQ51
-UQ22.1-BGS/R
L290/320 Model
Clamp 1

=V1UQ51
-UQ22.2-BGS/R
L290/320 Model
Clamp 1

=V1UQ51
-UQ22.3-BGS/R
L290/320 Model
Clamp 1

=V1UQ51
-UQ22.4-BGS/R
L290/320 Model
Clamp 1

=V1UQ51UQ21+.UQ51UQ21/1

=V1UQ51UQ23+.UQ51UQ23/1

			Date	12/22/2022	Volvo Trucks North America		Valiant TMS	FESTO DQ CONNECTION QN22	Drawing name: =2V04&EFS-EL	= V1UQ51UQ22
			Ed.	MKLEPADLO						+ V1UQ51UQ22
			Appr		P6700 Underbody Mainline - Cell 2V04				Document type: EFS	Project nr: 22-16151
Modification	Date	Name	Original		Replacement of	Replaced by	Scale 1:1			Page 1 / 1630

0	1	2	3	4	5	6	7	8	9

=V1UQ51KF3
+.UQ51

-KF3.24
=V1UQ51KF3+V1UQ51/4.1

L290 Model Clamp 3 (RST)	L290 Model Clamp 3 (SET)
=V1UQ51KF3	=V1UQ51KF3
+V1UQ51	+V1UQ51
-QN23.1_Q	-QN23.2_Q
=V1UQ51KF3	=V1UQ51KF3
+V1UQ51/4.3	+V1UQ51/4.3
Q2051.4	Q2051.5
1.1 Pneumatic Valve	1.2 Pneumatic Valve

-QN23 .1 .2

=V1UQ51KF3+V1UQ51/2.5
+.UQ51UQ23.1-W1

-W1
RKC 4.4T-XX-RSC 4.4T/S3060
XXm

BN BU BK WH

-BGS/R
1 3
+ -
TÜNKERS
285425
A2 A1
2 4

L290 Model Clamp 3

=V1UQ51UQ23.1
+.UQ51UQ23.1
-UQ23.1

=V1UQ51 -UQ23.1-BGS/R L290 Model Clamp 3

=V1UQ51UQ22+.UQ51UQ22/1

=V1UQ51UQ24+.UQ51UQ24/1

			Date	12/22/2022	Volvo Trucks North America	Valiant TMS	FESTO DQ CONNECTION QN23	Drawing name: =2V04&EFS-EL	= V1UQ51UQ23
			Ed.	MKLEPADLO					+ V1UQ51UQ23
			Appr		P6700 Underbody Mainline - Cell 2V04			Document type: EFS	Project nr: 22-16151
Modification	Date	Name	Original		Replacement of	Replaced by	Scale 1:1		Page 1 / 1630

0	1	2	3	4	5	6	7	8	9

=V1UQ51KF3
+.UQ51

-KF3.24
=V1UQ51KF3+V1UQ51/4.1

L290/320 Model Clamp 2 (RST)	L290/320 Model Clamp 2 (SET)
=V1UQ51KF3	=V1UQ51KF3
+V1UQ51	+V1UQ51
-QN24.1_Q	-QN24.2_Q
=V1UQ51KF3	=V1UQ51KF3
+V1UQ51/4.3	+V1UQ51/4.3
Q2051.6	Q2051.7
2.1 Pneumatic Valve	2.2 Pneumatic Valve

-QN24 .1 .2

=V1UQ51KF3+V1UQ51/2.6
+.UQ51UQ24.1-W1

-W1
RKC 4.4T-XX-RSC 4.4T/S3060
XXm

BN BU BK WH

-BGS/R
1 3
+ -
TÜNKERS
285425
A2 A1
2 4

L290/320 Model Clamp 2

=V1UQ51UQ24.1
+.UQ51UQ24.1
-UQ24.1

=V1UQ51 -UQ24.1-BGS/R L290/320 Model Clamp 2

=V1UQ51UQ23+.UQ51UQ23/1

=V1UQ51WC4+V1UQ51/1

			Date	12/22/2022	Volvo Trucks North America	Valiant TMS	FESTO DQ CONNECTION QN24	Drawing name: =2V04&EFS-EL	= V1UQ51UQ24
			Ed.	MKLEPADLO					+ V1UQ51UQ24
			Appr		P6700 Underbody Mainline - Cell 2V04			Document type: EFS	Project nr: 22-16151
Modification	Date	Name	Original		Replacement of	Replaced by	Scale 1:1		Page 1 / 1630

0	1	2	3	4	5	6	7	8	9

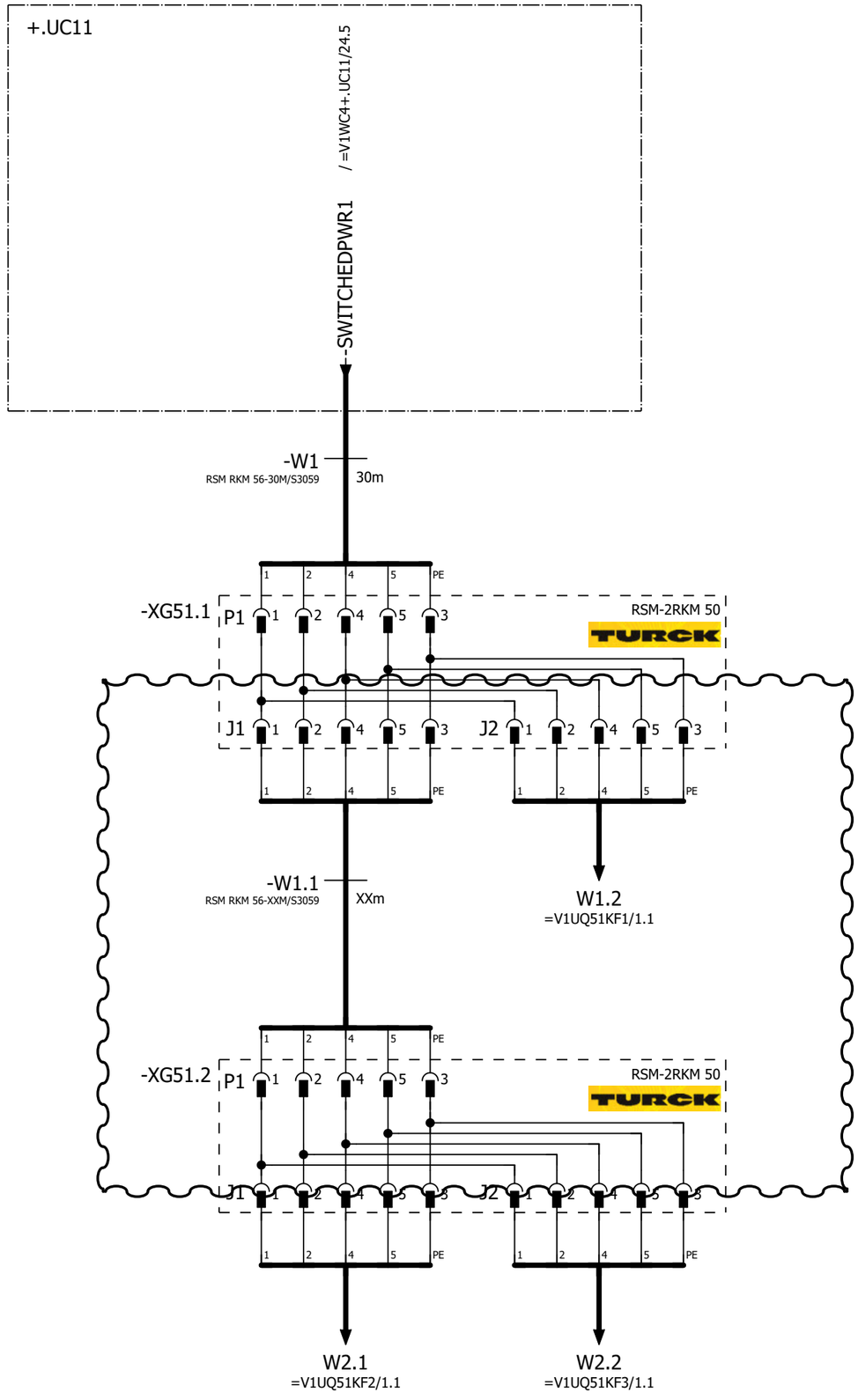

need JT

=V1UQ51UQ24+.UQ51UQ24/1

=V1UQ52BG0+.UQ52/1

			Date	12/22/2022	Volvo Trucks North America	Valiant TMS	24VDC	Drawing name: =2V04&EFS-EL	= V1UQ51WC4
			Ed.	MKLEPADLO					+ V1UQ51
			Appr		P6700 Underbody Mainline - Cell 2V04	Scale 1:1		Document type: EFS	Project nr: 22-16151
Modification	Date	Name	Original		Replacement of	Replaced by			Page 1 / 1630

0	1	2	3	4	5	6	7	8	9

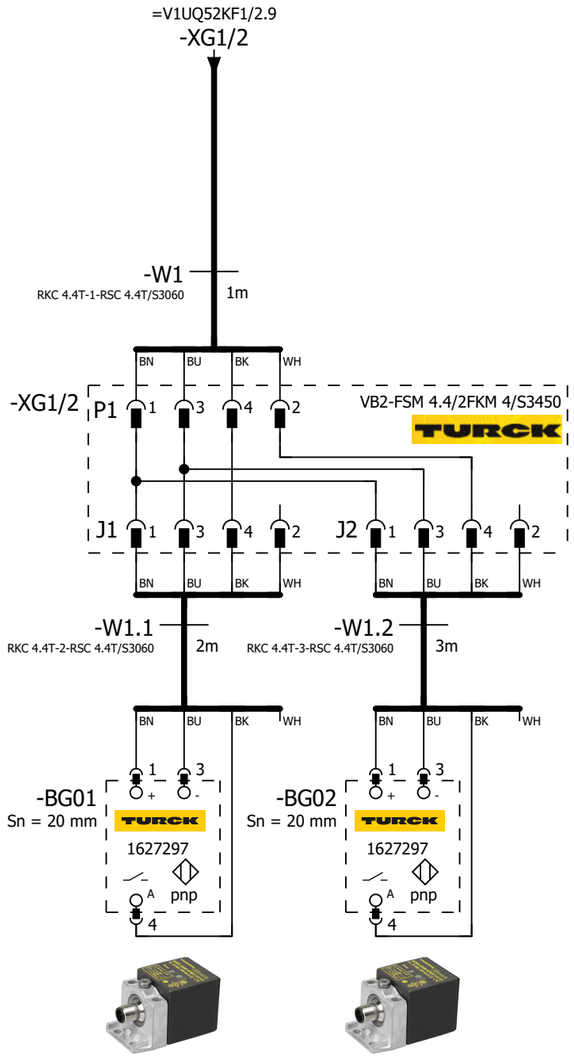

=V1UQ52 -BG01 Floor Frame Assy (Common)	=V1UQ52 -BG02 Floor Frame Assy (Common)

=V1UQ51WC4+.UQ51/1

=V1UQ52KF1/1

			Date	12/22/2022	Volvo Trucks North America	Valiant TMS	SENSORS	Drawing name: =2V04&EFS-EL	= V1UQ52BG0
			Ed.	MKLEPADLO					+ V1UQ52
			Appr		P6700 Underbody Mainline - Cell 2V04			Document type: EFS	Project nr: 22-16151
Modification	Date	Name	Original		Replacement of / Replaced by	Scale 1:1			Page 1 / 1630

0	1	2	3	4	5	6	7	8	9

=V1UQ52WC4/1.5 / W1

-W1
RSM RKM 56-25M/S3059
25m

=V1KF1+.UC11/2.6 / +.UC11-KF100.11-P12

-KF100.11-P12
PROFINET Cable
6XV1840-3AH10

-KF1

X20 M12, 7/8" 1 2 PE 4 5
0V_VAL / OUT
0V_EL / SEN
FE
24V_EL / SEN
24V_VAL / OUT

ON OFF 1 2 1 2

M12 -TP1
M12 -TP2

FESTO
Bus node + Interlinking block
548755 + 550208

-KF1.11

FESTO
CPX-M-AB-8-M12X2-5POL
549335

I2100.0	DI 0 X1:4	V1UQ52UQ1.1-BGR	Common Clamp (RESET)
I2100.1	DI 1 X1:2	V1UQ52UQ1.1-BGS	Common Clamp (SET)
I2100.2	DI 2 X2:4	V1UQ52UQ1.2-BGR	Common Clamp (RESET)
I2100.3	DI 3 X2:2	V1UQ52UQ1.2-BGS	Common Clamp (SET)
I2100.4	DI 4 X3:4	V1UQ52UQ1.3-BGR	Common Clamp (RESET)
I2100.5	DI 5 X3:2	V1UQ52UQ1.3-BGS	Common Clamp (SET)
I2100.6	DI 6 X4:4	V1UQ52UQ1.4-BGR	Common Clamp (RESET)
I2100.7	DI 7 X4:2	V1UQ52UQ1.4-BGS	Common Clamp (SET)
I2101.0	DI 8 X5:4	V1UQ52UQ2.1-BGR	L150 Model Clamp (RESET)
I2101.1	DI 9 X5:2	V1UQ52UQ2.1-BGS	L150 Model Clamp (SET)
I2101.2	DI 10 X6:4	V1UQ52UQ2.2-BGR	L150 Model Clamp (RESET)
I2101.3	DI 11 X6:2	V1UQ52UQ2.2-BGS	L150 Model Clamp (SET)
I2101.4	DI 12 X7:4	V1UQ52UQ3.1-BGR	L150 Model Shot Pin (RESET)
I2101.5	DI 13 X7:2	V1UQ52UQ3.1-BGS	L150 Model Shot Pin (SET)
I2101.6	DI 14 X8:4	V1UQ52UQ4.1-BGR	L230/290/320 Model Clamp (RESET)
I2101.7	DI 15 X8:2	V1UQ52UQ4.1-BGS	L230/290/320 Model Clamp (SET)

X1 M12 1 2 3 4 5 — 24V DI 1 0V DI 0 FE — BN WH BU BK
X2 M12 1 2 3 4 5 — 24V DI 3 0V DI 2 FE — BN WH BU BK
X3 M12 1 2 3 4 5 — 24V DI 5 0V DI 4 FE — BN WH BU BK
X4 M12 1 2 3 4 5 — 24V DI 7 0V DI 6 FE — BN WH BU BK
X5 M12 1 2 3 4 5 — 24V DI 9 0V DI 8 FE — BN WH BU BK
X6 M12 1 2 3 4 5 — 24V DI 11 0V DI 10 FE — BN WH BU BK
X7 M12 1 2 3 4 5 — 24V DI 13 0V DI 12 FE — BN WH BU BK
X8 M12 1 2 3 4 5 — 24V DI 15 0V DI 14 FE — BN WH BU BK

+.UQ52UQ1.1-W1
=V1UQ52UQ1+.UQ52UQ1/1.1

+.UQ52UQ1.2-W1
=V1UQ52UQ1+.UQ52UQ1/1.2

+.UQ52UQ1.3-W1
=V1UQ52UQ1+.UQ52UQ1/1.4

+.UQ52UQ1.4-W1
=V1UQ52UQ1+.UQ52UQ1/1.5

+.UQ52UQ2.1-W1
=V1UQ52UQ2+.UQ52UQ2/1.1

+.UQ52UQ2.2-W1
=V1UQ52UQ2+.UQ52UQ2/1.2

+.UQ52UQ3.1-W1
=V1UQ52UQ3+.UQ52UQ3/1.1

+.UQ52UQ4.1-W1
=V1UQ52UQ4+.UQ52UQ4/1.1

=V1UQ52BG0/1

2

			Date	12/22/2022	Volvo Trucks North America	Valiant TMS	CONNECTING MOD. FOR VTSA MANIFOLD	Drawing name: =2V04&EFS-EL	= V1UQ52KF1
			Ed.	MKLEPADLO					+ V1UQ52
			Appr		P6700 Underbody Mainline - Cell 2V04			Document type: EFS	Project nr: 22-16151
Modification	Date	Name	Original		Replacement of / Replaced by	Scale 1:1			Page 1 / 1630

I2102.0	V1UQ52UQ4.2-BGR	L230/290/320 Model Clamp (RESET)
I2102.1	V1UQ52UQ4.2-BGS	L230/290/320 Model Clamp (SET)
I2102.2	V1UQ52UQ5.1-BGR	L230 Model Linear Slide Position (RESET)
I2102.3	V1UQ52UQ5.1-BGS1	L290 Model Linear Slide Position (SET 1)
I2102.4	V1UQ52UQ5.1-BGS2	L320 Model Linear Slide Position (SET 2)
I2102.5	I2102.5	Spare
I2102.6	V1UQ52UQ6.1-BGR	L290 Model Slide Lock Clamp (RESET)
I2102.7	V1UQ52UQ6.1-BGS	L290 Model Slide Lock Clamp (SET)
I2103.0	I2103.0	Spare
I2103.1	I2103.1	Spare
I2103.2	I2103.2	Spare
I2103.3	I2103.3	Spare
I2103.4	I2103.4	Spare
I2103.5	I2103.5	Spare
I2103.6	V1UQ52-BG01	Sensor Floor Frame Assy (Common)
I2103.7	V1UQ52-BG02	Sensor Floor Frame Assy (Common)

-KF1.12

FESTO
CPX-M-AB-8-M12X2-5POL
549335

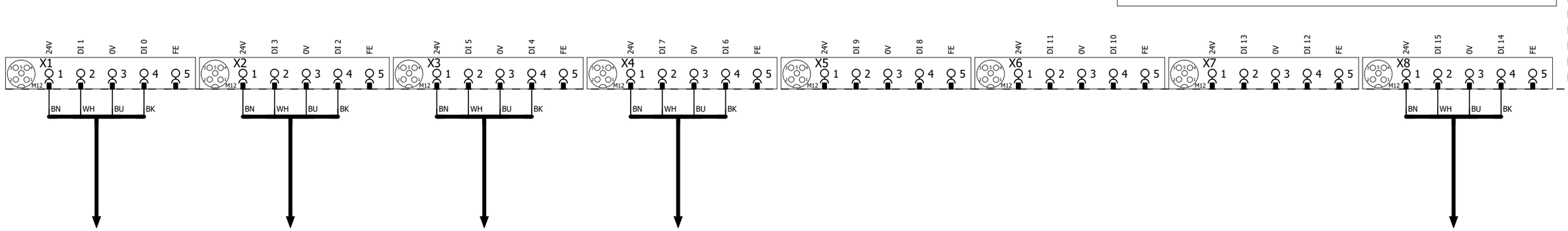

+.UQ52UQ4.2-W1
=V1UQ52UQ4+.UQ52UQ4/1.2

+.UQ52UQ5.1-W1
=V1UQ52UQ5+.UQ52UQ5/1.1

+.UQ52UQ5.1-W2
=V1UQ52UQ5+.UQ52UQ5/1.3

+.UQ52UQ6.1-W1
=V1UQ52UQ6+.UQ52UQ6/1.1

-XG1/2
=V1UQ52BG0/1.1

1 3

			Date	12/22/2022	Volvo Trucks North America	Valiant TMS	I/O MOD. DI16 (8 x M12) FOR VTSA-F	Drawing name: =2V04&EFS-EL	= V1UQ52KF1	
			Ed.	MKLEPADLO					+ V1UQ52	
			Appr		P6700 Underbody Mainline - Cell 2V04	Scale 1:1		Document type: EFS	Project nr: 22-16151	Page 2
Modification	Date	Name	Original		Replacement of / Replaced by					1630

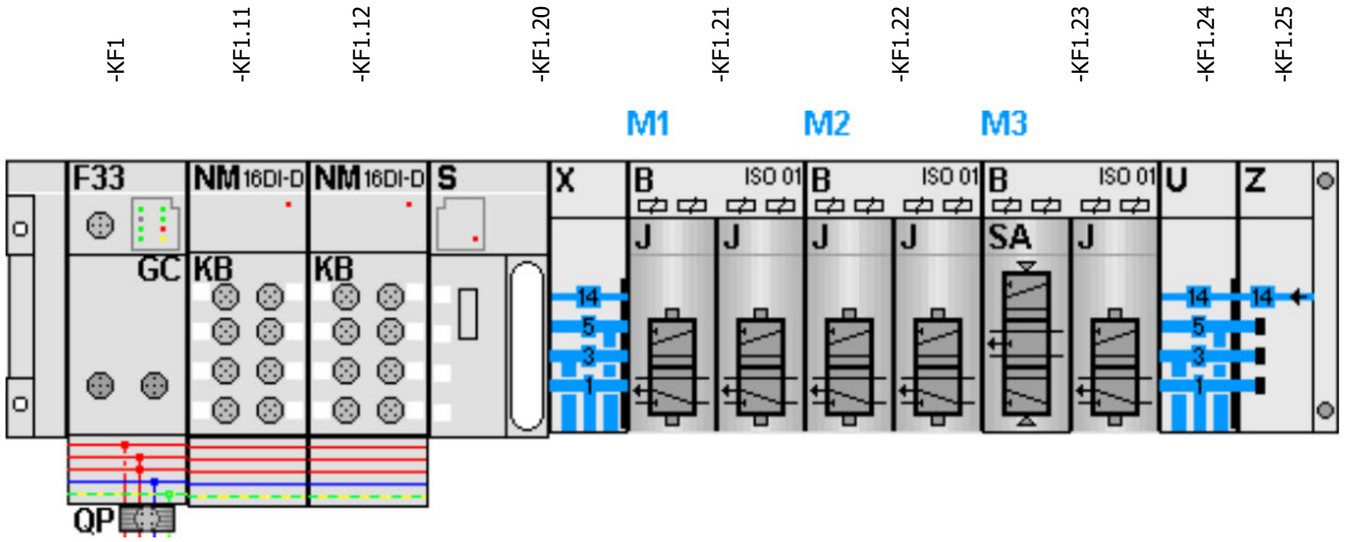

-KF1.21
=V1UQ52UQ1+.UQ52UQ1/1.3
=V1UQ52UQ2+.UQ52UQ2/1.3

FESTO

=V1UQ52UQ1+.UQ52UQ1/1.4	Q2100.0 DO 0 1.1	-QN1.1_Q	Common Clamps (RST)
=V1UQ52UQ1+.UQ52UQ1/1.4	Q2100.1 DO 1 1.2	-QN1.2_Q	Common Clamps (SET)
=V1UQ52UQ2+.UQ52UQ2/1.4	Q2100.2 DO 2 2.1	-QN2.1_Q	L150 Model Clamps (RST)
=V1UQ52UQ2+.UQ52UQ2/1.4	Q2100.3 DO 3 2.2	-QN2.2_Q	L150 Model Clamps (SET)

-KF1.22
=V1UQ52UQ3+.UQ52UQ3/1.3
=V1UQ52UQ4+.UQ52UQ4/1.3

FESTO

=V1UQ52UQ3+.UQ52UQ3/1.4	Q2100.4 DO 0 1.1	-QN3.1_Q	L150 Model Shot Pin (RST)
=V1UQ52UQ3+.UQ52UQ3/1.4	Q2100.5 DO 1 1.2	-QN3.2_Q	L150 Model Shot Pin (SET)
=V1UQ52UQ4+.UQ52UQ4/1.4	Q2100.6 DO 2 2.1	-QN4.1_Q	L230/290/320 Model Clamps (RST)
=V1UQ52UQ4+.UQ52UQ4/1.4	Q2100.7 DO 3 2.2	-QN4.2_Q	L230/290/320 Model Clamps (SET)

-KF1.23
=V1UQ52UQ5+.UQ52UQ5/1.3
=V1UQ52UQ6+.UQ52UQ6/1.3

FESTO

=V1UQ52UQ5+.UQ52UQ5/1.4	Q2101.0 DO 0 1.1	-QN5.1_Q	L230/290/320 Model Select Slide (RST)
=V1UQ52UQ5+.UQ52UQ5/1.4	Q2101.1 DO 1 1.2	-QN5.2_Q	L230/290/320 Model Select Slide (SET)
=V1UQ52UQ6+.UQ52UQ6/1.4	Q2101.2 DO 2 2.1	-QN6.1_Q	L290 Model Slide Lock Clamp (RST)
=V1UQ52UQ6+.UQ52UQ6/1.4	Q2101.3 DO 3 2.2	-QN6.2_Q	L290 Model Slide Lock Clamp (SET)

			Date	12/22/2022	Volvo Trucks North America	Valiant TMS	CONNECTING MOD. FOR FESTO DQ	Drawing name: =2V04&EFS-EL	= V1UQ52KF1
			Ed.	MKLEPADLO					+ V1UQ52
			Appr		P6700 Underbody Mainline - Cell 2V04			Document type: EFS / Project nr: 22-16151	Page 3
Modification	Date	Name	Original		Replacement of / Replaced by	Scale 1:1			1630

0	1	2	3	4	5	6	7	8	9

=V1UQ52KF1
+.UQ52

-KF1.21
=V1UQ52KF1+V1UQ52/3.1

Common Clamps (RST)
=V1UQ52KF1
+V1UQ52
-QN1.1_Q
=V1UQ52KF1
+V1UQ52/3.3
Q2100.0

Common Clamps (SET)
=V1UQ52KF1
+V1UQ52
-QN1.2_Q
=V1UQ52KF1
+V1UQ52/3.3
Q2100.1

1.1 Pneumatic Valve

1.2 Pneumatic Valve

-QN1 .1 .2

=V1UQ52KF1+V1UQ52/1.1
+.UQ52UQ1.1-W1

=V1UQ52KF1+V1UQ52/1.2
+.UQ52UQ1.2-W1

=V1UQ52KF1+V1UQ52/1.3
+.UQ52UQ1.3-W1

=V1UQ52KF1+V1UQ52/1.4
+.UQ52UQ1.4-W1

-W1 2m
RKC 4.4T-2-RSC 4.4T/S3060

-BGS/R
BN BU BK WH
1 3
TÜNKERS
1324644
A2 A1
2 4

Common Clamp
=V1UQ52UQ1.1
+.UQ52UQ1.1
-UQ1.1

Common Clamp
=V1UQ52UQ1.2
+.UQ52UQ1.2
-UQ1.2

Common Clamp
=V1UQ52UQ1.3
+.UQ52UQ1.3
-UQ1.3

Common Clamp
=V1UQ52UQ1.4
+.UQ52UQ1.4
-UQ1.4

=V1UQ52
-UQ1.1-BGS/R
Common
Clamp

=V1UQ52
-UQ1.2-BGS/R
Common
Clamp

=V1UQ52
-UQ1.3-BGS/R
Common
Clamp

=V1UQ52
-UQ1.4-BGS/R
Common
Clamp

=V1UQ52KF1+V1UQ52/3

=V1UQ52UQ2+.UQ52UQ2/1

			Date	12/22/2022	Volvo Trucks North America	Valiant TMS	FESTO DQ CONNECTION QN1	Drawing name: =2V04&EFS-EL	= V1UQ52UQ1
			Ed.	MKLEPADLO					+ V1UQ52UQ1
			Appr		P6700 Underbody Mainline - Cell 2V04			Document type: EFS	Project nr: 22-16151
Modification	Date	Name	Original		Replacement of	Replaced by	Scale 1:1		Page 1 / 1630

0	1	2	3	4	5	6	7	8	9

=V1UQ52KF1
+.UQ52

-KF1.21
=V1UQ52KF1+V1UQ52/3.1

L150 Model Clamps (RST)
=V1UQ52KF1
+V1UQ52
-QN2.1_Q
=V1UQ52KF1
+V1UQ52/3.3
Q2100.2

L150 Model Clamps (SET)
=V1UQ52KF1
+V1UQ52
-QN2.2_Q
=V1UQ52KF1
+V1UQ52/3.3
Q2100.3

2.1 Pneumatic Valve

2.2 Pneumatic Valve

-QN2 .1 .2

=V1UQ52KF1+V1UQ52/1.5
+.UQ52UQ2.1-W1

=V1UQ52KF1+V1UQ52/1.6
+.UQ52UQ2.2-W1

-W1 4m
RKC 4.4T-4-RSC 4.4T/S3060

BN BU BK WH

-BGS/R
1 3
TÜNKERS
285425
A2 A1
2 4

L150 Model Clamp
=V1UQ52UQ2.1
+.UQ52UQ2.1
-UQ2.1

L150 Model Clamp
=V1UQ52UQ2.2
+.UQ52UQ2.2
-UQ2.2

=V1UQ52
-UQ2.1-BGS/R
L150 Model
Clamp

=V1UQ52
-UQ2.2-BGS/R
L150 Model
Clamp

=V1UQ52UQ1+.UQ52UQ1/1

=V1UQ52UQ3+.UQ52UQ3/1

			Date	12/22/2022	Volvo Trucks North America		Valiant TMS	FESTO DQ CONNECTION QN2	Drawing name: =2V04&EFS-EL	= V1UQ52UQ2
			Ed.	MKLEPADLO						+ V1UQ52UQ2
			Appr		P6700 Underbody Mainline - Cell 2V04				Document type: EFS	Project nr: 22-16151
Modification	Date	Name	Original		Replacement of	Replaced by	Scale 1:1			Page 1 / 1630

0	1	2	3	4	5	6	7	8	9

=V1UQ52KF1
+.UQ52

-KF1.22
=V1UQ52KF1+V1UQ52/3.1

L150 Model Shot Pin (RST)	L150 Model Shot Pin (SET)
=V1UQ52KF1	=V1UQ52KF1
+V1UQ52	+V1UQ52
-QN3.1_Q	-QN3.2_Q
=V1UQ52KF1	=V1UQ52KF1
+V1UQ52/3.3	+V1UQ52/3.3
Q2100.4	Q2100.5

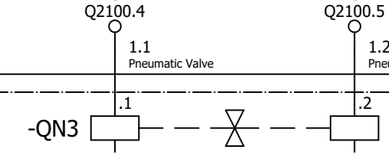

=V1UQ52KF1+V1UQ52/1.8
+.UQ52UQ3.1-W1

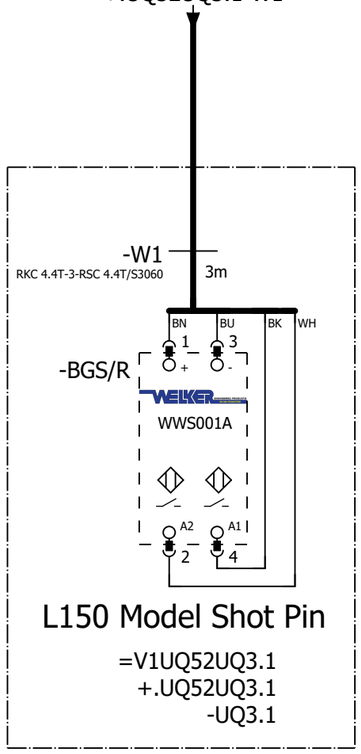

L150 Model Shot Pin

=V1UQ52UQ3.1
+.UQ52UQ3.1
-UQ3.1

=V1UQ52 -UQ3.1-BGS/R L150 Model Shot Pin

=V1UQ52UQ2+.UQ52UQ2/1

=V1UQ52UQ4+.UQ52UQ4/1

			Date	12/22/2022	Volvo Trucks North America	Valiant TMS	FESTO DQ CONNECTION QN3	Drawing name: =2V04&EFS-EL	= V1UQ52UQ3
			Ed.	MKLEPADLO					+ V1UQ52UQ3
			Appr		P6700 Underbody Mainline - Cell 2V04			Document type: EFS	Project nr: 22-16151
Modification	Date	Name	Original		Replacement of	Replaced by	Scale 1:1		Page 1 / 1630

0	1	2	3	4	5	6	7	8	9

=V1UQ52KF1
+.UQ52

-KF1.22
=V1UQ52KF1+V1UQ52/3.1

L230/290/320 Model Clamps (RST)
=V1UQ52KF1
+V1UQ52
-QN4.1_Q
=V1UQ52KF1
+V1UQ52/3.3
Q2100.6

L230/290/320 Model Clamps (SET)
=V1UQ52KF1
+V1UQ52
-QN4.2_Q
=V1UQ52KF1
+V1UQ52/3.3
Q2100.7

2.1 Pneumatic Valve

2.2 Pneumatic Valve

-QN4 .1 .2

=V1UQ52KF1+V1UQ52/1.9
+.UQ52UQ4.1-W1

=V1UQ52KF1+V1UQ52/2.1
+.UQ52UQ4.2-W1

-W1 5m
RKC 4.4T-5-RSC 4.4T/S3060

BN BU BK WH

-BGS/R
1 3
+ -
TÜNKERS
285425
A2 A1
2 4

L230/290/320 Model Clamp
=V1UQ52UQ4.1
+.UQ52UQ4.1
-UQ4.1

L230/290/320 Model Clamp
=V1UQ52UQ4.2
+.UQ52UQ4.2
-UQ4.2

=V1UQ52
-UQ4.1-BGS/R
L230/290/320
Model Clamp

=V1UQ52
-UQ4.2-BGS/R
L230/290/320
Model Clamp

=V1UQ52UQ3+.UQ52UQ3/1

=V1UQ52UQ5+.UQ52UQ5/1

			Date	12/22/2022	Volvo Trucks North America	Valiant TMS	FESTO DQ CONNECTION QN4	Drawing name: =2V04&EFS-EL	= V1UQ52UQ4
			Ed.	MKLEPADLO					+ V1UQ52UQ4
			Appr		P6700 Underbody Mainline - Cell 2V04			Document type: EFS	Project nr: 22-16151
Modification	Date	Name	Original		Replacement of / Replaced by	Scale 1:1			Page 1 / 1630

0	1	2	3	4	5	6	7	8	9

=V1UQ52KF1
+.UQ52

-KF1.23
=V1UQ52KF1+V1UQ52/3.1

L230/290/320 Model Select Slide (RST)
=V1UQ52KF1
+V1UQ52
-QN5.1_Q
=V1UQ52KF1
+V1UQ52/3.3
Q2101.0

L230/290/320 Model Select Slide (SET)
=V1UQ52KF1
+V1UQ52
-QN5.2_Q
=V1UQ52KF1
+V1UQ52/3.3
Q2101.1

1.1 Pneumatic Valve

1.2 Pneumatic Valve

-QN5 .1 .2

=V1UQ52KF1+V1UQ52/2.2
+.UQ52UQ5.1-W1

=V1UQ52KF1+V1UQ52/2.3
+.UQ52UQ5.1-W2

-W1 RKC 4.4T-4-RSC 4.4T/S3060 4m BN BU BK WH

-W2 RKC 4.4T-4-RSC 4.4T/S3060 4m BN BU BK WH

-XGR/S P1 1 3 4 2 VB2-FSM 4.4/2FKM 4/S3450 TURCK

J1 1 3 4 2 BN BU BK WH

J2 1 3 4 2 BN BU BK WH

-W1.1 RKC 4.4T-0.5-RSC 4.4T/S3060 0.5m BN BU BK WH

-W1.2 RKC 4.4T-1-RSC 4.4T/S3060 1m BN BU BK WH

-BGR Sn = 2 mm TURCK 1627297 pnp 1 3 A 4

-BGS1 Sn = 2 mm TURCK 1627297 pnp 1 3 A 4

-BGS2 Sn = 20 mm TURCK 1627297 pnp 1 3 A 4

L230/290/320 Model Select Linear Slide Position

=V1UQ52UQ5.1
+.UQ52UQ5.1
-UQ5.1

=V1UQ52 -UQ5.1-BGR L230 Model Sel Linear Slide Pos	=V1UQ52 -UQ5.1-BGS1 L290 Model Sel Linear Slide Pos	=V1UQ52 -UQ5.1-BGS2 L320 Model Sel Linear Slide Pos

=V1UQ52UQ4+.UQ52UQ4/1

=V1UQ52UQ6+.UQ52UQ6/1

			Date	12/22/2022	Volvo Trucks North America	Valiant TMS	FESTO DQ CONNECTION QN5	Drawing name: =2V04&EFS-EL	= V1UQ52UQ5
			Ed.	MKLEPADLO					+ V1UQ52UQ5
			Appr		P6700 Underbody Mainline - Cell 2V04	Scale 1:1		Document type: EFS	Project nr: 22-16151
Modification	Date	Name	Original		Replacement of	Replaced by			Page 1 / 1630

0	1	2	3	4	5	6	7	8	9

=V1UQ52KF1
+.UQ52

-KF1.23
=V1UQ52KF1+V1UQ52/3.1

L290 Model Slide Lock Clamp (RST)
=V1UQ52KF1
+V1UQ52
-QN6.1_Q
=V1UQ52KF1
+V1UQ52/3.3
Q2101.2

L290 Model Slide Lock Clamp (SET)
=V1UQ52KF1
+V1UQ52
-QN6.2_Q
=V1UQ52KF1
+V1UQ52/3.3
Q2101.3

2.1 Pneumatic Valve

2.2 Pneumatic Valve

-QN6 .1 .2

=V1UQ52KF1+V1UQ52/2.4
+.UQ52UQ6.1-W1

-W1
RKC 4.4T-6-RSC 4.4T/S3060
6m

BN BU BK WH

-BGS/R
1 3
+ -
TÜNKERS
1324638
A2 A1
2 4

L290 Model Slide Lock Clamp

=V1UQ52UQ6.1
+.UQ52UQ6.1
-UQ6.1

=V1UQ52 -UQ6.1-BGS/R L290 Model Slide Lock Clamp

=V1UQ52UQ5+.UQ52UQ5/1

=V1UQ52WC4+V1UQ52/1

			Date	12/22/2022	Volvo Trucks North America	Valiant TMS	FESTO DQ CONNECTION QN6	Drawing name: =2V04&EFS-EL	= V1UQ52UQ6
			Ed.	MKLEPADLO					+ V1UQ52UQ6
			Appr		P6700 Underbody Mainline - Cell 2V04			Document type: EFS	Project nr: 22-16151
Modification	Date	Name	Original		Replacement of	Replaced by	Scale 1:1		Page 1 / 1630

+.UC11

-SWITCHEDPWR2 / =V1WC4+.UC11/25.5

W1
=V1UQ52KF1/1.1

=V1UQ52UQ6+.UQ52UQ6/1

=V1UQ53BG0+.UQ53/1

			Date	12/22/2022	Volvo Trucks North America		Valiant TMS	24VDC	Drawing name: =2V04&EFS-EL	= V1UQ52WC4	
			Ed.	MKLEPADLO						+ V1UQ52	
			Appr		P6700 Underbody Mainline - Cell 2V04		Scale 1:1		Document type: EFS	Project nr: 22-16151	Page 1 / 1630
Modification	Date	Name	Original		Replacement of	Replaced by					

0	1	2	3	4	5	6	7	8	9

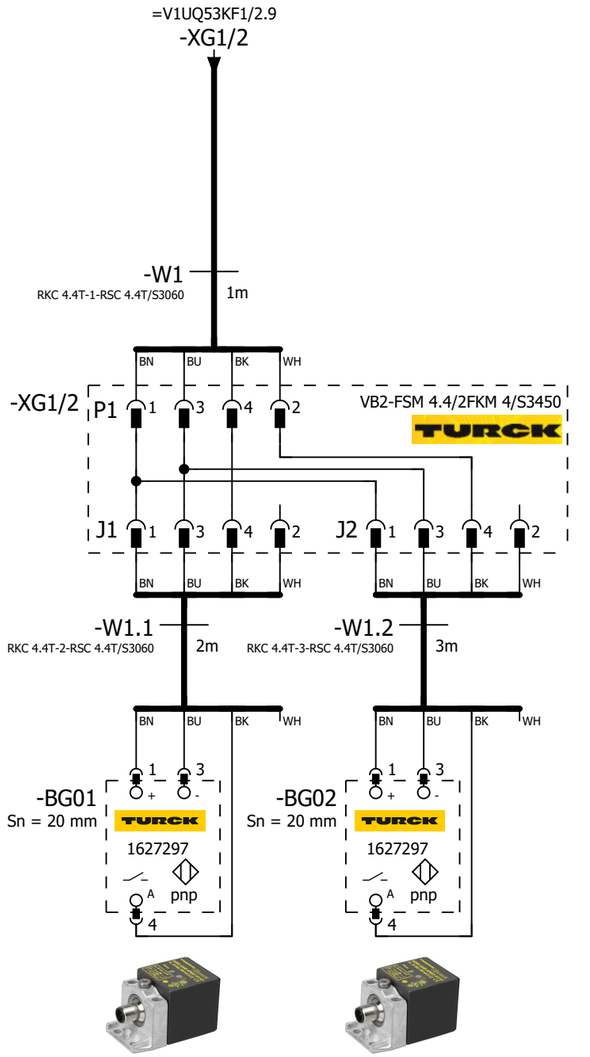

=V1UQ53 -BG01 Floor Frame Assy (Common)	=V1UQ53 -BG02 Floor Frame Assy (Common)

=V1UQ52WC4+.UQ52/1

=V1UQ53KF1/1

			Date	12/22/2022	Volvo Trucks North America	Valiant TMS	SENSORS	Drawing name: =2V04&EFS-EL	= V1UQ53BG0
			Ed.	MKLEPADLO					+ V1UQ53
			Appr		P6700 Underbody Mainline - Cell 2V04			Document type: EFS	Project nr: 22-16151
Modification	Date	Name	Original		Replacement of / Replaced by	Scale 1:1			Page 1 / 1630

0	1	2	3	4	5	6	7	8	9

=V1UQ53WC4/1.5 / W1

-W1
RSM RKM 56-30M/S3059
30m

=V1KF1+.UC14/2.6 / +.UC14-KF100.14-P13

-KF100.14-P13
PROFINET Cable
6XV1840-3AH10

-KF1

X20 M12, 7/8" 1 2 PE 4 5
0V_VAL / OUT
0V_EL / SEN
FE
24V_EL / SEN
24V_VAL / OUT

ON OFF 1 2 1 2

M12 -TP1
M12 -TP2

FESTO
Bus node + Interlinking block
548755 + 550208

I2150.0 DI 0 X1:4	V1UQ53UQ1.1-BGR	Common Clamp (RESET)
I2150.1 DI 1 X1:2	V1UQ53UQ1.1-BGS	Common Clamp (SET)
I2150.2 DI 2 X2:4	V1UQ53UQ1.2-BGR	Common Clamp (RESET)
I2150.3 DI 3 X2:2	V1UQ53UQ1.2-BGS	Common Clamp (SET)
I2150.4 DI 4 X3:4	V1UQ53UQ1.3-BGR	Common Clamp (RESET)
I2150.5 DI 5 X3:2	V1UQ53UQ1.3-BGS	Common Clamp (SET)
I2150.6 DI 6 X4:4	V1UQ53UQ1.4-BGR	Common Clamp (RESET)
I2150.7 DI 7 X4:2	V1UQ53UQ1.4-BGS	Common Clamp (SET)
I2151.0 DI 8 X5:4	V1UQ53UQ2.1-BGR	L150 Model Clamp (RESET)
I2151.1 DI 9 X5:2	V1UQ53UQ2.1-BGS	L150 Model Clamp (SET)
I2151.2 DI 10 X6:4	V1UQ53UQ2.2-BGR	L150 Model Clamp (RESET)
I2151.3 DI 11 X6:2	V1UQ53UQ2.2-BGS	L150 Model Clamp (SET)
I2151.4 DI 12 X7:4	V1UQ53UQ3.1-BGR	L150 Model Shot Pin (RESET)
I2151.5 DI 13 X7:2	V1UQ53UQ3.1-BGS	L150 Model Shot Pin (SET)
I2151.6 DI 14 X8:4	V1UQ53UQ4.1-BGR	L230/290/320 Model Clamp (RESET)
I2151.7 DI 15 X8:2	V1UQ53UQ4.1-BGS	L230/290/320 Model Clamp (SET)

-KF1.11

FESTO
CPX-M-AB-8-M12X2-5POL
549335

X1 M12 1 2 3 4 5 — 24V DI 1 0V DI 0 FE — BN WH BU BK
X2 M12 1 2 3 4 5 — 24V DI 3 0V DI 2 FE — BN WH BU BK
X3 M12 1 2 3 4 5 — 24V DI 5 0V DI 4 FE — BN WH BU BK
X4 M12 1 2 3 4 5 — 24V DI 7 0V DI 6 FE — BN WH BU BK
X5 M12 1 2 3 4 5 — 24V DI 9 0V DI 8 FE — BN WH BU BK
X6 M12 1 2 3 4 5 — 24V DI 11 0V DI 10 FE — BN WH BU BK
X7 M12 1 2 3 4 5 — 24V DI 13 0V DI 12 FE — BN WH BU BK
X8 M12 1 2 3 4 5 — 24V DI 15 0V DI 14 FE — BN WH BU BK

+.UQ53UQ1.1-W1 =V1UQ53UQ1+.UQ53UQ1/1.1
+.UQ53UQ1.2-W1 =V1UQ53UQ1+.UQ53UQ1/1.2
+.UQ53UQ1.3-W1 =V1UQ53UQ1+.UQ53UQ1/1.4
+.UQ53UQ1.4-W1 =V1UQ53UQ1+.UQ53UQ1/1.5
+.UQ53UQ2.1-W1 =V1UQ53UQ2+.UQ53UQ2/1.1
+.UQ53UQ2.2-W1 =V1UQ53UQ2+.UQ53UQ2/1.2
+.UQ53UQ3.1-W1 =V1UQ53UQ3+.UQ53UQ3/1.1
+.UQ53UQ4.1-W1 =V1UQ53UQ4+.UQ53UQ4/1.1

=V1UQ53BG0/1

			Date	12/22/2022	Volvo Trucks North America	Valiant TMS	CONNECTING MOD. FOR VTSA MANIFOLD	Drawing name: =2V04&EFS-EL	= V1UQ53KF1
			Ed.	MKLEPADLO					+ V1UQ53
			Appr		P6700 Underbody Mainline - Cell 2V04	Scale 1:1		Document type: EFS	Project nr: 22-16151
Modification	Date	Name	Original		Replacement of / Replaced by				Page 1 / 1630

0	1	2	3	4	5	6	7	8	9

-KF1.12

FESTO

CPX-M-AB-8-M12X2-5POL

549335

I2152.0	DI 0 X1:4	V1UQ53UQ4.2-BGR	L230/290/320 Model Clamp (RESET)
I2152.1	DI 1 X1:2	V1UQ53UQ4.2-BGS	L230/290/320 Model Clamp (SET)
I2152.2	DI 2 X2:4	V1UQ53UQ5.1-BG03	L230 Model Linear Slide Position (RESET)
I2152.3	DI 3 X2:2	V1UQ53UQ5.1-BG04	L290 Model Linear Slide Position (MID)
I2152.4	DI 4 X3:4	V1UQ53UQ5.1-BG05	L320 Model Linear Slide Position (SET)
I2152.5	DI 5 X3:2	I2152.5	Spare
I2152.6	DI 6 X4:4	V1UQ53UQ6.1-BGR	L290 Model Slide Lock Clamp (RESET)
I2152.7	DI 7 X4:2	V1UQ53UQ6.1-BGS	L290 Model Slide Lock Clamp (SET)
I2153.0	DI 8 X5:4	I2153.0	Spare
I2153.1	DI 9 X5:2	I2153.1	Spare
I2153.2	DI 10 X6:4	I2153.2	Spare
I2153.3	DI 11 X6:2	I2153.3	Spare
I2153.4	DI 12 X7:4	I2153.4	Spare
I2153.5	DI 13 X7:2	I2153.5	Spare
I2153.6	DI 14 X8:4	V1UQ53-BG01	Sensor Floor Frame Assy (Common)
I2153.7	DI 15 X8:2	V1UQ53-BG02	Sensor Floor Frame Assy (Common)

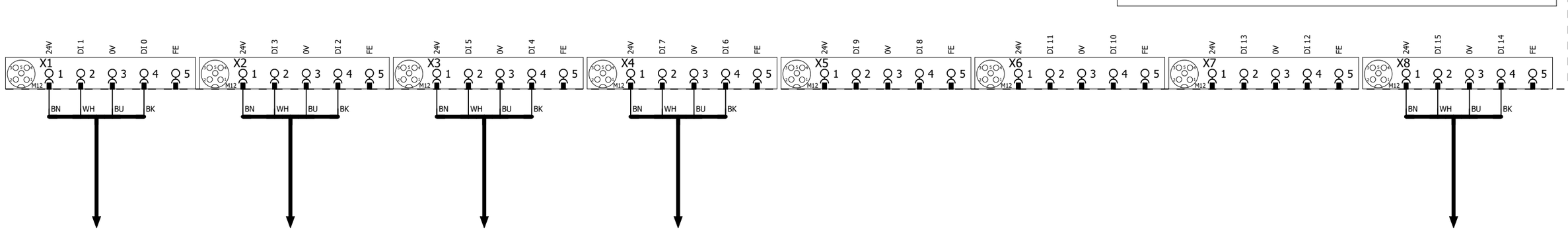

1 3

			Date	12/22/2022	Volvo Trucks North America	Valiant TMS	I/O MOD. DI16 (8 x M12) FOR VTSA-F	Drawing name: =2V04&EFS-EL	= V1UQ53KF1
			Ed.	MKLEPADLO					+ V1UQ53
			Appr		P6700 Underbody Mainline - Cell 2V04	Scale 1:1		Document type: EFS	Project nr: 22-16151
Modification	Date	Name	Original		Replacement of / Replaced by				Page 2 / 1630

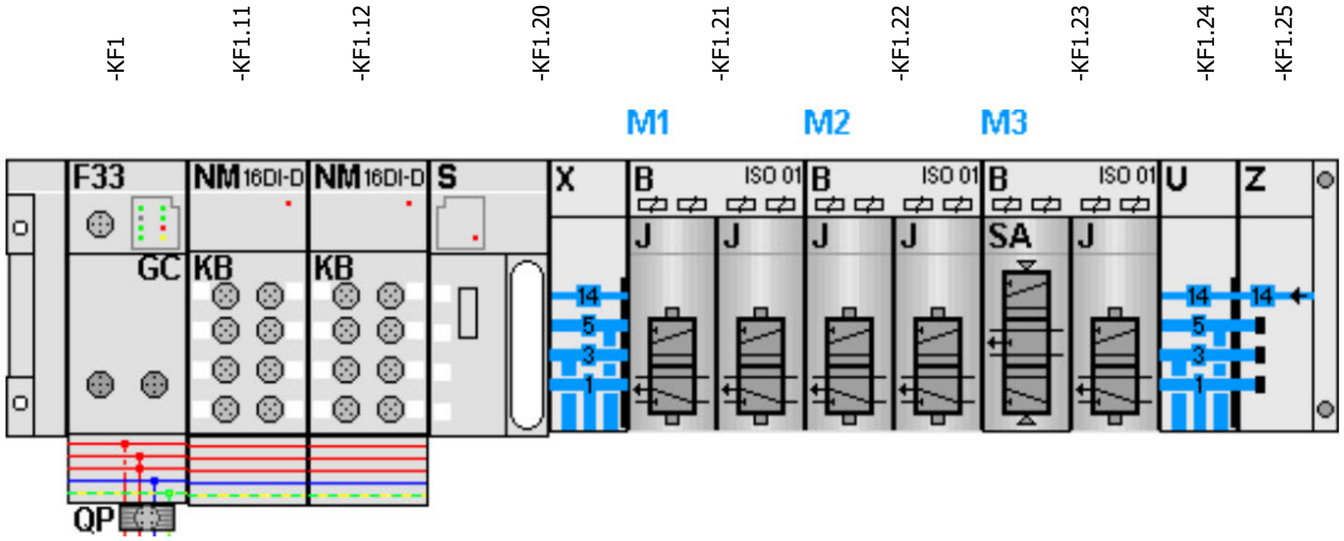

-KF1.21
=V1UQ53UQ1+.UQ53UQ1/1.3
=V1UQ53UQ2+.UQ53UQ2/1.3

FESTO

=V1UQ53UQ1+.UQ53UQ1/1.4	Q2150.0 DO 0 1.1	-QN1.1_Q	Common Clamps (RST)
=V1UQ53UQ1+.UQ53UQ1/1.4	Q2150.1 DO 1 1.2	-QN1.2_Q	Common Clamps (SET)
=V1UQ53UQ2+.UQ53UQ2/1.4	Q2150.2 DO 2 2.1	-QN2.1_Q	L150 Model Clamps (RST)
=V1UQ53UQ2+.UQ53UQ2/1.4	Q2150.3 DO 3 2.2	-QN2.2_Q	L150 Model Clamps (SET)

-KF1.22
=V1UQ53UQ3+.UQ53UQ3/1.3
=V1UQ53UQ4+.UQ53UQ4/1.3

FESTO

=V1UQ53UQ3+.UQ53UQ3/1.4	Q2150.4 DO 0 1.1	-QN3.1_Q	L150 Model Shot Pin (RST)
=V1UQ53UQ3+.UQ53UQ3/1.4	Q2150.5 DO 1 1.2	-QN3.2_Q	L150 Model Shot Pin (SET)
=V1UQ53UQ4+.UQ53UQ4/1.4	Q2150.6 DO 2 2.1	-QN4.1_Q	L230/290/320 Model Clamps (RST)
=V1UQ53UQ4+.UQ53UQ4/1.4	Q2150.7 DO 3 2.2	-QN4.2_Q	L230/290/320 Model Clamps (SET)

-KF1.23
=V1UQ53UQ5+.UQ53UQ5/1.3
=V1UQ53UQ6+.UQ53UQ6/1.3

FESTO

=V1UQ53UQ5+.UQ53UQ5/1.4	Q2151.0 DO 0 1.1	-QN5.1_Q	L230/290/320 Model Select Slide (RST)
=V1UQ53UQ5+.UQ53UQ5/1.4	Q2151.1 DO 1 1.2	-QN5.2_Q	L230/290/320 Model Select Slide (SET)
=V1UQ53UQ6+.UQ53UQ6/1.4	Q2151.2 DO 2 2.1	-QN6.1_Q	L290 Model Slide Lock Clamp (RST)
=V1UQ53UQ6+.UQ53UQ6/1.4	Q2151.3 DO 3 2.2	-QN6.2_Q	L290 Model Slide Lock Clamp (SET)

0	1	2	3	4	5	6	7	8	9

=V1UQ53KF1
+.UQ53

-KF1.21
=V1UQ53KF1+V1UQ53/3.1

Common Clamps (RST)	Common Clamps (SET)
=V1UQ53KF1	=V1UQ53KF1
+V1UQ53	+V1UQ53
-QN1.1_Q	-QN1.2_Q
=V1UQ53KF1	=V1UQ53KF1
+V1UQ53/3.3	+V1UQ53/3.3
Q2150.0	Q2150.1

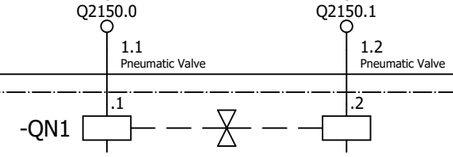

=V1UQ53KF1+V1UQ53/1.1
+.UQ53UQ1.1-W1

=V1UQ53KF1+V1UQ53/1.2
+.UQ53UQ1.2-W1

=V1UQ53KF1+V1UQ53/1.3
+.UQ53UQ1.3-W1

=V1UQ53KF1+V1UQ53/1.4
+.UQ53UQ1.4-W1

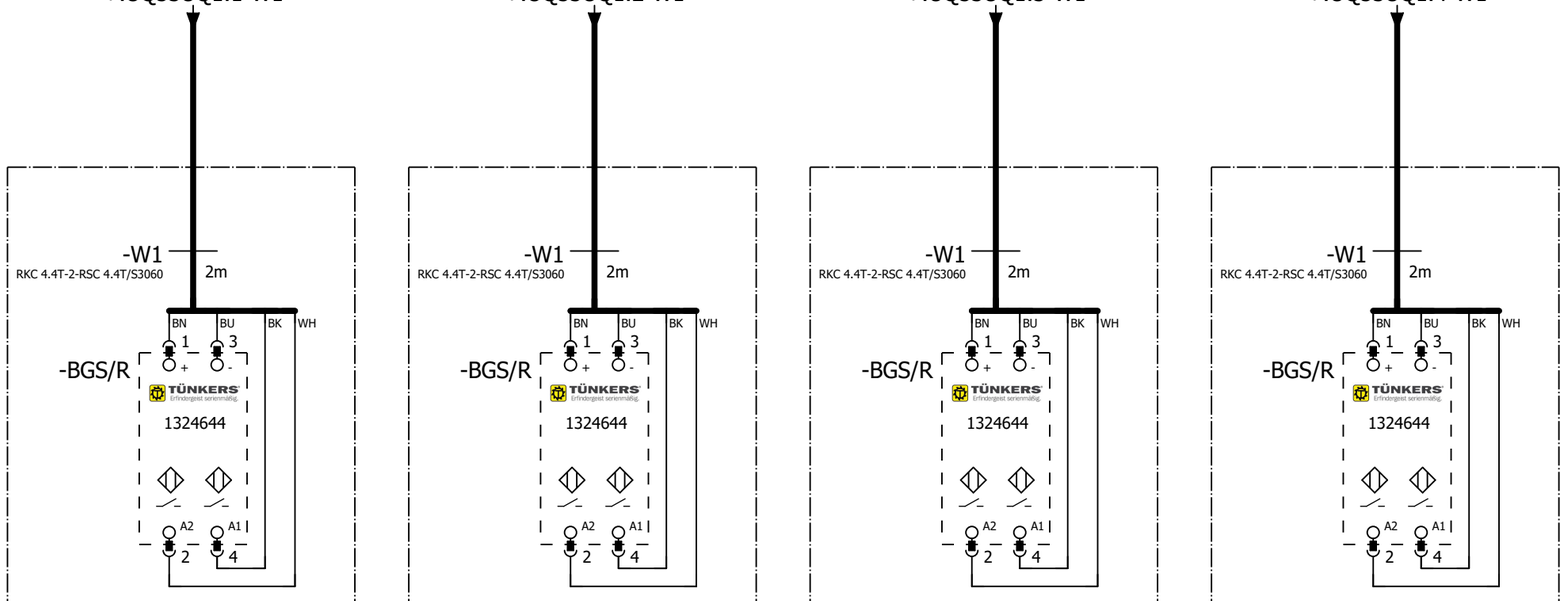

Common Clamp
=V1UQ53UQ1.1
+.UQ53UQ1.1
-UQ1.1

Common Clamp
=V1UQ53UQ1.2
+.UQ53UQ1.2
-UQ1.2

Common Clamp
=V1UQ53UQ1.3
+.UQ53UQ1.3
-UQ1.3

Common Clamp
=V1UQ53UQ1.4
+.UQ53UQ1.4
-UQ1.4

=V1UQ53
-UQ1.1-BGS/R
Common
Clamp

=V1UQ53
-UQ1.2-BGS/R
Common
Clamp

=V1UQ53
-UQ1.3-BGS/R
Common
Clamp

=V1UQ53
-UQ1.4-BGS/R
Common
Clamp

=V1UQ53KF1+V1UQ53/3

=V1UQ53UQ2+.UQ53UQ2/1

			Date	12/22/2022	Volvo Trucks North America	Valiant TMS	FESTO DQ CONNECTION QN1	Drawing name: =2V04&EFS-EL	= V1UQ53UQ1
			Ed.	MKLEPADLO					+ V1UQ53UQ1
			Appr		P6700 Underbody Mainline - Cell 2V04			Document type: EFS	Project nr: 22-16151
Modification	Date	Name	Original		Replacement of	Replaced by	Scale 1:1		Page 1 / 1630

0	1	2	3	4	5	6	7	8	9

=V1UQ53KF1
+.UQ53

-KF1.21
=V1UQ53KF1+V1UQ53/3.1

L150 Model Clamps (RST)	L150 Model Clamps (SET)
=V1UQ53KF1	=V1UQ53KF1
+V1UQ53	+V1UQ53
-QN2.1_Q	-QN2.2_Q
=V1UQ53KF1	=V1UQ53KF1
+V1UQ53/3.3	+V1UQ53/3.3
Q2150.2	Q2150.3
2.1 Pneumatic Valve	2.2 Pneumatic Valve

-QN2 .1 .2

=V1UQ53KF1+V1UQ53/1.5
+.UQ53UQ2.1-W1

=V1UQ53KF1+V1UQ53/1.6
+.UQ53UQ2.2-W1

-W1
RKC 4.4T-4-RSC 4.4T/S3060
4m

BN BU BK WH

-BGS/R
1 3
TÜNKERS
285425
A2 A1
2 4

L150 Model Clamp

=V1UQ53UQ2.1
+.UQ53UQ2.1
-UQ2.1

=V1UQ53
-UQ2.1-BGS/R
L150 Model Clamp

L150 Model Clamp

=V1UQ53UQ2.2
+.UQ53UQ2.2
-UQ2.2

=V1UQ53
-UQ2.2-BGS/R
L150 Model Clamp

=V1UQ53UQ1+.UQ53UQ1/1

=V1UQ53UQ3+.UQ53UQ3/1

			Date	12/22/2022	Volvo Trucks North America	Valiant TMS	FESTO DQ CONNECTION QN2	Drawing name: =2V04&EFS-EL	= V1UQ53UQ2
			Ed.	MKLEPADLO					+ V1UQ53UQ2
			Appr		P6700 Underbody Mainline - Cell 2V04			Document type: EFS	Project nr: 22-16151
Modification	Date	Name	Original		Replacement of	Replaced by	Scale 1:1		Page 1 / 1630

0	1	2	3	4	5	6	7	8	9

=V1UQ53KF1
+.UQ53

-KF1.22
=V1UQ53KF1+V1UQ53/3.1

L150 Model Shot Pin (RST)	L150 Model Shot Pin (SET)
=V1UQ53KF1	=V1UQ53KF1
+V1UQ53	+V1UQ53
-QN3.1_Q	-QN3.2_Q
=V1UQ53KF1	=V1UQ53KF1
+V1UQ53/3.3	+V1UQ53/3.3
Q2150.4	Q2150.5

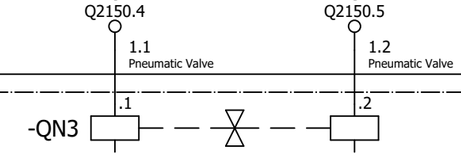

=V1UQ53KF1+V1UQ53/1.8
+.UQ53UQ3.1-W1

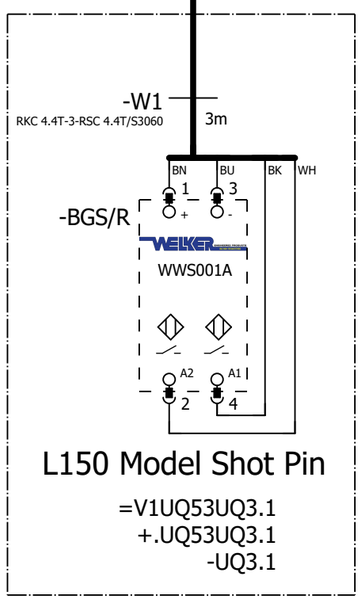

L150 Model Shot Pin

=V1UQ53UQ3.1
+.UQ53UQ3.1
-UQ3.1

=V1UQ53 -UQ3.1-BGS/R L150 Model Shot Pin

=V1UQ53UQ2+.UQ53UQ2/1

=V1UQ53UQ4+.UQ53UQ4/1

			Date	12/22/2022	Volvo Trucks North America	Valiant TMS	FESTO DQ CONNECTION QN3	Drawing name: =2V04&EFS-EL	= V1UQ53UQ3
			Ed.	MKLEPADLO					+ V1UQ53UQ3
			Appr		P6700 Underbody Mainline - Cell 2V04			Document type: EFS	Project nr: 22-16151
Modification	Date	Name	Original		Replacement of	Replaced by	Scale 1:1		Page 1 / 1630

0	1	2	3	4	5	6	7	8	9

=V1UQ53KF1
+.UQ53

-KF1.22
=V1UQ53KF1+V1UQ53/3.1

L230/290/320 Model Clamps (RST)
=V1UQ53KF1
+V1UQ53
-QN4.1_Q
=V1UQ53KF1
+V1UQ53/3.3
Q2150.6

L230/290/320 Model Clamps (SET)
=V1UQ53KF1
+V1UQ53
-QN4.2_Q
=V1UQ53KF1
+V1UQ53/3.3
Q2150.7

2.1 Pneumatic Valve

2.2 Pneumatic Valve

-QN4 .1 .2

=V1UQ53KF1+V1UQ53/1.9
+.UQ53UQ4.1-W1

=V1UQ53KF1+V1UQ53/2.1
+.UQ53UQ4.2-W1

-W1
RKC 4.4T-5-RSC 4.4T/S3060
5m

BN BU BK WH

-BGS/R
1 3
+ -
TÜNKERS
285425
A2 A1
2 4

L230/290/320 Model Clamp
=V1UQ53UQ4.1
+.UQ53UQ4.1
-UQ4.1

L230/290/320 Model Clamp
=V1UQ53UQ4.2
+.UQ53UQ4.2
-UQ4.2

=V1UQ53
-UQ4.1-BGS/R
L230/290/320
Model Clamp

=V1UQ53
-UQ4.2-BGS/R
L230/290/320
Model Clamp

=V1UQ53UQ3+.UQ53UQ3/1

=V1UQ53UQ5+.UQ53UQ5/1

			Date	12/22/2022	Volvo Trucks North America	Valiant TMS	FESTO DQ CONNECTION QN4	Drawing name: =2V04&EFS-EL	= V1UQ53UQ4
			Ed.	MKLEPADLO					+ V1UQ53UQ4
			Appr		P6700 Underbody Mainline - Cell 2V04	Scale 1:1		Document type: EFS	Project nr: 22-16151
Modification	Date	Name	Original		Replacement of	Replaced by			Page 1 / 1630

0	1	2	3	4	5	6	7	8	9

=V1UQ53KF1
+.UQ53

-KF1.23
=V1UQ53KF1+V1UQ53/3.1

L230/290/320 Model Select Slide (RST)
=V1UQ53KF1
+V1UQ53
-QN5.1_Q
=V1UQ53KF1
+V1UQ53/3.3
Q2151.0

L230/290/320 Model Select Slide (SET)
=V1UQ53KF1
+V1UQ53
-QN5.2_Q
=V1UQ53KF1
+V1UQ53/3.3
Q2151.1

1.1 Pneumatic Valve

1.2 Pneumatic Valve

-QN5 .1 .2

=V1UQ53KF1+V1UQ53/2.2
+.UQ53UQ5.1-W1

=V1UQ53KF1+V1UQ53/2.3
+.UQ53UQ5.1-W2

-W1 RKC 4.4T-4-RSC 4.4T/S3060 4m

-W2 RKC 4.4T-4-RSC 4.4T/S3060 4m

BN BU BK WH

-XGR/S P1 1 3 4 2

VB2-FSM 4.4/2FKM 4/S3450

J1 1 3 4 2

J2 1 3 4 2

-W1.1 RKC 4.4T-0.5-RSC 4.4T/S3060 0.5m

-W1.2 RKC 4.4T-1-RSC 4.4T/S3060 1m

-BG03
Sn = 2 mm
1627297
pnp

-BG04
Sn = 2 mm
1627297
pnp

-BG05
Sn = 20 mm
1627297
pnp

L230/290/320 Model Select Linear Slide Position

=V1UQ53UQ5.1
+.UQ53UQ5.1
-UQ5.1

=V1UQ53 -UQ5.1-BG03 L230 Model Sel Linear Slide Pos	=V1UQ53 -UQ5.1-BG04 L290 Model Sel Linear Slide Pos	=V1UQ53 -UQ5.1-BG05 L320 Model Sel Linear Slide Pos

=V1UQ53UQ4+.UQ53UQ4/1

=V1UQ53UQ6+.UQ53UQ6/1

			Date	12/22/2022	Volvo Trucks North America	Valiant TMS	FESTO DQ CONNECTION QN5	Drawing name: =2V04&EFS-EL	= V1UQ53UQ5
			Ed.	MKLEPADLO					+ V1UQ53UQ5
			Appr		P6700 Underbody Mainline - Cell 2V04			Document type: EFS	Project nr: 22-16151
Modification	Date	Name	Original		Replacement of / Replaced by	Scale 1:1			Page 1 / 1630

0	1	2	3	4	5	6	7	8	9

=V1UQ53KF1
+.UQ53

-KF1.23
=V1UQ53KF1+V1UQ53/3.1

L290 Model Slide Lock Clamp (RST)	L290 Model Slide Lock Clamp (SET)
=V1UQ53KF1	=V1UQ53KF1
+V1UQ53	+V1UQ53
-QN6.1_Q	-QN6.2_Q
=V1UQ53KF1	=V1UQ53KF1
+V1UQ53/3.3	+V1UQ53/3.3
Q2151.2	Q2151.3
2.1 Pneumatic Valve	2.2 Pneumatic Valve

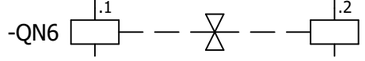

=V1UQ53KF1+V1UQ53/2.4
+.UQ53UQ6.1-W1

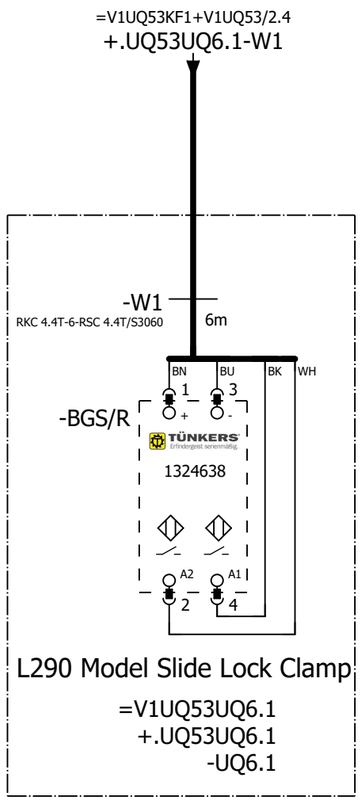

L290 Model Slide Lock Clamp

=V1UQ53UQ6.1
+.UQ53UQ6.1
-UQ6.1

=V1UQ53 -UQ6.1-BGS/R L290 Model Slide Lock Clamp

=V1UQ53UQ5+.UQ53UQ5/1

=V1UQ53WC4+V1UQ53/1

			Date	12/22/2022	Volvo Trucks North America	Valiant TMS	FESTO DQ CONNECTION QN6	Drawing name: =2V04&EFS-EL	= V1UQ53UQ6
			Ed.	MKLEPADLO					+ V1UQ53UQ6
			Appr		P6700 Underbody Mainline - Cell 2V04			Document type: EFS	Project nr: 22-16151
Modification	Date	Name	Original		Replacement of	Replaced by	Scale 1:1		Page 1 / 1630

+.UC14

-SWITCHEDPWR2 / =V1WC4+.UC14/21.5

W1
=V1UQ53KF1/1.1

=V1UQ53UQ6+.UQ53UQ6/1

=V1UQ54BG0+.UQ54/1

			Date	12/22/2022	Volvo Trucks North America	Valiant TMS	24VDC	Drawing name: =2V04&EFS-EL	= V1UQ53WC4	
			Ed.	MKLEPADLO					+ V1UQ53	
			Appr		P6700 Underbody Mainline - Cell 2V04	Scale 1:1		Document type: EFS	Project nr: 22-16151	Page 1 / 1630
Modification	Date	Name	Original		Replacement of	Replaced by				

0	1	2	3	4	5	6	7	8	9

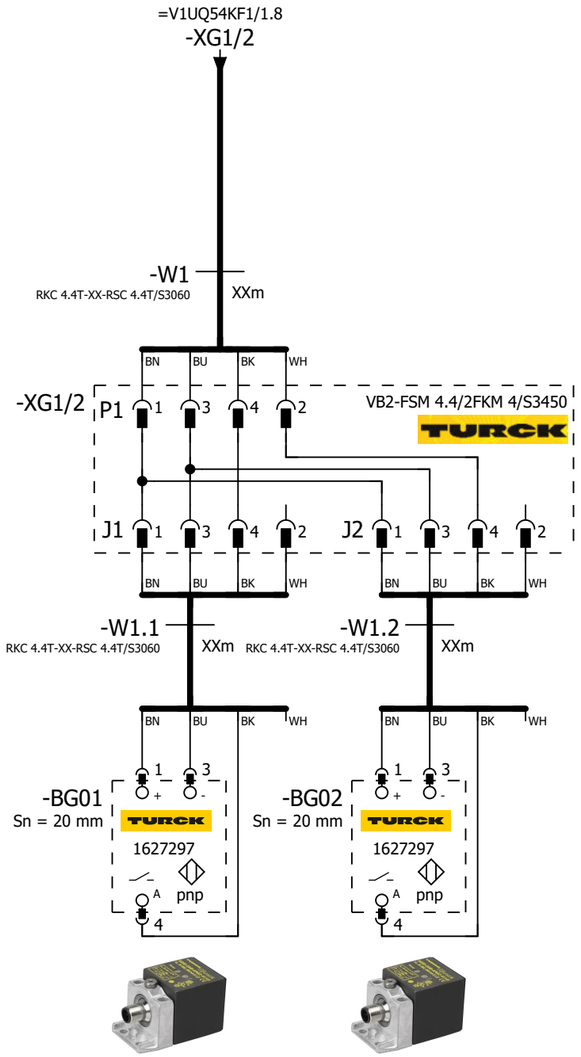

=V1UQ54 -BG01 Floor Frame Assy (Common)	=V1UQ54 -BG02 Floor Frame Assy (Common)

=V1UQ53WC4+.UQ53/1

=V1UQ54KF1/1

			Date	12/22/2022	Volvo Trucks North America	Valiant TMS	SENSORS	Drawing name: =2V04&EFS-EL	= V1UQ54BG0
			Ed.	MKLEPADLO					+ V1UQ54
			Appr		P6700 Underbody Mainline - Cell 2V04			Document type: EFS	Project nr: 22-16151
Modification	Date	Name	Original		Replacement of / Replaced by	Scale 1:1			Page 1 / 1630

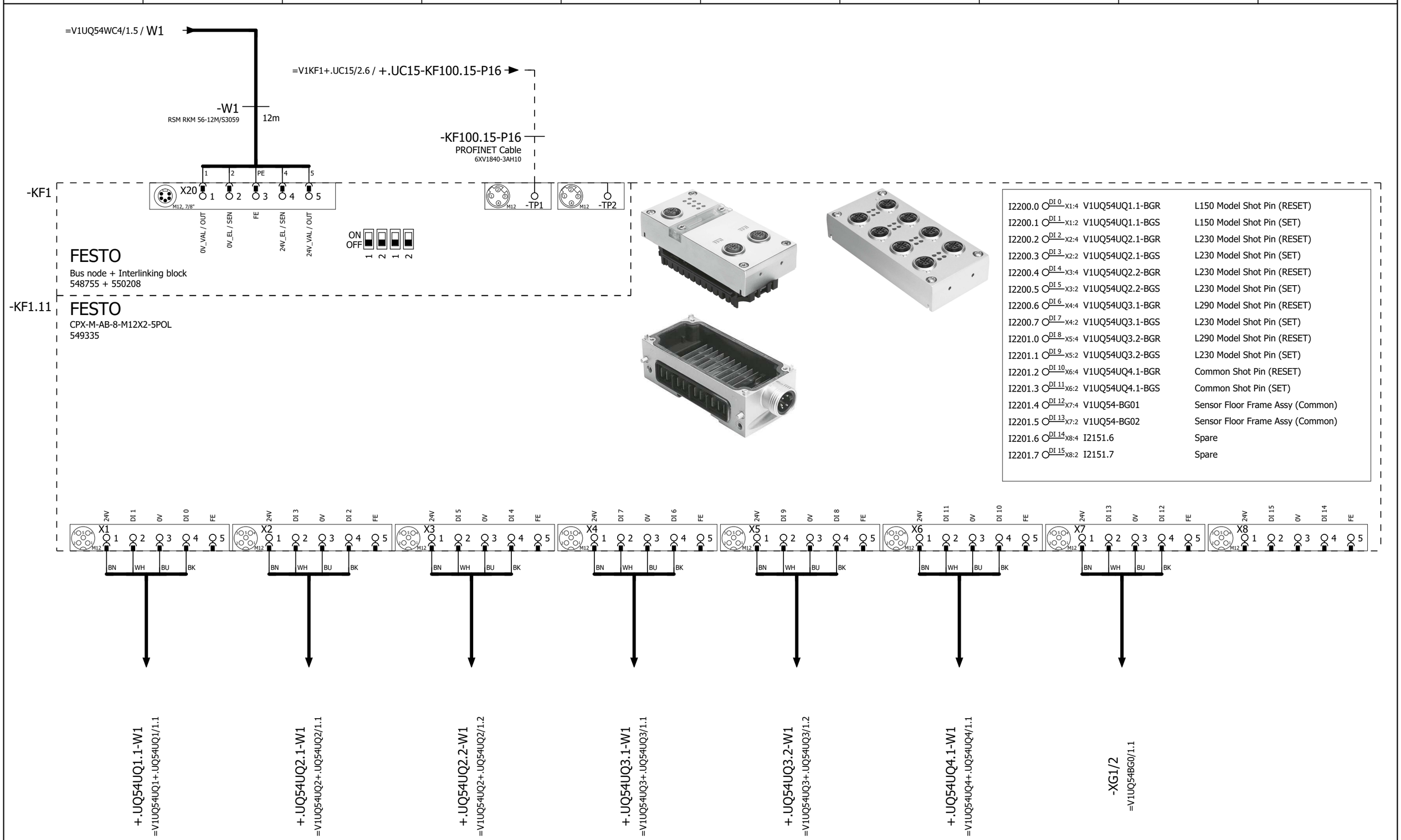

=V1UQ54BG0/1

2

			Date	12/22/2022	Volvo Trucks North America	Valiant TMS	CONNECTING MOD. FOR VTSA MANIFOLD	Drawing name: =2V04&EFS-EL	= V1UQ54KF1 + V1UQ54
			Ed.	MKLEPADLO	P6700 Underbody Mainline - Cell 2V04				
			Appr					Document type: EFS	Project nr: 22-16151
Modification	Date	Name	Original		Replacement of / Replaced by	Scale 1:1			Page 1 / 1630

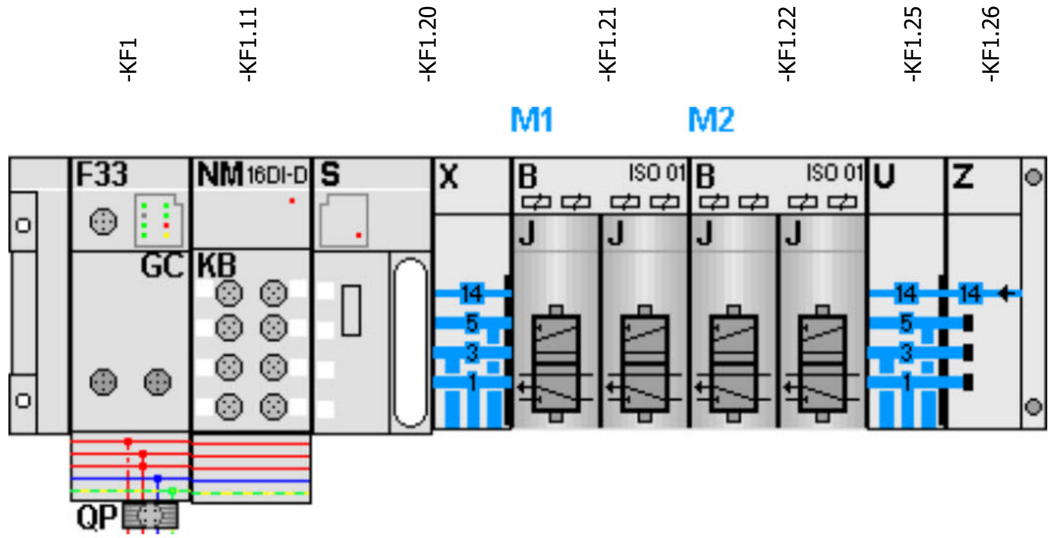

-KF1.21
=V1UQ54UQ1+.UQ54UQ1/1.3
=V1UQ54UQ2+.UQ54UQ2/1.3

FESTO

=V1UQ54UQ1+.UQ54UQ1/1.4	Q2200.0 DO 0 1.1	-QN1.1_Q	L150 Model Shot Pin (RST)
=V1UQ54UQ1+.UQ54UQ1/1.4	Q2200.1 DO 1 1.2	-QN1.2_Q	L150 Model Shot Pin (SET)
=V1UQ54UQ2+.UQ54UQ2/1.4	Q2200.2 DO 2 2.1	-QN2.1_Q	L230 Model Shot Pins (RST)
=V1UQ54UQ2+.UQ54UQ2/1.4	Q2200.3 DO 3 2.2	-QN2.2_Q	L230 Model Shot Pins (SET)

-KF1.22
=V1UQ54UQ3+.UQ54UQ3/1.3
=V1UQ54UQ4+.UQ54UQ4/1.3

FESTO

=V1UQ54UQ3+.UQ54UQ3/1.4	Q2200.4 DO 0 1.1	-QN3.1_Q	L290 Model Shot Pins (RST)
=V1UQ54UQ3+.UQ54UQ3/1.4	Q2200.5 DO 1 1.2	-QN3.2_Q	L290 Model Shot Pins (SET)
=V1UQ54UQ4+.UQ54UQ4/1.4	Q2200.6 DO 2 2.1	-QN4.1_Q	Common Shot Pin (RST)
=V1UQ54UQ4+.UQ54UQ4/1.4	Q2200.7 DO 3 2.2	-QN4.2_Q	Common Shot Pin (SET)

			Date	12/22/2022	Volvo Trucks North America	Valiant TMS	CONNECTING MOD. FOR FESTO DQ	Drawing name: =2V04&EFS-EL	= V1UQ54KF1
			Ed.	MKLEPADLO					+ V1UQ54
			Appr		P6700 Underbody Mainline - Cell 2V04			Document type: EFS	Project nr: 22-16151
Modification	Date	Name	Original		Replacement of / Replaced by	Scale 1:1			Page 2 / 1630

0	1	2	3	4	5	6	7	8	9

=V1UQ54KF1
+.UQ54

-KF1.21
=V1UQ54KF1+V1UQ54/2.1

L150 Model Shot Pin (RST)	L150 Model Shot Pin (SET)
=V1UQ54KF1	=V1UQ54KF1
+V1UQ54	+V1UQ54
-QN1.1_Q	-QN1.2_Q
=V1UQ54KF1	=V1UQ54KF1
+V1UQ54/2.3	+V1UQ54/2.3
Q2200.0	Q2200.1
1.1 Pneumatic Valve	1.2 Pneumatic Valve

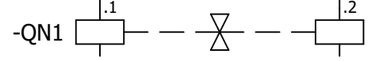

=V1UQ54KF1+V1UQ54/1.1
+.UQ54UQ1.1-W1

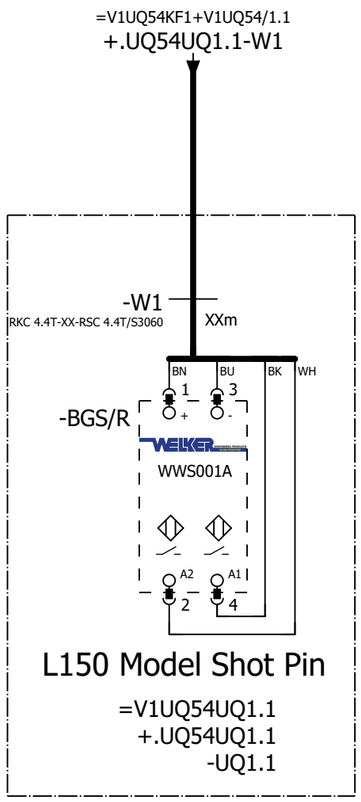

L150 Model Shot Pin

=V1UQ54UQ1.1
+.UQ54UQ1.1
-UQ1.1

=V1UQ54
-UQ1.1-BGS/R
L150 Model
Shot Pin

=V1UQ54KF1+V1UQ54/2

=V1UQ54UQ2+.UQ54UQ2/1

			Date	12/22/2022	Volvo Trucks North America	Valiant TMS	FESTO DQ CONNECTION QN1	Drawing name: =2V04&EFS-EL	= V1UQ54UQ1
			Ed.	MKLEPADLO					+ V1UQ54UQ1
			Appr		P6700 Underbody Mainline - Cell 2V04			Document type: EFS	Project nr: 22-16151
Modification	Date	Name	Original		Replacement of	Replaced by	Scale 1:1		Page 1 / 1630

0	1	2	3	4	5	6	7	8	9

=V1UQ54KF1
+.UQ54

-KF1.21
=V1UQ54KF1+V1UQ54/2.1

L230 Model Shot Pins (RST)	L230 Model Shot Pins (SET)
=V1UQ54KF1	=V1UQ54KF1
+V1UQ54	+V1UQ54
-QN2.1_Q	-QN2.2_Q
=V1UQ54KF1	=V1UQ54KF1
+V1UQ54/2.3	+V1UQ54/2.3
Q2200.2	Q2200.3
2.1 Pneumatic Valve	2.2 Pneumatic Valve

-QN2 .1 .2

=V1UQ54KF1+V1UQ54/1.2
+.UQ54UQ2.1-W1

=V1UQ54KF1+V1UQ54/1.3
+.UQ54UQ2.2-W1

-W1
RKC 4.4T-XX-RSC 4.4T/S3060
XXm

BN BU BK WH
1 3
-BGS/R
WELKER
WWS001A
A2 A1
2 4

L230 Model Shot Pin
=V1UQ54UQ2.1
+.UQ54UQ2.1
-UQ2.1

L230 Model Shot Pin
=V1UQ54UQ2.2
+.UQ54UQ2.2
-UQ2.2

=V1UQ54
-UQ2.1-BGS/R
L230 Model
Shot Pin

=V1UQ54
-UQ2.2-BGS/R
L230 Model
Shot Pin

=V1UQ54UQ1+.UQ54UQ1/1

=V1UQ54UQ3+.UQ54UQ3/1

			Date	12/22/2022	Volvo Trucks North America	Valiant TMS	FESTO DQ CONNECTION QN2	Drawing name: =2V04&EFS-EL	= V1UQ54UQ2
			Ed.	MKLEPADLO					+ V1UQ54UQ2
			Appr		P6700 Underbody Mainline - Cell 2V04			Document type: EFS	Project nr: 22-16151
Modification	Date	Name	Original		Replacement of	Replaced by	Scale 1:1		Page 1 / 1630

0	1	2	3	4	5	6	7	8	9

=V1UQ54KF1
+.UQ54

-KF1.22
=V1UQ54KF1+V1UQ54/2.1

L290 Model Shot Pins (RST)	L290 Model Shot Pins (SET)
=V1UQ54KF1	=V1UQ54KF1
+V1UQ54	+V1UQ54
-QN3.1_Q	-QN3.2_Q
=V1UQ54KF1	=V1UQ54KF1
+V1UQ54/2.3	+V1UQ54/2.3
Q2200.4	Q2200.5
1.1 Pneumatic Valve	1.2 Pneumatic Valve

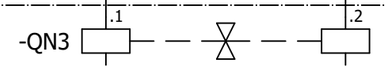

=V1UQ54KF1+V1UQ54/1.4
+.UQ54UQ3.1-W1

=V1UQ54KF1+V1UQ54/1.5
+.UQ54UQ3.2-W1

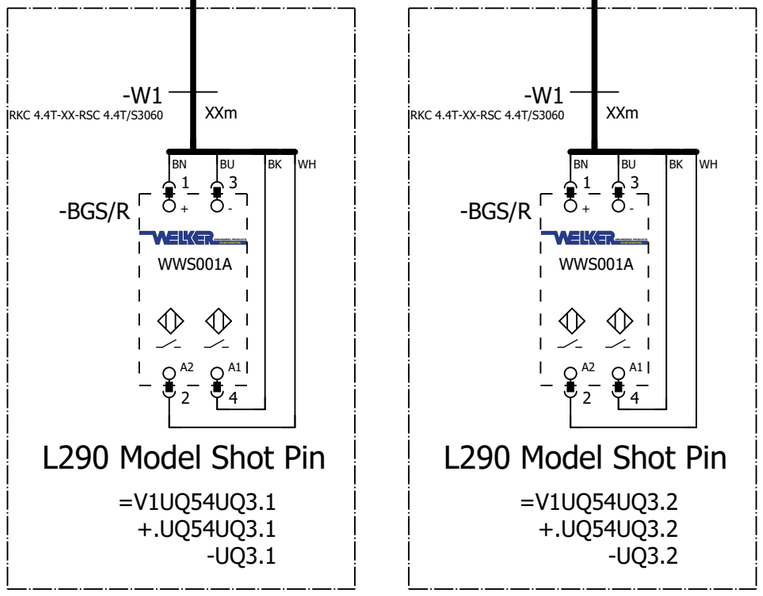

L290 Model Shot Pin

=V1UQ54UQ3.1
+.UQ54UQ3.1
-UQ3.1

L290 Model Shot Pin

=V1UQ54UQ3.2
+.UQ54UQ3.2
-UQ3.2

=V1UQ54
-UQ3.1-BGS/R
L290 Model
Shot Pin

=V1UQ54
-UQ3.2-BGS/R
L290 Model
Shot Pin

=V1UQ54UQ2+.UQ54UQ2/1

=V1UQ54UQ4+.UQ54UQ4/1

			Date	12/22/2022	Volvo Trucks North America	Valiant TMS	FESTO DQ CONNECTION QN3	Drawing name: =2V04&EFS-EL	= V1UQ54UQ3
			Ed.	MKLEPADLO					+ V1UQ54UQ3
			Appr		P6700 Underbody Mainline - Cell 2V04			Document type: EFS	Project nr: 22-16151
Modification	Date	Name	Original		Replacement of	Replaced by	Scale 1:1		Page 1 / 1630

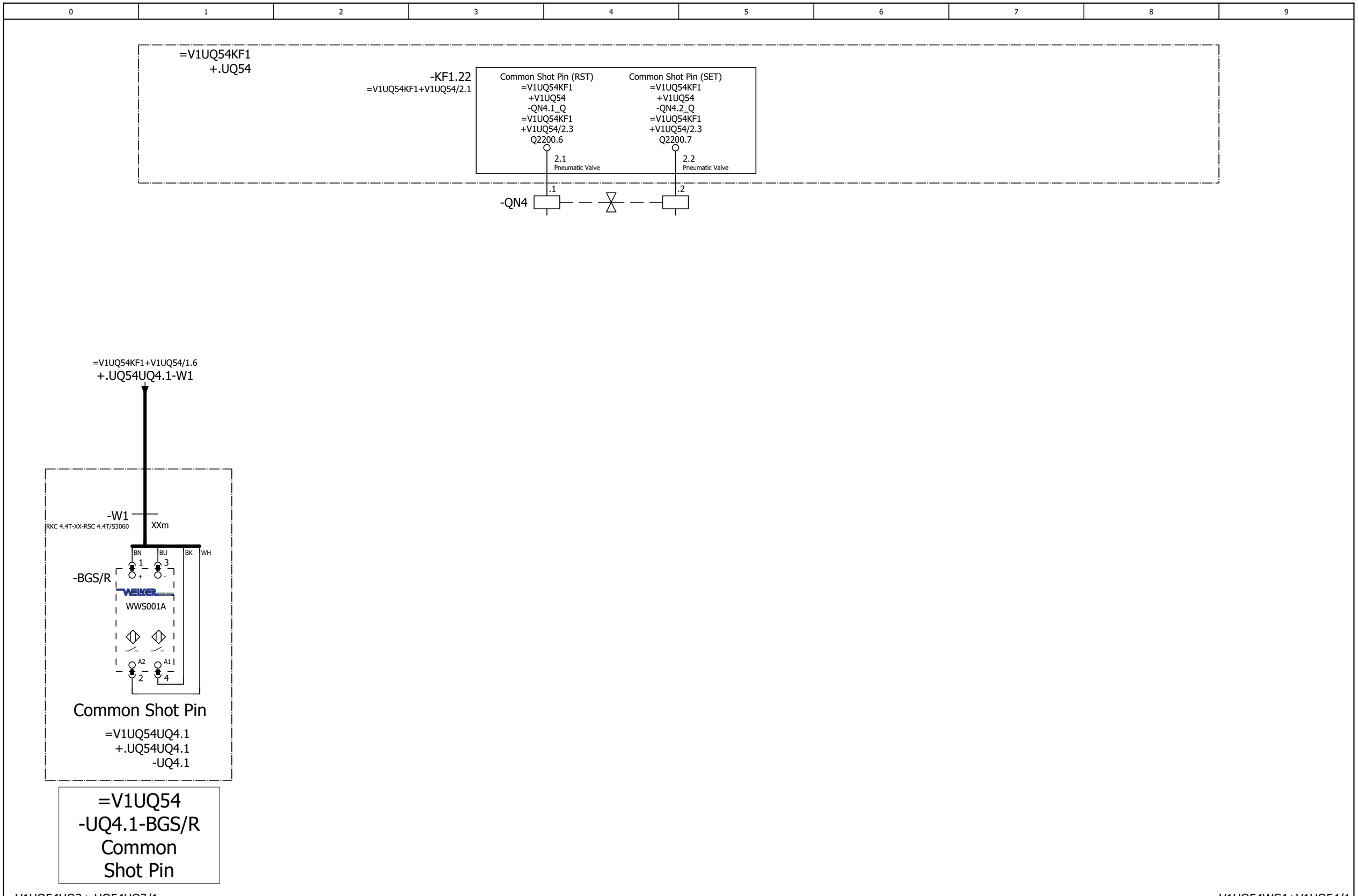

=V1UQ54UQ3+.UQ54UQ3/1

=V1UQ54WC4+V1UQ54/1

			Date	12/22/2022	Volvo Trucks North America	Valiant TMS	FESTO DQ CONNECTION QN4	Drawing name: =2V04&EFS-EL	= V1UQ54UQ4 + V1UQ54UQ4
			Ed.	MKLEPADLO	P6700 Underbody Mainline - Cell 2V04				
			Appr					Document type: EFS	Project nr: 22-16151
Modification	Date	Name	Original		Replacement of / Replaced by	Scale 1:1			Page 1 / 1630

+.UC15

-SWITCHEDPWR1 / =V1WC4+.UC15/20.5

W1
=V1UQ54KF1/1.1

=V1UQ54UQ4+.UQ54UQ4/1

=V1UQ55BG0+.UQ55/1

			Date	12/22/2022	Volvo Trucks North America	Valiant TMS	24VDC	Drawing name: =2V04&EFS-EL	= V1UQ54WC4	
			Ed.	MKLEPADLO					+ V1UQ54	
			Appr		P6700 Underbody Mainline - Cell 2V04	Scale 1:1		Document type: EFS	Project nr: 22-16151	Page 1 / 1630
Modification	Date	Name	Original		Replacement of	Replaced by				

0	1	2	3	4	5	6	7	8	9

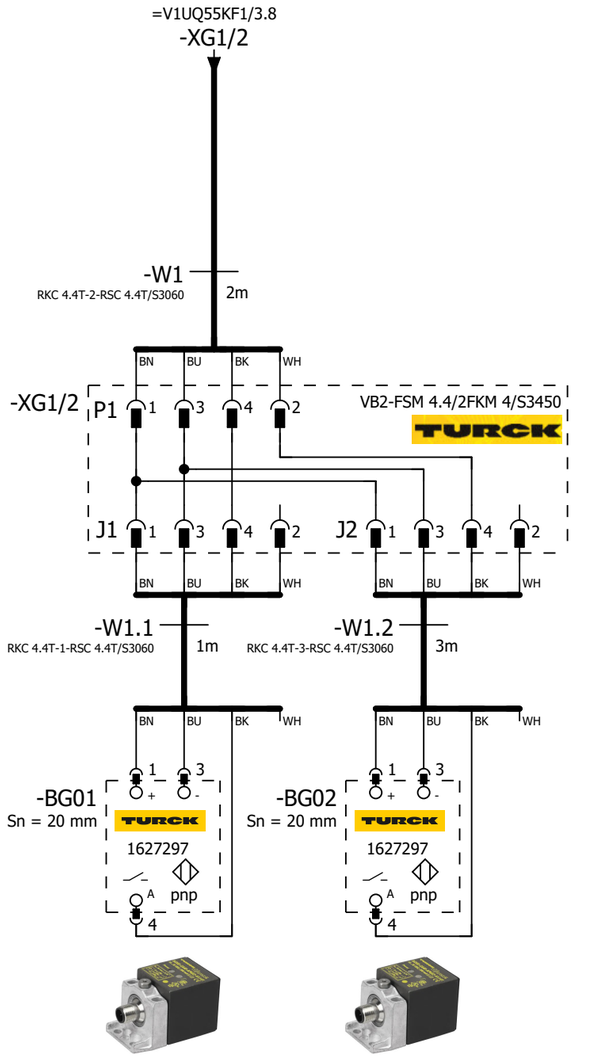

=V1UQ55 -BG01 Floor Frame Assy (Common)	=V1UQ55 -BG02 Floor Frame Assy (Common)

=V1UQ54WC4+.UQ54/1

=V1UQ55KF1/1

			Date	12/22/2022	Volvo Trucks North America	Valiant TMS	SENSORS	Drawing name: =2V04&EFS-EL	= V1UQ55BG0
			Ed.	MKLEPADLO					+ V1UQ55
			Appr		P6700 Underbody Mainline - Cell 2V04			Document type: EFS	Project nr: 22-16151
Modification	Date	Name	Original		Replacement of / Replaced by	Scale 1:1			Page 1 / 1630

0	1	2	3	4	5	6	7	8	9

=V1UQ55WC4/1.5 / W1

-W1
RSM RKM 56-30M/S3059
30m

=V1KF1+.UC14/2.6 / +.UC14-KF100.14-P14

-KF100.14-P14
PROFINET Cable
6XV1840-3AH10

-KF1

X20 M12, 7/8" 1 2 PE 4 5
0V_VAL / OUT
0V_EL / SEN
FE
24V_EL / SEN
24V_VAL / OUT

ON OFF 1 2 1 2

M12 -TP1
M12 -TP2

FESTO
Bus node + Interlinking block
548755 + 550208

-KF1.11

FESTO
CPX-M-AB-8-M12X2-5POL
549335

I2250.0	DI 0 X1:4	V1UQ55UQ1.1-BGR	Common Clamp (RESET)
I2250.1	DI 1 X1:2	V1UQ55UQ1.1-BGS	Common Clamp (SET)
I2250.2	DI 2 X2:4	V1UQ55UQ1.2-BGR	Common Clamp (RESET)
I2250.3	DI 3 X2:2	V1UQ55UQ1.2-BGS	Common Clamp (SET)
I2250.4	DI 4 X3:4	V1UQ55UQ1.3-BGR	Common Clamp (RESET)
I2250.5	DI 5 X3:2	V1UQ55UQ1.3-BGS	Common Clamp (SET)
I2250.6	DI 6 X4:4	V1UQ55UQ1.4-BGR	Common Clamp (RESET)
I2250.7	DI 7 X4:2	V1UQ55UQ1.4-BGS	Common Clamp (SET)
I2251.0	DI 8 X5:4	V1UQ55UQ2.1-BGR	L150 Model Shot Pin (RESET)
I2251.1	DI 9 X5:2	V1UQ55UQ2.1-BGS	L150 Model Shot Pin (SET)
I2251.2	DI 10 X6:4	V1UQ55UQ2.2-BGR	L150 Model Shot Pin (RESET)
I2251.3	DI 11 X6:2	V1UQ55UQ2.2-BGS	L150 Model Shot Pin (SET)
I2251.4	DI 12 X7:4	V1UQ55UQ3.1-BGR	L150 Model Clamp (RESET)
I2251.5	DI 13 X7:2	V1UQ55UQ3.1-BGS	L150 Model Clamp (SET)
I2251.6	DI 14 X8:4	V1UQ55UQ3.2-BGR	L150 Model Clamp (RESET)
I2251.7	DI 15 X8:2	V1UQ55UQ3.2-BGS	L150 Model Clamp (SET)

X1 M12 1 2 3 4 5 — 24V DI 1 0V DI 0 FE — BN WH BU BK
X2 M12 1 2 3 4 5 — 24V DI 3 0V DI 2 FE — BN WH BU BK
X3 M12 1 2 3 4 5 — 24V DI 5 0V DI 4 FE — BN WH BU BK
X4 M12 1 2 3 4 5 — 24V DI 7 0V DI 6 FE — BN WH BU BK
X5 M12 1 2 3 4 5 — 24V DI 9 0V DI 8 FE — BN WH BU BK
X6 M12 1 2 3 4 5 — 24V DI 11 0V DI 10 FE — BN WH BU BK
X7 M12 1 2 3 4 5 — 24V DI 13 0V DI 12 FE — BN WH BU BK
X8 M12 1 2 3 4 5 — 24V DI 15 0V DI 14 FE — BN WH BU BK

+.UQ55UQ1.1-W1 =V1UQ55UQ1+.UQ55UQ1/1.1
+.UQ55UQ1.2-W1 =V1UQ55UQ1+.UQ55UQ1/1.2
+.UQ55UQ1.3-W1 =V1UQ55UQ1+.UQ55UQ1/1.4
+.UQ55UQ1.4-W1 =V1UQ55UQ1+.UQ55UQ1/1.5
+.UQ55UQ2.1-W1 =V1UQ55UQ2+.UQ55UQ2/1.1
+.UQ55UQ2.2-W1 =V1UQ55UQ2+.UQ55UQ2/1.2
+.UQ55UQ3.1-W1 =V1UQ55UQ3+.UQ55UQ3/1.1
+.UQ55UQ3.2-W1 =V1UQ55UQ3+.UQ55UQ3/1.2

=V1UQ55BG0/1

			Date	12/22/2022	Volvo Trucks North America	Valiant TMS	CONNECTING MOD. FOR VTSA MANIFOLD	Drawing name: =2V04&EFS-EL	= V1UQ55KF1
			Ed.	MKLEPADLO					+ V1UQ55
			Appr		P6700 Underbody Mainline - Cell 2V04	Scale 1:1		Document type: EFS	Project nr: 22-16151
Modification	Date	Name	Original		Replacement of / Replaced by				Page 1 / 1630

0	1	2	3	4	5	6	7	8	9

-KF1.12

FESTO

CPX-M-AB-8-M12X2-5POL

549335

I2252.0	DI 0 X1:4	V1UQ55UQ4.1-BGR	L230 Model Shot Pin (RESET)
I2252.1	DI 1 X1:2	V1UQ55UQ4.1-BGS	L230 Model Shot Pin (SET)
I2252.2	DI 2 X2:4	V1UQ55UQ4.2-BGR	L230 Model Shot Pin (RESET)
I2252.3	DI 3 X2:2	V1UQ55UQ4.2-BGS	L230 Model Shot Pin (SET)
I2252.4	DI 4 X3:4	V1UQ55UQ5.1-BGR	L230 Model Clamp (RESET)
I2252.5	DI 5 X3:2	V1UQ55UQ5.1-BGS	L230 Model Clamp (SET)
I2252.6	DI 6 X4:4	V1UQ55UQ5.2-BGR	L230 Model Clamp (RESET)
I2252.7	DI 7 X4:2	V1UQ55UQ5.2-BGS	L230 Model Clamp (SET)
I2253.0	DI 8 X5:4	V1UQ55UQ6.1-BGR	L290 Model Shot Pin (RESET)
I2253.1	DI 9 X5:2	V1UQ55UQ6.1-BGS	L290 Model Shot Pin (SET)
I2253.2	DI 10 X6:4	V1UQ55UQ6.2-BGR	L290 Model Shot Pin (RESET)
I2253.3	DI 11 X6:2	V1UQ55UQ6.2-BGS	L290 Model Shot Pin (SET)
I2253.4	DI 12 X7:4	V1UQ55UQ7.1-BGR	L290 Model Clamp (RESET)
I2253.5	DI 13 X7:2	V1UQ55UQ7.1-BGS	L290 Model Clamp (SET)
I2253.6	DI 14 X8:4	V1UQ55UQ7.2-BGR	L290 Model Clamp (RESET)
I2253.7	DI 15 X8:2	V1UQ55UQ7.2-BGS	L290 Model Clamp (SET)

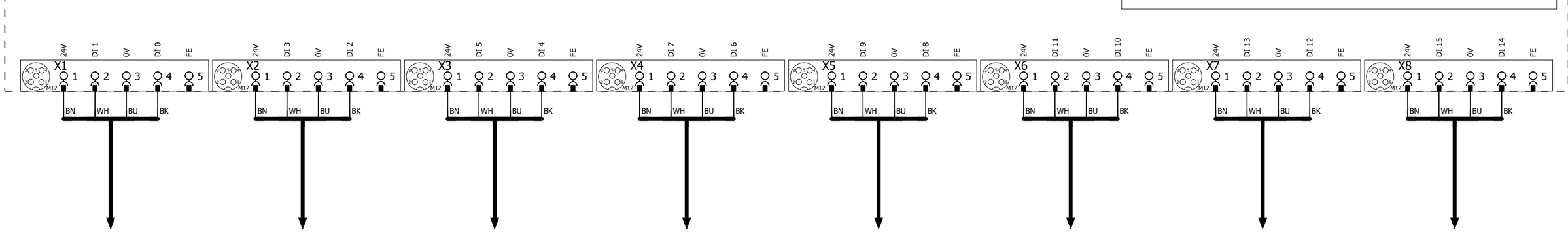

1 3

			Date	12/22/2022	Volvo Trucks North America	Valiant TMS	I/O MOD. DI16 (8 x M12) FOR VTSA-F	Drawing name: =2V04&EFS-EL	= V1UQ55KF1
			Ed.	MKLEPADLO					+ V1UQ55
			Appr		P6700 Underbody Mainline - Cell 2V04	Scale 1:1		Document type: EFS	Project nr: 22-16151
Modification	Date	Name	Original		Replacement of / Replaced by				Page 2 / 1630

0	1	2	3	4	5	6	7	8	9

-KF1.13

FESTO

CPX-M-AB-8-M12X2-5POL

549335

I2254.0	DI 0 X1:4	V1UQ55UQ8.1-BGR	L320 Model Shot Pin (RESET)
I2254.1	DI 1 X1:2	V1UQ55UQ8.1-BGS	L320 Model Shot Pin (SET)
I2254.2	DI 2 X2:4	V1UQ55UQ8.2-BGR	L320 Model Shot Pin (RESET)
I2254.3	DI 3 X2:2	V1UQ55UQ8.2-BGS	L320 Model Shot Pin (SET)
I2254.4	DI 4 X3:4	V1UQ55UQ9.1-BGR	L320 Model Clamp (RESET)
I2254.5	DI 5 X3:2	V1UQ55UQ9.1-BGS	L320 Model Clamp (SET)
I2254.6	DI 6 X4:4	V1UQ55UQ9.2-BGR	L320 Model Clamp (RESET)
I2254.7	DI 7 X4:2	V1UQ55UQ9.2-BGS	L320 Model Clamp (SET)
I2255.0	DI 8 X5:4	I2255.0	Spare
I2255.1	DI 9 X5:2	I2255.1	Spare
I2255.2	DI 10 X6:4	I2255.2	Spare
I2255.3	DI 11 X6:2	I2255.3	Spare
I2255.4	DI 12 X7:4	V1UQ55-BG01	Sensor Floor Frame Assy (Common)
I2255.5	DI 13 X7:2	V1UQ55-BG02	Sensor Floor Frame Assy (Common)
I2255.6	DI 14 X8:4	I2255.6	Spare
I2255.7	DI 15 X8:2	I2255.7	Spare

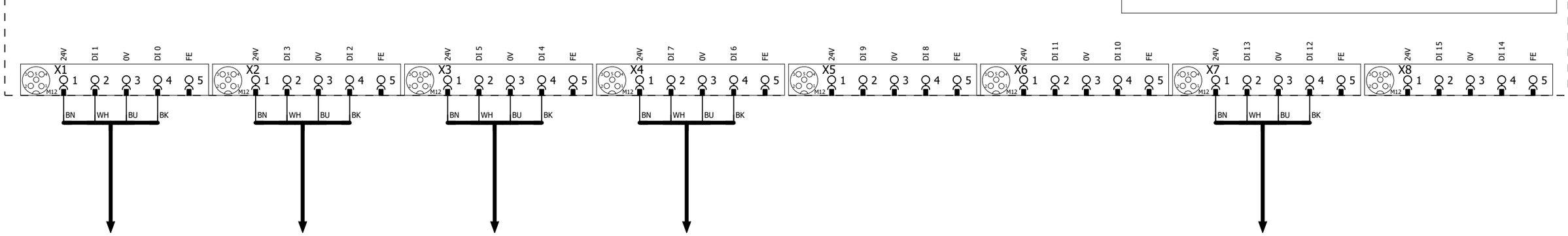

2 4

			Date	12/22/2022	Volvo Trucks North America	Valiant TMS	I/O MOD. DI16 (8 x M12) FOR VTSA-F	Drawing name: =2V04&EFS-EL	= V1UQ55KF1
			Ed.	MKLEPADLO					+ V1UQ55
			Appr		P6700 Underbody Mainline - Cell 2V04	Scale 1:1		Document type: EFS	Project nr: 22-16151
Modification	Date	Name	Original		Replacement of / Replaced by				Page 3 / 1630

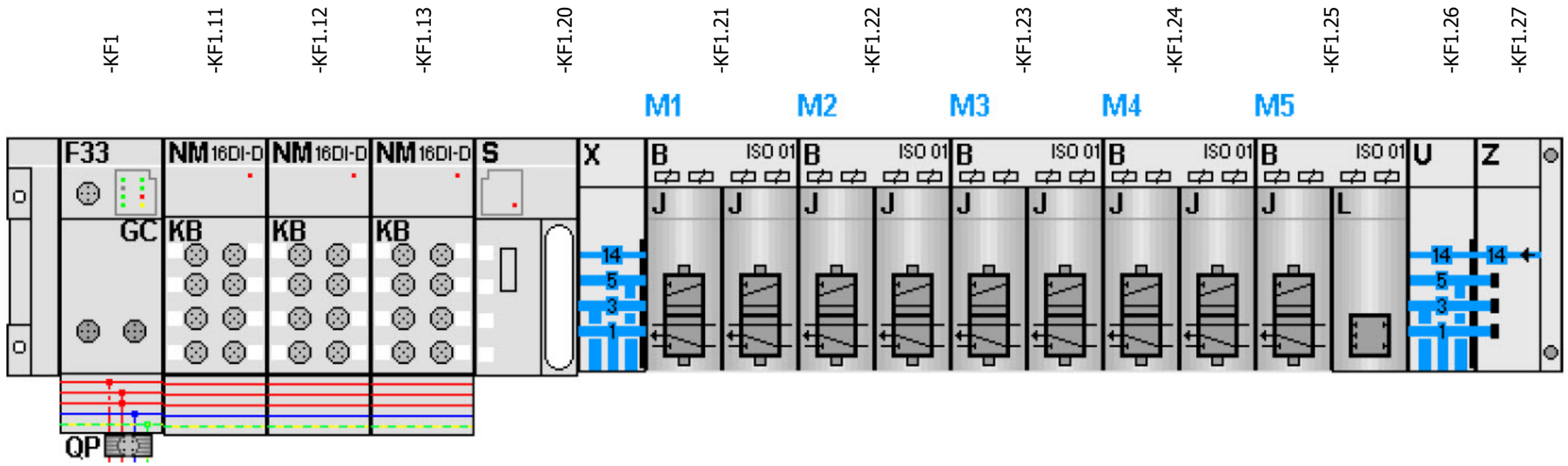

-KF1.21
=V1UQ55UQ1+.UQ55UQ1/1.3
=V1UQ55UQ2+.UQ55UQ2/1.3

FESTO

=V1UQ55UQ1+.UQ55UQ1/1.4	Q2250.0 DO 0 1.1	-QN1.1_Q	Common Clamps (RST)
=V1UQ55UQ1+.UQ55UQ1/1.4	Q2250.1 DO 1 1.2	-QN1.2_Q	Common Clamps (SET)
=V1UQ55UQ2+.UQ55UQ2/1.4	Q2250.2 DO 2 2.1	-QN2.1_Q	L150 Model Shot Pins (RST)
=V1UQ55UQ2+.UQ55UQ2/1.4	Q2250.3 DO 3 2.2	-QN2.2_Q	L150 Model Shot Pins (SET)

-KF1.22
=V1UQ55UQ3+.UQ55UQ3/1.3
=V1UQ55UQ4+.UQ55UQ4/1.3

FESTO

=V1UQ55UQ3+.UQ55UQ3/1.4	Q2250.4 DO 0 1.1	-QN3.1_Q	L150 Model Clamps (RST)
=V1UQ55UQ3+.UQ55UQ3/1.4	Q2250.5 DO 1 1.2	-QN3.2_Q	L150 Model Clamps (SET)
=V1UQ55UQ4+.UQ55UQ4/1.4	Q2250.6 DO 2 2.1	-QN4.1_Q	L230 Model Shot Pins (RST)
=V1UQ55UQ4+.UQ55UQ4/1.4	Q2250.7 DO 3 2.2	-QN4.2_Q	L230 Model Shot Pins (SET)

-KF1.23
=V1UQ55UQ5+.UQ55UQ5/1.3
=V1UQ55UQ6+.UQ55UQ6/1.3

FESTO

=V1UQ55UQ5+.UQ55UQ5/1.4	Q2251.0 DO 0 1.1	-QN5.1_Q	L230 Model Clamps (RST)
=V1UQ55UQ5+.UQ55UQ5/1.4	Q2251.1 DO 1 1.2	-QN5.2_Q	L230 Model Clamps (SET)
=V1UQ55UQ6+.UQ55UQ6/1.4	Q2251.2 DO 2 2.1	-QN6.1_Q	L290 Model Shot Pins (RST)
=V1UQ55UQ6+.UQ55UQ6/1.4	Q2251.3 DO 3 2.2	-QN6.2_Q	L290 Model Shot Pins (SET)

-KF1.24
=V1UQ55UQ7+.UQ55UQ7/1.3
=V1UQ55UQ8+.UQ55UQ8/1.3

FESTO

=V1UQ55UQ7+.UQ55UQ7/1.4	Q2251.4 DO 0 1.1	-QN7.1_Q	L290 Model Clamps (RST)
=V1UQ55UQ7+.UQ55UQ7/1.4	Q2251.5 DO 1 1.2	-QN7.2_Q	L290 Model Clamps (SET)
=V1UQ55UQ8+.UQ55UQ8/1.4	Q2251.6 DO 2 2.1	-QN8.1_Q	L320 Model Shot Pins (RST)
=V1UQ55UQ8+.UQ55UQ8/1.4	Q2251.7 DO 3 2.2	-QN8.2_Q	L320 Model Shot Pins (SET)

-KF1.25
=V1UQ55UQ9+.UQ55UQ9/1.3

FESTO

=V1UQ55UQ9+.UQ55UQ9/1.4	Q2252.0 DO 0 1.1	-QN9.1_Q	L320 Model Clamps (RST)
=V1UQ55UQ9+.UQ55UQ9/1.4	Q2252.1 DO 1 1.2	-QN9.2_Q	L320 Model Clamps (SET)
	Q2252.2 DO 2 2.1	Spare	
	Q2252.3 DO 3 2.2	Spare	

3

=V1UQ55UQ1+.UQ55UQ1/1

			Date	12/22/2022	Volvo Trucks North America	Valiant TMS	CONNECTING MOD. FOR FESTO DQ	Drawing name: =2V04&EFS-EL	= V1UQ55KF1 + V1UQ55
			Ed.	MKLEPADLO	P6700 Underbody Mainline - Cell 2V04				
			Appr					Document type: EFS	Project nr: 22-16151
Modification	Date	Name	Original		Replacement of / Replaced by	Scale 1:1			Page 4 / 1630

0	1	2	3	4	5	6	7	8	9

=V1UQ55KF1
+.UQ55

-KF1.21
=V1UQ55KF1+V1UQ55/4.1

Common Clamps (RST)
=V1UQ55KF1
+V1UQ55
-QN1.1_Q
=V1UQ55KF1
+V1UQ55/4.3
Q2250.0

Common Clamps (SET)
=V1UQ55KF1
+V1UQ55
-QN1.2_Q
=V1UQ55KF1
+V1UQ55/4.3
Q2250.1

1.1 Pneumatic Valve

1.2 Pneumatic Valve

-QN1 .1 .2

=V1UQ55KF1+V1UQ55/1.1
+.UQ55UQ1.1-W1

=V1UQ55KF1+V1UQ55/1.2
+.UQ55UQ1.2-W1

=V1UQ55KF1+V1UQ55/1.3
+.UQ55UQ1.3-W1

=V1UQ55KF1+V1UQ55/1.4
+.UQ55UQ1.4-W1

-W1 2m
RKC 4.4T-2-RSC 4.4T/S3060

-BGS/R
BN BU BK WH
1 3
TÜNKERS
1324644
A2 A1
2 4

Common Clamp
=V1UQ55UQ1.1
+.UQ55UQ1.1
-UQ1.1

Common Clamp
=V1UQ55UQ1.2
+.UQ55UQ1.2
-UQ1.2

Common Clamp
=V1UQ55UQ1.3
+.UQ55UQ1.3
-UQ1.3

Common Clamp
=V1UQ55UQ1.4
+.UQ55UQ1.4
-UQ1.4

=V1UQ55
-UQ1.1-BGS/R
Common
Clamp

=V1UQ55
-UQ1.2-BGS/R
Common
Clamp

=V1UQ55
-UQ1.3-BGS/R
Common
Clamp

=V1UQ55
-UQ1.4-BGS/R
Common
Clamp

=V1UQ55KF1+V1UQ55/4

=V1UQ55UQ2+.UQ55UQ2/1

			Date	12/22/2022	Volvo Trucks North America	Valiant TMS	FESTO DQ CONNECTION QN1	Drawing name: =2V04&EFS-EL	= V1UQ55UQ1
			Ed.	MKLEPADLO					+ V1UQ55UQ1
			Appr		P6700 Underbody Mainline - Cell 2V04			Document type: EFS	Project nr: 22-16151
Modification	Date	Name	Original		Replacement of	Replaced by	Scale 1:1		Page 1 / 1630

0	1	2	3	4	5	6	7	8	9

=V1UQ55KF1
+.UQ55

-KF1.21
=V1UQ55KF1+V1UQ55/4.1

L150 Model Shot Pins (RST)	L150 Model Shot Pins (SET)
=V1UQ55KF1	=V1UQ55KF1
+V1UQ55	+V1UQ55
-QN2.1_Q	-QN2.2_Q
=V1UQ55KF1	=V1UQ55KF1
+V1UQ55/4.3	+V1UQ55/4.3
Q2250.2	Q2250.3
2.1 Pneumatic Valve	2.2 Pneumatic Valve

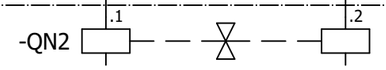

=V1UQ55KF1+V1UQ55/1.5
+.UQ55UQ2.1-W1

=V1UQ55KF1+V1UQ55/1.6
+.UQ55UQ2.2-W1

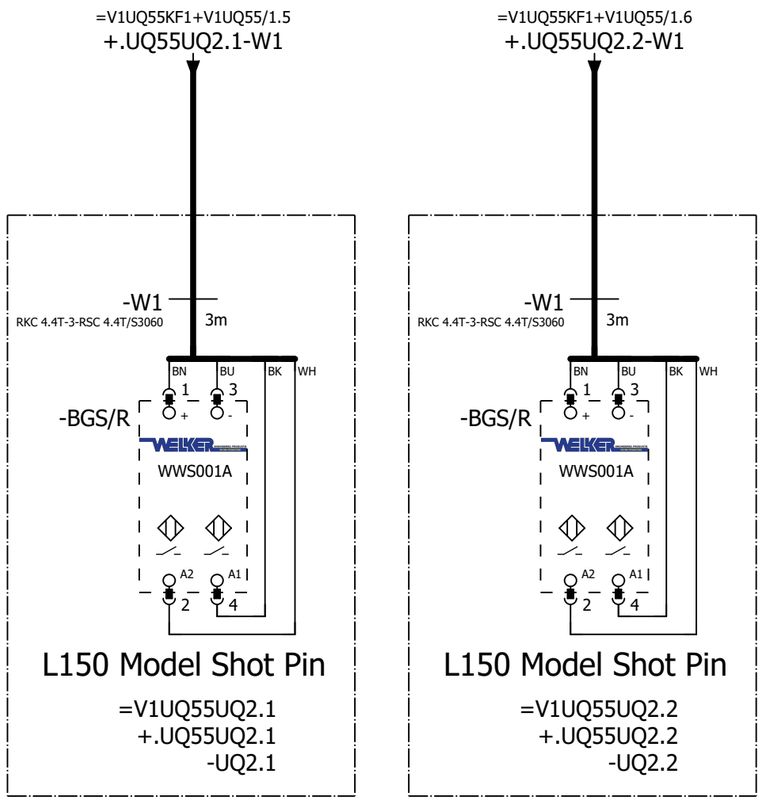

L150 Model Shot Pin

=V1UQ55UQ2.1
+.UQ55UQ2.1
-UQ2.1

L150 Model Shot Pin

=V1UQ55UQ2.2
+.UQ55UQ2.2
-UQ2.2

=V1UQ55
-UQ2.1-BGS/R
L150 Model
Shot Pin

=V1UQ55
-UQ2.2-BGS/R
L150 Model
Shot Pin

=V1UQ55UQ1+.UQ55UQ1/1

=V1UQ55UQ3+.UQ55UQ3/1

			Date	12/22/2022	Volvo Trucks North America		Valiant TMS	FESTO DQ CONNECTION QN2	Drawing name: =2V04&EFS-EL	= V1UQ55UQ2
			Ed.	MKLEPADLO						+ V1UQ55UQ2
			Appr		P6700 Underbody Mainline - Cell 2V04				Document type: EFS	Project nr: 22-16151
Modification	Date	Name	Original		Replacement of	Replaced by	Scale 1:1			Page 1 / 1630

0	1	2	3	4	5	6	7	8	9

=V1UQ55KF1
+.UQ55

-KF1.22
=V1UQ55KF1+V1UQ55/4.1

L150 Model Clamps (RST)	L150 Model Clamps (SET)
=V1UQ55KF1	=V1UQ55KF1
+V1UQ55	+V1UQ55
-QN3.1_Q	-QN3.2_Q
=V1UQ55KF1	=V1UQ55KF1
+V1UQ55/4.3	+V1UQ55/4.3
Q2250.4	Q2250.5
1.1 Pneumatic Valve	1.2 Pneumatic Valve

-QN3 .1 .2

=V1UQ55KF1+V1UQ55/1.8
+.UQ55UQ3.1-W1

-W1
RKC 4.4T-4-RSC 4.4T/S3060
4m

BN BU BK WH
1 3
+ -
-BGS/R
TÜNKERS
285425
A2 A1
2 4

L150 Model Clamp

=V1UQ55UQ3.1
+.UQ55UQ3.1
-UQ3.1

=V1UQ55
-UQ3.1-BGS/R
L150 Model
Clamp

=V1UQ55KF1+V1UQ55/1.9
+.UQ55UQ3.2-W1

-W1
RKC 4.4T-4-RSC 4.4T/S3060
4m

BN BU BK WH
1 3
+ -
-BGS/R
TÜNKERS
285425
A2 A1
2 4

L150 Model Clamp

=V1UQ55UQ3.2
+.UQ55UQ3.2
-UQ3.2

=V1UQ55
-UQ3.2-BGS/R
L150 Model
Clamp

=V1UQ55UQ2+.UQ55UQ2/1

=V1UQ55UQ4+.UQ55UQ4/1

			Date	12/22/2022	Volvo Trucks North America		Valiant TMS	FESTO DQ CONNECTION QN3	Drawing name: =2V04&EFS-EL	= V1UQ55UQ3
			Ed.	MKLEPADLO						+ V1UQ55UQ3
			Appr		P6700 Underbody Mainline - Cell 2V04				Document type: EFS	Project nr: 22-16151
Modification	Date	Name	Original		Replacement of	Replaced by	Scale 1:1			Page 1 / 1630

0	1	2	3	4	5	6	7	8	9

=V1UQ55KF1
+.UQ55

-KF1.22
=V1UQ55KF1+V1UQ55/4.1

L230 Model Shot Pins (RST)	L230 Model Shot Pins (SET)
=V1UQ55KF1	=V1UQ55KF1
+V1UQ55	+V1UQ55
-QN4.1_Q	-QN4.2_Q
=V1UQ55KF1	=V1UQ55KF1
+V1UQ55/4.3	+V1UQ55/4.3
Q2250.6	Q2250.7
2.1 Pneumatic Valve	2.2 Pneumatic Valve

-QN4 .1 .2

=V1UQ55KF1+V1UQ55/2.1
+.UQ55UQ4.1-W1

-W1
RKC 4.4T-4-RSC 4.4T/S3060
4m

BN BU BK WH

-BGS/R
1 3
WELKER
WWS001A
A2 A1
2 4

L230 Model Shot Pin

=V1UQ55UQ4.1
+.UQ55UQ4.1
-UQ4.1

=V1UQ55
-UQ4.1-BGS/R
L230 Model
Shot Pin

=V1UQ55KF1+V1UQ55/2.2
+.UQ55UQ4.2-W1

-W1
RKC 4.4T-4-RSC 4.4T/S3060
4m

BN BU BK WH

-BGS/R
1 3
WELKER
WWS001A
A2 A1
2 4

L230 Model Shot Pin

=V1UQ55UQ4.2
+.UQ55UQ4.2
-UQ4.2

=V1UQ55
-UQ4.2-BGS/R
L230 Model
Shot Pin

=V1UQ55UQ3+.UQ55UQ3/1

=V1UQ55UQ5+.UQ55UQ5/1

			Date	12/22/2022	Volvo Trucks North America	Valiant TMS	FESTO DQ CONNECTION QN4	Drawing name: =2V04&EFS-EL	= V1UQ55UQ4
			Ed.	MKLEPADLO					+ V1UQ55UQ4
			Appr		P6700 Underbody Mainline - Cell 2V04	Scale 1:1		Document type: EFS	Project nr: 22-16151
Modification	Date	Name	Original		Replacement of	Replaced by			Page 1 / 1630

0	1	2	3	4	5	6	7	8	9

=V1UQ55KF1
+.UQ55

-KF1.23
=V1UQ55KF1+V1UQ55/4.1

L230 Model Clamps (RST)	L230 Model Clamps (SET)
=V1UQ55KF1	=V1UQ55KF1
+V1UQ55	+V1UQ55
-QN5.1_Q	-QN5.2_Q
=V1UQ55KF1	=V1UQ55KF1
+V1UQ55/4.3	+V1UQ55/4.3
Q2251.0	Q2251.1
1.1 Pneumatic Valve	1.2 Pneumatic Valve

-QN5 .1 .2

=V1UQ55KF1+V1UQ55/2.3
+.UQ55UQ5.1-W1

-W1
RKC 4.4T-4-RSC 4.4T/S3060
4m

BN BU BK WH
1 3
+ -
-BGS/R
TÜNKERS
285425
A2 A1
2 4

L230 Model Clamp

=V1UQ55UQ5.1
+.UQ55UQ5.1
-UQ5.1

=V1UQ55
-UQ5.1-BGS/R
L230 Model
Clamp

=V1UQ55KF1+V1UQ55/2.4
+.UQ55UQ5.2-W1

-W1
RKC 4.4T-4-RSC 4.4T/S3060
4m

BN BU BK WH
1 3
+ -
-BGS/R
TÜNKERS
285425
A2 A1
2 4

L230 Model Clamp

=V1UQ55UQ5.2
+.UQ55UQ5.2
-UQ5.2

=V1UQ55
-UQ5.2-BGS/R
L230 Model
Clamp

=V1UQ55UQ4+.UQ55UQ4/1

=V1UQ55UQ6+.UQ55UQ6/1

			Date	12/22/2022	Volvo Trucks North America	Valiant TMS	FESTO DQ CONNECTION QN5	Drawing name: =2V04&EFS-EL	= V1UQ55UQ5
			Ed.	MKLEPADLO					+ V1UQ55UQ5
			Appr		P6700 Underbody Mainline - Cell 2V04			Document type: EFS	Project nr: 22-16151
Modification	Date	Name	Original		Replacement of / Replaced by	Scale 1:1			Page 1 / 1630

0	1	2	3	4	5	6	7	8	9

=V1UQ55KF1
+.UQ55

-KF1.23
=V1UQ55KF1+V1UQ55/4.1

L290 Model Shot Pins (RST)	L290 Model Shot Pins (SET)
=V1UQ55KF1	=V1UQ55KF1
+V1UQ55	+V1UQ55
-QN6.1_Q	-QN6.2_Q
=V1UQ55KF1	=V1UQ55KF1
+V1UQ55/4.3	+V1UQ55/4.3
Q2251.2	Q2251.3
2.1 Pneumatic Valve	2.2 Pneumatic Valve

-QN6 .1 .2

=V1UQ55KF1+V1UQ55/2.5
+.UQ55UQ6.1-W1

-W1
RKC 4.4T-5-RSC 4.4T/S3060
5m

BN BU BK WH

-BGS/R
1 3
WELKER
WWS001A
A2 A1
2 4

L290 Model Shot Pin

=V1UQ55UQ6.1
+.UQ55UQ6.1
-UQ6.1

=V1UQ55
-UQ6.1-BGS/R
L290 Model
Shot Pin

=V1UQ55KF1+V1UQ55/2.6
+.UQ55UQ6.2-W1

-W1
RKC 4.4T-5-RSC 4.4T/S3060
5m

BN BU BK WH

-BGS/R
1 3
WELKER
WWS001A
A2 A1
2 4

L290 Model Shot Pin

=V1UQ55UQ6.2
+.UQ55UQ6.2
-UQ6.2

=V1UQ55
-UQ6.2-BGS/R
L290 Model
Shot Pin

=V1UQ55UQ5+.UQ55UQ5/1

=V1UQ55UQ7+.UQ55UQ7/1

			Date	12/22/2022	Volvo Trucks North America		Valiant TMS	FESTO DQ CONNECTION QN6	Drawing name: =2V04&EFS-EL	= V1UQ55UQ6
			Ed.	MKLEPADLO						+ V1UQ55UQ6
			Appr		P6700 Underbody Mainline - Cell 2V04				Document type: EFS	Project nr: 22-16151
Modification	Date	Name	Original		Replacement of	Replaced by	Scale 1:1			Page 1 / 1630

0	1	2	3	4	5	6	7	8	9

=V1UQ55KF1
+.UQ55

-KF1.24
=V1UQ55KF1+V1UQ55/4.1

L290 Model Clamps (RST)	L290 Model Clamps (SET)
=V1UQ55KF1	=V1UQ55KF1
+V1UQ55	+V1UQ55
-QN7.1_Q	-QN7.2_Q
=V1UQ55KF1	=V1UQ55KF1
+V1UQ55/4.3	+V1UQ55/4.3
Q2251.4	Q2251.5
1.1 Pneumatic Valve	1.2 Pneumatic Valve

-QN7 .1 .2

=V1UQ55KF1+V1UQ55/2.8
+.UQ55UQ7.1-W1

-W1
RKC 4.4T-5-RSC 4.4T/S3060
5m

BN BU BK WH

-BGS/R
1 3
+ -
TÜNKERS
285425
A2 A1
2 4

L290 Model Clamp

=V1UQ55UQ7.1
+.UQ55UQ7.1
-UQ7.1

=V1UQ55
-UQ7.1-BGS/R
L290 Model
Clamp

=V1UQ55KF1+V1UQ55/2.9
+.UQ55UQ7.2-W1

-W1
RKC 4.4T-5-RSC 4.4T/S3060
5m

BN BU BK WH

-BGS/R
1 3
+ -
TÜNKERS
285425
A2 A1
2 4

L290 Model Clamp

=V1UQ55UQ7.2
+.UQ55UQ7.2
-UQ7.2

=V1UQ55
-UQ7.2-BGS/R
L290 Model
Clamp

=V1UQ55UQ6+.UQ55UQ6/1

=V1UQ55UQ8+.UQ55UQ8/1

			Date	12/22/2022	Volvo Trucks North America	Valiant TMS	FESTO DQ CONNECTION QN7	Drawing name: =2V04&EFS-EL	= V1UQ55UQ7
			Ed.	MKLEPADLO					+ V1UQ55UQ7
			Appr		P6700 Underbody Mainline - Cell 2V04			Document type: EFS	Project nr: 22-16151
Modification	Date	Name	Original		Replacement of	Replaced by	Scale 1:1		Page 1 / 1630

0	1	2	3	4	5	6	7	8	9

=V1UQ55KF1
+.UQ55

-KF1.24
=V1UQ55KF1+V1UQ55/4.1

L320 Model Shot Pins (RST)	L320 Model Shot Pins (SET)
=V1UQ55KF1	=V1UQ55KF1
+V1UQ55	+V1UQ55
-QN8.1_Q	-QN8.2_Q
=V1UQ55KF1	=V1UQ55KF1
+V1UQ55/4.3	+V1UQ55/4.3
Q2251.6	Q2251.7
2.1 Pneumatic Valve	2.2 Pneumatic Valve

-QN8 .1 .2

=V1UQ55KF1+V1UQ55/3.1
+.UQ55UQ8.1-W1

-W1
RKC 4.4T-6-RSC 4.4T/S3060
6m

BN BU BK WH
1 3
+ -
-BGS/R
WELKER
WWS001A
A2 A1
2 4

L320 Model Shot Pin

=V1UQ55UQ8.1
+.UQ55UQ8.1
-UQ8.1

=V1UQ55
-UQ8.1-BGS/R
L320 Model
Shot Pin

=V1UQ55KF1+V1UQ55/3.2
+.UQ55UQ8.2-W1

-W1
RKC 4.4T-6-RSC 4.4T/S3060
6m

BN BU BK WH
1 3
+ -
-BGS/R
WELKER
WWS001A
A2 A1
2 4

L320 Model Shot Pin

=V1UQ55UQ8.2
+.UQ55UQ8.2
-UQ8.2

=V1UQ55
-UQ8.2-BGS/R
L320 Model
Shot Pin

=V1UQ55UQ7+.UQ55UQ7/1

=V1UQ55UQ9+.UQ55UQ9/1

			Date	12/22/2022	Volvo Trucks North America	Valiant TMS	FESTO DQ CONNECTION QN8	Drawing name: =2V04&EFS-EL	= V1UQ55UQ8
			Ed.	MKLEPADLO					+ V1UQ55UQ8
			Appr		P6700 Underbody Mainline - Cell 2V04	Scale 1:1		Document type: EFS	Project nr: 22-16151
Modification	Date	Name	Original		Replacement of	Replaced by			Page 1 / 1630

0	1	2	3	4	5	6	7	8	9

=V1UQ55KF1
+.UQ55

-KF1.25
=V1UQ55KF1+V1UQ55/4.1

L320 Model Clamps (RST)	L320 Model Clamps (SET)
=V1UQ55KF1	=V1UQ55KF1
+V1UQ55	+V1UQ55
-QN9.1_Q	-QN9.2_Q
=V1UQ55KF1	=V1UQ55KF1
+V1UQ55/4.3	+V1UQ55/4.3
Q2252.0	Q2252.1
1.1 Pneumatic Valve	1.2 Pneumatic Valve

-QN9 .1 .2

=V1UQ55KF1+V1UQ55/3.3
+.UQ55UQ9.1-W1

=V1UQ55KF1+V1UQ55/3.4
+.UQ55UQ9.2-W1

-W1
RKC 4.4T-6-RSC 4.4T/S3060
6m

BN BU BK WH
1 3
\+ -
-BGS/R
TÜNKERS
285425
A2 A1
2 4

L320 Model Clamp
=V1UQ55UQ9.1
+.UQ55UQ9.1
-UQ9.1

L320 Model Clamp
=V1UQ55UQ9.2
+.UQ55UQ9.2
-UQ9.2

=V1UQ55
-UQ9.1-BGS/R
L320 Model Clamp

=V1UQ55
-UQ9.2-BGS/R
L320 Model Clamp

=V1UQ55UQ8+.UQ55UQ8/1

=V1UQ55WC4+V1UQ55/1

			Date	12/22/2022	Volvo Trucks North America		Valiant TMS	FESTO DQ CONNECTION QN9	Drawing name: =2V04&EFS-EL	= V1UQ55UQ9
			Ed.	MKLEPADLO						+ V1UQ55UQ9
			Appr		P6700 Underbody Mainline - Cell 2V04				Document type: EFS	Project nr: 22-16151
Modification	Date	Name	Original		Replacement of	Replaced by	Scale 1:1			Page 1 / 1630

+.UC14

-SWITCHEDPWR3 / =V1WC4+.UC14/22.5

W1
=V1UQ55KF1/1.1

=V1UQ55UQ9+.UQ55UQ9/1

=V1WC1+.UC11/1

			Date	12/22/2022	Volvo Trucks North America		Valiant TMS	24VDC	Drawing name: =2V04&EFS-EL	= V1UQ55WC4	
			Ed.	MKLEPADLO						+ V1UQ55	
			Appr		P6700 Underbody Mainline - Cell 2V04		Scale 1:1		Document type: EFS	Project nr: 22-16151	Page 1
Modification	Date	Name	Original		Replacement of	Replaced by					1630

0	1	2	3	4	5	6	7	8	9

3L1 / =V1WC2/10.1
3L2 / =V1WC2/10.1
3L3 / =V1WC2/10.1

3L1 BK 4/0 AWG
3L2 BK 4/0 AWG
3L3 BK 4/0 AWG

-QB1
In=400A

SIEMENS
MCCB_UL_FS400_400A_3P_65KA_ETU8_LSI
3VA6340-6KP31-0AA0
ETU850
L
I> S
I>>I
MF
-KF1
Communication module
3VA9177-0TB10
N U-tap -X4
N-CT -X1
EFB/AFB -X2

-2L+3 / =V1WC4/4.2
-2M3 / =V1WC4/4.2
L+ 1 1/L+
M 2 2/M
-KF1.1
Breaker data server
-X1
-WF10
COM
P1
P2
3VA9977-0TA20
-KF1.2
PN expansion module
7KM9300-0AE02-0AA0
-KF100.11-P2 / =V1KF1/2.5
-KF100.11-P2
PROFINET Cable

1L1 BK 4/0 AWG
1L2 BK 4/0 AWG
1L3 BK 4/0 AWG

3 KVA
-TA1
H1 X4
H3 X2
H2 X3
H4 X1
480VAC
120VAC

-FC1
1L1 BKOG 14 AWG
1L3 BKOG 14 AWG
2L1 BKOG 14 AWG
2L3 BKOG 14 AWG
15A

-V1UC11HL / =V1WC3/1.1
-V1UC11HN / =V1WC3/1.1

1L1 1L2 1L3 PE

480VAC TN-S 3 PHASE 60Hz
Fed from: .....
short circuit protection: .....
Over current: .....
cable type: 4/0 AWG

IkMax =.....kA
IkMin = ...kA
Z: ..... mΩ.

PE
1PE / =V1WC2/11.1
-GND1
RK
1x6 AWG
-GND
Terminal block Equipment Bonding

=V1UQ55WC4+.UQ55/1

+.UC12/1

			Date	12/22/2022	Volvo Trucks North America	Valiant TMS	Incoming power supply 480 VAC	Drawing name: =2V04&EFS-EL	= V1WC1
			Ed.	MKLEPADLO					+ V1UC11
			Appr		P6700 Underbody Mainline - Cell 2V04	Scale 1:1		Document type: EFS	Project nr: 22-16151
Modification	Date	Name	Original		Replacement of	Replaced by			Page 1 / 1630

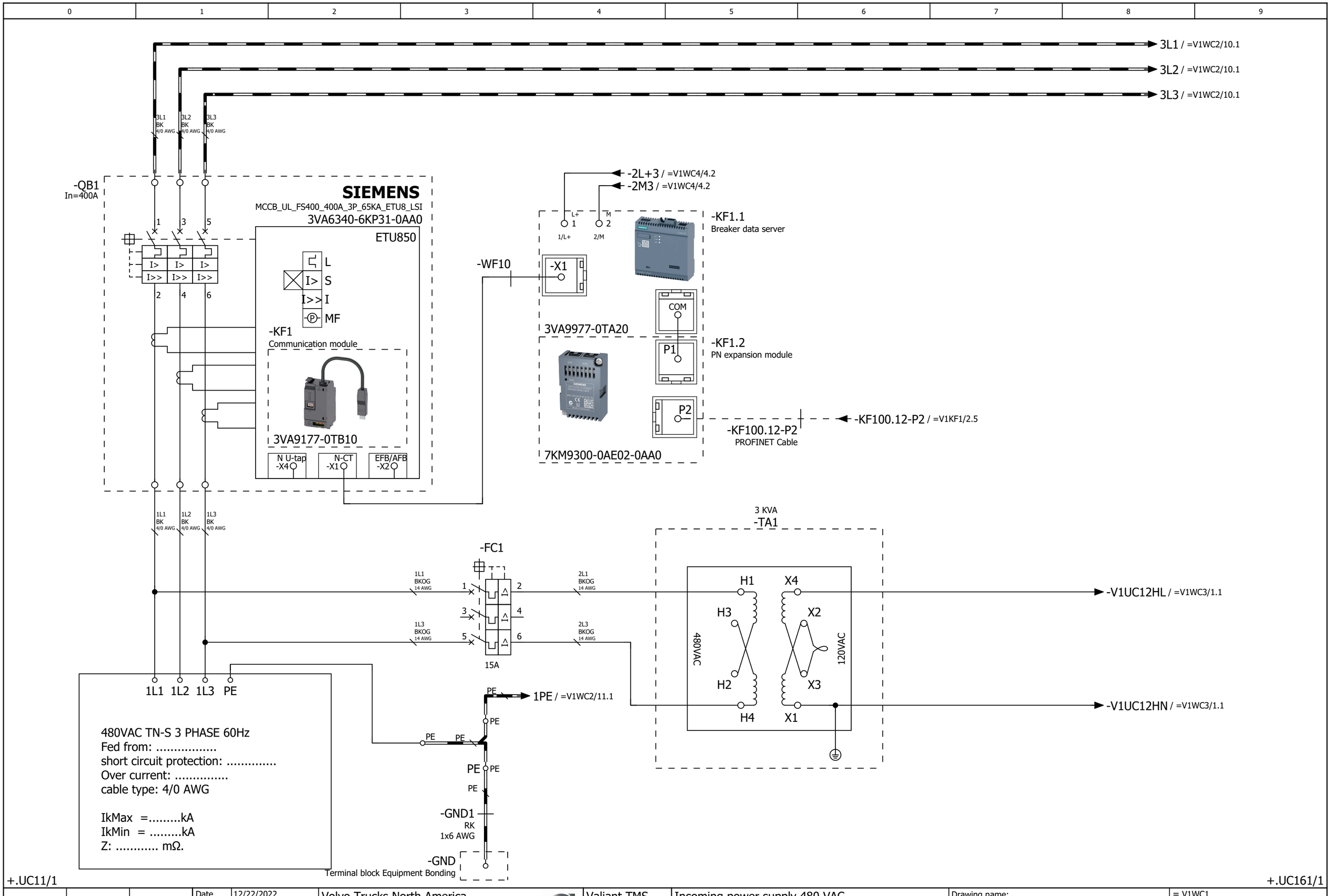

			Date	12/22/2022	Volvo Trucks North America	Valiant TMS	Incoming power supply 480 VAC	Drawing name: =2V04&EFS-EL	= V1WC1 + V1UC12
			Ed.	MKLEPADLO	P6700 Underbody Mainline - Cell 2V04				
			Appr					Document type: EFS	Project nr: 22-16151
Modification	Date	Name	Original		Replacement of / Replaced by	Scale 1:1			Page 1 / 1630

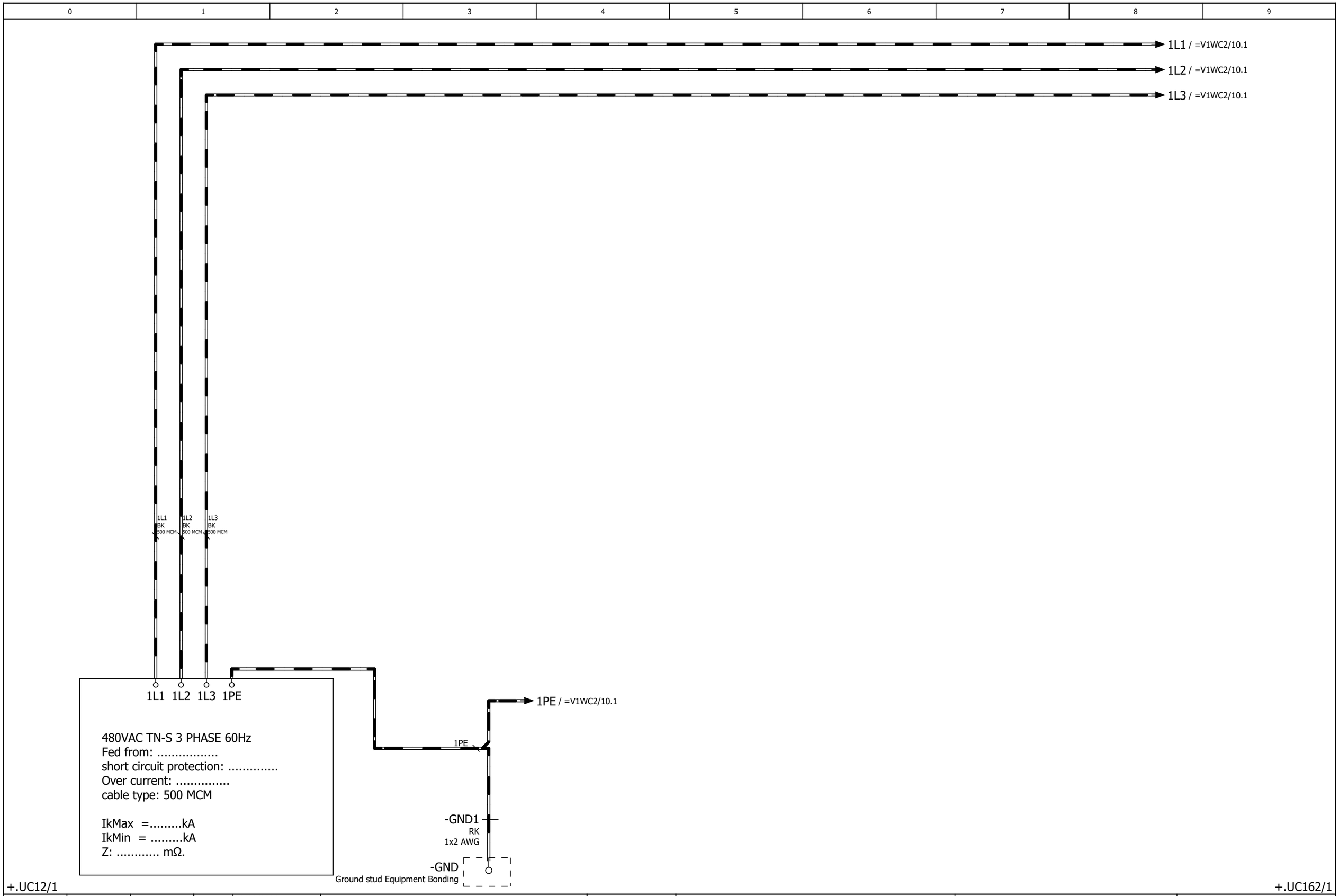

+.UC12/1

+.UC162/1

			Date	12/22/2022	Volvo Trucks North America	Valiant TMS	Incoming weld power supply 480 VAC	Drawing name: =2V04&EFS-EL	= V1WC1	
			Ed.	MKLEPADLO					+ V1UC161	
			Appr		P6700 Underbody Mainline - Cell 2V04	Scale 1:1		Document type: EFS	Project nr: 22-16151	Page 1
Modification	Date	Name	Original		Replacement of	Replaced by				1630

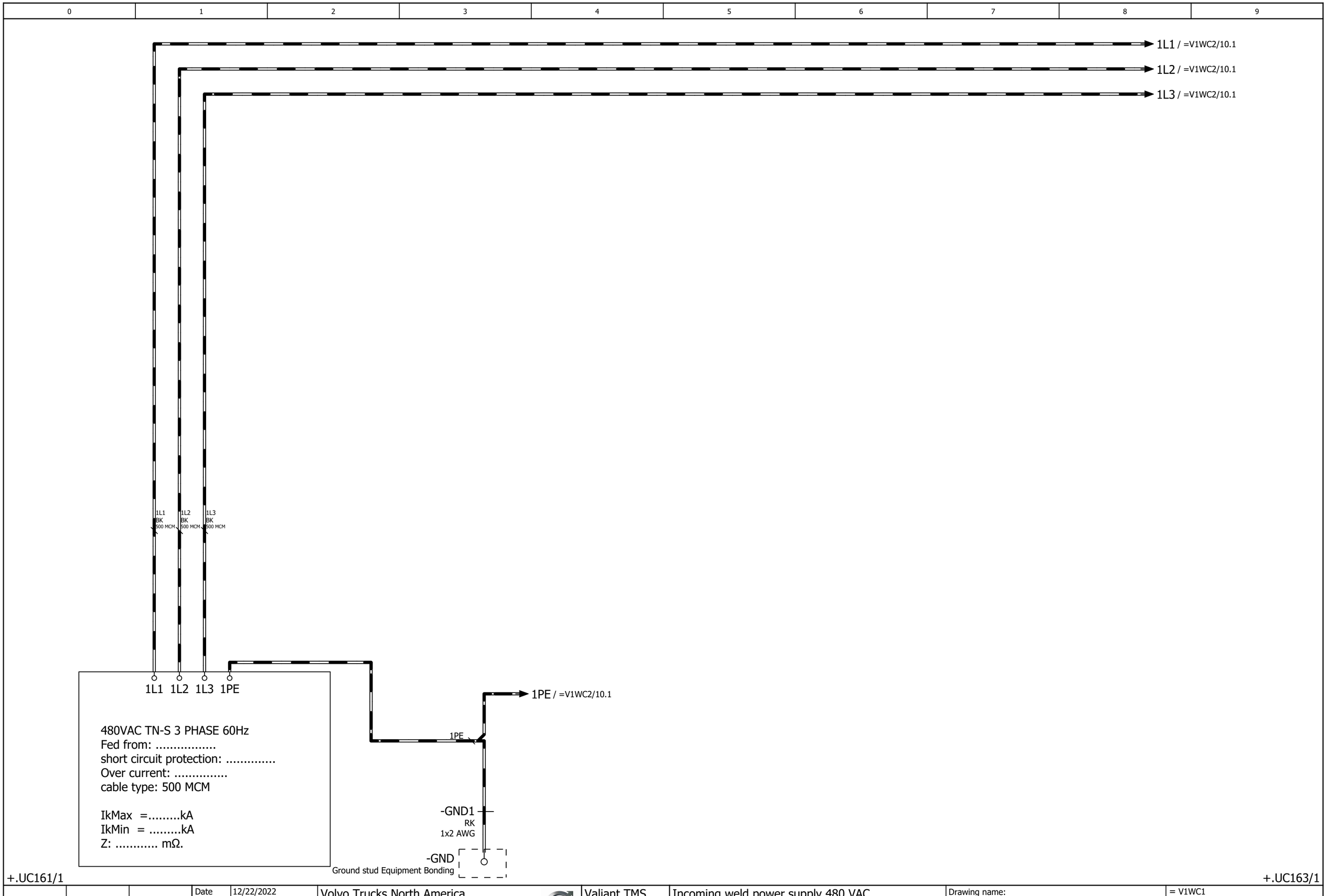

			Date	12/22/2022	Volvo Trucks North America	Valiant TMS	Incoming weld power supply 480 VAC	Drawing name: =2V04&EFS-EL	= V1WC1 + V1UC162	
			Ed.	MKLEPADLO	P6700 Underbody Mainline - Cell 2V04					
			Appr					Document type: EFS	Project nr: 22-16151	Page 1
Modification	Date	Name	Original		Replacement of / Replaced by	Scale 1:1				1630

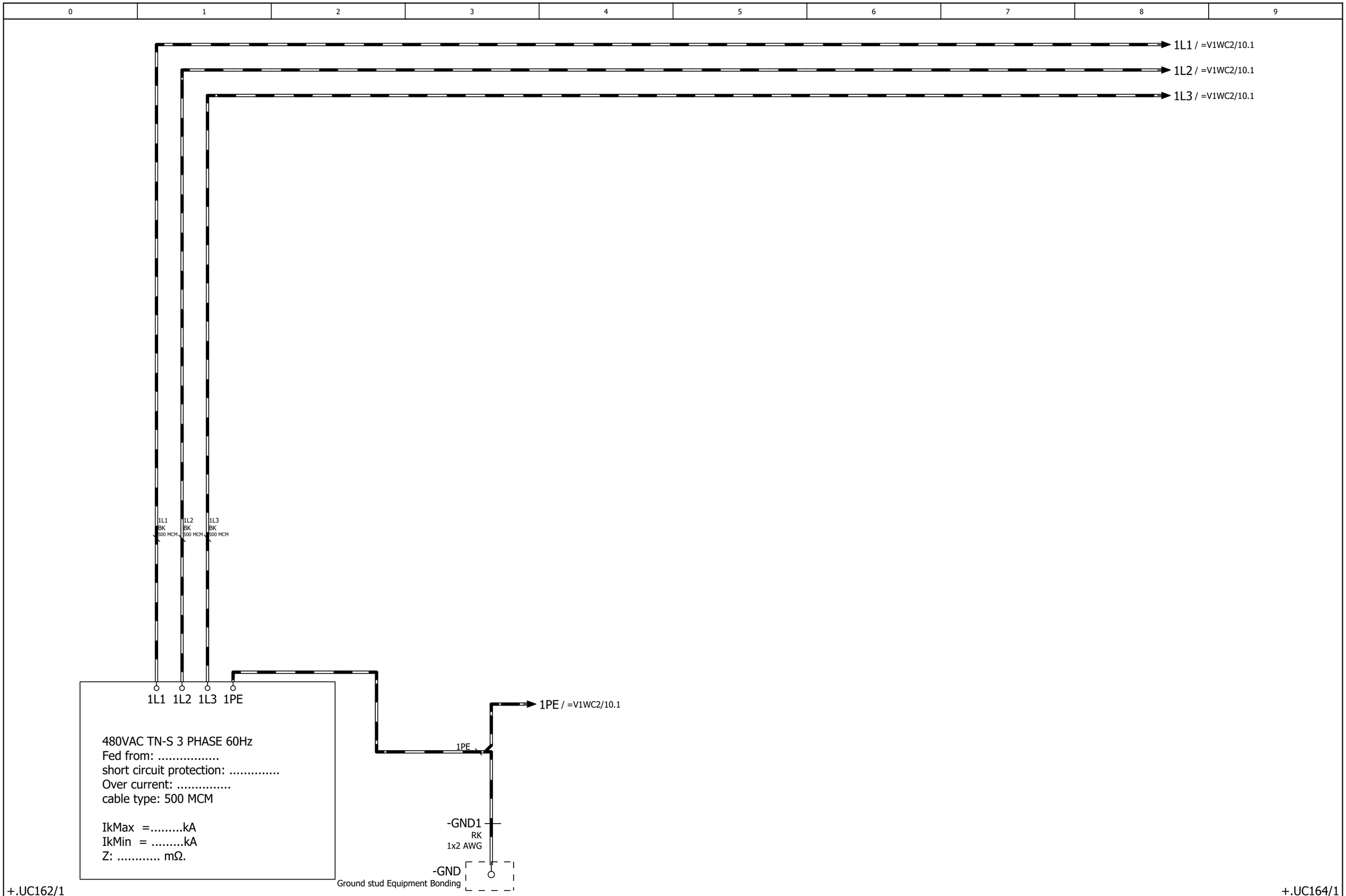

+.UC162/1

+.UC164/1

			Date	12/22/2022	Volvo Trucks North America	Valiant TMS	Incoming weld power supply 480 VAC	Drawing name: =2V04&EFS-EL	= V1WC1	
			Ed.	MKLEPADLO					+ V1UC163	
			Appr		P6700 Underbody Mainline - Cell 2V04	Scale 1:1		Document type: EFS	Project nr: 22-16151	Page 1
Modification	Date	Name	Original		Replacement of	Replaced by				1630

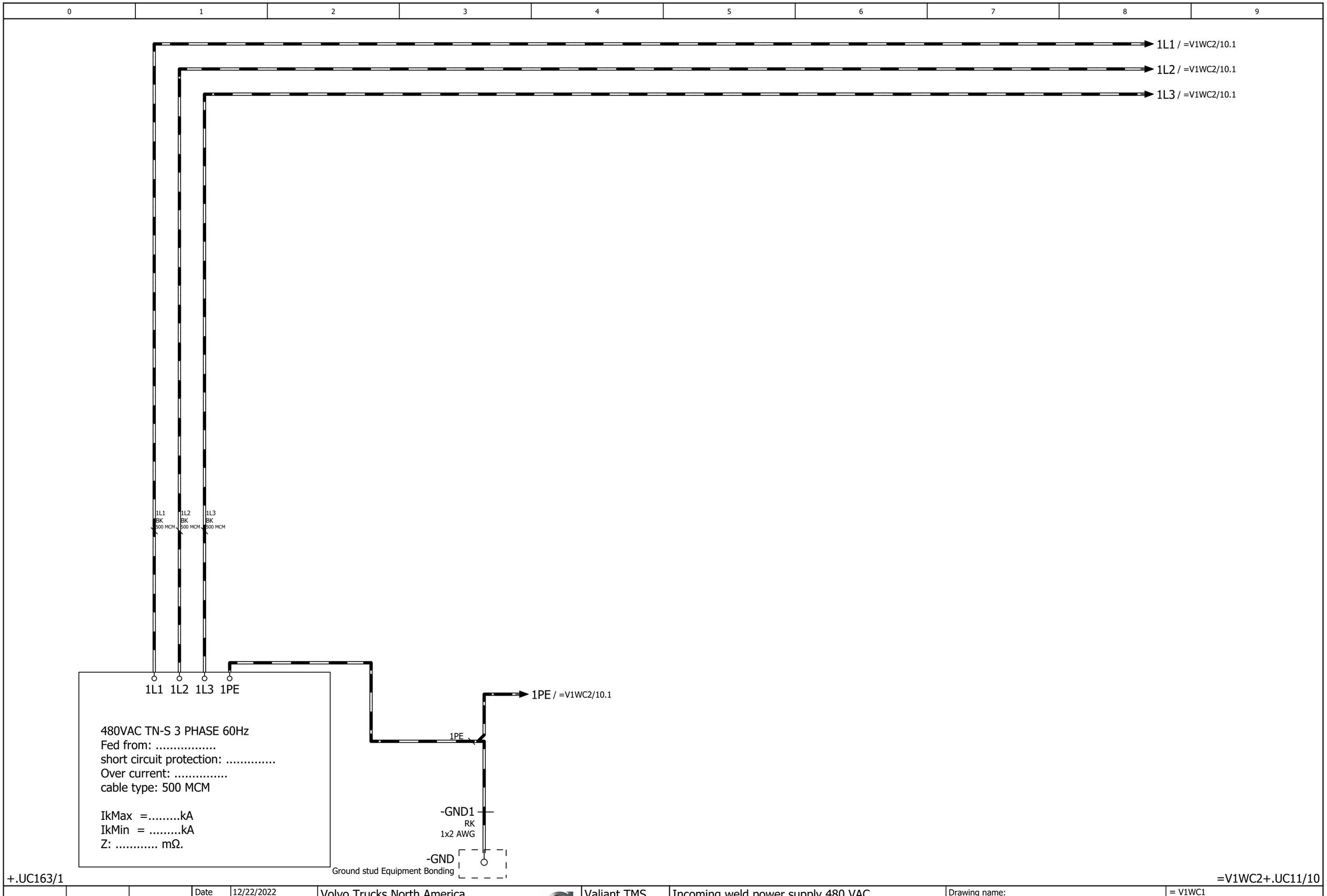

			Date	12/22/2022	Volvo Trucks North America	Valiant TMS	Incoming weld power supply 480 VAC	Drawing name: =2V04&EFS-EL	= V1WC1 + V1UC164
			Ed.	MKLEPADLO	P6700 Underbody Mainline - Cell 2V04				
			Appr					Document type: EFS	Project nr: 22-16151
Modification	Date	Name	Original		Replacement of / Replaced by	Scale 1:1			Page 1 / 1630

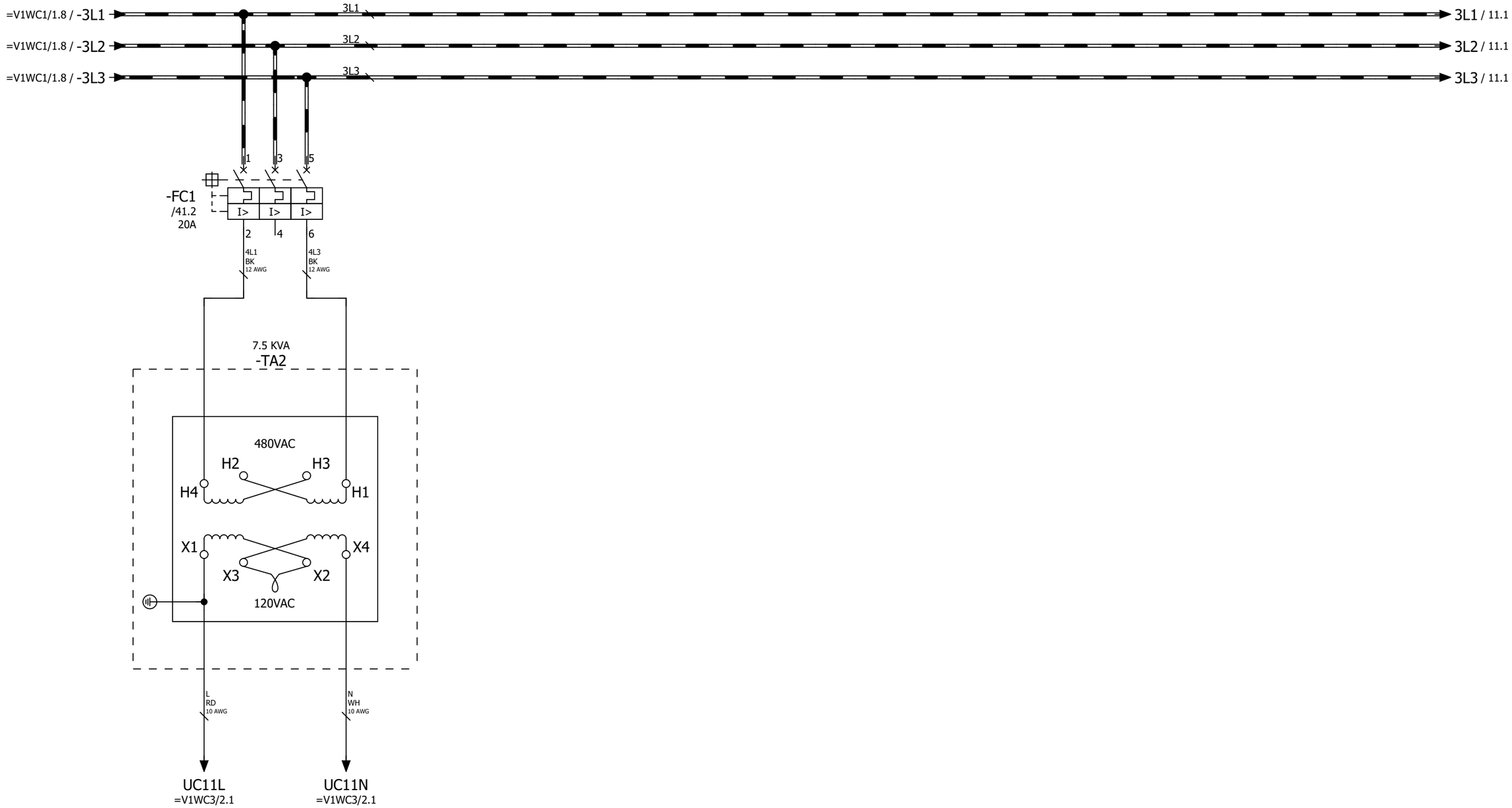

Power
Distribution
=V1UC11

=V1WC1+.UC164/1

11

			Date	12/22/2022	Volvo Trucks North America	Valiant TMS	Power distribution 480 VAC	Drawing name: =2V04&EFS-EL	= V1WC2	
			Ed.	MKLEPADLO					+ V1UC11	
			Appr		P6700 Underbody Mainline - Cell 2V04			Document type: EFS	Project nr: 22-16151	Page 10
Modification	Date	Name	Original		Replacement of / Replaced by	Scale 1:1				1630

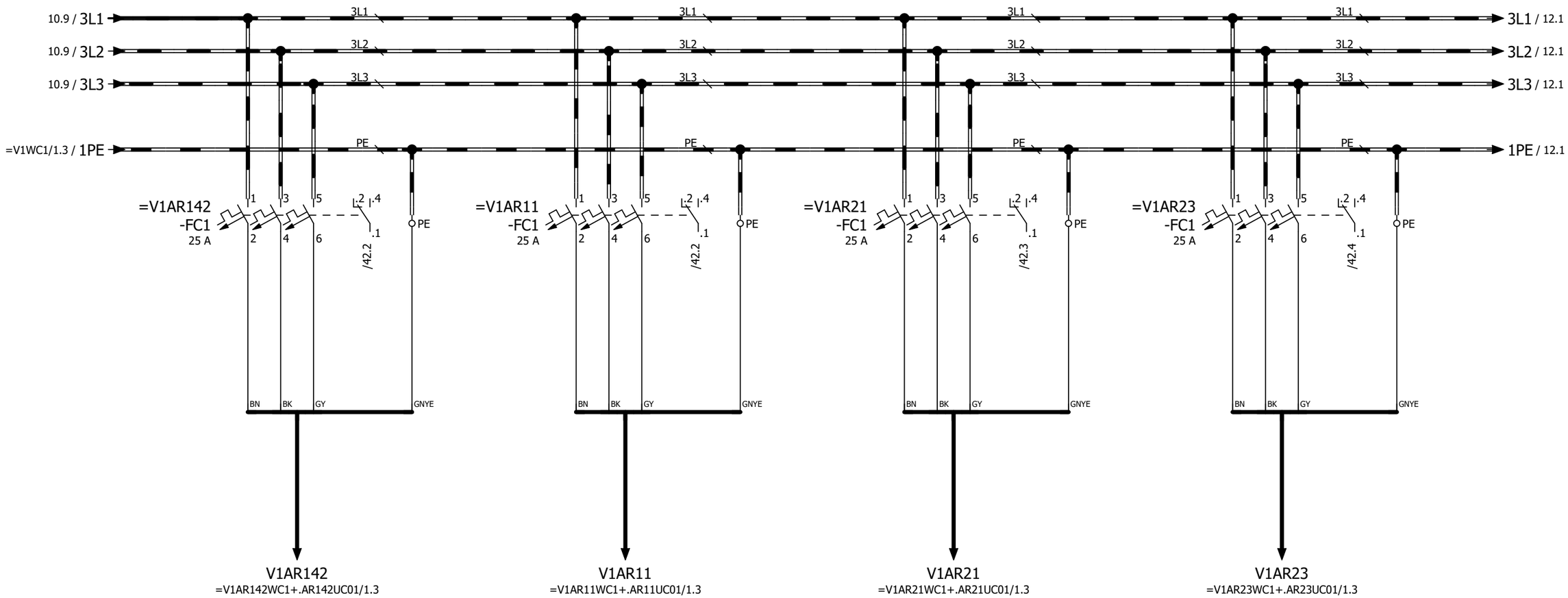

Power Distribution =V1AR142

Power Distribution =V1AR11

Power Distribution =V1AR21

Power Distribution =V1AR23

			Date	12/22/2022	Volvo Trucks North America	Valiant TMS	Power distribution 480 VAC	Drawing name: =2V04&EFS-EL	= V1WC2
			Ed.	MKLEPADLO					+ V1UC11
			Appr		P6700 Underbody Mainline - Cell 2V04			Document type: EFS	Project nr: 22-16151
Modification	Date	Name	Original		Replacement of / Replaced by	Scale 1:1			Page 11 / 1630

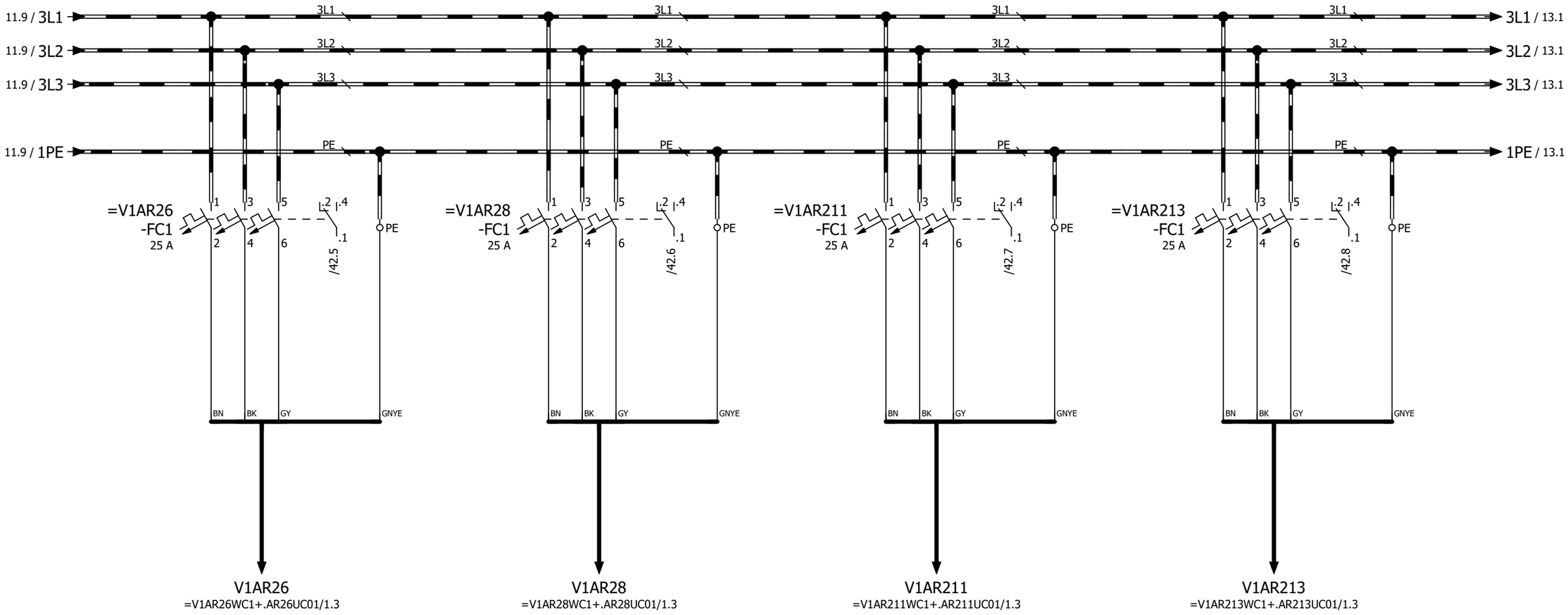

Power Distribution =V1AR26

Power Distribution =V1AR28

Power Distribution =V1AR211

Power Distribution =V1AR213

			Date	12/22/2022	Volvo Trucks North America	Valiant TMS	Power distribution 480 VAC	Drawing name: =2V04&EFS-EL	= V1WC2	
			Ed.	MKLEPADLO					+ V1UC11	
			Appr		P6700 Underbody Mainline - Cell 2V04			Document type: EFS	Project nr: 22-16151	Page 12
Modification	Date	Name	Original		Replacement of / Replaced by	Scale 1:1				1630

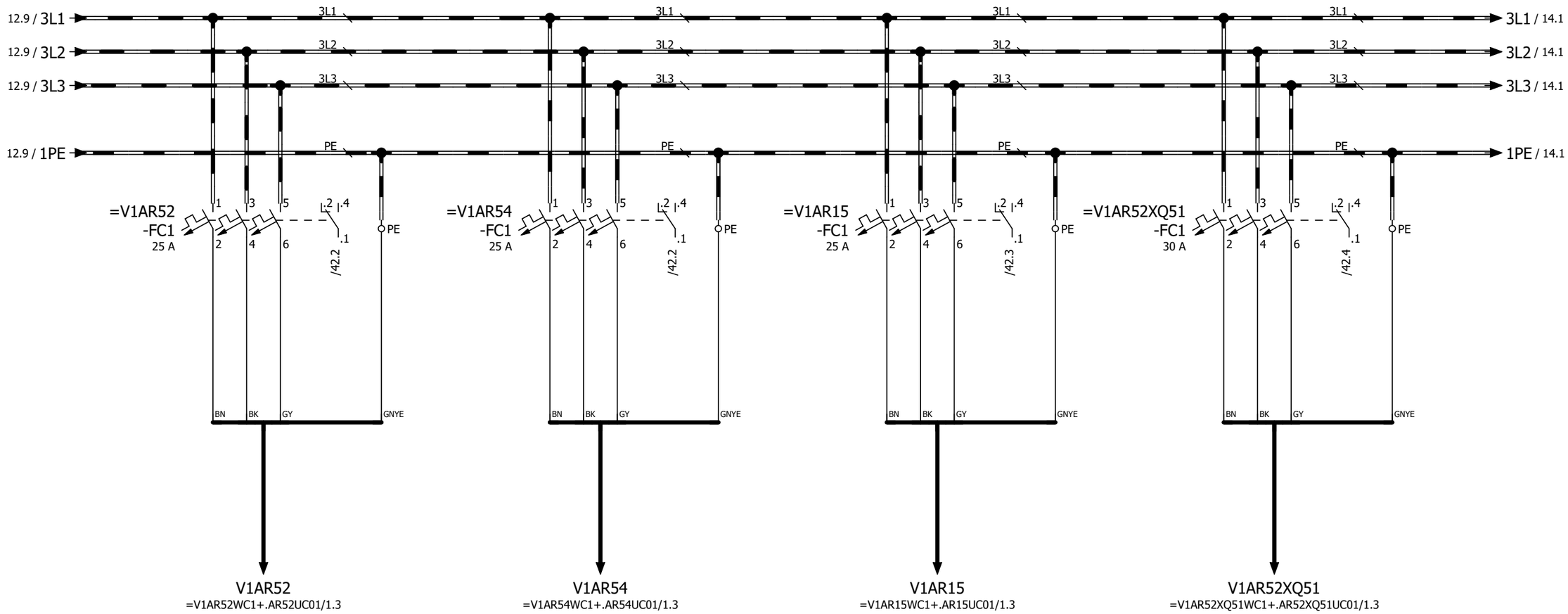

Power Distribution =V1AR52

Power Distribution =V1AR54

Power Distribution =V1AR15

Power Distribution =V1AR52XQ51

			Date	12/22/2022	Volvo Trucks North America	Valiant TMS	Power distribution 480 VAC	Drawing name: =2V04&EFS-EL	= V1WC2	
			Ed.	MKLEPADLO					+ V1UC11	
			Appr		P6700 Underbody Mainline - Cell 2V04	Scale 1:1		Document type: EFS	Project nr: 22-16151	Page 13 / 1630
Modification	Date	Name	Original		Replacement of	Replaced by				

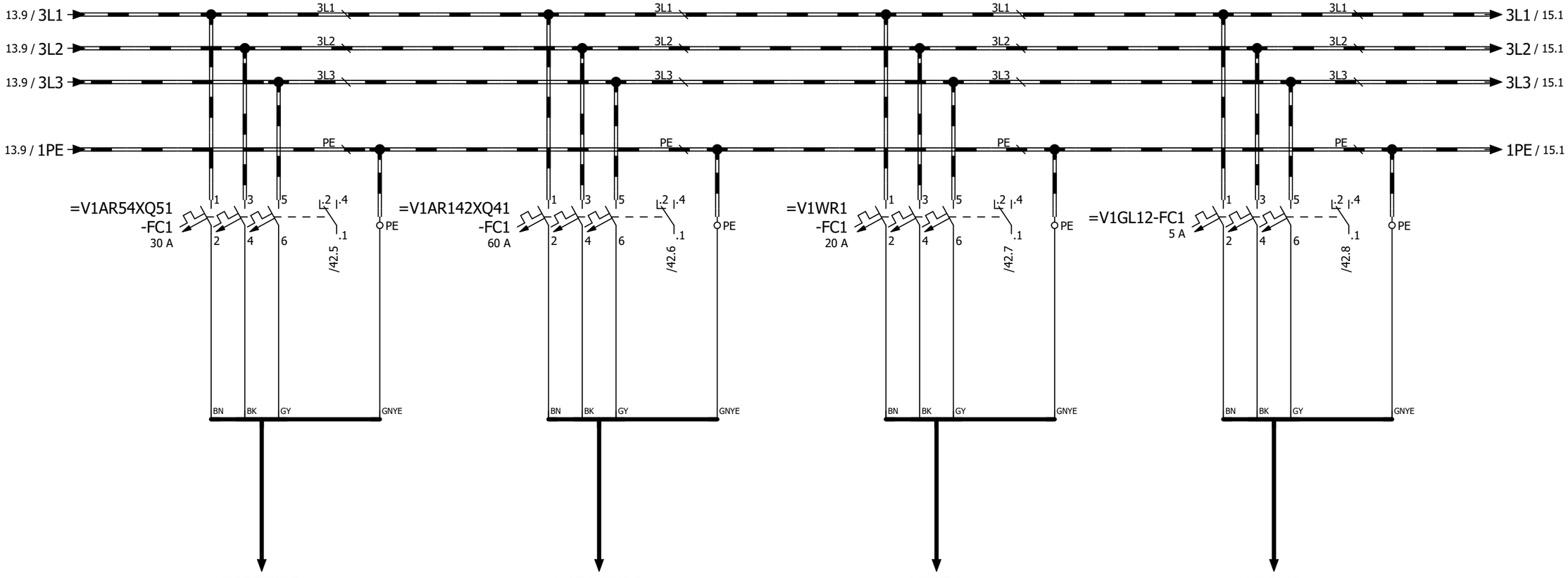

Power Distribution =V1AR54XQ51

Power Distribution =V1AR142XQ41

Power Distribution =V1WR1

Power Distribution =V1GL12

			Date	12/22/2022	Volvo Trucks North America	Valiant TMS	Power distribution 480 VAC	Drawing name: =2V04&EFS-EL	= V1WC2	
			Ed.	MKLEPADLO					+ V1UC11	
			Appr		P6700 Underbody Mainline - Cell 2V04			Document type: EFS	Project nr: 22-16151	Page 14
Modification	Date	Name	Original		Replacement of	Replaced by	Scale 1:1			1630

0	1	2	3	4	5	6	7	8	9

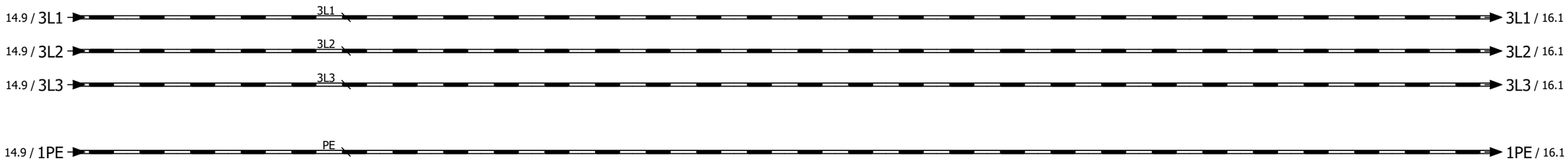

14

16

			Date	12/22/2022	Volvo Trucks North America	Valiant TMS	Power distribution 480 VAC	Drawing name: =2V04&EFS-EL		= V1WC2	
			Ed.	MKLEPADLO						+ V1UC11	
			Appr		P6700 Underbody Mainline - Cell 2V04			Document type: EFS	Project nr: 22-16151	Page	15
Modification	Date	Name	Original		Replacement of	Replaced by	Scale 1:1				1630

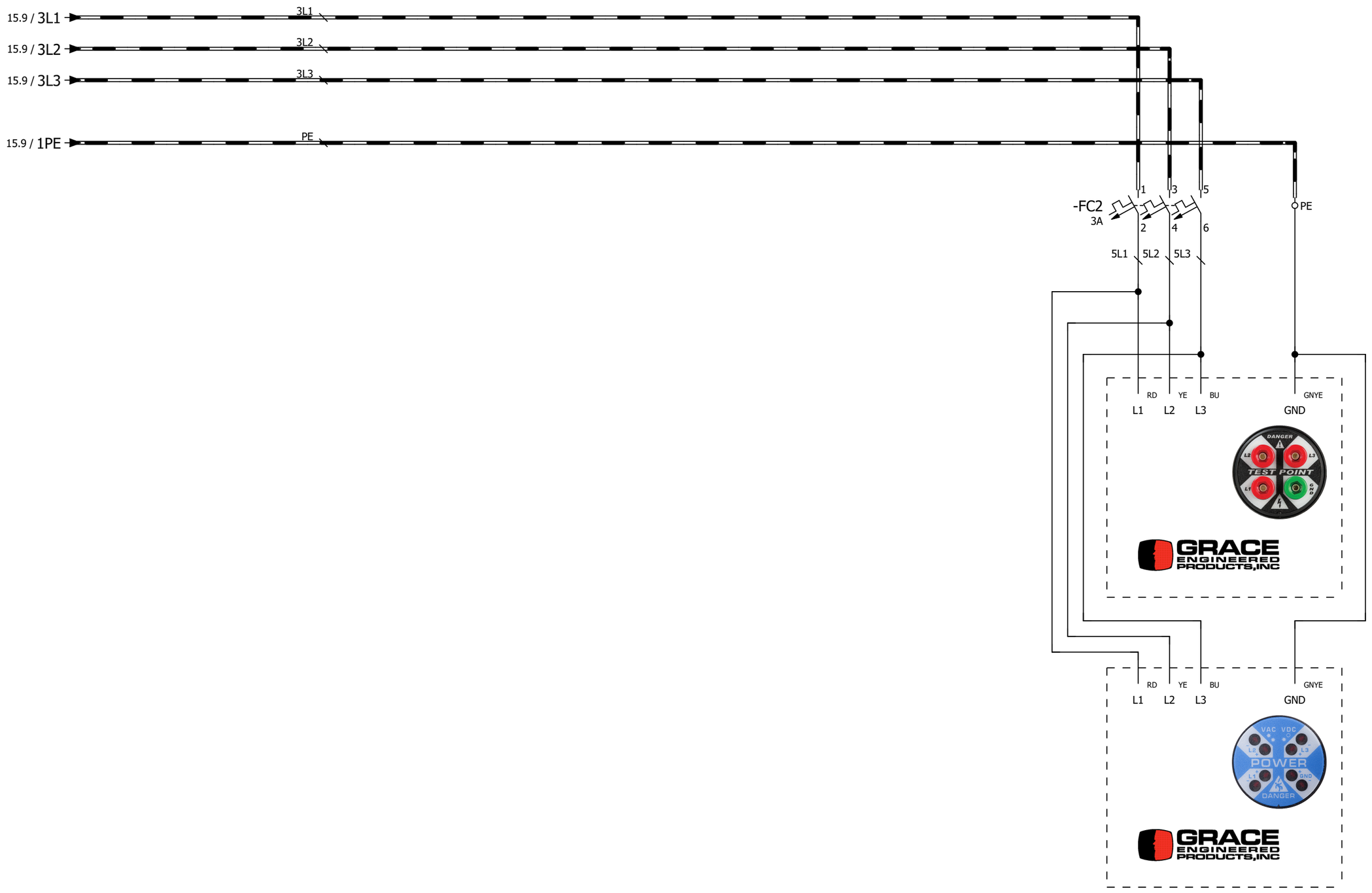

Voltage Test Port /
Indicator Light

			Date	12/22/2022	Volvo Trucks North America		Valiant TMS	Power distribution 480 VAC	Drawing name: =2V04&EFS-EL	= V1WC2
			Ed.	MKLEPADLO						+ V1UC11
			Appr		P6700 Underbody Mainline - Cell 2V04				Document type: EFS	Project nr: 22-16151
Modification	Date	Name	Original		Replacement of	Replaced by	Scale 1:1			Page 16 / 1630

=V1KF1

-KF11.11

Monitoring 480 VAC SPARE =V1KF1/9.2	Monitoring 480 VAC =V1UC11-FC1 =V1KF1/9.2			Monitoring 480 VAC SPARE =V1KF1/9.2	Monitoring 480 VAC SPARE =V1KF1/9.2
DI ET200SP	DI ET200SP	=V1WC4/1.0 TA1	=V1WC4/11.0 TA2	=V1WC4/1.1 FC11	=V1WC4/11.1 FC12	DI ET200SP	DI ET200SP
I50.0 DI0	I50.1 DI1					I50.6 DI6	I50.7 DI7
1	2					7	8

I50.1 BUOG 16 AWG

=V1WC2 -FC1 /10.1 .2 .4 .1

3L+1 BUOG 16 AWG

-XD3 1 2 3 4 5

=V1WC4/5.1 / 3L+1

=V1KF1

-KF11.11

Monitoring 480 VAC SPARE =V1KF1/9.2	Monitoring 480 VAC SPARE =V1KF1/9.2	Monitoring 480 VAC SPARE =V1KF1/9.2	Monitoring 480 VAC SPARE =V1KF1/9.2	Monitoring 480 VAC SPARE =V1KF1/9.2	Monitoring 480 VAC SPARE =V1KF1/9.2	Monitoring 480 VAC SPARE =V1KF1/9.2	Monitoring 480 VAC SPARE =V1KF1/9.2
DI ET200SP	DI ET200SP	DI ET200SP	DI ET200SP	DI ET200SP	DI ET200SP	DI ET200SP	DI ET200SP
I51.0 DI8	I51.1 DI9	I51.2 DI10	I51.3 DI11	I51.4 DI12	I51.5 DI13	I51.6 DI14	I51.7 DI15
9	10	11	12	13	14	15	16

			Date	12/22/2022	Volvo Trucks North America	Valiant TMS	Power distribution 480 VAC monitoring	Drawing name: =2V04&EFS-EL	= V1WC2
			Ed.	MKLEPADLO					+ V1UC11
			Appr		P6700 Underbody Mainline - Cell 2V04			Document type: EFS	Project nr: 22-16151	Page 41
Modification	Date	Name	Original		Replacement of / Replaced by	Scale 1:1				1630

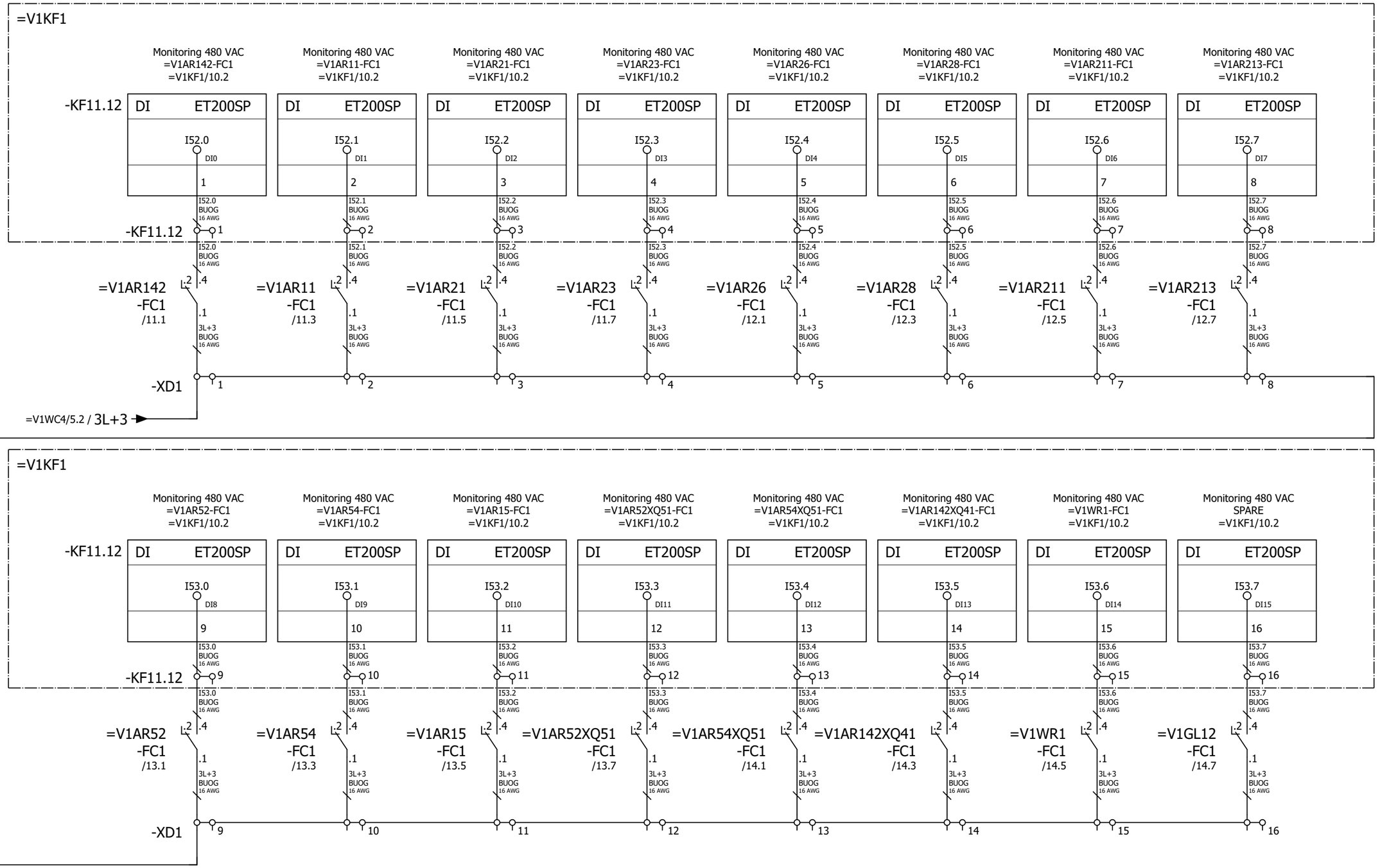

			Date	12/22/2022	Volvo Trucks North America	Valiant TMS	Power distribution 480 VAC monitoring	Drawing name: =2V04&EFS-EL	= V1WC2
			Ed.	MKLEPADLO					+ V1UC11
			Appr		P6700 Underbody Mainline - Cell 2V04			Document type: EFS	Project nr: 22-16151
Modification	Date	Name	Original		Replacement of / Replaced by	Scale 1:1			Page 42 / 1630

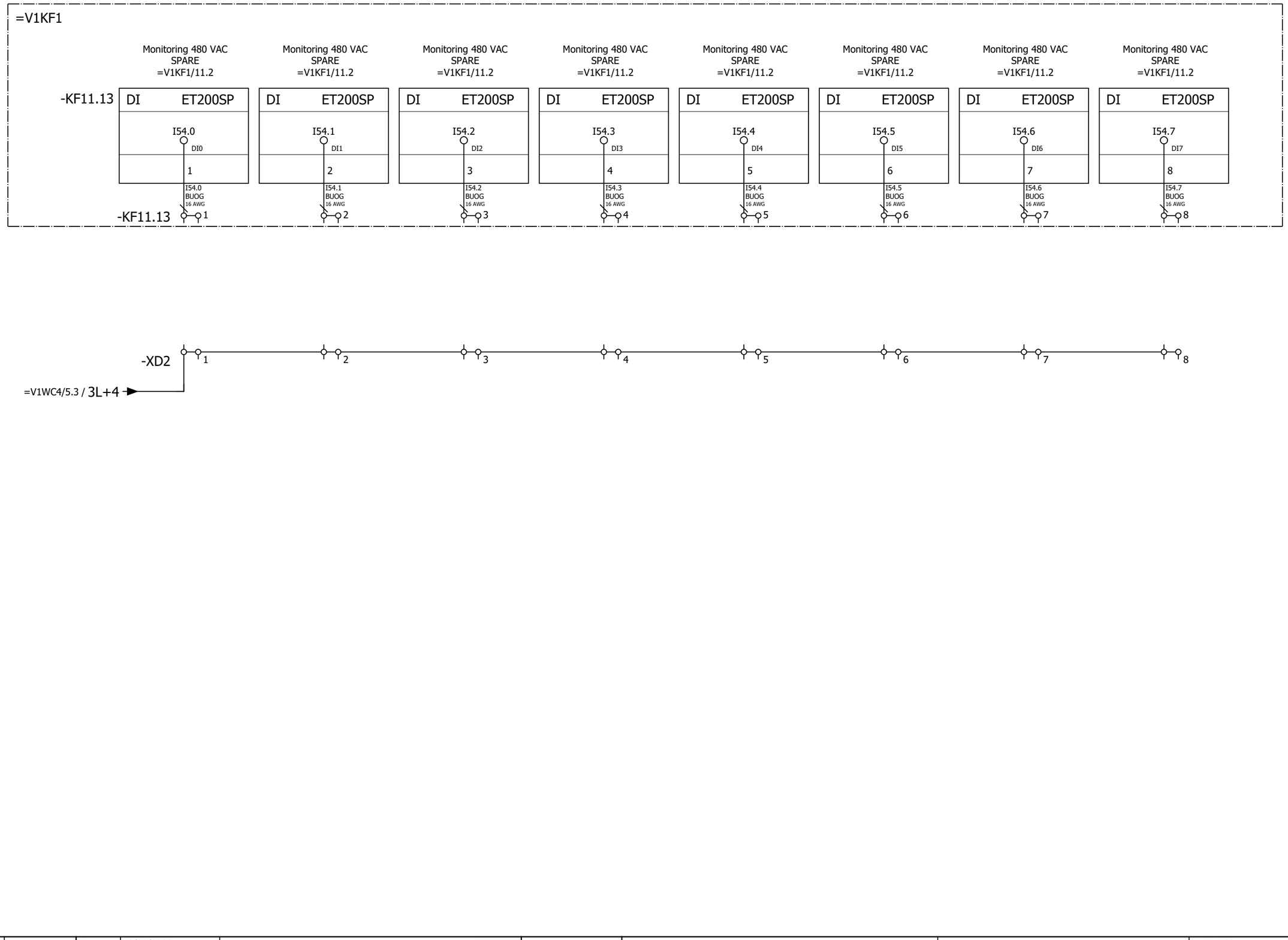

			Date	12/22/2022	Volvo Trucks North America	Valiant TMS	Power distribution 480 VAC monitoring	Drawing name: =2V04&EFS-EL	= V1WC2	
			Ed.	MKLEPADLO					+ V1UC11	
			Appr		P6700 Underbody Mainline - Cell 2V04			Document type: EFS	Project nr: 22-16151	Page 43
Modification	Date	Name	Original		Replacement of / Replaced by	Scale 1:1				1630

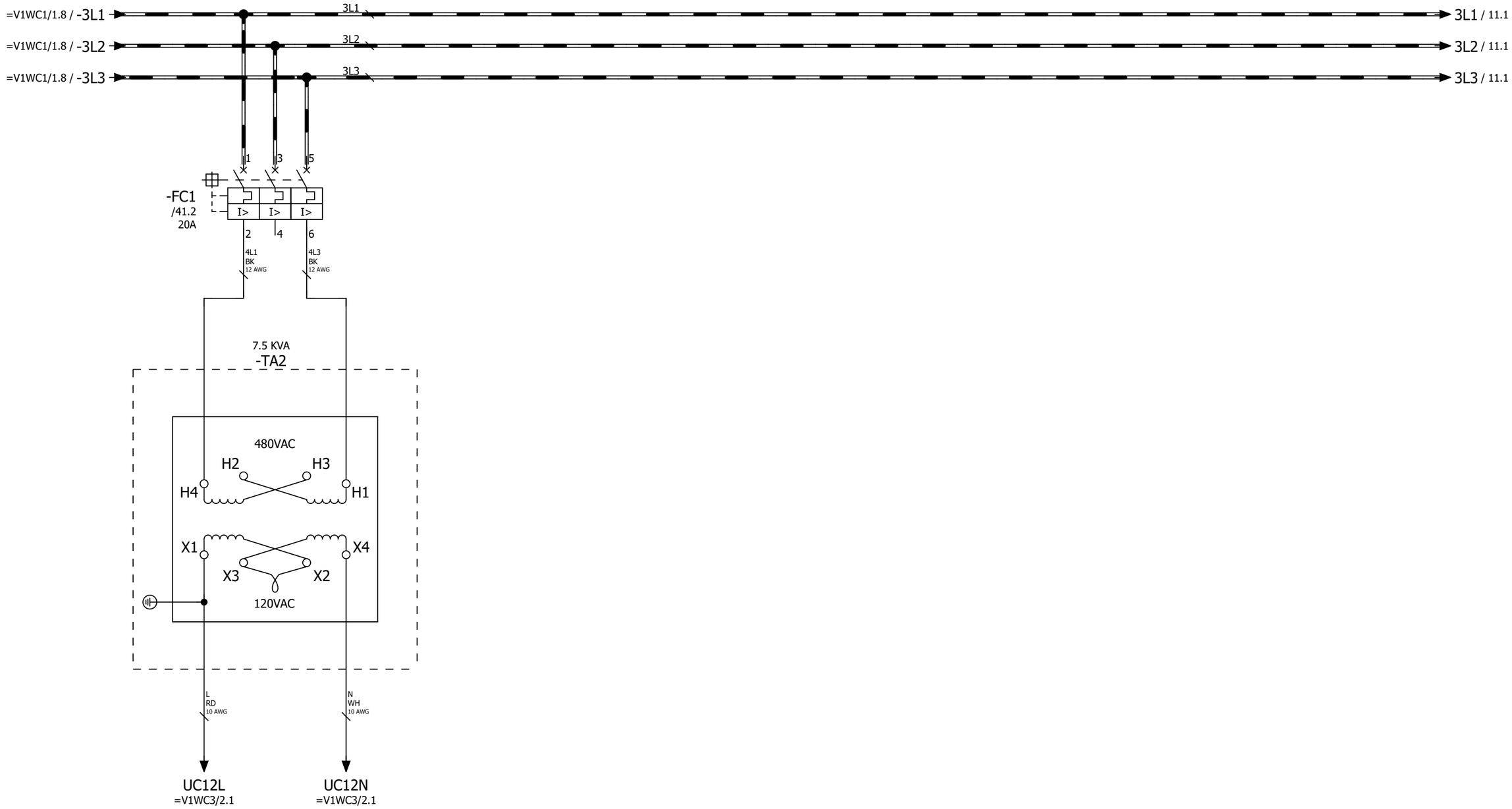

Power
Distribution
=V1UC12

+.UC11/43

11

			Date	12/22/2022	Volvo Trucks North America		Valiant TMS	Power distribution 480 VAC	Drawing name: =2V04&EFS-EL	= V1WC2
			Ed.	MKLEPADLO						+ V1UC12
			Appr		P6700 Underbody Mainline - Cell 2V04				Document type: EFS	Project nr: 22-16151
Modification	Date	Name	Original		Replacement of	Replaced by	Scale 1:1			Page 10 / 1630

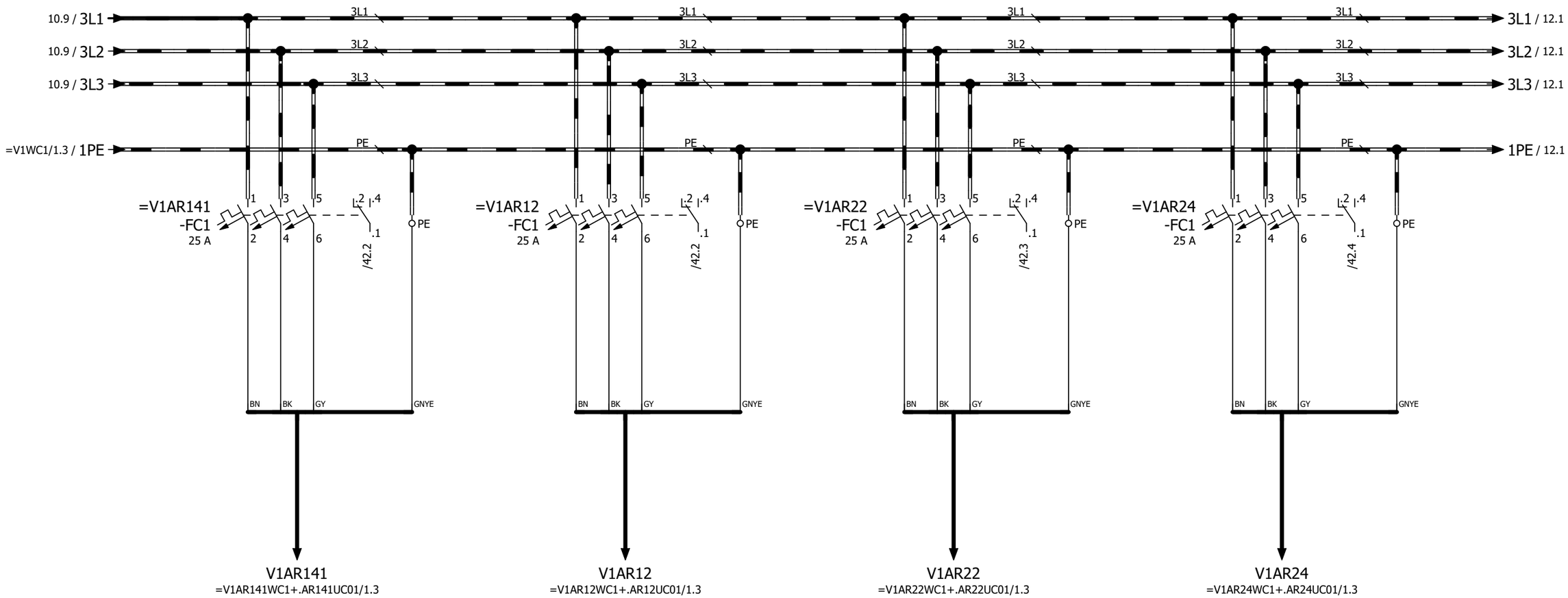

Power Distribution =V1AR141

Power Distribution =V1AR12

Power Distribution =V1AR22

Power Distribution =V1AR24

			Date	12/22/2022	Volvo Trucks North America	Valiant TMS	Power distribution 480 VAC	Drawing name: =2V04&EFS-EL	= V1WC2
			Ed.	MKLEPADLO					+ V1UC12
			Appr		P6700 Underbody Mainline - Cell 2V04			Document type: EFS	Project nr: 22-16151
Modification	Date	Name	Original		Replacement of / Replaced by	Scale 1:1			Page 11 / 1630

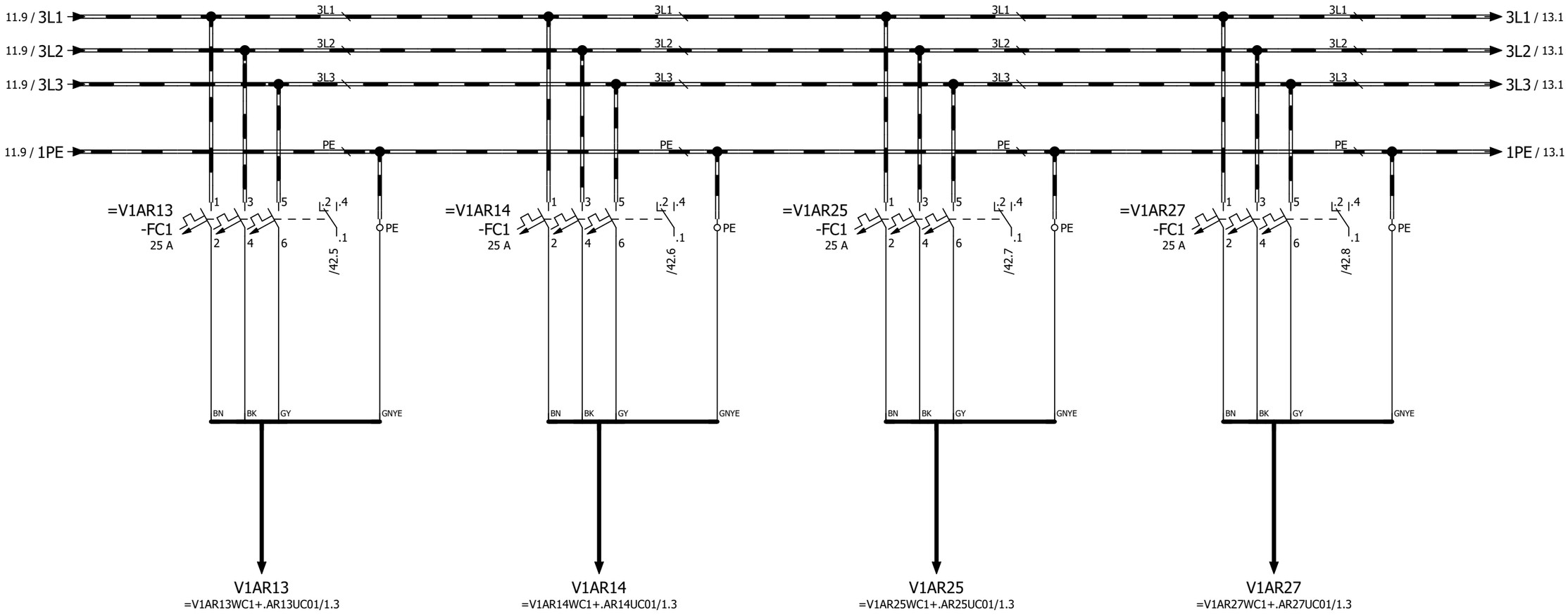

Power Distribution =V1AR13

Power Distribution =V1AR14

Power Distribution =V1AR25

Power Distribution =V1AR27

			Date	12/22/2022	Volvo Trucks North America	Valiant TMS	Power distribution 480 VAC	Drawing name: =2V04&EFS-EL	= V1WC2
			Ed.	MKLEPADLO					+ V1UC12
			Appr		P6700 Underbody Mainline - Cell 2V04			Document type: EFS	Project nr: 22-16151
Modification	Date	Name	Original		Replacement of / Replaced by	Scale 1:1			Page 12 / 1630

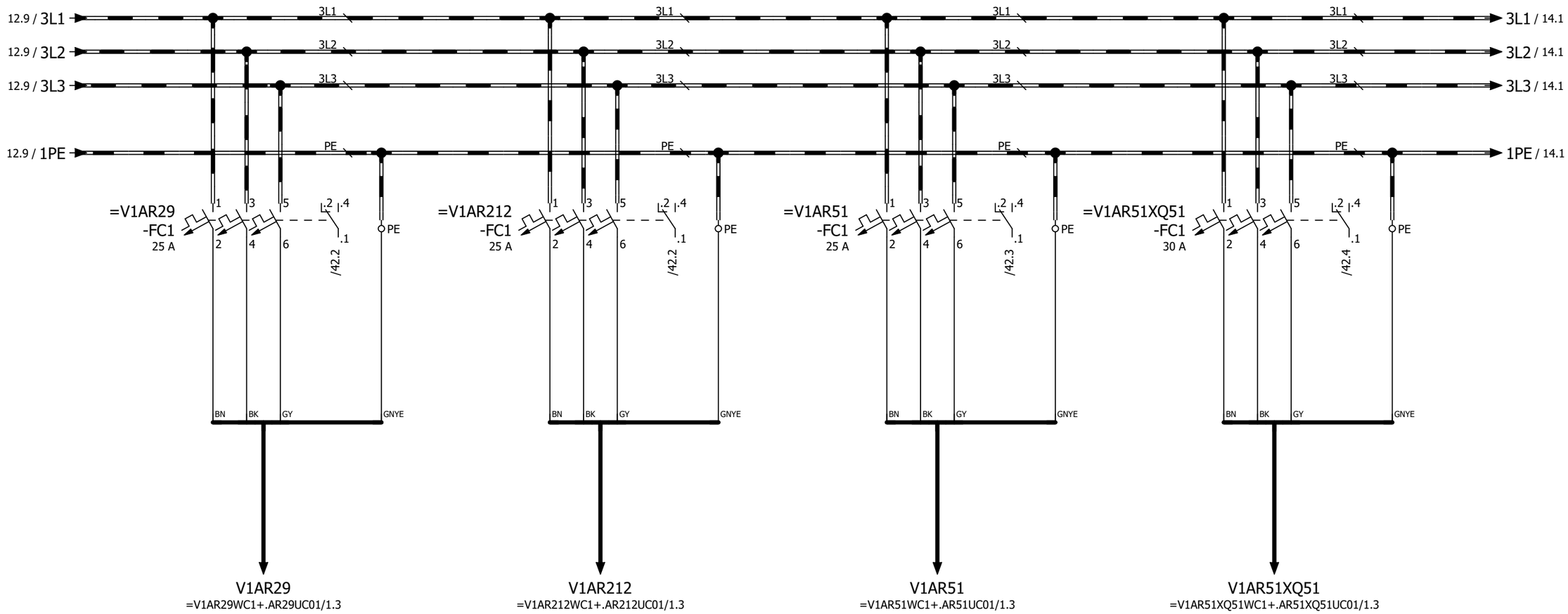

Power Distribution =V1AR29

Power Distribution =V1AR212

Power Distribution =V1AR51

Power Distribution =V1AR51XQ51

12

14

			Date	12/22/2022	Volvo Trucks North America	Valiant TMS	Power distribution 480 VAC	Drawing name: =2V04&EFS-EL	= V1WC2	
			Ed.	MKLEPADLO					+ V1UC12	
			Appr		P6700 Underbody Mainline - Cell 2V04	Scale 1:1		Document type: EFS	Project nr: 22-16151	Page 13 / 1630
Modification	Date	Name	Original		Replacement of	Replaced by				

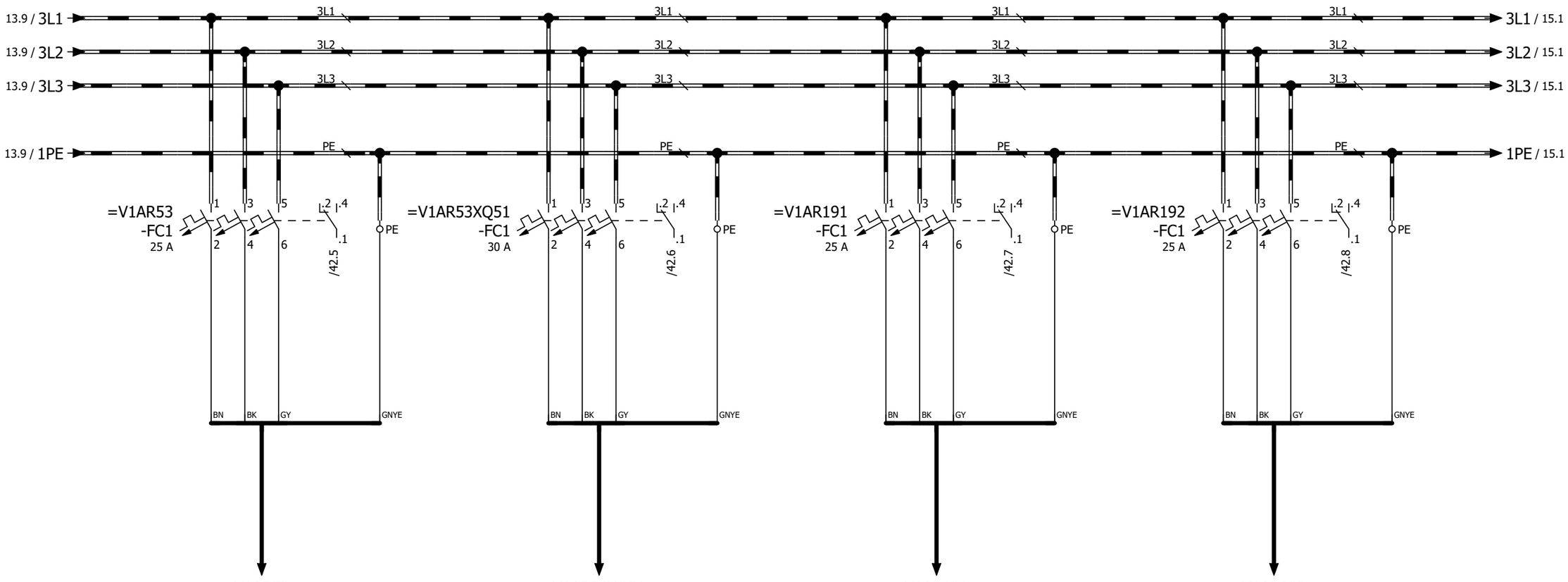

Power Distribution =V1AR53

Power Distribution =V1AR53XQ51

Power Distribution =V1AR191

Power Distribution =V1AR192

			Date	12/22/2022	Volvo Trucks North America	Valiant TMS	Power distribution 480 VAC	Drawing name: =2V04&EFS-EL	= V1WC2	
			Ed.	MKLEPADLO					+ V1UC12	
			Appr		P6700 Underbody Mainline - Cell 2V04			Document type: EFS	Project nr: 22-16151	Page 14
Modification	Date	Name	Original		Replacement of / Replaced by	Scale 1:1				1630

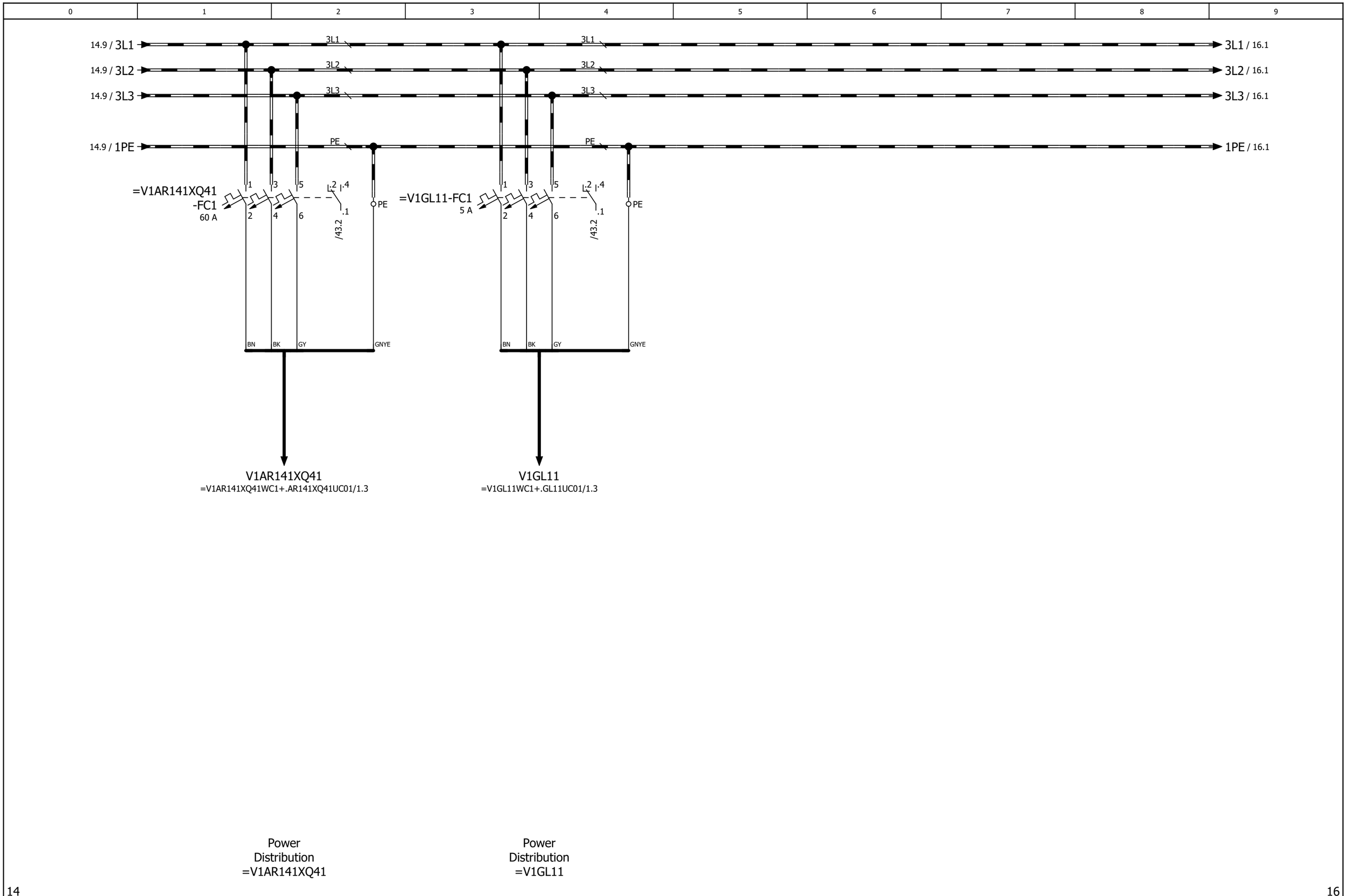

			Date	12/22/2022	Volvo Trucks North America	Valiant TMS	Power distribution 480 VAC	Drawing name: =2V04&EFS-EL	= V1WC2	
			Ed.	MKLEPADLO	P6700 Underbody Mainline - Cell 2V04				+ V1UC12	
			Appr					Document type: EFS	Project nr: 22-16151	Page 15
Modification	Date	Name	Original		Replacement of / Replaced by	Scale 1:1				1630

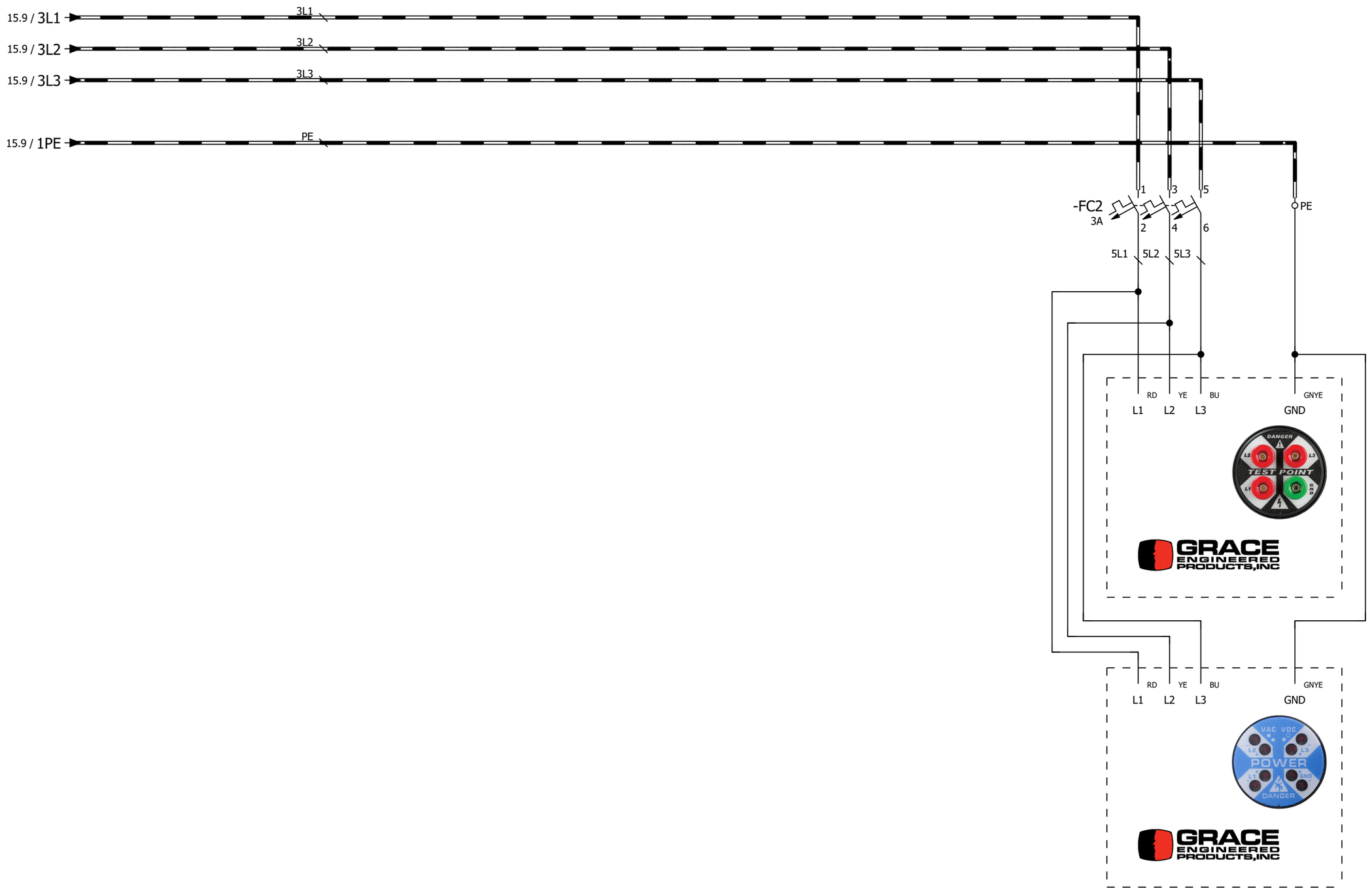

Voltage Test Port /
Indicator Light

			Date	12/22/2022	Volvo Trucks North America		Valiant TMS	Power distribution 480 VAC	Drawing name: =2V04&EFS-EL	= V1WC2
			Ed.	MKLEPADLO						+ V1UC12
			Appr		P6700 Underbody Mainline - Cell 2V04				Document type: EFS	Project nr: 22-16151
Modification	Date	Name	Original		Replacement of	Replaced by	Scale 1:1			Page 16 / 1630

=V1KF1

-KF12.11

Monitoring 480 VAC SPARE =V1KF1/9.2	Monitoring 480 VAC =V1UC12-FC1 =V1KF1/9.2			Monitoring 480 VAC SPARE =V1KF1/9.2	Monitoring 480 VAC SPARE =V1KF1/9.2
DI ET200SP	DI ET200SP			DI ET200SP	DI ET200SP
I80.0 DI0	I80.1 DI1			I80.6 DI6	I80.7 DI7
1	2			7	8

I80.1 BUOG 16 AWG

=V1WC2 -FC1 /10.1 .2 .4 .1

3L+1 BUOG 16 AWG

-XD3 1 2 3 4 5

=V1WC4/1.0 TA1

=V1WC4/11.0 TA2

=V1WC4/1.1 FC11

=V1WC4/11.1 FC12

=V1WC4/5.1 / 3L+1

=V1KF1

-KF12.11

Monitoring 480 VAC SPARE =V1KF1/9.2	Monitoring 480 VAC SPARE =V1KF1/9.2	Monitoring 480 VAC SPARE =V1KF1/9.2	Monitoring 480 VAC SPARE =V1KF1/9.2	Monitoring 480 VAC SPARE =V1KF1/9.2	Monitoring 480 VAC SPARE =V1KF1/9.2	Monitoring 480 VAC SPARE =V1KF1/9.2	Monitoring 480 VAC SPARE =V1KF1/9.2
DI ET200SP	DI ET200SP	DI ET200SP	DI ET200SP	DI ET200SP	DI ET200SP	DI ET200SP	DI ET200SP
I81.0 DI8	I81.1 DI9	I81.2 DI10	I81.3 DI11	I81.4 DI12	I81.5 DI13	I81.6 DI14	I81.7 DI15
9	10	11	12	13	14	15	16

			Date	12/22/2022	Volvo Trucks North America	Valiant TMS	Power distribution 480 VAC monitoring	Drawing name: =2V04&EFS-EL	= V1WC2
			Ed.	MKLEPADLO					+ V1UC12
			Appr		P6700 Underbody Mainline - Cell 2V04			Document type: EFS	Project nr: 22-16151
Modification	Date	Name	Original		Replacement of / Replaced by	Scale 1:1			Page 41 / 1630

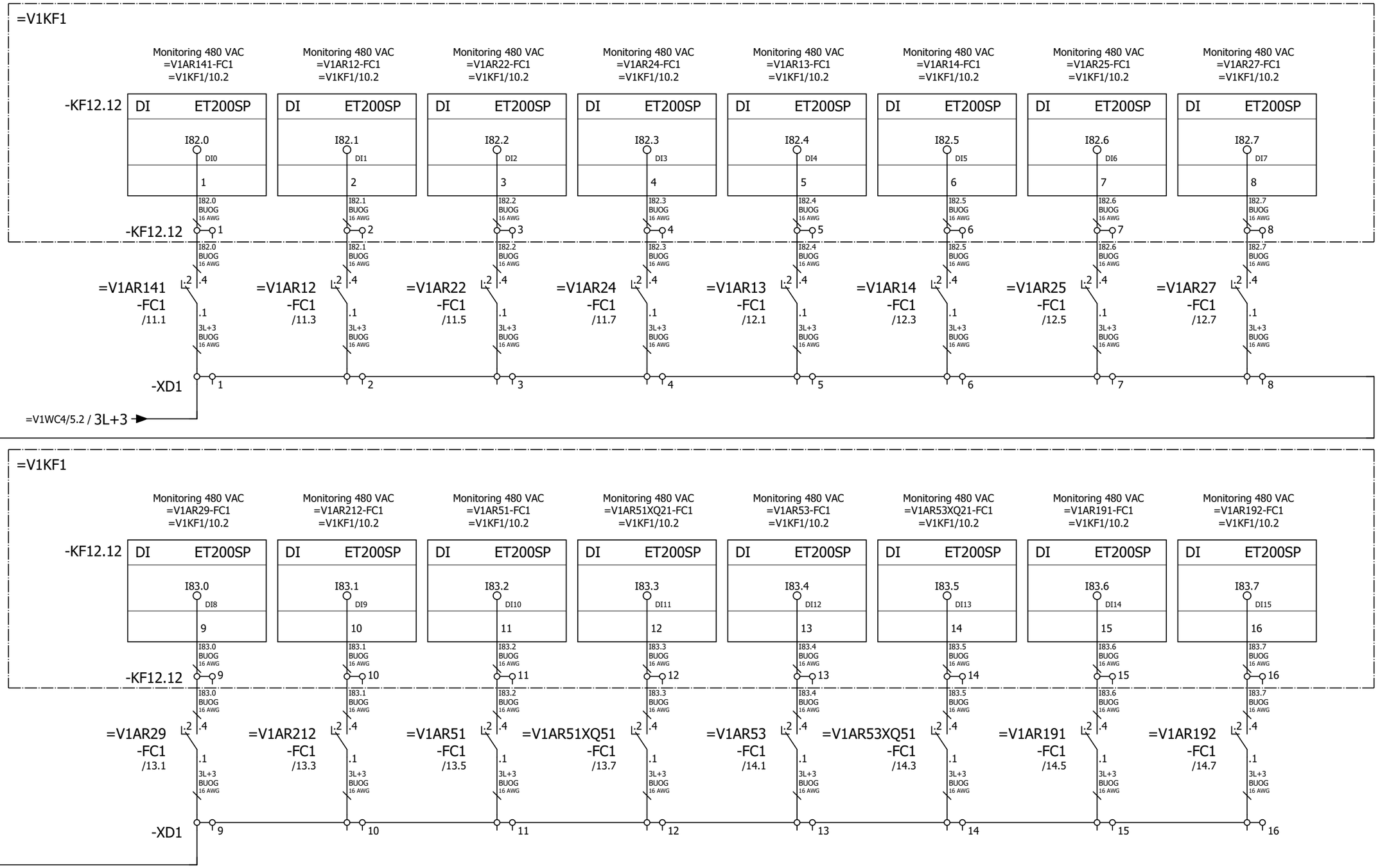

			Date	12/22/2022	Volvo Trucks North America	Valiant TMS	Power distribution 480 VAC monitoring	Drawing name: =2V04&EFS-EL	= V1WC2	
			Ed.	MKLEPADLO					+ V1UC12	
			Appr		P6700 Underbody Mainline - Cell 2V04			Document type: EFS	Project nr: 22-16151	Page 42
Modification	Date	Name	Original		Replacement of / Replaced by	Scale 1:1				1630

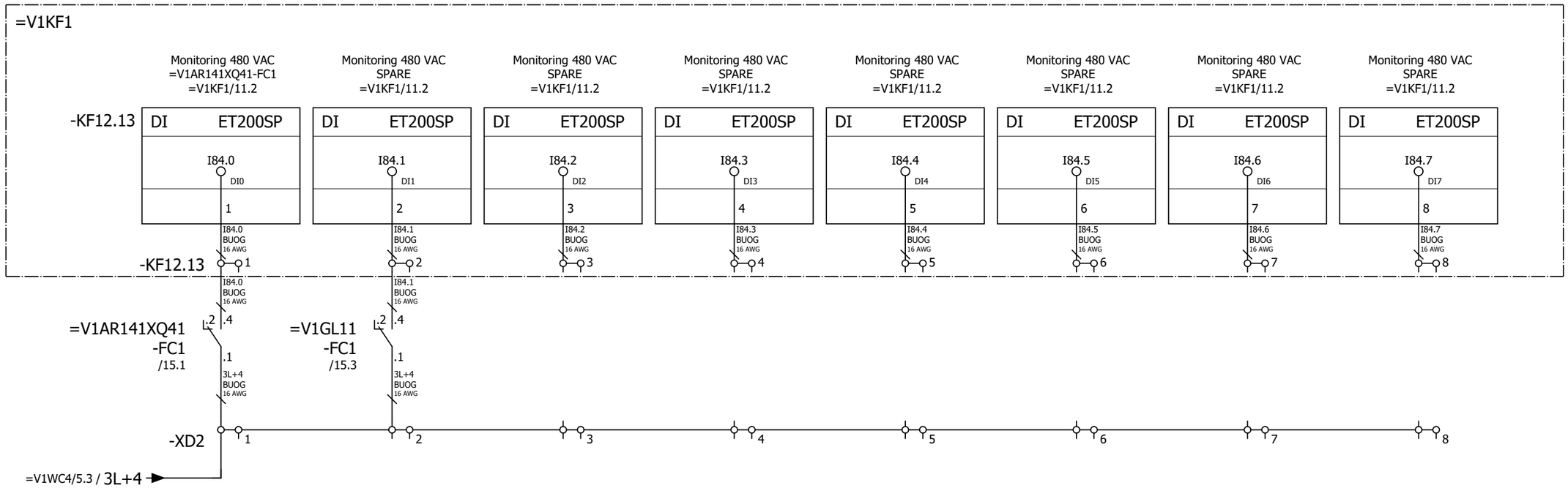

			Date	12/22/2022	Volvo Trucks North America	Valiant TMS	Power distribution 480 VAC monitoring	Drawing name: =2V04&EFS-EL	= V1WC2	
			Ed.	MKLEPADLO					+ V1UC12	
			Appr		P6700 Underbody Mainline - Cell 2V04			Document type: EFS	Project nr: 22-16151	Page 43
Modification	Date	Name	Original		Replacement of / Replaced by	Scale 1:1				1630

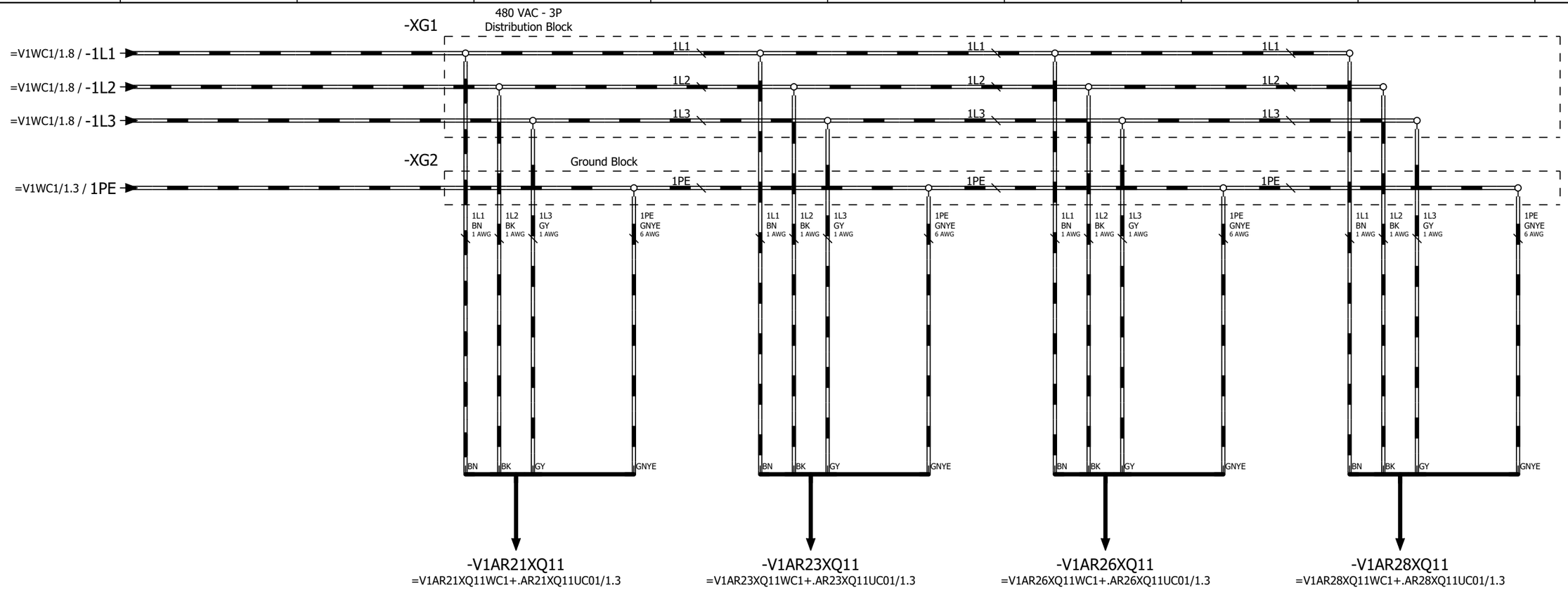

Weld Power Distribution 480 VAC AR21 (Weld Timer) (S110R01)

Weld Power Distribution 480 VAC AR23 (Weld Timer) (S110R03)

Weld Power Distribution 480 VAC AR26 (Weld Timer) (S120R02)

Weld Power Distribution 480 VAC AR28 (Weld Timer) (S120R06)

+.UC12/43

+.UC162/10

			Date	12/22/2022	Volvo Trucks North America	Valiant TMS	Weld power distribution 480 VAC	Drawing name: =2V04&EFS-EL	= V1WC2	
			Ed.	MKLEPADLO					+ V1UC161	
			Appr		P6700 Underbody Mainline - Cell 2V04			Document type: EFS	Project nr: 22-16151	Page 10
Modification	Date	Name	Original		Replacement of / Replaced by	Scale 1:1				1630

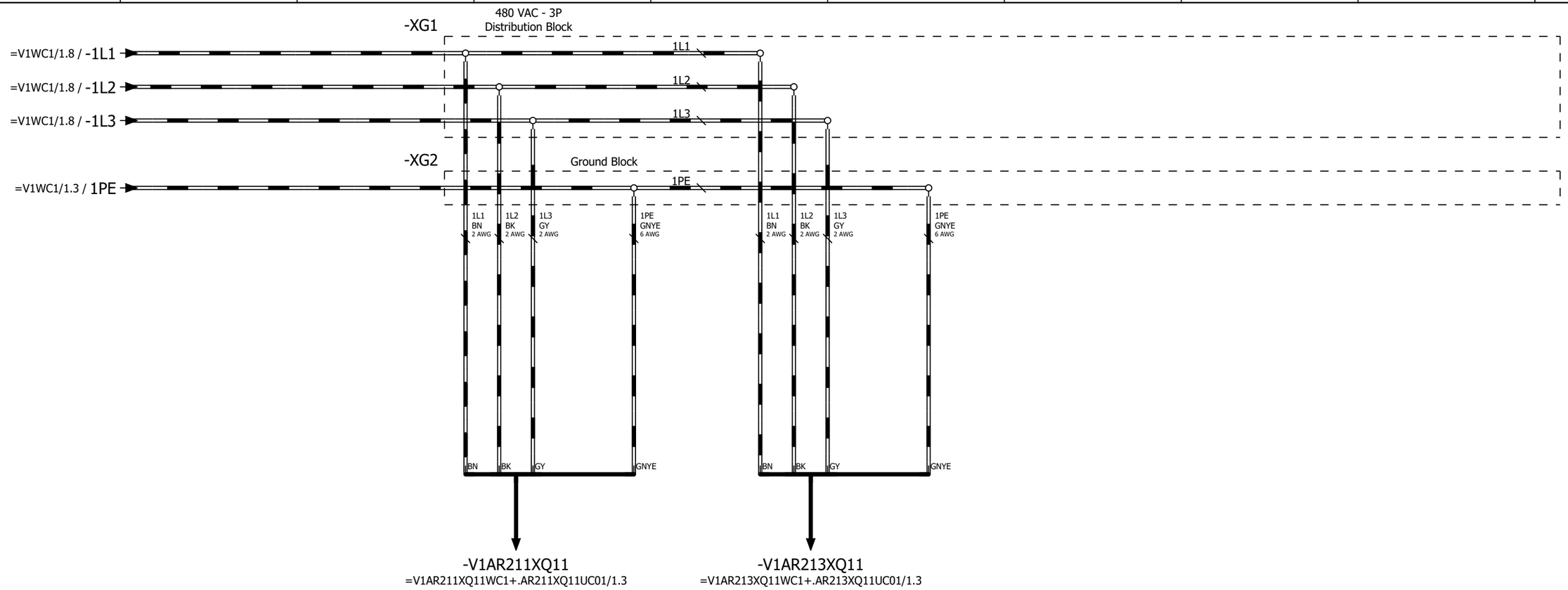

Weld Power Distribution 480 VAC AR211 (Weld Timer) (S130R02)

Weld Power Distribution 480 VAC AR213 (Weld Timer) (S130R06)

+.UC161/10

+.UC163/10

			Date	12/22/2022	Volvo Trucks North America	Valiant TMS	Weld power distribution 480 VAC	Drawing name: =2V04&EFS-EL	= V1WC2	
			Ed.	MKLEPADLO					+ V1UC162	
			Appr		P6700 Underbody Mainline - Cell 2V04			Document type: EFS	Project nr: 22-16151	Page 10
Modification	Date	Name	Original		Replacement of	Replaced by	Scale 1:1			1630

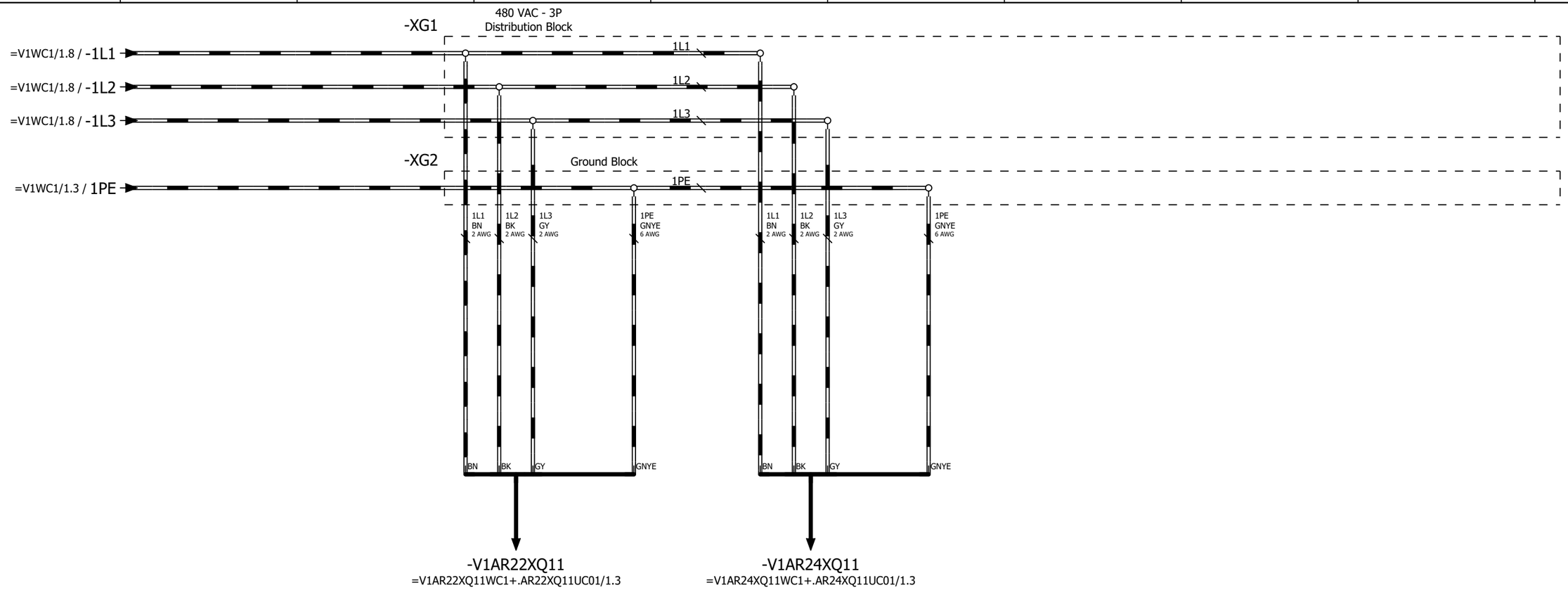

Weld Power Distribution 480 VAC AR22 (Weld Timer) (S110R02)

Weld Power Distribution 480 VAC AR24 (Weld Timer) (S110R04)

+.UC162/10

+.UC164/10

			Date	12/22/2022	Volvo Trucks North America	Valiant TMS	Weld power distribution 480 VAC	Drawing name: =2V04&EFS-EL	= V1WC2	
			Ed.	MKLEPADLO					+ V1UC163	
			Appr		P6700 Underbody Mainline - Cell 2V04			Document type: EFS	Project nr: 22-16151	Page 10
Modification	Date	Name	Original		Replacement of	Replaced by	Scale 1:1			1630

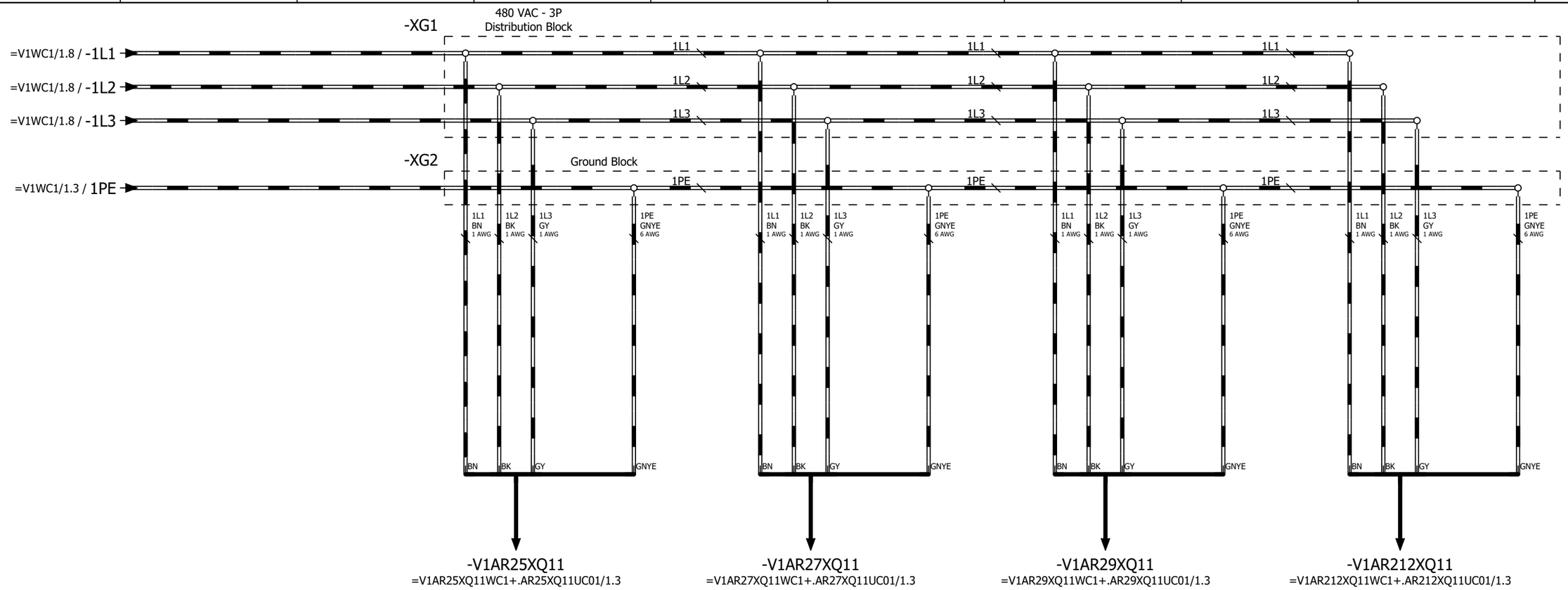

Weld Power Distribution 480 VAC AR25 (Weld Timer) (S120R01)

Weld Power Distribution 480 VAC AR27 (Weld Timer) (S120R05)

Weld Power Distribution 480 VAC AR29 (Weld Timer) (S130R01)

Weld Power Distribution 480 VAC AR212 (Weld Timer) (S130R05)

+.UC163/10

=V1WC3+.UC11/1

			Date	12/22/2022	Volvo Trucks North America	Valiant TMS	Weld power distribution 480 VAC	Drawing name: =2V04&EFS-EL	= V1WC2	
			Ed.	MKLEPADLO					+ V1UC164	
			Appr		P6700 Underbody Mainline - Cell 2V04			Document type: EFS	Project nr: 22-16151	Page 10
Modification	Date	Name	Original		Replacement of	Replaced by	Scale 1:1			1630

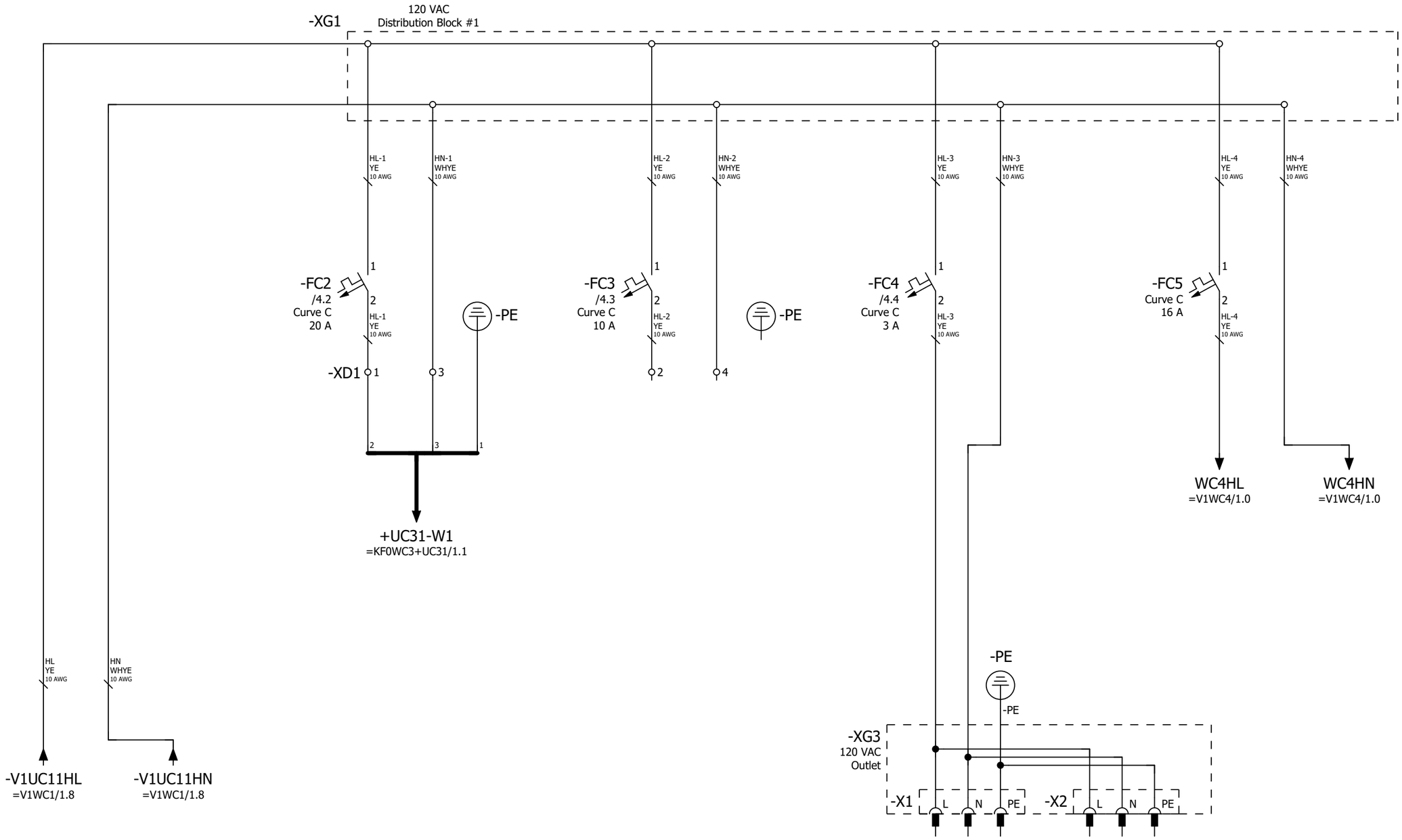

Power Distribution 120 VAC UC31 (MOP)

Power Distribution 120 VAC (SPARE)

Power Distribution 120 VAC Programming Port

Power Distribution 120 VAC To 24VDC Power Supply

=V1WC2+.UC164/10

2

			Date	12/22/2022	Volvo Trucks North America	Valiant TMS	Power Distribution 120 VAC (Above Disconnect)	Drawing name: =2V04&EFS-EL	= V1WC3
			Ed.	MKLEPADLO					+ V1UC11
			Appr		P6700 Underbody Mainline - Cell 2V04	Scale 1:1		Document type: EFS	Project nr: 22-16151
Modification	Date	Name	Original		Replacement of	Replaced by			Page 1 / 1630

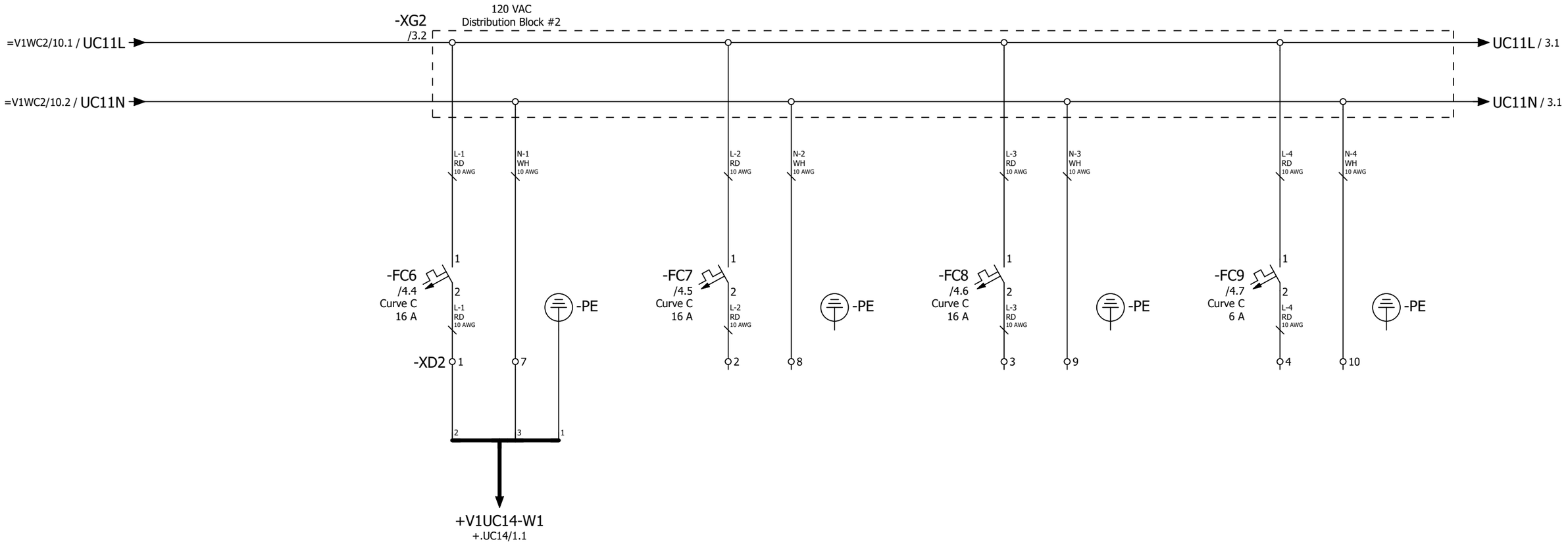

1	Power Distribution 120 VAC V1UC14 (RIO)	Power Distribution 120 VAC (SPARE)	Power Distribution 120 VAC (SPARE)	Power Distribution 120 VAC (SPARE)	3

			Date	12/22/2022	Volvo Trucks North America	Valiant TMS	Power Distribution 120 VAC (Below Disconnect)	Drawing name: =2V04&EFS-EL	= V1WC3		
			Ed.	MKLEPADLO					+ V1UC11		
			Appr		P6700 Underbody Mainline - Cell 2V04	Scale 1:1		Document type: EFS	Project nr: 22-16151	Page	2
Modification	Date	Name	Original		Replacement of / Replaced by						1630

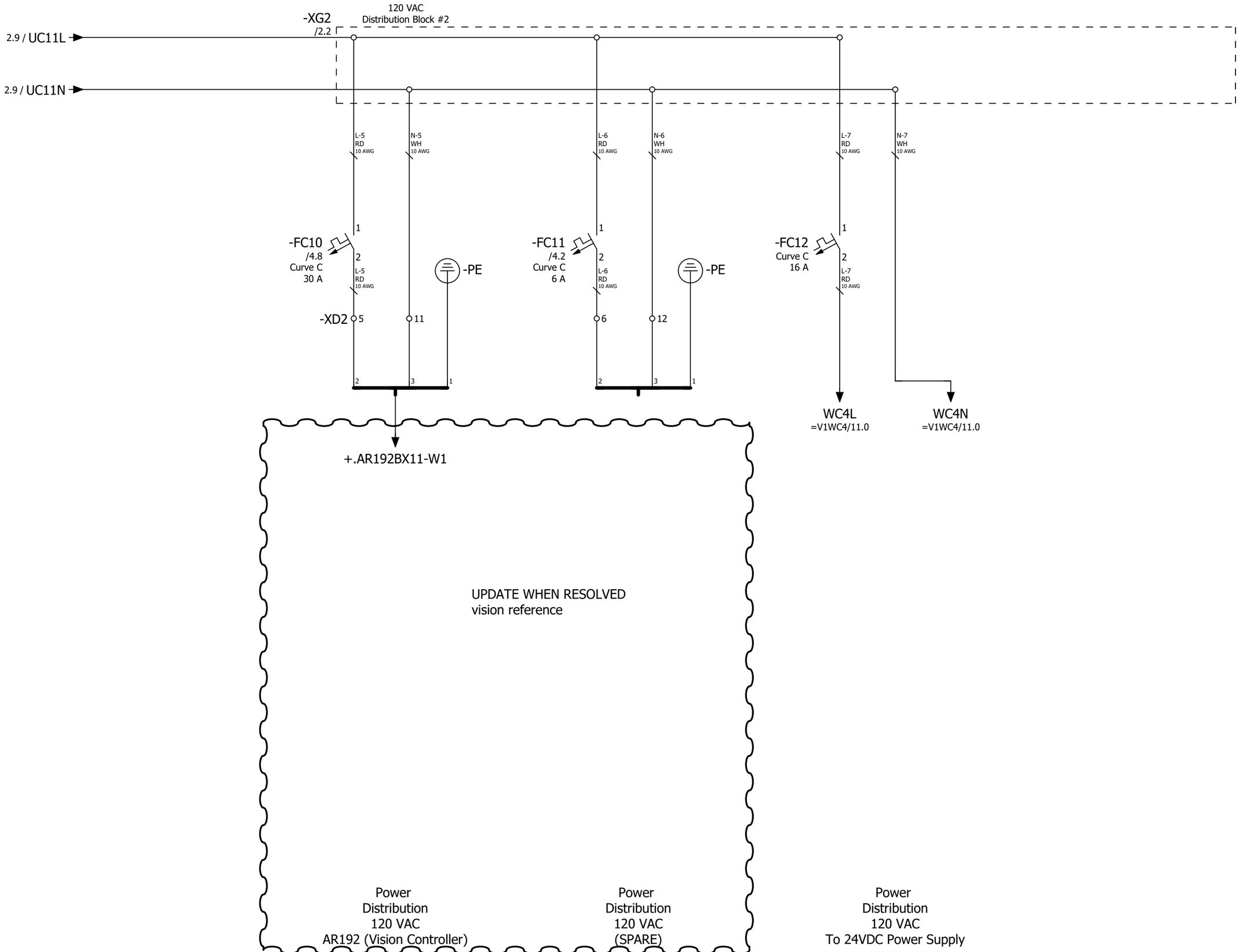

			Date	12/22/2022	Volvo Trucks North America	Valiant TMS	Power Distribution 120 VAC (Below Disconnect)	Drawing name: =2V04&EFS-EL	= V1WC3
			Ed.	MKLEPADLO					+ V1UC11
			Appr		P6700 Underbody Mainline - Cell 2V04			Document type: EFS	Project nr: 22-16151
Modification	Date	Name	Original		Replacement of / Replaced by	Scale 1:1			Page 3 / 1630

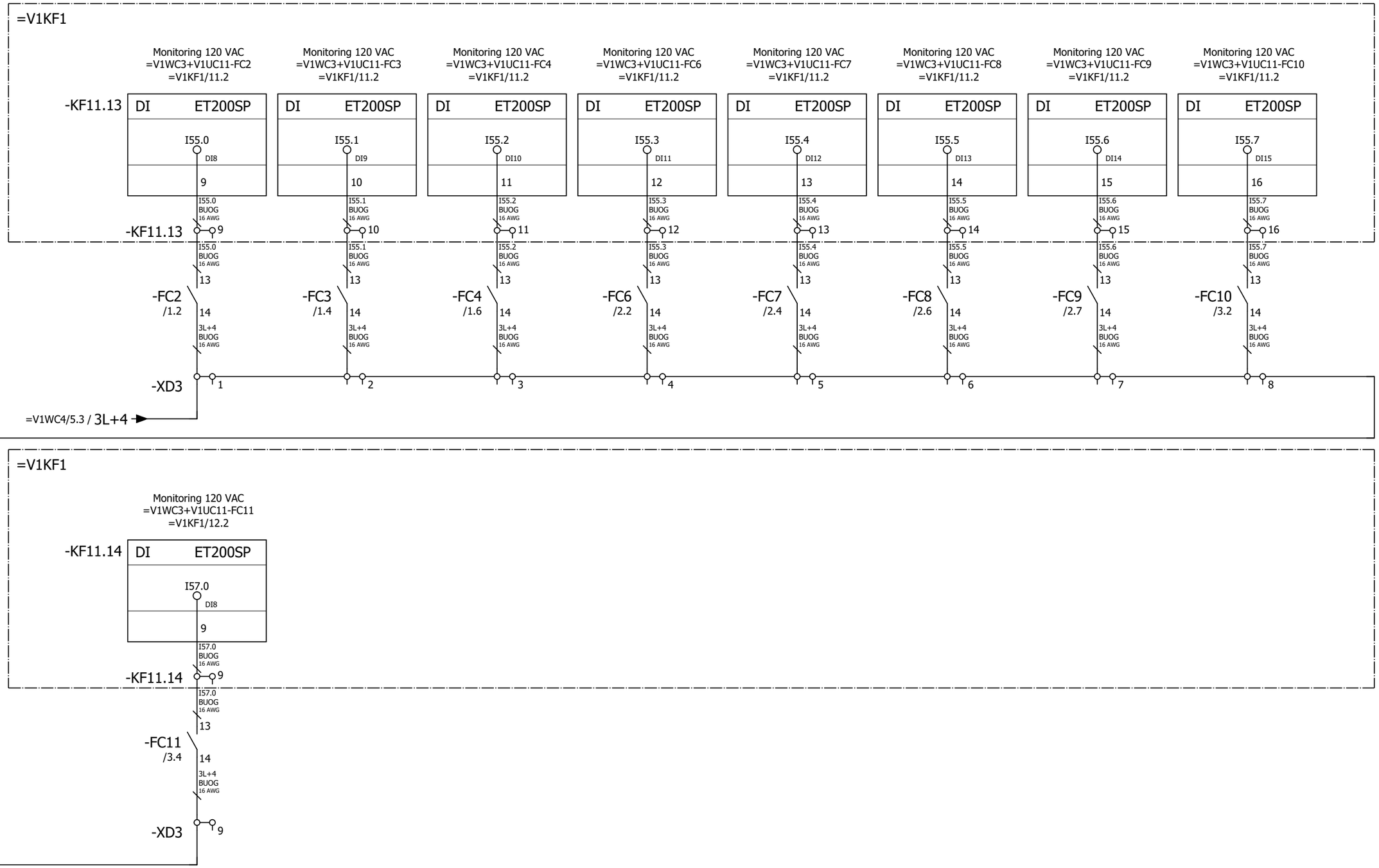

3

+.UC12/1

			Date	12/22/2022	Volvo Trucks North America	Valiant TMS	Power distribution 120 VAC monitoring (Above Disconnect)	Drawing name: =2V04&EFS-EL	= V1WC3
			Ed.	MKLEPADLO					+ V1UC11
			Appr		P6700 Underbody Mainline - Cell 2V04			Document type: EFS	Project nr: 22-16151
Modification	Date	Name	Original		Replacement of / Replaced by	Scale 1:1			Page 4 / 1630

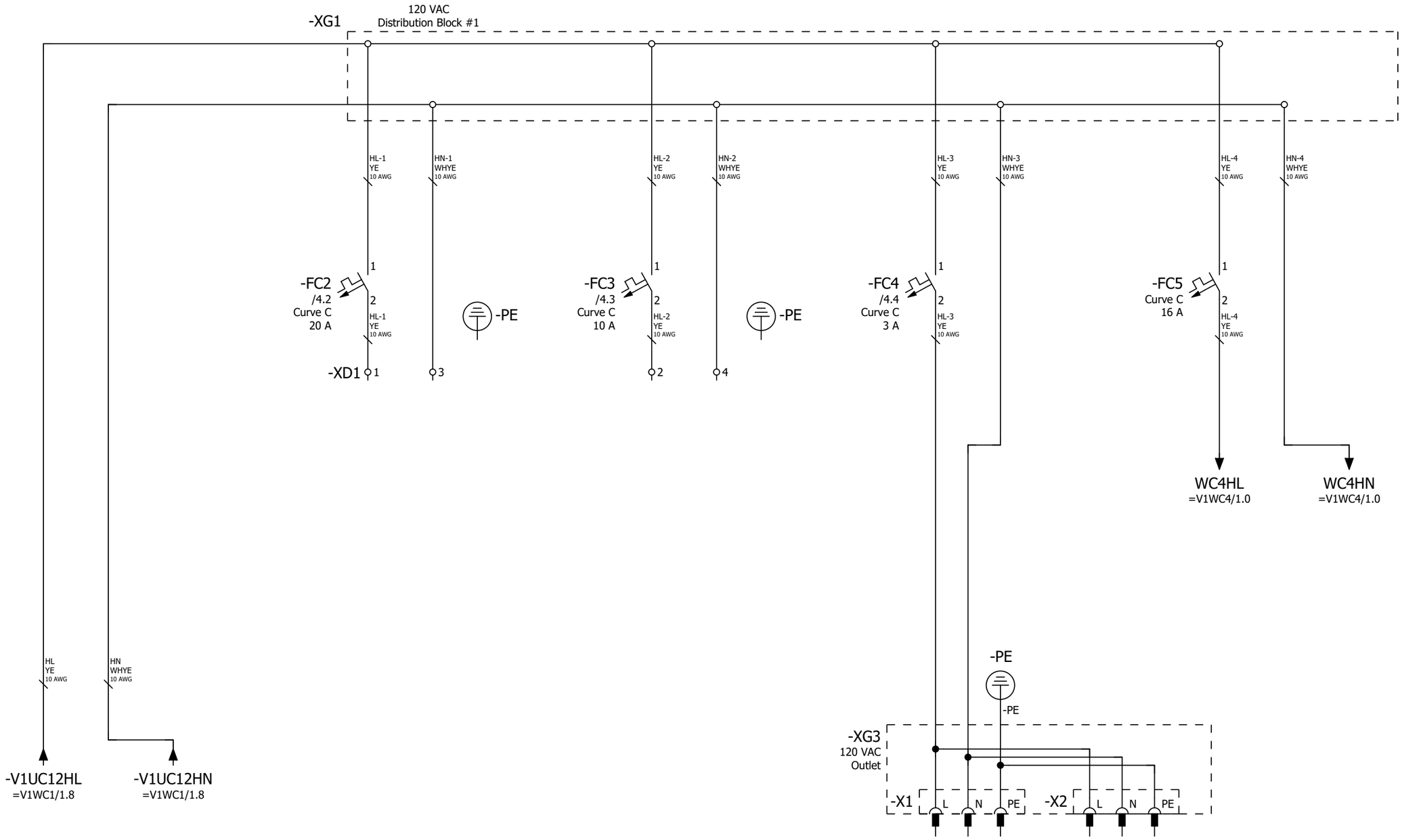

Power Distribution 120 VAC (SPARE)	Power Distribution 120 VAC (SPARE)	Power Distribution 120 VAC Programming Port	Power Distribution 120 VAC To 24VDC Power Supply
+.UC11/4			2

			Date	12/22/2022	Volvo Trucks North America	Valiant TMS	Power Distribution 120 VAC (Above Disconnect)	Drawing name: =2V04&EFS-EL	= V1WC3
			Ed.	MKLEPADLO					+ V1UC12
			Appr		P6700 Underbody Mainline - Cell 2V04	Scale 1:1		Document type: EFS	Project nr: 22-16151
Modification	Date	Name	Original		Replacement of	Replaced by			Page 1 / 1630

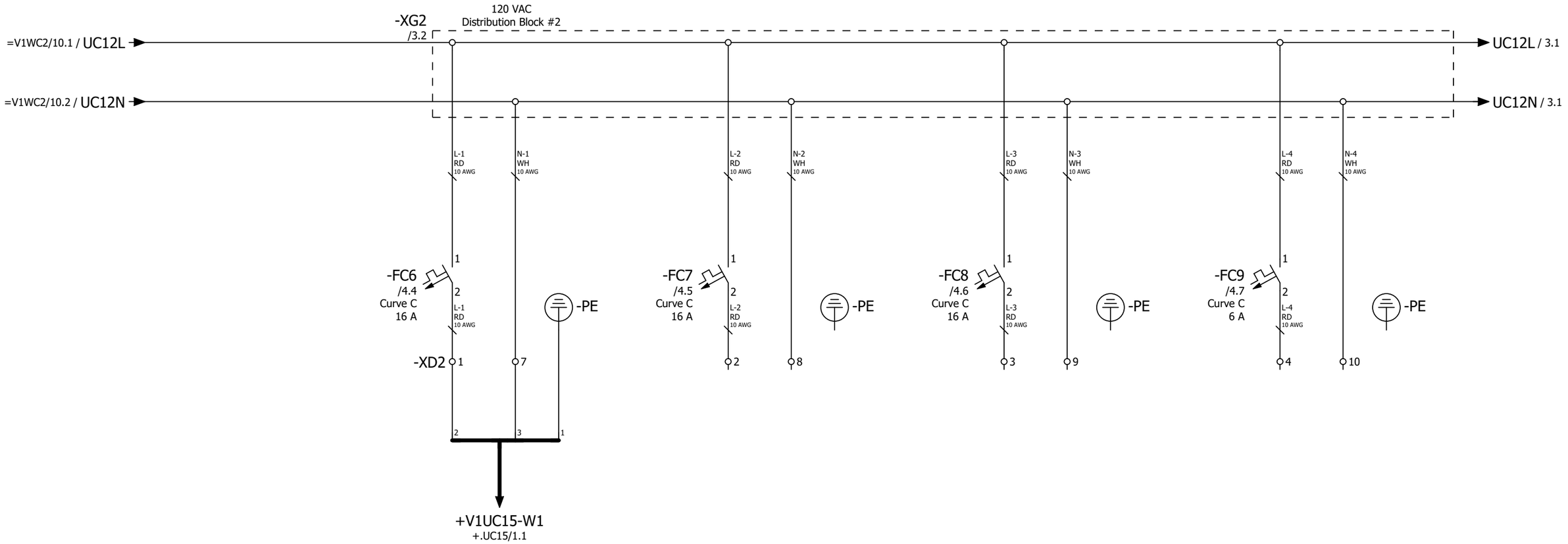

Power Distribution 120 VAC V1UC15 (RIO)	Power Distribution 120 VAC (SPARE)	Power Distribution 120 VAC (SPARE)	Power Distribution 120 VAC (SPARE)

			Date	12/22/2022	Volvo Trucks North America		Valiant TMS	Power Distribution 120 VAC (Below Disconnect)	Drawing name: =2V04&EFS-EL	= V1WC3	
			Ed.	MKLEPADLO						+ V1UC12	
			Appr		P6700 Underbody Mainline - Cell 2V04		Scale 1:1		Document type: EFS	Project nr: 22-16151	Page 2
Modification	Date	Name	Original		Replacement of	Replaced by					1630

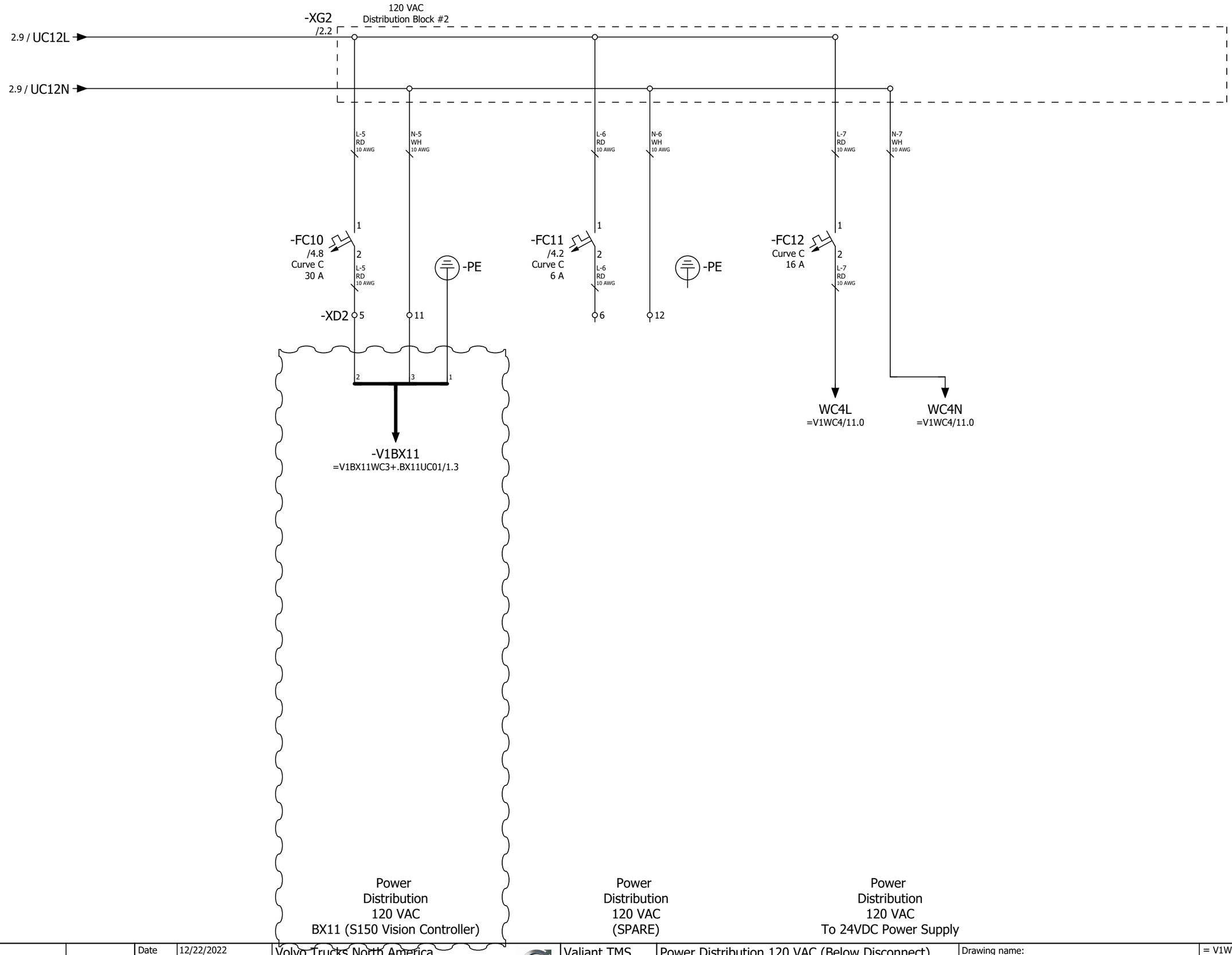

Power Distribution 120 VAC BX11 (S150 Vision Controller)

Power Distribution 120 VAC (SPARE)

Power Distribution 120 VAC To 24VDC Power Supply

			Date	12/22/2022	Volvo Trucks North America	Valiant TMS	Power Distribution 120 VAC (Below Disconnect)	Drawing name: =2V04&EFS-EL	= V1WC3	
			Ed.	MKLEPADLO					+ V1UC12	
			Appr		P6700 Underbody Mainline - Cell 2V04	Scale 1:1		Document type: EFS	Project nr: 22-16151	Page 3 / 1630
Modification	Date	Name	Original		Replacement of	Replaced by				

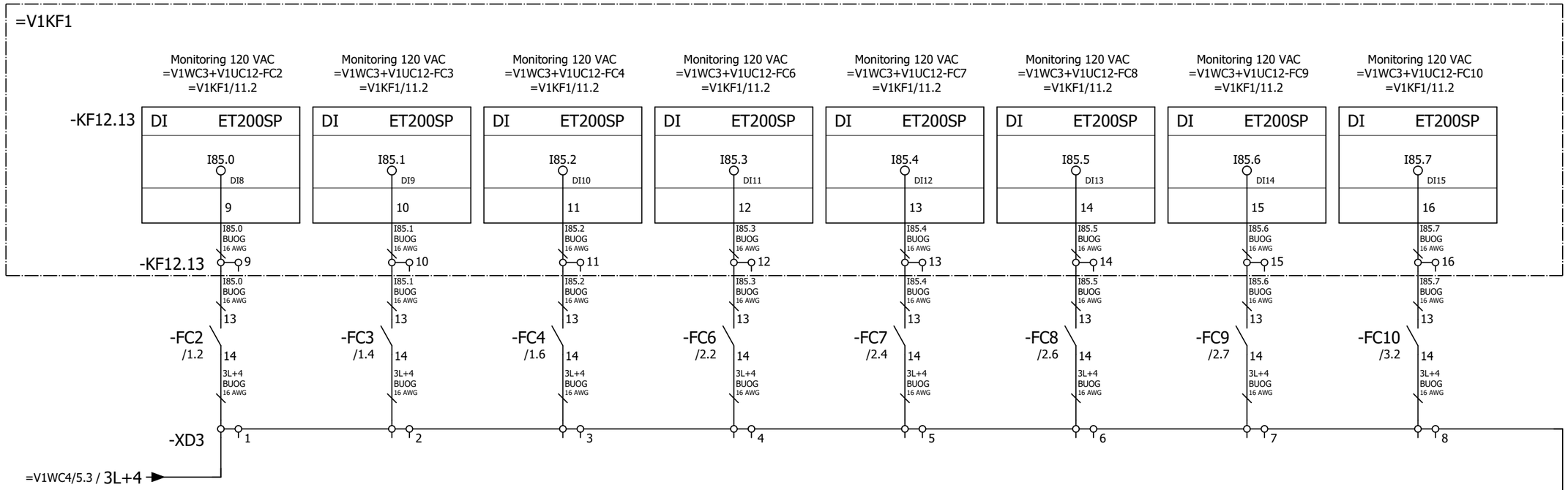

			Date	12/22/2022	Volvo Trucks North America	Valiant TMS	Power distribution 120 VAC monitoring (Above Disconnect)	Drawing name: =2V04&EFS-EL	= V1WC3
			Ed.	MKLEPADLO					+ V1UC12
			Appr		P6700 Underbody Mainline - Cell 2V04			Document type: EFS	Project nr: 22-16151
Modification	Date	Name	Original		Replacement of / Replaced by	Scale 1:1			Page 4 / 1630

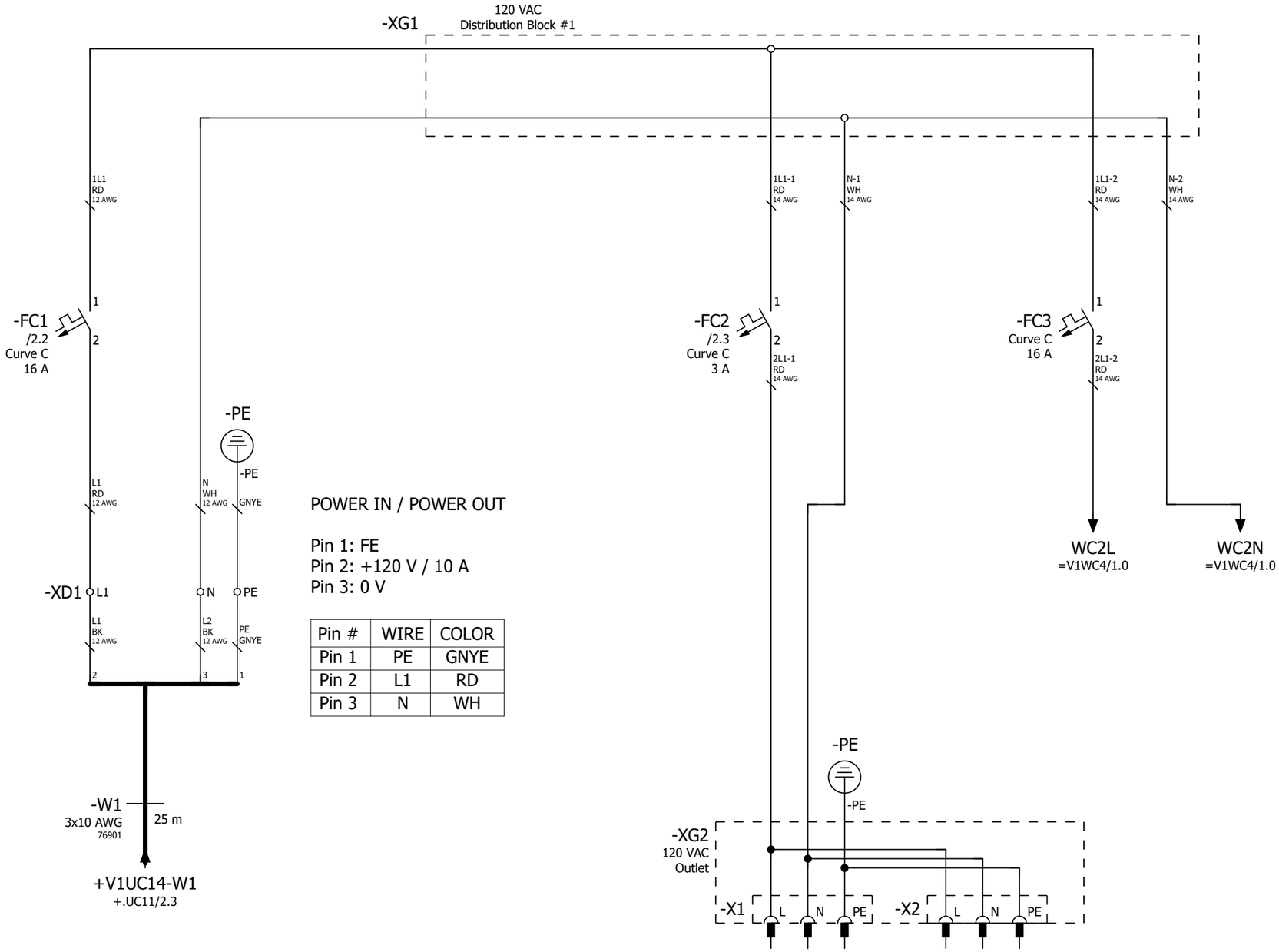

Pin #	WIRE	COLOR
Pin 1	PE	GNYE
Pin 2	L1	RD
Pin 3	N	WH

Power Distribution 120 VAC Programming Port

Power Distribution 120 VAC To 24VDC Power Supply

+.UC12/4

			Date	12/22/2022	Volvo Trucks North America	Valiant TMS	Power distribution 120 VAC	Drawing name: =2V04&EFS-EL	= V1WC3
			Ed.	MKLEPADLO					+ V1UC14
			Appr		P6700 Underbody Mainline - Cell 2V04			Document type: EFS	Project nr: 22-16151
Modification	Date	Name	Original		Replacement of / Replaced by	Scale 1:1			Page 1 / 1630

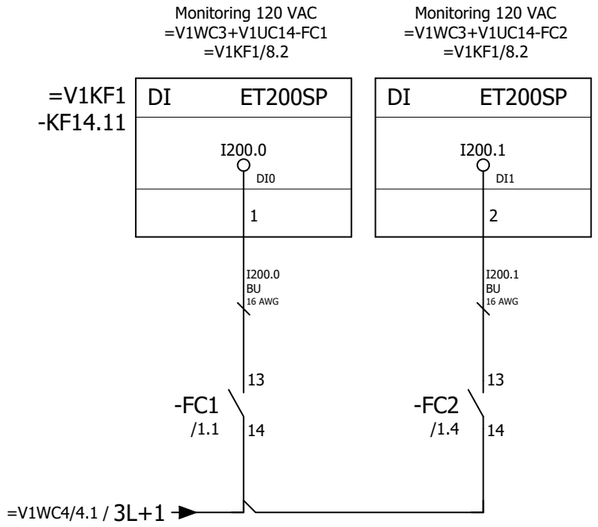

1

+.UC15/1

			Date	12/22/2022	Volvo Trucks North America	Valiant TMS	Monitoring 120VAC	Drawing name: =2V04&EFS-EL	= V1WC3	
			Ed.	MKLEPADLO					+ V1UC14	
			Appr		P6700 Underbody Mainline - Cell 2V04			Document type: EFS	Project nr: 22-16151	Page 2
Modification	Date	Name	Original		Replacement of / Replaced by	Scale 1:1				1630

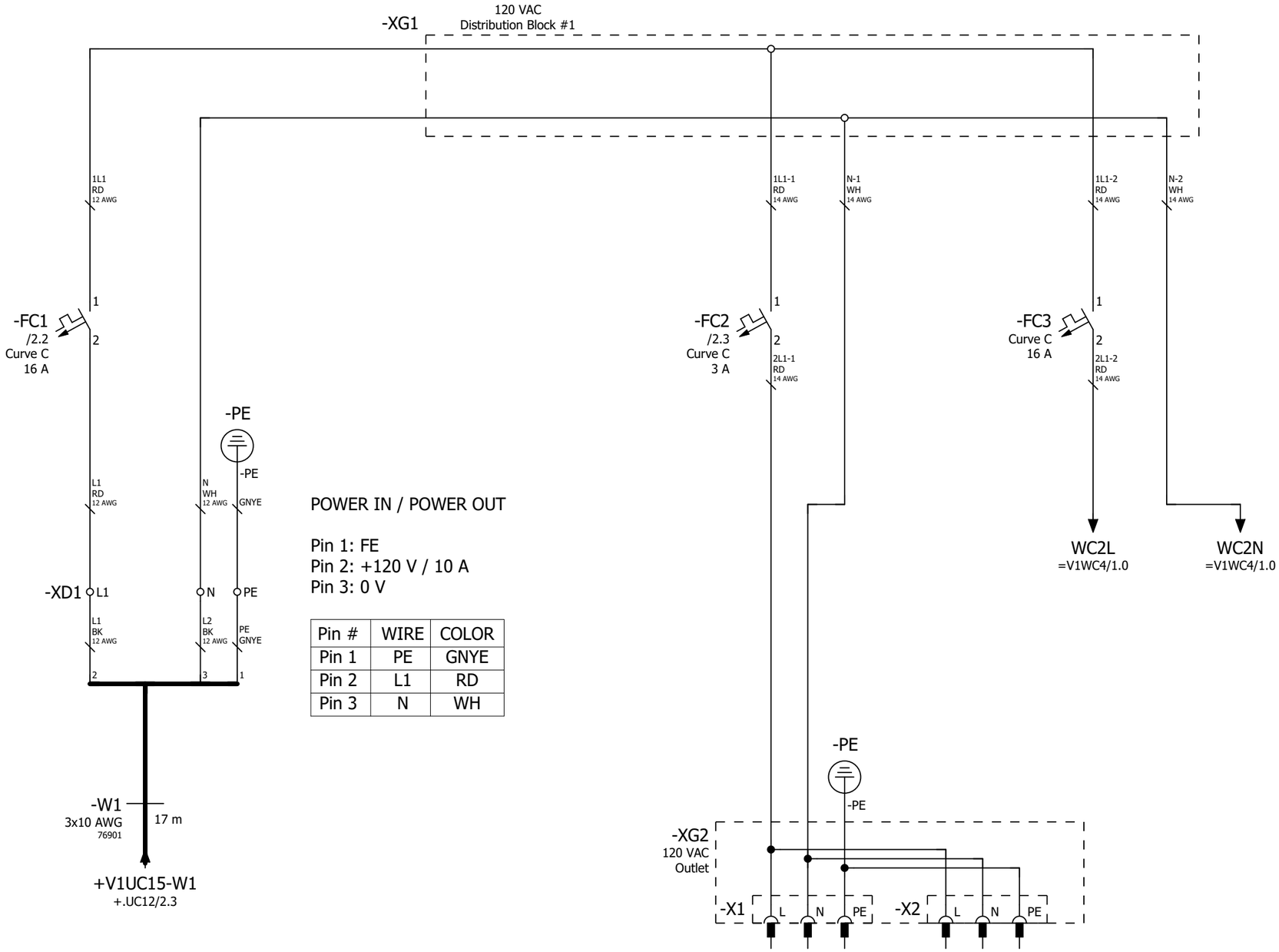

Pin #	WIRE	COLOR
Pin 1	PE	GNYE
Pin 2	L1	RD
Pin 3	N	WH

Power
Distribution
120 VAC
Programming Port

Power
Distribution
120 VAC
To 24VDC Power Supply

+.UC14/2

2

			Date	12/22/2022	Volvo Trucks North America	Valiant TMS	Power distribution 120 VAC	Drawing name: =2V04&EFS-EL	= V1WC3
			Ed.	MKLEPADLO					+ V1UC15
			Appr		P6700 Underbody Mainline - Cell 2V04			Document type: EFS	Project nr: 22-16151
Modification	Date	Name	Original		Replacement of	Replaced by	Scale 1:1		Page 1 / 1630

0	1	2	3	4	5	6	7	8	9

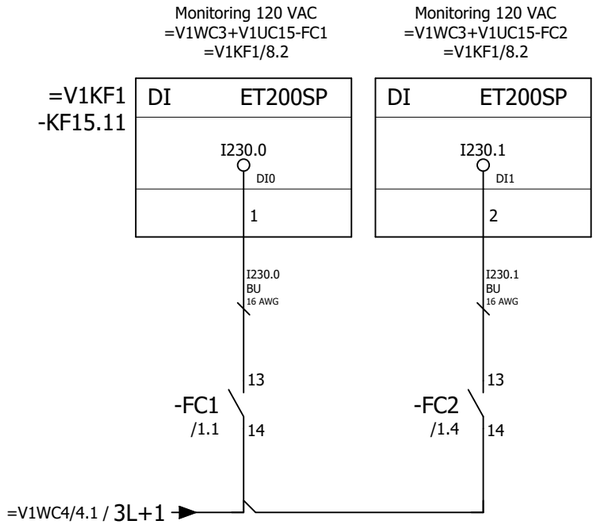

1

=V1WC4+.UC11/1

			Date	12/22/2022	Volvo Trucks North America		Valiant TMS	Monitoring 120VAC	Drawing name: =2V04&EFS-EL	= V1WC3	
			Ed.	MKLEPADLO						+ V1UC15	
			Appr		P6700 Underbody Mainline - Cell 2V04				Document type: EFS	Project nr: 22-16151	Page 2
Modification	Date	Name	Original		Replacement of	Replaced by	Scale 1:1				1630

0	1	2	3	4	5	6	7	8	9

=V1WC3/1.7 / WC4HL

=V1WC3/1.8 / WC4HN

-PE

-TA1
IN: AC 120-230 V,
DC 110-240 V
OUT: DC 24 V/20 A

L1/+ N/L2/- PE

SIEMENS
SITOP PSU6200 1ph 24 V/20 A
6EP3336-7SB00-3AX0

ADJUST
24 ... 28V
DEFAULT VALUE
24V

0 1
COM
HV
PO

>20 V CLOSED

+1 +2 -1 -2 -3 13 14

Monitoring 24VDC
=V1WC4+V1UC11-TA1_I
=V1KF1/9.2

DI ET200SP
I50.2
DI2
3

=V1KF1
-KF11.11

TA1 BUOG 16 AWG
M1 WHOG 12 AWG
-PE
3L+1 BUOG 16 AWG
I50.2 BUOG 16 AWG

=V1WC2/41.4 / TA1

M1
2.1

-XD5 1

-FC11
In: DC 24V
Out: 8 x DC 24V/10A

SIEMENS
SITOP SEL1200 8 x 10A
6EP4438-7FB00-3DX0

0 1
COM
TD2
TD1

24V1 INPUT 24V2

E--- RESET

CONTROL LOGIC

Monitoring 24VDC
=V1WC4+V1UC11-FC11_I
=V1KF1/9.2

DI ET200SP
I50.4
DI4
5

=V1KF1
-KF11.11

13 14 NF RST 0V1 0V2

3L+1 BUOG 16 AWG
I50.4 BUOG 16 AWG

=V1WC2/41.5 / FC11

2.1 / 1M1

OUTPUT

1 2 3 4 5 6 7 8

1L+ BUOG 16 AWG
2L+ BUOG 16 AWG
3L+ BUOG 16 AWG
4L+ BUOG 16 AWG
5L+ RD 16 AWG
6L+ RD 16 AWG
7L+ RD 16 AWG
8L+ RD 16 AWG

3.1 / -1L+
4.1 / -2L+
5.1 / -3L+
6.1 / -4L+
20.5 / -5L+
21.5 / -6L+
22.5 / -7L+
23.5 / -8L+

=V1WC3+.UC15/2

2

			Date	12/22/2022	Volvo Trucks North America	Valiant TMS	Power distribution 24VDC (Above Disconnect)	Drawing name: =2V04&EFS-EL / = V1WC4 / + V1UC11
			Ed.	MKLEPADLO				
			Appr		P6700 Underbody Mainline - Cell 2V04			Document type: EFS / Project nr: 22-16151 / Page 1 / 1630
Modification	Date	Name	Original		Replacement of / Replaced by	Scale 1:1		

1 3

			Date	12/22/2022	Volvo Trucks North America	Valiant TMS	Power distribution 24VDC HL+	Drawing name: =2V04&EFS-EL	= V1WC4	
			Ed.	MKLEPADLO					+ V1UC11	
			Appr		P6700 Underbody Mainline - Cell 2V04			Document type: EFS	Project nr: 22-16151	Page 2
Modification	Date	Name	Original		Replacement of / Replaced by	Scale 1:1				1630

0	1	2	3	4	5	6	7	8	9

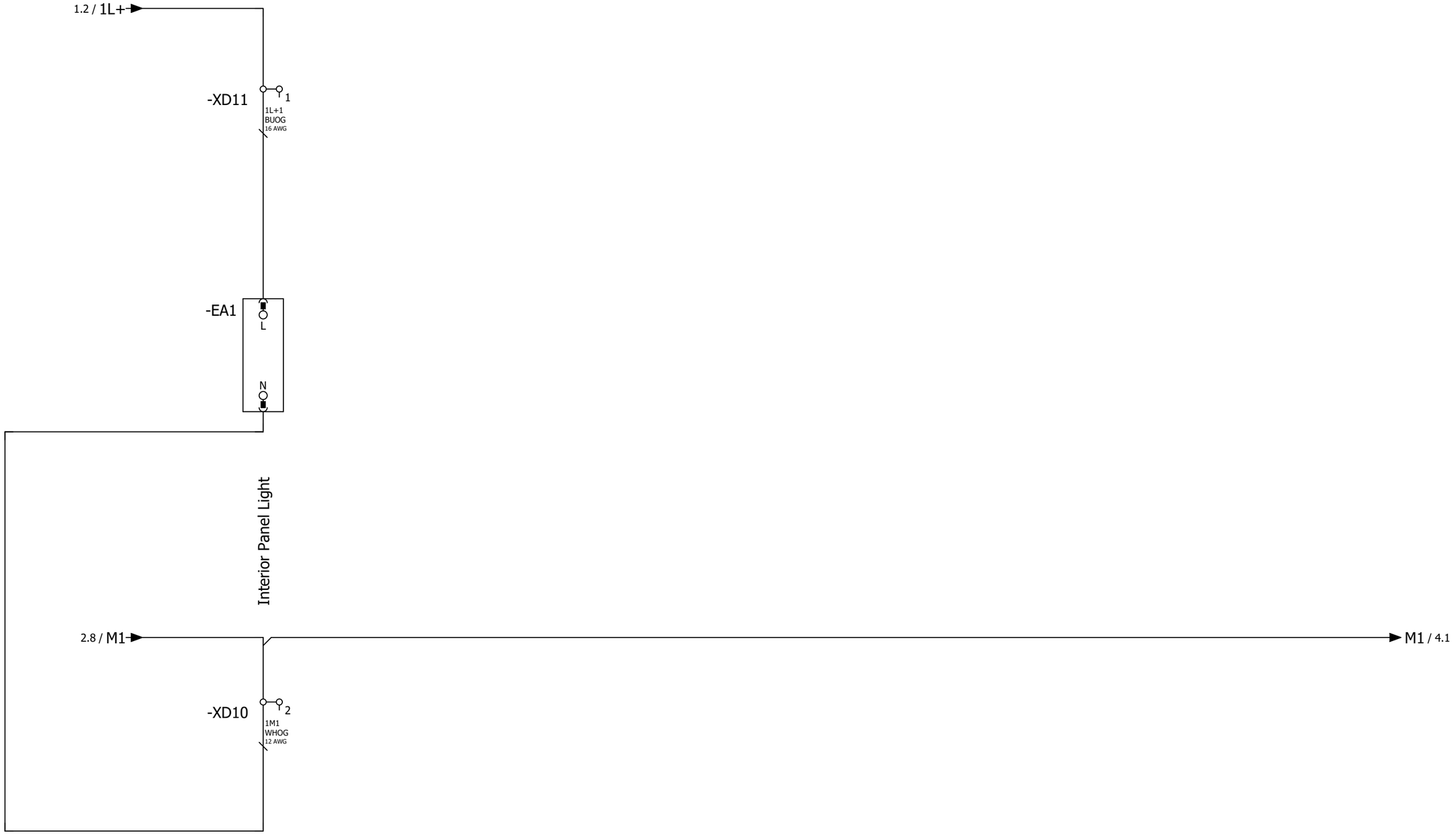

			Date	12/22/2022	Volvo Trucks North America		Valiant TMS	Power distribution 24VDC 1L+	Drawing name: =2V04&EFS-EL	= V1WC4	
			Ed.	MKLEPADLO						+ V1UC11	
			Appr		P6700 Underbody Mainline - Cell 2V04				Document type: EFS	Project nr: 22-16151	Page 3
Modification	Date	Name	Original		Replacement of	Replaced by	Scale 1:1				1630

0	1	2	3	4	5	6	7	8	9

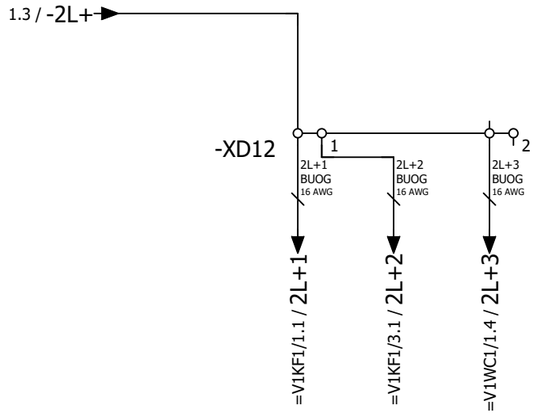

XC216 Profinet Switch

IM155 PN

Main Circuit Breaker

3 5

			Date	12/22/2022	Volvo Trucks North America		Valiant TMS	Power distribution 24VDC 2L+	Drawing name: =2V04&EFS-EL	= V1WC4	
			Ed.	MKLEPADLO						+ V1UC11	
			Appr		P6700 Underbody Mainline - Cell 2V04				Document type: EFS	Project nr: 22-16151	Page 4
Modification	Date	Name	Original		Replacement of	Replaced by	Scale 1:1				1630

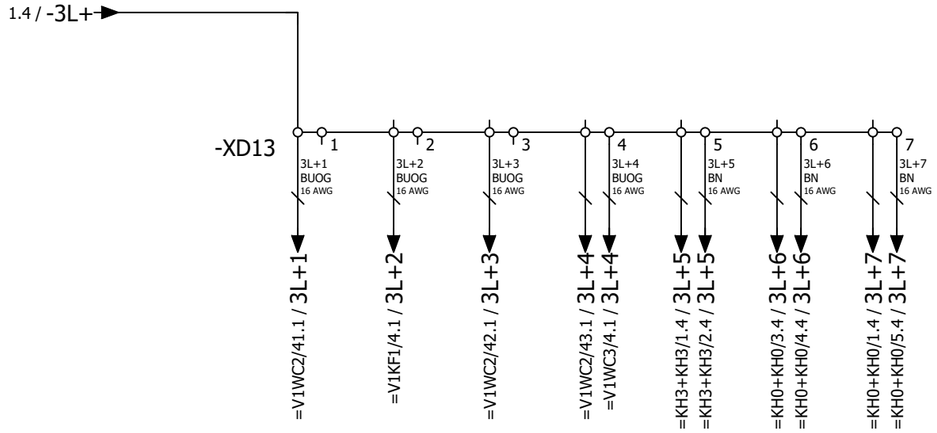

Power feedback signals Distribution Modules

Power Input Cards (DI+FDI)

Power feedback signals Circuit Breakers

Power feedback signals Circuit Breakers

Power Main Water On Monitoring, Power Water Filter Dirty Monitoring

Power Air Monitoring S110, S120

Power Main Air Monitoring, S130

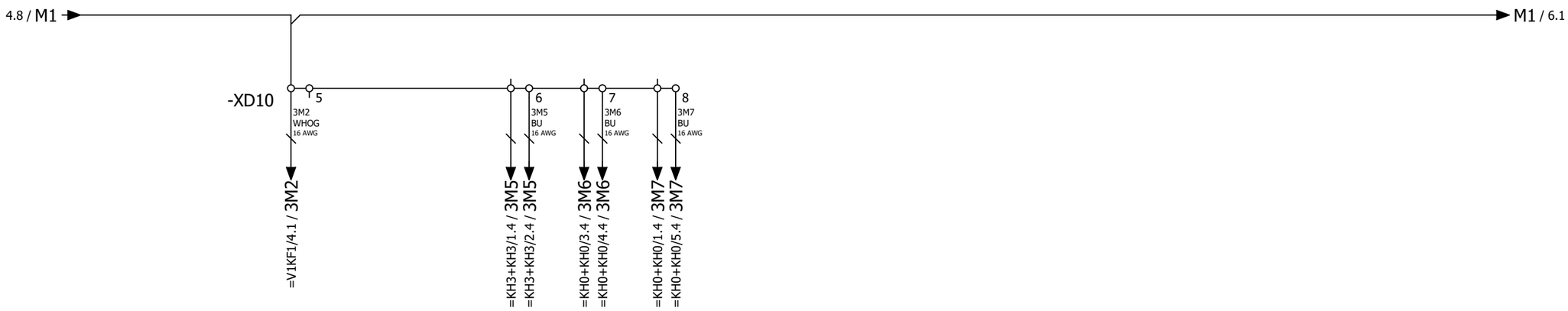

			Date	12/22/2022	Volvo Trucks North America	Valiant TMS	Power distribution 24VDC 3L+	Drawing name: =2V04&EFS-EL	= V1WC4	
			Ed.	MKLEPADLO					+ V1UC11	
			Appr		P6700 Underbody Mainline - Cell 2V04	Scale 1:1		Document type: EFS	Project nr: 22-16151	Page 5 / 1630
Modification	Date	Name	Original		Replacement of / Replaced by					

0	1	2	3	4	5	6	7	8	9

1.5 / -4L+

-XD14

1

2

4L+1
BUOG
16 AWG

4L+2
BN
18 AWG

=V1KF1/7.1 / 4L+1

=V1FQ1+.FQ1/9.1 / 4L+2

Power Output Cards (DQ+FDQ+FRQ)

Power Light Screen
2V03/2V04 S100 Conveyor

5.8 / M1

M1 / 7.1

-XD10

9

10

4M1
WHOG
16 AWG

4M2
BU
18 AWG

=V1KF1/7.1 / 4M1

=V1FQ1+.FQ1/9.1 / 4M2

5

7

			Date	12/22/2022	Volvo Trucks North America	Valiant TMS	Power distribution 24VDC 4L+	Drawing name: =2V04&EFS-EL	= V1WC4	
			Ed.	MKLEPADLO					+ V1UC11	
			Appr		P6700 Underbody Mainline - Cell 2V04			Document type: EFS	Project nr: 22-16151	Page 6
Modification	Date	Name	Original		Replacement of	Replaced by	Scale 1:1			1630

0	1	2	3	4	5	6	7	8	9

6 8

			Date	12/22/2022	Volvo Trucks North America	Valiant TMS	Power distribution 24VDC 5L+	Drawing name: =2V04&EFS-EL		= V1WC4	
			Ed.	MKLEPADLO						+ V1UC11	
			Appr		P6700 Underbody Mainline - Cell 2V04			Document type: EFS	Project nr: 22-16151	Page	7
Modification	Date	Name	Original		Replacement of	Replaced by	Scale 1:1				1630

			Date	12/22/2022	Volvo Trucks North America	Valiant TMS	Power distribution 24VDC 6L+	Drawing name: =2V04&EFS-EL		= V1WC4	
			Ed.	MKLEPADLO						+ V1UC11	
			Appr		P6700 Underbody Mainline - Cell 2V04			Document type: EFS	Project nr: 22-16151	Page	8
Modification	Date	Name	Original		Replacement of	Replaced by	Scale 1:1				1630

8 10

			Date	12/22/2022	Volvo Trucks North America	Valiant TMS	Power distribution 24VDC 7L+	Drawing name: =2V04&EFS-EL		= V1WC4	
			Ed.	MKLEPADLO						+ V1UC11	
			Appr		P6700 Underbody Mainline - Cell 2V04			Document type: EFS	Project nr: 22-16151	Page	9
Modification	Date	Name	Original		Replacement of	Replaced by	Scale 1:1				1630

0	1	2	3	4	5	6	7	8	9

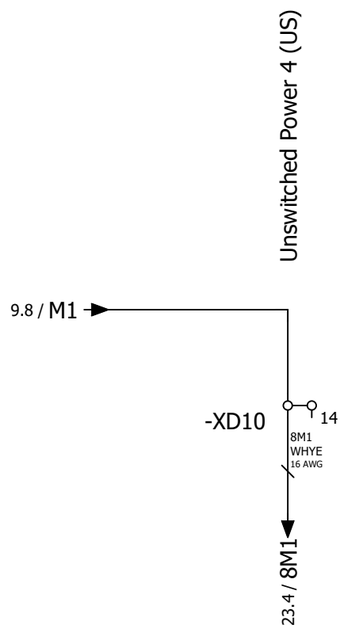

			Date	12/22/2022	Volvo Trucks North America	Valiant TMS	Power distribution 24VDC 8L+	Drawing name: =2V04&EFS-EL		= V1WC4	
			Ed.	MKLEPADLO						+ V1UC11	
			Appr		P6700 Underbody Mainline - Cell 2V04			Document type: EFS	Project nr: 22-16151	Page	10
Modification	Date	Name	Original		Replacement of	Replaced by	Scale 1:1				1630

0	1	2	3	4	5	6	7	8	9

=V1WC3/3.6 / WC4L

=V1WC3/3.7 / WC4N

-PE

-TA2
IN: AC 120-230 V,
DC 110-240 V
OUT: DC 24 V/20 A

L1/+ N/L2/- PE

SIEMENS
SITOP PSU6200 1ph 24 V/20 A
6EP3336-7SB00-3AX0

ADJUST
24 ... 28V
DEFAULT VALUE
24V

COM HV PO

>20 V CLOSED

+1 +2 -1 -2 -3 13 14

Monitoring 24VDC
=V1WC4+V1UC11-TA2_I
=V1KF1/9.2

DI ET200SP
I50.3
DI3
4

=V1KF1
-KF11.11

TA2 BU 16 AWG
M2 WHBU 12 AWG
-PE
3L+1 BUOG 16 AWG
I50.3 BUOG 16 AWG

=V1WC2/41.4 / TA2

M2
12.1

-XD6 1

-FC12
In: DC 24V
Out: 8 x DC 24V/10A

SIEMENS
SITOP SEL1200 8 x 10A
6EP4438-7FB00-3DX0

COM TD2 TD1

24V1 INPUT 24V2

E--- RESET

CONTROL LOGIC

13 14 NF RST 0V1 0V2

OUTPUT

1 2 3 4 5 6 7 8

Monitoring 24VDC
=V1WC4+V1UC11-FC12_I
=V1KF1/9.2

DI ET200SP
I50.5
DI5
6

=V1KF1
-KF11.11

3L+1 BUOG 16 AWG
I50.5 BUOG 16 AWG
=V1WC2/41.6 / FC12

19.8 / M2

11L+ BU 16 AWG
12L+ BU 16 AWG
13L+ BU 16 AWG
14L+ BU 16 AWG
15L+ RD 16 AWG
16L+ RD 16 AWG
17L+ RD 16 AWG
18L+ RD 16 AWG

12.1 / -11L+
13.1 / -12L+
14.1 / -13L+
15.1 / -14L+
24.5 / -15L+
25.5 / -16L+
26.5 / -17L+
27.5 / -18L+

10 12

			Date	12/22/2022	Volvo Trucks North America	Valiant TMS	Power distribution 24VDC (Below Disconnect)	Drawing name: =2V04&EFS-EL	= V1WC4
			Ed.	MKLEPADLO					+ V1UC11
			Appr		P6700 Underbody Mainline - Cell 2V04			Document type: EFS	Project nr: 22-16151	Page 11
Modification	Date	Name	Original		Replacement of	Replaced by	Scale 1:1			1630

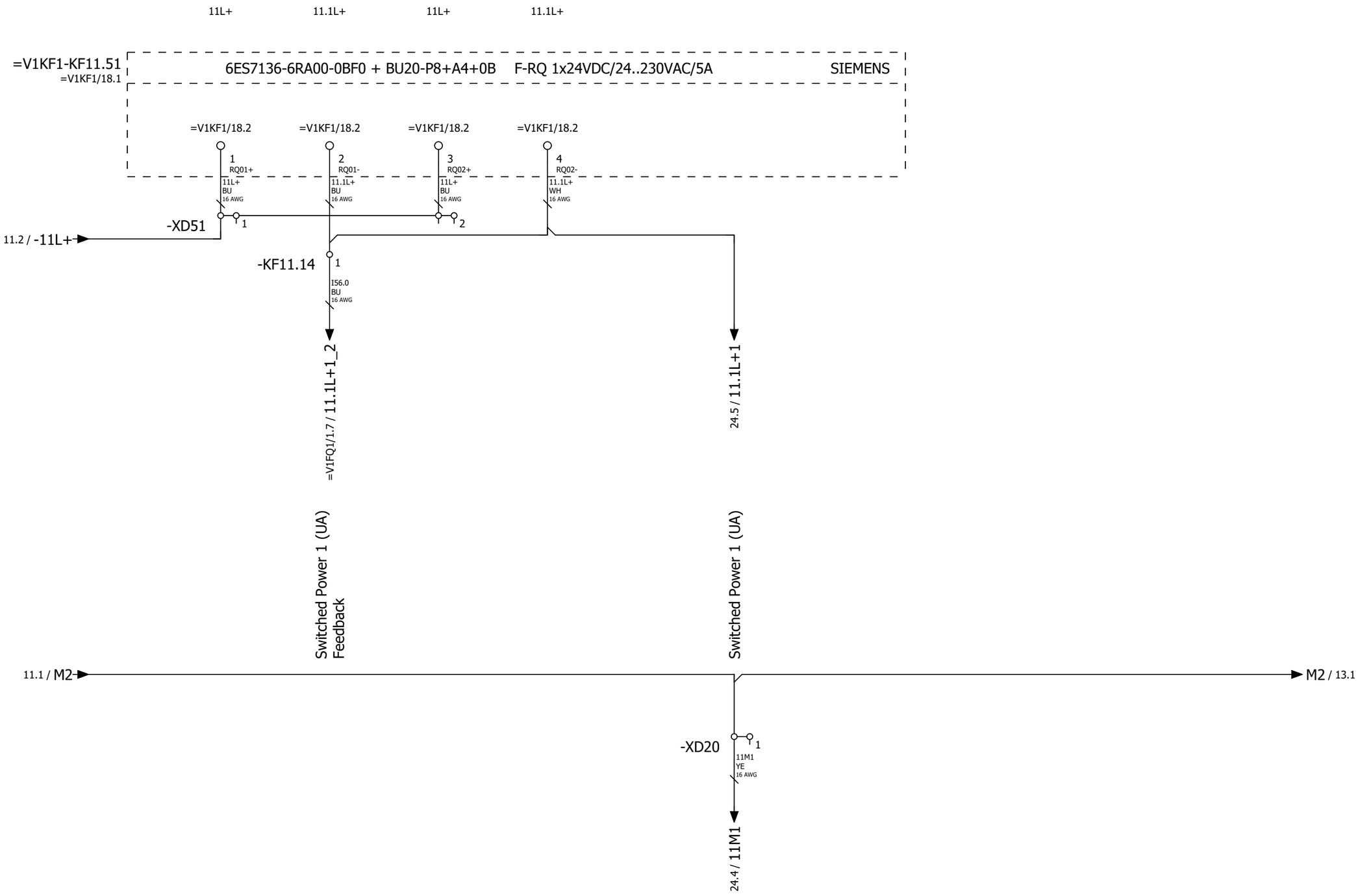

			Date	12/22/2022	Volvo Trucks North America		Valiant TMS	Power distribution 24VDC 11L+	Drawing name: =2V04&EFS-EL	= V1WC4	
			Ed.	MKLEPADLO						+ V1UC11	
			Appr		P6700 Underbody Mainline - Cell 2V04				Document type: EFS	Project nr: 22-16151	Page 12
Modification	Date	Name	Original		Replacement of	Replaced by	Scale 1:1				1630

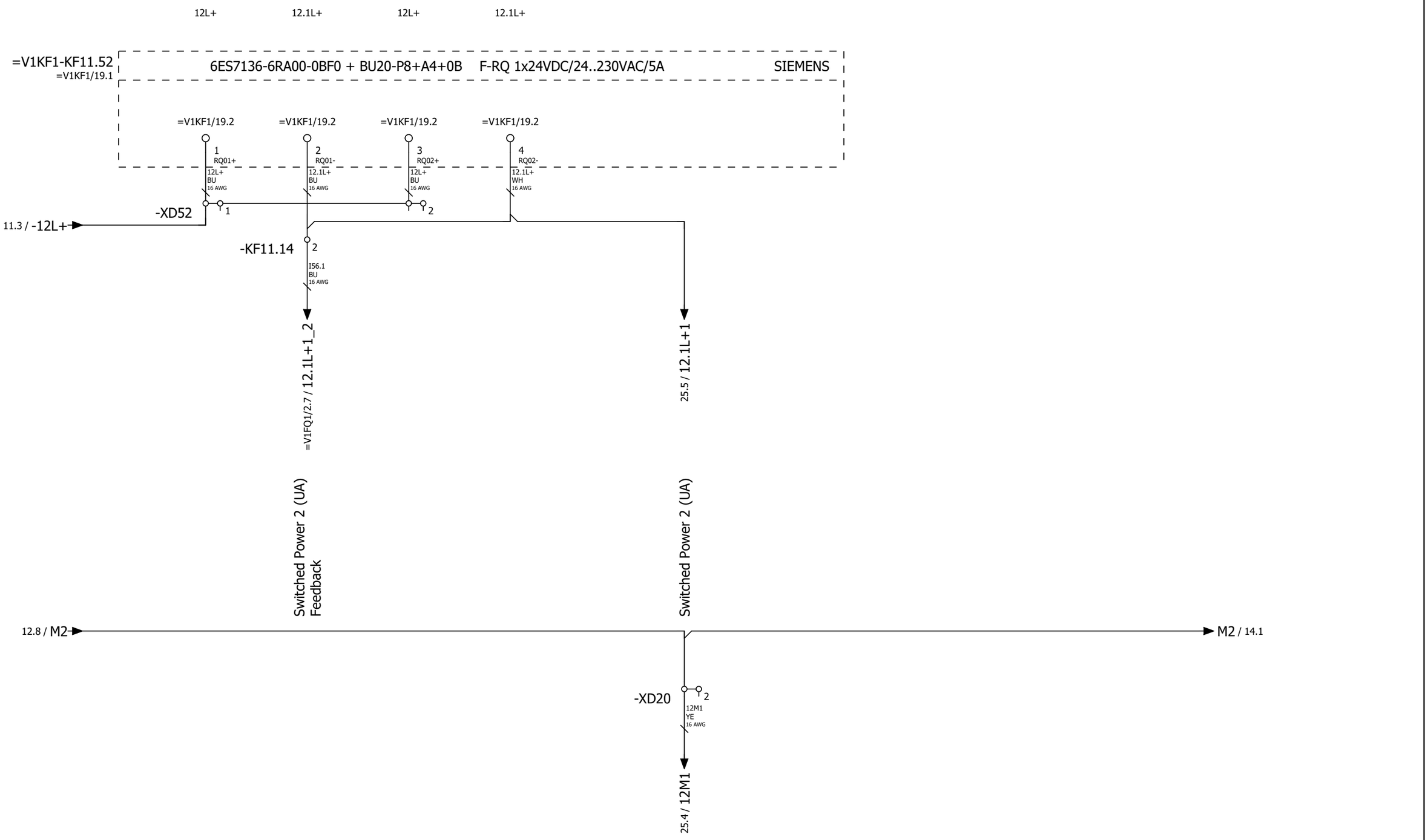

12

14

			Date	12/22/2022	Volvo Trucks North America		Valiant TMS	Power distribution 24VDC 12L+	Drawing name: =2V04&EFS-EL	= V1WC4	
			Ed.	MKLEPADLO						+ V1UC11	
			Appr		P6700 Underbody Mainline - Cell 2V04				Document type: EFS	Project nr: 22-16151	Page 13
Modification	Date	Name	Original		Replacement of	Replaced by	Scale 1:1				1630

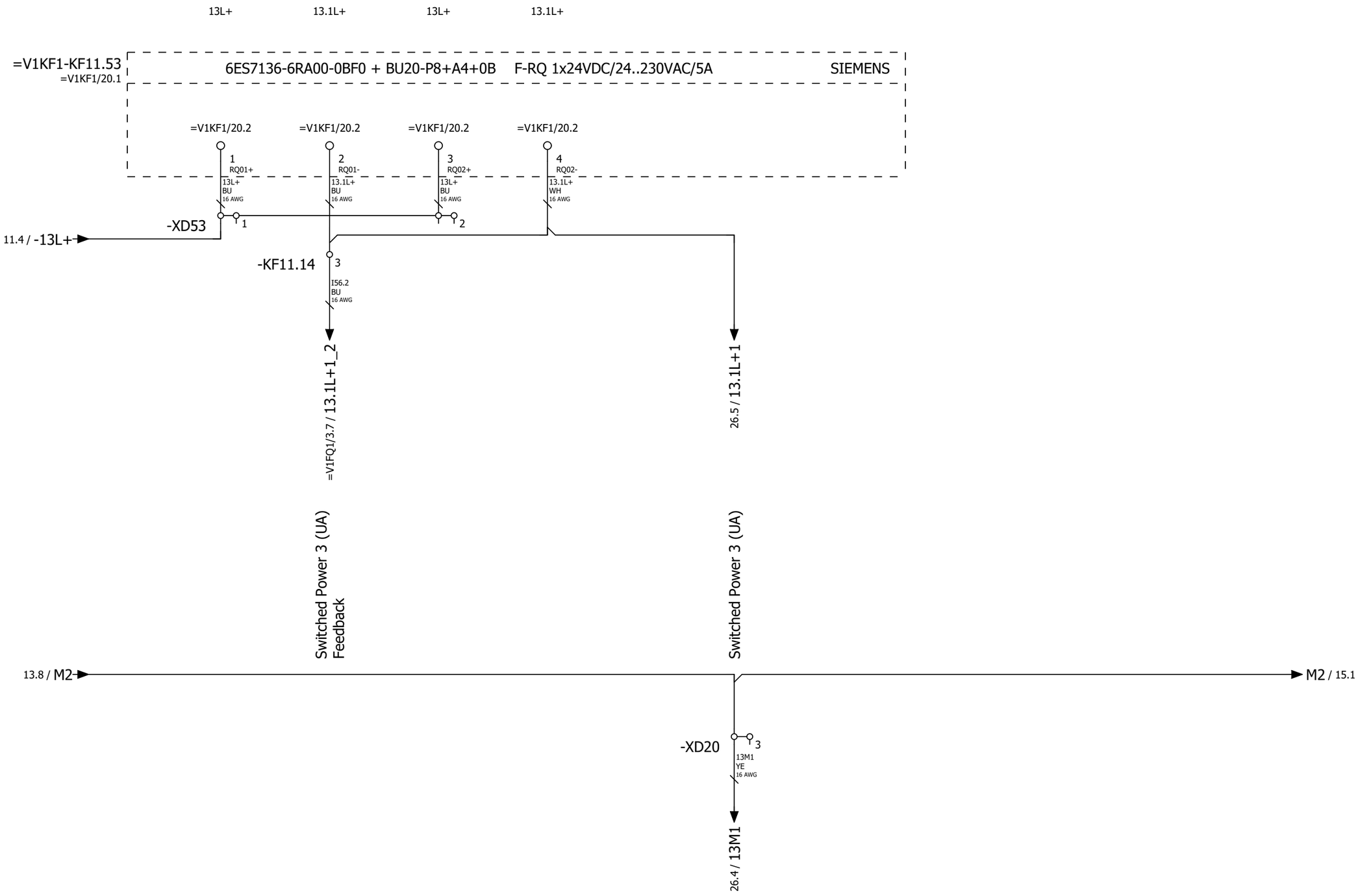

			Date	12/22/2022	Volvo Trucks North America		Valiant TMS	Power distribution 24VDC 13L+	Drawing name: =2V04&EFS-EL	= V1WC4	
			Ed.	MKLEPADLO						+ V1UC11	
			Appr		P6700 Underbody Mainline - Cell 2V04				Document type: EFS	Project nr: 22-16151	Page 14
Modification	Date	Name	Original		Replacement of	Replaced by	Scale 1:1				1630

0	1	2	3	4	5	6	7	8	9

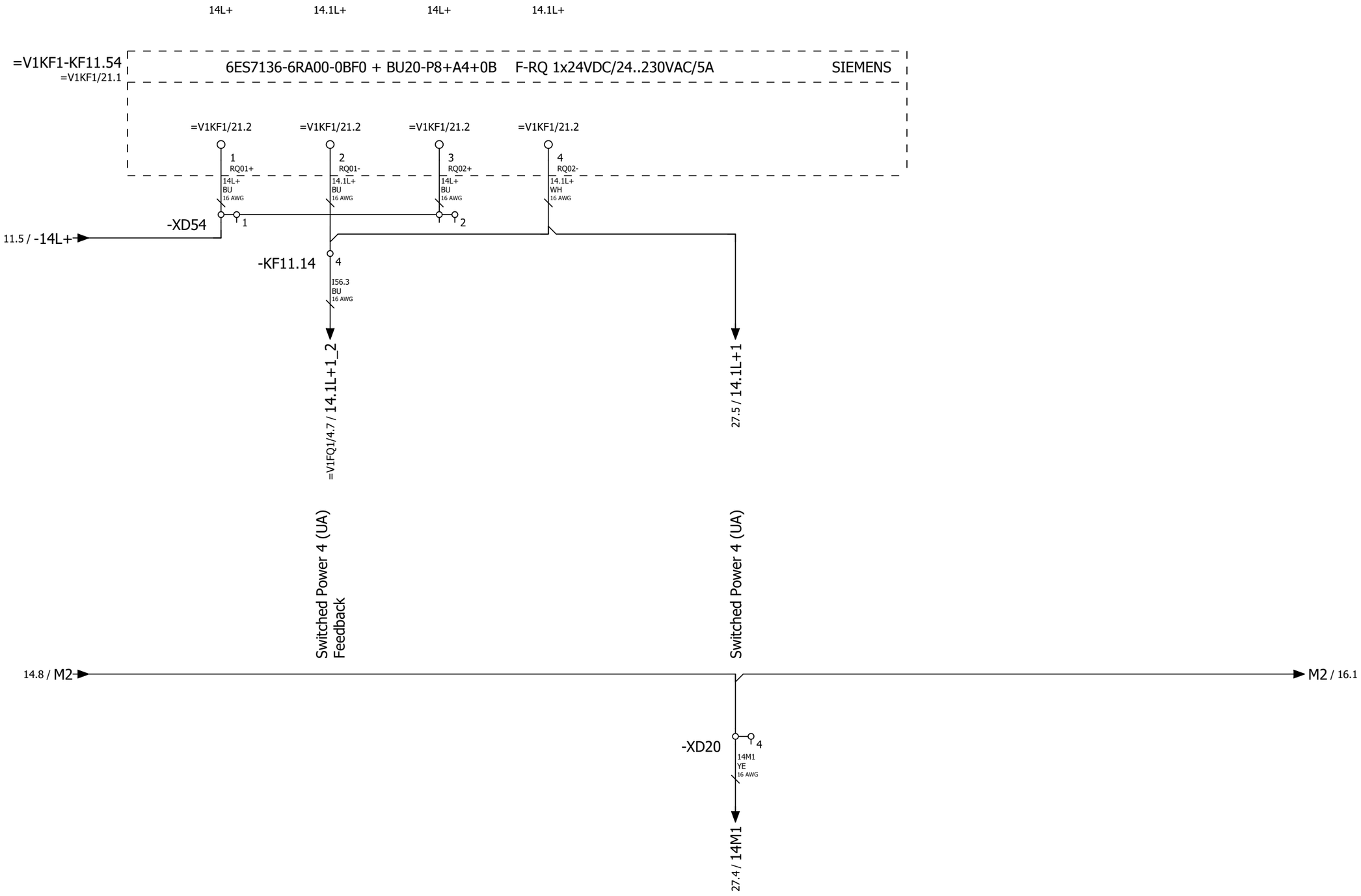

14

16

			Date	12/22/2022	Volvo Trucks North America	Valiant TMS	Power distribution 24VDC 14L+	Drawing name: =2V04&EFS-EL	= V1WC4
			Ed.	MKLEPADLO					+ V1UC11
			Appr		P6700 Underbody Mainline - Cell 2V04	Scale 1:1		Document type: EFS	Project nr: 22-16151
Modification	Date	Name	Original		Replacement of	Replaced by			Page 15 / 1630

0	1	2	3	4	5	6	7	8	9

15

17

			Date	12/22/2022	Volvo Trucks North America		Valiant TMS	Power distribution 24VDC 15L+	Drawing name: =2V04&EFS-EL	= V1WC4	
			Ed.	MKLEPADLO						+ V1UC11	
			Appr		P6700 Underbody Mainline - Cell 2V04				Document type: EFS	Project nr: 22-16151	Page 16
Modification	Date	Name	Original		Replacement of	Replaced by	Scale 1:1				1630

			Date	12/22/2022	Volvo Trucks North America	Valiant TMS	Power distribution 24VDC 16L+	Drawing name: =2V04&EFS-EL		= V1WC4	
			Ed.	MKLEPADLO						+ V1UC11	
			Appr		P6700 Underbody Mainline - Cell 2V04			Document type: EFS	Project nr: 22-16151	Page	17
Modification	Date	Name	Original		Replacement of / Replaced by	Scale 1:1					1630

17

19

			Date	12/22/2022	Volvo Trucks North America	Valiant TMS	Power distribution 24VDC 17L+	Drawing name: =2V04&EFS-EL	= V1WC4 + V1UC11
			Ed.	MKLEPADLO	P6700 Underbody Mainline - Cell 2V04				
			Appr					Document type: EFS	Project nr: 22-16151
Modification	Date	Name	Original		Replacement of / Replaced by	Scale 1:1			Page 18 / 1630

			Date	12/22/2022	Volvo Trucks North America	Valiant TMS	Power distribution 24VDC 18L+	Drawing name: =2V04&EFS-EL		= V1WC4	
			Ed.	MKLEPADLO						+ V1UC11	
			Appr		P6700 Underbody Mainline - Cell 2V04			Document type: EFS	Project nr: 22-16151	Page	19
Modification	Date	Name	Original		Replacement of	Replaced by	Scale 1:1				1630

0	1	2	3	4	5	6	7	8	9

+.UC11

/ 7.1

/ 1.6

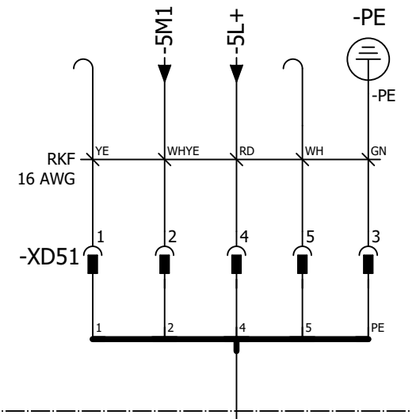

POWER IN / POWER OUT

Pin 1: 0 V UA
Pin 2: 0 V US
Pin 3: FE
Pin 4: +24 V US / 9 A
Pin 5: +24 V UA / 9 A

Pin #	WIRE	COLOR
Pin 1	N/C	YE
Pin 2	-5M1	WHYE
Pin 3	GND	GN
Pin 4	-5L+	RD
Pin 5	N/C	WH

+.FQ1-BG2
=V1FQ1+.FQ1/2.3

			Date	12/22/2022	Volvo Trucks North America	Valiant TMS	24VDC Unswitched Power 1	Drawing name: =2V04&EFS-EL	= V1WC4
			Ed.	MKLEPADLO					+ V1UC11
			Appr		P6700 Underbody Mainline - Cell 2V04	Scale 1:1		Document type: EFS	Project nr: 22-16151
Modification	Date	Name	Original		Replacement of	Replaced by			Page 20 / 1630

0	1	2	3	4	5	6	7	8	9

+.UC11

/ 8.1

/ 1.7

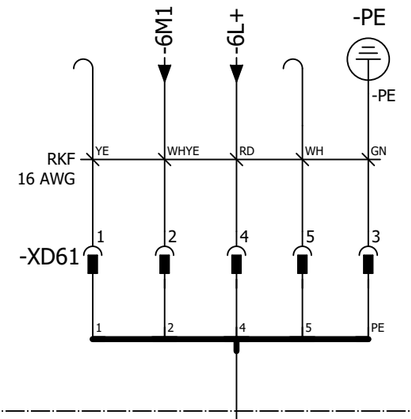

POWER IN / POWER OUT

Pin 1: 0 V UA
Pin 2: 0 V US
Pin 3: FE
Pin 4: +24 V US / 9 A
Pin 5: +24 V UA / 9 A

Pin #	WIRE	COLOR
Pin 1	N/C	YE
Pin 2	-6M1	WHYE
Pin 3	GND	GN
Pin 4	-6L+	RD
Pin 5	N/C	WH

+.FQ1-BG3
=V1FQ1+.FQ1/3.3

			Date	12/22/2022	Volvo Trucks North America	Valiant TMS	24VDC Unswitched Power 2	Drawing name: =2V04&EFS-EL	= V1WC4
			Ed.	MKLEPADLO					+ V1UC11
			Appr		P6700 Underbody Mainline - Cell 2V04	Scale 1:1		Document type: EFS	Project nr: 22-16151
Modification	Date	Name	Original		Replacement of	Replaced by			Page 21 / 1630

0	1	2	3	4	5	6	7	8	9

+.UC11

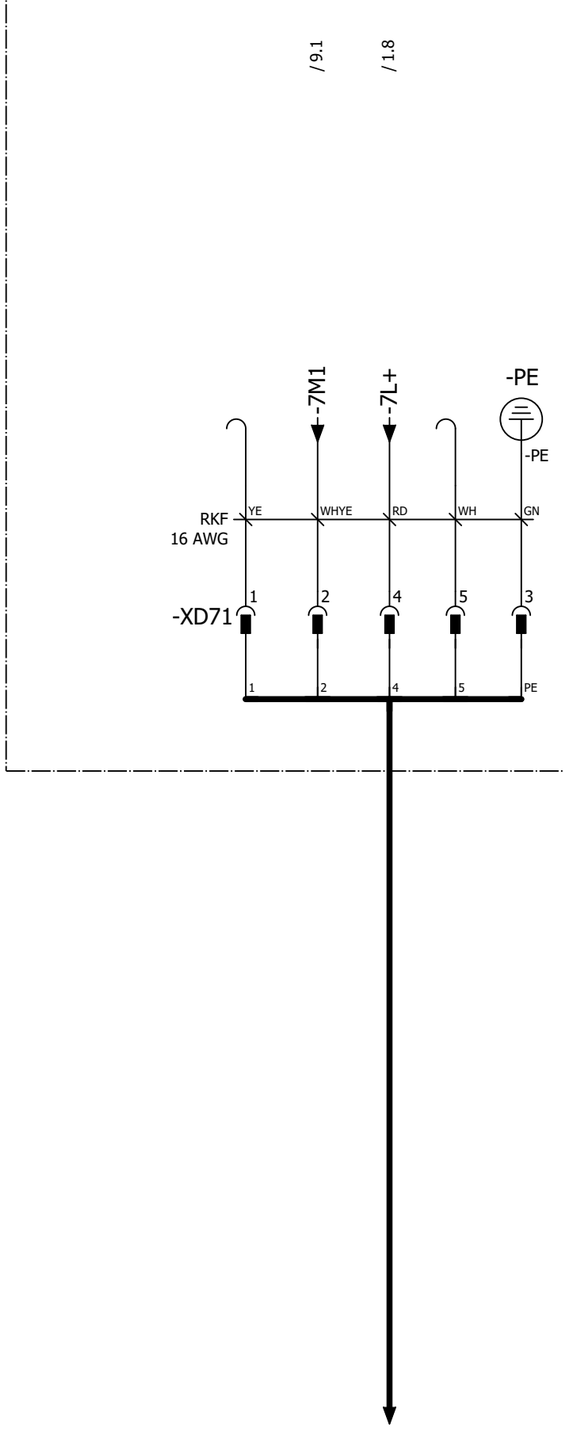

POWER IN / POWER OUT

Pin 1: 0 V UA
Pin 2: 0 V US
Pin 3: FE
Pin 4: +24 V US / 9 A
Pin 5: +24 V UA / 9 A

Pin #	WIRE	COLOR
Pin 1	N/C	YE
Pin 2	-7M1	WHYE
Pin 3	GND	GN
Pin 4	-7L+	RD
Pin 5	N/C	WH

			Date	12/22/2022	Volvo Trucks North America	Valiant TMS	24VDC Unswitched Power 3	Drawing name: =2V04&EFS-EL	= V1WC4
			Ed.	MKLEPADLO					+ V1UC11
			Appr		P6700 Underbody Mainline - Cell 2V04			Document type: EFS	Project nr: 22-16151
Modification	Date	Name	Original		Replacement of	Replaced by	Scale 1:1		Page 22 / 1630

0	1	2	3	4	5	6	7	8	9

+.UC11

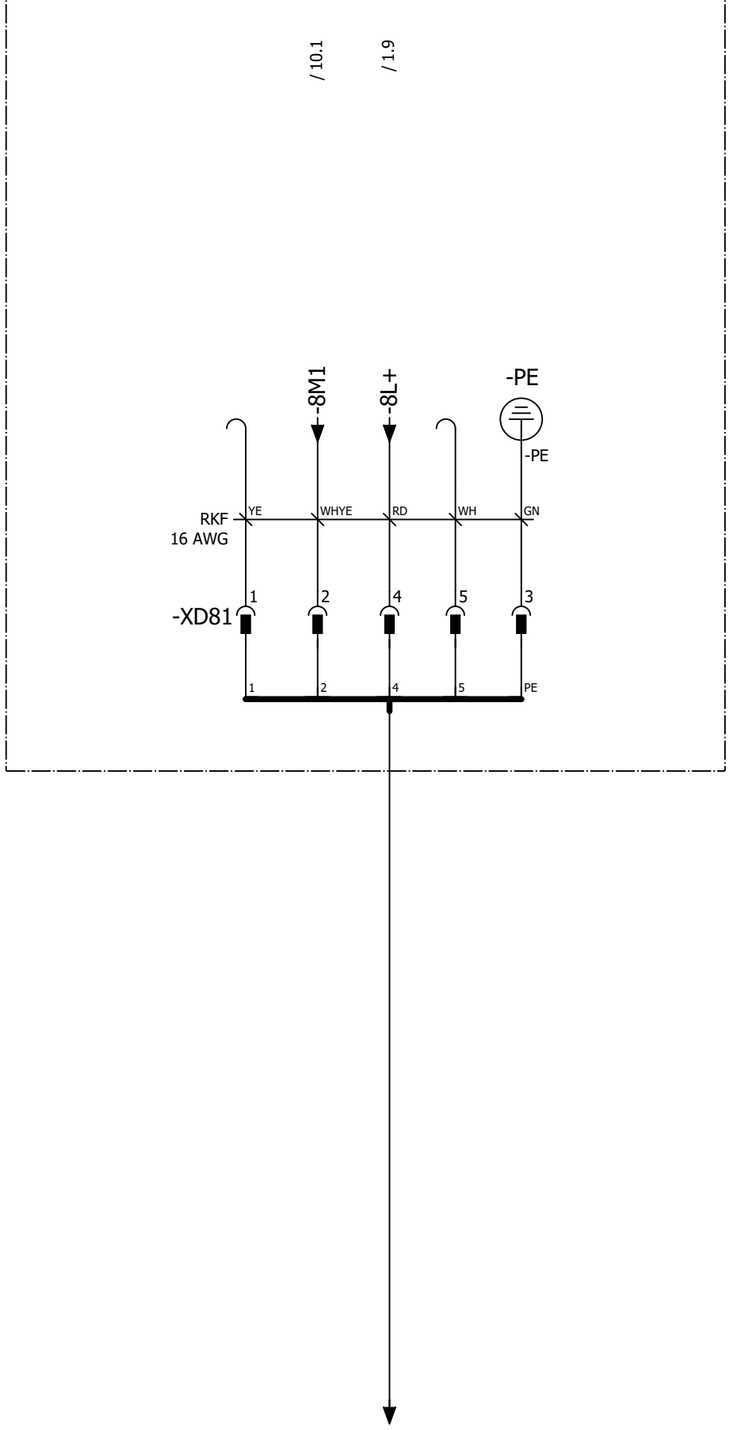

POWER IN / POWER OUT

Pin 1: 0 V UA
Pin 2: 0 V US
Pin 3: FE
Pin 4: +24 V US / 9 A
Pin 5: +24 V UA / 9 A

Pin #	WIRE	COLOR
Pin 1	N/C	YE
Pin 2	-8M1	WHYE
Pin 3	GND	GN
Pin 4	-8L+	RD
Pin 5	N/C	WH

0	1	2	3	4	5	6	7	8	9

+.UC11

/ 12.5 / 16.1 / 11.6 / 12.5

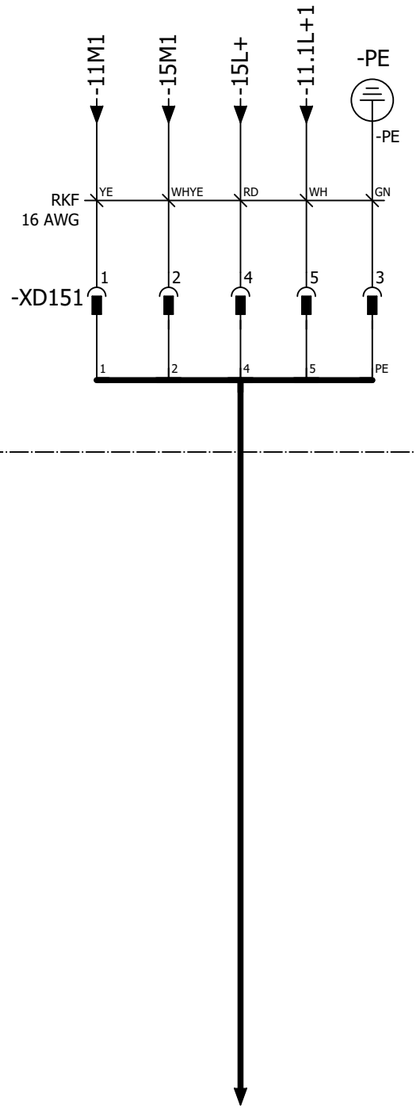

-SWITCHEDPWR1
=V1UQ51WC4+.UQ51/1.5

POWER IN / POWER OUT

Pin 1: 0 V UA
Pin 2: 0 V US
Pin 3: FE
Pin 4: +24 V US / 9 A
Pin 5: +24 V UA / 9 A

Pin #	WIRE	COLOR
Pin 1	-11M1	YE
Pin 2	-15M1	WHYE
Pin 3	GND	GN
Pin 4	-15L+	RD
Pin 5	-11.1L+1	WH

			Date	12/22/2022	Volvo Trucks North America	Valiant TMS	24VDC Switched Power 1	Drawing name: =2V04&EFS-EL	= V1WC4
			Ed.	MKLEPADLO					+ V1UC11
			Appr		P6700 Underbody Mainline - Cell 2V04			Document type: EFS	Project nr: 22-16151
Modification	Date	Name	Original		Replacement of	Replaced by	Scale 1:1		Page 24 / 1630

+.UC11

/ 13.5 / 17.1 / 11.7 / 13.5

-12M1 -16M1 -16L+ -12.1L+1 -PE

-PE

RKF
16 AWG

YE WHYE RD WH GN

-XD161

1 2 4 5 3

1 2 4 5 PE

-SWITCHEDPWR2
=V1UQ52WC4+.UQ52/1.5

POWER IN / POWER OUT

Pin 1: 0 V UA
Pin 2: 0 V US
Pin 3: FE
Pin 4: +24 V US / 9 A
Pin 5: +24 V UA / 9 A

Pin #	WIRE	COLOR
Pin 1	-12M1	YE
Pin 2	-16M1	WHYE
Pin 3	GND	GN
Pin 4	-16L+	RD
Pin 5	-12.1L+1	WH

			Date	12/22/2022	Volvo Trucks North America	Valiant TMS	24VDC Switched Power 2	Drawing name: =2V04&EFS-EL	= V1WC4
			Ed.	MKLEPADLO					+ V1UC11
			Appr		P6700 Underbody Mainline - Cell 2V04	Scale 1:1		Document type: EFS	Project nr: 22-16151
Modification	Date	Name	Original		Replacement of	Replaced by			Page 25 / 1630

+.UC11

/ 14.5 / 18.1 / 11.8 / 14.5

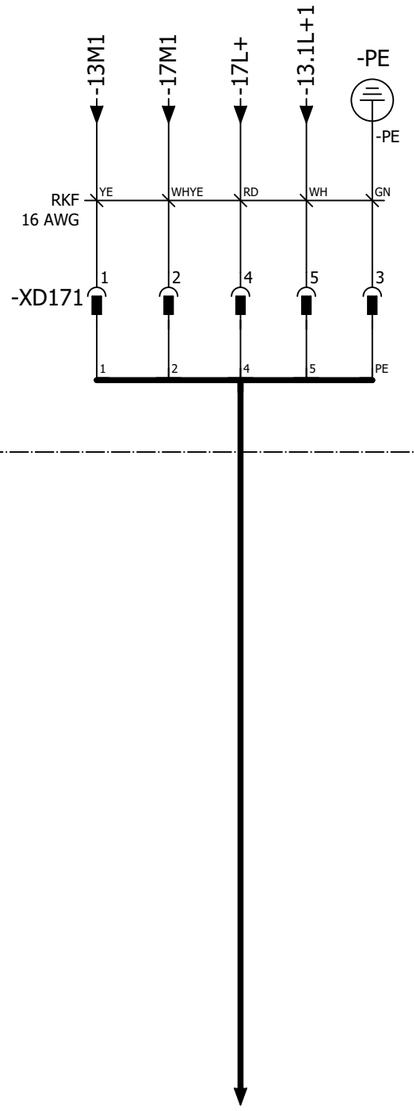

POWER IN / POWER OUT

Pin 1: 0 V UA
Pin 2: 0 V US
Pin 3: FE
Pin 4: +24 V US / 9 A
Pin 5: +24 V UA / 9 A

Pin #	WIRE	COLOR
Pin 1	-13M1	YE
Pin 2	-17M1	WHYE
Pin 3	GND	GN
Pin 4	-17L+	RD
Pin 5	-13.1L+1	WH

+.GL12KF2-W1
=V1GL12KF2+.GL12KF2/10.1

25

27

			Date	12/22/2022	Volvo Trucks North America	Valiant TMS	24VDC Switched Power 3	Drawing name: =2V04&EFS-EL	= V1WC4	
			Ed.	MKLEPADLO					+ V1UC11	
			Appr		P6700 Underbody Mainline - Cell 2V04	Scale 1:1		Document type: EFS	Project nr: 22-16151	Page 26 / 1630
Modification	Date	Name	Original		Replacement of	Replaced by				

0	1	2	3	4	5	6	7	8	9

+.UC11

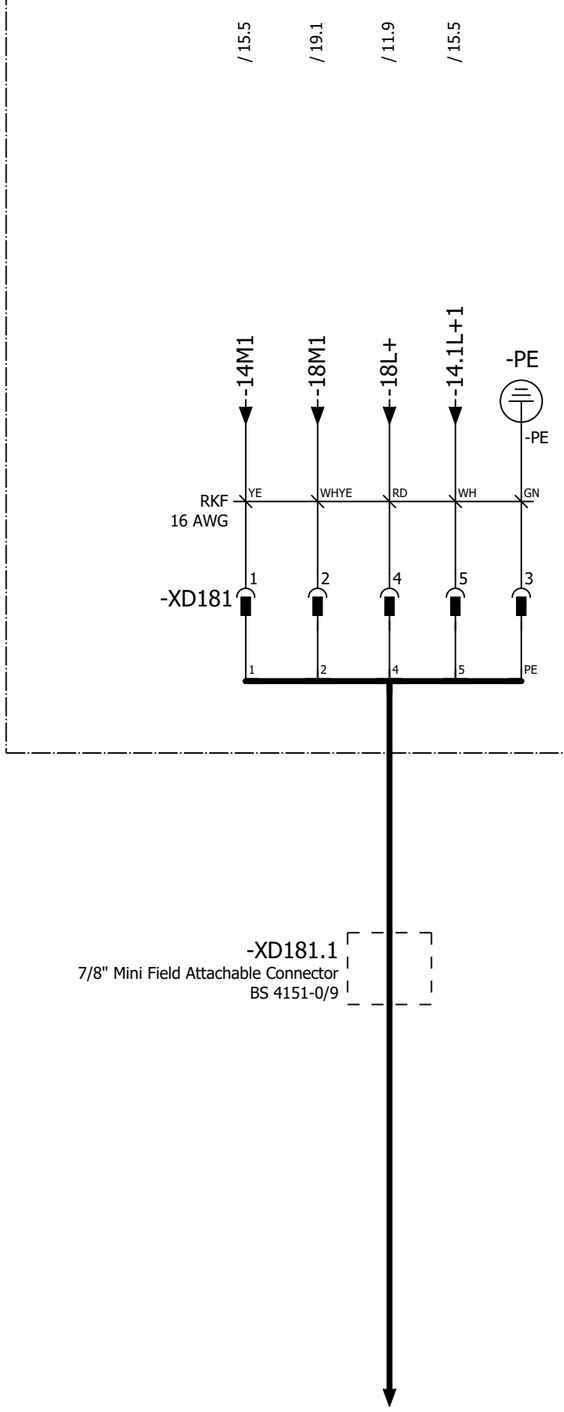

POWER IN / POWER OUT

Pin 1: 0 V UA
Pin 2: 0 V US
Pin 3: FE
Pin 4: +24 V US / 9 A
Pin 5: +24 V UA / 9 A

Pin #	WIRE	COLOR
Pin 1	-14M1	YE
Pin 2	-18M1	WHYE
Pin 3	GND	GN
Pin 4	-18L+	RD
Pin 5	-14.1L+1	WH

0	1	2	3	4	5	6	7	8	9

=V1WC3/1.7 / WC4HL

=V1WC3/1.8 / WC4HN

-PE

-TA1
IN: AC 120-230 V,
DC 110-240 V
OUT: DC 24 V/20 A

L1/+ N/L2/- PE

SIEMENS
SITOP PSU6200 1ph 24 V/20 A
6EP3336-7SB00-3AX0

ADJUST
24 ... 28V
DEFAULT VALUE
24V

0 1
COM
HV
PO

>20 V CLOSED

+1 +2 -1 -2 -3 13 14

Monitoring 24VDC
=V1WC4+V1UC12-TA1_I
=V1KF1/9.2

DI ET200SP
I80.2
DI2
3

=V1KF1
-KF12.11

TA1 BUOG 16 AWG
M1 WHOG 12 AWG
-PE
3L+1 BUOG 16 AWG
I80.2 BUOG 16 AWG

=V1WC2/41.4 / TA1

M1
2.1

-XD5 1

-FC11
In: DC 24V
Out: 8 x DC 24V/10A

SIEMENS
SITOP SEL1200 8 x 10A
6EP4438-7FB00-3DX0

0 1
COM
TD2
TD1

24V1 INPUT 24V2

E--- RESET

CONTROL LOGIC

13 14 NF RST 0V1 0V2

OUTPUT

1 2 3 4 5 6 7 8

Monitoring 24VDC
=V1WC4+V1UC12-FC11_I
=V1KF1/9.2

DI ET200SP
I80.4
DI4
5

=V1KF1
-KF12.11

3L+1 BUOG 16 AWG
I80.4 BUOG 16 AWG
=V1WC2/41.5 / FC11

2.1 / 1M1

1L+ BUOG 16 AWG
2L+ BUOG 16 AWG
3L+ BUOG 16 AWG
4L+ BUOG 16 AWG
5L+ RD 16 AWG
6L+ RD 16 AWG
7L+ RD 16 AWG
8L+ RD 16 AWG

3.1 / -1L+
4.1 / -2L+
5.1 / -3L+
6.1 / -4L+
20.5 / -5L+
21.5 / -6L+
22.5 / -7L+
23.5 / -8L+

+.UC11/27

2

			Date	12/22/2022	Volvo Trucks North America	Valiant TMS	Power distribution 24VDC (Above Disconnect)	Drawing name: =2V04&EFS-EL	= V1WC4
			Ed.	MKLEPADLO					+ V1UC12
			Appr		P6700 Underbody Mainline - Cell 2V04			Document type: EFS	Project nr: 22-16151	Page 1
Modification	Date	Name	Original		Replacement of	Replaced by	Scale 1:1			1630

0	1	2	3	4	5	6	7	8	9

0VDC
Selectivity Module FC11

1.1 / M1

M1 / 3.1

-XD10

1

1M1
WHOG
12 AWG

1.2 / 1M1

1

3

			Date	12/22/2022	Volvo Trucks North America	Valiant TMS	Power distribution 24VDC HL+	Drawing name: =2V04&EFS-EL		= V1WC4	
			Ed.	MKLEPADLO						+ V1UC12	
			Appr		P6700 Underbody Mainline - Cell 2V04			Document type: EFS	Project nr: 22-16151	Page	2
Modification	Date	Name	Original		Replacement of	Replaced by	Scale 1:1				1630

0	1	2	3	4	5	6	7	8	9

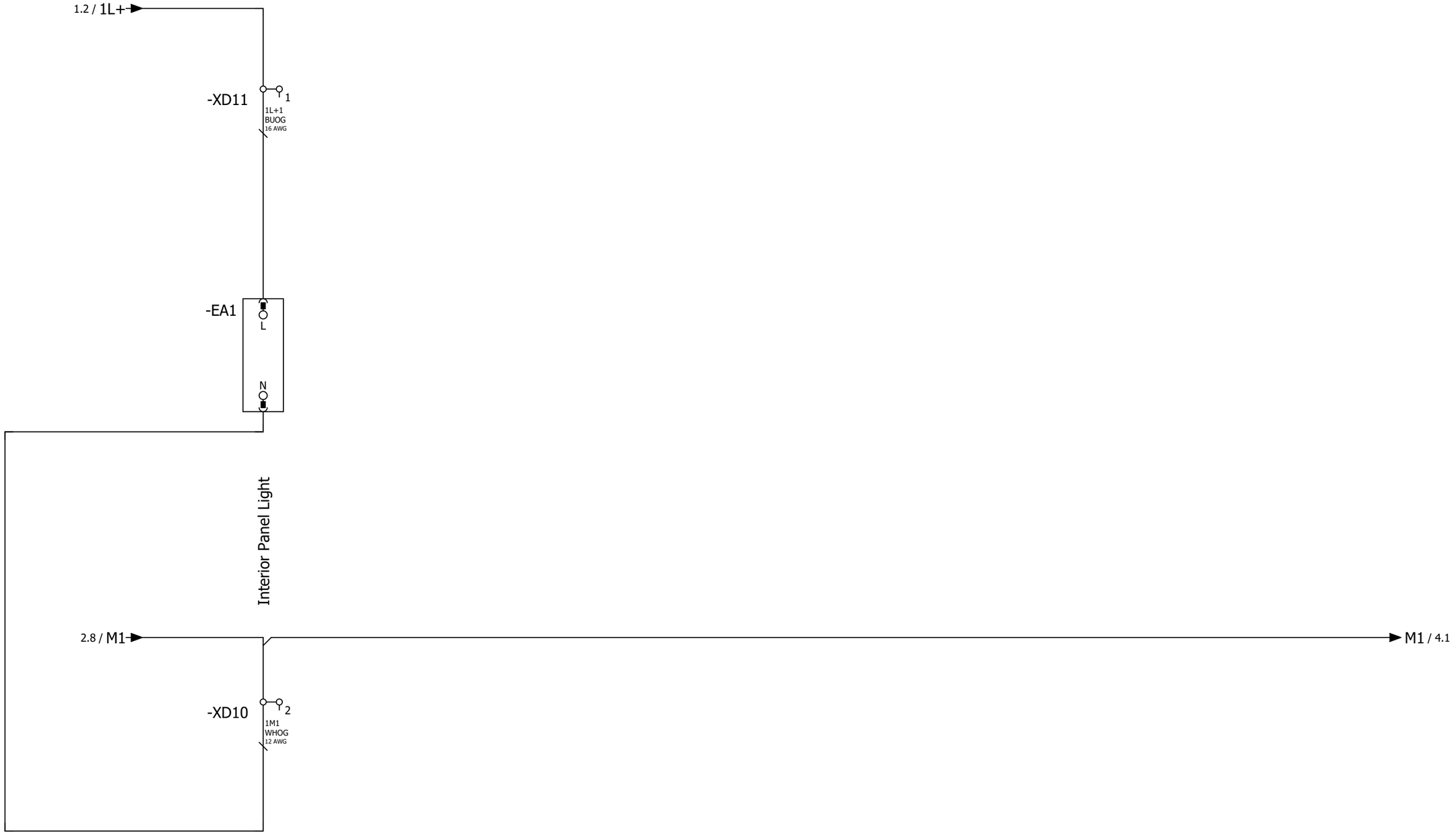

			Date	12/22/2022	Volvo Trucks North America		Valiant TMS	Power distribution 24VDC 1L+	Drawing name: =2V04&EFS-EL	= V1WC4	
			Ed.	MKLEPADLO						+ V1UC12	
			Appr		P6700 Underbody Mainline - Cell 2V04				Document type: EFS	Project nr: 22-16151	Page 3
Modification	Date	Name	Original		Replacement of	Replaced by	Scale 1:1				1630

0	1	2	3	4	5	6	7	8	9

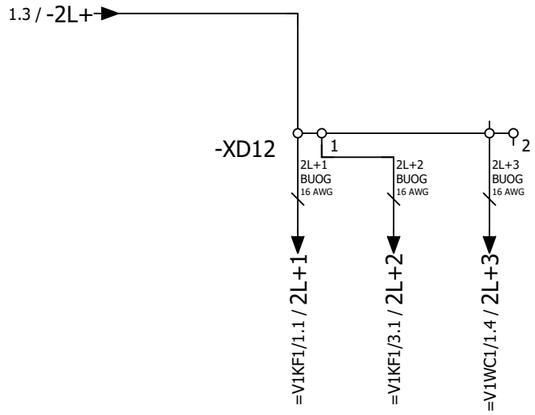

XC216 Profinet Switch

IM155 PN

Main Circuit Breaker

3

5

			Date	12/22/2022	Volvo Trucks North America	Valiant TMS	Power distribution 24VDC 2L+	Drawing name: =2V04&EFS-EL	= V1WC4	
			Ed.	MKLEPADLO					+ V1UC12	
			Appr		P6700 Underbody Mainline - Cell 2V04			Document type: EFS	Project nr: 22-16151	Page 4
Modification	Date	Name	Original		Replacement of / Replaced by	Scale 1:1				1630

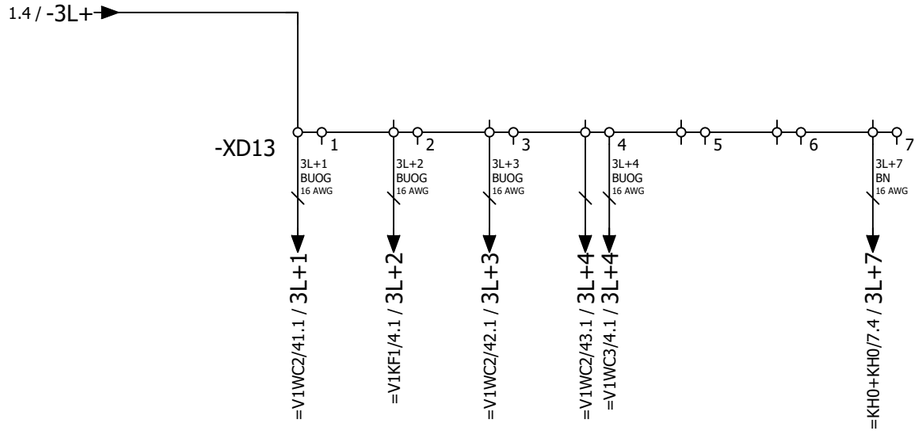

Power feedback signals Distribution Modules

Power Input Cards (DI+FDI)

Power feedback signals Circuit Breakers

Power feedback signals Circuit Breakers

Spare

Spare

Power Air Monitoring S150

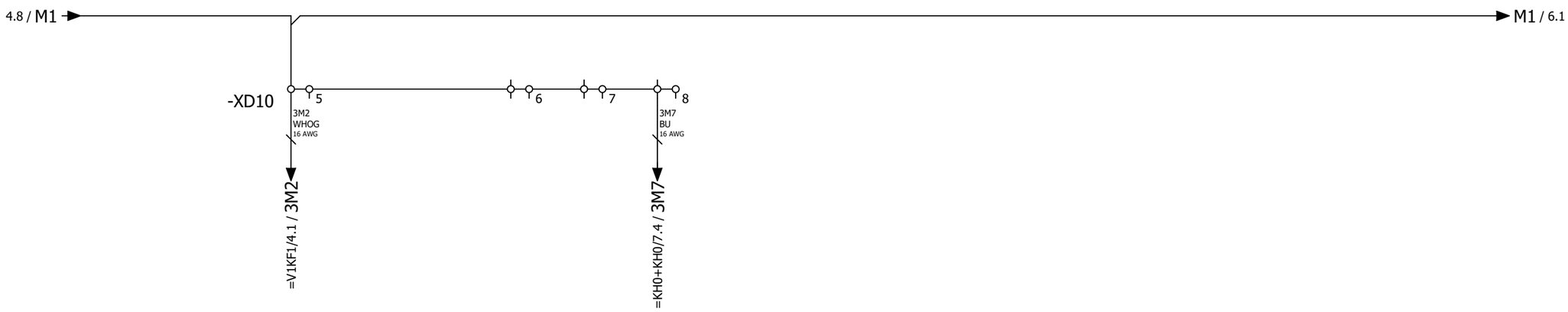

			Date	12/22/2022	Volvo Trucks North America		Valiant TMS	Power distribution 24VDC 3L+	Drawing name: =2V04&EFS-EL	= V1WC4
			Ed.	MKLEPADLO						+ V1UC12
			Appr		P6700 Underbody Mainline - Cell 2V04		Scale 1:1		Document type: EFS	Project nr: 22-16151
Modification	Date	Name	Original		Replacement of	Replaced by				Page 5 / 1630

0	1	2	3	4	5	6	7	8	9

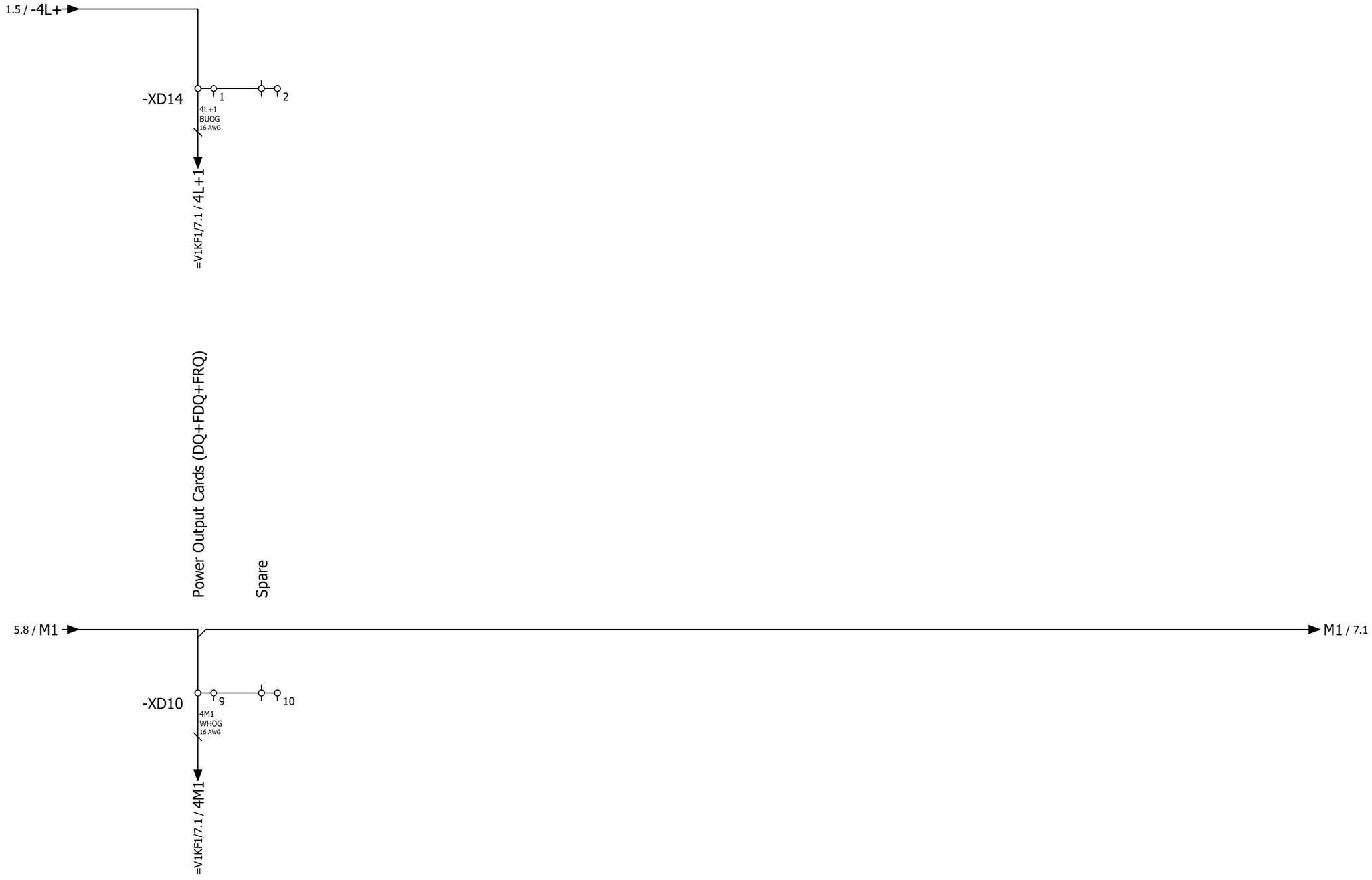

5									7
			Date	12/22/2022	Volvo Trucks North America		Valiant TMS	Power distribution 24VDC 4L+	Drawing name: =2V04&EFS-EL	= V1WC4
			Ed.	MKLEPADLO						+ V1UC12
			Appr		P6700 Underbody Mainline - Cell 2V04		Scale 1:1		Document type: EFS	Project nr: 22-16151
Modification	Date	Name	Original		Replacement of	Replaced by				Page 6 / 1630

6 8

			Date	12/22/2022	Volvo Trucks North America	Valiant TMS	Power distribution 24VDC 5L+	Drawing name: =2V04&EFS-EL		= V1WC4	
			Ed.	MKLEPADLO						+ V1UC12	
			Appr		P6700 Underbody Mainline - Cell 2V04			Document type: EFS	Project nr: 22-16151	Page	7
Modification	Date	Name	Original		Replacement of	Replaced by	Scale 1:1				1630

			Date	12/22/2022	Volvo Trucks North America	Valiant TMS	Power distribution 24VDC 6L+	Drawing name: =2V04&EFS-EL		= V1WC4	
			Ed.	MKLEPADLO						+ V1UC12	
			Appr		P6700 Underbody Mainline - Cell 2V04			Document type: EFS	Project nr: 22-16151	Page	8
Modification	Date	Name	Original		Replacement of	Replaced by	Scale 1:1				1630

8 10

			Date	12/22/2022	Volvo Trucks North America	Valiant TMS	Power distribution 24VDC 7L+	Drawing name: =2V04&EFS-EL		= V1WC4	
			Ed.	MKLEPADLO						+ V1UC12	
			Appr		P6700 Underbody Mainline - Cell 2V04			Document type: EFS	Project nr: 22-16151	Page	9
Modification	Date	Name	Original		Replacement of	Replaced by	Scale 1:1				1630

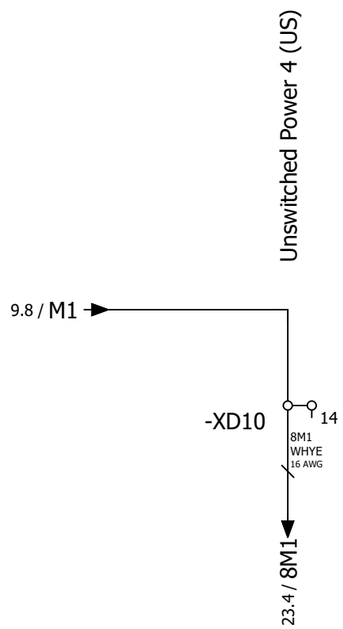

			Date	12/22/2022	Volvo Trucks North America	Valiant TMS	Power distribution 24VDC 8L+	Drawing name: =2V04&EFS-EL		= V1WC4	
			Ed.	MKLEPADLO						+ V1UC12	
			Appr		P6700 Underbody Mainline - Cell 2V04			Document type: EFS	Project nr: 22-16151	Page	10
Modification	Date	Name	Original		Replacement of / Replaced by	Scale 1:1					1630

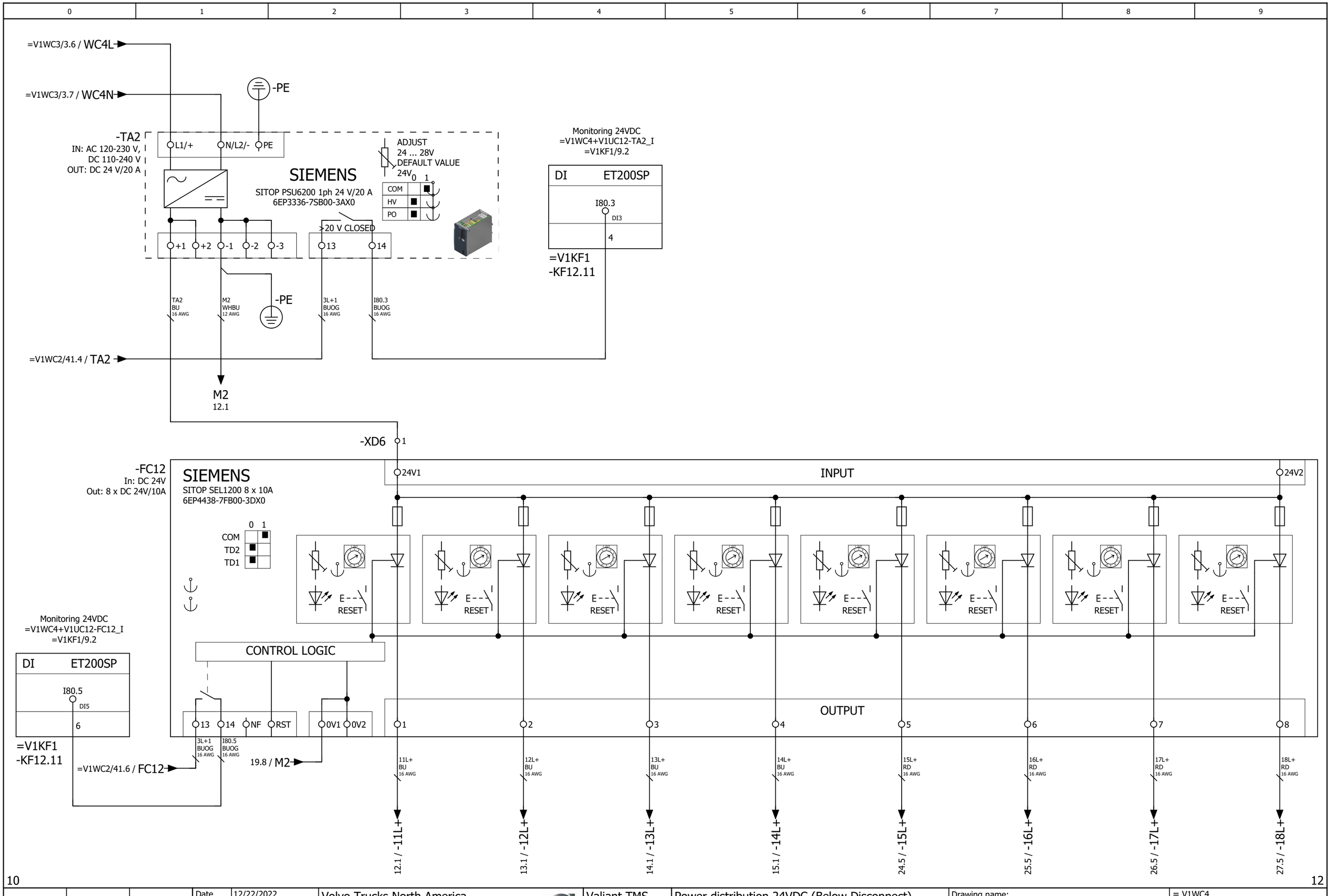

			Date	12/22/2022	Volvo Trucks North America	Valiant TMS	Power distribution 24VDC (Below Disconnect)	Drawing name: =2V04&EFS-EL	= V1WC4 + V1UC12
			Ed.	MKLEPADLO	P6700 Underbody Mainline - Cell 2V04			Document type: EFS	Project nr: 22-16151
			Appr						Page 11
Modification	Date	Name	Original		Replacement of / Replaced by	Scale 1:1			1630

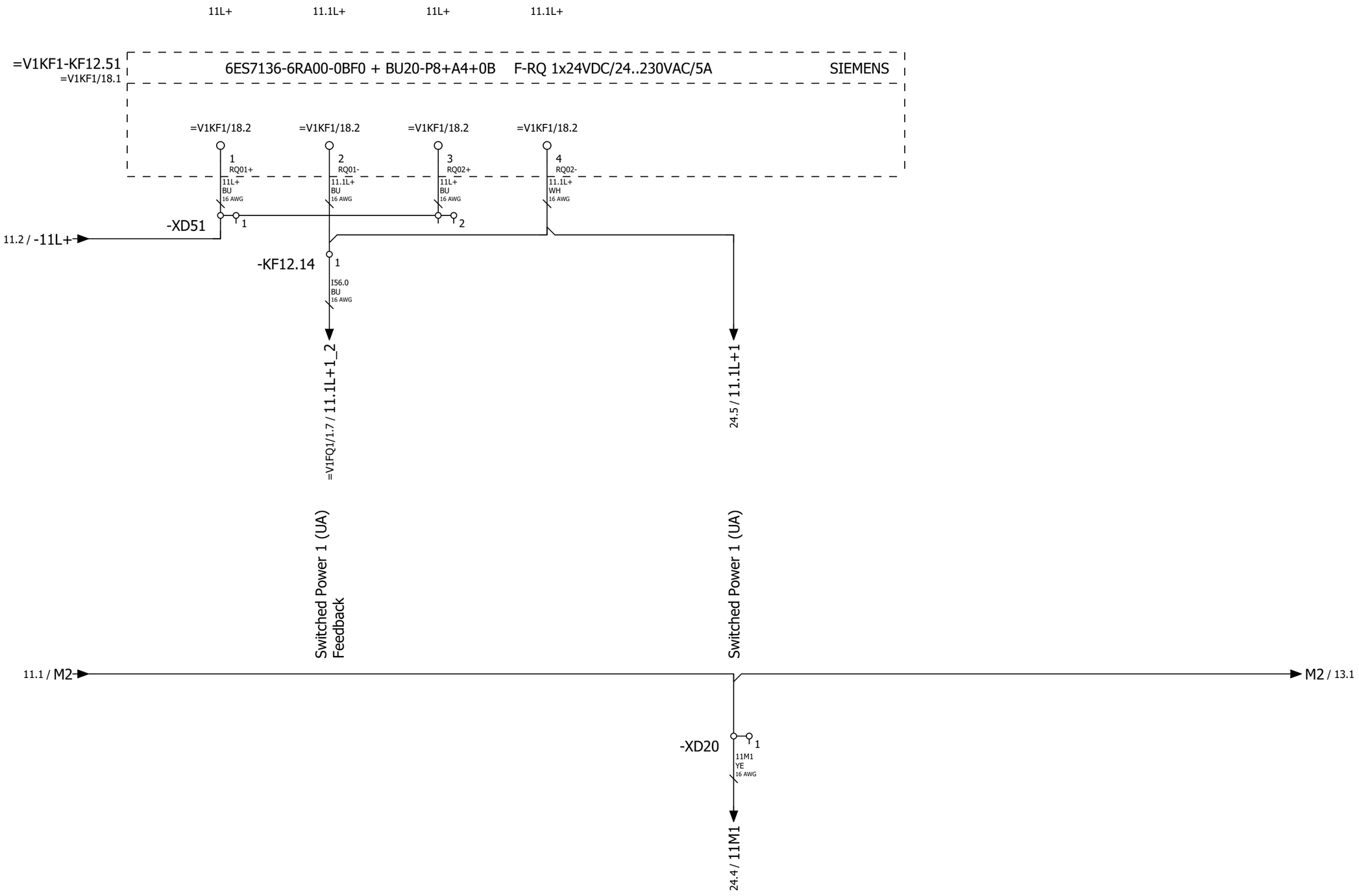

			Date	12/22/2022	Volvo Trucks North America		Valiant TMS	Power distribution 24VDC 11L+	Drawing name: =2V04&EFS-EL	= V1WC4
			Ed.	MKLEPADLO						+ V1UC12
			Appr		P6700 Underbody Mainline - Cell 2V04		Scale 1:1		Document type: EFS	Project nr: 22-16151
Modification	Date	Name	Original		Replacement of	Replaced by				Page 12 / 1630

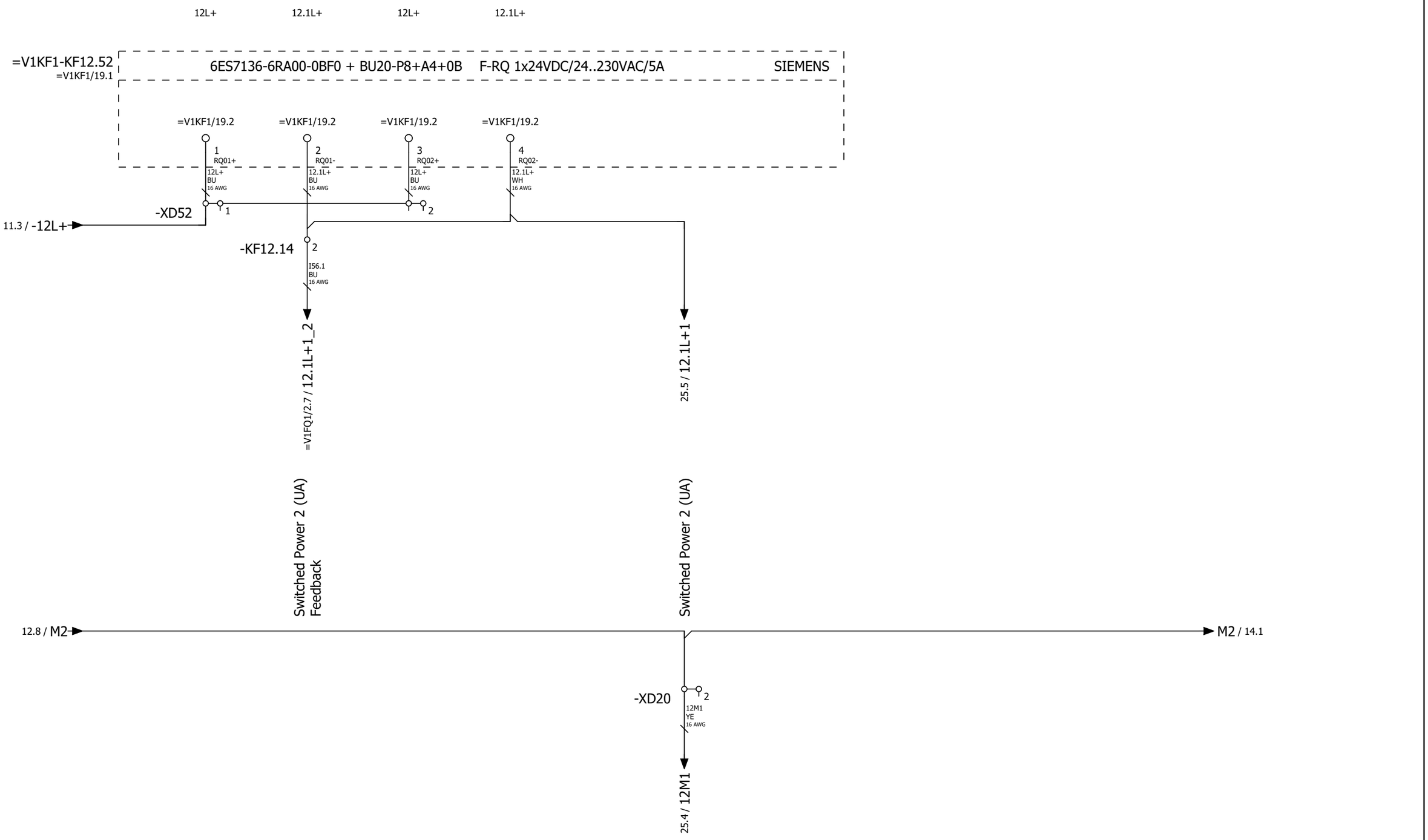

12

14

			Date	12/22/2022	Volvo Trucks North America	Valiant TMS	Power distribution 24VDC 12L+	Drawing name: =2V04&EFS-EL		= V1WC4	
			Ed.	MKLEPADLO						+ V1UC12	
			Appr		P6700 Underbody Mainline - Cell 2V04			Document type: EFS	Project nr: 22-16151	Page	13
Modification	Date	Name	Original		Replacement of	Replaced by	Scale 1:1				1630

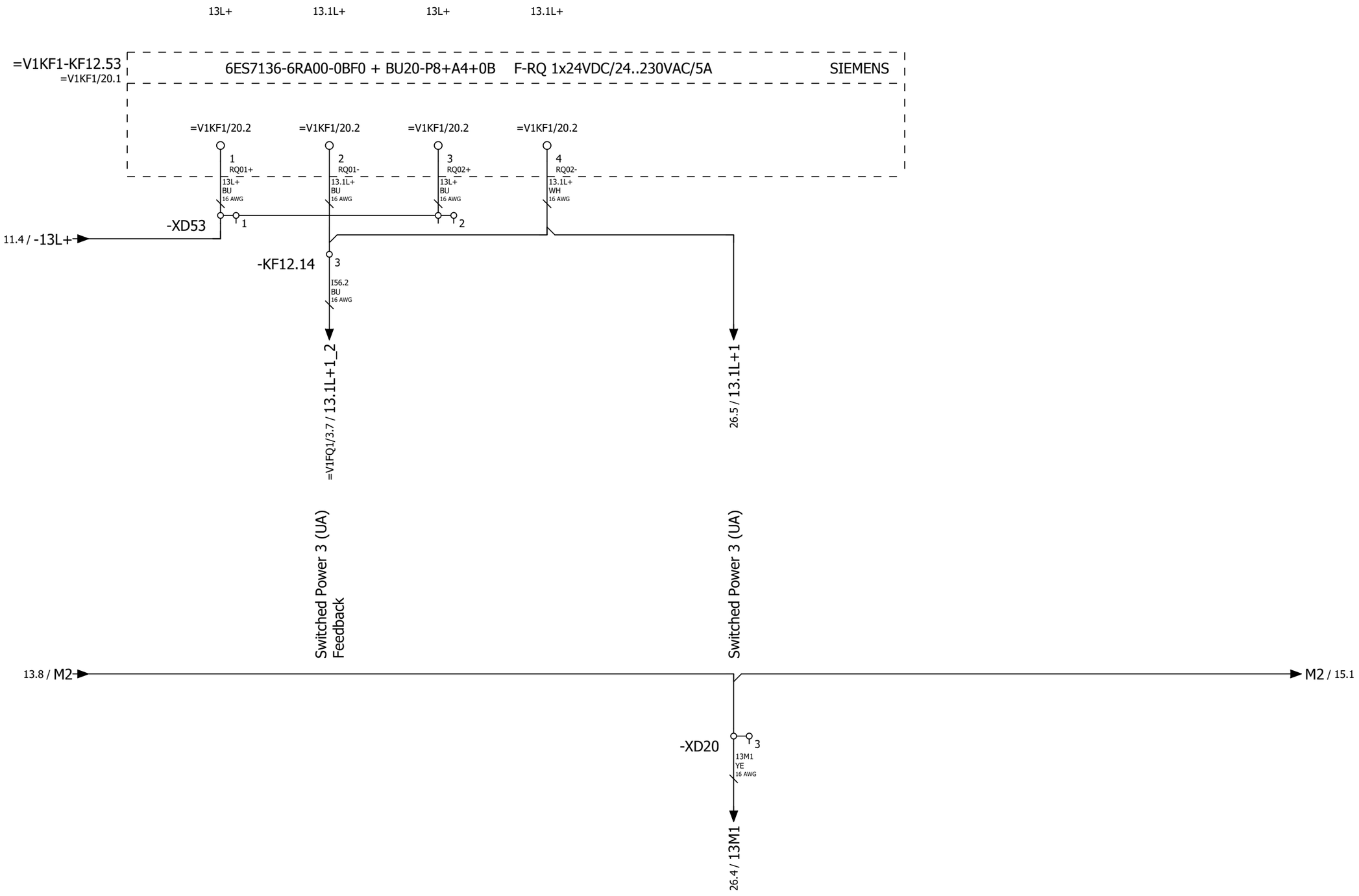

			Date	12/22/2022	Volvo Trucks North America		Valiant TMS	Power distribution 24VDC 13L+	Drawing name: =2V04&EFS-EL	= V1WC4	
			Ed.	MKLEPADLO						+ V1UC12	
			Appr		P6700 Underbody Mainline - Cell 2V04				Document type: EFS	Project nr: 22-16151	Page 14
Modification	Date	Name	Original		Replacement of	Replaced by	Scale 1:1				1630

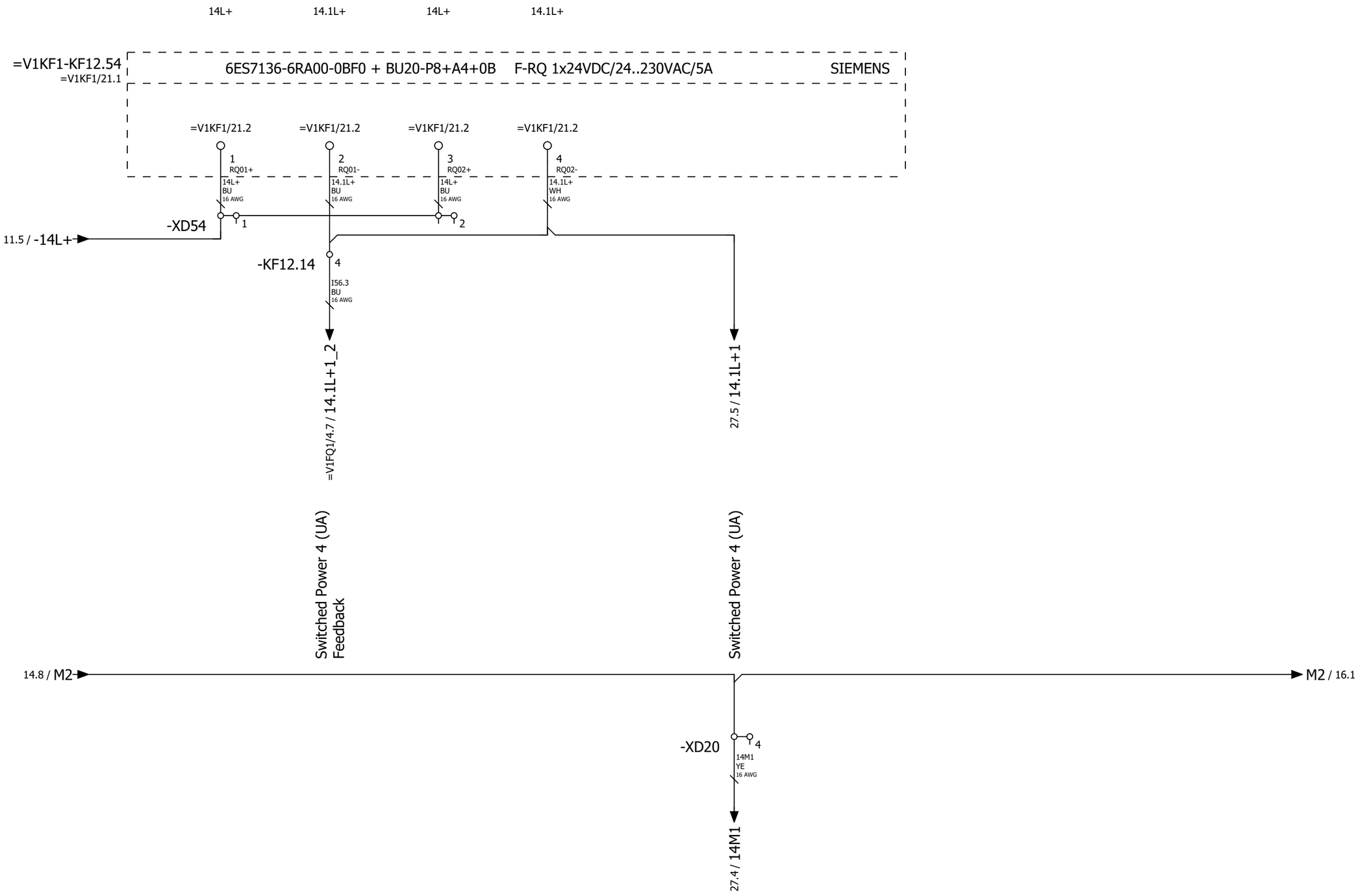

			Date	12/22/2022	Volvo Trucks North America	Valiant TMS	Power distribution 24VDC 14L+	Drawing name: =2V04&EFS-EL		= V1WC4	
			Ed.	MKLEPADLO						+ V1UC12	
			Appr		P6700 Underbody Mainline - Cell 2V04			Document type: EFS	Project nr: 22-16151	Page	15
Modification	Date	Name	Original		Replacement of	Replaced by	Scale 1:1				1630

15

17

			Date	12/22/2022	Volvo Trucks North America	Valiant TMS	Power distribution 24VDC 15L+	Drawing name: =2V04&EFS-EL		= V1WC4	
			Ed.	MKLEPADLO						+ V1UC12	
			Appr		P6700 Underbody Mainline - Cell 2V04			Document type: EFS	Project nr: 22-16151	Page	16
Modification	Date	Name	Original		Replacement of	Replaced by	Scale 1:1				1630

16

18

			Date	12/22/2022	Volvo Trucks North America	Valiant TMS	Power distribution 24VDC 16L+	Drawing name: =2V04&EFS-EL	= V1WC4	
			Ed.	MKLEPADLO					+ V1UC12	
			Appr		P6700 Underbody Mainline - Cell 2V04			Document type: EFS	Project nr: 22-16151	Page 17
Modification	Date	Name	Original		Replacement of / Replaced by	Scale 1:1				1630

17

19

			Date	12/22/2022	Volvo Trucks North America	Valiant TMS	Power distribution 24VDC 17L+	Drawing name: =2V04&EFS-EL		= V1WC4	
			Ed.	MKLEPADLO						+ V1UC12	
			Appr		P6700 Underbody Mainline - Cell 2V04			Document type: EFS	Project nr: 22-16151	Page	18
Modification	Date	Name	Original		Replacement of	Replaced by	Scale 1:1				1630

18

20

			Date	12/22/2022	Volvo Trucks North America	Valiant TMS	Power distribution 24VDC 18L+	Drawing name: =2V04&EFS-EL	= V1WC4
			Ed.	MKLEPADLO					+ V1UC12
			Appr		P6700 Underbody Mainline - Cell 2V04			Document type: EFS	Project nr: 22-16151
Modification	Date	Name	Original		Replacement of / Replaced by	Scale 1:1			Page 19 / 1630

+.UC12

/ 7.1

/ 1.6

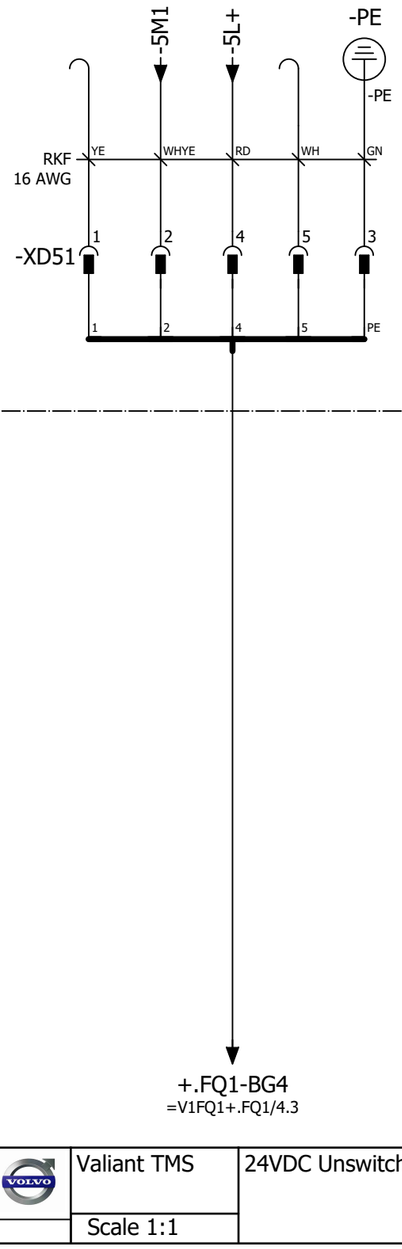

POWER IN / POWER OUT

Pin 1: 0 V UA
Pin 2: 0 V US
Pin 3: FE
Pin 4: +24 V US / 9 A
Pin 5: +24 V UA / 9 A

Pin #	WIRE	COLOR
Pin 1	N/C	YE
Pin 2	-5M1	WHYE
Pin 3	GND	GN
Pin 4	-5L+	RD
Pin 5	N/C	WH

+.FQ1-BG4
=V1FQ1+.FQ1/4.3

			Date	12/22/2022	Volvo Trucks North America	Valiant TMS	24VDC Unswitched Power 1	Drawing name: =2V04&EFS-EL	= V1WC4
			Ed.	MKLEPADLO					+ V1UC12
			Appr		P6700 Underbody Mainline - Cell 2V04			Document type: EFS	Project nr: 22-16151
Modification	Date	Name	Original		Replacement of	Replaced by	Scale 1:1		Page 20 / 1630

0	1	2	3	4	5	6	7	8	9

+.UC12

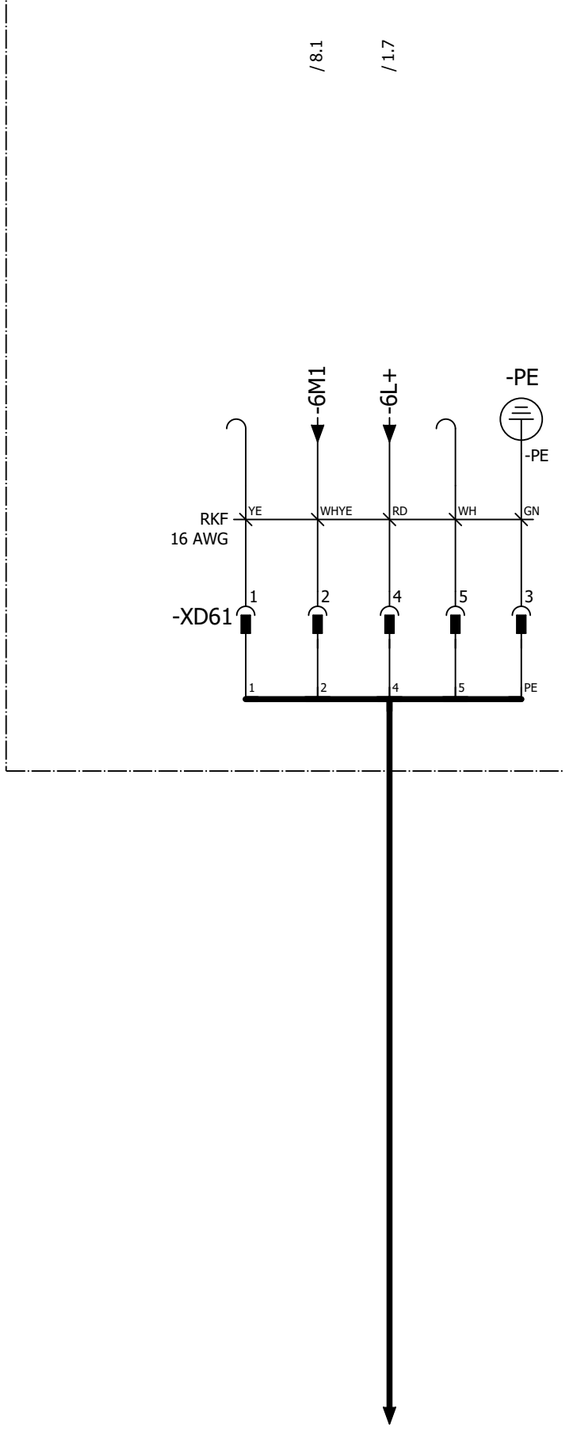

POWER IN / POWER OUT

Pin 1: 0 V UA
Pin 2: 0 V US
Pin 3: FE
Pin 4: +24 V US / 9 A
Pin 5: +24 V UA / 9 A

Pin #	WIRE	COLOR
Pin 1	N/C	YE
Pin 2	-6M1	WHYE
Pin 3	GND	GN
Pin 4	-6L+	RD
Pin 5	N/C	WH

			Date	12/22/2022	Volvo Trucks North America	Valiant TMS	24VDC Unswitched Power 2	Drawing name: =2V04&EFS-EL	= V1WC4
			Ed.	MKLEPADLO					+ V1UC12
			Appr		P6700 Underbody Mainline - Cell 2V04			Document type: EFS	Project nr: 22-16151
Modification	Date	Name	Original		Replacement of	Replaced by	Scale 1:1		Page 21 / 1630

0	1	2	3	4	5	6	7	8	9

+.UC12

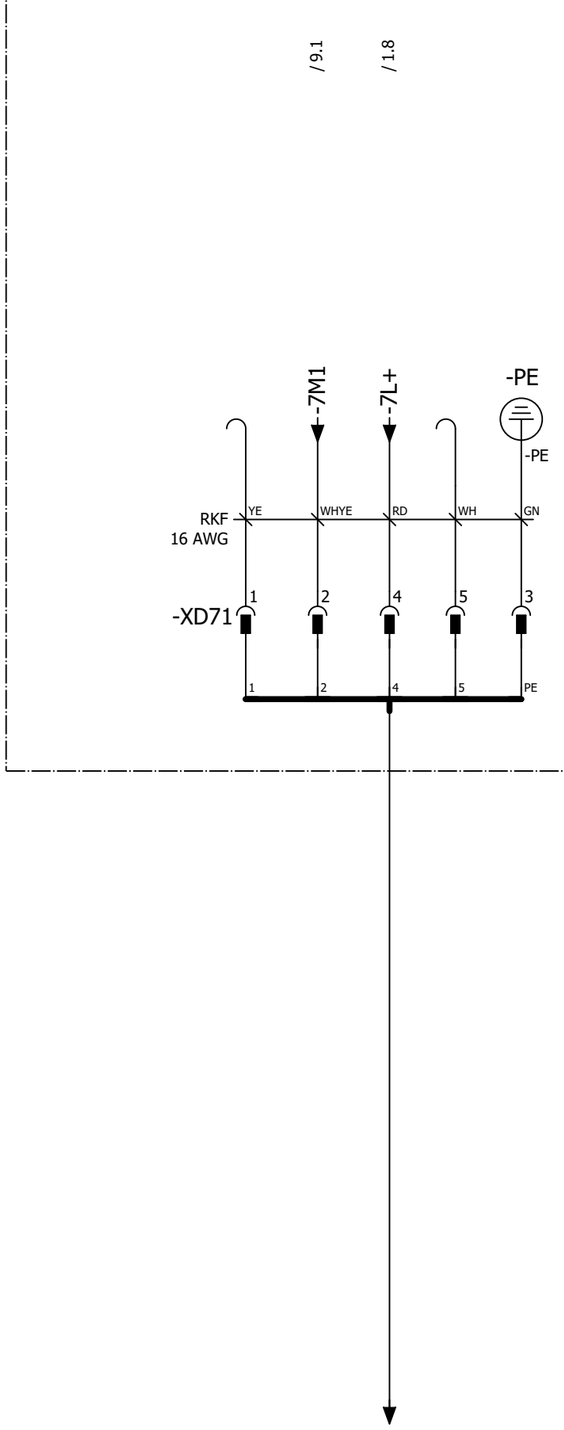

POWER IN / POWER OUT

Pin 1: 0 V UA
Pin 2: 0 V US
Pin 3: FE
Pin 4: +24 V US / 9 A
Pin 5: +24 V UA / 9 A

Pin #	WIRE	COLOR
Pin 1	N/C	YE
Pin 2	-7M1	WHYE
Pin 3	GND	GN
Pin 4	-7L+	RD
Pin 5	N/C	WH

			Date	12/22/2022	Volvo Trucks North America	Valiant TMS	24VDC Unswitched Power 3	Drawing name: =2V04&EFS-EL	= V1WC4
			Ed.	MKLEPADLO					+ V1UC12
			Appr		P6700 Underbody Mainline - Cell 2V04	Scale 1:1		Document type: EFS	Project nr: 22-16151
Modification	Date	Name	Original		Replacement of	Replaced by			Page 22 / 1630

0	1	2	3	4	5	6	7	8	9

+.UC12

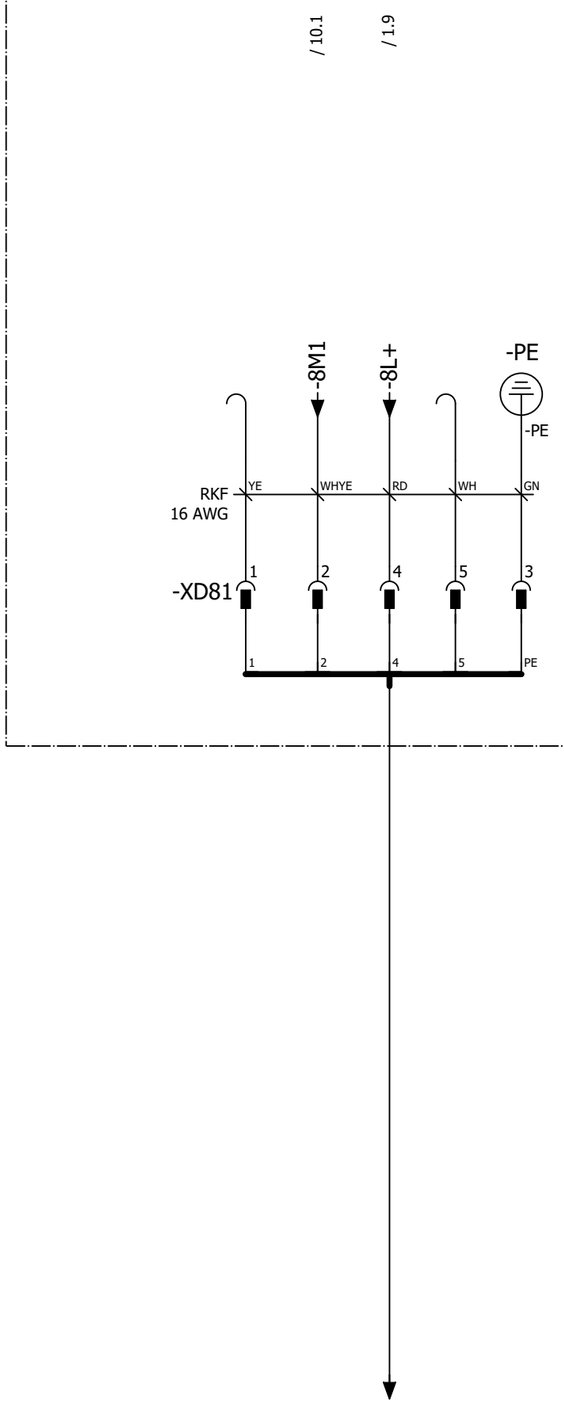

POWER IN / POWER OUT

Pin 1: 0 V UA
Pin 2: 0 V US
Pin 3: FE
Pin 4: +24 V US / 9 A
Pin 5: +24 V UA / 9 A

Pin #	WIRE	COLOR
Pin 1	N/C	YE
Pin 2	-8M1	WHYE
Pin 3	GND	GN
Pin 4	-8L+	RD
Pin 5	N/C	WH

			Date	12/22/2022	Volvo Trucks North America	Valiant TMS	24VDC Unswitched Power 4	Drawing name: =2V04&EFS-EL	= V1WC4
			Ed.	MKLEPADLO					+ V1UC12
			Appr		P6700 Underbody Mainline - Cell 2V04			Document type: EFS	Project nr: 22-16151
Modification	Date	Name	Original		Replacement of	Replaced by	Scale 1:1		Page 23 / 1630

+.UC12

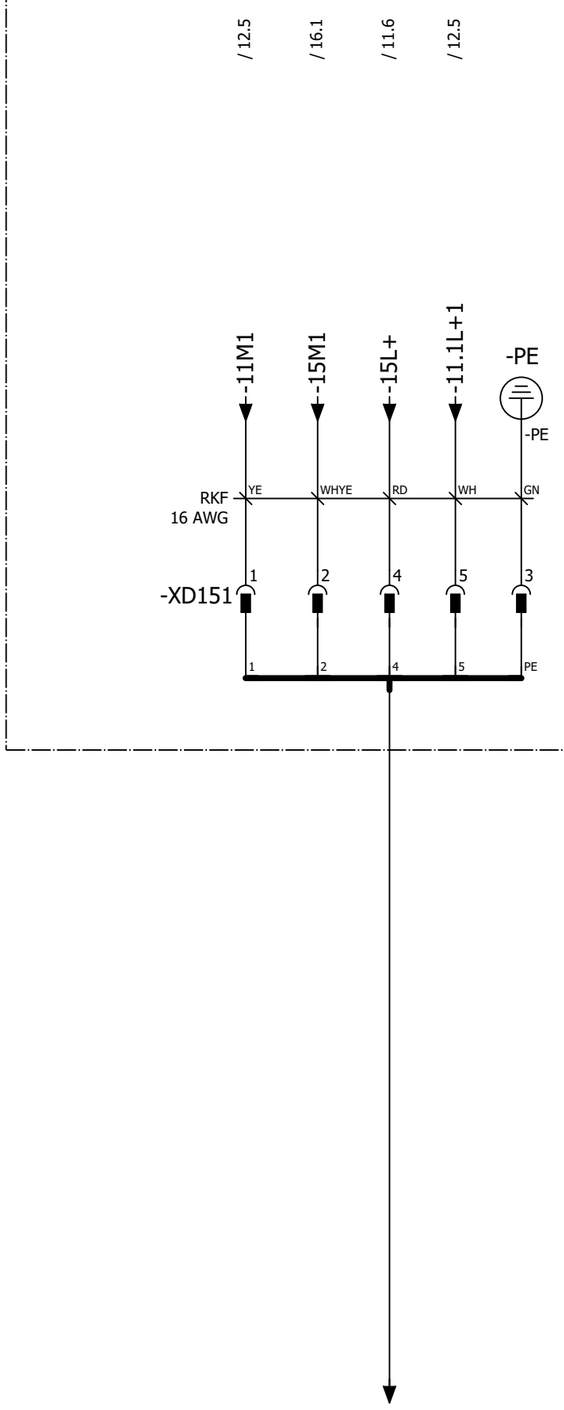

POWER IN / POWER OUT

Pin 1: 0 V UA
Pin 2: 0 V US
Pin 3: FE
Pin 4: +24 V US / 9 A
Pin 5: +24 V UA / 9 A

Pin #	WIRE	COLOR
Pin 1	-11M1	YE
Pin 2	-15M1	WHYE
Pin 3	GND	GN
Pin 4	-15L+	RD
Pin 5	-11.1L+1	WH

			Date	12/22/2022	Volvo Trucks North America	Valiant TMS	24VDC Switched Power 1	Drawing name: =2V04&EFS-EL	= V1WC4
			Ed.	MKLEPADLO					+ V1UC12
			Appr		P6700 Underbody Mainline - Cell 2V04			Document type: EFS	Project nr: 22-16151
Modification	Date	Name	Original		Replacement of	Replaced by	Scale 1:1		Page 24 / 1630

POWER IN / POWER OUT

Pin 1: 0 V UA
Pin 2: 0 V US
Pin 3: FE
Pin 4: +24 V US / 9 A
Pin 5: +24 V UA / 9 A

Pin #	WIRE	COLOR
Pin 1	-12M1	YE
Pin 2	-16M1	WHYE
Pin 3	GND	GN
Pin 4	-16L+	RD
Pin 5	-12.1L+1	WH

			Date	12/22/2022	Volvo Trucks North America	Valiant TMS	24VDC Switched Power 2	Drawing name: =2V04&EFS-EL	= V1WC4
			Ed.	MKLEPADLO					+ V1UC12
			Appr		P6700 Underbody Mainline - Cell 2V04			Document type: EFS	Project nr: 22-16151
Modification	Date	Name	Original		Replacement of	Replaced by	Scale 1:1		Page 25 / 1630

+.UC12

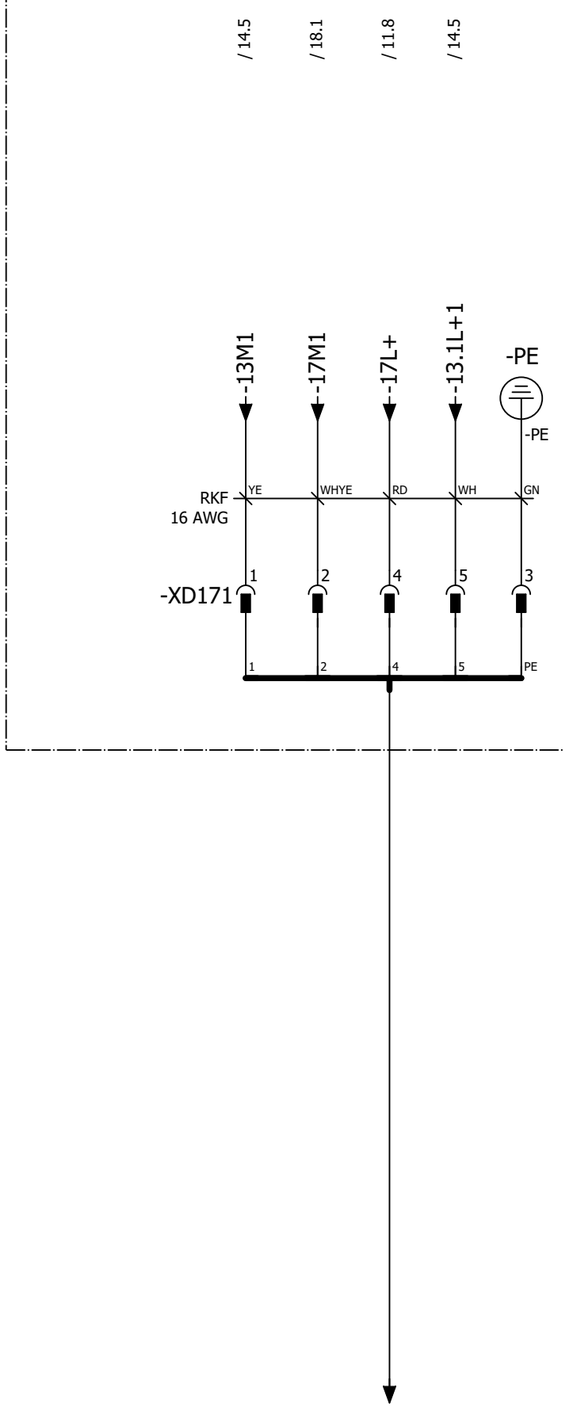

POWER IN / POWER OUT

Pin 1: 0 V UA
Pin 2: 0 V US
Pin 3: FE
Pin 4: +24 V US / 9 A
Pin 5: +24 V UA / 9 A

Pin #	WIRE	COLOR
Pin 1	-13M1	YE
Pin 2	-17M1	WHYE
Pin 3	GND	GN
Pin 4	-17L+	RD
Pin 5	-13.1L+1	WH

			Date	12/22/2022	Volvo Trucks North America	Valiant TMS	24VDC Switched Power 3	Drawing name: =2V04&EFS-EL	= V1WC4	
			Ed.	MKLEPADLO					+ V1UC12	
			Appr		P6700 Underbody Mainline - Cell 2V04			Document type: EFS	Project nr: 22-16151	Page 26
Modification	Date	Name	Original		Replacement of	Replaced by	Scale 1:1			1630

+.UC12

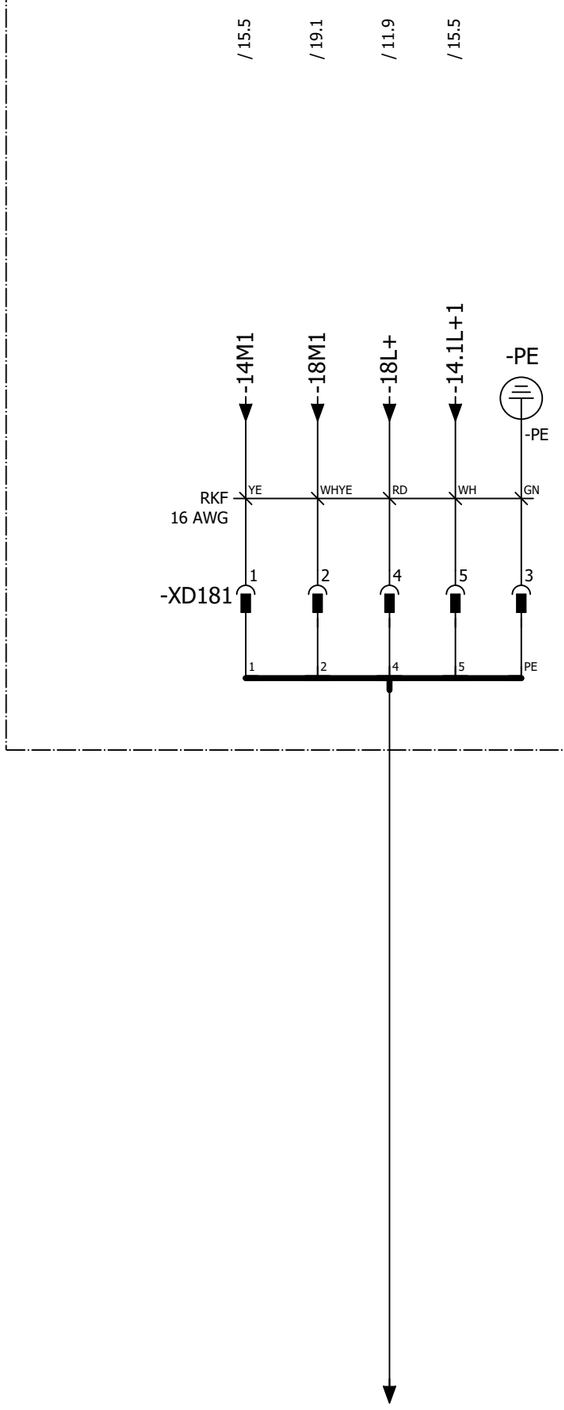

POWER IN / POWER OUT

Pin 1: 0 V UA
Pin 2: 0 V US
Pin 3: FE
Pin 4: +24 V US / 9 A
Pin 5: +24 V UA / 9 A

Pin #	WIRE	COLOR
Pin 1	-14M1	YE
Pin 2	-18M1	WHYE
Pin 3	GND	GN
Pin 4	-18L+	RD
Pin 5	-14.1L+1	WH

			Date	12/22/2022	Volvo Trucks North America	Valiant TMS	24VDC Switched Power 4	Drawing name: =2V04&EFS-EL	= V1WC4
			Ed.	MKLEPADLO					+ V1UC12
			Appr		P6700 Underbody Mainline - Cell 2V04			Document type: EFS	Project nr: 22-16151
Modification	Date	Name	Original		Replacement of / Replaced by	Scale 1:1			Page 27 / 1630

0	1	2	3	4	5	6	7	8	9

=V1WC3/1.6 / WC2L

=V1WC3/1.7 / WC2N

-PE

-TA1
IN: AC 120-230 V,
DC 110-240 V
OUT: DC 24 V/20 A

L1/+ N/L2/- PE

SIEMENS
SITOP PSU6200 1ph 24 V/20 A
6EP3336-7SB00-3AX0

ADJUST
24 ... 28V
DEFAULT VALUE
24V

0 1
COM
HV
PO

>20 V CLOSED

+1 +2 -1 -2 -3 13 14

Monitoring 24VDC
=V1WC4+V1UC14-TA1_I
=V1KF1/8.2

DI ET200SP
I200.2
DI2
3

=V1KF1
-KF14.11

TA1-1 BU 12 AWG
TA1-2 BU 12 AWG
M1 WH 12 AWG
-PE
3L+1 BUOG 16 AWG
I200.2 BUOG 16 AWG

4.2 / 3L+1

FC12 M1
11.0 2.1

FC12.1
11.1

-XD5 1

-FC11
In: DC 24V
Out: 8 x DC 24V/10A

SIEMENS
SITOP SEL1200 8 x 10A
6EP4438-7FB00-3DX0

0 1
COM
TD2
TD1

24V1 INPUT 24V2

E--- RESET

CONTROL LOGIC

13 14 NF RST 0V1 0V2

1 2 3 4 5 6 7 8

Monitoring 24VDC
=V1WC4+V1UC14-FC11_I
=V1KF1/8.2

DI ET200SP
I200.4
DI4
5

=V1KF1
-KF14.11

3L+1 BUOG 16 AWG
I200.4 BU 16 AWG
M1 WHBU 12 AWG

19.8 / M1

M1 / 11.2

11.1 / FC11

OUTPUT

1L+ BUOG 16 AWG
2L+ BUOG 16 AWG
3L+ BUOG 16 AWG
4L+ BUOG 16 AWG
5L+ RD 16 AWG
6L+ RD 16 AWG
7L+ RD 16 AWG
8L+ RD 16 AWG

2.1 / -1L+
3.1 / -2L+
4.1 / -3L+
5.1 / -4L+
6.1 / -5L+
7.1 / -6L+
8.1 / -7L+
9.1 / -8L+

+.UC12/27

2

			Date	12/22/2022	Volvo Trucks North America	Valiant TMS	Power distribution 24VDC for Inputs	Drawing name: =2V04&EFS-EL	= V1WC4
			Ed.	MKLEPADLO					+ V1UC14
			Appr		P6700 Underbody Mainline - Cell 2V04			Document type: EFS	Project nr: 22-16151	Page 1
Modification	Date	Name	Original		Replacement of	Replaced by	Scale 1:1			1630

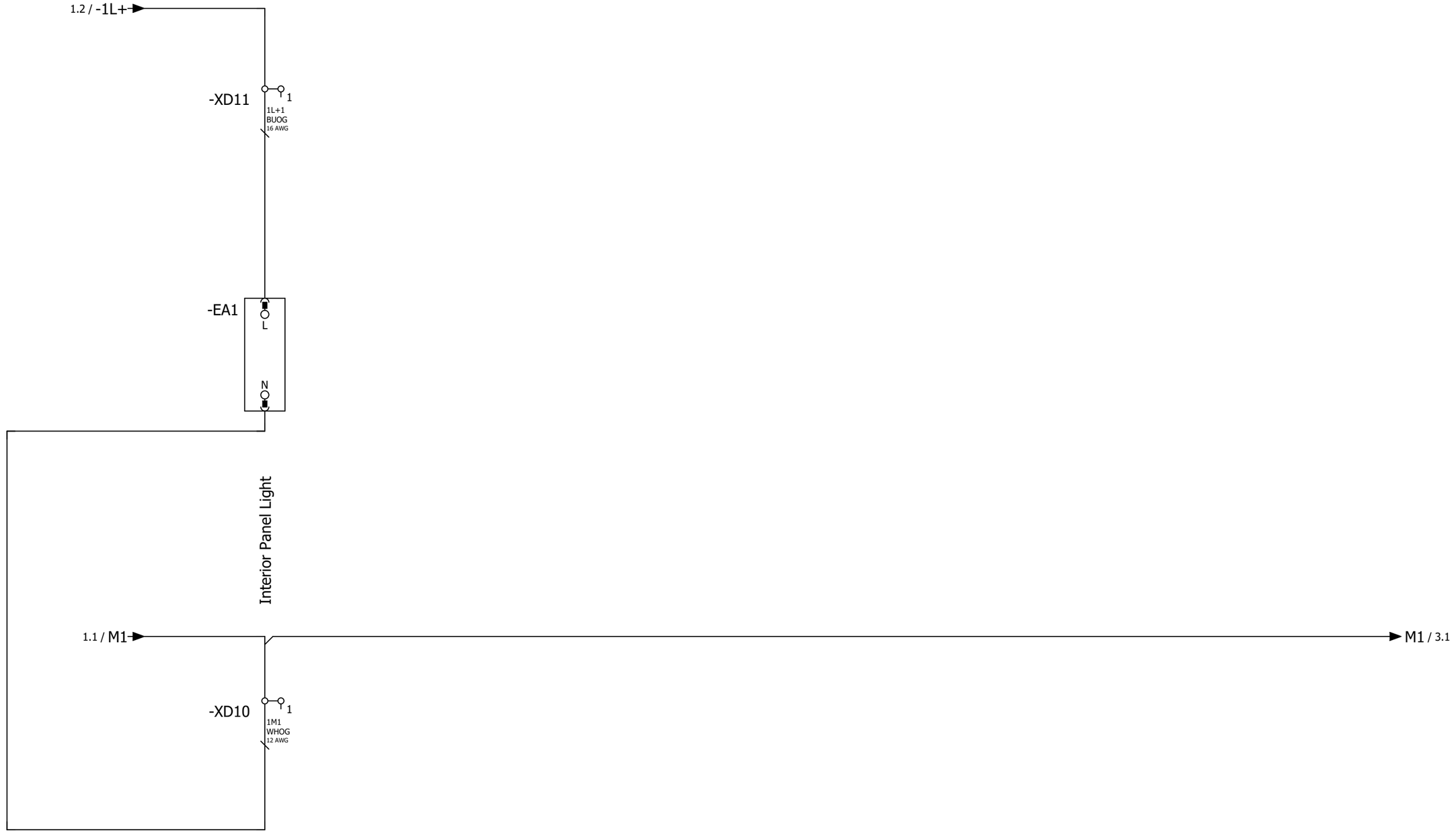

1 3

			Date	12/22/2022	Volvo Trucks North America	Valiant TMS	Power distribution 24VDC 1L+	Drawing name: =2V04&EFS-EL	= V1WC4	
			Ed.	MKLEPADLO					+ V1UC14	
			Appr		P6700 Underbody Mainline - Cell 2V04	Scale 1:1		Document type: EFS	Project nr: 22-16151	Page 2
Modification	Date	Name	Original		Replacement of	Replaced by				1630

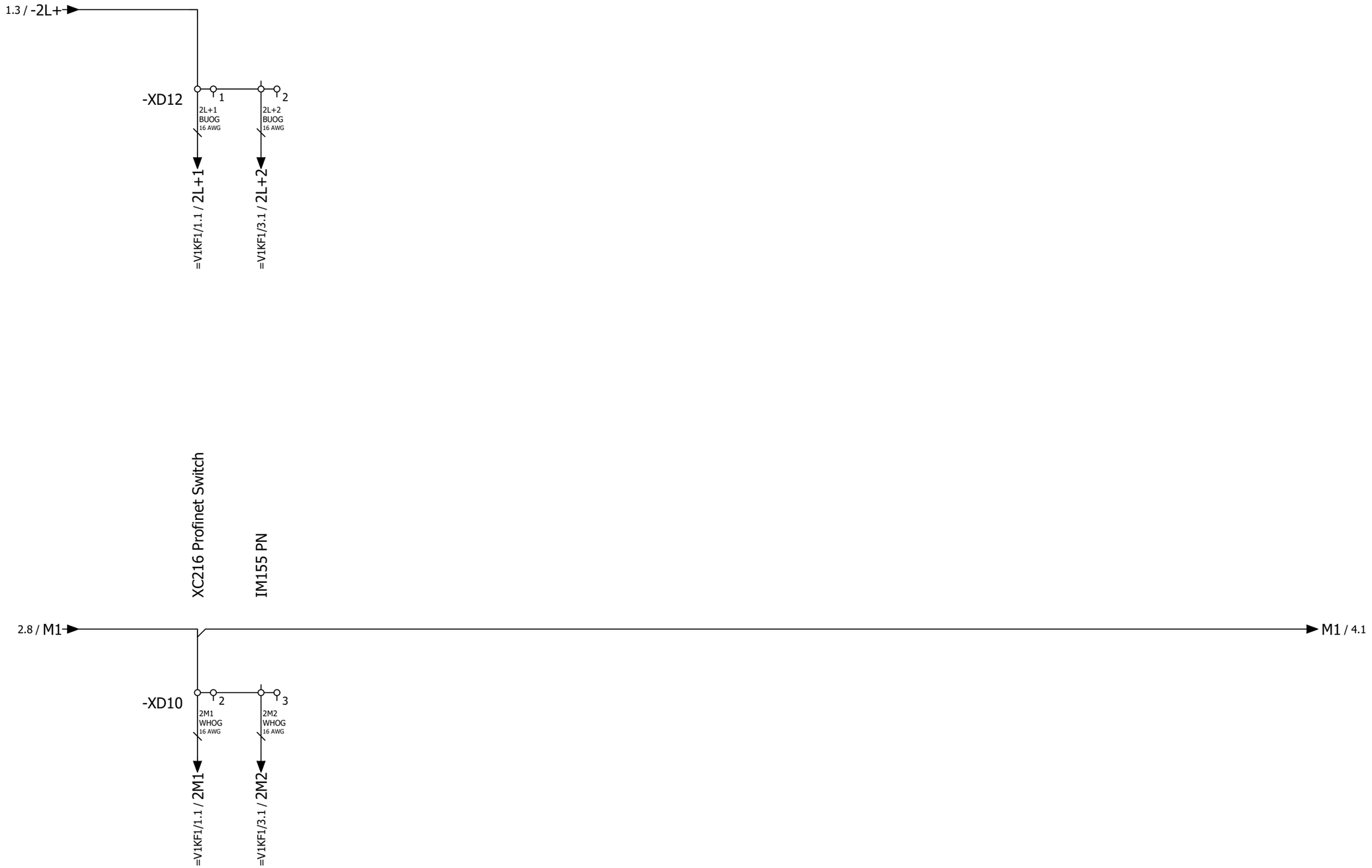

			Date	12/22/2022	Volvo Trucks North America	Valiant TMS	Power distribution 24VDC 2L+	Drawing name: =2V04&EFS-EL	= V1WC4	
			Ed.	MKLEPADLO					+ V1UC14	
			Appr		P6700 Underbody Mainline - Cell 2V04	Scale 1:1		Document type: EFS	Project nr: 22-16151	Page 3 / 1630
Modification	Date	Name	Original		Replacement of	Replaced by				

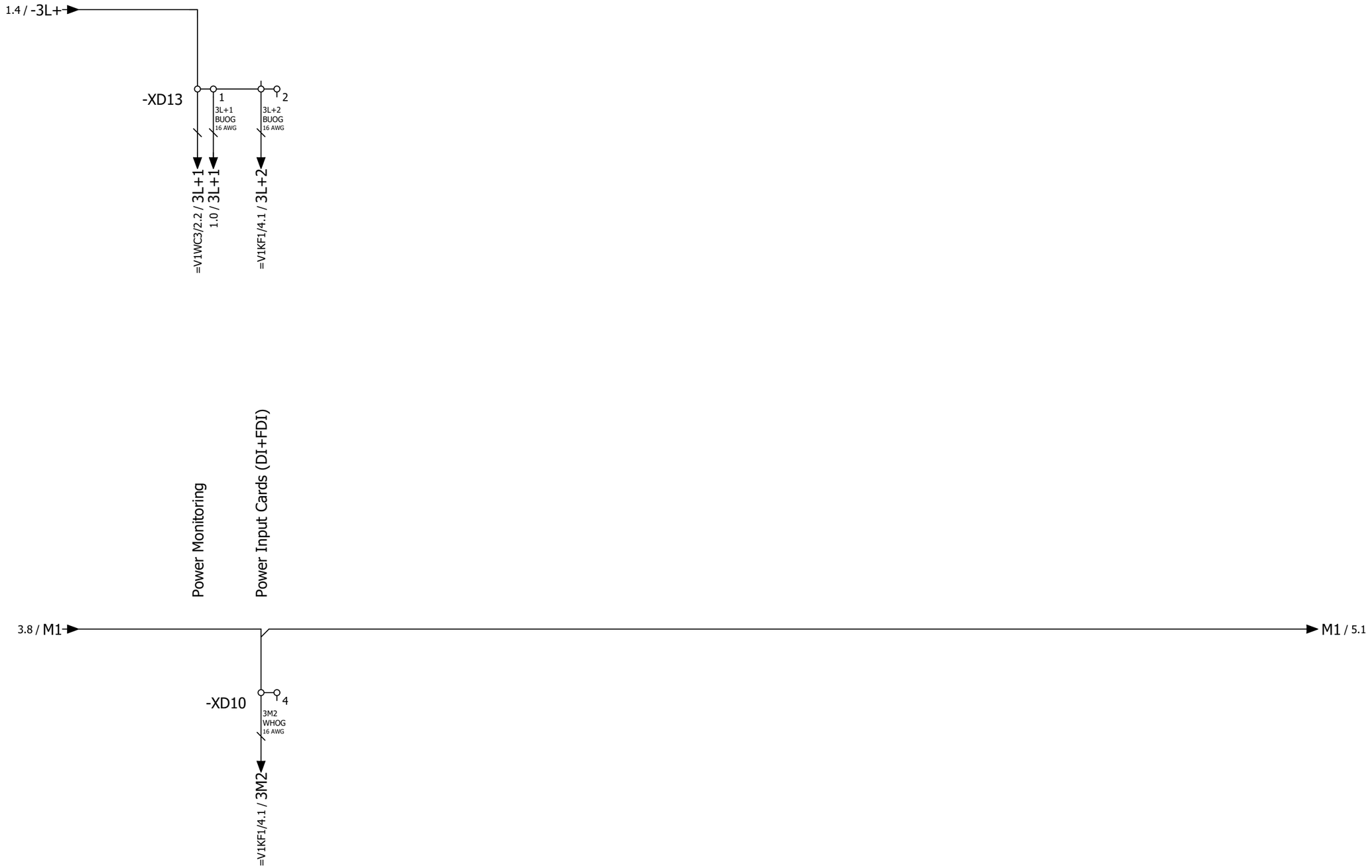

			Date	12/22/2022	Volvo Trucks North America		Valiant TMS	Power distribution 24VDC 3L+	Drawing name: =2V04&EFS-EL	= V1WC4	
			Ed.	MKLEPADLO						+ V1UC14	
			Appr		P6700 Underbody Mainline - Cell 2V04				Document type: EFS	Project nr: 22-16151	Page 4
Modification	Date	Name	Original		Replacement of	Replaced by	Scale 1:1				1630

0	1	2	3	4	5	6	7	8	9

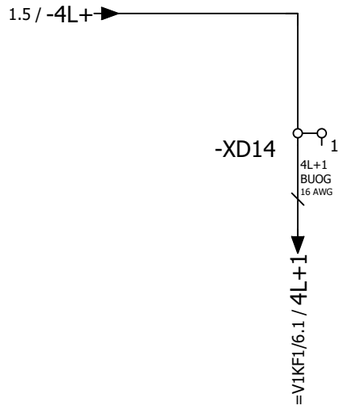

Power Output Cards (DQ+FDQ+FRQ)

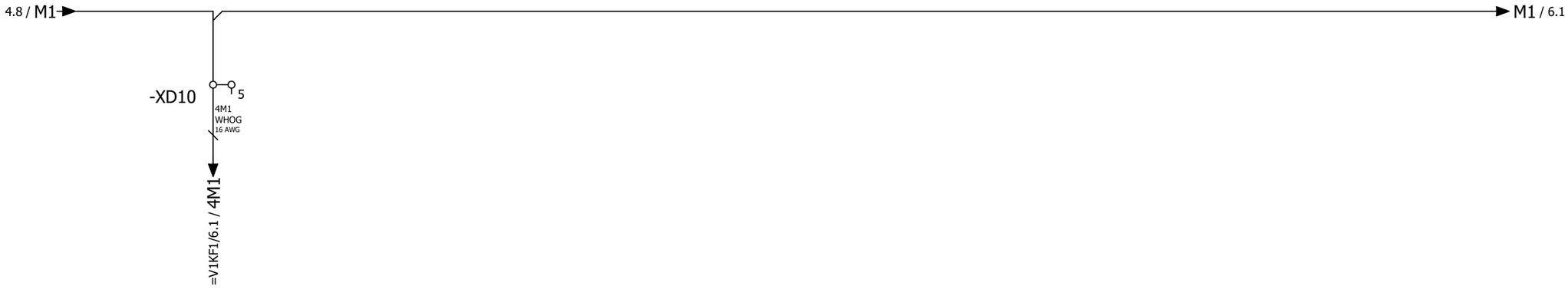

			Date	12/22/2022	Volvo Trucks North America	Valiant TMS	Power distribution 24VDC 4L+	Drawing name: =2V04&EFS-EL	= V1WC4	
			Ed.	MKLEPADLO					+ V1UC14	
			Appr		P6700 Underbody Mainline - Cell 2V04	Scale 1:1		Document type: EFS	Project nr: 22-16151	Page 5 / 1630
Modification	Date	Name	Original		Replacement of	Replaced by				

0	1	2	3	4	5	6	7	8	9

1.6 / -5L+

-XD15

1

5L+1

BN

16 AWG

=KH0+KH0/6.4 / 5L+1

=KH0+KH0/8.4 / 5L+1

Power Air Monitoring S140,
S150 Conveyor At Load

5.8 / M1

M1 / 7.1

-XD10

6

5M1

BU

16 AWG

=KH0+KH0/6.4 / 5M1

=KH0+KH0/8.4 / 5M1

5

7

			Date	12/22/2022	Volvo Trucks North America		Valiant TMS	Power distribution 24VDC 5L+	Drawing name: =2V04&EFS-EL	= V1WC4
			Ed.	MKLEPADLO						+ V1UC14
			Appr		P6700 Underbody Mainline - Cell 2V04				Document type: EFS	Project nr: 22-16151
Modification	Date	Name	Original		Replacement of	Replaced by	Scale 1:1			Page 6 / 1630

0	1	2	3	4	5	6	7	8	9

1.7 / -6L+

-XD16 1

6L+1
BN
18 AWG

=V1FQ1+.FQ1/10.1 / 6L+1

Power Light Screen
2V04/2V01 S150 Conveyor

6.8 / M1

M1 / 8.1

-XD10 7

6M1
BU
18 AWG

=V1FQ1+.FQ1/10.1 / 6M1

6

8

			Date	12/22/2022	Volvo Trucks North America		Valiant TMS	Power distribution 24VDC 6L+	Drawing name: =2V04&EFS-EL	= V1WC4	
			Ed.	MKLEPADLO						+ V1UC14	
			Appr		P6700 Underbody Mainline - Cell 2V04				Document type: EFS	Project nr: 22-16151	Page 7
Modification	Date	Name	Original		Replacement of	Replaced by	Scale 1:1				1630

0	1	2	3	4	5	6	7	8	9

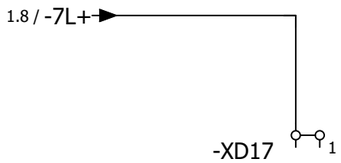

7 9

			Date	12/22/2022	Volvo Trucks North America	Valiant TMS	Power distribution 24VDC 7L+	Drawing name: =2V04&EFS-EL	= V1WC4	
			Ed.	MKLEPADLO					+ V1UC14	
			Appr		P6700 Underbody Mainline - Cell 2V04			Document type: EFS	Project nr: 22-16151	Page 8
Modification	Date	Name	Original		Replacement of / Replaced by	Scale 1:1				1630

0	1	2	3	4	5	6	7	8	9

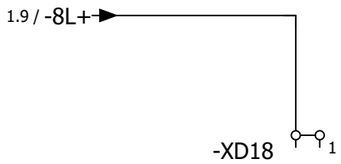

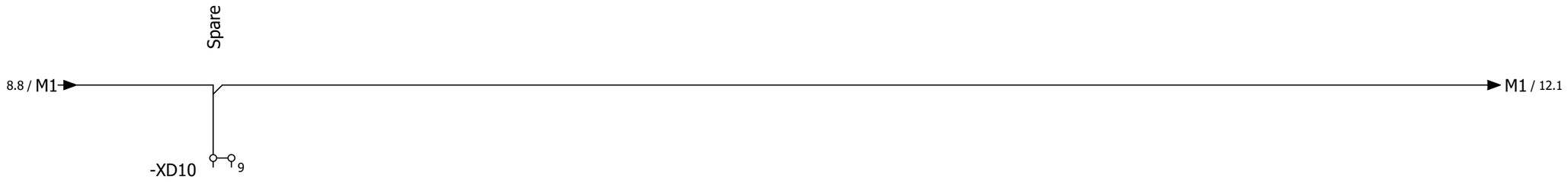

8

11

			Date	12/22/2022	Volvo Trucks North America	Valiant TMS	Power distribution 24VDC 8L+	Drawing name: =2V04&EFS-EL		= V1WC4	
			Ed.	MKLEPADLO						+ V1UC14	
			Appr		P6700 Underbody Mainline - Cell 2V04			Document type: EFS	Project nr: 22-16151	Page	9
Modification	Date	Name	Original		Replacement of	Replaced by	Scale 1:1				1630

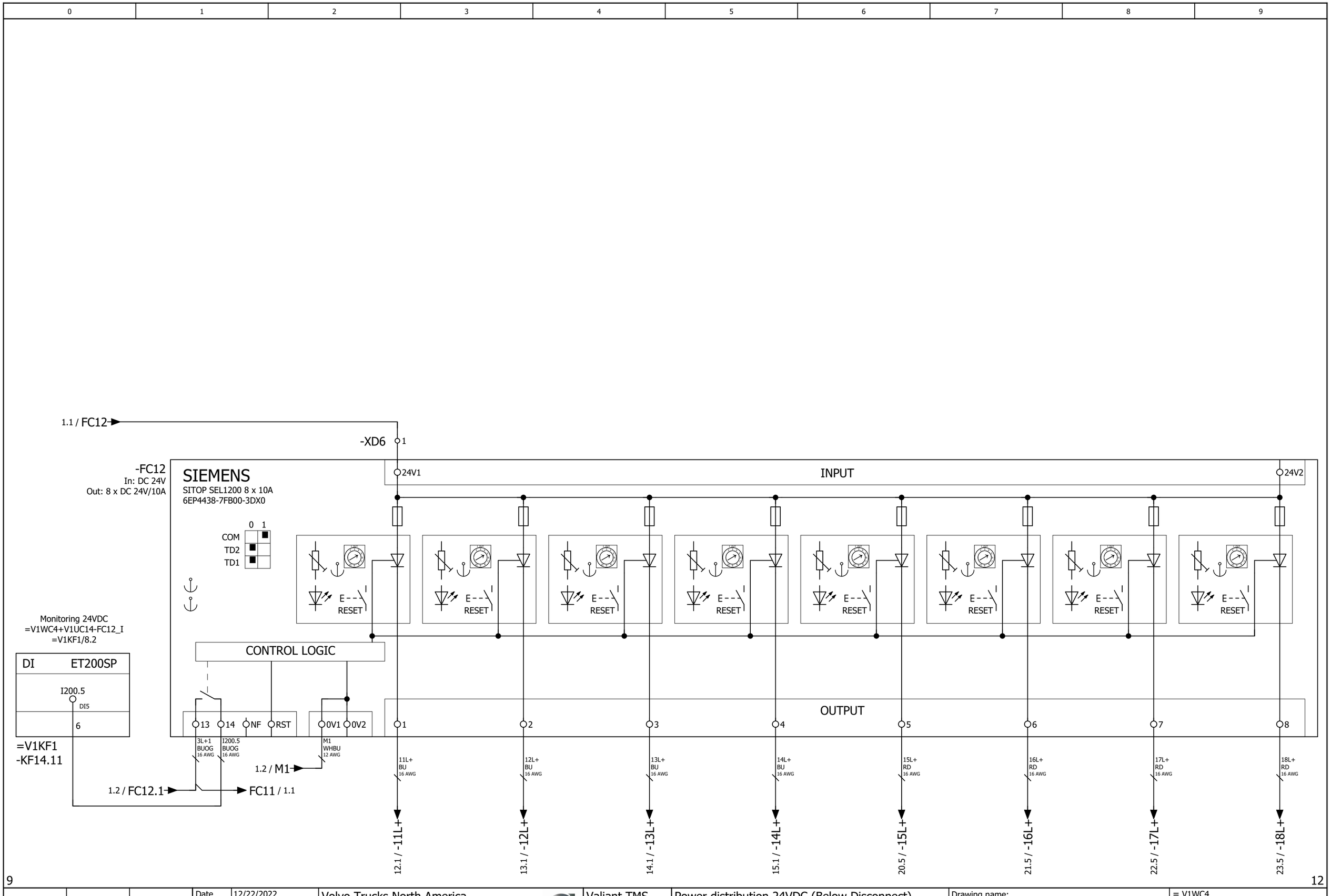

			Date	12/22/2022	Volvo Trucks North America	Valiant TMS	Power distribution 24VDC (Below Disconnect)	Drawing name: =2V04&EFS-EL	= V1WC4 + V1UC14
			Ed.	MKLEPADLO	P6700 Underbody Mainline - Cell 2V04				
			Appr					Document type: EFS	Project nr: 22-16151
Modification	Date	Name	Original		Replacement of / Replaced by	Scale 1:1			Page 11 / 1630

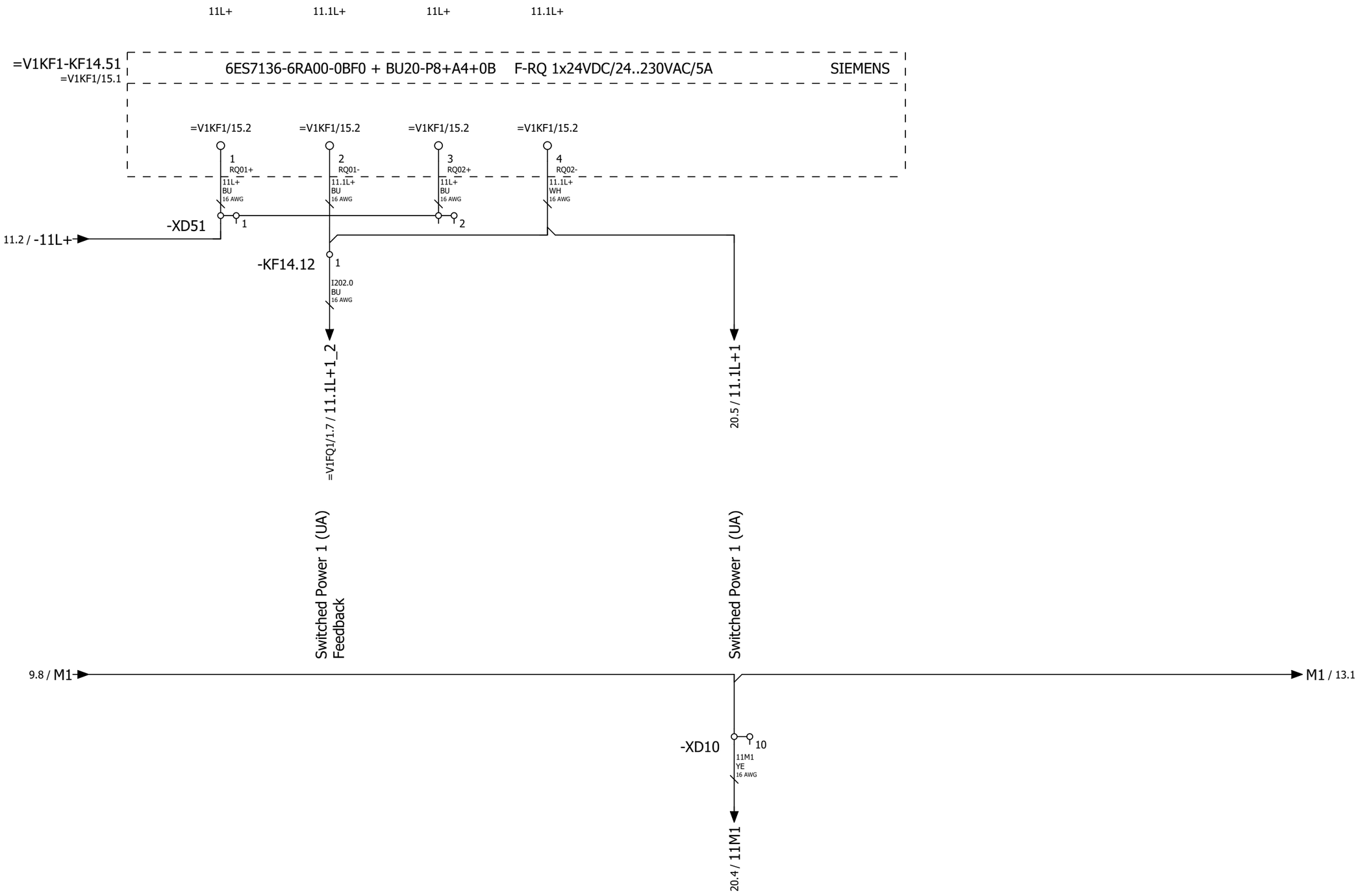

			Date	12/22/2022	Volvo Trucks North America		Valiant TMS	Power distribution 24VDC 11L+	Drawing name: =2V04&EFS-EL	= V1WC4	
			Ed.	MKLEPADLO						+ V1UC14	
			Appr		P6700 Underbody Mainline - Cell 2V04				Document type: EFS	Project nr: 22-16151	Page 12
Modification	Date	Name	Original		Replacement of	Replaced by	Scale 1:1				1630

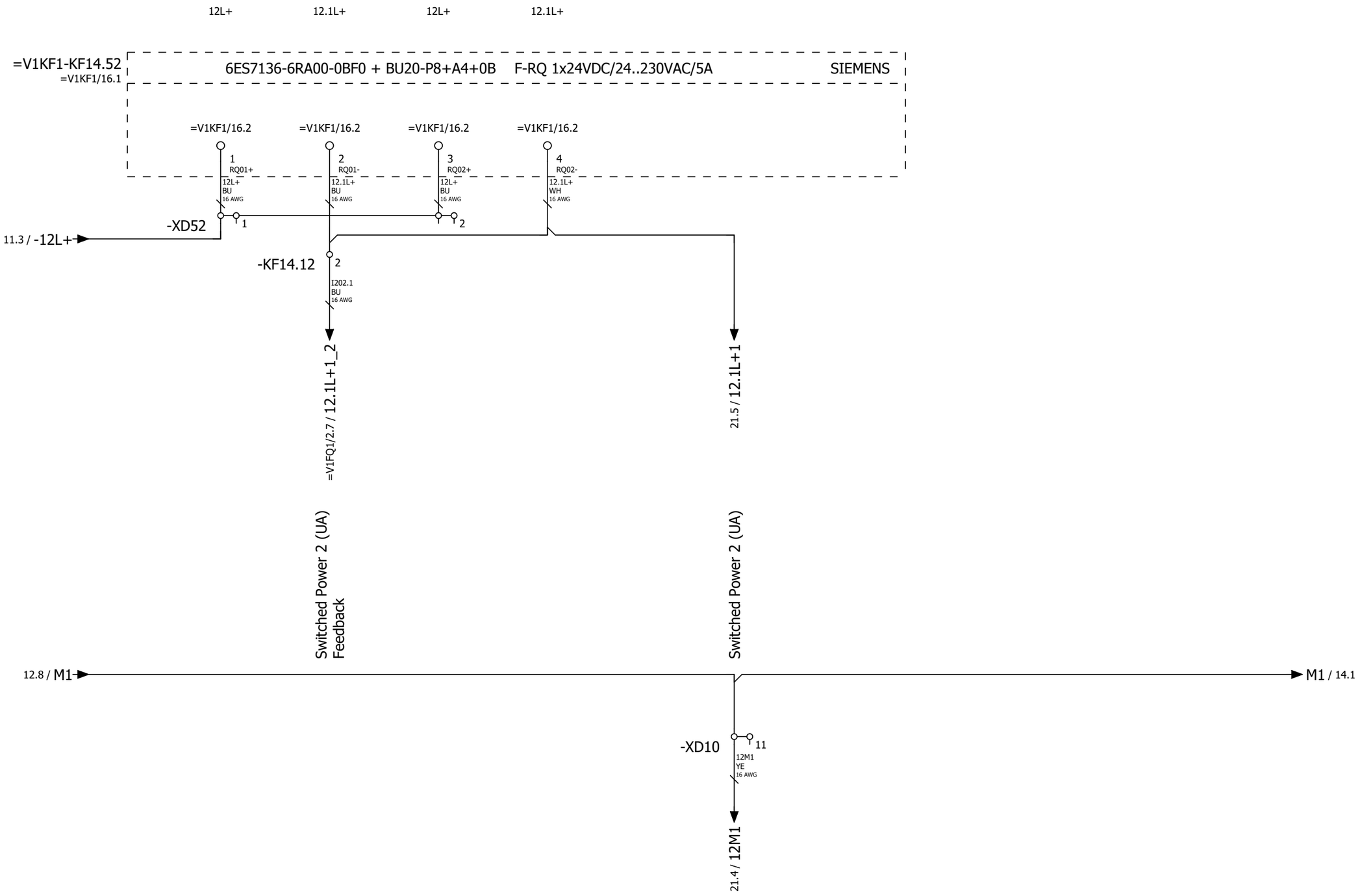

12

14

			Date	12/22/2022	Volvo Trucks North America		Valiant TMS	Power distribution 24VDC 12L+	Drawing name: =2V04&EFS-EL	= V1WC4	
			Ed.	MKLEPADLO						+ V1UC14	
			Appr		P6700 Underbody Mainline - Cell 2V04				Document type: EFS	Project nr: 22-16151	Page 13
Modification	Date	Name	Original		Replacement of	Replaced by	Scale 1:1				1630

13L+ 13.1L+ 13L+ 13.1L+

=V1KF1-KF14.53
=V1KF1/17.1

6ES7136-6RA00-0BF0 + BU20-P8+A4+0B F-RQ 1x24VDC/24..230VAC/5A SIEMENS

=V1KF1/17.2 =V1KF1/17.2 =V1KF1/17.2 =V1KF1/17.2

1 RQ01+ 13L+ BU 16 AWG
2 RQ01- 13.1L+ BU 16 AWG
3 RQ02+ 13L+ BU 16 AWG
4 RQ02- 13.1L+ WH 16 AWG

11.4 / -13L+ → -XD53 1 2

-KF14.12 3
I202.2 BU 16 AWG

=V1FQ1/3.7 / 13.1L+1_2
Switched Power 3 (UA) Feedback

22.5 / 13.1L+1
Switched Power 3 (UA)

13.8 / M1 → M1 / 15.1

-XD10 12
13M1 YE 16 AWG

22.4 / 13M1

13 15

			Date	12/22/2022	Volvo Trucks North America	Valiant TMS	Power distribution 24VDC 13L+	Drawing name: =2V04&EFS-EL	= V1WC4	
			Ed.	MKLEPADLO					+ V1UC14	
			Appr		P6700 Underbody Mainline - Cell 2V04	Scale 1:1		Document type: EFS	Project nr: 22-16151	Page 14
Modification	Date	Name	Original		Replacement of	Replaced by				1630

0	1	2	3	4	5	6	7	8	9

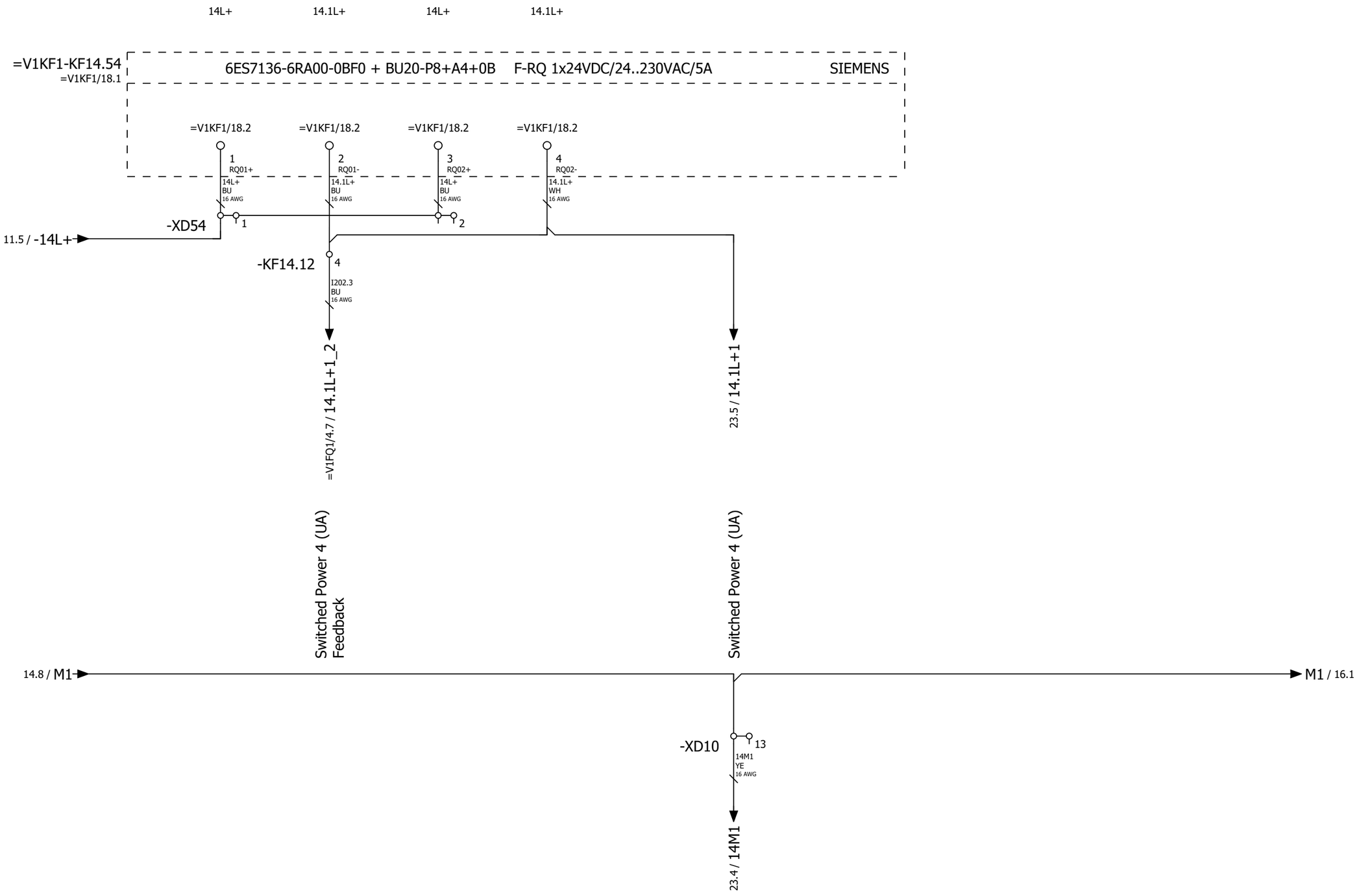

14

16

			Date	12/22/2022	Volvo Trucks North America	Valiant TMS	Power distribution 24VDC 14L+	Drawing name: =2V04&EFS-EL		= V1WC4	
			Ed.	MKLEPADLO						+ V1UC14	
			Appr		P6700 Underbody Mainline - Cell 2V04	Scale 1:1		Document type: EFS	Project nr: 22-16151	Page	15
Modification	Date	Name	Original		Replacement of	Replaced by					1630

15

17

			Date	12/22/2022	Volvo Trucks North America	Valiant TMS	Power distribution 24VDC 15L+	Drawing name: =2V04&EFS-EL		= V1WC4	
			Ed.	MKLEPADLO						+ V1UC14	
			Appr		P6700 Underbody Mainline - Cell 2V04			Document type: EFS	Project nr: 22-16151	Page	16
Modification	Date	Name	Original		Replacement of	Replaced by	Scale 1:1				1630

Switched Power 2 (US)

16.8 / M1

M1 / 18.1

-XD10

15

16M1
WHYE
16 AWG

21.4 / 16M1

16

18

			Date	12/22/2022	Volvo Trucks North America	Valiant TMS	Power distribution 24VDC 16L+	Drawing name: =2V04&EFS-EL		= V1WC4	
			Ed.	MKLEPADLO						+ V1UC14	
			Appr		P6700 Underbody Mainline - Cell 2V04			Document type: EFS	Project nr: 22-16151	Page	17
Modification	Date	Name	Original		Replacement of / Replaced by	Scale 1:1					1630

Switched Power 3 (US)

17.8 / M1

M1 / 19.1

-XD10

16

17M1
WHYE
16 AWG

22.4 / 17M1

17

19

			Date	12/22/2022	Volvo Trucks North America	Valiant TMS	Power distribution 24VDC 17L+	Drawing name: =2V04&EFS-EL	= V1WC4	
			Ed.	MKLEPADLO					+ V1UC14	
			Appr		P6700 Underbody Mainline - Cell 2V04			Document type: EFS	Project nr: 22-16151	Page 18
Modification	Date	Name	Original		Replacement of / Replaced by	Scale 1:1				1630

			Date	12/22/2022	Volvo Trucks North America	Valiant TMS	Power distribution 24VDC 18L+	Drawing name: =2V04&EFS-EL		= V1WC4	
			Ed.	MKLEPADLO						+ V1UC14	
			Appr		P6700 Underbody Mainline - Cell 2V04			Document type: EFS	Project nr: 22-16151	Page	19
Modification	Date	Name	Original		Replacement of	Replaced by	Scale 1:1				1630

0	1	2	3	4	5	6	7	8	9

+.UC14

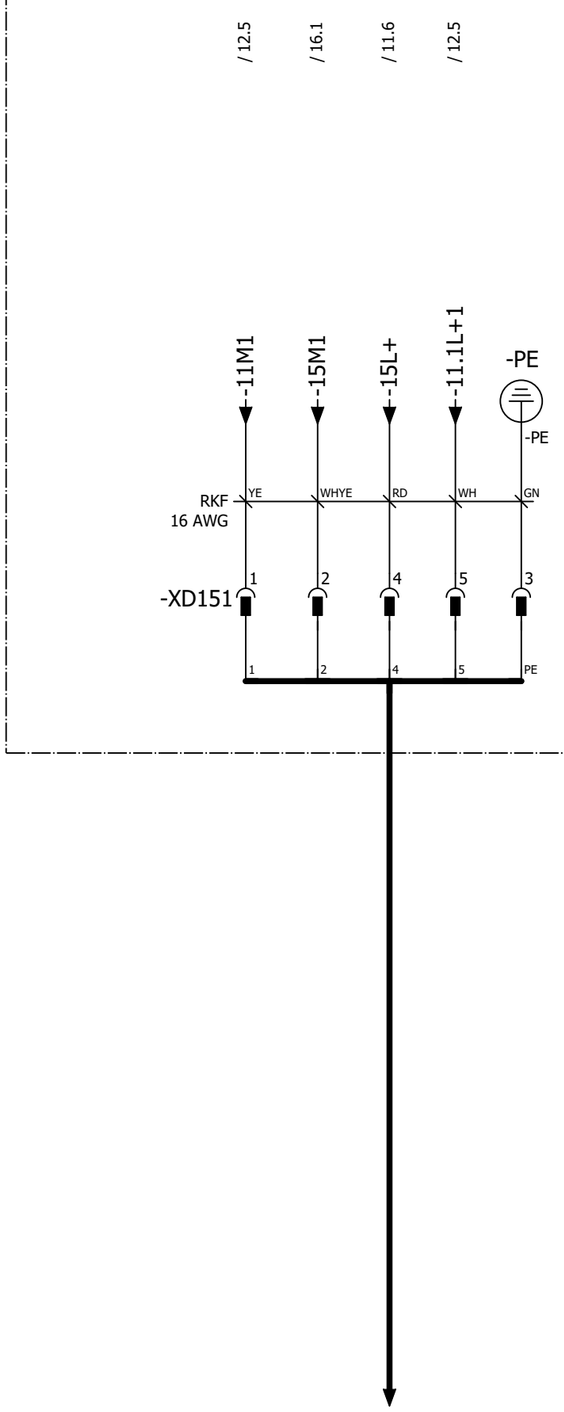

POWER IN / POWER OUT

Pin 1: 0 V UA
Pin 2: 0 V US
Pin 3: FE
Pin 4: +24 V US / 9 A
Pin 5: +24 V UA / 9 A

Pin #	WIRE	COLOR
Pin 1	-11M1	YE
Pin 2	-15M1	WHYE
Pin 3	GND	GN
Pin 4	-15L+	RD
Pin 5	-11.1L+1	WH

			Date	12/22/2022	Volvo Trucks North America	Valiant TMS	24VDC Switched Power 1	Drawing name: =2V04&EFS-EL	= V1WC4
			Ed.	MKLEPADLO					+ V1UC14
			Appr		P6700 Underbody Mainline - Cell 2V04			Document type: EFS	Project nr: 22-16151
Modification	Date	Name	Original		Replacement of	Replaced by	Scale 1:1		Page 20 / 1630

0	1	2	3	4	5	6	7	8	9

+.UC14

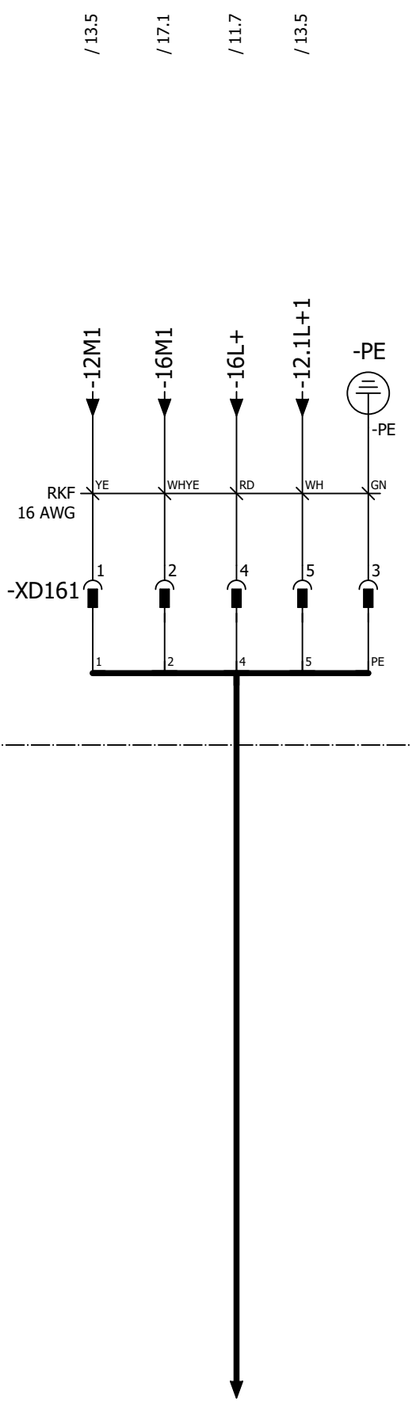

POWER IN / POWER OUT

Pin 1: 0 V UA
Pin 2: 0 V US
Pin 3: FE
Pin 4: +24 V US / 9 A
Pin 5: +24 V UA / 9 A

Pin #	WIRE	COLOR
Pin 1	-12M1	YE
Pin 2	-16M1	WHYE
Pin 3	GND	GN
Pin 4	-16L+	RD
Pin 5	-12.1L+1	WH

20

22

			Date	12/22/2022	Volvo Trucks North America	Valiant TMS	24VDC Switched Power 2	Drawing name: =2V04&EFS-EL	= V1WC4
			Ed.	MKLEPADLO					+ V1UC14
			Appr		P6700 Underbody Mainline - Cell 2V04	Scale 1:1		Document type: EFS	Project nr: 22-16151
Modification	Date	Name	Original		Replacement of	Replaced by			Page 21 / 1630

0	1	2	3	4	5	6	7	8	9

+.UC14

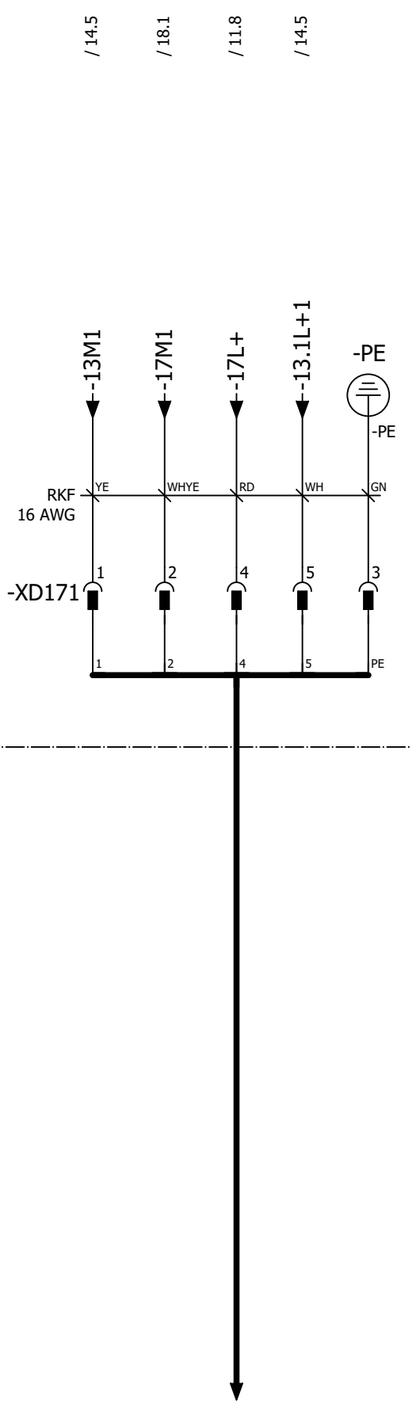

POWER IN / POWER OUT

Pin 1: 0 V UA
Pin 2: 0 V US
Pin 3: FE
Pin 4: +24 V US / 9 A
Pin 5: +24 V UA / 9 A

Pin #	WIRE	COLOR
Pin 1	-13M1	YE
Pin 2	-17M1	WHYE
Pin 3	GND	GN
Pin 4	-17L+	RD
Pin 5	-13.1L+1	WH

			Date	12/22/2022	Volvo Trucks North America	Valiant TMS	24VDC Switched Power 3	Drawing name: =2V04&EFS-EL	= V1WC4
			Ed.	MKLEPADLO					+ V1UC14
			Appr		P6700 Underbody Mainline - Cell 2V04	Scale 1:1		Document type: EFS	Project nr: 22-16151
Modification	Date	Name	Original		Replacement of	Replaced by			Page 22 / 1630

+.UC14

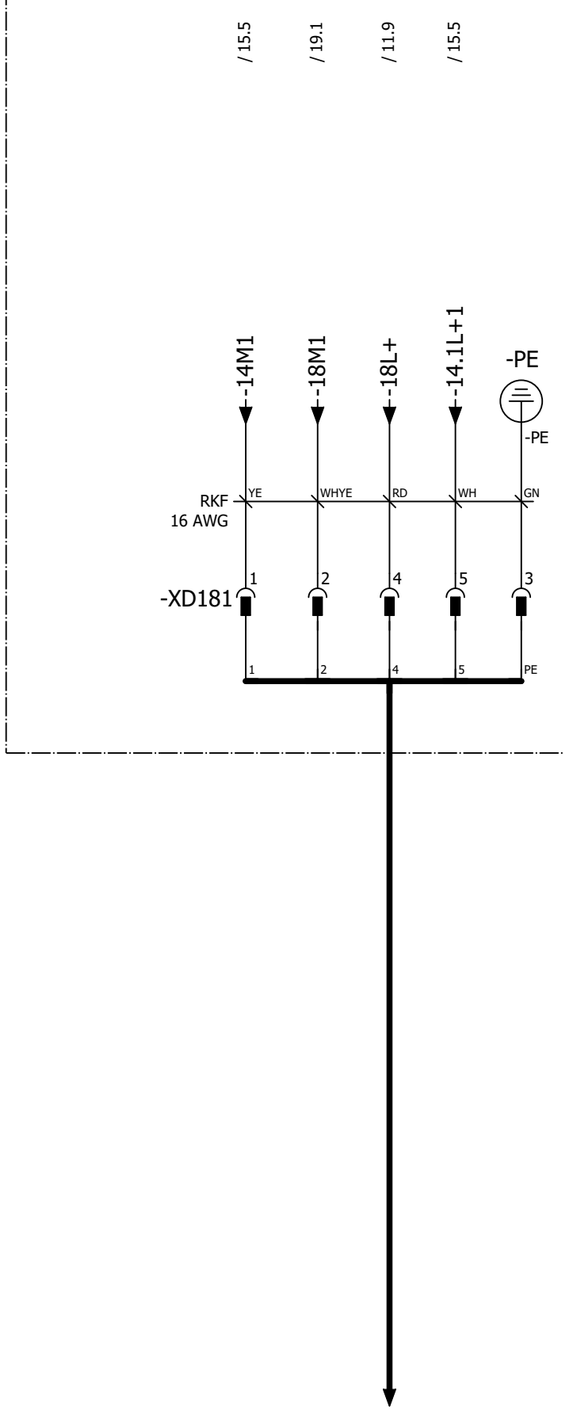

POWER IN / POWER OUT

Pin 1: 0 V UA
Pin 2: 0 V US
Pin 3: FE
Pin 4: +24 V US / 9 A
Pin 5: +24 V UA / 9 A

Pin #	WIRE	COLOR
Pin 1	-14M1	YE
Pin 2	-18M1	WHYE
Pin 3	GND	GN
Pin 4	-18L+	RD
Pin 5	-14.1L+1	WH

22

+.UC15/1

			Date	12/22/2022	Volvo Trucks North America	Valiant TMS	24VDC Switched Power 4	Drawing name: =2V04&EFS-EL	= V1WC4	
			Ed.	MKLEPADLO					+ V1UC14	
			Appr		P6700 Underbody Mainline - Cell 2V04	Scale 1:1		Document type: EFS	Project nr: 22-16151	Page 23
Modification	Date	Name	Original		Replacement of	Replaced by				1630

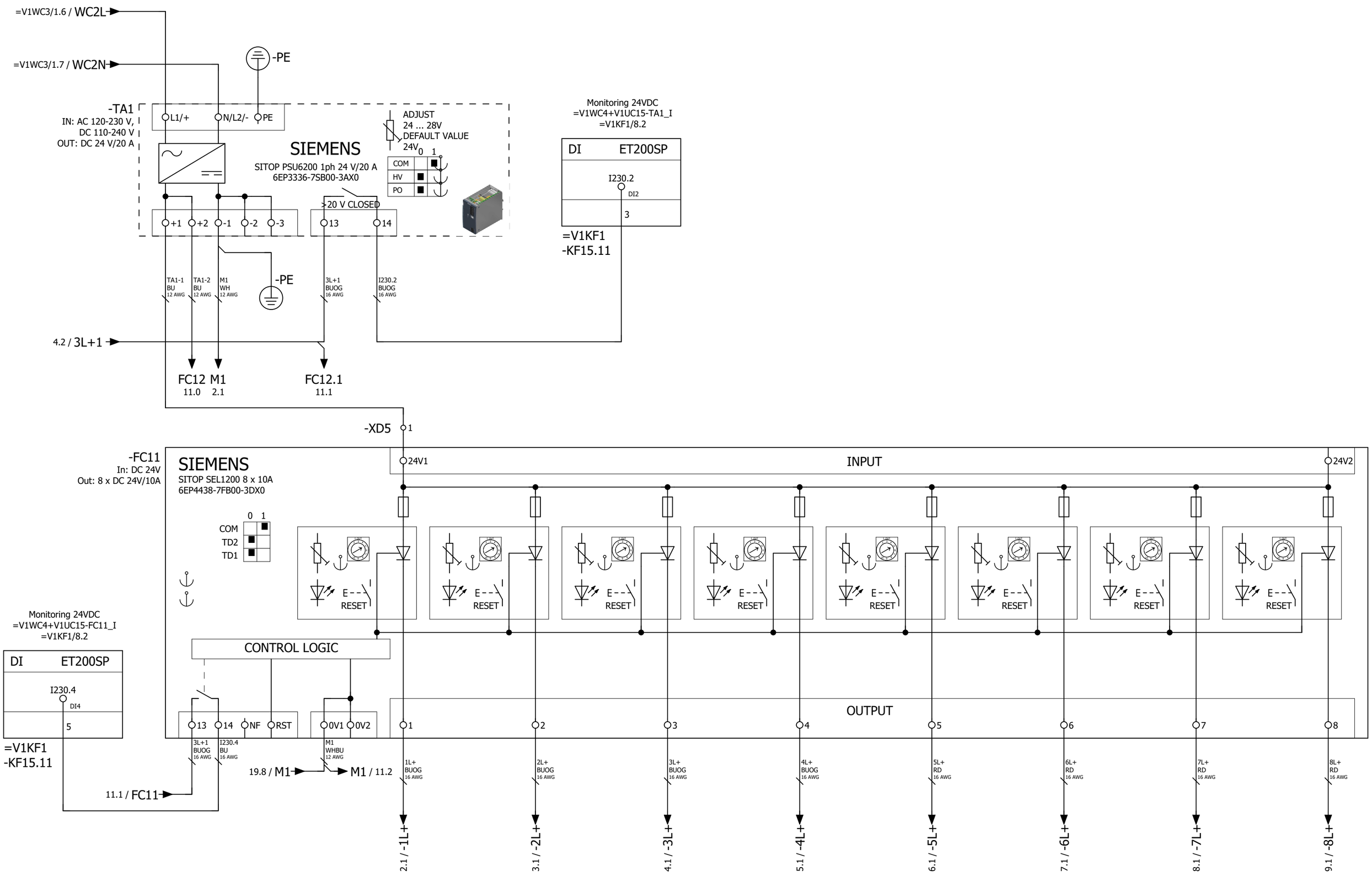

			Date	12/22/2022	Volvo Trucks North America	Valiant TMS	Power distribution 24VDC for Inputs	Drawing name: =2V04&EFS-EL	= V1WC4 + V1UC15
			Ed.	MKLEPADLO	P6700 Underbody Mainline - Cell 2V04				
			Appr					Document type: EFS	Project nr: 22-16151
Modification	Date	Name	Original		Replacement of / Replaced by	Scale 1:1			Page 1 / 1630

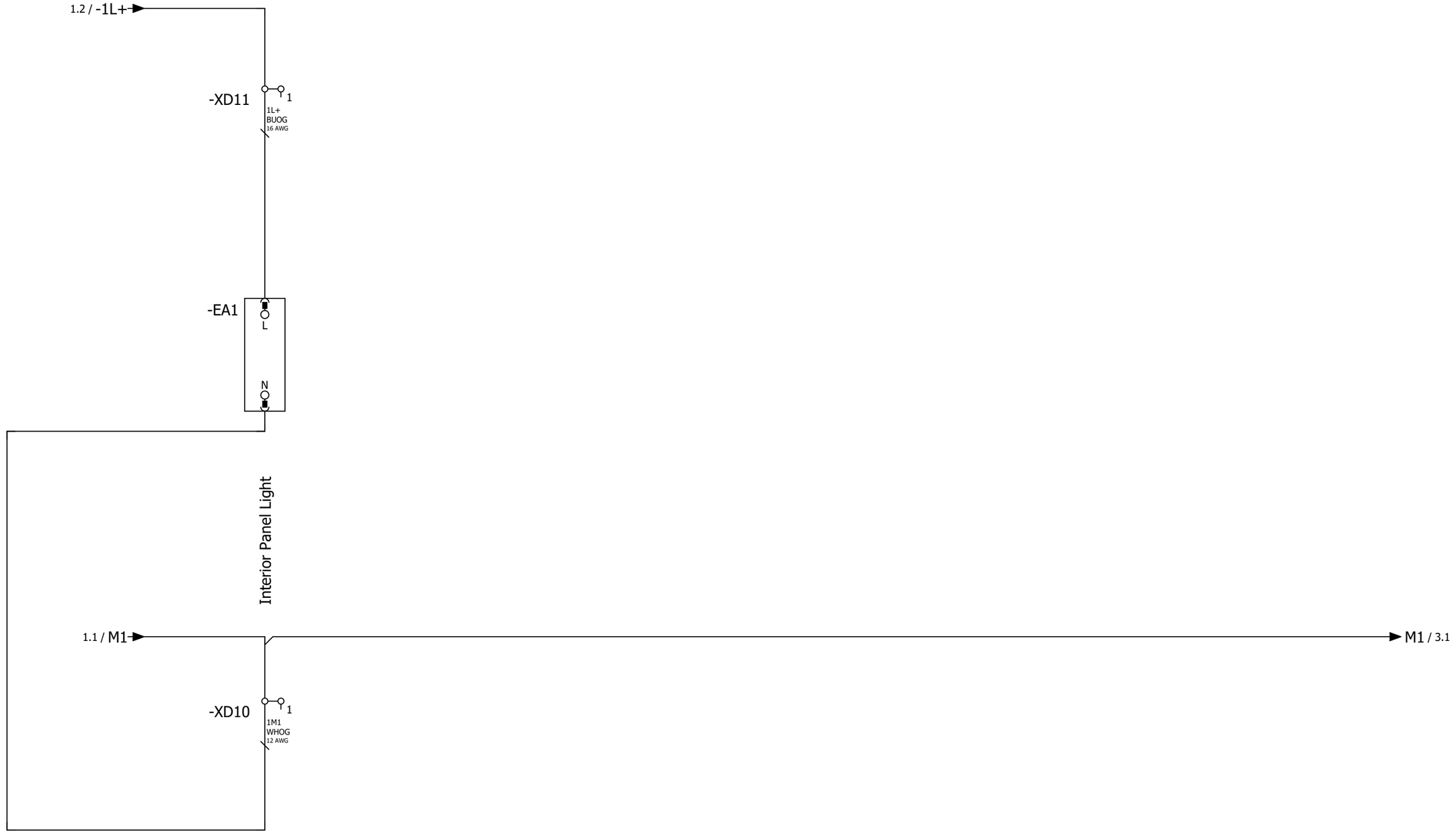

1 3

			Date	12/22/2022	Volvo Trucks North America	Valiant TMS	Power distribution 24VDC 1L+	Drawing name: =2V04&EFS-EL	= V1WC4	
			Ed.	MKLEPADLO					+ V1UC15	
			Appr		P6700 Underbody Mainline - Cell 2V04	Scale 1:1		Document type: EFS	Project nr: 22-16151	Page 2 / 1630
Modification	Date	Name	Original		Replacement of	Replaced by				

0	1	2	3	4	5	6	7	8	9

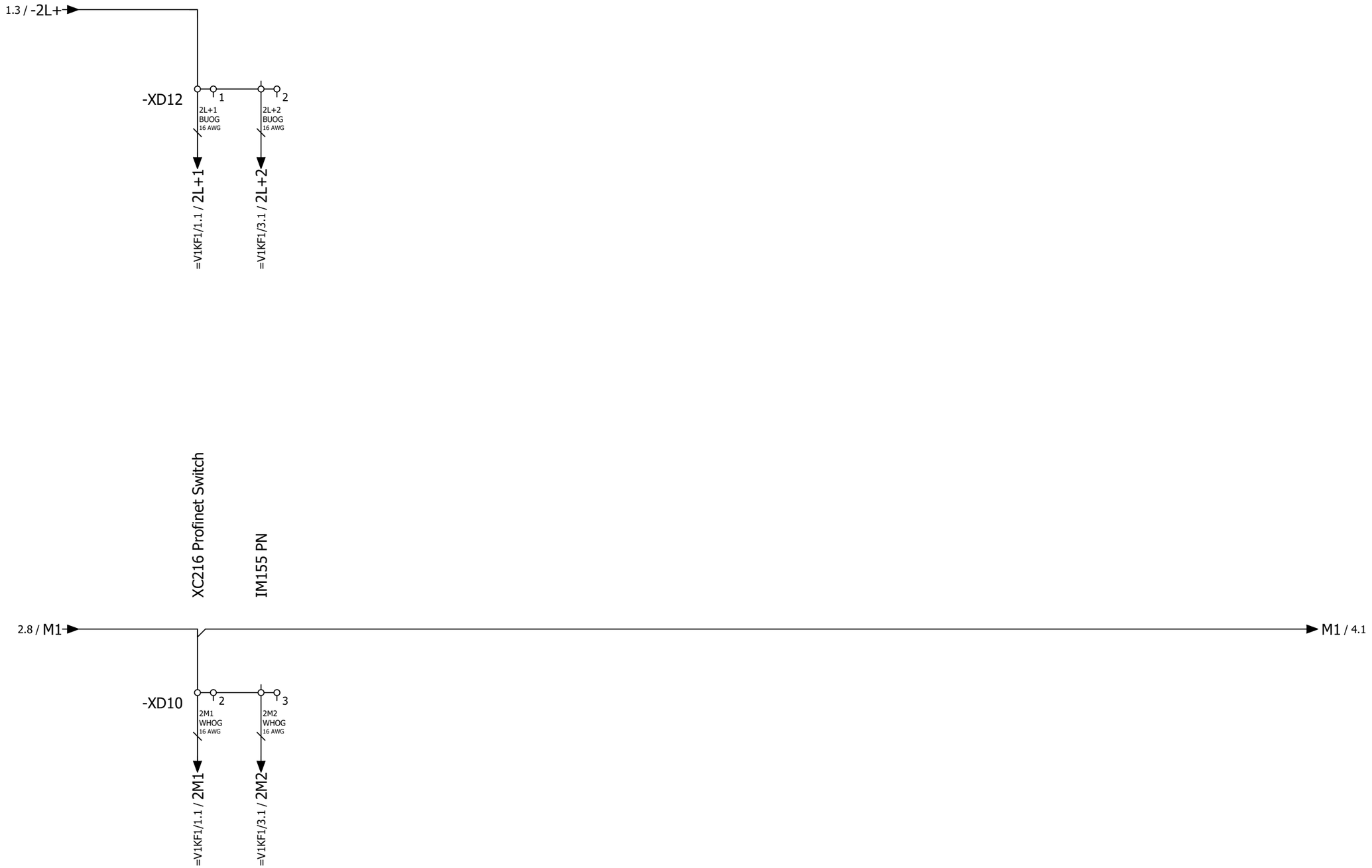

2 4

			Date	12/22/2022	Volvo Trucks North America		Valiant TMS	Power distribution 24VDC 2L+	Drawing name: =2V04&EFS-EL	= V1WC4	
			Ed.	MKLEPADLO						+ V1UC15	
			Appr		P6700 Underbody Mainline - Cell 2V04		Scale 1:1		Document type: EFS	Project nr: 22-16151	Page 3
Modification	Date	Name	Original		Replacement of	Replaced by					1630

0	1	2	3	4	5	6	7	8	9

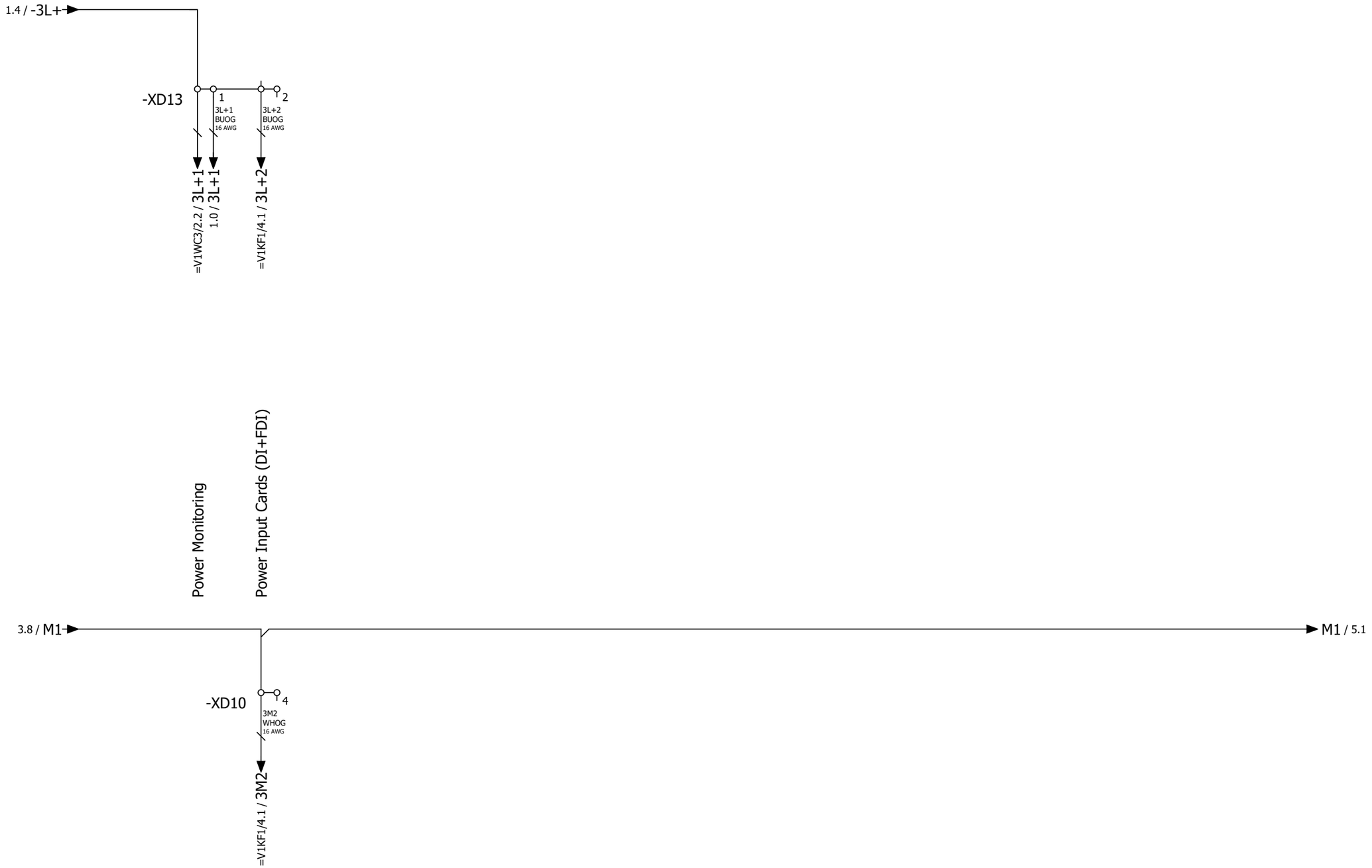

			Date	12/22/2022	Volvo Trucks North America	Valiant TMS	Power distribution 24VDC 3L+	Drawing name: =2V04&EFS-EL		= V1WC4	
			Ed.	MKLEPADLO						+ V1UC15	
			Appr		P6700 Underbody Mainline - Cell 2V04			Document type: EFS	Project nr: 22-16151	Page	4
Modification	Date	Name	Original		Replacement of / Replaced by	Scale 1:1					1630

0	1	2	3	4	5	6	7	8	9

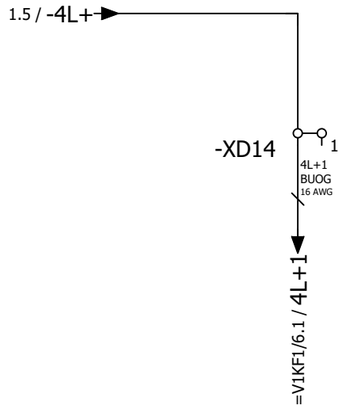

Power Output Cards (DQ+FDQ+FRQ)

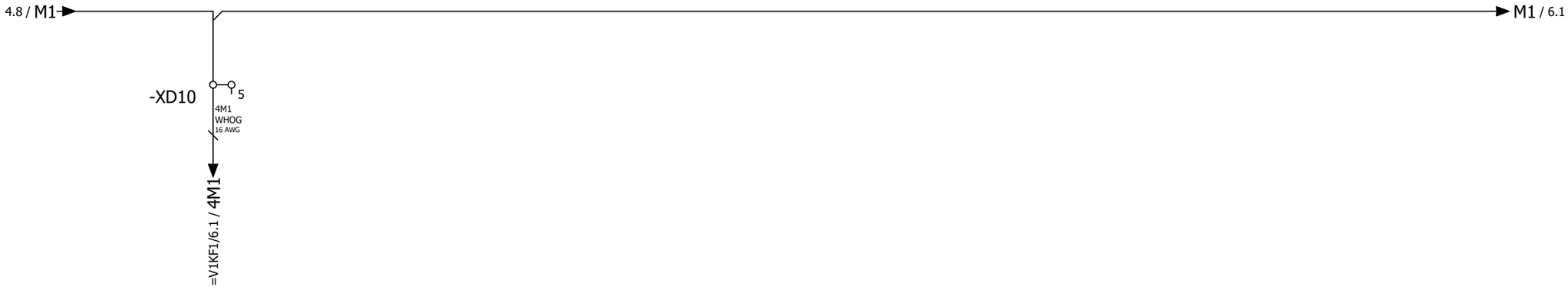

4 6

			Date	12/22/2022	Volvo Trucks North America	Valiant TMS	Power distribution 24VDC 4L+	Drawing name: =2V04&EFS-EL	= V1WC4
			Ed.	MKLEPADLO					+ V1UC15
			Appr		P6700 Underbody Mainline - Cell 2V04	Scale 1:1		Document type: EFS	Project nr: 22-16151
Modification	Date	Name	Original		Replacement of	Replaced by			Page 5 / 1630

0	1	2	3	4	5	6	7	8	9

1.6 / -5L+

-XD15

1

5L+1
BN
16 AWG

=KH0+KH0/2.4 / 5L+1

=KH0+KH0/9.4 / 5L+1

Power Air Monitoring S105,
2V02-GL12 (S060 Conveyor Unload)

5.8 / M1

M1 / 7.1

-XD10

6

5M1
BU
16 AWG

=KH0+KH0/2.4 / 5M1

=KH0+KH0/9.4 / 5M1

5

7

			Date	12/22/2022	Volvo Trucks North America	Valiant TMS	Power distribution 24VDC 5L+	Drawing name: =2V04&EFS-EL	= V1WC4
			Ed.	MKLEPADLO					+ V1UC15
			Appr		P6700 Underbody Mainline - Cell 2V04			Document type: EFS	Project nr: 22-16151
Modification	Date	Name	Original		Replacement of / Replaced by	Scale 1:1			Page 6 / 1630

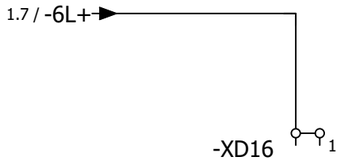

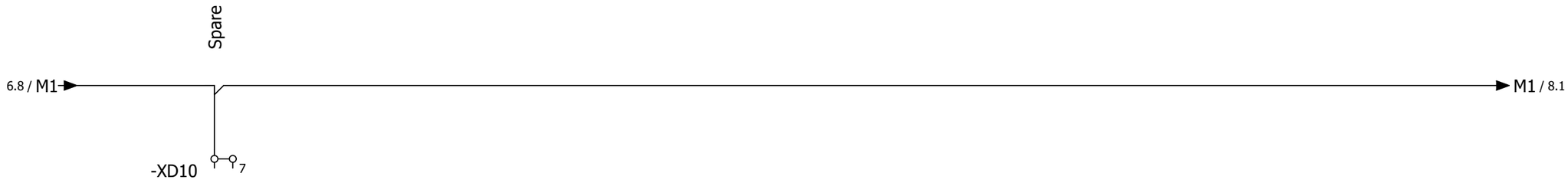

6 8

			Date	12/22/2022	Volvo Trucks North America	Valiant TMS	Power distribution 24VDC 6L+	Drawing name: =2V04&EFS-EL		= V1WC4	
			Ed.	MKLEPADLO						+ V1UC15	
			Appr		P6700 Underbody Mainline - Cell 2V04			Document type: EFS	Project nr: 22-16151	Page	7
Modification	Date	Name	Original		Replacement of	Replaced by	Scale 1:1				1630

0	1	2	3	4	5	6	7	8	9

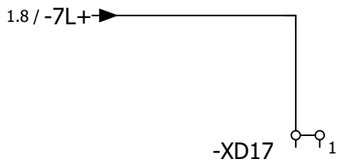

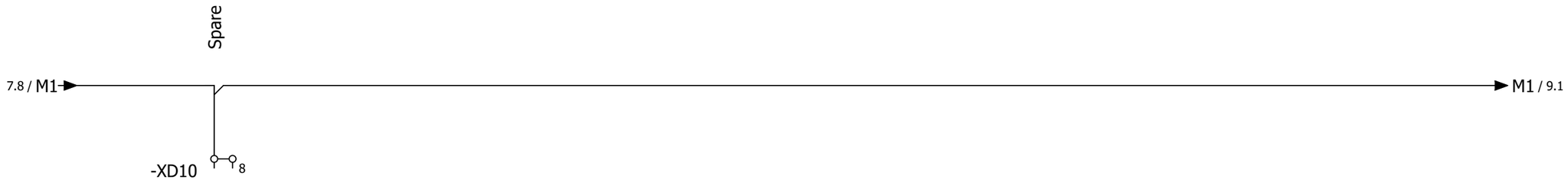

7 9

			Date	12/22/2022	Volvo Trucks North America	Valiant TMS	Power distribution 24VDC 7L+	Drawing name: =2V04&EFS-EL	= V1WC4	
			Ed.	MKLEPADLO					+ V1UC15	
			Appr		P6700 Underbody Mainline - Cell 2V04	Scale 1:1		Document type: EFS	Project nr: 22-16151	Page 8 / 1630
Modification	Date	Name	Original		Replacement of	Replaced by				

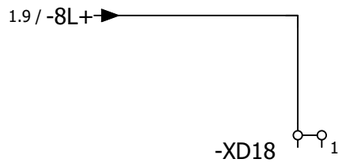

8

11

			Date	12/22/2022	Volvo Trucks North America	Valiant TMS	Power distribution 24VDC 8L+	Drawing name: =2V04&EFS-EL	= V1WC4	
			Ed.	MKLEPADLO					+ V1UC15	
			Appr		P6700 Underbody Mainline - Cell 2V04			Document type: EFS	Project nr: 22-16151	Page 9
Modification	Date	Name	Original		Replacement of / Replaced by	Scale 1:1				1630

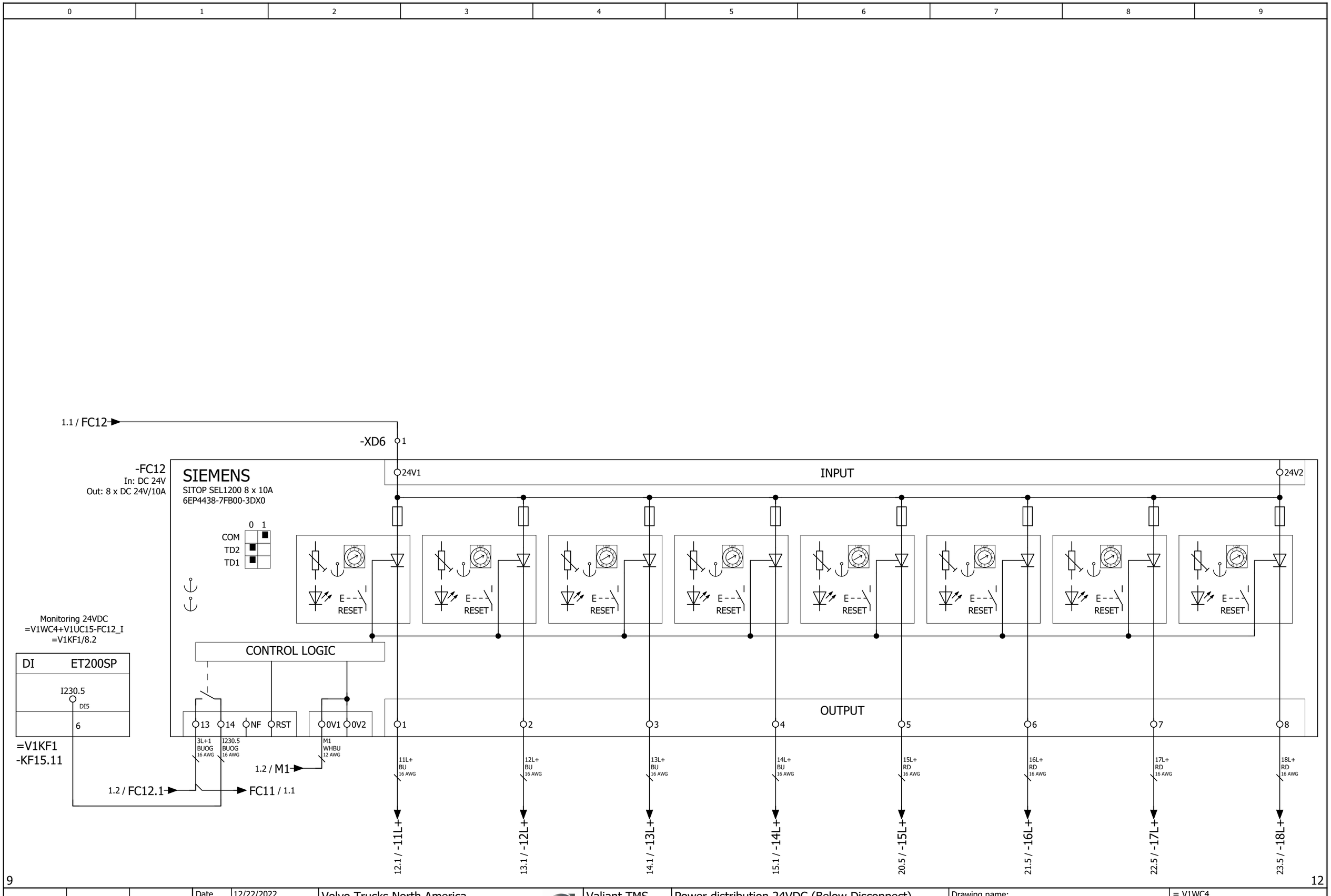

			Date	12/22/2022	Volvo Trucks North America	Valiant TMS	Power distribution 24VDC (Below Disconnect)	Drawing name: =2V04&EFS-EL	= V1WC4 + V1UC15	
			Ed.	MKLEPADLO	P6700 Underbody Mainline - Cell 2V04					
			Appr					Document type: EFS	Project nr: 22-16151	Page 11
Modification	Date	Name	Original		Replacement of / Replaced by	Scale 1:1				1630

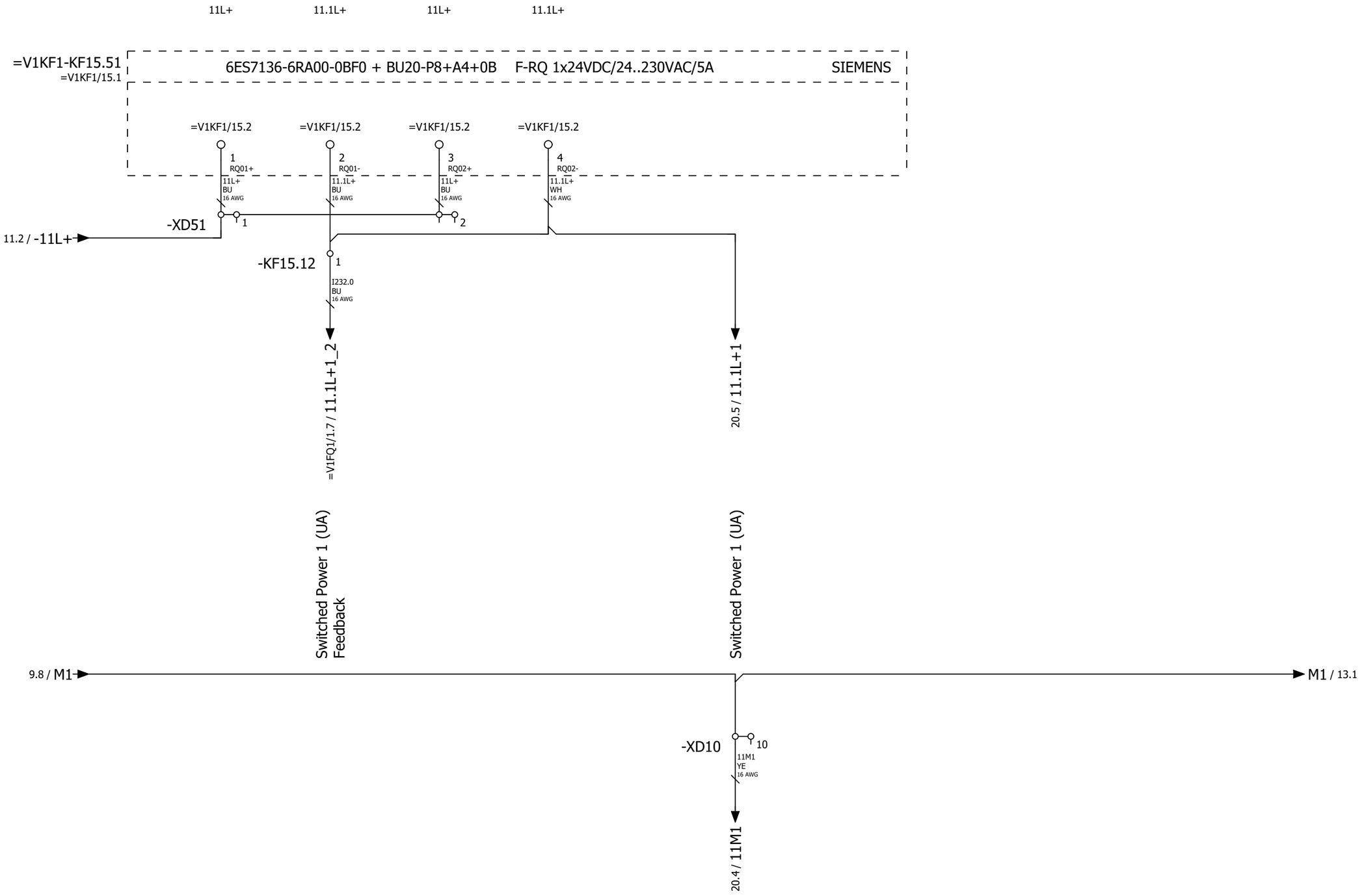

			Date	12/22/2022	Volvo Trucks North America		Valiant TMS	Power distribution 24VDC 11L+	Drawing name: =2V04&EFS-EL	= V1WC4	
			Ed.	MKLEPADLO						+ V1UC15	
			Appr		P6700 Underbody Mainline - Cell 2V04		Scale 1:1		Document type: EFS	Project nr: 22-16151	Page 12 / 1630
Modification	Date	Name	Original		Replacement of	Replaced by					

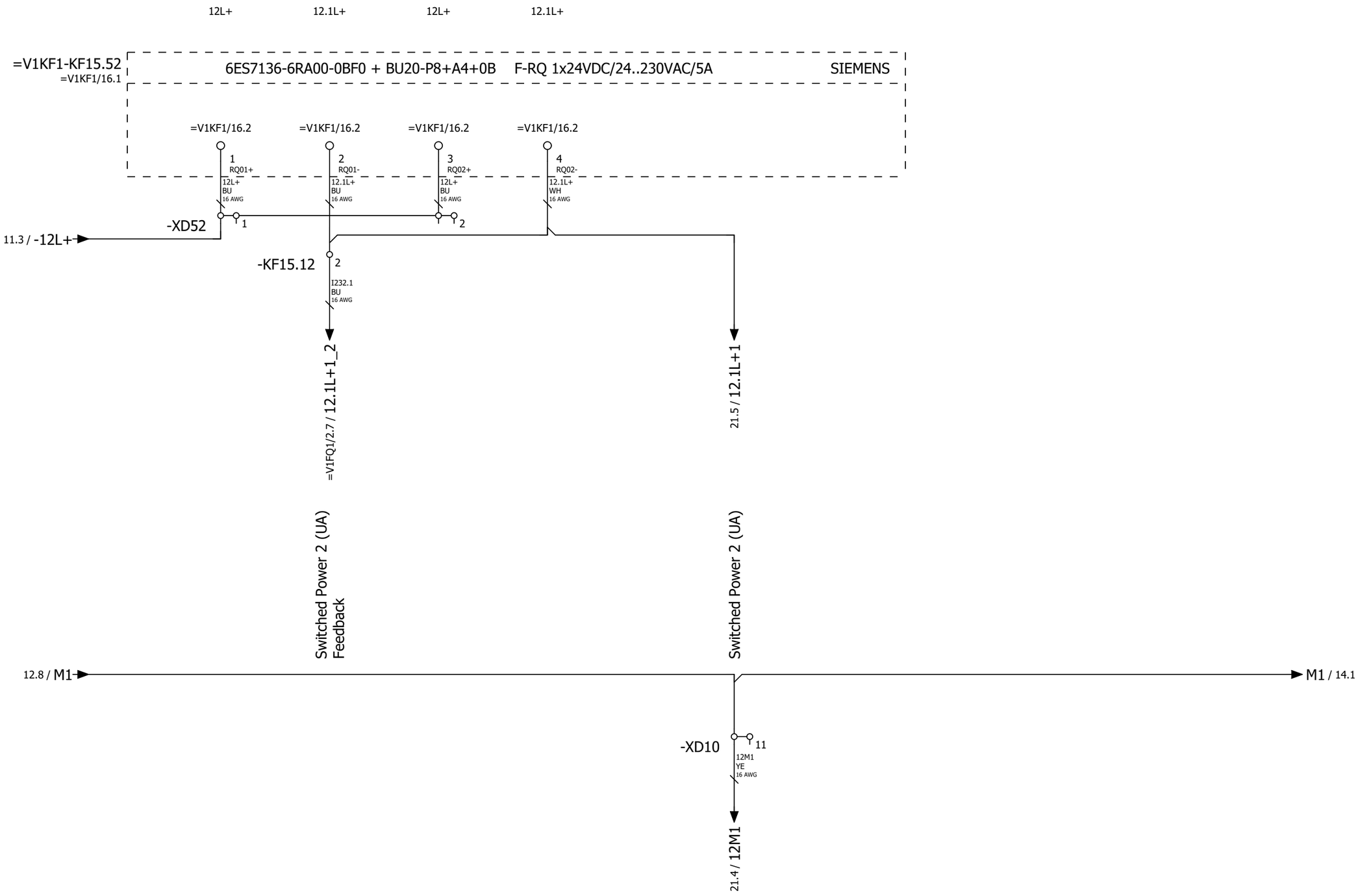

			Date	12/22/2022	Volvo Trucks North America	Valiant TMS	Power distribution 24VDC 12L+	Drawing name: =2V04&EFS-EL	= V1WC4	
			Ed.	MKLEPADLO					+ V1UC15	
			Appr		P6700 Underbody Mainline - Cell 2V04	Scale 1:1		Document type: EFS	Project nr: 22-16151	Page 13 / 1630
Modification	Date	Name	Original		Replacement of	Replaced by				

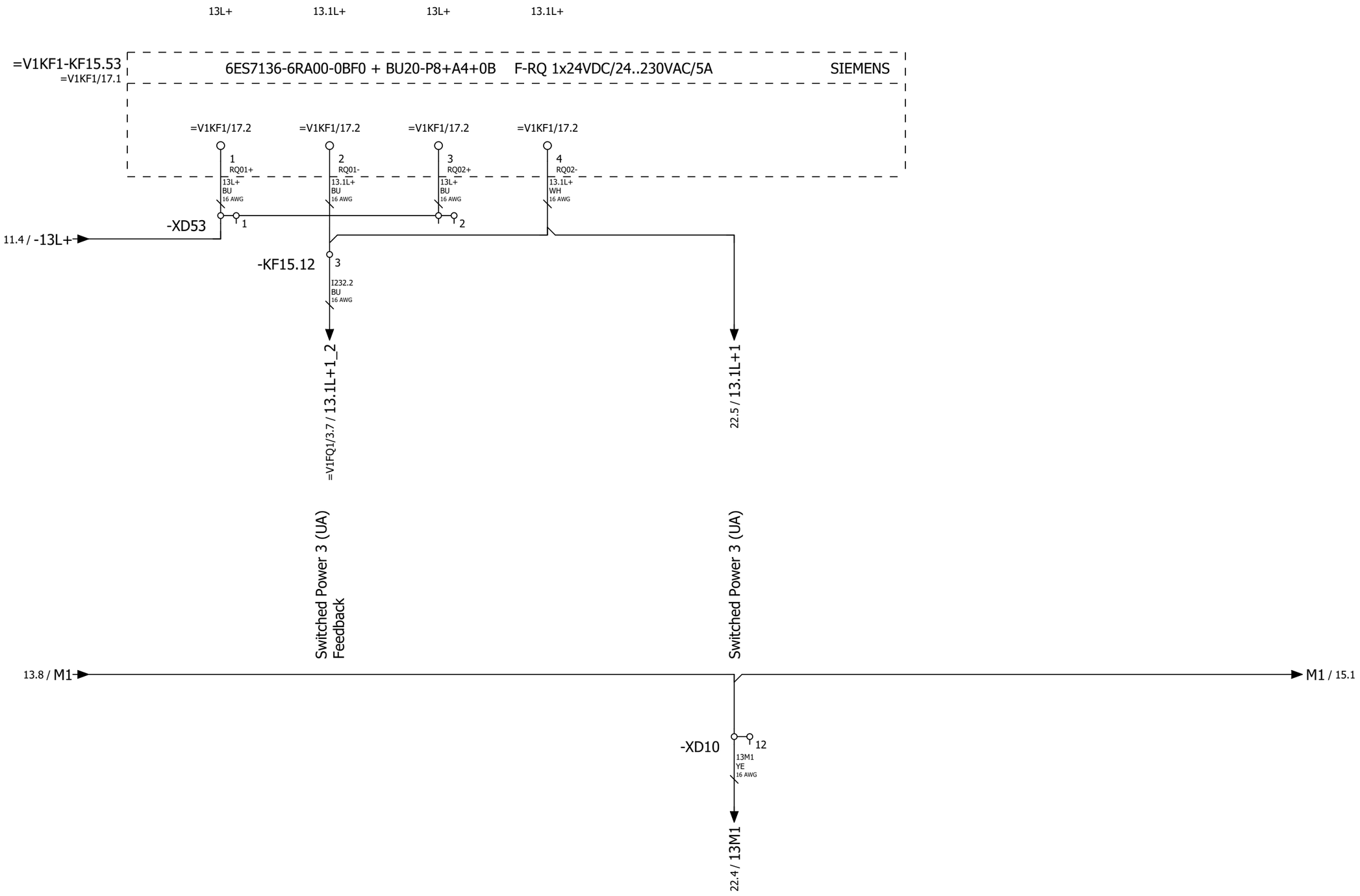

13

15

			Date	12/22/2022	Volvo Trucks North America		Valiant TMS	Power distribution 24VDC 13L+	Drawing name: =2V04&EFS-EL	= V1WC4	
			Ed.	MKLEPADLO						+ V1UC15	
			Appr		P6700 Underbody Mainline - Cell 2V04		Scale 1:1		Document type: EFS	Project nr: 22-16151	Page 14
Modification	Date	Name	Original		Replacement of	Replaced by					1630

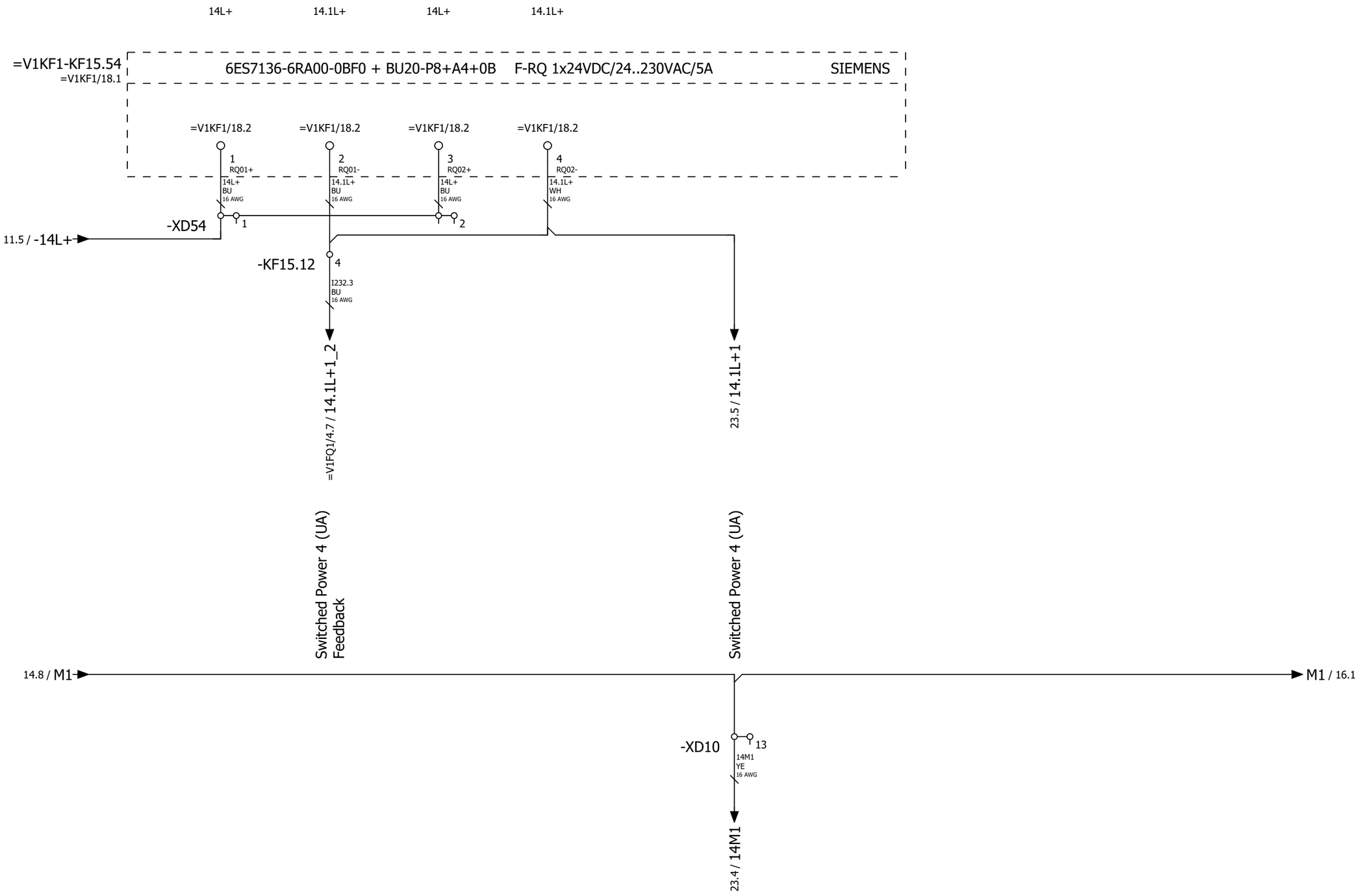

			Date	12/22/2022	Volvo Trucks North America		Valiant TMS	Power distribution 24VDC 14L+	Drawing name: =2V04&EFS-EL	= V1WC4	
			Ed.	MKLEPADLO						+ V1UC15	
			Appr		P6700 Underbody Mainline - Cell 2V04				Document type: EFS	Project nr: 22-16151	Page 15
Modification	Date	Name	Original		Replacement of	Replaced by	Scale 1:1				1630

15

17

			Date	12/22/2022	Volvo Trucks North America	Valiant TMS	Power distribution 24VDC 15L+	Drawing name: =2V04&EFS-EL	= V1WC4	
			Ed.	MKLEPADLO					+ V1UC15	
			Appr		P6700 Underbody Mainline - Cell 2V04			Document type: EFS	Project nr: 22-16151	Page 16
Modification	Date	Name	Original		Replacement of / Replaced by	Scale 1:1				1630

16

18

			Date	12/22/2022	Volvo Trucks North America		Valiant TMS	Power distribution 24VDC 16L+	Drawing name: =2V04&EFS-EL	= V1WC4	
			Ed.	MKLEPADLO						+ V1UC15	
			Appr		P6700 Underbody Mainline - Cell 2V04				Document type: EFS	Project nr: 22-16151	Page 17
Modification	Date	Name	Original		Replacement of	Replaced by	Scale 1:1				1630

Switched Power 3 (US)

17.8 / M1

M1 / 19.1

-XD10

16

17M1
WHYE
16 AWG

22.4 / 17M1

17

19

			Date	12/22/2022	Volvo Trucks North America	Valiant TMS	Power distribution 24VDC 17L+	Drawing name: =2V04&EFS-EL	= V1WC4	
			Ed.	MKLEPADLO					+ V1UC15	
			Appr		P6700 Underbody Mainline - Cell 2V04			Document type: EFS	Project nr: 22-16151	Page 18
Modification	Date	Name	Original		Replacement of / Replaced by	Scale 1:1				1630

18

20

			Date	12/22/2022	Volvo Trucks North America	Valiant TMS	Power distribution 24VDC 18L+	Drawing name: =2V04&EFS-EL	= V1WC4	
			Ed.	MKLEPADLO					+ V1UC15	
			Appr		P6700 Underbody Mainline - Cell 2V04			Document type: EFS	Project nr: 22-16151	Page 19
Modification	Date	Name	Original		Replacement of / Replaced by	Scale 1:1				1630

+.UC15

/ 12.5 / 16.1 / 11.6 / 12.5

-11M1 -15M1 -15L+ -11.1L+1 -PE

-PE

RKF
16 AWG

YE WHYE RD WH GN

-XD151

1 2 4 5 3

1 2 4 5 PE

-SWITCHEDPWR1
=V1UQ54WC4+.UQ54/1.5

POWER IN / POWER OUT

Pin 1: 0 V UA
Pin 2: 0 V US
Pin 3: FE
Pin 4: +24 V US / 9 A
Pin 5: +24 V UA / 9 A

Pin #	WIRE	COLOR
Pin 1	-11M1	YE
Pin 2	-15M1	WHYE
Pin 3	GND	GN
Pin 4	-15L+	RD
Pin 5	-11.1L+1	WH

			Date	12/22/2022	Volvo Trucks North America	Valiant TMS	24VDC Switched Power 1	Drawing name: =2V04&EFS-EL	= V1WC4
			Ed.	MKLEPADLO					+ V1UC15
			Appr		P6700 Underbody Mainline - Cell 2V04			Document type: EFS	Project nr: 22-16151
Modification	Date	Name	Original		Replacement of	Replaced by	Scale 1:1		Page 20 / 1630

0	1	2	3	4	5	6	7	8	9

+.UC15

/ 13.5 / 17.1 / 11.7 / 13.5

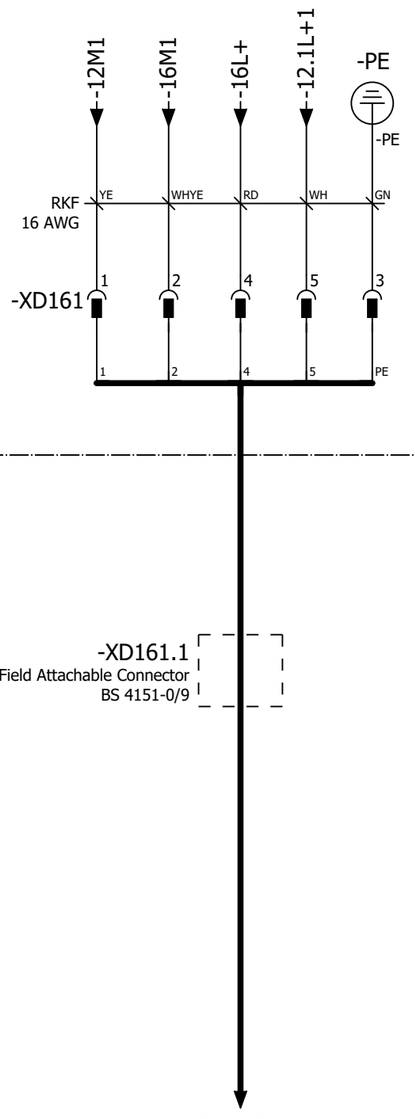

-XD161.1
7/8" Mini Field Attachable Connector
BS 4151-0/9

+.GL11KF2-W2
=V1GL11KF2+.GL11KF2/1.1

POWER IN / POWER OUT

Pin 1: 0 V UA
Pin 2: 0 V US
Pin 3: FE
Pin 4: +24 V US / 9 A
Pin 5: +24 V UA / 9 A

Pin #	WIRE	COLOR
Pin 1	-12M1	YE
Pin 2	-16M1	WHYE
Pin 3	GND	GN
Pin 4	-16L+	RD
Pin 5	-12.1L+1	WH

+.UC15

/ 14.5 / 18.1 / 11.8 / 14.5

-13M1 -17M1 -17L+ -13.1L+1 -PE

-PE

RKF
16 AWG

YE WHYE RD WH GN

-XD171

1 2 4 5 3

1 2 4 5 PE

-SWITCHEDPOWER3

POWER IN / POWER OUT

Pin 1: 0 V UA
Pin 2: 0 V US
Pin 3: FE
Pin 4: +24 V US / 9 A
Pin 5: +24 V UA / 9 A

Pin #	WIRE	COLOR
Pin 1	-13M1	YE
Pin 2	-17M1	WHYE
Pin 3	GND	GN
Pin 4	-17L+	RD
Pin 5	-13.1L+1	WH

			Date	12/22/2022	Volvo Trucks North America	Valiant TMS	24VDC Switched Power 3	Drawing name: =2V04&EFS-EL	= V1WC4
			Ed.	MKLEPADLO					+ V1UC15
			Appr		P6700 Underbody Mainline - Cell 2V04			Document type: EFS	Project nr: 22-16151
Modification	Date	Name	Original		Replacement of	Replaced by	Scale 1:1		Page 22 / 1630

0	1	2	3	4	5	6	7	8	9

+.UC15

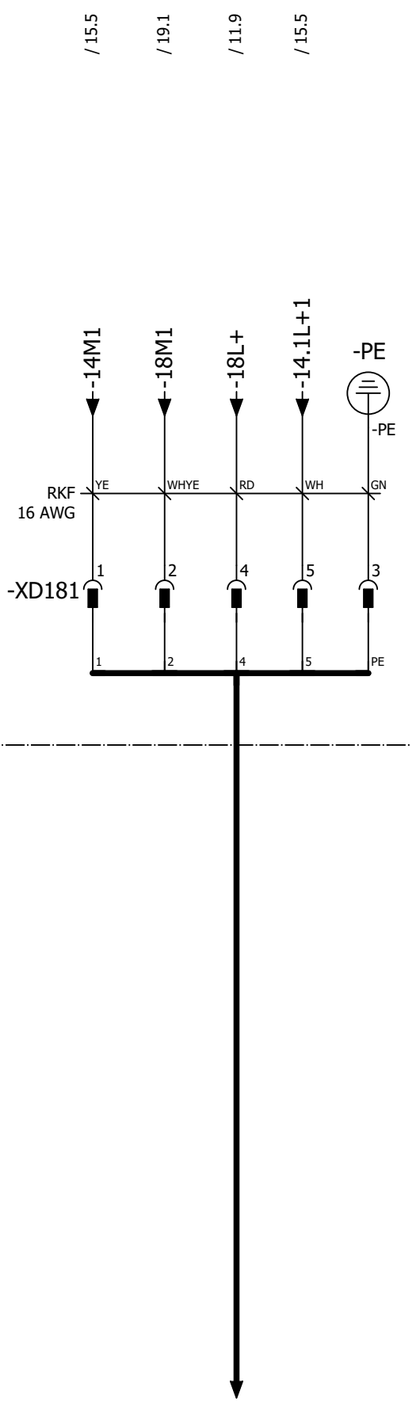

POWER IN / POWER OUT

Pin 1: 0 V UA
Pin 2: 0 V US
Pin 3: FE
Pin 4: +24 V US / 9 A
Pin 5: +24 V UA / 9 A

Pin #	WIRE	COLOR
Pin 1	-14M1	YE
Pin 2	-18M1	WHYE
Pin 3	GND	GN
Pin 4	-18L+	RD
Pin 5	-14.1L+1	WH

			Date	12/22/2022	Volvo Trucks North America	Valiant TMS	24VDC Switched Power 4	Drawing name: =2V04&EFS-EL	= V1WC4	
			Ed.	MKLEPADLO					+ V1UC15	
			Appr		P6700 Underbody Mainline - Cell 2V04			Document type: EFS	Project nr: 22-16151	Page 23
Modification	Date	Name	Original		Replacement of	Replaced by	Scale 1:1			1630

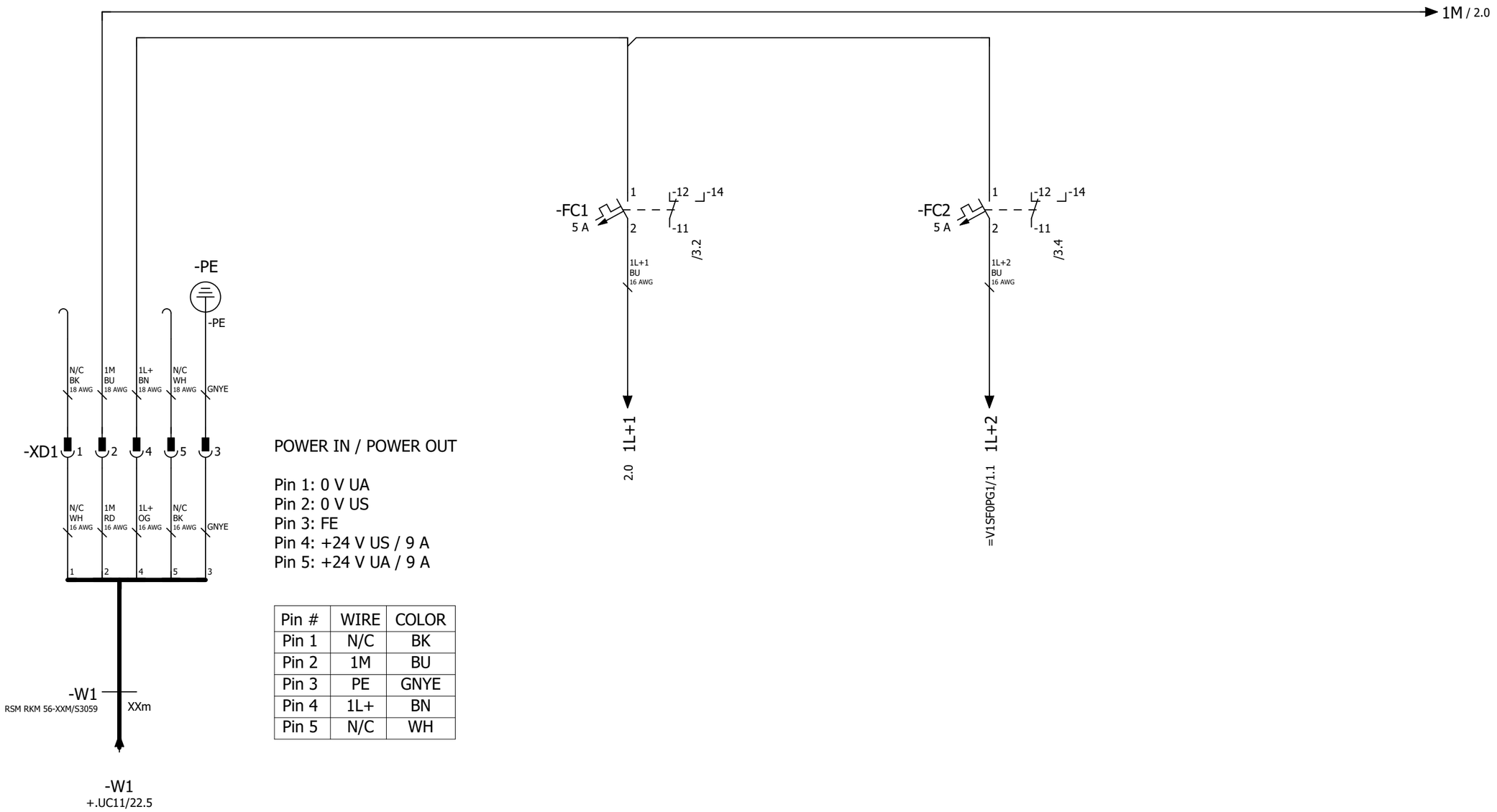

POWER IN / POWER OUT

Pin 1: 0 V UA
Pin 2: 0 V US
Pin 3: FE
Pin 4: +24 V US / 9 A
Pin 5: +24 V UA / 9 A

Pin #	WIRE	COLOR
Pin 1	N/C	BK
Pin 2	1M	BU
Pin 3	PE	GNYE
Pin 4	1L+	BN
Pin 5	N/C	WH

Power Distribution 24 VDC Display

Power Distribution 24 VDC ET200

+.UC15/23

2

			Date	12/22/2022	Volvo Trucks North America	Valiant TMS	Incomming power supply 24 VDC	Drawing name: =2V04&EFS-EL	= V1WC4
			Ed.	MKLEPADLO					+ V1UC32
			Appr		P6700 Underbody Mainline - Cell 2V04			Document type: EFS	Project nr: 22-16151
Modification	Date	Name	Original		Replacement of	Replaced by	Scale 1:1		Page 1 / 1630

			Date	12/22/2022	Volvo Trucks North America		Valiant TMS	Power distribution 24VDC 1L+	Drawing name: =2V04&EFS-EL	= V1WC4	
			Ed.	MKLEPADLO						+ V1UC32	
			Appr		P6700 Underbody Mainline - Cell 2V04				Document type: EFS	Project nr: 22-16151	Page 2
Modification	Date	Name	Original		Replacement of	Replaced by	Scale 1:1				1630

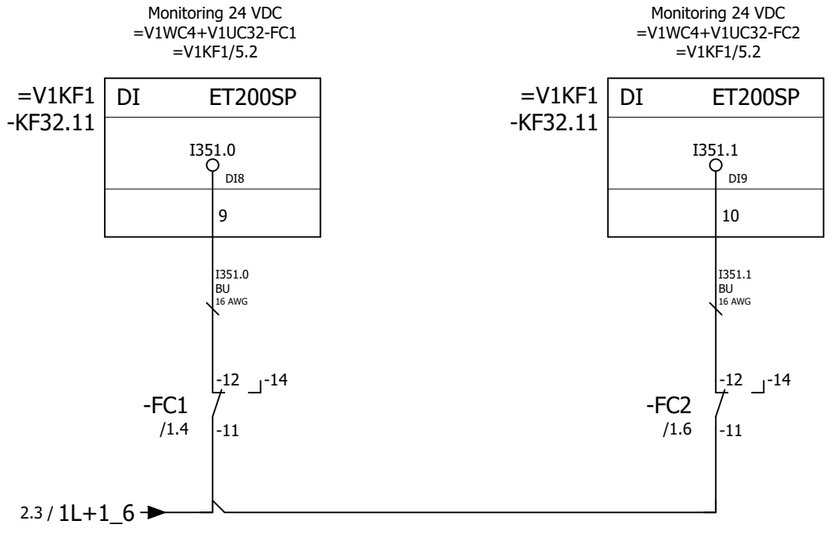

			Date	12/22/2022	Volvo Trucks North America	Valiant TMS	Monitoring 24VDC	Drawing name: =2V04&EFS-EL	= V1WC4	
			Ed.	MKLEPADLO					+ V1UC32	
			Appr		P6700 Underbody Mainline - Cell 2V04			Document type: EFS	Project nr: 22-16151	Page 3
Modification	Date	Name	Original		Replacement of / Replaced by	Scale 1:1				1630

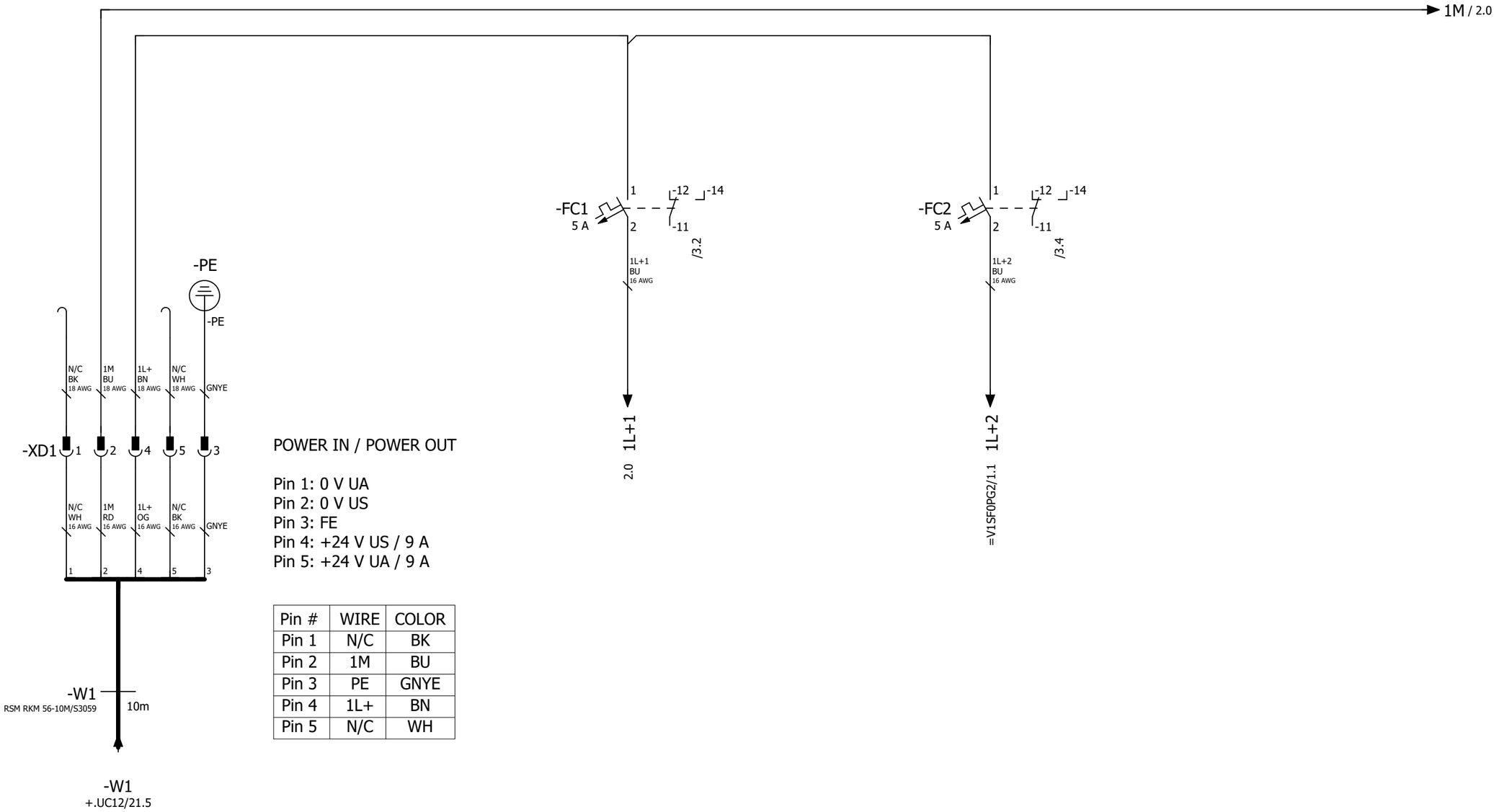

POWER IN / POWER OUT

Pin 1: 0 V UA
Pin 2: 0 V US
Pin 3: FE
Pin 4: +24 V US / 9 A
Pin 5: +24 V UA / 9 A

Pin #	WIRE	COLOR
Pin 1	N/C	BK
Pin 2	1M	BU
Pin 3	PE	GNYE
Pin 4	1L+	BN
Pin 5	N/C	WH

Power Distribution 24 VDC Display

Power Distribution 24 VDC ET200

+.UC32/3

2

			Date	12/22/2022	Volvo Trucks North America	Valiant TMS	Incomming power supply 24 VDC	Drawing name: =2V04&EFS-EL	= V1WC4
			Ed.	MKLEPADLO					+ V1UC33
			Appr		P6700 Underbody Mainline - Cell 2V04			Document type: EFS	Project nr: 22-16151
Modification	Date	Name	Original		Replacement of	Replaced by	Scale 1:1		Page 1 / 1630

0	1	2	3	4	5	6	7	8	9

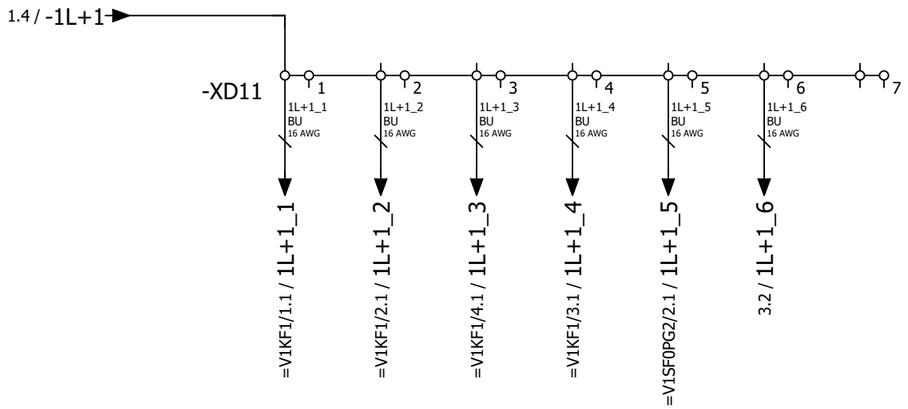

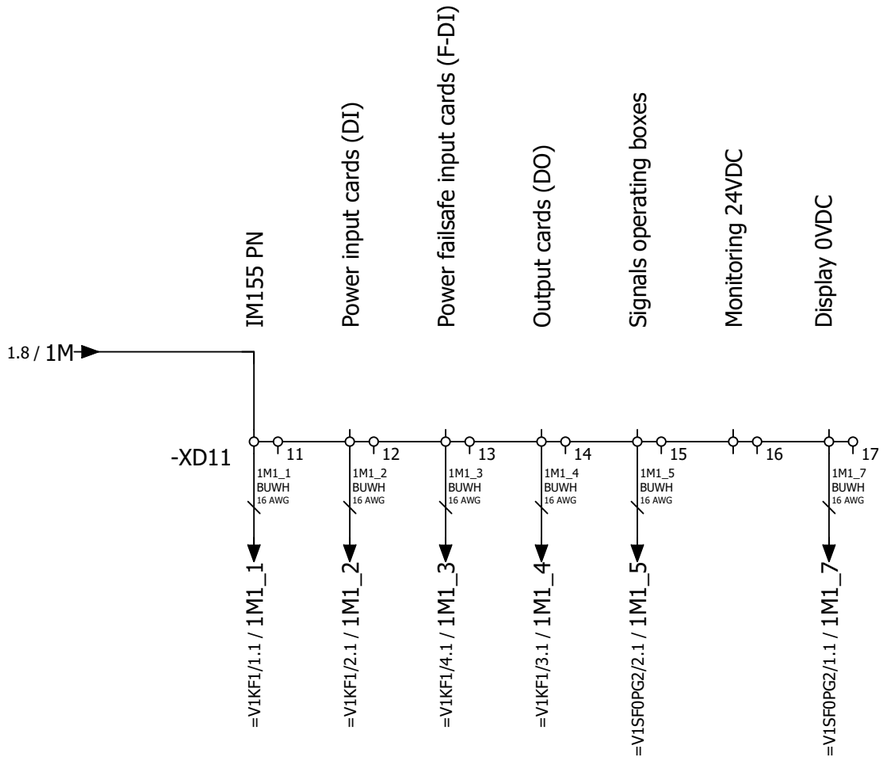

1 3

			Date	12/22/2022	Volvo Trucks North America	Valiant TMS	Power distribution 24VDC 1L+	Drawing name: =2V04&EFS-EL	= V1WC4
			Ed.	MKLEPADLO					+ V1UC33
			Appr		P6700 Underbody Mainline - Cell 2V04			Document type: EFS	Project nr: 22-16151
Modification	Date	Name	Original		Replacement of	Replaced by	Scale 1:1		Page 2 / 1630

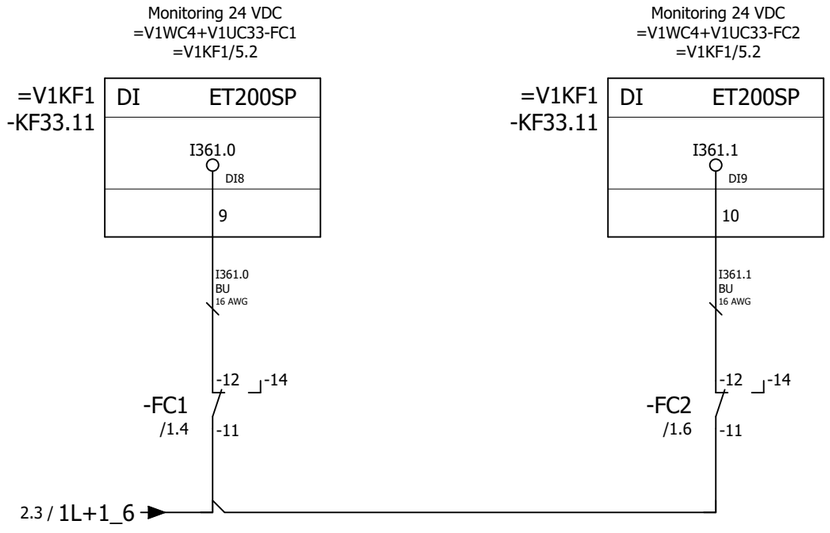

=V1WR1UQ51BG0+.WR1UQ51/1

			Date	12/22/2022	Volvo Trucks North America	Valiant TMS	Monitoring 24VDC	Drawing name: =2V04&EFS-EL	= V1WC4	
			Ed.	MKLEPADLO					+ V1UC33	
			Appr		P6700 Underbody Mainline - Cell 2V04			Document type: EFS	Project nr: 22-16151	Page 3
Modification	Date	Name	Original		Replacement of / Replaced by	Scale 1:1				1630

0	1	2	3	4	5	6	7	8	9

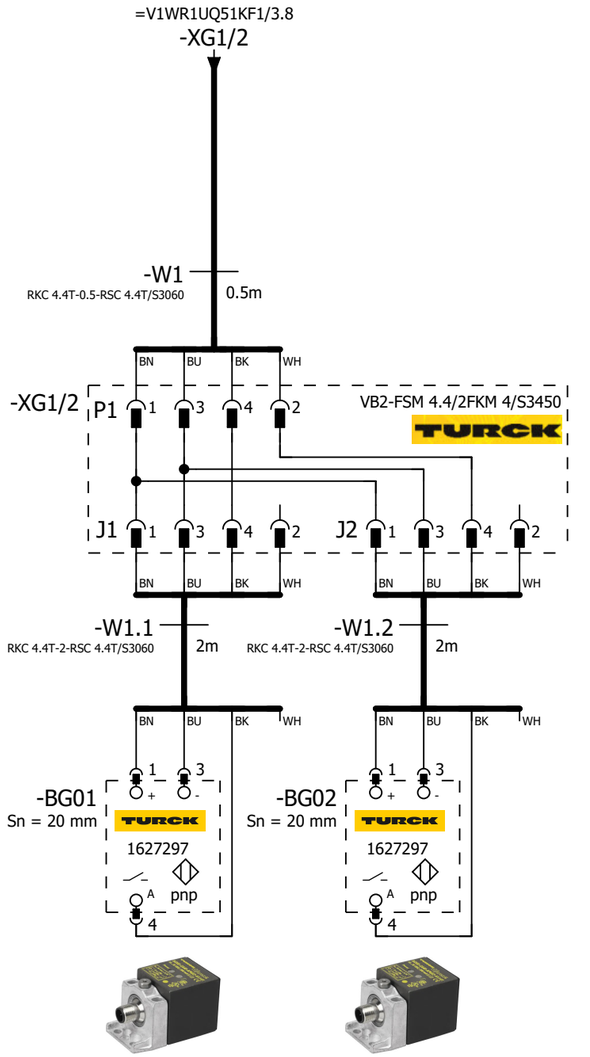

=V1WR1UQ51 -BG01 Floor Frame Assy (Common)	=V1WR1UQ51 -BG02 Floor Frame Assy (Common)

=V1WC4+.UC33/3

=V1WR1UQ51KF1/1

			Date	12/22/2022	Volvo Trucks North America		Valiant TMS	SENSORS	Drawing name: =2V04&EFS-EL	= V1WR1UQ51BG0
			Ed.	MKLEPADLO						+ V1WR1UQ51
			Appr		P6700 Underbody Mainline - Cell 2V04				Document type: EFS	Project nr: 22-16151
Modification	Date	Name	Original		Replacement of	Replaced by	Scale 1:1			Page 1 / 1630

0	1	2	3	4	5	6	7	8	9

=V1WR1UQ51WC4/1.5 / W1

-W1
RSM RKM 56-1M/S3059
1m

=V1KF1+.UC14/2.6 / +.UC14-KF100.14-P12

-KF100.14-P12
PROFINET Cable
6XV1840-3AH10

-KF1

X20 M12, 7/8" 1 2 PE 4 5
0V_VAL / OUT
0V_EL / SEN
FE
24V_EL / SEN
24V_VAL / OUT

ON OFF 1 2 1 2

M12 -TP1
M12 -TP2

FESTO
Bus node + Interlinking block
548755 + 550208

I2300.0	DI 0 X1:4	V1WR1UQ51UQ1.1-BGR	Common Pin Clamp (RESET)
I2300.1	DI 1 X1:2	V1WR1UQ51UQ1.1-BGS	Common Pin Clamp (SET)
I2300.2	DI 2 X2:4	V1WR1UQ51UQ1.2-BGR	Common Pin Clamp (RESET)
I2300.3	DI 3 X2:2	V1WR1UQ51UQ1.2-BGS	Common Pin Clamp (SET)
I2300.4	DI 4 X3:4	V1WR1UQ51UQ2.1-BGR	Common Clamp (RESET)
I2300.5	DI 5 X3:2	V1WR1UQ51UQ2.1-BGS	Common Clamp (SET)
I2300.6	DI 6 X4:4	V1WR1UQ51UQ2.2-BGR	Common Clamp (RESET)
I2300.7	DI 7 X4:2	V1WR1UQ51UQ2.2-BGS	Common Clamp (SET)
I2301.0	DI 8 X5:4	V1WR1UQ51UQ2.3-BGR	Common Clamp (RESET)
I2301.1	DI 9 X5:2	V1WR1UQ51UQ2.3-BGS	Common Clamp (SET)
I2301.2	DI 10 X6:4	V1WR1UQ51UQ2.4-BGR	Common Clamp (RESET)
I2301.3	DI 11 X6:2	V1WR1UQ51UQ2.4-BGS	Common Clamp (SET)
I2301.4	DI 12 X7:4	V1WR1UQ51UQ3.1-BGR	L150 Model Clamp (RESET)
I2301.5	DI 13 X7:2	V1WR1UQ51UQ3.1-BGS	L150 Model Clamp (SET)
I2301.6	DI 14 X8:4	V1WR1UQ51UQ3.2-BGR	L150 Model Clamp (RESET)
I2301.7	DI 15 X8:2	V1WR1UQ51UQ3.2-BGS	L150 Model Clamp (SET)

-KF1.11

FESTO
CPX-M-AB-8-M12X2-5POL
549335

X1 X2 X3 X4 X5 X6 X7 X8 M12
1: 24V | 2: DI 1 / DI 3 / DI 5 / DI 7 / DI 9 / DI 11 / DI 13 / DI 15 | 3: 0V | 4: DI 0 / DI 2 / DI 4 / DI 6 / DI 8 / DI 10 / DI 12 / DI 14 | 5: FE
BN WH BU BK

+.WR1UQ51UQ1.1-W1
=V1WR1UQ51UQ1+.WR1UQ51UQ1/1.1

+.WR1UQ51UQ1.2-W1
=V1WR1UQ51UQ1+.WR1UQ51UQ1/1.2

+.WR1UQ51UQ2.1-W1
=V1WR1UQ51UQ2+.WR1UQ51UQ2/1.1

+.WR1UQ51UQ2.2-W1
=V1WR1UQ51UQ2+.WR1UQ51UQ2/1.2

+.WR1UQ51UQ2.3-W1
=V1WR1UQ51UQ2+.WR1UQ51UQ2/1.4

+.WR1UQ51UQ2.4-W1
=V1WR1UQ51UQ2+.WR1UQ51UQ2/1.5

+.WR1UQ51UQ3.1-W1
=V1WR1UQ51UQ3+.WR1UQ51UQ3/1.1

+.WR1UQ51UQ3.2-W1
=V1WR1UQ51UQ3+.WR1UQ51UQ3/1.2

=V1WR1UQ51BG0/1

2

			Date	12/22/2022	Volvo Trucks North America	Valiant TMS	CONNECTING MOD. FOR VTSA MANIFOLD	Drawing name: =2V04&EFS-EL	= V1WR1UQ51KF1
			Ed.	MKLEPADLO					+ V1WR1UQ51
			Appr		P6700 Underbody Mainline - Cell 2V04			Document type: EFS	Project nr: 22-16151
Modification	Date	Name	Original		Replacement of	Replaced by	Scale 1:1		Page 1 / 1630

0	1	2	3	4	5	6	7	8	9

I2302.0	DI 0 X1:4	V1WR1UQ51UQ4.1-BGR	L230 Model Clamp (RESET)
I2302.1	DI 1 X1:2	V1WR1UQ51UQ4.1-BGS	L230 Model Clamp (SET)
I2302.2	DI 2 X2:4	V1WR1UQ51UQ4.2-BGR	L230 Model Clamp (RESET)
I2302.3	DI 3 X2:2	V1WR1UQ51UQ4.2-BGS	L230 Model Clamp (SET)
I2302.4	DI 4 X3:4	V1WR1UQ51UQ5.1-BGR	L290 Model Clamp (RESET)
I2302.5	DI 5 X3:2	V1WR1UQ51UQ5.1-BGS	L290 Model Clamp (SET)
I2302.6	DI 6 X4:4	V1WR1UQ51UQ5.2-BGR	L290 Model Clamp (RESET)
I2302.7	DI 7 X4:2	V1WR1UQ51UQ5.2-BGS	L290 Model Clamp (SET)
I2303.0	DI 8 X5:4	V1WR1UQ51UQ6.1-BGR	L320 Model Clamp (RESET)
I2303.1	DI 9 X5:2	V1WR1UQ51UQ6.1-BGS	L320 Model Clamp (SET)
I2303.2	DI 10 X6:4	V1WR1UQ51UQ6.2-BGR	L320 Model Clamp (RESET)
I2303.3	DI 11 X6:2	V1WR1UQ51UQ6.2-BGS	L320 Model Clamp (SET)
I2303.4	DI 12 X7:4	V1WR1UQ51UQ7.1-BGR	L230 Model Shot Pin (RESET)
I2303.5	DI 13 X7:2	V1WR1UQ51UQ7.1-BGS	L230 Model Shot Pin (SET)
I2303.6	DI 14 X8:4	V1WR1UQ51UQ7.2-BGR	L230 Model Shot Pin (RESET)
I2303.7	DI 15 X8:2	V1WR1UQ51UQ7.2-BGS	L230 Model Shot Pin (SET)

-KF1.12

FESTO

CPX-M-AB-8-M12X2-5POL

549335

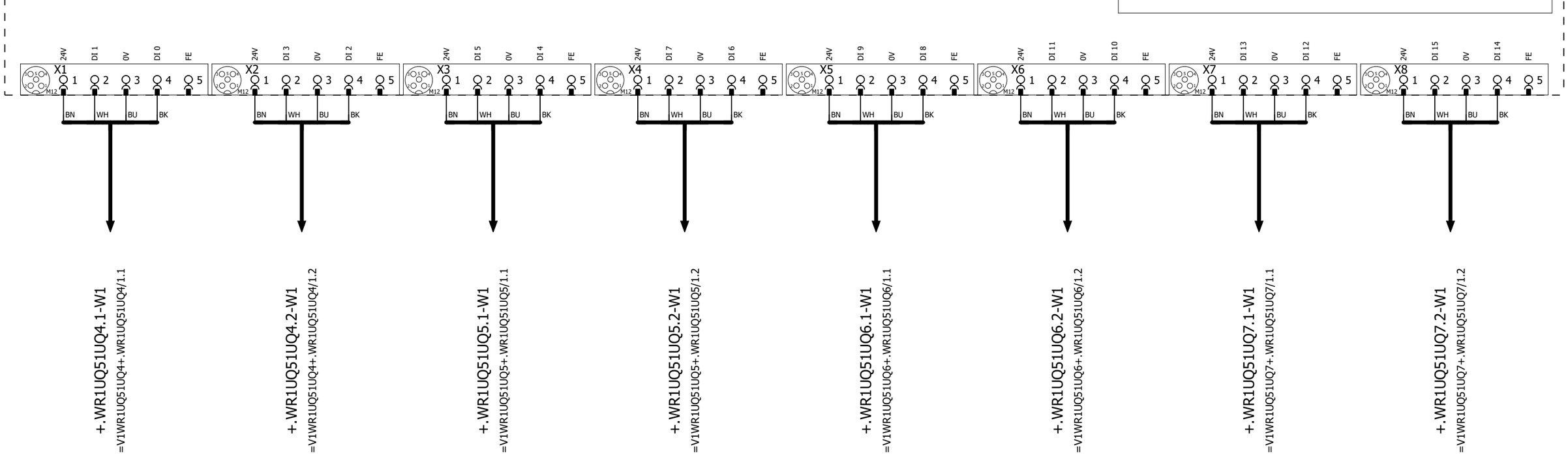

1

3

			Date	12/22/2022	Volvo Trucks North America	Valiant TMS	I/O MOD. DI16 (8 x M12) FOR VTSA-F	Drawing name: =2V04&EFS-EL	= V1WR1UQ51KF1
			Ed.	MKLEPADLO					+ V1WR1UQ51
			Appr		P6700 Underbody Mainline - Cell 2V04	Scale 1:1		Document type: EFS	Project nr: 22-16151
Modification	Date	Name	Original		Replacement of	Replaced by			Page 2 / 1630

0	1	2	3	4	5	6	7	8	9

-KF1.13

FESTO

CPX-M-AB-8-M12X2-5POL

549335

I2304.0 DI 0 X1:4	V1WR1UQ51UQ8.1-BGR	L290 Model Shot Pin (RESET)
I2304.1 DI 1 X1:2	V1WR1UQ51UQ8.1-BGS	L290 Model Shot Pin (SET)
I2304.2 DI 2 X2:4	V1WR1UQ51UQ8.2-BGR	L290 Model Shot Pin (RESET)
I2304.3 DI 3 X2:2	V1WR1UQ51UQ8.2-BGS	L290 Model Shot Pin (SET)
I2304.4 DI 4 X3:4	V1WR1UQ51UQ9.1-BGR	L320 Model Shot Pin (RESET)
I2304.5 DI 5 X3:2	V1WR1UQ51UQ9.1-BGS	L320 Model Shot Pin (SET)
I2304.6 DI 6 X4:4	V1WR1UQ51UQ9.2-BGR	L320 Model Shot Pin (RESET)
I2304.7 DI 7 X4:2	V1WR1UQ51UQ9.2-BGS	L320 Model Shot Pin (SET)
I2305.0 DI 8 X5:4	I2305.0	Spare
I2305.1 DI 9 X5:2	I2305.1	Spare
I2305.2 DI 10 X6:4	I2305.2	Spare
I2305.3 DI 11 X6:2	I2305.3	Spare
I2305.4 DI 12 X7:4	V1WR1UQ51-BG01	Sensor Floor Frame Assy (Common)
I2305.5 DI 13 X7:2	V1WR1UQ51-BG02	Sensor Floor Frame Assy (Common)
I2305.6 DI 14 X8:4	I2305.6	Spare
I2305.7 DI 15 X8:2	I2305.7	Spare

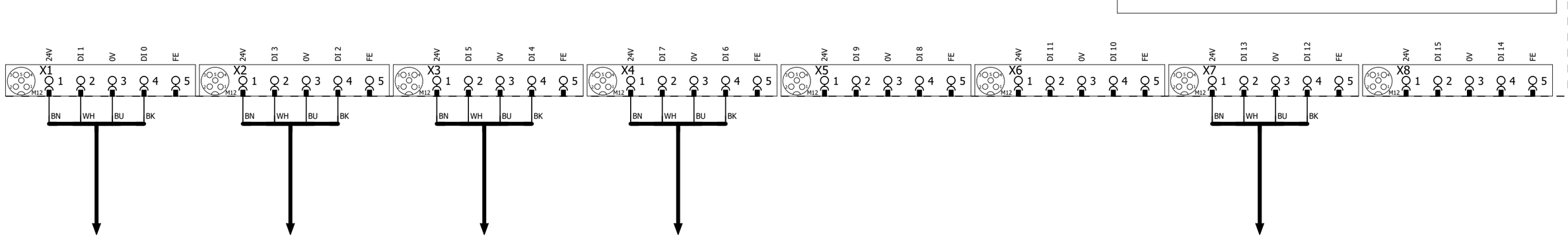

2 4

			Date	12/22/2022	Volvo Trucks North America	Valiant TMS	I/O MOD. DI16 (8 x M12) FOR VTSA-F	Drawing name: =2V04&EFS-EL	= V1WR1UQ51KF1
			Ed.	MKLEPADLO					+ V1WR1UQ51
			Appr		P6700 Underbody Mainline - Cell 2V04	Scale 1:1		Document type: EFS	Project nr: 22-16151 / Page 3 / 1630
Modification	Date	Name	Original		Replacement of / Replaced by				

0	1	2	3	4	5	6	7	8	9

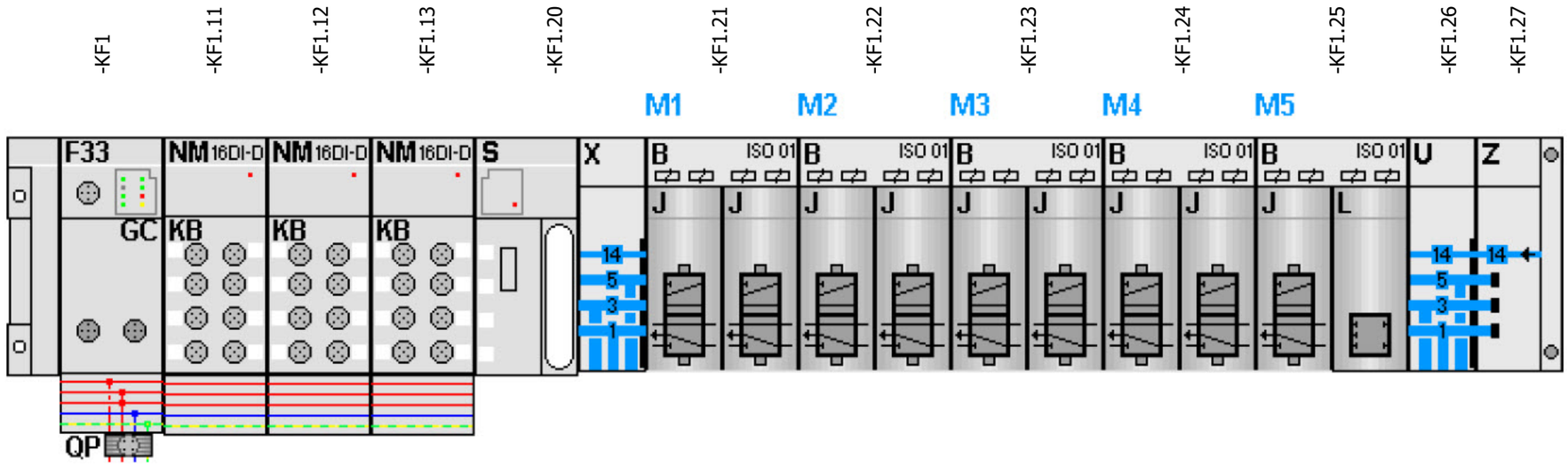

-KF1.21
=V1WR1UQ51UQ1+.WR1UQ51UQ1/1.3
=V1WR1UQ51UQ2+.WR1UQ51UQ2/1.3

FESTO

=V1WR1UQ51UQ1+.WR1UQ51UQ1/1.4	Q2300.0 DO 0 1.1	-QN1.1_Q	Common Pin Clamps (RST)
=V1WR1UQ51UQ1+.WR1UQ51UQ1/1.4	Q2300.1 DO 1 1.2	-QN1.2_Q	Common Pin Clamps (SET)
=V1WR1UQ51UQ2+.WR1UQ51UQ2/1.4	Q2300.2 DO 2 2.1	-QN2.1_Q	Common Clamps (RST)
=V1WR1UQ51UQ2+.WR1UQ51UQ2/1.4	Q2300.3 DO 3 2.2	-QN2.2_Q	Common Clamps (SET)

-KF1.22
=V1WR1UQ51UQ3+.WR1UQ51UQ3/1.3
=V1WR1UQ51UQ4+.WR1UQ51UQ4/1.3

FESTO

=V1WR1UQ51UQ3+.WR1UQ51UQ3/1.4	Q2300.4 DO 0 1.1	-QN3.1_Q	L150 Model Clamps (RST)
=V1WR1UQ51UQ3+.WR1UQ51UQ3/1.4	Q2300.5 DO 1 1.2	-QN3.2_Q	L150 Model Clamps (SET)
=V1WR1UQ51UQ4+.WR1UQ51UQ4/1.4	Q2300.6 DO 2 2.1	-QN4.1_Q	L230 Model Clamp (RST)
=V1WR1UQ51UQ4+.WR1UQ51UQ4/1.4	Q2300.7 DO 3 2.2	-QN4.2_Q	L230 Model Clamp (SET)

-KF1.23
=V1WR1UQ51UQ5+.WR1UQ51UQ5/1.3
=V1WR1UQ51UQ6+.WR1UQ51UQ6/1.3

FESTO

=V1WR1UQ51UQ5+.WR1UQ51UQ5/1.4	Q2301.0 DO 0 1.1	-QN5.1_Q	L290 Model Clamp (RST)
=V1WR1UQ51UQ5+.WR1UQ51UQ5/1.4	Q2301.1 DO 1 1.2	-QN5.2_Q	L290 Model Clamp (SET)
=V1WR1UQ51UQ6+.WR1UQ51UQ6/1.4	Q2301.2 DO 2 2.1	-QN6.1_Q	L320 Model CLamps (RST)
=V1WR1UQ51UQ6+.WR1UQ51UQ6/1.4	Q2301.3 DO 3 2.2	-QN6.2_Q	L320 Model CLamps (SET)

-KF1.24
=V1WR1UQ51UQ7+.WR1UQ51UQ7/1.3
=V1WR1UQ51UQ8+.WR1UQ51UQ8/1.3

FESTO

=V1WR1UQ51UQ7+.WR1UQ51UQ7/1.4	Q2301.4 DO 0 1.1	-QN7.1_Q	L230 Model Shot Pins (RST)
=V1WR1UQ51UQ7+.WR1UQ51UQ7/1.4	Q2301.5 DO 1 1.2	-QN7.2_Q	L230 Model Shot Pins (SET)
=V1WR1UQ51UQ8+.WR1UQ51UQ8/1.4	Q2301.6 DO 2 2.1	-QN8.1_Q	L290 Model Shot Pins (RST)
=V1WR1UQ51UQ8+.WR1UQ51UQ8/1.4	Q2301.7 DO 3 2.2	-QN8.2_Q	L290 Model Shot Pins (SET)

-KF1.25
=V1WR1UQ51UQ9+.WR1UQ51UQ9/1.3

FESTO

=V1WR1UQ51UQ9+.WR1UQ51UQ9/1.4	Q2302.0 DO 0 1.1	-QN9.1_Q	L320 Model Shot Pins (RST)
=V1WR1UQ51UQ9+.WR1UQ51UQ9/1.4	Q2302.1 DO 1 1.2	-QN9.2_Q	L320 Model Shot Pins (SET)
	Q2302.2 DO 2 2.1	Spare	
	Q2302.3 DO 3 2.2	Spare	

=V1WR1UQ51UQ1+.WR1UQ51UQ1/1

			Date	12/22/2022	Volvo Trucks North America	Valiant TMS	CONNECTING MOD. FOR FESTO DQ	Drawing name: =2V04&EFS-EL	= V1WR1UQ51KF1
			Ed.	MKLEPADLO					+ V1WR1UQ51
			Appr		P6700 Underbody Mainline - Cell 2V04			Document type: EFS	Project nr: 22-16151
Modification	Date	Name	Original		Replacement of	Replaced by	Scale 1:1		Page 4 / 1630

0	1	2	3	4	5	6	7	8	9

=V1WR1UQ51KF1
+.WR1UQ51

-KF1.21
=V1WR1UQ51KF1+V1WR1UQ51/4.1

Common Pin Clamps (RST)
=V1WR1UQ51KF1
+V1WR1UQ51
-QN1.1_Q
=V1WR1UQ51KF1
+V1WR1UQ51/4.3
Q2300.0

Common Pin Clamps (SET)
=V1WR1UQ51KF1
+V1WR1UQ51
-QN1.2_Q
=V1WR1UQ51KF1
+V1WR1UQ51/4.3
Q2300.1

1.1
Pneumatic Valve

1.2
Pneumatic Valve

-QN1
.1
.2

=V1WR1UQ51KF1+V1WR1UQ51/1.1
+.WR1UQ51UQ1.1-W1

=V1WR1UQ51KF1+V1WR1UQ51/1.2
+.WR1UQ51UQ1.2-W1

-W1
RKC 4.4T-2-RSC 4.4T/S3060
2m

-W1
RKC 4.4T-3-RSC 4.4T/S3060
3m

BN BU BK WH

-BGS/R
1 3
+ -
284395
A2 A1
2 4

Common Pin Clamp
=V1WR1UQ51UQ1.1
+.WR1UQ51UQ1.1
-UQ1.1

Common Pin Clamp
=V1WR1UQ51UQ1.2
+.WR1UQ51UQ1.2
-UQ1.2

=V1WR1UQ51
-UQ1.1-BGS/R
Common
Pin Clamp

=V1WR1UQ51
-UQ1.2-BGS/R
Common
Pin Clamp

=V1WR1UQ51KF1+V1WR1UQ51/4

=V1WR1UQ51UQ2+.WR1UQ51UQ2/1

			Date	12/22/2022	Volvo Trucks North America	Valiant TMS	FESTO DQ CONNECTION QN1	Drawing name: =2V04&EFS-EL	= V1WR1UQ51UQ1
			Ed.	MKLEPADLO					+ V1WR1UQ51UQ1
			Appr		P6700 Underbody Mainline - Cell 2V04			Document type: EFS	Project nr: 22-16151
Modification	Date	Name	Original		Replacement of	Replaced by	Scale 1:1		Page 1 / 1630

0	1	2	3	4	5	6	7	8	9

=V1WR1UQ51KF1
+.WR1UQ51

-KF1.21
=V1WR1UQ51KF1+V1WR1UQ51/4.1

Common Clamps (RST)
=V1WR1UQ51KF1
+V1WR1UQ51
-QN2.1_Q
=V1WR1UQ51KF1
+V1WR1UQ51/4.3
Q2300.2

Common Clamps (SET)
=V1WR1UQ51KF1
+V1WR1UQ51
-QN2.2_Q
=V1WR1UQ51KF1
+V1WR1UQ51/4.3
Q2300.3

2.1 Pneumatic Valve

2.2 Pneumatic Valve

-QN2 .1 .2

=V1WR1UQ51KF1+V1WR1UQ51/1.3
+.WR1UQ51UQ2.1-W1

=V1WR1UQ51KF1+V1WR1UQ51/1.4
+.WR1UQ51UQ2.2-W1

=V1WR1UQ51KF1+V1WR1UQ51/1.5
+.WR1UQ51UQ2.3-W1

=V1WR1UQ51KF1+V1WR1UQ51/1.6
+.WR1UQ51UQ2.4-W1

-W1 RKC 4.4T-3-RSC 4.4T/S3060 3m

-BGS/R TÜNKERS 1324644

BN BU BK WH
1 3
A2 A1
2 4

Common Clamp
=V1WR1UQ51UQ2.1
+.WR1UQ51UQ2.1
-UQ2.1

Common Clamp
=V1WR1UQ51UQ2.2
+.WR1UQ51UQ2.2
-UQ2.2

Common Clamp
=V1WR1UQ51UQ2.3
+.WR1UQ51UQ2.3
-UQ2.3

Common Clamp
=V1WR1UQ51UQ2.4
+.WR1UQ51UQ2.4
-UQ2.4

=V1WR1UQ51
-UQ2.1-BGS/R
Common
Clamp

=V1WR1UQ51
-UQ2.2-BGS/R
Common
Clamp

=V1WR1UQ51
-UQ2.3-BGS/R
Common
Clamp

=V1WR1UQ51
-UQ2.4-BGS/R
Common
Clamp

=V1WR1UQ51UQ1+.WR1UQ51UQ1/1

=V1WR1UQ51UQ3+.WR1UQ51UQ3/1

			Date	12/22/2022	Volvo Trucks North America	Valiant TMS	FESTO DQ CONNECTION QN2	Drawing name: =2V04&EFS-EL	= V1WR1UQ51UQ2
			Ed.	MKLEPADLO					+ V1WR1UQ51UQ2
			Appr		P6700 Underbody Mainline - Cell 2V04	Scale 1:1		Document type: EFS	Project nr: 22-16151
Modification	Date	Name	Original		Replacement of	Replaced by			Page 1 / 1630

0	1	2	3	4	5	6	7	8	9

=V1WR1UQ51KF1
+.WR1UQ51

-KF1.22
=V1WR1UQ51KF1+V1WR1UQ51/4.1

L150 Model Clamps (RST)
=V1WR1UQ51KF1
+V1WR1UQ51
-QN3.1_Q
=V1WR1UQ51KF1
+V1WR1UQ51/4.3
Q2300.4

L150 Model Clamps (SET)
=V1WR1UQ51KF1
+V1WR1UQ51
-QN3.2_Q
=V1WR1UQ51KF1
+V1WR1UQ51/4.3
Q2300.5

1.1 Pneumatic Valve
1.2 Pneumatic Valve

-QN3 .1 .2

=V1WR1UQ51KF1+V1WR1UQ51/1.8
+.WR1UQ51UQ3.1-W1

=V1WR1UQ51KF1+V1WR1UQ51/1.9
+.WR1UQ51UQ3.2-W1

-W1
RKC 4.4T-3-RSC 4.4T/S3060
3m

BN BU BK WH

-BGS/R
1 3
+ -
TÜNKERS
1324644
A2 A1
2 4

L150 Model Clamp
=V1WR1UQ51UQ3.1
+.WR1UQ51UQ3.1
-UQ3.1

L150 Model Clamp
=V1WR1UQ51UQ3.2
+.WR1UQ51UQ3.2
-UQ3.2

=V1WR1UQ51
-UQ3.1-BGS/R
L150 Model
Clamp

=V1WR1UQ51
-UQ3.2-BGS/R
L150 Model
Clamp

=V1WR1UQ51UQ2+.WR1UQ51UQ2/1

=V1WR1UQ51UQ4+.WR1UQ51UQ4/1

			Date	12/22/2022	Volvo Trucks North America	Valiant TMS	FESTO DQ CONNECTION QN3	Drawing name: =2V04&EFS-EL	= V1WR1UQ51UQ3
			Ed.	MKLEPADLO					+ V1WR1UQ51UQ3
			Appr		P6700 Underbody Mainline - Cell 2V04	Scale 1:1		Document type: EFS	Project nr: 22-16151
Modification	Date	Name	Original		Replacement of	Replaced by			Page 1 / 1630

0	1	2	3	4	5	6	7	8	9

=V1WR1UQ51KF1
+.WR1UQ51

-KF1.22
=V1WR1UQ51KF1+V1WR1UQ51/4.1

L230 Model Clamp (RST)
=V1WR1UQ51KF1
+V1WR1UQ51
-QN4.1_Q
=V1WR1UQ51KF1
+V1WR1UQ51/4.3
Q2300.6

L230 Model Clamp (SET)
=V1WR1UQ51KF1
+V1WR1UQ51
-QN4.2_Q
=V1WR1UQ51KF1
+V1WR1UQ51/4.3
Q2300.7

2.1 Pneumatic Valve

2.2 Pneumatic Valve

-QN4 .1 .2

=V1WR1UQ51KF1+V1WR1UQ51/2.1
+.WR1UQ51UQ4.1-W1

=V1WR1UQ51KF1+V1WR1UQ51/2.2
+.WR1UQ51UQ4.2-W1

-W1
RKC 4.4T-4-RSC 4.4T/S3060
4m

BN BU BK WH
1 3
\+ -
-BGS/R
TÜNKERS
1324644
A2 A1
2 4

L230 Model Clamp
=V1WR1UQ51UQ4.1
+.WR1UQ51UQ4.1
-UQ4.1

L230 Model Clamp
=V1WR1UQ51UQ4.2
+.WR1UQ51UQ4.2
-UQ4.2

=V1WR1UQ51
-UQ4.1-BGS/R
L230 Model
Clamp

=V1WR1UQ51
-UQ4.2-BGS/R
L230 Model
Clamp

=V1WR1UQ51UQ3+.WR1UQ51UQ3/1

=V1WR1UQ51UQ5+.WR1UQ51UQ5/1

			Date	12/22/2022	Volvo Trucks North America	Valiant TMS	FESTO DQ CONNECTION QN4	Drawing name: =2V04&EFS-EL	= V1WR1UQ51UQ4
			Ed.	MKLEPADLO					+ V1WR1UQ51UQ4
			Appr		P6700 Underbody Mainline - Cell 2V04			Document type: EFS	Project nr: 22-16151
Modification	Date	Name	Original		Replacement of / Replaced by	Scale 1:1			Page 1 / 1630

0	1	2	3	4	5	6	7	8	9

=V1WR1UQ51KF1
+.WR1UQ51

-KF1.23
=V1WR1UQ51KF1+V1WR1UQ51/4.1

L290 Model Clamp (RST)
=V1WR1UQ51KF1
+V1WR1UQ51
-QN5.1_Q
=V1WR1UQ51KF1
+V1WR1UQ51/4.3
Q2301.0

L290 Model Clamp (SET)
=V1WR1UQ51KF1
+V1WR1UQ51
-QN5.2_Q
=V1WR1UQ51KF1
+V1WR1UQ51/4.3
Q2301.1

1.1 Pneumatic Valve

1.2 Pneumatic Valve

-QN5 .1 .2

=V1WR1UQ51KF1+V1WR1UQ51/2.3
+.WR1UQ51UQ5.1-W1

=V1WR1UQ51KF1+V1WR1UQ51/2.4
+.WR1UQ51UQ5.2-W1

-W1
RKC 4.4T-4-RSC 4.4T/S3060
4m

BN BU BK WH

-BGS/R
1 3
+ -
TÜNKERS
1324644
A2 A1
2 4

L290 Model Clamp
=V1WR1UQ51UQ5.1
+.WR1UQ51UQ5.1
-UQ5.1

L290 Model Clamp
=V1WR1UQ51UQ5.2
+.WR1UQ51UQ5.2
-UQ5.2

=V1WR1UQ51
-UQ5.1-BGS/R
L290 Model
Clamp

=V1WR1UQ51
-UQ5.2-BGS/R
L290 Model
Clamp

=V1WR1UQ51UQ4+.WR1UQ51UQ4/1

=V1WR1UQ51UQ6+.WR1UQ51UQ6/1

			Date	12/22/2022	Volvo Trucks North America	Valiant TMS	FESTO DQ CONNECTION QN5	Drawing name: =2V04&EFS-EL	= V1WR1UQ51UQ5
			Ed.	MKLEPADLO					+ V1WR1UQ51UQ5
			Appr		P6700 Underbody Mainline - Cell 2V04			Document type: EFS	Project nr: 22-16151
Modification	Date	Name	Original		Replacement of / Replaced by	Scale 1:1			Page 1 / 1630

0	1	2	3	4	5	6	7	8	9

=V1WR1UQ51KF1
+.WR1UQ51

-KF1.23
=V1WR1UQ51KF1+V1WR1UQ51/4.1

L320 Model CLamps (RST)
=V1WR1UQ51KF1
+V1WR1UQ51
-QN6.1_Q
=V1WR1UQ51KF1
+V1WR1UQ51/4.3
Q2301.2

L320 Model CLamps (SET)
=V1WR1UQ51KF1
+V1WR1UQ51
-QN6.2_Q
=V1WR1UQ51KF1
+V1WR1UQ51/4.3
Q2301.3

2.1
Pneumatic Valve

2.2
Pneumatic Valve

-QN6 .1 .2

=V1WR1UQ51KF1+V1WR1UQ51/2.5
+.WR1UQ51UQ6.1-W1

=V1WR1UQ51KF1+V1WR1UQ51/2.6
+.WR1UQ51UQ6.2-W1

-W1
RKC 4.4T-4-RSC 4.4T/S3060
4m

BN BU BK WH
1 3
+ -

-BGS/R

TÜNKERS
Erfindergeist serienmäßig.

1324644

A2 A1
2 4

L320 Model Clamp

=V1WR1UQ51UQ6.1
+.WR1UQ51UQ6.1
-UQ6.1

=V1WR1UQ51UQ6.2
+.WR1UQ51UQ6.2
-UQ6.2

=V1WR1UQ51
-UQ6.1-BGS/R
L320 Model
Clamp

=V1WR1UQ51
-UQ6.2-BGS/R
L320 Model
Clamp

=V1WR1UQ51UQ5+.WR1UQ51UQ5/1

=V1WR1UQ51UQ7+.WR1UQ51UQ7/1

			Date	12/22/2022	Volvo Trucks North America	Valiant TMS	FESTO DQ CONNECTION QN6	Drawing name: =2V04&EFS-EL	= V1WR1UQ51UQ6
			Ed.	MKLEPADLO					+ V1WR1UQ51UQ6
			Appr		P6700 Underbody Mainline - Cell 2V04			Document type: EFS	Project nr: 22-16151
Modification	Date	Name	Original		Replacement of	Replaced by	Scale 1:1		Page 1 / 1630

0	1	2	3	4	5	6	7	8	9

=V1WR1UQ51KF1
+.WR1UQ51

-KF1.24
=V1WR1UQ51KF1+V1WR1UQ51/4.1

L230 Model Shot Pins (RST)	L230 Model Shot Pins (SET)
=V1WR1UQ51KF1	=V1WR1UQ51KF1
+V1WR1UQ51	+V1WR1UQ51
-QN7.1_Q	-QN7.2_Q
=V1WR1UQ51KF1	=V1WR1UQ51KF1
+V1WR1UQ51/4.3	+V1WR1UQ51/4.3
Q2301.4	Q2301.5
1.1 Pneumatic Valve	1.2 Pneumatic Valve

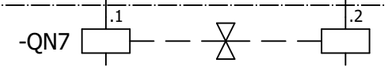

=V1WR1UQ51KF1+V1WR1UQ51/2.8
+.WR1UQ51UQ7.1-W1

=V1WR1UQ51KF1+V1WR1UQ51/2.9
+.WR1UQ51UQ7.2-W1

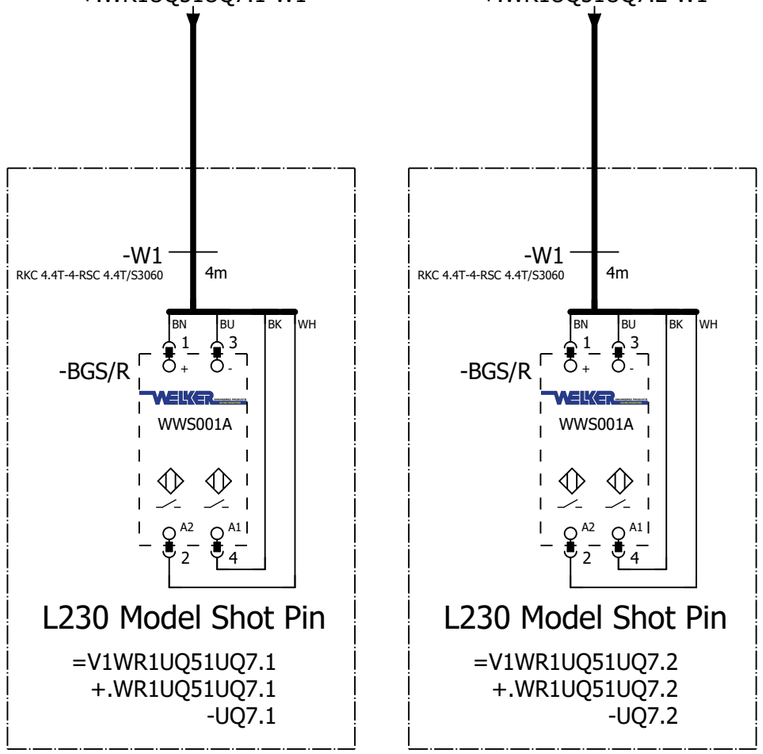

L230 Model Shot Pin

=V1WR1UQ51UQ7.1
+.WR1UQ51UQ7.1
-UQ7.1

L230 Model Shot Pin

=V1WR1UQ51UQ7.2
+.WR1UQ51UQ7.2
-UQ7.2

=V1WR1UQ51
-UQ7.1-BGS/R
L230 Model
Shot Pin

=V1WR1UQ51
-UQ7.2-BGS/R
L230 Model
Shot Pin

=V1WR1UQ51UQ6+.WR1UQ51UQ6/1

=V1WR1UQ51UQ8+.WR1UQ51UQ8/1

			Date	12/22/2022	Volvo Trucks North America		Valiant TMS	FESTO DQ CONNECTION QN7	Drawing name: =2V04&EFS-EL	= V1WR1UQ51UQ7
			Ed.	MKLEPADLO						+ V1WR1UQ51UQ7
			Appr		P6700 Underbody Mainline - Cell 2V04				Document type: EFS	Project nr: 22-16151
Modification	Date	Name	Original		Replacement of	Replaced by	Scale 1:1			Page 1 / 1630

0	1	2	3	4	5	6	7	8	9

=V1WR1UQ51KF1
+.WR1UQ51

-KF1.24
=V1WR1UQ51KF1+V1WR1UQ51/4.1

L290 Model Shot Pins (RST)	L290 Model Shot Pins (SET)
=V1WR1UQ51KF1	=V1WR1UQ51KF1
+V1WR1UQ51	+V1WR1UQ51
-QN8.1_Q	-QN8.2_Q
=V1WR1UQ51KF1	=V1WR1UQ51KF1
+V1WR1UQ51/4.3	+V1WR1UQ51/4.3
Q2301.6	Q2301.7
2.1 Pneumatic Valve	2.2 Pneumatic Valve

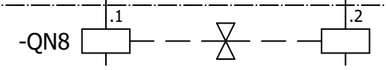

=V1WR1UQ51KF1+V1WR1UQ51/3.1
+.WR1UQ51UQ8.1-W1

=V1WR1UQ51KF1+V1WR1UQ51/3.2
+.WR1UQ51UQ8.2-W1

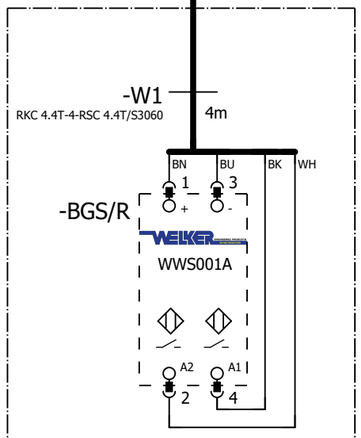

L290 Model Shot Pin

=V1WR1UQ51UQ8.1
+.WR1UQ51UQ8.1
-UQ8.1

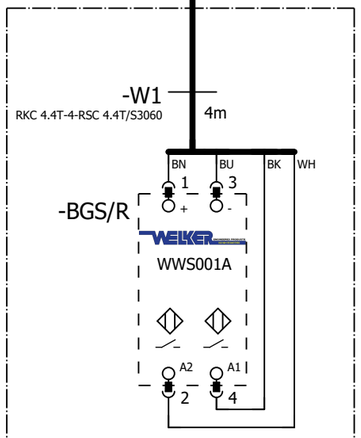

L290 Model Shot Pin

=V1WR1UQ51UQ8.2
+.WR1UQ51UQ8.2
-UQ8.2

=V1WR1UQ51
-UQ8.1-BGS/R
L290 Model
Shot Pin

=V1WR1UQ51
-UQ8.2-BGS/R
L290 Model
Shot Pin

=V1WR1UQ51UQ7+.WR1UQ51UQ7/1

=V1WR1UQ51UQ9+.WR1UQ51UQ9/1

			Date	12/22/2022	Volvo Trucks North America	Valiant TMS	FESTO DQ CONNECTION QN8	Drawing name: =2V04&EFS-EL	= V1WR1UQ51UQ8
			Ed.	MKLEPADLO					+ V1WR1UQ51UQ8
			Appr		P6700 Underbody Mainline - Cell 2V04			Document type: EFS	Project nr: 22-16151
Modification	Date	Name	Original		Replacement of	Replaced by	Scale 1:1		Page 1 / 1630

0	1	2	3	4	5	6	7	8	9

=V1WR1UQ51KF1
+.WR1UQ51

-KF1.25
=V1WR1UQ51KF1+V1WR1UQ51/4.1

L320 Model Shot Pins (RST)	L320 Model Shot Pins (SET)
=V1WR1UQ51KF1	=V1WR1UQ51KF1
+V1WR1UQ51	+V1WR1UQ51
-QN9.1_Q	-QN9.2_Q
=V1WR1UQ51KF1	=V1WR1UQ51KF1
+V1WR1UQ51/4.3	+V1WR1UQ51/4.3
Q2302.0	Q2302.1

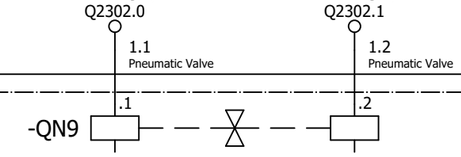

=V1WR1UQ51KF1+V1WR1UQ51/3.3
+.WR1UQ51UQ9.1-W1

=V1WR1UQ51KF1+V1WR1UQ51/3.4
+.WR1UQ51UQ9.2-W1

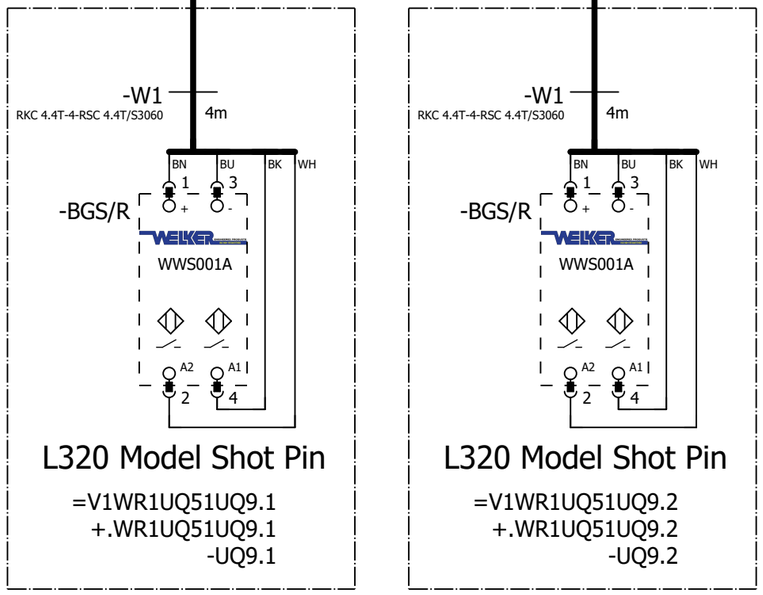

L320 Model Shot Pin

=V1WR1UQ51UQ9.1
+.WR1UQ51UQ9.1
-UQ9.1

L320 Model Shot Pin

=V1WR1UQ51UQ9.2
+.WR1UQ51UQ9.2
-UQ9.2

=V1WR1UQ51
-UQ9.1-BGS/R
L320 Model
Shot Pin

=V1WR1UQ51
-UQ9.2-BGS/R
L320 Model
Shot Pin

=V1WR1UQ51UQ8+.WR1UQ51UQ8/1

=V1WR1UQ51WC4+V1WR1UQ51/1

			Date	12/22/2022	Volvo Trucks North America		Valiant TMS	FESTO DQ CONNECTION QN9	Drawing name: =2V04&EFS-EL	= V1WR1UQ51UQ9
			Ed.	MKLEPADLO						+ V1WR1UQ51UQ9
			Appr		P6700 Underbody Mainline - Cell 2V04				Document type: EFS	Project nr: 22-16151
Modification	Date	Name	Original		Replacement of	Replaced by	Scale 1:1			Page 1 / 1630

+.UC14

-SWITCHEDPWR1 / =V1WC4+.UC14/20.5

W1
=V1WR1UQ51KF1/1.1

=V1WR1UQ51UQ9+.WR1UQ51UQ9/1

=V1WR1WC1+.WR1UC01/1

			Date	12/22/2022	Volvo Trucks North America	Valiant TMS	24VDC	Drawing name: =2V04&EFS-EL	= V1WR1UQ51WC4	
			Ed.	MKLEPADLO					+ V1WR1UQ51	
			Appr		P6700 Underbody Mainline - Cell 2V04	Scale 1:1		Document type: EFS	Project nr: 22-16151	Page 1
Modification	Date	Name	Original		Replacement of	Replaced by				1630

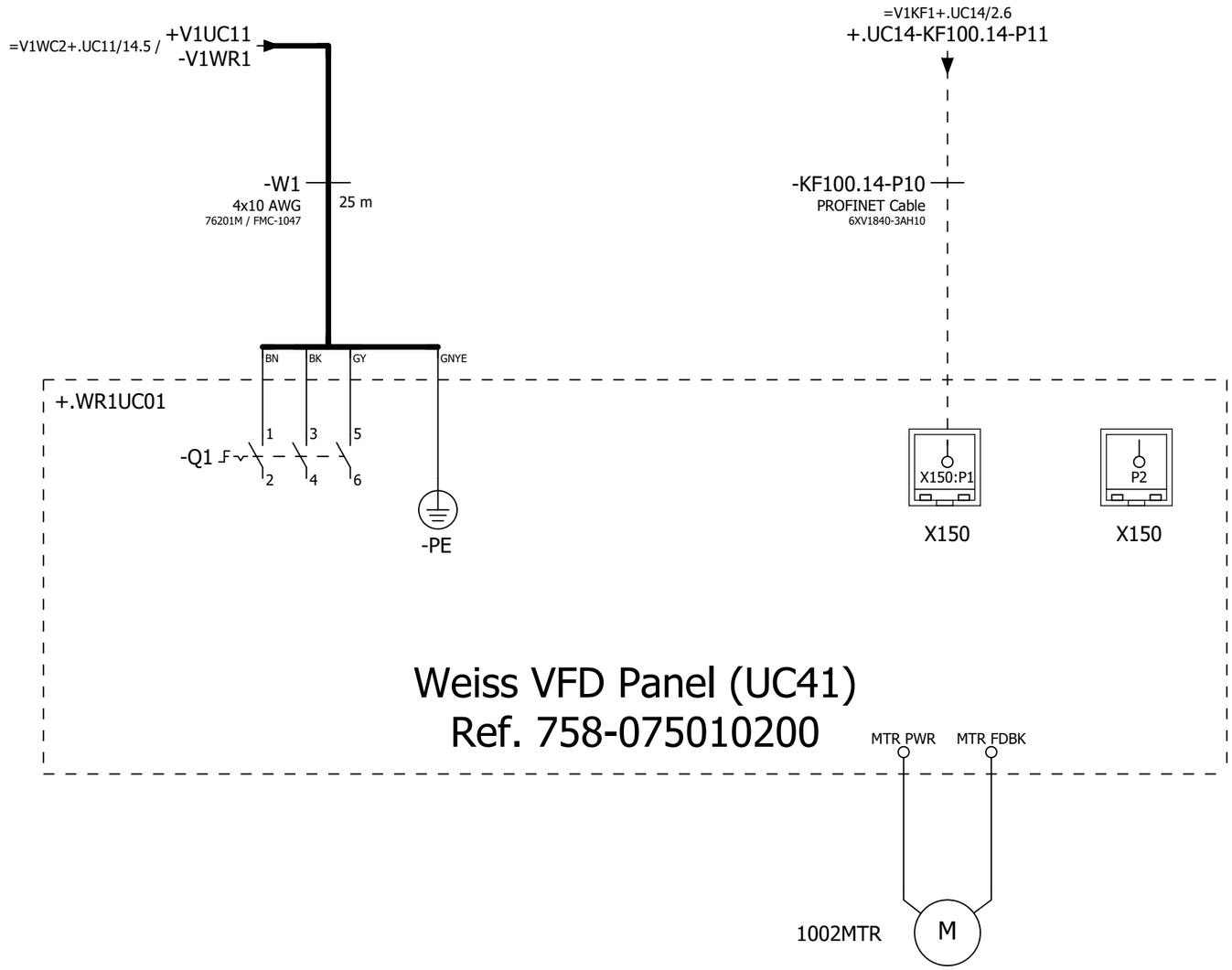

=V1WR1UQ51WC4+.WR1UQ51/1

&ELU=KF0+UC31/1

			Date	12/22/2022	Volvo Trucks North America	Valiant TMS	Incoming power & profinet	Drawing name: =2V04&EFS-EL	= V1WR1WC1	
			Ed.	MKLEPADLO					+ V1WR1UC01	
			Appr		P6700 Underbody Mainline - Cell 2V04			Document type: EFS	Project nr: 22-16151	Page 1
Modification	Date	Name	Original		Replacement of / Replaced by	Scale 1:1				1630

0	1	2	3	4	5	6	7	8	9

-UC31

&EFS=V1WR1WC1+V1WR1UC01/1

			Date	12/22/2022	Volvo Trucks North America	Valiant TMS	Layout UC31 MOP	Drawing name: =2V04&EFS-EL	= KF0	
			Ed.	MKLEPADLO					+ UC31	
			Appr		P6700 Underbody Mainline - Cell 2V04			Document type: ELU	Project nr: 22-16151	Page 1
Modification	Date	Name	Original		Replacement of	Replaced by	Scale 1:1			1630

0	1	2	3	4	5	6	7	8	9

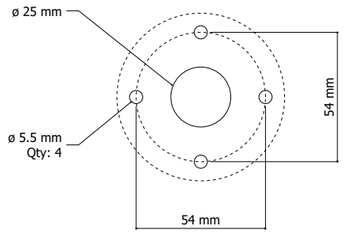

DETAIL 'B'
ABB Stack light
K70 series

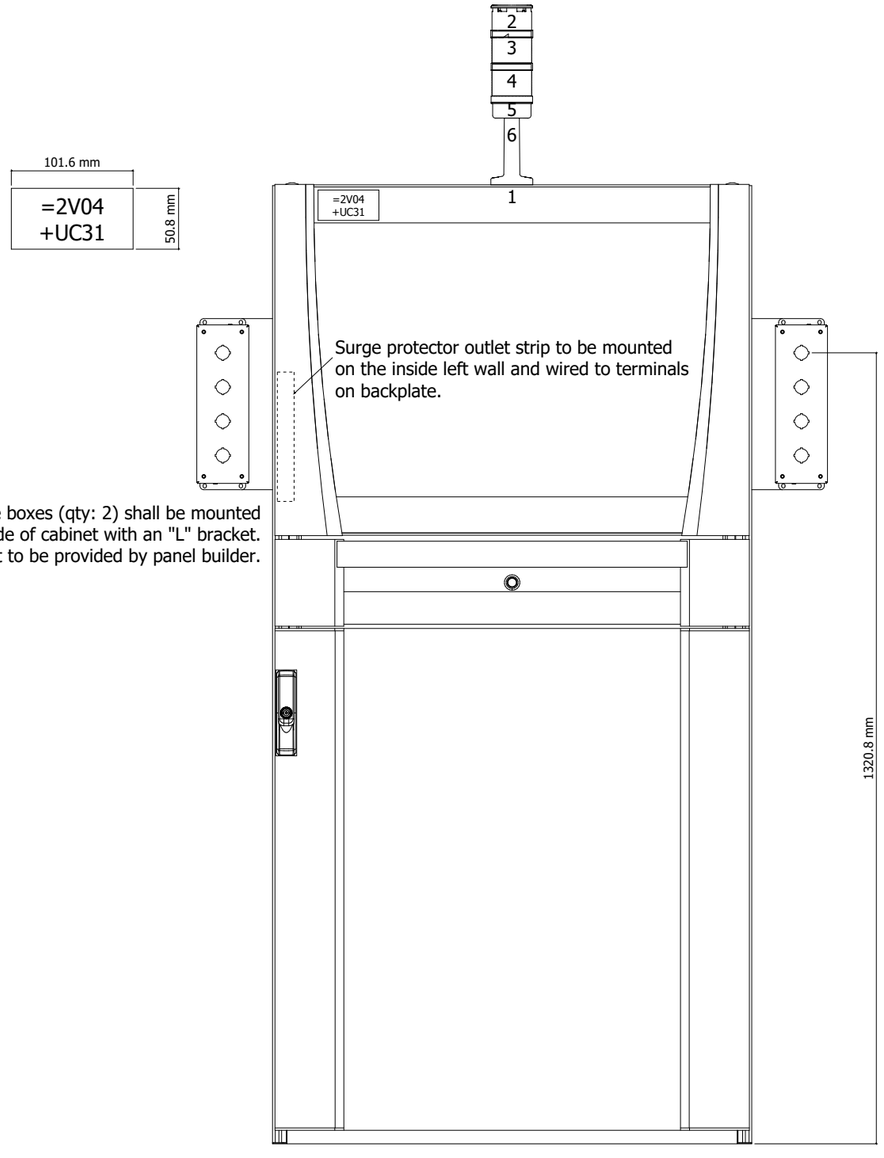

Enclosure boxes (qty: 2) shall be mounted to the side of cabinet with an "L" bracket.
* Mounting bracket to be provided by panel builder.

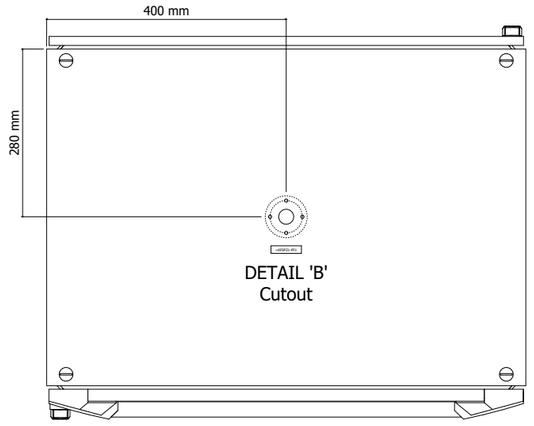

DETAIL 'B'
Cutout

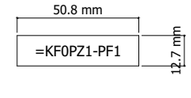

Top View
of Enclosure

Enclosure panel shall be finished in RAL 7035 Light Grey paint.

1 3

			Date	12/22/2022	Volvo Trucks North America	Valiant TMS	Layout UC31 MOP External View	Drawing name: =2V04&EFS-EL	= KF0	
			Ed.	MKLEPADLO					+ UC31	
			Appr		P6700 Underbody Mainline - Cell 2V04	Scale 1:10		Document type: ELU	Project nr: 22-16151	Page 2
Modification	Date	Name	Original		Replacement of	Replaced by				1630

0	1	2	3	4	5	6	7	8	9

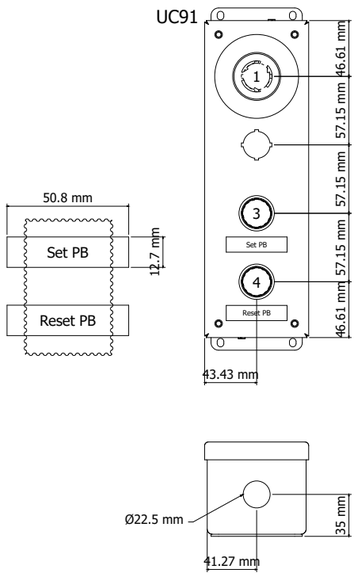

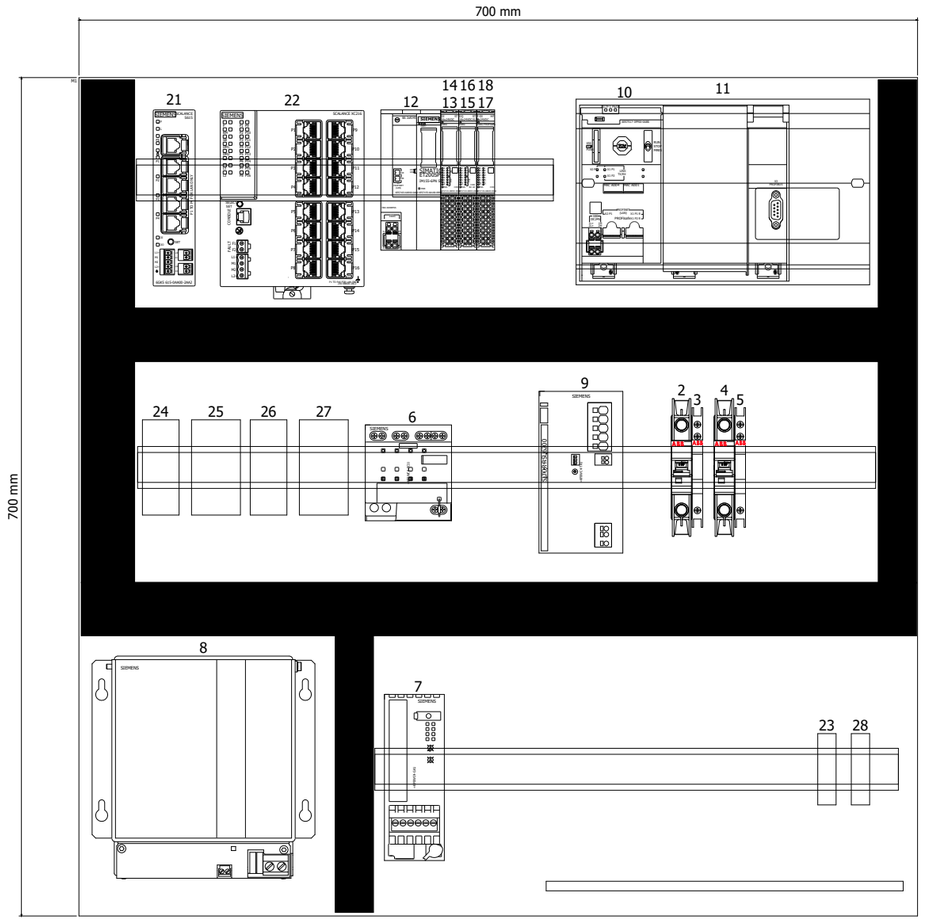

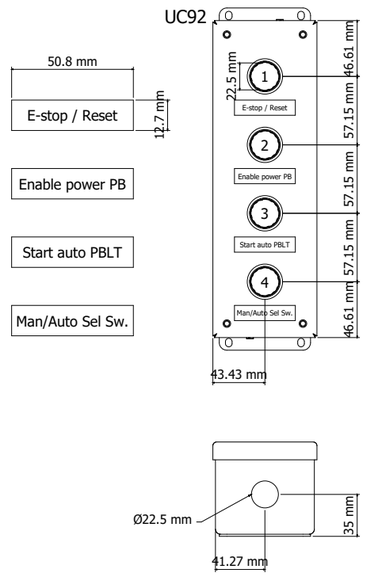

DETAIL 'B'
M12 Profinet Receptacle
Qty: 11

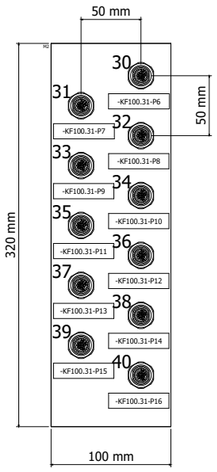

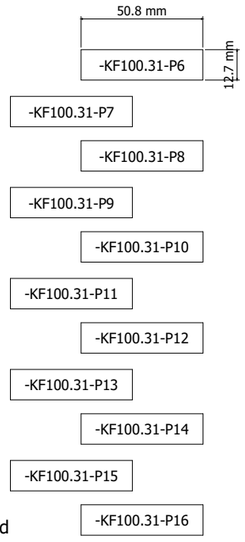

Profinet receptacle plate. Shall be mounted
to left side of subplate with a bracket.
* Mounting bracket to be provided by panel builder.

2

=V1SF0PG1+V1UC32/1

			Date	12/22/2022	Volvo Trucks North America	Valiant TMS	Layout UC31 MOP Internal View	Drawing name: =2V04&EFS-EL	= KF0
			Ed.	MKLEPADLO					+ UC31
			Appr		P6700 Underbody Mainline - Cell 2V04	Scale 1:5		Document type: ELU	Project nr: 22-16151
Modification	Date	Name	Original		Replacement of	Replaced by			Page 3 / 1630

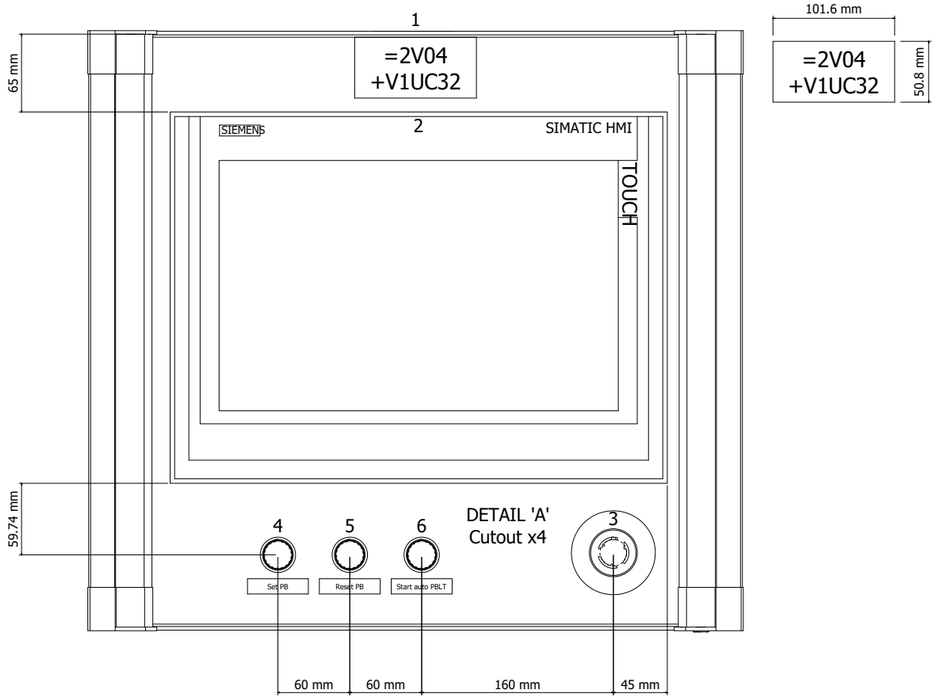

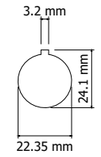

DETAIL 'A'
7/8" Receptacle,
Pushbutton and E-stop

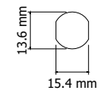

DETAIL 'B'
M12 Profinet Receptacle

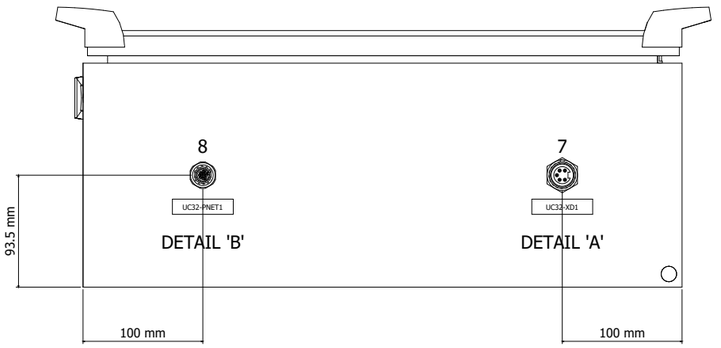

Buttom View
of Enclosure

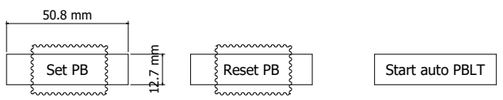

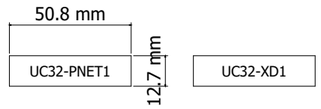

Enclosure panel shall be finished in RAL 7035 Light Grey paint.

=KF0+UC31/3

2

			Date	12/22/2022	Volvo Trucks North America	Valiant TMS	Layout UC32 SOP External View	Drawing name: =2V04&EFS-EL	= V1SF0PG1
			Ed.	MKLEPADLO					+ V1UC32
			Appr		P6700 Underbody Mainline - Cell 2V04	Scale 1:5		Document type: ELU	Project nr: 22-16151
Modification	Date	Name	Original		Replacement of	Replaced by			Page 1 / 1630

0	1	2	3	4	5	6	7	8	9

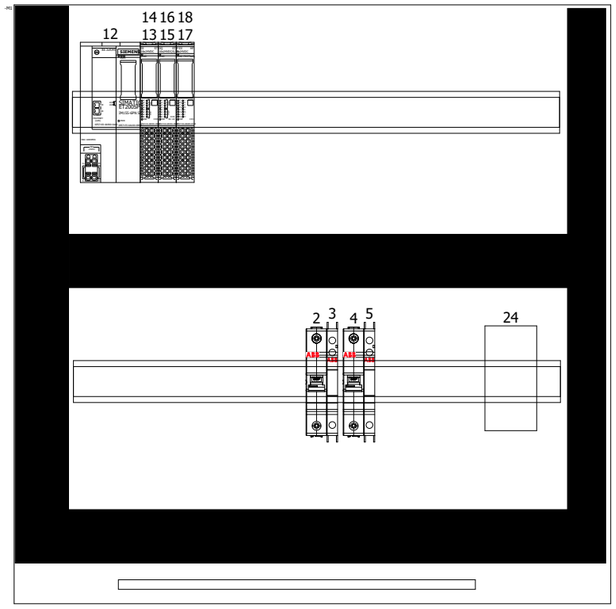

1

=V1SF0PG2+.UC33/1

			Date	12/22/2022	Volvo Trucks North America		Valiant TMS	Layout UC32 SOP Internal View	Drawing name: =2V04&EFS-EL	= V1SF0PG1
			Ed.	MKLEPADLO						+ V1UC32
			Appr		P6700 Underbody Mainline - Cell 2V04				Document type: ELU	Project nr: 22-16151
Modification	Date	Name	Original		Replacement of	Replaced by	Scale 1:5			Page 2 / 1630

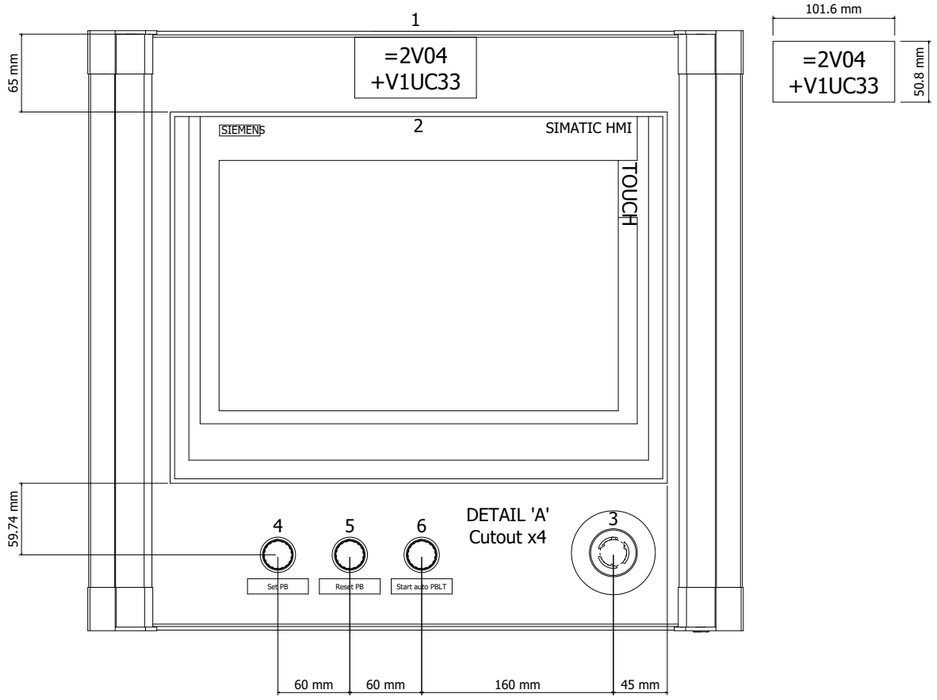

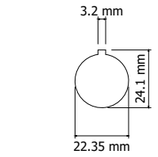

DETAIL 'A'
7/8" Receptacle,
Pushbutton and E-stop

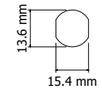

DETAIL 'B'
M12 Profinet Receptacle

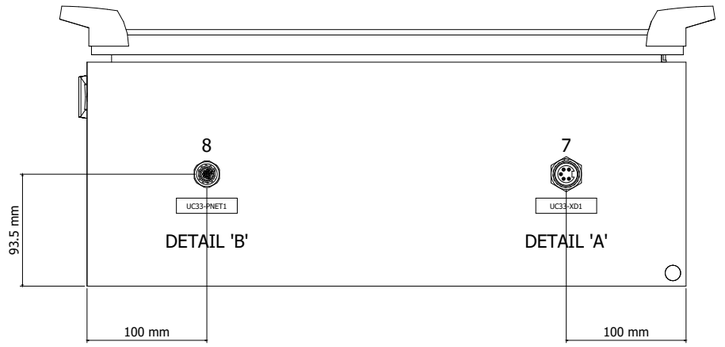

Buttom View
of Enclosure

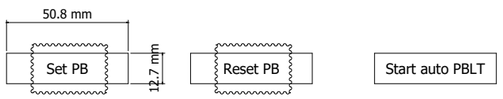

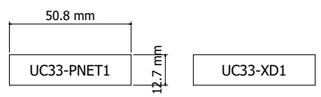

Enclosure panel shall be finished in RAL 7035 Light Grey paint.

=V1SF0PG1+.UC32/2

2

			Date	12/22/2022	Volvo Trucks North America	Valiant TMS	Layout UC33 SOP External View	Drawing name: =2V04&EFS-EL	= V1SF0PG2
			Ed.	MKLEPADLO					+ V1UC33
			Appr		P6700 Underbody Mainline - Cell 2V04	Scale 1:5		Document type: ELU	Project nr: 22-16151
Modification	Date	Name	Original		Replacement of	Replaced by			Page 1 / 1630

0	1	2	3	4	5	6	7	8	9

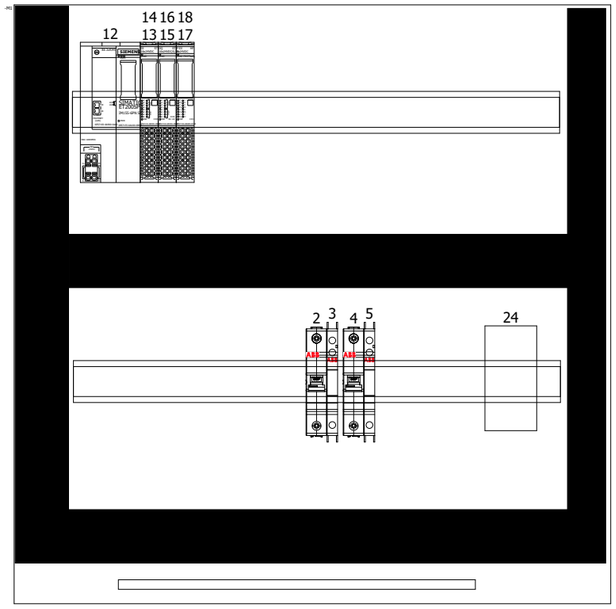

1

=V1UC11+.UC11/1

			Date	12/22/2022	Volvo Trucks North America		Valiant TMS	Layout UC33 SOP Internal View	Drawing name: =2V04&EFS-EL	= V1SF0PG2	
			Ed.	MKLEPADLO						+ V1UC33	
			Appr		P6700 Underbody Mainline - Cell 2V04				Document type: ELU	Project nr: 22-16151	Page 2
Modification	Date	Name	Original		Replacement of	Replaced by	Scale 1:5				1630

0	1	2	3	4	5	6	7	8	9

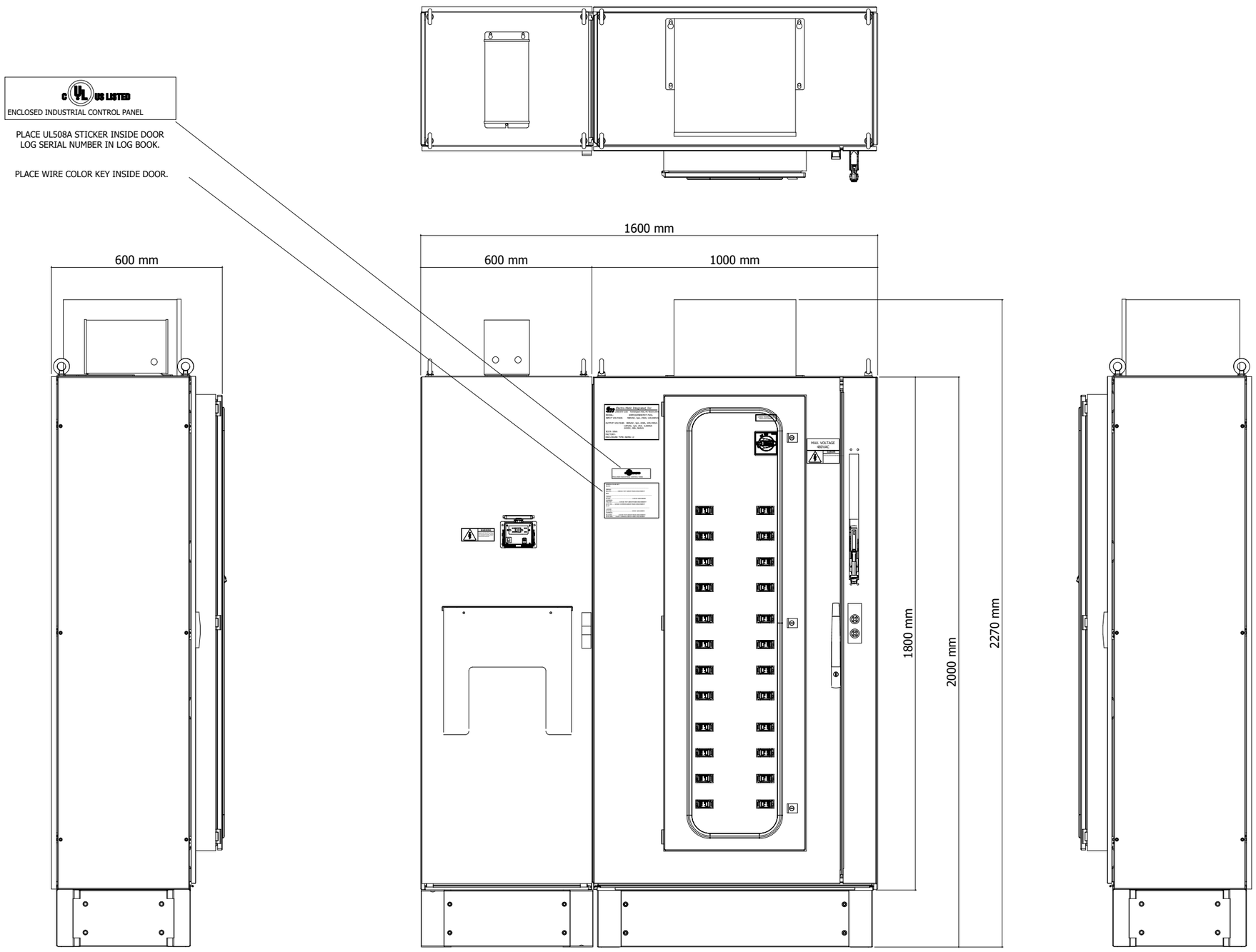

=V1SF0PG2+.UC33/2

2

			Date	12/22/2022	Volvo Trucks North America	Valiant TMS	Layout UC11 PDP External View	Drawing name: =2V04&EFS-EL	= V1UC11
			Ed.	MKLEPADLO					+ V1UC11
			Appr		P6700 Underbody Mainline - Cell 2V04			Document type: ELU	Project nr: 22-16151
Modification	Date	Name	Original		Replacement of	Replaced by	Scale 1:15		Page 1 / 1630

0	1	2	3	4	5	6	7	8	9

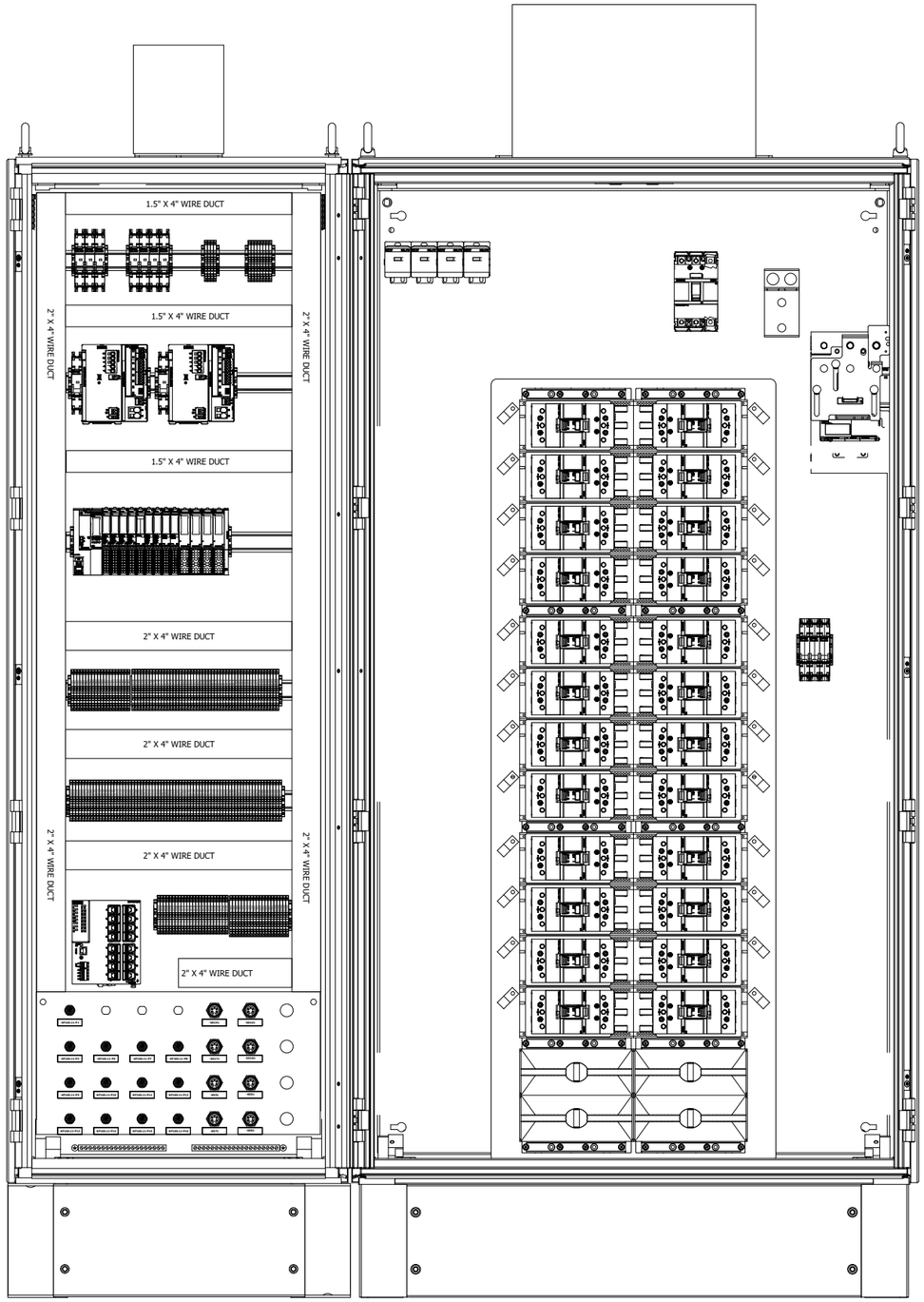

1

=V1UC12+.UC12/1

			Date	12/22/2022	Volvo Trucks North America	Valiant TMS	Layout UC11 PDP Internal View	Drawing name: =2V04&EFS-EL		= V1UC11	
			Ed.	MKLEPADLO						+ V1UC11	
1	2020-11-06	MINO	Appr		P6700 Underbody Mainline - Cell 2V04	Scale 1:10		Document type: ELU	Project nr: 22-16151	Page	2
Modification	Date	Name	Original		Replacement of	Replaced by					1630

0	1	2	3	4	5	6	7	8	9

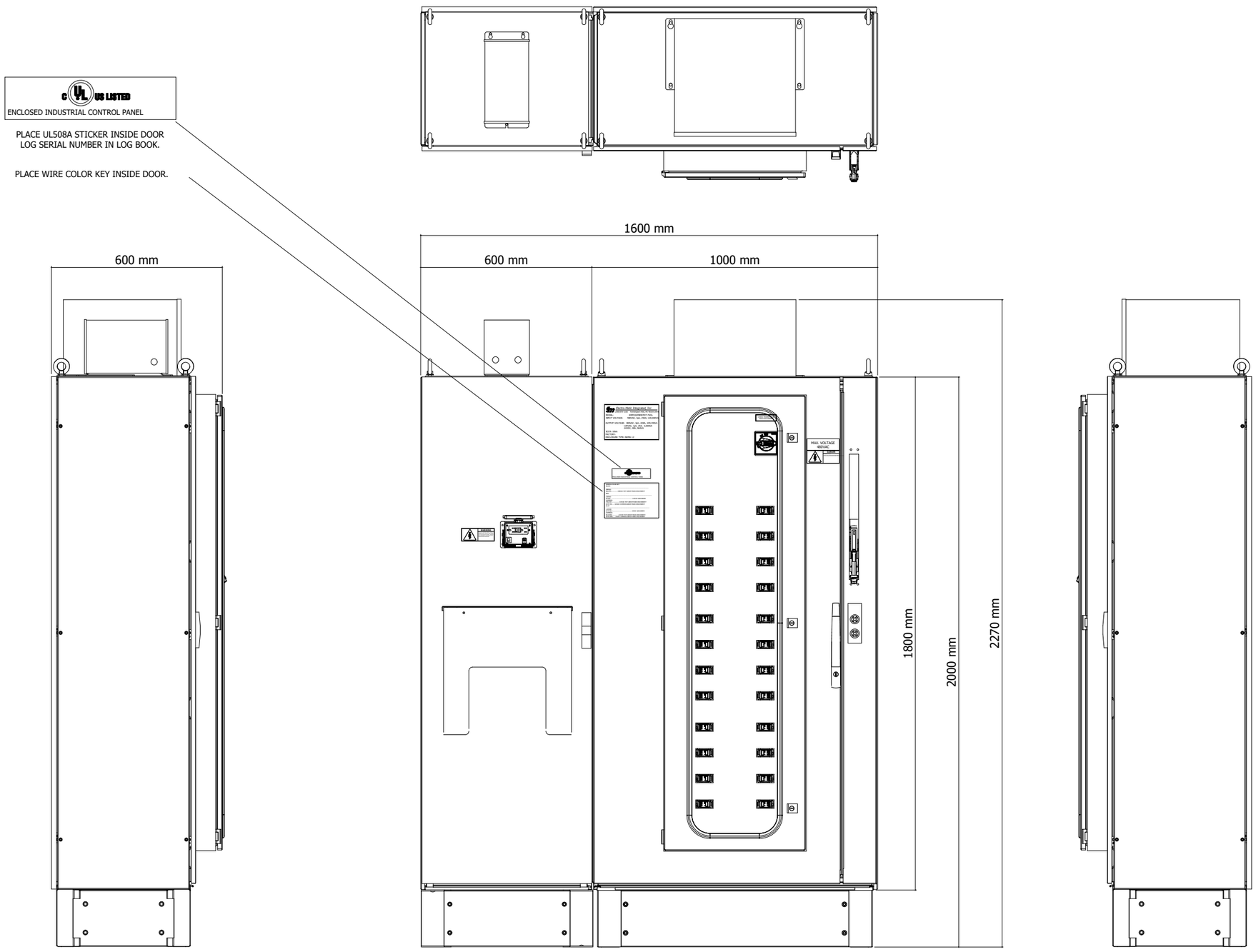

=V1UC11+.UC11/2

2

			Date	12/22/2022	Volvo Trucks North America	Valiant TMS	Layout UC12 PDP External View	Drawing name: =2V04&EFS-EL	= V1UC12
			Ed.	MKLEPADLO					+ V1UC12
			Appr		P6700 Underbody Mainline - Cell 2V04			Document type: ELU	Project nr: 22-16151
Modification	Date	Name	Original		Replacement of	Replaced by	Scale 1:15		Page 1 / 1630

0	1	2	3	4	5	6	7	8	9

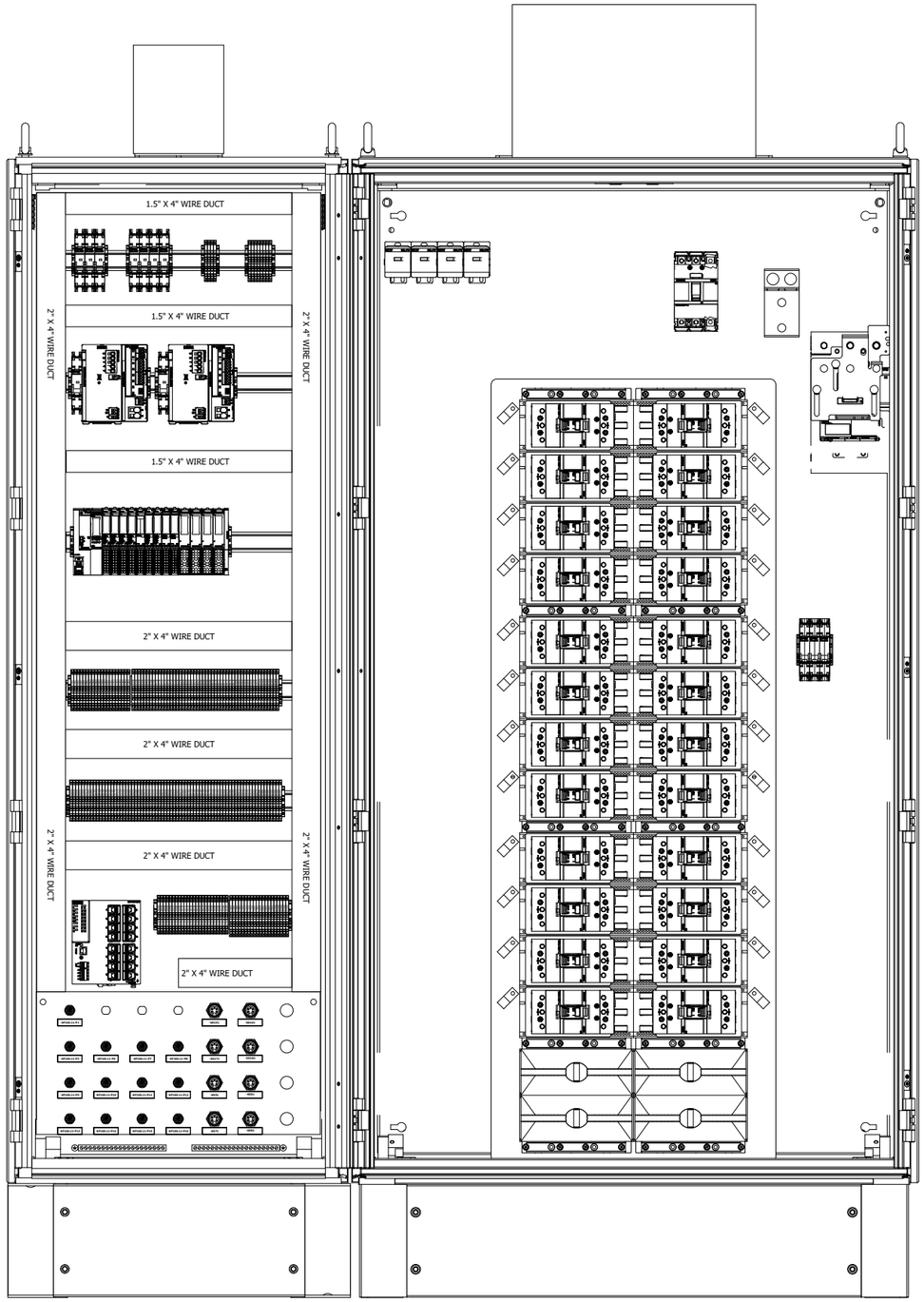

1

=V1UC14+.UC14/1

			Date	12/22/2022	Volvo Trucks North America	Valiant TMS	Layout UC12 PDP Internal View	Drawing name: =2V04&EFS-EL		= V1UC12	
			Ed.	MKLEPADLO						+ V1UC12	
1	2020-11-06	MINO	Appr		P6700 Underbody Mainline - Cell 2V04	Scale 1:10		Document type: ELU	Project nr: 22-16151	Page	2
Modification	Date	Name	Original		Replacement of	Replaced by					1630

0	1	2	3	4	5	6	7	8	9

PLACE UL508A STICKER INSIDE DOOR
LOG SERIAL NUMBER IN LOG BOOK.

PLACE WIRE COLOR KEY INSIDE DOOR.

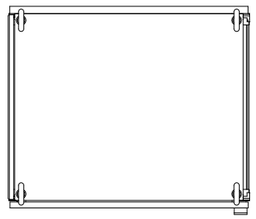

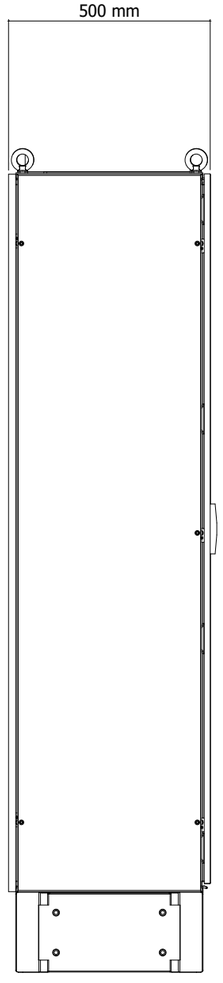

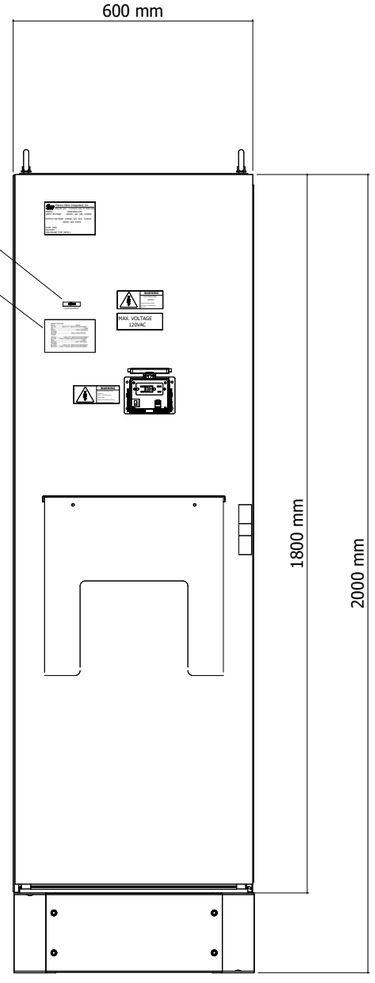

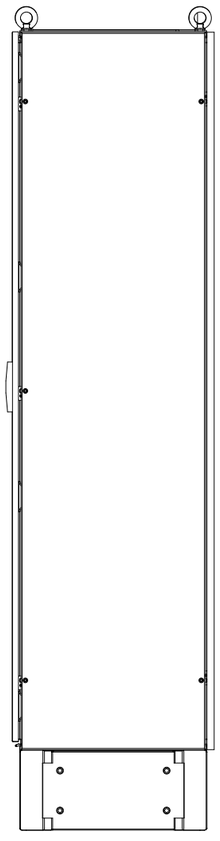

=V1UC12+.UC12/2

2

			Date	12/22/2022	Volvo Trucks North America	Valiant TMS	Layout UC14 RIO External View	Drawing name: =2V04&EFS-EL	= V1UC14
			Ed.	MKLEPADLO					+ V1UC14
			Appr		P6700 Underbody Mainline - Cell 2V04			Document type: ELU	Project nr: 22-16151
Modification	Date	Name	Original		Replacement of / Replaced by	Scale 1:15			Page 1 / 1630

0	1	2	3	4	5	6	7	8	9

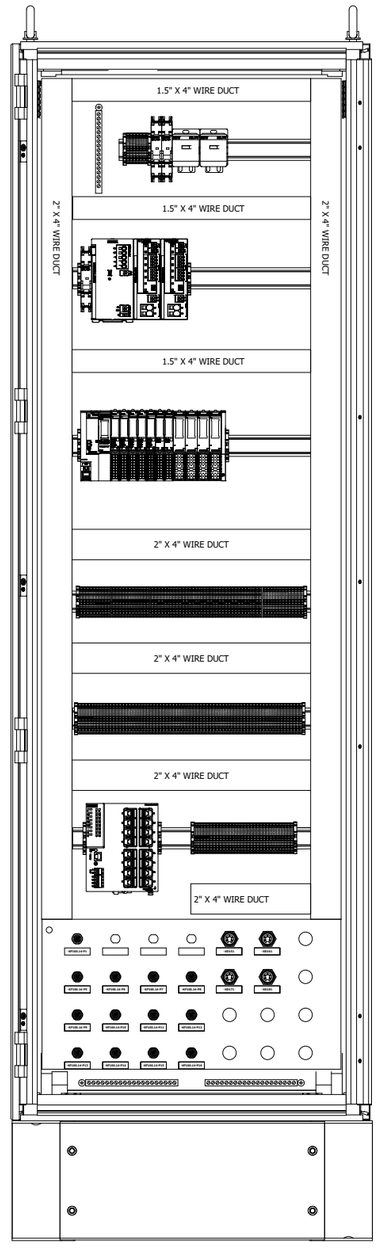

1

=V1UC15+.UC15/1

			Date	12/22/2022	Volvo Trucks North America	Valiant TMS	Layout UC14 RIO Internal Controls View	Drawing name: =2V04&EFS-EL	= V1UC14
			Ed.	MKLEPADLO					+ V1UC14
			Appr		P6700 Underbody Mainline - Cell 2V04	Scale 1:10		Document type: ELU	Project nr: 22-16151
Modification	Date	Name	Original		Replacement of	Replaced by			Page 2 / 1630

0	1	2	3	4	5	6	7	8	9

PLACE UL508A STICKER INSIDE DOOR
LOG SERIAL NUMBER IN LOG BOOK.

PLACE WIRE COLOR KEY INSIDE DOOR.

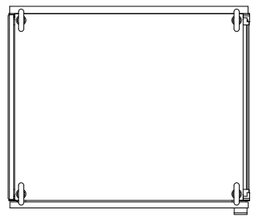

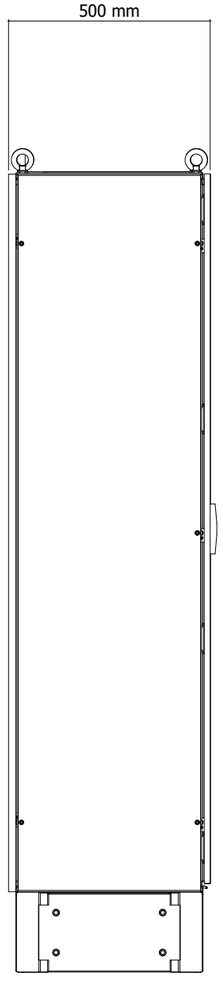

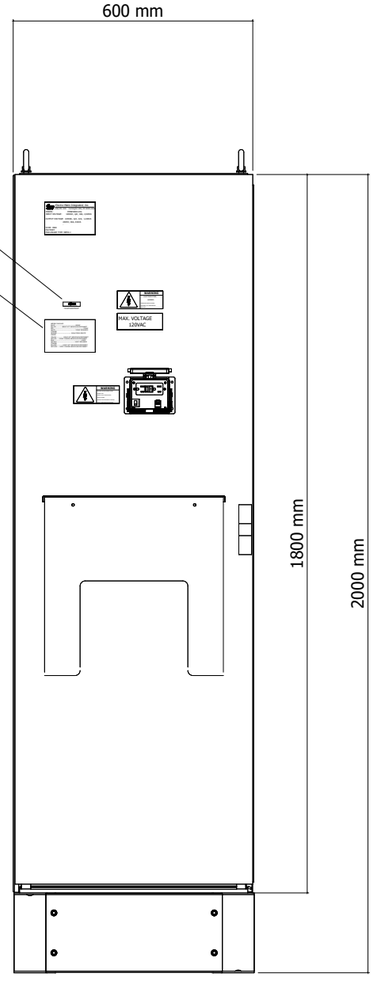

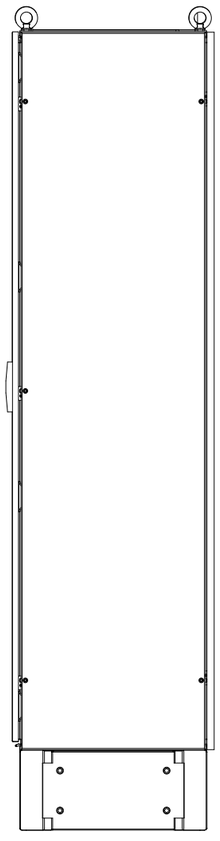

=V1UC14+.UC14/2

2

			Date	12/22/2022	Volvo Trucks North America	Valiant TMS	Layout UC15 RIO External View	Drawing name: =2V04&EFS-EL	= V1UC15
			Ed.	MKLEPADLO					+ V1UC15
			Appr		P6700 Underbody Mainline - Cell 2V04			Document type: ELU	Project nr: 22-16151
Modification	Date	Name	Original		Replacement of	Replaced by	Scale 1:15		Page 1 / 1630

0	1	2	3	4	5	6	7	8	9

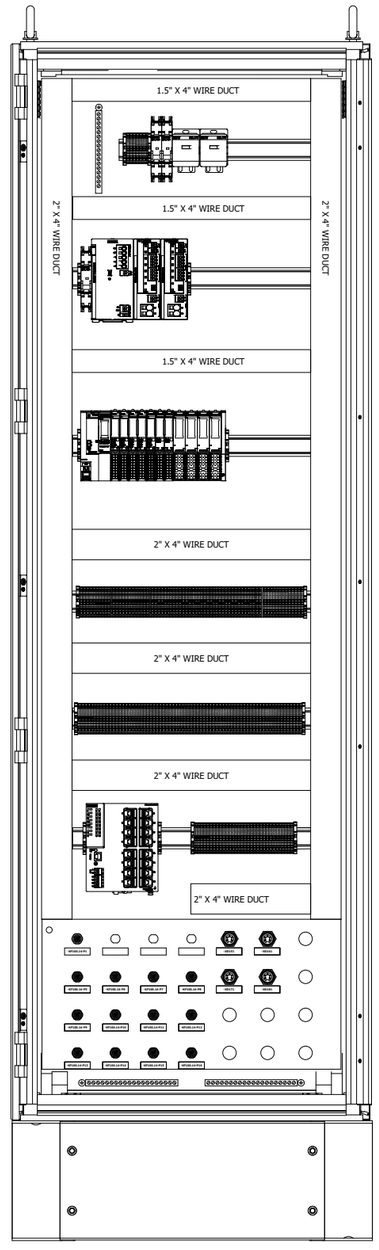

1

&EMA=KF0KF1+UC31/1

			Date	12/22/2022	Volvo Trucks North America	Valiant TMS	Layout UC15 RIO Internal Controls View	Drawing name: =2V04&EFS-EL	= V1UC15
			Ed.	MKLEPADLO					+ V1UC15
			Appr		P6700 Underbody Mainline - Cell 2V04	Scale 1:10		Document type: ELU	Project nr: 22-16151
Modification	Date	Name	Original		Replacement of	Replaced by			Page 2 / 1630

Cable diagram

F09_002_VLU

Cable name -KF100-P1			cable type PROFINET Cable					
remark			no. of conductors 4			cross-section 22		cable length
function text	Page / column	Target designation from	Connection point	conductor	Target designation to	Connection point	Page / column	function text
	&EFS/10.3	-KF100.31	P1		-KF99.31	P2	&EFS/10.1	

			Date	12/22/2022	Volvo Trucks North America	Valiant TMS	Cable diagram =KF0KF1+UC31-KF100-P1	Drawing name: =2V04&EFS-EL	= KF0KF1
			Ed.	MKLEPADLO					+ UC31
			Appr		P6700 Underbody Mainline - Cell 2V04			Document type: EMA	Project nr: 22-16151 Page 1
Modification	Date	Name	Original		Replacement of / Replaced by	Scale 1:1			1630

Cable diagram

F09_002_VLU

Cable name -KF100.31-P6			cable type PROFINET Cable					
remark			no. of conductors 4			cross-section 22		cable length
function text	Page / column	Target designation from	Connection point	conductor	Target designation to	Connection point	Page / column	function text
	&EFS/10.5	-KF100.31-P6			-KF100.31	P6	&EFS/10.4	

			Date	12/22/2022	Volvo Trucks North America	Valiant TMS	Cable diagram =KF0KF1+UC31-KF100.31-P6	Drawing name: =2V04&EFS-EL	= KF0KF1
			Ed.	MKLEPADLO					+ UC31
			Appr		P6700 Underbody Mainline - Cell 2V04			Document type: EMA	Project nr: 22-16151
Modification	Date	Name	Original		Replacement of / Replaced by	Scale 1:1			Page 2 / 1630

Cable diagram

F09_002_VLU

Cable name -KF100.31-P7			cable type PROFINET Cable					
remark			no. of conductors 4			cross-section 22		cable length
function text	Page / column	Target designation from	Connection point	conductor	Target designation to	Connection point	Page / column	function text
	&EFS/10.5	-KF100.31-P7			-KF100.31	P7	&EFS/10.4	

			Date	12/22/2022	Volvo Trucks North America	Valiant TMS	Cable diagram =KF0KF1+UC31-KF100.31-P7	Drawing name: =2V04&EFS-EL	= KF0KF1
			Ed.	MKLEPADLO					+ UC31
			Appr		P6700 Underbody Mainline - Cell 2V04			Document type: EMA	Project nr: 22-16151
Modification	Date	Name	Original		Replacement of / Replaced by	Scale 1:1			Page 3 / 1630

Cable diagram

F09_002_VLU

Cable name -KF100.31-P8			cable type PROFINET Cable					
remark			no. of conductors 4			cross-section 22		cable length
function text	Page / column	Target designation from	Connection point	conductor	Target designation to	Connection point	Page / column	function text
	&EFS/10.5	-KF100.31-P8			-KF100.31	P8	&EFS/10.4	

			Date	12/22/2022	Volvo Trucks North America	Valiant TMS	Cable diagram =KF0KF1+UC31-KF100.31-P8	Drawing name: =2V04&EFS-EL	= KF0KF1
			Ed.	MKLEPADLO					+ UC31
			Appr		P6700 Underbody Mainline - Cell 2V04			Document type: EMA	Project nr: 22-16151
Modification	Date	Name	Original		Replacement of / Replaced by	Scale 1:1			Page 4 / 1630

Cable diagram

F09_002_VLU

Cable name -KF100.31-P9			cable type PROFINET Cable					
remark			no. of conductors 4			cross-section 22		cable length
function text	Page / column	Target designation from	Connection point	conductor	Target designation to	Connection point	Page / column	function text
	&EFS/10.5	-KF100.31-P9			-KF100.31	P9	&EFS/10.4	

			Date	12/22/2022	Volvo Trucks North America	Valiant TMS	Cable diagram =KF0KF1+UC31-KF100.31-P9	Drawing name: =2V04&EFS-EL	= KF0KF1
			Ed.	MKLEPADLO					+ UC31
			Appr		P6700 Underbody Mainline - Cell 2V04			Document type: EMA	Project nr: 22-16151
Modification	Date	Name	Original		Replacement of / Replaced by	Scale 1:1			Page 5 / 1630

Cable diagram

F09_002_VLU

Cable name -KF100.31-P10			cable type PROFINET Cable					
remark			no. of conductors 4			cross-section 22		cable length
function text	Page / column	Target designation from	Connection point	conductor	Target designation to	Connection point	Page / column	function text
	&EFS/10.5	-KF100.31-P10			-KF100.31	P10	&EFS/10.4	

			Date	12/22/2022	Volvo Trucks North America	Valiant TMS	Cable diagram =KF0KF1+UC31-KF100.31-P10	Drawing name: =2V04&EFS-EL	= KF0KF1
			Ed.	MKLEPADLO					+ UC31
			Appr		P6700 Underbody Mainline - Cell 2V04			Document type: EMA	Project nr: 22-16151
Modification	Date	Name	Original		Replacement of / Replaced by	Scale 1:1			Page 6 / 1630

Cable diagram

F09_002_VLU

Cable name -KF100.31-P11			cable type PROFINET Cable					
remark			no. of conductors 4			cross-section 22		cable length
function text	Page / column	Target designation from	Connection point	conductor	Target designation to	Connection point	Page / column	function text
	&EFS/10.5	-KF100.31-P11			-KF100.31	P11	&EFS/10.4	

			Date	12/22/2022	Volvo Trucks North America	Valiant TMS	Cable diagram =KF0KF1+UC31-KF100.31-P11	Drawing name: =2V04&EFS-EL	= KF0KF1
			Ed.	MKLEPADLO					+ UC31
			Appr		P6700 Underbody Mainline - Cell 2V04			Document type: EMA	Project nr: 22-16151
Modification	Date	Name	Original		Replacement of / Replaced by	Scale 1:1			Page 7 / 1630

Cable diagram

F09_002_VLU

Cable name -KF100.31-P12			cable type PROFINET Cable					
remark			no. of conductors 4			cross-section 22		cable length
function text	Page / column	Target designation from	Connection point	conductor	Target designation to	Connection point	Page / column	function text
	&EFS/10.5	-KF100.31-P12			-KF100.31	P12	&EFS/10.4	

			Date	12/22/2022	Volvo Trucks North America	Valiant TMS	Cable diagram =KF0KF1+UC31-KF100.31-P12	Drawing name: =2V04&EFS-EL	= KF0KF1
			Ed.	MKLEPADLO					+ UC31
			Appr		P6700 Underbody Mainline - Cell 2V04			Document type: EMA	Project nr: 22-16151
Modification	Date	Name	Original		Replacement of / Replaced by	Scale 1:1			Page 8 / 1630

Cable diagram

F09_002_VLU

Cable name -KF100.31-P13			cable type PROFINET Cable					
remark			no. of conductors 4			cross-section 22		cable length
function text	Page / column	Target designation from	Connection point	conductor	Target designation to	Connection point	Page / column	function text
	&EFS/10.5	-KF100.31-P13			-KF100.31	P13	&EFS/10.4	

			Date	12/22/2022	Volvo Trucks North America	Valiant TMS	Cable diagram =KF0KF1+UC31-KF100.31-P13	Drawing name: =2V04&EFS-EL	= KF0KF1
			Ed.	MKLEPADLO					+ UC31
			Appr		P6700 Underbody Mainline - Cell 2V04			Document type: EMA	Project nr: 22-16151
Modification	Date	Name	Original		Replacement of / Replaced by	Scale 1:1			Page 9 / 1630

Cable diagram

F09_002_VLU

Cable name	-KF100.31-P14		cable type	PROFINET Cable				
remark			no. of conductors	4		cross-section	22	cable length
function text	Page / column	Target designation from	Connection point	conductor	Target designation to	Connection point	Page / column	function text
	&EFS/10.5	-KF100.31-P14			-KF100.31	P14	&EFS/10.4	

			Date	12/22/2022	Volvo Trucks North America	Valiant TMS	Cable diagram =KF0KF1+UC31-KF100.31-P14	Drawing name: =2V04&EFS-EL	= KF0KF1
			Ed.	MKLEPADLO					+ UC31
			Appr		P6700 Underbody Mainline - Cell 2V04			Document type: EMA	Project nr: 22-16151
Modification	Date	Name	Original		Replacement of / Replaced by	Scale 1:1			Page 10 / 1630

Cable diagram

F09_002_VLU

Cable name	-KF100.31-P15		cable type	PROFINET Cable				
remark			no. of conductors	4		cross-section	22	cable length
function text	Page / column	Target designation from	Connection point	conductor	Target designation to	Connection point	Page / column	function text
	&EFS/10.5	-KF100.31-P15			-KF100.31	P15	&EFS/10.4	

			Date	12/22/2022	Volvo Trucks North America	Valiant TMS	Cable diagram =KF0KF1+UC31-KF100.31-P15	Drawing name: =2V04&EFS-EL	= KF0KF1
			Ed.	MKLEPADLO					+ UC31
			Appr		P6700 Underbody Mainline - Cell 2V04			Document type: EMA	Project nr: 22-16151
Modification	Date	Name	Original		Replacement of / Replaced by	Scale 1:1			Page 11 / 1630

Cable diagram

F09_002_VLU

Cable name -KF100.31-P16			cable type PROFINET Cable					
remark			no. of conductors 4			cross-section 22		cable length
function text	Page / column	Target designation from	Connection point	conductor	Target designation to	Connection point	Page / column	function text
	&EFS/10.5	-KF100.31-P16			-KF100.31	P16	&EFS/10.4	

			Date	12/22/2022	Volvo Trucks North America	Valiant TMS	Cable diagram =KF0KF1+UC31-KF100.31-P16	Drawing name: =2V04&EFS-EL	= KF0KF1
			Ed.	MKLEPADLO					+ UC31
			Appr		P6700 Underbody Mainline - Cell 2V04			Document type: EMA	Project nr: 22-16151
Modification	Date	Name	Original		Replacement of / Replaced by	Scale 1:1			Page 12 / 1630

Cable diagram

F09_002_VLU

Cable name -W1			cable type TC-ER					
remark			no. of conductors 3			cross-section 10		cable length 12
function text	Page / column	Target designation from	Connection point	conductor	Target designation to	Connection point	Page / column	function text
	&EFS/1.1	-XD1	L1:1	BK	=V1WC3+V1UC11-XD1	1:1	&EFS=V1WC3+V1UC11/1.2	
	&EFS/1.1	-XD1	N:1	BK	=V1WC3+V1UC11-XD1	3:1	&EFS=V1WC3+V1UC11/1.3	
	&EFS/1.1	-XD1	PE:1	GNYE	=V1WC3+V1UC11-PE		&EFS=V1WC3+V1UC11/1.3	

=KF0KF1/12

=KH0+KH0/1

			Date	12/22/2022	Volvo Trucks North America	Valiant TMS	Cable diagram =KF0WC3+UC31-W1	Drawing name: =2V04&EFS-EL	= KF0WC3
			Ed.	MKLEPADLO					+ UC31
			Appr		P6700 Underbody Mainline - Cell 2V04			Document type: EMA	Project nr: 22-16151
Modification	Date	Name	Original		Replacement of / Replaced by	Scale 1:1			Page 1 / 1630

Cable diagram

F09_002_VLU

Cable name -W1			cable type NEBS-L1G4-K-5-LE4					
remark			no. of conductors 4			cross-section 26		cable length 5
function text	Page / column	Target designation from	Connection point	conductor	Target designation to	Connection point	Page / column	function text
				BN				
				BK				
				WH				
				BU				

=KF0WC3+UC31/1

2

			Date	12/22/2022	Volvo Trucks North America	Valiant TMS	Cable diagram =KH0+KH0-W1	Drawing name: =2V04&EFS-EL	= KH0
			Ed.	MKLEPADLO					+ KH0
			Appr		P6700 Underbody Mainline - Cell 2V04			Document type: EMA	Project nr: 22-16151
Modification	Date	Name	Original		Replacement of / Replaced by	Scale 1:1			Page 1 / 1630

Cable diagram

F09_002_VLU

Cable name	-W3		cable type	TPE				
remark	Air supply		no. of conductors	4	cross-section	18	cable length	12

function text	Page / column	Target designation from	Connection point	conductor	Target designation to	Connection point	Page / column	function text
	&EFS=V1WC4+V1UC15/6.1	=V1WC4+V1UC15-XD15	1:2	BN	-BP2	1	&EFS/2.5	
	&EFS=V1WC4+V1UC15/6.1	=V1WC4+V1UC15-XD10	6:2	BU	-BP2	3	&EFS/2.6	
	&EFS/2.6				-BP2	2	&EFS/2.6	
	&EFS/2.6	=V1KF1+V1UC15-KF15.12	7:2		-BP2	4	&EFS/2.6	

1

3

			Date	12/22/2022	Volvo Trucks North America	Valiant TMS	Cable diagram =KH0+KH0-W3	Drawing name: =2V04&EFS-EL	= KH0
			Ed.	MKLEPADLO					+ KH0
			Appr		P6700 Underbody Mainline - Cell 2V04			Document type: EMA	Project nr: 22-16151
Modification	Date	Name	Original		Replacement of / Replaced by	Scale 1:1			Page 2 / 1630

Cable diagram

F09_002_VLU

Cable name	-W4		cable type	TPE				
remark	Air supply		no. of conductors	4	cross-section	18	cable length	12

function text	Page / column	Target designation from	Connection point	conductor	Target designation to	Connection point	Page / column	function text
	&EFS=V1WC4+V1UC11/5.1	=V1WC4+V1UC11-XD13	6:2	BN	-BP3	1	&EFS/3.5	
	&EFS=V1WC4+V1UC11/5.1	=V1WC4+V1UC11-XD10	7:2	BU	-BP3	3	&EFS/3.6	
	&EFS/3.6				-BP3	2	&EFS/3.6	
	&EFS/3.6	=V1KF1+V1UC11-KF11.14	5:2		-BP3	4	&EFS/3.6	

			Date	12/22/2022	Volvo Trucks North America	Valiant TMS	Cable diagram =KH0+KH0-W4	Drawing name: =2V04&EFS-EL	= KH0
			Ed.	MKLEPADLO					+ KH0
			Appr		P6700 Underbody Mainline - Cell 2V04			Document type: EMA	Project nr: 22-16151
Modification	Date	Name	Original		Replacement of / Replaced by	Scale 1:1			Page 3 / 1630

Cable diagram

F09_002_VLU

Cable name	-W5		cable type	TPE				
remark	Air supply		no. of conductors	4	cross-section	18	cable length	12

function text	Page / column	Target designation from	Connection point	conductor	Target designation to	Connection point	Page / column	function text
	&EFS=V1WC4+V1UC11/5.3	=V1WC4+V1UC11-XD13	6:3	BN	-BP4	1	&EFS/4.5	
	&EFS=V1WC4+V1UC11/5.3	=V1WC4+V1UC11-XD10	7:3	BU	-BP4	3	&EFS/4.6	
	&EFS/4.6				-BP4	2	&EFS/4.6	
	&EFS/4.6	=V1KF1+V1UC11-KF11.14	6:2		-BP4	4	&EFS/4.6	

3

5

			Date	12/22/2022	Volvo Trucks North America	Valiant TMS	Cable diagram =KH0+KH0-W5	Drawing name: =2V04&EFS-EL	= KH0
			Ed.	MKLEPADLO					+ KH0
			Appr		P6700 Underbody Mainline - Cell 2V04			Document type: EMA	Project nr: 22-16151
Modification	Date	Name	Original		Replacement of / Replaced by	Scale 1:1			Page 4 / 1630

Cable diagram

F09_002_VLU

Cable name	-W6		cable type	TPE				
remark	Air supply		no. of conductors	4	cross-section	18	cable length	10

function text	Page / column	Target designation from	Connection point	conductor	Target designation to	Connection point	Page / column	function text
	&EFS=V1WC4+V1UC11/5.4	=V1WC4+V1UC11-XD13	7:3	BN	-BP5	1	&EFS/5.5	
	&EFS=V1WC4+V1UC11/5.4	=V1WC4+V1UC11-XD10	8:3	BU	-BP5	3	&EFS/5.6	
	&EFS/5.6				-BP5	2	&EFS/5.6	
	&EFS/5.6	=V1KF1+V1UC11-KF11.14	8:2		-BP5	4	&EFS/5.6	

			Date	12/22/2022	Volvo Trucks North America	Valiant TMS	Cable diagram =KH0+KH0-W6	Drawing name: =2V04&EFS-EL	= KH0	
			Ed.	MKLEPADLO					+ KH0	
			Appr		P6700 Underbody Mainline - Cell 2V04			Document type: EMA	Project nr: 22-16151	Page 5 / 1630
Modification	Date	Name	Original		Replacement of / Replaced by	Scale 1:1				

Cable diagram

F09_002_VLU

Cable name	-W7		cable type	TPE				
remark	Air supply		no. of conductors	4	cross-section	18	cable length	12

function text	Page / column	Target designation from	Connection point	conductor	Target designation to	Connection point	Page / column	function text
	&EFS=V1WC4+V1UC14/6.1	=V1WC4+V1UC14-XD15	1:2	BN	-BP6	1	&EFS/6.5	
	&EFS=V1WC4+V1UC14/6.1	=V1WC4+V1UC14-XD10	6:2	BU	-BP6	3	&EFS/6.6	
	&EFS/6.6				-BP6	2	&EFS/6.6	
	&EFS/6.6	=V1KF1+V1UC14-KF14.12	7:2		-BP6	4	&EFS/6.6	

			Date	12/22/2022	Volvo Trucks North America	Valiant TMS	Cable diagram =KH0+KH0-W7	Drawing name: =2V04&EFS-EL	= KH0	
			Ed.	MKLEPADLO					+ KH0	
			Appr		P6700 Underbody Mainline - Cell 2V04			Document type: EMA	Project nr: 22-16151	Page 6 / 1630
Modification	Date	Name	Original		Replacement of / Replaced by	Scale 1:1				

Cable diagram

F09_002_VLU

Cable name	-W8		cable type	TPE				
remark	Air supply		no. of conductors	4	cross-section	18	cable length	12

function text	Page / column	Target designation from	Connection point	conductor	Target designation to	Connection point	Page / column	function text
	&EFS=V1WC4+V1UC12/5.1	=V1WC4+V1UC12-XD13	7:2	BN	-BP7	1	&EFS/7.5	
	&EFS=V1WC4+V1UC12/5.1	=V1WC4+V1UC12-XD10	8:2	BU	-BP7	3	&EFS/7.6	
	&EFS/7.6				-BP7	2	&EFS/7.6	
	&EFS/7.6	=V1KF1+V1UC12-KF12.14	7:2		-BP7	4	&EFS/7.6	

			Date	12/22/2022	Volvo Trucks North America	Valiant TMS	Cable diagram =KH0+KH0-W8	Drawing name: =2V04&EFS-EL	= KH0
			Ed.	MKLEPADLO					+ KH0
			Appr		P6700 Underbody Mainline - Cell 2V04			Document type: EMA	Project nr: 22-16151
Modification	Date	Name	Original		Replacement of / Replaced by	Scale 1:1			Page 7 / 1630

Cable diagram

F09_002_VLU

Cable name	-W9		cable type	TPE				
remark	Air supply		no. of conductors	4	cross-section	18	cable length	12

function text	Page / column	Target designation from	Connection point	conductor	Target designation to	Connection point	Page / column	function text
	&EFS=V1WC4+V1UC14/6.1	=V1WC4+V1UC14-XD15	1:3	BN	-BP8	1	&EFS/8.5	
	&EFS=V1WC4+V1UC14/6.1	=V1WC4+V1UC14-XD10	6:3	BU	-BP8	3	&EFS/8.6	
	&EFS/8.6				-BP8	2	&EFS/8.6	
	&EFS/8.6	=V1KF1+V1UC14-KF14.12	8:2		-BP8	4	&EFS/8.6	

			Date	12/22/2022	Volvo Trucks North America	Valiant TMS	Cable diagram =KH0+KH0-W9	Drawing name: =2V04&EFS-EL	= KH0	
			Ed.	MKLEPADLO					+ KH0	
			Appr		P6700 Underbody Mainline - Cell 2V04			Document type: EMA	Project nr: 22-16151	Page 8 / 1630
Modification	Date	Name	Original		Replacement of / Replaced by	Scale 1:1				

Cable diagram

F09_002_VLU

Cable name	-W10		cable type	TPE				
remark	Air supply		no. of conductors	4	cross-section	18	cable length	12

function text	Page / column	Target designation from	Connection point	conductor	Target designation to	Connection point	Page / column	function text
	&EFS=V1WC4+V1UC15/6.1	=V1WC4+V1UC15-XD15	1:3	BN	-BP9	1	&EFS/9.5	
	&EFS=V1WC4+V1UC15/6.1	=V1WC4+V1UC15-XD10	6:3	BU	-BP9	3	&EFS/9.6	
	&EFS/9.6				-BP9	2	&EFS/9.6	
	&EFS/9.6	=V1KF1+V1UC15-KF15.12	8:2		-BP9	4	&EFS/9.6	

			Date	12/22/2022	Volvo Trucks North America	Valiant TMS	Cable diagram =KH0+KH0-W10	Drawing name: =2V04&EFS-EL	= KH0
			Ed.	MKLEPADLO					+ KH0
			Appr		P6700 Underbody Mainline - Cell 2V04			Document type: EMA	Project nr: 22-16151
Modification	Date	Name	Original		Replacement of / Replaced by	Scale 1:1			Page 9 / 1630

Cable diagram

F09_002_VLU

Cable name	-W1		cable type	TPE				
remark	Air supply		no. of conductors	4	cross-section	18	cable length	12

function text	Page / column	Target designation from	Connection point	conductor	Target designation to	Connection point	Page / column	function text
	&EFS=V1WC4+V1UC11/5.1	=V1WC4+V1UC11-XD13	5:2	BN	-BF1	1	&EFS/1.5	
	&EFS=V1WC4+V1UC11/5.1	=V1WC4+V1UC11-XD10	6:2	BU	-BF1	3	&EFS/1.6	
	&EFS/1.6				-BF1	2	&EFS/1.6	
	&EFS/1.6	=V1KF1+V1UC11-KF11.14	10:2		-BF1	4	&EFS/1.6	

			Date	12/22/2022	Volvo Trucks North America	Valiant TMS	Cable diagram =KH3+KH3-W1	Drawing name: =2V04&EFS-EL	= KH3
			Ed.	MKLEPADLO					+ KH3
			Appr		P6700 Underbody Mainline - Cell 2V04			Document type: EMA	Project nr: 22-16151
Modification	Date	Name	Original		Replacement of / Replaced by	Scale 1:1			Page 1 / 1630

Cable diagram

F09_002_VLU

Cable name	-W2		cable type	TPE				
remark	Air supply		no. of conductors	4	cross-section	18	cable length	12

function text	Page / column	Target designation from	Connection point	conductor	Target designation to	Connection point	Page / column	function text
	&EFS=V1WC4+V1UC11/5.3	=V1WC4+V1UC11-XD13	5:3	BN	-BF2	1	&EFS/2.5	
	&EFS=V1WC4+V1UC11/5.3	=V1WC4+V1UC11-XD10	6:3	BU	-BF2	3	&EFS/2.6	
	&EFS/2.6				-BF2	2	&EFS/2.6	
	&EFS/2.6	=V1KF1+V1UC11-KF11.14	11:2		-BF2	4	&EFS/2.6	

=V1AR11KF1+V1AR11UC01/1

			Date	12/22/2022	Volvo Trucks North America	Valiant TMS	Cable diagram =KH3+KH3-W2	Drawing name: =2V04&EFS-EL	= KH3
			Ed.	MKLEPADLO					+ KH3
			Appr		P6700 Underbody Mainline - Cell 2V04			Document type: EMA	Project nr: 22-16151
Modification	Date	Name	Original		Replacement of / Replaced by	Scale 1:1			Page 2 / 1630

Cable diagram

F09_002_VLU

Cable name -KF100.11-P6			cable type PROFINET Cable					
remark			no. of conductors 4			cross-section 22		cable length
function text	Page / column	Target designation from	Connection point	conductor	Target designation to	Connection point	Page / column	function text
	&EFS/1.7	-XPN-X2			=V1KF1+UC11-KF100.11-P6		&EFS=V1KF1+.UC11/2.5	

=KH3+KH3/2

=V1AR11UQ41BG0+.AR11UQ41/1

			Date	12/22/2022	Volvo Trucks North America	Valiant TMS	Cable diagram =V1AR11KF1+V1AR11UC01-KF100.11-P6	Drawing name: =2V04&EFS-EL	= V1AR11KF1
			Ed.	MKLEPADLO					+ V1AR11UC01
			Appr		P6700 Underbody Mainline - Cell 2V04			Document type: EMA	Project nr: 22-16151
Modification	Date	Name	Original		Replacement of / Replaced by	Scale 1:1			Page 1 / 1630

Cable diagram

F09_002_VLU

Cable name -W1			cable type TPE					
remark			no. of conductors 4			cross-section 18		cable length 2
function text	Page / column	Target designation from	Connection point	conductor	Target designation to	Connection point	Page / column	function text
	&EFS/1.0	-XG1/3	P1:1		=V1AR11UQ41KF2-KF2.13-X1	1	&EFS=V1AR11UQ41KF2/4.0	
	&EFS/1.1	-XG1/3	P1:3		=V1AR11UQ41KF2-KF2.13-X1	3	&EFS=V1AR11UQ41KF2/4.1	
	&EFS/1.1	-XG1/3	P1:4		=V1AR11UQ41KF2-KF2.13-X1	4	&EFS=V1AR11UQ41KF2/4.1	
	&EFS/1.1	-XG1/3	P1:2		=V1AR11UQ41KF2-KF2.13-X1	2	&EFS=V1AR11UQ41KF2/4.0	

			Date	12/22/2022	Volvo Trucks North America	Valiant TMS	Cable diagram =V1AR11UQ41BG0+V1AR11UQ41-W1	Drawing name: =2V04&EFS-EL	= V1AR11UQ41BG0
			Ed.	MKLEPADLO					+ V1AR11UQ41
			Appr		P6700 Underbody Mainline - Cell 2V04			Document type: EMA	Project nr: 22-16151
Modification	Date	Name	Original		Replacement of / Replaced by	Scale 1:1			Page 1 / 1630

Cable diagram

F09_002_VLU

Cable name -W1.1			cable type TPE					
remark			no. of conductors 4			cross-section 18		cable length 0.5
function text	Page / column	Target designation from	Connection point	conductor	Target designation to	Connection point	Page / column	function text
	&EFS/1.0	-BG01	1		-XG1/3	J1:1	&EFS/1.0	
	&EFS/1.0	-BG01	4		-XG1/3	J1:4	&EFS/1.1	
	&EFS/1.1	-BG01	3		-XG1/3	J1:3	&EFS/1.1	

			Date	12/22/2022	Volvo Trucks North America	Valiant TMS	Cable diagram =V1AR11UQ41BG0+V1AR11UQ41-W1.1	Drawing name: =2V04&EFS-EL	= V1AR11UQ41BG0
			Ed.	MKLEPADLO					+ V1AR11UQ41
			Appr		P6700 Underbody Mainline - Cell 2V04			Document type: EMA	Project nr: 22-16151
Modification	Date	Name	Original		Replacement of / Replaced by	Scale 1:1			Page 2 / 1630

Cable diagram

F09_002_VLU

Cable name -W1.2			cable type TPE					
remark			no. of conductors 4			cross-section 18		cable length 1
function text	Page / column	Target designation from	Connection point	conductor	Target designation to	Connection point	Page / column	function text
	&EFS/1.1	-BG03	1		-XG1/3	J2:1	&EFS/1.1	
	&EFS/1.1	-BG03	4		-XG1/3	J2:4	&EFS/1.2	
	&EFS/1.2	-BG03	3		-XG1/3	J2:3	&EFS/1.2	

			Date	12/22/2022	Volvo Trucks North America	Valiant TMS	Cable diagram =V1AR11UQ41BG0+V1AR11UQ41-W1.2	Drawing name: =2V04&EFS-EL	= V1AR11UQ41BG0
			Ed.	MKLEPADLO					+ V1AR11UQ41
			Appr		P6700 Underbody Mainline - Cell 2V04			Document type: EMA	Project nr: 22-16151
Modification	Date	Name	Original		Replacement of / Replaced by	Scale 1:1			Page 3 / 1630

Cable diagram

F09_002_VLU

Cable name -W2			cable type TPE					
remark			no. of conductors 4			cross-section 18		cable length 3
function text	Page / column	Target designation from	Connection point	conductor	Target designation to	Connection point	Page / column	function text
	&EFS/1.3	-XG2/4	P1:1		=V1AR11UQ41KF3-KF3.13-X1	1	&EFS=V1AR11UQ41KF3/4.0	
	&EFS/1.3	-XG2/4	P1:3		=V1AR11UQ41KF3-KF3.13-X1	3	&EFS=V1AR11UQ41KF3/4.1	
	&EFS/1.4	-XG2/4	P1:4		=V1AR11UQ41KF3-KF3.13-X1	4	&EFS=V1AR11UQ41KF3/4.1	
	&EFS/1.4	-XG2/4	P1:2		=V1AR11UQ41KF3-KF3.13-X1	2	&EFS=V1AR11UQ41KF3/4.0	

			Date	12/22/2022	Volvo Trucks North America	Valiant TMS	Cable diagram =V1AR11UQ41BG0+V1AR11UQ41-W2	Drawing name: =2V04&EFS-EL	= V1AR11UQ41BG0
			Ed.	MKLEPADLO					+ V1AR11UQ41
			Appr		P6700 Underbody Mainline - Cell 2V04			Document type: EMA	Project nr: 22-16151
Modification	Date	Name	Original		Replacement of / Replaced by	Scale 1:1			Page 4 / 1630

Cable diagram

F09_002_VLU

Cable name -W2.1			cable type TPE					
remark			no. of conductors 4			cross-section 18		cable length 0.5
function text	Page / column	Target designation from	Connection point	conductor	Target designation to	Connection point	Page / column	function text
	&EFS/1.3	-BG02	1		-XG2/4	J1:1	&EFS/1.3	
	&EFS/1.3	-BG02	4		-XG2/4	J1:4	&EFS/1.4	
	&EFS/1.3	-BG02	3		-XG2/4	J1:3	&EFS/1.3	

Cable diagram

F09_002_VLU

Cable name -W2.2			cable type TPE					
remark			no. of conductors 4			cross-section 18		cable length 0.5
function text	Page / column	Target designation from	Connection point	conductor	Target designation to	Connection point	Page / column	function text
	&EFS/1.4	-BG04	1		-XG2/4	J2:1	&EFS/1.4	
	&EFS/1.4	-BG04	4		-XG2/4	J2:4	&EFS/1.5	
	&EFS/1.4	-BG04	3		-XG2/4	J2:3	&EFS/1.4	

			Date	12/22/2022	Volvo Trucks North America	Valiant TMS	Cable diagram =V1AR11UQ41BG0+V1AR11UQ41-W2.2	Drawing name: =2V04&EFS-EL	= V1AR11UQ41BG0
			Ed.	MKLEPADLO					+ V1AR11UQ41
			Appr		P6700 Underbody Mainline - Cell 2V04			Document type: EMA	Project nr: 22-16151
Modification	Date	Name	Original		Replacement of / Replaced by	Scale 1:1			Page 6 / 1630

Cable diagram

F09_002_VLU

Cable name -W1			cable type TPU					
remark			no. of conductors 5			cross-section 16		cable length 2
function text	Page / column	Target designation from	Connection point	conductor	Target designation to	Connection point	Page / column	function text
	&EFS/1.3	-R3.CP/CS	C5		-XG1	P1:1	&EFS/1.0	
	&EFS/1.4	-R3.CP/CS	C7		-XG1	P1:2	&EFS/1.0	
	&EFS/1.3	-R3.CP/CS	C4		-XG1	P1:4	&EFS/1.0	
	&EFS/1.3	-R3.CP/CS	PE		-XG1	P1:3	&EFS/1.1	

			Date	12/22/2022	Volvo Trucks North America	Valiant TMS	Cable diagram =V1AR11UQ41KF1+V1AR11UQ41-W1	Drawing name: =2V04&EFS-EL	= V1AR11UQ41KF1
			Ed.	MKLEPADLO					+ V1AR11UQ41
			Appr		P6700 Underbody Mainline - Cell 2V04			Document type: EMA	Project nr: 22-16151 Page 1
Modification	Date	Name	Original		Replacement of / Replaced by	Scale 1:1			1630

Cable diagram

F09_002_VLU

Cable name -W1.1			cable type TPU					
remark			no. of conductors 5			cross-section 16		cable length 2
function text	Page / column	Target designation from	Connection point	conductor	Target designation to	Connection point	Page / column	function text
	&EFS/1.0	-XG1	J1:1		-XG2	P1:1	&EFS/1.0	
	&EFS/1.0	-XG1	J1:2		-XG2	P1:2	&EFS/1.0	
	&EFS/1.0	-XG1	J1:4		-XG2	P1:4	&EFS/1.0	
	&EFS/1.1	-XG1	J1:5		-XG2	P1:5	&EFS/1.1	
	&EFS/1.1	-XG1	J1:3		-XG2	P1:3	&EFS/1.1	

			Date	12/22/2022	Volvo Trucks North America	Valiant TMS	Cable diagram =V1AR11UQ41KF1+V1AR11UQ41-W1.1	Drawing name: =2V04&EFS-EL	= V1AR11UQ41KF1
			Ed.	MKLEPADLO					+ V1AR11UQ41
			Appr		P6700 Underbody Mainline - Cell 2V04			Document type: EMA	Project nr: 22-16151
Modification	Date	Name	Original		Replacement of / Replaced by	Scale 1:1			Page 2 / 1630

Cable diagram

F09_002_VLU

Cable name -W1.2			cable type TPU					
remark			no. of conductors 5			cross-section 16		cable length 1
function text	Page / column	Target designation from	Connection point	conductor	Target designation to	Connection point	Page / column	function text
	&EFS/2.1	-KF1-X20	1		-XG1	J2:1	&EFS/1.1	
	&EFS/2.1	-KF1-X20	2		-XG1	J2:2	&EFS/1.1	
	&EFS/2.2	-KF1-X20	5		-XG1	J2:4	&EFS/1.2	
	&EFS/2.1	-KF1-X20	3		-XG1	J2:3	&EFS/1.2	

			Date	12/22/2022	Volvo Trucks North America	Valiant TMS	Cable diagram =V1AR11UQ41KF1+V1AR11UQ41-W1.2	Drawing name: =2V04&EFS-EL	= V1AR11UQ41KF1
			Ed.	MKLEPADLO					+ V1AR11UQ41
			Appr		P6700 Underbody Mainline - Cell 2V04			Document type: EMA	Project nr: 22-16151
Modification	Date	Name	Original		Replacement of / Replaced by	Scale 1:1			Page 3 / 1630

Cable diagram

F09_002_VLU

Cable name -WF1			cable type PROFINET Cable					
remark			no. of conductors 4			cross-section 22		cable length
function text	Page / column	Target designation from	Connection point	conductor	Target designation to	Connection point	Page / column	function text
	&EFS/2.3	-KF1-TP1			-R3.CP/CS	R3.PROFINET	&EFS/1.5	

			Date	12/22/2022	Volvo Trucks North America	Valiant TMS	Cable diagram =V1AR11UQ41KF1+V1AR11UQ41-WF1	Drawing name: =2V04&EFS-EL	= V1AR11UQ41KF1
			Ed.	MKLEPADLO					+ V1AR11UQ41
			Appr		P6700 Underbody Mainline - Cell 2V04			Document type: EMA	Project nr: 22-16151
Modification	Date	Name	Original		Replacement of / Replaced by	Scale 1:1			Page 4 / 1630

Cable diagram

F09_002_VLU

Cable name -W1.1			cable type TPU					
remark			no. of conductors 5			cross-section 16		cable length 1
function text	Page / column	Target designation from	Connection point	conductor	Target designation to	Connection point	Page / column	function text
	&EFS=V1AR11UQ41KF1/4.V1	=V1AR11UQ41KF1-XG2	J1:1		-KF2-X20	1	&EFS/2.1	
	&EFS=V1AR11UQ41KF1/4.V1	=V1AR11UQ41KF1-XG2	J1:2		-KF2-X20	2	&EFS/2.1	
	&EFS=V1AR11UQ41KF1/4.V1	=V1AR11UQ41KF1-XG2	J1:4		-KF2-X20	5	&EFS/2.2	
	&EFS=V1AR11UQ41KF1/4.V1	=V1AR11UQ41KF1-XG2	J1:3		-KF2-X20	3	&EFS/2.1	

			Date	12/22/2022	Volvo Trucks North America	Valiant TMS	Cable diagram =V1AR11UQ41KF2+V1AR11UQ41-W1.1	Drawing name: =2V04&EFS-EL	= V1AR11UQ41KF2
			Ed.	MKLEPADLO					+ V1AR11UQ41
			Appr		P6700 Underbody Mainline - Cell 2V04			Document type: EMA	Project nr: 22-16151
Modification	Date	Name	Original		Replacement of / Replaced by	Scale 1:1			Page 1 / 1630

Cable diagram

F09_002_VLU

Cable name -WF2			cable type PROFINET Cable					
remark			no. of conductors 4			cross-section 22		cable length
function text	Page / column	Target designation from	Connection point	conductor	Target designation to	Connection point	Page / column	function text
	&EFS=V1AR11UQ41KF1/2.4	=V1AR11UQ41KF1-KF1-TP2			-KF2-TP1		&EFS/2.3	

			Date	12/22/2022	Volvo Trucks North America	Valiant TMS	Cable diagram =V1AR11UQ41KF2+V1AR11UQ41-WF2	Drawing name: =2V04&EFS-EL	= V1AR11UQ41KF2
			Ed.	MKLEPADLO					+ V1AR11UQ41
			Appr		P6700 Underbody Mainline - Cell 2V04			Document type: EMA	Project nr: 22-16151
Modification	Date	Name	Original		Replacement of / Replaced by	Scale 1:1			Page 2 / 1630

Cable diagram

F09_002_VLU

Cable name -W2.2			cable type TPU					
remark			no. of conductors 5			cross-section 16		cable length 1
function text	Page / column	Target designation from	Connection point	conductor	Target designation to	Connection point	Page / column	function text
	&EFS=V1AR11UQ41KF1/4	=V1AR11UQ41KF1-XG2	J2:1		-KF3-X20	1	&EFS/2.1	
	&EFS=V1AR11UQ41KF1/4	=V1AR11UQ41KF1-XG2	J2:2		-KF3-X20	2	&EFS/2.1	
	&EFS=V1AR11UQ41KF1/4	=V1AR11UQ41KF1-XG2	J2:4		-KF3-X20	5	&EFS/2.2	
	&EFS=V1AR11UQ41KF1/4	=V1AR11UQ41KF1-XG2	J2:3		-KF3-X20	3	&EFS/2.1	

			Date	12/22/2022	Volvo Trucks North America	Valiant TMS	Cable diagram =V1AR11UQ41KF3+V1AR11UQ41-W2.2	Drawing name: =2V04&EFS-EL	= V1AR11UQ41KF3
			Ed.	MKLEPADLO					+ V1AR11UQ41
			Appr		P6700 Underbody Mainline - Cell 2V04			Document type: EMA	Project nr: 22-16151
Modification	Date	Name	Original		Replacement of	Replaced by	Scale 1:1		Page 1 / 1630

Cable diagram

F09_002_VLU

Cable name -WF3			cable type PROFINET Cable					
remark			no. of conductors 4			cross-section 22		cable length
function text	Page / column	Target designation from	Connection point	conductor	Target designation to	Connection point	Page / column	function text
	&EFS=V1AR11UQ41KF2/2.4	=V1AR11UQ41KF2-KF2-TP2			-KF3-TP1		&EFS/2.3	

			Date	12/22/2022	Volvo Trucks North America	Valiant TMS	Cable diagram =V1AR11UQ41KF3+V1AR11UQ41-WF3	Drawing name: =2V04&EFS-EL	= V1AR11UQ41KF3
			Ed.	MKLEPADLO					+ V1AR11UQ41
			Appr		P6700 Underbody Mainline - Cell 2V04			Document type: EMA	Project nr: 22-16151
Modification	Date	Name	Original		Replacement of / Replaced by	Scale 1:1			Page 2 / 1630

Cable diagram

F09_002_VLU

Cable name -W1			cable type TPE					
remark			no. of conductors 4			cross-section 18		cable length 3
function text	Page / column	Target designation from	Connection point	conductor	Target designation to	Connection point	Page / column	function text
	&EFS=V1AR11UQ41KF1	=**V1AR11UQ41KF1**+V1AR11UQ41-KF1	1.0		1.11-X1		-BGS/R	1	&EFS=V1AR11UQ41UQ1+V1AR11UQ41UQ1/1.0
	&EFS=V1AR11UQ41KF1	=**V1AR11UQ41KF1**+V1AR11UQ41-KF2	1.0		1.11-X1		-BGS/R	2	&EFS=V1AR11UQ41UQ1+V1AR11UQ41UQ1/1.0
	&EFS=V1AR11UQ41KF1	=**V1AR11UQ41KF1**+V1AR11UQ41-KF3	1.1		1.11-X1		-BGS/R	3	&EFS=V1AR11UQ41UQ1+V1AR11UQ41UQ1/1.1
	&EFS=V1AR11UQ41KF1	=**V1AR11UQ41KF1**+V1AR11UQ41-KF4	1.1		1.11-X1		-BGS/R	4	&EFS=V1AR11UQ41UQ1+V1AR11UQ41UQ1/1.1

Cable diagram

F09_002_VLU

Cable name -W1			cable type TPE					
remark			no. of conductors 4			cross-section 18		cable length 1
function text	Page / column	Target designation from	Connection point	conductor	Target designation to	Connection point	Page / column	function text
	&EFS=V1AR11UQ41KF1	=**V1AR11UQ41/K2.1**+V1AR11UQ41-KF1	1.11-X2		-BGS/R	1	&EFS=V1AR11UQ41UQ2+V1AR11UQ41UQ2/1.0	
	&EFS=V1AR11UQ41KF1	=**V1AR11UQ41/K2.2**+V1AR11UQ41-KF2	1.11-X2		-BGS/R	2	&EFS=V1AR11UQ41UQ2+V1AR11UQ41UQ2/1.0	
	&EFS=V1AR11UQ41KF1	=**V1AR11UQ41/K2.3**+V1AR11UQ41-KF3	1.11-X2		-BGS/R	3	&EFS=V1AR11UQ41UQ2+V1AR11UQ41UQ2/1.1	
	&EFS=V1AR11UQ41KF1	=**V1AR11UQ41/K2.4**+V1AR11UQ41-KF4	1.11-X2		-BGS/R	4	&EFS=V1AR11UQ41UQ2+V1AR11UQ41UQ2/1.1	

=V1AR11UQ41UQ1.1+.AR11UQ41UQ1.1/1

=V1AR11UQ41UQ3.1+.AR11UQ41UQ3.1/1

			Date	12/22/2022	Volvo Trucks North America	Valiant TMS	Cable diagram =V1AR11UQ41UQ2.1+V1AR11UQ41UQ2.1-W1	Drawing name: =2V04&EFS-EL	= V1AR11UQ41UQ2.1
			Ed.	MKLEPADLO					+ V1AR11UQ41UQ2.1
			Appr		P6700 Underbody Mainline - Cell 2V04			Document type: EMA	Project nr: 22-16151
Modification	Date	Name	Original		Replacement of / Replaced by	Scale 1:1			Page 1 / 1630

Cable diagram

F09_002_VLU

Cable name -W1			cable type TPE					
remark			no. of conductors 4			cross-section 18		cable length 2
function text	Page / column	Target designation from	Connection point	conductor	Target designation to	Connection point	Page / column	function text
	&EFS=V1AR11UQ41KF1+	**=V1AR11UQ41/K2.3**+V1AR11UQ41-KF1	1.11-X3		-BGS/R	1	&EFS=V1AR11UQ41UQ3+V1AR11UQ41UQ3/1.0	
	&EFS=V1AR11UQ41KF1+	**=V1AR11UQ41/K2.3**+V1AR11UQ41-KF2	1.11-X3		-BGS/R	2	&EFS=V1AR11UQ41UQ3+V1AR11UQ41UQ3/1.0	
	&EFS=V1AR11UQ41KF1+	**=V1AR11UQ41/K2.3**+V1AR11UQ41-KF3	1.11-X3		-BGS/R	3	&EFS=V1AR11UQ41UQ3+V1AR11UQ41UQ3/1.1	
	&EFS=V1AR11UQ41KF1+	**=V1AR11UQ41/K2.3**+V1AR11UQ41-KF4	1.11-X3		-BGS/R	4	&EFS=V1AR11UQ41UQ3+V1AR11UQ41UQ3/1.1	

=V1AR11UQ41UQ2.1+.AR11UQ41UQ2.1/1

=V1AR11UQ41UQ3.2+.AR11UQ41UQ3.2/1

			Date	12/22/2022	Volvo Trucks North America	Valiant TMS	Cable diagram =V1AR11UQ41UQ3.1+V1AR11UQ41UQ3.1-W1	Drawing name: =2V04&EFS-EL	= V1AR11UQ41UQ3.1
			Ed.	MKLEPADLO					+ V1AR11UQ41UQ3.1
			Appr		P6700 Underbody Mainline - Cell 2V04			Document type: EMA	Project nr: 22-16151
Modification	Date	Name	Original		Replacement of / Replaced by	Scale 1:1			Page 1 / 1630

Cable diagram

F09_002_VLU

Cable name	-W1	cable type	TPE		
remark		no. of conductors	4	cross-section 18	cable length 2

function text	Page / column	Target designation from	Connection point	conductor	Target designation to	Connection point	Page / column	function text
	&EFS=V1AR11UQ41KF1+V1AR11UQ41KF1	=V1AR11UQ41/K2.1+V1AR11UQ41-KF1	1.11-X4		-BGS/R	1	&EFS=V1AR11UQ41UQ3+V1AR11UQ41UQ3/1.2	
	&EFS=V1AR11UQ41KF1+V1AR11UQ41KF1	=V1AR11UQ41/K2.1+V1AR11UQ41-KF2	1.11-X4		-BGS/R	2	&EFS=V1AR11UQ41UQ3+V1AR11UQ41UQ3/1.2	
	&EFS=V1AR11UQ41KF1+V1AR11UQ41KF1	=V1AR11UQ41/K2.1+V1AR11UQ41-KF3	1.11-X4		-BGS/R	3	&EFS=V1AR11UQ41UQ3+V1AR11UQ41UQ3/1.2	
	&EFS=V1AR11UQ41KF1+V1AR11UQ41KF1	=V1AR11UQ41/K2.1+V1AR11UQ41-KF4	1.11-X4		-BGS/R	4	&EFS=V1AR11UQ41UQ3+V1AR11UQ41UQ3/1.2	

=V1AR11UQ41UQ3.1+.AR11UQ41UQ3.1/1

=V1AR11UQ41UQ4.1+.AR11UQ41UQ4.1/1

			Date	12/22/2022	Volvo Trucks North America	Valiant TMS	Cable diagram =V1AR11UQ41UQ3.2+V1AR11UQ41UQ3.2-W1	Drawing name: =2V04&EFS-EL	= V1AR11UQ41UQ3.2 + V1AR11UQ41UQ3.2
			Ed.	MKLEPADLO	P6700 Underbody Mainline - Cell 2V04			Document type: EMA	Project nr: 22-16151
			Appr						Page 1
Modification	Date	Name	Original		Replacement of / Replaced by	Scale 1:1			1630

Cable diagram

F09_002_VLU

Cable name -W1			cable type TPE					
remark			no. of conductors 4			cross-section 18		cable length 3
function text	Page / column	Target designation from	Connection point	conductor	Target designation to	Connection point	Page / column	function text
	&EFS=V1AR11UQ41KF1	=**V1AR11UQ41/KF1**+V1AR11UQ41-KF1	1.11-X5		-BGS/R	1	&EFS=V1AR11UQ41UQ4+V1AR11UQ41UQ4/1.0	
	&EFS=V1AR11UQ41KF1	=**V1AR11UQ41/KF1**+V1AR11UQ41-KF2	1.11-X5		-BGS/R	2	&EFS=V1AR11UQ41UQ4+V1AR11UQ41UQ4/1.0	
	&EFS=V1AR11UQ41KF1	=**V1AR11UQ41/KF1**+V1AR11UQ41-KF3	1.11-X5		-BGS/R	3	&EFS=V1AR11UQ41UQ4+V1AR11UQ41UQ4/1.1	
	&EFS=V1AR11UQ41KF1	=**V1AR11UQ41/KF1**+V1AR11UQ41-KF4	1.11-X5		-BGS/R	4	&EFS=V1AR11UQ41UQ4+V1AR11UQ41UQ4/1.1	

=V1AR11UQ41UQ3.2+.AR11UQ41UQ3.2/1

=V1AR11UQ41UQ4.2+.AR11UQ41UQ4.2/1

			Date	12/22/2022	Volvo Trucks North America	Valiant TMS	Cable diagram	Drawing name: =2V04&EFS-EL	= V1AR11UQ41UQ4.1
			Ed.	MKLEPADLO			=V1AR11UQ41UQ4.1+V1AR11UQ41UQ4.1-W1		+ V1AR11UQ41UQ4.1
			Appr		P6700 Underbody Mainline - Cell 2V04			Document type: EMA	Project nr: 22-16151
Modification	Date	Name	Original		Replacement of / Replaced by	Scale 1:1			Page 1 / 1630

Cable diagram

F09_002_VLU

Cable name -W1			cable type TPE					
remark			no. of conductors 4			cross-section 18		cable length 3
function text	Page / column	Target designation from	Connection point	conductor	Target designation to	Connection point	Page / column	function text
	&EFS=V1AR11UQ41KF1	=**V1AR11UQ41/K2.6**+V1AR11UQ41-KF1	1.11-X6		-BGS/R	1	&EFS=V1AR11UQ41UQ4+V1AR11UQ41UQ4/1.2	
	&EFS=V1AR11UQ41KF1	=**V1AR11UQ41/K2.6**+V1AR11UQ41-KF2	1.11-X6		-BGS/R	2	&EFS=V1AR11UQ41UQ4+V1AR11UQ41UQ4/1.2	
	&EFS=V1AR11UQ41KF1	=**V1AR11UQ41/K2.6**+V1AR11UQ41-KF3	1.11-X6		-BGS/R	3	&EFS=V1AR11UQ41UQ4+V1AR11UQ41UQ4/1.2	
	&EFS=V1AR11UQ41KF1	=**V1AR11UQ41/K2.7**+V1AR11UQ41-KF4	1.11-X6		-BGS/R	4	&EFS=V1AR11UQ41UQ4+V1AR11UQ41UQ4/1.2	

=V1AR11UQ41UQ4.1+.AR11UQ41UQ4.1/1

=V1AR11UQ41UQ4.3+.AR11UQ41UQ4.3/1

			Date	12/22/2022	Volvo Trucks North America	Valiant TMS	Cable diagram =V1AR11UQ41UQ4.2+V1AR11UQ41UQ4.2-W1	Drawing name: =2V04&EFS-EL	= V1AR11UQ41UQ4.2
			Ed.	MKLEPADLO					+ V1AR11UQ41UQ4.2
			Appr		P6700 Underbody Mainline - Cell 2V04			Document type: EMA	Project nr: 22-16151
Modification	Date	Name	Original		Replacement of / Replaced by	Scale 1:1			Page 1 / 1630

Cable diagram

F09_002_VLU

Cable name -W1			cable type TPE					
remark			no. of conductors 4			cross-section 18		cable length 2
function text	Page / column	Target designation from	Connection point	conductor	Target designation to	Connection point	Page / column	function text
	&EFS=V1AR11UQ41KF1	=**V1AR11UQ41KF1**+V1AR11UQ41-KF1	1.11-X7		-BGS/R	1	&EFS=V1AR11UQ41UQ4+V1AR11UQ41UQ4/1.4	
	&EFS=V1AR11UQ41KF1	=**V1AR11UQ41KF1**+V1AR11UQ41-KF2	1.11-X7		-BGS/R	2	&EFS=V1AR11UQ41UQ4+V1AR11UQ41UQ4/1.4	
	&EFS=V1AR11UQ41KF1	=**V1AR11UQ41KF1**+V1AR11UQ41-KF3	1.11-X7		-BGS/R	3	&EFS=V1AR11UQ41UQ4+V1AR11UQ41UQ4/1.4	
	&EFS=V1AR11UQ41KF1	=**V1AR11UQ41KF1**+V1AR11UQ41-KF4	1.11-X7		-BGS/R	4	&EFS=V1AR11UQ41UQ4+V1AR11UQ41UQ4/1.4	

=V1AR11UQ41UQ4.2+.AR11UQ41UQ4.2/1

=V1AR11UQ41UQ4.4+.AR11UQ41UQ4.4/1

			Date	12/22/2022	Volvo Trucks North America	Valiant TMS	Cable diagram =V1AR11UQ41UQ4.3+V1AR11UQ41UQ4.3-W1	Drawing name: =2V04&EFS-EL	= V1AR11UQ41UQ4.3
			Ed.	MKLEPADLO					+ V1AR11UQ41UQ4.3
			Appr		P6700 Underbody Mainline - Cell 2V04			Document type: EMA	Project nr: 22-16151
Modification	Date	Name	Original		Replacement of / Replaced by	Scale 1:1			Page 1 / 1630

Cable diagram

F09_002_VLU

Cable name -W1			cable type TPE					
remark			no. of conductors 4			cross-section 18		cable length 2
function text	Page / column	Target designation from	Connection point	conductor	Target designation to	Connection point	Page / column	function text
	&EFS=V1AR11UQ41KF1	=**V1AR11UQ41/K2.8**+V1AR11UQ41-KF1	1.11-X8		-BGS/R	1	&EFS=V1AR11UQ41UQ4+V1AR11UQ41UQ4/1.5	
	&EFS=V1AR11UQ41KF1	=**V1AR11UQ41/K2.9**+V1AR11UQ41-KF2	1.11-X8		-BGS/R	2	&EFS=V1AR11UQ41UQ4+V1AR11UQ41UQ4/1.5	
	&EFS=V1AR11UQ41KF1	=**V1AR11UQ41/K2.9**+V1AR11UQ41-KF3	1.11-X8		-BGS/R	3	&EFS=V1AR11UQ41UQ4+V1AR11UQ41UQ4/1.5	
	&EFS=V1AR11UQ41KF1	=**V1AR11UQ41/K2.9**+V1AR11UQ41-KF4	1.11-X8		-BGS/R	4	&EFS=V1AR11UQ41UQ4+V1AR11UQ41UQ4/1.5	

=V1AR11UQ41UQ4.3+.AR11UQ41UQ4.3/1

=V1AR11UQ41UQ5.1+.AR11UQ41UQ5.1/1

			Date	12/22/2022	Volvo Trucks North America	Valiant TMS	Cable diagram =V1AR11UQ41UQ4.4+V1AR11UQ41UQ4.4-W1	Drawing name: =2V04&EFS-EL	= V1AR11UQ41UQ4.4
			Ed.	MKLEPADLO					+ V1AR11UQ41UQ4.4
			Appr		P6700 Underbody Mainline - Cell 2V04			Document type: EMA	Project nr: 22-16151
Modification	Date	Name	Original		Replacement of / Replaced by	Scale 1:1			Page 1 / 1630

Cable diagram

F09_002_VLU

Cable name -W1			cable type TPE					
remark			no. of conductors 4			cross-section 18		cable length 1
function text	Page / column	Target designation from	Connection point	conductor	Target designation to	Connection point	Page / column	function text
	&EFS=V1AR11UQ41KF1	=**V1AR11UQ41KF1**+V1AR11UQ41-KF1	1.12-X1		-BGS/R	1	&EFS=V1AR11UQ41UQ5+V1AR11UQ41UQ5/1.0	
	&EFS=V1AR11UQ41KF1	=**V1AR11UQ41KF1**+V1AR11UQ41-KF2	1.12-X1		-BGS/R	2	&EFS=V1AR11UQ41UQ5+V1AR11UQ41UQ5/1.0	
	&EFS=V1AR11UQ41KF1	=**V1AR11UQ41KF1**+V1AR11UQ41-KF3	1.12-X1		-BGS/R	3	&EFS=V1AR11UQ41UQ5+V1AR11UQ41UQ5/1.1	
	&EFS=V1AR11UQ41KF1	=**V1AR11UQ41KF1**+V1AR11UQ41-KF4	1.12-X1		-BGS/R	4	&EFS=V1AR11UQ41UQ5+V1AR11UQ41UQ5/1.1	

			Date	12/22/2022	Volvo Trucks North America	Valiant TMS	Cable diagram =V1AR11UQ41UQ5.1+V1AR11UQ41UQ5.1-W1	Drawing name: =2V04&EFS-EL	= V1AR11UQ41UQ5.1
			Ed.	MKLEPADLO					+ V1AR11UQ41UQ5.1
			Appr		P6700 Underbody Mainline - Cell 2V04	Scale 1:1		Document type: EMA	Project nr: 22-16151
Modification	Date	Name	Original		Replacement of	Replaced by			Page 1 / 1630

Cable diagram

F09_002_VLU

Cable name -W1			cable type TPE					
remark			no. of conductors 4			cross-section 18		cable length 1
function text	Page / column	Target designation from	Connection point	conductor	Target designation to	Connection point	Page / column	function text
	&EFS=V1AR11UQ41KF1	=**V1AR11UQ41KF1**+V1AR11UQ41-KF1	1.12-X2		-BGS/R	1	&EFS=V1AR11UQ41UQ5+V1AR11UQ41UQ5/1.2	
	&EFS=V1AR11UQ41KF1	=**V1AR11UQ41KF1**+V1AR11UQ41-KF2	1.12-X2		-BGS/R	2	&EFS=V1AR11UQ41UQ5+V1AR11UQ41UQ5/1.2	
	&EFS=V1AR11UQ41KF1	=**V1AR11UQ41KF1**+V1AR11UQ41-KF3	1.12-X2		-BGS/R	3	&EFS=V1AR11UQ41UQ5+V1AR11UQ41UQ5/1.2	
	&EFS=V1AR11UQ41KF1	=**V1AR11UQ41KF1**+V1AR11UQ41-KF4	1.12-X2		-BGS/R	4	&EFS=V1AR11UQ41UQ5+V1AR11UQ41UQ5/1.2	

=V1AR11UQ41UQ5.1+.AR11UQ41UQ5.1/1

=V1AR11UQ41UQ5.3+.AR11UQ41UQ5.3/1

			Date	12/22/2022	Volvo Trucks North America	Valiant TMS	Cable diagram =V1AR11UQ41UQ5.2+V1AR11UQ41UQ5.2-W1	Drawing name: =2V04&EFS-EL	= V1AR11UQ41UQ5.2
			Ed.	MKLEPADLO					+ V1AR11UQ41UQ5.2
			Appr		P6700 Underbody Mainline - Cell 2V04			Document type: EMA	Project nr: 22-16151
Modification	Date	Name	Original		Replacement of / Replaced by	Scale 1:1			Page 1 / 1630

Cable diagram

F09_002_VLU

Cable name	-W1	cable type	TPE		
remark		no. of conductors	4	cross-section 18	cable length 2

function text	Page / column	Target designation from	Connection point	conductor	Target designation to	Connection point	Page / column	function text
	&EFS=V1AR11UQ41KF1+V1AR11UQ41KF3+V1AR11UQ41-KF1.12-X3	=V1AR11UQ41/KF3	1		-BGS/R	1	&EFS=V1AR11UQ41UQ5+V1AR11UQ41UQ5/1.4	
	&EFS=V1AR11UQ41KF1+V1AR11UQ41KF3+V1AR11UQ41-KF1.12-X3	=V1AR11UQ41/KF3	2		-BGS/R	2	&EFS=V1AR11UQ41UQ5+V1AR11UQ41UQ5/1.4	
	&EFS=V1AR11UQ41KF1+V1AR11UQ41KF3+V1AR11UQ41-KF1.12-X3	=V1AR11UQ41/KF3	3		-BGS/R	3	&EFS=V1AR11UQ41UQ5+V1AR11UQ41UQ5/1.4	
	&EFS=V1AR11UQ41KF1+V1AR11UQ41KF3+V1AR11UQ41-KF1.12-X3	=V1AR11UQ41/KF3	4		-BGS/R	4	&EFS=V1AR11UQ41UQ5+V1AR11UQ41UQ5/1.4	

=V1AR11UQ41UQ5.2+.AR11UQ41UQ5.2/1

=V1AR11UQ41UQ5.4+.AR11UQ41UQ5.4/1

			Date	12/22/2022	Volvo Trucks North America	Valiant TMS	Cable diagram =V1AR11UQ41UQ5.3+V1AR11UQ41UQ5.3-W1	Drawing name: =2V04&EFS-EL
			Ed.	MKLEPADLO	P6700 Underbody Mainline - Cell 2V04			= V1AR11UQ41UQ5.3 + V1AR11UQ41UQ5.3
			Appr					Document type: EMA
Modification	Date	Name	Original		Replacement of / Replaced by	Scale 1:1		Project nr: 22-16151

Page 1 / 1630

Cable diagram

F09_002_VLU

Cable name -W1			cable type TPE					
remark			no. of conductors 4			cross-section 18		cable length 2
function text	Page / column	Target designation from	Connection point	conductor	Target designation to	Connection point	Page / column	function text
	&EFS=V1AR11UQ41KF1	=V1AR11UQ41/K3.1+V1AR11UQ41-KF1	1.12-X4		-BGS/R	1	&EFS=V1AR11UQ41UQ5+V1AR11UQ41UQ5/1.5	
	&EFS=V1AR11UQ41KF1	=V1AR11UQ41/K3.1+V1AR11UQ41-KF2	1.12-X4		-BGS/R	2	&EFS=V1AR11UQ41UQ5+V1AR11UQ41UQ5/1.5	
	&EFS=V1AR11UQ41KF1	=V1AR11UQ41/K3.1+V1AR11UQ41-KF3	1.12-X4		-BGS/R	3	&EFS=V1AR11UQ41UQ5+V1AR11UQ41UQ5/1.5	
	&EFS=V1AR11UQ41KF1	=V1AR11UQ41/K3.1+V1AR11UQ41-KF4	1.12-X4		-BGS/R	4	&EFS=V1AR11UQ41UQ5+V1AR11UQ41UQ5/1.5	

			Date	12/22/2022	Volvo Trucks North America	Valiant TMS	Cable diagram =V1AR11UQ41UQ5.4+V1AR11UQ41UQ5.4-W1	Drawing name: =2V04&EFS-EL	= V1AR11UQ41UQ5.4
			Ed.	MKLEPADLO					+ V1AR11UQ41UQ5.4
			Appr		P6700 Underbody Mainline - Cell 2V04	Scale 1:1		Document type: EMA	Project nr: 22-16151 Page 1
Modification	Date	Name	Original		Replacement of / Replaced by				1630

Cable diagram

F09_002_VLU

Cable name -W1			cable type TPE					
remark			no. of conductors 4			cross-section 18		cable length 2
function text	Page / column	Target designation from	Connection point	conductor	Target designation to	Connection point	Page / column	function text
	&EFS=V1AR11UQ41KF1	=**V1AR11UQ41KF1**+V1AR11UQ41-KF1	1.12-X5		-BGS/R	1	&EFS=V1AR11UQ41UQ6+V1AR11UQ41UQ6/1.0	
	&EFS=V1AR11UQ41KF1	=**V1AR11UQ41KF1**+V1AR11UQ41-KF2	1.12-X5		-BGS/R	2	&EFS=V1AR11UQ41UQ6+V1AR11UQ41UQ6/1.0	
	&EFS=V1AR11UQ41KF1	=**V1AR11UQ41KF1**+V1AR11UQ41-KF3	1.12-X5		-BGS/R	3	&EFS=V1AR11UQ41UQ6+V1AR11UQ41UQ6/1.1	
	&EFS=V1AR11UQ41KF1	=**V1AR11UQ41KF1**+V1AR11UQ41-KF4	1.12-X5		-BGS/R	4	&EFS=V1AR11UQ41UQ6+V1AR11UQ41UQ6/1.1	

=V1AR11UQ41UQ5.4+.AR11UQ41UQ5.4/1

=V1AR11UQ41UQ7.1+.AR11UQ41UQ7.1/1

			Date	12/22/2022	Volvo Trucks North America	Valiant TMS	Cable diagram =V1AR11UQ41UQ6.1+V1AR11UQ41UQ6.1-W1	Drawing name: =2V04&EFS-EL	= V1AR11UQ41UQ6.1
			Ed.	MKLEPADLO					+ V1AR11UQ41UQ6.1
			Appr		P6700 Underbody Mainline - Cell 2V04	Scale 1:1		Document type: EMA	Project nr: 22-16151
Modification	Date	Name	Original		Replacement of / Replaced by				Page 1 / 1630

Cable diagram

F09_002_VLU

Cable name -W1			cable type TPE					
remark			no. of conductors 4			cross-section 18		cable length 2
function text	Page / column	Target designation from	Connection point	conductor	Target designation to	Connection point	Page / column	function text
	&EFS=V1AR11UQ41KF1+**=V1AR11UQ41/K3.6**+V1AR11UQ41-KF1		1.12-X6		-BGS/R	1	&EFS=V1AR11UQ41UQ7+V1AR11UQ41UQ7/1.0	
	&EFS=V1AR11UQ41KF1+**=V1AR11UQ41/K3.6**+V1AR11UQ41-KF2		1.12-X6		-BGS/R	4	&EFS=V1AR11UQ41UQ7+V1AR11UQ41UQ7/1.1	
	&EFS=V1AR11UQ41KF1+**=V1AR11UQ41/K3.6**+V1AR11UQ41-KF3		1.12-X6		-BGS/R	3	&EFS=V1AR11UQ41UQ7+V1AR11UQ41UQ7/1.0	

			Date	12/22/2022	Volvo Trucks North America	Valiant TMS	Cable diagram =V1AR11UQ41UQ7.1+V1AR11UQ41UQ7.1-W1	Drawing name: =2V04&EFS-EL	= V1AR11UQ41UQ7.1
			Ed.	MKLEPADLO					+ V1AR11UQ41UQ7.1
			Appr		P6700 Underbody Mainline - Cell 2V04	Scale 1:1		Document type: EMA	Project nr: 22-16151
Modification	Date	Name	Original		Replacement of	Replaced by			Page 1 / 1630

Cable diagram

F09_002_VLU

Cable name -W1			cable type TPE					
remark			no. of conductors 4			cross-section 18		cable length 2
function text	Page / column	Target designation from	Connection point	conductor	Target designation to	Connection point	Page / column	function text
	&EFS=V1AR11UQ41KF1	=**V1AR11UQ41KF1**+V1AR11UQ41-KF1	1.12-X7		-BGS/R	1	&EFS=V1AR11UQ41UQ8+V1AR11UQ41UQ8/1.0	
	&EFS=V1AR11UQ41KF1	=**V1AR11UQ41KF1**+V1AR11UQ41-KF2	1.12-X7		-BGS/R	2	&EFS=V1AR11UQ41UQ8+V1AR11UQ41UQ8/1.0	
	&EFS=V1AR11UQ41KF1	=**V1AR11UQ41KF1**+V1AR11UQ41-KF3	1.12-X7		-BGS/R	3	&EFS=V1AR11UQ41UQ8+V1AR11UQ41UQ8/1.1	
	&EFS=V1AR11UQ41KF1	=**V1AR11UQ41KF1**+V1AR11UQ41-KF4	1.12-X7		-BGS/R	4	&EFS=V1AR11UQ41UQ8+V1AR11UQ41UQ8/1.1	

=V1AR11UQ41UQ7.1+.AR11UQ41UQ7.1/1

=V1AR11UQ41UQ8.2+.AR11UQ41UQ8.2/1

			Date	12/22/2022	Volvo Trucks North America	Valiant TMS	Cable diagram =V1AR11UQ41UQ8.1+V1AR11UQ41UQ8.1-W1	Drawing name: =2V04&EFS-EL	= V1AR11UQ41UQ8.1
			Ed.	MKLEPADLO					+ V1AR11UQ41UQ8.1
			Appr		P6700 Underbody Mainline - Cell 2V04	Scale 1:1		Document type: EMA	Project nr: 22-16151
Modification	Date	Name	Original		Replacement of	Replaced by			Page 1 / 1630

Cable diagram

F09_002_VLU

Cable name -W1			cable type TPE					
remark			no. of conductors 4			cross-section 18		cable length 2
function text	Page / column	Target designation from	Connection point	conductor	Target designation to	Connection point	Page / column	function text
	&EFS=V1AR11UQ41KF1	=**V1AR11UQ41KF1**+V1AR11UQ41-KF1	1.12-X8		-BGS/R	1	&EFS=V1AR11UQ41UQ8+V1AR11UQ41UQ8/1.2	
	&EFS=V1AR11UQ41KF1	=**V1AR11UQ41KF1**+V1AR11UQ41-KF2	1.12-X8		-BGS/R	2	&EFS=V1AR11UQ41UQ8+V1AR11UQ41UQ8/1.2	
	&EFS=V1AR11UQ41KF1	=**V1AR11UQ41KF1**+V1AR11UQ41-KF3	1.12-X8		-BGS/R	3	&EFS=V1AR11UQ41UQ8+V1AR11UQ41UQ8/1.2	
	&EFS=V1AR11UQ41KF1	=**V1AR11UQ41KF1**+V1AR11UQ41-KF4	1.12-X8		-BGS/R	4	&EFS=V1AR11UQ41UQ8+V1AR11UQ41UQ8/1.2	

			Date	12/22/2022	Volvo Trucks North America	Valiant TMS	Cable diagram =V1AR11UQ41UQ8.2+V1AR11UQ41UQ8.2-W1	Drawing name: =2V04&EFS-EL	= V1AR11UQ41UQ8.2
			Ed.	MKLEPADLO					+ V1AR11UQ41UQ8.2
			Appr		P6700 Underbody Mainline - Cell 2V04			Document type: EMA	Project nr: 22-16151
Modification	Date	Name	Original		Replacement of / Replaced by	Scale 1:1			Page 1 / 1630

Cable diagram

F09_002_VLU

Cable name -W1			cable type TPE					
remark			no. of conductors 4			cross-section 18		cable length 1
function text	Page / column	Target designation from	Connection point	conductor	Target designation to	Connection point	Page / column	function text
	&EFS=V1AR11UQ41KF1	=**V1AR11UQ41/KF1**+V1AR11UQ41-KF1	1.13-X1		-BGS/R	1	&EFS=V1AR11UQ41UQ8+V1AR11UQ41UQ8/1.4	
	&EFS=V1AR11UQ41KF1	=**V1AR11UQ41/KF1**+V1AR11UQ41-KF2	1.13-X1		-BGS/R	2	&EFS=V1AR11UQ41UQ8+V1AR11UQ41UQ8/1.4	
	&EFS=V1AR11UQ41KF1	=**V1AR11UQ41/KF1**+V1AR11UQ41-KF3	1.13-X1		-BGS/R	3	&EFS=V1AR11UQ41UQ8+V1AR11UQ41UQ8/1.4	
	&EFS=V1AR11UQ41KF1	=**V1AR11UQ41/KF1**+V1AR11UQ41-KF4	1.13-X1		-BGS/R	4	&EFS=V1AR11UQ41UQ8+V1AR11UQ41UQ8/1.4	

			Date	12/22/2022	Volvo Trucks North America	Valiant TMS	Cable diagram =V1AR11UQ41UQ8.3+V1AR11UQ41UQ8.3-W1	Drawing name: =2V04&EFS-EL	= V1AR11UQ41UQ8.3
			Ed.	MKLEPADLO					+ V1AR11UQ41UQ8.3
			Appr		P6700 Underbody Mainline - Cell 2V04			Document type: EMA	Project nr: 22-16151
Modification	Date	Name	Original		Replacement of / Replaced by	Scale 1:1			Page 1 / 1630

Cable diagram

F09_002_VLU

Cable name	-W1	cable type	TPE		
remark		no. of conductors	4	cross-section 18	cable length 1

function text	Page / column	Target designation from	Connection point	conductor	Target designation to	Connection point	Page / column	function text
	&EFS=V1AR11UQ41KF1+V1AR11UQ41KF1.1	=V1AR11UQ41/4.1+V1AR11UQ41-KF1.13-X2	1		-BGS/R	1	&EFS=V1AR11UQ41UQ8+V1AR11UQ41UQ8/1.5	
	&EFS=V1AR11UQ41KF1+V1AR11UQ41KF1.2	=V1AR11UQ41/4.2+V1AR11UQ41-KF1.13-X2	2		-BGS/R	2	&EFS=V1AR11UQ41UQ8+V1AR11UQ41UQ8/1.5	
	&EFS=V1AR11UQ41KF1+V1AR11UQ41KF1.2	=V1AR11UQ41/4.2+V1AR11UQ41-KF1.13-X2	3		-BGS/R	3	&EFS=V1AR11UQ41UQ8+V1AR11UQ41UQ8/1.5	
	&EFS=V1AR11UQ41KF1+V1AR11UQ41KF1.2	=V1AR11UQ41/4.2+V1AR11UQ41-KF1.13-X2	4		-BGS/R	4	&EFS=V1AR11UQ41UQ8+V1AR11UQ41UQ8/1.5	

=V1AR11UQ41UQ8.3+.AR11UQ41UQ8.3/1

=V1AR11UQ41UQ9.1+.AR11UQ41UQ9.1/1

			Date	12/22/2022	Volvo Trucks North America	Valiant TMS	Cable diagram =V1AR11UQ41UQ8.4+V1AR11UQ41UQ8.4-W1	Drawing name: =2V04&EFS-EL	= V1AR11UQ41UQ8.4 + V1AR11UQ41UQ8.4
			Ed.	MKLEPADLO	P6700 Underbody Mainline - Cell 2V04				
			Appr					Document type: EMA	Project nr: 22-16151
Modification	Date	Name	Original		Replacement of / Replaced by	Scale 1:1			Page 1 / 1630

Cable diagram

F09_002_VLU

Cable name -W1			cable type TPE					
remark			no. of conductors 4			cross-section 18		cable length 2
function text	Page / column	Target designation from	Connection point	conductor	Target designation to	Connection point	Page / column	function text
	&EFS=V1AR11UQ41KF2	=V1AR11UQ41/KF2+V1AR11UQ41-KF2.11-X1	1		-BGS/R	1	&EFS=V1AR11UQ41UQ9+V1AR11UQ41UQ9/1.0	
	&EFS=V1AR11UQ41KF2	=V1AR11UQ41/KF2+V1AR11UQ41-KF2.11-X1	2		-BGS/R	2	&EFS=V1AR11UQ41UQ9+V1AR11UQ41UQ9/1.0	
	&EFS=V1AR11UQ41KF2	=V1AR11UQ41/KF2+V1AR11UQ41-KF2.11-X1	3		-BGS/R	3	&EFS=V1AR11UQ41UQ9+V1AR11UQ41UQ9/1.1	
	&EFS=V1AR11UQ41KF2	=V1AR11UQ41/KF2+V1AR11UQ41-KF2.11-X1	4		-BGS/R	4	&EFS=V1AR11UQ41UQ9+V1AR11UQ41UQ9/1.1	

=V1AR11UQ41UQ8.4+.AR11UQ41UQ8.4/1

=V1AR11UQ41UQ9.2+.AR11UQ41UQ9.2/1

			Date	12/22/2022	Volvo Trucks North America	Valiant TMS	Cable diagram =V1AR11UQ41UQ9.1+V1AR11UQ41UQ9.1-W1	Drawing name: =2V04&EFS-EL	= V1AR11UQ41UQ9.1
			Ed.	MKLEPADLO					+ V1AR11UQ41UQ9.1
			Appr		P6700 Underbody Mainline - Cell 2V04			Document type: EMA	Project nr: 22-16151
Modification	Date	Name	Original		Replacement of / Replaced by	Scale 1:1			Page 1 / 1630

Cable diagram

F09_002_VLU

Cable name -W1			cable type TPE					
remark			no. of conductors 4			cross-section 18		cable length 1
function text	Page / column	Target designation from	Connection point	conductor	Target designation to	Connection point	Page / column	function text
	&EFS=V1AR11UQ41KF2	=V1AR11UQ41KF2+V1AR11UQ41-KF2.11-X2	1		-BGS/R	1	&EFS=V1AR11UQ41UQ9+V1AR11UQ41UQ9/1.2	
	&EFS=V1AR11UQ41KF2	=V1AR11UQ41KF2+V1AR11UQ41-KF2.11-X2	2		-BGS/R	2	&EFS=V1AR11UQ41UQ9+V1AR11UQ41UQ9/1.2	
	&EFS=V1AR11UQ41KF2	=V1AR11UQ41KF2+V1AR11UQ41-KF2.11-X2	3		-BGS/R	3	&EFS=V1AR11UQ41UQ9+V1AR11UQ41UQ9/1.2	
	&EFS=V1AR11UQ41KF2	=V1AR11UQ41KF2+V1AR11UQ41-KF2.11-X2	4		-BGS/R	4	&EFS=V1AR11UQ41UQ9+V1AR11UQ41UQ9/1.2	

=V1AR11UQ41UQ9.1+.AR11UQ41UQ9.1/1

=V1AR11UQ41UQ10.1+.AR11UQ41UQ10.1/1

			Date	12/22/2022	Volvo Trucks North America	Valiant TMS	Cable diagram =V1AR11UQ41UQ9.2+V1AR11UQ41UQ9.2-W1	Drawing name: =2V04&EFS-EL	= V1AR11UQ41UQ9.2
			Ed.	MKLEPADLO					+ V1AR11UQ41UQ9.2
			Appr		P6700 Underbody Mainline - Cell 2V04			Document type: EMA	Project nr: 22-16151
Modification	Date	Name	Original		Replacement of / Replaced by	Scale 1:1			Page 1 / 1630

Cable diagram

F09_002_VLU

Cable name -W1			cable type TPE					
remark			no. of conductors 4			cross-section 18		cable length 2
function text	Page / column	Target designation from	Connection point	conductor	Target designation to	Connection point	Page / column	function text
	&EFS=V1AR11UQ41KF2	=V1AR11UQ41KF2+V1AR11UQ41-KF2.11-X3	1		-BGS/R	1	&EFS=V1AR11UQ41UQ10+V1AR11UQ41UQ10/1.0	
	&EFS=V1AR11UQ41KF2	=V1AR11UQ41KF2+V1AR11UQ41-KF2.11-X3	2		-BGS/R	2	&EFS=V1AR11UQ41UQ10+V1AR11UQ41UQ10/1.0	
	&EFS=V1AR11UQ41KF2	=V1AR11UQ41KF2+V1AR11UQ41-KF2.11-X3	3		-BGS/R	3	&EFS=V1AR11UQ41UQ10+V1AR11UQ41UQ10/1.1	
	&EFS=V1AR11UQ41KF2	=V1AR11UQ41KF2+V1AR11UQ41-KF2.11-X3	4		-BGS/R	4	&EFS=V1AR11UQ41UQ10+V1AR11UQ41UQ10/1.1	

=V1AR11UQ41UQ9.2+.AR11UQ41UQ9.2/1

=V1AR11UQ41UQ10.2+.AR11UQ41UQ10.2/1

			Date	12/22/2022	Volvo Trucks North America	Valiant TMS	Cable diagram =V1AR11UQ41UQ10.1+V1AR11UQ41UQ10.1-W1	Drawing name: =2V04&EFS-EL	= V1AR11UQ41UQ10.1
			Ed.	MKLEPADLO					+ V1AR11UQ41UQ10.1
			Appr		P6700 Underbody Mainline - Cell 2V04	Scale 1:1		Document type: EMA	Project nr: 22-16151
Modification	Date	Name	Original		Replacement of	Replaced by			Page 1 / 1630

Cable diagram

F09_002_VLU

Cable name -W1			cable type TPE					
remark			no. of conductors 4			cross-section 18		cable length 2
function text	Page / column	Target designation from	Connection point	conductor	Target designation to	Connection point	Page / column	function text
	&EFS=V1AR11UQ41KF2	=V1AR11UQ41KF2+V1AR11UQ41-KF2.11-X4	1		-BGS/R	1	&EFS=V1AR11UQ41UQ10+V1AR11UQ41UQ10/1.2	
	&EFS=V1AR11UQ41KF2	=V1AR11UQ41KF2+V1AR11UQ41-KF2.11-X4	2		-BGS/R	2	&EFS=V1AR11UQ41UQ10+V1AR11UQ41UQ10/1.2	
	&EFS=V1AR11UQ41KF2	=V1AR11UQ41KF2+V1AR11UQ41-KF2.11-X4	3		-BGS/R	3	&EFS=V1AR11UQ41UQ10+V1AR11UQ41UQ10/1.2	
	&EFS=V1AR11UQ41KF2	=V1AR11UQ41KF2+V1AR11UQ41-KF2.11-X4	4		-BGS/R	4	&EFS=V1AR11UQ41UQ10+V1AR11UQ41UQ10/1.2	

=V1AR11UQ41UQ10.1+.AR11UQ41UQ10.1/1

=V1AR11UQ41UQ11.1+.AR11UQ41UQ11.1/1

			Date	12/22/2022	Volvo Trucks North America	Valiant TMS	Cable diagram =V1AR11UQ41UQ10.2+V1AR11UQ41UQ10.2-W1	Drawing name: =2V04&EFS-EL	= V1AR11UQ41UQ10.2
			Ed.	MKLEPADLO					+ V1AR11UQ41UQ10.2
			Appr		P6700 Underbody Mainline - Cell 2V04			Document type: EMA	Project nr: 22-16151
Modification	Date	Name	Original		Replacement of / Replaced by	Scale 1:1			Page 1 / 1630

Cable diagram

F09_002_VLU

Cable name	-W1	cable type	TPE		
remark		no. of conductors	4	cross-section 18	cable length 1

function text	Page / column	Target designation from	Connection point	conductor	Target designation to	Connection point	Page / column	function text
	&EFS=V1AR11UQ41KF2+V1AR11UQ41/2.5	=V1AR11UQ41KF5+V1AR11UQ41-KF1	2.11-X5		-BGS/R	1	&EFS=V1AR11UQ41UQ11+V1AR11UQ41UQ11/1.0	
	&EFS=V1AR11UQ41KF2+V1AR11UQ41/2.5	=V1AR11UQ41KF5+V1AR11UQ41-KF2	2.11-X5		-BGS/R	2	&EFS=V1AR11UQ41UQ11+V1AR11UQ41UQ11/1.0	
	&EFS=V1AR11UQ41KF2+V1AR11UQ41/2.5	=V1AR11UQ41KF5+V1AR11UQ41-KF3	2.11-X5		-BGS/R	3	&EFS=V1AR11UQ41UQ11+V1AR11UQ41UQ11/1.1	
	&EFS=V1AR11UQ41KF2+V1AR11UQ41/2.5	=V1AR11UQ41KF5+V1AR11UQ41-KF4	2.11-X5		-BGS/R	4	&EFS=V1AR11UQ41UQ11+V1AR11UQ41UQ11/1.1	

=V1AR11UQ41UQ10.2+.AR11UQ41UQ10.2/1

=V1AR11UQ41UQ12.1+.AR11UQ41UQ12.1/1

			Date	12/22/2022	Volvo Trucks North America	Valiant TMS	Cable diagram =V1AR11UQ41UQ11.1+V1AR11UQ41UQ11.1-W1	Drawing name: =2V04&EFS-EL	= V1AR11UQ41UQ11.1 + V1AR11UQ41UQ11.1
			Ed.	MKLEPADLO	P6700 Underbody Mainline - Cell 2V04				
			Appr					Document type: EMA	Project nr: 22-16151
Modification	Date	Name	Original		Replacement of / Replaced by	Scale 1:1			Page 1 / 1630

Cable diagram

F09_002_VLU

Cable name	-W1	cable type	TPE		
remark		no. of conductors	4	cross-section 18	cable length 2

function text	Page / column	Target designation from	Connection point	conductor	Target designation to	Connection point	Page / column	function text
	&EFS=V1AR11UQ41KF2+V1AR11UQ41KF2	=V1AR11UQ41KF2+V1AR11UQ41-KF2.11-X6	1		-BGS/R	1	&EFS=V1AR11UQ41UQ12+V1AR11UQ41UQ12/1.0	
	&EFS=V1AR11UQ41KF2+V1AR11UQ41KF2	=V1AR11UQ41KF2+V1AR11UQ41-KF2.11-X6	2		-BGS/R	4	&EFS=V1AR11UQ41UQ12+V1AR11UQ41UQ12/1.1	
	&EFS=V1AR11UQ41KF2+V1AR11UQ41KF2	=V1AR11UQ41KF2+V1AR11UQ41-KF2.11-X6	3		-BGS/R	3	&EFS=V1AR11UQ41UQ12+V1AR11UQ41UQ12/1.0	

=V1AR11UQ41UQ11.1+.AR11UQ41UQ11.1/1

=V1AR11UQ41UQ13.1+.AR11UQ41UQ13.1/1

			Date	12/22/2022	Volvo Trucks North America	Valiant TMS	Cable diagram =V1AR11UQ41UQ12.1+V1AR11UQ41UQ12.1-W1	Drawing name: =2V04&EFS-EL	= V1AR11UQ41UQ12.1 + V1AR11UQ41UQ12.1
			Ed.	MKLEPADLO	P6700 Underbody Mainline - Cell 2V04				
			Appr					Document type: EMA	Project nr: 22-16151
Modification	Date	Name	Original		Replacement of / Replaced by	Scale 1:1			Page 1 / 1630

Cable diagram

F09_002_VLU

Cable name -W1			cable type TPE					
remark			no. of conductors 4			cross-section 18		cable length 2
function text	Page / column	Target designation from	Connection point	conductor	Target designation to	Connection point	Page / column	function text
	&EFS=V1AR11UQ41KF2	=V1AR11UQ41KF2.7+V1AR11UQ41-KF2.11-X7			-BGS/R	1	&EFS=V1AR11UQ41UQ13+V1AR11UQ41UQ13/1.0	
	&EFS=V1AR11UQ41KF2	=V1AR11UQ41KF2.7+V1AR11UQ41-KF2.11-X7			-BGS/R	4	&EFS=V1AR11UQ41UQ13+V1AR11UQ41UQ13/1.1	
	&EFS=V1AR11UQ41KF2	=V1AR11UQ41KF2.8+V1AR11UQ41-KF2.11-X7			-BGS/R	3	&EFS=V1AR11UQ41UQ13+V1AR11UQ41UQ13/1.0	

			Date	12/22/2022	Volvo Trucks North America	Valiant TMS	Cable diagram =V1AR11UQ41UQ13.1+V1AR11UQ41UQ13.1-W1	Drawing name: =2V04&EFS-EL	= V1AR11UQ41UQ13.1
			Ed.	MKLEPADLO					+ V1AR11UQ41UQ13.1
			Appr		P6700 Underbody Mainline - Cell 2V04			Document type: EMA	Project nr: 22-16151
Modification	Date	Name	Original		Replacement of / Replaced by	Scale 1:1			Page 1 / 1630

Cable diagram

F09_002_VLU

Cable name	-W1	cable type	TPE		
remark		no. of conductors	4	cross-section 18	cable length 2

function text	Page / column	Target designation from	Connection point	conductor	Target designation to	Connection point	Page / column	function text
	&EFS=V1AR11UQ41KF2+V1AR11UQ41KF2	=V1AR11UQ41/2.3+V1AR11UQ41-KF2.11-X8	1		-BGS/R	1	&EFS=V1AR11UQ41UQ14+V1AR11UQ41UQ14/1.0	
	&EFS=V1AR11UQ41KF2+V1AR11UQ41KF2	=V1AR11UQ41/2.9+V1AR11UQ41-KF2.11-X8	2		-BGS/R	2	&EFS=V1AR11UQ41UQ14+V1AR11UQ41UQ14/1.0	
	&EFS=V1AR11UQ41KF2+V1AR11UQ41KF2	=V1AR11UQ41/2.9+V1AR11UQ41-KF2.11-X8	3		-BGS/R	3	&EFS=V1AR11UQ41UQ14+V1AR11UQ41UQ14/1.1	
	&EFS=V1AR11UQ41KF2+V1AR11UQ41KF2	=V1AR11UQ41/2.9+V1AR11UQ41-KF2.11-X8	4		-BGS/R	4	&EFS=V1AR11UQ41UQ14+V1AR11UQ41UQ14/1.1	

=V1AR11UQ41UQ13.1+.AR11UQ41UQ13.1/1

=V1AR11UQ41UQ14.2+.AR11UQ41UQ14.2/1

			Date	12/22/2022	Volvo Trucks North America	Valiant TMS	Cable diagram =V1AR11UQ41UQ14.1+V1AR11UQ41UQ14.1-W1	Drawing name: =2V04&EFS-EL	= V1AR11UQ41UQ14.1 + V1AR11UQ41UQ14.1
			Ed.	MKLEPADLO	P6700 Underbody Mainline - Cell 2V04				
			Appr					Document type: EMA	Project nr: 22-16151
Modification	Date	Name	Original		Replacement of / Replaced by	Scale 1:1			Page 1 / 1630

Cable diagram

F09_002_VLU

Cable name -W1			cable type TPE					
remark			no. of conductors 4			cross-section 18		cable length 2
function text	Page / column	Target designation from	Connection point	conductor	Target designation to	Connection point	Page / column	function text
	&EFS=V1AR11UQ41KF2	=V1AR11UQ41KF2+V1AR11UQ41-KF2.12-X1			-BGS/R	1	&EFS=V1AR11UQ41UQ14+V1AR11UQ41UQ14/1.2	
	&EFS=V1AR11UQ41KF2	=V1AR11UQ41KF2+V1AR11UQ41-KF2.12-X1			-BGS/R	2	&EFS=V1AR11UQ41UQ14+V1AR11UQ41UQ14/1.2	
	&EFS=V1AR11UQ41KF2	=V1AR11UQ41KF2+V1AR11UQ41-KF2.12-X1			-BGS/R	3	&EFS=V1AR11UQ41UQ14+V1AR11UQ41UQ14/1.2	
	&EFS=V1AR11UQ41KF2	=V1AR11UQ41KF2+V1AR11UQ41-KF2.12-X1			-BGS/R	4	&EFS=V1AR11UQ41UQ14+V1AR11UQ41UQ14/1.2	

=V1AR11UQ41UQ14.1+.AR11UQ41UQ14.1/1

=V1AR11UQ41UQ15.1+.AR11UQ41UQ15.1/1

			Date	12/22/2022	Volvo Trucks North America	Valiant TMS	Cable diagram =V1AR11UQ41UQ14.2+V1AR11UQ41UQ14.2-W1	Drawing name: =2V04&EFS-EL	= V1AR11UQ41UQ14.2
			Ed.	MKLEPADLO					+ V1AR11UQ41UQ14.2
			Appr		P6700 Underbody Mainline - Cell 2V04			Document type: EMA	Project nr: 22-16151
Modification	Date	Name	Original		Replacement of	Replaced by	Scale 1:1		Page 1 / 1630

Cable diagram

F09_002_VLU

Cable name -W1			cable type TPE					
remark			no. of conductors 4			cross-section 18		cable length 2
function text	Page / column	Target designation from	Connection point	conductor	Target designation to	Connection point	Page / column	function text
	&EFS=V1AR11UQ41KF2	=V1AR11UQ41KF2+V1AR11UQ41-KF2.12-X2	1		-BGS/R	1	&EFS=V1AR11UQ41UQ15+V1AR11UQ41UQ15/1.0	
	&EFS=V1AR11UQ41KF2	=V1AR11UQ41KF2+V1AR11UQ41-KF2.12-X2	2		-BGS/R	2	&EFS=V1AR11UQ41UQ15+V1AR11UQ41UQ15/1.0	
	&EFS=V1AR11UQ41KF2	=V1AR11UQ41KF2+V1AR11UQ41-KF2.12-X2	3		-BGS/R	3	&EFS=V1AR11UQ41UQ15+V1AR11UQ41UQ15/1.1	
	&EFS=V1AR11UQ41KF2	=V1AR11UQ41KF2+V1AR11UQ41-KF2.12-X2	4		-BGS/R	4	&EFS=V1AR11UQ41UQ15+V1AR11UQ41UQ15/1.1	

=V1AR11UQ41UQ14.2+.AR11UQ41UQ14.2/1

=V1AR11UQ41UQ15.2+.AR11UQ41UQ15.2/1

			Date	12/22/2022	Volvo Trucks North America	Valiant TMS	Cable diagram =V1AR11UQ41UQ15.1+V1AR11UQ41UQ15.1-W1	Drawing name: =2V04&EFS-EL	= V1AR11UQ41UQ15.1
			Ed.	MKLEPADLO					+ V1AR11UQ41UQ15.1
			Appr		P6700 Underbody Mainline - Cell 2V04			Document type: EMA	Project nr: 22-16151
Modification	Date	Name	Original		Replacement of / Replaced by	Scale 1:1			Page 1 / 1630

Cable diagram

F09_002_VLU

Cable name -W1			cable type TPE					
remark			no. of conductors 4			cross-section 18		cable length 2
function text	Page / column	Target designation from	Connection point	conductor	Target designation to	Connection point	Page / column	function text
	&EFS=V1AR11UQ41KF2	=V1AR11UQ41KF2+V1AR11UQ41-KF2.12-X3	1		-BGS/R	1	&EFS=V1AR11UQ41UQ15+V1AR11UQ41UQ15/1.2	
	&EFS=V1AR11UQ41KF2	=V1AR11UQ41KF2+V1AR11UQ41-KF2.12-X3	2		-BGS/R	2	&EFS=V1AR11UQ41UQ15+V1AR11UQ41UQ15/1.2	
	&EFS=V1AR11UQ41KF2	=V1AR11UQ41KF2+V1AR11UQ41-KF2.12-X3	3		-BGS/R	3	&EFS=V1AR11UQ41UQ15+V1AR11UQ41UQ15/1.2	
	&EFS=V1AR11UQ41KF2	=V1AR11UQ41KF2+V1AR11UQ41-KF2.12-X3	4		-BGS/R	4	&EFS=V1AR11UQ41UQ15+V1AR11UQ41UQ15/1.2	

=V1AR11UQ41UQ15.1+.AR11UQ41UQ15.1/1

=V1AR11UQ41UQ16.1+.AR11UQ41UQ16.1/1

			Date	12/22/2022	Volvo Trucks North America	Valiant TMS	Cable diagram =V1AR11UQ41UQ15.2+V1AR11UQ41UQ15.2-W1	Drawing name: =2V04&EFS-EL	= V1AR11UQ41UQ15.2
			Ed.	MKLEPADLO					+ V1AR11UQ41UQ15.2
			Appr		P6700 Underbody Mainline - Cell 2V04			Document type: EMA	Project nr: 22-16151
Modification	Date	Name	Original		Replacement of / Replaced by	Scale 1:1			Page 1 / 1630

Cable diagram

F09_002_VLU

Cable name	-W1	cable type	TPE		
remark		no. of conductors	4	cross-section 18	cable length 2

function text	Page / column	Target designation from	Connection point	conductor	Target designation to	Connection point	Page / column	function text
	&EFS=V1AR11UQ41KF2+V1AR11UQ41/KF2	=V1AR11UQ41/KF2+V1AR11UQ41-KF2	1	2.12-X4	-BGS/R	1	&EFS=V1AR11UQ41UQ16+V1AR11UQ41UQ16/1.0	
	&EFS=V1AR11UQ41KF2+V1AR11UQ41/KF2	=V1AR11UQ41/KF2+V1AR11UQ41-KF2	2	2.12-X4	-BGS/R	2	&EFS=V1AR11UQ41UQ16+V1AR11UQ41UQ16/1.0	
	&EFS=V1AR11UQ41KF2+V1AR11UQ41/KF2	=V1AR11UQ41/KF2+V1AR11UQ41-KF2	3	2.12-X4	-BGS/R	3	&EFS=V1AR11UQ41UQ16+V1AR11UQ41UQ16/1.1	
	&EFS=V1AR11UQ41KF2+V1AR11UQ41/KF2	=V1AR11UQ41/KF2+V1AR11UQ41-KF2	4	2.12-X4	-BGS/R	4	&EFS=V1AR11UQ41UQ16+V1AR11UQ41UQ16/1.1	

=V1AR11UQ41UQ15.2+.AR11UQ41UQ15.2/1

=V1AR11UQ41UQ16.2+.AR11UQ41UQ16.2/1

			Date	12/22/2022	Volvo Trucks North America	Valiant TMS	Cable diagram =V1AR11UQ41UQ16.1+V1AR11UQ41UQ16.1-W1	Drawing name: =2V04&EFS-EL	= V1AR11UQ41UQ16.1 + V1AR11UQ41UQ16.1
			Ed.	MKLEPADLO	P6700 Underbody Mainline - Cell 2V04				
			Appr					Document type: EMA	Project nr: 22-16151
Modification	Date	Name	Original		Replacement of / Replaced by	Scale 1:1			Page 1 / 1630

Cable diagram

F09_002_VLU

Cable name -W1			cable type TPE					
remark			no. of conductors 4			cross-section 18		cable length 2
function text	Page / column	Target designation from	Connection point	conductor	Target designation to	Connection point	Page / column	function text
	&EFS=V1AR11UQ41KF2+	**=V1AR11UQ41/KF2**	+V1AR11UQ41-KF2	2.12-X5		-BGS/R	1	&EFS=V1AR11UQ41UQ16+V1AR11UQ41UQ16/1.2
	&EFS=V1AR11UQ41KF2+	**=V1AR11UQ41/KF2**	+V1AR11UQ41-KF2	2.12-X5		-BGS/R	2	&EFS=V1AR11UQ41UQ16+V1AR11UQ41UQ16/1.2
	&EFS=V1AR11UQ41KF2+	**=V1AR11UQ41/KF2**	+V1AR11UQ41-KF2	2.12-X5		-BGS/R	3	&EFS=V1AR11UQ41UQ16+V1AR11UQ41UQ16/1.2
	&EFS=V1AR11UQ41KF2+	**=V1AR11UQ41/KF2**	+V1AR11UQ41-KF2	2.12-X5		-BGS/R	4	&EFS=V1AR11UQ41UQ16+V1AR11UQ41UQ16/1.2

=V1AR11UQ41UQ16.1+.AR11UQ41UQ16.1/1

=V1AR11UQ41UQ17.1+.AR11UQ41UQ17.1/1

			Date	12/22/2022	Volvo Trucks North America	Valiant TMS	Cable diagram =V1AR11UQ41UQ16.2+V1AR11UQ41UQ16.2-W1	Drawing name: =2V04&EFS-EL	= V1AR11UQ41UQ16.2
			Ed.	MKLEPADLO					+ V1AR11UQ41UQ16.2
			Appr		P6700 Underbody Mainline - Cell 2V04			Document type: EMA	Project nr: 22-16151
Modification	Date	Name	Original		Replacement of / Replaced by	Scale 1:1			Page 1 / 1630

Cable diagram

F09_002_VLU

Cable name -W1			cable type TPE					
remark			no. of conductors 4			cross-section 18		cable length 2
function text	Page / column	Target designation from	Connection point	conductor	Target designation to	Connection point	Page / column	function text
	&EFS=V1AR11UQ41KF3+**V1AR11UQ41KF3**+V1AR11UQ41-KF3.11-X1				-BGS/R	1	&EFS=V1AR11UQ41UQ17+V1AR11UQ41UQ17/1.0	
	&EFS=V1AR11UQ41KF3+**V1AR11UQ41KF3**+V1AR11UQ41-KF3.11-X1				-BGS/R	2	&EFS=V1AR11UQ41UQ17+V1AR11UQ41UQ17/1.0	
	&EFS=V1AR11UQ41KF3+**V1AR11UQ41KF3**+V1AR11UQ41-KF3.11-X1				-BGS/R	3	&EFS=V1AR11UQ41UQ17+V1AR11UQ41UQ17/1.1	
	&EFS=V1AR11UQ41KF3+**V1AR11UQ41KF3**+V1AR11UQ41-KF3.11-X1				-BGS/R	4	&EFS=V1AR11UQ41UQ17+V1AR11UQ41UQ17/1.1	

=V1AR11UQ41UQ16.2+.AR11UQ41UQ16.2/1

=V1AR11UQ41UQ18.1+.AR11UQ41UQ18.1/1

			Date	12/22/2022	Volvo Trucks North America	Valiant TMS	Cable diagram =V1AR11UQ41UQ17.1+V1AR11UQ41UQ17.1-W1	Drawing name: =2V04&EFS-EL	= V1AR11UQ41UQ17.1
			Ed.	MKLEPADLO					+ V1AR11UQ41UQ17.1
			Appr		P6700 Underbody Mainline - Cell 2V04			Document type: EMA	Project nr: 22-16151
Modification	Date	Name	Original		Replacement of / Replaced by	Scale 1:1			Page 1 / 1630

Cable diagram

F09_002_VLU

Cable name	-W1	cable type	TPE		
remark		no. of conductors	4	cross-section 18	cable length 2

function text	Page / column	Target designation from	Connection point	conductor	Target designation to	Connection point	Page / column	function text
	&EFS=V1AR11UQ41KF3+V1AR11UQ41KF3.1	=V1AR11UQ41KF3+V1AR11UQ41-KF3.11-X2	1		-BGS/R	1	&EFS=V1AR11UQ41UQ18+V1AR11UQ41UQ18/1.0	
	&EFS=V1AR11UQ41KF3+V1AR11UQ41KF3.2	=V1AR11UQ41KF3+V1AR11UQ41-KF3.11-X2	2		-BGS/R	4	&EFS=V1AR11UQ41UQ18+V1AR11UQ41UQ18/1.1	
	&EFS=V1AR11UQ41KF3+V1AR11UQ41KF3.3	=V1AR11UQ41KF3+V1AR11UQ41-KF3.11-X2	3		-BGS/R	3	&EFS=V1AR11UQ41UQ18+V1AR11UQ41UQ18/1.0	

=V1AR11UQ41UQ17.1+.AR11UQ41UQ17.1/1

=V1AR11UQ41UQ19.1+.AR11UQ41UQ19.1/1

			Date	12/22/2022	Volvo Trucks North America	Valiant TMS	Cable diagram =V1AR11UQ41UQ18.1+V1AR11UQ41UQ18.1-W1	Drawing name: =2V04&EFS-EL	= V1AR11UQ41UQ18.1 + V1AR11UQ41UQ18.1
			Ed.	MKLEPADLO	P6700 Underbody Mainline - Cell 2V04				
			Appr					Document type: EMA	Project nr: 22-16151
Modification	Date	Name	Original		Replacement of / Replaced by	Scale 1:1			Page 1 / 1630

Cable diagram

F09_002_VLU

Cable name -W1			cable type TPE					
remark			no. of conductors 4			cross-section 18		cable length 2
function text	Page / column	Target designation from	Connection point	conductor	Target designation to	Connection point	Page / column	function text
	&EFS=V1AR11UQ41KF3+**V1AR11UQ41KF3**+V1AR11UQ41-KF3.11-X3				-BGS/R	1	&EFS=V1AR11UQ41UQ19+V1AR11UQ41UQ19/1.0	
	&EFS=V1AR11UQ41KF3+**V1AR11UQ41KF3**+V1AR11UQ41-KF3.11-X3				-BGS/R	4	&EFS=V1AR11UQ41UQ19+V1AR11UQ41UQ19/1.1	
	&EFS=V1AR11UQ41KF3+**V1AR11UQ41KF3**+V1AR11UQ41-KF3.11-X3				-BGS/R	3	&EFS=V1AR11UQ41UQ19+V1AR11UQ41UQ19/1.0	

=V1AR11UQ41UQ18.1+.AR11UQ41UQ18.1/1

=V1AR11UQ41UQ20.1+.AR11UQ41UQ20.1/1

			Date	12/22/2022	Volvo Trucks North America	Valiant TMS	Cable diagram =V1AR11UQ41UQ19.1+V1AR11UQ41UQ19.1-W1	Drawing name: =2V04&EFS-EL	= V1AR11UQ41UQ19.1
			Ed.	MKLEPADLO					+ V1AR11UQ41UQ19.1
			Appr		P6700 Underbody Mainline - Cell 2V04			Document type: EMA	Project nr: 22-16151
Modification	Date	Name	Original		Replacement of / Replaced by	Scale 1:1			Page 1 / 1630

Cable diagram

F09_002_VLU

Cable name -W1			cable type TPE					
remark			no. of conductors 4			cross-section 18		cable length 2
function text	Page / column	Target designation from	Connection point	conductor	Target designation to	Connection point	Page / column	function text
	&EFS=V1AR11UQ41KF3+**V1AR11UQ41KF3**+V1AR11UQ41-KF3.11-X4				-BGS/R	1	&EFS=V1AR11UQ41UQ20+V1AR11UQ41UQ20/1.0	
	&EFS=V1AR11UQ41KF3+**V1AR11UQ41KF3**+V1AR11UQ41-KF3.11-X4				-BGS/R	2	&EFS=V1AR11UQ41UQ20+V1AR11UQ41UQ20/1.0	
	&EFS=V1AR11UQ41KF3+**V1AR11UQ41KF3**+V1AR11UQ41-KF3.11-X4				-BGS/R	3	&EFS=V1AR11UQ41UQ20+V1AR11UQ41UQ20/1.1	
	&EFS=V1AR11UQ41KF3+**V1AR11UQ41KF3**+V1AR11UQ41-KF3.11-X4				-BGS/R	4	&EFS=V1AR11UQ41UQ20+V1AR11UQ41UQ20/1.1	

			Date	12/22/2022	Volvo Trucks North America	Valiant TMS	Cable diagram =V1AR11UQ41UQ20.1+V1AR11UQ41UQ20.1-W1	Drawing name: =2V04&EFS-EL	= V1AR11UQ41UQ20.1
			Ed.	MKLEPADLO					+ V1AR11UQ41UQ20.1
			Appr		P6700 Underbody Mainline - Cell 2V04	Scale 1:1		Document type: EMA	Project nr: 22-16151 Page 1
Modification	Date	Name	Original		Replacement of / Replaced by				1630

Cable diagram

F09_002_VLU

Cable name -W1			cable type TPE					
remark			no. of conductors 4			cross-section 18		cable length 2
function text	Page / column	Target designation from	Connection point	conductor	Target designation to	Connection point	Page / column	function text
	&EFS=V1AR11UQ41KF3	=**V1AR11UQ41/KF3**+V1AR11UQ41-KF3.11-X5	1		-BGS/R	1	&EFS=V1AR11UQ41UQ20+V1AR11UQ41UQ20/1.2	
	&EFS=V1AR11UQ41KF3	=**V1AR11UQ41/KF3**+V1AR11UQ41-KF3.11-X5	2		-BGS/R	2	&EFS=V1AR11UQ41UQ20+V1AR11UQ41UQ20/1.2	
	&EFS=V1AR11UQ41KF3	=**V1AR11UQ41/KF3**+V1AR11UQ41-KF3.11-X5	3		-BGS/R	3	&EFS=V1AR11UQ41UQ20+V1AR11UQ41UQ20/1.2	
	&EFS=V1AR11UQ41KF3	=**V1AR11UQ41/KF3**+V1AR11UQ41-KF3.11-X5	4		-BGS/R	4	&EFS=V1AR11UQ41UQ20+V1AR11UQ41UQ20/1.2	

=V1AR11UQ41UQ20.1+.AR11UQ41UQ20.1/1

=V1AR11UQ41UQ21.1+.AR11UQ41UQ21.1/1

			Date	12/22/2022	Volvo Trucks North America	Valiant TMS	Cable diagram =V1AR11UQ41UQ20.2+V1AR11UQ41UQ20.2-W1	Drawing name: =2V04&EFS-EL	= V1AR11UQ41UQ20.2
			Ed.	MKLEPADLO					+ V1AR11UQ41UQ20.2
			Appr		P6700 Underbody Mainline - Cell 2V04			Document type: EMA	Project nr: 22-16151
Modification	Date	Name	Original		Replacement of	Replaced by	Scale 1:1		Page 1 / 1630

Cable diagram

F09_002_VLU

Cable name -W1			cable type TPE					
remark			no. of conductors 4			cross-section 18		cable length 3
function text	Page / column	Target designation from	Connection point	conductor	Target designation to	Connection point	Page / column	function text
	&EFS=V1AR11UQ41KF3+**V1AR11UQ41KF3**.5+V1AR11UQ41-KF3.11-X6				-BGS/R	1	&EFS=V1AR11UQ41UQ21+V1AR11UQ41UQ21/1.0	
	&EFS=V1AR11UQ41KF3+**V1AR11UQ41KF3**.5+V1AR11UQ41-KF3.11-X6				-BGS/R	2	&EFS=V1AR11UQ41UQ21+V1AR11UQ41UQ21/1.0	
	&EFS=V1AR11UQ41KF3+**V1AR11UQ41KF3**.5+V1AR11UQ41-KF3.11-X6				-BGS/R	3	&EFS=V1AR11UQ41UQ21+V1AR11UQ41UQ21/1.1	
	&EFS=V1AR11UQ41KF3+**V1AR11UQ41KF3**.7+V1AR11UQ41-KF3.11-X6				-BGS/R	4	&EFS=V1AR11UQ41UQ21+V1AR11UQ41UQ21/1.1	

=V1AR11UQ41UQ20.2+.AR11UQ41UQ20.2/1

=V1AR11UQ41UQ21.2+.AR11UQ41UQ21.2/1

			Date	12/22/2022	Volvo Trucks North America	Valiant TMS	Cable diagram =V1AR11UQ41UQ21.1+V1AR11UQ41UQ21.1-W1	Drawing name: =2V04&EFS-EL	= V1AR11UQ41UQ21.1
			Ed.	MKLEPADLO					+ V1AR11UQ41UQ21.1
			Appr		P6700 Underbody Mainline - Cell 2V04			Document type: EMA	Project nr: 22-16151
Modification	Date	Name	Original		Replacement of / Replaced by	Scale 1:1			Page 1 / 1630

Cable diagram

F09_002_VLU

Cable name -W1			cable type TPE					
remark			no. of conductors 4			cross-section 18		cable length 3
function text	Page / column	Target designation from	Connection point	conductor	Target designation to	Connection point	Page / column	function text
	&EFS=V1AR11UQ41KF3+**V1AR11UQ41KF3**/2.7	+V1AR11UQ41-KF3.11-X7			-BGS/R	1	&EFS=V1AR11UQ41UQ21+V1AR11UQ41UQ21/1.2	
	&EFS=V1AR11UQ41KF3+**V1AR11UQ41KF3**/4.7	+V1AR11UQ41-KF3.11-X7			-BGS/R	2	&EFS=V1AR11UQ41UQ21+V1AR11UQ41UQ21/1.2	
	&EFS=V1AR11UQ41KF3+**V1AR11UQ41KF3**/6.8	+V1AR11UQ41-KF3.11-X7			-BGS/R	3	&EFS=V1AR11UQ41UQ21+V1AR11UQ41UQ21/1.2	
	&EFS=V1AR11UQ41KF3+**V1AR11UQ41KF3**/8.8	+V1AR11UQ41-KF3.11-X7			-BGS/R	4	&EFS=V1AR11UQ41UQ21+V1AR11UQ41UQ21/1.2	

=V1AR11UQ41UQ21.1+.AR11UQ41UQ21.1/1

=V1AR11UQ41UQ22.1+.AR11UQ41UQ22.1/1

			Date	12/22/2022	Volvo Trucks North America	Valiant TMS	Cable diagram =V1AR11UQ41UQ21.2+V1AR11UQ41UQ21.2-W1	Drawing name: =2V04&EFS-EL	= V1AR11UQ41UQ21.2
			Ed.	MKLEPADLO					+ V1AR11UQ41UQ21.2
			Appr		P6700 Underbody Mainline - Cell 2V04			Document type: EMA	Project nr: 22-16151
Modification	Date	Name	Original		Replacement of	Replaced by	Scale 1:1		Page 1 / 1630

Cable diagram

F09_002_VLU

Cable name -W1			cable type TPE					
remark			no. of conductors 4			cross-section 18		cable length 2
function text	Page / column	Target designation from	Connection point	conductor	Target designation to	Connection point	Page / column	function text
	&EFS=V1AR11UQ41KF3+V1AR11UQ41/KF3	=V1AR11UQ41/KF3+V1AR11UQ41-KF3.11-X8	1		-BGS/R	1	&EFS=V1AR11UQ41UQ22+V1AR11UQ41UQ22/1.0	
	&EFS=V1AR11UQ41KF3+V1AR11UQ41/KF3	=V1AR11UQ41/KF3+V1AR11UQ41-KF3.11-X8	2		-BGS/R	2	&EFS=V1AR11UQ41UQ22+V1AR11UQ41UQ22/1.0	
	&EFS=V1AR11UQ41KF3+V1AR11UQ41/KF3	=V1AR11UQ41/KF3+V1AR11UQ41-KF3.11-X8	3		-BGS/R	3	&EFS=V1AR11UQ41UQ22+V1AR11UQ41UQ22/1.1	
	&EFS=V1AR11UQ41KF3+V1AR11UQ41/KF3	=V1AR11UQ41/KF3+V1AR11UQ41-KF3.11-X8	4		-BGS/R	4	&EFS=V1AR11UQ41UQ22+V1AR11UQ41UQ22/1.1	

=V1AR11UQ41UQ21.2+.AR11UQ41UQ21.2/1

=V1AR11UQ41UQ23.1+.AR11UQ41UQ23.1/1

			Date	12/22/2022	Volvo Trucks North America	Valiant TMS	Cable diagram =V1AR11UQ41UQ22.1+V1AR11UQ41UQ22.1-W1	Drawing name: =2V04&EFS-EL	= V1AR11UQ41UQ22.1 + V1AR11UQ41UQ22.1
			Ed.	MKLEPADLO	P6700 Underbody Mainline - Cell 2V04				
			Appr					Document type: EMA	Project nr: 22-16151
Modification	Date	Name	Original		Replacement of / Replaced by	Scale 1:1			Page 1 / 1630

Cable diagram

F09_002_VLU

Cable name -W1			cable type TPE					
remark			no. of conductors 4			cross-section 18		cable length 2
function text	Page / column	Target designation from	Connection point	conductor	Target designation to	Connection point	Page / column	function text
	&EFS=V1AR11UQ41KF3+**V1AR11UQ41KF3**+V1AR11UQ41-KF3.12-X1				-BGS/R	1	&EFS=V1AR11UQ41UQ23+V1AR11UQ41UQ23/1.0	
	&EFS=V1AR11UQ41KF3+**V1AR11UQ41KF3**+V1AR11UQ41-KF3.12-X1				-BGS/R	4	&EFS=V1AR11UQ41UQ23+V1AR11UQ41UQ23/1.1	
	&EFS=V1AR11UQ41KF3+**V1AR11UQ41KF3**+V1AR11UQ41-KF3.12-X1				-BGS/R	3	&EFS=V1AR11UQ41UQ23+V1AR11UQ41UQ23/1.0	

=V1AR11UQ41UQ22.1+.AR11UQ41UQ22.1/1

=V1AR11UQ41UQ24.1+.AR11UQ41UQ24.1/1

			Date	12/22/2022	Volvo Trucks North America	Valiant TMS	Cable diagram =V1AR11UQ41UQ23.1+V1AR11UQ41UQ23.1-W1	Drawing name: =2V04&EFS-EL	= V1AR11UQ41UQ23.1
			Ed.	MKLEPADLO					+ V1AR11UQ41UQ23.1
			Appr		P6700 Underbody Mainline - Cell 2V04			Document type: EMA	Project nr: 22-16151
Modification	Date	Name	Original		Replacement of	Replaced by	Scale 1:1		Page 1 / 1630

Cable diagram

F09_002_VLU

Cable name -W1			cable type TPE					
remark			no. of conductors 4			cross-section 18		cable length 3
function text	Page / column	Target designation from	Connection point	conductor	Target designation to	Connection point	Page / column	function text
	&EFS=V1AR11UQ41KF3+**V1AR11UQ41KF3**.1	=V1AR11UQ41KF3.1+V1AR11UQ41-KF3.12-X2			-BGS/R	1	&EFS=V1AR11UQ41UQ24+V1AR11UQ41UQ24/1.0	
	&EFS=V1AR11UQ41KF3+**V1AR11UQ41KF3**.2	=V1AR11UQ41KF3.2+V1AR11UQ41-KF3.12-X2			-BGS/R	2	&EFS=V1AR11UQ41UQ24+V1AR11UQ41UQ24/1.0	
	&EFS=V1AR11UQ41KF3+**V1AR11UQ41KF3**.3	=V1AR11UQ41KF3.3+V1AR11UQ41-KF3.12-X2			-BGS/R	3	&EFS=V1AR11UQ41UQ24+V1AR11UQ41UQ24/1.1	
	&EFS=V1AR11UQ41KF3+**V1AR11UQ41KF3**.4	=V1AR11UQ41KF3.4+V1AR11UQ41-KF3.12-X2			-BGS/R	4	&EFS=V1AR11UQ41UQ24+V1AR11UQ41UQ24/1.1	

=V1AR11UQ41UQ23.1+.AR11UQ41UQ23.1/1

=V1AR11UQ41UQ24.2+.AR11UQ41UQ24.2/1

			Date	12/22/2022	Volvo Trucks North America	Valiant TMS	Cable diagram =V1AR11UQ41UQ24.1+V1AR11UQ41UQ24.1-W1	Drawing name: =2V04&EFS-EL	= V1AR11UQ41UQ24.1
			Ed.	MKLEPADLO					+ V1AR11UQ41UQ24.1
			Appr		P6700 Underbody Mainline - Cell 2V04			Document type: EMA	Project nr: 22-16151
Modification	Date	Name	Original		Replacement of	Replaced by	Scale 1:1		Page 1 / 1630

Cable diagram

F09_002_VLU

Cable name -W1			cable type TPE					
remark			no. of conductors 4			cross-section 18		cable length 3
function text	Page / column	Target designation from	Connection point	conductor	Target designation to	Connection point	Page / column	function text
	&EFS=V1AR11UQ41KF3	=**V1AR11UQ41KF3**+V1AR11UQ41-KF3	3.12-X3		-BGS/R	1	&EFS=V1AR11UQ41UQ24+V1AR11UQ41UQ24/1.2	
	&EFS=V1AR11UQ41KF3	=**V1AR11UQ41KF3**+V1AR11UQ41-KF2	3.12-X3		-BGS/R	2	&EFS=V1AR11UQ41UQ24+V1AR11UQ41UQ24/1.2	
	&EFS=V1AR11UQ41KF3	=**V1AR11UQ41KF3**+V1AR11UQ41-KF3	3.12-X3		-BGS/R	3	&EFS=V1AR11UQ41UQ24+V1AR11UQ41UQ24/1.2	
	&EFS=V1AR11UQ41KF3	=**V1AR11UQ41KF3**+V1AR11UQ41-KF4	3.12-X3		-BGS/R	4	&EFS=V1AR11UQ41UQ24+V1AR11UQ41UQ24/1.2	

Cable diagram

F09_002_VLU

Cable name -W1			cable type TC-ER					
remark			no. of conductors 4			cross-section 10		cable length 15
function text	Page / column	Target designation from	Connection point	conductor	Target designation to	Connection point	Page / column	function text
	&EFS=V1WC2+.UC11/11.3	=V1AR11+UC11-FC1	2		-Q1	1	&EFS/1.3	
	&EFS=V1WC2+.UC11/11.3	=V1AR11+UC11-FC1	4		-Q1	3	&EFS/1.3	
	&EFS=V1WC2+.UC11/11.3	=V1AR11+UC11-FC1	6		-Q1	5	&EFS/1.3	
Power Distribution =V1AR11	&EFS=V1WC2+.UC11/11.4		PE		-PE		&EFS/1.4	

=V1AR11UQ41UQ24.2+.AR11UQ41UQ24.2/1

=V1AR12KF1+.AR12UC01/1

			Date	12/22/2022	Volvo Trucks North America	Valiant TMS	Cable diagram =V1AR11WC1+V1AR11UC01-W1	Drawing name: =2V04&EFS-EL	= V1AR11WC1
			Ed.	MKLEPADLO					+ V1AR11UC01
			Appr		P6700 Underbody Mainline - Cell 2V04			Document type: EMA	Project nr: 22-16151
Modification	Date	Name	Original		Replacement of / Replaced by	Scale 1:1			Page 1 / 1630

Cable diagram

F09_002_VLU

Cable name -KF100.15-P8			cable type PROFINET Cable					
remark			no. of conductors 4			cross-section 22		cable length
function text	Page / column	Target designation from	Connection point	conductor	Target designation to	Connection point	Page / column	function text
	&EFS/1.7	-XPN-X2			=V1KF1+UC15-KF100.15-P8		&EFS=V1KF1+.UC15/2.5	

=V1AR11WC1+.AR11UC01/1

=V1AR12UQ41BG0+.AR12UQ41/1

			Date	12/22/2022	Volvo Trucks North America		Valiant TMS	Cable diagram =V1AR12KF1+V1AR12UC01-KF100.15-P8	Drawing name: =2V04&EFS-EL	= V1AR12KF1
			Ed.	MKLEPADLO						+ V1AR12UC01
			Appr		P6700 Underbody Mainline - Cell 2V04				Document type: EMA	Project nr: 22-16151
Modification	Date	Name	Original		Replacement of	Replaced by	Scale 1:1			Page 1 / 1630

Cable diagram

F09_002_VLU

Cable name -W1			cable type TPE					
remark			no. of conductors 4			cross-section 18		cable length
function text	Page / column	Target designation from	Connection point	conductor	Target designation to	Connection point	Page / column	function text
	&EFS/1.0	-XG1/2	P1:1		=V1AR12UQ41KF1-KF1.13-X1	1	&EFS=V1AR12UQ41KF1/4.0	
	&EFS/1.1	-XG1/2	P1:3		=V1AR12UQ41KF1-KF1.13-X1	3	&EFS=V1AR12UQ41KF1/4.1	
	&EFS/1.1	-XG1/2	P1:4		=V1AR12UQ41KF1-KF1.13-X1	4	&EFS=V1AR12UQ41KF1/4.1	
	&EFS/1.1	-XG1/2	P1:2		=V1AR12UQ41KF1-KF1.13-X1	2	&EFS=V1AR12UQ41KF1/4.0	

			Date	12/22/2022	Volvo Trucks North America	Valiant TMS	Cable diagram =V1AR12UQ41BG0+V1AR12UQ41-W1	Drawing name: =2V04&EFS-EL	= V1AR12UQ41BG0
			Ed.	MKLEPADLO					+ V1AR12UQ41
			Appr		P6700 Underbody Mainline - Cell 2V04			Document type: EMA	Project nr: 22-16151
Modification	Date	Name	Original		Replacement of / Replaced by	Scale 1:1			Page 1 / 1630

Cable diagram

F09_002_VLU

Cable name -W1.1			cable type TPE					
remark			no. of conductors 4			cross-section 18		cable length
function text	Page / column	Target designation from	Connection point	conductor	Target designation to	Connection point	Page / column	function text
	&EFS/1.0	-BG01	1		-XG1/2	J1:1	&EFS/1.0	
	&EFS/1.0	-BG01	4		-XG1/2	J1:4	&EFS/1.1	
	&EFS/1.1	-BG01	3		-XG1/2	J1:3	&EFS/1.1	

1 3

			Date	12/22/2022	Volvo Trucks North America	Valiant TMS	Cable diagram =V1AR12UQ41BG0+V1AR12UQ41-W1.1	Drawing name: =2V04&EFS-EL	= V1AR12UQ41BG0
			Ed.	MKLEPADLO					+ V1AR12UQ41
			Appr		P6700 Underbody Mainline - Cell 2V04			Document type: EMA	Project nr: 22-16151
Modification	Date	Name	Original		Replacement of / Replaced by	Scale 1:1			Page 2 / 1630

Cable diagram

F09_002_VLU

Cable name -W1.2			cable type TPE					
remark			no. of conductors 4			cross-section 18		cable length
function text	Page / column	Target designation from	Connection point	conductor	Target designation to	Connection point	Page / column	function text
	&EFS/1.1	-BG02	1		-XG1/2	J2:1	&EFS/1.1	
	&EFS/1.1	-BG02	4		-XG1/2	J2:4	&EFS/1.2	
	&EFS/1.2	-BG02	3		-XG1/2	J2:3	&EFS/1.2	

			Date	12/22/2022	Volvo Trucks North America	Valiant TMS	Cable diagram =V1AR12UQ41BG0+V1AR12UQ41-W1.2	Drawing name: =2V04&EFS-EL	= V1AR12UQ41BG0
			Ed.	MKLEPADLO					+ V1AR12UQ41
			Appr		P6700 Underbody Mainline - Cell 2V04			Document type: EMA	Project nr: 22-16151
Modification	Date	Name	Original		Replacement of / Replaced by	Scale 1:1			Page 3 / 1630

Cable diagram

F09_002_VLU

Cable name -W1			cable type TPU					
remark			no. of conductors 5			cross-section 16		cable length 2
function text	Page / column	Target designation from	Connection point	conductor	Target designation to	Connection point	Page / column	function text
	&EFS/2.2	-KF1-X20	5		-R3.CP/CS	C4	&EFS/1.3	
	&EFS/2.1	-KF1-X20	1		-R3.CP/CS	C5	&EFS/1.3	
	&EFS/2.1	-KF1-X20	3		-R3.CP/CS	PE	&EFS/1.3	
	&EFS/2.2	-KF1-X20	4		-R3.CP/CS	C6	&EFS/1.3	
	&EFS/2.1	-KF1-X20	2		-R3.CP/CS	C7	&EFS/1.4	

			Date	12/22/2022	Volvo Trucks North America	Valiant TMS	Cable diagram =V1AR12UQ41KF1+V1AR12UQ41-W1	Drawing name: =2V04&EFS-EL	= V1AR12UQ41KF1
			Ed.	MKLEPADLO					+ V1AR12UQ41
			Appr		P6700 Underbody Mainline - Cell 2V04			Document type: EMA	Project nr: 22-16151
Modification	Date	Name	Original		Replacement of / Replaced by	Scale 1:1			Page 1 / 1630

Cable diagram

F09_002_VLU

Cable name -WF1			cable type PROFINET Cable					
remark			no. of conductors 4			cross-section 22		cable length
function text	Page / column	Target designation from	Connection point	conductor	Target designation to	Connection point	Page / column	function text
	&EFS/2.3	-KF1-TP1			-R3.CP/CS	R3.PROFINET	&EFS/1.5	

			Date	12/22/2022	Volvo Trucks North America	Valiant TMS	Cable diagram =V1AR12UQ41KF1+V1AR12UQ41-WF1	Drawing name: =2V04&EFS-EL	= V1AR12UQ41KF1
			Ed.	MKLEPADLO					+ V1AR12UQ41
			Appr		P6700 Underbody Mainline - Cell 2V04			Document type: EMA	Project nr: 22-16151
Modification	Date	Name	Original		Replacement of / Replaced by	Scale 1:1			Page 2 / 1630

Cable diagram

F09_002_VLU

Cable name -W1			cable type TPE					
remark			no. of conductors 4			cross-section 18		cable length 1
function text	Page / column	Target designation from	Connection point	conductor	Target designation to	Connection point	Page / column	function text
	&EFS=V1AR12UQ41KF1	=**V1AR12UQ41**/KF1.0+V1AR12UQ41-KF1	1.11-X1		-BGS/R	1	&EFS=V1AR12UQ41UQ1+V1AR12UQ41UQ1/1.0	
	&EFS=V1AR12UQ41KF1	=**V1AR12UQ41**/KF1.0+V1AR12UQ41-KF2	1.11-X1		-BGS/R	4	&EFS=V1AR12UQ41UQ1+V1AR12UQ41UQ1/1.1	
	&EFS=V1AR12UQ41KF1	=**V1AR12UQ41**/KF1.1+V1AR12UQ41-KF3	1.11-X1		-BGS/R	3	&EFS=V1AR12UQ41UQ1+V1AR12UQ41UQ1/1.0	

Cable diagram

F09_002_VLU

Cable name	-W1	cable type	TPE		
remark		no. of conductors	4	cross-section 18	cable length 1

function text	Page / column	Target designation from	Connection point	conductor	Target designation to	Connection point	Page / column	function text
	&EFS=V1AR12UQ41KF1+V1AR12UQ41KF1.1	=V1AR12UQ41KF1+V1AR12UQ41-KF1.1-X2	1		-BGS/R	1	&EFS=V1AR12UQ41UQ2+V1AR12UQ41UQ2/1.0	
	&EFS=V1AR12UQ41KF1+V1AR12UQ41KF2.1	=V1AR12UQ41KF1+V1AR12UQ41-KF2.1-X2	2		-BGS/R	4	&EFS=V1AR12UQ41UQ2+V1AR12UQ41UQ2/1.1	
	&EFS=V1AR12UQ41KF1+V1AR12UQ41KF2.1	=V1AR12UQ41KF1+V1AR12UQ41-KF3.1-X2	3		-BGS/R	3	&EFS=V1AR12UQ41UQ2+V1AR12UQ41UQ2/1.0	

=V1AR12UQ41UQ1.1+.AR12UQ41UQ1.1/1

=V1AR12UQ41UQ3.1+.AR12UQ41UQ3.1/1

			Date	12/22/2022	Volvo Trucks North America	Valiant TMS	Cable diagram =V1AR12UQ41UQ2.1+V1AR12UQ41UQ2.1-W1	Drawing name: =2V04&EFS-EL	= V1AR12UQ41UQ2.1 + V1AR12UQ41UQ2.1
			Ed.	MKLEPADLO	P6700 Underbody Mainline - Cell 2V04				
			Appr					Document type: EMA	Project nr: 22-16151
Modification	Date	Name	Original		Replacement of / Replaced by	Scale 1:1			Page 1 / 1630

Cable diagram

F09_002_VLU

Cable name -W1			cable type TPE					
remark			no. of conductors 4			cross-section 18		cable length 1
function text	Page / column	Target designation from	Connection point	conductor	Target designation to	Connection point	Page / column	function text
	&EFS=V1AR12UQ41KF1	=**V1AR12UQ41**/KF1+V1AR12UQ41-KF1	1.11-X3		-BGS/R	1	&EFS=V1AR12UQ41UQ3+V1AR12UQ41UQ3/1.0	
	&EFS=V1AR12UQ41KF1	=**V1AR12UQ41**/KF1+V1AR12UQ41-KF2	1.11-X3		-BGS/R	4	&EFS=V1AR12UQ41UQ3+V1AR12UQ41UQ3/1.1	
	&EFS=V1AR12UQ41KF1	=**V1AR12UQ41**/KF1+V1AR12UQ41-KF3	1.11-X3		-BGS/R	3	&EFS=V1AR12UQ41UQ3+V1AR12UQ41UQ3/1.0	

=V1AR12UQ41UQ2.1+.AR12UQ41UQ2.1/1

=V1AR12UQ41UQ4.1+.AR12UQ41UQ4.1/1

			Date	12/22/2022	Volvo Trucks North America	Valiant TMS	Cable diagram =V1AR12UQ41UQ3.1+V1AR12UQ41UQ3.1-W1	Drawing name: =2V04&EFS-EL	= V1AR12UQ41UQ3.1
			Ed.	MKLEPADLO					+ V1AR12UQ41UQ3.1
			Appr		P6700 Underbody Mainline - Cell 2V04			Document type: EMA	Project nr: 22-16151
Modification	Date	Name	Original		Replacement of / Replaced by	Scale 1:1			Page 1 / 1630

Cable diagram

F09_002_VLU

Cable name -W1			cable type TPE					
remark			no. of conductors 4			cross-section 18		cable length 1
function text	Page / column	Target designation from	Connection point	conductor	Target designation to	Connection point	Page / column	function text
	&EFS=V1AR12UQ41KF1+V1AR12UQ41KF1.1	=V1AR12UQ41KF1+V1AR12UQ41-KF1.11-X4	1		-BGS/R	1	&EFS=V1AR12UQ41UQ4+V1AR12UQ41UQ4/1.0	
	&EFS=V1AR12UQ41KF1+V1AR12UQ41KF1.1	=V1AR12UQ41KF1+V1AR12UQ41-KF1.11-X4	2		-BGS/R	4	&EFS=V1AR12UQ41UQ4+V1AR12UQ41UQ4/1.1	
	&EFS=V1AR12UQ41KF1+V1AR12UQ41KF1.1	=V1AR12UQ41KF1+V1AR12UQ41-KF1.11-X4	3		-BGS/R	3	&EFS=V1AR12UQ41UQ4+V1AR12UQ41UQ4/1.0	

=V1AR12UQ41UQ3.1+.AR12UQ41UQ3.1/1

=V1AR12UQ41UQ5.1+.AR12UQ41UQ5.1/1

			Date	12/22/2022	Volvo Trucks North America	Valiant TMS	Cable diagram =V1AR12UQ41UQ4.1+V1AR12UQ41UQ4.1-W1	Drawing name: =2V04&EFS-EL	= V1AR12UQ41UQ4.1 + V1AR12UQ41UQ4.1
			Ed.	MKLEPADLO	P6700 Underbody Mainline - Cell 2V04				
			Appr					Document type: EMA	Project nr: 22-16151
Modification	Date	Name	Original		Replacement of / Replaced by	Scale 1:1			Page 1 / 1630

Cable diagram

F09_002_VLU

Cable name	-W1	cable type	TPE		
remark		no. of conductors	4	cross-section 18	cable length

function text	Page / column	Target designation from	Connection point	conductor	Target designation to	Connection point	Page / column	function text
	&EFS=V1AR12UQ41KF1+V1AR12UQ41KF1	=V1AR12UQ41/2.5+V1AR12UQ41-KF1	1.11-X5		-BGS/R	1	&EFS=V1AR12UQ41UQ5+V1AR12UQ41UQ5/1.0	
	&EFS=V1AR12UQ41KF1+V1AR12UQ41KF1	=V1AR12UQ41/2.5+V1AR12UQ41-KF2	1.11-X5		-BGS/R	2	&EFS=V1AR12UQ41UQ5+V1AR12UQ41UQ5/1.0	
	&EFS=V1AR12UQ41KF1+V1AR12UQ41KF1	=V1AR12UQ41/2.5+V1AR12UQ41-KF3	1.11-X5		-BGS/R	3	&EFS=V1AR12UQ41UQ5+V1AR12UQ41UQ5/1.1	
	&EFS=V1AR12UQ41KF1+V1AR12UQ41KF1	=V1AR12UQ41/2.5+V1AR12UQ41-KF4	1.11-X5		-BGS/R	4	&EFS=V1AR12UQ41UQ5+V1AR12UQ41UQ5/1.1	

=V1AR12UQ41UQ4.1+.AR12UQ41UQ4.1/1

=V1AR12UQ41UQ5.2+.AR12UQ41UQ5.2/1

			Date	12/22/2022	Volvo Trucks North America	Valiant TMS	Cable diagram =V1AR12UQ41UQ5.1+V1AR12UQ41UQ5.1-W1	Drawing name: =2V04&EFS-EL	= V1AR12UQ41UQ5.1 + V1AR12UQ41UQ5.1
			Ed.	MKLEPADLO	P6700 Underbody Mainline - Cell 2V04				
			Appr					Document type: EMA	Project nr: 22-16151
Modification	Date	Name	Original		Replacement of / Replaced by	Scale 1:1			Page 1 / 1630

Cable diagram

F09_002_VLU

Cable name -W1			cable type TPE					
remark			no. of conductors 4			cross-section 18		cable length
function text	Page / column	Target designation from	Connection point	conductor	Target designation to	Connection point	Page / column	function text
	&EFS=V1AR12UQ41KF1	=**V1AR12UQ41**/K2.6+V1AR12UQ41-KF1	1.11-X6		-BGS/R	1	&EFS=V1AR12UQ41UQ5+V1AR12UQ41UQ5/1.2	
	&EFS=V1AR12UQ41KF1	=**V1AR12UQ41**/K2.6+V1AR12UQ41-KF2	1.11-X6		-BGS/R	2	&EFS=V1AR12UQ41UQ5+V1AR12UQ41UQ5/1.2	
	&EFS=V1AR12UQ41KF1	=**V1AR12UQ41**/K2.6+V1AR12UQ41-KF3	1.11-X6		-BGS/R	3	&EFS=V1AR12UQ41UQ5+V1AR12UQ41UQ5/1.2	
	&EFS=V1AR12UQ41KF1	=**V1AR12UQ41**/K2.7+V1AR12UQ41-KF4	1.11-X6		-BGS/R	4	&EFS=V1AR12UQ41UQ5+V1AR12UQ41UQ5/1.2	

			Date	12/22/2022	Volvo Trucks North America	Valiant TMS	Cable diagram =V1AR12UQ41UQ5.2+V1AR12UQ41UQ5.2-W1	Drawing name: =2V04&EFS-EL	= V1AR12UQ41UQ5.2
			Ed.	MKLEPADLO					+ V1AR12UQ41UQ5.2
			Appr		P6700 Underbody Mainline - Cell 2V04			Document type: EMA	Project nr: 22-16151 Page 1
Modification	Date	Name	Original		Replacement of / Replaced by	Scale 1:1			1630

Cable diagram

F09_002_VLU

Cable name	-W1	cable type	TPE		
remark		no. of conductors	4	cross-section 18	cable length

function text	Page / column	Target designation from	Connection point	conductor	Target designation to	Connection point	Page / column	function text
	&EFS=V1AR12UQ41KF1+V1AR12UQ41KF1	=V1AR12UQ41/K7.7+V1AR12UQ41-KF1	1.11-X7		-BGS/R	1	&EFS=V1AR12UQ41UQ6+V1AR12UQ41UQ6/1.0	
	&EFS=V1AR12UQ41KF1+V1AR12UQ41KF1	=V1AR12UQ41/K7.7+V1AR12UQ41-KF2	1.11-X7		-BGS/R	2	&EFS=V1AR12UQ41UQ6+V1AR12UQ41UQ6/1.0	
	&EFS=V1AR12UQ41KF1+V1AR12UQ41KF1	=V1AR12UQ41/K7.8+V1AR12UQ41-KF3	1.11-X7		-BGS/R	3	&EFS=V1AR12UQ41UQ6+V1AR12UQ41UQ6/1.1	
	&EFS=V1AR12UQ41KF1+V1AR12UQ41KF1	=V1AR12UQ41/K7.8+V1AR12UQ41-KF4	1.11-X7		-BGS/R	4	&EFS=V1AR12UQ41UQ6+V1AR12UQ41UQ6/1.1	

=V1AR12UQ41UQ5.2+.AR12UQ41UQ5.2/1

=V1AR12UQ41UQ6.2+.AR12UQ41UQ6.2/1

			Date	12/22/2022	Volvo Trucks North America	Valiant TMS	Cable diagram =V1AR12UQ41UQ6.1+V1AR12UQ41UQ6.1-W1	Drawing name: =2V04&EFS-EL	= V1AR12UQ41UQ6.1 + V1AR12UQ41UQ6.1
			Ed.	MKLEPADLO	P6700 Underbody Mainline - Cell 2V04				
			Appr					Document type: EMA	Project nr: 22-16151
Modification	Date	Name	Original		Replacement of / Replaced by	Scale 1:1			Page 1 / 1630

Cable diagram

F09_002_VLU

Cable name -W1			cable type TPE					
remark			no. of conductors 4			cross-section 18		cable length
function text	Page / column	Target designation from	Connection point	conductor	Target designation to	Connection point	Page / column	function text
	&EFS=V1AR12UQ41KF1	=**V1AR12UQ41**/KF1:8+V1AR12UQ41-KF1	1.11-X8		-BGS/R	1	&EFS=V1AR12UQ41UQ6+V1AR12UQ41UQ6/1.2	
	&EFS=V1AR12UQ41KF1	=**V1AR12UQ41**/KF1:9+V1AR12UQ41-KF2	1.11-X8		-BGS/R	2	&EFS=V1AR12UQ41UQ6+V1AR12UQ41UQ6/1.2	
	&EFS=V1AR12UQ41KF1	=**V1AR12UQ41**/KF1:9+V1AR12UQ41-KF3	1.11-X8		-BGS/R	3	&EFS=V1AR12UQ41UQ6+V1AR12UQ41UQ6/1.2	
	&EFS=V1AR12UQ41KF1	=**V1AR12UQ41**/KF1:9+V1AR12UQ41-KF4	1.11-X8		-BGS/R	4	&EFS=V1AR12UQ41UQ6+V1AR12UQ41UQ6/1.2	

=V1AR12UQ41UQ6.1+.AR12UQ41UQ6.1/1

=V1AR12UQ41UQ7.1+.AR12UQ41UQ7.1/1

			Date	12/22/2022	Volvo Trucks North America	Valiant TMS	Cable diagram =V1AR12UQ41UQ6.2+V1AR12UQ41UQ6.2-W1	Drawing name: =2V04&EFS-EL	= V1AR12UQ41UQ6.2
			Ed.	MKLEPADLO					+ V1AR12UQ41UQ6.2
			Appr		P6700 Underbody Mainline - Cell 2V04			Document type: EMA	Project nr: 22-16151
Modification	Date	Name	Original		Replacement of / Replaced by	Scale 1:1			Page 1 / 1630

Cable diagram

F09_002_VLU

Cable name -W1			cable type TPE					
remark			no. of conductors 4			cross-section 18		cable length
function text	Page / column	Target designation from	Connection point	conductor	Target designation to	Connection point	Page / column	function text
	&EFS=V1AR12UQ41KF1	=**V1AR12UQ41K3**+V1AR12UQ41-KF1	1.12-X1		-BGS/R	1	&EFS=V1AR12UQ41UQ7+V1AR12UQ41UQ7/1.0	
	&EFS=V1AR12UQ41KF1	=**V1AR12UQ41K3**+V1AR12UQ41-KF2	1.12-X1		-BGS/R	2	&EFS=V1AR12UQ41UQ7+V1AR12UQ41UQ7/1.0	
	&EFS=V1AR12UQ41KF1	=**V1AR12UQ41K3**+V1AR12UQ41-KF3	1.12-X1		-BGS/R	3	&EFS=V1AR12UQ41UQ7+V1AR12UQ41UQ7/1.1	
	&EFS=V1AR12UQ41KF1	=**V1AR12UQ41K3**+V1AR12UQ41-KF4	1.12-X1		-BGS/R	4	&EFS=V1AR12UQ41UQ7+V1AR12UQ41UQ7/1.1	

Cable diagram

F09_002_VLU

Cable name -W1			cable type TPE					
remark			no. of conductors 4			cross-section 18		cable length
function text	Page / column	Target designation from	Connection point	conductor	Target designation to	Connection point	Page / column	function text
	&EFS=V1AR12UQ41KF1	=**V1AR12UQ41KF1**+V1AR12UQ41-KF1	1.12-X2		-BGS/R	1	&EFS=V1AR12UQ41UQ7+V1AR12UQ41UQ7/1.2	
	&EFS=V1AR12UQ41KF1	=**V1AR12UQ41KF1**+V1AR12UQ41-KF2	1.12-X2		-BGS/R	2	&EFS=V1AR12UQ41UQ7+V1AR12UQ41UQ7/1.2	
	&EFS=V1AR12UQ41KF1	=**V1AR12UQ41KF1**+V1AR12UQ41-KF3	1.12-X2		-BGS/R	3	&EFS=V1AR12UQ41UQ7+V1AR12UQ41UQ7/1.2	
	&EFS=V1AR12UQ41KF1	=**V1AR12UQ41KF1**+V1AR12UQ41-KF4	1.12-X2		-BGS/R	4	&EFS=V1AR12UQ41UQ7+V1AR12UQ41UQ7/1.2	

			Date	12/22/2022	Volvo Trucks North America	Valiant TMS	Cable diagram =V1AR12UQ41UQ7.2+V1AR12UQ41UQ7.2-W1	Drawing name: =2V04&EFS-EL	= V1AR12UQ41UQ7.2
			Ed.	MKLEPADLO					+ V1AR12UQ41UQ7.2
			Appr		P6700 Underbody Mainline - Cell 2V04	Scale 1:1		Document type: EMA	Project nr: 22-16151
Modification	Date	Name	Original		Replacement of / Replaced by				Page 1 / 1630

Cable diagram

F09_002_VLU

Cable name -W1			cable type TPE					
remark			no. of conductors 4			cross-section 18		cable length
function text	Page / column	Target designation from	Connection point	conductor	Target designation to	Connection point	Page / column	function text
	&EFS=V1AR12UQ41KF1	=**V1AR12UQ41**/KF1+V1AR12UQ41-KF1	1.12-X3		-BGS/R	1	&EFS=V1AR12UQ41UQ8+V1AR12UQ41UQ8/1.0	
	&EFS=V1AR12UQ41KF1	=**V1AR12UQ41**/KF1+V1AR12UQ41-KF2	1.12-X3		-BGS/R	2	&EFS=V1AR12UQ41UQ8+V1AR12UQ41UQ8/1.0	
	&EFS=V1AR12UQ41KF1	=**V1AR12UQ41**/KF1+V1AR12UQ41-KF3	1.12-X3		-BGS/R	3	&EFS=V1AR12UQ41UQ8+V1AR12UQ41UQ8/1.1	
	&EFS=V1AR12UQ41KF1	=**V1AR12UQ41**/KF1+V1AR12UQ41-KF4	1.12-X3		-BGS/R	4	&EFS=V1AR12UQ41UQ8+V1AR12UQ41UQ8/1.1	

Cable diagram

F09_002_VLU

Cable name -W1			cable type TPE					
remark			no. of conductors 4			cross-section 18		cable length
function text	Page / column	Target designation from	Connection point	conductor	Target designation to	Connection point	Page / column	function text
	&EFS=V1AR12UQ41KF1	=**V1AR12UQ41**/KF1+V1AR12UQ41-KF1	1.12-X4		-BGS/R	1	&EFS=V1AR12UQ41UQ8+V1AR12UQ41UQ8/1.2	
	&EFS=V1AR12UQ41KF1	=**V1AR12UQ41**/KF1+V1AR12UQ41-KF2	1.12-X4		-BGS/R	2	&EFS=V1AR12UQ41UQ8+V1AR12UQ41UQ8/1.2	
	&EFS=V1AR12UQ41KF1	=**V1AR12UQ41**/KF1+V1AR12UQ41-KF3	1.12-X4		-BGS/R	3	&EFS=V1AR12UQ41UQ8+V1AR12UQ41UQ8/1.2	
	&EFS=V1AR12UQ41KF1	=**V1AR12UQ41**/KF1+V1AR12UQ41-KF4	1.12-X4		-BGS/R	4	&EFS=V1AR12UQ41UQ8+V1AR12UQ41UQ8/1.2	

			Date	12/22/2022	Volvo Trucks North America	Valiant TMS	Cable diagram =V1AR12UQ41UQ8.2+V1AR12UQ41UQ8.2-W1	Drawing name: =2V04&EFS-EL	= V1AR12UQ41UQ8.2
			Ed.	MKLEPADLO					+ V1AR12UQ41UQ8.2
			Appr		P6700 Underbody Mainline - Cell 2V04			Document type: EMA	Project nr: 22-16151
Modification	Date	Name	Original		Replacement of / Replaced by	Scale 1:1			Page 1 / 1630

Cable diagram

F09_002_VLU

Cable name -W1			cable type TPE					
remark			no. of conductors 4			cross-section 18		cable length
function text	Page / column	Target designation from	Connection point	conductor	Target designation to	Connection point	Page / column	function text
	&EFS=V1AR12UQ41KF1	=**V1AR12UQ41**/KF1+V1AR12UQ41-KF1	1.12-X5		-BGS/R	1	&EFS=V1AR12UQ41UQ9+V1AR12UQ41UQ9/1.0	
	&EFS=V1AR12UQ41KF1	=**V1AR12UQ41**/KF1+V1AR12UQ41-KF2	1.12-X5		-BGS/R	2	&EFS=V1AR12UQ41UQ9+V1AR12UQ41UQ9/1.0	
	&EFS=V1AR12UQ41KF1	=**V1AR12UQ41**/KF1+V1AR12UQ41-KF3	1.12-X5		-BGS/R	3	&EFS=V1AR12UQ41UQ9+V1AR12UQ41UQ9/1.1	
	&EFS=V1AR12UQ41KF1	=**V1AR12UQ41**/KF1+V1AR12UQ41-KF4	1.12-X5		-BGS/R	4	&EFS=V1AR12UQ41UQ9+V1AR12UQ41UQ9/1.1	

Cable diagram

F09_002_VLU

Cable name -W1			cable type TPE					
remark			no. of conductors 4			cross-section 18		cable length
function text	Page / column	Target designation from	Connection point	conductor	Target designation to	Connection point	Page / column	function text
	&EFS=V1AR12UQ41KF1	=**V1AR12UQ41**/K3.6+V1AR12UQ41-KF1	1.12-X6		-BGS/R	1	&EFS=V1AR12UQ41UQ9+V1AR12UQ41UQ9/1.2	
	&EFS=V1AR12UQ41KF1	=**V1AR12UQ41**/K3.6+V1AR12UQ41-KF2	1.12-X6		-BGS/R	2	&EFS=V1AR12UQ41UQ9+V1AR12UQ41UQ9/1.2	
	&EFS=V1AR12UQ41KF1	=**V1AR12UQ41**/K3.6+V1AR12UQ41-KF3	1.12-X6		-BGS/R	3	&EFS=V1AR12UQ41UQ9+V1AR12UQ41UQ9/1.2	
	&EFS=V1AR12UQ41KF1	=**V1AR12UQ41**/K3.7+V1AR12UQ41-KF4	1.12-X6		-BGS/R	4	&EFS=V1AR12UQ41UQ9+V1AR12UQ41UQ9/1.2	

Cable diagram

F09_002_VLU

Cable name -W1			cable type TC-ER					
remark			no. of conductors 4			cross-section 10		cable length 7
function text	Page / column	Target designation from	Connection point	conductor	Target designation to	Connection point	Page / column	function text
	&EFS=V1WC2+.UC12/11.3	=V1AR12+UC12-FC1	2		-Q1	1	&EFS/1.3	
	&EFS=V1WC2+.UC12/11.3	=V1AR12+UC12-FC1	4		-Q1	3	&EFS/1.3	
	&EFS=V1WC2+.UC12/11.3	=V1AR12+UC12-FC1	6		-Q1	5	&EFS/1.3	
Power Distribution =V1AR12	&EFS=V1WC2+.UC12/11.4		PE		-PE		&EFS/1.4	

=V1AR12UQ41UQ9.2+.AR12UQ41UQ9.2/1

=V1AR13KF1+.AR13UC01/1

			Date	12/22/2022	Volvo Trucks North America	Valiant TMS	Cable diagram =V1AR12WC1+V1AR12UC01-W1	Drawing name: =2V04&EFS-EL	= V1AR12WC1
			Ed.	MKLEPADLO					+ V1AR12UC01
			Appr		P6700 Underbody Mainline - Cell 2V04			Document type: EMA	Project nr: 22-16151
Modification	Date	Name	Original		Replacement of / Replaced by	Scale 1:1			Page 1 / 1630

Cable diagram

F09_002_VLU

Cable name -KF100.15-P10			cable type PROFINET Cable					
remark			no. of conductors 4			cross-section 22		cable length
function text	Page / column	Target designation from	Connection point	conductor	Target designation to	Connection point	Page / column	function text
	&EFS/1.7	-XPN-X2			=V1KF1+UC15-KF100.15-P10		&EFS=V1KF1+.UC15/2.5	

=V1AR12WC1+.AR12UC01/1

=V1AR13UQ41BG0+.AR13UQ41/1

			Date	12/22/2022	Volvo Trucks North America	Valiant TMS	Cable diagram =V1AR13KF1+V1AR13UC01-KF100.15-P10	Drawing name: =2V04&EFS-EL	= V1AR13KF1
			Ed.	MKLEPADLO					+ V1AR13UC01
			Appr		P6700 Underbody Mainline - Cell 2V04			Document type: EMA	Project nr: 22-16151
Modification	Date	Name	Original		Replacement of / Replaced by	Scale 1:1			Page 1 / 1630

Cable diagram

F09_002_VLU

Cable name -W1			cable type TPE					
remark			no. of conductors 4			cross-section 18		cable length 2
function text	Page / column	Target designation from	Connection point	conductor	Target designation to	Connection point	Page / column	function text
	&EFS/1.0	-XG1/2	P1:1		=V1AR13UQ41KF1-KF1.13-X1	1	&EFS=V1AR13UQ41KF1/4.0	
	&EFS/1.1	-XG1/2	P1:3		=V1AR13UQ41KF1-KF1.13-X1	3	&EFS=V1AR13UQ41KF1/4.1	
	&EFS/1.1	-XG1/2	P1:4		=V1AR13UQ41KF1-KF1.13-X1	4	&EFS=V1AR13UQ41KF1/4.1	
	&EFS/1.1	-XG1/2	P1:2		=V1AR13UQ41KF1-KF1.13-X1	2	&EFS=V1AR13UQ41KF1/4.0	

			Date	12/22/2022	Volvo Trucks North America	Valiant TMS	Cable diagram =V1AR13UQ41BG0+V1AR13UQ41-W1	Drawing name: =2V04&EFS-EL	= V1AR13UQ41BG0
			Ed.	MKLEPADLO					+ V1AR13UQ41
			Appr		P6700 Underbody Mainline - Cell 2V04			Document type: EMA	Project nr: 22-16151
Modification	Date	Name	Original		Replacement of / Replaced by	Scale 1:1			Page 1 / 1630

Cable diagram

F09_002_VLU

Cable name -W1.1			cable type TPE					
remark			no. of conductors 4			cross-section 18		cable length 2
function text	Page / column	Target designation from	Connection point	conductor	Target designation to	Connection point	Page / column	function text
	&EFS/1.0	-BG01	1		-XG1/2	J1:1	&EFS/1.0	
	&EFS/1.0	-BG01	4		-XG1/2	J1:4	&EFS/1.1	
	&EFS/1.1	-BG01	3		-XG1/2	J1:3	&EFS/1.1	

			Date	12/22/2022	Volvo Trucks North America	Valiant TMS	Cable diagram =V1AR13UQ41BG0+V1AR13UQ41-W1.1	Drawing name: =2V04&EFS-EL	= V1AR13UQ41BG0
			Ed.	MKLEPADLO					+ V1AR13UQ41
			Appr		P6700 Underbody Mainline - Cell 2V04			Document type: EMA	Project nr: 22-16151
Modification	Date	Name	Original		Replacement of / Replaced by	Scale 1:1			Page 2 / 1630

Cable diagram

F09_002_VLU

Cable name -W1.2			cable type TPE					
remark			no. of conductors 4			cross-section 18		cable length 1
function text	Page / column	Target designation from	Connection point	conductor	Target designation to	Connection point	Page / column	function text
	&EFS/1.1	-BG02	1		-XG1/2	J2:1	&EFS/1.1	
	&EFS/1.1	-BG02	4		-XG1/2	J2:4	&EFS/1.2	
	&EFS/1.2	-BG02	3		-XG1/2	J2:3	&EFS/1.2	

			Date	12/22/2022	Volvo Trucks North America	Valiant TMS	Cable diagram =V1AR13UQ41BG0+V1AR13UQ41-W1.2	Drawing name: =2V04&EFS-EL	= V1AR13UQ41BG0
			Ed.	MKLEPADLO					+ V1AR13UQ41
			Appr		P6700 Underbody Mainline - Cell 2V04			Document type: EMA	Project nr: 22-16151
Modification	Date	Name	Original		Replacement of / Replaced by	Scale 1:1			Page 3 / 1630

Cable diagram

F09_002_VLU

Cable name -W1			cable type TPU					
remark			no. of conductors 5			cross-section 16		cable length 2
function text	Page / column	Target designation from	Connection point	conductor	Target designation to	Connection point	Page / column	function text
	&EFS/2.2	-KF1-X20	5		-R3.CP/CS	C4	&EFS/1.3	
	&EFS/2.1	-KF1-X20	1		-R3.CP/CS	C5	&EFS/1.3	
	&EFS/2.1	-KF1-X20	3		-R3.CP/CS	PE	&EFS/1.3	
	&EFS/2.2	-KF1-X20	4		-R3.CP/CS	C6	&EFS/1.3	
	&EFS/2.1	-KF1-X20	2		-R3.CP/CS	C7	&EFS/1.4	

			Date	12/22/2022	Volvo Trucks North America	Valiant TMS	Cable diagram =V1AR13UQ41KF1+V1AR13UQ41-W1	Drawing name: =2V04&EFS-EL	= V1AR13UQ41KF1
			Ed.	MKLEPADLO					+ V1AR13UQ41
			Appr		P6700 Underbody Mainline - Cell 2V04			Document type: EMA	Project nr: 22-16151
Modification	Date	Name	Original		Replacement of / Replaced by	Scale 1:1			Page 1 / 1630

Cable diagram

F09_002_VLU

Cable name -WF1			cable type PROFINET Cable					
remark			no. of conductors 4			cross-section 22		cable length
function text	Page / column	Target designation from	Connection point	conductor	Target designation to	Connection point	Page / column	function text
	&EFS/2.3	-KF1-TP1			-R3.CP/CS	R3.PROFINET	&EFS/1.5	

			Date	12/22/2022	Volvo Trucks North America	Valiant TMS	Cable diagram =V1AR13UQ41KF1+V1AR13UQ41-WF1	Drawing name: =2V04&EFS-EL	= V1AR13UQ41KF1
			Ed.	MKLEPADLO					+ V1AR13UQ41
			Appr		P6700 Underbody Mainline - Cell 2V04			Document type: EMA	Project nr: 22-16151
Modification	Date	Name	Original		Replacement of / Replaced by	Scale 1:1			Page 2 / 1630

Cable diagram

F09_002_VLU

Cable name -W1			cable type TPE					
remark			no. of conductors 4			cross-section 18		cable length 2
function text	Page / column	Target designation from	Connection point	conductor	Target designation to	Connection point	Page / column	function text
	&EFS=V1AR13UQ41KF1	=**V1AR13UQ41KF1**+V1AR13UQ41-KF1	1		1.11-X1	1	-BGS/R	&EFS=V1AR13UQ41UQ1+V1AR13UQ41UQ1/1.0
	&EFS=V1AR13UQ41KF1	=**V1AR13UQ41KF1**+V1AR13UQ41-KF2	1		1.11-X1	4	-BGS/R	&EFS=V1AR13UQ41UQ1+V1AR13UQ41UQ1/1.1
	&EFS=V1AR13UQ41KF1	=**V1AR13UQ41KF1**+V1AR13UQ41-KF3	1		1.11-X1	3	-BGS/R	&EFS=V1AR13UQ41UQ1+V1AR13UQ41UQ1/1.0

Cable diagram

F09_002_VLU

Cable name -W1			cable type TPE					
remark			no. of conductors 4			cross-section 18		cable length 2
function text	Page / column	Target designation from	Connection point	conductor	Target designation to	Connection point	Page / column	function text
	&EFS=V1AR13UQ41KF1	=**V1AR13UQ41/KF1.1**+V1AR13UQ41-KF1	1.11-X2		-BGS/R	1	&EFS=V1AR13UQ41UQ2+V1AR13UQ41UQ2/1.0	
	&EFS=V1AR13UQ41KF1	=**V1AR13UQ41/KF1.2**+V1AR13UQ41-KF1	1.11-X2		-BGS/R	4	&EFS=V1AR13UQ41UQ2+V1AR13UQ41UQ2/1.1	
	&EFS=V1AR13UQ41KF1	=**V1AR13UQ41/KF1.3**+V1AR13UQ41-KF1	1.11-X2		-BGS/R	3	&EFS=V1AR13UQ41UQ2+V1AR13UQ41UQ2/1.0	

			Date	12/22/2022	Volvo Trucks North America	Valiant TMS	Cable diagram =V1AR13UQ41UQ2.1+V1AR13UQ41UQ2.1-W1	Drawing name: =2V04&EFS-EL	= V1AR13UQ41UQ2.1
			Ed.	MKLEPADLO					+ V1AR13UQ41UQ2.1
			Appr		P6700 Underbody Mainline - Cell 2V04			Document type: EMA	Project nr: 22-16151
Modification	Date	Name	Original		Replacement of / Replaced by	Scale 1:1			Page 1 / 1630

Cable diagram

F09_002_VLU

Cable name -W1			cable type TPE					
remark			no. of conductors 4			cross-section 18		cable length 2
function text	Page / column	Target designation from	Connection point	conductor	Target designation to	Connection point	Page / column	function text
	&EFS=V1AR13UQ41KF1	=**V1AR13UQ41/KF1**.3+V1AR13UQ41-KF1	1.11-X3		-BGS/R	1	&EFS=V1AR13UQ41UQ3+V1AR13UQ41UQ3/1.0	
	&EFS=V1AR13UQ41KF1	=**V1AR13UQ41/KF1**.4+V1AR13UQ41-KF1	1.11-X3		-BGS/R	4	&EFS=V1AR13UQ41UQ3+V1AR13UQ41UQ3/1.1	
	&EFS=V1AR13UQ41KF1	=**V1AR13UQ41/KF1**.3+V1AR13UQ41-KF1	1.11-X3		-BGS/R	3	&EFS=V1AR13UQ41UQ3+V1AR13UQ41UQ3/1.0	

=V1AR13UQ41UQ2.1+.AR13UQ41UQ2.1/1

=V1AR13UQ41UQ4.1+.AR13UQ41UQ4.1/1

			Date	12/22/2022	Volvo Trucks North America	Valiant TMS	Cable diagram =V1AR13UQ41UQ3.1+V1AR13UQ41UQ3.1-W1	Drawing name: =2V04&EFS-EL	= V1AR13UQ41UQ3.1
			Ed.	MKLEPADLO					+ V1AR13UQ41UQ3.1
			Appr		P6700 Underbody Mainline - Cell 2V04			Document type: EMA	Project nr: 22-16151
Modification	Date	Name	Original		Replacement of	Replaced by	Scale 1:1		Page 1 / 1630

Cable diagram

F09_002_VLU

Cable name	-W1	cable type	TPE		
remark		no. of conductors	4	cross-section 18	cable length 2

function text	Page / column	Target designation from	Connection point	conductor	Target designation to	Connection point	Page / column	function text
	&EFS=V1AR13UQ41KF1+V1AR13UQ41KF1	=V1AR13UQ41/2.1+V1AR13UQ41-KF1	1.11-X4		-BGS/R	1	&EFS=V1AR13UQ41UQ4+V1AR13UQ41UQ4/1.0	
	&EFS=V1AR13UQ41KF1+V1AR13UQ41KF1	=V1AR13UQ41/2.1+V1AR13UQ41-KF2	1.11-X4		-BGS/R	4	&EFS=V1AR13UQ41UQ4+V1AR13UQ41UQ4/1.1	
	&EFS=V1AR13UQ41KF1+V1AR13UQ41KF1	=V1AR13UQ41/2.1+V1AR13UQ41-KF3	1.11-X4		-BGS/R	3	&EFS=V1AR13UQ41UQ4+V1AR13UQ41UQ4/1.0	

=V1AR13UQ41UQ3.1+.AR13UQ41UQ3.1/1

=V1AR13UQ41UQ5.1+.AR13UQ41UQ5.1/1

			Date	12/22/2022	Volvo Trucks North America	Valiant TMS	Cable diagram =V1AR13UQ41UQ4.1+V1AR13UQ41UQ4.1-W1	Drawing name: =2V04&EFS-EL	= V1AR13UQ41UQ4.1 + V1AR13UQ41UQ4.1
			Ed.	MKLEPADLO	P6700 Underbody Mainline - Cell 2V04				
			Appr					Document type: EMA	Project nr: 22-16151
Modification	Date	Name	Original		Replacement of / Replaced by	Scale 1:1			Page 1 / 1630

Cable diagram

F09_002_VLU

Cable name	-W1	cable type	TPE		
remark		no. of conductors	4	cross-section 18	cable length 2

function text	Page / column	Target designation from	Connection point	conductor	Target designation to	Connection point	Page / column	function text
	&EFS=V1AR13UQ41KF1+V1AR13UQ41KF1	=V1AR13UQ41/2.5+V1AR13UQ41-KF1	1.11-X5		-BGS/R	1	&EFS=V1AR13UQ41UQ5+V1AR13UQ41UQ5/1.0	
	&EFS=V1AR13UQ41KF1+V1AR13UQ41KF1	=V1AR13UQ41/2.5+V1AR13UQ41-KF2	1.11-X5		-BGS/R	2	&EFS=V1AR13UQ41UQ5+V1AR13UQ41UQ5/1.0	
	&EFS=V1AR13UQ41KF1+V1AR13UQ41KF1	=V1AR13UQ41/2.5+V1AR13UQ41-KF3	1.11-X5		-BGS/R	3	&EFS=V1AR13UQ41UQ5+V1AR13UQ41UQ5/1.1	
	&EFS=V1AR13UQ41KF1+V1AR13UQ41KF1	=V1AR13UQ41/2.5+V1AR13UQ41-KF4	1.11-X5		-BGS/R	4	&EFS=V1AR13UQ41UQ5+V1AR13UQ41UQ5/1.1	

=V1AR13UQ41UQ4.1+.AR13UQ41UQ4.1/1

=V1AR13UQ41UQ5.2+.AR13UQ41UQ5.2/1

			Date	12/22/2022	Volvo Trucks North America	Valiant TMS	Cable diagram =V1AR13UQ41UQ5.1+V1AR13UQ41UQ5.1-W1	Drawing name: =2V04&EFS-EL	= V1AR13UQ41UQ5.1 + V1AR13UQ41UQ5.1
			Ed.	MKLEPADLO	P6700 Underbody Mainline - Cell 2V04				
			Appr					Document type: EMA	Project nr: 22-16151
Modification	Date	Name	Original		Replacement of / Replaced by	Scale 1:1			Page 1 / 1630

Cable diagram

F09_002_VLU

Cable name -W1			cable type TPE					
remark			no. of conductors 4			cross-section 18		cable length 3
function text	Page / column	Target designation from	Connection point	conductor	Target designation to	Connection point	Page / column	function text
	&EFS=V1AR13UQ41KF1	=**V1AR13UQ41**/KF1.6+V1AR13UQ41-KF1	1.11-X6		-BGS/R	1	&EFS=V1AR13UQ41UQ5+V1AR13UQ41UQ5/1.2	
	&EFS=V1AR13UQ41KF1	=**V1AR13UQ41**/KF1.6+V1AR13UQ41-KF2	1.11-X6		-BGS/R	2	&EFS=V1AR13UQ41UQ5+V1AR13UQ41UQ5/1.2	
	&EFS=V1AR13UQ41KF1	=**V1AR13UQ41**/KF1.6+V1AR13UQ41-KF3	1.11-X6		-BGS/R	3	&EFS=V1AR13UQ41UQ5+V1AR13UQ41UQ5/1.2	
	&EFS=V1AR13UQ41KF1	=**V1AR13UQ41**/KF1.7+V1AR13UQ41-KF4	1.11-X6		-BGS/R	4	&EFS=V1AR13UQ41UQ5+V1AR13UQ41UQ5/1.2	

=V1AR13UQ41UQ5.1+.AR13UQ41UQ5.1/1

=V1AR13UQ41UQ6.1+.AR13UQ41UQ6.1/1

			Date	12/22/2022	Volvo Trucks North America	Valiant TMS	Cable diagram =V1AR13UQ41UQ5.2+V1AR13UQ41UQ5.2-W1	Drawing name: =2V04&EFS-EL	= V1AR13UQ41UQ5.2
			Ed.	MKLEPADLO					+ V1AR13UQ41UQ5.2
			Appr		P6700 Underbody Mainline - Cell 2V04			Document type: EMA	Project nr: 22-16151
Modification	Date	Name	Original		Replacement of	Replaced by	Scale 1:1		Page 1 / 1630

Cable diagram

F09_002_VLU

Cable name -W1			cable type TPE					
remark			no. of conductors 4			cross-section 18		cable length 2
function text	Page / column	Target designation from	Connection point	conductor	Target designation to	Connection point	Page / column	function text
	&EFS=V1AR13UQ41KF1	=**V1AR13UQ41**/K2.7+V1AR13UQ41-KF1	1.11-X7		-BGS/R	1	&EFS=V1AR13UQ41UQ6+V1AR13UQ41UQ6/1.0	
	&EFS=V1AR13UQ41KF1	=**V1AR13UQ41**/K2.7+V1AR13UQ41-KF2	1.11-X7		-BGS/R	2	&EFS=V1AR13UQ41UQ6+V1AR13UQ41UQ6/1.0	
	&EFS=V1AR13UQ41KF1	=**V1AR13UQ41**/K2.8+V1AR13UQ41-KF3	1.11-X7		-BGS/R	3	&EFS=V1AR13UQ41UQ6+V1AR13UQ41UQ6/1.1	
	&EFS=V1AR13UQ41KF1	=**V1AR13UQ41**/K2.8+V1AR13UQ41-KF4	1.11-X7		-BGS/R	4	&EFS=V1AR13UQ41UQ6+V1AR13UQ41UQ6/1.1	

			Date	12/22/2022	Volvo Trucks North America	Valiant TMS	Cable diagram =V1AR13UQ41UQ6.1+V1AR13UQ41UQ6.1-W1	Drawing name: =2V04&EFS-EL	= V1AR13UQ41UQ6.1
			Ed.	MKLEPADLO					+ V1AR13UQ41UQ6.1
			Appr		P6700 Underbody Mainline - Cell 2V04			Document type: EMA	Project nr: 22-16151
Modification	Date	Name	Original		Replacement of / Replaced by	Scale 1:1			Page 1 / 1630

Cable diagram

F09_002_VLU

Cable name -W1			cable type TPE					
remark			no. of conductors 4			cross-section 18		cable length 2
function text	Page / column	Target designation from	Connection point	conductor	Target designation to	Connection point	Page / column	function text
	&EFS=V1AR13UQ41KF1	=**V1AR13UQ41**/K2.8+V1AR13UQ41-KF1	1.11-X8		-BGS/R	1	&EFS=V1AR13UQ41UQ6+V1AR13UQ41UQ6/1.2	
	&EFS=V1AR13UQ41KF1	=**V1AR13UQ41**/K2.9+V1AR13UQ41-KF2	1.11-X8		-BGS/R	2	&EFS=V1AR13UQ41UQ6+V1AR13UQ41UQ6/1.2	
	&EFS=V1AR13UQ41KF1	=**V1AR13UQ41**/K2.9+V1AR13UQ41-KF3	1.11-X8		-BGS/R	3	&EFS=V1AR13UQ41UQ6+V1AR13UQ41UQ6/1.2	
	&EFS=V1AR13UQ41KF1	=**V1AR13UQ41**/K2.9+V1AR13UQ41-KF4	1.11-X8		-BGS/R	4	&EFS=V1AR13UQ41UQ6+V1AR13UQ41UQ6/1.2	

=V1AR13UQ41UQ6.1+.AR13UQ41UQ6.1/1

=V1AR13UQ41UQ7.1+.AR13UQ41UQ7.1/1

			Date	12/22/2022	Volvo Trucks North America	Valiant TMS	Cable diagram =V1AR13UQ41UQ6.2+V1AR13UQ41UQ6.2-W1	Drawing name: =2V04&EFS-EL	= V1AR13UQ41UQ6.2
			Ed.	MKLEPADLO					+ V1AR13UQ41UQ6.2
			Appr		P6700 Underbody Mainline - Cell 2V04			Document type: EMA	Project nr: 22-16151
Modification	Date	Name	Original		Replacement of	Replaced by	Scale 1:1		Page 1 / 1630

Cable diagram

F09_002_VLU

Cable name -W1			cable type TPE					
remark			no. of conductors 4			cross-section 18		cable length 2
function text	Page / column	Target designation from	Connection point	conductor	Target designation to	Connection point	Page / column	function text
	&EFS=V1AR13UQ41KF1+**=V1AR13UQ41/K3.0**+V1AR13UQ41-KF1		1.12-X1		-BGS/R	1	&EFS=V1AR13UQ41UQ7+V1AR13UQ41UQ7/1.0	
	&EFS=V1AR13UQ41KF1+**=V1AR13UQ41/K3.0**+V1AR13UQ41-KF2		1.12-X1		-BGS/R	2	&EFS=V1AR13UQ41UQ7+V1AR13UQ41UQ7/1.0	
	&EFS=V1AR13UQ41KF1+**=V1AR13UQ41/K3.1**+V1AR13UQ41-KF3		1.12-X1		-BGS/R	3	&EFS=V1AR13UQ41UQ7+V1AR13UQ41UQ7/1.1	
	&EFS=V1AR13UQ41KF1+**=V1AR13UQ41/K3.1**+V1AR13UQ41-KF4		1.12-X1		-BGS/R	4	&EFS=V1AR13UQ41UQ7+V1AR13UQ41UQ7/1.1	

			Date	12/22/2022	Volvo Trucks North America	Valiant TMS	Cable diagram =V1AR13UQ41UQ7.1+V1AR13UQ41UQ7.1-W1	Drawing name: =2V04&EFS-EL	= V1AR13UQ41UQ7.1
			Ed.	MKLEPADLO					+ V1AR13UQ41UQ7.1
			Appr		P6700 Underbody Mainline - Cell 2V04	Scale 1:1		Document type: EMA	Project nr: 22-16151
Modification	Date	Name	Original		Replacement of / Replaced by				Page 1 / 1630

Cable diagram

F09_002_VLU

Cable name -W1			cable type TPE					
remark			no. of conductors 4			cross-section 18		cable length 2
function text	Page / column	Target designation from	Connection point	conductor	Target designation to	Connection point	Page / column	function text
	&EFS=V1AR13UQ41KF1+	**=V1AR13UQ41/K3.1**+V1AR13UQ41-KF1	1.12-X2		-BGS/R	1	&EFS=V1AR13UQ41UQ7+V1AR13UQ41UQ7/1.2	
	&EFS=V1AR13UQ41KF1+	**=V1AR13UQ41/K3.2**+V1AR13UQ41-KF2	1.12-X2		-BGS/R	2	&EFS=V1AR13UQ41UQ7+V1AR13UQ41UQ7/1.2	
	&EFS=V1AR13UQ41KF1+	**=V1AR13UQ41/K3.2**+V1AR13UQ41-KF3	1.12-X2		-BGS/R	3	&EFS=V1AR13UQ41UQ7+V1AR13UQ41UQ7/1.2	
	&EFS=V1AR13UQ41KF1+	**=V1AR13UQ41/K3.2**+V1AR13UQ41-KF4	1.12-X2		-BGS/R	4	&EFS=V1AR13UQ41UQ7+V1AR13UQ41UQ7/1.2	

=V1AR13UQ41UQ7.1+.AR13UQ41UQ7.1/1

=V1AR13UQ41UQ8.1+.AR13UQ41UQ8.1/1

			Date	12/22/2022	Volvo Trucks North America	Valiant TMS	Cable diagram =V1AR13UQ41UQ7.2+V1AR13UQ41UQ7.2-W1	Drawing name: =2V04&EFS-EL	= V1AR13UQ41UQ7.2
			Ed.	MKLEPADLO					+ V1AR13UQ41UQ7.2
			Appr		P6700 Underbody Mainline - Cell 2V04			Document type: EMA	Project nr: 22-16151
Modification	Date	Name	Original		Replacement of	Replaced by	Scale 1:1		Page 1 / 1630

Cable diagram

F09_002_VLU

Cable name -W1			cable type TPE					
remark			no. of conductors 4			cross-section 18		cable length 1
function text	Page / column	Target designation from	Connection point	conductor	Target designation to	Connection point	Page / column	function text
	&EFS=V1AR13UQ41KF1	=**V1AR13UQ41**/KF1+V1AR13UQ41-KF1	1.12-X3		-BGS/R	1	&EFS=V1AR13UQ41UQ8+V1AR13UQ41UQ8/1.0	
	&EFS=V1AR13UQ41KF1	=**V1AR13UQ41**/KF1+V1AR13UQ41-KF2	1.12-X3		-BGS/R	2	&EFS=V1AR13UQ41UQ8+V1AR13UQ41UQ8/1.0	
	&EFS=V1AR13UQ41KF1	=**V1AR13UQ41**/KF1+V1AR13UQ41-KF3	1.12-X3		-BGS/R	3	&EFS=V1AR13UQ41UQ8+V1AR13UQ41UQ8/1.1	
	&EFS=V1AR13UQ41KF1	=**V1AR13UQ41**/KF1+V1AR13UQ41-KF4	1.12-X3		-BGS/R	4	&EFS=V1AR13UQ41UQ8+V1AR13UQ41UQ8/1.1	

			Date	12/22/2022	Volvo Trucks North America	Valiant TMS	Cable diagram =V1AR13UQ41UQ8.1+V1AR13UQ41UQ8.1-W1	Drawing name: =2V04&EFS-EL	= V1AR13UQ41UQ8.1
			Ed.	MKLEPADLO					+ V1AR13UQ41UQ8.1
			Appr		P6700 Underbody Mainline - Cell 2V04	Scale 1:1		Document type: EMA	Project nr: 22-16151
Modification	Date	Name	Original		Replacement of / Replaced by				Page 1 / 1630

Cable diagram

F09_002_VLU

Cable name -W1			cable type TPE					
remark			no. of conductors 4			cross-section 18		cable length 2
function text	Page / column	Target designation from	Connection point	conductor	Target designation to	Connection point	Page / column	function text
	&EFS=V1AR13UQ41KF1	=**V1AR13UQ41**/KF1+V1AR13UQ41-KF1	1.12-X4		-BGS/R	1	&EFS=V1AR13UQ41UQ8+V1AR13UQ41UQ8/1.2	
	&EFS=V1AR13UQ41KF1	=**V1AR13UQ41**/KF1+V1AR13UQ41-KF2	1.12-X4		-BGS/R	2	&EFS=V1AR13UQ41UQ8+V1AR13UQ41UQ8/1.2	
	&EFS=V1AR13UQ41KF1	=**V1AR13UQ41**/KF1+V1AR13UQ41-KF3	1.12-X4		-BGS/R	3	&EFS=V1AR13UQ41UQ8+V1AR13UQ41UQ8/1.2	
	&EFS=V1AR13UQ41KF1	=**V1AR13UQ41**/KF1+V1AR13UQ41-KF4	1.12-X4		-BGS/R	4	&EFS=V1AR13UQ41UQ8+V1AR13UQ41UQ8/1.2	

Cable diagram

F09_002_VLU

Cable name -W1			cable type TPE					
remark			no. of conductors 4			cross-section 18		cable length 2
function text	Page / column	Target designation from	Connection point	conductor	Target designation to	Connection point	Page / column	function text
	&EFS=V1AR13UQ41KF1	=V1AR13UQ41/K3.5+V1AR13UQ41-KF1	1.12-X5		-BGS/R	1	&EFS=V1AR13UQ41UQ9+V1AR13UQ41UQ9/1.0	
	&EFS=V1AR13UQ41KF1	=V1AR13UQ41/K3.5+V1AR13UQ41-KF2	1.12-X5		-BGS/R	2	&EFS=V1AR13UQ41UQ9+V1AR13UQ41UQ9/1.0	
	&EFS=V1AR13UQ41KF1	=V1AR13UQ41/K3.5+V1AR13UQ41-KF3	1.12-X5		-BGS/R	3	&EFS=V1AR13UQ41UQ9+V1AR13UQ41UQ9/1.1	
	&EFS=V1AR13UQ41KF1	=V1AR13UQ41/K3.5+V1AR13UQ41-KF4	1.12-X5		-BGS/R	4	&EFS=V1AR13UQ41UQ9+V1AR13UQ41UQ9/1.1	

=V1AR13UQ41UQ8.2+.AR13UQ41UQ8.2/1

=V1AR13UQ41UQ9.2+.AR13UQ41UQ9.2/1

			Date	12/22/2022	Volvo Trucks North America	Valiant TMS	Cable diagram =V1AR13UQ41UQ9.1+V1AR13UQ41UQ9.1-W1	Drawing name: =2V04&EFS-EL	= V1AR13UQ41UQ9.1
			Ed.	MKLEPADLO					+ V1AR13UQ41UQ9.1
			Appr		P6700 Underbody Mainline - Cell 2V04			Document type: EMA	Project nr: 22-16151
Modification	Date	Name	Original		Replacement of / Replaced by	Scale 1:1			Page 1 / 1630

Cable diagram

F09_002_VLU

Cable name -W1			cable type TPE					
remark			no. of conductors 4			cross-section 18		cable length 2
function text	Page / column	Target designation from	Connection point	conductor	Target designation to	Connection point	Page / column	function text
	&EFS=V1AR13UQ41KF1	=**V1AR13UQ41KF1**+V1AR13UQ41-KF1	1.12-X6		-BGS/R	1	&EFS=V1AR13UQ41UQ9+V1AR13UQ41UQ9/1.2	
	&EFS=V1AR13UQ41KF1	=**V1AR13UQ41KF1**+V1AR13UQ41-KF2	1.12-X6		-BGS/R	2	&EFS=V1AR13UQ41UQ9+V1AR13UQ41UQ9/1.2	
	&EFS=V1AR13UQ41KF1	=**V1AR13UQ41KF1**+V1AR13UQ41-KF3	1.12-X6		-BGS/R	3	&EFS=V1AR13UQ41UQ9+V1AR13UQ41UQ9/1.2	
	&EFS=V1AR13UQ41KF1	=**V1AR13UQ41KF1**+V1AR13UQ41-KF4	1.12-X6		-BGS/R	4	&EFS=V1AR13UQ41UQ9+V1AR13UQ41UQ9/1.2	

Cable diagram

F09_002_VLU

Cable name -W1			cable type TC-ER					
remark			no. of conductors 4			cross-section 10		cable length 15
function text	Page / column	Target designation from	Connection point	conductor	Target designation to	Connection point	Page / column	function text
	&EFS=V1WC2+.UC12/12.1	=V1AR13+UC12-FC1	2		-Q1	1	&EFS/1.3	
	&EFS=V1WC2+.UC12/12.1	=V1AR13+UC12-FC1	4		-Q1	3	&EFS/1.3	
	&EFS=V1WC2+.UC12/12.1	=V1AR13+UC12-FC1	6		-Q1	5	&EFS/1.3	
Power Distribution =V1AR13	&EFS=V1WC2+.UC12/12.2		PE		-PE		&EFS/1.4	

Cable diagram

F09_002_VLU

Cable name -KF100.15-P12			cable type PROFINET Cable					
remark			no. of conductors 4			cross-section 22		cable length
function text	Page / column	Target designation from	Connection point	conductor	Target designation to	Connection point	Page / column	function text
	&EFS/1.7	-XPN-X2			=V1KF1+UC15-KF100.15-P12		&EFS=V1KF1+.UC15/2.5	

=V1AR13WC1+.AR13UC01/1

=V1AR14UQ41BG0+.AR14UQ41/1

			Date	12/22/2022	Volvo Trucks North America	Valiant TMS	Cable diagram =V1AR14KF1+V1AR14UC01-KF100.15-P12	Drawing name: =2V04&EFS-EL	= V1AR14KF1
			Ed.	MKLEPADLO					+ V1AR14UC01
			Appr		P6700 Underbody Mainline - Cell 2V04			Document type: EMA	Project nr: 22-16151
Modification	Date	Name	Original		Replacement of / Replaced by	Scale 1:1			Page 1 / 1630

Cable diagram

F09_002_VLU

Cable name -W1			cable type TPE					
remark			no. of conductors 4			cross-section 18		cable length 2
function text	Page / column	Target designation from	Connection point	conductor	Target designation to	Connection point	Page / column	function text
	&EFS/1.0	-XG1/2	P1:1		=V1AR14UQ41KF1-KF1.13-X1	1	&EFS=V1AR14UQ41KF1/4.0	
	&EFS/1.1	-XG1/2	P1:3		=V1AR14UQ41KF1-KF1.13-X1	3	&EFS=V1AR14UQ41KF1/4.1	
	&EFS/1.1	-XG1/2	P1:4		=V1AR14UQ41KF1-KF1.13-X1	4	&EFS=V1AR14UQ41KF1/4.1	
	&EFS/1.1	-XG1/2	P1:2		=V1AR14UQ41KF1-KF1.13-X1	2	&EFS=V1AR14UQ41KF1/4.0	

			Date	12/22/2022	Volvo Trucks North America	Valiant TMS	Cable diagram =V1AR14UQ41BG0+V1AR14UQ41-W1	Drawing name: =2V04&EFS-EL	= V1AR14UQ41BG0
			Ed.	MKLEPADLO					+ V1AR14UQ41
			Appr		P6700 Underbody Mainline - Cell 2V04			Document type: EMA	Project nr: 22-16151 Page 1
Modification	Date	Name	Original		Replacement of / Replaced by	Scale 1:1			1630

Cable diagram

F09_002_VLU

Cable name -W1.1			cable type TPE					
remark			no. of conductors 4			cross-section 18		cable length 2
function text	Page / column	Target designation from	Connection point	conductor	Target designation to	Connection point	Page / column	function text
	&EFS/1.0	-BG01	1		-XG1/2	J1:1	&EFS/1.0	
	&EFS/1.0	-BG01	4		-XG1/2	J1:4	&EFS/1.1	
	&EFS/1.1	-BG01	3		-XG1/2	J1:3	&EFS/1.1	

			Date	12/22/2022	Volvo Trucks North America	Valiant TMS	Cable diagram =V1AR14UQ41BG0+V1AR14UQ41-W1.1	Drawing name: =2V04&EFS-EL	= V1AR14UQ41BG0
			Ed.	MKLEPADLO					+ V1AR14UQ41
			Appr		P6700 Underbody Mainline - Cell 2V04			Document type: EMA	Project nr: 22-16151
Modification	Date	Name	Original		Replacement of / Replaced by	Scale 1:1			Page 2 / 1630

Cable diagram

F09_002_VLU

Cable name -W1.2			cable type TPE					
remark			no. of conductors 4			cross-section 18		cable length 0.5
function text	Page / column	Target designation from	Connection point	conductor	Target designation to	Connection point	Page / column	function text
	&EFS/1.1	-BG02	1		-XG1/2	J2:1	&EFS/1.1	
	&EFS/1.1	-BG02	4		-XG1/2	J2:4	&EFS/1.2	
	&EFS/1.2	-BG02	3		-XG1/2	J2:3	&EFS/1.2	

			Date	12/22/2022	Volvo Trucks North America	Valiant TMS	Cable diagram =V1AR14UQ41BG0+V1AR14UQ41-W1.2	Drawing name: =2V04&EFS-EL	= V1AR14UQ41BG0
			Ed.	MKLEPADLO					+ V1AR14UQ41
			Appr		P6700 Underbody Mainline - Cell 2V04			Document type: EMA	Project nr: 22-16151
Modification	Date	Name	Original		Replacement of / Replaced by	Scale 1:1			Page 3 / 1630

Cable diagram

F09_002_VLU

Cable name -W1			cable type TPU					
remark			no. of conductors 5			cross-section 16		cable length 2
function text	Page / column	Target designation from	Connection point	conductor	Target designation to	Connection point	Page / column	function text
	&EFS/2.2	-KF1-X20	5		-R3.CP/CS	C4	&EFS/1.3	
	&EFS/2.1	-KF1-X20	1		-R3.CP/CS	C5	&EFS/1.3	
	&EFS/2.1	-KF1-X20	3		-R3.CP/CS	PE	&EFS/1.3	
	&EFS/2.2	-KF1-X20	4		-R3.CP/CS	C6	&EFS/1.3	
	&EFS/2.1	-KF1-X20	2		-R3.CP/CS	C7	&EFS/1.4	

			Date	12/22/2022	Volvo Trucks North America	Valiant TMS	Cable diagram =V1AR14UQ41KF1+V1AR14UQ41-W1	Drawing name: =2V04&EFS-EL	= V1AR14UQ41KF1
			Ed.	MKLEPADLO					+ V1AR14UQ41
			Appr		P6700 Underbody Mainline - Cell 2V04			Document type: EMA	Project nr: 22-16151
Modification	Date	Name	Original		Replacement of / Replaced by	Scale 1:1			Page 1 / 1630

Cable diagram

F09_002_VLU

Cable name -WF1			cable type PROFINET Cable					
remark			no. of conductors 4			cross-section 22		cable length
function text	Page / column	Target designation from	Connection point	conductor	Target designation to	Connection point	Page / column	function text
	&EFS/2.3	-KF1-TP1			-R3.CP/CS	R3.PROFINET	&EFS/1.5	

			Date	12/22/2022	Volvo Trucks North America	Valiant TMS	Cable diagram =V1AR14UQ41KF1+V1AR14UQ41-WF1	Drawing name: =2V04&EFS-EL	= V1AR14UQ41KF1
			Ed.	MKLEPADLO					+ V1AR14UQ41
			Appr		P6700 Underbody Mainline - Cell 2V04			Document type: EMA	Project nr: 22-16151
Modification	Date	Name	Original		Replacement of / Replaced by	Scale 1:1			Page 2 / 1630

Cable diagram

F09_002_VLU

Cable name -W1			cable type TPE					
remark			no. of conductors 4			cross-section 18		cable length 2
function text	Page / column	Target designation from	Connection point	conductor	Target designation to	Connection point	Page / column	function text
	&EFS=V1AR14UQ41KF1	=**V1AR14UQ41KF1**+V1AR14UQ41-KF1	1.11-X1		-BGS/R	1	&EFS=V1AR14UQ41UQ1+V1AR14UQ41UQ1/1.0	
	&EFS=V1AR14UQ41KF1	=**V1AR14UQ41KF1**+V1AR14UQ41-KF2	1.11-X1		-BGS/R	4	&EFS=V1AR14UQ41UQ1+V1AR14UQ41UQ1/1.1	
	&EFS=V1AR14UQ41KF1	=**V1AR14UQ41KF1**+V1AR14UQ41-KF3	1.11-X1		-BGS/R	3	&EFS=V1AR14UQ41UQ1+V1AR14UQ41UQ1/1.0	

=V1AR14UQ41KF1+V1AR14UQ41/2

=V1AR14UQ41UQ2.1+.AR14UQ41UQ2.1/1

			Date	12/22/2022	Volvo Trucks North America	Valiant TMS	Cable diagram =V1AR14UQ41UQ1.1+V1AR14UQ41UQ1.1-W1	Drawing name: =2V04&EFS-EL	= V1AR14UQ41UQ1.1
			Ed.	MKLEPADLO					+ V1AR14UQ41UQ1.1
			Appr		P6700 Underbody Mainline - Cell 2V04			Document type: EMA	Project nr: 22-16151
Modification	Date	Name	Original		Replacement of / Replaced by	Scale 1:1			Page 1 / 1630

Cable diagram

F09_002_VLU

Cable name -W1			cable type TPE					
remark			no. of conductors 4			cross-section 18		cable length 2
function text	Page / column	Target designation from	Connection point	conductor	Target designation to	Connection point	Page / column	function text
	&EFS=V1AR14UQ41KF1	=**V1AR14UQ41KF1**.1+V1AR14UQ41-KF1	1.11-X2		-BGS/R	1	&EFS=V1AR14UQ41UQ2+V1AR14UQ41UQ2/1.0	
	&EFS=V1AR14UQ41KF1	=**V1AR14UQ41KF1**.2+V1AR14UQ41-KF2	1.11-X2		-BGS/R	4	&EFS=V1AR14UQ41UQ2+V1AR14UQ41UQ2/1.1	
	&EFS=V1AR14UQ41KF1	=**V1AR14UQ41KF1**.3+V1AR14UQ41-KF3	1.11-X2		-BGS/R	3	&EFS=V1AR14UQ41UQ2+V1AR14UQ41UQ2/1.0	

=V1AR14UQ41UQ1.1+.AR14UQ41UQ1.1/1

=V1AR14UQ41UQ3.1+.AR14UQ41UQ3.1/1

			Date	12/22/2022	Volvo Trucks North America	Valiant TMS	Cable diagram =V1AR14UQ41UQ2.1+V1AR14UQ41UQ2.1-W1	Drawing name: =2V04&EFS-EL	= V1AR14UQ41UQ2.1
			Ed.	MKLEPADLO					+ V1AR14UQ41UQ2.1
			Appr		P6700 Underbody Mainline - Cell 2V04			Document type: EMA	Project nr: 22-16151
Modification	Date	Name	Original		Replacement of / Replaced by	Scale 1:1			Page 1 / 1630

Cable diagram

F09_002_VLU

Cable name -W1			cable type TPE					
remark			no. of conductors 4			cross-section 18		cable length 2
function text	Page / column	Target designation from	Connection point	conductor	Target designation to	Connection point	Page / column	function text
	&EFS=V1AR14UQ41KF1	=**V1AR14UQ41**/KF1:3+V1AR14UQ41-KF1	1.11-X3		-BGS/R	1	&EFS=V1AR14UQ41UQ3+V1AR14UQ41UQ3/1.0	
	&EFS=V1AR14UQ41KF1	=**V1AR14UQ41**/KF1:4+V1AR14UQ41-KF1	1.11-X3		-BGS/R	4	&EFS=V1AR14UQ41UQ3+V1AR14UQ41UQ3/1.1	
	&EFS=V1AR14UQ41KF1	=**V1AR14UQ41**/KF1:3+V1AR14UQ41-KF1	1.11-X3		-BGS/R	3	&EFS=V1AR14UQ41UQ3+V1AR14UQ41UQ3/1.0	

			Date	12/22/2022	Volvo Trucks North America	Valiant TMS	Cable diagram =V1AR14UQ41UQ3.1+V1AR14UQ41UQ3.1-W1	Drawing name: =2V04&EFS-EL	= V1AR14UQ41UQ3.1
			Ed.	MKLEPADLO					+ V1AR14UQ41UQ3.1
			Appr		P6700 Underbody Mainline - Cell 2V04			Document type: EMA	Project nr: 22-16151
Modification	Date	Name	Original		Replacement of / Replaced by	Scale 1:1			Page 1 / 1630

Cable diagram

F09_002_VLU

Cable name	-W1	cable type	TPE		
remark		no. of conductors	4	cross-section 18	cable length 2

function text	Page / column	Target designation from	Connection point	conductor	Target designation to	Connection point	Page / column	function text
	&EFS=V1AR14UQ41KF1+V1AR14UQ41/KF1	=V1AR14UQ41/KF1+V1AR14UQ41-KF1.11-X4	1		-BGS/R	1	&EFS=V1AR14UQ41UQ4+V1AR14UQ41UQ4/1.0	
	&EFS=V1AR14UQ41KF1+V1AR14UQ41/KF1	=V1AR14UQ41/KF1+V1AR14UQ41-KF1.11-X4	2		-BGS/R	4	&EFS=V1AR14UQ41UQ4+V1AR14UQ41UQ4/1.1	
	&EFS=V1AR14UQ41KF1+V1AR14UQ41/KF1	=V1AR14UQ41/KF1+V1AR14UQ41-KF1.11-X4	3		-BGS/R	3	&EFS=V1AR14UQ41UQ4+V1AR14UQ41UQ4/1.0	

=V1AR14UQ41UQ3.1+.AR14UQ41UQ3.1/1

=V1AR14UQ41UQ5.1+.AR14UQ41UQ5.1/1

			Date	12/22/2022	Volvo Trucks North America	Valiant TMS	Cable diagram =V1AR14UQ41UQ4.1+V1AR14UQ41UQ4.1-W1	Drawing name: =2V04&EFS-EL	= V1AR14UQ41UQ4.1 + V1AR14UQ41UQ4.1
			Ed.	MKLEPADLO	P6700 Underbody Mainline - Cell 2V04				
			Appr					Document type: EMA	Project nr: 22-16151
Modification	Date	Name	Original		Replacement of / Replaced by	Scale 1:1			Page 1 / 1630

Cable diagram

F09_002_VLU

Cable name -W1			cable type TPE					
remark			no. of conductors 4			cross-section 18		cable length 3
function text	Page / column	Target designation from	Connection point	conductor	Target designation to	Connection point	Page / column	function text
	&EFS=V1AR14UQ41KF1	=**V1AR14UQ41/KF1**+V1AR14UQ41-KF1	1		1.11-X5	-BGS/R	1	&EFS=V1AR14UQ41UQ5+V1AR14UQ41UQ5/1.0
	&EFS=V1AR14UQ41KF1	=**V1AR14UQ41/KF1**+V1AR14UQ41-KF2	1		1.11-X5	-BGS/R	2	&EFS=V1AR14UQ41UQ5+V1AR14UQ41UQ5/1.0
	&EFS=V1AR14UQ41KF1	=**V1AR14UQ41/KF1**+V1AR14UQ41-KF3	1		1.11-X5	-BGS/R	3	&EFS=V1AR14UQ41UQ5+V1AR14UQ41UQ5/1.1
	&EFS=V1AR14UQ41KF1	=**V1AR14UQ41/KF1**+V1AR14UQ41-KF4	1		1.11-X5	-BGS/R	4	&EFS=V1AR14UQ41UQ5+V1AR14UQ41UQ5/1.1

=V1AR14UQ41UQ4.1+.AR14UQ41UQ4.1/1

=V1AR14UQ41UQ5.2+.AR14UQ41UQ5.2/1

			Date	12/22/2022	Volvo Trucks North America	Valiant TMS	Cable diagram =V1AR14UQ41UQ5.1+V1AR14UQ41UQ5.1-W1	Drawing name: =2V04&EFS-EL	= V1AR14UQ41UQ5.1
			Ed.	MKLEPADLO					+ V1AR14UQ41UQ5.1
			Appr		P6700 Underbody Mainline - Cell 2V04	Scale 1:1		Document type: EMA	Project nr: 22-16151
Modification	Date	Name	Original		Replacement of	Replaced by			Page 1 / 1630

Cable diagram

F09_002_VLU

Cable name -W1			cable type TPE					
remark			no. of conductors 4			cross-section 18		cable length 3
function text	Page / column	Target designation from	Connection point	conductor	Target designation to	Connection point	Page / column	function text
	&EFS=V1AR14UQ41KF1	=**V1AR14UQ41/K2.6**+V1AR14UQ41-KF1	1.11-X6		-BGS/R	1	&EFS=V1AR14UQ41UQ5+V1AR14UQ41UQ5/1.2	
	&EFS=V1AR14UQ41KF1	=**V1AR14UQ41/K2.6**+V1AR14UQ41-KF2	1.11-X6		-BGS/R	2	&EFS=V1AR14UQ41UQ5+V1AR14UQ41UQ5/1.2	
	&EFS=V1AR14UQ41KF1	=**V1AR14UQ41/K2.6**+V1AR14UQ41-KF3	1.11-X6		-BGS/R	3	&EFS=V1AR14UQ41UQ5+V1AR14UQ41UQ5/1.2	
	&EFS=V1AR14UQ41KF1	=**V1AR14UQ41/K2.7**+V1AR14UQ41-KF4	1.11-X6		-BGS/R	4	&EFS=V1AR14UQ41UQ5+V1AR14UQ41UQ5/1.2	

=V1AR14UQ41UQ5.1+.AR14UQ41UQ5.1/1

=V1AR14UQ41UQ6.1+.AR14UQ41UQ6.1/1

			Date	12/22/2022	Volvo Trucks North America	Valiant TMS	Cable diagram =V1AR14UQ41UQ5.2+V1AR14UQ41UQ5.2-W1	Drawing name: =2V04&EFS-EL	= V1AR14UQ41UQ5.2
			Ed.	MKLEPADLO					+ V1AR14UQ41UQ5.2
			Appr		P6700 Underbody Mainline - Cell 2V04			Document type: EMA	Project nr: 22-16151
Modification	Date	Name	Original		Replacement of / Replaced by	Scale 1:1			Page 1 / 1630

Cable diagram

F09_002_VLU

Cable name	-W1	cable type	TPE		
remark		no. of conductors	4	cross-section 18	cable length 2

function text	Page / column	Target designation from	Connection point	conductor	Target designation to	Connection point	Page / column	function text
	&EFS=V1AR14UQ41KF1+V1AR14UQ41KF1	=V1AR14UQ41/K7.1+V1AR14UQ41-KF1	1.11-X7		-BGS/R	1	&EFS=V1AR14UQ41UQ6+V1AR14UQ41UQ6/1.0	
	&EFS=V1AR14UQ41KF1+V1AR14UQ41KF1	=V1AR14UQ41/K7.1+V1AR14UQ41-KF2	1.11-X7		-BGS/R	2	&EFS=V1AR14UQ41UQ6+V1AR14UQ41UQ6/1.0	
	&EFS=V1AR14UQ41KF1+V1AR14UQ41KF1	=V1AR14UQ41/K7.1+V1AR14UQ41-KF3	1.11-X7		-BGS/R	3	&EFS=V1AR14UQ41UQ6+V1AR14UQ41UQ6/1.1	
	&EFS=V1AR14UQ41KF1+V1AR14UQ41KF1	=V1AR14UQ41/K7.1+V1AR14UQ41-KF4	1.11-X7		-BGS/R	4	&EFS=V1AR14UQ41UQ6+V1AR14UQ41UQ6/1.1	

=V1AR14UQ41UQ5.2+.AR14UQ41UQ5.2/1

=V1AR14UQ41UQ6.2+.AR14UQ41UQ6.2/1

			Date	12/22/2022	Volvo Trucks North America	Valiant TMS	Cable diagram =V1AR14UQ41UQ6.1+V1AR14UQ41UQ6.1-W1	Drawing name: =2V04&EFS-EL	= V1AR14UQ41UQ6.1 + V1AR14UQ41UQ6.1
			Ed.	MKLEPADLO	P6700 Underbody Mainline - Cell 2V04				
			Appr					Document type: EMA	Project nr: 22-16151
Modification	Date	Name	Original		Replacement of / Replaced by	Scale 1:1			Page 1 / 1630

Cable diagram

F09_002_VLU

Cable name	-W1	cable type	TPE		
remark		no. of conductors	4	cross-section 18	cable length 2

function text	Page / column	Target designation from	Connection point	conductor	Target designation to	Connection point	Page / column	function text
	&EFS=V1AR14UQ41KF1+V1AR14UQ41KF1.8	=V1AR14UQ41KF1+V1AR14UQ41-KF1.11-X8	1		-BGS/R	1	&EFS=V1AR14UQ41UQ6+V1AR14UQ41UQ6/1.2	
	&EFS=V1AR14UQ41KF1+V1AR14UQ41KF1.9	=V1AR14UQ41KF1+V1AR14UQ41-KF1.11-X8	2		-BGS/R	2	&EFS=V1AR14UQ41UQ6+V1AR14UQ41UQ6/1.2	
	&EFS=V1AR14UQ41KF1+V1AR14UQ41KF1.9	=V1AR14UQ41KF1+V1AR14UQ41-KF1.11-X8	3		-BGS/R	3	&EFS=V1AR14UQ41UQ6+V1AR14UQ41UQ6/1.2	
	&EFS=V1AR14UQ41KF1+V1AR14UQ41KF1.9	=V1AR14UQ41KF1+V1AR14UQ41-KF1.11-X8	4		-BGS/R	4	&EFS=V1AR14UQ41UQ6+V1AR14UQ41UQ6/1.2	

=V1AR14UQ41UQ6.1+.AR14UQ41UQ6.1/1

=V1AR14UQ41UQ7.1+.AR14UQ41UQ7.1/1

			Date	12/22/2022	Volvo Trucks North America	Valiant TMS	Cable diagram =V1AR14UQ41UQ6.2+V1AR14UQ41UQ6.2-W1	Drawing name: =2V04&EFS-EL	= V1AR14UQ41UQ6.2 + V1AR14UQ41UQ6.2
			Ed.	MKLEPADLO	P6700 Underbody Mainline - Cell 2V04				
			Appr					Document type: EMA	Project nr: 22-16151
Modification	Date	Name	Original		Replacement of / Replaced by	Scale 1:1			Page 1 / 1630

Cable diagram

F09_002_VLU

Cable name -W1			cable type TPE					
remark			no. of conductors 4			cross-section 18		cable length 1
function text	Page / column	Target designation from	Connection point	conductor	Target designation to	Connection point	Page / column	function text
	&EFS=V1AR14UQ41KF1	=**V1AR14UQ41/K3.0**+V1AR14UQ41-KF1	1.12-X1		-BGS/R	1	&EFS=V1AR14UQ41UQ7+V1AR14UQ41UQ7/1.0	
	&EFS=V1AR14UQ41KF1	=**V1AR14UQ41/K3.0**+V1AR14UQ41-KF2	1.12-X1		-BGS/R	2	&EFS=V1AR14UQ41UQ7+V1AR14UQ41UQ7/1.0	
	&EFS=V1AR14UQ41KF1	=**V1AR14UQ41/K3.1**+V1AR14UQ41-KF3	1.12-X1		-BGS/R	3	&EFS=V1AR14UQ41UQ7+V1AR14UQ41UQ7/1.1	
	&EFS=V1AR14UQ41KF1	=**V1AR14UQ41/K3.1**+V1AR14UQ41-KF4	1.12-X1		-BGS/R	4	&EFS=V1AR14UQ41UQ7+V1AR14UQ41UQ7/1.1	

Cable diagram

F09_002_VLU

Cable name -W1			cable type TPE					
remark			no. of conductors 4			cross-section 18		cable length 1
function text	Page / column	Target designation from	Connection point	conductor	Target designation to	Connection point	Page / column	function text
	&EFS=V1AR14UQ41KF1	=**V1AR14UQ41KF1**+V1AR14UQ41-KF1	1.12-X2		-BGS/R	1	&EFS=V1AR14UQ41UQ7+V1AR14UQ41UQ7/1.2	
	&EFS=V1AR14UQ41KF1	=**V1AR14UQ41KF1**+V1AR14UQ41-KF2	1.12-X2		-BGS/R	2	&EFS=V1AR14UQ41UQ7+V1AR14UQ41UQ7/1.2	
	&EFS=V1AR14UQ41KF1	=**V1AR14UQ41KF1**+V1AR14UQ41-KF3	1.12-X2		-BGS/R	3	&EFS=V1AR14UQ41UQ7+V1AR14UQ41UQ7/1.2	
	&EFS=V1AR14UQ41KF1	=**V1AR14UQ41KF1**+V1AR14UQ41-KF4	1.12-X2		-BGS/R	4	&EFS=V1AR14UQ41UQ7+V1AR14UQ41UQ7/1.2	

Cable diagram

F09_002_VLU

Cable name -W1			cable type TPE					
remark			no. of conductors 4			cross-section 18		cable length 2
function text	Page / column	Target designation from	Connection point	conductor	Target designation to	Connection point	Page / column	function text
	&EFS=V1AR14UQ41KF1+V1AR14UQ41/KF.3	=V1AR14UQ41/KF.3+V1AR14UQ41-KF1	1.12-X3		-BGS/R	1	&EFS=V1AR14UQ41UQ8+V1AR14UQ41UQ8/1.0	
	&EFS=V1AR14UQ41KF1+V1AR14UQ41/KF.3	=V1AR14UQ41/KF.3+V1AR14UQ41-KF2	1.12-X3		-BGS/R	2	&EFS=V1AR14UQ41UQ8+V1AR14UQ41UQ8/1.0	
	&EFS=V1AR14UQ41KF1+V1AR14UQ41/KF.3	=V1AR14UQ41/KF.3+V1AR14UQ41-KF3	1.12-X3		-BGS/R	3	&EFS=V1AR14UQ41UQ8+V1AR14UQ41UQ8/1.1	
	&EFS=V1AR14UQ41KF1+V1AR14UQ41/KF.3	=V1AR14UQ41/KF.3+V1AR14UQ41-KF4	1.12-X3		-BGS/R	4	&EFS=V1AR14UQ41UQ8+V1AR14UQ41UQ8/1.1	

=V1AR14UQ41UQ7.2+.AR14UQ41UQ7.2/1

=V1AR14UQ41UQ8.2+.AR14UQ41UQ8.2/1

			Date	12/22/2022	Volvo Trucks North America	Valiant TMS	Cable diagram =V1AR14UQ41UQ8.1+V1AR14UQ41UQ8.1-W1	Drawing name: =2V04&EFS-EL	= V1AR14UQ41UQ8.1 + V1AR14UQ41UQ8.1
			Ed.	MKLEPADLO	P6700 Underbody Mainline - Cell 2V04				
			Appr					Document type: EMA	Project nr: 22-16151
Modification	Date	Name	Original		Replacement of / Replaced by	Scale 1:1			Page 1 / 1630

Cable diagram

F09_002_VLU

Cable name -W1			cable type TPE					
remark			no. of conductors 4			cross-section 18		cable length 2
function text	Page / column	Target designation from	Connection point	conductor	Target designation to	Connection point	Page / column	function text
	&EFS=V1AR14UQ41KF1	=**V1AR14UQ41KF1**+V1AR14UQ41-KF1	1.12-X4		-BGS/R	1	&EFS=V1AR14UQ41UQ8+V1AR14UQ41UQ8/1.2	
	&EFS=V1AR14UQ41KF1	=**V1AR14UQ41KF1**+V1AR14UQ41-KF2	1.12-X4		-BGS/R	2	&EFS=V1AR14UQ41UQ8+V1AR14UQ41UQ8/1.2	
	&EFS=V1AR14UQ41KF1	=**V1AR14UQ41KF1**+V1AR14UQ41-KF3	1.12-X4		-BGS/R	3	&EFS=V1AR14UQ41UQ8+V1AR14UQ41UQ8/1.2	
	&EFS=V1AR14UQ41KF1	=**V1AR14UQ41KF1**+V1AR14UQ41-KF4	1.12-X4		-BGS/R	4	&EFS=V1AR14UQ41UQ8+V1AR14UQ41UQ8/1.2	

Cable diagram

F09_002_VLU

Cable name -W1			cable type TPE					
remark			no. of conductors 4			cross-section 18		cable length 2
function text	Page / column	Target designation from	Connection point	conductor	Target designation to	Connection point	Page / column	function text
	&EFS=V1AR14UQ41KF1	=**V1AR14UQ41KF1**+V1AR14UQ41-KF1	1.12-X5		-BGS/R	1	&EFS=V1AR14UQ41UQ9+V1AR14UQ41UQ9/1.0	
	&EFS=V1AR14UQ41KF1	=**V1AR14UQ41KF1**+V1AR14UQ41-KF2	1.12-X5		-BGS/R	2	&EFS=V1AR14UQ41UQ9+V1AR14UQ41UQ9/1.0	
	&EFS=V1AR14UQ41KF1	=**V1AR14UQ41KF1**+V1AR14UQ41-KF3	1.12-X5		-BGS/R	3	&EFS=V1AR14UQ41UQ9+V1AR14UQ41UQ9/1.1	
	&EFS=V1AR14UQ41KF1	=**V1AR14UQ41KF1**+V1AR14UQ41-KF4	1.12-X5		-BGS/R	4	&EFS=V1AR14UQ41UQ9+V1AR14UQ41UQ9/1.1	

Cable diagram

F09_002_VLU

Cable name -W1			cable type TPE					
remark			no. of conductors 4			cross-section 18		cable length 2
function text	Page / column	Target designation from	Connection point	conductor	Target designation to	Connection point	Page / column	function text
	&EFS=V1AR14UQ41KF1	=**V1AR14UQ41KF1**+V1AR14UQ41-KF1	1.12-X6		-BGS/R	1	&EFS=V1AR14UQ41UQ9+V1AR14UQ41UQ9/1.2	
	&EFS=V1AR14UQ41KF1	=**V1AR14UQ41KF1**+V1AR14UQ41-KF2	1.12-X6		-BGS/R	2	&EFS=V1AR14UQ41UQ9+V1AR14UQ41UQ9/1.2	
	&EFS=V1AR14UQ41KF1	=**V1AR14UQ41KF1**+V1AR14UQ41-KF3	1.12-X6		-BGS/R	3	&EFS=V1AR14UQ41UQ9+V1AR14UQ41UQ9/1.2	
	&EFS=V1AR14UQ41KF1	=**V1AR14UQ41KF1**+V1AR14UQ41-KF4	1.12-X6		-BGS/R	4	&EFS=V1AR14UQ41UQ9+V1AR14UQ41UQ9/1.2	

			Date	12/22/2022	Volvo Trucks North America	Valiant TMS	Cable diagram =V1AR14UQ41UQ9.2+V1AR14UQ41UQ9.2-W1	Drawing name: =2V04&EFS-EL	= V1AR14UQ41UQ9.2
			Ed.	MKLEPADLO					+ V1AR14UQ41UQ9.2
			Appr		P6700 Underbody Mainline - Cell 2V04			Document type: EMA	Project nr: 22-16151
Modification	Date	Name	Original		Replacement of / Replaced by	Scale 1:1			Page 1 / 1630

Cable diagram

F09_002_VLU

Cable name -W1			cable type TC-ER					
remark			no. of conductors 4			cross-section 10		cable length 17
function text	Page / column	Target designation from	Connection point	conductor	Target designation to	Connection point	Page / column	function text
	&EFS=V1WC2+.UC12/12.3	=V1AR14+UC12-FC1	2		-Q1	1	&EFS/1.3	
	&EFS=V1WC2+.UC12/12.3	=V1AR14+UC12-FC1	4		-Q1	3	&EFS/1.3	
	&EFS=V1WC2+.UC12/12.3	=V1AR14+UC12-FC1	6		-Q1	5	&EFS/1.3	
Power Distribution =V1AR14	&EFS=V1WC2+.UC12/12.4		PE		-PE		&EFS/1.4	

Cable diagram

F09_002_VLU

Cable name -KF100.14-P8			cable type PROFINET Cable					
remark			no. of conductors 4			cross-section 22		cable length
function text	Page / column	Target designation from	Connection point	conductor	Target designation to	Connection point	Page / column	function text
	&EFS/1.7	-XPN-X2			=V1KF1+UC14-KF100.14-P8		&EFS=V1KF1+.UC14/2.5	

=V1AR14WC1+.AR14UC01/1

=V1AR15UQ41BG0+.AR15UQ41/1

			Date	12/22/2022	Volvo Trucks North America	Valiant TMS	Cable diagram =V1AR15KF1+V1AR15UC01-KF100.14-P8	Drawing name: =2V04&EFS-EL	= V1AR15KF1
			Ed.	MKLEPADLO					+ V1AR15UC01
			Appr		P6700 Underbody Mainline - Cell 2V04			Document type: EMA	Project nr: 22-16151
Modification	Date	Name	Original		Replacement of / Replaced by	Scale 1:1			Page 1 / 1630

Cable diagram

F09_002_VLU

Cable name -W1			cable type TPE					
remark			no. of conductors 4			cross-section 18		cable length 2
function text	Page / column	Target designation from	Connection point	conductor	Target designation to	Connection point	Page / column	function text
	&EFS/1.0	-XG1/2	P1:1		=V1AR15UQ41KF1-KF1.13-X1	1	&EFS=V1AR15UQ41KF1/4.0	
	&EFS/1.1	-XG1/2	P1:3		=V1AR15UQ41KF1-KF1.13-X1	3	&EFS=V1AR15UQ41KF1/4.1	
	&EFS/1.1	-XG1/2	P1:4		=V1AR15UQ41KF1-KF1.13-X1	4	&EFS=V1AR15UQ41KF1/4.1	
	&EFS/1.1	-XG1/2	P1:2		=V1AR15UQ41KF1-KF1.13-X1	2	&EFS=V1AR15UQ41KF1/4.0	

			Date	12/22/2022	Volvo Trucks North America	Valiant TMS	Cable diagram =V1AR15UQ41BG0+V1AR15UQ41-W1	Drawing name: =2V04&EFS-EL	= V1AR15UQ41BG0
			Ed.	MKLEPADLO					+ V1AR15UQ41
			Appr		P6700 Underbody Mainline - Cell 2V04			Document type: EMA	Project nr: 22-16151
Modification	Date	Name	Original		Replacement of / Replaced by	Scale 1:1			Page 1 / 1630

Cable diagram

F09_002_VLU

Cable name -W1.1			cable type TPE					
remark			no. of conductors 4			cross-section 18		cable length 2
function text	Page / column	Target designation from	Connection point	conductor	Target designation to	Connection point	Page / column	function text
	&EFS/1.0	-BG01	1		-XG1/2	J1:1	&EFS/1.0	
	&EFS/1.0	-BG01	4		-XG1/2	J1:4	&EFS/1.1	
	&EFS/1.1	-BG01	3		-XG1/2	J1:3	&EFS/1.1	

			Date	12/22/2022	Volvo Trucks North America	Valiant TMS	Cable diagram =V1AR15UQ41BG0+V1AR15UQ41-W1.1	Drawing name: =2V04&EFS-EL	= V1AR15UQ41BG0
			Ed.	MKLEPADLO					+ V1AR15UQ41
			Appr		P6700 Underbody Mainline - Cell 2V04			Document type: EMA	Project nr: 22-16151
Modification	Date	Name	Original		Replacement of / Replaced by	Scale 1:1			Page 2 / 1630

Cable diagram

F09_002_VLU

Cable name -W1.2			cable type TPE					
remark			no. of conductors 4			cross-section 18		cable length 0.5
function text	Page / column	Target designation from	Connection point	conductor	Target designation to	Connection point	Page / column	function text
	&EFS/1.1	-BG02	1		-XG1/2	J2:1	&EFS/1.1	
	&EFS/1.1	-BG02	4		-XG1/2	J2:4	&EFS/1.2	
	&EFS/1.2	-BG02	3		-XG1/2	J2:3	&EFS/1.2	

			Date	12/22/2022	Volvo Trucks North America	Valiant TMS	Cable diagram =V1AR15UQ41BG0+V1AR15UQ41-W1.2	Drawing name: =2V04&EFS-EL	= V1AR15UQ41BG0
			Ed.	MKLEPADLO					+ V1AR15UQ41
			Appr		P6700 Underbody Mainline - Cell 2V04			Document type: EMA	Project nr: 22-16151
Modification	Date	Name	Original		Replacement of / Replaced by	Scale 1:1			Page 3 / 1630

Cable diagram

F09_002_VLU

Cable name -W1			cable type TPU					
remark			no. of conductors 5			cross-section 16		cable length 2
function text	Page / column	Target designation from	Connection point	conductor	Target designation to	Connection point	Page / column	function text
	&EFS/2.2	-KF1-X20	5		-R3.CP/CS	C4	&EFS/1.3	
	&EFS/2.1	-KF1-X20	1		-R3.CP/CS	C5	&EFS/1.3	
	&EFS/2.1	-KF1-X20	3		-R3.CP/CS	PE	&EFS/1.3	
	&EFS/2.2	-KF1-X20	4		-R3.CP/CS	C6	&EFS/1.3	
	&EFS/2.1	-KF1-X20	2		-R3.CP/CS	C7	&EFS/1.4	

			Date	12/22/2022	Volvo Trucks North America	Valiant TMS	Cable diagram =V1AR15UQ41KF1+V1AR15UQ41-W1	Drawing name: =2V04&EFS-EL	= V1AR15UQ41KF1
			Ed.	MKLEPADLO					+ V1AR15UQ41
			Appr		P6700 Underbody Mainline - Cell 2V04			Document type: EMA	Project nr: 22-16151
Modification	Date	Name	Original		Replacement of / Replaced by	Scale 1:1			Page 1 / 1630

Cable diagram

F09_002_VLU

Cable name -WF1			cable type PROFINET Cable					
remark			no. of conductors 4			cross-section 22		cable length
function text	Page / column	Target designation from	Connection point	conductor	Target designation to	Connection point	Page / column	function text
	&EFS/2.3	-KF1-TP1			-R3.CP/CS	R3.PROFINET	&EFS/1.5	

			Date	12/22/2022	Volvo Trucks North America	Valiant TMS	Cable diagram =V1AR15UQ41KF1+V1AR15UQ41-WF1	Drawing name: =2V04&EFS-EL	= V1AR15UQ41KF1
			Ed.	MKLEPADLO					+ V1AR15UQ41
			Appr		P6700 Underbody Mainline - Cell 2V04			Document type: EMA	Project nr: 22-16151
Modification	Date	Name	Original		Replacement of / Replaced by	Scale 1:1			Page 2 / 1630

Cable diagram

F09_002_VLU

Cable name -W1			cable type TPE					
remark			no. of conductors 4			cross-section 18		cable length 2
function text	Page / column	Target designation from	Connection point	conductor	Target designation to	Connection point	Page / column	function text
	&EFS=V1AR15UQ41KF1	=**V1AR15UQ41**/KF1:0+V1AR15UQ41-KF1	1.11-X1		-BGS/R	1	&EFS=V1AR15UQ41UQ1+V1AR15UQ41UQ1/1.0	
	&EFS=V1AR15UQ41KF1	=**V1AR15UQ41**/KF1:0+V1AR15UQ41-KF2	1.11-X1		-BGS/R	4	&EFS=V1AR15UQ41UQ1+V1AR15UQ41UQ1/1.1	
	&EFS=V1AR15UQ41KF1	=**V1AR15UQ41**/KF1:1+V1AR15UQ41-KF3	1.11-X1		-BGS/R	3	&EFS=V1AR15UQ41UQ1+V1AR15UQ41UQ1/1.0	

Cable diagram

F09_002_VLU

Cable name -W1			cable type TPE					
remark			no. of conductors 4			cross-section 18		cable length 2
function text	Page / column	Target designation from	Connection point	conductor	Target designation to	Connection point	Page / column	function text
	&EFS=V1AR15UQ41KF1	=**V1AR15UQ41KF1**.1+V1AR15UQ41-KF1	1.11-X2		-BGS/R	1	&EFS=V1AR15UQ41UQ2+V1AR15UQ41UQ2/1.0	
	&EFS=V1AR15UQ41KF1	=**V1AR15UQ41KF1**.2+V1AR15UQ41-KF1	1.11-X2		-BGS/R	4	&EFS=V1AR15UQ41UQ2+V1AR15UQ41UQ2/1.1	
	&EFS=V1AR15UQ41KF1	=**V1AR15UQ41KF1**.3+V1AR15UQ41-KF1	1.11-X2		-BGS/R	3	&EFS=V1AR15UQ41UQ2+V1AR15UQ41UQ2/1.0	

=V1AR15UQ41UQ1.1+.AR15UQ41UQ1.1/1

=V1AR15UQ41UQ3.1+.AR15UQ41UQ3.1/1

			Date	12/22/2022	Volvo Trucks North America	Valiant TMS	Cable diagram =V1AR15UQ41UQ2.1+V1AR15UQ41UQ2.1-W1	Drawing name: =2V04&EFS-EL	= V1AR15UQ41UQ2.1
			Ed.	MKLEPADLO					+ V1AR15UQ41UQ2.1
			Appr		P6700 Underbody Mainline - Cell 2V04			Document type: EMA	Project nr: 22-16151
Modification	Date	Name	Original		Replacement of	Replaced by	Scale 1:1		Page 1 / 1630

Cable diagram

F09_002_VLU

Cable name -W1			cable type TPE					
remark			no. of conductors 4			cross-section 18		cable length 2
function text	Page / column	Target designation from	Connection point	conductor	Target designation to	Connection point	Page / column	function text
	&EFS=V1AR15UQ41KF1	=**V1AR15UQ41**/KF1+V1AR15UQ41-KF1	1		1.11-X3	1	-BGS/R	&EFS=V1AR15UQ41UQ3+V1AR15UQ41UQ3/1.0
	&EFS=V1AR15UQ41KF1	=**V1AR15UQ41**/KF1+V1AR15UQ41-KF1	2		1.11-X3	4	-BGS/R	&EFS=V1AR15UQ41UQ3+V1AR15UQ41UQ3/1.1
	&EFS=V1AR15UQ41KF1	=**V1AR15UQ41**/KF1+V1AR15UQ41-KF1	3		1.11-X3	3	-BGS/R	&EFS=V1AR15UQ41UQ3+V1AR15UQ41UQ3/1.0

=V1AR15UQ41UQ2.1+.AR15UQ41UQ2.1/1

=V1AR15UQ41UQ4.1+.AR15UQ41UQ4.1/1

			Date	12/22/2022	Volvo Trucks North America	Valiant TMS	Cable diagram =V1AR15UQ41UQ3.1+V1AR15UQ41UQ3.1-W1	Drawing name: =2V04&EFS-EL	= V1AR15UQ41UQ3.1
			Ed.	MKLEPADLO					+ V1AR15UQ41UQ3.1
			Appr		P6700 Underbody Mainline - Cell 2V04			Document type: EMA	Project nr: 22-16151
Modification	Date	Name	Original		Replacement of / Replaced by	Scale 1:1			Page 1 / 1630

Cable diagram

F09_002_VLU

Cable name	-W1	cable type	TPE		
remark		no. of conductors	4	cross-section 18	cable length 2

function text	Page / column	Target designation from	Connection point	conductor	Target designation to	Connection point	Page / column	function text
	&EFS=V1AR15UQ41KF1+V1AR15UQ41KF1	=V1AR15UQ41/2.1+V1AR15UQ41-KF1	1.11-X4		-BGS/R	1	&EFS=V1AR15UQ41UQ4+V1AR15UQ41UQ4/1.0	
	&EFS=V1AR15UQ41KF1+V1AR15UQ41KF1	=V1AR15UQ41/2.1+V1AR15UQ41-KF2	1.11-X4		-BGS/R	4	&EFS=V1AR15UQ41UQ4+V1AR15UQ41UQ4/1.1	
	&EFS=V1AR15UQ41KF1+V1AR15UQ41KF1	=V1AR15UQ41/2.1+V1AR15UQ41-KF3	1.11-X4		-BGS/R	3	&EFS=V1AR15UQ41UQ4+V1AR15UQ41UQ4/1.0	

=V1AR15UQ41UQ3.1+.AR15UQ41UQ3.1/1

=V1AR15UQ41UQ5.1+.AR15UQ41UQ5.1/1

			Date	12/22/2022	Volvo Trucks North America	Valiant TMS	Cable diagram =V1AR15UQ41UQ4.1+V1AR15UQ41UQ4.1-W1	Drawing name: =2V04&EFS-EL	= V1AR15UQ41UQ4.1 + V1AR15UQ41UQ4.1
			Ed.	MKLEPADLO	P6700 Underbody Mainline - Cell 2V04				
			Appr					Document type: EMA	Project nr: 22-16151
Modification	Date	Name	Original		Replacement of / Replaced by	Scale 1:1			Page 1 / 1630

Cable diagram

F09_002_VLU

Cable name -W1			cable type TPE					
remark			no. of conductors 4			cross-section 18		cable length 3
function text	Page / column	Target designation from	Connection point	conductor	Target designation to	Connection point	Page / column	function text
	&EFS=V1AR15UQ41KF1	=**V1AR15UQ41**/KF1 +V1AR15UQ41-KF1	1.11-X5		-BGS/R	1	&EFS=V1AR15UQ41UQ5+V1AR15UQ41UQ5/1.0	
	&EFS=V1AR15UQ41KF1	=**V1AR15UQ41**/KF1 +V1AR15UQ41-KF2	1.11-X5		-BGS/R	2	&EFS=V1AR15UQ41UQ5+V1AR15UQ41UQ5/1.0	
	&EFS=V1AR15UQ41KF1	=**V1AR15UQ41**/KF1 +V1AR15UQ41-KF3	1.11-X5		-BGS/R	3	&EFS=V1AR15UQ41UQ5+V1AR15UQ41UQ5/1.1	
	&EFS=V1AR15UQ41KF1	=**V1AR15UQ41**/KF1 +V1AR15UQ41-KF4	1.11-X5		-BGS/R	4	&EFS=V1AR15UQ41UQ5+V1AR15UQ41UQ5/1.1	

			Date	12/22/2022	Volvo Trucks North America	Valiant TMS	Cable diagram =V1AR15UQ41UQ5.1+V1AR15UQ41UQ5.1-W1	Drawing name: =2V04&EFS-EL	= V1AR15UQ41UQ5.1
			Ed.	MKLEPADLO					+ V1AR15UQ41UQ5.1
			Appr		P6700 Underbody Mainline - Cell 2V04			Document type: EMA	Project nr: 22-16151
Modification	Date	Name	Original		Replacement of / Replaced by	Scale 1:1			Page 1 / 1630

Cable diagram

F09_002_VLU

Cable name -W1			cable type TPE					
remark			no. of conductors 4			cross-section 18		cable length 3
function text	Page / column	Target designation from	Connection point	conductor	Target designation to	Connection point	Page / column	function text
	&EFS=V1AR15UQ41KF1	=**V1AR15UQ41/K2.6**+V1AR15UQ41-KF	1	1.11-X6	-BGS/R	1	&EFS=V1AR15UQ41UQ5+V1AR15UQ41UQ5/1.2	
	&EFS=V1AR15UQ41KF1	=**V1AR15UQ41/K2.6**+V1AR15UQ41-KF	2	1.11-X6	-BGS/R	2	&EFS=V1AR15UQ41UQ5+V1AR15UQ41UQ5/1.2	
	&EFS=V1AR15UQ41KF1	=**V1AR15UQ41/K2.6**+V1AR15UQ41-KF	3	1.11-X6	-BGS/R	3	&EFS=V1AR15UQ41UQ5+V1AR15UQ41UQ5/1.2	
	&EFS=V1AR15UQ41KF1	=**V1AR15UQ41/K2.7**+V1AR15UQ41-KF	4	1.11-X6	-BGS/R	4	&EFS=V1AR15UQ41UQ5+V1AR15UQ41UQ5/1.2	

			Date	12/22/2022	Volvo Trucks North America	Valiant TMS	Cable diagram =V1AR15UQ41UQ5.2+V1AR15UQ41UQ5.2-W1	Drawing name: =2V04&EFS-EL	= V1AR15UQ41UQ5.2
			Ed.	MKLEPADLO					+ V1AR15UQ41UQ5.2
			Appr		P6700 Underbody Mainline - Cell 2V04			Document type: EMA	Project nr: 22-16151 Page 1
Modification	Date	Name	Original		Replacement of / Replaced by	Scale 1:1			1630

Cable diagram

F09_002_VLU

Cable name -W1			cable type TPE					
remark			no. of conductors 4			cross-section 18		cable length 2
function text	Page / column	Target designation from	Connection point	conductor	Target designation to	Connection point	Page / column	function text
	&EFS=V1AR15UQ41KF1	=**V1AR15UQ41**/K2.7+V1AR15UQ41-KF1	1.11-X7		-BGS/R	1	&EFS=V1AR15UQ41UQ6+V1AR15UQ41UQ6/1.0	
	&EFS=V1AR15UQ41KF1	=**V1AR15UQ41**/K2.7+V1AR15UQ41-KF2	1.11-X7		-BGS/R	2	&EFS=V1AR15UQ41UQ6+V1AR15UQ41UQ6/1.0	
	&EFS=V1AR15UQ41KF1	=**V1AR15UQ41**/K2.8+V1AR15UQ41-KF3	1.11-X7		-BGS/R	3	&EFS=V1AR15UQ41UQ6+V1AR15UQ41UQ6/1.1	
	&EFS=V1AR15UQ41KF1	=**V1AR15UQ41**/K2.8+V1AR15UQ41-KF4	1.11-X7		-BGS/R	4	&EFS=V1AR15UQ41UQ6+V1AR15UQ41UQ6/1.1	

=V1AR15UQ41UQ5.2+.AR15UQ41UQ5.2/1

=V1AR15UQ41UQ6.2+.AR15UQ41UQ6.2/1

Cable diagram

F09_002_VLU

Cable name -W1			cable type TPE					
remark			no. of conductors 4			cross-section 18		cable length 2
function text	Page / column	Target designation from	Connection point	conductor	Target designation to	Connection point	Page / column	function text
	&EFS=V1AR15UQ41KF1	=**V1AR15UQ41**/K2:8+V1AR15UQ41-KF1	1.11-X8		-BGS/R	1	&EFS=V1AR15UQ41UQ6+V1AR15UQ41UQ6/1.2	
	&EFS=V1AR15UQ41KF1	=**V1AR15UQ41**/K2:9+V1AR15UQ41-KF2	1.11-X8		-BGS/R	2	&EFS=V1AR15UQ41UQ6+V1AR15UQ41UQ6/1.2	
	&EFS=V1AR15UQ41KF1	=**V1AR15UQ41**/K2:9+V1AR15UQ41-KF3	1.11-X8		-BGS/R	3	&EFS=V1AR15UQ41UQ6+V1AR15UQ41UQ6/1.2	
	&EFS=V1AR15UQ41KF1	=**V1AR15UQ41**/K2:9+V1AR15UQ41-KF4	1.11-X8		-BGS/R	4	&EFS=V1AR15UQ41UQ6+V1AR15UQ41UQ6/1.2	

Cable diagram

F09_002_VLU

Cable name -W1			cable type TPE					
remark			no. of conductors 4			cross-section 18		cable length 1
function text	Page / column	Target designation from	Connection point	conductor	Target designation to	Connection point	Page / column	function text
	&EFS=V1AR15UQ41KF1	=**V1AR15UQ41KF1**+V1AR15UQ41-KF1	1.12-X1		-BGS/R	1	&EFS=V1AR15UQ41UQ7+V1AR15UQ41UQ7/1.0	
	&EFS=V1AR15UQ41KF1	=**V1AR15UQ41KF1**+V1AR15UQ41-KF2	1.12-X1		-BGS/R	2	&EFS=V1AR15UQ41UQ7+V1AR15UQ41UQ7/1.0	
	&EFS=V1AR15UQ41KF1	=**V1AR15UQ41KF1**+V1AR15UQ41-KF3	1.12-X1		-BGS/R	3	&EFS=V1AR15UQ41UQ7+V1AR15UQ41UQ7/1.1	
	&EFS=V1AR15UQ41KF1	=**V1AR15UQ41KF1**+V1AR15UQ41-KF4	1.12-X1		-BGS/R	4	&EFS=V1AR15UQ41UQ7+V1AR15UQ41UQ7/1.1	

Cable diagram

F09_002_VLU

Cable name -W1			cable type TPE					
remark			no. of conductors 4			cross-section 18		cable length 2
function text	Page / column	Target designation from	Connection point	conductor	Target designation to	Connection point	Page / column	function text
	&EFS=V1AR15UQ41KF1+	**=V1AR15UQ41/K3.1**+V1AR15UQ41-KF1	1.12-X2		-BGS/R	1	&EFS=V1AR15UQ41UQ7+V1AR15UQ41UQ7/1.2	
	&EFS=V1AR15UQ41KF1+	**=V1AR15UQ41/K3.2**+V1AR15UQ41-KF2	1.12-X2		-BGS/R	2	&EFS=V1AR15UQ41UQ7+V1AR15UQ41UQ7/1.2	
	&EFS=V1AR15UQ41KF1+	**=V1AR15UQ41/K3.2**+V1AR15UQ41-KF3	1.12-X2		-BGS/R	3	&EFS=V1AR15UQ41UQ7+V1AR15UQ41UQ7/1.2	
	&EFS=V1AR15UQ41KF1+	**=V1AR15UQ41/K3.2**+V1AR15UQ41-KF4	1.12-X2		-BGS/R	4	&EFS=V1AR15UQ41UQ7+V1AR15UQ41UQ7/1.2	

=V1AR15UQ41UQ7.1+.AR15UQ41UQ7.1/1

=V1AR15UQ41UQ8.1+.AR15UQ41UQ8.1/1

			Date	12/22/2022	Volvo Trucks North America	Valiant TMS	Cable diagram =V1AR15UQ41UQ7.2+V1AR15UQ41UQ7.2-W1	Drawing name: =2V04&EFS-EL	= V1AR15UQ41UQ7.2
			Ed.	MKLEPADLO					+ V1AR15UQ41UQ7.2
			Appr		P6700 Underbody Mainline - Cell 2V04			Document type: EMA	Project nr: 22-16151
Modification	Date	Name	Original		Replacement of / Replaced by	Scale 1:1			Page 1 / 1630

Cable diagram

F09_002_VLU

Cable name -W1			cable type TPE					
remark			no. of conductors 4			cross-section 18		cable length 2
function text	Page / column	Target designation from	Connection point	conductor	Target designation to	Connection point	Page / column	function text
	&EFS=V1AR15UQ41KF1	=**V1AR15UQ41KF1**+V1AR15UQ41-KF1	1.12-X3		-BGS/R	1	&EFS=V1AR15UQ41UQ8+V1AR15UQ41UQ8/1.0	
	&EFS=V1AR15UQ41KF1	=**V1AR15UQ41KF1**+V1AR15UQ41-KF2	1.12-X3		-BGS/R	2	&EFS=V1AR15UQ41UQ8+V1AR15UQ41UQ8/1.0	
	&EFS=V1AR15UQ41KF1	=**V1AR15UQ41KF1**+V1AR15UQ41-KF3	1.12-X3		-BGS/R	3	&EFS=V1AR15UQ41UQ8+V1AR15UQ41UQ8/1.1	
	&EFS=V1AR15UQ41KF1	=**V1AR15UQ41KF1**+V1AR15UQ41-KF4	1.12-X3		-BGS/R	4	&EFS=V1AR15UQ41UQ8+V1AR15UQ41UQ8/1.1	

			Date	12/22/2022	Volvo Trucks North America	Valiant TMS	Cable diagram =V1AR15UQ41UQ8.1+V1AR15UQ41UQ8.1-W1	Drawing name: =2V04&EFS-EL	= V1AR15UQ41UQ8.1
			Ed.	MKLEPADLO					+ V1AR15UQ41UQ8.1
			Appr		P6700 Underbody Mainline - Cell 2V04	Scale 1:1		Document type: EMA	Project nr: 22-16151
Modification	Date	Name	Original		Replacement of / Replaced by				Page 1 / 1630

Cable diagram

F09_002_VLU

Cable name -W1			cable type TPE					
remark			no. of conductors 4			cross-section 18		cable length 2
function text	Page / column	Target designation from	Connection point	conductor	Target designation to	Connection point	Page / column	function text
	&EFS=V1AR15UQ41KF1	=**V1AR15UQ41KF1**+V1AR15UQ41-KF1	1.12-X4		-BGS/R	1	&EFS=V1AR15UQ41UQ8+V1AR15UQ41UQ8/1.2	
	&EFS=V1AR15UQ41KF1	=**V1AR15UQ41KF1**+V1AR15UQ41-KF2	1.12-X4		-BGS/R	2	&EFS=V1AR15UQ41UQ8+V1AR15UQ41UQ8/1.2	
	&EFS=V1AR15UQ41KF1	=**V1AR15UQ41KF1**+V1AR15UQ41-KF3	1.12-X4		-BGS/R	3	&EFS=V1AR15UQ41UQ8+V1AR15UQ41UQ8/1.2	
	&EFS=V1AR15UQ41KF1	=**V1AR15UQ41KF1**+V1AR15UQ41-KF4	1.12-X4		-BGS/R	4	&EFS=V1AR15UQ41UQ8+V1AR15UQ41UQ8/1.2	

Cable diagram

F09_002_VLU

Cable name -W1			cable type TPE					
remark			no. of conductors 4			cross-section 18		cable length 2
function text	Page / column	Target designation from	Connection point	conductor	Target designation to	Connection point	Page / column	function text
	&EFS=V1AR15UQ41KF1	=**V1AR15UQ41KF1**+V1AR15UQ41-KF1	1.12-X5		-BGS/R	1	&EFS=V1AR15UQ41UQ9+V1AR15UQ41UQ9/1.0	
	&EFS=V1AR15UQ41KF1	=**V1AR15UQ41KF1**+V1AR15UQ41-KF2	1.12-X5		-BGS/R	2	&EFS=V1AR15UQ41UQ9+V1AR15UQ41UQ9/1.0	
	&EFS=V1AR15UQ41KF1	=**V1AR15UQ41KF1**+V1AR15UQ41-KF3	1.12-X5		-BGS/R	3	&EFS=V1AR15UQ41UQ9+V1AR15UQ41UQ9/1.1	
	&EFS=V1AR15UQ41KF1	=**V1AR15UQ41KF1**+V1AR15UQ41-KF4	1.12-X5		-BGS/R	4	&EFS=V1AR15UQ41UQ9+V1AR15UQ41UQ9/1.1	

=V1AR15UQ41UQ8.2+.AR15UQ41UQ8.2/1

=V1AR15UQ41UQ9.2+.AR15UQ41UQ9.2/1

			Date	12/22/2022	Volvo Trucks North America	Valiant TMS	Cable diagram =V1AR15UQ41UQ9.1+V1AR15UQ41UQ9.1-W1	Drawing name: =2V04&EFS-EL	= V1AR15UQ41UQ9.1
			Ed.	MKLEPADLO					+ V1AR15UQ41UQ9.1
			Appr		P6700 Underbody Mainline - Cell 2V04			Document type: EMA	Project nr: 22-16151
Modification	Date	Name	Original		Replacement of / Replaced by	Scale 1:1			Page 1 / 1630

Cable diagram

F09_002_VLU

Cable name -W1			cable type TPE					
remark			no. of conductors 4			cross-section 18		cable length 3
function text	Page / column	Target designation from	Connection point	conductor	Target designation to	Connection point	Page / column	function text
	&EFS=V1AR15UQ41KF1	=**V1AR15UQ41/K3.6**+V1AR15UQ41-KF	1	1.12-X6	-BGS/R	1	&EFS=V1AR15UQ41UQ9+V1AR15UQ41UQ9/1.2	
	&EFS=V1AR15UQ41KF1	=**V1AR15UQ41/K3.6**+V1AR15UQ41-KF	2	1.12-X6	-BGS/R	2	&EFS=V1AR15UQ41UQ9+V1AR15UQ41UQ9/1.2	
	&EFS=V1AR15UQ41KF1	=**V1AR15UQ41/K3.6**+V1AR15UQ41-KF	3	1.12-X6	-BGS/R	3	&EFS=V1AR15UQ41UQ9+V1AR15UQ41UQ9/1.2	
	&EFS=V1AR15UQ41KF1	=**V1AR15UQ41/K3.7**+V1AR15UQ41-KF	4	1.12-X6	-BGS/R	4	&EFS=V1AR15UQ41UQ9+V1AR15UQ41UQ9/1.2	

Cable diagram

F09_002_VLU

Cable name -W1			cable type TC-ER					
remark			no. of conductors 4			cross-section 10		cable length 20
function text	Page / column	Target designation from	Connection point	conductor	Target designation to	Connection point	Page / column	function text
	&EFS=V1WC2+.UC11/13.5	=V1AR15+UC11-FC1	2		-Q1	1	&EFS/1.3	
	&EFS=V1WC2+.UC11/13.5	=V1AR15+UC11-FC1	4		-Q1	3	&EFS/1.3	
	&EFS=V1WC2+.UC11/13.5	=V1AR15+UC11-FC1	6		-Q1	5	&EFS/1.3	
Power Distribution =V1AR15	&EFS=V1WC2+.UC11/13.6		PE		-PE		&EFS/1.4	

Cable diagram

F09_002_VLU

Cable name -KF100.11-P7			cable type PROFINET Cable					
remark			no. of conductors 4			cross-section 22		cable length
function text	Page / column	Target designation from	Connection point	conductor	Target designation to	Connection point	Page / column	function text
	&EFS/1.7	-XPN-X2			=V1KF1+UC11-KF100.11-P7		&EFS=V1KF1+.UC11/2.5	

=V1AR15WC1+.AR15UC01/1

=V1AR21WC1/1

			Date	12/22/2022	Volvo Trucks North America	Valiant TMS	Cable diagram =V1AR21KF1+V1AR21UC01-KF100.11-P7	Drawing name: =2V04&EFS-EL / = V1AR21KF1 / + V1AR21UC01
			Ed.	MKLEPADLO				
			Appr		P6700 Underbody Mainline - Cell 2V04			Document type: EMA / Project nr: 22-16151 / Page 1 / 1630
Modification	Date	Name	Original		Replacement of / Replaced by	Scale 1:1		

Cable diagram

F09_002_VLU

Cable name -W1			cable type TC-ER					
remark			no. of conductors 4			cross-section 10		cable length 15
function text	Page / column	Target designation from	Connection point	conductor	Target designation to	Connection point	Page / column	function text
	&EFS=V1WC2+.UC11/11.5	=V1AR21+UC11-FC1	2		-Q1	1	&EFS/1.3	
	&EFS=V1WC2+.UC11/11.5	=V1AR21+UC11-FC1	4		-Q1	3	&EFS/1.3	
	&EFS=V1WC2+.UC11/11.5	=V1AR21+UC11-FC1	6		-Q1	5	&EFS/1.3	
Power Distribution =V1AR21	&EFS=V1WC2+.UC11/11.6		PE		-PE		&EFS/1.4	

=V1AR21KF1/1

=V1AR22KF1+.AR22UC01/1

			Date	12/22/2022	Volvo Trucks North America	Valiant TMS	Cable diagram =V1AR21WC1+V1AR21UC01-W1	Drawing name: =2V04&EFS-EL	= V1AR21WC1
			Ed.	MKLEPADLO					+ V1AR21UC01
			Appr		P6700 Underbody Mainline - Cell 2V04			Document type: EMA	Project nr: 22-16151
Modification	Date	Name	Original		Replacement of / Replaced by	Scale 1:1			Page 1 / 1630

Cable diagram

F09_002_VLU

Cable name -KF100.15-P6			cable type PROFINET Cable					
remark			no. of conductors 4			cross-section 22		cable length
function text	Page / column	Target designation from	Connection point	conductor	Target designation to	Connection point	Page / column	function text
	&EFS/1.7	-XPN-X2			=V1KF1+UC15-KF100.15-P6		&EFS=V1KF1+.UC15/2.5	

=V1AR21WC1+.AR21UC01/1

=V1AR22WC1/1

			Date	12/22/2022	Volvo Trucks North America	Valiant TMS	Cable diagram	Drawing name: =2V04&EFS-EL	= V1AR22KF1
			Ed.	MKLEPADLO			=V1AR22KF1+V1AR22UC01-KF100.15-P6		+ V1AR22UC01
			Appr		P6700 Underbody Mainline - Cell 2V04			Document type: EMA / Project nr: 22-16151	Page 1 / 1630
Modification	Date	Name	Original		Replacement of / Replaced by	Scale 1:1			

Cable diagram

F09_002_VLU

Cable name -W1			cable type TC-ER					
remark			no. of conductors 4			cross-section 10		cable length 10
function text	Page / column	Target designation from	Connection point	conductor	Target designation to	Connection point	Page / column	function text
	&EFS=V1WC2+.UC12/11.5	=V1AR22+UC12-FC1	2		-Q1	1	&EFS/1.3	
	&EFS=V1WC2+.UC12/11.5	=V1AR22+UC12-FC1	4		-Q1	3	&EFS/1.3	
	&EFS=V1WC2+.UC12/11.5	=V1AR22+UC12-FC1	6		-Q1	5	&EFS/1.3	
Power Distribution =V1AR22	&EFS=V1WC2+.UC12/11.6		PE		-PE		&EFS/1.4	

=V1AR22KF1/1

=V1AR22XQ11WC1+.AR22XQ11UC01/1

			Date	12/22/2022	Volvo Trucks North America	Valiant TMS	Cable diagram =V1AR22WC1+V1AR22UC01-W1	Drawing name: =2V04&EFS-EL	= V1AR22WC1
			Ed.	MKLEPADLO					+ V1AR22UC01
			Appr		P6700 Underbody Mainline - Cell 2V04			Document type: EMA	Project nr: 22-16151
Modification	Date	Name	Original		Replacement of / Replaced by	Scale 1:1			Page 1 / 1630

Cable diagram

F09_002_VLU

Cable name	-W1		cable type	TC-ER				
remark	Max.		no. of conductors	4		cross-section	1	cable length 7.62
function text	Page / column	Target designation from	Connection point	conductor	Target designation to	Connection point	Page / column	function text
	&EFS/1.3	-XG1	L2	BK	=V1WC2+UC163-XG1		&EFS=V1WC2+.UC163/10.3	
	&EFS/1.3	-XG1	L1	BN	=V1WC2+UC163-XG1		&EFS=V1WC2+.UC163/10.2	
	&EFS/1.4	-XG1	PE	GNYE	=V1WC2+UC163-XG2		&EFS=V1WC2+.UC163/10.3	
	&EFS/1.3	-XG1	L3	GY	=V1WC2+UC163-XG1		&EFS=V1WC2+.UC163/10.3	

Cable diagram

F09_002_VLU

Cable name -KF100.11-P8			cable type PROFINET Cable					
remark			no. of conductors 4			cross-section 22		cable length
function text	Page / column	Target designation from	Connection point	conductor	Target designation to	Connection point	Page / column	function text
	&EFS/1.7	-XPN-X2			=V1KF1+UC11-KF100.11-P8		&EFS=V1KF1+.UC11/2.5	

=V1AR22XQ11WC1+.AR22XQ11UC01/1

=V1AR23WC1/1

			Date	12/22/2022	Volvo Trucks North America	Valiant TMS	Cable diagram =V1AR23KF1+V1AR23UC01-KF100.11-P8	Drawing name: =2V04&EFS-EL	= V1AR23KF1
			Ed.	MKLEPADLO					+ V1AR23UC01
			Appr		P6700 Underbody Mainline - Cell 2V04			Document type: EMA	Project nr: 22-16151
Modification	Date	Name	Original		Replacement of / Replaced by	Scale 1:1			Page 1 / 1630

Cable diagram

F09_002_VLU

Cable name -W1			cable type TC-ER					
remark			no. of conductors 4			cross-section 10		cable length 32
function text	Page / column	Target designation from	Connection point	conductor	Target designation to	Connection point	Page / column	function text
	&EFS=V1WC2+.UC11/11.7	=V1AR23+UC11-FC1	2		-Q1	1	&EFS/1.3	
	&EFS=V1WC2+.UC11/11.7	=V1AR23+UC11-FC1	4		-Q1	3	&EFS/1.3	
	&EFS=V1WC2+.UC11/11.7	=V1AR23+UC11-FC1	6		-Q1	5	&EFS/1.3	
Power Distribution =V1AR23	&EFS=V1WC2+.UC11/11.8		PE		-PE		&EFS/1.4	

=V1AR23KF1/1

=V1AR23XQ11WC1+.AR23XQ11UC01/1

			Date	12/22/2022	Volvo Trucks North America	Valiant TMS	Cable diagram =V1AR23WC1+V1AR23UC01-W1	Drawing name: =2V04&EFS-EL	= V1AR23WC1
			Ed.	MKLEPADLO					+ V1AR23UC01
			Appr		P6700 Underbody Mainline - Cell 2V04			Document type: EMA	Project nr: 22-16151
Modification	Date	Name	Original		Replacement of / Replaced by	Scale 1:1			Page 1 / 1630

Cable diagram

F09_002_VLU

Cable name	-W1		cable type	TC-ER				
remark	Max.		no. of conductors	4		cross-section	1	cable length 7.62
function text	Page / column	Target designation from	Connection point	conductor	Target designation to	Connection point	Page / column	function text
	&EFS/1.3	-XG1	L2	BK	=V1WC2+UC161-XG1		&EFS=V1WC2+.UC161/10.4	
	&EFS/1.3	-XG1	L1	BN	=V1WC2+UC161-XG1		&EFS=V1WC2+.UC161/10.4	
	&EFS/1.4	-XG1	PE	GNYE	=V1WC2+UC161-XG2		&EFS=V1WC2+.UC161/10.5	
	&EFS/1.3	-XG1	L3	GY	=V1WC2+UC161-XG1		&EFS=V1WC2+.UC161/10.5	

=V1AR23WC1+.AR23UC01/1

=V1AR24KF1+.AR24UC01/1

			Date	12/22/2022	Volvo Trucks North America	Valiant TMS	Cable diagram =V1AR23XQ11WC1+V1AR23XQ11UC01-W1	Drawing name: =2V04&EFS-EL	= V1AR23XQ11WC1
			Ed.	MKLEPADLO					+ V1AR23XQ11UC01
			Appr		P6700 Underbody Mainline - Cell 2V04			Document type: EMA	Project nr: 22-16151 Page 1
Modification	Date	Name	Original		Replacement of / Replaced by	Scale 1:1			1630

Cable diagram

F09_002_VLU

Cable name -KF100.15-P7			cable type PROFINET Cable					
remark			no. of conductors 4			cross-section 22		cable length
function text	Page / column	Target designation from	Connection point	conductor	Target designation to	Connection point	Page / column	function text
	&EFS/1.7	-XPN-X2			=V1KF1+UC15-KF100.15-P7		&EFS=V1KF1+.UC15/2.5	

=V1AR23XQ11WC1+.AR23XQ11UC01/1

=V1AR24WC1/1

			Date	12/22/2022	Volvo Trucks North America	Valiant TMS	Cable diagram =V1AR24KF1+V1AR24UC01-KF100.15-P7	Drawing name: =2V04&EFS-EL	= V1AR24KF1
			Ed.	MKLEPADLO					+ V1AR24UC01
			Appr		P6700 Underbody Mainline - Cell 2V04			Document type: EMA	Project nr: 22-16151
Modification	Date	Name	Original		Replacement of / Replaced by	Scale 1:1			Page 1 / 1630

Cable diagram

F09_002_VLU

Cable name -W1			cable type TC-ER					
remark			no. of conductors 4			cross-section 10		cable length 12
function text	Page / column	Target designation from	Connection point	conductor	Target designation to	Connection point	Page / column	function text
	&EFS=V1WC2+.UC12/11.7	=V1AR24+UC12-FC1	2		-Q1	1	&EFS/1.3	
	&EFS=V1WC2+.UC12/11.7	=V1AR24+UC12-FC1	4		-Q1	3	&EFS/1.3	
	&EFS=V1WC2+.UC12/11.7	=V1AR24+UC12-FC1	6		-Q1	5	&EFS/1.3	
Power Distribution =V1AR24	&EFS=V1WC2+.UC12/11.8		PE		-PE		&EFS/1.4	

=V1AR24KF1/1

=V1AR24XQ11WC1+.AR24XQ11UC01/1

			Date	12/22/2022	Volvo Trucks North America	Valiant TMS	Cable diagram =V1AR24WC1+V1AR24UC01-W1	Drawing name: =2V04&EFS-EL	= V1AR24WC1
			Ed.	MKLEPADLO					+ V1AR24UC01
			Appr		P6700 Underbody Mainline - Cell 2V04			Document type: EMA	Project nr: 22-16151
Modification	Date	Name	Original		Replacement of / Replaced by	Scale 1:1			Page 1 / 1630

Cable diagram

F09_002_VLU

Cable name	-W1		cable type	TC-ER				
remark	Max.		no. of conductors	4		cross-section	1	cable length 7.62
function text	Page / column	Target designation from	Connection point	conductor	Target designation to	Connection point	Page / column	function text
	&EFS/1.3	-XG1	L2	BK	=V1WC2+UC163-XG1		&EFS=V1WC2+.UC163/10.4	
	&EFS/1.3	-XG1	L1	BN	=V1WC2+UC163-XG1		&EFS=V1WC2+.UC163/10.4	
	&EFS/1.4	-XG1	PE	GNYE	=V1WC2+UC163-XG2		&EFS=V1WC2+.UC163/10.5	
	&EFS/1.3	-XG1	L3	GY	=V1WC2+UC163-XG1		&EFS=V1WC2+.UC163/10.5	

Cable diagram

F09_002_VLU

Cable name -KF100.15-P9			cable type PROFINET Cable					
remark			no. of conductors 4			cross-section 22		cable length
function text	Page / column	Target designation from	Connection point	conductor	Target designation to	Connection point	Page / column	function text
	&EFS/1.7	-XPN-X2			=V1KF1+UC15-KF100.15-P9		&EFS=V1KF1+.UC15/2.5	

=V1AR24XQ11WC1+.AR24XQ11UC01/1

=V1AR25WC1/1

			Date	12/22/2022	Volvo Trucks North America	Valiant TMS	Cable diagram =V1AR25KF1+V1AR25UC01-KF100.15-P9	Drawing name: =2V04&EFS-EL	= V1AR25KF1
			Ed.	MKLEPADLO					+ V1AR25UC01
			Appr		P6700 Underbody Mainline - Cell 2V04			Document type: EMA	Project nr: 22-16151
Modification	Date	Name	Original		Replacement of / Replaced by	Scale 1:1			Page 1 / 1630

Cable diagram

F09_002_VLU

Cable name -W1			cable type TC-ER					
remark			no. of conductors 4			cross-section 10		cable length 8
function text	Page / column	Target designation from	Connection point	conductor	Target designation to	Connection point	Page / column	function text
	&EFS=V1WC2+.UC12/12.5	=V1AR25+UC12-FC1	2		-Q1	1	&EFS/1.3	
	&EFS=V1WC2+.UC12/12.5	=V1AR25+UC12-FC1	4		-Q1	3	&EFS/1.3	
	&EFS=V1WC2+.UC12/12.5	=V1AR25+UC12-FC1	6		-Q1	5	&EFS/1.3	
Power Distribution =V1AR25	&EFS=V1WC2+.UC12/12.6		PE		-PE		&EFS/1.4	

=V1AR25KF1/1

=V1AR25XQ11WC1+.AR25XQ11UC01/1

			Date	12/22/2022	Volvo Trucks North America	Valiant TMS	Cable diagram =V1AR25WC1+V1AR25UC01-W1	Drawing name: =2V04&EFS-EL	= V1AR25WC1
			Ed.	MKLEPADLO					+ V1AR25UC01
			Appr		P6700 Underbody Mainline - Cell 2V04			Document type: EMA	Project nr: 22-16151
Modification	Date	Name	Original		Replacement of / Replaced by	Scale 1:1			Page 1 / 1630

Cable diagram

F09_002_VLU

Cable name	-W1		cable type	TC-ER				
remark	Max.		no. of conductors	4		cross-section	1	cable length 7.62
function text	Page / column	Target designation from	Connection point	conductor	Target designation to	Connection point	Page / column	function text
	&EFS/1.3	-XG1	L2	BK	=V1WC2+UC164-XG1		&EFS=V1WC2+.UC164/10.3	
	&EFS/1.3	-XG1	L1	BN	=V1WC2+UC164-XG1		&EFS=V1WC2+.UC164/10.2	
	&EFS/1.4	-XG1	PE	GNYE	=V1WC2+UC164-XG2		&EFS=V1WC2+.UC164/10.3	
	&EFS/1.3	-XG1	L3	GY	=V1WC2+UC164-XG1		&EFS=V1WC2+.UC164/10.3	

Cable diagram

F09_002_VLU

Cable name -KF100.11-P9			cable type PROFINET Cable					
remark			no. of conductors 4			cross-section 22		cable length
function text	Page / column	Target designation from	Connection point	conductor	Target designation to	Connection point	Page / column	function text
	&EFS/1.7	-XPN-X2			=V1KF1+UC11-KF100.11-P9		&EFS=V1KF1+.UC11/2.5	

=V1AR25XQ11WC1+.AR25XQ11UC01/1

=V1AR26WC1/1

			Date	12/22/2022	Volvo Trucks North America	Valiant TMS	Cable diagram =V1AR26KF1+V1AR26UC01-KF100.11-P9	Drawing name: =2V04&EFS-EL	= V1AR26KF1
			Ed.	MKLEPADLO					+ V1AR26UC01
			Appr		P6700 Underbody Mainline - Cell 2V04			Document type: EMA	Project nr: 22-16151
Modification	Date	Name	Original		Replacement of / Replaced by	Scale 1:1			Page 1 / 1630

Cable diagram

F09_002_VLU

Cable name -W1			cable type TC-ER					
remark			no. of conductors 4			cross-section 10		cable length 35
function text	Page / column	Target designation from	Connection point	conductor	Target designation to	Connection point	Page / column	function text
	&EFS=V1WC2+.UC11/12.1	=V1AR26+UC11-FC1	2		-Q1	1	&EFS/1.3	
	&EFS=V1WC2+.UC11/12.1	=V1AR26+UC11-FC1	4		-Q1	3	&EFS/1.3	
	&EFS=V1WC2+.UC11/12.1	=V1AR26+UC11-FC1	6		-Q1	5	&EFS/1.3	
Power Distribution =V1AR26	&EFS=V1WC2+.UC11/12.2		PE		-PE		&EFS/1.4	

=V1AR26KF1/1

=V1AR26XQ11WC1+.AR26XQ11UC01/1

			Date	12/22/2022	Volvo Trucks North America	Valiant TMS	Cable diagram =V1AR26WC1+V1AR26UC01-W1	Drawing name: =2V04&EFS-EL	= V1AR26WC1
			Ed.	MKLEPADLO					+ V1AR26UC01
			Appr		P6700 Underbody Mainline - Cell 2V04			Document type: EMA	Project nr: 22-16151
Modification	Date	Name	Original		Replacement of / Replaced by	Scale 1:1			Page 1 / 1630

Cable diagram

F09_002_VLU

Cable name	-W1		cable type	TC-ER				
remark	Max.		no. of conductors	4		cross-section	1	cable length 7.62
function text	Page / column	Target designation from	Connection point	conductor	Target designation to	Connection point	Page / column	function text
	&EFS/1.3	-XG1	L2	BK	=V1WC2+UC161-XG1		&EFS=V1WC2+.UC161/10.6	
	&EFS/1.3	-XG1	L1	BN	=V1WC2+UC161-XG1		&EFS=V1WC2+.UC161/10.6	
	&EFS/1.4	-XG1	PE	GNYE	=V1WC2+UC161-XG2		&EFS=V1WC2+.UC161/10.7	
	&EFS/1.3	-XG1	L3	GY	=V1WC2+UC161-XG1		&EFS=V1WC2+.UC161/10.6	

Cable diagram

F09_002_VLU

Cable name -KF100.15-P11			cable type PROFINET Cable					
remark			no. of conductors 4			cross-section 22		cable length
function text	Page / column	Target designation from	Connection point	conductor	Target designation to	Connection point	Page / column	function text
	&EFS/1.7	-XPN-X2			=V1KF1+UC15-KF100.15-P11		&EFS=V1KF1+.UC15/2.5	

=V1AR26XQ11WC1+.AR26XQ11UC01/1

=V1AR27WC1/1

			Date	12/22/2022	Volvo Trucks North America	Valiant TMS	Cable diagram	Drawing name: =2V04&EFS-EL	= V1AR27KF1
			Ed.	MKLEPADLO			=V1AR27KF1+V1AR27UC01-KF100.15-P11		+ V1AR27UC01
			Appr		P6700 Underbody Mainline - Cell 2V04			Document type: EMA / Project nr: 22-16151	Page 1 / 1630
Modification	Date	Name	Original		Replacement of / Replaced by	Scale 1:1			

Cable diagram

F09_002_VLU

Cable name -W1			cable type TC-ER					
remark			no. of conductors 4			cross-section 10		cable length 12
function text	Page / column	Target designation from	Connection point	conductor	Target designation to	Connection point	Page / column	function text
	&EFS=V1WC2+.UC12/12.7	=V1AR27+UC12-FC1	2		-Q1	1	&EFS/1.3	
	&EFS=V1WC2+.UC12/12.7	=V1AR27+UC12-FC1	4		-Q1	3	&EFS/1.3	
	&EFS=V1WC2+.UC12/12.7	=V1AR27+UC12-FC1	6		-Q1	5	&EFS/1.3	
Power Distribution =V1AR27	&EFS=V1WC2+.UC12/12.8		PE		-PE		&EFS/1.4	

=V1AR27KF1/1

=V1AR27XQ11WC1+.AR27XQ11UC01/1

			Date	12/22/2022	Volvo Trucks North America	Valiant TMS	Cable diagram =V1AR27WC1+V1AR27UC01-W1	Drawing name: =2V04&EFS-EL	= V1AR27WC1
			Ed.	MKLEPADLO					+ V1AR27UC01
			Appr		P6700 Underbody Mainline - Cell 2V04			Document type: EMA	Project nr: 22-16151
Modification	Date	Name	Original		Replacement of / Replaced by	Scale 1:1			Page 1 / 1630

Cable diagram

F09_002_VLU

Cable name	-W1		cable type	TC-ER				
remark	Max.		no. of conductors	4		cross-section	1	cable length 7.62
function text	Page / column	Target designation from	Connection point	conductor	Target designation to	Connection point	Page / column	function text
	&EFS/1.3	-XG1	L2	BK	=V1WC2+UC164-XG1		&EFS=V1WC2+.UC164/10.4	
	&EFS/1.3	-XG1	L1	BN	=V1WC2+UC164-XG1		&EFS=V1WC2+.UC164/10.4	
	&EFS/1.4	-XG1	PE	GNYE	=V1WC2+UC164-XG2		&EFS=V1WC2+.UC164/10.5	
	&EFS/1.3	-XG1	L3	GY	=V1WC2+UC164-XG1		&EFS=V1WC2+.UC164/10.5	

=V1AR27WC1+.AR27UC01/1

=V1AR28KF1+.AR28UC01/1

			Date	12/22/2022	Volvo Trucks North America		Valiant TMS	Cable diagram =V1AR27XQ11WC1+V1AR27XQ11UC01-W1	Drawing name: =2V04&EFS-EL	= V1AR27XQ11WC1
			Ed.	MKLEPADLO						+ V1AR27XQ11UC01
			Appr		P6700 Underbody Mainline - Cell 2V04				Document type: EMA	Project nr: 22-16151
Modification	Date	Name	Original		Replacement of	Replaced by	Scale 1:1			Page 1 / 1630

Cable diagram

F09_002_VLU

Cable name	-KF100.11-P10		cable type	PROFINET Cable				
remark			no. of conductors	4	cross-section	22	cable length	
function text	Page / column	Target designation from	Connection point	conductor	Target designation to	Connection point	Page / column	function text
	&EFS/1.7	-XPN-X2			=V1KF1+UC11-KF100.11-P10		&EFS=V1KF1+.UC11/2.5	

=V1AR27XQ11WC1+.AR27XQ11UC01/1

=V1AR28WC1/1

			Date	12/22/2022	Volvo Trucks North America	Valiant TMS	Cable diagram	Drawing name:	= V1AR28KF1
			Ed.	MKLEPADLO			=V1AR28KF1+V1AR28UC01-KF100.11-P10	=2V04&EFS-EL	+ V1AR28UC01
			Appr		P6700 Underbody Mainline - Cell 2V04			Document type: EMA	Project nr: 22-16151
Modification	Date	Name	Original		Replacement of	Replaced by	Scale 1:1		Page 1 / 1630

Cable diagram

F09_002_VLU

Cable name -W1			cable type TC-ER					
remark			no. of conductors 4			cross-section 10		cable length 35
function text	Page / column	Target designation from	Connection point	conductor	Target designation to	Connection point	Page / column	function text
	&EFS=V1WC2+.UC11/12.3	=V1AR28+UC11-FC1	2		-Q1	1	&EFS/1.3	
	&EFS=V1WC2+.UC11/12.3	=V1AR28+UC11-FC1	4		-Q1	3	&EFS/1.3	
	&EFS=V1WC2+.UC11/12.3	=V1AR28+UC11-FC1	6		-Q1	5	&EFS/1.3	
Power Distribution =V1AR28	&EFS=V1WC2+.UC11/12.4		PE		-PE		&EFS/1.4	

=V1AR28KF1/1

=V1AR28XQ11WC1+.AR28XQ11UC01/1

			Date	12/22/2022	Volvo Trucks North America	Valiant TMS	Cable diagram =V1AR28WC1+V1AR28UC01-W1	Drawing name: =2V04&EFS-EL	= V1AR28WC1
			Ed.	MKLEPADLO					+ V1AR28UC01
			Appr		P6700 Underbody Mainline - Cell 2V04			Document type: EMA	Project nr: 22-16151
Modification	Date	Name	Original		Replacement of / Replaced by	Scale 1:1			Page 1 / 1630

Cable diagram

F09_002_VLU

Cable name	-W1		cable type	TC-ER				
remark	Max.		no. of conductors	4		cross-section	1	cable length 7.62
function text	Page / column	Target designation from	Connection point	conductor	Target designation to	Connection point	Page / column	function text
	&EFS/1.3	-XG1	L2	BK	=V1WC2+UC161-XG1		&EFS=V1WC2+.UC161/10.8	
	&EFS/1.3	-XG1	L1	BN	=V1WC2+UC161-XG1		&EFS=V1WC2+.UC161/10.7	
	&EFS/1.4	-XG1	PE	GNYE	=V1WC2+UC161-XG2		&EFS=V1WC2+.UC161/10.8	
	&EFS/1.3	-XG1	L3	GY	=V1WC2+UC161-XG1		&EFS=V1WC2+.UC161/10.8	

Cable diagram

F09_002_VLU

Cable name -KF100.15-P13			cable type PROFINET Cable					
remark			no. of conductors 4			cross-section 22		cable length
function text	Page / column	Target designation from	Connection point	conductor	Target designation to	Connection point	Page / column	function text
	&EFS/1.7	-XPN-X2			=V1KF1+UC15-KF100.15-P13		&EFS=V1KF1+.UC15/2.5	

=V1AR28XQ11WC1+.AR28XQ11UC01/1

=V1AR29WC1/1

			Date	12/22/2022	Volvo Trucks North America	Valiant TMS	Cable diagram =V1AR29KF1+V1AR29UC01-KF100.15-P13	Drawing name: =2V04&EFS-EL	= V1AR29KF1
			Ed.	MKLEPADLO					+ V1AR29UC01
			Appr		P6700 Underbody Mainline - Cell 2V04			Document type: EMA	Project nr: 22-16151	Page 1
Modification	Date	Name	Original		Replacement of / Replaced by	Scale 1:1				1630

Cable diagram

F09_002_VLU

Cable name -W1			cable type TC-ER					
remark			no. of conductors 4			cross-section 10		cable length 15
function text	Page / column	Target designation from	Connection point	conductor	Target designation to	Connection point	Page / column	function text
	&EFS=V1WC2+.UC12/13.1	=V1AR29+UC12-FC1	2		-Q1	1	&EFS/1.3	
	&EFS=V1WC2+.UC12/13.1	=V1AR29+UC12-FC1	4		-Q1	3	&EFS/1.3	
	&EFS=V1WC2+.UC12/13.1	=V1AR29+UC12-FC1	6		-Q1	5	&EFS/1.3	
Power Distribution =V1AR29	&EFS=V1WC2+.UC12/13.2		PE		-PE		&EFS/1.4	

=V1AR29KF1/1

=V1AR29XQ11WC1+.AR29XQ11UC01/1

			Date	12/22/2022	Volvo Trucks North America	Valiant TMS	Cable diagram =V1AR29WC1+V1AR29UC01-W1	Drawing name: =2V04&EFS-EL	= V1AR29WC1
			Ed.	MKLEPADLO					+ V1AR29UC01
			Appr		P6700 Underbody Mainline - Cell 2V04			Document type: EMA	Project nr: 22-16151
Modification	Date	Name	Original		Replacement of / Replaced by	Scale 1:1			Page 1 / 1630

Cable diagram

F09_002_VLU

Cable name	-W1		cable type	TC-ER				
remark	Max.		no. of conductors	4		cross-section	1	cable length 7.62
function text	Page / column	Target designation from	Connection point	conductor	Target designation to	Connection point	Page / column	function text
	&EFS/1.3	-XG1	L2	BK	=V1WC2+UC164-XG1		&EFS=V1WC2+.UC164/10.6	
	&EFS/1.3	-XG1	L1	BN	=V1WC2+UC164-XG1		&EFS=V1WC2+.UC164/10.6	
	&EFS/1.4	-XG1	PE	GNYE	=V1WC2+UC164-XG2		&EFS=V1WC2+.UC164/10.7	
	&EFS/1.3	-XG1	L3	GY	=V1WC2+UC164-XG1		&EFS=V1WC2+.UC164/10.6	

Cable diagram

F09_002_VLU

Cable name -KF100.12-P5			cable type PROFINET Cable					
remark			no. of conductors 4			cross-section 22		cable length
function text	Page / column	Target designation from	Connection point	conductor	Target designation to	Connection point	Page / column	function text
	&EFS/1.7	-XPN-X2			=V1KF1+UC12-KF100.12-P5		&EFS=V1KF1+.UC12/2.5	

=V1AR29XQ11WC1+.AR29XQ11UC01/1

=V1AR51WC1/1

			Date	12/22/2022	Volvo Trucks North America	Valiant TMS	Cable diagram =V1AR51KF1+V1AR51UC01-KF100.12-P5	Drawing name: =2V04&EFS-EL	= V1AR51KF1
			Ed.	MKLEPADLO					+ V1AR51UC01
			Appr		P6700 Underbody Mainline - Cell 2V04			Document type: EMA	Project nr: 22-16151
Modification	Date	Name	Original		Replacement of / Replaced by	Scale 1:1			Page 1 / 1630

Cable diagram

F09_002_VLU

Cable name -W1			cable type TC-ER					
remark			no. of conductors 4			cross-section 10		cable length 20
function text	Page / column	Target designation from	Connection point	conductor	Target designation to	Connection point	Page / column	function text
	&EFS=V1WC2+.UC12/13.5	=V1AR51+UC12-FC1	2		-Q1	1	&EFS/1.3	
	&EFS=V1WC2+.UC12/13.5	=V1AR51+UC12-FC1	4		-Q1	3	&EFS/1.3	
	&EFS=V1WC2+.UC12/13.5	=V1AR51+UC12-FC1	6		-Q1	5	&EFS/1.3	
Power Distribution =V1AR51	&EFS=V1WC2+.UC12/13.6		PE		-PE		&EFS/1.4	

=V1AR51KF1/1

=V1AR51XQ51WC1+.AR51XQ51UC01/1

			Date	12/22/2022	Volvo Trucks North America	Valiant TMS	Cable diagram =V1AR51WC1+V1AR51UC01-W1	Drawing name: =2V04&EFS-EL	= V1AR51WC1
			Ed.	MKLEPADLO					+ V1AR51UC01
			Appr		P6700 Underbody Mainline - Cell 2V04			Document type: EMA	Project nr: 22-16151
Modification	Date	Name	Original		Replacement of / Replaced by	Scale 1:1			Page 1 / 1630

Cable diagram

F09_002_VLU

Cable name -W1			cable type TC-ER					
remark			no. of conductors 4			cross-section 8		cable length 36
function text	Page / column	Target designation from	Connection point	conductor	Target designation to	Connection point	Page / column	function text
	&EFS/1.3	-XG1	L1		=V1AR51XQ51+UC12-FC1	2	&EFS=V1WC2+.UC12/13.7	
	&EFS/1.3	-XG1	L2		=V1AR51XQ51+UC12-FC1	4	&EFS=V1WC2+.UC12/13.7	
	&EFS/1.3	-XG1	L3		=V1AR51XQ51+UC12-FC1	6	&EFS=V1WC2+.UC12/13.7	
	&EFS/1.4	-XG1	PE			PE	&EFS=V1WC2+.UC12/13.8	Power Distribution =V1AR51XQ51

=V1AR51WC1+.AR51UC01/1

=V1AR52KF1+.AR52UC01/1

			Date	12/22/2022	Volvo Trucks North America	Valiant TMS	Cable diagram =V1AR51XQ51WC1+V1AR51XQ51UC01-W1	Drawing name: =2V04&EFS-EL	= V1AR51XQ51WC1
			Ed.	MKLEPADLO					+ V1AR51XQ51UC01
			Appr		P6700 Underbody Mainline - Cell 2V04			Document type: EMA	Project nr: 22-16151
Modification	Date	Name	Original		Replacement of / Replaced by	Scale 1:1			Page 1 / 1630

Cable diagram

F09_002_VLU

Cable name -KF100.14-P6			cable type PROFINET Cable					
remark			no. of conductors 4			cross-section 22		cable length
function text	Page / column	Target designation from	Connection point	conductor	Target designation to	Connection point	Page / column	function text
	&EFS/1.7	-XPN-X2			=V1KF1+UC14-KF100.14-P6		&EFS=V1KF1+.UC14/2.5	

=V1AR51XQ51WC1+.AR51XQ51UC01/1

=V1AR52WC1/1

			Date	12/22/2022	Volvo Trucks North America	Valiant TMS	Cable diagram =V1AR52KF1+V1AR52UC01-KF100.14-P6	Drawing name: =2V04&EFS-EL	= V1AR52KF1
			Ed.	MKLEPADLO					+ V1AR52UC01
			Appr		P6700 Underbody Mainline - Cell 2V04			Document type: EMA	Project nr: 22-16151
Modification	Date	Name	Original		Replacement of / Replaced by	Scale 1:1			Page 1 / 1630

Cable diagram

F09_002_VLU

Cable name -W1			cable type TC-ER					
remark			no. of conductors 4			cross-section 10		cable length 15
function text	Page / column	Target designation from	Connection point	conductor	Target designation to	Connection point	Page / column	function text
	&EFS=V1WC2+.UC11/13.1	=V1AR52+UC11-FC1	2		-Q1	1	&EFS/1.3	
	&EFS=V1WC2+.UC11/13.1	=V1AR52+UC11-FC1	4		-Q1	3	&EFS/1.3	
	&EFS=V1WC2+.UC11/13.1	=V1AR52+UC11-FC1	6		-Q1	5	&EFS/1.3	
Power Distribution =V1AR52	&EFS=V1WC2+.UC11/13.2		PE		-PE		&EFS/1.4	

=V1AR52KF1/1

=V1AR52XQ51WC1+.AR52XQ51UC01/1

			Date	12/22/2022	Volvo Trucks North America	Valiant TMS	Cable diagram =V1AR52WC1+V1AR52UC01-W1	Drawing name: =2V04&EFS-EL	= V1AR52WC1
			Ed.	MKLEPADLO					+ V1AR52UC01
			Appr		P6700 Underbody Mainline - Cell 2V04			Document type: EMA	Project nr: 22-16151
Modification	Date	Name	Original		Replacement of / Replaced by	Scale 1:1			Page 1 / 1630

Cable diagram

F09_002_VLU

Cable name -W1			cable type TC-ER					
remark			no. of conductors 4			cross-section 8		cable length 21
function text	Page / column	Target designation from	Connection point	conductor	Target designation to	Connection point	Page / column	function text
	&EFS/1.3	-XG1	L1		=V1AR52XQ51+UC11-FC1	2	&EFS=V1WC2+.UC11/13.7	
	&EFS/1.3	-XG1	L2		=V1AR52XQ51+UC11-FC1	4	&EFS=V1WC2+.UC11/13.7	
	&EFS/1.3	-XG1	L3		=V1AR52XQ51+UC11-FC1	6	&EFS=V1WC2+.UC11/13.7	
	&EFS/1.4	-XG1	PE			PE	&EFS=V1WC2+.UC11/13.8	Power Distribution =V1AR52XQ51

=V1AR52WC1+.AR52UC01/1

=V1AR53KF1+.AR53UC01/1

			Date	12/22/2022	Volvo Trucks North America	Valiant TMS	Cable diagram =V1AR52XQ51WC1+V1AR52XQ51UC01-W1	Drawing name: =2V04&EFS-EL	= V1AR52XQ51WC1
			Ed.	MKLEPADLO					+ V1AR52XQ51UC01
			Appr		P6700 Underbody Mainline - Cell 2V04			Document type: EMA	Project nr: 22-16151
Modification	Date	Name	Original		Replacement of	Replaced by	Scale 1:1		Page 1 / 1630

Cable diagram

F09_002_VLU

Cable name -KF100.12-P6			cable type PROFINET Cable					
remark			no. of conductors 4			cross-section 22		cable length
function text	Page / column	Target designation from	Connection point	conductor	Target designation to	Connection point	Page / column	function text
	&EFS/1.7	-XPN-X2			=V1KF1+UC12-KF100.12-P6		&EFS=V1KF1+.UC12/2.5	

=V1AR52XQ51WC1+.AR52XQ51UC01/1

=V1AR53WC1/1

			Date	12/22/2022	Volvo Trucks North America	Valiant TMS	Cable diagram =V1AR53KF1+V1AR53UC01-KF100.12-P6	Drawing name: =2V04&EFS-EL	= V1AR53KF1
			Ed.	MKLEPADLO					+ V1AR53UC01
			Appr		P6700 Underbody Mainline - Cell 2V04			Document type: EMA	Project nr: 22-16151
Modification	Date	Name	Original		Replacement of / Replaced by	Scale 1:1			Page 1 / 1630

Cable diagram

F09_002_VLU

Cable name -W1			cable type TC-ER					
remark			no. of conductors 4			cross-section 10		cable length 22
function text	Page / column	Target designation from	Connection point	conductor	Target designation to	Connection point	Page / column	function text
	&EFS=V1WC2+.UC12/14.1	=V1AR53+UC12-FC1	2		-Q1	1	&EFS/1.3	
	&EFS=V1WC2+.UC12/14.1	=V1AR53+UC12-FC1	4		-Q1	3	&EFS/1.3	
	&EFS=V1WC2+.UC12/14.1	=V1AR53+UC12-FC1	6		-Q1	5	&EFS/1.3	
Power Distribution =V1AR53	&EFS=V1WC2+.UC12/14.2		PE		-PE		&EFS/1.4	

=V1AR53KF1/1

=V1AR53XQ51WC1+.AR53XQ51UC01/1

			Date	12/22/2022	Volvo Trucks North America	Valiant TMS	Cable diagram =V1AR53WC1+V1AR53UC01-W1	Drawing name: =2V04&EFS-EL	= V1AR53WC1
			Ed.	MKLEPADLO					+ V1AR53UC01
			Appr		P6700 Underbody Mainline - Cell 2V04			Document type: EMA	Project nr: 22-16151
Modification	Date	Name	Original		Replacement of / Replaced by	Scale 1:1			Page 1 / 1630

Cable diagram

F09_002_VLU

Cable name -W1			cable type TC-ER					
remark			no. of conductors 4			cross-section 8		cable length 37
function text	Page / column	Target designation from	Connection point	conductor	Target designation to	Connection point	Page / column	function text
	&EFS/1.3	-XG1	L1		=V1AR53XQ51+UC12-FC1	2	&EFS=V1WC2+.UC12/14.3	
	&EFS/1.3	-XG1	L2		=V1AR53XQ51+UC12-FC1	4	&EFS=V1WC2+.UC12/14.3	
	&EFS/1.3	-XG1	L3		=V1AR53XQ51+UC12-FC1	6	&EFS=V1WC2+.UC12/14.3	
	&EFS/1.4	-XG1	PE			PE	&EFS=V1WC2+.UC12/14.4	Power Distribution =V1AR53XQ51

=V1AR53WC1+.AR53UC01/1

=V1AR54KF1+.AR54UC01/1

			Date	12/22/2022	Volvo Trucks North America	Valiant TMS	Cable diagram =V1AR53XQ51WC1+V1AR53XQ51UC01-W1	Drawing name: =2V04&EFS-EL	= V1AR53XQ51WC1
			Ed.	MKLEPADLO					+ V1AR53XQ51UC01
			Appr		P6700 Underbody Mainline - Cell 2V04			Document type: EMA	Project nr: 22-16151
Modification	Date	Name	Original		Replacement of	Replaced by	Scale 1:1		Page 1 / 1630

Cable diagram

F09_002_VLU

Cable name -KF100.14-P7			cable type PROFINET Cable					
remark			no. of conductors 4			cross-section 22		cable length
function text	Page / column	Target designation from	Connection point	conductor	Target designation to	Connection point	Page / column	function text
	&EFS/1.7	-XPN-X2			=V1KF1+UC14-KF100.14-P7		&EFS=V1KF1+.UC14/2.5	

=V1AR53XQ51WC1+.AR53XQ51UC01/1

=V1AR54WC1/1

			Date	12/22/2022	Volvo Trucks North America	Valiant TMS	Cable diagram =V1AR54KF1+V1AR54UC01-KF100.14-P7	Drawing name: =2V04&EFS-EL	= V1AR54KF1
			Ed.	MKLEPADLO					+ V1AR54UC01
			Appr		P6700 Underbody Mainline - Cell 2V04			Document type: EMA	Project nr: 22-16151
Modification	Date	Name	Original		Replacement of / Replaced by	Scale 1:1			Page 1 / 1630

Cable diagram

F09_002_VLU

Cable name -W1			cable type TC-ER					
remark			no. of conductors 4			cross-section 10		cable length 15
function text	Page / column	Target designation from	Connection point	conductor	Target designation to	Connection point	Page / column	function text
	&EFS=V1WC2+.UC11/13.3	=V1AR54+UC11-FC1	2		-Q1	1	&EFS/1.3	
	&EFS=V1WC2+.UC11/13.3	=V1AR54+UC11-FC1	4		-Q1	3	&EFS/1.3	
	&EFS=V1WC2+.UC11/13.3	=V1AR54+UC11-FC1	6		-Q1	5	&EFS/1.3	
Power Distribution =V1AR54	&EFS=V1WC2+.UC11/13.4		PE		-PE		&EFS/1.4	

=V1AR54KF1/1

=V1AR54XQ51WC1+.AR54XQ51UC01/1

			Date	12/22/2022	Volvo Trucks North America	Valiant TMS	Cable diagram =V1AR54WC1+V1AR54UC01-W1	Drawing name: =2V04&EFS-EL	= V1AR54WC1
			Ed.	MKLEPADLO					+ V1AR54UC01
			Appr		P6700 Underbody Mainline - Cell 2V04			Document type: EMA	Project nr: 22-16151
Modification	Date	Name	Original		Replacement of / Replaced by	Scale 1:1			Page 1 / 1630

Cable diagram

F09_002_VLU

Cable name -W1			cable type TC-ER					
remark			no. of conductors 4			cross-section 8		cable length 22
function text	Page / column	Target designation from	Connection point	conductor	Target designation to	Connection point	Page / column	function text
	&EFS/1.3	-XG1	L1		=V1AR54XQ51+UC11-FC1	2	&EFS=V1WC2+.UC11/14.1	
	&EFS/1.3	-XG1	L2		=V1AR54XQ51+UC11-FC1	4	&EFS=V1WC2+.UC11/14.1	
	&EFS/1.3	-XG1	L3		=V1AR54XQ51+UC11-FC1	6	&EFS=V1WC2+.UC11/14.1	
	&EFS/1.4	-XG1	PE			PE	&EFS=V1WC2+.UC11/14.2	Power Distribution =V1AR54XQ51

=V1AR54WC1+.AR54UC01/1

=V1AR141KF1+.AR141UC01/1

			Date	12/22/2022	Volvo Trucks North America	Valiant TMS	Cable diagram =V1AR54XQ51WC1+V1AR54XQ51UC01-W1	Drawing name: =2V04&EFS-EL	= V1AR54XQ51WC1
			Ed.	MKLEPADLO					+ V1AR54XQ51UC01
			Appr		P6700 Underbody Mainline - Cell 2V04			Document type: EMA	Project nr: 22-16151
Modification	Date	Name	Original		Replacement of / Replaced by	Scale 1:1			Page 1 / 1630

Cable diagram

F09_002_VLU

Cable name -KF100.15-P5			cable type PROFINET Cable					
remark			no. of conductors 4			cross-section 22		cable length
function text	Page / column	Target designation from	Connection point	conductor	Target designation to	Connection point	Page / column	function text
	&EFS/1.7	-XPN-X2			=V1KF1+UC15-KF100.15-P5		&EFS=V1KF1+.UC15/2.5	

=V1AR54XQ51WC1+.AR54XQ51UC01/1

=V1AR141WC1/1

			Date	12/22/2022	Volvo Trucks North America	Valiant TMS	Cable diagram =V1AR141KF1+V1AR141UC01-KF100.15-P5	Drawing name: =2V04&EFS-EL	= V1AR141KF1
			Ed.	MKLEPADLO					+ V1AR141UC01
			Appr		P6700 Underbody Mainline - Cell 2V04			Document type: EMA	Project nr: 22-16151	Page 1
Modification	Date	Name	Original		Replacement of / Replaced by	Scale 1:1				1630

Cable diagram

F09_002_VLU

Cable name -W1			cable type TC-ER					
remark			no. of conductors 4			cross-section 10		cable length 17
function text	Page / column	Target designation from	Connection point	conductor	Target designation to	Connection point	Page / column	function text
	&EFS=V1WC2+.UC12/11.1	=V1AR141+UC12-FC1	2		-Q1	1	&EFS/1.3	
	&EFS=V1WC2+.UC12/11.1	=V1AR141+UC12-FC1	4		-Q1	3	&EFS/1.3	
	&EFS=V1WC2+.UC12/11.1	=V1AR141+UC12-FC1	6		-Q1	5	&EFS/1.3	
Power Distribution =V1AR141	&EFS=V1WC2+.UC12/11.2		PE		-PE		&EFS/1.4	

=V1AR141KF1/1

=V1AR141XQ41WC1+.AR141XQ41UC01/1

			Date	12/22/2022	Volvo Trucks North America	Valiant TMS	Cable diagram =V1AR141WC1+V1AR141UC01-W1	Drawing name: =2V04&EFS-EL	= V1AR141WC1
			Ed.	MKLEPADLO					+ V1AR141UC01
			Appr		P6700 Underbody Mainline - Cell 2V04			Document type: EMA	Project nr: 22-16151
Modification	Date	Name	Original		Replacement of / Replaced by	Scale 1:1			Page 1 / 1630

Cable diagram

F09_002_VLU

Cable name -W1			cable type TC-ER					
remark			no. of conductors 4			cross-section 4		cable length 20
function text	Page / column	Target designation from	Connection point	conductor	Target designation to	Connection point	Page / column	function text
	&EFS/1.3	-XG1	L1		=V1AR141XQ41+UC12-FC1	2	&EFS=V1WC2+.UC12/15.1	
	&EFS/1.3	-XG1	L2		=V1AR141XQ41+UC12-FC1	4	&EFS=V1WC2+.UC12/15.1	
	&EFS/1.3	-XG1	L3		=V1AR141XQ41+UC12-FC1	6	&EFS=V1WC2+.UC12/15.1	
	&EFS/1.4	-XG1	PE			PE	&EFS=V1WC2+.UC12/15.2	Power Distribution =V1AR141XQ41

=V1AR141WC1+.AR141UC01/1

=V1AR142KF1+.AR142UC01/1

			Date	12/22/2022	Volvo Trucks North America	Valiant TMS	Cable diagram =V1AR141XQ41WC1+V1AR141XQ41UC01-W1	Drawing name: =2V04&EFS-EL	= V1AR141XQ41WC1
			Ed.	MKLEPADLO					+ V1AR141XQ41UC01
			Appr		P6700 Underbody Mainline - Cell 2V04			Document type: EMA	Project nr: 22-16151
Modification	Date	Name	Original		Replacement of / Replaced by	Scale 1:1			Page 1 / 1630

Cable diagram

F09_002_VLU

Cable name -KF100.11-P5			cable type PROFINET Cable					
remark			no. of conductors 4			cross-section 22		cable length
function text	Page / column	Target designation from	Connection point	conductor	Target designation to	Connection point	Page / column	function text
	&EFS/1.7	-XPN-X2			=V1KF1+UC11-KF100.11-P5		&EFS=V1KF1+.UC11/2.5	

=V1AR141XQ41WC1+.AR141XQ41UC01/1

=V1AR142WC1/1

			Date	12/22/2022	Volvo Trucks North America	Valiant TMS	Cable diagram =V1AR142KF1+V1AR142UC01-KF100.11-P5	Drawing name: =2V04&EFS-EL	= V1AR142KF1
			Ed.	MKLEPADLO					+ V1AR142UC01
			Appr		P6700 Underbody Mainline - Cell 2V04			Document type: EMA	Project nr: 22-16151
Modification	Date	Name	Original		Replacement of / Replaced by	Scale 1:1			Page 1 / 1630

Cable diagram

F09_002_VLU

Cable name -W1			cable type TC-ER					
remark			no. of conductors 4			cross-section 10		cable length 15
function text	Page / column	Target designation from	Connection point	conductor	Target designation to	Connection point	Page / column	function text
	&EFS=V1WC2+.UC11/11.1	=V1AR142+UC11-FC1	2		-Q1	1	&EFS/1.3	
	&EFS=V1WC2+.UC11/11.1	=V1AR142+UC11-FC1	4		-Q1	3	&EFS/1.3	
	&EFS=V1WC2+.UC11/11.1	=V1AR142+UC11-FC1	6		-Q1	5	&EFS/1.3	
Power Distribution =V1AR142	&EFS=V1WC2+.UC11/11.2		PE		-PE		&EFS/1.4	

=V1AR142KF1/1

=V1AR142XQ41WC1+.AR142XQ41UC01/1

			Date	12/22/2022	Volvo Trucks North America	Valiant TMS	Cable diagram =V1AR142WC1+V1AR142UC01-W1	Drawing name: =2V04&EFS-EL	= V1AR142WC1
			Ed.	MKLEPADLO					+ V1AR142UC01
			Appr		P6700 Underbody Mainline - Cell 2V04			Document type: EMA	Project nr: 22-16151
Modification	Date	Name	Original		Replacement of / Replaced by	Scale 1:1			Page 1 / 1630

Cable diagram

F09_002_VLU

Cable name -W1			cable type TC-ER					
remark			no. of conductors 4			cross-section 4		cable length 15
function text	Page / column	Target designation from	Connection point	conductor	Target designation to	Connection point	Page / column	function text
	&EFS/1.3	-XG1	L1		=V1AR142XQ41+UC11-FC1	2	&EFS=V1WC2+.UC11/14.3	
	&EFS/1.3	-XG1	L2		=V1AR142XQ41+UC11-FC1	4	&EFS=V1WC2+.UC11/14.3	
	&EFS/1.3	-XG1	L3		=V1AR142XQ41+UC11-FC1	6	&EFS=V1WC2+.UC11/14.3	
	&EFS/1.4	-XG1	PE			PE	&EFS=V1WC2+.UC11/14.4	Power Distribution =V1AR142XQ41

=V1AR142WC1+.AR142UC01/1

=V1AR191KF1+.AR191UC01/1

			Date	12/22/2022	Volvo Trucks North America	Valiant TMS	Cable diagram =V1AR142XQ41WC1+V1AR142XQ41UC01-W1	Drawing name: =2V04&EFS-EL	= V1AR142XQ41WC1
			Ed.	MKLEPADLO					+ V1AR142XQ41UC01
			Appr		P6700 Underbody Mainline - Cell 2V04			Document type: EMA	Project nr: 22-16151
Modification	Date	Name	Original		Replacement of / Replaced by	Scale 1:1			Page 1 / 1630

Cable diagram

F09_002_VLU

Cable name -KF100.12-P7			cable type PROFINET Cable					
remark			no. of conductors 4			cross-section 22		cable length
function text	Page / column	Target designation from	Connection point	conductor	Target designation to	Connection point	Page / column	function text
	&EFS/1.7	-XPN-X2			=V1KF1+UC12-KF100.12-P7		&EFS=V1KF1+.UC12/2.5	

=V1AR142XQ41WC1+.AR142XQ41UC01/1

=V1AR191WC1/1

			Date	12/22/2022	Volvo Trucks North America	Valiant TMS	Cable diagram =V1AR191KF1+V1AR191UC01-KF100.12-P7	Drawing name: =2V04&EFS-EL	= V1AR191KF1
			Ed.	MKLEPADLO					+ V1AR191UC01
			Appr		P6700 Underbody Mainline - Cell 2V04			Document type: EMA	Project nr: 22-16151
Modification	Date	Name	Original		Replacement of / Replaced by	Scale 1:1			Page 1 / 1630

Cable diagram

F09_002_VLU

Cable name -W1			cable type TC-ER					
remark			no. of conductors 4			cross-section 10		cable length 35
function text	Page / column	Target designation from	Connection point	conductor	Target designation to	Connection point	Page / column	function text
	&EFS=V1WC2+.UC12/14.5	=V1AR191+UC12-FC1	2		-Q1	1	&EFS/1.3	
	&EFS=V1WC2+.UC12/14.5	=V1AR191+UC12-FC1	4		-Q1	3	&EFS/1.3	
	&EFS=V1WC2+.UC12/14.5	=V1AR191+UC12-FC1	6		-Q1	5	&EFS/1.3	
Power Distribution =V1AR191	&EFS=V1WC2+.UC12/14.6		PE		-PE		&EFS/1.4	

=V1AR191KF1/1

=V1AR192KF1+.AR192UC01/1

			Date	12/22/2022	Volvo Trucks North America	Valiant TMS	Cable diagram =V1AR191WC1+V1AR191UC01-W1	Drawing name: =2V04&EFS-EL	= V1AR191WC1
			Ed.	MKLEPADLO					+ V1AR191UC01
			Appr		P6700 Underbody Mainline - Cell 2V04			Document type: EMA	Project nr: 22-16151
Modification	Date	Name	Original		Replacement of / Replaced by	Scale 1:1			Page 1 / 1630

Cable diagram

F09_002_VLU

Cable name -KF100.12-P8			cable type PROFINET Cable					
remark			no. of conductors 4			cross-section 22		cable length
function text	Page / column	Target designation from	Connection point	conductor	Target designation to	Connection point	Page / column	function text
	&EFS/1.7	-XPN-X2			=V1KF1+UC12-KF100.12-P8		&EFS=V1KF1+.UC12/2.5	

=V1AR191WC1+.AR191UC01/1

=V1AR192WC1/1

			Date	12/22/2022	Volvo Trucks North America	Valiant TMS	Cable diagram =V1AR192KF1+V1AR192UC01-KF100.12-P8	Drawing name: =2V04&EFS-EL	= V1AR192KF1
			Ed.	MKLEPADLO					+ V1AR192UC01
			Appr		P6700 Underbody Mainline - Cell 2V04			Document type: EMA	Project nr: 22-16151
Modification	Date	Name	Original		Replacement of / Replaced by	Scale 1:1			Page 1 / 1630

Cable diagram

F09_002_VLU

Cable name -W1			cable type TC-ER					
remark			no. of conductors 4			cross-section 10		cable length 35
function text	Page / column	Target designation from	Connection point	conductor	Target designation to	Connection point	Page / column	function text
	&EFS=V1WC2+.UC12/14.7	=V1AR192+UC12-FC1	2		-Q1	1	&EFS/1.3	
	&EFS=V1WC2+.UC12/14.7	=V1AR192+UC12-FC1	4		-Q1	3	&EFS/1.3	
	&EFS=V1WC2+.UC12/14.7	=V1AR192+UC12-FC1	6		-Q1	5	&EFS/1.3	
Power Distribution =V1AR192	&EFS=V1WC2+.UC12/14.8		PE		-PE		&EFS/1.4	

=V1AR192KF1/1

=V1AR211KF1+.AR211UC01/1

			Date	12/22/2022	Volvo Trucks North America	Valiant TMS	Cable diagram =V1AR192WC1+V1AR192UC01-W1	Drawing name: =2V04&EFS-EL	= V1AR192WC1
			Ed.	MKLEPADLO					+ V1AR192UC01
			Appr		P6700 Underbody Mainline - Cell 2V04			Document type: EMA	Project nr: 22-16151
Modification	Date	Name	Original		Replacement of / Replaced by	Scale 1:1			Page 1 / 1630

Cable diagram

F09_002_VLU

Cable name	-KF100.31-P14		cable type	PROFINET Cable				
remark			no. of conductors	4	cross-section	22	cable length	
function text	Page / column	Target designation from	Connection point	conductor	Target designation to	Connection point	Page / column	function text
	&EFS=KF0KF1+UC31/10=5	-KF0KF1+UC31-KF100.31-P14			-XPN-X2		&EFS/1.7	

=V1AR192WC1+.AR192UC01/1

=V1AR211WC1/1

			Date	12/22/2022	Volvo Trucks North America	Valiant TMS	Cable diagram =V1AR211KF1+V1AR211UC01-KF100.31-P14	Drawing name: =2V04&EFS-EL	= V1AR211KF1
			Ed.	MKLEPADLO					+ V1AR211UC01
			Appr		P6700 Underbody Mainline - Cell 2V04			Document type: EMA	Project nr: 22-16151
Modification	Date	Name	Original		Replacement of	Replaced by	Scale 1:1		Page 1 / 1630

Cable diagram

F09_002_VLU

Cable name -W1			cable type TC-ER					
remark			no. of conductors 4			cross-section 10		cable length 35
function text	Page / column	Target designation from	Connection point	conductor	Target designation to	Connection point	Page / column	function text
	&EFS=V1WC2+.UC11/12.5	=V1AR211+UC11-FC1	2		-Q1	1	&EFS/1.3	
	&EFS=V1WC2+.UC11/12.5	=V1AR211+UC11-FC1	4		-Q1	3	&EFS/1.3	
	&EFS=V1WC2+.UC11/12.5	=V1AR211+UC11-FC1	6		-Q1	5	&EFS/1.3	
Power Distribution =V1AR211	&EFS=V1WC2+.UC11/12.6		PE		-PE		&EFS/1.4	

			Date	12/22/2022	Volvo Trucks North America	Valiant TMS	Cable diagram =V1AR211WC1+V1AR211UC01-W1	Drawing name: =2V04&EFS-EL	= V1AR211WC1
			Ed.	MKLEPADLO					+ V1AR211UC01
			Appr		P6700 Underbody Mainline - Cell 2V04			Document type: EMA	Project nr: 22-16151
Modification	Date	Name	Original		Replacement of / Replaced by	Scale 1:1			Page 1 / 1630

Cable diagram

F09_002_VLU

Cable name	-W1		cable type	TC-ER				
remark	Max.		no. of conductors	4		cross-section	1	cable length 7.62
function text	Page / column	Target designation from	Connection point	conductor	Target designation to	Connection point	Page / column	function text
	&EFS/1.3	-XG1	L2	BK	=V1WC2+UC162-XG1		&EFS=V1WC2+.UC162/10.3	
	&EFS/1.3	-XG1	L1	BN	=V1WC2+UC162-XG1		&EFS=V1WC2+.UC162/10.2	
	&EFS/1.4	-XG1	PE	GNYE	=V1WC2+UC162-XG2		&EFS=V1WC2+.UC162/10.3	
	&EFS/1.3	-XG1	L3	GY	=V1WC2+UC162-XG1		&EFS=V1WC2+.UC162/10.3	

Cable diagram

F09_002_VLU

Cable name -KF100.15-P14			cable type PROFINET Cable					
remark			no. of conductors 4			cross-section 22		cable length
function text	Page / column	Target designation from	Connection point	conductor	Target designation to	Connection point	Page / column	function text
	&EFS/1.7	-XPN-X2			=V1KF1+UC15-KF100.15-P14		&EFS=V1KF1+.UC15/2.5	

=V1AR211XQ11WC1+.AR211XQ11UC01/1

=V1AR212WC1/1

			Date	12/22/2022	Volvo Trucks North America	Valiant TMS	Cable diagram =V1AR212KF1+V1AR212UC01-KF100.15-P14	Drawing name: =2V04&EFS-EL	= V1AR212KF1
			Ed.	MKLEPADLO					+ V1AR212UC01
			Appr		P6700 Underbody Mainline - Cell 2V04			Document type: EMA	Project nr: 22-16151
Modification	Date	Name	Original		Replacement of / Replaced by	Scale 1:1			Page 1 / 1630

Cable diagram

F09_002_VLU

Cable name -W1			cable type TC-ER					
remark			no. of conductors 4			cross-section 10		cable length 16
function text	Page / column	Target designation from	Connection point	conductor	Target designation to	Connection point	Page / column	function text
	&EFS=V1WC2+.UC12/13.3	=V1AR212+UC12-FC1	2		-Q1	1	&EFS/1.3	
	&EFS=V1WC2+.UC12/13.3	=V1AR212+UC12-FC1	4		-Q1	3	&EFS/1.3	
	&EFS=V1WC2+.UC12/13.3	=V1AR212+UC12-FC1	6		-Q1	5	&EFS/1.3	
Power Distribution =V1AR212	&EFS=V1WC2+.UC12/13.4		PE		-PE		&EFS/1.4	

=V1AR212KF1/1

=V1AR212XQ11WC1+.AR212XQ11UC01/1

			Date	12/22/2022	Volvo Trucks North America	Valiant TMS	Cable diagram =V1AR212WC1+V1AR212UC01-W1	Drawing name: =2V04&EFS-EL	= V1AR212WC1
			Ed.	MKLEPADLO					+ V1AR212UC01
			Appr		P6700 Underbody Mainline - Cell 2V04			Document type: EMA	Project nr: 22-16151
Modification	Date	Name	Original		Replacement of / Replaced by	Scale 1:1			Page 1 / 1630

Cable diagram

F09_002_VLU

Cable name	-W1		cable type	TC-ER				
remark	Max.		no. of conductors	4		cross-section	1	cable length 7.62
function text	Page / column	Target designation from	Connection point	conductor	Target designation to	Connection point	Page / column	function text
	&EFS/1.3	-XG1	L2	BK	=V1WC2+UC164-XG1		&EFS=V1WC2+.UC164/10.8	
	&EFS/1.3	-XG1	L1	BN	=V1WC2+UC164-XG1		&EFS=V1WC2+.UC164/10.7	
	&EFS/1.4	-XG1	PE	GNYE	=V1WC2+UC164-XG2		&EFS=V1WC2+.UC164/10.8	
	&EFS/1.3	-XG1	L3	GY	=V1WC2+UC164-XG1		&EFS=V1WC2+.UC164/10.8	

Cable diagram

F09_002_VLU

Cable name -KF100.14-P5			cable type PROFINET Cable					
remark			no. of conductors 4			cross-section 22		cable length
function text	Page / column	Target designation from	Connection point	conductor	Target designation to	Connection point	Page / column	function text
	&EFS/1.7	-XPN-X2			=V1KF1+UC14-KF100.14-P5		&EFS=V1KF1+.UC14/2.5	

=V1AR212XQ11WC1+.AR212XQ11UC01/1

=V1AR213WC1/1

			Date	12/22/2022	Volvo Trucks North America	Valiant TMS	Cable diagram =V1AR213KF1+V1AR213UC01-KF100.14-P5	Drawing name: =2V04&EFS-EL	= V1AR213KF1
			Ed.	MKLEPADLO					+ V1AR213UC01
			Appr		P6700 Underbody Mainline - Cell 2V04			Document type: EMA	Project nr: 22-16151
Modification	Date	Name	Original		Replacement of / Replaced by	Scale 1:1			Page 1 / 1630

Cable diagram

F09_002_VLU

Cable name -W1			cable type TC-ER					
remark			no. of conductors 4			cross-section 10		cable length 35
function text	Page / column	Target designation from	Connection point	conductor	Target designation to	Connection point	Page / column	function text
	&EFS=V1WC2+.UC11/12.7	=V1AR213+UC11-FC1	2		-Q1	1	&EFS/1.3	
	&EFS=V1WC2+.UC11/12.7	=V1AR213+UC11-FC1	4		-Q1	3	&EFS/1.3	
	&EFS=V1WC2+.UC11/12.7	=V1AR213+UC11-FC1	6		-Q1	5	&EFS/1.3	
Power Distribution =V1AR213	&EFS=V1WC2+.UC11/12.8		PE		-PE		&EFS/1.4	

=V1AR213KF1/1

=V1AR213XQ11WC1+.AR213XQ11UC01/1

			Date	12/22/2022	Volvo Trucks North America	Valiant TMS	Cable diagram =V1AR213WC1+V1AR213UC01-W1	Drawing name: =2V04&EFS-EL	= V1AR213WC1
			Ed.	MKLEPADLO					+ V1AR213UC01
			Appr		P6700 Underbody Mainline - Cell 2V04			Document type: EMA	Project nr: 22-16151
Modification	Date	Name	Original		Replacement of / Replaced by	Scale 1:1			Page 1 / 1630

Cable diagram

F09_002_VLU

Cable name	-W1		cable type	TC-ER				
remark	Max.		no. of conductors	4		cross-section	1	cable length 7.62
function text	Page / column	Target designation from	Connection point	conductor	Target designation to	Connection point	Page / column	function text
	&EFS/1.3	-XG1	L2	BK	=V1WC2+UC162-XG1		&EFS=V1WC2+.UC162/10.4	
	&EFS/1.3	-XG1	L1	BN	=V1WC2+UC162-XG1		&EFS=V1WC2+.UC162/10.4	
	&EFS/1.4	-XG1	PE	GNYE	=V1WC2+UC162-XG2		&EFS=V1WC2+.UC162/10.5	
	&EFS/1.3	-XG1	L3	GY	=V1WC2+UC162-XG1		&EFS=V1WC2+.UC162/10.5	

			Date	12/22/2022	Volvo Trucks North America	Valiant TMS	Cable diagram =V1AR213XQ11WC1+V1AR213XQ11UC01-W1	Drawing name: =2V04&EFS-EL	= V1AR213XQ11WC1
			Ed.	MKLEPADLO					+ V1AR213XQ11UC01
			Appr		P6700 Underbody Mainline - Cell 2V04			Document type: EMA	Project nr: 22-16151
Modification	Date	Name	Original		Replacement of / Replaced by	Scale 1:1			Page 1 / 1630

Cable diagram

F09_002_VLU

Cable name -W1			cable type TPU					
remark			no. of conductors 5			cross-section 16		cable length 15
function text	Page / column	Target designation from	Connection point	conductor	Target designation to	Connection point	Page / column	function text
	&EFS/1.3	+.FQ1BG1-BG1-X1	1		+.FQ1BG2-BG2-X2	1	&EFS/2.4	
	&EFS/1.3	+.FQ1BG1-BG1-X1	2		+.FQ1BG2-BG2-X2	2	&EFS/2.5	
	&EFS/1.3	+.FQ1BG1-BG1-X1	3		+.FQ1BG2-BG2-X2	3	&EFS/2.5	
	&EFS/1.4	+.FQ1BG1-BG1-X1	4		+.FQ1BG2-BG2-X2	4	&EFS/2.5	
	&EFS/1.4	+.FQ1BG1-BG1-X1	5		+.FQ1BG2-BG2-X2	5	&EFS/2.5	

			Date	12/22/2022	Volvo Trucks North America	Valiant TMS	Cable diagram =V1FQ1+V1FQ1-W1	Drawing name: =2V04&EFS-EL	= V1FQ1
			Ed.	MKLEPADLO					+ V1FQ1
			Appr		P6700 Underbody Mainline - Cell 2V04			Document type: EMA	Project nr: 22-16151
Modification	Date	Name	Original		Replacement of / Replaced by	Scale 1:1			Page 1 / 1630

Cable diagram

F09_002_VLU

Cable name -W7			cable type TPU					
remark			no. of conductors 5			cross-section 16		cable length 15
function text	Page / column	Target designation from	Connection point	conductor	Target designation to	Connection point	Page / column	function text
	&EFS/6.4	+.FQ1BG6-BG6-X2	1		+.FQ1BG7-BG7-X1	1	&EFS/7.3	
	&EFS/6.5	+.FQ1BG6-BG6-X2	2		+.FQ1BG7-BG7-X1	2	&EFS/7.3	
	&EFS/6.5	+.FQ1BG6-BG6-X2	3		+.FQ1BG7-BG7-X1	3	&EFS/7.3	
	&EFS/6.5	+.FQ1BG6-BG6-X2	4		+.FQ1BG7-BG7-X1	4	&EFS/7.4	
	&EFS/6.5	+.FQ1BG6-BG6-X2	5		+.FQ1BG7-BG7-X1	5	&EFS/7.4	

1 3

			Date	12/22/2022	Volvo Trucks North America	Valiant TMS	Cable diagram =V1FQ1+V1FQ1-W7	Drawing name: =2V04&EFS-EL	= V1FQ1
			Ed.	MKLEPADLO					+ V1FQ1
			Appr		P6700 Underbody Mainline - Cell 2V04			Document type: EMA	Project nr: 22-16151 Page 2
Modification	Date	Name	Original		Replacement of / Replaced by	Scale 1:1			1630

Cable diagram

F09_002_VLU

Cable name -W8			cable type TPU					
remark			no. of conductors 5			cross-section 16		cable length 25
function text	Page / column	Target designation from	Connection point	conductor	Target designation to	Connection point	Page / column	function text
	&EFS/7.4	+.FQ1BG7-BG7-X2	1		+.FQ1BG8-BG8-X1	1	&EFS/8.3	
	&EFS/7.5	+.FQ1BG7-BG7-X2	2		+.FQ1BG8-BG8-X1	2	&EFS/8.3	
	&EFS/7.5	+.FQ1BG7-BG7-X2	3		+.FQ1BG8-BG8-X1	3	&EFS/8.3	
	&EFS/7.5	+.FQ1BG7-BG7-X2	4		+.FQ1BG8-BG8-X1	4	&EFS/8.4	
	&EFS/7.5	+.FQ1BG7-BG7-X2	5		+.FQ1BG8-BG8-X1	5	&EFS/8.4	

			Date	12/22/2022	Volvo Trucks North America	Valiant TMS	Cable diagram =V1FQ1+V1FQ1-W8	Drawing name: =2V04&EFS-EL	= V1FQ1
			Ed.	MKLEPADLO					+ V1FQ1
			Appr		P6700 Underbody Mainline - Cell 2V04			Document type: EMA / Project nr: 22-16151	Page 3
Modification	Date	Name	Original		Replacement of / Replaced by	Scale 1:1			1630

Cable diagram

F09_002_VLU

Cable name -W11R			cable type TPE					
remark			no. of conductors 4			cross-section 18		cable length 30
function text	Page / column	Target designation from	Connection point	conductor	Target designation to	Connection point	Page / column	function text
	&EFS=V1WC4+.UC11/6.2	=V1WC4+UC11-XD14	2:2	BN	-BR11-R	1	&EFS/9.3	
	&EFS=V1WC4+.UC11/6.2	=V1WC4+UC11-XD10	10:2	BU	-BR11-R	3	&EFS/9.3	
	&EFS/9.3	=V1KF1+UC11-KF11.31	1:1		-BR11-R	4	&EFS/9.4	
	&EFS/9.4	=V1KF1+UC11-KF11.31	5:1		-BR11-R	2	&EFS/9.3	

			Date	12/22/2022	Volvo Trucks North America	Valiant TMS	Cable diagram =V1FQ1+V1FQ1-W11R	Drawing name: =2V04&EFS-EL	= V1FQ1
			Ed.	MKLEPADLO					+ V1FQ1
			Appr		P6700 Underbody Mainline - Cell 2V04			Document type: EMA	Project nr: 22-16151
Modification	Date	Name	Original		Replacement of / Replaced by	Scale 1:1			Page 4 / 1630

Cable diagram

F09_002_VLU

Cable name -W11T			cable type TPE					
remark			no. of conductors 4			cross-section 18		cable length 25
function text	Page / column	Target designation from	Connection point	conductor	Target designation to	Connection point	Page / column	function text
	&EFS=V1WC4+.UC11/6.2	=V1WC4+UC11-XD14	2:2	BN	-BR11-T	1	&EFS/9.1	
	&EFS=V1WC4+.UC11/6.2	=V1WC4+UC11-XD10	10:2	BU	-BR11-T	3	&EFS/9.2	
	&EFS/9.1				-BR11-T	2	&EFS/9.1	
	&EFS/9.2				-BR11-T	4	&EFS/9.2	

			Date	12/22/2022	Volvo Trucks North America	Valiant TMS	Cable diagram =V1FQ1+V1FQ1-W11T	Drawing name: =2V04&EFS-EL	= V1FQ1
			Ed.	MKLEPADLO					+ V1FQ1
			Appr		P6700 Underbody Mainline - Cell 2V04			Document type: EMA	Project nr: 22-16151
Modification	Date	Name	Original		Replacement of / Replaced by	Scale 1:1			Page 5 / 1630

Cable diagram

F09_002_VLU

Cable name -W1			cable type TPU					
remark			no. of conductors 5			cross-section 16		cable length
function text	Page / column	Target designation from	Connection point	conductor	Target designation to	Connection point	Page / column	function text
	&EFS=V1WC4+.UC15/23.5	=V1WC4+UC15-XD181	4		-KF2.11	X01:1	&EFS/10.1	
	&EFS=V1WC4+.UC15/23.4	=V1WC4+UC15-XD181	1		-KF2.11	X01:3	&EFS/10.1	
	&EFS=V1WC4+.UC15/23.4	=V1WC4+UC15-XD181	2		-KF2.11	X01:4	&EFS/10.1	
	&EFS=V1WC4+.UC15/23.5	=V1WC4+UC15-XD181	3		-KF2.11	X01:5	&EFS/10.1	

=V1FQ1+.FQ1/5

=V1GL11UQ51BG0+.GL11UQ51/10

			Date	12/22/2022	Volvo Trucks North America	Valiant TMS	Cable diagram =V1GL11KF2+V1GL11KF2-W1	Drawing name: =2V04&EFS-EL	= V1GL11KF2
			Ed.	MKLEPADLO					+ V1GL11KF2
			Appr		P6700 Underbody Mainline - Cell 2V04			Document type: EMA	Project nr: 22-16151
Modification	Date	Name	Original		Replacement of / Replaced by	Scale 1:1			Page 1 / 1630

Cable diagram

F09_002_VLU

Cable name -W7			cable type TPE					
remark			no. of conductors 4			cross-section 18		cable length 1
function text	Page / column	Target designation from	Connection point	conductor	Target designation to	Connection point	Page / column	function text
	&EFS/1.3	-BG04	1		=V1GL11UQ51KF2-KF2.12-X2	1	&EFS=V1GL11UQ51KF2/2.1	
	&EFS/1.3	-BG04	4		=V1GL11UQ51KF2-KF2.12-X2	4	&EFS=V1GL11UQ51KF2/2.2	
	&EFS/1.3	-BG04	3		=V1GL11UQ51KF2-KF2.12-X2	3	&EFS=V1GL11UQ51KF2/2.2	

			Date	12/22/2022	Volvo Trucks North America	Valiant TMS	Cable diagram =V1GL11UQ51BG0+V1GL11UQ51-W7	Drawing name: =2V04&EFS-EL	= V1GL11UQ51BG0
			Ed.	MKLEPADLO					+ V1GL11UQ51
			Appr		P6700 Underbody Mainline - Cell 2V04			Document type: EMA	Project nr: 22-16151 Page 10
Modification	Date	Name	Original		Replacement of / Replaced by	Scale 1:1			1630

Cable diagram

F09_002_VLU

Cable name -W8			cable type TPE					
remark			no. of conductors 4			cross-section 18		cable length 3
function text	Page / column	Target designation from	Connection point	conductor	Target designation to	Connection point	Page / column	function text
	&EFS/1.6	-XG5/20	P1:1		=V1GL11UQ51KF2-KF2.12-X3	1	&EFS=V1GL11UQ51KF2/2.3	
	&EFS/1.6	-XG5/20	P1:3		=V1GL11UQ51KF2-KF2.12-X3	3	&EFS=V1GL11UQ51KF2/2.3	
	&EFS/1.6	-XG5/20	P1:4		=V1GL11UQ51KF2-KF2.12-X3	4	&EFS=V1GL11UQ51KF2/2.3	
	&EFS/1.7	-XG5/20	P1:2		=V1GL11UQ51KF2-KF2.12-X3	2	&EFS=V1GL11UQ51KF2/2.3	

			Date	12/22/2022	Volvo Trucks North America	Valiant TMS	Cable diagram =V1GL11UQ51BG0+V1GL11UQ51-W8	Drawing name: =2V04&EFS-EL	= V1GL11UQ51BG0
			Ed.	MKLEPADLO					+ V1GL11UQ51
			Appr		P6700 Underbody Mainline - Cell 2V04			Document type: EMA	Project nr: 22-16151 Page 13
Modification	Date	Name	Original		Replacement of / Replaced by	Scale 1:1			1630

Cable diagram

F09_002_VLU

Cable name -W1			cable type TPU					
remark			no. of conductors 5			cross-section 16		cable length 20
function text	Page / column	Target designation from	Connection point	conductor	Target designation to	Connection point	Page / column	function text
	&EFS=V1GL11KF2+.GL11KF2/1.2	=V1GL11UQ51UQ4.1+.GL11UQ51UQ4.1/1	X02:1		-KF2-X20	4	&EFS/1.2	
	&EFS=V1GL11KF2+.GL11KF2/1.1	=V1GL11UQ51UQ4.1+.GL11UQ51UQ4.1/1	X02:3		-KF2-X20	1	&EFS/1.1	
	&EFS=V1GL11KF2+.GL11KF2/1.1	=V1GL11UQ51UQ4.1+.GL11UQ51UQ4.1/1	X02:4		-KF2-X20	2	&EFS/1.1	
	&EFS=V1GL11KF2+.GL11KF2/1.1	=V1GL11UQ51UQ4.1+.GL11UQ51UQ4.1/1	X02:5		-KF2-X20	3	&EFS/1.1	

			Date	12/22/2022	Volvo Trucks North America	Valiant TMS	Cable diagram =V1GL11UQ51KF2+V1GL11UQ51-W1	Drawing name: =2V04&EFS-EL	= V1GL11UQ51KF2
			Ed.	MKLEPADLO					+ V1GL11UQ51
			Appr		P6700 Underbody Mainline - Cell 2V04			Document type: EMA	Project nr: 22-16151
Modification	Date	Name	Original		Replacement of / Replaced by	Scale 1:1			Page 1 / 1630

Cable diagram

F09_002_VLU

Cable name -W1			cable type TPE					
remark			no. of conductors 4			cross-section 18		cable length 4
function text	Page / column	Target designation from	Connection point	conductor	Target designation to	Connection point	Page / column	function text
	&EFS=V1GL11UQ51KF2+V1GL11UQ51/1.2	=V1GL11UQ51/KF2	1		+V1GL11UQ51-KF2.11-X3	P1:1	&EFS=V1GL11UQ51UQ4+V1GL11UQ51UQ4/1.1	
	&EFS=V1GL11UQ51KF2+V1GL11UQ51/1.2	=V1GL11UQ51/KF2	2		+V1GL11UQ51-KF2.11-X3	P1:2	&EFS=V1GL11UQ51UQ4+V1GL11UQ51UQ4/1.1	
	&EFS=V1GL11UQ51KF2+V1GL11UQ51/1.2	=V1GL11UQ51/KF2	3		+V1GL11UQ51-KF2.11-X3	P1:3	&EFS=V1GL11UQ51UQ4+V1GL11UQ51UQ4/1.1	
	&EFS=V1GL11UQ51KF2+V1GL11UQ51/1.2	=V1GL11UQ51/KF2	4		+V1GL11UQ51-KF2.11-X3	P1:4	&EFS=V1GL11UQ51UQ4+V1GL11UQ51UQ4/1.1	

			Date	12/22/2022	Volvo Trucks North America	Valiant TMS	Cable diagram =V1GL11UQ51UQ4.1+V1GL11UQ51UQ4.1-W1	Drawing name: =2V04&EFS-EL	= V1GL11UQ51UQ4.1
			Ed.	MKLEPADLO					+ V1GL11UQ51UQ4.1
			Appr		P6700 Underbody Mainline - Cell 2V04			Document type: EMA	Project nr: 22-16151
Modification	Date	Name	Original		Replacement of / Replaced by	Scale 1:1			Page 1 / 1630

Cable diagram

F09_002_VLU

Cable name -W1.1			cable type TPE					
remark			no. of conductors 4			cross-section 18		cable length 0.5
function text	Page / column	Target designation from	Connection point	conductor	Target designation to	Connection point	Page / column	function text
	&EFS=V1GL11UQ51UQ4+V1GL11UQ51UQ4/1.1	-XGR/S	1		-XGR/S	J1:1	&EFS=V1GL11UQ51UQ4+V1GL11UQ51UQ4/1.1	
	&EFS=V1GL11UQ51UQ4+V1GL11UQ51UQ4/1.1	-XGR/S	4		-XGR/S	J1:4	&EFS=V1GL11UQ51UQ4+V1GL11UQ51UQ4/1.1	
	&EFS=V1GL11UQ51UQ4+V1GL11UQ51UQ4/1.1	-XGR/S	3		-XGR/S	J1:3	&EFS=V1GL11UQ51UQ4+V1GL11UQ51UQ4/1.1	

1 3

			Date	12/22/2022	Volvo Trucks North America	Valiant TMS	Cable diagram =V1GL11UQ51UQ4.1+V1GL11UQ51UQ4.1-W1.1	Drawing name: =2V04&EFS-EL	= V1GL11UQ51UQ4.1
			Ed.	MKLEPADLO					+ V1GL11UQ51UQ4.1
			Appr		P6700 Underbody Mainline - Cell 2V04			Document type: EMA	Project nr: 22-16151
Modification	Date	Name	Original		Replacement of / Replaced by	Scale 1:1			Page 2 / 1630

Cable diagram

F09_002_VLU

Cable name -W1.2			cable type TPE					
remark			no. of conductors 4			cross-section 18		cable length 0.5
function text	Page / column	Target designation from	Connection point	conductor	Target designation to	Connection point	Page / column	function text
	&EFS=V1GL11UQ51UQ4+V1GL11UQ51UQ4/1.2	-XGR/S	1		-XGR/S	J2:1	&EFS=V1GL11UQ51UQ4+V1GL11UQ51UQ4/1.2	
	&EFS=V1GL11UQ51UQ4+V1GL11UQ51UQ4/1.2	-XGR/S	4		-XGR/S	J2:4	&EFS=V1GL11UQ51UQ4+V1GL11UQ51UQ4/1.2	
	&EFS=V1GL11UQ51UQ4+V1GL11UQ51UQ4/1.2	-XGR/S	3		-XGR/S	J2:3	&EFS=V1GL11UQ51UQ4+V1GL11UQ51UQ4/1.2	

			Date	12/22/2022	Volvo Trucks North America	Valiant TMS	Cable diagram =V1GL11UQ51UQ4.1+V1GL11UQ51UQ4.1-W1.2	Drawing name: =2V04&EFS-EL	= V1GL11UQ51UQ4.1
			Ed.	MKLEPADLO					+ V1GL11UQ51UQ4.1
			Appr		P6700 Underbody Mainline - Cell 2V04			Document type: EMA	Project nr: 22-16151 Page 3
Modification	Date	Name	Original		Replacement of / Replaced by	Scale 1:1			1630

Cable diagram

F09_002_VLU

Cable name -W1			cable type TPE					
remark			no. of conductors 4			cross-section 18		cable length 4
function text	Page / column	Target designation from	Connection point	conductor	Target designation to	Connection point	Page / column	function text
	&EFS=V1GL11UQ51KF2+V1GL11UQ51KF2	=V1GL11UQ51KF2+V1GL11UQ51KF2	-KF2.11-X4		-XGR/S	P1:1	&EFS=V1GL11UQ51UQ5+V1GL11UQ51UQ5/1.1	
	&EFS=V1GL11UQ51KF2+V1GL11UQ51KF2	=V1GL11UQ51KF2+V1GL11UQ51KF2	-KF2.11-X4		-XGR/S	P1:2	&EFS=V1GL11UQ51UQ5+V1GL11UQ51UQ5/1.1	
	&EFS=V1GL11UQ51KF2+V1GL11UQ51KF2	=V1GL11UQ51KF2+V1GL11UQ51KF2	-KF2.11-X4		-XGR/S	P1:3	&EFS=V1GL11UQ51UQ5+V1GL11UQ51UQ5/1.1	
	&EFS=V1GL11UQ51KF2+V1GL11UQ51KF2	=V1GL11UQ51KF2+V1GL11UQ51KF2	-KF2.11-X4		-XGR/S	P1:4	&EFS=V1GL11UQ51UQ5+V1GL11UQ51UQ5/1.1	

			Date	12/22/2022	Volvo Trucks North America	Valiant TMS	Cable diagram =V1GL11UQ51UQ5.1+V1GL11UQ51UQ5.1-W1	Drawing name: =2V04&EFS-EL	= V1GL11UQ51UQ5.1
			Ed.	MKLEPADLO					+ V1GL11UQ51UQ5.1
			Appr		P6700 Underbody Mainline - Cell 2V04			Document type: EMA	Project nr: 22-16151
Modification	Date	Name	Original		Replacement of	Replaced by	Scale 1:1		Page 1 / 1630

Cable diagram

F09_002_VLU

Cable name -W1.1			cable type TPE					
remark			no. of conductors 4			cross-section 18		cable length 0.5
function text	Page / column	Target designation from	Connection point	conductor	Target designation to	Connection point	Page / column	function text
	&EFS=V1GL11UQ51UQ5-BVGR	-XGR/S	1		-XGR/S	J1:1	&EFS=V1GL11UQ51UQ5+V1GL11UQ51UQ5/1.1	
	&EFS=V1GL11UQ51UQ5-BVGR	-XGR/S	4		-XGR/S	J1:4	&EFS=V1GL11UQ51UQ5+V1GL11UQ51UQ5/1.1	
	&EFS=V1GL11UQ51UQ5-BVGR	-XGR/S	3		-XGR/S	J1:3	&EFS=V1GL11UQ51UQ5+V1GL11UQ51UQ5/1.1	

1 3

			Date	12/22/2022	Volvo Trucks North America	Valiant TMS	Cable diagram =V1GL11UQ51UQ5.1+V1GL11UQ51UQ5.1-W1.1	Drawing name: =2V04&EFS-EL	= V1GL11UQ51UQ5.1	
			Ed.	MKLEPADLO					+ V1GL11UQ51UQ5.1	
			Appr		P6700 Underbody Mainline - Cell 2V04			Document type: EMA	Project nr: 22-16151	Page 2
Modification	Date	Name	Original		Replacement of / Replaced by	Scale 1:1				1630

Cable diagram

F09_002_VLU

Cable name -W1.2			cable type TPE					
remark			no. of conductors 4			cross-section 18		cable length 0.5
function text	Page / column	Target designation from	Connection point	conductor	Target designation to	Connection point	Page / column	function text
	&EFS=V1GL11UQ51UQ5-W1.2	-XGR/S	1		-XGL11UQ51UQ5/1.2	J2:1	&EFS=V1GL11UQ51UQ5+V1GL11UQ51UQ5/1.2	
	&EFS=V1GL11UQ51UQ5-W1.2	-XGR/S	4		-XGL11UQ51UQ5/1.2	J2:4	&EFS=V1GL11UQ51UQ5+V1GL11UQ51UQ5/1.2	
	&EFS=V1GL11UQ51UQ5-W1.2	-XGR/S	3		-XGL11UQ51UQ5/1.2	J2:3	&EFS=V1GL11UQ51UQ5+V1GL11UQ51UQ5/1.2	

			Date	12/22/2022	Volvo Trucks North America	Valiant TMS	Cable diagram =V1GL11UQ51UQ5.1+V1GL11UQ51UQ5.1-W1.2	Drawing name: =2V04&EFS-EL	= V1GL11UQ51UQ5.1
			Ed.	MKLEPADLO					+ V1GL11UQ51UQ5.1
			Appr		P6700 Underbody Mainline - Cell 2V04			Document type: EMA	Project nr: 22-16151 Page 3
Modification	Date	Name	Original		Replacement of / Replaced by	Scale 1:1			1630

Cable diagram

F09_002_VLU

Cable name -W2			cable type					
remark			no. of conductors 4			cross-section 14		cable length 2
function text	Page / column	Target designation from	Connection point	conductor	Target designation to	Connection point	Page / column	function text
	&EFS/1.3	=V1GL11-TA1	X1:1		-Q1	2	&EFS/1.3	
	&EFS/1.3	=V1GL11-TA1	X1:2		-Q1	4	&EFS/1.3	
	&EFS/1.3	=V1GL11-TA1	X1:3		-Q1	6	&EFS/1.3	
	&EFS/1.4	=V1GL11-TA1	X1:PE		-Q1	PE	&EFS/1.4	

			Date	12/22/2022	Volvo Trucks North America	Valiant TMS	Cable diagram =V1GL11WC1+V1GL11UC01-W2	Drawing name: =2V04&EFS-EL	= V1GL11WC1
			Ed.	MKLEPADLO					+ V1GL11UC01
			Appr		P6700 Underbody Mainline - Cell 2V04			Document type: EMA	Project nr: 22-16151
Modification	Date	Name	Original		Replacement of / Replaced by	Scale 1:1			Page 1 / 1630

Cable diagram

F09_002_VLU

Cable name -W1			cable type TPU					
remark			no. of conductors 5			cross-section 16		cable length
function text	Page / column	Target designation from	Connection point	conductor	Target designation to	Connection point	Page / column	function text
	&EFS=V1WC4+.UC11/26.5	-V1WC4+UC11-XD171	4		-KF2.11	X01:1	&EFS/10.1	
	&EFS=V1WC4+.UC11/26.4	-V1WC4+UC11-XD171	1		-KF2.11	X01:3	&EFS/10.1	
	&EFS=V1WC4+.UC11/26.4	-V1WC4+UC11-XD171	2		-KF2.11	X01:4	&EFS/10.1	
	&EFS=V1WC4+.UC11/26.5	-V1WC4+UC11-XD171	3		-KF2.11	X01:5	&EFS/10.1	

=V1GL11WC1+.GL11UC01/1

=V1GL12UQ51BG0+.GL12UQ51/4

			Date	12/22/2022	Volvo Trucks North America	Valiant TMS	Cable diagram =V1GL12KF2+V1GL12KF2-W1	Drawing name: =2V04&EFS-EL	= V1GL12KF2
			Ed.	MKLEPADLO					+ V1GL12KF2
			Appr		P6700 Underbody Mainline - Cell 2V04			Document type: EMA	Project nr: 22-16151
Modification	Date	Name	Original		Replacement of / Replaced by	Scale 1:1			Page 1 / 1630

Cable diagram

F09_002_VLU

Cable name -W5			cable type TPE					
remark			no. of conductors 4			cross-section 18		cable length 1
function text	Page / column	Target designation from	Connection point	conductor	Target designation to	Connection point	Page / column	function text
	&EFS/1.0	-BG05	1		=V1GL12UQ51KF2-KF2.12-X1	1	&EFS=V1GL12UQ51KF2/2.0	
	&EFS/1.0	-BG05	4		=V1GL12UQ51KF2-KF2.12-X1	4	&EFS=V1GL12UQ51KF2/2.1	
	&EFS/1.1	-BG05	3		=V1GL12UQ51KF2-KF2.12-X1	3	&EFS=V1GL12UQ51KF2/2.1	

			Date	12/22/2022	Volvo Trucks North America	Valiant TMS	Cable diagram =V1GL12UQ51BG0+V1GL12UQ51-W5	Drawing name: =2V04&EFS-EL	= V1GL12UQ51BG0
			Ed.	MKLEPADLO					+ V1GL12UQ51
			Appr		P6700 Underbody Mainline - Cell 2V04			Document type: EMA	Project nr: 22-16151 Page 4
Modification	Date	Name	Original		Replacement of / Replaced by	Scale 1:1			1630

Cable diagram

F09_002_VLU

Cable name -W6			cable type TPE					
remark			no. of conductors 4			cross-section 18		cable length 3
function text	Page / column	Target designation from	Connection point	conductor	Target designation to	Connection point	Page / column	function text
	&EFS/1.3	-XG6/19	P1:1		=V1GL12UQ51KF2-KF2.12-X2	1	&EFS=V1GL12UQ51KF2/2.1	
	&EFS/1.3	-XG6/19	P1:3		=V1GL12UQ51KF2-KF2.12-X2	3	&EFS=V1GL12UQ51KF2/2.2	
	&EFS/1.4	-XG6/19	P1:4		=V1GL12UQ51KF2-KF2.12-X2	4	&EFS=V1GL12UQ51KF2/2.2	
	&EFS/1.4	-XG6/19	P1:2		=V1GL12UQ51KF2-KF2.12-X2	2	&EFS=V1GL12UQ51KF2/2.2	

			Date	12/22/2022	Volvo Trucks North America	Valiant TMS	Cable diagram =V1GL12UQ51BG0+V1GL12UQ51-W6	Drawing name: =2V04&EFS-EL	= V1GL12UQ51BG0
			Ed.	MKLEPADLO					+ V1GL12UQ51
			Appr		P6700 Underbody Mainline - Cell 2V04			Document type: EMA	Project nr: 22-16151
Modification	Date	Name	Original		Replacement of / Replaced by	Scale 1:1			Page 7 / 1630

Cable diagram

F09_002_VLU

Cable name -W6.1			cable type TPE					
remark			no. of conductors 4			cross-section 18		cable length 1
function text	Page / column	Target designation from	Connection point	conductor	Target designation to	Connection point	Page / column	function text
	&EFS/1.3	-BG06	1		-XG6/19	J1:1	&EFS/1.3	
	&EFS/1.3	-BG06	4		-XG6/19	J1:4	&EFS/1.4	
	&EFS/1.3	-BG06	3		-XG6/19	J1:3	&EFS/1.3	

			Date	12/22/2022	Volvo Trucks North America		Valiant TMS	Cable diagram =V1GL12UQ51BG0+V1GL12UQ51-W6.1	Drawing name: =2V04&EFS-EL	= V1GL12UQ51BG0
			Ed.	MKLEPADLO						+ V1GL12UQ51
			Appr		P6700 Underbody Mainline - Cell 2V04				Document type: EMA	Project nr: 22-16151
Modification	Date	Name	Original		Replacement of	Replaced by	Scale 1:1			Page 8 / 1630

Cable diagram

F09_002_VLU

Cable name -W6.2			cable type TPE					
remark			no. of conductors 4			cross-section 18		cable length 1
function text	Page / column	Target designation from	Connection point	conductor	Target designation to	Connection point	Page / column	function text
	&EFS/1.4	-BG19	1		-XG6/19	J2:1	&EFS/1.4	
	&EFS/1.4	-BG19	4		-XG6/19	J2:4	&EFS/1.5	
	&EFS/1.4	-BG19	3		-XG6/19	J2:3	&EFS/1.4	

			Date	12/22/2022	Volvo Trucks North America	Valiant TMS	Cable diagram =V1GL12UQ51BG0+V1GL12UQ51-W6.2	Drawing name: =2V04&EFS-EL	= V1GL12UQ51BG0
			Ed.	MKLEPADLO					+ V1GL12UQ51
			Appr		P6700 Underbody Mainline - Cell 2V04			Document type: EMA	Project nr: 22-16151 Page 9
Modification	Date	Name	Original		Replacement of / Replaced by	Scale 1:1			1630

Cable diagram

F09_002_VLU

Cable name -W7			cable type TPE					
remark			no. of conductors 4			cross-section 18		cable length 1
function text	Page / column	Target designation from	Connection point	conductor	Target designation to	Connection point	Page / column	function text
	&EFS/1.6	-XG7/14	P1:1		=V1GL12UQ51KF2-KF2.12-X3	1	&EFS=V1GL12UQ51KF2/2.3	
	&EFS/1.6	-XG7/14	P1:3		=V1GL12UQ51KF2-KF2.12-X3	3	&EFS=V1GL12UQ51KF2/2.3	
	&EFS/1.6	-XG7/14	P1:4		=V1GL12UQ51KF2-KF2.12-X3	4	&EFS=V1GL12UQ51KF2/2.3	
	&EFS/1.7	-XG7/14	P1:2		=V1GL12UQ51KF2-KF2.12-X3	2	&EFS=V1GL12UQ51KF2/2.3	

			Date	12/22/2022	Volvo Trucks North America	Valiant TMS	Cable diagram =V1GL12UQ51BG0+V1GL12UQ51-W7	Drawing name: =2V04&EFS-EL	= V1GL12UQ51BG0
			Ed.	MKLEPADLO					+ V1GL12UQ51
			Appr		P6700 Underbody Mainline - Cell 2V04			Document type: EMA	Project nr: 22-16151
Modification	Date	Name	Original		Replacement of / Replaced by	Scale 1:1			Page 10 / 1630

Cable diagram

F09_002_VLU

Cable name -W7.1			cable type TPE					
remark			no. of conductors 4			cross-section 18		cable length 2
function text	Page / column	Target designation from	Connection point	conductor	Target designation to	Connection point	Page / column	function text
	&EFS/1.6	-BG07	1		-XG7/14	J1:1	&EFS/1.6	
	&EFS/1.6	-BG07	4		-XG7/14	J1:4	&EFS/1.6	
	&EFS/1.6	-BG07	3		-XG7/14	J1:3	&EFS/1.6	

			Date	12/22/2022	Volvo Trucks North America	Valiant TMS	Cable diagram =V1GL12UQ51BG0+V1GL12UQ51-W7.1	Drawing name: =2V04&EFS-EL	= V1GL12UQ51BG0
			Ed.	MKLEPADLO					+ V1GL12UQ51
			Appr		P6700 Underbody Mainline - Cell 2V04			Document type: EMA	Project nr: 22-16151
Modification	Date	Name	Original		Replacement of / Replaced by	Scale 1:1			Page 11 / 1630

Cable diagram

F09_002_VLU

Cable name -W7.2			cable type TPE					
remark			no. of conductors 4			cross-section 18		cable length 2
function text	Page / column	Target designation from	Connection point	conductor	Target designation to	Connection point	Page / column	function text
	&EFS/1.7	-BG14	1		-XG7/14	J2:1	&EFS/1.7	
	&EFS/1.7	-BG14	4		-XG7/14	J2:4	&EFS/1.7	
	&EFS/1.7	-BG14	3		-XG7/14	J2:3	&EFS/1.7	

			Date	12/22/2022	Volvo Trucks North America	Valiant TMS	Cable diagram =V1GL12UQ51BG0+V1GL12UQ51-W7.2	Drawing name: =2V04&EFS-EL	= V1GL12UQ51BG0
			Ed.	MKLEPADLO					+ V1GL12UQ51
			Appr		P6700 Underbody Mainline - Cell 2V04			Document type: EMA	Project nr: 22-16151 Page 12
Modification	Date	Name	Original		Replacement of / Replaced by	Scale 1:1			1630

Cable diagram

F09_002_VLU

Cable name -W8			cable type TPE					
remark			no. of conductors 4			cross-section 18		cable length 3
function text	Page / column	Target designation from	Connection point	conductor	Target designation to	Connection point	Page / column	function text
	&EFS/2.0	-XG8/9	P1:1		=V1GL12UQ51KF2-KF2.12-X4	1	&EFS=V1GL12UQ51KF2/2.4	
	&EFS/2.1	-XG8/9	P1:3		=V1GL12UQ51KF2-KF2.12-X4	3	&EFS=V1GL12UQ51KF2/2.4	
	&EFS/2.1	-XG8/9	P1:4		=V1GL12UQ51KF2-KF2.12-X4	4	&EFS=V1GL12UQ51KF2/2.4	
	&EFS/2.1	-XG8/9	P1:2		=V1GL12UQ51KF2-KF2.12-X4	2	&EFS=V1GL12UQ51KF2/2.4	

			Date	12/22/2022	Volvo Trucks North America	Valiant TMS	Cable diagram =V1GL12UQ51BG0+V1GL12UQ51-W8	Drawing name: =2V04&EFS-EL	= V1GL12UQ51BG0
			Ed.	MKLEPADLO					+ V1GL12UQ51
			Appr		P6700 Underbody Mainline - Cell 2V04			Document type: EMA	Project nr: 22-16151 Page 13
Modification	Date	Name	Original		Replacement of / Replaced by	Scale 1:1			1630

Cable diagram

F09_002_VLU

Cable name	-W1	cable type	TPU		
remark		no. of conductors	5	cross-section 16	cable length 20

function text	Page / column	Target designation from	Connection point	conductor	Target designation to	Connection point	Page / column	function text
	&EFS=V1GL12KF2+.GL12KF2/1.2	=V1GL12KF2+GL12KF2-KF2.11	X02:1		-KF2-X20	4	&EFS/1.2	
	&EFS=V1GL12KF2+.GL12KF2/1.2	=V1GL12KF2+GL12KF2-KF2.11	X02:3		-KF2-X20	1	&EFS/1.1	
	&EFS=V1GL12KF2+.GL12KF2/1.2	=V1GL12KF2+GL12KF2-KF2.11	X02:4		-KF2-X20	2	&EFS/1.1	
	&EFS=V1GL12KF2+.GL12KF2/1.2	=V1GL12KF2+GL12KF2-KF2.11	X02:5		-KF2-X20	3	&EFS/1.1	

=V1GL12UQ51BG0/13

=V1GL12UQ51UQ3.1+.GL12UQ51UQ3.1/1

			Date	12/22/2022	Volvo Trucks North America	Valiant TMS	Cable diagram =V1GL12UQ51KF2+V1GL12UQ51-W1	Drawing name: =2V04&EFS-EL	= V1GL12UQ51KF2 + V1GL12UQ51
			Ed.	MKLEPADLO	P6700 Underbody Mainline - Cell 2V04				
			Appr					Document type: EMA	Project nr: 22-16151
Modification	Date	Name	Original		Replacement of / Replaced by	Scale 1:1			Page 1 / 1630

Cable diagram

F09_002_VLU

Cable name -W1			cable type TPE					
remark			no. of conductors 4			cross-section 18		cable length 4
function text	Page / column	Target designation from	Connection point	conductor	Target designation to	Connection point	Page / column	function text
	&EFS=V1GL12UQ51KF2+V1GL12UQ51/1	=V1GL12UQ51KF2+V1GL12UQ51/1	2.11-X1		-XGR/S	P1:1	&EFS=V1GL12UQ51UQ3+V1GL12UQ51UQ3/1.1	
	&EFS=V1GL12UQ51KF2+V1GL12UQ51/1	=V1GL12UQ51KF2+V1GL12UQ51/1	2.11-X1		-XGR/S	P1:2	&EFS=V1GL12UQ51UQ3+V1GL12UQ51UQ3/1.1	
	&EFS=V1GL12UQ51KF2+V1GL12UQ51/1	=V1GL12UQ51KF2+V1GL12UQ51/1	2.11-X1		-XGR/S	P1:3	&EFS=V1GL12UQ51UQ3+V1GL12UQ51UQ3/1.1	
	&EFS=V1GL12UQ51KF2+V1GL12UQ51/1	=V1GL12UQ51KF2+V1GL12UQ51/1	2.11-X1		-XGR/S	P1:4	&EFS=V1GL12UQ51UQ3+V1GL12UQ51UQ3/1.1	

			Date	12/22/2022	Volvo Trucks North America	Valiant TMS	Cable diagram =V1GL12UQ51UQ3.1+V1GL12UQ51UQ3.1-W1	Drawing name: =2V04&EFS-EL	= V1GL12UQ51UQ3.1
			Ed.	MKLEPADLO					+ V1GL12UQ51UQ3.1
			Appr		P6700 Underbody Mainline - Cell 2V04			Document type: EMA	Project nr: 22-16151
Modification	Date	Name	Original		Replacement of / Replaced by	Scale 1:1			Page 1 / 1630

Cable diagram

F09_002_VLU

Cable name -W1.1			cable type TPE					
remark			no. of conductors 4			cross-section 18		cable length 0.5
function text	Page / column	Target designation from	Connection point	conductor	Target designation to	Connection point	Page / column	function text
	&EFS=V1GL12UQ51UQ3+V1GL12UQ51UQ3/1.1	-XGR/S	1		-XGR/S	J1:1	&EFS=V1GL12UQ51UQ3+V1GL12UQ51UQ3/1.1	
	&EFS=V1GL12UQ51UQ3+V1GL12UQ51UQ3/1.1	-XGR/S	4		-XGR/S	J1:4	&EFS=V1GL12UQ51UQ3+V1GL12UQ51UQ3/1.1	
	&EFS=V1GL12UQ51UQ3+V1GL12UQ51UQ3/1.1	-XGR/S	3		-XGR/S	J1:3	&EFS=V1GL12UQ51UQ3+V1GL12UQ51UQ3/1.1	

1 3

			Date	12/22/2022	Volvo Trucks North America	Valiant TMS	Cable diagram =V1GL12UQ51UQ3.1+V1GL12UQ51UQ3.1-W1.1	Drawing name: =2V04&EFS-EL	= V1GL12UQ51UQ3.1
			Ed.	MKLEPADLO					+ V1GL12UQ51UQ3.1
			Appr		P6700 Underbody Mainline - Cell 2V04			Document type: EMA	Project nr: 22-16151
Modification	Date	Name	Original		Replacement of / Replaced by	Scale 1:1			Page 2 / 1630

Cable diagram

F09_002_VLU

Cable name -W1.2			cable type TPE					
remark			no. of conductors 4			cross-section 18		cable length 0.5
function text	Page / column	Target designation from	Connection point	conductor	Target designation to	Connection point	Page / column	function text
	&EFS=V1GL12UQ51UQ3+V1GL12UQ51UQ3/1.2	-XGR/S	1		-XGL12UQ51UQ3/1.2	J2:1	&EFS=V1GL12UQ51UQ3+V1GL12UQ51UQ3/1.2	
	&EFS=V1GL12UQ51UQ3+V1GL12UQ51UQ3/1.2	-XGR/S	4		-XGL12UQ51UQ3/1.2	J2:4	&EFS=V1GL12UQ51UQ3+V1GL12UQ51UQ3/1.2	
	&EFS=V1GL12UQ51UQ3+V1GL12UQ51UQ3/1.2	-XGR/S	3		-XGL12UQ51UQ3/1.2	J2:3	&EFS=V1GL12UQ51UQ3+V1GL12UQ51UQ3/1.2	

			Date	12/22/2022	Volvo Trucks North America	Valiant TMS	Cable diagram =V1GL12UQ51UQ3.1+V1GL12UQ51UQ3.1-W1.2	Drawing name: =2V04&EFS-EL	= V1GL12UQ51UQ3.1
			Ed.	MKLEPADLO					+ V1GL12UQ51UQ3.1
			Appr		P6700 Underbody Mainline - Cell 2V04			Document type: EMA	Project nr: 22-16151 Page 3
Modification	Date	Name	Original		Replacement of / Replaced by	Scale 1:1			1630

Cable diagram

F09_002_VLU

Cable name -W1			cable type TPE					
remark			no. of conductors 4			cross-section 18		cable length 4
function text	Page / column	Target designation from	Connection point	conductor	Target designation to	Connection point	Page / column	function text
	&EFS=V1GL12UQ51KF2+V1GL12UQ51KF2	=V1GL12UQ51KF2+V1GL12UQ51KF2	1		-XGR/S	P1:1	&EFS=V1GL12UQ51UQ4+V1GL12UQ51UQ4/1.1	
	&EFS=V1GL12UQ51KF2+V1GL12UQ51KF2	=V1GL12UQ51KF2+V1GL12UQ51KF2	2		-XGR/S	P1:2	&EFS=V1GL12UQ51UQ4+V1GL12UQ51UQ4/1.1	
	&EFS=V1GL12UQ51KF2+V1GL12UQ51KF2	=V1GL12UQ51KF2+V1GL12UQ51KF2	3		-XGR/S	P1:3	&EFS=V1GL12UQ51UQ4+V1GL12UQ51UQ4/1.1	
	&EFS=V1GL12UQ51KF2+V1GL12UQ51KF2	=V1GL12UQ51KF2+V1GL12UQ51KF2	4		-XGR/S	P1:4	&EFS=V1GL12UQ51UQ4+V1GL12UQ51UQ4/1.1	

			Date	12/22/2022	Volvo Trucks North America	Valiant TMS	Cable diagram =V1GL12UQ51UQ4.1+V1GL12UQ51UQ4.1-W1	Drawing name: =2V04&EFS-EL	= V1GL12UQ51UQ4.1
			Ed.	MKLEPADLO					+ V1GL12UQ51UQ4.1
			Appr		P6700 Underbody Mainline - Cell 2V04			Document type: EMA	Project nr: 22-16151
Modification	Date	Name	Original		Replacement of / Replaced by	Scale 1:1			Page 1 / 1630

Cable diagram

F09_002_VLU

Cable name -W1.1			cable type TPE					
remark			no. of conductors 4			cross-section 18		cable length 0.5
function text	Page / column	Target designation from	Connection point	conductor	Target designation to	Connection point	Page / column	function text
	&EFS=V1GL12UQ51UQ4+V1GL12UQ51UQ4/1.1	-XGR/S	1		-XGR/S	J1:1	&EFS=V1GL12UQ51UQ4+V1GL12UQ51UQ4/1.1	
	&EFS=V1GL12UQ51UQ4+V1GL12UQ51UQ4/1.1	-XGR/S	4		-XGR/S	J1:4	&EFS=V1GL12UQ51UQ4+V1GL12UQ51UQ4/1.1	
	&EFS=V1GL12UQ51UQ4+V1GL12UQ51UQ4/1.1	-XGR/S	3		-XGR/S	J1:3	&EFS=V1GL12UQ51UQ4+V1GL12UQ51UQ4/1.1	

1 3

			Date	12/22/2022	Volvo Trucks North America	Valiant TMS	Cable diagram =V1GL12UQ51UQ4.1+V1GL12UQ51UQ4.1-W1.1	Drawing name: =2V04&EFS-EL	= V1GL12UQ51UQ4.1
			Ed.	MKLEPADLO					+ V1GL12UQ51UQ4.1
			Appr		P6700 Underbody Mainline - Cell 2V04			Document type: EMA	Project nr: 22-16151
Modification	Date	Name	Original		Replacement of / Replaced by	Scale 1:1			Page 2 / 1630

Cable diagram

F09_002_VLU

Cable name -W1.2			cable type TPE					
remark			no. of conductors 4			cross-section 18		cable length 0.5
function text	Page / column	Target designation from	Connection point	conductor	Target designation to	Connection point	Page / column	function text
	&EFS=V1GL12UQ51UQ4+V1GL12UQ51UQ4/1.2	-XGR/S	1		-XGR/S	J2:1	&EFS=V1GL12UQ51UQ4+V1GL12UQ51UQ4/1.2	
	&EFS=V1GL12UQ51UQ4+V1GL12UQ51UQ4/1.2	-XGR/S	4		-XGR/S	J2:4	&EFS=V1GL12UQ51UQ4+V1GL12UQ51UQ4/1.2	
	&EFS=V1GL12UQ51UQ4+V1GL12UQ51UQ4/1.2	-XGR/S	3		-XGR/S	J2:3	&EFS=V1GL12UQ51UQ4+V1GL12UQ51UQ4/1.2	

			Date	12/22/2022	Volvo Trucks North America	Valiant TMS	Cable diagram =V1GL12UQ51UQ4.1+V1GL12UQ51UQ4.1-W1.2	Drawing name: =2V04&EFS-EL	= V1GL12UQ51UQ4.1
			Ed.	MKLEPADLO					+ V1GL12UQ51UQ4.1
			Appr		P6700 Underbody Mainline - Cell 2V04	Scale 1:1		Document type: EMA	Project nr: 22-16151
Modification	Date	Name	Original		Replacement of	Replaced by			Page 3 / 1630

Cable diagram

F09_002_VLU

Cable name -W1			cable type TPE					
remark			no. of conductors 4			cross-section 18		cable length 4
function text	Page / column	Target designation from	Connection point	conductor	Target designation to	Connection point	Page / column	function text
	&EFS=V1GL12UQ51KF2+V1GL12UQ51KF2	=V1GL12UQ51KF2+V1GL12UQ51KF2	1		-XGR/S	P1:1	&EFS=V1GL12UQ51UQ5+V1GL12UQ51UQ5/1.1	
	&EFS=V1GL12UQ51KF2+V1GL12UQ51KF2	=V1GL12UQ51KF2+V1GL12UQ51KF2	2		-XGR/S	P1:2	&EFS=V1GL12UQ51UQ5+V1GL12UQ51UQ5/1.1	
	&EFS=V1GL12UQ51KF2+V1GL12UQ51KF2	=V1GL12UQ51KF2+V1GL12UQ51KF2	3		-XGR/S	P1:3	&EFS=V1GL12UQ51UQ5+V1GL12UQ51UQ5/1.1	
	&EFS=V1GL12UQ51KF2+V1GL12UQ51KF2	=V1GL12UQ51KF2+V1GL12UQ51KF2	4		-XGR/S	P1:4	&EFS=V1GL12UQ51UQ5+V1GL12UQ51UQ5/1.1	

			Date	12/22/2022	Volvo Trucks North America	Valiant TMS	Cable diagram =V1GL12UQ51UQ5.1+V1GL12UQ51UQ5.1-W1	Drawing name: =2V04&EFS-EL	= V1GL12UQ51UQ5.1
			Ed.	MKLEPADLO					+ V1GL12UQ51UQ5.1
			Appr		P6700 Underbody Mainline - Cell 2V04			Document type: EMA	Project nr: 22-16151
Modification	Date	Name	Original		Replacement of	Replaced by	Scale 1:1		Page 1 / 1630

Cable diagram

F09_002_VLU

Cable name -W1.1			cable type TPE					
remark			no. of conductors 4			cross-section 18		cable length 0.5
function text	Page / column	Target designation from	Connection point	conductor	Target designation to	Connection point	Page / column	function text
	&EFS=V1GL12UQ51UQ5+V1GL12UQ51UQ5/1.1	-XGR/S	1		-XGR/S	J1:1	&EFS=V1GL12UQ51UQ5+V1GL12UQ51UQ5/1.1	
	&EFS=V1GL12UQ51UQ5+V1GL12UQ51UQ5/1.1	-XGR/S	4		-XGR/S	J1:4	&EFS=V1GL12UQ51UQ5+V1GL12UQ51UQ5/1.1	
	&EFS=V1GL12UQ51UQ5+V1GL12UQ51UQ5/1.1	-XGR/S	3		-XGR/S	J1:3	&EFS=V1GL12UQ51UQ5+V1GL12UQ51UQ5/1.1	

1 3

			Date	12/22/2022	Volvo Trucks North America	Valiant TMS	Cable diagram =V1GL12UQ51UQ5.1+V1GL12UQ51UQ5.1-W1.1	Drawing name: =2V04&EFS-EL	= V1GL12UQ51UQ5.1
			Ed.	MKLEPADLO					+ V1GL12UQ51UQ5.1
			Appr		P6700 Underbody Mainline - Cell 2V04			Document type: EMA	Project nr: 22-16151
Modification	Date	Name	Original		Replacement of / Replaced by	Scale 1:1			Page 2 / 1630

Cable diagram

F09_002_VLU

Cable name -W1.2			cable type TPE					
remark			no. of conductors 4			cross-section 18		cable length 0.5
function text	Page / column	Target designation from	Connection point	conductor	Target designation to	Connection point	Page / column	function text
	&EFS=V1GL12UQ51UQ5-BG0	=V1GL12UQ51UQ5/1.2	1		-XGR/S	J2:1	&EFS=V1GL12UQ51UQ5+V1GL12UQ51UQ5/1.2	
	&EFS=V1GL12UQ51UQ5-BG0	=V1GL12UQ51UQ5/1.2	4		-XGR/S	J2:4	&EFS=V1GL12UQ51UQ5+V1GL12UQ51UQ5/1.2	
	&EFS=V1GL12UQ51UQ5-BG0	=V1GL12UQ51UQ5/1.2	3		-XGR/S	J2:3	&EFS=V1GL12UQ51UQ5+V1GL12UQ51UQ5/1.2	

			Date	12/22/2022	Volvo Trucks North America	Valiant TMS	Cable diagram =V1GL12UQ51UQ5.1+V1GL12UQ51UQ5.1-W1.2	Drawing name: =2V04&EFS-EL	= V1GL12UQ51UQ5.1
			Ed.	MKLEPADLO					+ V1GL12UQ51UQ5.1
			Appr		P6700 Underbody Mainline - Cell 2V04			Document type: EMA	Project nr: 22-16151 Page 3
Modification	Date	Name	Original		Replacement of / Replaced by	Scale 1:1			1630

Cable diagram

F09_002_VLU

Cable name -W1			cable type TPE					
remark			no. of conductors 4			cross-section 18		cable length 3
function text	Page / column	Target designation from	Connection point	conductor	Target designation to	Connection point	Page / column	function text
	&EFS/1.0	-XG1/3	P1:1		=V1GL13UQ51KF1-KF1.12-X1	1	&EFS=V1GL13UQ51KF1/2.0	
	&EFS/1.1	-XG1/3	P1:3		=V1GL13UQ51KF1-KF1.12-X1	3	&EFS=V1GL13UQ51KF1/2.1	
	&EFS/1.1	-XG1/3	P1:4		=V1GL13UQ51KF1-KF1.12-X1	4	&EFS=V1GL13UQ51KF1/2.1	
	&EFS/1.1	-XG1/3	P1:2		=V1GL13UQ51KF1-KF1.12-X1	2	&EFS=V1GL13UQ51KF1/2.0	

			Date	12/22/2022	Volvo Trucks North America	Valiant TMS	Cable diagram =V1GL13UQ51BG0+V1GL13UQ51-W1	Drawing name: =2V04&EFS-EL	= V1GL13UQ51BG0
			Ed.	MKLEPADLO					+ V1GL13UQ51
			Appr		P6700 Underbody Mainline - Cell 2V04			Document type: EMA	Project nr: 22-16151
Modification	Date	Name	Original		Replacement of / Replaced by	Scale 1:1			Page 1 / 1630

Cable diagram

F09_002_VLU

Cable name -W1.1			cable type TPE					
remark			no. of conductors 4			cross-section 18		cable length 1
function text	Page / column	Target designation from	Connection point	conductor	Target designation to	Connection point	Page / column	function text
	&EFS/1.0	-BG01	1		-XG1/3	J1:1	&EFS/1.0	
	&EFS/1.0	-BG01	4		-XG1/3	J1:4	&EFS/1.1	
	&EFS/1.1	-BG01	3		-XG1/3	J1:3	&EFS/1.1	

			Date	12/22/2022	Volvo Trucks North America	Valiant TMS	Cable diagram =V1GL13UQ51BG0+V1GL13UQ51-W1.1	Drawing name: =2V04&EFS-EL	= V1GL13UQ51BG0
			Ed.	MKLEPADLO					+ V1GL13UQ51
			Appr		P6700 Underbody Mainline - Cell 2V04	Scale 1:1		Document type: EMA	Project nr: 22-16151
Modification	Date	Name	Original		Replacement of / Replaced by				Page 2 / 1630

Cable diagram

F09_002_VLU

Cable name -W1.2			cable type TPE					
remark			no. of conductors 4			cross-section 18		cable length 1
function text	Page / column	Target designation from	Connection point	conductor	Target designation to	Connection point	Page / column	function text
	&EFS/1.1	-BG03	1		-XG1/3	J2:1	&EFS/1.1	
	&EFS/1.1	-BG03	4		-XG1/3	J2:4	&EFS/1.2	
	&EFS/1.2	-BG03	3		-XG1/3	J2:3	&EFS/1.2	

			Date	12/22/2022	Volvo Trucks North America		Valiant TMS	Cable diagram =V1GL13UQ51BG0+V1GL13UQ51-W1.2	Drawing name: =2V04&EFS-EL	= V1GL13UQ51BG0
			Ed.	MKLEPADLO						+ V1GL13UQ51
			Appr		P6700 Underbody Mainline - Cell 2V04				Document type: EMA	Project nr: 22-16151
Modification	Date	Name	Original		Replacement of	Replaced by	Scale 1:1			Page 3 / 1630

Cable diagram

F09_002_VLU

Cable name -W2			cable type TPE					
remark			no. of conductors 4			cross-section 18		cable length 1
function text	Page / column	Target designation from	Connection point	conductor	Target designation to	Connection point	Page / column	function text
	&EFS/1.3	-XG2/4	P1:1		=V1GL13UQ51KF1-KF1.12-X2	1	&EFS=V1GL13UQ51KF1/2.1	
	&EFS/1.3	-XG2/4	P1:3		=V1GL13UQ51KF1-KF1.12-X2	3	&EFS=V1GL13UQ51KF1/2.2	
	&EFS/1.4	-XG2/4	P1:4		=V1GL13UQ51KF1-KF1.12-X2	4	&EFS=V1GL13UQ51KF1/2.2	
	&EFS/1.4	-XG2/4	P1:2		=V1GL13UQ51KF1-KF1.12-X2	2	&EFS=V1GL13UQ51KF1/2.2	

3 5

			Date	12/22/2022	Volvo Trucks North America	Valiant TMS	Cable diagram =V1GL13UQ51BG0+V1GL13UQ51-W2	Drawing name: =2V04&EFS-EL	= V1GL13UQ51BG0
			Ed.	MKLEPADLO					+ V1GL13UQ51
			Appr		P6700 Underbody Mainline - Cell 2V04			Document type: EMA	Project nr: 22-16151
Modification	Date	Name	Original		Replacement of / Replaced by	Scale 1:1			Page 4 / 1630

Cable diagram

F09_002_VLU

Cable name -W2.1			cable type TPE					
remark			no. of conductors 4			cross-section 18		cable length 2
function text	Page / column	Target designation from	Connection point	conductor	Target designation to	Connection point	Page / column	function text
	&EFS/1.3	-BG02	1		-XG2/4	J1:1	&EFS/1.3	
	&EFS/1.3	-BG02	4		-XG2/4	J1:4	&EFS/1.4	
	&EFS/1.3	-BG02	3		-XG2/4	J1:3	&EFS/1.3	

			Date	12/22/2022	Volvo Trucks North America	Valiant TMS	Cable diagram	Drawing name: =2V04&EFS-EL	= V1GL13UQ51BG0
			Ed.	MKLEPADLO			=V1GL13UQ51BG0+V1GL13UQ51-W2.1		+ V1GL13UQ51
			Appr		P6700 Underbody Mainline - Cell 2V04			Document type: EMA	Project nr: 22-16151
Modification	Date	Name	Original		Replacement of / Replaced by	Scale 1:1			Page 5 / 1630

Cable diagram

F09_002_VLU

Cable name -W2.2			cable type TPE					
remark			no. of conductors 4			cross-section 18		cable length 2
function text	Page / column	Target designation from	Connection point	conductor	Target designation to	Connection point	Page / column	function text
	&EFS/1.4	-BG04	1		-XG2/4	J2:1	&EFS/1.4	
	&EFS/1.4	-BG04	4		-XG2/4	J2:4	&EFS/1.5	
	&EFS/1.4	-BG04	3		-XG2/4	J2:3	&EFS/1.4	

			Date	12/22/2022	Volvo Trucks North America	Valiant TMS	Cable diagram =V1GL13UQ51BG0+V1GL13UQ51-W2.2	Drawing name: =2V04&EFS-EL	= V1GL13UQ51BG0
			Ed.	MKLEPADLO					+ V1GL13UQ51
			Appr		P6700 Underbody Mainline - Cell 2V04			Document type: EMA	Project nr: 22-16151 Page 6
Modification	Date	Name	Original		Replacement of / Replaced by	Scale 1:1			1630

Cable diagram

F09_002_VLU

Cable name -W3			cable type TPE					
remark			no. of conductors 4			cross-section 18		cable length 1
function text	Page / column	Target designation from	Connection point	conductor	Target designation to	Connection point	Page / column	function text
	&EFS/1.6	-XG5/6	P1:1		=V1GL13UQ51KF1-KF1.12-X3	1	&EFS=V1GL13UQ51KF1/2.3	
	&EFS/1.6	-XG5/6	P1:3		=V1GL13UQ51KF1-KF1.12-X3	3	&EFS=V1GL13UQ51KF1/2.3	
	&EFS/1.6	-XG5/6	P1:4		=V1GL13UQ51KF1-KF1.12-X3	4	&EFS=V1GL13UQ51KF1/2.3	
	&EFS/1.7	-XG5/6	P1:2		=V1GL13UQ51KF1-KF1.12-X3	2	&EFS=V1GL13UQ51KF1/2.3	

6 8

			Date	12/22/2022	Volvo Trucks North America	Valiant TMS	Cable diagram =V1GL13UQ51BG0+V1GL13UQ51-W3	Drawing name: =2V04&EFS-EL	= V1GL13UQ51BG0
			Ed.	MKLEPADLO					+ V1GL13UQ51
			Appr		P6700 Underbody Mainline - Cell 2V04			Document type: EMA	Project nr: 22-16151
Modification	Date	Name	Original		Replacement of / Replaced by	Scale 1:1			Page 7 / 1630

Cable diagram

F09_002_VLU

Cable name -W3.1			cable type TPE					
remark			no. of conductors 4			cross-section 18		cable length 2
function text	Page / column	Target designation from	Connection point	conductor	Target designation to	Connection point	Page / column	function text
	&EFS/1.6	-BG05	1		-XG5/6	J1:1	&EFS/1.6	
	&EFS/1.6	-BG05	4		-XG5/6	J1:4	&EFS/1.6	
	&EFS/1.6	-BG05	3		-XG5/6	J1:3	&EFS/1.6	

			Date	12/22/2022	Volvo Trucks North America	Valiant TMS	Cable diagram =V1GL13UQ51BG0+V1GL13UQ51-W3.1	Drawing name: =2V04&EFS-EL	= V1GL13UQ51BG0
			Ed.	MKLEPADLO					+ V1GL13UQ51
			Appr		P6700 Underbody Mainline - Cell 2V04			Document type: EMA	Project nr: 22-16151
Modification	Date	Name	Original		Replacement of / Replaced by	Scale 1:1			Page 8 / 1630

Cable diagram

F09_002_VLU

Cable name -W3.2			cable type TPE					
remark			no. of conductors 4			cross-section 18		cable length 2
function text	Page / column	Target designation from	Connection point	conductor	Target designation to	Connection point	Page / column	function text
	&EFS/1.7	-BG06	1		-XG5/6	J2:1	&EFS/1.7	
	&EFS/1.7	-BG06	4		-XG5/6	J2:4	&EFS/1.7	
	&EFS/1.7	-BG06	3		-XG5/6	J2:3	&EFS/1.7	

			Date	12/22/2022	Volvo Trucks North America	Valiant TMS	Cable diagram =V1GL13UQ51BG0+V1GL13UQ51-W3.2	Drawing name: =2V04&EFS-EL	= V1GL13UQ51BG0
			Ed.	MKLEPADLO					+ V1GL13UQ51
			Appr		P6700 Underbody Mainline - Cell 2V04			Document type: EMA	Project nr: 22-16151
Modification	Date	Name	Original		Replacement of / Replaced by	Scale 1:1			Page 9 / 1630

Cable diagram

F09_002_VLU

Cable name	-KF100.14-P15		cable type	PROFINET Cable				
remark			no. of conductors	4	cross-section	22	cable length	
function text	Page / column	Target designation from	Connection point	conductor	Target designation to	Connection point	Page / column	function text
	&EFS=V1KF1+.UC14/2.5	=V1KF1+UC14-KF100.14-P15			-KF1-TP1		&EFS/1.3	

			Date	12/22/2022	Volvo Trucks North America	Valiant TMS	Cable diagram =V1GL13UQ51KF1+V1GL13UQ51-KF100.14-P15	Drawing name: =2V04&EFS-EL	= V1GL13UQ51KF1
			Ed.	MKLEPADLO					+ V1GL13UQ51
			Appr		P6700 Underbody Mainline - Cell 2V04			Document type: EMA	Project nr: 22-16151
Modification	Date	Name	Original		Replacement of / Replaced by	Scale 1:1			Page 1 / 1630

Cable diagram

F09_002_VLU

Cable name -W1			cable type TPE					
remark			no. of conductors 4			cross-section 18		cable length 4
function text	Page / column	Target designation from	Connection point	conductor	Target designation to	Connection point	Page / column	function text
	&EFS=V1GL13UQ51KF1+V1GL13UQ51/1	=V1GL13UQ51/KF1+V1GL13UQ51-KF1.11-X1			-XGR/S	P1:1	&EFS=V1GL13UQ51UQ1+V1GL13UQ51UQ1/1.1	
	&EFS=V1GL13UQ51KF1+V1GL13UQ51/1	=V1GL13UQ51/KF1+V1GL13UQ51-KF2.11-X1			-XGR/S	P1:2	&EFS=V1GL13UQ51UQ1+V1GL13UQ51UQ1/1.1	
	&EFS=V1GL13UQ51KF1+V1GL13UQ51/1	=V1GL13UQ51/KF1+V1GL13UQ51-KF3.11-X1			-XGR/S	P1:3	&EFS=V1GL13UQ51UQ1+V1GL13UQ51UQ1/1.1	
	&EFS=V1GL13UQ51KF1+V1GL13UQ51/1	=V1GL13UQ51/KF1+V1GL13UQ51-KF4.11-X1			-XGR/S	P1:4	&EFS=V1GL13UQ51UQ1+V1GL13UQ51UQ1/1.1	

			Date	12/22/2022	Volvo Trucks North America	Valiant TMS	Cable diagram =V1GL13UQ51UQ1.1+V1GL13UQ51UQ1.1-W1	Drawing name: =2V04&EFS-EL	= V1GL13UQ51UQ1.1
			Ed.	MKLEPADLO					+ V1GL13UQ51UQ1.1
			Appr		P6700 Underbody Mainline - Cell 2V04			Document type: EMA	Project nr: 22-16151
Modification	Date	Name	Original		Replacement of	Replaced by	Scale 1:1		Page 1 / 1630

Cable diagram

F09_002_VLU

Cable name -W1.1			cable type TPE					
remark			no. of conductors 4			cross-section 18		cable length 0.5
function text	Page / column	Target designation from	Connection point	conductor	Target designation to	Connection point	Page / column	function text
	&EFS=V1GL13UQ51UQ1-BVGR	-XGR/S	1		-XGR/S	J1:1	&EFS=V1GL13UQ51UQ1+V1GL13UQ51UQ1/1.1	
	&EFS=V1GL13UQ51UQ1-BVGR	-XGR/S	4		-XGR/S	J1:4	&EFS=V1GL13UQ51UQ1+V1GL13UQ51UQ1/1.1	
	&EFS=V1GL13UQ51UQ1-BVGR	-XGR/S	3		-XGR/S	J1:3	&EFS=V1GL13UQ51UQ1+V1GL13UQ51UQ1/1.1	

			Date	12/22/2022	Volvo Trucks North America	Valiant TMS	Cable diagram =V1GL13UQ51UQ1.1+V1GL13UQ51UQ1.1-W1.1	Drawing name: =2V04&EFS-EL	= V1GL13UQ51UQ1.1
			Ed.	MKLEPADLO					+ V1GL13UQ51UQ1.1
			Appr		P6700 Underbody Mainline - Cell 2V04			Document type: EMA	Project nr: 22-16151
Modification	Date	Name	Original		Replacement of / Replaced by	Scale 1:1			Page 2 / 1630

Cable diagram

F09_002_VLU

Cable name -W1.2			cable type TPE					
remark			no. of conductors 4			cross-section 18		cable length 0.5
function text	Page / column	Target designation from	Connection point	conductor	Target designation to	Connection point	Page / column	function text
	&EFS=V1GL13UQ51UQ1-BVSS	-XGR/S	1		=V1GL13UQ51UQ1/1.2	J2:1	&EFS=V1GL13UQ51UQ1+V1GL13UQ51UQ1/1.2	
	&EFS=V1GL13UQ51UQ1-BVSS	-XGR/S	4		=V1GL13UQ51UQ1/1.2	J2:4	&EFS=V1GL13UQ51UQ1+V1GL13UQ51UQ1/1.2	
	&EFS=V1GL13UQ51UQ1-BVSS	-XGR/S	3		=V1GL13UQ51UQ1/1.2	J2:3	&EFS=V1GL13UQ51UQ1+V1GL13UQ51UQ1/1.2	

			Date	12/22/2022	Volvo Trucks North America	Valiant TMS	Cable diagram =V1GL13UQ51UQ1.1+V1GL13UQ51UQ1.1-W1.2	Drawing name: =2V04&EFS-EL	= V1GL13UQ51UQ1.1
			Ed.	MKLEPADLO					+ V1GL13UQ51UQ1.1
			Appr		P6700 Underbody Mainline - Cell 2V04			Document type: EMA	Project nr: 22-16151
Modification	Date	Name	Original		Replacement of / Replaced by	Scale 1:1			Page 3 / 1630

Cable diagram

F09_002_VLU

Cable name -W1			cable type TPE					
remark			no. of conductors 4			cross-section 18		cable length 4
function text	Page / column	Target designation from	Connection point	conductor	Target designation to	Connection point	Page / column	function text
	&EFS=V1GL13UQ51KF1+V1GL13UQ51KF1	=V1GL13UQ51/KF1+V1GL13UQ51-KF1	1.11-X2		-XGR/S	P1:1	&EFS=V1GL13UQ51UQ2+V1GL13UQ51UQ2/1.1	
	&EFS=V1GL13UQ51KF1+V1GL13UQ51KF2	=V1GL13UQ51/KF2+V1GL13UQ51-KF2	1.11-X2		-XGR/S	P1:2	&EFS=V1GL13UQ51UQ2+V1GL13UQ51UQ2/1.1	
	&EFS=V1GL13UQ51KF1+V1GL13UQ51KF2	=V1GL13UQ51/KF2+V1GL13UQ51-KF3	1.11-X2		-XGR/S	P1:3	&EFS=V1GL13UQ51UQ2+V1GL13UQ51UQ2/1.1	
	&EFS=V1GL13UQ51KF1+V1GL13UQ51KF2	=V1GL13UQ51/KF2+V1GL13UQ51-KF4	1.11-X2		-XGR/S	P1:4	&EFS=V1GL13UQ51UQ2+V1GL13UQ51UQ2/1.1	

			Date	12/22/2022	Volvo Trucks North America	Valiant TMS	Cable diagram =V1GL13UQ51UQ2.1+V1GL13UQ51UQ2.1-W1	Drawing name: =2V04&EFS-EL	= V1GL13UQ51UQ2.1
			Ed.	MKLEPADLO					+ V1GL13UQ51UQ2.1
			Appr		P6700 Underbody Mainline - Cell 2V04			Document type: EMA	Project nr: 22-16151
Modification	Date	Name	Original		Replacement of	Replaced by	Scale 1:1		Page 1 / 1630

Cable diagram

F09_002_VLU

Cable name -W1.1			cable type TPE					
remark			no. of conductors 4			cross-section 18		cable length 0.5
function text	Page / column	Target designation from	Connection point	conductor	Target designation to	Connection point	Page / column	function text
	&EFS=V1GL13UQ51UQ2-XGR	-XGR/S=V1GL13UQ51UQ2/1.1	1		-XGR/S	J1:1	&EFS=V1GL13UQ51UQ2+V1GL13UQ51UQ2/1.1	
	&EFS=V1GL13UQ51UQ2-XGR	-XGR/S=V1GL13UQ51UQ2/1.1	4		-XGR/S	J1:4	&EFS=V1GL13UQ51UQ2+V1GL13UQ51UQ2/1.1	
	&EFS=V1GL13UQ51UQ2-XGR	-XGR/S=V1GL13UQ51UQ2/1.1	3		-XGR/S	J1:3	&EFS=V1GL13UQ51UQ2+V1GL13UQ51UQ2/1.1	

1 3

			Date	12/22/2022	Volvo Trucks North America	Valiant TMS	Cable diagram =V1GL13UQ51UQ2.1+V1GL13UQ51UQ2.1-W1.1	Drawing name: =2V04&EFS-EL	= V1GL13UQ51UQ2.1	
			Ed.	MKLEPADLO					+ V1GL13UQ51UQ2.1	
			Appr		P6700 Underbody Mainline - Cell 2V04			Document type: EMA	Project nr: 22-16151	Page 2
Modification	Date	Name	Original		Replacement of	Replaced by	Scale 1:1			1630

Cable diagram

F09_002_VLU

Cable name -W1.2			cable type TPE					
remark			no. of conductors 4			cross-section 18		cable length 0.5
function text	Page / column	Target designation from	Connection point	conductor	Target designation to	Connection point	Page / column	function text
	&EFS=V1GL13UQ51UQ2-BG5	-BG5+V1GL13UQ51UQ2/1.2	1		-XGR/S	J2:1	&EFS=V1GL13UQ51UQ2+V1GL13UQ51UQ2/1.2	
	&EFS=V1GL13UQ51UQ2-BG5	-BG5+V1GL13UQ51UQ2/1.2	4		-XGR/S	J2:4	&EFS=V1GL13UQ51UQ2+V1GL13UQ51UQ2/1.2	
	&EFS=V1GL13UQ51UQ2-BG5	-BG5+V1GL13UQ51UQ2/1.2	3		-XGR/S	J2:3	&EFS=V1GL13UQ51UQ2+V1GL13UQ51UQ2/1.2	

			Date	12/22/2022	Volvo Trucks North America	Valiant TMS	Cable diagram =V1GL13UQ51UQ2.1+V1GL13UQ51UQ2.1-W1.2	Drawing name: =2V04&EFS-EL	= V1GL13UQ51UQ2.1
			Ed.	MKLEPADLO					+ V1GL13UQ51UQ2.1
			Appr		P6700 Underbody Mainline - Cell 2V04			Document type: EMA	Project nr: 22-16151
Modification	Date	Name	Original		Replacement of / Replaced by	Scale 1:1			Page 3 / 1630

Cable diagram

F09_002_VLU

Cable name -KF100.11-P1			cable type PROFINET Cable					
remark			no. of conductors 4			cross-section 22		cable length
function text	Page / column	Target designation from	Connection point	conductor	Target designation to	Connection point	Page / column	function text
	&EFS/2.1	-KF100.11-P1			-KF100.11	P1	&EFS/2.3	

			Date	12/22/2022	Volvo Trucks North America	Valiant TMS	Cable diagram =V1KF1+V1UC11-KF100.11-P1	Drawing name: =2V04&EFS-EL	= V1KF1
			Ed.	MKLEPADLO					+ V1UC11
			Appr		P6700 Underbody Mainline - Cell 2V04			Document type: EMA	Project nr: 22-16151
Modification	Date	Name	Original		Replacement of / Replaced by	Scale 1:1			Page 1 / 1630

Cable diagram

F09_002_VLU

Cable name -KF100.11-P4			cable type PROFINET Cable					
remark			no. of conductors 4			cross-section 22		cable length
function text	Page / column	Target designation from	Connection point	conductor	Target designation to	Connection point	Page / column	function text
	&EFS/2.5	-KF100.11-P4			-KF100.11	-P4	&EFS/2.4	

			Date	12/22/2022	Volvo Trucks North America	Valiant TMS	Cable diagram =V1KF1+V1UC11-KF100.11-P4	Drawing name: =2V04&EFS-EL	= V1KF1
			Ed.	MKLEPADLO					+ V1UC11
			Appr		P6700 Underbody Mainline - Cell 2V04			Document type: EMA	Project nr: 22-16151
Modification	Date	Name	Original		Replacement of / Replaced by	Scale 1:1			Page 2 / 1630

Cable diagram

F09_002_VLU

Cable name -KF100.11-P5			cable type PROFINET Cable					
remark			no. of conductors 4			cross-section 22		cable length
function text	Page / column	Target designation from	Connection point	conductor	Target designation to	Connection point	Page / column	function text
	&EFS/2.5	-KF100.11-P5			-KF100.11	-P5	&EFS/2.4	

			Date	12/22/2022	Volvo Trucks North America	Valiant TMS	Cable diagram =V1KF1+V1UC11-KF100.11-P5	Drawing name: =2V04&EFS-EL	= V1KF1
			Ed.	MKLEPADLO					+ V1UC11
			Appr		P6700 Underbody Mainline - Cell 2V04			Document type: EMA	Project nr: 22-16151
Modification	Date	Name	Original		Replacement of / Replaced by	Scale 1:1			Page 3 / 1630

Cable diagram

F09_002_VLU

Cable name -KF100.11-P6			cable type PROFINET Cable					
remark			no. of conductors 4			cross-section 22		cable length
function text	Page / column	Target designation from	Connection point	conductor	Target designation to	Connection point	Page / column	function text
	&EFS/2.5	-KF100.11-P6			-KF100.11	-P6	&EFS/2.4	

			Date	12/22/2022	Volvo Trucks North America	Valiant TMS	Cable diagram =V1KF1+V1UC11-KF100.11-P6	Drawing name: =2V04&EFS-EL	= V1KF1
			Ed.	MKLEPADLO					+ V1UC11
			Appr		P6700 Underbody Mainline - Cell 2V04			Document type: EMA	Project nr: 22-16151
Modification	Date	Name	Original		Replacement of / Replaced by	Scale 1:1			Page 4 / 1630

Cable diagram

F09_002_VLU

Cable name -KF100.11-P7			cable type PROFINET Cable					
remark			no. of conductors 4			cross-section 22		cable length
function text	Page / column	Target designation from	Connection point	conductor	Target designation to	Connection point	Page / column	function text
	&EFS/2.5	-KF100.11-P7			-KF100.11	-P7	&EFS/2.4	

			Date	12/22/2022	Volvo Trucks North America	Valiant TMS	Cable diagram =V1KF1+V1UC11-KF100.11-P7	Drawing name: =2V04&EFS-EL	= V1KF1
			Ed.	MKLEPADLO					+ V1UC11
			Appr		P6700 Underbody Mainline - Cell 2V04	Scale 1:1		Document type: EMA	Project nr: 22-16151	Page 5
Modification	Date	Name	Original		Replacement of	Replaced by				1630

Cable diagram

F09_002_VLU

Cable name -KF100.11-P8			cable type PROFINET Cable					
remark			no. of conductors 4			cross-section 22		cable length
function text	Page / column	Target designation from	Connection point	conductor	Target designation to	Connection point	Page / column	function text
	&EFS/2.5	-KF100.11-P8			-KF100.11	-P8	&EFS/2.4	

5 7

			Date	12/22/2022	Volvo Trucks North America	Valiant TMS	Cable diagram =V1KF1+V1UC11-KF100.11-P8	Drawing name: =2V04&EFS-EL	= V1KF1
			Ed.	MKLEPADLO					+ V1UC11
			Appr		P6700 Underbody Mainline - Cell 2V04			Document type: EMA	Project nr: 22-16151
Modification	Date	Name	Original		Replacement of / Replaced by	Scale 1:1			Page 6 / 1630

Cable diagram

F09_002_VLU

Cable name -KF100.11-P9			cable type PROFINET Cable					
remark			no. of conductors 4			cross-section 22		cable length
function text	Page / column	Target designation from	Connection point	conductor	Target designation to	Connection point	Page / column	function text
	&EFS/2.5	-KF100.11-P9			-KF100.11	-P9	&EFS/2.4	

			Date	12/22/2022	Volvo Trucks North America	Valiant TMS	Cable diagram =V1KF1+V1UC11-KF100.11-P9	Drawing name: =2V04&EFS-EL	= V1KF1
			Ed.	MKLEPADLO					+ V1UC11
			Appr		P6700 Underbody Mainline - Cell 2V04			Document type: EMA	Project nr: 22-16151 Page 7
Modification	Date	Name	Original		Replacement of / Replaced by	Scale 1:1			1630

Cable diagram

F09_002_VLU

Cable name -KF100.11-P10			cable type PROFINET Cable					
remark			no. of conductors 4			cross-section 22		cable length
function text	Page / column	Target designation from	Connection point	conductor	Target designation to	Connection point	Page / column	function text
	&EFS/2.5	-KF100.11-P10			-KF100.11	-P10	&EFS/2.4	

			Date	12/22/2022	Volvo Trucks North America	Valiant TMS	Cable diagram =V1KF1+V1UC11-KF100.11-P10	Drawing name: =2V04&EFS-EL	= V1KF1
			Ed.	MKLEPADLO					+ V1UC11
			Appr		P6700 Underbody Mainline - Cell 2V04			Document type: EMA	Project nr: 22-16151 Page 8
Modification	Date	Name	Original		Replacement of / Replaced by	Scale 1:1			1630

Cable diagram

F09_002_VLU

Cable name -KF100.11-P11			cable type PROFINET Cable					
remark			no. of conductors 4			cross-section 22		cable length
function text	Page / column	Target designation from	Connection point	conductor	Target designation to	Connection point	Page / column	function text
	&EFS/2.5	-KF100.11-P11			-KF100.11	-P11	&EFS/2.4	

			Date	12/22/2022	Volvo Trucks North America	Valiant TMS	Cable diagram =V1KF1+V1UC11-KF100.11-P11	Drawing name: =2V04&EFS-EL	= V1KF1
			Ed.	MKLEPADLO					+ V1UC11
			Appr		P6700 Underbody Mainline - Cell 2V04			Document type: EMA	Project nr: 22-16151
Modification	Date	Name	Original		Replacement of / Replaced by	Scale 1:1			Page 9 / 1630

Cable diagram

F09_002_VLU

Cable name -KF100.11-P12			cable type PROFINET Cable					
remark			no. of conductors 4			cross-section 22		cable length
function text	Page / column	Target designation from	Connection point	conductor	Target designation to	Connection point	Page / column	function text
	&EFS/2.5	-KF100.11-P12			-KF100.11	-P12	&EFS/2.4	

			Date	12/22/2022	Volvo Trucks North America	Valiant TMS	Cable diagram =V1KF1+V1UC11-KF100.11-P12	Drawing name: =2V04&EFS-EL	= V1KF1
			Ed.	MKLEPADLO					+ V1UC11
			Appr		P6700 Underbody Mainline - Cell 2V04			Document type: EMA	Project nr: 22-16151
Modification	Date	Name	Original		Replacement of / Replaced by	Scale 1:1			Page 10 / 1630

Cable diagram

F09_002_VLU

Cable name -KF100.11-P13			cable type PROFINET Cable					
remark			no. of conductors 4			cross-section 22		cable length
function text	Page / column	Target designation from	Connection point	conductor	Target designation to	Connection point	Page / column	function text
	&EFS/2.5	-KF100.11-P13			-KF100.11	-P13	&EFS/2.4	

			Date	12/22/2022	Volvo Trucks North America	Valiant TMS	Cable diagram =V1KF1+V1UC11-KF100.11-P13	Drawing name: =2V04&EFS-EL	= V1KF1
			Ed.	MKLEPADLO					+ V1UC11
			Appr		P6700 Underbody Mainline - Cell 2V04			Document type: EMA	Project nr: 22-16151
Modification	Date	Name	Original		Replacement of / Replaced by	Scale 1:1			Page 11 / 1630

Cable diagram

F09_002_VLU

Cable name -KF100.11-P14			cable type PROFINET Cable					
remark			no. of conductors 4			cross-section 22		cable length
function text	Page / column	Target designation from	Connection point	conductor	Target designation to	Connection point	Page / column	function text
	&EFS/2.5	-KF100.11-P14			-KF100.11	-P14	&EFS/2.4	

			Date	12/22/2022	Volvo Trucks North America	Valiant TMS	Cable diagram =V1KF1+V1UC11-KF100.11-P14	Drawing name: =2V04&EFS-EL	= V1KF1
			Ed.	MKLEPADLO					+ V1UC11
			Appr		P6700 Underbody Mainline - Cell 2V04			Document type: EMA	Project nr: 22-16151
Modification	Date	Name	Original		Replacement of / Replaced by	Scale 1:1			Page 12 / 1630

Cable diagram

F09_002_VLU

Cable name -KF100.11-P15			cable type PROFINET Cable					
remark			no. of conductors 4			cross-section 22		cable length
function text	Page / column	Target designation from	Connection point	conductor	Target designation to	Connection point	Page / column	function text
	&EFS/2.5	-KF100.11-P15			-KF100.11	-P15	&EFS/2.4	

			Date	12/22/2022	Volvo Trucks North America	Valiant TMS	Cable diagram =V1KF1+V1UC11-KF100.11-P15	Drawing name: =2V04&EFS-EL	= V1KF1
			Ed.	MKLEPADLO					+ V1UC11
			Appr		P6700 Underbody Mainline - Cell 2V04			Document type: EMA	Project nr: 22-16151
Modification	Date	Name	Original		Replacement of / Replaced by	Scale 1:1			Page 13 / 1630

Cable diagram

F09_002_VLU

Cable name	-KF100.11-P16		cable type	PROFINET Cable				
remark			no. of conductors	4	cross-section	22	cable length	
function text	Page / column	Target designation from	Connection point	conductor	Target designation to	Connection point	Page / column	function text
	&EFS/2.5	-KF100.11-P16			-KF100.11	-P16	&EFS/2.4	

			Date	12/22/2022	Volvo Trucks North America	Valiant TMS	Cable diagram =V1KF1+V1UC11-KF100.11-P16	Drawing name: =2V04&EFS-EL	= V1KF1
			Ed.	MKLEPADLO					+ V1UC11
			Appr		P6700 Underbody Mainline - Cell 2V04			Document type: EMA	Project nr: 22-16151
Modification	Date	Name	Original		Replacement of / Replaced by	Scale 1:1			Page 14 / 1630

Cable diagram

F09_002_VLU

Cable name -KF100.12-P1			cable type PROFINET Cable					
remark			no. of conductors 4			cross-section 22		cable length
function text	Page / column	Target designation from	Connection point	conductor	Target designation to	Connection point	Page / column	function text
	&EFS/2.1	-KF100.12-P1			-KF100.12	P1	&EFS/2.3	

+.UC11/14

2

			Date	12/22/2022	Volvo Trucks North America	Valiant TMS	Cable diagram =V1KF1+V1UC12-KF100.12-P1	Drawing name: =2V04&EFS-EL	= V1KF1
			Ed.	MKLEPADLO					+ V1UC12
			Appr		P6700 Underbody Mainline - Cell 2V04			Document type: EMA	Project nr: 22-16151
Modification	Date	Name	Original		Replacement of / Replaced by	Scale 1:1			Page 1 / 1630

Cable diagram

F09_002_VLU

Cable name -KF100.12-P4			cable type PROFINET Cable					
remark			no. of conductors 4			cross-section 22		cable length
function text	Page / column	Target designation from	Connection point	conductor	Target designation to	Connection point	Page / column	function text
	&EFS/2.5	-KF100.12-P4			-KF100.12	-P4	&EFS/2.4	

1 3

			Date	12/22/2022	Volvo Trucks North America	Valiant TMS	Cable diagram =V1KF1+V1UC12-KF100.12-P4	Drawing name: =2V04&EFS-EL	= V1KF1
			Ed.	MKLEPADLO					+ V1UC12
			Appr		P6700 Underbody Mainline - Cell 2V04			Document type: EMA	Project nr: 22-16151
Modification	Date	Name	Original		Replacement of / Replaced by	Scale 1:1			Page 2 / 1630

Cable diagram

F09_002_VLU

Cable name -KF100.12-P5			cable type PROFINET Cable					
remark			no. of conductors 4			cross-section 22		cable length
function text	Page / column	Target designation from	Connection point	conductor	Target designation to	Connection point	Page / column	function text
	&EFS/2.5	-KF100.12-P5			-KF100.12	-P5	&EFS/2.4	

			Date	12/22/2022	Volvo Trucks North America	Valiant TMS	Cable diagram =V1KF1+V1UC12-KF100.12-P5	Drawing name: =2V04&EFS-EL	= V1KF1
			Ed.	MKLEPADLO					+ V1UC12
			Appr		P6700 Underbody Mainline - Cell 2V04			Document type: EMA	Project nr: 22-16151 Page 3
Modification	Date	Name	Original		Replacement of / Replaced by	Scale 1:1			1630

Cable diagram

F09_002_VLU

Cable name -KF100.12-P6			cable type PROFINET Cable					
remark			no. of conductors 4			cross-section 22		cable length
function text	Page / column	Target designation from	Connection point	conductor	Target designation to	Connection point	Page / column	function text
	&EFS/2.5	-KF100.12-P6			-KF100.12	-P6	&EFS/2.4	

			Date	12/22/2022	Volvo Trucks North America	Valiant TMS	Cable diagram =V1KF1+V1UC12-KF100.12-P6	Drawing name: =2V04&EFS-EL	= V1KF1
			Ed.	MKLEPADLO					+ V1UC12
			Appr		P6700 Underbody Mainline - Cell 2V04			Document type: EMA	Project nr: 22-16151
Modification	Date	Name	Original		Replacement of / Replaced by	Scale 1:1			Page 4 / 1630

Cable diagram

F09_002_VLU

Cable name -KF100.12-P7			cable type PROFINET Cable					
remark			no. of conductors 4			cross-section 22		cable length
function text	Page / column	Target designation from	Connection point	conductor	Target designation to	Connection point	Page / column	function text
	&EFS/2.5	-KF100.12-P7			-KF100.12	-P7	&EFS/2.4	

			Date	12/22/2022	Volvo Trucks North America	Valiant TMS	Cable diagram =V1KF1+V1UC12-KF100.12-P7	Drawing name: =2V04&EFS-EL	= V1KF1
			Ed.	MKLEPADLO					+ V1UC12
			Appr		P6700 Underbody Mainline - Cell 2V04			Document type: EMA	Project nr: 22-16151
Modification	Date	Name	Original		Replacement of / Replaced by	Scale 1:1			Page 5 / 1630

Cable diagram

F09_002_VLU

Cable name -KF100.12-P8			cable type PROFINET Cable					
remark			no. of conductors 4			cross-section 22		cable length
function text	Page / column	Target designation from	Connection point	conductor	Target designation to	Connection point	Page / column	function text
	&EFS/2.5	-KF100.12-P8			-KF100.12	-P8	&EFS/2.4	

			Date	12/22/2022	Volvo Trucks North America	Valiant TMS	Cable diagram =V1KF1+V1UC12-KF100.12-P8	Drawing name: =2V04&EFS-EL	= V1KF1
			Ed.	MKLEPADLO					+ V1UC12
			Appr		P6700 Underbody Mainline - Cell 2V04			Document type: EMA	Project nr: 22-16151
Modification	Date	Name	Original		Replacement of / Replaced by	Scale 1:1			Page 6 / 1630

Cable diagram

F09_002_VLU

Cable name -KF100.12-P9			cable type PROFINET Cable					
remark			no. of conductors 4			cross-section 22		cable length
function text	Page / column	Target designation from	Connection point	conductor	Target designation to	Connection point	Page / column	function text
	&EFS/2.5	-KF100.12-P9			-KF100.12	-P9	&EFS/2.4	

			Date	12/22/2022	Volvo Trucks North America	Valiant TMS	Cable diagram =V1KF1+V1UC12-KF100.12-P9	Drawing name: =2V04&EFS-EL	= V1KF1
			Ed.	MKLEPADLO					+ V1UC12
			Appr		P6700 Underbody Mainline - Cell 2V04			Document type: EMA	Project nr: 22-16151
Modification	Date	Name	Original		Replacement of / Replaced by	Scale 1:1			Page 7 / 1630

Cable diagram

F09_002_VLU

Cable name	-KF100.12-P10		cable type	PROFINET Cable				
remark			no. of conductors	4		cross-section	22	cable length
function text	Page / column	Target designation from	Connection point	conductor	Target designation to	Connection point	Page / column	function text
	&EFS/2.5	-KF100.12-P10			-KF100.12	-P10	&EFS/2.4	

			Date	12/22/2022	Volvo Trucks North America	Valiant TMS	Cable diagram =V1KF1+V1UC12-KF100.12-P10	Drawing name: =2V04&EFS-EL	= V1KF1
			Ed.	MKLEPADLO					+ V1UC12
			Appr		P6700 Underbody Mainline - Cell 2V04			Document type: EMA	Project nr: 22-16151
Modification	Date	Name	Original		Replacement of / Replaced by	Scale 1:1			Page 8 / 1630

Cable diagram

F09_002_VLU

Cable name -KF100.12-P11			cable type PROFINET Cable					
remark			no. of conductors 4			cross-section 22		cable length
function text	Page / column	Target designation from	Connection point	conductor	Target designation to	Connection point	Page / column	function text
	&EFS/2.5	-KF100.12-P11			-KF100.12	-P11	&EFS/2.4	

			Date	12/22/2022	Volvo Trucks North America	Valiant TMS	Cable diagram =V1KF1+V1UC12-KF100.12-P11	Drawing name: =2V04&EFS-EL	= V1KF1
			Ed.	MKLEPADLO					+ V1UC12
			Appr		P6700 Underbody Mainline - Cell 2V04			Document type: EMA	Project nr: 22-16151
Modification	Date	Name	Original		Replacement of / Replaced by	Scale 1:1			Page 9 / 1630

Cable diagram

F09_002_VLU

Cable name -KF100.12-P12			cable type PROFINET Cable					
remark			no. of conductors 4			cross-section 22		cable length
function text	Page / column	Target designation from	Connection point	conductor	Target designation to	Connection point	Page / column	function text
	&EFS/2.5	-KF100.12-P12			-KF100.12	-P12	&EFS/2.4	

			Date	12/22/2022	Volvo Trucks North America	Valiant TMS	Cable diagram =V1KF1+V1UC12-KF100.12-P12	Drawing name: =2V04&EFS-EL	= V1KF1
			Ed.	MKLEPADLO					+ V1UC12
			Appr		P6700 Underbody Mainline - Cell 2V04			Document type: EMA	Project nr: 22-16151	Page 10
Modification	Date	Name	Original		Replacement of / Replaced by	Scale 1:1				1630

Cable diagram

F09_002_VLU

Cable name -KF100.12-P13			cable type PROFINET Cable					
remark			no. of conductors 4			cross-section 22		cable length
function text	Page / column	Target designation from	Connection point	conductor	Target designation to	Connection point	Page / column	function text
	&EFS/2.5	-KF100.12-P13			-KF100.12	-P13	&EFS/2.4	

			Date	12/22/2022	Volvo Trucks North America	Valiant TMS	Cable diagram =V1KF1+V1UC12-KF100.12-P13	Drawing name: =2V04&EFS-EL	= V1KF1
			Ed.	MKLEPADLO					+ V1UC12
			Appr		P6700 Underbody Mainline - Cell 2V04			Document type: EMA	Project nr: 22-16151 Page 11
Modification	Date	Name	Original		Replacement of / Replaced by	Scale 1:1			1630

Cable diagram

F09_002_VLU

Cable name -KF100.12-P14			cable type PROFINET Cable					
remark			no. of conductors 4			cross-section 22		cable length
function text	Page / column	Target designation from	Connection point	conductor	Target designation to	Connection point	Page / column	function text
	&EFS/2.5	-KF100.12-P14			-KF100.12	-P14	&EFS/2.4	

			Date	12/22/2022	Volvo Trucks North America	Valiant TMS	Cable diagram =V1KF1+V1UC12-KF100.12-P14	Drawing name: =2V04&EFS-EL	= V1KF1
			Ed.	MKLEPADLO					+ V1UC12
			Appr		P6700 Underbody Mainline - Cell 2V04			Document type: EMA	Project nr: 22-16151 Page 12
Modification	Date	Name	Original		Replacement of / Replaced by	Scale 1:1			1630

Cable diagram

F09_002_VLU

Cable name -KF100.12-P15			cable type PROFINET Cable					
remark			no. of conductors 4			cross-section 22		cable length
function text	Page / column	Target designation from	Connection point	conductor	Target designation to	Connection point	Page / column	function text
	&EFS/2.5	-KF100.12-P15			-KF100.12	-P15	&EFS/2.4	

			Date	12/22/2022	Volvo Trucks North America	Valiant TMS	Cable diagram =V1KF1+V1UC12-KF100.12-P15	Drawing name: =2V04&EFS-EL	= V1KF1
			Ed.	MKLEPADLO					+ V1UC12
			Appr		P6700 Underbody Mainline - Cell 2V04			Document type: EMA	Project nr: 22-16151 Page 13
Modification	Date	Name	Original		Replacement of / Replaced by	Scale 1:1			1630

Cable diagram

F09_002_VLU

Cable name	-KF100.12-P16		cable type	PROFINET Cable				
remark			no. of conductors	4		cross-section	22	cable length
function text	Page / column	Target designation from	Connection point	conductor	Target designation to	Connection point	Page / column	function text
	&EFS/2.5	-KF100.12-P16			-KF100.12	-P16	&EFS/2.4	

			Date	12/22/2022	Volvo Trucks North America	Valiant TMS	Cable diagram =V1KF1+V1UC12-KF100.12-P16	Drawing name: =2V04&EFS-EL	= V1KF1
			Ed.	MKLEPADLO					+ V1UC12
			Appr		P6700 Underbody Mainline - Cell 2V04			Document type: EMA	Project nr: 22-16151
Modification	Date	Name	Original		Replacement of / Replaced by	Scale 1:1			Page 14 / 1630

Cable diagram

F09_002_VLU

Cable name -KF100.14-P1			cable type PROFINET Cable					
remark			no. of conductors 4			cross-section 22		cable length
function text	Page / column	Target designation from	Connection point	conductor	Target designation to	Connection point	Page / column	function text
	&EFS/2.1	-KF100.14-P1			-KF100.14	P1	&EFS/2.3	

			Date	12/22/2022	Volvo Trucks North America	Valiant TMS	Cable diagram =V1KF1+V1UC14-KF100.14-P1	Drawing name: =2V04&EFS-EL	= V1KF1
			Ed.	MKLEPADLO					+ V1UC14
			Appr		P6700 Underbody Mainline - Cell 2V04			Document type: EMA	Project nr: 22-16151
Modification	Date	Name	Original		Replacement of / Replaced by	Scale 1:1			Page 1 / 1630

Cable diagram

F09_002_VLU

Cable name -KF100.14-P4			cable type PROFINET Cable					
remark			no. of conductors 4			cross-section 22		cable length
function text	Page / column	Target designation from	Connection point	conductor	Target designation to	Connection point	Page / column	function text
	&EFS/2.5	-KF100.14-P4			-KF100.14	-P4	&EFS/2.4	

1 3

			Date	12/22/2022	Volvo Trucks North America	Valiant TMS	Cable diagram =V1KF1+V1UC14-KF100.14-P4	Drawing name: =2V04&EFS-EL	= V1KF1
			Ed.	MKLEPADLO					+ V1UC14
			Appr		P6700 Underbody Mainline - Cell 2V04			Document type: EMA	Project nr: 22-16151
Modification	Date	Name	Original		Replacement of / Replaced by	Scale 1:1			Page 2 / 1630

Cable diagram

F09_002_VLU

Cable name -KF100.14-P5			cable type PROFINET Cable					
remark			no. of conductors 4			cross-section 22		cable length
function text	Page / column	Target designation from	Connection point	conductor	Target designation to	Connection point	Page / column	function text
	&EFS/2.5	-KF100.14-P5			-KF100.14	-P5	&EFS/2.4	

			Date	12/22/2022	Volvo Trucks North America	Valiant TMS	Cable diagram =V1KF1+V1UC14-KF100.14-P5	Drawing name: =2V04&EFS-EL	= V1KF1
			Ed.	MKLEPADLO					+ V1UC14
			Appr		P6700 Underbody Mainline - Cell 2V04			Document type: EMA	Project nr: 22-16151
Modification	Date	Name	Original		Replacement of / Replaced by	Scale 1:1			Page 3 / 1630

Cable diagram

F09_002_VLU

Cable name -KF100.14-P6			cable type PROFINET Cable					
remark			no. of conductors 4			cross-section 22		cable length
function text	Page / column	Target designation from	Connection point	conductor	Target designation to	Connection point	Page / column	function text
	&EFS/2.5	-KF100.14-P6			-KF100.14	-P6	&EFS/2.4	

			Date	12/22/2022	Volvo Trucks North America	Valiant TMS	Cable diagram =V1KF1+V1UC14-KF100.14-P6	Drawing name: =2V04&EFS-EL	= V1KF1
			Ed.	MKLEPADLO					+ V1UC14
			Appr		P6700 Underbody Mainline - Cell 2V04			Document type: EMA	Project nr: 22-16151
Modification	Date	Name	Original		Replacement of / Replaced by	Scale 1:1			Page 4 / 1630

Cable diagram

F09_002_VLU

Cable name -KF100.14-P7			cable type PROFINET Cable					
remark			no. of conductors 4			cross-section 22		cable length
function text	Page / column	Target designation from	Connection point	conductor	Target designation to	Connection point	Page / column	function text
	&EFS/2.5	-KF100.14-P7			-KF100.14	-P7	&EFS/2.4	

			Date	12/22/2022	Volvo Trucks North America	Valiant TMS	Cable diagram =V1KF1+V1UC14-KF100.14-P7	Drawing name: =2V04&EFS-EL	= V1KF1
			Ed.	MKLEPADLO					+ V1UC14
			Appr		P6700 Underbody Mainline - Cell 2V04			Document type: EMA	Project nr: 22-16151
Modification	Date	Name	Original		Replacement of / Replaced by	Scale 1:1			Page 5 / 1630

Cable diagram

F09_002_VLU

Cable name -KF100.14-P8			cable type PROFINET Cable					
remark			no. of conductors 4			cross-section 22		cable length
function text	Page / column	Target designation from	Connection point	conductor	Target designation to	Connection point	Page / column	function text
	&EFS/2.5	-KF100.14-P8			-KF100.14	-P8	&EFS/2.4	

			Date	12/22/2022	Volvo Trucks North America	Valiant TMS	Cable diagram =V1KF1+V1UC14-KF100.14-P8	Drawing name: =2V04&EFS-EL	= V1KF1
			Ed.	MKLEPADLO					+ V1UC14
			Appr		P6700 Underbody Mainline - Cell 2V04			Document type: EMA	Project nr: 22-16151
Modification	Date	Name	Original		Replacement of / Replaced by	Scale 1:1			Page 6 / 1630

Cable diagram

F09_002_VLU

Cable name -KF100.14-P9			cable type PROFINET Cable					
remark			no. of conductors 4			cross-section 22		cable length
function text	Page / column	Target designation from	Connection point	conductor	Target designation to	Connection point	Page / column	function text
	&EFS/2.5	-KF100.14-P9			-KF100.14	-P9	&EFS/2.4	

6 8

			Date	12/22/2022	Volvo Trucks North America	Valiant TMS	Cable diagram =V1KF1+V1UC14-KF100.14-P9	Drawing name: =2V04&EFS-EL	= V1KF1
			Ed.	MKLEPADLO					+ V1UC14
			Appr		P6700 Underbody Mainline - Cell 2V04			Document type: EMA	Project nr: 22-16151
Modification	Date	Name	Original		Replacement of / Replaced by	Scale 1:1			Page 7 / 1630

Cable diagram

F09_002_VLU

Cable name -KF100.14-P10			cable type PROFINET Cable					
remark			no. of conductors 4			cross-section 22		cable length
function text	Page / column	Target designation from	Connection point	conductor	Target designation to	Connection point	Page / column	function text
	&EFS/2.5	-KF100.14-P10			-KF100.14	-P10	&EFS/2.4	

			Date	12/22/2022	Volvo Trucks North America	Valiant TMS	Cable diagram =V1KF1+V1UC14-KF100.14-P10	Drawing name: =2V04&EFS-EL	= V1KF1
			Ed.	MKLEPADLO					+ V1UC14
			Appr		P6700 Underbody Mainline - Cell 2V04			Document type: EMA	Project nr: 22-16151
Modification	Date	Name	Original		Replacement of / Replaced by	Scale 1:1			Page 8 / 1630

Cable diagram

F09_002_VLU

Cable name -KF100.14-P11			cable type PROFINET Cable					
remark			no. of conductors 4			cross-section 22		cable length
function text	Page / column	Target designation from	Connection point	conductor	Target designation to	Connection point	Page / column	function text
	&EFS/2.5	-KF100.14-P11			-KF100.14	-P11	&EFS/2.4	

			Date	12/22/2022	Volvo Trucks North America	Valiant TMS	Cable diagram =V1KF1+V1UC14-KF100.14-P11	Drawing name: =2V04&EFS-EL	= V1KF1
			Ed.	MKLEPADLO					+ V1UC14
			Appr		P6700 Underbody Mainline - Cell 2V04			Document type: EMA	Project nr: 22-16151
Modification	Date	Name	Original		Replacement of / Replaced by	Scale 1:1			Page 9 / 1630

Cable diagram

F09_002_VLU

Cable name -KF100.14-P12			cable type PROFINET Cable					
remark			no. of conductors 4			cross-section 22		cable length
function text	Page / column	Target designation from	Connection point	conductor	Target designation to	Connection point	Page / column	function text
	&EFS/2.5	-KF100.14-P12			-KF100.14	-P12	&EFS/2.4	

			Date	12/22/2022	Volvo Trucks North America	Valiant TMS	Cable diagram =V1KF1+V1UC14-KF100.14-P12	Drawing name: =2V04&EFS-EL	= V1KF1	
			Ed.	MKLEPADLO					+ V1UC14	
			Appr		P6700 Underbody Mainline - Cell 2V04			Document type: EMA	Project nr: 22-16151	Page 10
Modification	Date	Name	Original		Replacement of / Replaced by	Scale 1:1				1630

Cable diagram

F09_002_VLU

Cable name -KF100.14-P13			cable type PROFINET Cable					
remark			no. of conductors 4			cross-section 22		cable length
function text	Page / column	Target designation from	Connection point	conductor	Target designation to	Connection point	Page / column	function text
	&EFS/2.5	-KF100.14-P13			-KF100.14	-P13	&EFS/2.4	

			Date	12/22/2022	Volvo Trucks North America	Valiant TMS	Cable diagram =V1KF1+V1UC14-KF100.14-P13	Drawing name: =2V04&EFS-EL	= V1KF1
			Ed.	MKLEPADLO					+ V1UC14
			Appr		P6700 Underbody Mainline - Cell 2V04			Document type: EMA	Project nr: 22-16151	Page 11
Modification	Date	Name	Original		Replacement of / Replaced by	Scale 1:1				1630

Cable diagram

F09_002_VLU

Cable name -KF100.14-P14			cable type PROFINET Cable					
remark			no. of conductors 4			cross-section 22		cable length
function text	Page / column	Target designation from	Connection point	conductor	Target designation to	Connection point	Page / column	function text
	&EFS/2.5	-KF100.14-P14			-KF100.14	-P14	&EFS/2.4	

			Date	12/22/2022	Volvo Trucks North America	Valiant TMS	Cable diagram =V1KF1+V1UC14-KF100.14-P14	Drawing name: =2V04&EFS-EL	= V1KF1
			Ed.	MKLEPADLO					+ V1UC14
			Appr		P6700 Underbody Mainline - Cell 2V04			Document type: EMA	Project nr: 22-16151
Modification	Date	Name	Original		Replacement of / Replaced by	Scale 1:1			Page 12 / 1630

Cable diagram

F09_002_VLU

Cable name	-KF100.14-P15		cable type	PROFINET Cable				
remark			no. of conductors	4		cross-section	22	cable length
function text	Page / column	Target designation from	Connection point	conductor	Target designation to	Connection point	Page / column	function text
	&EFS/2.5	-KF100.14-P15			-KF100.14	-P15	&EFS/2.4	

			Date	12/22/2022	Volvo Trucks North America	Valiant TMS	Cable diagram =V1KF1+V1UC14-KF100.14-P15	Drawing name: =2V04&EFS-EL	= V1KF1
			Ed.	MKLEPADLO					+ V1UC14
			Appr		P6700 Underbody Mainline - Cell 2V04			Document type: EMA	Project nr: 22-16151 Page 13
Modification	Date	Name	Original		Replacement of / Replaced by	Scale 1:1			1630

Cable diagram

F09_002_VLU

Cable name	-KF100.14-P16		cable type	PROFINET Cable				
remark			no. of conductors	4		cross-section	22	cable length
function text	Page / column	Target designation from	Connection point	conductor	Target designation to	Connection point	Page / column	function text
	&EFS/2.5	-KF100.14-P16			-KF100.14	-P16	&EFS/2.4	

			Date	12/22/2022	Volvo Trucks North America	Valiant TMS	Cable diagram =V1KF1+V1UC14-KF100.14-P16	Drawing name: =2V04&EFS-EL	= V1KF1
			Ed.	MKLEPADLO					+ V1UC14
			Appr		P6700 Underbody Mainline - Cell 2V04			Document type: EMA	Project nr: 22-16151
Modification	Date	Name	Original		Replacement of / Replaced by	Scale 1:1			Page 14 / 1630

Cable diagram

F09_002_VLU

Cable name -KF100.15-P1			cable type PROFINET Cable					
remark			no. of conductors 4			cross-section 22		cable length
function text	Page / column	Target designation from	Connection point	conductor	Target designation to	Connection point	Page / column	function text
	&EFS/2.1	-KF100.15-P1			-KF100.15	P1	&EFS/2.3	

			Date	12/22/2022	Volvo Trucks North America	Valiant TMS	Cable diagram =V1KF1+V1UC15-KF100.15-P1	Drawing name: =2V04&EFS-EL	= V1KF1
			Ed.	MKLEPADLO					+ V1UC15
			Appr		P6700 Underbody Mainline - Cell 2V04			Document type: EMA	Project nr: 22-16151
Modification	Date	Name	Original		Replacement of / Replaced by	Scale 1:1			Page 1 / 1630

Cable diagram

F09_002_VLU

Cable name -KF100.15-P4			cable type PROFINET Cable					
remark			no. of conductors 4			cross-section 22		cable length
function text	Page / column	Target designation from	Connection point	conductor	Target designation to	Connection point	Page / column	function text
	&EFS/2.5	-KF100.15-P4			-KF100.15	-P4	&EFS/2.4	

			Date	12/22/2022	Volvo Trucks North America	Valiant TMS	Cable diagram =V1KF1+V1UC15-KF100.15-P4	Drawing name: =2V04&EFS-EL	= V1KF1
			Ed.	MKLEPADLO					+ V1UC15
			Appr		P6700 Underbody Mainline - Cell 2V04			Document type: EMA	Project nr: 22-16151 Page 2
Modification	Date	Name	Original		Replacement of / Replaced by	Scale 1:1			1630

Cable diagram

F09_002_VLU

Cable name -KF100.15-P5			cable type PROFINET Cable					
remark			no. of conductors 4			cross-section 22		cable length
function text	Page / column	Target designation from	Connection point	conductor	Target designation to	Connection point	Page / column	function text
	&EFS/2.5	-KF100.15-P5			-KF100.15	-P5	&EFS/2.4	

			Date	12/22/2022	Volvo Trucks North America	Valiant TMS	Cable diagram =V1KF1+V1UC15-KF100.15-P5	Drawing name: =2V04&EFS-EL	= V1KF1
			Ed.	MKLEPADLO					+ V1UC15
			Appr		P6700 Underbody Mainline - Cell 2V04			Document type: EMA	Project nr: 22-16151 Page 3
Modification	Date	Name	Original		Replacement of / Replaced by	Scale 1:1			1630

Cable diagram

F09_002_VLU

Cable name -KF100.15-P6			cable type PROFINET Cable					
remark			no. of conductors 4			cross-section 22		cable length
function text	Page / column	Target designation from	Connection point	conductor	Target designation to	Connection point	Page / column	function text
	&EFS/2.5	-KF100.15-P6			-KF100.15	-P6	&EFS/2.4	

			Date	12/22/2022	Volvo Trucks North America	Valiant TMS	Cable diagram =V1KF1+V1UC15-KF100.15-P6	Drawing name: =2V04&EFS-EL	= V1KF1
			Ed.	MKLEPADLO					+ V1UC15
			Appr		P6700 Underbody Mainline - Cell 2V04			Document type: EMA	Project nr: 22-16151
Modification	Date	Name	Original		Replacement of / Replaced by	Scale 1:1			Page 4 / 1630

Cable diagram

F09_002_VLU

Cable name -KF100.15-P7			cable type PROFINET Cable					
remark			no. of conductors 4			cross-section 22		cable length
function text	Page / column	Target designation from	Connection point	conductor	Target designation to	Connection point	Page / column	function text
	&EFS/2.5	-KF100.15-P7			-KF100.15	-P7	&EFS/2.4	

			Date	12/22/2022	Volvo Trucks North America	Valiant TMS	Cable diagram =V1KF1+V1UC15-KF100.15-P7	Drawing name: =2V04&EFS-EL	= V1KF1
			Ed.	MKLEPADLO					+ V1UC15
			Appr		P6700 Underbody Mainline - Cell 2V04			Document type: EMA	Project nr: 22-16151 Page 5
Modification	Date	Name	Original		Replacement of / Replaced by	Scale 1:1			1630

Cable diagram

F09_002_VLU

Cable name -KF100.15-P8			cable type PROFINET Cable					
remark			no. of conductors 4			cross-section 22		cable length
function text	Page / column	Target designation from	Connection point	conductor	Target designation to	Connection point	Page / column	function text
	&EFS/2.5	-KF100.15-P8			-KF100.15	-P8	&EFS/2.4	

5 7

			Date	12/22/2022	Volvo Trucks North America	Valiant TMS	Cable diagram =V1KF1+V1UC15-KF100.15-P8	Drawing name: =2V04&EFS-EL	= V1KF1
			Ed.	MKLEPADLO					+ V1UC15
			Appr		P6700 Underbody Mainline - Cell 2V04			Document type: EMA	Project nr: 22-16151
Modification	Date	Name	Original		Replacement of / Replaced by	Scale 1:1			Page 6 / 1630

Cable diagram

F09_002_VLU

Cable name -KF100.15-P9			cable type PROFINET Cable					
remark			no. of conductors 4			cross-section 22		cable length
function text	Page / column	Target designation from	Connection point	conductor	Target designation to	Connection point	Page / column	function text
	&EFS/2.5	-KF100.15-P9			-KF100.15	-P9	&EFS/2.4	

6 8

			Date	12/22/2022	Volvo Trucks North America	Valiant TMS	Cable diagram =V1KF1+V1UC15-KF100.15-P9	Drawing name: =2V04&EFS-EL	= V1KF1
			Ed.	MKLEPADLO					+ V1UC15
			Appr		P6700 Underbody Mainline - Cell 2V04			Document type: EMA	Project nr: 22-16151
Modification	Date	Name	Original		Replacement of / Replaced by	Scale 1:1			Page 7 / 1630

Cable diagram

F09_002_VLU

Cable name -KF100.15-P10			cable type PROFINET Cable					
remark			no. of conductors 4			cross-section 22		cable length
function text	Page / column	Target designation from	Connection point	conductor	Target designation to	Connection point	Page / column	function text
	&EFS/2.5	-KF100.15-P10			-KF100.15	-P10	&EFS/2.4	

			Date	12/22/2022	Volvo Trucks North America	Valiant TMS	Cable diagram =V1KF1+V1UC15-KF100.15-P10	Drawing name: =2V04&EFS-EL	= V1KF1
			Ed.	MKLEPADLO					+ V1UC15
			Appr		P6700 Underbody Mainline - Cell 2V04			Document type: EMA	Project nr: 22-16151 Page 8
Modification	Date	Name	Original		Replacement of / Replaced by	Scale 1:1			1630

Cable diagram

F09_002_VLU

Cable name -KF100.15-P11			cable type PROFINET Cable					
remark			no. of conductors 4			cross-section 22		cable length
function text	Page / column	Target designation from	Connection point	conductor	Target designation to	Connection point	Page / column	function text
	&EFS/2.5	-KF100.15-P11			-KF100.15	-P11	&EFS/2.4	

			Date	12/22/2022	Volvo Trucks North America	Valiant TMS	Cable diagram =V1KF1+V1UC15-KF100.15-P11	Drawing name: =2V04&EFS-EL	= V1KF1
			Ed.	MKLEPADLO					+ V1UC15
			Appr		P6700 Underbody Mainline - Cell 2V04			Document type: EMA	Project nr: 22-16151
Modification	Date	Name	Original		Replacement of / Replaced by	Scale 1:1			Page 9 / 1630

Cable diagram

F09_002_VLU

Cable name -KF100.15-P12			cable type PROFINET Cable					
remark			no. of conductors 4			cross-section 22		cable length
function text	Page / column	Target designation from	Connection point	conductor	Target designation to	Connection point	Page / column	function text
	&EFS/2.5	-KF100.15-P12			-KF100.15	-P12	&EFS/2.4	

			Date	12/22/2022	Volvo Trucks North America	Valiant TMS	Cable diagram =V1KF1+V1UC15-KF100.15-P12	Drawing name: =2V04&EFS-EL	= V1KF1
			Ed.	MKLEPADLO					+ V1UC15
			Appr		P6700 Underbody Mainline - Cell 2V04			Document type: EMA	Project nr: 22-16151 Page 10
Modification	Date	Name	Original		Replacement of / Replaced by	Scale 1:1			1630

Cable diagram

F09_002_VLU

Cable name -KF100.15-P13			cable type PROFINET Cable					
remark			no. of conductors 4			cross-section 22		cable length
function text	Page / column	Target designation from	Connection point	conductor	Target designation to	Connection point	Page / column	function text
	&EFS/2.5	-KF100.15-P13			-KF100.15	-P13	&EFS/2.4	

			Date	12/22/2022	Volvo Trucks North America	Valiant TMS	Cable diagram =V1KF1+V1UC15-KF100.15-P13	Drawing name: =2V04&EFS-EL	= V1KF1
			Ed.	MKLEPADLO					+ V1UC15
			Appr		P6700 Underbody Mainline - Cell 2V04			Document type: EMA	Project nr: 22-16151	Page 11
Modification	Date	Name	Original		Replacement of / Replaced by	Scale 1:1				1630

Cable diagram

F09_002_VLU

Cable name -KF100.15-P14			cable type PROFINET Cable					
remark			no. of conductors 4			cross-section 22		cable length
function text	Page / column	Target designation from	Connection point	conductor	Target designation to	Connection point	Page / column	function text
	&EFS/2.5	-KF100.15-P14			-KF100.15	-P14	&EFS/2.4	

			Date	12/22/2022	Volvo Trucks North America	Valiant TMS	Cable diagram =V1KF1+V1UC15-KF100.15-P14	Drawing name: =2V04&EFS-EL	= V1KF1
			Ed.	MKLEPADLO					+ V1UC15
			Appr		P6700 Underbody Mainline - Cell 2V04			Document type: EMA	Project nr: 22-16151
Modification	Date	Name	Original		Replacement of / Replaced by	Scale 1:1			Page 12 / 1630

Cable diagram

F09_002_VLU

Cable name -KF100.15-P15			cable type PROFINET Cable					
remark			no. of conductors 4			cross-section 22		cable length
function text	Page / column	Target designation from	Connection point	conductor	Target designation to	Connection point	Page / column	function text
	&EFS/2.5	-KF100.15-P15			-KF100.15	-P15	&EFS/2.4	

			Date	12/22/2022	Volvo Trucks North America	Valiant TMS	Cable diagram =V1KF1+V1UC15-KF100.15-P15	Drawing name: =2V04&EFS-EL	= V1KF1
			Ed.	MKLEPADLO					+ V1UC15
			Appr		P6700 Underbody Mainline - Cell 2V04			Document type: EMA	Project nr: 22-16151 Page 13
Modification	Date	Name	Original		Replacement of / Replaced by	Scale 1:1			1630

Cable diagram

F09_002_VLU

Cable name -KF100.15-P16			cable type PROFINET Cable					
remark			no. of conductors 4			cross-section 22		cable length
function text	Page / column	Target designation from	Connection point	conductor	Target designation to	Connection point	Page / column	function text
	&EFS/2.5	-KF100.15-P16			-KF100.15	-P16	&EFS/2.4	

			Date	12/22/2022	Volvo Trucks North America	Valiant TMS	Cable diagram =V1KF1+V1UC15-KF100.15-P16	Drawing name: =2V04&EFS-EL	= V1KF1
			Ed.	MKLEPADLO					+ V1UC15
			Appr		P6700 Underbody Mainline - Cell 2V04			Document type: EMA	Project nr: 22-16151
Modification	Date	Name	Original		Replacement of / Replaced by	Scale 1:1			Page 14 / 1630

Cable diagram

F09_002_VLU

Cable name -KF100.12-P12			cable type PROFINET Cable					
remark			no. of conductors 4			cross-section 22		cable length
function text	Page / column	Target designation from	Connection point	conductor	Target designation to	Connection point	Page / column	function text
	&EFS+.UC12/2.5	+.UC12-KF100.12-P12			-PNET1		&EFS/1.4	

+.UC15/14

+.UC33/1

			Date	12/22/2022	Volvo Trucks North America	Valiant TMS	Cable diagram =V1KF1+V1UC32-KF100.12-P12	Drawing name: =2V04&EFS-EL	= V1KF1
			Ed.	MKLEPADLO					+ V1UC32
			Appr		P6700 Underbody Mainline - Cell 2V04			Document type: EMA	Project nr: 22-16151
Modification	Date	Name	Original		Replacement of / Replaced by	Scale 1:1			Page 1 / 1630

Cable diagram

F09_002_VLU

Cable name -KF100.12-P13			cable type PROFINET Cable					
remark			no. of conductors 4			cross-section 22		cable length
function text	Page / column	Target designation from	Connection point	conductor	Target designation to	Connection point	Page / column	function text
	&EFS+.UC12/2.5	+.UC12-KF100.12-P13			-PNET1		&EFS/1.4	

+.UC32/1

=V1UQ51BG0+.UQ51/1

			Date	12/22/2022	Volvo Trucks North America	Valiant TMS	Cable diagram =V1KF1+V1UC33-KF100.12-P13	Drawing name: =2V04&EFS-EL	= V1KF1
			Ed.	MKLEPADLO					+ V1UC33
			Appr		P6700 Underbody Mainline - Cell 2V04			Document type: EMA	Project nr: 22-16151
Modification	Date	Name	Original		Replacement of / Replaced by	Scale 1:1			Page 1 / 1630

Cable diagram

F09_002_VLU

Cable name -W1			cable type TPE					
remark			no. of conductors 4			cross-section 18		cable length 2
function text	Page / column	Target designation from	Connection point	conductor	Target designation to	Connection point	Page / column	function text
	&EFS/1.0	-XG1/2	P1:1		=V1UQ51KF1-KF1.13-X5	1	&EFS=V1UQ51KF1/3.5	
	&EFS/1.1	-XG1/2	P1:3		=V1UQ51KF1-KF1.13-X5	3	&EFS=V1UQ51KF1/3.5	
	&EFS/1.1	-XG1/2	P1:4		=V1UQ51KF1-KF1.13-X5	4	&EFS=V1UQ51KF1/3.5	
	&EFS/1.1	-XG1/2	P1:2		=V1UQ51KF1-KF1.13-X5	2	&EFS=V1UQ51KF1/3.5	

			Date	12/22/2022	Volvo Trucks North America	Valiant TMS	Cable diagram =V1UQ51BG0+V1UQ51-W1	Drawing name: =2V04&EFS-EL	= V1UQ51BG0
			Ed.	MKLEPADLO					+ V1UQ51
			Appr		P6700 Underbody Mainline - Cell 2V04			Document type: EMA	Project nr: 22-16151 Page 1
Modification	Date	Name	Original		Replacement of / Replaced by	Scale 1:1			1630

Cable diagram

F09_002_VLU

Cable name -W1.1			cable type TPE					
remark			no. of conductors 4			cross-section 18		cable length 1
function text	Page / column	Target designation from	Connection point	conductor	Target designation to	Connection point	Page / column	function text
	&EFS/1.0	-BG01	1		-XG1/2	J1:1	&EFS/1.0	
	&EFS/1.0	-BG01	4		-XG1/2	J1:4	&EFS/1.1	
	&EFS/1.1	-BG01	3		-XG1/2	J1:3	&EFS/1.1	

			Date	12/22/2022	Volvo Trucks North America	Valiant TMS	Cable diagram =V1UQ51BG0+V1UQ51-W1.1	Drawing name: =2V04&EFS-EL	= V1UQ51BG0
			Ed.	MKLEPADLO					+ V1UQ51
			Appr		P6700 Underbody Mainline - Cell 2V04			Document type: EMA	Project nr: 22-16151
Modification	Date	Name	Original		Replacement of / Replaced by	Scale 1:1			Page 2 / 1630

Cable diagram

F09_002_VLU

Cable name -W1.2			cable type TPE					
remark			no. of conductors 4			cross-section 18		cable length 3
function text	Page / column	Target designation from	Connection point	conductor	Target designation to	Connection point	Page / column	function text
	&EFS/1.1	-BG02	1		-XG1/2	J2:1	&EFS/1.1	
	&EFS/1.1	-BG02	4		-XG1/2	J2:4	&EFS/1.2	
	&EFS/1.2	-BG02	3		-XG1/2	J2:3	&EFS/1.2	

			Date	12/22/2022	Volvo Trucks North America	Valiant TMS	Cable diagram =V1UQ51BG0+V1UQ51-W1.2	Drawing name: =2V04&EFS-EL	= V1UQ51BG0
			Ed.	MKLEPADLO					+ V1UQ51
			Appr		P6700 Underbody Mainline - Cell 2V04			Document type: EMA	Project nr: 22-16151
Modification	Date	Name	Original		Replacement of / Replaced by	Scale 1:1			Page 3 / 1630

Cable diagram

F09_002_VLU

Cable name -W2			cable type TPE					
remark			no. of conductors 4			cross-section 18		cable length 2
function text	Page / column	Target designation from	Connection point	conductor	Target designation to	Connection point	Page / column	function text
	&EFS/1.3	-XG3/4	P1:1		=V1UQ51KF2-KF2.13-X5	1	&EFS=V1UQ51KF2/3.5	
	&EFS/1.3	-XG3/4	P1:3		=V1UQ51KF2-KF2.13-X5	3	&EFS=V1UQ51KF2/3.5	
	&EFS/1.4	-XG3/4	P1:4		=V1UQ51KF2-KF2.13-X5	4	&EFS=V1UQ51KF2/3.5	
	&EFS/1.4	-XG3/4	P1:2		=V1UQ51KF2-KF2.13-X5	2	&EFS=V1UQ51KF2/3.5	

3 5

			Date	12/22/2022	Volvo Trucks North America	Valiant TMS	Cable diagram =V1UQ51BG0+V1UQ51-W2	Drawing name: =2V04&EFS-EL	= V1UQ51BG0
			Ed.	MKLEPADLO					+ V1UQ51
			Appr		P6700 Underbody Mainline - Cell 2V04			Document type: EMA	Project nr: 22-16151
Modification	Date	Name	Original		Replacement of / Replaced by	Scale 1:1			Page 4 / 1630

Cable diagram

F09_002_VLU

Cable name -W2.1			cable type TPE					
remark			no. of conductors 4			cross-section 18		cable length 1
function text	Page / column	Target designation from	Connection point	conductor	Target designation to	Connection point	Page / column	function text
	&EFS/1.3	-BG03	1		-XG3/4	J1:1	&EFS/1.3	
	&EFS/1.3	-BG03	4		-XG3/4	J1:4	&EFS/1.4	
	&EFS/1.3	-BG03	3		-XG3/4	J1:3	&EFS/1.3	

			Date	12/22/2022	Volvo Trucks North America	Valiant TMS	Cable diagram =V1UQ51BG0+V1UQ51-W2.1	Drawing name: =2V04&EFS-EL	= V1UQ51BG0
			Ed.	MKLEPADLO					+ V1UQ51
			Appr		P6700 Underbody Mainline - Cell 2V04			Document type: EMA	Project nr: 22-16151
Modification	Date	Name	Original		Replacement of / Replaced by	Scale 1:1			Page 5 / 1630

Cable diagram

F09_002_VLU

Cable name -W2.2			cable type TPE					
remark			no. of conductors 4			cross-section 18		cable length 3
function text	Page / column	Target designation from	Connection point	conductor	Target designation to	Connection point	Page / column	function text
	&EFS/1.4	-BG04	1		-XG3/4	J2:1	&EFS/1.4	
	&EFS/1.4	-BG04	4		-XG3/4	J2:4	&EFS/1.5	
	&EFS/1.4	-BG04	3		-XG3/4	J2:3	&EFS/1.4	

			Date	12/22/2022	Volvo Trucks North America		Valiant TMS	Cable diagram =V1UQ51BG0+V1UQ51-W2.2	Drawing name: =2V04&EFS-EL	= V1UQ51BG0	
			Ed.	MKLEPADLO						+ V1UQ51	
			Appr		P6700 Underbody Mainline - Cell 2V04				Document type: EMA	Project nr: 22-16151	Page 6
Modification	Date	Name	Original		Replacement of	Replaced by	Scale 1:1				1630

Cable diagram

F09_002_VLU

Cable name -W1.1			cable type TPU					
remark			no. of conductors 5			cross-section 16		cable length 1
function text	Page / column	Target designation from	Connection point	conductor	Target designation to	Connection point	Page / column	function text
	&EFS/1.1	-KF1-X20	1		=V1UQ51WC4-XG51.1	J2:1	&EFS=V1UQ51WC4/1.5	
	&EFS/1.1	-KF1-X20	2		=V1UQ51WC4-XG51.1	J2:2	&EFS=V1UQ51WC4/1.5	
	&EFS/1.1	-KF1-X20	3		=V1UQ51WC4-XG51.1	J2:3	&EFS=V1UQ51WC4/1.6	
	&EFS/1.2	-KF1-X20	4		=V1UQ51WC4-XG51.1	J2:4	&EFS=V1UQ51WC4/1.6	
	&EFS/1.2	-KF1-X20	5		=V1UQ51WC4-XG51.1	J2:5	&EFS=V1UQ51WC4/1.6	

			Date	12/22/2022	Volvo Trucks North America	Valiant TMS	Cable diagram =V1UQ51KF1+V1UQ51-W1.1	Drawing name: =2V04&EFS-EL	= V1UQ51KF1
			Ed.	MKLEPADLO					+ V1UQ51
			Appr		P6700 Underbody Mainline - Cell 2V04			Document type: EMA	Project nr: 22-16151
Modification	Date	Name	Original		Replacement of / Replaced by	Scale 1:1			Page 1 / 1630

Cable diagram

F09_002_VLU

Cable name -W2.1			cable type TPU					
remark			no. of conductors 5			cross-section 16		cable length 1
function text	Page / column	Target designation from	Connection point	conductor	Target designation to	Connection point	Page / column	function text
	&EFS/1.1	-KF2-X20	1		=V1UQ51WC4-XG51.2	J1:1	&EFS=V1UQ51WC4/1.4	
	&EFS/1.1	-KF2-X20	2		=V1UQ51WC4-XG51.2	J1:2	&EFS=V1UQ51WC4/1.4	
	&EFS/1.1	-KF2-X20	3		=V1UQ51WC4-XG51.2	J1:3	&EFS=V1UQ51WC4/1.5	
	&EFS/1.2	-KF2-X20	4		=V1UQ51WC4-XG51.2	J1:4	&EFS=V1UQ51WC4/1.5	
	&EFS/1.2	-KF2-X20	5		=V1UQ51WC4-XG51.2	J1:5	&EFS=V1UQ51WC4/1.5	

			Date	12/22/2022	Volvo Trucks North America	Valiant TMS	Cable diagram =V1UQ51KF2+V1UQ51-W2.1	Drawing name: =2V04&EFS-EL	= V1UQ51KF2
			Ed.	MKLEPADLO					+ V1UQ51
			Appr		P6700 Underbody Mainline - Cell 2V04			Document type: EMA	Project nr: 22-16151
Modification	Date	Name	Original		Replacement of / Replaced by	Scale 1:1			Page 1 / 1630

Cable diagram

F09_002_VLU

Cable name -WF2			cable type PROFINET Cable					
remark			no. of conductors 4			cross-section 22		cable length
function text	Page / column	Target designation from	Connection point	conductor	Target designation to	Connection point	Page / column	function text
	&EFS=V1UQ51KF1/1.4	=V1UQ51KF1-KF1-TP2			-KF2-TP1		&EFS/1.3	

			Date	12/22/2022	Volvo Trucks North America	Valiant TMS	Cable diagram =V1UQ51KF2+V1UQ51-WF2	Drawing name: =2V04&EFS-EL	= V1UQ51KF2
			Ed.	MKLEPADLO					+ V1UQ51
			Appr		P6700 Underbody Mainline - Cell 2V04			Document type: EMA	Project nr: 22-16151
Modification	Date	Name	Original		Replacement of / Replaced by	Scale 1:1			Page 2 / 1630

Cable diagram

F09_002_VLU

Cable name -W2.2			cable type TPU					
remark			no. of conductors 5			cross-section 16		cable length 1
function text	Page / column	Target designation from	Connection point	conductor	Target designation to	Connection point	Page / column	function text
	&EFS/1.1	-KF3-X20	1		=V1UQ51WC4-XG51.2	J2:1	&EFS=V1UQ51WC4/1.5	
	&EFS/1.1	-KF3-X20	2		=V1UQ51WC4-XG51.2	J2:2	&EFS=V1UQ51WC4/1.5	
	&EFS/1.1	-KF3-X20	3		=V1UQ51WC4-XG51.2	J2:3	&EFS=V1UQ51WC4/1.6	
	&EFS/1.2	-KF3-X20	4		=V1UQ51WC4-XG51.2	J2:4	&EFS=V1UQ51WC4/1.6	
	&EFS/1.2	-KF3-X20	5		=V1UQ51WC4-XG51.2	J2:5	&EFS=V1UQ51WC4/1.6	

			Date	12/22/2022	Volvo Trucks North America	Valiant TMS	Cable diagram =V1UQ51KF3+V1UQ51-W2.2	Drawing name: =2V04&EFS-EL	= V1UQ51KF3
			Ed.	MKLEPADLO					+ V1UQ51
			Appr		P6700 Underbody Mainline - Cell 2V04			Document type: EMA	Project nr: 22-16151
Modification	Date	Name	Original		Replacement of / Replaced by	Scale 1:1			Page 1 / 1630

Cable diagram

F09_002_VLU

Cable name -WF3			cable type PROFINET Cable					
remark			no. of conductors 4			cross-section 22		cable length
function text	Page / column	Target designation from	Connection point	conductor	Target designation to	Connection point	Page / column	function text
	&EFS=V1UQ51KF2/1.4	=V1UQ51KF2-KF2-TP2			-KF3-TP1		&EFS/1.3	

			Date	12/22/2022	Volvo Trucks North America	Valiant TMS	Cable diagram =V1UQ51KF3+V1UQ51-WF3	Drawing name: =2V04&EFS-EL	= V1UQ51KF3
			Ed.	MKLEPADLO					+ V1UQ51
			Appr		P6700 Underbody Mainline - Cell 2V04			Document type: EMA	Project nr: 22-16151
Modification	Date	Name	Original		Replacement of / Replaced by	Scale 1:1			Page 2 / 1630

Cable diagram

F09_002_VLU

Cable name -W1			cable type TPE					
remark			no. of conductors 4			cross-section 18		cable length 2
function text	Page / column	Target designation from	Connection point	conductor	Target designation to	Connection point	Page / column	function text
	&EFS=V1UQ51KF1+V1UQ51/1.6	=V1UQ51KF1+V1UQ51-KF1.1	1-X1 1		-BGS/R	1	&EFS=V1UQ51UQ1+V1UQ51UQ1/1.0	
	&EFS=V1UQ51KF1+V1UQ51/1.6	=V1UQ51KF1+V1UQ51-KF1.1	1-X1 2		-BGS/R	2	&EFS=V1UQ51UQ1+V1UQ51UQ1/1.0	
	&EFS=V1UQ51KF1+V1UQ51/1.5	=V1UQ51KF1+V1UQ51-KF1.1	1-X1 3		-BGS/R	3	&EFS=V1UQ51UQ1+V1UQ51UQ1/1.1	
	&EFS=V1UQ51KF1+V1UQ51/1.5	=V1UQ51KF1+V1UQ51-KF1.1	1-X1 4		-BGS/R	4	&EFS=V1UQ51UQ1+V1UQ51UQ1/1.1	

Cable diagram

F09_002_VLU

Cable name -W1			cable type TPE					
remark			no. of conductors 4			cross-section 18		cable length 2
function text	Page / column	Target designation from	Connection point	conductor	Target designation to	Connection point	Page / column	function text
	&EFS=V1UQ51KF1+V1UQ51UQ1	-V1UQ51KF1+V1UQ51-KF1.1	1-X2 1		-BGS/R	1	&EFS=V1UQ51UQ1+V1UQ51UQ1/1.2	
	&EFS=V1UQ51KF1+V1UQ51UQ1	-V1UQ51KF1+V1UQ51-KF1.1	1-X2 2		-BGS/R	2	&EFS=V1UQ51UQ1+V1UQ51UQ1/1.2	
	&EFS=V1UQ51KF1+V1UQ51UQ1	-V1UQ51KF1+V1UQ51-KF1.1	1-X2 3		-BGS/R	3	&EFS=V1UQ51UQ1+V1UQ51UQ1/1.2	
	&EFS=V1UQ51KF1+V1UQ51UQ1	-V1UQ51KF1+V1UQ51-KF1.1	1-X2 4		-BGS/R	4	&EFS=V1UQ51UQ1+V1UQ51UQ1/1.2	

			Date	12/22/2022	Volvo Trucks North America	Valiant TMS	Cable diagram =V1UQ51UQ1.2+V1UQ51UQ1.2-W1	Drawing name: =2V04&EFS-EL	= V1UQ51UQ1.2
			Ed.	MKLEPADLO					+ V1UQ51UQ1.2
			Appr		P6700 Underbody Mainline - Cell 2V04			Document type: EMA	Project nr: 22-16151
Modification	Date	Name	Original		Replacement of / Replaced by	Scale 1:1			Page 1 / 1630

Cable diagram

F09_002_VLU

Cable name -W1			cable type TPE					
remark			no. of conductors 4			cross-section 18		cable length 2
function text	Page / column	Target designation from	Connection point	conductor	Target designation to	Connection point	Page / column	function text
	&EFS=V1UQ51KF1+V1UQ51UQ2	=V1UQ51KF1+V1UQ51-KF1.1	1-X3 1		-BGS/R	1	&EFS=V1UQ51UQ2+V1UQ51UQ2/1.0	
	&EFS=V1UQ51KF1+V1UQ51UQ2	=V1UQ51KF1+V1UQ51-KF1.1	1-X3 2		-BGS/R	2	&EFS=V1UQ51UQ2+V1UQ51UQ2/1.0	
	&EFS=V1UQ51KF1+V1UQ51UQ2	=V1UQ51KF1+V1UQ51-KF1.1	1-X3 3		-BGS/R	3	&EFS=V1UQ51UQ2+V1UQ51UQ2/1.1	
	&EFS=V1UQ51KF1+V1UQ51UQ2	=V1UQ51KF1+V1UQ51-KF1.1	1-X3 4		-BGS/R	4	&EFS=V1UQ51UQ2+V1UQ51UQ2/1.1	

			Date	12/22/2022	Volvo Trucks North America	Valiant TMS	Cable diagram =V1UQ51UQ2.1+V1UQ51UQ2.1-W1	Drawing name: =2V04&EFS-EL	= V1UQ51UQ2.1
			Ed.	MKLEPADLO					+ V1UQ51UQ2.1
			Appr		P6700 Underbody Mainline - Cell 2V04			Document type: EMA	Project nr: 22-16151
Modification	Date	Name	Original		Replacement of / Replaced by	Scale 1:1			Page 1 / 1630

Cable diagram

F09_002_VLU

Cable name -W1			cable type TPE					
remark			no. of conductors 4			cross-section 18		cable length 3
function text	Page / column	Target designation from	Connection point	conductor	Target designation to	Connection point	Page / column	function text
	&EFS=V1UQ51KF1+V1UQ51KF1/1.1	-V1UQ51KF1+V1UQ51-KF1.1	1-X4 1		-BGS/R	1	&EFS=V1UQ51UQ3+V1UQ51UQ3/1.0	
	&EFS=V1UQ51KF1+V1UQ51KF1/1.1	-V1UQ51KF1+V1UQ51-KF1.1	1-X4 2		-BGS/R	2	&EFS=V1UQ51UQ3+V1UQ51UQ3/1.0	
	&EFS=V1UQ51KF1+V1UQ51KF1/1.1	-V1UQ51KF1+V1UQ51-KF1.1	1-X4 3		-BGS/R	3	&EFS=V1UQ51UQ3+V1UQ51UQ3/1.1	
	&EFS=V1UQ51KF1+V1UQ51KF1/1.1	-V1UQ51KF1+V1UQ51-KF1.1	1-X4 4		-BGS/R	4	&EFS=V1UQ51UQ3+V1UQ51UQ3/1.1	

Cable diagram

F09_002_VLU

Cable name -W1			cable type TPE					
remark			no. of conductors 4			cross-section 18		cable length 3
function text	Page / column	Target designation from	Connection point	conductor	Target designation to	Connection point	Page / column	function text
	&EFS=V1UQ51KF1+V1UQ51	=V1UQ51KF1+V1UQ51-KF1.1	1-X5 1		-BGS/R	1	&EFS=V1UQ51UQ3+V1UQ51UQ3/1.2	
	&EFS=V1UQ51KF1+V1UQ51	=V1UQ51KF1+V1UQ51-KF1.1	1-X5 2		-BGS/R	2	&EFS=V1UQ51UQ3+V1UQ51UQ3/1.2	
	&EFS=V1UQ51KF1+V1UQ51	=V1UQ51KF1+V1UQ51-KF1.1	1-X5 3		-BGS/R	3	&EFS=V1UQ51UQ3+V1UQ51UQ3/1.2	
	&EFS=V1UQ51KF1+V1UQ51	=V1UQ51KF1+V1UQ51-KF1.1	1-X5 4		-BGS/R	4	&EFS=V1UQ51UQ3+V1UQ51UQ3/1.2	

			Date	12/22/2022	Volvo Trucks North America	Valiant TMS	Cable diagram =V1UQ51UQ3.2+V1UQ51UQ3.2-W1	Drawing name: =2V04&EFS-EL	= V1UQ51UQ3.2
			Ed.	MKLEPADLO					+ V1UQ51UQ3.2
			Appr		P6700 Underbody Mainline - Cell 2V04			Document type: EMA	Project nr: 22-16151
Modification	Date	Name	Original		Replacement of / Replaced by	Scale 1:1			Page 1 / 1630

Cable diagram

F09_002_VLU

Cable name -W1			cable type TPE					
remark			no. of conductors 4			cross-section 18		cable length 4
function text	Page / column	Target designation from	Connection point	conductor	Target designation to	Connection point	Page / column	function text
	&EFS=V1UQ51KF1+V1UQ51	=V1UQ51KF1+V1UQ51-KF1.1	1-X6 1		-BGS/R	1	&EFS=V1UQ51UQ4+V1UQ51UQ4/1.0	
	&EFS=V1UQ51KF1+V1UQ51	=V1UQ51KF1+V1UQ51-KF1.1	1-X6 2		-BGS/R	2	&EFS=V1UQ51UQ4+V1UQ51UQ4/1.0	
	&EFS=V1UQ51KF1+V1UQ51	=V1UQ51KF1+V1UQ51-KF1.1	1-X6 3		-BGS/R	3	&EFS=V1UQ51UQ4+V1UQ51UQ4/1.1	
	&EFS=V1UQ51KF1+V1UQ51	=V1UQ51KF1+V1UQ51-KF1.1	1-X6 4		-BGS/R	4	&EFS=V1UQ51UQ4+V1UQ51UQ4/1.1	

			Date	12/22/2022	Volvo Trucks North America	Valiant TMS	Cable diagram =V1UQ51UQ4.1+V1UQ51UQ4.1-W1	Drawing name: =2V04&EFS-EL	= V1UQ51UQ4.1
			Ed.	MKLEPADLO					+ V1UQ51UQ4.1
			Appr		P6700 Underbody Mainline - Cell 2V04			Document type: EMA	Project nr: 22-16151
Modification	Date	Name	Original		Replacement of / Replaced by	Scale 1:1			Page 1 / 1630

Cable diagram

F09_002_VLU

Cable name -W1			cable type TPE					
remark			no. of conductors 4			cross-section 18		cable length 4
function text	Page / column	Target designation from	Connection point	conductor	Target designation to	Connection point	Page / column	function text
	&EFS=V1UQ51KF1+V1UQ51UQ7	=V1UQ51KF1+V1UQ51-KF1.1	1-X7 1		-BGS/R	1	&EFS=V1UQ51UQ4+V1UQ51UQ4/1.2	
	&EFS=V1UQ51KF1+V1UQ51UQ7	=V1UQ51KF1+V1UQ51-KF1.1	1-X7 2		-BGS/R	2	&EFS=V1UQ51UQ4+V1UQ51UQ4/1.2	
	&EFS=V1UQ51KF1+V1UQ51UQ8	=V1UQ51KF1+V1UQ51-KF1.1	1-X7 3		-BGS/R	3	&EFS=V1UQ51UQ4+V1UQ51UQ4/1.2	
	&EFS=V1UQ51KF1+V1UQ51UQ8	=V1UQ51KF1+V1UQ51-KF1.1	1-X7 4		-BGS/R	4	&EFS=V1UQ51UQ4+V1UQ51UQ4/1.2	

			Date	12/22/2022	Volvo Trucks North America	Valiant TMS	Cable diagram =V1UQ51UQ4.2+V1UQ51UQ4.2-W1	Drawing name: =2V04&EFS-EL	= V1UQ51UQ4.2
			Ed.	MKLEPADLO					+ V1UQ51UQ4.2
			Appr		P6700 Underbody Mainline - Cell 2V04			Document type: EMA	Project nr: 22-16151
Modification	Date	Name	Original		Replacement of / Replaced by	Scale 1:1			Page 1 / 1630

Cable diagram

F09_002_VLU

Cable name -W1			cable type TPE					
remark			no. of conductors 4			cross-section 18		cable length 4
function text	Page / column	Target designation from	Connection point	conductor	Target designation to	Connection point	Page / column	function text
	&EFS=V1UQ51KF1+V1UQ51	=V1UQ51KF1+V1UQ51-KF1.1	1-X8 1		-XGR/S	P1:1	&EFS=V1UQ51UQ5+V1UQ51UQ5/1.1	
	&EFS=V1UQ51KF1+V1UQ51	=V1UQ51KF1+V1UQ51-KF1.1	1-X8 2		-XGR/S	P1:2	&EFS=V1UQ51UQ5+V1UQ51UQ5/1.1	
	&EFS=V1UQ51KF1+V1UQ51	=V1UQ51KF1+V1UQ51-KF1.1	1-X8 3		-XGR/S	P1:3	&EFS=V1UQ51UQ5+V1UQ51UQ5/1.1	
	&EFS=V1UQ51KF1+V1UQ51	=V1UQ51KF1+V1UQ51-KF1.1	1-X8 4		-XGR/S	P1:4	&EFS=V1UQ51UQ5+V1UQ51UQ5/1.1	

			Date	12/22/2022	Volvo Trucks North America	Valiant TMS	Cable diagram =V1UQ51UQ5.1+V1UQ51UQ5.1-W1	Drawing name: =2V04&EFS-EL	= V1UQ51UQ5.1
			Ed.	MKLEPADLO					+ V1UQ51UQ5.1
			Appr		P6700 Underbody Mainline - Cell 2V04			Document type: EMA	Project nr: 22-16151
Modification	Date	Name	Original		Replacement of / Replaced by	Scale 1:1			Page 1 / 1630

Cable diagram

F09_002_VLU

Cable name -W1.1			cable type TPE					
remark			no. of conductors 4			cross-section 18		cable length
function text	Page / column	Target designation from	Connection point	conductor	Target designation to	Connection point	Page / column	function text
	&EFS=V1UQ51UQ5+V1UQ51UQ5/1.1	-XGR/S	1		-XGR/S	J1:1	&EFS=V1UQ51UQ5+V1UQ51UQ5/1.1	
	&EFS=V1UQ51UQ5+V1UQ51UQ5/1.1	-XGR/S	4		-XGR/S	J1:4	&EFS=V1UQ51UQ5+V1UQ51UQ5/1.1	
	&EFS=V1UQ51UQ5+V1UQ51UQ5/1.1	-XGR/S	3		-XGR/S	J1:3	&EFS=V1UQ51UQ5+V1UQ51UQ5/1.1	

			Date	12/22/2022	Volvo Trucks North America	Valiant TMS	Cable diagram =V1UQ51UQ5.1+V1UQ51UQ5.1-W1.1	Drawing name: =2V04&EFS-EL	= V1UQ51UQ5.1
			Ed.	MKLEPADLO					+ V1UQ51UQ5.1
			Appr		P6700 Underbody Mainline - Cell 2V04			Document type: EMA	Project nr: 22-16151
Modification	Date	Name	Original		Replacement of / Replaced by	Scale 1:1			Page 2 / 1630

Cable diagram

F09_002_VLU

Cable name -W1.2			cable type TPE					
remark			no. of conductors 4			cross-section 18		cable length
function text	Page / column	Target designation from	Connection point	conductor	Target designation to	Connection point	Page / column	function text
	&EFS=V1UQ51UQ5+V1UQ51UQ5/1.2	-XGS	1		-XGR/S	J2:1	&EFS=V1UQ51UQ5+V1UQ51UQ5/1.2	
	&EFS=V1UQ51UQ5+V1UQ51UQ5/1.2	-XGS	4		-XGR/S	J2:4	&EFS=V1UQ51UQ5+V1UQ51UQ5/1.2	
	&EFS=V1UQ51UQ5+V1UQ51UQ5/1.2	-XGS	3		-XGR/S	J2:3	&EFS=V1UQ51UQ5+V1UQ51UQ5/1.2	

			Date	12/22/2022	Volvo Trucks North America	Valiant TMS	Cable diagram =V1UQ51UQ5.1+V1UQ51UQ5.1-W1.2	Drawing name: =2V04&EFS-EL	= V1UQ51UQ5.1
			Ed.	MKLEPADLO					+ V1UQ51UQ5.1
			Appr		P6700 Underbody Mainline - Cell 2V04			Document type: EMA	Project nr: 22-16151 Page 3
Modification	Date	Name	Original		Replacement of / Replaced by	Scale 1:1			1630

Cable diagram

F09_002_VLU

Cable name -W1			cable type TPE					
remark			no. of conductors 4			cross-section 18		cable length 4
function text	Page / column	Target designation from	Connection point	conductor	Target designation to	Connection point	Page / column	function text
	&EFS=V1UQ51KF1+V1UQ51UQ5	-V1UQ51KF1+V1UQ51-KF1.1	2-X1 1		-XGR/S	P1:1	&EFS=V1UQ51UQ5+V1UQ51UQ5/1.4	
	&EFS=V1UQ51KF1+V1UQ51UQ5	-V1UQ51KF1+V1UQ51-KF1.1	2-X1 2		-XGR/S	P1:2	&EFS=V1UQ51UQ5+V1UQ51UQ5/1.4	
	&EFS=V1UQ51KF1+V1UQ51UQ5	-V1UQ51KF1+V1UQ51-KF1.1	2-X1 3		-XGR/S	P1:3	&EFS=V1UQ51UQ5+V1UQ51UQ5/1.4	
	&EFS=V1UQ51KF1+V1UQ51UQ5	-V1UQ51KF1+V1UQ51-KF1.1	2-X1 4		-XGR/S	P1:4	&EFS=V1UQ51UQ5+V1UQ51UQ5/1.4	

			Date	12/22/2022	Volvo Trucks North America	Valiant TMS	Cable diagram =V1UQ51UQ5.2+V1UQ51UQ5.2-W1	Drawing name: =2V04&EFS-EL	= V1UQ51UQ5.2
			Ed.	MKLEPADLO					+ V1UQ51UQ5.2
			Appr		P6700 Underbody Mainline - Cell 2V04			Document type: EMA	Project nr: 22-16151
Modification	Date	Name	Original		Replacement of / Replaced by	Scale 1:1			Page 1 / 1630

Cable diagram

F09_002_VLU

Cable name -W1.1			cable type TPE					
remark			no. of conductors 4			cross-section 18		cable length
function text	Page / column	Target designation from	Connection point	conductor	Target designation to	Connection point	Page / column	function text
	&EFS=V1UQ51UQ5+V1UQ51UQ5/1.4	-XGR/S	1		-XGR/S	J1:1	&EFS=V1UQ51UQ5+V1UQ51UQ5/1.4	
	&EFS=V1UQ51UQ5+V1UQ51UQ5/1.4	-XGR/S	4		-XGR/S	J1:4	&EFS=V1UQ51UQ5+V1UQ51UQ5/1.4	
	&EFS=V1UQ51UQ5+V1UQ51UQ5/1.4	-XGR/S	3		-XGR/S	J1:3	&EFS=V1UQ51UQ5+V1UQ51UQ5/1.4	

1 3

			Date	12/22/2022	Volvo Trucks North America	Valiant TMS	Cable diagram =V1UQ51UQ5.2+V1UQ51UQ5.2-W1.1	Drawing name: =2V04&EFS-EL	= V1UQ51UQ5.2	
			Ed.	MKLEPADLO					+ V1UQ51UQ5.2	
			Appr		P6700 Underbody Mainline - Cell 2V04			Document type: EMA	Project nr: 22-16151	Page 2
Modification	Date	Name	Original		Replacement of / Replaced by	Scale 1:1				1630

Cable diagram

F09_002_VLU

Cable name -W1.2			cable type TPE					
remark			no. of conductors 4			cross-section 18		cable length
function text	Page / column	Target designation from	Connection point	conductor	Target designation to	Connection point	Page / column	function text
	&EFS=V1UQ51UQ5+V1UQ51UQ5/1.5	-BG1	1		-XGR/S	J2:1	&EFS=V1UQ51UQ5+V1UQ51UQ5/1.5	
	&EFS=V1UQ51UQ5+V1UQ51UQ5/1.5	-BG1	4		-XGR/S	J2:4	&EFS=V1UQ51UQ5+V1UQ51UQ5/1.5	
	&EFS=V1UQ51UQ5+V1UQ51UQ5/1.5	-BG1	3		-XGR/S	J2:3	&EFS=V1UQ51UQ5+V1UQ51UQ5/1.5	

			Date	12/22/2022	Volvo Trucks North America	Valiant TMS	Cable diagram =V1UQ51UQ5.2+V1UQ51UQ5.2-W1.2	Drawing name: =2V04&EFS-EL	= V1UQ51UQ5.2
			Ed.	MKLEPADLO					+ V1UQ51UQ5.2
			Appr		P6700 Underbody Mainline - Cell 2V04			Document type: EMA	Project nr: 22-16151 Page 3
Modification	Date	Name	Original		Replacement of / Replaced by	Scale 1:1			1630

Cable diagram

F09_002_VLU

Cable name -W1			cable type TPE					
remark			no. of conductors 4			cross-section 18		cable length 1
function text	Page / column	Target designation from	Connection point	conductor	Target designation to	Connection point	Page / column	function text
	&EFS=V1UQ51KF1+V1UQ51/2.1	-V1UQ51KF1+V1UQ51-KF1.1	2-X2 1		-BGS/R	1	&EFS=V1UQ51UQ6+V1UQ51UQ6/1.0	
	&EFS=V1UQ51KF1+V1UQ51/2.2	-V1UQ51KF1+V1UQ51-KF1.1	2-X2 2		-BGS/R	2	&EFS=V1UQ51UQ6+V1UQ51UQ6/1.0	
	&EFS=V1UQ51KF1+V1UQ51/2.3	-V1UQ51KF1+V1UQ51-KF1.1	2-X2 3		-BGS/R	3	&EFS=V1UQ51UQ6+V1UQ51UQ6/1.1	
	&EFS=V1UQ51KF1+V1UQ51/2.4	-V1UQ51KF1+V1UQ51-KF1.1	2-X2 4		-BGS/R	4	&EFS=V1UQ51UQ6+V1UQ51UQ6/1.1	

Cable diagram

F09_002_VLU

Cable name -W1			cable type TPE					
remark			no. of conductors 4			cross-section 18		cable length 1
function text	Page / column	Target designation from	Connection point	conductor	Target designation to	Connection point	Page / column	function text
	&EFS=V1UQ51KF1+V1UQ51	=V1UQ51KF1+V1UQ51-KF1.1	2-X3 1		-BGS/R	1	&EFS=V1UQ51UQ6+V1UQ51UQ6/1.2	
	&EFS=V1UQ51KF1+V1UQ51	=V1UQ51KF1+V1UQ51-KF1.1	2-X3 2		-BGS/R	2	&EFS=V1UQ51UQ6+V1UQ51UQ6/1.2	
	&EFS=V1UQ51KF1+V1UQ51	=V1UQ51KF1+V1UQ51-KF1.1	2-X3 3		-BGS/R	3	&EFS=V1UQ51UQ6+V1UQ51UQ6/1.2	
	&EFS=V1UQ51KF1+V1UQ51	=V1UQ51KF1+V1UQ51-KF1.1	2-X3 4		-BGS/R	4	&EFS=V1UQ51UQ6+V1UQ51UQ6/1.2	

			Date	12/22/2022	Volvo Trucks North America	Valiant TMS	Cable diagram =V1UQ51UQ6.2+V1UQ51UQ6.2-W1	Drawing name: =2V04&EFS-EL	= V1UQ51UQ6.2
			Ed.	MKLEPADLO					+ V1UQ51UQ6.2
			Appr		P6700 Underbody Mainline - Cell 2V04			Document type: EMA	Project nr: 22-16151
Modification	Date	Name	Original		Replacement of / Replaced by	Scale 1:1			Page 1 / 1630

Cable diagram

F09_002_VLU

Cable name -W1			cable type TPE					
remark			no. of conductors 4			cross-section 18		cable length 3
function text	Page / column	Target designation from	Connection point	conductor	Target designation to	Connection point	Page / column	function text
	&EFS=V1UQ51KF1+V1UQ51KF1/2.5	-V1UQ51KF1+V1UQ51-KF1.1	2-X4 1		-BGS/R	1	&EFS=V1UQ51UQ7+V1UQ51UQ7/1.0	
	&EFS=V1UQ51KF1+V1UQ51KF1/2.5	-V1UQ51KF1+V1UQ51-KF1.1	2-X4 2		-BGS/R	2	&EFS=V1UQ51UQ7+V1UQ51UQ7/1.0	
	&EFS=V1UQ51KF1+V1UQ51KF1/2.5	-V1UQ51KF1+V1UQ51-KF1.1	2-X4 3		-BGS/R	3	&EFS=V1UQ51UQ7+V1UQ51UQ7/1.0	
	&EFS=V1UQ51KF1+V1UQ51KF1/2.5	-V1UQ51KF1+V1UQ51-KF1.1	2-X4 4		-BGS/R	4	&EFS=V1UQ51UQ7+V1UQ51UQ7/1.0	

Cable diagram

F09_002_VLU

Cable name -W1			cable type TPE					
remark			no. of conductors 4			cross-section 18		cable length 3
function text	Page / column	Target designation from	Connection point	conductor	Target designation to	Connection point	Page / column	function text
	&EFS=V1UQ51KF1+V1UQ51KF1/2.5	=V1UQ51KF1+V1UQ51-KF1.1	2-X5 1		-BGS/R	1	&EFS=V1UQ51UQ7+V1UQ51UQ7/1.2	
	&EFS=V1UQ51KF1+V1UQ51KF1/2.5	=V1UQ51KF1+V1UQ51-KF1.1	2-X5 2		-BGS/R	2	&EFS=V1UQ51UQ7+V1UQ51UQ7/1.2	
	&EFS=V1UQ51KF1+V1UQ51KF1/2.5	=V1UQ51KF1+V1UQ51-KF1.1	2-X5 3		-BGS/R	3	&EFS=V1UQ51UQ7+V1UQ51UQ7/1.2	
	&EFS=V1UQ51KF1+V1UQ51KF1/2.5	=V1UQ51KF1+V1UQ51-KF1.1	2-X5 4		-BGS/R	4	&EFS=V1UQ51UQ7+V1UQ51UQ7/1.2	

Cable diagram

F09_002_VLU

Cable name -W1			cable type TPE					
remark			no. of conductors 4			cross-section 18		cable length 3
function text	Page / column	Target designation from	Connection point	conductor	Target designation to	Connection point	Page / column	function text
	&EFS=V1UQ51KF1+V1UQ51UQ5	-V1UQ51KF1+V1UQ51-KF1.1	2-X6 1		-BGS/R	1	&EFS=V1UQ51UQ7+V1UQ51UQ7/1.3	
	&EFS=V1UQ51KF1+V1UQ51UQ6	-V1UQ51KF1+V1UQ51-KF1.1	2-X6 3		-BGS/R	3	&EFS=V1UQ51UQ7+V1UQ51UQ7/1.3	
	&EFS=V1UQ51KF1+V1UQ51UQ7	-V1UQ51KF1+V1UQ51-KF1.1	2-X6 4		-BGS/R	4	&EFS=V1UQ51UQ7+V1UQ51UQ7/1.3	

=V1UQ51UQ7.2+.UQ51UQ7.2/1

=V1UQ51UQ7.4+.UQ51UQ7.4/1

			Date	12/22/2022	Volvo Trucks North America	Valiant TMS	Cable diagram =V1UQ51UQ7.3+V1UQ51UQ7.3-W1	Drawing name: =2V04&EFS-EL	= V1UQ51UQ7.3
			Ed.	MKLEPADLO					+ V1UQ51UQ7.3
			Appr		P6700 Underbody Mainline - Cell 2V04			Document type: EMA	Project nr: 22-16151
Modification	Date	Name	Original		Replacement of	Replaced by	Scale 1:1		Page 1 / 1630

Cable diagram

F09_002_VLU

Cable name -W1			cable type TPE					
remark			no. of conductors 4			cross-section 18		cable length 3
function text	Page / column	Target designation from	Connection point	conductor	Target designation to	Connection point	Page / column	function text
	&EFS=V1UQ51KF1+V1UQ51UQ7	-V1UQ51KF1+V1UQ51-KF1.1	2-X7 1		-BGS/R	1	&EFS=V1UQ51UQ7+V1UQ51UQ7/1.4	
	&EFS=V1UQ51KF1+V1UQ51UQ8	-V1UQ51KF1+V1UQ51-KF1.1	2-X7 3		-BGS/R	3	&EFS=V1UQ51UQ7+V1UQ51UQ7/1.5	
	&EFS=V1UQ51KF1+V1UQ51UQ8	-V1UQ51KF1+V1UQ51-KF1.1	2-X7 4		-BGS/R	4	&EFS=V1UQ51UQ7+V1UQ51UQ7/1.5	

			Date	12/22/2022	Volvo Trucks North America	Valiant TMS	Cable diagram =V1UQ51UQ7.4+V1UQ51UQ7.4-W1	Drawing name: =2V04&EFS-EL	= V1UQ51UQ7.4
			Ed.	MKLEPADLO					+ V1UQ51UQ7.4
			Appr		P6700 Underbody Mainline - Cell 2V04			Document type: EMA	Project nr: 22-16151
Modification	Date	Name	Original		Replacement of / Replaced by	Scale 1:1			Page 1 / 1630

Cable diagram

F09_002_VLU

Cable name -W1			cable type TPE					
remark			no. of conductors 4			cross-section 18		cable length 3
function text	Page / column	Target designation from	Connection point	conductor	Target designation to	Connection point	Page / column	function text
	&EFS=V1UQ51KF1+V1UQ51UQ8	-V1UQ51KF1+V1UQ51-KF1.1	2-X8 1		-BGS/R	1	&EFS=V1UQ51UQ7+V1UQ51UQ7/1.6	
	&EFS=V1UQ51KF1+V1UQ51UQ9	-V1UQ51KF1+V1UQ51-KF1.1	2-X8 3		-BGS/R	3	&EFS=V1UQ51UQ7+V1UQ51UQ7/1.6	
	&EFS=V1UQ51KF1+V1UQ51UQ9	-V1UQ51KF1+V1UQ51-KF1.1	2-X8 4		-BGS/R	4	&EFS=V1UQ51UQ7+V1UQ51UQ7/1.6	

			Date	12/22/2022	Volvo Trucks North America	Valiant TMS	Cable diagram =V1UQ51UQ7.5+V1UQ51UQ7.5-W1	Drawing name: =2V04&EFS-EL	= V1UQ51UQ7.5
			Ed.	MKLEPADLO					+ V1UQ51UQ7.5
			Appr		P6700 Underbody Mainline - Cell 2V04			Document type: EMA	Project nr: 22-16151
Modification	Date	Name	Original		Replacement of / Replaced by	Scale 1:1			Page 1 / 1630

Cable diagram

F09_002_VLU

Cable name -W1			cable type TPE					
remark			no. of conductors 4			cross-section 18		cable length 3
function text	Page / column	Target designation from	Connection point	conductor	Target designation to	Connection point	Page / column	function text
	&EFS=V1UQ51KF1+V1UQ51UQ6	=V1UQ51KF1+V1UQ51-KF1.1	3-X1 1		-BGS/R	1	&EFS=V1UQ51UQ7+V1UQ51UQ7/1.7	
	&EFS=V1UQ51KF1+V1UQ51UQ6	=V1UQ51KF1+V1UQ51-KF1.1	3-X1 3		-BGS/R	3	&EFS=V1UQ51UQ7+V1UQ51UQ7/1.7	
	&EFS=V1UQ51KF1+V1UQ51UQ6	=V1UQ51KF1+V1UQ51-KF1.1	3-X1 4		-BGS/R	4	&EFS=V1UQ51UQ7+V1UQ51UQ7/1.7	

=V1UQ51UQ7.5+.UQ51UQ7.5/1

=V1UQ51UQ7.7+.UQ51UQ7.7/1

			Date	12/22/2022	Volvo Trucks North America	Valiant TMS	Cable diagram =V1UQ51UQ7.6+V1UQ51UQ7.6-W1	Drawing name: =2V04&EFS-EL	= V1UQ51UQ7.6
			Ed.	MKLEPADLO					+ V1UQ51UQ7.6
			Appr		P6700 Underbody Mainline - Cell 2V04			Document type: EMA	Project nr: 22-16151
Modification	Date	Name	Original		Replacement of	Replaced by	Scale 1:1		Page 1 / 1630

Cable diagram

F09_002_VLU

Cable name -W1			cable type TPE					
remark			no. of conductors 4			cross-section 18		cable length 3
function text	Page / column	Target designation from	Connection point	conductor	Target designation to	Connection point	Page / column	function text
	&EFS=V1UQ51KF1+V1UQ51UQ7/6.1	=V1UQ51KF1+V1UQ51-KF1.1	3-X2 1		-BGS/R	1	&EFS=V1UQ51UQ7+V1UQ51UQ7/1.9	
	&EFS=V1UQ51KF1+V1UQ51UQ7/6.2	=V1UQ51KF1+V1UQ51-KF1.1	3-X2 3		-BGS/R	3	&EFS=V1UQ51UQ7+V1UQ51UQ7/1.9	
	&EFS=V1UQ51KF1+V1UQ51UQ7/6.3	=V1UQ51KF1+V1UQ51-KF1.1	3-X2 4		-BGS/R	4	&EFS=V1UQ51UQ7+V1UQ51UQ7/1.9	

			Date	12/22/2022	Volvo Trucks North America	Valiant TMS	Cable diagram =V1UQ51UQ7.7+V1UQ51UQ7.7-W1	Drawing name: =2V04&EFS-EL	= V1UQ51UQ7.7
			Ed.	MKLEPADLO					+ V1UQ51UQ7.7
			Appr		P6700 Underbody Mainline - Cell 2V04			Document type: EMA	Project nr: 22-16151
Modification	Date	Name	Original		Replacement of / Replaced by	Scale 1:1			Page 1 / 1630

Cable diagram

F09_002_VLU

Cable name -W1			cable type TPE					
remark			no. of conductors 4			cross-section 18		cable length 3
function text	Page / column	Target designation from	Connection point	conductor	Target designation to	Connection point	Page / column	function text
	&EFS=V1UQ51KF1+V1UQ51-KF1.1	=V1UQ51KF1+V1UQ51-KF1.1	3-X3 1		-BGS/R	1	&EFS=V1UQ51UQ8+V1UQ51UQ8/1.0	
	&EFS=V1UQ51KF1+V1UQ51-KF1.1	=V1UQ51KF1+V1UQ51-KF1.1	3-X3 2		-BGS/R	2	&EFS=V1UQ51UQ8+V1UQ51UQ8/1.0	
	&EFS=V1UQ51KF1+V1UQ51-KF1.1	=V1UQ51KF1+V1UQ51-KF1.1	3-X3 3		-BGS/R	3	&EFS=V1UQ51UQ8+V1UQ51UQ8/1.1	
	&EFS=V1UQ51KF1+V1UQ51-KF1.1	=V1UQ51KF1+V1UQ51-KF1.1	3-X3 4		-BGS/R	4	&EFS=V1UQ51UQ8+V1UQ51UQ8/1.1	

			Date	12/22/2022	Volvo Trucks North America	Valiant TMS	Cable diagram =V1UQ51UQ8.1+V1UQ51UQ8.1-W1	Drawing name: =2V04&EFS-EL	= V1UQ51UQ8.1
			Ed.	MKLEPADLO					+ V1UQ51UQ8.1
			Appr		P6700 Underbody Mainline - Cell 2V04			Document type: EMA	Project nr: 22-16151
Modification	Date	Name	Original		Replacement of / Replaced by	Scale 1:1			Page 1 / 1630

Cable diagram

F09_002_VLU

Cable name -W1			cable type TPE					
remark			no. of conductors 4			cross-section 18		cable length 3
function text	Page / column	Target designation from	Connection point	conductor	Target designation to	Connection point	Page / column	function text
	&EFS=V1UQ51KF1+V1UQ51UQ4	-V1UQ51KF1+V1UQ51-KF1.1	3-X4 1		-BGS/R	1	&EFS=V1UQ51UQ8+V1UQ51UQ8/1.2	
	&EFS=V1UQ51KF1+V1UQ51UQ4	-V1UQ51KF1+V1UQ51-KF1.1	3-X4 2		-BGS/R	2	&EFS=V1UQ51UQ8+V1UQ51UQ8/1.2	
	&EFS=V1UQ51KF1+V1UQ51UQ4	-V1UQ51KF1+V1UQ51-KF1.1	3-X4 3		-BGS/R	3	&EFS=V1UQ51UQ8+V1UQ51UQ8/1.2	
	&EFS=V1UQ51KF1+V1UQ51UQ4	-V1UQ51KF1+V1UQ51-KF1.1	3-X4 4		-BGS/R	4	&EFS=V1UQ51UQ8+V1UQ51UQ8/1.2	

			Date	12/22/2022	Volvo Trucks North America	Valiant TMS	Cable diagram =V1UQ51UQ8.2+V1UQ51UQ8.2-W1	Drawing name: =2V04&EFS-EL	= V1UQ51UQ8.2
			Ed.	MKLEPADLO					+ V1UQ51UQ8.2
			Appr		P6700 Underbody Mainline - Cell 2V04			Document type: EMA	Project nr: 22-16151
Modification	Date	Name	Original		Replacement of / Replaced by	Scale 1:1			Page 1 / 1630

Cable diagram

F09_002_VLU

Cable name -W1			cable type TPE					
remark			no. of conductors 4			cross-section 18		cable length 4
function text	Page / column	Target designation from	Connection point	conductor	Target designation to	Connection point	Page / column	function text
	&EFS=V1UQ51KF2+V1UQ51UQ6	=V1UQ51KF2+V1UQ51-KF2.1	1-X1 1		-BGS/R	1	&EFS=V1UQ51UQ9+V1UQ51UQ9/1.0	
	&EFS=V1UQ51KF2+V1UQ51UQ6	=V1UQ51KF2+V1UQ51-KF2.1	1-X1 2		-BGS/R	2	&EFS=V1UQ51UQ9+V1UQ51UQ9/1.0	
	&EFS=V1UQ51KF2+V1UQ51UQ5	=V1UQ51KF2+V1UQ51-KF2.1	1-X1 3		-BGS/R	3	&EFS=V1UQ51UQ9+V1UQ51UQ9/1.1	
	&EFS=V1UQ51KF2+V1UQ51UQ5	=V1UQ51KF2+V1UQ51-KF2.1	1-X1 4		-BGS/R	4	&EFS=V1UQ51UQ9+V1UQ51UQ9/1.1	

=V1UQ51UQ8.2+.UQ51UQ8.2/1

=V1UQ51UQ9.2+.UQ51UQ9.2/1

			Date	12/22/2022	Volvo Trucks North America	Valiant TMS	Cable diagram =V1UQ51UQ9.1+V1UQ51UQ9.1-W1	Drawing name: =2V04&EFS-EL	= V1UQ51UQ9.1
			Ed.	MKLEPADLO					+ V1UQ51UQ9.1
			Appr		P6700 Underbody Mainline - Cell 2V04			Document type: EMA	Project nr: 22-16151
Modification	Date	Name	Original		Replacement of	Replaced by	Scale 1:1		Page 1 / 1630

Cable diagram

F09_002_VLU

Cable name -W1			cable type TPE					
remark			no. of conductors 4			cross-section 18		cable length 4
function text	Page / column	Target designation from	Connection point	conductor	Target designation to	Connection point	Page / column	function text
	&EFS=V1UQ51KF2+V1UQ51UQ1	=V1UQ51KF2+V1UQ51-KF2.1	1-X2 1		-BGS/R	1	&EFS=V1UQ51UQ9+V1UQ51UQ9/1.2	
	&EFS=V1UQ51KF2+V1UQ51UQ2	=V1UQ51KF2+V1UQ51-KF2.1	1-X2 2		-BGS/R	2	&EFS=V1UQ51UQ9+V1UQ51UQ9/1.2	
	&EFS=V1UQ51KF2+V1UQ51UQ3	=V1UQ51KF2+V1UQ51-KF2.1	1-X2 3		-BGS/R	3	&EFS=V1UQ51UQ9+V1UQ51UQ9/1.2	
	&EFS=V1UQ51KF2+V1UQ51UQ4	=V1UQ51KF2+V1UQ51-KF2.1	1-X2 4		-BGS/R	4	&EFS=V1UQ51UQ9+V1UQ51UQ9/1.2	

			Date	12/22/2022	Volvo Trucks North America	Valiant TMS	Cable diagram =V1UQ51UQ9.2+V1UQ51UQ9.2-W1	Drawing name: =2V04&EFS-EL	= V1UQ51UQ9.2
			Ed.	MKLEPADLO					+ V1UQ51UQ9.2
			Appr		P6700 Underbody Mainline - Cell 2V04			Document type: EMA	Project nr: 22-16151
Modification	Date	Name	Original		Replacement of / Replaced by	Scale 1:1			Page 1 / 1630

Cable diagram

F09_002_VLU

Cable name -W1			cable type TPE					
remark			no. of conductors 4			cross-section 18		cable length 4
function text	Page / column	Target designation from	Connection point	conductor	Target designation to	Connection point	Page / column	function text
	&EFS=V1UQ51KF2+V1UQ51UQ5	-V1UQ51KF2+V1UQ51-KF2.1	1-X3 1		-BGS/R	1	&EFS=V1UQ51UQ9+V1UQ51UQ9/1.4	
	&EFS=V1UQ51KF2+V1UQ51UQ5	-V1UQ51KF2+V1UQ51-KF2.1	1-X3 2		-BGS/R	2	&EFS=V1UQ51UQ9+V1UQ51UQ9/1.4	
	&EFS=V1UQ51KF2+V1UQ51UQ5	-V1UQ51KF2+V1UQ51-KF2.1	1-X3 3		-BGS/R	3	&EFS=V1UQ51UQ9+V1UQ51UQ9/1.4	
	&EFS=V1UQ51KF2+V1UQ51UQ5	-V1UQ51KF2+V1UQ51-KF2.1	1-X3 4		-BGS/R	4	&EFS=V1UQ51UQ9+V1UQ51UQ9/1.4	

Cable diagram

F09_002_VLU

Cable name -W1			cable type TPE					
remark			no. of conductors 4			cross-section 18		cable length 4
function text	Page / column	Target designation from	Connection point	conductor	Target designation to	Connection point	Page / column	function text
	&EFS=V1UQ51KF2+V1UQ51UQ5	=V1UQ51KF2+V1UQ51-KF2.1	1-X4 1		-BGS/R	1	&EFS=V1UQ51UQ9+V1UQ51UQ9/1.5	
	&EFS=V1UQ51KF2+V1UQ51UQ5	=V1UQ51KF2+V1UQ51-KF2.1	1-X4 2		-BGS/R	2	&EFS=V1UQ51UQ9+V1UQ51UQ9/1.5	
	&EFS=V1UQ51KF2+V1UQ51UQ5	=V1UQ51KF2+V1UQ51-KF2.1	1-X4 3		-BGS/R	3	&EFS=V1UQ51UQ9+V1UQ51UQ9/1.5	
	&EFS=V1UQ51KF2+V1UQ51UQ5	=V1UQ51KF2+V1UQ51-KF2.1	1-X4 4		-BGS/R	4	&EFS=V1UQ51UQ9+V1UQ51UQ9/1.5	

			Date	12/22/2022	Volvo Trucks North America	Valiant TMS	Cable diagram =V1UQ51UQ9.4+V1UQ51UQ9.4-W1	Drawing name: =2V04&EFS-EL	= V1UQ51UQ9.4
			Ed.	MKLEPADLO					+ V1UQ51UQ9.4
			Appr		P6700 Underbody Mainline - Cell 2V04			Document type: EMA	Project nr: 22-16151
Modification	Date	Name	Original		Replacement of / Replaced by	Scale 1:1			Page 1 / 1630

Cable diagram

F09_002_VLU

Cable name -W1			cable type TPE					
remark			no. of conductors 4			cross-section 18		cable length 4
function text	Page / column	Target designation from	Connection point	conductor	Target designation to	Connection point	Page / column	function text
	&EFS=V1UQ51KF2+V1UQ51/1.1	=V1UQ51KF2+V1UQ51-KF2.1	1		-X5	1	-BGS/R	&EFS=V1UQ51UQ10+V1UQ51UQ10/1.0
	&EFS=V1UQ51KF2+V1UQ51/1.1	=V1UQ51KF2+V1UQ51-KF2.1	2		-X5	2	-BGS/R	&EFS=V1UQ51UQ10+V1UQ51UQ10/1.0
	&EFS=V1UQ51KF2+V1UQ51/1.1	=V1UQ51KF2+V1UQ51-KF2.1	3		-X5	3	-BGS/R	&EFS=V1UQ51UQ10+V1UQ51UQ10/1.1
	&EFS=V1UQ51KF2+V1UQ51/1.1	=V1UQ51KF2+V1UQ51-KF2.1	4		-X5	4	-BGS/R	&EFS=V1UQ51UQ10+V1UQ51UQ10/1.1

			Date	12/22/2022	Volvo Trucks North America	Valiant TMS	Cable diagram =V1UQ51UQ10.1+V1UQ51UQ10.1-W1	Drawing name: =2V04&EFS-EL	= V1UQ51UQ10.1
			Ed.	MKLEPADLO					+ V1UQ51UQ10.1
			Appr		P6700 Underbody Mainline - Cell 2V04			Document type: EMA	Project nr: 22-16151
Modification	Date	Name	Original		Replacement of / Replaced by	Scale 1:1			Page 1 / 1630

Cable diagram

F09_002_VLU

Cable name -W1			cable type TPE					
remark			no. of conductors 4			cross-section 18		cable length 4
function text	Page / column	Target designation from	Connection point	conductor	Target designation to	Connection point	Page / column	function text
	&EFS=V1UQ51KF2+V1UQ51UQ5	=V1UQ51KF2+V1UQ51-KF2.1	1-X6 1		-BGS/R	1	&EFS=V1UQ51UQ10+V1UQ51UQ10/1.2	
	&EFS=V1UQ51KF2+V1UQ51UQ6	=V1UQ51KF2+V1UQ51-KF2.1	1-X6 2		-BGS/R	2	&EFS=V1UQ51UQ10+V1UQ51UQ10/1.2	
	&EFS=V1UQ51KF2+V1UQ51UQ5	=V1UQ51KF2+V1UQ51-KF2.1	1-X6 3		-BGS/R	3	&EFS=V1UQ51UQ10+V1UQ51UQ10/1.2	
	&EFS=V1UQ51KF2+V1UQ51UQ7	=V1UQ51KF2+V1UQ51-KF2.1	1-X6 4		-BGS/R	4	&EFS=V1UQ51UQ10+V1UQ51UQ10/1.2	

			Date	12/22/2022	Volvo Trucks North America	Valiant TMS	Cable diagram =V1UQ51UQ10.2+V1UQ51UQ10.2-W1	Drawing name: =2V04&EFS-EL	= V1UQ51UQ10.2
			Ed.	MKLEPADLO					+ V1UQ51UQ10.2
			Appr		P6700 Underbody Mainline - Cell 2V04			Document type: EMA	Project nr: 22-16151
Modification	Date	Name	Original		Replacement of / Replaced by	Scale 1:1			Page 1 / 1630

Cable diagram

F09_002_VLU

Cable name -W1			cable type TPE					
remark			no. of conductors 4			cross-section 18		cable length 4
function text	Page / column	Target designation from	Connection point	conductor	Target designation to	Connection point	Page / column	function text
	&EFS=V1UQ51KF2+V1UQ51UQ7	=V1UQ51KF2+V1UQ51-KF2.1	1-X7 1		-BGS/R	1	&EFS=V1UQ51UQ11+V1UQ51UQ11/1.0	
	&EFS=V1UQ51KF2+V1UQ51UQ7	=V1UQ51KF2+V1UQ51-KF2.1	1-X7 2		-BGS/R	2	&EFS=V1UQ51UQ11+V1UQ51UQ11/1.0	
	&EFS=V1UQ51KF2+V1UQ51UQ8	=V1UQ51KF2+V1UQ51-KF2.1	1-X7 3		-BGS/R	3	&EFS=V1UQ51UQ11+V1UQ51UQ11/1.1	
	&EFS=V1UQ51KF2+V1UQ51UQ8	=V1UQ51KF2+V1UQ51-KF2.1	1-X7 4		-BGS/R	4	&EFS=V1UQ51UQ11+V1UQ51UQ11/1.1	

=V1UQ51UQ10.2+.UQ51UQ10.2/1

=V1UQ51UQ12.1+.UQ51UQ12.1/1

			Date	12/22/2022	Volvo Trucks North America	Valiant TMS	Cable diagram =V1UQ51UQ11.1+V1UQ51UQ11.1-W1	Drawing name: =2V04&EFS-EL	= V1UQ51UQ11.1
			Ed.	MKLEPADLO					+ V1UQ51UQ11.1
			Appr		P6700 Underbody Mainline - Cell 2V04	Scale 1:1		Document type: EMA	Project nr: 22-16151
Modification	Date	Name	Original		Replacement of / Replaced by				Page 1 / 1630

Cable diagram

F09_002_VLU

Cable name -W1			cable type TPE					
remark			no. of conductors 4			cross-section 18		cable length 4
function text	Page / column	Target designation from	Connection point	conductor	Target designation to	Connection point	Page / column	function text
	&EFS=V1UQ51KF2+V1UQ51UQ8	=V1UQ51KF2+V1UQ51-KF2.1	1-X8 1		-BGS/R	1	&EFS=V1UQ51UQ12+V1UQ51UQ12/1.0	
	&EFS=V1UQ51KF2+V1UQ51UQ9	=V1UQ51KF2+V1UQ51-KF2.1	1-X8 2		-BGS/R	2	&EFS=V1UQ51UQ12+V1UQ51UQ12/1.0	
	&EFS=V1UQ51KF2+V1UQ51UQ9	=V1UQ51KF2+V1UQ51-KF2.1	1-X8 3		-BGS/R	3	&EFS=V1UQ51UQ12+V1UQ51UQ12/1.1	
	&EFS=V1UQ51KF2+V1UQ51UQ9	=V1UQ51KF2+V1UQ51-KF2.1	1-X8 4		-BGS/R	4	&EFS=V1UQ51UQ12+V1UQ51UQ12/1.1	

			Date	12/22/2022	Volvo Trucks North America	Valiant TMS	Cable diagram =V1UQ51UQ12.1+V1UQ51UQ12.1-W1	Drawing name: =2V04&EFS-EL	= V1UQ51UQ12.1
			Ed.	MKLEPADLO					+ V1UQ51UQ12.1
			Appr		P6700 Underbody Mainline - Cell 2V04			Document type: EMA	Project nr: 22-16151
Modification	Date	Name	Original		Replacement of / Replaced by	Scale 1:1			Page 1 / 1630

Cable diagram

F09_002_VLU

Cable name -W1			cable type TPE					
remark			no. of conductors 4			cross-section 18		cable length 4
function text	Page / column	Target designation from	Connection point	conductor	Target designation to	Connection point	Page / column	function text
	&EFS=V1UQ51KF2+V1UQ51UQ6	=V1UQ51KF2+V1UQ51-KF2.1	2-X1 1		-BGS/R	1	&EFS=V1UQ51UQ13+V1UQ51UQ13/1.0	
	&EFS=V1UQ51KF2+V1UQ51UQ6	=V1UQ51KF2+V1UQ51-KF2.1	2-X1 2		-BGS/R	2	&EFS=V1UQ51UQ13+V1UQ51UQ13/1.0	
	&EFS=V1UQ51KF2+V1UQ51UQ5	=V1UQ51KF2+V1UQ51-KF2.1	2-X1 3		-BGS/R	3	&EFS=V1UQ51UQ13+V1UQ51UQ13/1.1	
	&EFS=V1UQ51KF2+V1UQ51UQ5	=V1UQ51KF2+V1UQ51-KF2.1	2-X1 4		-BGS/R	4	&EFS=V1UQ51UQ13+V1UQ51UQ13/1.1	

			Date	12/22/2022	Volvo Trucks North America	Valiant TMS	Cable diagram =V1UQ51UQ13.1+V1UQ51UQ13.1-W1	Drawing name: =2V04&EFS-EL	= V1UQ51UQ13.1
			Ed.	MKLEPADLO					+ V1UQ51UQ13.1
			Appr		P6700 Underbody Mainline - Cell 2V04	Scale 1:1		Document type: EMA	Project nr: 22-16151	Page 1
Modification	Date	Name	Original		Replacement of / Replaced by				1630

Cable diagram

F09_002_VLU

Cable name -W1			cable type TPE					
remark			no. of conductors 4			cross-section 18		cable length 4
function text	Page / column	Target designation from	Connection point	conductor	Target designation to	Connection point	Page / column	function text
	&EFS=V1UQ51KF2+V1UQ51UQ1	-V1UQ51KF2+V1UQ51-KF2.1	2-X2 1		-BGS/R	1	&EFS=V1UQ51UQ14+V1UQ51UQ14/1.0	
	&EFS=V1UQ51KF2+V1UQ51UQ2	-V1UQ51KF2+V1UQ51-KF2.1	2-X2 2		-BGS/R	2	&EFS=V1UQ51UQ14+V1UQ51UQ14/1.0	
	&EFS=V1UQ51KF2+V1UQ51UQ3	-V1UQ51KF2+V1UQ51-KF2.1	2-X2 3		-BGS/R	3	&EFS=V1UQ51UQ14+V1UQ51UQ14/1.1	
	&EFS=V1UQ51KF2+V1UQ51UQ4	-V1UQ51KF2+V1UQ51-KF2.1	2-X2 4		-BGS/R	4	&EFS=V1UQ51UQ14+V1UQ51UQ14/1.1	

			Date	12/22/2022	Volvo Trucks North America	Valiant TMS	Cable diagram =V1UQ51UQ14.1+V1UQ51UQ14.1-W1	Drawing name: =2V04&EFS-EL	= V1UQ51UQ14.1
			Ed.	MKLEPADLO					+ V1UQ51UQ14.1
			Appr		P6700 Underbody Mainline - Cell 2V04			Document type: EMA	Project nr: 22-16151
Modification	Date	Name	Original		Replacement of / Replaced by	Scale 1:1			Page 1 / 1630

Cable diagram

F09_002_VLU

Cable name -W1			cable type TPE					
remark			no. of conductors 4			cross-section 18		cable length 4
function text	Page / column	Target designation from	Connection point	conductor	Target designation to	Connection point	Page / column	function text
	&EFS=V1UQ51KF2+V1UQ51UQ1	-V1UQ51KF2+V1UQ51-KF2.1	2-X3 1		-BGS/R	1	&EFS=V1UQ51UQ14+V1UQ51UQ14/1.2	
	&EFS=V1UQ51KF2+V1UQ51UQ1	-V1UQ51KF2+V1UQ51-KF2.1	2-X3 2		-BGS/R	2	&EFS=V1UQ51UQ14+V1UQ51UQ14/1.2	
	&EFS=V1UQ51KF2+V1UQ51UQ1	-V1UQ51KF2+V1UQ51-KF2.1	2-X3 3		-BGS/R	3	&EFS=V1UQ51UQ14+V1UQ51UQ14/1.2	
	&EFS=V1UQ51KF2+V1UQ51UQ1	-V1UQ51KF2+V1UQ51-KF2.1	2-X3 4		-BGS/R	4	&EFS=V1UQ51UQ14+V1UQ51UQ14/1.2	

			Date	12/22/2022	Volvo Trucks North America	Valiant TMS	Cable diagram =V1UQ51UQ14.2+V1UQ51UQ14.2-W1	Drawing name: =2V04&EFS-EL	= V1UQ51UQ14.2
			Ed.	MKLEPADLO					+ V1UQ51UQ14.2
			Appr		P6700 Underbody Mainline - Cell 2V04			Document type: EMA	Project nr: 22-16151
Modification	Date	Name	Original		Replacement of / Replaced by	Scale 1:1			Page 1 / 1630

Cable diagram

F09_002_VLU

Cable name -W1			cable type TPE					
remark			no. of conductors 4			cross-section 18		cable length 4
function text	Page / column	Target designation from	Connection point	conductor	Target designation to	Connection point	Page / column	function text
	&EFS=V1UQ51KF2+V1UQ51UQ15	=V1UQ51KF2+V1UQ51-KF2.1	2-X4 1		-BGS/R	1	&EFS=V1UQ51UQ15+V1UQ51UQ15/1.0	
	&EFS=V1UQ51KF2+V1UQ51UQ15	=V1UQ51KF2+V1UQ51-KF2.1	2-X4 2		-BGS/R	2	&EFS=V1UQ51UQ15+V1UQ51UQ15/1.0	
	&EFS=V1UQ51KF2+V1UQ51UQ15	=V1UQ51KF2+V1UQ51-KF2.1	2-X4 3		-BGS/R	3	&EFS=V1UQ51UQ15+V1UQ51UQ15/1.1	
	&EFS=V1UQ51KF2+V1UQ51UQ15	=V1UQ51KF2+V1UQ51-KF2.1	2-X4 4		-BGS/R	4	&EFS=V1UQ51UQ15+V1UQ51UQ15/1.1	

			Date	12/22/2022	Volvo Trucks North America	Valiant TMS	Cable diagram =V1UQ51UQ15.1+V1UQ51UQ15.1-W1	Drawing name: =2V04&EFS-EL	= V1UQ51UQ15.1
			Ed.	MKLEPADLO					+ V1UQ51UQ15.1
			Appr		P6700 Underbody Mainline - Cell 2V04			Document type: EMA	Project nr: 22-16151
Modification	Date	Name	Original		Replacement of / Replaced by	Scale 1:1			Page 1 / 1630

Cable diagram

F09_002_VLU

Cable name -W1			cable type TPE					
remark			no. of conductors 4			cross-section 18		cable length 4
function text	Page / column	Target designation from	Connection point	conductor	Target designation to	Connection point	Page / column	function text
	&EFS=V1UQ51KF2+V1UQ51UQ15	-W1/2	=V1UQ51KF2+V1UQ51-KF2.1	2-X5 1		-BGS/R	1	&EFS=V1UQ51UQ15+V1UQ51UQ15/1.2
	&EFS=V1UQ51KF2+V1UQ51UQ15	-W1/2	=V1UQ51KF2+V1UQ51-KF2.1	2-X5 2		-BGS/R	2	&EFS=V1UQ51UQ15+V1UQ51UQ15/1.2
	&EFS=V1UQ51KF2+V1UQ51UQ15	-W1/2	=V1UQ51KF2+V1UQ51-KF2.1	2-X5 3		-BGS/R	3	&EFS=V1UQ51UQ15+V1UQ51UQ15/1.2
	&EFS=V1UQ51KF2+V1UQ51UQ15	-W1/2	=V1UQ51KF2+V1UQ51-KF2.1	2-X5 4		-BGS/R	4	&EFS=V1UQ51UQ15+V1UQ51UQ15/1.2

=V1UQ51UQ15.1+.UQ51UQ15.1/1

=V1UQ51UQ16.1+.UQ51UQ16.1/1

			Date	12/22/2022	Volvo Trucks North America	Valiant TMS	Cable diagram =V1UQ51UQ15.2+V1UQ51UQ15.2-W1	Drawing name: =2V04&EFS-EL	= V1UQ51UQ15.2
			Ed.	MKLEPADLO					+ V1UQ51UQ15.2
			Appr		P6700 Underbody Mainline - Cell 2V04	Scale 1:1		Document type: EMA	Project nr: 22-16151
Modification	Date	Name	Original		Replacement of / Replaced by				Page 1 / 1630

Cable diagram

F09_002_VLU

Cable name -W1			cable type TPE					
remark			no. of conductors 4			cross-section 18		cable length 4
function text	Page / column	Target designation from	Connection point	conductor	Target designation to	Connection point	Page / column	function text
	&EFS=V1UQ51KF2+V1UQ51UQ6	-V1UQ51KF2+V1UQ51-KF2.1	2-X6 1		-BGS/R	1	&EFS=V1UQ51UQ16+V1UQ51UQ16/1.0	
	&EFS=V1UQ51KF2+V1UQ51UQ6	-V1UQ51KF2+V1UQ51-KF2.1	2-X6 2		-BGS/R	2	&EFS=V1UQ51UQ16+V1UQ51UQ16/1.0	
	&EFS=V1UQ51KF2+V1UQ51UQ6	-V1UQ51KF2+V1UQ51-KF2.1	2-X6 3		-BGS/R	3	&EFS=V1UQ51UQ16+V1UQ51UQ16/1.1	
	&EFS=V1UQ51KF2+V1UQ51UQ7	-V1UQ51KF2+V1UQ51-KF2.1	2-X6 4		-BGS/R	4	&EFS=V1UQ51UQ16+V1UQ51UQ16/1.1	

=V1UQ51UQ15.2+.UQ51UQ15.2/1

=V1UQ51UQ17.1+.UQ51UQ17.1/1

			Date	12/22/2022	Volvo Trucks North America	Valiant TMS	Cable diagram =V1UQ51UQ16.1+V1UQ51UQ16.1-W1	Drawing name: =2V04&EFS-EL	= V1UQ51UQ16.1
			Ed.	MKLEPADLO					+ V1UQ51UQ16.1
			Appr		P6700 Underbody Mainline - Cell 2V04			Document type: EMA	Project nr: 22-16151
Modification	Date	Name	Original		Replacement of / Replaced by	Scale 1:1			Page 1 / 1630

Cable diagram

F09_002_VLU

Cable name -W1			cable type TPE					
remark			no. of conductors 4			cross-section 18		cable length 4
function text	Page / column	Target designation from	Connection point	conductor	Target designation to	Connection point	Page / column	function text
	&EFS=V1UQ51KF3+V1UQ51UQ6	=V1UQ51KF3+V1UQ51-KF3.1	1-X1 1		-XGR/S	P1:1	&EFS=V1UQ51UQ17+V1UQ51UQ17/1.1	
	&EFS=V1UQ51KF3+V1UQ51UQ6	=V1UQ51KF3+V1UQ51-KF3.1	1-X1 2		-XGR/S	P1:2	&EFS=V1UQ51UQ17+V1UQ51UQ17/1.1	
	&EFS=V1UQ51KF3+V1UQ51UQ5	=V1UQ51KF3+V1UQ51-KF3.1	1-X1 3		-XGR/S	P1:3	&EFS=V1UQ51UQ17+V1UQ51UQ17/1.1	
	&EFS=V1UQ51KF3+V1UQ51UQ5	=V1UQ51KF3+V1UQ51-KF3.1	1-X1 4		-XGR/S	P1:4	&EFS=V1UQ51UQ17+V1UQ51UQ17/1.1	

			Date	12/22/2022	Volvo Trucks North America	Valiant TMS	Cable diagram =V1UQ51UQ17.1+V1UQ51UQ17.1-W1	Drawing name: =2V04&EFS-EL	= V1UQ51UQ17.1
			Ed.	MKLEPADLO					+ V1UQ51UQ17.1
			Appr		P6700 Underbody Mainline - Cell 2V04			Document type: EMA	Project nr: 22-16151
Modification	Date	Name	Original		Replacement of / Replaced by	Scale 1:1			Page 1 / 1630

Cable diagram

F09_002_VLU

Cable name -W1.1			cable type TPE					
remark			no. of conductors 4			cross-section 18		cable length
function text	Page / column	Target designation from	Connection point	conductor	Target designation to	Connection point	Page / column	function text
	&EFS=V1UQ51UQ17+V1UQ51UQ17/1.1	-XGR/S	1		-XGR/S	J1:1	&EFS=V1UQ51UQ17+V1UQ51UQ17/1.1	
	&EFS=V1UQ51UQ17+V1UQ51UQ17/1.1	-XGR/S	4		-XGR/S	J1:4	&EFS=V1UQ51UQ17+V1UQ51UQ17/1.1	
	&EFS=V1UQ51UQ17+V1UQ51UQ17/1.1	-XGR/S	3		-XGR/S	J1:3	&EFS=V1UQ51UQ17+V1UQ51UQ17/1.1	

			Date	12/22/2022	Volvo Trucks North America	Valiant TMS	Cable diagram =V1UQ51UQ17.1+V1UQ51UQ17.1-W1.1	Drawing name: =2V04&EFS-EL	= V1UQ51UQ17.1
			Ed.	MKLEPADLO					+ V1UQ51UQ17.1
			Appr		P6700 Underbody Mainline - Cell 2V04			Document type: EMA	Project nr: 22-16151
Modification	Date	Name	Original		Replacement of / Replaced by	Scale 1:1			Page 2 / 1630

Cable diagram

F09_002_VLU

Cable name -W1.2			cable type TPE					
remark			no. of conductors 4			cross-section 18		cable length
function text	Page / column	Target designation from	Connection point	conductor	Target designation to	Connection point	Page / column	function text
	&EFS=V1UQ51UQ17+V1UQ51UQ17/1.2	-XGR/S	1		-XGR/S	J2:1	&EFS=V1UQ51UQ17+V1UQ51UQ17/1.2	
	&EFS=V1UQ51UQ17+V1UQ51UQ17/1.2	-XGR/S	4		-XGR/S	J2:4	&EFS=V1UQ51UQ17+V1UQ51UQ17/1.2	
	&EFS=V1UQ51UQ17+V1UQ51UQ17/1.2	-XGR/S	3		-XGR/S	J2:3	&EFS=V1UQ51UQ17+V1UQ51UQ17/1.2	

			Date	12/22/2022	Volvo Trucks North America	Valiant TMS	Cable diagram =V1UQ51UQ17.1+V1UQ51UQ17.1-W1.2	Drawing name: =2V04&EFS-EL	= V1UQ51UQ17.1
			Ed.	MKLEPADLO					+ V1UQ51UQ17.1
			Appr		P6700 Underbody Mainline - Cell 2V04	Scale 1:1		Document type: EMA	Project nr: 22-16151 Page 3
Modification	Date	Name	Original		Replacement of / Replaced by				1630

Cable diagram

F09_002_VLU

Cable name -W1			cable type TPE					
remark			no. of conductors 4			cross-section 18		cable length 4
function text	Page / column	Target designation from	Connection point	conductor	Target designation to	Connection point	Page / column	function text
	&EFS=V1UQ51KF3+V1UQ51UQ1	-W1/1.1	=V1UQ51KF3+V1UQ51-KF3.1	1-X2 1		-XGR/S	P1:1	&EFS=V1UQ51UQ18+V1UQ51UQ18/1.1
	&EFS=V1UQ51KF3+V1UQ51UQ2	-W1/1.2	=V1UQ51KF3+V1UQ51-KF3.1	1-X2 2		-XGR/S	P1:2	&EFS=V1UQ51UQ18+V1UQ51UQ18/1.1
	&EFS=V1UQ51KF3+V1UQ51UQ3	-W1/1.3	=V1UQ51KF3+V1UQ51-KF3.1	1-X2 3		-XGR/S	P1:3	&EFS=V1UQ51UQ18+V1UQ51UQ18/1.1
	&EFS=V1UQ51KF3+V1UQ51UQ4	-W1/1.4	=V1UQ51KF3+V1UQ51-KF3.1	1-X2 4		-XGR/S	P1:4	&EFS=V1UQ51UQ18+V1UQ51UQ18/1.1

			Date	12/22/2022	Volvo Trucks North America	Valiant TMS	Cable diagram =V1UQ51UQ18.1+V1UQ51UQ18.1-W1	Drawing name: =2V04&EFS-EL	= V1UQ51UQ18.1
			Ed.	MKLEPADLO					+ V1UQ51UQ18.1
			Appr		P6700 Underbody Mainline - Cell 2V04			Document type: EMA	Project nr: 22-16151
Modification	Date	Name	Original		Replacement of / Replaced by	Scale 1:1			Page 1 / 1630

Cable diagram

F09_002_VLU

Cable name -W1.1			cable type TPE					
remark			no. of conductors 4			cross-section 18		cable length
function text	Page / column	Target designation from	Connection point	conductor	Target designation to	Connection point	Page / column	function text
	&EFS=V1UQ51UQ18+V1UQ51UQ18/1.1	-XGR/S	1		-XGR/S	J1:1	&EFS=V1UQ51UQ18+V1UQ51UQ18/1.1	
	&EFS=V1UQ51UQ18+V1UQ51UQ18/1.1	-XGR/S	4		-XGR/S	J1:4	&EFS=V1UQ51UQ18+V1UQ51UQ18/1.1	
	&EFS=V1UQ51UQ18+V1UQ51UQ18/1.1	-XGR/S	3		-XGR/S	J1:3	&EFS=V1UQ51UQ18+V1UQ51UQ18/1.1	

			Date	12/22/2022	Volvo Trucks North America	Valiant TMS	Cable diagram =V1UQ51UQ18.1+V1UQ51UQ18.1-W1.1	Drawing name: =2V04&EFS-EL	= V1UQ51UQ18.1
			Ed.	MKLEPADLO					+ V1UQ51UQ18.1
			Appr		P6700 Underbody Mainline - Cell 2V04			Document type: EMA	Project nr: 22-16151
Modification	Date	Name	Original		Replacement of / Replaced by	Scale 1:1			Page 2 / 1630

Cable diagram

F09_002_VLU

Cable name -W1.2			cable type TPE					
remark			no. of conductors 4			cross-section 18		cable length
function text	Page / column	Target designation from	Connection point	conductor	Target designation to	Connection point	Page / column	function text
	&EFS=V1UQ51UQ18+V1UQ51UQ18/1.2	-XGR/S	1		-XGR/S	J2:1	&EFS=V1UQ51UQ18+V1UQ51UQ18/1.2	
	&EFS=V1UQ51UQ18+V1UQ51UQ18/1.2	-XGR/S	4		-XGR/S	J2:4	&EFS=V1UQ51UQ18+V1UQ51UQ18/1.2	
	&EFS=V1UQ51UQ18+V1UQ51UQ18/1.2	-XGR/S	3		-XGR/S	J2:3	&EFS=V1UQ51UQ18+V1UQ51UQ18/1.2	

			Date	12/22/2022	Volvo Trucks North America	Valiant TMS	Cable diagram =V1UQ51UQ18.1+V1UQ51UQ18.1-W1.2	Drawing name: =2V04&EFS-EL	= V1UQ51UQ18.1
			Ed.	MKLEPADLO					+ V1UQ51UQ18.1
			Appr		P6700 Underbody Mainline - Cell 2V04			Document type: EMA	Project nr: 22-16151 Page 3
Modification	Date	Name	Original		Replacement of / Replaced by	Scale 1:1			1630

Cable diagram

F09_002_VLU

Cable name -W1			cable type TPE					
remark			no. of conductors 4			cross-section 18		cable length 4
function text	Page / column	Target designation from	Connection point	conductor	Target designation to	Connection point	Page / column	function text
	&EFS=V1UQ51KF3+V1UQ51UQ5	=V1UQ51KF3+V1UQ51-KF3.1	1-X3 1		-BGS/R	1	&EFS=V1UQ51UQ19+V1UQ51UQ19/1.0	
	&EFS=V1UQ51KF3+V1UQ51UQ5	=V1UQ51KF3+V1UQ51-KF3.1	1-X3 2		-BGS/R	2	&EFS=V1UQ51UQ19+V1UQ51UQ19/1.0	
	&EFS=V1UQ51KF3+V1UQ51UQ5	=V1UQ51KF3+V1UQ51-KF3.1	1-X3 3		-BGS/R	3	&EFS=V1UQ51UQ19+V1UQ51UQ19/1.1	
	&EFS=V1UQ51KF3+V1UQ51UQ5	=V1UQ51KF3+V1UQ51-KF3.1	1-X3 4		-BGS/R	4	&EFS=V1UQ51UQ19+V1UQ51UQ19/1.1	

			Date	12/22/2022	Volvo Trucks North America	Valiant TMS	Cable diagram =V1UQ51UQ19.1+V1UQ51UQ19.1-W1	Drawing name: =2V04&EFS-EL	= V1UQ51UQ19.1
			Ed.	MKLEPADLO					+ V1UQ51UQ19.1
			Appr		P6700 Underbody Mainline - Cell 2V04			Document type: EMA	Project nr: 22-16151
Modification	Date	Name	Original		Replacement of / Replaced by	Scale 1:1			Page 1 / 1630

Cable diagram

F09_002_VLU

Cable name -W1			cable type TPE					
remark			no. of conductors 4			cross-section 18		cable length 4
function text	Page / column	Target designation from	Connection point	conductor	Target designation to	Connection point	Page / column	function text
	&EFS=V1UQ51KF3+V1UQ51UQ5	=V1UQ51KF3+V1UQ51-KF3.1	1-X4 1		-BGS/R	1	&EFS=V1UQ51UQ19+V1UQ51UQ19/1.2	
	&EFS=V1UQ51KF3+V1UQ51UQ5	=V1UQ51KF3+V1UQ51-KF3.1	1-X4 2		-BGS/R	2	&EFS=V1UQ51UQ19+V1UQ51UQ19/1.2	
	&EFS=V1UQ51KF3+V1UQ51UQ5	=V1UQ51KF3+V1UQ51-KF3.1	1-X4 3		-BGS/R	3	&EFS=V1UQ51UQ19+V1UQ51UQ19/1.2	
	&EFS=V1UQ51KF3+V1UQ51UQ5	=V1UQ51KF3+V1UQ51-KF3.1	1-X4 4		-BGS/R	4	&EFS=V1UQ51UQ19+V1UQ51UQ19/1.2	

			Date	12/22/2022	Volvo Trucks North America	Valiant TMS	Cable diagram =V1UQ51UQ19.2+V1UQ51UQ19.2-W1	Drawing name: =2V04&EFS-EL	= V1UQ51UQ19.2
			Ed.	MKLEPADLO					+ V1UQ51UQ19.2
			Appr		P6700 Underbody Mainline - Cell 2V04			Document type: EMA	Project nr: 22-16151
Modification	Date	Name	Original		Replacement of / Replaced by	Scale 1:1			Page 1 / 1630

Cable diagram

F09_002_VLU

Cable name -W1			cable type TPE					
remark			no. of conductors 4			cross-section 18		cable length 4
function text	Page / column	Target designation from	Connection point	conductor	Target designation to	Connection point	Page / column	function text
	&EFS=V1UQ51KF3+V1UQ51UQ5	=V1UQ51KF3+V1UQ51-KF3.1	1		-X5 1 -BGS/R	1	&EFS=V1UQ51UQ20+V1UQ51UQ20/1.0	
	&EFS=V1UQ51KF3+V1UQ51UQ5	=V1UQ51KF3+V1UQ51-KF3.1	1		-X5 2 -BGS/R	2	&EFS=V1UQ51UQ20+V1UQ51UQ20/1.0	
	&EFS=V1UQ51KF3+V1UQ51UQ5	=V1UQ51KF3+V1UQ51-KF3.1	1		-X5 3 -BGS/R	3	&EFS=V1UQ51UQ20+V1UQ51UQ20/1.1	
	&EFS=V1UQ51KF3+V1UQ51UQ5	=V1UQ51KF3+V1UQ51-KF3.1	1		-X5 4 -BGS/R	4	&EFS=V1UQ51UQ20+V1UQ51UQ20/1.1	

			Date	12/22/2022	Volvo Trucks North America	Valiant TMS	Cable diagram =V1UQ51UQ20.1+V1UQ51UQ20.1-W1	Drawing name: =2V04&EFS-EL	= V1UQ51UQ20.1
			Ed.	MKLEPADLO					+ V1UQ51UQ20.1
			Appr		P6700 Underbody Mainline - Cell 2V04			Document type: EMA	Project nr: 22-16151
Modification	Date	Name	Original		Replacement of / Replaced by	Scale 1:1			Page 1 / 1630

Cable diagram

F09_002_VLU

Cable name -W1			cable type TPE					
remark			no. of conductors 4			cross-section 18		cable length 4
function text	Page / column	Target designation from	Connection point	conductor	Target designation to	Connection point	Page / column	function text
	&EFS=V1UQ51KF3+V1UQ51UQ5	=V1UQ51KF3+V1UQ51-KF3.1	1-X6 1		-BGS/R	1	&EFS=V1UQ51UQ20+V1UQ51UQ20/1.2	
	&EFS=V1UQ51KF3+V1UQ51UQ6	=V1UQ51KF3+V1UQ51-KF3.1	1-X6 2		-BGS/R	2	&EFS=V1UQ51UQ20+V1UQ51UQ20/1.2	
	&EFS=V1UQ51KF3+V1UQ51UQ6	=V1UQ51KF3+V1UQ51-KF3.1	1-X6 3		-BGS/R	3	&EFS=V1UQ51UQ20+V1UQ51UQ20/1.2	
	&EFS=V1UQ51KF3+V1UQ51UQ7	=V1UQ51KF3+V1UQ51-KF3.1	1-X6 4		-BGS/R	4	&EFS=V1UQ51UQ20+V1UQ51UQ20/1.2	

			Date	12/22/2022	Volvo Trucks North America	Valiant TMS	Cable diagram =V1UQ51UQ20.2+V1UQ51UQ20.2-W1	Drawing name: =2V04&EFS-EL	= V1UQ51UQ20.2
			Ed.	MKLEPADLO					+ V1UQ51UQ20.2
			Appr		P6700 Underbody Mainline - Cell 2V04			Document type: EMA	Project nr: 22-16151
Modification	Date	Name	Original		Replacement of / Replaced by	Scale 1:1			Page 1 / 1630

Cable diagram

F09_002_VLU

Cable name -W1			cable type TPE					
remark			no. of conductors 4			cross-section 18		cable length 4
function text	Page / column	Target designation from	Connection point	conductor	Target designation to	Connection point	Page / column	function text
	&EFS=V1UQ51KF3+V1UQ51UQ7	=V1UQ51KF3+V1UQ51-KF3.1	1-X7 1		-BGS/R	1	&EFS=V1UQ51UQ21+V1UQ51UQ21/1.0	
	&EFS=V1UQ51KF3+V1UQ51UQ7	=V1UQ51KF3+V1UQ51-KF3.1	1-X7 2		-BGS/R	2	&EFS=V1UQ51UQ21+V1UQ51UQ21/1.0	
	&EFS=V1UQ51KF3+V1UQ51UQ8	=V1UQ51KF3+V1UQ51-KF3.1	1-X7 3		-BGS/R	3	&EFS=V1UQ51UQ21+V1UQ51UQ21/1.1	
	&EFS=V1UQ51KF3+V1UQ51UQ8	=V1UQ51KF3+V1UQ51-KF3.1	1-X7 4		-BGS/R	4	&EFS=V1UQ51UQ21+V1UQ51UQ21/1.1	

			Date	12/22/2022	Volvo Trucks North America	Valiant TMS	Cable diagram =V1UQ51UQ21.1+V1UQ51UQ21.1-W1	Drawing name: =2V04&EFS-EL	= V1UQ51UQ21.1
			Ed.	MKLEPADLO					+ V1UQ51UQ21.1
			Appr		P6700 Underbody Mainline - Cell 2V04			Document type: EMA	Project nr: 22-16151
Modification	Date	Name	Original		Replacement of / Replaced by	Scale 1:1			Page 1 / 1630

Cable diagram

F09_002_VLU

Cable name -W1			cable type TPE					
remark			no. of conductors 4			cross-section 18		cable length 4
function text	Page / column	Target designation from	Connection point	conductor	Target designation to	Connection point	Page / column	function text
	&EFS=V1UQ51KF3+V1UQ51UQ8	-V1UQ51KF3+V1UQ51-KF3.1	1-X8 1		-BGS/R	1	&EFS=V1UQ51UQ21+V1UQ51UQ21/1.2	
	&EFS=V1UQ51KF3+V1UQ51UQ9	-V1UQ51KF3+V1UQ51-KF3.1	1-X8 2		-BGS/R	2	&EFS=V1UQ51UQ21+V1UQ51UQ21/1.2	
	&EFS=V1UQ51KF3+V1UQ51UQ9	-V1UQ51KF3+V1UQ51-KF3.1	1-X8 3		-BGS/R	3	&EFS=V1UQ51UQ21+V1UQ51UQ21/1.2	
	&EFS=V1UQ51KF3+V1UQ51UQ9	-V1UQ51KF3+V1UQ51-KF3.1	1-X8 4		-BGS/R	4	&EFS=V1UQ51UQ21+V1UQ51UQ21/1.2	

			Date	12/22/2022	Volvo Trucks North America	Valiant TMS	Cable diagram =V1UQ51UQ21.2+V1UQ51UQ21.2-W1	Drawing name: =2V04&EFS-EL	= V1UQ51UQ21.2
			Ed.	MKLEPADLO					+ V1UQ51UQ21.2
			Appr		P6700 Underbody Mainline - Cell 2V04	Scale 1:1		Document type: EMA	Project nr: 22-16151
Modification	Date	Name	Original		Replacement of	Replaced by			Page 1 / 1630

Cable diagram

F09_002_VLU

Cable name	-W1	cable type	TPE		
remark		no. of conductors	4	cross-section 18	cable length 4

function text	Page / column	Target designation from	Connection point	conductor	Target designation to	Connection point	Page / column	function text
	&EFS=V1UQ51KF3+V1UQ51UQ51	=V1UQ51KF3+V1UQ51-KF3.12-X1	1		-BGS/R	1	&EFS=V1UQ51UQ22+V1UQ51UQ22/1.0	
	&EFS=V1UQ51KF3+V1UQ51UQ51	=V1UQ51KF3+V1UQ51-KF3.12-X1	2		-BGS/R	2	&EFS=V1UQ51UQ22+V1UQ51UQ22/1.0	
	&EFS=V1UQ51KF3+V1UQ51UQ51	=V1UQ51KF3+V1UQ51-KF3.12-X1	3		-BGS/R	3	&EFS=V1UQ51UQ22+V1UQ51UQ22/1.1	
	&EFS=V1UQ51KF3+V1UQ51UQ51	=V1UQ51KF3+V1UQ51-KF3.12-X1	4		-BGS/R	4	&EFS=V1UQ51UQ22+V1UQ51UQ22/1.1	

=V1UQ51UQ21.2+.UQ51UQ21.2/1

=V1UQ51UQ22.2+.UQ51UQ22.2/1

			Date	12/22/2022	Volvo Trucks North America	Valiant TMS	Cable diagram =V1UQ51UQ22.1+V1UQ51UQ22.1-W1	Drawing name: =2V04&EFS-EL
			Ed.	MKLEPADLO	P6700 Underbody Mainline - Cell 2V04			= V1UQ51UQ22.1 + V1UQ51UQ22.1
			Appr					Document type: EMA
Modification	Date	Name	Original		Replacement of / Replaced by	Scale 1:1		Project nr: 22-16151

Page 1 / 1630

Cable diagram

F09_002_VLU

Cable name	-W1	cable type	TPE		
remark		no. of conductors	4	cross-section 18	cable length 4

function text	Page / column	Target designation from	Connection point	conductor	Target designation to	Connection point	Page / column	function text
	&EFS=V1UQ51KF3+V1UQ51UQ21	=V1UQ51KF3+V1UQ51-KF3.12-X2	1		-BGS/R	1	&EFS=V1UQ51UQ22+V1UQ51UQ22/1.2	
	&EFS=V1UQ51KF3+V1UQ51UQ21	=V1UQ51KF3+V1UQ51-KF3.12-X2	2		-BGS/R	2	&EFS=V1UQ51UQ22+V1UQ51UQ22/1.2	
	&EFS=V1UQ51KF3+V1UQ51UQ21	=V1UQ51KF3+V1UQ51-KF3.12-X2	3		-BGS/R	3	&EFS=V1UQ51UQ22+V1UQ51UQ22/1.2	
	&EFS=V1UQ51KF3+V1UQ51UQ21	=V1UQ51KF3+V1UQ51-KF3.12-X2	4		-BGS/R	4	&EFS=V1UQ51UQ22+V1UQ51UQ22/1.2	

=V1UQ51UQ22.1+.UQ51UQ22.1/1

=V1UQ51UQ22.3+.UQ51UQ22.3/1

			Date	12/22/2022	Volvo Trucks North America	Valiant TMS	Cable diagram =V1UQ51UQ22.2+V1UQ51UQ22.2-W1	Drawing name: =2V04&EFS-EL
			Ed.	MKLEPADLO	P6700 Underbody Mainline - Cell 2V04			= V1UQ51UQ22.2 + V1UQ51UQ22.2
			Appr					Document type: EMA
Modification	Date	Name	Original		Replacement of / Replaced by	Scale 1:1		Project nr: 22-16151

Page 1 / 1630

Cable diagram

F09_002_VLU

Cable name	-W1	cable type	TPE		
remark		no. of conductors	4	cross-section 18	cable length 4

function text	Page / column	Target designation from	Connection point	conductor	Target designation to	Connection point	Page / column	function text
	&EFS=V1UQ51KF3+V1UQ51UQ2	=V1UQ51KF3+V1UQ51-KF3.12-X3	1		-BGS/R	1	&EFS=V1UQ51UQ22+V1UQ51UQ22/1.4	
	&EFS=V1UQ51KF3+V1UQ51UQ2	=V1UQ51KF3+V1UQ51-KF3.12-X3	2		-BGS/R	2	&EFS=V1UQ51UQ22+V1UQ51UQ22/1.4	
	&EFS=V1UQ51KF3+V1UQ51UQ2	=V1UQ51KF3+V1UQ51-KF3.12-X3	3		-BGS/R	3	&EFS=V1UQ51UQ22+V1UQ51UQ22/1.4	
	&EFS=V1UQ51KF3+V1UQ51UQ2	=V1UQ51KF3+V1UQ51-KF3.12-X3	4		-BGS/R	4	&EFS=V1UQ51UQ22+V1UQ51UQ22/1.4	

=V1UQ51UQ22.2+.UQ51UQ22.2/1

=V1UQ51UQ22.4+.UQ51UQ22.4/1

			Date	12/22/2022	Volvo Trucks North America	Valiant TMS	Cable diagram =V1UQ51UQ22.3+V1UQ51UQ22.3-W1	Drawing name: =2V04&EFS-EL	= V1UQ51UQ22.3 + V1UQ51UQ22.3
			Ed.	MKLEPADLO	P6700 Underbody Mainline - Cell 2V04				
			Appr					Document type: EMA	Project nr: 22-16151
Modification	Date	Name	Original		Replacement of / Replaced by	Scale 1:1			Page 1 / 1630

Cable diagram

F09_002_VLU

Cable name -W1			cable type TPE					
remark			no. of conductors 4			cross-section 18		cable length 4
function text	Page / column	Target designation from	Connection point	conductor	Target designation to	Connection point	Page / column	function text
	&EFS=V1UQ51KF3+V1UQ51UQ2	-V1UQ51KF3+V1UQ51-KF3.1	2-X4 1		-BGS/R	1	&EFS=V1UQ51UQ22+V1UQ51UQ22/1.5	
	&EFS=V1UQ51KF3+V1UQ51UQ2	-V1UQ51KF3+V1UQ51-KF3.1	2-X4 2		-BGS/R	2	&EFS=V1UQ51UQ22+V1UQ51UQ22/1.5	
	&EFS=V1UQ51KF3+V1UQ51UQ2	-V1UQ51KF3+V1UQ51-KF3.1	2-X4 3		-BGS/R	3	&EFS=V1UQ51UQ22+V1UQ51UQ22/1.5	
	&EFS=V1UQ51KF3+V1UQ51UQ2	-V1UQ51KF3+V1UQ51-KF3.1	2-X4 4		-BGS/R	4	&EFS=V1UQ51UQ22+V1UQ51UQ22/1.5	

=V1UQ51UQ22.3+.UQ51UQ22.3/1

=V1UQ51UQ23.1+.UQ51UQ23.1/1

			Date	12/22/2022	Volvo Trucks North America	Valiant TMS	Cable diagram =V1UQ51UQ22.4+V1UQ51UQ22.4-W1	Drawing name: =2V04&EFS-EL	= V1UQ51UQ22.4
			Ed.	MKLEPADLO					+ V1UQ51UQ22.4
			Appr		P6700 Underbody Mainline - Cell 2V04			Document type: EMA	Project nr: 22-16151
Modification	Date	Name	Original		Replacement of / Replaced by	Scale 1:1			Page 1 / 1630

Cable diagram

F09_002_VLU

Cable name -W1			cable type TPE					
remark			no. of conductors 4			cross-section 18		cable length 4
function text	Page / column	Target designation from	Connection point	conductor	Target designation to	Connection point	Page / column	function text
	&EFS=V1UQ51KF3+V1UQ51UQ23	=V1UQ51KF3+V1UQ51-KF3.1	2-X5 1		-BGS/R	1	&EFS=V1UQ51UQ23+V1UQ51UQ23/1.0	
	&EFS=V1UQ51KF3+V1UQ51UQ23	=V1UQ51KF3+V1UQ51-KF3.1	2-X5 2		-BGS/R	2	&EFS=V1UQ51UQ23+V1UQ51UQ23/1.0	
	&EFS=V1UQ51KF3+V1UQ51UQ23	=V1UQ51KF3+V1UQ51-KF3.1	2-X5 3		-BGS/R	3	&EFS=V1UQ51UQ23+V1UQ51UQ23/1.1	
	&EFS=V1UQ51KF3+V1UQ51UQ23	=V1UQ51KF3+V1UQ51-KF3.1	2-X5 4		-BGS/R	4	&EFS=V1UQ51UQ23+V1UQ51UQ23/1.1	

=V1UQ51UQ22.4+.UQ51UQ22.4/1

=V1UQ51UQ24.1+.UQ51UQ24.1/1

			Date	12/22/2022	Volvo Trucks North America	Valiant TMS	Cable diagram =V1UQ51UQ23.1+V1UQ51UQ23.1-W1	Drawing name: =2V04&EFS-EL	= V1UQ51UQ23.1
			Ed.	MKLEPADLO					+ V1UQ51UQ23.1
			Appr		P6700 Underbody Mainline - Cell 2V04			Document type: EMA	Project nr: 22-16151
Modification	Date	Name	Original		Replacement of / Replaced by	Scale 1:1			Page 1 / 1630

Cable diagram

F09_002_VLU

Cable name -W1			cable type TPE					
remark			no. of conductors 4			cross-section 18		cable length 4
function text	Page / column	Target designation from	Connection point	conductor	Target designation to	Connection point	Page / column	function text
	&EFS=V1UQ51KF3+V1UQ51UQ5	=V1UQ51KF3+V1UQ51-KF3.1	2-X6 1		-BGS/R	1	&EFS=V1UQ51UQ24+V1UQ51UQ24/1.0	
	&EFS=V1UQ51KF3+V1UQ51UQ6	=V1UQ51KF3+V1UQ51-KF3.1	2-X6 2		-BGS/R	2	&EFS=V1UQ51UQ24+V1UQ51UQ24/1.0	
	&EFS=V1UQ51KF3+V1UQ51UQ6	=V1UQ51KF3+V1UQ51-KF3.1	2-X6 3		-BGS/R	3	&EFS=V1UQ51UQ24+V1UQ51UQ24/1.1	
	&EFS=V1UQ51KF3+V1UQ51UQ7	=V1UQ51KF3+V1UQ51-KF3.1	2-X6 4		-BGS/R	4	&EFS=V1UQ51UQ24+V1UQ51UQ24/1.1	

			Date	12/22/2022	Volvo Trucks North America	Valiant TMS	Cable diagram =V1UQ51UQ24.1+V1UQ51UQ24.1-W1	Drawing name: =2V04&EFS-EL	= V1UQ51UQ24.1
			Ed.	MKLEPADLO					+ V1UQ51UQ24.1
			Appr		P6700 Underbody Mainline - Cell 2V04			Document type: EMA	Project nr: 22-16151
Modification	Date	Name	Original		Replacement of / Replaced by	Scale 1:1			Page 1 / 1630

Cable diagram

F09_002_VLU

Cable name -W1			cable type TPU					
remark			no. of conductors 5			cross-section 16		cable length 30
function text	Page / column	Target designation from	Connection point	conductor	Target designation to	Connection point	Page / column	function text
	&EFS=V1WC4+.UC11/24.4	-V1WC4+UC11-XD151	1		-XG51.1	P1:1	&EFS/1.4	
	&EFS=V1WC4+.UC11/24.4	-V1WC4+UC11-XD151	2		-XG51.1	P1:2	&EFS/1.4	
	&EFS=V1WC4+.UC11/24.5	-V1WC4+UC11-XD151	4		-XG51.1	P1:4	&EFS/1.5	
	&EFS=V1WC4+.UC11/24.5	-V1WC4+UC11-XD151	5		-XG51.1	P1:5	&EFS/1.5	
	&EFS=V1WC4+.UC11/24.5	-V1WC4+UC11-XD151	3		-XG51.1	P1:3	&EFS/1.5	

			Date	12/22/2022	Volvo Trucks North America	Valiant TMS	Cable diagram =V1UQ51WC4+V1UQ51-W1	Drawing name: =2V04&EFS-EL	= V1UQ51WC4 + V1UQ51
			Ed.	MKLEPADLO					
			Appr		P6700 Underbody Mainline - Cell 2V04	Scale 1:1		Document type: EMA / Project nr: 22-16151	Page 1 / 1630
Modification	Date	Name	Original		Replacement of / Replaced by				

Cable diagram

F09_002_VLU

Cable name -W1.1			cable type TPU					
remark			no. of conductors 5			cross-section 16		cable length
function text	Page / column	Target designation from	Connection point	conductor	Target designation to	Connection point	Page / column	function text
	&EFS/1.4	-XG51.1	J1:1		-XG51.2	P1:1	&EFS/1.4	
	&EFS/1.4	-XG51.1	J1:2		-XG51.2	P1:2	&EFS/1.4	
	&EFS/1.5	-XG51.1	J1:4		-XG51.2	P1:4	&EFS/1.5	
	&EFS/1.5	-XG51.1	J1:5		-XG51.2	P1:5	&EFS/1.5	
	&EFS/1.5	-XG51.1	J1:3		-XG51.2	P1:3	&EFS/1.5	

			Date	12/22/2022	Volvo Trucks North America	Valiant TMS	Cable diagram =V1UQ51WC4+V1UQ51-W1.1	Drawing name: =2V04&EFS-EL	= V1UQ51WC4
			Ed.	MKLEPADLO					+ V1UQ51
			Appr		P6700 Underbody Mainline - Cell 2V04			Document type: EMA	Project nr: 22-16151
Modification	Date	Name	Original		Replacement of / Replaced by	Scale 1:1			Page 2 / 1630

Cable diagram

F09_002_VLU

Cable name -W1			cable type TPE					
remark			no. of conductors 4			cross-section 18		cable length 1
function text	Page / column	Target designation from	Connection point	conductor	Target designation to	Connection point	Page / column	function text
	&EFS/1.0	-XG1/2	P1:1		=V1UQ52KF1-KF1.12-X8	1	&EFS=V1UQ52KF1/2.8	
	&EFS/1.1	-XG1/2	P1:3		=V1UQ52KF1-KF1.12-X8	3	&EFS=V1UQ52KF1/2.9	
	&EFS/1.1	-XG1/2	P1:4		=V1UQ52KF1-KF1.12-X8	4	&EFS=V1UQ52KF1/2.9	
	&EFS/1.1	-XG1/2	P1:2		=V1UQ52KF1-KF1.12-X8	2	&EFS=V1UQ52KF1/2.9	

			Date	12/22/2022	Volvo Trucks North America	Valiant TMS	Cable diagram =V1UQ52BG0+V1UQ52-W1	Drawing name: =2V04&EFS-EL	= V1UQ52BG0
			Ed.	MKLEPADLO					+ V1UQ52
			Appr		P6700 Underbody Mainline - Cell 2V04			Document type: EMA	Project nr: 22-16151 Page 1
Modification	Date	Name	Original		Replacement of / Replaced by	Scale 1:1			1630

Cable diagram

F09_002_VLU

Cable name -W1.1			cable type TPE					
remark			no. of conductors 4			cross-section 18		cable length 2
function text	Page / column	Target designation from	Connection point	conductor	Target designation to	Connection point	Page / column	function text
	&EFS/1.0	-BG01	1		-XG1/2	J1:1	&EFS/1.0	
	&EFS/1.0	-BG01	4		-XG1/2	J1:4	&EFS/1.1	
	&EFS/1.1	-BG01	3		-XG1/2	J1:3	&EFS/1.1	

			Date	12/22/2022	Volvo Trucks North America	Valiant TMS	Cable diagram =V1UQ52BG0+V1UQ52-W1.1	Drawing name: =2V04&EFS-EL	= V1UQ52BG0
			Ed.	MKLEPADLO					+ V1UQ52
			Appr		P6700 Underbody Mainline - Cell 2V04			Document type: EMA	Project nr: 22-16151
Modification	Date	Name	Original		Replacement of / Replaced by	Scale 1:1			Page 2 / 1630

Cable diagram

F09_002_VLU

Cable name -W1.2			cable type TPE					
remark			no. of conductors 4			cross-section 18		cable length 3
function text	Page / column	Target designation from	Connection point	conductor	Target designation to	Connection point	Page / column	function text
	&EFS/1.1	-BG02	1		-XG1/2	J2:1	&EFS/1.1	
	&EFS/1.1	-BG02	4		-XG1/2	J2:4	&EFS/1.2	
	&EFS/1.2	-BG02	3		-XG1/2	J2:3	&EFS/1.2	

			Date	12/22/2022	Volvo Trucks North America	Valiant TMS	Cable diagram =V1UQ52BG0+V1UQ52-W1.2	Drawing name: =2V04&EFS-EL	= V1UQ52BG0
			Ed.	MKLEPADLO					+ V1UQ52
			Appr		P6700 Underbody Mainline - Cell 2V04			Document type: EMA	Project nr: 22-16151
Modification	Date	Name	Original		Replacement of / Replaced by	Scale 1:1			Page 3 / 1630

Cable diagram

F09_002_VLU

Cable name -KF100.11-P12			cable type PROFINET Cable					
remark			no. of conductors 4			cross-section 22		cable length
function text	Page / column	Target designation from	Connection point	conductor	Target designation to	Connection point	Page / column	function text
	&EFS=V1KF1+.UC11/2.5	=V1KF1+UC11-KF100.11-P12			-KF1-TP1		&EFS/1.3	

=V1UQ52BG0/3

2

			Date	12/22/2022	Volvo Trucks North America	Valiant TMS	Cable diagram =V1UQ52KF1+V1UQ52-KF100.11-P12	Drawing name: =2V04&EFS-EL	= V1UQ52KF1
			Ed.	MKLEPADLO					+ V1UQ52
			Appr		P6700 Underbody Mainline - Cell 2V04			Document type: EMA	Project nr: 22-16151
Modification	Date	Name	Original		Replacement of / Replaced by	Scale 1:1			Page 1 / 1630

Cable diagram

F09_002_VLU

Cable name -W1			cable type TPU					
remark			no. of conductors 5			cross-section 16		cable length 25
function text	Page / column	Target designation from	Connection point	conductor	Target designation to	Connection point	Page / column	function text
	&EFS=V1WC4+.UC11/25.4	-V1WC4+UC11-XD161	1		-KF1-X20	1	&EFS/1.1	
	&EFS=V1WC4+.UC11/25.4	-V1WC4+UC11-XD161	2		-KF1-X20	2	&EFS/1.1	
	&EFS=V1WC4+.UC11/25.5	-V1WC4+UC11-XD161	3		-KF1-X20	3	&EFS/1.1	
	&EFS=V1WC4+.UC11/25.5	-V1WC4+UC11-XD161	4		-KF1-X20	4	&EFS/1.2	
	&EFS=V1WC4+.UC11/25.5	-V1WC4+UC11-XD161	5		-KF1-X20	5	&EFS/1.2	

			Date	12/22/2022	Volvo Trucks North America	Valiant TMS	Cable diagram =V1UQ52KF1+V1UQ52-W1	Drawing name: =2V04&EFS-EL	= V1UQ52KF1
			Ed.	MKLEPADLO					+ V1UQ52
			Appr		P6700 Underbody Mainline - Cell 2V04			Document type: EMA	Project nr: 22-16151
Modification	Date	Name	Original		Replacement of / Replaced by	Scale 1:1			Page 2 / 1630

Cable diagram

F09_002_VLU

Cable name -W1			cable type TPE					
remark			no. of conductors 4			cross-section 18		cable length 2
function text	Page / column	Target designation from	Connection point	conductor	Target designation to	Connection point	Page / column	function text
	&EFS=V1UQ52KF1+V1UQ52/1.6	=V1UQ52KF1+V1UQ52-KF1.1	1-X1 1		-BGS/R	1	&EFS=V1UQ52UQ1+V1UQ52UQ1/1.0	
	&EFS=V1UQ52KF1+V1UQ52/1.6	=V1UQ52KF1+V1UQ52-KF1.1	1-X1 2		-BGS/R	2	&EFS=V1UQ52UQ1+V1UQ52UQ1/1.0	
	&EFS=V1UQ52KF1+V1UQ52/1.5	=V1UQ52KF1+V1UQ52-KF1.1	1-X1 3		-BGS/R	3	&EFS=V1UQ52UQ1+V1UQ52UQ1/1.1	
	&EFS=V1UQ52KF1+V1UQ52/1.5	=V1UQ52KF1+V1UQ52-KF1.1	1-X1 4		-BGS/R	4	&EFS=V1UQ52UQ1+V1UQ52UQ1/1.1	

Cable diagram

F09_002_VLU

Cable name -W1			cable type TPE					
remark			no. of conductors 4			cross-section 18		cable length 2
function text	Page / column	Target designation from	Connection point	conductor	Target designation to	Connection point	Page / column	function text
	&EFS=V1UQ52KF1+V1UQ52UQ1	=V1UQ52KF1+V1UQ52-KF1.1	1-X2 1		-BGS/R	1	&EFS=V1UQ52UQ1+V1UQ52UQ1/1.2	
	&EFS=V1UQ52KF1+V1UQ52UQ1	=V1UQ52KF1+V1UQ52-KF1.1	1-X2 2		-BGS/R	2	&EFS=V1UQ52UQ1+V1UQ52UQ1/1.2	
	&EFS=V1UQ52KF1+V1UQ52UQ1	=V1UQ52KF1+V1UQ52-KF1.1	1-X2 3		-BGS/R	3	&EFS=V1UQ52UQ1+V1UQ52UQ1/1.2	
	&EFS=V1UQ52KF1+V1UQ52UQ1	=V1UQ52KF1+V1UQ52-KF1.1	1-X2 4		-BGS/R	4	&EFS=V1UQ52UQ1+V1UQ52UQ1/1.2	

			Date	12/22/2022	Volvo Trucks North America	Valiant TMS	Cable diagram =V1UQ52UQ1.2+V1UQ52UQ1.2-W1	Drawing name: =2V04&EFS-EL	= V1UQ52UQ1.2
			Ed.	MKLEPADLO					+ V1UQ52UQ1.2
			Appr		P6700 Underbody Mainline - Cell 2V04			Document type: EMA	Project nr: 22-16151
Modification	Date	Name	Original		Replacement of / Replaced by	Scale 1:1			Page 1 / 1630

Cable diagram

F09_002_VLU

Cable name -W1			cable type TPE					
remark			no. of conductors 4			cross-section 18		cable length 2
function text	Page / column	Target designation from	Connection point	conductor	Target designation to	Connection point	Page / column	function text
	&EFS=V1UQ52KF1+V1UQ52UQ1	-V1UQ52KF1+V1UQ52-KF1.1	1-X3 1		-BGS/R	1	&EFS=V1UQ52UQ1+V1UQ52UQ1/1.4	
	&EFS=V1UQ52KF1+V1UQ52UQ1	-V1UQ52KF1+V1UQ52-KF1.1	1-X3 2		-BGS/R	2	&EFS=V1UQ52UQ1+V1UQ52UQ1/1.4	
	&EFS=V1UQ52KF1+V1UQ52UQ1	-V1UQ52KF1+V1UQ52-KF1.1	1-X3 3		-BGS/R	3	&EFS=V1UQ52UQ1+V1UQ52UQ1/1.4	
	&EFS=V1UQ52KF1+V1UQ52UQ1	-V1UQ52KF1+V1UQ52-KF1.1	1-X3 4		-BGS/R	4	&EFS=V1UQ52UQ1+V1UQ52UQ1/1.4	

			Date	12/22/2022	Volvo Trucks North America	Valiant TMS	Cable diagram =V1UQ52UQ1.3+V1UQ52UQ1.3-W1	Drawing name: =2V04&EFS-EL	= V1UQ52UQ1.3
			Ed.	MKLEPADLO					+ V1UQ52UQ1.3
			Appr		P6700 Underbody Mainline - Cell 2V04			Document type: EMA	Project nr: 22-16151
Modification	Date	Name	Original		Replacement of / Replaced by	Scale 1:1			Page 1 / 1630

Cable diagram

F09_002_VLU

Cable name -W1			cable type TPE					
remark			no. of conductors 4			cross-section 18		cable length 2
function text	Page / column	Target designation from	Connection point	conductor	Target designation to	Connection point	Page / column	function text
	&EFS=V1UQ52KF1+V1UQ52UQ1	-V1UQ52KF1+V1UQ52-KF1.1	1-X4 1		-BGS/R	1	&EFS=V1UQ52UQ1+V1UQ52UQ1/1.5	
	&EFS=V1UQ52KF1+V1UQ52UQ1	-V1UQ52KF1+V1UQ52-KF1.1	1-X4 2		-BGS/R	2	&EFS=V1UQ52UQ1+V1UQ52UQ1/1.5	
	&EFS=V1UQ52KF1+V1UQ52UQ1	-V1UQ52KF1+V1UQ52-KF1.1	1-X4 3		-BGS/R	3	&EFS=V1UQ52UQ1+V1UQ52UQ1/1.5	
	&EFS=V1UQ52KF1+V1UQ52UQ1	-V1UQ52KF1+V1UQ52-KF1.1	1-X4 4		-BGS/R	4	&EFS=V1UQ52UQ1+V1UQ52UQ1/1.5	

			Date	12/22/2022	Volvo Trucks North America	Valiant TMS	Cable diagram =V1UQ52UQ1.4+V1UQ52UQ1.4-W1	Drawing name: =2V04&EFS-EL	= V1UQ52UQ1.4
			Ed.	MKLEPADLO					+ V1UQ52UQ1.4
			Appr		P6700 Underbody Mainline - Cell 2V04			Document type: EMA	Project nr: 22-16151
Modification	Date	Name	Original		Replacement of / Replaced by	Scale 1:1			Page 1 / 1630

Cable diagram

F09_002_VLU

Cable name -W1			cable type TPE					
remark			no. of conductors 4			cross-section 18		cable length 4
function text	Page / column	Target designation from	Connection point	conductor	Target designation to	Connection point	Page / column	function text
	&EFS=V1UQ52KF1+V1UQ52UQ2/1.0	=V1UQ52KF1+V1UQ52-KF1.1	1-X5 1		-BGS/R	1	&EFS=V1UQ52UQ2+V1UQ52UQ2/1.0	
	&EFS=V1UQ52KF1+V1UQ52UQ2/1.0	=V1UQ52KF1+V1UQ52-KF1.1	1-X5 2		-BGS/R	2	&EFS=V1UQ52UQ2+V1UQ52UQ2/1.0	
	&EFS=V1UQ52KF1+V1UQ52UQ2/1.1	=V1UQ52KF1+V1UQ52-KF1.1	1-X5 3		-BGS/R	3	&EFS=V1UQ52UQ2+V1UQ52UQ2/1.1	
	&EFS=V1UQ52KF1+V1UQ52UQ2/1.1	=V1UQ52KF1+V1UQ52-KF1.1	1-X5 4		-BGS/R	4	&EFS=V1UQ52UQ2+V1UQ52UQ2/1.1	

			Date	12/22/2022	Volvo Trucks North America	Valiant TMS	Cable diagram =V1UQ52UQ2.1+V1UQ52UQ2.1-W1	Drawing name: =2V04&EFS-EL	= V1UQ52UQ2.1
			Ed.	MKLEPADLO					+ V1UQ52UQ2.1
			Appr		P6700 Underbody Mainline - Cell 2V04			Document type: EMA	Project nr: 22-16151
Modification	Date	Name	Original		Replacement of / Replaced by	Scale 1:1			Page 1 / 1630

Cable diagram

F09_002_VLU

Cable name -W1			cable type TPE					
remark			no. of conductors 4			cross-section 18		cable length 4
function text	Page / column	Target designation from	Connection point	conductor	Target designation to	Connection point	Page / column	function text
	&EFS=V1UQ52KF1+V1UQ52UQ2/1.2	=V1UQ52KF1+V1UQ52-KF1.1	1-X6 1		-BGS/R	1	&EFS=V1UQ52UQ2+V1UQ52UQ2/1.2	
	&EFS=V1UQ52KF1+V1UQ52UQ2/1.2	=V1UQ52KF1+V1UQ52-KF1.1	1-X6 2		-BGS/R	2	&EFS=V1UQ52UQ2+V1UQ52UQ2/1.2	
	&EFS=V1UQ52KF1+V1UQ52UQ2/1.2	=V1UQ52KF1+V1UQ52-KF1.1	1-X6 3		-BGS/R	3	&EFS=V1UQ52UQ2+V1UQ52UQ2/1.2	
	&EFS=V1UQ52KF1+V1UQ52UQ2/1.2	=V1UQ52KF1+V1UQ52-KF1.1	1-X6 4		-BGS/R	4	&EFS=V1UQ52UQ2+V1UQ52UQ2/1.2	

Cable diagram

F09_002_VLU

Cable name -W1			cable type TPE					
remark			no. of conductors 4			cross-section 18		cable length 3
function text	Page / column	Target designation from	Connection point	conductor	Target designation to	Connection point	Page / column	function text
	&EFS=V1UQ52KF1+V1UQ52UQ7	=V1UQ52KF1+V1UQ52-KF1.1	1-X7 1		-BGS/R	1	&EFS=V1UQ52UQ3+V1UQ52UQ3/1.0	
	&EFS=V1UQ52KF1+V1UQ52UQ7	=V1UQ52KF1+V1UQ52-KF1.1	1-X7 2		-BGS/R	2	&EFS=V1UQ52UQ3+V1UQ52UQ3/1.0	
	&EFS=V1UQ52KF1+V1UQ52UQ8	=V1UQ52KF1+V1UQ52-KF1.1	1-X7 3		-BGS/R	3	&EFS=V1UQ52UQ3+V1UQ52UQ3/1.1	
	&EFS=V1UQ52KF1+V1UQ52UQ8	=V1UQ52KF1+V1UQ52-KF1.1	1-X7 4		-BGS/R	4	&EFS=V1UQ52UQ3+V1UQ52UQ3/1.1	

Cable diagram

F09_002_VLU

Cable name -W1			cable type TPE					
remark			no. of conductors 4			cross-section 18		cable length 5
function text	Page / column	Target designation from	Connection point	conductor	Target designation to	Connection point	Page / column	function text
	&EFS=V1UQ52KF1+V1UQ52UQ8	=V1UQ52KF1+V1UQ52-KF1.1	1-X8 1		-BGS/R	1	&EFS=V1UQ52UQ4+V1UQ52UQ4/1.0	
	&EFS=V1UQ52KF1+V1UQ52UQ9	=V1UQ52KF1+V1UQ52-KF1.1	1-X8 2		-BGS/R	2	&EFS=V1UQ52UQ4+V1UQ52UQ4/1.0	
	&EFS=V1UQ52KF1+V1UQ52UQ9	=V1UQ52KF1+V1UQ52-KF1.1	1-X8 3		-BGS/R	3	&EFS=V1UQ52UQ4+V1UQ52UQ4/1.1	
	&EFS=V1UQ52KF1+V1UQ52UQ9	=V1UQ52KF1+V1UQ52-KF1.1	1-X8 4		-BGS/R	4	&EFS=V1UQ52UQ4+V1UQ52UQ4/1.1	

			Date	12/22/2022	Volvo Trucks North America	Valiant TMS	Cable diagram =V1UQ52UQ4.1+V1UQ52UQ4.1-W1	Drawing name: =2V04&EFS-EL	= V1UQ52UQ4.1
			Ed.	MKLEPADLO					+ V1UQ52UQ4.1
			Appr		P6700 Underbody Mainline - Cell 2V04			Document type: EMA	Project nr: 22-16151
Modification	Date	Name	Original		Replacement of / Replaced by	Scale 1:1			Page 1 / 1630

Cable diagram

F09_002_VLU

Cable name -W1			cable type TPE					
remark			no. of conductors 4			cross-section 18		cable length 5
function text	Page / column	Target designation from	Connection point	conductor	Target designation to	Connection point	Page / column	function text
	&EFS=V1UQ52KF1+V1UQ52UQ6	-V1UQ52KF1+V1UQ52-KF1.1	2-X1 1		-BGS/R	1	&EFS=V1UQ52UQ4+V1UQ52UQ4/1.2	
	&EFS=V1UQ52KF1+V1UQ52UQ6	-V1UQ52KF1+V1UQ52-KF1.1	2-X1 2		-BGS/R	2	&EFS=V1UQ52UQ4+V1UQ52UQ4/1.2	
	&EFS=V1UQ52KF1+V1UQ52UQ5	-V1UQ52KF1+V1UQ52-KF1.1	2-X1 3		-BGS/R	3	&EFS=V1UQ52UQ4+V1UQ52UQ4/1.2	
	&EFS=V1UQ52KF1+V1UQ52UQ5	-V1UQ52KF1+V1UQ52-KF1.1	2-X1 4		-BGS/R	4	&EFS=V1UQ52UQ4+V1UQ52UQ4/1.2	

=V1UQ52UQ4.1+.UQ52UQ4.1/1

=V1UQ52UQ5.1+.UQ52UQ5.1/1

			Date	12/22/2022	Volvo Trucks North America	Valiant TMS	Cable diagram =V1UQ52UQ4.2+V1UQ52UQ4.2-W1	Drawing name: =2V04&EFS-EL	= V1UQ52UQ4.2
			Ed.	MKLEPADLO					+ V1UQ52UQ4.2
			Appr		P6700 Underbody Mainline - Cell 2V04			Document type: EMA	Project nr: 22-16151
Modification	Date	Name	Original		Replacement of / Replaced by	Scale 1:1			Page 1 / 1630

Cable diagram

F09_002_VLU

Cable name -W1			cable type TPE					
remark			no. of conductors 4			cross-section 18		cable length 4
function text	Page / column	Target designation from	Connection point	conductor	Target designation to	Connection point	Page / column	function text
	&EFS=V1UQ52KF1+V1UQ52UQ5	-V1UQ52KF1+V1UQ52-KF1.1	2-X2 1		-XGR/S	P1:1	&EFS=V1UQ52UQ5+V1UQ52UQ5/1.1	
	&EFS=V1UQ52KF1+V1UQ52UQ5	-V1UQ52KF1+V1UQ52-KF1.1	2-X2 2		-XGR/S	P1:2	&EFS=V1UQ52UQ5+V1UQ52UQ5/1.1	
	&EFS=V1UQ52KF1+V1UQ52UQ5	-V1UQ52KF1+V1UQ52-KF1.1	2-X2 3		-XGR/S	P1:3	&EFS=V1UQ52UQ5+V1UQ52UQ5/1.1	
	&EFS=V1UQ52KF1+V1UQ52UQ5	-V1UQ52KF1+V1UQ52-KF1.1	2-X2 4		-XGR/S	P1:4	&EFS=V1UQ52UQ5+V1UQ52UQ5/1.1	

			Date	12/22/2022	Volvo Trucks North America	Valiant TMS	Cable diagram =V1UQ52UQ5.1+V1UQ52UQ5.1-W1	Drawing name: =2V04&EFS-EL	= V1UQ52UQ5.1
			Ed.	MKLEPADLO					+ V1UQ52UQ5.1
			Appr		P6700 Underbody Mainline - Cell 2V04			Document type: EMA	Project nr: 22-16151
Modification	Date	Name	Original		Replacement of / Replaced by	Scale 1:1			Page 1 / 1630

Cable diagram

F09_002_VLU

Cable name -W1.1			cable type TPE					
remark			no. of conductors 4			cross-section 18		cable length 0.5
function text	Page / column	Target designation from	Connection point	conductor	Target designation to	Connection point	Page / column	function text
	&EFS=V1UQ52UQ5+V1UQ52UQ5/1.1	-XGR/S	1		-XGR/S	J1:1	&EFS=V1UQ52UQ5+V1UQ52UQ5/1.1	
	&EFS=V1UQ52UQ5+V1UQ52UQ5/1.1	-XGR/S	4		-XGR/S	J1:4	&EFS=V1UQ52UQ5+V1UQ52UQ5/1.1	
	&EFS=V1UQ52UQ5+V1UQ52UQ5/1.1	-XGR/S	3		-XGR/S	J1:3	&EFS=V1UQ52UQ5+V1UQ52UQ5/1.1	

1 3

			Date	12/22/2022	Volvo Trucks North America	Valiant TMS	Cable diagram =V1UQ52UQ5.1+V1UQ52UQ5.1-W1.1	Drawing name: =2V04&EFS-EL	= V1UQ52UQ5.1
			Ed.	MKLEPADLO					+ V1UQ52UQ5.1
			Appr		P6700 Underbody Mainline - Cell 2V04			Document type: EMA	Project nr: 22-16151
Modification	Date	Name	Original		Replacement of / Replaced by	Scale 1:1			Page 2 / 1630

Cable diagram

F09_002_VLU

Cable name -W1.2			cable type TPE					
remark			no. of conductors 4			cross-section 18		cable length 1
function text	Page / column	Target designation from	Connection point	conductor	Target designation to	Connection point	Page / column	function text
	&EFS=V1UQ52UQ5+V1UQ52UQ5/1.2	-BG21	1		-XGR/S	J2:1	&EFS=V1UQ52UQ5+V1UQ52UQ5/1.2	
	&EFS=V1UQ52UQ5+V1UQ52UQ5/1.2	-BG21	4		-XGR/S	J2:4	&EFS=V1UQ52UQ5+V1UQ52UQ5/1.2	
	&EFS=V1UQ52UQ5+V1UQ52UQ5/1.2	-BG21	3		-XGR/S	J2:3	&EFS=V1UQ52UQ5+V1UQ52UQ5/1.2	

			Date	12/22/2022	Volvo Trucks North America	Valiant TMS	Cable diagram =V1UQ52UQ5.1+V1UQ52UQ5.1-W1.2	Drawing name: =2V04&EFS-EL	= V1UQ52UQ5.1
			Ed.	MKLEPADLO					+ V1UQ52UQ5.1
			Appr		P6700 Underbody Mainline - Cell 2V04			Document type: EMA	Project nr: 22-16151
Modification	Date	Name	Original		Replacement of / Replaced by	Scale 1:1			Page 3 / 1630

Cable diagram

F09_002_VLU

Cable name -W2			cable type TPE					
remark			no. of conductors 4			cross-section 18		cable length 4
function text	Page / column	Target designation from	Connection point	conductor	Target designation to	Connection point	Page / column	function text
	&EFS=V1UQ52KF1+V1UQ52UQ5	=V1UQ52KF1+V1UQ52-KF1.1	2-X3 1		-BGS2	1	&EFS=V1UQ52UQ5+V1UQ52UQ5/1.3	
	&EFS=V1UQ52KF1+V1UQ52UQ5	=V1UQ52KF1+V1UQ52-KF1.1	2-X3 3		-BGS2	3	&EFS=V1UQ52UQ5+V1UQ52UQ5/1.3	
	&EFS=V1UQ52KF1+V1UQ52UQ5	=V1UQ52KF1+V1UQ52-KF1.1	2-X3 4		-BGS2	4	&EFS=V1UQ52UQ5+V1UQ52UQ5/1.3	

			Date	12/22/2022	Volvo Trucks North America	Valiant TMS	Cable diagram =V1UQ52UQ5.1+V1UQ52UQ5.1-W2	Drawing name: =2V04&EFS-EL	= V1UQ52UQ5.1
			Ed.	MKLEPADLO					+ V1UQ52UQ5.1
			Appr		P6700 Underbody Mainline - Cell 2V04			Document type: EMA	Project nr: 22-16151
Modification	Date	Name	Original		Replacement of / Replaced by	Scale 1:1			Page 4 / 1630

Cable diagram

F09_002_VLU

Cable name -W1			cable type TPE					
remark			no. of conductors 4			cross-section 18		cable length 6
function text	Page / column	Target designation from	Connection point	conductor	Target designation to	Connection point	Page / column	function text
	&EFS=V1UQ52KF1+V1UQ52UQ5	-V1UQ52KF1+V1UQ52-KF1.1	2-X4 1		-BGS/R	1	&EFS=V1UQ52UQ6+V1UQ52UQ6/1.0	
	&EFS=V1UQ52KF1+V1UQ52UQ5	-V1UQ52KF1+V1UQ52-KF1.1	2-X4 2		-BGS/R	2	&EFS=V1UQ52UQ6+V1UQ52UQ6/1.0	
	&EFS=V1UQ52KF1+V1UQ52UQ5	-V1UQ52KF1+V1UQ52-KF1.1	2-X4 3		-BGS/R	3	&EFS=V1UQ52UQ6+V1UQ52UQ6/1.1	
	&EFS=V1UQ52KF1+V1UQ52UQ5	-V1UQ52KF1+V1UQ52-KF1.1	2-X4 4		-BGS/R	4	&EFS=V1UQ52UQ6+V1UQ52UQ6/1.1	

			Date	12/22/2022	Volvo Trucks North America	Valiant TMS	Cable diagram =V1UQ52UQ6.1+V1UQ52UQ6.1-W1	Drawing name: =2V04&EFS-EL	= V1UQ52UQ6.1
			Ed.	MKLEPADLO					+ V1UQ52UQ6.1
			Appr		P6700 Underbody Mainline - Cell 2V04			Document type: EMA	Project nr: 22-16151
Modification	Date	Name	Original		Replacement of / Replaced by	Scale 1:1			Page 1 / 1630

Cable diagram

F09_002_VLU

Cable name -W1			cable type TPE					
remark			no. of conductors 4			cross-section 18		cable length 1
function text	Page / column	Target designation from	Connection point	conductor	Target designation to	Connection point	Page / column	function text
	&EFS/1.0	-XG1/2	P1:1		=V1UQ53KF1-KF1.12-X8	1	&EFS=V1UQ53KF1/2.8	
	&EFS/1.1	-XG1/2	P1:3		=V1UQ53KF1-KF1.12-X8	3	&EFS=V1UQ53KF1/2.9	
	&EFS/1.1	-XG1/2	P1:4		=V1UQ53KF1-KF1.12-X8	4	&EFS=V1UQ53KF1/2.9	
	&EFS/1.1	-XG1/2	P1:2		=V1UQ53KF1-KF1.12-X8	2	&EFS=V1UQ53KF1/2.9	

			Date	12/22/2022	Volvo Trucks North America	Valiant TMS	Cable diagram =V1UQ53BG0+V1UQ53-W1	Drawing name: =2V04&EFS-EL	= V1UQ53BG0
			Ed.	MKLEPADLO					+ V1UQ53
			Appr		P6700 Underbody Mainline - Cell 2V04			Document type: EMA	Project nr: 22-16151 Page 1
Modification	Date	Name	Original		Replacement of / Replaced by	Scale 1:1			1630

Cable diagram

F09_002_VLU

Cable name -W1.1			cable type TPE					
remark			no. of conductors 4			cross-section 18		cable length 2
function text	Page / column	Target designation from	Connection point	conductor	Target designation to	Connection point	Page / column	function text
	&EFS/1.0	-BG01	1		-XG1/2	J1:1	&EFS/1.0	
	&EFS/1.0	-BG01	4		-XG1/2	J1:4	&EFS/1.1	
	&EFS/1.1	-BG01	3		-XG1/2	J1:3	&EFS/1.1	

			Date	12/22/2022	Volvo Trucks North America	Valiant TMS	Cable diagram =V1UQ53BG0+V1UQ53-W1.1	Drawing name: =2V04&EFS-EL	= V1UQ53BG0
			Ed.	MKLEPADLO					+ V1UQ53
			Appr		P6700 Underbody Mainline - Cell 2V04			Document type: EMA	Project nr: 22-16151
Modification	Date	Name	Original		Replacement of / Replaced by	Scale 1:1			Page 2 / 1630

Cable diagram

F09_002_VLU

Cable name -W1.2			cable type TPE					
remark			no. of conductors 4			cross-section 18		cable length 3
function text	Page / column	Target designation from	Connection point	conductor	Target designation to	Connection point	Page / column	function text
	&EFS/1.1	-BG02	1		-XG1/2	J2:1	&EFS/1.1	
	&EFS/1.1	-BG02	4		-XG1/2	J2:4	&EFS/1.2	
	&EFS/1.2	-BG02	3		-XG1/2	J2:3	&EFS/1.2	

			Date	12/22/2022	Volvo Trucks North America	Valiant TMS	Cable diagram =V1UQ53BG0+V1UQ53-W1.2	Drawing name: =2V04&EFS-EL	= V1UQ53BG0
			Ed.	MKLEPADLO					+ V1UQ53
			Appr		P6700 Underbody Mainline - Cell 2V04			Document type: EMA	Project nr: 22-16151 Page 3
Modification	Date	Name	Original		Replacement of / Replaced by	Scale 1:1			1630

Cable diagram

F09_002_VLU

Cable name	-KF100.14-P13		cable type	PROFINET Cable				
remark			no. of conductors	4	cross-section	22	cable length	
function text	Page / column	Target designation from	Connection point	conductor	Target designation to	Connection point	Page / column	function text
	&EFS=V1KF1+.UC14/2.5	=V1KF1+UC14-KF100.14-P13			-KF1-TP1		&EFS/1.3	

			Date	12/22/2022	Volvo Trucks North America	Valiant TMS	Cable diagram	Drawing name:	= V1UQ53KF1
			Ed.	MKLEPADLO			=V1UQ53KF1+V1UQ53-KF100.14-P13	=2V04&EFS-EL	+ V1UQ53
			Appr		P6700 Underbody Mainline - Cell 2V04			Document type: EMA / Project nr: 22-16151	Page 1 / 1630
Modification	Date	Name	Original		Replacement of / Replaced by	Scale 1:1			

Cable diagram

F09_002_VLU

Cable name -W1			cable type TPU					
remark			no. of conductors 5			cross-section 16		cable length 30
function text	Page / column	Target designation from	Connection point	conductor	Target designation to	Connection point	Page / column	function text
	&EFS=V1WC4+.UC14/21.4	-V1WC4+UC14-XD161	1		-KF1-X20	1	&EFS/1.1	
	&EFS=V1WC4+.UC14/21.4	-V1WC4+UC14-XD161	2		-KF1-X20	2	&EFS/1.1	
	&EFS=V1WC4+.UC14/21.5	-V1WC4+UC14-XD161	3		-KF1-X20	3	&EFS/1.1	
	&EFS=V1WC4+.UC14/21.5	-V1WC4+UC14-XD161	4		-KF1-X20	4	&EFS/1.2	
	&EFS=V1WC4+.UC14/21.5	-V1WC4+UC14-XD161	5		-KF1-X20	5	&EFS/1.2	

			Date	12/22/2022	Volvo Trucks North America	Valiant TMS	Cable diagram =V1UQ53KF1+V1UQ53-W1	Drawing name: =2V04&EFS-EL	= V1UQ53KF1
			Ed.	MKLEPADLO					+ V1UQ53
			Appr		P6700 Underbody Mainline - Cell 2V04			Document type: EMA	Project nr: 22-16151
Modification	Date	Name	Original		Replacement of / Replaced by	Scale 1:1			Page 2 / 1630

Cable diagram

F09_002_VLU

Cable name -W1			cable type TPE					
remark			no. of conductors 4			cross-section 18		cable length 2
function text	Page / column	Target designation from	Connection point	conductor	Target designation to	Connection point	Page / column	function text
	&EFS=V1UQ53KF1+V1UQ53/1.6	=V1UQ53KF1+V1UQ53-KF1.1	1-X1 1		-BGS/R	1	&EFS=V1UQ53UQ1+V1UQ53UQ1/1.0	
	&EFS=V1UQ53KF1+V1UQ53/1.6	=V1UQ53KF1+V1UQ53-KF1.1	1-X1 2		-BGS/R	2	&EFS=V1UQ53UQ1+V1UQ53UQ1/1.0	
	&EFS=V1UQ53KF1+V1UQ53/1.5	=V1UQ53KF1+V1UQ53-KF1.1	1-X1 3		-BGS/R	3	&EFS=V1UQ53UQ1+V1UQ53UQ1/1.1	
	&EFS=V1UQ53KF1+V1UQ53/1.5	=V1UQ53KF1+V1UQ53-KF1.1	1-X1 4		-BGS/R	4	&EFS=V1UQ53UQ1+V1UQ53UQ1/1.1	

Cable diagram

F09_002_VLU

Cable name -W1			cable type TPE					
remark			no. of conductors 4			cross-section 18		cable length 2
function text	Page / column	Target designation from	Connection point	conductor	Target designation to	Connection point	Page / column	function text
	&EFS=V1UQ53KF1+V1UQ53UQ1	-W1/1.1	=V1UQ53KF1+V1UQ53-KF1.1	1-X2 1		-BGS/R	1	&EFS=V1UQ53UQ1+V1UQ53UQ1/1.2
	&EFS=V1UQ53KF1+V1UQ53UQ1	-W1/1.2	=V1UQ53KF1+V1UQ53-KF1.1	1-X2 2		-BGS/R	2	&EFS=V1UQ53UQ1+V1UQ53UQ1/1.2
	&EFS=V1UQ53KF1+V1UQ53UQ1	-W1/1.3	=V1UQ53KF1+V1UQ53-KF1.1	1-X2 3		-BGS/R	3	&EFS=V1UQ53UQ1+V1UQ53UQ1/1.2
	&EFS=V1UQ53KF1+V1UQ53UQ1	-W1/1.4	=V1UQ53KF1+V1UQ53-KF1.1	1-X2 4		-BGS/R	4	&EFS=V1UQ53UQ1+V1UQ53UQ1/1.2

			Date	12/22/2022	Volvo Trucks North America	Valiant TMS	Cable diagram =V1UQ53UQ1.2+V1UQ53UQ1.2-W1	Drawing name: =2V04&EFS-EL	= V1UQ53UQ1.2
			Ed.	MKLEPADLO					+ V1UQ53UQ1.2
			Appr		P6700 Underbody Mainline - Cell 2V04			Document type: EMA	Project nr: 22-16151
Modification	Date	Name	Original		Replacement of / Replaced by	Scale 1:1			Page 1 / 1630

Cable diagram

F09_002_VLU

Cable name -W1			cable type TPE					
remark			no. of conductors 4			cross-section 18		cable length 2
function text	Page / column	Target designation from	Connection point	conductor	Target designation to	Connection point	Page / column	function text
	&EFS=V1UQ53KF1+V1UQ53/1.3	-V1UQ53KF1+V1UQ53-KF1.1	1-X3 1		-BGS/R	1	&EFS=V1UQ53UQ1+V1UQ53UQ1/1.4	
	&EFS=V1UQ53KF1+V1UQ53/1.3	-V1UQ53KF1+V1UQ53-KF1.1	1-X3 2		-BGS/R	2	&EFS=V1UQ53UQ1+V1UQ53UQ1/1.4	
	&EFS=V1UQ53KF1+V1UQ53/1.3	-V1UQ53KF1+V1UQ53-KF1.1	1-X3 3		-BGS/R	3	&EFS=V1UQ53UQ1+V1UQ53UQ1/1.4	
	&EFS=V1UQ53KF1+V1UQ53/1.3	-V1UQ53KF1+V1UQ53-KF1.1	1-X3 4		-BGS/R	4	&EFS=V1UQ53UQ1+V1UQ53UQ1/1.4	

			Date	12/22/2022	Volvo Trucks North America	Valiant TMS	Cable diagram =V1UQ53UQ1.3+V1UQ53UQ1.3-W1	Drawing name: =2V04&EFS-EL	= V1UQ53UQ1.3
			Ed.	MKLEPADLO					+ V1UQ53UQ1.3
			Appr		P6700 Underbody Mainline - Cell 2V04			Document type: EMA	Project nr: 22-16151
Modification	Date	Name	Original		Replacement of / Replaced by	Scale 1:1			Page 1 / 1630

Cable diagram

F09_002_VLU

Cable name -W1			cable type TPE					
remark			no. of conductors 4			cross-section 18		cable length 2
function text	Page / column	Target designation from	Connection point	conductor	Target designation to	Connection point	Page / column	function text
	&EFS=V1UQ53KF1+V1UQ53/1.5	-V1UQ53KF1+V1UQ53-KF1.1	1-X4 1		-BGS/R	1	&EFS=V1UQ53UQ1+V1UQ53UQ1/1.5	
	&EFS=V1UQ53KF1+V1UQ53/1.5	-V1UQ53KF1+V1UQ53-KF1.1	1-X4 2		-BGS/R	2	&EFS=V1UQ53UQ1+V1UQ53UQ1/1.5	
	&EFS=V1UQ53KF1+V1UQ53/1.5	-V1UQ53KF1+V1UQ53-KF1.1	1-X4 3		-BGS/R	3	&EFS=V1UQ53UQ1+V1UQ53UQ1/1.5	
	&EFS=V1UQ53KF1+V1UQ53/1.5	-V1UQ53KF1+V1UQ53-KF1.1	1-X4 4		-BGS/R	4	&EFS=V1UQ53UQ1+V1UQ53UQ1/1.5	

Cable diagram

F09_002_VLU

Cable name -W1			cable type TPE					
remark			no. of conductors 4			cross-section 18		cable length 4
function text	Page / column	Target designation from	Connection point	conductor	Target designation to	Connection point	Page / column	function text
	&EFS=V1UQ53KF1+V1UQ53UQ5	=V1UQ53KF1+V1UQ53-KF1.11-X5	1		-BGS/R	1	&EFS=V1UQ53UQ2+V1UQ53UQ2/1.0	
	&EFS=V1UQ53KF1+V1UQ53UQ5	=V1UQ53KF1+V1UQ53-KF1.11-X5	2		-BGS/R	2	&EFS=V1UQ53UQ2+V1UQ53UQ2/1.0	
	&EFS=V1UQ53KF1+V1UQ53UQ5	=V1UQ53KF1+V1UQ53-KF1.11-X5	3		-BGS/R	3	&EFS=V1UQ53UQ2+V1UQ53UQ2/1.1	
	&EFS=V1UQ53KF1+V1UQ53UQ5	=V1UQ53KF1+V1UQ53-KF1.11-X5	4		-BGS/R	4	&EFS=V1UQ53UQ2+V1UQ53UQ2/1.1	

=V1UQ53UQ1.4+.UQ53UQ1.4/1

=V1UQ53UQ2.2+.UQ53UQ2.2/1

			Date	12/22/2022	Volvo Trucks North America	Valiant TMS	Cable diagram =V1UQ53UQ2.1+V1UQ53UQ2.1-W1	Drawing name: =2V04&EFS-EL	= V1UQ53UQ2.1 + V1UQ53UQ2.1
			Ed.	MKLEPADLO	P6700 Underbody Mainline - Cell 2V04				
			Appr					Document type: EMA	Project nr: 22-16151
Modification	Date	Name	Original		Replacement of / Replaced by	Scale 1:1			Page 1 / 1630

Cable diagram

F09_002_VLU

Cable name -W1			cable type TPE					
remark			no. of conductors 4			cross-section 18		cable length 4
function text	Page / column	Target designation from	Connection point	conductor	Target designation to	Connection point	Page / column	function text
	&EFS=V1UQ53KF1+V1UQ53/1.2	=V1UQ53KF1+V1UQ53-KF1.1	1-X6 1		-BGS/R	1	&EFS=V1UQ53UQ2+V1UQ53UQ2/1.2	
	&EFS=V1UQ53KF1+V1UQ53/1.2	=V1UQ53KF1+V1UQ53-KF1.1	1-X6 2		-BGS/R	2	&EFS=V1UQ53UQ2+V1UQ53UQ2/1.2	
	&EFS=V1UQ53KF1+V1UQ53/1.2	=V1UQ53KF1+V1UQ53-KF1.1	1-X6 3		-BGS/R	3	&EFS=V1UQ53UQ2+V1UQ53UQ2/1.2	
	&EFS=V1UQ53KF1+V1UQ53/1.2	=V1UQ53KF1+V1UQ53-KF1.1	1-X6 4		-BGS/R	4	&EFS=V1UQ53UQ2+V1UQ53UQ2/1.2	

			Date	12/22/2022	Volvo Trucks North America	Valiant TMS	Cable diagram =V1UQ53UQ2.2+V1UQ53UQ2.2-W1	Drawing name: =2V04&EFS-EL	= V1UQ53UQ2.2
			Ed.	MKLEPADLO					+ V1UQ53UQ2.2
			Appr		P6700 Underbody Mainline - Cell 2V04			Document type: EMA	Project nr: 22-16151
Modification	Date	Name	Original		Replacement of / Replaced by	Scale 1:1			Page 1 / 1630

Cable diagram

F09_002_VLU

Cable name -W1			cable type TPE					
remark			no. of conductors 4			cross-section 18		cable length 3
function text	Page / column	Target designation from	Connection point	conductor	Target designation to	Connection point	Page / column	function text
	&EFS=V1UQ53KF1+V1UQ53UQ7	=V1UQ53KF1+V1UQ53-KF1.1	1-X7 1		-BGS/R	1	&EFS=V1UQ53UQ3+V1UQ53UQ3/1.0	
	&EFS=V1UQ53KF1+V1UQ53UQ7	=V1UQ53KF1+V1UQ53-KF1.1	1-X7 2		-BGS/R	2	&EFS=V1UQ53UQ3+V1UQ53UQ3/1.0	
	&EFS=V1UQ53KF1+V1UQ53UQ8	=V1UQ53KF1+V1UQ53-KF1.1	1-X7 3		-BGS/R	3	&EFS=V1UQ53UQ3+V1UQ53UQ3/1.1	
	&EFS=V1UQ53KF1+V1UQ53UQ8	=V1UQ53KF1+V1UQ53-KF1.1	1-X7 4		-BGS/R	4	&EFS=V1UQ53UQ3+V1UQ53UQ3/1.1	

=V1UQ53UQ2.2+.UQ53UQ2.2/1

=V1UQ53UQ4.1+.UQ53UQ4.1/1

			Date	12/22/2022	Volvo Trucks North America	Valiant TMS	Cable diagram =V1UQ53UQ3.1+V1UQ53UQ3.1-W1	Drawing name: =2V04&EFS-EL	= V1UQ53UQ3.1
			Ed.	MKLEPADLO					+ V1UQ53UQ3.1
			Appr		P6700 Underbody Mainline - Cell 2V04	Scale 1:1		Document type: EMA	Project nr: 22-16151
Modification	Date	Name	Original		Replacement of	Replaced by			Page 1 / 1630

Cable diagram

F09_002_VLU

Cable name -W1			cable type TPE					
remark			no. of conductors 4			cross-section 18		cable length 5
function text	Page / column	Target designation from	Connection point	conductor	Target designation to	Connection point	Page / column	function text
	&EFS=V1UQ53KF1+V1UQ53KF1+V1UQ53-KF1.1	-V1UQ53KF1+V1UQ53KF1+V1UQ53-KF1.1	1-X8 1		-BGS/R	1	&EFS=V1UQ53UQ4+V1UQ53UQ4/1.0	
	&EFS=V1UQ53KF1+V1UQ53KF1+V1UQ53-KF1.1	-V1UQ53KF1+V1UQ53KF1+V1UQ53-KF1.1	1-X8 2		-BGS/R	2	&EFS=V1UQ53UQ4+V1UQ53UQ4/1.0	
	&EFS=V1UQ53KF1+V1UQ53KF1+V1UQ53-KF1.1	-V1UQ53KF1+V1UQ53KF1+V1UQ53-KF1.1	1-X8 3		-BGS/R	3	&EFS=V1UQ53UQ4+V1UQ53UQ4/1.1	
	&EFS=V1UQ53KF1+V1UQ53KF1+V1UQ53-KF1.1	-V1UQ53KF1+V1UQ53KF1+V1UQ53-KF1.1	1-X8 4		-BGS/R	4	&EFS=V1UQ53UQ4+V1UQ53UQ4/1.1	

			Date	12/22/2022	Volvo Trucks North America	Valiant TMS	Cable diagram =V1UQ53UQ4.1+V1UQ53UQ4.1-W1	Drawing name: =2V04&EFS-EL	= V1UQ53UQ4.1
			Ed.	MKLEPADLO					+ V1UQ53UQ4.1
			Appr		P6700 Underbody Mainline - Cell 2V04	Scale 1:1		Document type: EMA	Project nr: 22-16151
Modification	Date	Name	Original		Replacement of	Replaced by			Page 1 / 1630

Cable diagram

F09_002_VLU

Cable name -W1			cable type TPE					
remark			no. of conductors 4			cross-section 18		cable length 5
function text	Page / column	Target designation from	Connection point	conductor	Target designation to	Connection point	Page / column	function text
	&EFS=V1UQ53KF1+V1UQ53UQ6	-V1UQ53KF1+V1UQ53-KF1.12	-X1 1		-BGS/R	1	&EFS=V1UQ53UQ4+V1UQ53UQ4/1.2	
	&EFS=V1UQ53KF1+V1UQ53UQ6	-V1UQ53KF1+V1UQ53-KF1.12	-X1 2		-BGS/R	2	&EFS=V1UQ53UQ4+V1UQ53UQ4/1.2	
	&EFS=V1UQ53KF1+V1UQ53UQ5	-V1UQ53KF1+V1UQ53-KF1.12	-X1 3		-BGS/R	3	&EFS=V1UQ53UQ4+V1UQ53UQ4/1.2	
	&EFS=V1UQ53KF1+V1UQ53UQ5	-V1UQ53KF1+V1UQ53-KF1.12	-X1 4		-BGS/R	4	&EFS=V1UQ53UQ4+V1UQ53UQ4/1.2	

			Date	12/22/2022	Volvo Trucks North America	Valiant TMS	Cable diagram =V1UQ53UQ4.2+V1UQ53UQ4.2-W1	Drawing name: =2V04&EFS-EL	= V1UQ53UQ4.2
			Ed.	MKLEPADLO					+ V1UQ53UQ4.2
			Appr		P6700 Underbody Mainline - Cell 2V04			Document type: EMA	Project nr: 22-16151
Modification	Date	Name	Original		Replacement of / Replaced by	Scale 1:1			Page 1 / 1630

Cable diagram

F09_002_VLU

Cable name	-W1	cable type	TPE		
remark		no. of conductors	4	cross-section 18	cable length 4

function text	Page / column	Target designation from	Connection point	conductor	Target designation to	Connection point	Page / column	function text
	&EFS=V1UQ53KF1+V1UQ53UQ5	=V1UQ53KF1+V1UQ53-KF1.12-X2	1		-XGR/S	P1:1	&EFS=V1UQ53UQ5+V1UQ53UQ5/1.1	
	&EFS=V1UQ53KF1+V1UQ53UQ5	=V1UQ53KF1+V1UQ53-KF1.12-X2	2		-XGR/S	P1:2	&EFS=V1UQ53UQ5+V1UQ53UQ5/1.1	
	&EFS=V1UQ53KF1+V1UQ53UQ5	=V1UQ53KF1+V1UQ53-KF1.12-X2	3		-XGR/S	P1:3	&EFS=V1UQ53UQ5+V1UQ53UQ5/1.1	
	&EFS=V1UQ53KF1+V1UQ53UQ5	=V1UQ53KF1+V1UQ53-KF1.12-X2	4		-XGR/S	P1:4	&EFS=V1UQ53UQ5+V1UQ53UQ5/1.1	

Cable diagram

F09_002_VLU

Cable name -W1.1			cable type TPE					
remark			no. of conductors 4			cross-section 18		cable length 0.5
function text	Page / column	Target designation from	Connection point	conductor	Target designation to	Connection point	Page / column	function text
	&EFS=V1UQ53UQ5+V1UQ53UQ5/1.1	-XGR/S	1		-XGR/S	J1:1	&EFS=V1UQ53UQ5+V1UQ53UQ5/1.1	
	&EFS=V1UQ53UQ5+V1UQ53UQ5/1.1	-XGR/S	4		-XGR/S	J1:4	&EFS=V1UQ53UQ5+V1UQ53UQ5/1.1	
	&EFS=V1UQ53UQ5+V1UQ53UQ5/1.1	-XGR/S	3		-XGR/S	J1:3	&EFS=V1UQ53UQ5+V1UQ53UQ5/1.1	

1 3

			Date	12/22/2022	Volvo Trucks North America	Valiant TMS	Cable diagram =V1UQ53UQ5.1+V1UQ53UQ5.1-W1.1	Drawing name: =2V04&EFS-EL	= V1UQ53UQ5.1	
			Ed.	MKLEPADLO					+ V1UQ53UQ5.1	
			Appr		P6700 Underbody Mainline - Cell 2V04			Document type: EMA	Project nr: 22-16151	Page 2
Modification	Date	Name	Original		Replacement of / Replaced by	Scale 1:1				1630

Cable diagram

F09_002_VLU

Cable name -W1.2			cable type TPE					
remark			no. of conductors 4			cross-section 18		cable length 1
function text	Page / column	Target designation from	Connection point	conductor	Target designation to	Connection point	Page / column	function text
	&EFS=V1UQ53UQ5+V1UQ53UQ5/1.2	-XGR/S	1		-XGR/S	J2:1	&EFS=V1UQ53UQ5+V1UQ53UQ5/1.2	
	&EFS=V1UQ53UQ5+V1UQ53UQ5/1.2	-XGR/S	4		-XGR/S	J2:4	&EFS=V1UQ53UQ5+V1UQ53UQ5/1.2	
	&EFS=V1UQ53UQ5+V1UQ53UQ5/1.2	-XGR/S	3		-XGR/S	J2:3	&EFS=V1UQ53UQ5+V1UQ53UQ5/1.2	

			Date	12/22/2022	Volvo Trucks North America	Valiant TMS	Cable diagram =V1UQ53UQ5.1+V1UQ53UQ5.1-W1.2	Drawing name: =2V04&EFS-EL	= V1UQ53UQ5.1	
			Ed.	MKLEPADLO					+ V1UQ53UQ5.1	
			Appr		P6700 Underbody Mainline - Cell 2V04			Document type: EMA	Project nr: 22-16151	Page 3
Modification	Date	Name	Original		Replacement of / Replaced by	Scale 1:1				1630

Cable diagram

F09_002_VLU

Cable name -W2			cable type TPE					
remark			no. of conductors 4			cross-section 18		cable length 4
function text	Page / column	Target designation from	Connection point	conductor	Target designation to	Connection point	Page / column	function text
	&EFS=V1UQ53KF1+V1UQ53UQ5/2.3	-V1UQ53KF1+V1UQ53-KF1.1	2-X3 1		-BG05	1	&EFS=V1UQ53UQ5+V1UQ53UQ5/1.3	
	&EFS=V1UQ53KF1+V1UQ53UQ5/2.3	-V1UQ53KF1+V1UQ53-KF1.1	2-X3 3		-BG05	3	&EFS=V1UQ53UQ5+V1UQ53UQ5/1.3	
	&EFS=V1UQ53KF1+V1UQ53UQ5/2.3	-V1UQ53KF1+V1UQ53-KF1.1	2-X3 4		-BG05	4	&EFS=V1UQ53UQ5+V1UQ53UQ5/1.3	

			Date	12/22/2022	Volvo Trucks North America	Valiant TMS	Cable diagram =V1UQ53UQ5.1+V1UQ53UQ5.1-W2	Drawing name: =2V04&EFS-EL	= V1UQ53UQ5.1
			Ed.	MKLEPADLO					+ V1UQ53UQ5.1
			Appr		P6700 Underbody Mainline - Cell 2V04			Document type: EMA	Project nr: 22-16151
Modification	Date	Name	Original		Replacement of	Replaced by	Scale 1:1		Page 4 / 1630

Cable diagram

F09_002_VLU

Cable name -W1			cable type TPE					
remark			no. of conductors 4			cross-section 18		cable length 6
function text	Page / column	Target designation from	Connection point	conductor	Target designation to	Connection point	Page / column	function text
	&EFS=V1UQ53KF1+V1UQ53KF1/2.5	-V1UQ53KF1+V1UQ53-KF1.1	2-X4 1		-BGS/R	1	&EFS=V1UQ53UQ6+V1UQ53UQ6/1.0	
	&EFS=V1UQ53KF1+V1UQ53KF1/2.5	-V1UQ53KF1+V1UQ53-KF1.1	2-X4 2		-BGS/R	2	&EFS=V1UQ53UQ6+V1UQ53UQ6/1.0	
	&EFS=V1UQ53KF1+V1UQ53KF1/2.5	-V1UQ53KF1+V1UQ53-KF1.1	2-X4 3		-BGS/R	3	&EFS=V1UQ53UQ6+V1UQ53UQ6/1.1	
	&EFS=V1UQ53KF1+V1UQ53KF1/2.5	-V1UQ53KF1+V1UQ53-KF1.1	2-X4 4		-BGS/R	4	&EFS=V1UQ53UQ6+V1UQ53UQ6/1.1	

			Date	12/22/2022	Volvo Trucks North America	Valiant TMS	Cable diagram =V1UQ53UQ6.1+V1UQ53UQ6.1-W1	Drawing name: =2V04&EFS-EL	= V1UQ53UQ6.1
			Ed.	MKLEPADLO					+ V1UQ53UQ6.1
			Appr		P6700 Underbody Mainline - Cell 2V04			Document type: EMA	Project nr: 22-16151
Modification	Date	Name	Original		Replacement of / Replaced by	Scale 1:1			Page 1 / 1630

Cable diagram

F09_002_VLU

Cable name -W1			cable type TPE					
remark			no. of conductors 4			cross-section 18		cable length 2
function text	Page / column	Target designation from	Connection point	conductor	Target designation to	Connection point	Page / column	function text
	&EFS/1.0	-XG1/2	P1:1		=V1UQ54KF1-KF1.11-X7	1	&EFS=V1UQ54KF1/1.7	
	&EFS/1.1	-XG1/2	P1:3		=V1UQ54KF1-KF1.11-X7	3	&EFS=V1UQ54KF1/1.8	
	&EFS/1.1	-XG1/2	P1:4		=V1UQ54KF1-KF1.11-X7	4	&EFS=V1UQ54KF1/1.8	
	&EFS/1.1	-XG1/2	P1:2		=V1UQ54KF1-KF1.11-X7	2	&EFS=V1UQ54KF1/1.7	

			Date	12/22/2022	Volvo Trucks North America	Valiant TMS	Cable diagram =V1UQ54BG0+V1UQ54-W1	Drawing name: =2V04&EFS-EL	= V1UQ54BG0
			Ed.	MKLEPADLO					+ V1UQ54
			Appr		P6700 Underbody Mainline - Cell 2V04			Document type: EMA	Project nr: 22-16151
Modification	Date	Name	Original		Replacement of / Replaced by	Scale 1:1			Page 1 / 1630

Cable diagram

F09_002_VLU

Cable name -W1.1			cable type TPE					
remark			no. of conductors 4			cross-section 18		cable length 1
function text	Page / column	Target designation from	Connection point	conductor	Target designation to	Connection point	Page / column	function text
	&EFS/1.0	-BG01	1		-XG1/2	J1:1	&EFS/1.0	
	&EFS/1.0	-BG01	4		-XG1/2	J1:4	&EFS/1.1	
	&EFS/1.1	-BG01	3		-XG1/2	J1:3	&EFS/1.1	

			Date	12/22/2022	Volvo Trucks North America	Valiant TMS	Cable diagram =V1UQ54BG0+V1UQ54-W1.1	Drawing name: =2V04&EFS-EL	= V1UQ54BG0
			Ed.	MKLEPADLO					+ V1UQ54
			Appr		P6700 Underbody Mainline - Cell 2V04			Document type: EMA	Project nr: 22-16151 Page 2
Modification	Date	Name	Original		Replacement of / Replaced by	Scale 1:1			1630

Cable diagram

F09_002_VLU

Cable name -W1.2			cable type TPE					
remark			no. of conductors 4			cross-section 18		cable length 3
function text	Page / column	Target designation from	Connection point	conductor	Target designation to	Connection point	Page / column	function text
	&EFS/1.1	-BG02	1		-XG1/2	J2:1	&EFS/1.1	
	&EFS/1.1	-BG02	4		-XG1/2	J2:4	&EFS/1.2	
	&EFS/1.2	-BG02	3		-XG1/2	J2:3	&EFS/1.2	

			Date	12/22/2022	Volvo Trucks North America	Valiant TMS	Cable diagram =V1UQ54BG0+V1UQ54-W1.2	Drawing name: =2V04&EFS-EL	= V1UQ54BG0
			Ed.	MKLEPADLO					+ V1UQ54
			Appr		P6700 Underbody Mainline - Cell 2V04			Document type: EMA	Project nr: 22-16151 Page 3
Modification	Date	Name	Original		Replacement of / Replaced by	Scale 1:1			1630

Cable diagram

F09_002_VLU

Cable name -KF100.15-P16			cable type PROFINET Cable					
remark			no. of conductors 4			cross-section 22		cable length
function text	Page / column	Target designation from	Connection point	conductor	Target designation to	Connection point	Page / column	function text
	&EFS=V1KF1+.UC15/2.5	=V1KF1+UC15-KF100.15-P16			-KF1-TP1		&EFS/1.3	

=V1UQ54BG0/3

2

			Date	12/22/2022	Volvo Trucks North America	Valiant TMS	Cable diagram =V1UQ54KF1+V1UQ54-KF100.15-P16	Drawing name: =2V04&EFS-EL	= V1UQ54KF1
			Ed.	MKLEPADLO					+ V1UQ54
			Appr		P6700 Underbody Mainline - Cell 2V04			Document type: EMA	Project nr: 22-16151
Modification	Date	Name	Original		Replacement of / Replaced by	Scale 1:1			Page 1 / 1630

Cable diagram

F09_002_VLU

Cable name -W1			cable type TPU					
remark			no. of conductors 5			cross-section 16		cable length 12
function text	Page / column	Target designation from	Connection point	conductor	Target designation to	Connection point	Page / column	function text
	&EFS=V1WC4+.UC15/20.4	-V1WC4+UC15-XD151	1		-KF1-X20	1	&EFS/1.1	
	&EFS=V1WC4+.UC15/20.4	-V1WC4+UC15-XD151	2		-KF1-X20	2	&EFS/1.1	
	&EFS=V1WC4+.UC15/20.5	-V1WC4+UC15-XD151	3		-KF1-X20	3	&EFS/1.1	
	&EFS=V1WC4+.UC15/20.5	-V1WC4+UC15-XD151	4		-KF1-X20	4	&EFS/1.2	
	&EFS=V1WC4+.UC15/20.5	-V1WC4+UC15-XD151	5		-KF1-X20	5	&EFS/1.2	

			Date	12/22/2022	Volvo Trucks North America	Valiant TMS	Cable diagram =V1UQ54KF1+V1UQ54-W1	Drawing name: =2V04&EFS-EL	= V1UQ54KF1
			Ed.	MKLEPADLO					+ V1UQ54
			Appr		P6700 Underbody Mainline - Cell 2V04			Document type: EMA	Project nr: 22-16151 Page 2
Modification	Date	Name	Original		Replacement of / Replaced by	Scale 1:1			1630

Cable diagram

F09_002_VLU

Cable name -W1			cable type TPE					
remark			no. of conductors 4			cross-section 18		cable length 2
function text	Page / column	Target designation from	Connection point	conductor	Target designation to	Connection point	Page / column	function text
	&EFS=V1UQ54KF1+V1UQ54/2.6	-V1UQ54KF1+V1UQ54-KF1.1	1-X1 1		-BGS/R	1	&EFS=V1UQ54UQ1+V1UQ54UQ1/1.0	
	&EFS=V1UQ54KF1+V1UQ54/2.6	-V1UQ54KF1+V1UQ54-KF1.1	1-X1 2		-BGS/R	2	&EFS=V1UQ54UQ1+V1UQ54UQ1/1.0	
	&EFS=V1UQ54KF1+V1UQ54/2.5	-V1UQ54KF1+V1UQ54-KF1.1	1-X1 3		-BGS/R	3	&EFS=V1UQ54UQ1+V1UQ54UQ1/1.1	
	&EFS=V1UQ54KF1+V1UQ54/2.5	-V1UQ54KF1+V1UQ54-KF1.1	1-X1 4		-BGS/R	4	&EFS=V1UQ54UQ1+V1UQ54UQ1/1.1	

Cable diagram

F09_002_VLU

Cable name -W1			cable type TPE					
remark			no. of conductors 4			cross-section 18		cable length 2
function text	Page / column	Target designation from	Connection point	conductor	Target designation to	Connection point	Page / column	function text
	&EFS=V1UQ54KF1+V1UQ54KF1/1.1	-V1UQ54KF1+V1UQ54-KF1.1	1		-BGS/R	1	&EFS=V1UQ54UQ2+V1UQ54UQ2/1.0	
	&EFS=V1UQ54KF1+V1UQ54KF1/1.2	-V1UQ54KF1+V1UQ54-KF1.1	2		-BGS/R	2	&EFS=V1UQ54UQ2+V1UQ54UQ2/1.0	
	&EFS=V1UQ54KF1+V1UQ54KF1/1.3	-V1UQ54KF1+V1UQ54-KF1.1	3		-BGS/R	3	&EFS=V1UQ54UQ2+V1UQ54UQ2/1.1	
	&EFS=V1UQ54KF1+V1UQ54KF1/1.4	-V1UQ54KF1+V1UQ54-KF1.1	4		-BGS/R	4	&EFS=V1UQ54UQ2+V1UQ54UQ2/1.1	

=V1UQ54UQ1.1+.UQ54UQ1.1/1

=V1UQ54UQ2.2+.UQ54UQ2.2/1

			Date	12/22/2022	Volvo Trucks North America	Valiant TMS	Cable diagram =V1UQ54UQ2.1+V1UQ54UQ2.1-W1	Drawing name: =2V04&EFS-EL	= V1UQ54UQ2.1
			Ed.	MKLEPADLO					+ V1UQ54UQ2.1
			Appr		P6700 Underbody Mainline - Cell 2V04			Document type: EMA	Project nr: 22-16151
Modification	Date	Name	Original		Replacement of	Replaced by	Scale 1:1		Page 1 / 1630

Cable diagram

F09_002_VLU

Cable name -W1			cable type TPE					
remark			no. of conductors 4			cross-section 18		cable length 2
function text	Page / column	Target designation from	Connection point	conductor	Target designation to	Connection point	Page / column	function text
	&EFS=V1UQ54KF1+V1UQ54KF1+V1UQ54-KF1.1	-V1UQ54KF1+V1UQ54KF1+V1UQ54-KF1.1	1-X3 1		-BGS/R	1	&EFS=V1UQ54UQ2+V1UQ54UQ2/1.2	
	&EFS=V1UQ54KF1+V1UQ54KF1+V1UQ54-KF1.1	-V1UQ54KF1+V1UQ54KF1+V1UQ54-KF1.1	1-X3 2		-BGS/R	2	&EFS=V1UQ54UQ2+V1UQ54UQ2/1.2	
	&EFS=V1UQ54KF1+V1UQ54KF1+V1UQ54-KF1.1	-V1UQ54KF1+V1UQ54KF1+V1UQ54-KF1.1	1-X3 3		-BGS/R	3	&EFS=V1UQ54UQ2+V1UQ54UQ2/1.2	
	&EFS=V1UQ54KF1+V1UQ54KF1+V1UQ54-KF1.1	-V1UQ54KF1+V1UQ54KF1+V1UQ54-KF1.1	1-X3 4		-BGS/R	4	&EFS=V1UQ54UQ2+V1UQ54UQ2/1.2	

			Date	12/22/2022	Volvo Trucks North America	Valiant TMS	Cable diagram =V1UQ54UQ2.2+V1UQ54UQ2.2-W1	Drawing name: =2V04&EFS-EL	= V1UQ54UQ2.2
			Ed.	MKLEPADLO					+ V1UQ54UQ2.2
			Appr		P6700 Underbody Mainline - Cell 2V04			Document type: EMA	Project nr: 22-16151
Modification	Date	Name	Original		Replacement of / Replaced by	Scale 1:1			Page 1 / 1630

Cable diagram

F09_002_VLU

Cable name -W1			cable type TPE					
remark			no. of conductors 4			cross-section 18		cable length 2
function text	Page / column	Target designation from	Connection point	conductor	Target designation to	Connection point	Page / column	function text
	&EFS=V1UQ54KF1+V1UQ54KF1/1.1	-V1UQ54KF1+V1UQ54-KF1.1	1		-X4 1 -BGS/R	1	&EFS=V1UQ54UQ3+V1UQ54UQ3/1.0	
	&EFS=V1UQ54KF1+V1UQ54KF1/1.1	-V1UQ54KF1+V1UQ54-KF1.1	2		-X4 2 -BGS/R	2	&EFS=V1UQ54UQ3+V1UQ54UQ3/1.0	
	&EFS=V1UQ54KF1+V1UQ54KF1/1.1	-V1UQ54KF1+V1UQ54-KF1.1	3		-X4 3 -BGS/R	3	&EFS=V1UQ54UQ3+V1UQ54UQ3/1.1	
	&EFS=V1UQ54KF1+V1UQ54KF1/1.1	-V1UQ54KF1+V1UQ54-KF1.1	4		-X4 4 -BGS/R	4	&EFS=V1UQ54UQ3+V1UQ54UQ3/1.1	

			Date	12/22/2022	Volvo Trucks North America	Valiant TMS	Cable diagram =V1UQ54UQ3.1+V1UQ54UQ3.1-W1	Drawing name: =2V04&EFS-EL	= V1UQ54UQ3.1
			Ed.	MKLEPADLO					+ V1UQ54UQ3.1
			Appr		P6700 Underbody Mainline - Cell 2V04			Document type: EMA	Project nr: 22-16151
Modification	Date	Name	Original		Replacement of / Replaced by	Scale 1:1			Page 1 / 1630

Cable diagram

F09_002_VLU

Cable name -W1			cable type TPE					
remark			no. of conductors 4			cross-section 18		cable length 2
function text	Page / column	Target designation from	Connection point	conductor	Target designation to	Connection point	Page / column	function text
	&EFS=V1UQ54KF1+V1UQ54	=V1UQ54KF1+V1UQ54-KF1.1	1-X5 1		-BGS/R	1	&EFS=V1UQ54UQ3+V1UQ54UQ3/1.2	
	&EFS=V1UQ54KF1+V1UQ54	=V1UQ54KF1+V1UQ54-KF1.1	1-X5 2		-BGS/R	2	&EFS=V1UQ54UQ3+V1UQ54UQ3/1.2	
	&EFS=V1UQ54KF1+V1UQ54	=V1UQ54KF1+V1UQ54-KF1.1	1-X5 3		-BGS/R	3	&EFS=V1UQ54UQ3+V1UQ54UQ3/1.2	
	&EFS=V1UQ54KF1+V1UQ54	=V1UQ54KF1+V1UQ54-KF1.1	1-X5 4		-BGS/R	4	&EFS=V1UQ54UQ3+V1UQ54UQ3/1.2	

			Date	12/22/2022	Volvo Trucks North America	Valiant TMS	Cable diagram =V1UQ54UQ3.2+V1UQ54UQ3.2-W1	Drawing name: =2V04&EFS-EL	= V1UQ54UQ3.2
			Ed.	MKLEPADLO					+ V1UQ54UQ3.2
			Appr		P6700 Underbody Mainline - Cell 2V04			Document type: EMA	Project nr: 22-16151
Modification	Date	Name	Original		Replacement of / Replaced by	Scale 1:1			Page 1 / 1630

Cable diagram

F09_002_VLU

Cable name -W1			cable type TPE					
remark			no. of conductors 4			cross-section 18		cable length 2
function text	Page / column	Target designation from	Connection point	conductor	Target designation to	Connection point	Page / column	function text
	&EFS=V1UQ54KF1+V1UQ54UQ4/1.0	-V1UQ54KF1+V1UQ54-KF1.1	1		-X6 1 -BGS/R	1	&EFS=V1UQ54UQ4+V1UQ54UQ4/1.0	
	&EFS=V1UQ54KF1+V1UQ54UQ4/1.0	-V1UQ54KF1+V1UQ54-KF1.1	2		-X6 2 -BGS/R	2	&EFS=V1UQ54UQ4+V1UQ54UQ4/1.0	
	&EFS=V1UQ54KF1+V1UQ54UQ4/1.1	-V1UQ54KF1+V1UQ54-KF1.1	3		-X6 3 -BGS/R	3	&EFS=V1UQ54UQ4+V1UQ54UQ4/1.1	
	&EFS=V1UQ54KF1+V1UQ54UQ4/1.1	-V1UQ54KF1+V1UQ54-KF1.1	4		-X6 4 -BGS/R	4	&EFS=V1UQ54UQ4+V1UQ54UQ4/1.1	

			Date	12/22/2022	Volvo Trucks North America	Valiant TMS	Cable diagram =V1UQ54UQ4.1+V1UQ54UQ4.1-W1	Drawing name: =2V04&EFS-EL	= V1UQ54UQ4.1
			Ed.	MKLEPADLO					+ V1UQ54UQ4.1
			Appr		P6700 Underbody Mainline - Cell 2V04			Document type: EMA	Project nr: 22-16151
Modification	Date	Name	Original		Replacement of / Replaced by	Scale 1:1			Page 1 / 1630

Cable diagram

F09_002_VLU

Cable name -W1			cable type TPE					
remark			no. of conductors 4			cross-section 18		cable length 2
function text	Page / column	Target designation from	Connection point	conductor	Target designation to	Connection point	Page / column	function text
	&EFS/1.0	-XG1/2	P1:1		=V1UQ55KF1-KF1.13-X7	1	&EFS=V1UQ55KF1/3.7	
	&EFS/1.1	-XG1/2	P1:3		=V1UQ55KF1-KF1.13-X7	3	&EFS=V1UQ55KF1/3.8	
	&EFS/1.1	-XG1/2	P1:4		=V1UQ55KF1-KF1.13-X7	4	&EFS=V1UQ55KF1/3.8	
	&EFS/1.1	-XG1/2	P1:2		=V1UQ55KF1-KF1.13-X7	2	&EFS=V1UQ55KF1/3.7	

			Date	12/22/2022	Volvo Trucks North America	Valiant TMS	Cable diagram =V1UQ55BG0+V1UQ55-W1	Drawing name: =2V04&EFS-EL	= V1UQ55BG0
			Ed.	MKLEPADLO					+ V1UQ55
			Appr		P6700 Underbody Mainline - Cell 2V04			Document type: EMA	Project nr: 22-16151 Page 1
Modification	Date	Name	Original		Replacement of / Replaced by	Scale 1:1			1630

Cable diagram

F09_002_VLU

Cable name -W1.1			cable type TPE					
remark			no. of conductors 4			cross-section 18		cable length 1
function text	Page / column	Target designation from	Connection point	conductor	Target designation to	Connection point	Page / column	function text
	&EFS/1.0	-BG01	1		-XG1/2	J1:1	&EFS/1.0	
	&EFS/1.0	-BG01	4		-XG1/2	J1:4	&EFS/1.1	
	&EFS/1.1	-BG01	3		-XG1/2	J1:3	&EFS/1.1	

			Date	12/22/2022	Volvo Trucks North America	Valiant TMS	Cable diagram =V1UQ55BG0+V1UQ55-W1.1	Drawing name: =2V04&EFS-EL	= V1UQ55BG0
			Ed.	MKLEPADLO					+ V1UQ55
			Appr		P6700 Underbody Mainline - Cell 2V04			Document type: EMA	Project nr: 22-16151
Modification	Date	Name	Original		Replacement of / Replaced by	Scale 1:1			Page 2 / 1630

Cable diagram

F09_002_VLU

Cable name -W1.2			cable type TPE					
remark			no. of conductors 4			cross-section 18		cable length 3
function text	Page / column	Target designation from	Connection point	conductor	Target designation to	Connection point	Page / column	function text
	&EFS/1.1	-BG02	1		-XG1/2	J2:1	&EFS/1.1	
	&EFS/1.1	-BG02	4		-XG1/2	J2:4	&EFS/1.2	
	&EFS/1.2	-BG02	3		-XG1/2	J2:3	&EFS/1.2	

			Date	12/22/2022	Volvo Trucks North America	Valiant TMS	Cable diagram =V1UQ55BG0+V1UQ55-W1.2	Drawing name: =2V04&EFS-EL	= V1UQ55BG0
			Ed.	MKLEPADLO					+ V1UQ55
			Appr		P6700 Underbody Mainline - Cell 2V04			Document type: EMA	Project nr: 22-16151
Modification	Date	Name	Original		Replacement of / Replaced by	Scale 1:1			Page 3 / 1630

Cable diagram

F09_002_VLU

Cable name	-KF100.14-P14		cable type	PROFINET Cable				
remark			no. of conductors	4	cross-section	22	cable length	
function text	Page / column	Target designation from	Connection point	conductor	Target designation to	Connection point	Page / column	function text
	&EFS=V1KF1+.UC14/2.5	=V1KF1+UC14-KF100.14-P14			-KF1-TP1		&EFS/1.3	

			Date	12/22/2022	Volvo Trucks North America	Valiant TMS	Cable diagram =V1UQ55KF1+V1UQ55-KF100.14-P14	Drawing name: =2V04&EFS-EL	= V1UQ55KF1
			Ed.	MKLEPADLO					+ V1UQ55
			Appr		P6700 Underbody Mainline - Cell 2V04			Document type: EMA	Project nr: 22-16151 Page 1
Modification	Date	Name	Original		Replacement of / Replaced by	Scale 1:1			1630

Cable diagram

F09_002_VLU

Cable name -W1			cable type TPU					
remark			no. of conductors 5			cross-section 16		cable length 30
function text	Page / column	Target designation from	Connection point	conductor	Target designation to	Connection point	Page / column	function text
	&EFS=V1WC4+.UC14/22.4	=V1WC4+UC14-XD171	1		-KF1-X20	1	&EFS/1.1	
	&EFS=V1WC4+.UC14/22.4	=V1WC4+UC14-XD171	2		-KF1-X20	2	&EFS/1.1	
	&EFS=V1WC4+.UC14/22.5	=V1WC4+UC14-XD171	3		-KF1-X20	3	&EFS/1.1	
	&EFS=V1WC4+.UC14/22.5	=V1WC4+UC14-XD171	4		-KF1-X20	4	&EFS/1.2	
	&EFS=V1WC4+.UC14/22.5	=V1WC4+UC14-XD171	5		-KF1-X20	5	&EFS/1.2	

			Date	12/22/2022	Volvo Trucks North America	Valiant TMS	Cable diagram =V1UQ55KF1+V1UQ55-W1	Drawing name: =2V04&EFS-EL	= V1UQ55KF1
			Ed.	MKLEPADLO					+ V1UQ55
			Appr		P6700 Underbody Mainline - Cell 2V04			Document type: EMA	Project nr: 22-16151
Modification	Date	Name	Original		Replacement of / Replaced by	Scale 1:1			Page 2 / 1630

Cable diagram

F09_002_VLU

Cable name -W1			cable type TPE					
remark			no. of conductors 4			cross-section 18		cable length 2
function text	Page / column	Target designation from	Connection point	conductor	Target designation to	Connection point	Page / column	function text
	&EFS=V1UQ55KF1+V1UQ55/1.6	-W1:1 =V1UQ55KF1+V1UQ55-KF1.1	1-X1 1		-BGS/R	1	&EFS=V1UQ55UQ1+V1UQ55UQ1/1.0	
	&EFS=V1UQ55KF1+V1UQ55/1.6	-W1:2 =V1UQ55KF1+V1UQ55-KF1.1	1-X1 2		-BGS/R	2	&EFS=V1UQ55UQ1+V1UQ55UQ1/1.0	
	&EFS=V1UQ55KF1+V1UQ55/1.5	-W1:3 =V1UQ55KF1+V1UQ55-KF1.1	1-X1 3		-BGS/R	3	&EFS=V1UQ55UQ1+V1UQ55UQ1/1.1	
	&EFS=V1UQ55KF1+V1UQ55/1.5	-W1:4 =V1UQ55KF1+V1UQ55-KF1.1	1-X1 4		-BGS/R	4	&EFS=V1UQ55UQ1+V1UQ55UQ1/1.1	

			Date	12/22/2022	Volvo Trucks North America	Valiant TMS	Cable diagram =V1UQ55UQ1.1+V1UQ55UQ1.1-W1	Drawing name: =2V04&EFS-EL	= V1UQ55UQ1.1
			Ed.	MKLEPADLO					+ V1UQ55UQ1.1
			Appr		P6700 Underbody Mainline - Cell 2V04			Document type: EMA	Project nr: 22-16151
Modification	Date	Name	Original		Replacement of / Replaced by	Scale 1:1			Page 1 / 1630

Cable diagram

F09_002_VLU

Cable name -W1			cable type TPE					
remark			no. of conductors 4			cross-section 18		cable length 2
function text	Page / column	Target designation from	Connection point	conductor	Target designation to	Connection point	Page / column	function text
	&EFS=V1UQ55KF1+V1UQ55UQ1	-W1:1	=V1UQ55KF1+V1UQ55-KF1.1	1-X2 1		-BGS/R	1	&EFS=V1UQ55UQ1+V1UQ55UQ1/1.2
	&EFS=V1UQ55KF1+V1UQ55UQ1	-W1:2	=V1UQ55KF1+V1UQ55-KF1.1	1-X2 2		-BGS/R	2	&EFS=V1UQ55UQ1+V1UQ55UQ1/1.2
	&EFS=V1UQ55KF1+V1UQ55UQ1	-W1:3	=V1UQ55KF1+V1UQ55-KF1.1	1-X2 3		-BGS/R	3	&EFS=V1UQ55UQ1+V1UQ55UQ1/1.2
	&EFS=V1UQ55KF1+V1UQ55UQ1	-W1:4	=V1UQ55KF1+V1UQ55-KF1.1	1-X2 4		-BGS/R	4	&EFS=V1UQ55UQ1+V1UQ55UQ1/1.2

			Date	12/22/2022	Volvo Trucks North America	Valiant TMS	Cable diagram =V1UQ55UQ1.2+V1UQ55UQ1.2-W1	Drawing name: =2V04&EFS-EL	= V1UQ55UQ1.2
			Ed.	MKLEPADLO					+ V1UQ55UQ1.2
			Appr		P6700 Underbody Mainline - Cell 2V04			Document type: EMA	Project nr: 22-16151
Modification	Date	Name	Original		Replacement of / Replaced by	Scale 1:1			Page 1 / 1630

Cable diagram

F09_002_VLU

Cable name -W1			cable type TPE					
remark			no. of conductors 4			cross-section 18		cable length 2
function text	Page / column	Target designation from	Connection point	conductor	Target designation to	Connection point	Page / column	function text
	&EFS=V1UQ55KF1+V1UQ55UQ1	-V1UQ55KF1+V1UQ55-KF1.1	1-X3 1		-BGS/R	1	&EFS=V1UQ55UQ1+V1UQ55UQ1/1.4	
	&EFS=V1UQ55KF1+V1UQ55UQ1	-V1UQ55KF1+V1UQ55-KF1.1	1-X3 2		-BGS/R	2	&EFS=V1UQ55UQ1+V1UQ55UQ1/1.4	
	&EFS=V1UQ55KF1+V1UQ55UQ1	-V1UQ55KF1+V1UQ55-KF1.1	1-X3 3		-BGS/R	3	&EFS=V1UQ55UQ1+V1UQ55UQ1/1.4	
	&EFS=V1UQ55KF1+V1UQ55UQ1	-V1UQ55KF1+V1UQ55-KF1.1	1-X3 4		-BGS/R	4	&EFS=V1UQ55UQ1+V1UQ55UQ1/1.4	

Cable diagram

F09_002_VLU

Cable name	-W1	cable type	TPE		
remark		no. of conductors	4	cross-section 18	cable length 2

function text	Page / column	Target designation from	Connection point	conductor	Target designation to	Connection point	Page / column	function text
	&EFS=V1UQ55KF1+V1UQ55UQ1/1.5	=V1UQ55KF1+V1UQ55-KF1.11-X4	1		-BGS/R	1	&EFS=V1UQ55UQ1+V1UQ55UQ1/1.5	
	&EFS=V1UQ55KF1+V1UQ55UQ1/1.5	=V1UQ55KF1+V1UQ55-KF1.11-X4	2		-BGS/R	2	&EFS=V1UQ55UQ1+V1UQ55UQ1/1.5	
	&EFS=V1UQ55KF1+V1UQ55UQ1/1.5	=V1UQ55KF1+V1UQ55-KF1.11-X4	3		-BGS/R	3	&EFS=V1UQ55UQ1+V1UQ55UQ1/1.5	
	&EFS=V1UQ55KF1+V1UQ55UQ1/1.5	=V1UQ55KF1+V1UQ55-KF1.11-X4	4		-BGS/R	4	&EFS=V1UQ55UQ1+V1UQ55UQ1/1.5	

=V1UQ55UQ1.3+.UQ55UQ1.3/1

=V1UQ55UQ2.1+.UQ55UQ2.1/1

			Date	12/22/2022	Volvo Trucks North America	Valiant TMS	Cable diagram =V1UQ55UQ1.4+V1UQ55UQ1.4-W1	Drawing name: =2V04&EFS-EL	= V1UQ55UQ1.4 + V1UQ55UQ1.4
			Ed.	MKLEPADLO	P6700 Underbody Mainline - Cell 2V04				
			Appr					Document type: EMA	Project nr: 22-16151
Modification	Date	Name	Original		Replacement of / Replaced by	Scale 1:1			Page 1 / 1630

Cable diagram

F09_002_VLU

Cable name -W1			cable type TPE					
remark			no. of conductors 4			cross-section 18		cable length 3
function text	Page / column	Target designation from	Connection point	conductor	Target designation to	Connection point	Page / column	function text
	&EFS=V1UQ55KF1+V1UQ55/1.1	-V1UQ55KF1+V1UQ55-KF1.1	1-X5 1		-BGS/R	1	&EFS=V1UQ55UQ2+V1UQ55UQ2/1.0	
	&EFS=V1UQ55KF1+V1UQ55/1.1	-V1UQ55KF1+V1UQ55-KF1.1	1-X5 2		-BGS/R	2	&EFS=V1UQ55UQ2+V1UQ55UQ2/1.0	
	&EFS=V1UQ55KF1+V1UQ55/1.1	-V1UQ55KF1+V1UQ55-KF1.1	1-X5 3		-BGS/R	3	&EFS=V1UQ55UQ2+V1UQ55UQ2/1.1	
	&EFS=V1UQ55KF1+V1UQ55/1.1	-V1UQ55KF1+V1UQ55-KF1.1	1-X5 4		-BGS/R	4	&EFS=V1UQ55UQ2+V1UQ55UQ2/1.1	

Cable diagram

F09_002_VLU

Cable name -W1			cable type TPE					
remark			no. of conductors 4			cross-section 18		cable length 3
function text	Page / column	Target designation from	Connection point	conductor	Target designation to	Connection point	Page / column	function text
	&EFS=V1UQ55KF1+V1UQ55UQ2/1.1	-V1UQ55KF1+V1UQ55-KF1.1	1		-X6	1	&EFS=V1UQ55UQ2+V1UQ55UQ2/1.2	
	&EFS=V1UQ55KF1+V1UQ55UQ2/1.1	-V1UQ55KF1+V1UQ55-KF1.1	2		-X6	2	&EFS=V1UQ55UQ2+V1UQ55UQ2/1.2	
	&EFS=V1UQ55KF1+V1UQ55UQ2/1.1	-V1UQ55KF1+V1UQ55-KF1.1	3		-X6	3	&EFS=V1UQ55UQ2+V1UQ55UQ2/1.2	
	&EFS=V1UQ55KF1+V1UQ55UQ2/1.1	-V1UQ55KF1+V1UQ55-KF1.1	4		-X6	4	&EFS=V1UQ55UQ2+V1UQ55UQ2/1.2	

=V1UQ55UQ2.1+.UQ55UQ2.1/1

=V1UQ55UQ3.1+.UQ55UQ3.1/1

			Date	12/22/2022	Volvo Trucks North America	Valiant TMS	Cable diagram =V1UQ55UQ2.2+V1UQ55UQ2.2-W1	Drawing name: =2V04&EFS-EL	= V1UQ55UQ2.2
			Ed.	MKLEPADLO					+ V1UQ55UQ2.2
			Appr		P6700 Underbody Mainline - Cell 2V04			Document type: EMA	Project nr: 22-16151
Modification	Date	Name	Original		Replacement of / Replaced by	Scale 1:1			Page 1 / 1630

Cable diagram

F09_002_VLU

Cable name	-W1	cable type	TPE		
remark		no. of conductors	4	cross-section 18	cable length 4

function text	Page / column	Target designation from	Connection point	conductor	Target designation to	Connection point	Page / column	function text
	&EFS=V1UQ55KF1+V1UQ55UQ7	=V1UQ55KF1+V1UQ55-KF1.11-X7	1		-BGS/R	1	&EFS=V1UQ55UQ3+V1UQ55UQ3/1.0	
	&EFS=V1UQ55KF1+V1UQ55UQ7	=V1UQ55KF1+V1UQ55-KF1.11-X7	2		-BGS/R	2	&EFS=V1UQ55UQ3+V1UQ55UQ3/1.0	
	&EFS=V1UQ55KF1+V1UQ55UQ8	=V1UQ55KF1+V1UQ55-KF1.11-X7	3		-BGS/R	3	&EFS=V1UQ55UQ3+V1UQ55UQ3/1.1	
	&EFS=V1UQ55KF1+V1UQ55UQ8	=V1UQ55KF1+V1UQ55-KF1.11-X7	4		-BGS/R	4	&EFS=V1UQ55UQ3+V1UQ55UQ3/1.1	

Cable diagram

F09_002_VLU

Cable name -W1			cable type TPE					
remark			no. of conductors 4			cross-section 18		cable length 4
function text	Page / column	Target designation from	Connection point	conductor	Target designation to	Connection point	Page / column	function text
	&EFS=V1UQ55KF1+V1UQ55UQ3/1.1	-V1UQ55KF1+V1UQ55-KF1.1	1-X8 1		-BGS/R	1	&EFS=V1UQ55UQ3+V1UQ55UQ3/1.2	
	&EFS=V1UQ55KF1+V1UQ55UQ3/1.1	-V1UQ55KF1+V1UQ55-KF1.1	1-X8 2		-BGS/R	2	&EFS=V1UQ55UQ3+V1UQ55UQ3/1.2	
	&EFS=V1UQ55KF1+V1UQ55UQ3/1.1	-V1UQ55KF1+V1UQ55-KF1.1	1-X8 3		-BGS/R	3	&EFS=V1UQ55UQ3+V1UQ55UQ3/1.2	
	&EFS=V1UQ55KF1+V1UQ55UQ3/1.1	-V1UQ55KF1+V1UQ55-KF1.1	1-X8 4		-BGS/R	4	&EFS=V1UQ55UQ3+V1UQ55UQ3/1.2	

=V1UQ55UQ3.1+.UQ55UQ3.1/1

=V1UQ55UQ4.1+.UQ55UQ4.1/1

			Date	12/22/2022	Volvo Trucks North America	Valiant TMS	Cable diagram =V1UQ55UQ3.2+V1UQ55UQ3.2-W1	Drawing name: =2V04&EFS-EL	= V1UQ55UQ3.2
			Ed.	MKLEPADLO					+ V1UQ55UQ3.2
			Appr		P6700 Underbody Mainline - Cell 2V04			Document type: EMA	Project nr: 22-16151
Modification	Date	Name	Original		Replacement of / Replaced by	Scale 1:1			Page 1 / 1630

Cable diagram

F09_002_VLU

Cable name	-W1	cable type	TPE		
remark		no. of conductors	4	cross-section 18	cable length 4

function text	Page / column	Target designation from	Connection point	conductor	Target designation to	Connection point	Page / column	function text
	&EFS=V1UQ55KF1+V1UQ55UQ5	=V1UQ55KF1+V1UQ55-KF1.12-X1	1		-BGS/R	1	&EFS=V1UQ55UQ4+V1UQ55UQ4/1.0	
	&EFS=V1UQ55KF1+V1UQ55UQ5	=V1UQ55KF1+V1UQ55-KF1.12-X1	2		-BGS/R	2	&EFS=V1UQ55UQ4+V1UQ55UQ4/1.0	
	&EFS=V1UQ55KF1+V1UQ55UQ1	=V1UQ55KF1+V1UQ55-KF1.12-X1	3		-BGS/R	3	&EFS=V1UQ55UQ4+V1UQ55UQ4/1.1	
	&EFS=V1UQ55KF1+V1UQ55UQ1	=V1UQ55KF1+V1UQ55-KF1.12-X1	4		-BGS/R	4	&EFS=V1UQ55UQ4+V1UQ55UQ4/1.1	

=V1UQ55UQ3.2+.UQ55UQ3.2/1

=V1UQ55UQ4.2+.UQ55UQ4.2/1

			Date	12/22/2022	Volvo Trucks North America	Valiant TMS	Cable diagram =V1UQ55UQ4.1+V1UQ55UQ4.1-W1	Drawing name: =2V04&EFS-EL	= V1UQ55UQ4.1 + V1UQ55UQ4.1
			Ed.	MKLEPADLO	P6700 Underbody Mainline - Cell 2V04				
			Appr					Document type: EMA	Project nr: 22-16151
Modification	Date	Name	Original		Replacement of / Replaced by	Scale 1:1			Page 1 / 1630

Cable diagram

F09_002_VLU

Cable name -W1			cable type TPE					
remark			no. of conductors 4			cross-section 18		cable length 4
function text	Page / column	Target designation from	Connection point	conductor	Target designation to	Connection point	Page / column	function text
	&EFS=V1UQ55KF1+V1UQ55UQ1	=V1UQ55KF1+V1UQ55-KF1.1	2-X2 1		-BGS/R	1	&EFS=V1UQ55UQ4+V1UQ55UQ4/1.2	
	&EFS=V1UQ55KF1+V1UQ55UQ2	=V1UQ55KF1+V1UQ55-KF1.1	2-X2 2		-BGS/R	2	&EFS=V1UQ55UQ4+V1UQ55UQ4/1.2	
	&EFS=V1UQ55KF1+V1UQ55UQ3	=V1UQ55KF1+V1UQ55-KF1.1	2-X2 3		-BGS/R	3	&EFS=V1UQ55UQ4+V1UQ55UQ4/1.2	
	&EFS=V1UQ55KF1+V1UQ55UQ4	=V1UQ55KF1+V1UQ55-KF1.1	2-X2 4		-BGS/R	4	&EFS=V1UQ55UQ4+V1UQ55UQ4/1.2	

			Date	12/22/2022	Volvo Trucks North America	Valiant TMS	Cable diagram =V1UQ55UQ4.2+V1UQ55UQ4.2-W1	Drawing name: =2V04&EFS-EL	= V1UQ55UQ4.2
			Ed.	MKLEPADLO					+ V1UQ55UQ4.2
			Appr		P6700 Underbody Mainline - Cell 2V04			Document type: EMA	Project nr: 22-16151
Modification	Date	Name	Original		Replacement of / Replaced by	Scale 1:1			Page 1 / 1630

Cable diagram

F09_002_VLU

Cable name -W1			cable type TPE					
remark			no. of conductors 4			cross-section 18		cable length 4
function text	Page / column	Target designation from	Connection point	conductor	Target designation to	Connection point	Page / column	function text
	&EFS=V1UQ55KF1+V1UQ55UQ5/2.3	=V1UQ55KF1+V1UQ55-KF1.1	2-X3 1		-BGS/R	1	&EFS=V1UQ55UQ5+V1UQ55UQ5/1.0	
	&EFS=V1UQ55KF1+V1UQ55UQ5/2.3	=V1UQ55KF1+V1UQ55-KF1.1	2-X3 2		-BGS/R	2	&EFS=V1UQ55UQ5+V1UQ55UQ5/1.0	
	&EFS=V1UQ55KF1+V1UQ55UQ5/2.3	=V1UQ55KF1+V1UQ55-KF1.1	2-X3 3		-BGS/R	3	&EFS=V1UQ55UQ5+V1UQ55UQ5/1.1	
	&EFS=V1UQ55KF1+V1UQ55UQ5/2.3	=V1UQ55KF1+V1UQ55-KF1.1	2-X3 4		-BGS/R	4	&EFS=V1UQ55UQ5+V1UQ55UQ5/1.1	

			Date	12/22/2022	Volvo Trucks North America	Valiant TMS	Cable diagram =V1UQ55UQ5.1+V1UQ55UQ5.1-W1	Drawing name: =2V04&EFS-EL	= V1UQ55UQ5.1
			Ed.	MKLEPADLO					+ V1UQ55UQ5.1
			Appr		P6700 Underbody Mainline - Cell 2V04			Document type: EMA	Project nr: 22-16151
Modification	Date	Name	Original		Replacement of / Replaced by	Scale 1:1			Page 1 / 1630

Cable diagram

F09_002_VLU

Cable name -W1			cable type TPE					
remark			no. of conductors 4			cross-section 18		cable length 4
function text	Page / column	Target designation from	Connection point	conductor	Target designation to	Connection point	Page / column	function text
	&EFS=V1UQ55KF1+V1UQ55UQ5	-W1:1 =V1UQ55KF1+V1UQ55-KF1.1	2-X4 1		-BGS/R	1	&EFS=V1UQ55UQ5+V1UQ55UQ5/1.2	
	&EFS=V1UQ55KF1+V1UQ55UQ5	-W1:2 =V1UQ55KF1+V1UQ55-KF1.1	2-X4 2		-BGS/R	2	&EFS=V1UQ55UQ5+V1UQ55UQ5/1.2	
	&EFS=V1UQ55KF1+V1UQ55UQ5	-W1:3 =V1UQ55KF1+V1UQ55-KF1.1	2-X4 3		-BGS/R	3	&EFS=V1UQ55UQ5+V1UQ55UQ5/1.2	
	&EFS=V1UQ55KF1+V1UQ55UQ5	-W1:4 =V1UQ55KF1+V1UQ55-KF1.1	2-X4 4		-BGS/R	4	&EFS=V1UQ55UQ5+V1UQ55UQ5/1.2	

Cable diagram

F09_002_VLU

Cable name	-W1	cable type	TPE		
remark		no. of conductors	4	cross-section 18	cable length 5

function text	Page / column	Target designation from	Connection point	conductor	Target designation to	Connection point	Page / column	function text
	&EFS=V1UQ55KF1+V1UQ55UQ5	=V1UQ55KF1+V1UQ55-KF1.12-X5	1		-BGS/R	1	&EFS=V1UQ55UQ6+V1UQ55UQ6/1.0	
	&EFS=V1UQ55KF1+V1UQ55UQ5	=V1UQ55KF1+V1UQ55-KF1.12-X5	2		-BGS/R	2	&EFS=V1UQ55UQ6+V1UQ55UQ6/1.0	
	&EFS=V1UQ55KF1+V1UQ55UQ5	=V1UQ55KF1+V1UQ55-KF1.12-X5	3		-BGS/R	3	&EFS=V1UQ55UQ6+V1UQ55UQ6/1.1	
	&EFS=V1UQ55KF1+V1UQ55UQ5	=V1UQ55KF1+V1UQ55-KF1.12-X5	4		-BGS/R	4	&EFS=V1UQ55UQ6+V1UQ55UQ6/1.1	

=V1UQ55UQ5.2+.UQ55UQ5.2/1

=V1UQ55UQ6.2+.UQ55UQ6.2/1

			Date	12/22/2022	Volvo Trucks North America	Valiant TMS	Cable diagram =V1UQ55UQ6.1+V1UQ55UQ6.1-W1	Drawing name: =2V04&EFS-EL	= V1UQ55UQ6.1 + V1UQ55UQ6.1
			Ed.	MKLEPADLO	P6700 Underbody Mainline - Cell 2V04			Document type: EMA	Project nr: 22-16151
			Appr						Page 1
Modification	Date	Name	Original		Replacement of / Replaced by	Scale 1:1			1630

Cable diagram

F09_002_VLU

Cable name -W1			cable type TPE					
remark			no. of conductors 4			cross-section 18		cable length 5
function text	Page / column	Target designation from	Connection point	conductor	Target designation to	Connection point	Page / column	function text
	&EFS=V1UQ55KF1+V1UQ55UQ6	-W1:1 =V1UQ55KF1+V1UQ55-KF1.1	2-X6 1		-BGS/R	1	&EFS=V1UQ55UQ6+V1UQ55UQ6/1.2	
	&EFS=V1UQ55KF1+V1UQ55UQ6	-W1:2 =V1UQ55KF1+V1UQ55-KF1.1	2-X6 2		-BGS/R	2	&EFS=V1UQ55UQ6+V1UQ55UQ6/1.2	
	&EFS=V1UQ55KF1+V1UQ55UQ6	-W1:3 =V1UQ55KF1+V1UQ55-KF1.1	2-X6 3		-BGS/R	3	&EFS=V1UQ55UQ6+V1UQ55UQ6/1.2	
	&EFS=V1UQ55KF1+V1UQ55UQ6	-W1:4 =V1UQ55KF1+V1UQ55-KF1.1	2-X6 4		-BGS/R	4	&EFS=V1UQ55UQ6+V1UQ55UQ6/1.2	

			Date	12/22/2022	Volvo Trucks North America	Valiant TMS	Cable diagram =V1UQ55UQ6.2+V1UQ55UQ6.2-W1	Drawing name: =2V04&EFS-EL	= V1UQ55UQ6.2
			Ed.	MKLEPADLO					+ V1UQ55UQ6.2
			Appr		P6700 Underbody Mainline - Cell 2V04			Document type: EMA	Project nr: 22-16151
Modification	Date	Name	Original		Replacement of / Replaced by	Scale 1:1			Page 1 / 1630

Cable diagram

F09_002_VLU

Cable name -W1			cable type TPE					
remark			no. of conductors 4			cross-section 18		cable length 5
function text	Page / column	Target designation from	Connection point	conductor	Target designation to	Connection point	Page / column	function text
	&EFS=V1UQ55KF1+V1UQ55UQ7	-V1UQ55KF1+V1UQ55-KF1.1	2-X7 1		-BGS/R	1	&EFS=V1UQ55UQ7+V1UQ55UQ7/1.0	
	&EFS=V1UQ55KF1+V1UQ55UQ7	-V1UQ55KF1+V1UQ55-KF1.1	2-X7 2		-BGS/R	2	&EFS=V1UQ55UQ7+V1UQ55UQ7/1.0	
	&EFS=V1UQ55KF1+V1UQ55UQ8	-V1UQ55KF1+V1UQ55-KF1.1	2-X7 3		-BGS/R	3	&EFS=V1UQ55UQ7+V1UQ55UQ7/1.1	
	&EFS=V1UQ55KF1+V1UQ55UQ8	-V1UQ55KF1+V1UQ55-KF1.1	2-X7 4		-BGS/R	4	&EFS=V1UQ55UQ7+V1UQ55UQ7/1.1	

			Date	12/22/2022	Volvo Trucks North America	Valiant TMS	Cable diagram =V1UQ55UQ7.1+V1UQ55UQ7.1-W1	Drawing name: =2V04&EFS-EL	= V1UQ55UQ7.1
			Ed.	MKLEPADLO					+ V1UQ55UQ7.1
			Appr		P6700 Underbody Mainline - Cell 2V04			Document type: EMA	Project nr: 22-16151
Modification	Date	Name	Original		Replacement of / Replaced by	Scale 1:1			Page 1 / 1630

Cable diagram

F09_002_VLU

Cable name -W1			cable type TPE					
remark			no. of conductors 4			cross-section 18		cable length 5
function text	Page / column	Target designation from	Connection point	conductor	Target designation to	Connection point	Page / column	function text
	&EFS=V1UQ55KF1+V1UQ55UQ8	-V1UQ55KF1+V1UQ55-KF1.1	2-X8 1		-BGS/R	1	&EFS=V1UQ55UQ7+V1UQ55UQ7/1.2	
	&EFS=V1UQ55KF1+V1UQ55UQ8	-V1UQ55KF1+V1UQ55-KF1.1	2-X8 2		-BGS/R	2	&EFS=V1UQ55UQ7+V1UQ55UQ7/1.2	
	&EFS=V1UQ55KF1+V1UQ55UQ8	-V1UQ55KF1+V1UQ55-KF1.1	2-X8 3		-BGS/R	3	&EFS=V1UQ55UQ7+V1UQ55UQ7/1.2	
	&EFS=V1UQ55KF1+V1UQ55UQ8	-V1UQ55KF1+V1UQ55-KF1.1	2-X8 4		-BGS/R	4	&EFS=V1UQ55UQ7+V1UQ55UQ7/1.2	

Cable diagram

F09_002_VLU

Cable name -W1			cable type TPE					
remark			no. of conductors 4			cross-section 18		cable length 6
function text	Page / column	Target designation from	Connection point	conductor	Target designation to	Connection point	Page / column	function text
	&EFS=V1UQ55KF1+V1UQ55UQ6	=V1UQ55KF1+V1UQ55-KF1.1	3-X1 1		-BGS/R	1	&EFS=V1UQ55UQ8+V1UQ55UQ8/1.0	
	&EFS=V1UQ55KF1+V1UQ55UQ6	=V1UQ55KF1+V1UQ55-KF1.1	3-X1 2		-BGS/R	2	&EFS=V1UQ55UQ8+V1UQ55UQ8/1.0	
	&EFS=V1UQ55KF1+V1UQ55UQ5	=V1UQ55KF1+V1UQ55-KF1.1	3-X1 3		-BGS/R	3	&EFS=V1UQ55UQ8+V1UQ55UQ8/1.1	
	&EFS=V1UQ55KF1+V1UQ55UQ5	=V1UQ55KF1+V1UQ55-KF1.1	3-X1 4		-BGS/R	4	&EFS=V1UQ55UQ8+V1UQ55UQ8/1.1	

			Date	12/22/2022	Volvo Trucks North America	Valiant TMS	Cable diagram =V1UQ55UQ8.1+V1UQ55UQ8.1-W1	Drawing name: =2V04&EFS-EL	= V1UQ55UQ8.1
			Ed.	MKLEPADLO					+ V1UQ55UQ8.1
			Appr		P6700 Underbody Mainline - Cell 2V04			Document type: EMA	Project nr: 22-16151
Modification	Date	Name	Original		Replacement of / Replaced by	Scale 1:1			Page 1 / 1630

Cable diagram

F09_002_VLU

Cable name -W1			cable type TPE					
remark			no. of conductors 4			cross-section 18		cable length 6
function text	Page / column	Target designation from	Connection point	conductor	Target designation to	Connection point	Page / column	function text
	&EFS=V1UQ55KF1+V1UQ55UQ1/6.1	-V1UQ55KF1+V1UQ55-KF1.1	3-X2 1		-BGS/R	1	&EFS=V1UQ55UQ8+V1UQ55UQ8/1.2	
	&EFS=V1UQ55KF1+V1UQ55UQ1/6.2	-V1UQ55KF1+V1UQ55-KF1.1	3-X2 2		-BGS/R	2	&EFS=V1UQ55UQ8+V1UQ55UQ8/1.2	
	&EFS=V1UQ55KF1+V1UQ55UQ1/6.3	-V1UQ55KF1+V1UQ55-KF1.1	3-X2 3		-BGS/R	3	&EFS=V1UQ55UQ8+V1UQ55UQ8/1.2	
	&EFS=V1UQ55KF1+V1UQ55UQ1/6.4	-V1UQ55KF1+V1UQ55-KF1.1	3-X2 4		-BGS/R	4	&EFS=V1UQ55UQ8+V1UQ55UQ8/1.2	

Cable diagram

F09_002_VLU

Cable name -W1			cable type TPE					
remark			no. of conductors 4			cross-section 18		cable length 6
function text	Page / column	Target designation from	Connection point	conductor	Target designation to	Connection point	Page / column	function text
	&EFS=V1UQ55KF1+V1UQ55UQ8	=V1UQ55KF1+V1UQ55-KF1.1	3-X3 1		-BGS/R	1	&EFS=V1UQ55UQ9+V1UQ55UQ9/1.0	
	&EFS=V1UQ55KF1+V1UQ55UQ8	=V1UQ55KF1+V1UQ55-KF1.1	3-X3 2		-BGS/R	2	&EFS=V1UQ55UQ9+V1UQ55UQ9/1.0	
	&EFS=V1UQ55KF1+V1UQ55UQ8	=V1UQ55KF1+V1UQ55-KF1.1	3-X3 3		-BGS/R	3	&EFS=V1UQ55UQ9+V1UQ55UQ9/1.1	
	&EFS=V1UQ55KF1+V1UQ55UQ8	=V1UQ55KF1+V1UQ55-KF1.1	3-X3 4		-BGS/R	4	&EFS=V1UQ55UQ9+V1UQ55UQ9/1.1	

=V1UQ55UQ8.2+.UQ55UQ8.2/1

=V1UQ55UQ9.2+.UQ55UQ9.2/1

			Date	12/22/2022	Volvo Trucks North America	Valiant TMS	Cable diagram =V1UQ55UQ9.1+V1UQ55UQ9.1-W1	Drawing name: =2V04&EFS-EL	= V1UQ55UQ9.1
			Ed.	MKLEPADLO					+ V1UQ55UQ9.1
			Appr		P6700 Underbody Mainline - Cell 2V04			Document type: EMA	Project nr: 22-16151
Modification	Date	Name	Original		Replacement of	Replaced by	Scale 1:1		Page 1 / 1630

Cable diagram

F09_002_VLU

Cable name -W1			cable type TPE					
remark			no. of conductors 4			cross-section 18		cable length 6
function text	Page / column	Target designation from	Connection point	conductor	Target designation to	Connection point	Page / column	function text
	&EFS=V1UQ55KF1+V1UQ55UQ9/1.1	=V1UQ55KF1+V1UQ55-KF1.1	3-X4 1		-BGS/R	1	&EFS=V1UQ55UQ9+V1UQ55UQ9/1.2	
	&EFS=V1UQ55KF1+V1UQ55UQ9/1.1	=V1UQ55KF1+V1UQ55-KF1.1	3-X4 2		-BGS/R	2	&EFS=V1UQ55UQ9+V1UQ55UQ9/1.2	
	&EFS=V1UQ55KF1+V1UQ55UQ9/1.1	=V1UQ55KF1+V1UQ55-KF1.1	3-X4 3		-BGS/R	3	&EFS=V1UQ55UQ9+V1UQ55UQ9/1.2	
	&EFS=V1UQ55KF1+V1UQ55UQ9/1.1	=V1UQ55KF1+V1UQ55-KF1.1	3-X4 4		-BGS/R	4	&EFS=V1UQ55UQ9+V1UQ55UQ9/1.2	

=V1UQ55UQ9.1+.UQ55UQ9.1/1

=V1WC1+.UC11/1

			Date	12/22/2022	Volvo Trucks North America	Valiant TMS	Cable diagram =V1UQ55UQ9.2+V1UQ55UQ9.2-W1	Drawing name: =2V04&EFS-EL	= V1UQ55UQ9.2
			Ed.	MKLEPADLO					+ V1UQ55UQ9.2
			Appr		P6700 Underbody Mainline - Cell 2V04			Document type: EMA	Project nr: 22-16151
Modification	Date	Name	Original		Replacement of / Replaced by	Scale 1:1			Page 1 / 1630

Cable diagram

F09_002_VLU

Cable name -GND1			cable type RK					
remark			no. of conductors 1			cross-section 6		cable length
function text	Page / column	Target designation from	Connection point	conductor	Target designation to	Connection point	Page / column	function text
480VAC TN-S 3 PHASE 60Hz Fed from: ..... short circuit protection: ..... Over current: ..... cable type: 4/0 AWG IkMax =.....kA IkMin = ...kA Z: ..... mΩ.	&EFS/1.3	-GND			-PE	PE	&EFS/1.3	480VAC TN-S 3 PHASE 60Hz Fed from: ..... short circuit protection: ..... Over current: ..... cable type: 4/0 AWG IkMax =.....kA IkMin = ...kA Z: ..... mΩ.

=V1UQ55UQ9.2+.UQ55UQ9.2/1

2

			Date	12/22/2022	Volvo Trucks North America	Valiant TMS	Cable diagram =V1WC1+V1UC11-GND1	Drawing name: =2V04&EFS-EL	= V1WC1	
			Ed.	MKLEPADLO					+ V1UC11	
			Appr		P6700 Underbody Mainline - Cell 2V04			Document type: EMA	Project nr: 22-16151	Page 1
Modification	Date	Name	Original		Replacement of / Replaced by	Scale 1:1				1630

Cable diagram

F09_002_VLU

Cable name -KF100.11-P2			cable type PROFINET Cable					
remark			no. of conductors 4			cross-section 22		cable length
function text	Page / column	Target designation from	Connection point	conductor	Target designation to	Connection point	Page / column	function text
	&EFS=V1KF1/2.4	=V1KF1-KF100.11	P2		-KF1.2	P2	&EFS/1.5	

1

+.UC12/1

			Date	12/22/2022	Volvo Trucks North America	Valiant TMS	Cable diagram =V1WC1+V1UC11-KF100.11-P2	Drawing name: =2V04&EFS-EL	= V1WC1
			Ed.	MKLEPADLO					+ V1UC11
			Appr		P6700 Underbody Mainline - Cell 2V04			Document type: EMA	Project nr: 22-16151
Modification	Date	Name	Original		Replacement of / Replaced by	Scale 1:1			Page 2 / 1630

Cable diagram

F09_002_VLU

Cable name -GND1			cable type RK					
remark			no. of conductors 1			cross-section 6		cable length
function text	Page / column	Target designation from	Connection point	conductor	Target designation to	Connection point	Page / column	function text
480VAC TN-S 3 PHASE 60Hz Fed from: ..... short circuit protection: ..... Over current: ..... cable type: 4/0 AWG IkMax =.....kA IkMin = ...kA Z: ..... mΩ.	&EFS/1.3	-GND			-PE	PE	&EFS/1.3	480VAC TN-S 3 PHASE 60Hz Fed from: ..... short circuit protection: ..... Over current: ..... cable type: 4/0 AWG IkMax =.....kA IkMin = ...kA Z: ..... mΩ.

			Date	12/22/2022	Volvo Trucks North America	Valiant TMS	Cable diagram =V1WC1+V1UC12-GND1	Drawing name: =2V04&EFS-EL	= V1WC1
			Ed.	MKLEPADLO					+ V1UC12
			Appr		P6700 Underbody Mainline - Cell 2V04			Document type: EMA	Project nr: 22-16151
Modification	Date	Name	Original		Replacement of / Replaced by	Scale 1:1			Page 1 / 1630

Cable diagram

F09_002_VLU

Cable name -KF100.12-P2			cable type PROFINET Cable					
remark			no. of conductors 4			cross-section 22		cable length
function text	Page / column	Target designation from	Connection point	conductor	Target designation to	Connection point	Page / column	function text
	&EFS=V1KF1/2.4	=V1KF1-KF100.12	P2		-KF1.2	P2	&EFS/1.5	

			Date	12/22/2022	Volvo Trucks North America	Valiant TMS	Cable diagram =V1WC1+V1UC12-KF100.12-P2	Drawing name: =2V04&EFS-EL	= V1WC1
			Ed.	MKLEPADLO					+ V1UC12
			Appr		P6700 Underbody Mainline - Cell 2V04			Document type: EMA	Project nr: 22-16151
Modification	Date	Name	Original		Replacement of / Replaced by	Scale 1:1			Page 2 / 1630

Cable diagram

F09_002_VLU

Cable name -W1			cable type TC-ER					
remark			no. of conductors 3			cross-section 10		cable length 25
function text	Page / column	Target designation from	Connection point	conductor	Target designation to	Connection point	Page / column	function text
	&EFS+.UC11/2.2	+.UC11-XD2	1:1	BK	-XD1	L1:1	&EFS/1.1	
	&EFS+.UC11/2.3	+.UC11-XD2	7:1	BK	-XD1	N:1	&EFS/1.1	
	&EFS+.UC11/2.3	+.UC11-PE		GNYE	-XD1	PE:1	&EFS/1.1	

=V1WC1+.UC12/2

+.UC15/1

			Date	12/22/2022	Volvo Trucks North America	Valiant TMS	Cable diagram =V1WC3+V1UC14-W1	Drawing name: =2V04&EFS-EL	= V1WC3
			Ed.	MKLEPADLO					+ V1UC14
			Appr		P6700 Underbody Mainline - Cell 2V04			Document type: EMA	Project nr: 22-16151
Modification	Date	Name	Original		Replacement of / Replaced by	Scale 1:1			Page 1 / 1630

Cable diagram

F09_002_VLU

Cable name -W1			cable type TC-ER					
remark			no. of conductors 3			cross-section 10		cable length 17
function text	Page / column	Target designation from	Connection point	conductor	Target designation to	Connection point	Page / column	function text
	&EFS+.UC12/2.2	+.UC12-XD2	1:1	BK	-XD1	L1:1	&EFS/1.1	
	&EFS+.UC12/2.3	+.UC12-XD2	7:1	BK	-XD1	N:1	&EFS/1.1	
	&EFS+.UC12/2.3	+.UC12-PE		GNYE	-XD1	PE:1	&EFS/1.1	

+.UC14/1

=V1WC4+.UC32/1

			Date	12/22/2022	Volvo Trucks North America	Valiant TMS	Cable diagram =V1WC3+V1UC15-W1	Drawing name: =2V04&EFS-EL	= V1WC3
			Ed.	MKLEPADLO					+ V1UC15
			Appr		P6700 Underbody Mainline - Cell 2V04			Document type: EMA	Project nr: 22-16151
Modification	Date	Name	Original		Replacement of / Replaced by	Scale 1:1			Page 1 / 1630

Cable diagram

F09_002_VLU

Cable name -W1			cable type TPU					
remark			no. of conductors 5			cross-section 16		cable length
function text	Page / column	Target designation from	Connection point	conductor	Target designation to	Connection point	Page / column	function text
	&EFS+.UC11/22.5	+.UC11-XD71	5	BK	-XD1	5	&EFS/1.1	
	&EFS+.UC11/22.5	+.UC11-XD71	4	OG	-XD1	4	&EFS/1.1	
	&EFS+.UC11/22.4	+.UC11-XD71	2	RD	-XD1	2	&EFS/1.1	
	&EFS+.UC11/22.4	+.UC11-XD71	1	WH	-XD1	1	&EFS/1.1	

=V1WC3+.UC15/1

+.UC33/1

			Date	12/22/2022	Volvo Trucks North America	Valiant TMS	Cable diagram =V1WC4+V1UC32-W1	Drawing name: =2V04&EFS-EL	= V1WC4
			Ed.	MKLEPADLO					+ V1UC32
			Appr		P6700 Underbody Mainline - Cell 2V04			Document type: EMA	Project nr: 22-16151
Modification	Date	Name	Original		Replacement of / Replaced by	Scale 1:1			Page 1 / 1630

Cable diagram

F09_002_VLU

Cable name -W1			cable type TPU					
remark			no. of conductors 5			cross-section 16		cable length 10
function text	Page / column	Target designation from	Connection point	conductor	Target designation to	Connection point	Page / column	function text
	&EFS+.UC12/21.5	+.UC12-XD61	5	BK	-XD1	5	&EFS/1.1	
	&EFS+.UC12/21.5	+.UC12-XD61	4	OG	-XD1	4	&EFS/1.1	
	&EFS+.UC12/21.4	+.UC12-XD61	2	RD	-XD1	2	&EFS/1.1	
	&EFS+.UC12/21.4	+.UC12-XD61	1	WH	-XD1	1	&EFS/1.1	

			Date	12/22/2022	Volvo Trucks North America	Valiant TMS	Cable diagram =V1WC4+V1UC33-W1	Drawing name: =2V04&EFS-EL	= V1WC4
			Ed.	MKLEPADLO					+ V1UC33
			Appr		P6700 Underbody Mainline - Cell 2V04			Document type: EMA	Project nr: 22-16151
Modification	Date	Name	Original		Replacement of / Replaced by	Scale 1:1			Page 1 / 1630

Cable diagram

F09_002_VLU

Cable name -W1			cable type TPE					
remark			no. of conductors 4			cross-section 18		cable length 0.5
function text	Page / column	Target designation from	Connection point	conductor	Target designation to	Connection point	Page / column	function text
	&EFS/1.0	-XG1/2	P1:1		=V1WR1UQ51KF1-KF1.13-X7	1	&EFS=V1WR1UQ51KF1/3.7	
	&EFS/1.1	-XG1/2	P1:3		=V1WR1UQ51KF1-KF1.13-X7	3	&EFS=V1WR1UQ51KF1/3.8	
	&EFS/1.1	-XG1/2	P1:4		=V1WR1UQ51KF1-KF1.13-X7	4	&EFS=V1WR1UQ51KF1/3.8	
	&EFS/1.1	-XG1/2	P1:2		=V1WR1UQ51KF1-KF1.13-X7	2	&EFS=V1WR1UQ51KF1/3.7	

			Date	12/22/2022	Volvo Trucks North America	Valiant TMS	Cable diagram =V1WR1UQ51BG0+V1WR1UQ51-W1	Drawing name: =2V04&EFS-EL	= V1WR1UQ51BG0
			Ed.	MKLEPADLO					+ V1WR1UQ51
			Appr		P6700 Underbody Mainline - Cell 2V04			Document type: EMA	Project nr: 22-16151
Modification	Date	Name	Original		Replacement of / Replaced by	Scale 1:1			Page 1 / 1630

Cable diagram

F09_002_VLU

Cable name -W1.1			cable type TPE					
remark			no. of conductors 4			cross-section 18		cable length 2
function text	Page / column	Target designation from	Connection point	conductor	Target designation to	Connection point	Page / column	function text
	&EFS/1.0	-BG01	1		-XG1/2	J1:1	&EFS/1.0	
	&EFS/1.0	-BG01	4		-XG1/2	J1:4	&EFS/1.1	
	&EFS/1.1	-BG01	3		-XG1/2	J1:3	&EFS/1.1	

			Date	12/22/2022	Volvo Trucks North America	Valiant TMS	Cable diagram =V1WR1UQ51BG0+V1WR1UQ51-W1.1	Drawing name: =2V04&EFS-EL	= V1WR1UQ51BG0
			Ed.	MKLEPADLO					+ V1WR1UQ51
			Appr		P6700 Underbody Mainline - Cell 2V04			Document type: EMA	Project nr: 22-16151
Modification	Date	Name	Original		Replacement of / Replaced by	Scale 1:1			Page 2 / 1630

Cable diagram

F09_002_VLU

Cable name -W1.2			cable type TPE					
remark			no. of conductors 4			cross-section 18		cable length 2
function text	Page / column	Target designation from	Connection point	conductor	Target designation to	Connection point	Page / column	function text
	&EFS/1.1	-BG02	1		-XG1/2	J2:1	&EFS/1.1	
	&EFS/1.1	-BG02	4		-XG1/2	J2:4	&EFS/1.2	
	&EFS/1.2	-BG02	3		-XG1/2	J2:3	&EFS/1.2	

			Date	12/22/2022	Volvo Trucks North America	Valiant TMS	Cable diagram =V1WR1UQ51BG0+V1WR1UQ51-W1.2	Drawing name: =2V04&EFS-EL	= V1WR1UQ51BG0
			Ed.	MKLEPADLO					+ V1WR1UQ51
			Appr		P6700 Underbody Mainline - Cell 2V04			Document type: EMA	Project nr: 22-16151
Modification	Date	Name	Original		Replacement of / Replaced by	Scale 1:1			Page 3 / 1630

Cable diagram

F09_002_VLU

Cable name -W1			cable type TPU					
remark			no. of conductors 5			cross-section 16		cable length 1
function text	Page / column	Target designation from	Connection point	conductor	Target designation to	Connection point	Page / column	function text
	&EFS=V1WC4+.UC14/20.4	-V1WC4+UC14-XD151	1		-KF1-X20	1	&EFS/1.1	
	&EFS=V1WC4+.UC14/20.4	-V1WC4+UC14-XD151	2		-KF1-X20	2	&EFS/1.1	
	&EFS=V1WC4+.UC14/20.5	-V1WC4+UC14-XD151	4		-KF1-X20	4	&EFS/1.2	
	&EFS=V1WC4+.UC14/20.5	-V1WC4+UC14-XD151	5		-KF1-X20	5	&EFS/1.2	
	&EFS=V1WC4+.UC14/20.5	-V1WC4+UC14-XD151	3		-KF1-X20	3	&EFS/1.1	

			Date	12/22/2022	Volvo Trucks North America	Valiant TMS	Cable diagram =V1WR1UQ51KF1+V1WR1UQ51-W1	Drawing name: =2V04&EFS-EL	= V1WR1UQ51KF1
			Ed.	MKLEPADLO					+ V1WR1UQ51
			Appr		P6700 Underbody Mainline - Cell 2V04			Document type: EMA	Project nr: 22-16151
Modification	Date	Name	Original		Replacement of / Replaced by	Scale 1:1			Page 1 / 1630

Cable diagram

F09_002_VLU

Cable name -W1			cable type TPE					
remark			no. of conductors 4			cross-section 18		cable length 2
function text	Page / column	Target designation from	Connection point	conductor	Target designation to	Connection point	Page / column	function text
	&EFS=V1WR1UQ51KF1+V1WR1UQ51/1	=V1WR1UQ51KF1+V1WR1UQ51-KF1	1		11-X1 -BGS/R	1	&EFS=V1WR1UQ51UQ1+V1WR1UQ51UQ1/1.0	
	&EFS=V1WR1UQ51KF1+V1WR1UQ51/1	=V1WR1UQ51KF1+V1WR1UQ51-KF1	2		11-X1 -BGS/R	2	&EFS=V1WR1UQ51UQ1+V1WR1UQ51UQ1/1.0	
	&EFS=V1WR1UQ51KF1+V1WR1UQ51/1	=V1WR1UQ51KF1+V1WR1UQ51-KF1	3		11-X1 -BGS/R	3	&EFS=V1WR1UQ51UQ1+V1WR1UQ51UQ1/1.1	
	&EFS=V1WR1UQ51KF1+V1WR1UQ51/1	=V1WR1UQ51KF1+V1WR1UQ51-KF1	4		11-X1 -BGS/R	4	&EFS=V1WR1UQ51UQ1+V1WR1UQ51UQ1/1.1	

			Date	12/22/2022	Volvo Trucks North America	Valiant TMS	Cable diagram =V1WR1UQ51UQ1.1+V1WR1UQ51UQ1.1-W1	Drawing name: =2V04&EFS-EL	= V1WR1UQ51UQ1.1
			Ed.	MKLEPADLO					+ V1WR1UQ51UQ1.1
			Appr		P6700 Underbody Mainline - Cell 2V04	Scale 1:1		Document type: EMA	Project nr: 22-16151
Modification	Date	Name	Original		Replacement of / Replaced by				Page 1 / 1630

Cable diagram

F09_002_VLU

Cable name -W1			cable type TPE					
remark			no. of conductors 4			cross-section 18		cable length 3
function text	Page / column	Target designation from	Connection point	conductor	Target designation to	Connection point	Page / column	function text
	&EFS=V1WR1UQ51KF1+V1WR1UQ51KF1	=V1WR1UQ51/KF1+V1WR1UQ51-KF1	1		11-X2 -BGS/R	1	&EFS=V1WR1UQ51UQ1+V1WR1UQ51UQ1/1.2	
	&EFS=V1WR1UQ51KF1+V1WR1UQ51KF1	=V1WR1UQ51/KF1+V1WR1UQ51-KF1	2		11-X2 -BGS/R	2	&EFS=V1WR1UQ51UQ1+V1WR1UQ51UQ1/1.2	
	&EFS=V1WR1UQ51KF1+V1WR1UQ51KF1	=V1WR1UQ51/KF1+V1WR1UQ51-KF1	3		11-X2 -BGS/R	3	&EFS=V1WR1UQ51UQ1+V1WR1UQ51UQ1/1.2	
	&EFS=V1WR1UQ51KF1+V1WR1UQ51KF1	=V1WR1UQ51/KF1+V1WR1UQ51-KF1	4		11-X2 -BGS/R	4	&EFS=V1WR1UQ51UQ1+V1WR1UQ51UQ1/1.2	

Cable diagram

F09_002_VLU

Cable name -W1			cable type TPE					
remark			no. of conductors 4			cross-section 18		cable length 3
function text	Page / column	Target designation from	Connection point	conductor	Target designation to	Connection point	Page / column	function text
	&EFS=V1WR1UQ51KF1+V1WR1UQ51/KF1	+V1WR1UQ51/KF1+V1WR1UQ51-KF1	1	1	-X3	1	&EFS=V1WR1UQ51UQ2+V1WR1UQ51UQ2/1.0	
	&EFS=V1WR1UQ51KF1+V1WR1UQ51/KF1	+V1WR1UQ51/KF1+V1WR1UQ51-KF1	2	1	-X3	2	&EFS=V1WR1UQ51UQ2+V1WR1UQ51UQ2/1.0	
	&EFS=V1WR1UQ51KF1+V1WR1UQ51/KF1	+V1WR1UQ51/KF1+V1WR1UQ51-KF1	3	1	-X3	3	&EFS=V1WR1UQ51UQ2+V1WR1UQ51UQ2/1.1	
	&EFS=V1WR1UQ51KF1+V1WR1UQ51/KF1	+V1WR1UQ51/KF1+V1WR1UQ51-KF1	4	1	-X3	4	&EFS=V1WR1UQ51UQ2+V1WR1UQ51UQ2/1.1	

Cable diagram

F09_002_VLU

Cable name -W1			cable type TPE					
remark			no. of conductors 4			cross-section 18		cable length 3
function text	Page / column	Target designation from	Connection point	conductor	Target designation to	Connection point	Page / column	function text
	&EFS=V1WR1UQ51KF1+V1WR1UQ51/KF1	+V1WR1UQ51-KF1	1		11-X4	-BGS/R	1	&EFS=V1WR1UQ51UQ2+V1WR1UQ51UQ2/1.2
	&EFS=V1WR1UQ51KF1+V1WR1UQ51/KF1	+V1WR1UQ51-KF1	2		11-X4	-BGS/R	2	&EFS=V1WR1UQ51UQ2+V1WR1UQ51UQ2/1.2
	&EFS=V1WR1UQ51KF1+V1WR1UQ51/KF1	+V1WR1UQ51-KF1	3		11-X4	-BGS/R	3	&EFS=V1WR1UQ51UQ2+V1WR1UQ51UQ2/1.2
	&EFS=V1WR1UQ51KF1+V1WR1UQ51/KF1	+V1WR1UQ51-KF1	4		11-X4	-BGS/R	4	&EFS=V1WR1UQ51UQ2+V1WR1UQ51UQ2/1.2

			Date	12/22/2022	Volvo Trucks North America	Valiant TMS	Cable diagram =V1WR1UQ51UQ2.2+V1WR1UQ51UQ2.2-W1	Drawing name: =2V04&EFS-EL	= V1WR1UQ51UQ2.2
			Ed.	MKLEPADLO					+ V1WR1UQ51UQ2.2
			Appr		P6700 Underbody Mainline - Cell 2V04			Document type: EMA	Project nr: 22-16151
Modification	Date	Name	Original		Replacement of / Replaced by	Scale 1:1			Page 1 / 1630

Cable diagram

F09_002_VLU

Cable name -W1			cable type TPE					
remark			no. of conductors 4			cross-section 18		cable length 3
function text	Page / column	Target designation from	Connection point	conductor	Target designation to	Connection point	Page / column	function text
	&EFS=V1WR1UQ51KF1+V1WR1UQ51/KF1	+V1WR1UQ51-KF1	1		11-X5 -BGS/R	1	&EFS=V1WR1UQ51UQ2+V1WR1UQ51UQ2/1.4	
	&EFS=V1WR1UQ51KF1+V1WR1UQ51/KF1	+V1WR1UQ51-KF1	2		11-X5 -BGS/R	2	&EFS=V1WR1UQ51UQ2+V1WR1UQ51UQ2/1.4	
	&EFS=V1WR1UQ51KF1+V1WR1UQ51/KF1	+V1WR1UQ51-KF1	3		11-X5 -BGS/R	3	&EFS=V1WR1UQ51UQ2+V1WR1UQ51UQ2/1.4	
	&EFS=V1WR1UQ51KF1+V1WR1UQ51/KF1	+V1WR1UQ51-KF1	4		11-X5 -BGS/R	4	&EFS=V1WR1UQ51UQ2+V1WR1UQ51UQ2/1.4	

=V1WR1UQ51UQ2.2+.WR1UQ51UQ2.2/1

=V1WR1UQ51UQ2.4+.WR1UQ51UQ2.4/1

			Date	12/22/2022	Volvo Trucks North America	Valiant TMS	Cable diagram =V1WR1UQ51UQ2.3+V1WR1UQ51UQ2.3-W1	Drawing name: =2V04&EFS-EL	= V1WR1UQ51UQ2.3
			Ed.	MKLEPADLO					+ V1WR1UQ51UQ2.3
			Appr		P6700 Underbody Mainline - Cell 2V04	Scale 1:1		Document type: EMA	Project nr: 22-16151
Modification	Date	Name	Original		Replacement of	Replaced by			Page 1 / 1630

Cable diagram

F09_002_VLU

Cable name -W1			cable type TPE					
remark			no. of conductors 4			cross-section 18		cable length 3
function text	Page / column	Target designation from	Connection point	conductor	Target designation to	Connection point	Page / column	function text
	&EFS=V1WR1UQ51KF1+V1WR1UQ51KF1	=V1WR1UQ51/KF1+V1WR1UQ51-KF1	1		11-X6 -BGS/R	1	&EFS=V1WR1UQ51UQ2+V1WR1UQ51UQ2/1.5	
	&EFS=V1WR1UQ51KF1+V1WR1UQ51KF1	=V1WR1UQ51/KF1+V1WR1UQ51-KF1	2		11-X6 -BGS/R	2	&EFS=V1WR1UQ51UQ2+V1WR1UQ51UQ2/1.5	
	&EFS=V1WR1UQ51KF1+V1WR1UQ51KF1	=V1WR1UQ51/KF1+V1WR1UQ51-KF1	3		11-X6 -BGS/R	3	&EFS=V1WR1UQ51UQ2+V1WR1UQ51UQ2/1.5	
	&EFS=V1WR1UQ51KF1+V1WR1UQ51KF1	=V1WR1UQ51/KF1+V1WR1UQ51-KF1	4		11-X6 -BGS/R	4	&EFS=V1WR1UQ51UQ2+V1WR1UQ51UQ2/1.5	

			Date	12/22/2022	Volvo Trucks North America	Valiant TMS	Cable diagram =V1WR1UQ51UQ2.4+V1WR1UQ51UQ2.4-W1	Drawing name: =2V04&EFS-EL	= V1WR1UQ51UQ2.4
			Ed.	MKLEPADLO					+ V1WR1UQ51UQ2.4
			Appr		P6700 Underbody Mainline - Cell 2V04			Document type: EMA	Project nr: 22-16151
Modification	Date	Name	Original		Replacement of / Replaced by	Scale 1:1			Page 1 / 1630

Cable diagram

F09_002_VLU

Cable name -W1			cable type TPE					
remark			no. of conductors 4			cross-section 18		cable length 3
function text	Page / column	Target designation from	Connection point	conductor	Target designation to	Connection point	Page / column	function text
	&EFS=V1WR1UQ51KF1+V1WR1UQ51/KF1	=V1WR1UQ51/KF1+V1WR1UQ51-KF1	1		11-X7 -BGS/R	1	&EFS=V1WR1UQ51UQ3+V1WR1UQ51UQ3/1.0	
	&EFS=V1WR1UQ51KF1+V1WR1UQ51/KF1	=V1WR1UQ51/KF1+V1WR1UQ51-KF2	2		11-X7 -BGS/R	2	&EFS=V1WR1UQ51UQ3+V1WR1UQ51UQ3/1.0	
	&EFS=V1WR1UQ51KF1+V1WR1UQ51/KF1	=V1WR1UQ51/KF1+V1WR1UQ51-KF3	3		11-X7 -BGS/R	3	&EFS=V1WR1UQ51UQ3+V1WR1UQ51UQ3/1.1	
	&EFS=V1WR1UQ51KF1+V1WR1UQ51/KF1	=V1WR1UQ51/KF1+V1WR1UQ51-KF4	4		11-X7 -BGS/R	4	&EFS=V1WR1UQ51UQ3+V1WR1UQ51UQ3/1.1	

=V1WR1UQ51UQ2.4+.WR1UQ51UQ2.4/1

=V1WR1UQ51UQ3.2+.WR1UQ51UQ3.2/1

			Date	12/22/2022	Volvo Trucks North America	Valiant TMS	Cable diagram =V1WR1UQ51UQ3.1+V1WR1UQ51UQ3.1-W1	Drawing name: =2V04&EFS-EL	= V1WR1UQ51UQ3.1
			Ed.	MKLEPADLO					+ V1WR1UQ51UQ3.1
			Appr		P6700 Underbody Mainline - Cell 2V04			Document type: EMA	Project nr: 22-16151
Modification	Date	Name	Original		Replacement of / Replaced by	Scale 1:1			Page 1 / 1630

Cable diagram

F09_002_VLU

Cable name -W1			cable type TPE					
remark			no. of conductors 4			cross-section 18		cable length 3
function text	Page / column	Target designation from	Connection point	conductor	Target designation to	Connection point	Page / column	function text
	&EFS=V1WR1UQ51KF1+V1WR1UQ51/KF1	=V1WR1UQ51/KF1+V1WR1UQ51-KF1	1		11-X8 -BGS/R	1	&EFS=V1WR1UQ51UQ3+V1WR1UQ51UQ3/1.2	
	&EFS=V1WR1UQ51KF1+V1WR1UQ51/KF1	=V1WR1UQ51/KF1+V1WR1UQ51-KF1	2		11-X8 -BGS/R	2	&EFS=V1WR1UQ51UQ3+V1WR1UQ51UQ3/1.2	
	&EFS=V1WR1UQ51KF1+V1WR1UQ51/KF1	=V1WR1UQ51/KF1+V1WR1UQ51-KF1	3		11-X8 -BGS/R	3	&EFS=V1WR1UQ51UQ3+V1WR1UQ51UQ3/1.2	
	&EFS=V1WR1UQ51KF1+V1WR1UQ51/KF1	=V1WR1UQ51/KF1+V1WR1UQ51-KF1	4		11-X8 -BGS/R	4	&EFS=V1WR1UQ51UQ3+V1WR1UQ51UQ3/1.2	

			Date	12/22/2022	Volvo Trucks North America	Valiant TMS	Cable diagram =V1WR1UQ51UQ3.2+V1WR1UQ51UQ3.2-W1	Drawing name: =2V04&EFS-EL	= V1WR1UQ51UQ3.2
			Ed.	MKLEPADLO					+ V1WR1UQ51UQ3.2
			Appr		P6700 Underbody Mainline - Cell 2V04	Scale 1:1		Document type: EMA	Project nr: 22-16151 Page 1
Modification	Date	Name	Original		Replacement of / Replaced by				1630

Cable diagram

F09_002_VLU

Cable name -W1			cable type TPE					
remark			no. of conductors 4			cross-section 18		cable length 4
function text	Page / column	Target designation from	Connection point	conductor	Target designation to	Connection point	Page / column	function text
	&EFS=V1WR1UQ51KF1+V1WR1UQ51KF1	+V1WR1UQ51KF1+V1WR1UQ51-KF1	1		12-X1 -BGS/R	1	&EFS=V1WR1UQ51UQ4+V1WR1UQ51UQ4/1.0	
	&EFS=V1WR1UQ51KF1+V1WR1UQ51KF1	+V1WR1UQ51KF1+V1WR1UQ51-KF1	2		12-X1 -BGS/R	2	&EFS=V1WR1UQ51UQ4+V1WR1UQ51UQ4/1.0	
	&EFS=V1WR1UQ51KF1+V1WR1UQ51KF1	+V1WR1UQ51KF1+V1WR1UQ51-KF1	3		12-X1 -BGS/R	3	&EFS=V1WR1UQ51UQ4+V1WR1UQ51UQ4/1.1	
	&EFS=V1WR1UQ51KF1+V1WR1UQ51KF1	+V1WR1UQ51KF1+V1WR1UQ51-KF1	4		12-X1 -BGS/R	4	&EFS=V1WR1UQ51UQ4+V1WR1UQ51UQ4/1.1	

=V1WR1UQ51UQ3.2+.WR1UQ51UQ3.2/1

=V1WR1UQ51UQ4.2+.WR1UQ51UQ4.2/1

			Date	12/22/2022	Volvo Trucks North America	Valiant TMS	Cable diagram =V1WR1UQ51UQ4.1+V1WR1UQ51UQ4.1-W1	Drawing name: =2V04&EFS-EL	= V1WR1UQ51UQ4.1
			Ed.	MKLEPADLO					+ V1WR1UQ51UQ4.1
			Appr		P6700 Underbody Mainline - Cell 2V04	Scale 1:1		Document type: EMA	Project nr: 22-16151
Modification	Date	Name	Original		Replacement of	Replaced by			Page 1 / 1630

Cable diagram

F09_002_VLU

Cable name -W1			cable type TPE					
remark			no. of conductors 4			cross-section 18		cable length 4
function text	Page / column	Target designation from	Connection point	conductor	Target designation to	Connection point	Page / column	function text
	&EFS=V1WR1UQ51KF1+V1WR1UQ51/2F1	=V1WR1UQ51/2F1+V1WR1UQ51-KF1	1		12-X2		-BGS/R	1	&EFS=V1WR1UQ51UQ4+V1WR1UQ51UQ4/1.2
	&EFS=V1WR1UQ51KF1+V1WR1UQ51/2F1	=V1WR1UQ51/2F1+V1WR1UQ51-KF2	2		12-X2		-BGS/R	2	&EFS=V1WR1UQ51UQ4+V1WR1UQ51UQ4/1.2
	&EFS=V1WR1UQ51KF1+V1WR1UQ51/2F1	=V1WR1UQ51/2F1+V1WR1UQ51-KF3	3		12-X2		-BGS/R	3	&EFS=V1WR1UQ51UQ4+V1WR1UQ51UQ4/1.2
	&EFS=V1WR1UQ51KF1+V1WR1UQ51/2F1	=V1WR1UQ51/2F1+V1WR1UQ51-KF4	4		12-X2		-BGS/R	4	&EFS=V1WR1UQ51UQ4+V1WR1UQ51UQ4/1.2

=V1WR1UQ51UQ4.1+.WR1UQ51UQ4.1/1

=V1WR1UQ51UQ5.1+.WR1UQ51UQ5.1/1

			Date	12/22/2022	Volvo Trucks North America	Valiant TMS	Cable diagram =V1WR1UQ51UQ4.2+V1WR1UQ51UQ4.2-W1	Drawing name: =2V04&EFS-EL	= V1WR1UQ51UQ4.2
			Ed.	MKLEPADLO					+ V1WR1UQ51UQ4.2
			Appr		P6700 Underbody Mainline - Cell 2V04			Document type: EMA	Project nr: 22-16151	Page 1
Modification	Date	Name	Original		Replacement of	Replaced by	Scale 1:1			1630

Cable diagram

F09_002_VLU

Cable name -W1			cable type TPE					
remark			no. of conductors 4			cross-section 18		cable length 4
function text	Page / column	Target designation from	Connection point	conductor	Target designation to	Connection point	Page / column	function text
	&EFS=V1WR1UQ51KF1+V1WR1UQ51/2-F1	+V1WR1UQ51/2-F1+V1WR1UQ51-KF1	1	12-X3	-BGS/R	1	&EFS=V1WR1UQ51UQ5	+V1WR1UQ51UQ5/1.0
	&EFS=V1WR1UQ51KF1+V1WR1UQ51/2-F1	+V1WR1UQ51/2-F1+V1WR1UQ51-KF1	2	12-X3	-BGS/R	2	&EFS=V1WR1UQ51UQ5	+V1WR1UQ51UQ5/1.0
	&EFS=V1WR1UQ51KF1+V1WR1UQ51/2-F1	+V1WR1UQ51/2-F1+V1WR1UQ51-KF1	3	12-X3	-BGS/R	3	&EFS=V1WR1UQ51UQ5	+V1WR1UQ51UQ5/1.1
	&EFS=V1WR1UQ51KF1+V1WR1UQ51/2-F1	+V1WR1UQ51/2-F1+V1WR1UQ51-KF1	4	12-X3	-BGS/R	4	&EFS=V1WR1UQ51UQ5	+V1WR1UQ51UQ5/1.1

=V1WR1UQ51UQ4.2+.WR1UQ51UQ4.2/1

=V1WR1UQ51UQ5.2+.WR1UQ51UQ5.2/1

			Date	12/22/2022	Volvo Trucks North America	Valiant TMS	Cable diagram =V1WR1UQ51UQ5.1+V1WR1UQ51UQ5.1-W1	Drawing name: =2V04&EFS-EL	= V1WR1UQ51UQ5.1
			Ed.	MKLEPADLO					+ V1WR1UQ51UQ5.1
			Appr		P6700 Underbody Mainline - Cell 2V04			Document type: EMA	Project nr: 22-16151
Modification	Date	Name	Original		Replacement of / Replaced by	Scale 1:1			Page 1 / 1630

Cable diagram

F09_002_VLU

Cable name -W1			cable type TPE					
remark			no. of conductors 4			cross-section 18		cable length 4
function text	Page / column	Target designation from	Connection point	conductor	Target designation to	Connection point	Page / column	function text
	&EFS=V1WR1UQ51KF1+V1WR1UQ51/2-F1	=V1WR1UQ51/2-F1+V1WR1UQ51-KF1:1	12-X4		-BGS/R	1	&EFS=V1WR1UQ51UQ5+V1WR1UQ51UQ5/1.2	
	&EFS=V1WR1UQ51KF1+V1WR1UQ51/2-F1	=V1WR1UQ51/2-F1+V1WR1UQ51-KF1:2	12-X4		-BGS/R	2	&EFS=V1WR1UQ51UQ5+V1WR1UQ51UQ5/1.2	
	&EFS=V1WR1UQ51KF1+V1WR1UQ51/2-F1	=V1WR1UQ51/2-F1+V1WR1UQ51-KF1:3	12-X4		-BGS/R	3	&EFS=V1WR1UQ51UQ5+V1WR1UQ51UQ5/1.2	
	&EFS=V1WR1UQ51KF1+V1WR1UQ51/2-F1	=V1WR1UQ51/2-F1+V1WR1UQ51-KF1:4	12-X4		-BGS/R	4	&EFS=V1WR1UQ51UQ5+V1WR1UQ51UQ5/1.2	

			Date	12/22/2022	Volvo Trucks North America	Valiant TMS	Cable diagram =V1WR1UQ51UQ5.2+V1WR1UQ51UQ5.2-W1	Drawing name: =2V04&EFS-EL	= V1WR1UQ51UQ5.2
			Ed.	MKLEPADLO					+ V1WR1UQ51UQ5.2
			Appr		P6700 Underbody Mainline - Cell 2V04	Scale 1:1		Document type: EMA	Project nr: 22-16151
Modification	Date	Name	Original		Replacement of	Replaced by			Page 1 / 1630

Cable diagram

F09_002_VLU

Cable name -W1			cable type TPE					
remark			no. of conductors 4			cross-section 18		cable length 4
function text	Page / column	Target designation from	Connection point	conductor	Target designation to	Connection point	Page / column	function text
	&EFS=V1WR1UQ51KF1+V1WR1UQ51/2F1	=V1WR1UQ51/2F1+V1WR1UQ51-KF1	1	12-X5	-BGS/R	1	&EFS=V1WR1UQ51UQ6+V1WR1UQ51UQ6/1.0	
	&EFS=V1WR1UQ51KF1+V1WR1UQ51/2F1	=V1WR1UQ51/2F1+V1WR1UQ51-KF1	2	12-X5	-BGS/R	2	&EFS=V1WR1UQ51UQ6+V1WR1UQ51UQ6/1.0	
	&EFS=V1WR1UQ51KF1+V1WR1UQ51/2F1	=V1WR1UQ51/2F1+V1WR1UQ51-KF1	3	12-X5	-BGS/R	3	&EFS=V1WR1UQ51UQ6+V1WR1UQ51UQ6/1.1	
	&EFS=V1WR1UQ51KF1+V1WR1UQ51/2F1	=V1WR1UQ51/2F1+V1WR1UQ51-KF1	4	12-X5	-BGS/R	4	&EFS=V1WR1UQ51UQ6+V1WR1UQ51UQ6/1.1	

=V1WR1UQ51UQ5.2+.WR1UQ51UQ5.2/1

=V1WR1UQ51UQ6.2+.WR1UQ51UQ6.2/1

			Date	12/22/2022	Volvo Trucks North America	Valiant TMS	Cable diagram =V1WR1UQ51UQ6.1+V1WR1UQ51UQ6.1-W1	Drawing name: =2V04&EFS-EL	= V1WR1UQ51UQ6.1
			Ed.	MKLEPADLO					+ V1WR1UQ51UQ6.1
			Appr		P6700 Underbody Mainline - Cell 2V04			Document type: EMA	Project nr: 22-16151
Modification	Date	Name	Original		Replacement of / Replaced by	Scale 1:1			Page 1 / 1630

Cable diagram

F09_002_VLU

Cable name -W1			cable type TPE					
remark			no. of conductors 4			cross-section 18		cable length 4
function text	Page / column	Target designation from	Connection point	conductor	Target designation to	Connection point	Page / column	function text
	&EFS=V1WR1UQ51KF1+V1WR1UQ51/2F1	=V1WR1UQ51/2F1+V1WR1UQ51-KF1	1	12-X6	-BGS/R	1	&EFS=V1WR1UQ51UQ6+V1WR1UQ51UQ6/1.2	
	&EFS=V1WR1UQ51KF1+V1WR1UQ51/2F1	=V1WR1UQ51/2F1+V1WR1UQ51-KF1	2	12-X6	-BGS/R	2	&EFS=V1WR1UQ51UQ6+V1WR1UQ51UQ6/1.2	
	&EFS=V1WR1UQ51KF1+V1WR1UQ51/2F1	=V1WR1UQ51/2F1+V1WR1UQ51-KF1	3	12-X6	-BGS/R	3	&EFS=V1WR1UQ51UQ6+V1WR1UQ51UQ6/1.2	
	&EFS=V1WR1UQ51KF1+V1WR1UQ51/2F1	=V1WR1UQ51/2F1+V1WR1UQ51-KF1	4	12-X6	-BGS/R	4	&EFS=V1WR1UQ51UQ6+V1WR1UQ51UQ6/1.2	

=V1WR1UQ51UQ6.1+.WR1UQ51UQ6.1/1

=V1WR1UQ51UQ7.1+.WR1UQ51UQ7.1/1

			Date	12/22/2022	Volvo Trucks North America	Valiant TMS	Cable diagram =V1WR1UQ51UQ6.2+V1WR1UQ51UQ6.2-W1	Drawing name: =2V04&EFS-EL	= V1WR1UQ51UQ6.2
			Ed.	MKLEPADLO					+ V1WR1UQ51UQ6.2
			Appr		P6700 Underbody Mainline - Cell 2V04			Document type: EMA	Project nr: 22-16151
Modification	Date	Name	Original		Replacement of	Replaced by	Scale 1:1		Page 1 / 1630

Cable diagram

F09_002_VLU

Cable name -W1			cable type TPE					
remark			no. of conductors 4			cross-section 18		cable length 4
function text	Page / column	Target designation from	Connection point	conductor	Target designation to	Connection point	Page / column	function text
	&EFS=V1WR1UQ51KF1+V1WR1UQ51KF1	+V1WR1UQ51KF1	1		12-X7 -BGS/R	1	&EFS=V1WR1UQ51UQ7	+V1WR1UQ51UQ7/1.0
	&EFS=V1WR1UQ51KF1+V1WR1UQ51KF1	+V1WR1UQ51KF1	2		12-X7 -BGS/R	2	&EFS=V1WR1UQ51UQ7	+V1WR1UQ51UQ7/1.0
	&EFS=V1WR1UQ51KF1+V1WR1UQ51KF1	+V1WR1UQ51KF1	3		12-X7 -BGS/R	3	&EFS=V1WR1UQ51UQ7	+V1WR1UQ51UQ7/1.1
	&EFS=V1WR1UQ51KF1+V1WR1UQ51KF1	+V1WR1UQ51KF1	4		12-X7 -BGS/R	4	&EFS=V1WR1UQ51UQ7	+V1WR1UQ51UQ7/1.1

=V1WR1UQ51UQ6.2+.WR1UQ51UQ6.2/1

=V1WR1UQ51UQ7.2+.WR1UQ51UQ7.2/1

			Date	12/22/2022	Volvo Trucks North America	Valiant TMS	Cable diagram =V1WR1UQ51UQ7.1+V1WR1UQ51UQ7.1-W1	Drawing name: =2V04&EFS-EL	= V1WR1UQ51UQ7.1
			Ed.	MKLEPADLO					+ V1WR1UQ51UQ7.1
			Appr		P6700 Underbody Mainline - Cell 2V04			Document type: EMA	Project nr: 22-16151
Modification	Date	Name	Original		Replacement of / Replaced by	Scale 1:1			Page 1 / 1630

Cable diagram

F09_002_VLU

Cable name -W1			cable type TPE					
remark			no. of conductors 4			cross-section 18		cable length 4
function text	Page / column	Target designation from	Connection point	conductor	Target designation to	Connection point	Page / column	function text
	&EFS=V1WR1UQ51KF1+V1WR1UQ51/2F1	=V1WR1UQ51/2F1+V1WR1UQ51-KF1	1	12-X8	-BGS/R	1	&EFS=V1WR1UQ51UQ7+V1WR1UQ51UQ7/1.2	
	&EFS=V1WR1UQ51KF1+V1WR1UQ51/2F1	=V1WR1UQ51/2F1+V1WR1UQ51-KF1	2	12-X8	-BGS/R	2	&EFS=V1WR1UQ51UQ7+V1WR1UQ51UQ7/1.2	
	&EFS=V1WR1UQ51KF1+V1WR1UQ51/2F1	=V1WR1UQ51/2F1+V1WR1UQ51-KF1	3	12-X8	-BGS/R	3	&EFS=V1WR1UQ51UQ7+V1WR1UQ51UQ7/1.2	
	&EFS=V1WR1UQ51KF1+V1WR1UQ51/2F1	=V1WR1UQ51/2F1+V1WR1UQ51-KF1	4	12-X8	-BGS/R	4	&EFS=V1WR1UQ51UQ7+V1WR1UQ51UQ7/1.2	

=V1WR1UQ51UQ7.1+.WR1UQ51UQ7.1/1

=V1WR1UQ51UQ8.1+.WR1UQ51UQ8.1/1

			Date	12/22/2022	Volvo Trucks North America	Valiant TMS	Cable diagram =V1WR1UQ51UQ7.2+V1WR1UQ51UQ7.2-W1	Drawing name: =2V04&EFS-EL	= V1WR1UQ51UQ7.2
			Ed.	MKLEPADLO					+ V1WR1UQ51UQ7.2
			Appr		P6700 Underbody Mainline - Cell 2V04			Document type: EMA	Project nr: 22-16151
Modification	Date	Name	Original		Replacement of	Replaced by	Scale 1:1		Page 1 / 1630

Cable diagram

F09_002_VLU

Cable name -W1			cable type TPE					
remark			no. of conductors 4			cross-section 18		cable length 4
function text	Page / column	Target designation from	Connection point	conductor	Target designation to	Connection point	Page / column	function text
	&EFS=V1WR1UQ51KF1+V1WR1UQ51/8F1	=V1WR1UQ51/8F1+V1WR1UQ51-KF1	1		13-X1	-BGS/R	1	&EFS=V1WR1UQ51UQ8+V1WR1UQ51UQ8/1.0
	&EFS=V1WR1UQ51KF1+V1WR1UQ51/8F1	=V1WR1UQ51/8F1+V1WR1UQ51-KF1	2		13-X1	-BGS/R	2	&EFS=V1WR1UQ51UQ8+V1WR1UQ51UQ8/1.0
	&EFS=V1WR1UQ51KF1+V1WR1UQ51/8F1	=V1WR1UQ51/8F1+V1WR1UQ51-KF1	3		13-X1	-BGS/R	3	&EFS=V1WR1UQ51UQ8+V1WR1UQ51UQ8/1.1
	&EFS=V1WR1UQ51KF1+V1WR1UQ51/8F1	=V1WR1UQ51/8F1+V1WR1UQ51-KF1	4		13-X1	-BGS/R	4	&EFS=V1WR1UQ51UQ8+V1WR1UQ51UQ8/1.1

=V1WR1UQ51UQ7.2+.WR1UQ51UQ7.2/1

=V1WR1UQ51UQ8.2+.WR1UQ51UQ8.2/1

			Date	12/22/2022	Volvo Trucks North America	Valiant TMS	Cable diagram =V1WR1UQ51UQ8.1+V1WR1UQ51UQ8.1-W1	Drawing name: =2V04&EFS-EL	= V1WR1UQ51UQ8.1
			Ed.	MKLEPADLO					+ V1WR1UQ51UQ8.1
			Appr		P6700 Underbody Mainline - Cell 2V04			Document type: EMA	Project nr: 22-16151
Modification	Date	Name	Original		Replacement of	Replaced by	Scale 1:1		Page 1 / 1630

Cable diagram

F09_002_VLU

Cable name -W1			cable type TPE					
remark			no. of conductors 4			cross-section 18		cable length 4
function text	Page / column	Target designation from	Connection point	conductor	Target designation to	Connection point	Page / column	function text
	&EFS=V1WR1UQ51KF1+V1WR1UQ51/8.1	=V1WR1UQ51/8.1+V1WR1UQ51-KF1	1		13-X2 -BGS/R	1	&EFS=V1WR1UQ51UQ8+V1WR1UQ51UQ8/1.2	
	&EFS=V1WR1UQ51KF1+V1WR1UQ51/8.1	=V1WR1UQ51/8.1+V1WR1UQ51-KF2	2		13-X2 -BGS/R	2	&EFS=V1WR1UQ51UQ8+V1WR1UQ51UQ8/1.2	
	&EFS=V1WR1UQ51KF1+V1WR1UQ51/8.1	=V1WR1UQ51/8.1+V1WR1UQ51-KF3	3		13-X2 -BGS/R	3	&EFS=V1WR1UQ51UQ8+V1WR1UQ51UQ8/1.2	
	&EFS=V1WR1UQ51KF1+V1WR1UQ51/8.1	=V1WR1UQ51/8.1+V1WR1UQ51-KF4	4		13-X2 -BGS/R	4	&EFS=V1WR1UQ51UQ8+V1WR1UQ51UQ8/1.2	

=V1WR1UQ51UQ8.1+.WR1UQ51UQ8.1/1

=V1WR1UQ51UQ9.1+.WR1UQ51UQ9.1/1

			Date	12/22/2022	Volvo Trucks North America	Valiant TMS	Cable diagram =V1WR1UQ51UQ8.2+V1WR1UQ51UQ8.2-W1	Drawing name: =2V04&EFS-EL	= V1WR1UQ51UQ8.2
			Ed.	MKLEPADLO					+ V1WR1UQ51UQ8.2
			Appr		P6700 Underbody Mainline - Cell 2V04			Document type: EMA	Project nr: 22-16151
Modification	Date	Name	Original		Replacement of / Replaced by	Scale 1:1			Page 1 / 1630

Cable diagram

F09_002_VLU

Cable name -W1			cable type TPE					
remark			no. of conductors 4			cross-section 18		cable length 4
function text	Page / column	Target designation from	Connection point	conductor	Target designation to	Connection point	Page / column	function text
	&EFS=V1WR1UQ51KF1+V1WR1UQ51/8.1	=V1WR1UQ51/8.1+V1WR1UQ51-KF1	1		13-X3 -BGS/R	1	&EFS=V1WR1UQ51UQ9+V1WR1UQ51UQ9/1.0	
	&EFS=V1WR1UQ51KF1+V1WR1UQ51/8.1	=V1WR1UQ51/8.1+V1WR1UQ51-KF2	2		13-X3 -BGS/R	2	&EFS=V1WR1UQ51UQ9+V1WR1UQ51UQ9/1.0	
	&EFS=V1WR1UQ51KF1+V1WR1UQ51/8.1	=V1WR1UQ51/8.1+V1WR1UQ51-KF3	3		13-X3 -BGS/R	3	&EFS=V1WR1UQ51UQ9+V1WR1UQ51UQ9/1.1	
	&EFS=V1WR1UQ51KF1+V1WR1UQ51/8.1	=V1WR1UQ51/8.1+V1WR1UQ51-KF4	4		13-X3 -BGS/R	4	&EFS=V1WR1UQ51UQ9+V1WR1UQ51UQ9/1.1	

=V1WR1UQ51UQ8.2+.WR1UQ51UQ8.2/1

=V1WR1UQ51UQ9.2+.WR1UQ51UQ9.2/1

			Date	12/22/2022	Volvo Trucks North America	Valiant TMS	Cable diagram =V1WR1UQ51UQ9.1+V1WR1UQ51UQ9.1-W1	Drawing name: =2V04&EFS-EL	= V1WR1UQ51UQ9.1
			Ed.	MKLEPADLO					+ V1WR1UQ51UQ9.1
			Appr		P6700 Underbody Mainline - Cell 2V04			Document type: EMA	Project nr: 22-16151
Modification	Date	Name	Original		Replacement of / Replaced by	Scale 1:1			Page 1 / 1630

Cable diagram

F09_002_VLU

Cable name -W1			cable type TPE					
remark			no. of conductors 4			cross-section 18		cable length 4
function text	Page / column	Target designation from	Connection point	conductor	Target designation to	Connection point	Page / column	function text
	&EFS=V1WR1UQ51KF1+V1WR1UQ51/3-1	=V1WR1UQ51/3-1+V1WR1UQ51-KF1	1		13-X4 -BGS/R	1	&EFS=V1WR1UQ51UQ9+V1WR1UQ51UQ9/1.2	
	&EFS=V1WR1UQ51KF1+V1WR1UQ51/3-1	=V1WR1UQ51/3-1+V1WR1UQ51-KF2	2		13-X4 -BGS/R	2	&EFS=V1WR1UQ51UQ9+V1WR1UQ51UQ9/1.2	
	&EFS=V1WR1UQ51KF1+V1WR1UQ51/3-1	=V1WR1UQ51/3-1+V1WR1UQ51-KF3	3		13-X4 -BGS/R	3	&EFS=V1WR1UQ51UQ9+V1WR1UQ51UQ9/1.2	
	&EFS=V1WR1UQ51KF1+V1WR1UQ51/3-1	=V1WR1UQ51/3-1+V1WR1UQ51-KF4	4		13-X4 -BGS/R	4	&EFS=V1WR1UQ51UQ9+V1WR1UQ51UQ9/1.2	

=V1WR1UQ51UQ9.1+.WR1UQ51UQ9.1/1

=V1WR1WC1+.WR1UC01/1

			Date	12/22/2022	Volvo Trucks North America	Valiant TMS	Cable diagram =V1WR1UQ51UQ9.2+V1WR1UQ51UQ9.2-W1	Drawing name: =2V04&EFS-EL	= V1WR1UQ51UQ9.2
			Ed.	MKLEPADLO					+ V1WR1UQ51UQ9.2
			Appr		P6700 Underbody Mainline - Cell 2V04			Document type: EMA	Project nr: 22-16151
Modification	Date	Name	Original		Replacement of / Replaced by	Scale 1:1			Page 1 / 1630

Cable diagram

F09_002_VLU

Cable name	-KF100.14-P10		cable type	PROFINET Cable				
remark			no. of conductors	4	cross-section	22	cable length	
function text	Page / column	Target designation from	Connection point	conductor	Target designation to	Connection point	Page / column	function text
	&EFS=V1KF1+.UC14/2.5	=V1KF1+UC14-KF100.14-P11			-X150	P1	&EFS/1.6	

=V1WR1UQ51UQ9.2+.WR1UQ51UQ9.2/1

2

			Date	12/22/2022	Volvo Trucks North America	Valiant TMS	Cable diagram	Drawing name: =2V04&EFS-EL	= V1WR1WC1
			Ed.	MKLEPADLO			=V1WR1WC1+V1WR1UC01-KF100.14-P10		+ V1WR1UC01
			Appr		P6700 Underbody Mainline - Cell 2V04			Document type: EMA / Project nr: 22-16151	Page 1 / 1630
Modification	Date	Name	Original		Replacement of / Replaced by	Scale 1:1			

Cable diagram

F09_002_VLU

Cable name -W1			cable type TC-ER					
remark			no. of conductors 4			cross-section 10		cable length 25
function text	Page / column	Target designation from	Connection point	conductor	Target designation to	Connection point	Page / column	function text
	&EFS=V1WC2+.UC11/14.5	=V1WR1+UC11-FC1	2		-Q1	1	&EFS/1.3	
	&EFS=V1WC2+.UC11/14.5	=V1WR1+UC11-FC1	4		-Q1	3	&EFS/1.3	
	&EFS=V1WC2+.UC11/14.5	=V1WR1+UC11-FC1	6		-Q1	5	&EFS/1.3	
Power Distribution =V1WR1	&EFS=V1WC2+.UC11/14.6		PE		-PE		&EFS/1.4	

			Date	12/22/2022	Volvo Trucks North America	Valiant TMS	Cable diagram =V1WR1WC1+V1WR1UC01-W1	Drawing name: =2V04&EFS-EL	= V1WR1WC1
			Ed.	MKLEPADLO					+ V1WR1UC01
			Appr		P6700 Underbody Mainline - Cell 2V04			Document type: EMA	Project nr: 22-16151
Modification	Date	Name	Original		Replacement of / Replaced by	Scale 1:1			Page 2 / 1630

Cable overview

F10_001_Cable

Cable name	Source (from)	Target (to)	cable type	all conductors	Conductors used	Cross-section [mm]	Length [m]	remark
=V1GL11WC1-W2	=V1GL11+V1GL11UC01-TA1	=V1GL11WC1+V1GL11UC01-Q1		4	4	14	2	
=V1GL11WC1-W3				8	0	14	15	
=V1GL12WC1-W2	=V1GL12+V1GL12UC01-TA1	=V1GL12WC1+V1GL12UC01-Q1		4	4	14	10	
=V1GL12WC1-W3				8	0	14	15	
=V1GL11KF2-W3	=V1GL11KF2+V1GL11KF2-BZ02	=V1GL11KF2+V1GL11KF2-KF2.12	CBL	4	1	16	5	
=V1GL12KF2-W3	=V1GL12KF2+V1GL12KF2-BZ02	=V1GL12KF2+V1GL12KF2-KF2.12	CBL	4	1	16	5	
=V1GL13KF1-W3	=V1GL13KF1+V1GL13KF1-BZ01	=V1GL13KF1+V1GL13KF1-KF1.12	CBL	4	1	16	5	
=KH0-W1			NEBS-L1G4-K-5-LE4	4	0	26	5	
=KF0KF1-KF1.31-P2	=KF0KF1+UC31-KF1.31-X1	=KF0KF1+UC31-KF31	PROFINET Cable	4	0	22		
=KF0KF1-KF100-P1	=KF0KF1+UC31-KF100.31	=KF0KF1+UC31-KF99.31	PROFINET Cable	4	1	22		
=KF0KF1-KF100.31-P2	=KF0KF1+UC31-KF1.31-X2	=KF0KF1+UC31-KF100.31	PROFINET Cable	4	0	22		
=KF0KF1-KF100.31-P3	=KF0KF1+UC31-KF1.31-X1	=KF0KF1+UC31-KF100.31	PROFINET Cable	4	0	22		
=KF0KF1-KF100.31-P4	=KF0KF1+UC31-KF100.31	=KF0KF1+UC31-PC1	PROFINET Cable	4	0	22		
=KF0KF1-KF100.31-P5	=KF0KF1+UC31-KF100.31	=KF0KF1+UC31-PC1	PROFINET Cable	4	0	22		
=KF0KF1-KF100.31-P6	=KF0KF1+UC31-KF100.31-P6	=KF0KF1+UC31-KF100.31	PROFINET Cable	4	1	22		
=KF0KF1-KF100.31-P7	=KF0KF1+UC31-KF100.31-P7	=KF0KF1+UC31-KF100.31	PROFINET Cable	4	1	22		
=KF0KF1-KF100.31-P8	=KF0KF1+UC31-KF100.31-P8	=KF0KF1+UC31-KF100.31	PROFINET Cable	4	1	22		
=KF0KF1-KF100.31-P9	=KF0KF1+UC31-KF100.31-P9	=KF0KF1+UC31-XG2	PROFINET Cable	4	1	22		
		=KF0KF1+UC31-KF100.31						
=KF0KF1-KF100.31-P10	=KF0KF1+UC31-KF100.31-P10	=KF0KF1+UC31-KF100.31	PROFINET Cable	4	1	22		
=KF0KF1-KF100.31-P11	=KF0KF1+UC31-KF100.31-P11	=KF0KF1+UC31-KF100.31	PROFINET Cable	4	1	22		
=KF0KF1-KF100.31-P12	=KF0KF1+UC31-KF100.31-P12	=KF0KF1+UC31-KF100.31	PROFINET Cable	4	1	22		
=KF0KF1-KF100.31-P13	=KF0KF1+UC31-KF100.31-P13	=KF0KF1+UC31-KF100.31	PROFINET Cable	4	1	22		
=KF0KF1-KF100.31-P14	=KF0KF1+UC31-KF100.31-P14	=KF0KF1+UC31-KF100.31	PROFINET Cable	4	1	22		
=KF0KF1-KF100.31-P15	=KF0KF1+UC31-KF100.31-P15	=KF0KF1+UC31-KF100.31	PROFINET Cable	4	1	22		
=KF0KF1-KF100.31-P16	=KF0KF1+UC31-KF100.31-P16	=KF0KF1+UC31-KF100.31	PROFINET Cable	4	1	22		
=KF0KF1-WF1	=KF0KF1+UC31-KF99.31	=KF0KF1+UC31-xx	PROFINET Cable	4	0	22		
=V1AR11KF1-KF100.11-P6	=V1AR11KF1+V1AR11UC01-XPN-X2	=V1KF1+V1UC11-KF100.11-P6	PROFINET Cable	4	1	22		
=V1AR11UQ41KF1-WF1	=V1AR11UQ41KF1+V1AR11UQ41-KF1-TP1	=V1AR11UQ41KF1+V1AR11UQ41-R3.CP/CS	PROFINET Cable	4	1	22		
=V1AR11UQ41KF2-WF2	=V1AR11UQ41KF1+V1AR11UQ41-KF1-TP2	=V1AR11UQ41KF2+V1AR11UQ41-KF2-TP1	PROFINET Cable	4	1	22		
=V1AR11UQ41KF3-WF3	=V1AR11UQ41KF2+V1AR11UQ41-KF2-TP2	=V1AR11UQ41KF3+V1AR11UQ41-KF3-TP1	PROFINET Cable	4	1	22		
=V1AR12KF1-KF100.15-P8	=V1AR12KF1+V1AR12UC01-XPN-X2	=V1KF1+V1UC15-KF100.15-P8	PROFINET Cable	4	1	22		
=V1AR12UQ41KF1-WF1	=V1AR12UQ41KF1+V1AR12UQ41-KF1-TP1	=V1AR12UQ41KF1+V1AR12UQ41-R3.CP/CS	PROFINET Cable	4	1	22		
=V1AR13KF1-KF100.15-P10	=V1AR13KF1+V1AR13UC01-XPN-X2	=V1KF1+V1UC15-KF100.15-P10	PROFINET Cable	4	1	22		
=V1AR13UQ41KF1-WF1	=V1AR13UQ41KF1+V1AR13UQ41-KF1-TP1	=V1AR13UQ41KF1+V1AR13UQ41-R3.CP/CS	PROFINET Cable	4	1	22		
=V1AR14KF1-KF100.15-P12	=V1AR14KF1+V1AR14UC01-XPN-X2	=V1KF1+V1UC15-KF100.15-P12	PROFINET Cable	4	1	22		
=V1AR14UQ41KF1-WF1	=V1AR14UQ41KF1+V1AR14UQ41-KF1-TP1	=V1AR14UQ41KF1+V1AR14UQ41-R3.CP/CS	PROFINET Cable	4	1	22		
=V1AR15KF1-KF100.14-P8	=V1AR15KF1+V1AR15UC01-XPN-X2	=V1KF1+V1UC14-KF100.14-P8	PROFINET Cable	4	1	22		
=V1AR15UQ41KF1-WF1	=V1AR15UQ41KF1+V1AR15UQ41-KF1-TP1	=V1AR15UQ41KF1+V1AR15UQ41-R3.CP/CS	PROFINET Cable	4	1	22		
=V1AR21KF1-KF100.11-P7	=V1AR21KF1+V1AR21UC01-XPN-X2	=V1KF1+V1UC11-KF100.11-P7	PROFINET Cable	4	1	22		
=V1AR22KF1-KF100.15-P6	=V1AR22KF1+V1AR22UC01-XPN-X2	=V1KF1+V1UC15-KF100.15-P6	PROFINET Cable	4	1	22		
=V1AR23KF1-KF100.11-P8	=V1AR23KF1+V1AR23UC01-XPN-X2	=V1KF1+V1UC11-KF100.11-P8	PROFINET Cable	4	1	22		
=V1AR24KF1-KF100.15-P7	=V1AR24KF1+V1AR24UC01-XPN-X2	=V1KF1+V1UC15-KF100.15-P7	PROFINET Cable	4	1	22		
=V1AR25KF1-KF100.15-P9	=V1AR25KF1+V1AR25UC01-XPN-X2	=V1KF1+V1UC15-KF100.15-P9	PROFINET Cable	4	1	22		
=V1AR26KF1-KF100.11-P9	=V1AR26KF1+V1AR26UC01-XPN-X2	=V1KF1+V1UC11-KF100.11-P9	PROFINET Cable	4	1	22		
=V1AR27KF1-KF100.15-P11	=V1AR27KF1+V1AR27UC01-XPN-X2	=V1KF1+V1UC15-KF100.15-P11	PROFINET Cable	4	1	22		

Cable overview

F10_001_Cable

Cable name	Source (from)	Target (to)	cable type	all conductors	Conductors used	Cross-section [mm]	Length [m]	remark
=V1AR28KF1-KF100.11-P10	=V1AR28KF1+V1AR28UC01-XPN-X2	=V1KF1+V1UC11-KF100.11-P10	PROFINET Cable	4	1	22		
=V1AR29KF1-KF100.15-P13	=V1AR29KF1+V1AR29UC01-XPN-X2	=V1KF1+V1UC15-KF100.15-P13	PROFINET Cable	4	1	22		
=V1AR51KF1-KF100.12-P5	=V1AR51KF1+V1AR51UC01-XPN-X2	=V1KF1+V1UC12-KF100.12-P5	PROFINET Cable	4	1	22		
=V1AR52KF1-KF100.14-P6	=V1AR52KF1+V1AR52UC01-XPN-X2	=V1KF1+V1UC14-KF100.14-P6	PROFINET Cable	4	1	22		
=V1AR53KF1-KF100.12-P6	=V1AR53KF1+V1AR53UC01-XPN-X2	=V1KF1+V1UC12-KF100.12-P6	PROFINET Cable	4	1	22		
=V1AR54KF1-KF100.14-P7	=V1AR54KF1+V1AR54UC01-XPN-X2	=V1KF1+V1UC14-KF100.14-P7	PROFINET Cable	4	1	22		
=V1AR141KF1-KF100.15-P5	=V1AR141KF1+V1AR141UC01-XPN-X2	=V1KF1+V1UC15-KF100.15-P5	PROFINET Cable	4	1	22		
=V1AR142KF1-KF100.11-P5	=V1AR142KF1+V1AR142UC01-XPN-X2	=V1KF1+V1UC11-KF100.11-P5	PROFINET Cable	4	1	22		
=V1AR191KF1-KF100.12-P7	=V1AR191KF1+V1AR191UC01-XPN-X2	=V1KF1+V1UC12-KF100.12-P7	PROFINET Cable	4	1	22		
=V1AR192KF1-KF100.12-P8	=V1AR192KF1+V1AR192UC01-XPN-X2	=V1KF1+V1UC12-KF100.12-P8	PROFINET Cable	4	1	22		
=V1AR211KF1-KF100.31-P14	=KF0KF1+UC31-KF100.31-P14	=V1AR211KF1+V1AR211UC01-XPN-X2	PROFINET Cable	4	1	22		
=V1AR212KF1-KF100.15-P14	=V1AR212KF1+V1AR212UC01-XPN-X2	=V1KF1+V1UC15-KF100.15-P14	PROFINET Cable	4	1	22		
=V1AR213KF1-KF100.14-P5	=V1AR213KF1+V1AR213UC01-XPN-X2	=V1KF1+V1UC14-KF100.14-P5	PROFINET Cable	4	1	22		
=V1BX11WC3-KF100.12-P11	=V1KF1+V1UC12-KF100.12-P11	=V1BX11WC3+V1BX11UC01-KFS1	PROFINET Cable	4	1	22		
=V1FQ1-KF100.11-P15	=V1FQ1+V1FQ1BG1-BG1-X3	=V1FQ1+V1FQ1BG2-BG2-X4	PROFINET Cable	4	0	22		
=V1FQ1-KF100.12-P16	=V1FQ1+V1FQ1BG6-BG6-X4	=V1FQ1+V1FQ1BG7-BG7-X3	PROFINET Cable	4	0	22		
	=V1FQ1+V1FQ1BG7-BG7-X4	=V1FQ1+V1FQ1BG8-BG8-X3						
=V1GL11KF2-KF100.15-P15			PROFINET Cable	4	0	22		
=V1GL11KF2-WF1	=V1GL11KF2+V1GL11KF2-KF2.12	=V1GL11UQ51KF2+V1GL11UQ51-KF2-TP2	PROFINET Cable	4	1	22		
=V1GL11UQ51KF2-WF1			PROFINET Cable	4	0	22		
=V1GL12KF2-KF100.11-P13			PROFINET Cable	4	0	22		
=V1GL12KF2-WF1	=V1GL12KF2+V1GL12KF2-KF2.12	=V1GL12UQ51KF2+V1GL12UQ51-KF2-TP2	PROFINET Cable	4	1	22		
=V1GL12UQ51KF2-WF1			PROFINET Cable	4	0	22		
=V1GL13KF1-WF1	=V1GL13KF1+V1GL13KF1-KF1.12	=V1GL13UQ51KF1+V1GL13UQ51-KF1-TP2	PROFINET Cable	4	1	22		
=V1GL13UQ51KF1-KF100.14-P15	=V1KF1+V1UC14-KF100.14-P15	=V1GL13UQ51KF1+V1GL13UQ51-KF1-TP1	PROFINET Cable	4	1	22		
=V1KF1-KF100.11-P1	=V1KF1+V1UC11-KF100.11-P1	=V1KF1+V1UC11-KF100.11	PROFINET Cable	4	1	22		
=V1KF1-KF100.11-P4	=V1KF1+V1UC11-KF100.11-P4	=V1KF1+V1UC11-KF100.11	PROFINET Cable	4	1	22		
=V1KF1-KF100.11-P5	=V1KF1+V1UC11-KF100.11-P5	=V1KF1+V1UC11-KF100.11	PROFINET Cable	4	1	22		
=V1KF1-KF100.11-P6	=V1KF1+V1UC11-KF100.11-P6	=V1KF1+V1UC11-KF100.11	PROFINET Cable	4	1	22		
=V1KF1-KF100.11-P7	=V1KF1+V1UC11-KF100.11-P7	=V1KF1+V1UC11-KF100.11	PROFINET Cable	4	1	22		
=V1KF1-KF100.11-P8	=V1KF1+V1UC11-KF100.11-P8	=V1KF1+V1UC11-KF100.11	PROFINET Cable	4	1	22		
=V1KF1-KF100.11-P9	=V1KF1+V1UC11-KF100.11-P9	=V1KF1+V1UC11-KF100.11	PROFINET Cable	4	1	22		
=V1KF1-KF100.11-P10	=V1KF1+V1UC11-KF100.11-P10	=V1KF1+V1UC11-KF100.11	PROFINET Cable	4	1	22		
=V1KF1-KF100.11-P11	=V1KF1+V1UC11-KF100.11-P11	=V1KF1+V1UC11-KF100.11	PROFINET Cable	4	1	22		
=V1KF1-KF100.11-P12	=V1KF1+V1UC11-KF100.11-P12	=V1KF1+V1UC11-KF100.11	PROFINET Cable	4	1	22		
=V1KF1-KF100.11-P13	=V1KF1+V1UC11-KF100.11-P13	=V1KF1+V1UC11-KF100.11	PROFINET Cable	4	1	22		
=V1KF1-KF100.11-P14	=V1KF1+V1UC11-KF100.11-P14	=V1KF1+V1UC11-KF100.11	PROFINET Cable	4	1	22		
=V1KF1-KF100.11-P15	=V1KF1+V1UC11-KF100.11-P15	=V1FQ1+V1FQ1BG2-BG2-X3	PROFINET Cable	4	1	22		
		=V1KF1+V1UC11-KF100.11						
=V1KF1-KF100.11-P16	=V1KF1+V1UC11-KF100.11-P16	=V1FQ1+V1FQ1BG3-BG3-X3	PROFINET Cable	4	1	22		
		=V1KF1+V1UC11-KF100.11						
=V1KF1-KF100.11-P3	=V1KF1+V1UC11-KF100.11	=V1KF1+V1UC11-KF11	PROFINET Cable	4	0	22		
=V1KF1-KF100.31-P6	=KF0KF1+UC31-KF100.31-P6	=V1KF1+V1UC11-KF100.11-P1	PROFINET Cable	4	0	22		
=V1KF1-KF100.12-P1	=V1KF1+V1UC12-KF100.12-P1	=V1KF1+V1UC12-KF100.12	PROFINET Cable	4	1	22		
=V1KF1-KF100.12-P4	=V1KF1+V1UC12-KF100.12-P4	=V1KF1+V1UC12-KF100.12	PROFINET Cable	4	1	22		
=V1KF1-KF100.12-P5	=V1KF1+V1UC12-KF100.12-P5	=V1KF1+V1UC12-KF100.12	PROFINET Cable	4	1	22		

			Date	12/22/2022	Volvo Trucks North America	Valiant TMS	Cable overview	Drawing name: =2V04&EFS-EL	=
			Ed.	MKLEPADLO					+
			Appr		P6700 Underbody Mainline - Cell 2V04			Document type: EMC	Project nr: 22-16151
Modification	Date	Name	Original		Replacement of	Replaced by	Scale 1:1		Page 2 / 1630

Cable overview

F10_001_Cable

Cable name	Source (from)	Target (to)	cable type	all conductors	Conductors used	Cross-section [mm]	Length [m]	remark
=V1KF1-KF100.12-P6	=V1KF1+V1UC12-KF100.12-P6	=V1KF1+V1UC12-KF100.12	PROFINET Cable	4	1	22		
=V1KF1-KF100.12-P7	=V1KF1+V1UC12-KF100.12-P7	=V1KF1+V1UC12-KF100.12	PROFINET Cable	4	1	22		
=V1KF1-KF100.12-P8	=V1KF1+V1UC12-KF100.12-P8	=V1KF1+V1UC12-KF100.12	PROFINET Cable	4	1	22		
=V1KF1-KF100.12-P9	=V1KF1+V1UC12-KF100.12-P9	=V1KF1+V1UC12-KF100.12	PROFINET Cable	4	1	22		
=V1KF1-KF100.12-P10	=V1KF1+V1UC12-KF100.12-P10	=V1KF1+V1UC12-KF100.12	PROFINET Cable	4	1	22		
=V1KF1-KF100.12-P11	=V1KF1+V1UC12-KF100.12-P11	=V1KF1+V1UC12-KF100.12	PROFINET Cable	4	1	22		
=V1KF1-KF100.12-P12	=V1KF1+V1UC12-KF100.12-P12	=V1KF1+V1UC12-KF100.12	PROFINET Cable	4	1	22		
=V1KF1-KF100.12-P13	=V1KF1+V1UC12-KF100.12-P13	=V1KF1+V1UC12-KF100.12	PROFINET Cable	4	1	22		
=V1KF1-KF100.12-P14	=V1KF1+V1UC12-KF100.12-P14	=V1KF1+V1UC12-KF100.12	PROFINET Cable	4	1	22		
=V1KF1-KF100.12-P15	=V1KF1+V1UC12-KF100.12-P15	=V1FQ1+V1FQ1BG5-BG5-X3	PROFINET Cable	4	1	22		
		=V1KF1+V1UC12-KF100.12						
=V1KF1-KF100.12-P16	=V1KF1+V1UC12-KF100.12-P16	=V1FQ1+V1FQ1BG6-BG6-X3	PROFINET Cable	4	1	22		
		=V1KF1+V1UC12-KF100.12						
=V1KF1-KF100.12-P3	=V1KF1+V1UC12-KF100.12	=V1KF1+V1UC12-KF12	PROFINET Cable	4	0	22		
=V1KF1-KF100.31-P7	=KF0KF1+UC31-KF100.31-P7	=V1KF1+V1UC12-KF100.12-P1	PROFINET Cable	4	0	22		
=V1KF1-KF100.14-P1	=V1KF1+V1UC14-KF100.14-P1	=V1KF1+V1UC14-KF100.14	PROFINET Cable	4	1	22		
=V1KF1-KF100.14-P3	=V1KF1+V1UC14-KF100.14	=V1KF1+V1UC14-KF14	PROFINET Cable	4	0	22		
=V1KF1-KF100.14-P4	=V1KF1+V1UC14-KF100.14-P4	=V1KF1+V1UC14-KF100.14	PROFINET Cable	4	1	22		
=V1KF1-KF100.14-P5	=V1KF1+V1UC14-KF100.14-P5	=V1KF1+V1UC14-KF100.14	PROFINET Cable	4	1	22		
=V1KF1-KF100.14-P6	=V1KF1+V1UC14-KF100.14-P6	=V1KF1+V1UC14-KF100.14	PROFINET Cable	4	1	22		
=V1KF1-KF100.14-P7	=V1KF1+V1UC14-KF100.14-P7	=V1KF1+V1UC14-KF100.14	PROFINET Cable	4	1	22		
=V1KF1-KF100.14-P8	=V1KF1+V1UC14-KF100.14-P8	=V1KF1+V1UC14-KF100.14	PROFINET Cable	4	1	22		
=V1KF1-KF100.14-P9	=V1KF1+V1UC14-KF100.14-P9	=V1KF1+V1UC14-KF100.14	PROFINET Cable	4	1	22		
=V1KF1-KF100.14-P10	=V1KF1+V1UC14-KF100.14-P10	=V1KF1+V1UC14-KF100.14	PROFINET Cable	4	1	22		
=V1KF1-KF100.14-P11	=V1KF1+V1UC14-KF100.14-P11	=V1KF1+V1UC14-KF100.14	PROFINET Cable	4	1	22		
=V1KF1-KF100.14-P12	=V1KF1+V1UC14-KF100.14-P12	=V1KF1+V1UC14-KF100.14	PROFINET Cable	4	1	22		
=V1KF1-KF100.14-P13	=V1KF1+V1UC14-KF100.14-P13	=V1KF1+V1UC14-KF100.14	PROFINET Cable	4	1	22		
=V1KF1-KF100.14-P14	=V1KF1+V1UC14-KF100.14-P14	=V1KF1+V1UC14-KF100.14	PROFINET Cable	4	1	22		
=V1KF1-KF100.14-P15	=V1KF1+V1UC14-KF100.14-P15	=V1KF1+V1UC14-KF100.14	PROFINET Cable	4	1	22		
=V1KF1-KF100.14-P16	=V1KF1+V1UC14-KF100.14-P16	=V1FQ1+V1FQ1BG4-BG4-X3	PROFINET Cable	4	1	22		
		=V1KF1+V1UC14-KF100.14						
=V1KF1-KF100.31-P10	=KF0KF1+UC31-KF100.31-P10	=V1KF1+V1UC14-KF100.14-P1	PROFINET Cable	4	0	22		
=V1KF1-KF100.15-P1	=V1KF1+V1UC15-KF100.15-P1	=V1KF1+V1UC15-KF100.15	PROFINET Cable	4	1	22		
=V1KF1-KF100.15-P3	=V1KF1+V1UC15-KF100.15	=V1KF1+V1UC15-KF15	PROFINET Cable	4	0	22		
=V1KF1-KF100.15-P4	=V1KF1+V1UC15-KF100.15-P4	=V1KF1+V1UC15-KF100.15	PROFINET Cable	4	1	22		
=V1KF1-KF100.15-P5	=V1KF1+V1UC15-KF100.15-P5	=V1KF1+V1UC15-KF100.15	PROFINET Cable	4	1	22		
=V1KF1-KF100.15-P6	=V1KF1+V1UC15-KF100.15-P6	=V1KF1+V1UC15-KF100.15	PROFINET Cable	4	1	22		
=V1KF1-KF100.15-P7	=V1KF1+V1UC15-KF100.15-P7	=V1KF1+V1UC15-KF100.15	PROFINET Cable	4	1	22		
=V1KF1-KF100.15-P8	=V1KF1+V1UC15-KF100.15-P8	=V1KF1+V1UC15-KF100.15	PROFINET Cable	4	1	22		
=V1KF1-KF100.15-P9	=V1KF1+V1UC15-KF100.15-P9	=V1KF1+V1UC15-KF100.15	PROFINET Cable	4	1	22		
=V1KF1-KF100.15-P10	=V1KF1+V1UC15-KF100.15-P10	=V1KF1+V1UC15-KF100.15	PROFINET Cable	4	1	22		
=V1KF1-KF100.15-P11	=V1KF1+V1UC15-KF100.15-P11	=V1KF1+V1UC15-KF100.15	PROFINET Cable	4	1	22		
=V1KF1-KF100.15-P12	=V1KF1+V1UC15-KF100.15-P12	=V1KF1+V1UC15-KF100.15	PROFINET Cable	4	1	22		
=V1KF1-KF100.15-P13	=V1KF1+V1UC15-KF100.15-P13	=V1KF1+V1UC15-KF100.15	PROFINET Cable	4	1	22		
=V1KF1-KF100.15-P14	=V1KF1+V1UC15-KF100.15-P14	=V1KF1+V1UC15-KF100.15	PROFINET Cable	4	1	22		
=V1KF1-KF100.15-P15	=V1KF1+V1UC15-KF100.15-P15	=V1KF1+V1UC15-KF100.15	PROFINET Cable	4	1	22		

			Date	12/22/2022	Volvo Trucks North America	Valiant TMS	Cable overview	Drawing name: =2V04&EFS-EL	=
			Ed.	MKLEPADLO					+
			Appr		P6700 Underbody Mainline - Cell 2V04			Document type: EMC	Project nr: 22-16151
Modification	Date	Name	Original		Replacement of	Replaced by	Scale 1:1		Page 3 / 1630

Cable overview

F10_001_Cable

Cable name	Source (from)	Target (to)	cable type	all conductors	Conductors used	Cross-section [mm]	Length [m]	remark
=V1KF1-KF100.15-P16	=V1KF1+V1UC15-KF100.15-P16	=V1KF1+V1UC15-KF100.15	PROFINET Cable	4	1	22		
=V1KF1-KF100.31-P11	=KF0KF1+UC31-KF100.31-P11	=V1KF1+V1UC15-KF100.15-P1	PROFINET Cable	4	0	22		
=V1KF1-KF100.12-P12	=V1KF1+V1UC12-KF100.12-P12	=V1KF1+V1UC32-PNET1	PROFINET Cable	4	1	22		
=V1KF1-PNET1	=V1KF1+V1UC32-PNET1	=V1KF1+V1UC32-KF32	PROFINET Cable	4	0	22		
=V1KF1-KF100.12-P13	=V1KF1+V1UC12-KF100.12-P13	=V1KF1+V1UC33-PNET1	PROFINET Cable	4	1	22		
=V1KF1-PNET1	=V1KF1+V1UC33-PNET1	=V1KF1+V1UC33-KF33	PROFINET Cable	4	0	22		
=V1SF0PG1-KF32-P2	=V1KF1+V1UC32-KF32	=V1SF0PG1+V1UC32-PG1	PROFINET Cable	4	0	22		
=V1SF0PG2-KF33-P2	=V1KF1+V1UC33-KF33	=V1SF0PG2+V1UC33-PG1	PROFINET Cable	4	0	22		
=V1UQ51KF1-KF100.11-P12	=V1KF1+V1UC11-KF100.11-P11	=V1UQ51KF1+V1UQ51-KF1-TP1	PROFINET Cable	4	0	22		
=V1UQ51KF2-WF2	=V1UQ51KF1+V1UQ51-KF1-TP2	=V1UQ51KF2+V1UQ51-KF2-TP1	PROFINET Cable	4	1	22		
=V1UQ51KF3-WF3	=V1UQ51KF2+V1UQ51-KF2-TP2	=V1UQ51KF3+V1UQ51-KF3-TP1	PROFINET Cable	4	1	22		
=V1UQ52KF1-KF100.11-P12	=V1KF1+V1UC11-KF100.11-P12	=V1UQ52KF1+V1UQ52-KF1-TP1	PROFINET Cable	4	1	22		
=V1UQ53KF1-KF100.14-P13	=V1KF1+V1UC14-KF100.14-P13	=V1UQ53KF1+V1UQ53-KF1-TP1	PROFINET Cable	4	1	22		
=V1UQ54KF1-KF100.15-P16	=V1KF1+V1UC15-KF100.15-P16	=V1UQ54KF1+V1UQ54-KF1-TP1	PROFINET Cable	4	1	22		
=V1UQ55KF1-KF100.14-P14	=V1KF1+V1UC14-KF100.14-P14	=V1UQ55KF1+V1UQ55-KF1-TP1	PROFINET Cable	4	1	22		
=V1WC1-KF100.11-P2	=V1KF1+V1UC11-KF100.11	=V1WC1+V1UC11-KF1.2	PROFINET Cable	4	1	22		
=V1WC1-KF100.12-P2	=V1KF1+V1UC12-KF100.12	=V1WC1+V1UC12-KF1.2	PROFINET Cable	4	1	22		
=V1WR1UQ51KF1-KF100.14-P12	=V1KF1+V1UC14-KF100.14-P12	=V1WR1UQ51KF1+V1WR1UQ51-KF1-TP1	PROFINET Cable	4	0	22		
=V1WR1WC1-KF100.14-P10	=V1KF1+V1UC14-KF100.14-P11	=V1WR1WC1+V1WR1UC01-X150	PROFINET Cable	4	1	22		
=V1GL11KF2-W2	=V1WC4+V1UC15-XD161	=V1GL11KF2+V1GL11KF2-KF2.12	PUR	5	3	16	30	
=V1GL12KF2-W2	=V1WC4+V1UC11-XD181	=V1GL12KF2+V1GL12KF2-KF2.12	PUR	5	3	16	25	
=V1GL13KF1-W1.2	=V1GL13KF1+V1GL13KF1-KF1.12	=V1GL13UQ51WC4+V1GL13UQ51-XG51	PUR	5	3	16	5	
=V1WC1-GND1	=WC1+V1UC161-WC1	=V1WC1+V1UC161-GND	RK	1	0	2		
=V1WC1-GND1	=WC1+V1UC162-WC1	=V1WC1+V1UC162-GND	RK	1	0	2		
=V1WC1-GND1	=WC1+V1UC163-WC1	=V1WC1+V1UC163-GND	RK	1	0	2		
=V1WC1-GND1	=WC1+V1UC164-WC1	=V1WC1+V1UC164-GND	RK	1	0	2		
=V1WC1-GND1	=V1WC1+V1UC11-GND	=V1WC1+V1UC11-PE	RK	1	1	6		
=V1WC1-GND1	=V1WC1+V1UC12-GND	=V1WC1+V1UC12-PE	RK	1	1	6		
=V1AR21XQ11WC1-W1			TC-ER	4	0	1	7.62	Max.
=V1AR22XQ11WC1-W1	=V1AR22XQ11WC1+V1AR22XQ11UC01-XG1	=V1WC2+V1UC163-XG1	TC-ER	4	4	1	7.62	Max.
		=V1WC2+V1UC163-XG2						
=V1AR23XQ11WC1-W1	=V1AR23XQ11WC1+V1AR23XQ11UC01-XG1	=V1WC2+V1UC161-XG1	TC-ER	4	4	1	7.62	Max.
		=V1WC2+V1UC161-XG2						
=V1AR24XQ11WC1-W1	=V1AR24XQ11WC1+V1AR24XQ11UC01-XG1	=V1WC2+V1UC163-XG1	TC-ER	4	4	1	7.62	Max.
		=V1WC2+V1UC163-XG2						
=V1AR25XQ11WC1-W1	=V1AR25XQ11WC1+V1AR25XQ11UC01-XG1	=V1WC2+V1UC164-XG1	TC-ER	4	4	1	7.62	Max.
		=V1WC2+V1UC164-XG2						
=V1AR26XQ11WC1-W1	=V1AR26XQ11WC1+V1AR26XQ11UC01-XG1	=V1WC2+V1UC161-XG1	TC-ER	4	4	1	7.62	Max.
		=V1WC2+V1UC161-XG2						
=V1AR27XQ11WC1-W1	=V1AR27XQ11WC1+V1AR27XQ11UC01-XG1	=V1WC2+V1UC164-XG1	TC-ER	4	4	1	7.62	Max.
		=V1WC2+V1UC164-XG2						
=V1AR28XQ11WC1-W1	=V1AR28XQ11WC1+V1AR28XQ11UC01-XG1	=V1WC2+V1UC161-XG1	TC-ER	4	4	1	7.62	Max.
		=V1WC2+V1UC161-XG2						
=V1AR29XQ11WC1-W1	=V1AR29XQ11WC1+V1AR29XQ11UC01-XG1	=V1WC2+V1UC164-XG1	TC-ER	4	4	1	7.62	Max.
		=V1WC2+V1UC164-XG2						
=V1AR211XQ11WC1-W1	=V1AR211XQ11WC1+V1AR211XQ11UC01-XG1	=V1WC2+V1UC162-XG1	TC-ER	4	4	1	7.62	Max.

			Date	12/22/2022	Volvo Trucks North America	Valiant TMS	Cable overview	Drawing name: =2V04&EFS-EL	=
			Ed.	MKLEPADLO					+
			Appr		P6700 Underbody Mainline - Cell 2V04			Document type: EMC	Project nr: 22-16151
Modification	Date	Name	Original		Replacement of	Replaced by	Scale 1:1		Page 4 / 1630

Cable overview

F10_001_Cable

Cable name	Source (from)	Target (to)	cable type	all conductors	Conductors used	Cross-section [mm]	Length [m]	remark
		=V1WC2+V1UC162-XG2						
=V1AR212XQ11WC1-W1	=V1AR212XQ11WC1+V1AR212XQ11UC01-XG1	=V1WC2+V1UC164-XG1	TC-ER	4	4	1	7.62	Max.
		=V1WC2+V1UC164-XG2						
=V1AR213XQ11WC1-W1	=V1AR213XQ11WC1+V1AR213XQ11UC01-XG1	=V1WC2+V1UC162-XG1	TC-ER	4	4	1	7.62	Max.
		=V1WC2+V1UC162-XG2						
=V1AR141XQ41WC1-W1	=V1AR141XQ41WC1+V1AR141XQ41UC01-XG1	=V1AR141XQ41+V1UC12-FC1	TC-ER	4	4	4	20	
=V1AR142XQ41WC1-W1	=V1AR142XQ41WC1+V1AR142XQ41UC01-XG1	=V1AR142XQ41+V1UC11-FC1	TC-ER	4	4	4	15	
=V1AR51XQ51WC1-W1	=V1AR51XQ51WC1+V1AR51XQ51UC01-XG1	=V1AR51XQ51+V1UC12-FC1	TC-ER	4	4	8	36	
=V1AR52XQ51WC1-W1	=V1AR52XQ51WC1+V1AR52XQ51UC01-XG1	=V1AR52XQ51+V1UC11-FC1	TC-ER	4	4	8	21	
=V1AR53XQ51WC1-W1	=V1AR53XQ51WC1+V1AR53XQ51UC01-XG1	=V1AR53XQ51+V1UC12-FC1	TC-ER	4	4	8	37	
=V1AR54XQ51WC1-W1	=V1AR54XQ51WC1+V1AR54XQ51UC01-XG1	=V1AR54XQ51+V1UC11-FC1	TC-ER	4	4	8	22	
=V1BX11WC3-W1	=V1WC3+V1UC12-XD2	=V1BX11WC3+V1BX11UC01-Q1	TC-ER	3	3	8	40	
	=V1BX11WC3+V1BX11UC01-PE	=V1WC3+V1UC12-PE						
=KF0WC3-W1	=KF0WC3+UC31-XD1	=V1WC3+V1UC11-XD1	TC-ER	3	3	10	12	
		=V1WC3+V1UC11-PE						
=V1AR11WC1-W1		=V1AR11WC1+V1AR11UC01-PE	TC-ER	4	4	10	15	
	=V1AR11+V1UC11-FC1	=V1AR11WC1+V1AR11UC01-Q1						
=V1AR12WC1-W1		=V1AR12WC1+V1AR12UC01-PE	TC-ER	4	4	10	7	
	=V1AR12+V1UC12-FC1	=V1AR12WC1+V1AR12UC01-Q1						
=V1AR13WC1-W1		=V1AR13WC1+V1AR13UC01-PE	TC-ER	4	4	10	15	
	=V1AR13+V1UC12-FC1	=V1AR13WC1+V1AR13UC01-Q1						
=V1AR14WC1-W1		=V1AR14WC1+V1AR14UC01-PE	TC-ER	4	4	10	17	
	=V1AR14+V1UC12-FC1	=V1AR14WC1+V1AR14UC01-Q1						
=V1AR15WC1-W1		=V1AR15WC1+V1AR15UC01-PE	TC-ER	4	4	10	20	
	=V1AR15+V1UC11-FC1	=V1AR15WC1+V1AR15UC01-Q1						
=V1AR21WC1-W1		=V1AR21WC1+V1AR21UC01-PE	TC-ER	4	4	10	15	
	=V1AR21+V1UC11-FC1	=V1AR21WC1+V1AR21UC01-Q1						
=V1AR22WC1-W1		=V1AR22WC1+V1AR22UC01-PE	TC-ER	4	4	10	10	
	=V1AR22+V1UC12-FC1	=V1AR22WC1+V1AR22UC01-Q1						
=V1AR23WC1-W1		=V1AR23WC1+V1AR23UC01-PE	TC-ER	4	4	10	32	
	=V1AR23+V1UC11-FC1	=V1AR23WC1+V1AR23UC01-Q1						
=V1AR24WC1-W1		=V1AR24WC1+V1AR24UC01-PE	TC-ER	4	4	10	12	
	=V1AR24+V1UC12-FC1	=V1AR24WC1+V1AR24UC01-Q1						
=V1AR25WC1-W1		=V1AR25WC1+V1AR25UC01-PE	TC-ER	4	4	10	8	
	=V1AR25+V1UC12-FC1	=V1AR25WC1+V1AR25UC01-Q1						
=V1AR26WC1-W1		=V1AR26WC1+V1AR26UC01-PE	TC-ER	4	4	10	35	
	=V1AR26+V1UC11-FC1	=V1AR26WC1+V1AR26UC01-Q1						
=V1AR27WC1-W1		=V1AR27WC1+V1AR27UC01-PE	TC-ER	4	4	10	12	
	=V1AR27+V1UC12-FC1	=V1AR27WC1+V1AR27UC01-Q1						
=V1AR28WC1-W1		=V1AR28WC1+V1AR28UC01-PE	TC-ER	4	4	10	35	

Cable overview

F10_001_Cable

Cable name	Source (from)	Target (to)	cable type	all conductors	Conductors used	Cross-section [mm]	Length [m]	remark
	=V1AR28+V1UC11-FC1	=V1AR28WC1+V1AR28UC01-Q1						
=V1AR29WC1-W1		=V1AR29WC1+V1AR29UC01-PE	TC-ER	4	4	10	15	
	=V1AR29+V1UC12-FC1	=V1AR29WC1+V1AR29UC01-Q1						
=V1AR51WC1-W1		=V1AR51WC1+V1AR51UC01-PE	TC-ER	4	4	10	20	
	=V1AR51+V1UC12-FC1	=V1AR51WC1+V1AR51UC01-Q1						
=V1AR52WC1-W1		=V1AR52WC1+V1AR52UC01-PE	TC-ER	4	4	10	15	
	=V1AR52+V1UC11-FC1	=V1AR52WC1+V1AR52UC01-Q1						
=V1AR53WC1-W1		=V1AR53WC1+V1AR53UC01-PE	TC-ER	4	4	10	22	
	=V1AR53+V1UC12-FC1	=V1AR53WC1+V1AR53UC01-Q1						
=V1AR54WC1-W1		=V1AR54WC1+V1AR54UC01-PE	TC-ER	4	4	10	15	
	=V1AR54+V1UC11-FC1	=V1AR54WC1+V1AR54UC01-Q1						
=V1AR141WC1-W1		=V1AR141WC1+V1AR141UC01-PE	TC-ER	4	4	10	17	
	=V1AR141+V1UC12-FC1	=V1AR141WC1+V1AR141UC01-Q1						
=V1AR142WC1-W1		=V1AR142WC1+V1AR142UC01-PE	TC-ER	4	4	10	15	
	=V1AR142+V1UC11-FC1	=V1AR142WC1+V1AR142UC01-Q1						
=V1AR191WC1-W1		=V1AR191WC1+V1AR191UC01-PE	TC-ER	4	4	10	35	
	=V1AR191+V1UC12-FC1	=V1AR191WC1+V1AR191UC01-Q1						
=V1AR192WC1-W1		=V1AR192WC1+V1AR192UC01-PE	TC-ER	4	4	10	35	
	=V1AR192+V1UC12-FC1	=V1AR192WC1+V1AR192UC01-Q1						
=V1AR211WC1-W1		=V1AR211WC1+V1AR211UC01-PE	TC-ER	4	4	10	35	
	=V1AR211+V1UC11-FC1	=V1AR211WC1+V1AR211UC01-Q1						
=V1AR212WC1-W1		=V1AR212WC1+V1AR212UC01-PE	TC-ER	4	4	10	16	
	=V1AR212+V1UC12-FC1	=V1AR212WC1+V1AR212UC01-Q1						
=V1AR213WC1-W1		=V1AR213WC1+V1AR213UC01-PE	TC-ER	4	4	10	35	
	=V1AR213+V1UC11-FC1	=V1AR213WC1+V1AR213UC01-Q1						
=V1GL11WC1-W1		=V1GL11WC1+V1GL11UC01-Q1	TC-ER	4	4	10	45	
	=V1GL11+V1UC12-FC1							
=V1GL12WC1-W1		=V1GL12WC1+V1GL12UC01-Q1	TC-ER	4	4	10	45	
	=V1GL12+V1UC11-FC1							
=V1WC3-W1	=V1WC3+V1UC11-XD2	=V1WC3+V1UC14-XD1	TC-ER	3	3	10	25	
	=V1WC3+V1UC11-PE							
=V1WC3-W1	=V1WC3+V1UC12-XD2	=V1WC3+V1UC15-XD1	TC-ER	3	3	10	17	
	=V1WC3+V1UC12-PE							
=V1WR1WC1-W1		=V1WR1WC1+V1WR1UC01-PE	TC-ER	4	4	10	25	
	=V1WR1+V1UC11-FC1	=V1WR1WC1+V1WR1UC01-Q1						
=KH0-W2			TPE	4	0	18	12	Air supply
=KH0-W3	=V1KF1+V1UC15-KF15.12	=KH0+KH0-BP2	TPE	4	4	18	12	Air supply
	=V1WC4+V1UC15-XD10							
	=V1WC4+V1UC15-XD15							
=KH0-W4	=V1KF1+V1UC11-KF11.14	=KH0+KH0-BP3	TPE	4	4	18	12	Air supply
	=V1WC4+V1UC11-XD10							
	=V1WC4+V1UC11-XD13							
=KH0-W5	=V1KF1+V1UC11-KF11.14	=KH0+KH0-BP4	TPE	4	4	18	12	Air supply
	=V1WC4+V1UC11-XD10							

			Date	12/22/2022	Volvo Trucks North America	Valiant TMS	Cable overview	Drawing name: =2V04&EFS-EL	=
			Ed.	MKLEPADLO					+
			Appr		P6700 Underbody Mainline - Cell 2V04			Document type: EMC	Project nr: 22-16151
Modification	Date	Name	Original		Replacement of	Replaced by	Scale 1:1		Page 6 / 1630

Cable overview

F10_001_Cable

Cable name	Source (from)	Target (to)	cable type	all conductors	Conductors used	Cross-section [mm]	Length [m]	remark
	=V1WC4+V1UC11-XD13							
=KH0-W6	=V1KF1+V1UC11-KF11.14	=KH0+KH0-BP5	TPE	4	4	18	10	Air supply
	=V1WC4+V1UC11-XD10							
	=V1WC4+V1UC11-XD13							
=KH0-W7	=V1KF1+V1UC14-KF14.12	=KH0+KH0-BP6	TPE	4	4	18	12	Air supply
	=V1WC4+V1UC14-XD10							
	=V1WC4+V1UC14-XD15							
=KH0-W8	=V1KF1+V1UC12-KF12.14	=KH0+KH0-BP7	TPE	4	4	18	12	Air supply
	=V1WC4+V1UC12-XD10							
	=V1WC4+V1UC12-XD13							
=KH0-W9	=V1KF1+V1UC14-KF14.12	=KH0+KH0-BP8	TPE	4	4	18	12	Air supply
	=V1WC4+V1UC14-XD10							
	=V1WC4+V1UC14-XD15							
=KH0-W10	=V1KF1+V1UC15-KF15.12	=KH0+KH0-BP9	TPE	4	4	18	12	Air supply
	=V1WC4+V1UC15-XD10							
	=V1WC4+V1UC15-XD15							
=KH3-W1	=V1KF1+V1UC11-KF11.14	=KH3+KH3-BF1	TPE	4	4	18	12	Air supply
	=V1WC4+V1UC11-XD10							
	=V1WC4+V1UC11-XD13							
=KH3-W2	=V1KF1+V1UC11-KF11.14	=KH3+KH3-BF2	TPE	4	4	18	12	Air supply
	=V1WC4+V1UC11-XD10							
	=V1WC4+V1UC11-XD13							
=V1AR11UQ41BG0-W1	=V1AR11UQ41BG0+V1AR11UQ41-XG1/3	=V1AR11UQ41KF2+V1AR11UQ41-KF2.13-X1	TPE	4	4	18	2	
=V1AR11UQ41BG0-W1.1	=V1AR11UQ41BG0+V1AR11UQ41-BG01	=V1AR11UQ41BG0+V1AR11UQ41-XG1/3	TPE	4	3	18	0.5	
=V1AR11UQ41BG0-W1.2	=V1AR11UQ41BG0+V1AR11UQ41-BG03	=V1AR11UQ41BG0+V1AR11UQ41-XG1/3	TPE	4	3	18	1	
=V1AR11UQ41BG0-W2	=V1AR11UQ41BG0+V1AR11UQ41-XG2/4	=V1AR11UQ41KF3+V1AR11UQ41-KF3.13-X1	TPE	4	4	18	3	
=V1AR11UQ41BG0-W2.1	=V1AR11UQ41BG0+V1AR11UQ41-BG02	=V1AR11UQ41BG0+V1AR11UQ41-XG2/4	TPE	4	3	18	0.5	
=V1AR11UQ41BG0-W2.2	=V1AR11UQ41BG0+V1AR11UQ41-BG04	=V1AR11UQ41BG0+V1AR11UQ41-XG2/4	TPE	4	3	18	0.5	
=V1AR11UQ41UQ1.1-W1	=V1AR11UQ41KF1+V1AR11UQ41-KF1.11-X1	=V1AR11UQ41UQ1.1+V1AR11UQ41UQ1.1-BGS/R	TPE	4	4	18	3	
=V1AR11UQ41UQ2.1-W1	=V1AR11UQ41KF1+V1AR11UQ41-KF1.11-X2	=V1AR11UQ41UQ2.1+V1AR11UQ41UQ2.1-BGS/R	TPE	4	4	18	1	
=V1AR11UQ41UQ3.1-W1	=V1AR11UQ41KF1+V1AR11UQ41-KF1.11-X3	=V1AR11UQ41UQ3.1+V1AR11UQ41UQ3.1-BGS/R	TPE	4	4	18	2	
=V1AR11UQ41UQ3.2-W1	=V1AR11UQ41KF1+V1AR11UQ41-KF1.11-X4	=V1AR11UQ41UQ3.2+V1AR11UQ41UQ3.2-BGS/R	TPE	4	4	18	2	
=V1AR11UQ41UQ4.1-W1	=V1AR11UQ41KF1+V1AR11UQ41-KF1.11-X5	=V1AR11UQ41UQ4.1+V1AR11UQ41UQ4.1-BGS/R	TPE	4	4	18	3	
=V1AR11UQ41UQ4.2-W1	=V1AR11UQ41KF1+V1AR11UQ41-KF1.11-X6	=V1AR11UQ41UQ4.2+V1AR11UQ41UQ4.2-BGS/R	TPE	4	4	18	3	
=V1AR11UQ41UQ4.3-W1	=V1AR11UQ41KF1+V1AR11UQ41-KF1.11-X7	=V1AR11UQ41UQ4.3+V1AR11UQ41UQ4.3-BGS/R	TPE	4	4	18	2	
=V1AR11UQ41UQ4.4-W1	=V1AR11UQ41KF1+V1AR11UQ41-KF1.11-X8	=V1AR11UQ41UQ4.4+V1AR11UQ41UQ4.4-BGS/R	TPE	4	4	18	2	
=V1AR11UQ41UQ5.1-W1	=V1AR11UQ41KF1+V1AR11UQ41-KF1.12-X1	=V1AR11UQ41UQ5.1+V1AR11UQ41UQ5.1-BGS/R	TPE	4	4	18	1	
=V1AR11UQ41UQ5.2-W1	=V1AR11UQ41KF1+V1AR11UQ41-KF1.12-X2	=V1AR11UQ41UQ5.2+V1AR11UQ41UQ5.2-BGS/R	TPE	4	4	18	1	

			Date	12/22/2022	Volvo Trucks North America	Valiant TMS	Cable overview	Drawing name: =2V04&EFS-EL	=
			Ed.	MKLEPADLO					+
			Appr		P6700 Underbody Mainline - Cell 2V04			Document type: EMC	Project nr: 22-16151	Page 7
Modification	Date	Name	Original		Replacement of	Replaced by	Scale 1:1			1630

Cable overview

F10_001_Cable

Cable name	Source (from)	Target (to)	cable type	all conductors	Conductors used	Cross-section [mm]	Length [m]	remark
=V1AR11UQ41UQ5.3-W1	=V1AR11UQ41KF1+V1AR11UQ41-KF1.12-X3	=V1AR11UQ41UQ5.3+V1AR11UQ41UQ5.3-BGS/R	TPE	4	4	18	2	
=V1AR11UQ41UQ5.4-W1	=V1AR11UQ41KF1+V1AR11UQ41-KF1.12-X4	=V1AR11UQ41UQ5.4+V1AR11UQ41UQ5.4-BGS/R	TPE	4	4	18	2	
=V1AR11UQ41UQ6.1-W1	=V1AR11UQ41KF1+V1AR11UQ41-KF1.12-X5	=V1AR11UQ41UQ6.1+V1AR11UQ41UQ6.1-BGS/R	TPE	4	4	18	2	
=V1AR11UQ41UQ7.1-W1	=V1AR11UQ41KF1+V1AR11UQ41-KF1.12-X6	=V1AR11UQ41UQ7.1+V1AR11UQ41UQ7.1-BGS/R	TPE	4	3	18	2	
=V1AR11UQ41UQ8.1-W1	=V1AR11UQ41KF1+V1AR11UQ41-KF1.12-X7	=V1AR11UQ41UQ8.1+V1AR11UQ41UQ8.1-BGS/R	TPE	4	4	18	2	
=V1AR11UQ41UQ8.2-W1	=V1AR11UQ41KF1+V1AR11UQ41-KF1.12-X8	=V1AR11UQ41UQ8.2+V1AR11UQ41UQ8.2-BGS/R	TPE	4	4	18	2	
=V1AR11UQ41UQ8.3-W1	=V1AR11UQ41KF1+V1AR11UQ41-KF1.13-X1	=V1AR11UQ41UQ8.3+V1AR11UQ41UQ8.3-BGS/R	TPE	4	4	18	1	
=V1AR11UQ41UQ8.4-W1	=V1AR11UQ41KF1+V1AR11UQ41-KF1.13-X2	=V1AR11UQ41UQ8.4+V1AR11UQ41UQ8.4-BGS/R	TPE	4	4	18	1	
=V1AR11UQ41UQ9.1-W1	=V1AR11UQ41KF2+V1AR11UQ41-KF2.11-X1	=V1AR11UQ41UQ9.1+V1AR11UQ41UQ9.1-BGS/R	TPE	4	4	18	2	
=V1AR11UQ41UQ9.2-W1	=V1AR11UQ41KF2+V1AR11UQ41-KF2.11-X2	=V1AR11UQ41UQ9.2+V1AR11UQ41UQ9.2-BGS/R	TPE	4	4	18	1	
=V1AR11UQ41UQ10.1-W1	=V1AR11UQ41KF2+V1AR11UQ41-KF2.11-X3	=V1AR11UQ41UQ10.1+V1AR11UQ41UQ10.1-BGS/R	TPE	4	4	18	2	
=V1AR11UQ41UQ10.2-W1	=V1AR11UQ41KF2+V1AR11UQ41-KF2.11-X4	=V1AR11UQ41UQ10.2+V1AR11UQ41UQ10.2-BGS/R	TPE	4	4	18	2	
=V1AR11UQ41UQ11.1-W1	=V1AR11UQ41KF2+V1AR11UQ41-KF2.11-X5	=V1AR11UQ41UQ11.1+V1AR11UQ41UQ11.1-BGS/R	TPE	4	4	18	1	
=V1AR11UQ41UQ12.1-W1	=V1AR11UQ41KF2+V1AR11UQ41-KF2.11-X6	=V1AR11UQ41UQ12.1+V1AR11UQ41UQ12.1-BGS/R	TPE	4	3	18	2	
=V1AR11UQ41UQ13.1-W1	=V1AR11UQ41KF2+V1AR11UQ41-KF2.11-X7	=V1AR11UQ41UQ13.1+V1AR11UQ41UQ13.1-BGS/R	TPE	4	3	18	2	
=V1AR11UQ41UQ14.1-W1	=V1AR11UQ41KF2+V1AR11UQ41-KF2.11-X8	=V1AR11UQ41UQ14.1+V1AR11UQ41UQ14.1-BGS/R	TPE	4	4	18	2	
=V1AR11UQ41UQ14.2-W1	=V1AR11UQ41KF2+V1AR11UQ41-KF2.12-X1	=V1AR11UQ41UQ14.2+V1AR11UQ41UQ14.2-BGS/R	TPE	4	4	18	2	
=V1AR11UQ41UQ15.1-W1	=V1AR11UQ41KF2+V1AR11UQ41-KF2.12-X2	=V1AR11UQ41UQ15.1+V1AR11UQ41UQ15.1-BGS/R	TPE	4	4	18	2	
=V1AR11UQ41UQ15.2-W1	=V1AR11UQ41KF2+V1AR11UQ41-KF2.12-X3	=V1AR11UQ41UQ15.2+V1AR11UQ41UQ15.2-BGS/R	TPE	4	4	18	2	
=V1AR11UQ41UQ16.1-W1	=V1AR11UQ41KF2+V1AR11UQ41-KF2.12-X4	=V1AR11UQ41UQ16.1+V1AR11UQ41UQ16.1-BGS/R	TPE	4	4	18	2	
=V1AR11UQ41UQ16.2-W1	=V1AR11UQ41KF2+V1AR11UQ41-KF2.12-X5	=V1AR11UQ41UQ16.2+V1AR11UQ41UQ16.2-BGS/R	TPE	4	4	18	2	
=V1AR11UQ41UQ17.1-W1	=V1AR11UQ41KF3+V1AR11UQ41-KF3.11-X1	=V1AR11UQ41UQ17.1+V1AR11UQ41UQ17.1-BGS/R	TPE	4	4	18	2	
=V1AR11UQ41UQ18.1-W1	=V1AR11UQ41KF3+V1AR11UQ41-KF3.11-X2	=V1AR11UQ41UQ18.1+V1AR11UQ41UQ18.1-BGS/R	TPE	4	3	18	2	
=V1AR11UQ41UQ19.1-W1	=V1AR11UQ41KF3+V1AR11UQ41-KF3.11-X3	=V1AR11UQ41UQ19.1+V1AR11UQ41UQ19.1-BGS/R	TPE	4	3	18	2	
=V1AR11UQ41UQ20.1-W1	=V1AR11UQ41KF3+V1AR11UQ41-KF3.11-X4	=V1AR11UQ41UQ20.1+V1AR11UQ41UQ20.1-BGS/R	TPE	4	4	18	2	
=V1AR11UQ41UQ20.2-W1	=V1AR11UQ41KF3+V1AR11UQ41-KF3.11-X5	=V1AR11UQ41UQ20.2+V1AR11UQ41UQ20.2-BGS/R	TPE	4	4	18	2	
=V1AR11UQ41UQ21.1-W1	=V1AR11UQ41KF3+V1AR11UQ41-KF3.11-X6	=V1AR11UQ41UQ21.1+V1AR11UQ41UQ21.1-BGS/R	TPE	4	4	18	3	
=V1AR11UQ41UQ21.2-W1	=V1AR11UQ41KF3+V1AR11UQ41-KF3.11-X7	=V1AR11UQ41UQ21.2+V1AR11UQ41UQ21.2-BGS/R	TPE	4	4	18	3	
=V1AR11UQ41UQ22.1-W1	=V1AR11UQ41KF3+V1AR11UQ41-KF3.11-X8	=V1AR11UQ41UQ22.1+V1AR11UQ41UQ22.1-BGS/R	TPE	4	4	18	2	
=V1AR11UQ41UQ23.1-W1	=V1AR11UQ41KF3+V1AR11UQ41-KF3.12-X1	=V1AR11UQ41UQ23.1+V1AR11UQ41UQ23.1-BGS/R	TPE	4	3	18	2	
=V1AR11UQ41UQ24.1-W1	=V1AR11UQ41KF3+V1AR11UQ41-KF3.12-X2	=V1AR11UQ41UQ24.1+V1AR11UQ41UQ24.1-BGS/R	TPE	4	4	18	3	
=V1AR11UQ41UQ24.2-W1	=V1AR11UQ41KF3+V1AR11UQ41-KF3.12-X3	=V1AR11UQ41UQ24.2+V1AR11UQ41UQ24.2-BGS/R	TPE	4	4	18	3	
=V1AR12UQ41BG0-W1	=V1AR12UQ41BG0+V1AR12UQ41-XG1/2	=V1AR12UQ41KF1+V1AR12UQ41-KF1.13-X1	TPE	4	4	18		
=V1AR12UQ41BG0-W1.1	=V1AR12UQ41BG0+V1AR12UQ41-BG01	=V1AR12UQ41BG0+V1AR12UQ41-XG1/2	TPE	4	3	18		
=V1AR12UQ41BG0-W1.2	=V1AR12UQ41BG0+V1AR12UQ41-BG02	=V1AR12UQ41BG0+V1AR12UQ41-XG1/2	TPE	4	3	18		
=V1AR12UQ41UQ1.1-W1	=V1AR12UQ41KF1+V1AR12UQ41-KF1.11-X1	=V1AR12UQ41UQ1.1+V1AR12UQ41UQ1.1-BGS/R	TPE	4	3	18	1	
=V1AR12UQ41UQ2.1-W1	=V1AR12UQ41KF1+V1AR12UQ41-KF1.11-X2	=V1AR12UQ41UQ2.1+V1AR12UQ41UQ2.1-BGS/R	TPE	4	3	18	1	
=V1AR12UQ41UQ3.1-W1	=V1AR12UQ41KF1+V1AR12UQ41-KF1.11-X3	=V1AR12UQ41UQ3.1+V1AR12UQ41UQ3.1-BGS/R	TPE	4	3	18	1	
=V1AR12UQ41UQ4.1-W1	=V1AR12UQ41KF1+V1AR12UQ41-KF1.11-X4	=V1AR12UQ41UQ4.1+V1AR12UQ41UQ4.1-BGS/R	TPE	4	3	18	1	
=V1AR12UQ41UQ5.1-W1	=V1AR12UQ41KF1+V1AR12UQ41-KF1.11-X5	=V1AR12UQ41UQ5.1+V1AR12UQ41UQ5.1-BGS/R	TPE	4	4	18		
=V1AR12UQ41UQ5.2-W1	=V1AR12UQ41KF1+V1AR12UQ41-KF1.11-X6	=V1AR12UQ41UQ5.2+V1AR12UQ41UQ5.2-BGS/R	TPE	4	4	18		
=V1AR12UQ41UQ6.1-W1	=V1AR12UQ41KF1+V1AR12UQ41-KF1.11-X7	=V1AR12UQ41UQ6.1+V1AR12UQ41UQ6.1-BGS/R	TPE	4	4	18		
=V1AR12UQ41UQ6.2-W1	=V1AR12UQ41KF1+V1AR12UQ41-KF1.11-X8	=V1AR12UQ41UQ6.2+V1AR12UQ41UQ6.2-BGS/R	TPE	4	4	18		
=V1AR12UQ41UQ7.1-W1	=V1AR12UQ41KF1+V1AR12UQ41-KF1.12-X1	=V1AR12UQ41UQ7.1+V1AR12UQ41UQ7.1-BGS/R	TPE	4	4	18		
=V1AR12UQ41UQ7.2-W1	=V1AR12UQ41KF1+V1AR12UQ41-KF1.12-X2	=V1AR12UQ41UQ7.2+V1AR12UQ41UQ7.2-BGS/R	TPE	4	4	18		
=V1AR12UQ41UQ8.1-W1	=V1AR12UQ41KF1+V1AR12UQ41-KF1.12-X3	=V1AR12UQ41UQ8.1+V1AR12UQ41UQ8.1-BGS/R	TPE	4	4	18		

			Date	12/22/2022	Volvo Trucks North America	Valiant TMS	Cable overview	Drawing name: =2V04&EFS-EL	=
			Ed.	MKLEPADLO					+
			Appr		P6700 Underbody Mainline - Cell 2V04			Document type: EMC	Project nr: 22-16151
Modification	Date	Name	Original		Replacement of	Replaced by	Scale 1:1		Page 8 / 1630

Cable overview

F10_001_Cable

Cable name	Source (from)	Target (to)	cable type	all conductors	Conductors used	Cross-section [mm]	Length [m]	remark
=V1AR12UQ41UQ8.2-W1	=V1AR12UQ41KF1+V1AR12UQ41-KF1.12-X4	=V1AR12UQ41UQ8.2+V1AR12UQ41UQ8.2-BGS/R	TPE	4	4	18		
=V1AR12UQ41UQ9.1-W1	=V1AR12UQ41KF1+V1AR12UQ41-KF1.12-X5	=V1AR12UQ41UQ9.1+V1AR12UQ41UQ9.1-BGS/R	TPE	4	4	18		
=V1AR12UQ41UQ9.2-W1	=V1AR12UQ41KF1+V1AR12UQ41-KF1.12-X6	=V1AR12UQ41UQ9.2+V1AR12UQ41UQ9.2-BGS/R	TPE	4	4	18		
=V1AR13UQ41BG0-W1	=V1AR13UQ41BG0+V1AR13UQ41-XG1/2	=V1AR13UQ41KF1+V1AR13UQ41-KF1.13-X1	TPE	4	4	18	2	
=V1AR13UQ41BG0-W1.1	=V1AR13UQ41BG0+V1AR13UQ41-BG01	=V1AR13UQ41BG0+V1AR13UQ41-XG1/2	TPE	4	3	18	2	
=V1AR13UQ41BG0-W1.2	=V1AR13UQ41BG0+V1AR13UQ41-BG02	=V1AR13UQ41BG0+V1AR13UQ41-XG1/2	TPE	4	3	18	1	
=V1AR13UQ41UQ1.1-W1	=V1AR13UQ41KF1+V1AR13UQ41-KF1.11-X1	=V1AR13UQ41UQ1.1+V1AR13UQ41UQ1.1-BGS/R	TPE	4	3	18	2	
=V1AR13UQ41UQ2.1-W1	=V1AR13UQ41KF1+V1AR13UQ41-KF1.11-X2	=V1AR13UQ41UQ2.1+V1AR13UQ41UQ2.1-BGS/R	TPE	4	3	18	2	
=V1AR13UQ41UQ3.1-W1	=V1AR13UQ41KF1+V1AR13UQ41-KF1.11-X3	=V1AR13UQ41UQ3.1+V1AR13UQ41UQ3.1-BGS/R	TPE	4	3	18	2	
=V1AR13UQ41UQ4.1-W1	=V1AR13UQ41KF1+V1AR13UQ41-KF1.11-X4	=V1AR13UQ41UQ4.1+V1AR13UQ41UQ4.1-BGS/R	TPE	4	3	18	2	
=V1AR13UQ41UQ5.1-W1	=V1AR13UQ41KF1+V1AR13UQ41-KF1.11-X5	=V1AR13UQ41UQ5.1+V1AR13UQ41UQ5.1-BGS/R	TPE	4	4	18	2	
=V1AR13UQ41UQ5.2-W1	=V1AR13UQ41KF1+V1AR13UQ41-KF1.11-X6	=V1AR13UQ41UQ5.2+V1AR13UQ41UQ5.2-BGS/R	TPE	4	4	18	3	
=V1AR13UQ41UQ6.1-W1	=V1AR13UQ41KF1+V1AR13UQ41-KF1.11-X7	=V1AR13UQ41UQ6.1+V1AR13UQ41UQ6.1-BGS/R	TPE	4	4	18	2	
=V1AR13UQ41UQ6.2-W1	=V1AR13UQ41KF1+V1AR13UQ41-KF1.11-X8	=V1AR13UQ41UQ6.2+V1AR13UQ41UQ6.2-BGS/R	TPE	4	4	18	2	
=V1AR13UQ41UQ7.1-W1	=V1AR13UQ41KF1+V1AR13UQ41-KF1.12-X1	=V1AR13UQ41UQ7.1+V1AR13UQ41UQ7.1-BGS/R	TPE	4	4	18	2	
=V1AR13UQ41UQ7.2-W1	=V1AR13UQ41KF1+V1AR13UQ41-KF1.12-X2	=V1AR13UQ41UQ7.2+V1AR13UQ41UQ7.2-BGS/R	TPE	4	4	18	2	
=V1AR13UQ41UQ8.1-W1	=V1AR13UQ41KF1+V1AR13UQ41-KF1.12-X3	=V1AR13UQ41UQ8.1+V1AR13UQ41UQ8.1-BGS/R	TPE	4	4	18	1	
=V1AR13UQ41UQ8.2-W1	=V1AR13UQ41KF1+V1AR13UQ41-KF1.12-X4	=V1AR13UQ41UQ8.2+V1AR13UQ41UQ8.2-BGS/R	TPE	4	4	18	2	
=V1AR13UQ41UQ9.1-W1	=V1AR13UQ41KF1+V1AR13UQ41-KF1.12-X5	=V1AR13UQ41UQ9.1+V1AR13UQ41UQ9.1-BGS/R	TPE	4	4	18	2	
=V1AR13UQ41UQ9.2-W1	=V1AR13UQ41KF1+V1AR13UQ41-KF1.12-X6	=V1AR13UQ41UQ9.2+V1AR13UQ41UQ9.2-BGS/R	TPE	4	4	18	2	
=V1AR14UQ41BG0-W1	=V1AR14UQ41BG0+V1AR14UQ41-XG1/2	=V1AR14UQ41KF1+V1AR14UQ41-KF1.13-X1	TPE	4	4	18	2	
=V1AR14UQ41BG0-W1.1	=V1AR14UQ41BG0+V1AR14UQ41-BG01	=V1AR14UQ41BG0+V1AR14UQ41-XG1/2	TPE	4	3	18	2	
=V1AR14UQ41BG0-W1.2	=V1AR14UQ41BG0+V1AR14UQ41-BG02	=V1AR14UQ41BG0+V1AR14UQ41-XG1/2	TPE	4	3	18	0.5	
=V1AR14UQ41UQ1.1-W1	=V1AR14UQ41KF1+V1AR14UQ41-KF1.11-X1	=V1AR14UQ41UQ1.1+V1AR14UQ41UQ1.1-BGS/R	TPE	4	3	18	2	
=V1AR14UQ41UQ2.1-W1	=V1AR14UQ41KF1+V1AR14UQ41-KF1.11-X2	=V1AR14UQ41UQ2.1+V1AR14UQ41UQ2.1-BGS/R	TPE	4	3	18	2	
=V1AR14UQ41UQ3.1-W1	=V1AR14UQ41KF1+V1AR14UQ41-KF1.11-X3	=V1AR14UQ41UQ3.1+V1AR14UQ41UQ3.1-BGS/R	TPE	4	3	18	2	
=V1AR14UQ41UQ4.1-W1	=V1AR14UQ41KF1+V1AR14UQ41-KF1.11-X4	=V1AR14UQ41UQ4.1+V1AR14UQ41UQ4.1-BGS/R	TPE	4	3	18	2	
=V1AR14UQ41UQ5.1-W1	=V1AR14UQ41KF1+V1AR14UQ41-KF1.11-X5	=V1AR14UQ41UQ5.1+V1AR14UQ41UQ5.1-BGS/R	TPE	4	4	18	3	
=V1AR14UQ41UQ5.2-W1	=V1AR14UQ41KF1+V1AR14UQ41-KF1.11-X6	=V1AR14UQ41UQ5.2+V1AR14UQ41UQ5.2-BGS/R	TPE	4	4	18	3	
=V1AR14UQ41UQ6.1-W1	=V1AR14UQ41KF1+V1AR14UQ41-KF1.11-X7	=V1AR14UQ41UQ6.1+V1AR14UQ41UQ6.1-BGS/R	TPE	4	4	18	2	
=V1AR14UQ41UQ6.2-W1	=V1AR14UQ41KF1+V1AR14UQ41-KF1.11-X8	=V1AR14UQ41UQ6.2+V1AR14UQ41UQ6.2-BGS/R	TPE	4	4	18	2	
=V1AR14UQ41UQ7.1-W1	=V1AR14UQ41KF1+V1AR14UQ41-KF1.12-X1	=V1AR14UQ41UQ7.1+V1AR14UQ41UQ7.1-BGS/R	TPE	4	4	18	1	
=V1AR14UQ41UQ7.2-W1	=V1AR14UQ41KF1+V1AR14UQ41-KF1.12-X2	=V1AR14UQ41UQ7.2+V1AR14UQ41UQ7.2-BGS/R	TPE	4	4	18	1	
=V1AR14UQ41UQ8.1-W1	=V1AR14UQ41KF1+V1AR14UQ41-KF1.12-X3	=V1AR14UQ41UQ8.1+V1AR14UQ41UQ8.1-BGS/R	TPE	4	4	18	2	
=V1AR14UQ41UQ8.2-W1	=V1AR14UQ41KF1+V1AR14UQ41-KF1.12-X4	=V1AR14UQ41UQ8.2+V1AR14UQ41UQ8.2-BGS/R	TPE	4	4	18	2	
=V1AR14UQ41UQ9.1-W1	=V1AR14UQ41KF1+V1AR14UQ41-KF1.12-X5	=V1AR14UQ41UQ9.1+V1AR14UQ41UQ9.1-BGS/R	TPE	4	4	18	2	
=V1AR14UQ41UQ9.2-W1	=V1AR14UQ41KF1+V1AR14UQ41-KF1.12-X6	=V1AR14UQ41UQ9.2+V1AR14UQ41UQ9.2-BGS/R	TPE	4	4	18	2	
=V1AR15UQ41BG0-W1	=V1AR15UQ41BG0+V1AR15UQ41-XG1/2	=V1AR15UQ41KF1+V1AR15UQ41-KF1.13-X1	TPE	4	4	18	2	
=V1AR15UQ41BG0-W1.1	=V1AR15UQ41BG0+V1AR15UQ41-BG01	=V1AR15UQ41BG0+V1AR15UQ41-XG1/2	TPE	4	3	18	2	
=V1AR15UQ41BG0-W1.2	=V1AR15UQ41BG0+V1AR15UQ41-BG02	=V1AR15UQ41BG0+V1AR15UQ41-XG1/2	TPE	4	3	18	0.5	
=V1AR15UQ41UQ1.1-W1	=V1AR15UQ41KF1+V1AR15UQ41-KF1.11-X1	=V1AR15UQ41UQ1.1+V1AR15UQ41UQ1.1-BGS/R	TPE	4	3	18	2	
=V1AR15UQ41UQ2.1-W1	=V1AR15UQ41KF1+V1AR15UQ41-KF1.11-X2	=V1AR15UQ41UQ2.1+V1AR15UQ41UQ2.1-BGS/R	TPE	4	3	18	2	
=V1AR15UQ41UQ3.1-W1	=V1AR15UQ41KF1+V1AR15UQ41-KF1.11-X3	=V1AR15UQ41UQ3.1+V1AR15UQ41UQ3.1-BGS/R	TPE	4	3	18	2	
=V1AR15UQ41UQ4.1-W1	=V1AR15UQ41KF1+V1AR15UQ41-KF1.11-X4	=V1AR15UQ41UQ4.1+V1AR15UQ41UQ4.1-BGS/R	TPE	4	3	18	2	
=V1AR15UQ41UQ5.1-W1	=V1AR15UQ41KF1+V1AR15UQ41-KF1.11-X5	=V1AR15UQ41UQ5.1+V1AR15UQ41UQ5.1-BGS/R	TPE	4	4	18	3	
=V1AR15UQ41UQ5.2-W1	=V1AR15UQ41KF1+V1AR15UQ41-KF1.11-X6	=V1AR15UQ41UQ5.2+V1AR15UQ41UQ5.2-BGS/R	TPE	4	4	18	3	

			Date	12/22/2022	Volvo Trucks North America	Valiant TMS	Cable overview	Drawing name: =2V04&EFS-EL	=
			Ed.	MKLEPADLO					+
			Appr		P6700 Underbody Mainline - Cell 2V04			Document type: EMC	Project nr: 22-16151
Modification	Date	Name	Original		Replacement of / Replaced by	Scale 1:1			Page 9 / 1630

Cable overview

F10_001_Cable

Cable name	Source (from)	Target (to)	cable type	all conductors	Conductors used	Cross-section [mm]	Length [m]	remark
=V1AR15UQ41UQ6.1-W1	=V1AR15UQ41KF1+V1AR15UQ41-KF1.11-X7	=V1AR15UQ41UQ6.1+V1AR15UQ41UQ6.1-BGS/R	TPE	4	4	18	2	
=V1AR15UQ41UQ6.2-W1	=V1AR15UQ41KF1+V1AR15UQ41-KF1.11-X8	=V1AR15UQ41UQ6.2+V1AR15UQ41UQ6.2-BGS/R	TPE	4	4	18	2	
=V1AR15UQ41UQ7.1-W1	=V1AR15UQ41KF1+V1AR15UQ41-KF1.12-X1	=V1AR15UQ41UQ7.1+V1AR15UQ41UQ7.1-BGS/R	TPE	4	4	18	1	
=V1AR15UQ41UQ7.2-W1	=V1AR15UQ41KF1+V1AR15UQ41-KF1.12-X2	=V1AR15UQ41UQ7.2+V1AR15UQ41UQ7.2-BGS/R	TPE	4	4	18	2	
=V1AR15UQ41UQ8.1-W1	=V1AR15UQ41KF1+V1AR15UQ41-KF1.12-X3	=V1AR15UQ41UQ8.1+V1AR15UQ41UQ8.1-BGS/R	TPE	4	4	18	2	
=V1AR15UQ41UQ8.2-W1	=V1AR15UQ41KF1+V1AR15UQ41-KF1.12-X4	=V1AR15UQ41UQ8.2+V1AR15UQ41UQ8.2-BGS/R	TPE	4	4	18	2	
=V1AR15UQ41UQ9.1-W1	=V1AR15UQ41KF1+V1AR15UQ41-KF1.12-X5	=V1AR15UQ41UQ9.1+V1AR15UQ41UQ9.1-BGS/R	TPE	4	4	18	2	
=V1AR15UQ41UQ9.2-W1	=V1AR15UQ41KF1+V1AR15UQ41-KF1.12-X6	=V1AR15UQ41UQ9.2+V1AR15UQ41UQ9.2-BGS/R	TPE	4	4	18	3	
=V1FQ1-W11R	=V1KF1+V1UC11-KF11.31	=V1FQ1+V1FQ1-BR11-R	TPE	4	4	18	30	
	=V1WC4+V1UC11-XD10							
	=V1WC4+V1UC11-XD14							
=V1FQ1-W11T	=V1WC4+V1UC11-XD10	=V1FQ1+V1FQ1-BR11-T	TPE	4	4	18	25	
	=V1WC4+V1UC11-XD14							
=V1FQ1-W12R	=V1KF1+V1UC14-KF14.31	=V1FQ1+V1FQ1-BR12-R	TPE	4	4	18	25	
	=V1WC4+V1UC14-XD10							
	=V1WC4+V1UC14-XD16							
=V1FQ1-W12T	=V1WC4+V1UC14-XD10	=V1FQ1+V1FQ1-BR12-T	TPE	4	4	18	25	
	=V1WC4+V1UC14-XD16							
=V1GL11UQ51BG0-W6	=V1GL11UQ51BG0+V1GL11UQ51-XG2/3	=V1GL11UQ51KF2+V1GL11UQ51-KF2.12-X1	TPE	4	4	18	1	
=V1GL11UQ51BG0-W6.1	=V1GL11UQ51BG0+V1GL11UQ51-BG02	=V1GL11UQ51BG0+V1GL11UQ51-XG2/3	TPE	4	3	18	2	
=V1GL11UQ51BG0-W6.2	=V1GL11UQ51BG0+V1GL11UQ51-BG03	=V1GL11UQ51BG0+V1GL11UQ51-XG2/3	TPE	4	3	18	2	
=V1GL11UQ51BG0-W7	=V1GL11UQ51BG0+V1GL11UQ51-BG04	=V1GL11UQ51KF2+V1GL11UQ51-KF2.12-X2	TPE	4	3	18	1	
=V1GL11UQ51BG0-W8	=V1GL11UQ51BG0+V1GL11UQ51-XG5/20	=V1GL11UQ51KF2+V1GL11UQ51-KF2.12-X3	TPE	4	4	18	3	
=V1GL11UQ51BG0-W8.1	=V1GL11UQ51BG0+V1GL11UQ51-BG05	=V1GL11UQ51BG0+V1GL11UQ51-XG5/20	TPE	4	3	18	1	
=V1GL11UQ51BG0-W8.2	=V1GL11UQ51BG0+V1GL11UQ51-BG20	=V1GL11UQ51BG0+V1GL11UQ51-XG5/20	TPE	4	3	18	1	
=V1GL11UQ51BG0-W9	=V1GL11UQ51BG0+V1GL11UQ51-XG6/7	=V1GL11UQ51KF2+V1GL11UQ51-KF2.12-X4	TPE	4	4	18	1	
=V1GL11UQ51BG0-W9.1	=V1GL11UQ51BG0+V1GL11UQ51-BG06	=V1GL11UQ51BG0+V1GL11UQ51-XG6/7	TPE	4	3	18	2	
=V1GL11UQ51BG0-W9.2	=V1GL11UQ51BG0+V1GL11UQ51-BG07	=V1GL11UQ51BG0+V1GL11UQ51-XG6/7	TPE	4	3	18	2	
=V1GL11UQ51BG0-W10	=V1GL11UQ51BG0+V1GL11UQ51-BG13	=V1GL11UQ51KF2+V1GL11UQ51-KF2.12-X5	TPE	4	3	18	1	
=V1GL11UQ51BG0-W11	=V1GL11UQ51BG0+V1GL11UQ51-BG08	=V1GL11UQ51KF2+V1GL11UQ51-KF2.12-X6	TPE	4	3	18	1	
=V1GL11UQ51BG0-W12	=V1GL11UQ51BG0+V1GL11UQ51-XG9/22	=V1GL11UQ51KF2+V1GL11UQ51-KF2.12-X7	TPE	4	4	18	3	
=V1GL11UQ51BG0-W12.1	=V1GL11UQ51BG0+V1GL11UQ51-BG09	=V1GL11UQ51BG0+V1GL11UQ51-XG9/22	TPE	4	3	18	1	
=V1GL11UQ51BG0-W12.2	=V1GL11UQ51BG0+V1GL11UQ51-BG22	=V1GL11UQ51BG0+V1GL11UQ51-XG9/22	TPE	4	3	18	1	
=V1GL11UQ51BG0-W13	=V1GL11UQ51BG0+V1GL11UQ51-XG16/17	=V1GL11UQ51KF2+V1GL11UQ51-KF2.12-X8	TPE	4	4	18	3	
=V1GL11UQ51BG0-W13.1	=V1GL11UQ51BG0+V1GL11UQ51-BG16	=V1GL11UQ51BG0+V1GL11UQ51-XG16/17	TPE	4	3	18	1	
=V1GL11UQ51BG0-W13.2	=V1GL11UQ51BG0+V1GL11UQ51-BG17	=V1GL11UQ51BG0+V1GL11UQ51-XG16/17	TPE	4	3	18	1	
=V1GL11UQ51BG0-W14	=V1GL11UQ51BG0+V1GL11UQ51-BG18	=V1GL11UQ51KF2+V1GL11UQ51-KF2.13-X1	TPE	4	4	18	3	
=V1GL11UQ51UQ2.1-W1	=V1GL11UQ51KF2+V1GL11UQ51-KF2.11-X1	=V1GL11UQ51UQ2.1+V1GL11UQ51UQ2.1-XGR/S	TPE	4	4	18	4	
=V1GL11UQ51UQ2.1-W1.1	=V1GL11UQ51UQ2.1+V1GL11UQ51UQ2.1-BGR	=V1GL11UQ51UQ2.1+V1GL11UQ51UQ2.1-XGR/S	TPE	4	3	18	0.5	
=V1GL11UQ51UQ2.1-W1.2	=V1GL11UQ51UQ2.1+V1GL11UQ51UQ2.1-BGS	=V1GL11UQ51UQ2.1+V1GL11UQ51UQ2.1-XGR/S	TPE	4	3	18	0.5	
=V1GL11UQ51UQ3.1-W1	=V1GL11UQ51KF2+V1GL11UQ51-KF2.11-X2	=V1GL11UQ51UQ3.1+V1GL11UQ51UQ3.1-XGR/S	TPE	4	4	18	4	
=V1GL11UQ51UQ3.1-W1.1	=V1GL11UQ51UQ3.1+V1GL11UQ51UQ3.1-BGR	=V1GL11UQ51UQ3.1+V1GL11UQ51UQ3.1-XGR/S	TPE	4	3	18	0.5	
=V1GL11UQ51UQ3.1-W1.2	=V1GL11UQ51UQ3.1+V1GL11UQ51UQ3.1-BGS	=V1GL11UQ51UQ3.1+V1GL11UQ51UQ3.1-XGR/S	TPE	4	3	18	0.5	
=V1GL11UQ51UQ4.1-W1	=V1GL11UQ51KF2+V1GL11UQ51-KF2.11-X3	=V1GL11UQ51UQ4.1+V1GL11UQ51UQ4.1-XGR/S	TPE	4	4	18	4	

			Date	12/22/2022	Volvo Trucks North America	Valiant TMS	Cable overview	Drawing name: =2V04&EFS-EL	=
			Ed.	MKLEPADLO					+
			Appr		P6700 Underbody Mainline - Cell 2V04			Document type: EMC	Project nr: 22-16151
Modification	Date	Name	Original		Replacement of	Replaced by	Scale 1:1		Page 10 / 1630

Cable overview

F10_001_Cable

Cable name	Source (from)	Target (to)	cable type	all conductors	Conductors used	Cross-section [mm]	Length [m]	remark
=V1GL11UQ51UQ4.1-W1.1	=V1GL11UQ51UQ4.1+V1GL11UQ51UQ4.1-BGR	=V1GL11UQ51UQ4.1+V1GL11UQ51UQ4.1-XGR/S	TPE	4	3	18	0.5	
=V1GL11UQ51UQ4.1-W1.2	=V1GL11UQ51UQ4.1+V1GL11UQ51UQ4.1-BGS	=V1GL11UQ51UQ4.1+V1GL11UQ51UQ4.1-XGR/S	TPE	4	3	18	0.5	
=V1GL11UQ51UQ5.1-W1	=V1GL11UQ51KF2+V1GL11UQ51-KF2.11-X4	=V1GL11UQ51UQ5.1+V1GL11UQ51UQ5.1-XGR/S	TPE	4	4	18	4	
=V1GL11UQ51UQ5.1-W1.1	=V1GL11UQ51UQ5.1+V1GL11UQ51UQ5.1-BGR	=V1GL11UQ51UQ5.1+V1GL11UQ51UQ5.1-XGR/S	TPE	4	3	18	0.5	
=V1GL11UQ51UQ5.1-W1.2	=V1GL11UQ51UQ5.1+V1GL11UQ51UQ5.1-BGS	=V1GL11UQ51UQ5.1+V1GL11UQ51UQ5.1-XGR/S	TPE	4	3	18	0.5	
=V1GL11UQ51UQ6.1-W1	=V1GL11UQ51KF2+V1GL11UQ51-KF2.11-X5	=V1GL11UQ51UQ6.1+V1GL11UQ51UQ6.1-XGR/S	TPE	4	4	18	4	
=V1GL11UQ51UQ6.1-W1.1	=V1GL11UQ51UQ6.1+V1GL11UQ51UQ6.1-BGR	=V1GL11UQ51UQ6.1+V1GL11UQ51UQ6.1-XGR/S	TPE	4	3	18	0.5	
=V1GL11UQ51UQ6.1-W1.2	=V1GL11UQ51UQ6.1+V1GL11UQ51UQ6.1-BGS	=V1GL11UQ51UQ6.1+V1GL11UQ51UQ6.1-XGR/S	TPE	4	3	18	0.5	
=V1GL11UQ51UQ7.1-W1	=V1GL11UQ51KF2+V1GL11UQ51-KF2.11-X6	=V1GL11UQ51UQ7.1+V1GL11UQ51UQ7.1-XGR/S	TPE	4	4	18	4	
=V1GL11UQ51UQ7.1-W1.1	=V1GL11UQ51UQ7.1+V1GL11UQ51UQ7.1-BGR	=V1GL11UQ51UQ7.1+V1GL11UQ51UQ7.1-XGR/S	TPE	4	3	18	0.5	
=V1GL11UQ51UQ7.1-W1.2	=V1GL11UQ51UQ7.1+V1GL11UQ51UQ7.1-BGS	=V1GL11UQ51UQ7.1+V1GL11UQ51UQ7.1-XGR/S	TPE	4	3	18	0.5	
=V1GL11UQ51UQ8.1-W1	=V1GL11UQ51KF2+V1GL11UQ51-KF2.11-X7	=V1GL11UQ51UQ8.1+V1GL11UQ51UQ8.1-XGR/S	TPE	4	4	18	4	
=V1GL11UQ51UQ8.1-W1.1	=V1GL11UQ51UQ8.1+V1GL11UQ51UQ8.1-BGR	=V1GL11UQ51UQ8.1+V1GL11UQ51UQ8.1-XGR/S	TPE	4	3	18	0.5	
=V1GL11UQ51UQ8.1-W1.2	=V1GL11UQ51UQ8.1+V1GL11UQ51UQ8.1-BGS	=V1GL11UQ51UQ8.1+V1GL11UQ51UQ8.1-XGR/S	TPE	4	3	18	0.5	
=V1GL12UQ51BG0-W5	=V1GL12UQ51BG0+V1GL12UQ51-BG05	=V1GL12UQ51KF2+V1GL12UQ51-KF2.12-X1	TPE	4	3	18	1	
=V1GL12UQ51BG0-W6	=V1GL12UQ51BG0+V1GL12UQ51-XG6/19	=V1GL12UQ51KF2+V1GL12UQ51-KF2.12-X2	TPE	4	4	18	3	
=V1GL12UQ51BG0-W6.1	=V1GL12UQ51BG0+V1GL12UQ51-BG06	=V1GL12UQ51BG0+V1GL12UQ51-XG6/19	TPE	4	3	18	1	
=V1GL12UQ51BG0-W6.2	=V1GL12UQ51BG0+V1GL12UQ51-BG19	=V1GL12UQ51BG0+V1GL12UQ51-XG6/19	TPE	4	3	18	1	
=V1GL12UQ51BG0-W7	=V1GL12UQ51BG0+V1GL12UQ51-XG7/14	=V1GL12UQ51KF2+V1GL12UQ51-KF2.12-X3	TPE	4	4	18	1	
=V1GL12UQ51BG0-W7.1	=V1GL12UQ51BG0+V1GL12UQ51-BG07	=V1GL12UQ51BG0+V1GL12UQ51-XG7/14	TPE	4	3	18	2	
=V1GL12UQ51BG0-W7.2	=V1GL12UQ51BG0+V1GL12UQ51-BG14	=V1GL12UQ51BG0+V1GL12UQ51-XG7/14	TPE	4	3	18	2	
=V1GL12UQ51BG0-W8	=V1GL12UQ51BG0+V1GL12UQ51-XG8/9	=V1GL12UQ51KF2+V1GL12UQ51-KF2.12-X4	TPE	4	4	18	3	
=V1GL12UQ51BG0-W8.1	=V1GL12UQ51BG0+V1GL12UQ51-BG08	=V1GL12UQ51BG0+V1GL12UQ51-XG8/9	TPE	4	3	18	1	
=V1GL12UQ51BG0-W8.2	=V1GL12UQ51BG0+V1GL12UQ51-BG09	=V1GL12UQ51BG0+V1GL12UQ51-XG8/9	TPE	4	3	18	1	
=V1GL12UQ51BG0-W9	=V1GL12UQ51BG0+V1GL12UQ51-XG10/11	=V1GL12UQ51KF2+V1GL12UQ51-KF2.12-X5	TPE	4	4	18	3	
=V1GL12UQ51BG0-W9.1	=V1GL12UQ51BG0+V1GL12UQ51-BG10	=V1GL12UQ51BG0+V1GL12UQ51-XG10/11	TPE	4	3	18	1	
=V1GL12UQ51BG0-W9.2	=V1GL12UQ51BG0+V1GL12UQ51-BG11	=V1GL12UQ51BG0+V1GL12UQ51-XG10/11	TPE	4	3	18	1	
=V1GL12UQ51BG0-W10	=V1GL12UQ51BG0+V1GL12UQ51-XG15/16	=V1GL12UQ51KF2+V1GL12UQ51-KF2.12-X6	TPE	4	4	18	3	
=V1GL12UQ51BG0-W10.1	=V1GL12UQ51BG0+V1GL12UQ51-BG15	=V1GL12UQ51BG0+V1GL12UQ51-XG15/16	TPE	4	3	18	1	
=V1GL12UQ51BG0-W10.2	=V1GL12UQ51BG0+V1GL12UQ51-BG16	=V1GL12UQ51BG0+V1GL12UQ51-XG15/16	TPE	4	3	18	1	
=V1GL12UQ51BG0-W11	=V1GL12UQ51BG0+V1GL12UQ51-BG17	=V1GL12UQ51KF2+V1GL12UQ51-KF2.12-X7	TPE	4	4	18	3	
=V1GL12UQ51UQ3.1-W1	=V1GL12UQ51KF2+V1GL12UQ51-KF2.11-X1	=V1GL12UQ51UQ3.1+V1GL12UQ51UQ3.1-XGR/S	TPE	4	4	18	4	
=V1GL12UQ51UQ3.1-W1.1	=V1GL12UQ51UQ3.1+V1GL12UQ51UQ3.1-BGR	=V1GL12UQ51UQ3.1+V1GL12UQ51UQ3.1-XGR/S	TPE	4	3	18	0.5	
=V1GL12UQ51UQ3.1-W1.2	=V1GL12UQ51UQ3.1+V1GL12UQ51UQ3.1-BGS	=V1GL12UQ51UQ3.1+V1GL12UQ51UQ3.1-XGR/S	TPE	4	3	18	0.5	
=V1GL12UQ51UQ4.1-W1	=V1GL12UQ51KF2+V1GL12UQ51-KF2.11-X2	=V1GL12UQ51UQ4.1+V1GL12UQ51UQ4.1-XGR/S	TPE	4	4	18	4	
=V1GL12UQ51UQ4.1-W1.1	=V1GL12UQ51UQ4.1+V1GL12UQ51UQ4.1-BGR	=V1GL12UQ51UQ4.1+V1GL12UQ51UQ4.1-XGR/S	TPE	4	3	18	0.5	
=V1GL12UQ51UQ4.1-W1.2	=V1GL12UQ51UQ4.1+V1GL12UQ51UQ4.1-BGS	=V1GL12UQ51UQ4.1+V1GL12UQ51UQ4.1-XGR/S	TPE	4	3	18	0.5	
=V1GL12UQ51UQ4.2-W1	=V1GL12UQ51KF2+V1GL12UQ51-KF2.11-X3	=V1GL12UQ51UQ4.2+V1GL12UQ51UQ4.2-XGR/S	TPE	4	4	18	4	
=V1GL12UQ51UQ4.2-W1.1	=V1GL12UQ51UQ4.2+V1GL12UQ51UQ4.2-BGR	=V1GL12UQ51UQ4.2+V1GL12UQ51UQ4.2-XGR/S	TPE	4	3	18	0.5	
=V1GL12UQ51UQ4.2-W1.2	=V1GL12UQ51UQ4.2+V1GL12UQ51UQ4.2-BGS	=V1GL12UQ51UQ4.2+V1GL12UQ51UQ4.2-XGR/S	TPE	4	3	18	0.5	
=V1GL12UQ51UQ5.1-W1	=V1GL12UQ51KF2+V1GL12UQ51-KF2.11-X4	=V1GL12UQ51UQ5.1+V1GL12UQ51UQ5.1-XGR/S	TPE	4	4	18	4	
=V1GL12UQ51UQ5.1-W1.1	=V1GL12UQ51UQ5.1+V1GL12UQ51UQ5.1-BGR	=V1GL12UQ51UQ5.1+V1GL12UQ51UQ5.1-XGR/S	TPE	4	3	18	0.5	
=V1GL12UQ51UQ5.1-W1.2	=V1GL12UQ51UQ5.1+V1GL12UQ51UQ5.1-BGS	=V1GL12UQ51UQ5.1+V1GL12UQ51UQ5.1-XGR/S	TPE	4	3	18	0.5	
=V1GL12UQ51UQ6.1-W1	=V1GL12UQ51KF2+V1GL12UQ51-KF2.11-X5	=V1GL12UQ51UQ6.1+V1GL12UQ51UQ6.1-XGR/S	TPE	4	4	18	4	
=V1GL12UQ51UQ6.1-W1.1	=V1GL12UQ51UQ6.1+V1GL12UQ51UQ6.1-BGR	=V1GL12UQ51UQ6.1+V1GL12UQ51UQ6.1-XGR/S	TPE	4	3	18	0.5	
=V1GL12UQ51UQ6.1-W1.2	=V1GL12UQ51UQ6.1+V1GL12UQ51UQ6.1-BGS	=V1GL12UQ51UQ6.1+V1GL12UQ51UQ6.1-XGR/S	TPE	4	3	18	0.5	

			Date	12/22/2022	Volvo Trucks North America	Valiant TMS	Cable overview	Drawing name: =2V04&EFS-EL	=
			Ed.	MKLEPADLO					+
			Appr		P6700 Underbody Mainline - Cell 2V04			Document type: EMC	Project nr: 22-16151
Modification	Date	Name	Original		Replacement of	Replaced by	Scale 1:1		Page 11 / 1630

Cable overview

F10_001_Cable

Cable name	Source (from)	Target (to)	cable type	all conductors	Conductors used	Cross-section [mm]	Length [m]	remark
=V1GL13UQ51BG0-W1	=V1GL13UQ51BG0+V1GL13UQ51-XG1/3	=V1GL13UQ51KF1+V1GL13UQ51-KF1.12-X1	TPE	4	4	18	3	
=V1GL13UQ51BG0-W1.1	=V1GL13UQ51BG0+V1GL13UQ51-BG01	=V1GL13UQ51BG0+V1GL13UQ51-XG1/3	TPE	4	3	18	1	
=V1GL13UQ51BG0-W1.2	=V1GL13UQ51BG0+V1GL13UQ51-BG03	=V1GL13UQ51BG0+V1GL13UQ51-XG1/3	TPE	4	3	18	1	
=V1GL13UQ51BG0-W2	=V1GL13UQ51BG0+V1GL13UQ51-XG2/4	=V1GL13UQ51KF1+V1GL13UQ51-KF1.12-X2	TPE	4	4	18	1	
=V1GL13UQ51BG0-W2.1	=V1GL13UQ51BG0+V1GL13UQ51-BG02	=V1GL13UQ51BG0+V1GL13UQ51-XG2/4	TPE	4	3	18	2	
=V1GL13UQ51BG0-W2.2	=V1GL13UQ51BG0+V1GL13UQ51-BG04	=V1GL13UQ51BG0+V1GL13UQ51-XG2/4	TPE	4	3	18	2	
=V1GL13UQ51BG0-W3	=V1GL13UQ51BG0+V1GL13UQ51-XG5/6	=V1GL13UQ51KF1+V1GL13UQ51-KF1.12-X3	TPE	4	4	18	1	
=V1GL13UQ51BG0-W3.1	=V1GL13UQ51BG0+V1GL13UQ51-BG05	=V1GL13UQ51BG0+V1GL13UQ51-XG5/6	TPE	4	3	18	2	
=V1GL13UQ51BG0-W3.2	=V1GL13UQ51BG0+V1GL13UQ51-BG06	=V1GL13UQ51BG0+V1GL13UQ51-XG5/6	TPE	4	3	18	2	
=V1GL13UQ51BG0-W4	=V1GL13UQ51BG0+V1GL13UQ51-BG07	=V1GL13UQ51KF1+V1GL13UQ51-KF1.12-X4	TPE	4	3	18	1	
=V1GL13UQ51BG0-W5	=V1GL13UQ51BG0+V1GL13UQ51-XG8/9	=V1GL13UQ51KF1+V1GL13UQ51-KF1.12-X5	TPE	4	4	18	1	
=V1GL13UQ51BG0-W5.1	=V1GL13UQ51BG0+V1GL13UQ51-BG08	=V1GL13UQ51BG0+V1GL13UQ51-XG8/9	TPE	4	3	18	2	
=V1GL13UQ51BG0-W5.2	=V1GL13UQ51BG0+V1GL13UQ51-BG09	=V1GL13UQ51BG0+V1GL13UQ51-XG8/9	TPE	4	3	18	2	
=V1GL13UQ51BG0-W6	=V1GL13UQ51BG0+V1GL13UQ51-BG17	=V1GL13UQ51KF1+V1GL13UQ51-KF1.12-X6	TPE	4	3	18	1	
=V1GL13UQ51UQ1.1-W1	=V1GL13UQ51KF1+V1GL13UQ51-KF1.11-X1	=V1GL13UQ51UQ1.1+V1GL13UQ51UQ1.1-XGR/S	TPE	4	4	18	4	
=V1GL13UQ51UQ1.1-W1.1	=V1GL13UQ51UQ1.1+V1GL13UQ51UQ1.1-BGR	=V1GL13UQ51UQ1.1+V1GL13UQ51UQ1.1-XGR/S	TPE	4	3	18	0.5	
=V1GL13UQ51UQ1.1-W1.2	=V1GL13UQ51UQ1.1+V1GL13UQ51UQ1.1-BGS	=V1GL13UQ51UQ1.1+V1GL13UQ51UQ1.1-XGR/S	TPE	4	3	18	0.5	
=V1GL13UQ51UQ2.1-W1	=V1GL13UQ51KF1+V1GL13UQ51-KF1.11-X2	=V1GL13UQ51UQ2.1+V1GL13UQ51UQ2.1-XGR/S	TPE	4	4	18	4	
=V1GL13UQ51UQ2.1-W1.1	=V1GL13UQ51UQ2.1+V1GL13UQ51UQ2.1-BGR	=V1GL13UQ51UQ2.1+V1GL13UQ51UQ2.1-XGR/S	TPE	4	3	18	0.5	
=V1GL13UQ51UQ2.1-W1.2	=V1GL13UQ51UQ2.1+V1GL13UQ51UQ2.1-BGS	=V1GL13UQ51UQ2.1+V1GL13UQ51UQ2.1-XGR/S	TPE	4	3	18	0.5	
=V1GL13UQ51UQ3.1-W1	=V1GL13UQ51KF1+V1GL13UQ51-KF1.11-X3	=V1GL13UQ51UQ3.1+V1GL13UQ51UQ3.1-XGR/S	TPE	4	4	18	4	
=V1GL13UQ51UQ3.1-W1.1	=V1GL13UQ51UQ3.1+V1GL13UQ51UQ3.1-BGR	=V1GL13UQ51UQ3.1+V1GL13UQ51UQ3.1-XGR/S	TPE	4	3	18	0.5	
=V1GL13UQ51UQ3.1-W1.2	=V1GL13UQ51UQ3.1+V1GL13UQ51UQ3.1-BGS	=V1GL13UQ51UQ3.1+V1GL13UQ51UQ3.1-XGR/S	TPE	4	3	18	0.5	
=V1GL13UQ51UQ7.1-W1	=V1GL13UQ51KF1+V1GL13UQ51-KF1.11-X4	=V1GL13UQ51UQ7.1+V1GL13UQ51UQ7.1-XGR/S	TPE	4	4	18	4	
=V1GL13UQ51UQ7.1-W1.1	=V1GL13UQ51UQ7.1+V1GL13UQ51UQ7.1-BGR	=V1GL13UQ51UQ7.1+V1GL13UQ51UQ7.1-XGR/S	TPE	4	3	18	0.5	
=V1GL13UQ51UQ7.1-W1.2	=V1GL13UQ51UQ7.1+V1GL13UQ51UQ7.1-BGS	=V1GL13UQ51UQ7.1+V1GL13UQ51UQ7.1-XGR/S	TPE	4	3	18	0.5	
=V1GL13UQ51UQ8.1-W1	=V1GL13UQ51KF1+V1GL13UQ51-KF1.11-X5	=V1GL13UQ51UQ8.1+V1GL13UQ51UQ8.1-XGR/S	TPE	4	4	18	4	
=V1GL13UQ51UQ8.1-W1.1	=V1GL13UQ51UQ8.1+V1GL13UQ51UQ8.1-BGR	=V1GL13UQ51UQ8.1+V1GL13UQ51UQ8.1-XGR/S	TPE	4	3	18	0.5	
=V1GL13UQ51UQ8.1-W1.2	=V1GL13UQ51UQ8.1+V1GL13UQ51UQ8.1-BGS	=V1GL13UQ51UQ8.1+V1GL13UQ51UQ8.1-XGR/S	TPE	4	3	18	0.5	
=V1UQ51BG0-W1	=V1UQ51BG0+V1UQ51-XG1/2	=V1UQ51KF1+V1UQ51-KF1.13-X5	TPE	4	4	18	2	
=V1UQ51BG0-W1.1	=V1UQ51BG0+V1UQ51-BG01	=V1UQ51BG0+V1UQ51-XG1/2	TPE	4	3	18	1	
=V1UQ51BG0-W1.2	=V1UQ51BG0+V1UQ51-BG02	=V1UQ51BG0+V1UQ51-XG1/2	TPE	4	3	18	3	
=V1UQ51BG0-W2	=V1UQ51BG0+V1UQ51-XG3/4	=V1UQ51KF2+V1UQ51-KF2.13-X5	TPE	4	4	18	2	
=V1UQ51BG0-W2.1	=V1UQ51BG0+V1UQ51-BG03	=V1UQ51BG0+V1UQ51-XG3/4	TPE	4	3	18	1	
=V1UQ51BG0-W2.2	=V1UQ51BG0+V1UQ51-BG04	=V1UQ51BG0+V1UQ51-XG3/4	TPE	4	3	18	3	
=V1UQ51UQ1.1-W1	=V1UQ51KF1+V1UQ51-KF1.11-X1	=V1UQ51UQ1.1+V1UQ51UQ1.1-BGS/R	TPE	4	4	18	2	
=V1UQ51UQ1.2-W1	=V1UQ51KF1+V1UQ51-KF1.11-X2	=V1UQ51UQ1.2+V1UQ51UQ1.2-BGS/R	TPE	4	4	18	2	
=V1UQ51UQ2.1-W1	=V1UQ51KF1+V1UQ51-KF1.11-X3	=V1UQ51UQ2.1+V1UQ51UQ2.1-BGS/R	TPE	4	4	18	2	
=V1UQ51UQ3.1-W1	=V1UQ51KF1+V1UQ51-KF1.11-X4	=V1UQ51UQ3.1+V1UQ51UQ3.1-BGS/R	TPE	4	4	18	3	
=V1UQ51UQ3.2-W1	=V1UQ51KF1+V1UQ51-KF1.11-X5	=V1UQ51UQ3.2+V1UQ51UQ3.2-BGS/R	TPE	4	4	18	3	
=V1UQ51UQ4.1-W1	=V1UQ51KF1+V1UQ51-KF1.11-X6	=V1UQ51UQ4.1+V1UQ51UQ4.1-BGS/R	TPE	4	4	18	4	
=V1UQ51UQ4.2-W1	=V1UQ51KF1+V1UQ51-KF1.11-X7	=V1UQ51UQ4.2+V1UQ51UQ4.2-BGS/R	TPE	4	4	18	4	
=V1UQ51UQ5.1-W1	=V1UQ51KF1+V1UQ51-KF1.11-X8	=V1UQ51UQ5.1+V1UQ51UQ5.1-XGR/S	TPE	4	4	18	4	
=V1UQ51UQ5.1-W1.1	=V1UQ51UQ5.1+V1UQ51UQ5.1-BGR	=V1UQ51UQ5.1+V1UQ51UQ5.1-XGR/S	TPE	4	3	18		
=V1UQ51UQ5.1-W1.2	=V1UQ51UQ5.1+V1UQ51UQ5.1-BGS	=V1UQ51UQ5.1+V1UQ51UQ5.1-XGR/S	TPE	4	3	18		
=V1UQ51UQ5.2-W1	=V1UQ51KF1+V1UQ51-KF1.12-X1	=V1UQ51UQ5.2+V1UQ51UQ5.2-XGR/S	TPE	4	4	18	4	

			Date	12/22/2022	Volvo Trucks North America	Valiant TMS	Cable overview	Drawing name: =2V04&EFS-EL	=
			Ed.	MKLEPADLO					+
			Appr		P6700 Underbody Mainline - Cell 2V04			Document type: EMC	Project nr: 22-16151
Modification	Date	Name	Original		Replacement of	Replaced by	Scale 1:1		Page 12 / 1630

Cable overview

F10_001_Cable

Cable name	Source (from)	Target (to)	cable type	all conductors	Conductors used	Cross-section [mm]	Length [m]	remark
=V1UQ51UQ5.2-W1.1	=V1UQ51UQ5.2+V1UQ51UQ5.2-BGR	=V1UQ51UQ5.2+V1UQ51UQ5.2-XGR/S	TPE	4	3	18		
=V1UQ51UQ5.2-W1.2	=V1UQ51UQ5.2+V1UQ51UQ5.2-BGS	=V1UQ51UQ5.2+V1UQ51UQ5.2-XGR/S	TPE	4	3	18		
=V1UQ51UQ6.1-W1	=V1UQ51KF1+V1UQ51-KF1.12-X2	=V1UQ51UQ6.1+V1UQ51UQ6.1-BGS/R	TPE	4	4	18	1	
=V1UQ51UQ6.2-W1	=V1UQ51KF1+V1UQ51-KF1.12-X3	=V1UQ51UQ6.2+V1UQ51UQ6.2-BGS/R	TPE	4	4	18	1	
=V1UQ51UQ7.1-W1	=V1UQ51KF1+V1UQ51-KF1.12-X4	=V1UQ51UQ7.1+V1UQ51UQ7.1-BGS/R	TPE	4	4	18	3	
=V1UQ51UQ7.2-W1	=V1UQ51KF1+V1UQ51-KF1.12-X5	=V1UQ51UQ7.2+V1UQ51UQ7.2-BGS/R	TPE	4	4	18	3	
=V1UQ51UQ7.3-W1	=V1UQ51KF1+V1UQ51-KF1.12-X6	=V1UQ51UQ7.3+V1UQ51UQ7.3-BGS/R	TPE	4	3	18	3	
=V1UQ51UQ7.4-W1	=V1UQ51KF1+V1UQ51-KF1.12-X7	=V1UQ51UQ7.4+V1UQ51UQ7.4-BGS/R	TPE	4	3	18	3	
=V1UQ51UQ7.5-W1	=V1UQ51KF1+V1UQ51-KF1.12-X8	=V1UQ51UQ7.5+V1UQ51UQ7.5-BGS/R	TPE	4	3	18	3	
=V1UQ51UQ7.6-W1	=V1UQ51KF1+V1UQ51-KF1.13-X1	=V1UQ51UQ7.6+V1UQ51UQ7.6-BGS/R	TPE	4	3	18	3	
=V1UQ51UQ7.7-W1	=V1UQ51KF1+V1UQ51-KF1.13-X2	=V1UQ51UQ7.7+V1UQ51UQ7.7-BGS/R	TPE	4	3	18	3	
=V1UQ51UQ8.1-W1	=V1UQ51KF1+V1UQ51-KF1.13-X3	=V1UQ51UQ8.1+V1UQ51UQ8.1-BGS/R	TPE	4	4	18	3	
=V1UQ51UQ8.2-W1	=V1UQ51KF1+V1UQ51-KF1.13-X4	=V1UQ51UQ8.2+V1UQ51UQ8.2-BGS/R	TPE	4	4	18	3	
=V1UQ51UQ9.1-W1	=V1UQ51KF2+V1UQ51-KF2.11-X1	=V1UQ51UQ9.1+V1UQ51UQ9.1-BGS/R	TPE	4	4	18	4	
=V1UQ51UQ9.2-W1	=V1UQ51KF2+V1UQ51-KF2.11-X2	=V1UQ51UQ9.2+V1UQ51UQ9.2-BGS/R	TPE	4	4	18	4	
=V1UQ51UQ9.3-W1	=V1UQ51KF2+V1UQ51-KF2.11-X3	=V1UQ51UQ9.3+V1UQ51UQ9.3-BGS/R	TPE	4	4	18	4	
=V1UQ51UQ9.4-W1	=V1UQ51KF2+V1UQ51-KF2.11-X4	=V1UQ51UQ9.4+V1UQ51UQ9.4-BGS/R	TPE	4	4	18	4	
=V1UQ51UQ10.1-W1	=V1UQ51KF2+V1UQ51-KF2.11-X5	=V1UQ51UQ10.1+V1UQ51UQ10.1-BGS/R	TPE	4	4	18	4	
=V1UQ51UQ10.2-W1	=V1UQ51KF2+V1UQ51-KF2.11-X6	=V1UQ51UQ10.2+V1UQ51UQ10.2-BGS/R	TPE	4	4	18	4	
=V1UQ51UQ11.1-W1	=V1UQ51KF2+V1UQ51-KF2.11-X7	=V1UQ51UQ11.1+V1UQ51UQ11.1-BGS/R	TPE	4	4	18	4	
=V1UQ51UQ12.1-W1	=V1UQ51KF2+V1UQ51-KF2.11-X8	=V1UQ51UQ12.1+V1UQ51UQ12.1-BGS/R	TPE	4	4	18	4	
=V1UQ51UQ13.1-W1	=V1UQ51KF2+V1UQ51-KF2.12-X1	=V1UQ51UQ13.1+V1UQ51UQ13.1-BGS/R	TPE	4	4	18	4	
=V1UQ51UQ14.1-W1	=V1UQ51KF2+V1UQ51-KF2.12-X2	=V1UQ51UQ14.1+V1UQ51UQ14.1-BGS/R	TPE	4	4	18	4	
=V1UQ51UQ14.2-W1	=V1UQ51KF2+V1UQ51-KF2.12-X3	=V1UQ51UQ14.2+V1UQ51UQ14.2-BGS/R	TPE	4	4	18	4	
=V1UQ51UQ15.1-W1	=V1UQ51KF2+V1UQ51-KF2.12-X4	=V1UQ51UQ15.1+V1UQ51UQ15.1-BGS/R	TPE	4	4	18	4	
=V1UQ51UQ15.2-W1	=V1UQ51KF2+V1UQ51-KF2.12-X5	=V1UQ51UQ15.2+V1UQ51UQ15.2-BGS/R	TPE	4	4	18	4	
=V1UQ51UQ16.1-W1	=V1UQ51KF2+V1UQ51-KF2.12-X6	=V1UQ51UQ16.1+V1UQ51UQ16.1-BGS/R	TPE	4	4	18	4	
=V1UQ51UQ17.1-W1	=V1UQ51KF3+V1UQ51-KF3.11-X1	=V1UQ51UQ17.1+V1UQ51UQ17.1-XGR/S	TPE	4	4	18	4	
=V1UQ51UQ17.1-W1.1	=V1UQ51UQ17.1+V1UQ51UQ17.1-BGR	=V1UQ51UQ17.1+V1UQ51UQ17.1-XGR/S	TPE	4	3	18		
=V1UQ51UQ17.1-W1.2	=V1UQ51UQ17.1+V1UQ51UQ17.1-BGS	=V1UQ51UQ17.1+V1UQ51UQ17.1-XGR/S	TPE	4	3	18		
=V1UQ51UQ18.1-W1	=V1UQ51KF3+V1UQ51-KF3.11-X2	=V1UQ51UQ18.1+V1UQ51UQ18.1-XGR/S	TPE	4	4	18	4	
=V1UQ51UQ18.1-W1.1	=V1UQ51UQ18.1+V1UQ51UQ18.1-BGR	=V1UQ51UQ18.1+V1UQ51UQ18.1-XGR/S	TPE	4	3	18		
=V1UQ51UQ18.1-W1.2	=V1UQ51UQ18.1+V1UQ51UQ18.1-BGS	=V1UQ51UQ18.1+V1UQ51UQ18.1-XGR/S	TPE	4	3	18		
=V1UQ51UQ19.1-W1	=V1UQ51KF3+V1UQ51-KF3.11-X3	=V1UQ51UQ19.1+V1UQ51UQ19.1-BGS/R	TPE	4	4	18	4	
=V1UQ51UQ19.2-W1	=V1UQ51KF3+V1UQ51-KF3.11-X4	=V1UQ51UQ19.2+V1UQ51UQ19.2-BGS/R	TPE	4	4	18	4	
=V1UQ51UQ20.1-W1	=V1UQ51KF3+V1UQ51-KF3.11-X5	=V1UQ51UQ20.1+V1UQ51UQ20.1-BGS/R	TPE	4	4	18	4	
=V1UQ51UQ20.2-W1	=V1UQ51KF3+V1UQ51-KF3.11-X6	=V1UQ51UQ20.2+V1UQ51UQ20.2-BGS/R	TPE	4	4	18	4	
=V1UQ51UQ21.1-W1	=V1UQ51KF3+V1UQ51-KF3.11-X7	=V1UQ51UQ21.1+V1UQ51UQ21.1-BGS/R	TPE	4	4	18	4	
=V1UQ51UQ21.2-W1	=V1UQ51KF3+V1UQ51-KF3.11-X8	=V1UQ51UQ21.2+V1UQ51UQ21.2-BGS/R	TPE	4	4	18	4	
=V1UQ51UQ22.1-W1	=V1UQ51KF3+V1UQ51-KF3.12-X1	=V1UQ51UQ22.1+V1UQ51UQ22.1-BGS/R	TPE	4	4	18	4	
=V1UQ51UQ22.2-W1	=V1UQ51KF3+V1UQ51-KF3.12-X2	=V1UQ51UQ22.2+V1UQ51UQ22.2-BGS/R	TPE	4	4	18	4	
=V1UQ51UQ22.3-W1	=V1UQ51KF3+V1UQ51-KF3.12-X3	=V1UQ51UQ22.3+V1UQ51UQ22.3-BGS/R	TPE	4	4	18	4	
=V1UQ51UQ22.4-W1	=V1UQ51KF3+V1UQ51-KF3.12-X4	=V1UQ51UQ22.4+V1UQ51UQ22.4-BGS/R	TPE	4	4	18	4	
=V1UQ51UQ23.1-W1	=V1UQ51KF3+V1UQ51-KF3.12-X5	=V1UQ51UQ23.1+V1UQ51UQ23.1-BGS/R	TPE	4	4	18	4	
=V1UQ51UQ24.1-W1	=V1UQ51KF3+V1UQ51-KF3.12-X6	=V1UQ51UQ24.1+V1UQ51UQ24.1-BGS/R	TPE	4	4	18	4	
=V1UQ52BG0-W1	=V1UQ52BG0+V1UQ52-XG1/2	=V1UQ52KF1+V1UQ52-KF1.12-X8	TPE	4	4	18	1	

			Date	12/22/2022	Volvo Trucks North America	Valiant TMS	Cable overview	Drawing name: =2V04&EFS-EL	=
			Ed.	MKLEPADLO					+
			Appr		P6700 Underbody Mainline - Cell 2V04			Document type: EMC	Project nr: 22-16151
Modification	Date	Name	Original		Replacement of / Replaced by	Scale 1:1			Page 13 / 1630

Cable overview

F10_001_Cable

Cable name	Source (from)	Target (to)	cable type	all conductors	Conductors used	Cross-section [mm]	Length [m]	remark
=V1UQ52BG0-W1.1	=V1UQ52BG0+V1UQ52-BG01	=V1UQ52BG0+V1UQ52-XG1/2	TPE	4	3	18	2	
=V1UQ52BG0-W1.2	=V1UQ52BG0+V1UQ52-BG02	=V1UQ52BG0+V1UQ52-XG1/2	TPE	4	3	18	3	
=V1UQ52UQ1.1-W1	=V1UQ52KF1+V1UQ52-KF1.11-X1	=V1UQ52UQ1.1+V1UQ52UQ1.1-BGS/R	TPE	4	4	18	2	
=V1UQ52UQ1.2-W1	=V1UQ52KF1+V1UQ52-KF1.11-X2	=V1UQ52UQ1.2+V1UQ52UQ1.2-BGS/R	TPE	4	4	18	2	
=V1UQ52UQ1.3-W1	=V1UQ52KF1+V1UQ52-KF1.11-X3	=V1UQ52UQ1.3+V1UQ52UQ1.3-BGS/R	TPE	4	4	18	2	
=V1UQ52UQ1.4-W1	=V1UQ52KF1+V1UQ52-KF1.11-X4	=V1UQ52UQ1.4+V1UQ52UQ1.4-BGS/R	TPE	4	4	18	2	
=V1UQ52UQ2.1-W1	=V1UQ52KF1+V1UQ52-KF1.11-X5	=V1UQ52UQ2.1+V1UQ52UQ2.1-BGS/R	TPE	4	4	18	4	
=V1UQ52UQ2.2-W1	=V1UQ52KF1+V1UQ52-KF1.11-X6	=V1UQ52UQ2.2+V1UQ52UQ2.2-BGS/R	TPE	4	4	18	4	
=V1UQ52UQ3.1-W1	=V1UQ52KF1+V1UQ52-KF1.11-X7	=V1UQ52UQ3.1+V1UQ52UQ3.1-BGS/R	TPE	4	4	18	3	
=V1UQ52UQ4.1-W1	=V1UQ52KF1+V1UQ52-KF1.11-X8	=V1UQ52UQ4.1+V1UQ52UQ4.1-BGS/R	TPE	4	4	18	5	
=V1UQ52UQ4.2-W1	=V1UQ52KF1+V1UQ52-KF1.12-X1	=V1UQ52UQ4.2+V1UQ52UQ4.2-BGS/R	TPE	4	4	18	5	
=V1UQ52UQ5.1-W1	=V1UQ52KF1+V1UQ52-KF1.12-X2	=V1UQ52UQ5.1+V1UQ52UQ5.1-XGR/S	TPE	4	4	18	4	
=V1UQ52UQ5.1-W1.1	=V1UQ52UQ5.1+V1UQ52UQ5.1-BGR	=V1UQ52UQ5.1+V1UQ52UQ5.1-XGR/S	TPE	4	3	18	0.5	
=V1UQ52UQ5.1-W1.2	=V1UQ52UQ5.1+V1UQ52UQ5.1-BGS1	=V1UQ52UQ5.1+V1UQ52UQ5.1-XGR/S	TPE	4	3	18	1	
=V1UQ52UQ5.1-W2	=V1UQ52KF1+V1UQ52-KF1.12-X3	=V1UQ52UQ5.1+V1UQ52UQ5.1-BGS2	TPE	4	3	18	4	
=V1UQ52UQ6.1-W1	=V1UQ52KF1+V1UQ52-KF1.12-X4	=V1UQ52UQ6.1+V1UQ52UQ6.1-BGS/R	TPE	4	4	18	6	
=V1UQ53BG0-W1	=V1UQ53BG0+V1UQ53-XG1/2	=V1UQ53KF1+V1UQ53-KF1.12-X8	TPE	4	4	18	1	
=V1UQ53BG0-W1.1	=V1UQ53BG0+V1UQ53-BG01	=V1UQ53BG0+V1UQ53-XG1/2	TPE	4	3	18	2	
=V1UQ53BG0-W1.2	=V1UQ53BG0+V1UQ53-BG02	=V1UQ53BG0+V1UQ53-XG1/2	TPE	4	3	18	3	
=V1UQ53UQ1.1-W1	=V1UQ53KF1+V1UQ53-KF1.11-X1	=V1UQ53UQ1.1+V1UQ53UQ1.1-BGS/R	TPE	4	4	18	2	
=V1UQ53UQ1.2-W1	=V1UQ53KF1+V1UQ53-KF1.11-X2	=V1UQ53UQ1.2+V1UQ53UQ1.2-BGS/R	TPE	4	4	18	2	
=V1UQ53UQ1.3-W1	=V1UQ53KF1+V1UQ53-KF1.11-X3	=V1UQ53UQ1.3+V1UQ53UQ1.3-BGS/R	TPE	4	4	18	2	
=V1UQ53UQ1.4-W1	=V1UQ53KF1+V1UQ53-KF1.11-X4	=V1UQ53UQ1.4+V1UQ53UQ1.4-BGS/R	TPE	4	4	18	2	
=V1UQ53UQ2.1-W1	=V1UQ53KF1+V1UQ53-KF1.11-X5	=V1UQ53UQ2.1+V1UQ53UQ2.1-BGS/R	TPE	4	4	18	4	
=V1UQ53UQ2.2-W1	=V1UQ53KF1+V1UQ53-KF1.11-X6	=V1UQ53UQ2.2+V1UQ53UQ2.2-BGS/R	TPE	4	4	18	4	
=V1UQ53UQ3.1-W1	=V1UQ53KF1+V1UQ53-KF1.11-X7	=V1UQ53UQ3.1+V1UQ53UQ3.1-BGS/R	TPE	4	4	18	3	
=V1UQ53UQ4.1-W1	=V1UQ53KF1+V1UQ53-KF1.11-X8	=V1UQ53UQ4.1+V1UQ53UQ4.1-BGS/R	TPE	4	4	18	5	
=V1UQ53UQ4.2-W1	=V1UQ53KF1+V1UQ53-KF1.12-X1	=V1UQ53UQ4.2+V1UQ53UQ4.2-BGS/R	TPE	4	4	18	5	
=V1UQ53UQ5.1-W1	=V1UQ53KF1+V1UQ53-KF1.12-X2	=V1UQ53UQ5.1+V1UQ53UQ5.1-XGR/S	TPE	4	4	18	4	
=V1UQ53UQ5.1-W1.1	=V1UQ53UQ5.1+V1UQ53UQ5.1-BG03	=V1UQ53UQ5.1+V1UQ53UQ5.1-XGR/S	TPE	4	3	18	0.5	
=V1UQ53UQ5.1-W1.2	=V1UQ53UQ5.1+V1UQ53UQ5.1-BG04	=V1UQ53UQ5.1+V1UQ53UQ5.1-XGR/S	TPE	4	3	18	1	
=V1UQ53UQ5.1-W2	=V1UQ53KF1+V1UQ53-KF1.12-X3	=V1UQ53UQ5.1+V1UQ53UQ5.1-BG05	TPE	4	3	18	4	
=V1UQ53UQ6.1-W1	=V1UQ53KF1+V1UQ53-KF1.12-X4	=V1UQ53UQ6.1+V1UQ53UQ6.1-BGS/R	TPE	4	4	18	6	
=V1UQ54BG0-W1	=V1UQ54BG0+V1UQ54-XG1/2	=V1UQ54KF1+V1UQ54-KF1.11-X7	TPE	4	4	18	2	
=V1UQ54BG0-W1.1	=V1UQ54BG0+V1UQ54-BG01	=V1UQ54BG0+V1UQ54-XG1/2	TPE	4	3	18	1	
=V1UQ54BG0-W1.2	=V1UQ54BG0+V1UQ54-BG02	=V1UQ54BG0+V1UQ54-XG1/2	TPE	4	3	18	3	
=V1UQ54UQ1.1-W1	=V1UQ54KF1+V1UQ54-KF1.11-X1	=V1UQ54UQ1.1+V1UQ54UQ1.1-BGS/R	TPE	4	4	18	2	
=V1UQ54UQ2.1-W1	=V1UQ54KF1+V1UQ54-KF1.11-X2	=V1UQ54UQ2.1+V1UQ54UQ2.1-BGS/R	TPE	4	4	18	2	
=V1UQ54UQ2.2-W1	=V1UQ54KF1+V1UQ54-KF1.11-X3	=V1UQ54UQ2.2+V1UQ54UQ2.2-BGS/R	TPE	4	4	18	2	
=V1UQ54UQ3.1-W1	=V1UQ54KF1+V1UQ54-KF1.11-X4	=V1UQ54UQ3.1+V1UQ54UQ3.1-BGS/R	TPE	4	4	18	2	
=V1UQ54UQ3.2-W1	=V1UQ54KF1+V1UQ54-KF1.11-X5	=V1UQ54UQ3.2+V1UQ54UQ3.2-BGS/R	TPE	4	4	18	2	
=V1UQ54UQ4.1-W1	=V1UQ54KF1+V1UQ54-KF1.11-X6	=V1UQ54UQ4.1+V1UQ54UQ4.1-BGS/R	TPE	4	4	18	2	
=V1UQ55BG0-W1	=V1UQ55BG0+V1UQ55-XG1/2	=V1UQ55KF1+V1UQ55-KF1.13-X7	TPE	4	4	18	2	
=V1UQ55BG0-W1.1	=V1UQ55BG0+V1UQ55-BG01	=V1UQ55BG0+V1UQ55-XG1/2	TPE	4	3	18	1	
=V1UQ55BG0-W1.2	=V1UQ55BG0+V1UQ55-BG02	=V1UQ55BG0+V1UQ55-XG1/2	TPE	4	3	18	3	
=V1UQ55UQ1.1-W1	=V1UQ55KF1+V1UQ55-KF1.11-X1	=V1UQ55UQ1.1+V1UQ55UQ1.1-BGS/R	TPE	4	4	18	2	

			Date	12/22/2022	Volvo Trucks North America	Valiant TMS	Cable overview	Drawing name: =2V04&EFS-EL	=
			Ed.	MKLEPADLO					+
			Appr		P6700 Underbody Mainline - Cell 2V04			Document type: EMC	Project nr: 22-16151
Modification	Date	Name	Original		Replacement of / Replaced by	Scale 1:1			Page 14 / 1630

Cable overview

F10_001_Cable

Cable name	Source (from)	Target (to)	cable type	all conductors	Conductors used	Cross-section [mm]	Length [m]	remark
=V1UQ55UQ1.2-W1	=V1UQ55KF1+V1UQ55-KF1.11-X2	=V1UQ55UQ1.2+V1UQ55UQ1.2-BGS/R	TPE	4	4	18	2	
=V1UQ55UQ1.3-W1	=V1UQ55KF1+V1UQ55-KF1.11-X3	=V1UQ55UQ1.3+V1UQ55UQ1.3-BGS/R	TPE	4	4	18	2	
=V1UQ55UQ1.4-W1	=V1UQ55KF1+V1UQ55-KF1.11-X4	=V1UQ55UQ1.4+V1UQ55UQ1.4-BGS/R	TPE	4	4	18	2	
=V1UQ55UQ2.1-W1	=V1UQ55KF1+V1UQ55-KF1.11-X5	=V1UQ55UQ2.1+V1UQ55UQ2.1-BGS/R	TPE	4	4	18	3	
=V1UQ55UQ2.2-W1	=V1UQ55KF1+V1UQ55-KF1.11-X6	=V1UQ55UQ2.2+V1UQ55UQ2.2-BGS/R	TPE	4	4	18	3	
=V1UQ55UQ3.1-W1	=V1UQ55KF1+V1UQ55-KF1.11-X7	=V1UQ55UQ3.1+V1UQ55UQ3.1-BGS/R	TPE	4	4	18	4	
=V1UQ55UQ3.2-W1	=V1UQ55KF1+V1UQ55-KF1.11-X8	=V1UQ55UQ3.2+V1UQ55UQ3.2-BGS/R	TPE	4	4	18	4	
=V1UQ55UQ4.1-W1	=V1UQ55KF1+V1UQ55-KF1.12-X1	=V1UQ55UQ4.1+V1UQ55UQ4.1-BGS/R	TPE	4	4	18	4	
=V1UQ55UQ4.2-W1	=V1UQ55KF1+V1UQ55-KF1.12-X2	=V1UQ55UQ4.2+V1UQ55UQ4.2-BGS/R	TPE	4	4	18	4	
=V1UQ55UQ5.1-W1	=V1UQ55KF1+V1UQ55-KF1.12-X3	=V1UQ55UQ5.1+V1UQ55UQ5.1-BGS/R	TPE	4	4	18	4	
=V1UQ55UQ5.2-W1	=V1UQ55KF1+V1UQ55-KF1.12-X4	=V1UQ55UQ5.2+V1UQ55UQ5.2-BGS/R	TPE	4	4	18	4	
=V1UQ55UQ6.1-W1	=V1UQ55KF1+V1UQ55-KF1.12-X5	=V1UQ55UQ6.1+V1UQ55UQ6.1-BGS/R	TPE	4	4	18	5	
=V1UQ55UQ6.2-W1	=V1UQ55KF1+V1UQ55-KF1.12-X6	=V1UQ55UQ6.2+V1UQ55UQ6.2-BGS/R	TPE	4	4	18	5	
=V1UQ55UQ7.1-W1	=V1UQ55KF1+V1UQ55-KF1.12-X7	=V1UQ55UQ7.1+V1UQ55UQ7.1-BGS/R	TPE	4	4	18	5	
=V1UQ55UQ7.2-W1	=V1UQ55KF1+V1UQ55-KF1.12-X8	=V1UQ55UQ7.2+V1UQ55UQ7.2-BGS/R	TPE	4	4	18	5	
=V1UQ55UQ8.1-W1	=V1UQ55KF1+V1UQ55-KF1.13-X1	=V1UQ55UQ8.1+V1UQ55UQ8.1-BGS/R	TPE	4	4	18	6	
=V1UQ55UQ8.2-W1	=V1UQ55KF1+V1UQ55-KF1.13-X2	=V1UQ55UQ8.2+V1UQ55UQ8.2-BGS/R	TPE	4	4	18	6	
=V1UQ55UQ9.1-W1	=V1UQ55KF1+V1UQ55-KF1.13-X3	=V1UQ55UQ9.1+V1UQ55UQ9.1-BGS/R	TPE	4	4	18	6	
=V1UQ55UQ9.2-W1	=V1UQ55KF1+V1UQ55-KF1.13-X4	=V1UQ55UQ9.2+V1UQ55UQ9.2-BGS/R	TPE	4	4	18	6	
=V1WR1UQ51BG0-W1	=V1WR1UQ51BG0+V1WR1UQ51-XG1/2	=V1WR1UQ51KF1+V1WR1UQ51-KF1.13-X7	TPE	4	4	18	0.5	
=V1WR1UQ51BG0-W1.1	=V1WR1UQ51BG0+V1WR1UQ51-BG01	=V1WR1UQ51BG0+V1WR1UQ51-XG1/2	TPE	4	3	18	2	
=V1WR1UQ51BG0-W1.2	=V1WR1UQ51BG0+V1WR1UQ51-BG02	=V1WR1UQ51BG0+V1WR1UQ51-XG1/2	TPE	4	3	18	2	
=V1WR1UQ51UQ1.1-W1	=V1WR1UQ51KF1+V1WR1UQ51-KF1.11-X1	=V1WR1UQ51UQ1.1+V1WR1UQ51UQ1.1-BGS/R	TPE	4	4	18	2	
=V1WR1UQ51UQ1.2-W1	=V1WR1UQ51KF1+V1WR1UQ51-KF1.11-X2	=V1WR1UQ51UQ1.2+V1WR1UQ51UQ1.2-BGS/R	TPE	4	4	18	3	
=V1WR1UQ51UQ2.1-W1	=V1WR1UQ51KF1+V1WR1UQ51-KF1.11-X3	=V1WR1UQ51UQ2.1+V1WR1UQ51UQ2.1-BGS/R	TPE	4	4	18	3	
=V1WR1UQ51UQ2.2-W1	=V1WR1UQ51KF1+V1WR1UQ51-KF1.11-X4	=V1WR1UQ51UQ2.2+V1WR1UQ51UQ2.2-BGS/R	TPE	4	4	18	3	
=V1WR1UQ51UQ2.3-W1	=V1WR1UQ51KF1+V1WR1UQ51-KF1.11-X5	=V1WR1UQ51UQ2.3+V1WR1UQ51UQ2.3-BGS/R	TPE	4	4	18	3	
=V1WR1UQ51UQ2.4-W1	=V1WR1UQ51KF1+V1WR1UQ51-KF1.11-X6	=V1WR1UQ51UQ2.4+V1WR1UQ51UQ2.4-BGS/R	TPE	4	4	18	3	
=V1WR1UQ51UQ3.1-W1	=V1WR1UQ51KF1+V1WR1UQ51-KF1.11-X7	=V1WR1UQ51UQ3.1+V1WR1UQ51UQ3.1-BGS/R	TPE	4	4	18	3	
=V1WR1UQ51UQ3.2-W1	=V1WR1UQ51KF1+V1WR1UQ51-KF1.11-X8	=V1WR1UQ51UQ3.2+V1WR1UQ51UQ3.2-BGS/R	TPE	4	4	18	3	
=V1WR1UQ51UQ4.1-W1	=V1WR1UQ51KF1+V1WR1UQ51-KF1.12-X1	=V1WR1UQ51UQ4.1+V1WR1UQ51UQ4.1-BGS/R	TPE	4	4	18	4	
=V1WR1UQ51UQ4.2-W1	=V1WR1UQ51KF1+V1WR1UQ51-KF1.12-X2	=V1WR1UQ51UQ4.2+V1WR1UQ51UQ4.2-BGS/R	TPE	4	4	18	4	
=V1WR1UQ51UQ5.1-W1	=V1WR1UQ51KF1+V1WR1UQ51-KF1.12-X3	=V1WR1UQ51UQ5.1+V1WR1UQ51UQ5.1-BGS/R	TPE	4	4	18	4	
=V1WR1UQ51UQ5.2-W1	=V1WR1UQ51KF1+V1WR1UQ51-KF1.12-X4	=V1WR1UQ51UQ5.2+V1WR1UQ51UQ5.2-BGS/R	TPE	4	4	18	4	
=V1WR1UQ51UQ6.1-W1	=V1WR1UQ51KF1+V1WR1UQ51-KF1.12-X5	=V1WR1UQ51UQ6.1+V1WR1UQ51UQ6.1-BGS/R	TPE	4	4	18	4	
=V1WR1UQ51UQ6.2-W1	=V1WR1UQ51KF1+V1WR1UQ51-KF1.12-X6	=V1WR1UQ51UQ6.2+V1WR1UQ51UQ6.2-BGS/R	TPE	4	4	18	4	
=V1WR1UQ51UQ7.1-W1	=V1WR1UQ51KF1+V1WR1UQ51-KF1.12-X7	=V1WR1UQ51UQ7.1+V1WR1UQ51UQ7.1-BGS/R	TPE	4	4	18	4	
=V1WR1UQ51UQ7.2-W1	=V1WR1UQ51KF1+V1WR1UQ51-KF1.12-X8	=V1WR1UQ51UQ7.2+V1WR1UQ51UQ7.2-BGS/R	TPE	4	4	18	4	
=V1WR1UQ51UQ8.1-W1	=V1WR1UQ51KF1+V1WR1UQ51-KF1.13-X1	=V1WR1UQ51UQ8.1+V1WR1UQ51UQ8.1-BGS/R	TPE	4	4	18	4	
=V1WR1UQ51UQ8.2-W1	=V1WR1UQ51KF1+V1WR1UQ51-KF1.13-X2	=V1WR1UQ51UQ8.2+V1WR1UQ51UQ8.2-BGS/R	TPE	4	4	18	4	
=V1WR1UQ51UQ9.1-W1	=V1WR1UQ51KF1+V1WR1UQ51-KF1.13-X3	=V1WR1UQ51UQ9.1+V1WR1UQ51UQ9.1-BGS/R	TPE	4	4	18	4	
=V1WR1UQ51UQ9.2-W1	=V1WR1UQ51KF1+V1WR1UQ51-KF1.13-X4	=V1WR1UQ51UQ9.2+V1WR1UQ51UQ9.2-BGS/R	TPE	4	4	18	4	
=V1AR11UQ41KF1-W1	=V1AR11UQ41KF1+V1AR11UQ41-R3.CP/CS	=V1AR11UQ41KF1+V1AR11UQ41-XG1	TPU	5	4	16	2	
=V1AR11UQ41KF1-W1.1	=V1AR11UQ41KF1+V1AR11UQ41-XG1	=V1AR11UQ41KF1+V1AR11UQ41-XG2	TPU	5	5	16	2	
=V1AR11UQ41KF1-W1.2	=V1AR11UQ41KF1+V1AR11UQ41-KF1-X20	=V1AR11UQ41KF1+V1AR11UQ41-XG1	TPU	5	4	16	1	
=V1AR11UQ41KF2-W1.1	=V1AR11UQ41KF1+V1AR11UQ41-XG2	=V1AR11UQ41KF2+V1AR11UQ41-KF2-X20	TPU	5	4	16	1	

			Date	12/22/2022	Volvo Trucks North America	Valiant TMS	Cable overview	Drawing name: =2V04&EFS-EL	=
			Ed.	MKLEPADLO					+
			Appr		P6700 Underbody Mainline - Cell 2V04			Document type: EMC	Project nr: 22-16151
Modification	Date	Name	Original		Replacement of	Replaced by	Scale 1:1		Page 15 / 1630

Cable overview

F10_001_Cable

Cable name	Source (from)	Target (to)	cable type	all conductors	Conductors used	Cross-section [mm]	Length [m]	remark
=V1AR11UQ41KF3-W2.2	=V1AR11UQ41KF1+V1AR11UQ41-XG2	=V1AR11UQ41KF3+V1AR11UQ41-KF3-X20	TPU	5	4	16	1	
=V1AR12UQ41KF1-W1	=V1AR12UQ41KF1+V1AR12UQ41-KF1-X20	=V1AR12UQ41KF1+V1AR12UQ41-R3.CP/CS	TPU	5	5	16	2	
=V1AR13UQ41KF1-W1	=V1AR13UQ41KF1+V1AR13UQ41-KF1-X20	=V1AR13UQ41KF1+V1AR13UQ41-R3.CP/CS	TPU	5	5	16	2	
=V1AR14UQ41KF1-W1	=V1AR14UQ41KF1+V1AR14UQ41-KF1-X20	=V1AR14UQ41KF1+V1AR14UQ41-R3.CP/CS	TPU	5	5	16	2	
=V1AR15UQ41KF1-W1	=V1AR15UQ41KF1+V1AR15UQ41-KF1-X20	=V1AR15UQ41KF1+V1AR15UQ41-R3.CP/CS	TPU	5	5	16	2	
=V1FQ1-W1	=V1FQ1+V1FQ1BG1-BG1-X1	=V1FQ1+V1FQ1BG2-BG2-X2	TPU	5	5	16	15	
=V1FQ1-W2			TPU	5	0	16	10	
=V1FQ1-W3			TPU	5	0	16	15	
=V1FQ1-W4			TPU	5	0	16	8	
=V1FQ1-W5			TPU	5	0	16	15	
=V1FQ1-W6			TPU	5	0	16	10	
=V1FQ1-W7	=V1FQ1+V1FQ1BG6-BG6-X2	=V1FQ1+V1FQ1BG7-BG7-X1	TPU	5	5	16	15	
=V1FQ1-W8	=V1FQ1+V1FQ1BG7-BG7-X2	=V1FQ1+V1FQ1BG8-BG8-X1	TPU	5	5	16	25	
=V1GL11KF2-W1	=V1WC4+V1UC15-XD181	=V1GL11KF2+V1GL11KF2-KF2.11	TPU	5	4	16		
=V1GL11UQ51KF2-W1	=V1GL11KF2+V1GL11KF2-KF2.11	=V1GL11UQ51KF2+V1GL11UQ51-KF2-X20	TPU	5	4	16	20	
=V1GL12KF2-W1	=V1WC4+V1UC11-XD171	=V1GL12KF2+V1GL12KF2-KF2.11	TPU	5	4	16		
=V1GL12UQ51KF2-W1	=V1GL12KF2+V1GL12KF2-KF2.11	=V1GL12UQ51KF2+V1GL12UQ51-KF2-X20	TPU	5	4	16	20	
=V1GL13UQ51KF1-W1.1	=V1GL13UQ51KF1+V1GL13UQ51-KF1-X20	=V1GL13UQ51WC4+V1GL13UQ51-XG51	TPU	5	5	16	2	
=V1GL13UQ51WC4-W1	=V1WC4+V1UC14-XD181	=V1GL13UQ51WC4+V1GL13UQ51-XG51	TPU	5	5	16	20	
=V1UQ51KF1-W1.1	=V1UQ51KF1+V1UQ51-KF1-X20	=V1UQ51WC4+V1UQ51-XG51.1	TPU	5	5	16	1	
=V1UQ51KF2-W2.1	=V1UQ51KF2+V1UQ51-KF2-X20	=V1UQ51WC4+V1UQ51-XG51.2	TPU	5	5	16	1	
=V1UQ51KF3-W2.2	=V1UQ51KF3+V1UQ51-KF3-X20	=V1UQ51WC4+V1UQ51-XG51.2	TPU	5	5	16	1	
=V1UQ51WC4-W1	=V1WC4+V1UC11-XD151	=V1UQ51WC4+V1UQ51-XG51.1	TPU	5	5	16	30	
=V1UQ51WC4-W1.1	=V1UQ51WC4+V1UQ51-XG51.1	=V1UQ51WC4+V1UQ51-XG51.2	TPU	5	5	16		
=V1UQ52KF1-W1	=V1WC4+V1UC11-XD161	=V1UQ52KF1+V1UQ52-KF1-X20	TPU	5	5	16	25	
=V1UQ53KF1-W1	=V1WC4+V1UC14-XD161	=V1UQ53KF1+V1UQ53-KF1-X20	TPU	5	5	16	30	
=V1UQ54KF1-W1	=V1WC4+V1UC15-XD151	=V1UQ54KF1+V1UQ54-KF1-X20	TPU	5	5	16	12	
=V1UQ55KF1-W1	=V1WC4+V1UC14-XD171	=V1UQ55KF1+V1UQ55-KF1-X20	TPU	5	5	16	30	
=V1WC4-W1	=V1WC4+V1UC11-XD71	=V1WC4+V1UC32-XD1	TPU	5	4	16		
=V1WC4-W1	=V1WC4+V1UC12-XD61	=V1WC4+V1UC33-XD1	TPU	5	4	16	10	
=V1WR1UQ51KF1-W1	=V1WC4+V1UC14-XD151	=V1WR1UQ51KF1+V1WR1UQ51-KF1-X20	TPU	5	5	16	1	

			Date	12/22/2022	Volvo Trucks North America	Valiant TMS	Cable overview	Drawing name: =2V04&EFS-EL	=
			Ed.	MKLEPADLO					+
			Appr		P6700 Underbody Mainline - Cell 2V04			Document type: EMC	Project nr: 22-16151
Modification	Date	Name	Original		Replacement of	Replaced by	Scale 1:1		Page 16 / 1630

Parts list

F01_001

Device tag	Quantity	Designation	Type number	Supplier	Part number
	7	Mounting rail EN 50 022 (35x7,5)	TS 35_7,5		TS 35_7,5

&EMC/16

+KH0/1

			Date	12/22/2022	Volvo Trucks North America	Valiant TMS	Parts list : TS 35_7,5 - TS 35_7,5	Drawing name: =2V04&EFS-EL	=
			Ed.	MKLEPADLO					+
			Appr		P6700 Underbody Mainline - Cell 2V04			Document type: EPB	Project nr: 22-16151
Modification	Date	Name	Original		Replacement of / Replaced by	Scale 1:1			Page 1 / 1630

Parts list

F01_001

Device tag	Quantity	Designation	Type number	Supplier	Part number
=KH0-W1-XD2	1	MALE 5-PIN M12 FIELD ATTACHABLE CONNECTOR	BS 8251-0/PG9	TURCK	TUR.BS 8251-0/PG9

+/1

+UC31/1

			Date	12/22/2022	Volvo Trucks North America	Valiant TMS	Parts list : TUR.BS 8251-0/PG9 - TUR.BS 8251-0/PG9	Drawing name: =2V04&EFS-EL	=	
			Ed.	MKLEPADLO					+ KH0	
			Appr		P6700 Underbody Mainline - Cell 2V04	Scale 1:1		Document type: EPB	Project nr: 22-16151	Page 1 / 1630
Modification	Date	Name	Original		Replacement of	Replaced by				

Parts list

F01_001

Device tag	Quantity	Designation	Type number	Supplier	Part number
=KF0-M1	1	Ground bar kit, 5 positions.	ECGB5	SIE	US2.ECGB5
=KF0-M1	1	Wiring Duct Covers, PVC	C1.5LG6	PAN	PAN.C1.5LG6
=KF0-M1	1	Wiring Duct Covers, PVC	C1LG6	PAN	PAN.C1LG6
=KF0-M1	1	Wide Slotted Wiring Duct, PVC	G1.5X4LG6	PAN	PAN.G1.5X4LG6
=KF0-M1	1	Wide Slotted Wiring Duct, PVC	G1X4LG6	PAN	PAN.G1X4LG6
=KF0-M1	1	STAND.SECTIONAL RAIL 35MM, LENGTH 483MM	6ES5710-8MA11	Siemens AG	SIE.6ES5710-8MA11
=KF0-UC31	1	PC PC enclosure system, WHD: 800x1600x600 mm, Sheet steel	PC.5386050	RIT	RIT.5386050
=KF0-UC31	1	VX Partial mounting plate, for VX: 700x700 mm	VX.8617580	RIT	RIT.8617580
=KF0-UC31	1	Base/plinth corner piece with base/plinth trim panels, front and rear,	VX.8640003		RIT.8640003
=KF0-UC31	1	Base/plinth trim panels, side, sheet steel, optimised design, 100 mm	VX.8640033		RIT.8640033
=KF0-UC91	1	Pushbutton Enclosure, Type 12, 4PB, 22.5mm holes, 10.00Hx3.25Wx2.75D, Gray, Steel	E4PBG	HOFFMAN	HOF.E4PBG
=KF0-UC91	1	Hol-Sealers Hole Seal, 1.22" diameter, Gray, Steel	ASPBG	HOFFMAN	ASPBG
=KF0-UC92	1	Pushbutton Enclosure, Type 12, 4PB, 22.5mm holes, 10.00Hx3.25Wx2.75D, Gray, Steel	E4PBG	HOFFMAN	HOF.E4PBG
=KF0-UC92	1	LEGEND PLATET KTC15-1005	KTC15-1005		ABB.1SFA616915R1005
=KF0-UC92	1	Hol-Sealers Hole Seal, 1.22" diameter, Gray, Steel	ASPBG	HOFFMAN	ASPBG
=KF0KF1-KF1.31	1	CPU 1517F-3 PN/DP, 3MB PROG., 8MB DATA	6ES7517-3FP00-0AB0	SIE	SIE.6ES7517-3FP00-0AB0
=KF0KF1-KF1.31	1	SIMATIC S7 MEMORY CARD, 2 GB	6ES7954-8LP03-0AA0	SIE	SIE.6ES7954-8LP03-0AA0
=KF0KF1-KF1.31	1	MOUNTING RAIL 245MM (9.6")	6ES7590-1AC40-0AA0	SIE	SIE.6ES7590-1AC40-0AA0
=KF0KF1-KF31	1				SIE.6ES7155-6AA01-0BN0_subassembly
=KF0KF1-KF31	1	ET200SP, SERVERMODULE	6ES7193-6PA00-0AA0		SIE.6ES7193-6PA00-0AA0
=KF0KF1-KF31.11	1	ET 200SP, DI 16x 24V DC ST, PU 1	6ES7131-6BH01-0BA0	SIE	SIE.6ES7131-6BH01-0BA0
=KF0KF1-KF31.11	1	BASEUNIT TYPE A0, BU15-P16+A0+2D	6ES7193-6BP00-0DA0	SIE	SIE.6ES7193-6BP00-0DA0
=KF0KF1-KF31.21	1	ET 200SP, DQ 16x 24V DC/0,5A ST, PU 1	6ES7132-6BH01-0BA0	SIE	SIE.6ES7132-6BH01-0BA0
=KF0KF1-KF31.21	1	BASEUNIT TYPE A0, BU15-P16+A0+2D	6ES7193-6BP00-0DA0	SIE	SIE.6ES7193-6BP00-0DA0
=KF0KF1-KF31.31	1	ET 200SP, El-Mod., F-DI 8x24VDC HF	6ES7136-6BA01-0CA0	SIE	SIE.6ES7136-6BA01-0CA0
=KF0KF1-KF31.31	1	BASEUNIT TYPE A0, BU15-P16+A0+2D	6ES7193-6BP00-0DA0	SIE	SIE.6ES7193-6BP00-0DA0
=KF0KF1-KF99.31	1	SCALANCE S615	6GK5615-0AA00-2AA2	SIE	SIE.6GK5615-0AA00-2AA2
=KF0KF1-KF99.31	1	C-PLUG	6GK1900-0AB10	SIE	SIE.6GK1900-0AB10
=KF0KF1-KF100.31	1	SCALANCE XC216	6GK5216-0BA00-2AC2	SIE	SIE.6GK5216-0BA00-2AC2
=KF0KF1-KF100.31-P6	1	Profinet cable - RJ45 plug to M12 Female receptacle; 1m long	RJ45S FKSDED 423-1M	TURCK	TUR.RJ45S FKSDED 423-1M
=KF0KF1-KF100.31-P7	1	Profinet cable - RJ45 plug to M12 Female receptacle; 1m long	RJ45S FKSDED 423-1M	TURCK	TUR.RJ45S FKSDED 423-1M
=KF0KF1-KF100.31-P8	1	Profinet cable - RJ45 plug to M12 Female receptacle; 1m long	RJ45S FKSDED 423-1M	TURCK	TUR.RJ45S FKSDED 423-1M
=KF0KF1-KF100.31-P9	1	Profinet cable - RJ45 plug to M12 Female receptacle; 1m long	RJ45S FKSDED 423-1M	TURCK	TUR.RJ45S FKSDED 423-1M
=KF0KF1-KF100.31-P10	1	Profinet cable - RJ45 plug to M12 Female receptacle; 1m long	RJ45S FKSDED 423-1M	TURCK	TUR.RJ45S FKSDED 423-1M
=KF0KF1-KF100.31-P11	1	Profinet cable - RJ45 plug to M12 Female receptacle; 1m long	RJ45S FKSDED 423-1M	TURCK	TUR.RJ45S FKSDED 423-1M
=KF0KF1-KF100.31-P12	1	Profinet cable - RJ45 plug to M12 Female receptacle; 1m long	RJ45S FKSDED 423-1M	TURCK	TUR.RJ45S FKSDED 423-1M
=KF0KF1-KF100.31-P13	1	Profinet cable - RJ45 plug to M12 Female receptacle; 1m long	RJ45S FKSDED 423-1M	TURCK	TUR.RJ45S FKSDED 423-1M
=KF0KF1-KF100.31-P14	1	Profinet cable - RJ45 plug to M12 Female receptacle; 1m long	RJ45S FKSDED 423-1M	TURCK	TUR.RJ45S FKSDED 423-1M
=KF0KF1-KF100.31-P15	1	Profinet cable - RJ45 plug to M12 Female receptacle; 1m long	RJ45S FKSDED 423-1M	TURCK	TUR.RJ45S FKSDED 423-1M
=KF0KF1-KF100.31-P16	1	Profinet cable - RJ45 plug to M12 Female receptacle; 1m long	RJ45S FKSDED 423-1M	TURCK	TUR.RJ45S FKSDED 423-1M
=KF0KF1-XG1	1				4000-73000-0180000
=KF0KF1-XG2	1				4000-73000-0180000
=KF0PZ1-PF1	1	Signaling column connection element for pipe mounting incl. end cover and seal	8WD4408-0AA	SIE	SIE.8WD4408-0AA
=KF0PZ1-PF1	1	Tube with foot, tube length 100 mm, accessory for signaling columns 8WD44, D=70 mm	8WD4308-0DA	SIEMENS	SIE.8WD4308-0DA
=KF0PZ1-PF1	1	Signaling column multifunctional siren element different sounds can be set 24 V	8WD4420-0EA2		SIE.8WD4420-0EA2
=KF0PZ1-PF1	1	Signaling column continuous light element LED red, 24 V AC/DC	8WD4420-5AB	SIE	SIE.8WD4420-5AB
=KF0PZ1-PF1	1	Signaling column continuous light element LED green, 24 V AC/DC	8WD4420-5AC	SIE	SIE.8WD4420-5AC
=KF0WC3-FC1	1	Miniature Circuit Breaker MCBs - SU201M - Number of Poles 1 - Tripping characteristic C	SU201M-C10	ABB	ABB.2CDS271337R0104
=KF0WC3-FC1	1	S2C-H6RU - Auxiliary Contact	S2C-H6RU	ABB	ABB.2CDS200914R0001
=KF0WC3-FC2	1	Miniature Circuit Breaker MCBs - SU201M - Number of Poles 1 - Tripping characteristic C	SU201M-C10	ABB	ABB.2CDS271337R0104
=KF0WC3-FC2	1	S2C-H6RU - Auxiliary Contact	S2C-H6RU	ABB	ABB.2CDS200914R0001
=KF0WC4-FC11	1	4x3-10A	6EP1961-2BA41	SIE	SIE.6EP1961-2BA41
=KF0WC4-GA1	1	SITOP UPS1600	6EP4134-3AB00-2AY0		SIE.6EP4134-3AB00-2AY0
=KF0WC4-GB1	1	SITOP UPS1100	6EP4134-0GB00-0AY0	SIE	SIE.6EP4134-0GB00-0AY0
=KF0WC4-TA1	1	SITOP PSU6200 1ph 24 V/20 A	6EP3336-7SB00-3AX0		SIE.6EP3336-7SB00-3AX0

+KH0/1

+.UC91/1

			Date	12/22/2022	Volvo Trucks North America	Valiant TMS	Parts list : US2.ECGB5 - SIE.6EP3336-7SB00-3AX0	Drawing name: =2V04&EFS-EL	= + UC31
			Ed.	MKLEPADLO					
			Appr		P6700 Underbody Mainline - Cell 2V04	Scale 1:1		Document type: EPB	Project nr: 22-16151
Modification	Date	Name	Original		Replacement of	Replaced by			Page 1 / 1630

Parts list

F01_001

Device tag	Quantity	Designation	Type number	Supplier	Part number
=KF0FQ0-SF1	1	EMERGENCY STOP CE4T-10R-02	CE4T-10R-02	ABB	ABB.1SFA619550R1051
=KF0FQ0-SF1	1	LEGEND PLATET KTC15-1005	KTC15-1005		ABB.1SFA616915R1005
=KF0SF1-SF5	1	PUSHBUTTON CP1-10G-20	CP1-10G-20	ABB	ABB.1SFA619100R1022
=KF0SF1-SF6	1	PUSHBUTTON CP1-10Y-20	CP1-10Y-20	ABB	ABB.1SFA619100R1023

+UC31/1

+.UC92/1

			Date	12/22/2022	Volvo Trucks North America	Valiant TMS	Parts list : ABB.1SFA619550R1051 - ABB.1SFA619100R1023	Drawing name: =2V04&EFS-EL	=	
			Ed.	MKLEPADLO					+ UC31UC91	
			Appr		P6700 Underbody Mainline - Cell 2V04	Scale 1:1		Document type: EPB	Project nr: 22-16151	Page 1 / 1630
Modification	Date	Name	Original		Replacement of	Replaced by				

Parts list

F01_001

Device tag	Quantity	Designation	Type number	Supplier	Part number
=KF0SF1-SF1/PF1	1	PUSHBUTTON CP1-11R-10 24V AC/DC	CP1-11R-10	ABB	ABB.1SFA619100R1111
=KF0SF1-SF2	1	PUSHBUTTON CP1-10B-20	CP1-10B-20	ABB	ABB.1SFA619100R1026
=KF0SF1-SF3/PF3	1	PUSHBUTTON CP1-11C-10	CP1-11C-10	ABB	ABB.1SFA619100R1118
=KF0SF1-SF4	1	SELECTOR SWITCH C2SS1-10B-10	C2SS1-10B-10	ABB	ABB.1SFA619200R1016

+.UC91/1

+UC32/1

			Date	12/22/2022	Volvo Trucks North America	Valiant TMS	Parts list : ABB.1SFA619100R1111 - ABB.1SFA619200R1016	Drawing name: =2V04&EFS-EL	=	
			Ed.	MKLEPADLO					+ UC31UC92	
			Appr		P6700 Underbody Mainline - Cell 2V04	Scale 1:1		Document type: EPB	Project nr: 22-16151	Page 1 / 1630
Modification	Date	Name	Original		Replacement of	Replaced by				

Parts list

F01_001

Device tag	Quantity	Designation	Type number	Supplier	Part number
=FQ0V1SF1S01-SF1	1	EMERGENCY STOP CE4T-10R-02	CE4T-10R-02	ABB	ABB.1SFA619550R1051
=FQ0V1SF1S01-SF1	1	LEGEND PLATET KTC15-1005	KTC15-1005		ABB.1SFA616915R1005

+UC31UC92/1

+UC33/1

			Date	12/22/2022	Volvo Trucks North America	Valiant TMS	Parts list : ABB.1SFA619550R1051 - ABB.1SFA616915R1005	Drawing name: =2V04&EFS-EL	= + UC32
			Ed.	MKLEPADLO					
			Appr		P6700 Underbody Mainline - Cell 2V04	Scale 1:1		Document type: EPB	Project nr: 22-16151
Modification	Date	Name	Original		Replacement of	Replaced by			Page 1 / 1630

Parts list

F01_001

Device tag	Quantity	Designation	Type number	Supplier	Part number
=FQ0V1SF2S01-SF1	1	EMERGENCY STOP CE4T-10R-02	CE4T-10R-02	ABB	ABB.1SFA619550R1051
=FQ0V1SF2S01-SF1	1	LEGEND PLATET KTC15-1005	KTC15-1005		ABB.1SFA616915R1005

+UC32/1

+V1AR11UQ41/1

			Date	12/22/2022	Volvo Trucks North America	Valiant TMS	Parts list : ABB.1SFA619550R1051 - ABB.1SFA616915R1005	Drawing name: =2V04&EFS-EL	=	
			Ed.	MKLEPADLO					+ UC33	
			Appr		P6700 Underbody Mainline - Cell 2V04			Document type: EPB	Project nr: 22-16151	Page 1
Modification	Date	Name	Original		Replacement of	Replaced by	Scale 1:1			1630

Parts list

F01_001

Device tag	Quantity	Designation	Type number	Supplier	Part number
=V1AR11UQ41BG0-BG01	1	Inductive sensor With WeldGuard™ coating	NI50U-CK40-AP6X2-H1141/S1590 W/BS4	TURCK	TUR.NI50U-CK40-AP6X2-H1141/S1590 W/BS4
=V1AR11UQ41BG0-BG02	1	Inductive sensor With WeldGuard™ coating	NI50U-CK40-AP6X2-H1141/S1590 W/BS4	TURCK	TUR.NI50U-CK40-AP6X2-H1141/S1590 W/BS4
=V1AR11UQ41BG0-BG03	1	Inductive sensor With WeldGuard™ coating	NI50U-CK40-AP6X2-H1141/S1590 W/BS4	TURCK	TUR.NI50U-CK40-AP6X2-H1141/S1590 W/BS4
=V1AR11UQ41BG0-BG04	1	Inductive sensor With WeldGuard™ coating	NI50U-CK40-AP6X2-H1141/S1590 W/BS4	TURCK	TUR.NI50U-CK40-AP6X2-H1141/S1590 W/BS4
=V1AR11UQ41BG0-XG1/3	1	Y splitter	U2-30676	TURCK	TUR.VB2-FSM 4.4/2FKM 4/S3450
=V1AR11UQ41BG0-XG2/4	1	Y splitter	U2-30676	TURCK	TUR.VB2-FSM 4.4/2FKM 4/S3450
=V1AR11UQ41KF1-KF1	0	Bus node	CPX-FB33	FES	FES.548755
=V1AR11UQ41KF1-KF1	0	Interlinking block	CPX-M-GE-EV-S-7/8-5POL	FES	FES.550208
=V1AR11UQ41KF1-KF1.11	0	Manifold block	CPX-M-AB-8-M12X2-5POL	FES	FES.549335
=V1AR11UQ41KF1-KF1.12	0	Manifold block	CPX-M-AB-8-M12X2-5POL	FES	FES.549335
=V1AR11UQ41KF1-KF1.13	0	Manifold block	CPX-M-AB-8-M12X2-5POL	FES	FES.549335
=V1AR11UQ41KF1-XG1	1	TEE, 5-PIN MINI, STANDARD KEYWAY	U2109-9	TURCK	TUR.RSM-2RKM 50
=V1AR11UQ41KF1-XG2	1	TEE, 5-PIN MINI, STANDARD KEYWAY	U2109-9	TURCK	TUR.RSM-2RKM 50
=V1AR11UQ41KF2-KF2	0	Bus node	CPX-FB33	FES	FES.548755
=V1AR11UQ41KF2-KF2	0	Interlinking block	CPX-M-GE-EV-S-7/8-5POL	FES	FES.550208
=V1AR11UQ41KF2-KF2.11	0	Manifold block	CPX-M-AB-8-M12X2-5POL	FES	FES.549335
=V1AR11UQ41KF2-KF2.12	0	Manifold block	CPX-M-AB-8-M12X2-5POL	FES	FES.549335
=V1AR11UQ41KF2-KF2.13	0	Manifold block	CPX-M-AB-8-M12X2-5POL	FES	FES.549335
=V1AR11UQ41KF3-KF3	0	Bus node	CPX-FB33	FES	FES.548755
=V1AR11UQ41KF3-KF3	0	Interlinking block	CPX-M-GE-EV-S-7/8-5POL	FES	FES.550208
=V1AR11UQ41KF3-KF3.11	0	Manifold block	CPX-M-AB-8-M12X2-5POL	FES	FES.549335
=V1AR11UQ41KF3-KF3.12	0	Manifold block	CPX-M-AB-8-M12X2-5POL	FES	FES.549335
=V1AR11UQ41KF3-KF3.13	0	Manifold block	CPX-M-AB-8-M12X2-5POL	FES	FES.549335

+UC33/1

+.AR11UQ41UQ1.1/1

			Date	12/22/2022	Volvo Trucks North America	Valiant TMS	Parts list : TUR.NI50U-CK40-AP6X2-H1141/S1590 W/BS4 - FES.549335	Drawing name: =2V04&EFS-EL	=
			Ed.	MKLEPADLO					+ V1AR11UQ41
			Appr		P6700 Underbody Mainline - Cell 2V04	Scale 1:1		Document type: EPB	Project nr: 22-16151
Modification	Date	Name	Original		Replacement of	Replaced by			Page 1 / 1630

Parts list

F01_001

Device tag	Quantity	Designation	Type number	Supplier	Part number
=V1AR11UQ41UQ1.1-BGS/R	1	Inductive sensor Monitoring Kit for Power Clamps	WWS001A	WELKER	WELKER.WWS001A

+V1AR11UQ41/1

+.AR11UQ41UQ2.1/1

			Date	12/22/2022	Volvo Trucks North America	Valiant TMS	Parts list : WELKER.WWS001A - WELKER.WWS001A	Drawing name: =2V04&EFS-EL	= + V1AR11UQ41UQ1.1
			Ed.	MKLEPADLO					
			Appr		P6700 Underbody Mainline - Cell 2V04	Scale 1:1		Document type: EPB	Project nr: 22-16151
Modification	Date	Name	Original		Replacement of	Replaced by			Page 1 / 1630

Parts list

F01_001

Device tag	Quantity	Designation	Type number	Supplier	Part number
=V1AR11UQ41UQ2.1-BGS/R	1	Inductive sensor Monitoring Kit for Power Clamps	WWS001A	WELKER	WELKER.WWS001A

+.AR11UQ41UQ1.1/1

+.AR11UQ41UQ3.1/1

			Date	12/22/2022	Volvo Trucks North America	Valiant TMS	Parts list : WELKER.WWS001A - WELKER.WWS001A	Drawing name: =2V04&EFS-EL	= + V1AR11UQ41UQ2.1
			Ed.	MKLEPADLO					
			Appr		P6700 Underbody Mainline - Cell 2V04	Scale 1:1		Document type: EPB	Project nr: 22-16151
Modification	Date	Name	Original		Replacement of	Replaced by			Page 1 / 1630

Parts list

F01_001

Device tag	Quantity	Designation	Type number	Supplier	Part number
=V1AR11UQ41UQ3.1-BGS/R	1	Inductive sensor Monitoring Kit for Power Clamps	WWS001A	WELKER	WELKER.WWS001A

+.AR11UQ41UQ2.1/1

+.AR11UQ41UQ3.2/1

			Date	12/22/2022	Volvo Trucks North America	Valiant TMS	Parts list : WELKER.WWS001A - WELKER.WWS001A	Drawing name: =2V04&EFS-EL	=	
			Ed.	MKLEPADLO					+ V1AR11UQ41UQ3.1	
			Appr		P6700 Underbody Mainline - Cell 2V04	Scale 1:1		Document type: EPB	Project nr: 22-16151	Page 1 / 1630
Modification	Date	Name	Original		Replacement of	Replaced by				

Parts list

F01_001

Device tag	Quantity	Designation	Type number	Supplier	Part number
=V1AR11UQ41UQ3.2-BGS/R	1	Inductive sensor Monitoring Kit for Power Clamps	WWS001A	WELKER	WELKER.WWS001A

+.AR11UQ41UQ3.1/1

+.AR11UQ41UQ4.1/1

			Date	12/22/2022	Volvo Trucks North America	Valiant TMS	Parts list : WELKER.WWS001A - WELKER.WWS001A	Drawing name: =2V04&EFS-EL	= + V1AR11UQ41UQ3.2
			Ed.	MKLEPADLO					
			Appr		P6700 Underbody Mainline - Cell 2V04			Document type: EPB	Project nr: 22-16151
Modification	Date	Name	Original		Replacement of	Replaced by	Scale 1:1		Page 1 / 1630

Parts list

F01_001

Device tag	Quantity	Designation	Type number	Supplier	Part number
=V1AR11UQ41UQ4.1-BGS/R	1	Inductive sensor Monitoring Kit for Vario Clamps	1324633	TUNKERS	TUN.1324633

+.AR11UQ41UQ3.2/1

+.AR11UQ41UQ4.2/1

			Date	12/22/2022	Volvo Trucks North America	Valiant TMS	Parts list : TUN.1324633 - TUN.1324633	Drawing name: =2V04&EFS-EL	=	
			Ed.	MKLEPADLO					+ V1AR11UQ41UQ4.1	
			Appr		P6700 Underbody Mainline - Cell 2V04	Scale 1:1		Document type: EPB	Project nr: 22-16151	Page 1 / 1630
Modification	Date	Name	Original		Replacement of	Replaced by				

Parts list

F01_001

Device tag	Quantity	Designation	Type number	Supplier	Part number
=V1AR11UQ41UQ4.2-BGS/R	1	Inductive sensor Monitoring Kit for Vario Clamps	1324633	TUNKERS	TUN.1324633

+.AR11UQ41UQ4.1/1

+.AR11UQ41UQ4.3/1

			Date	12/22/2022	Volvo Trucks North America	Valiant TMS	Parts list : TUN.1324633 - TUN.1324633	Drawing name: =2V04&EFS-EL	= + V1AR11UQ41UQ4.2
			Ed.	MKLEPADLO					
			Appr		P6700 Underbody Mainline - Cell 2V04	Scale 1:1		Document type: EPB / Project nr: 22-16151	Page 1 / 1630
Modification	Date	Name	Original		Replacement of / Replaced by				

Parts list

F01_001

Device tag	Quantity	Designation	Type number	Supplier	Part number
=V1AR11UQ41UQ4.3-BGS/R	1	Inductive sensor Monitoring Kit for Vario Clamps	1324633	TUNKERS	TUN.1324633

+.AR11UQ41UQ4.2/1

+.AR11UQ41UQ4.4/1

			Date	12/22/2022	Volvo Trucks North America	Valiant TMS	Parts list : TUN.1324633 - TUN.1324633	Drawing name: =2V04&EFS-EL	= + V1AR11UQ41UQ4.3
			Ed.	MKLEPADLO					
			Appr		P6700 Underbody Mainline - Cell 2V04	Scale 1:1		Document type: EPB	Project nr: 22-16151
Modification	Date	Name	Original		Replacement of	Replaced by			Page 1 / 1630

Parts list

F01_001

Device tag	Quantity	Designation	Type number	Supplier	Part number
=V1AR11UQ41UQ4.4-BGS/R	1	Inductive sensor Monitoring Kit for Vario Clamps	1324633	TUNKERS	TUN.1324633

+.AR11UQ41UQ4.3/1

+.AR11UQ41UQ5.1/1

			Date	12/22/2022	Volvo Trucks North America	Valiant TMS	Parts list : TUN.1324633 - TUN.1324633	Drawing name: =2V04&EFS-EL	= + V1AR11UQ41UQ4.4
			Ed.	MKLEPADLO					
			Appr		P6700 Underbody Mainline - Cell 2V04	Scale 1:1		Document type: EPB	Project nr: 22-16151
Modification	Date	Name	Original		Replacement of	Replaced by			Page 1 / 1630

Parts list

F01_001

Device tag	Quantity	Designation	Type number	Supplier	Part number
=V1AR11UQ41UQ5.1-BGS/R	1	Inductive sensor Monitoring Kit for Vario Clamps	1324633	TUNKERS	TUN.1324633

+.AR11UQ41UQ4.4/1

+.AR11UQ41UQ5.2/1

			Date	12/22/2022	Volvo Trucks North America	Valiant TMS	Parts list : TUN.1324633 - TUN.1324633	Drawing name: =2V04&EFS-EL	= + V1AR11UQ41UQ5.1
			Ed.	MKLEPADLO					
			Appr		P6700 Underbody Mainline - Cell 2V04	Scale 1:1		Document type: EPB	Project nr: 22-16151
Modification	Date	Name	Original		Replacement of	Replaced by			Page 1 / 1630

Parts list

F01_001

Device tag	Quantity	Designation	Type number	Supplier	Part number
=V1AR11UQ41UQ5.2-BGS/R	1	Inductive sensor Monitoring Kit for Vario Clamps	1324633	TUNKERS	TUN.1324633

+.AR11UQ41UQ5.1/1

+.AR11UQ41UQ5.3/1

Parts list

F01_001

Device tag	Quantity	Designation	Type number	Supplier	Part number
=V1AR11UQ41UQ5.3-BGS/R	1	Inductive sensor Monitoring Kit for Vario Clamps	1324633	TUNKERS	TUN.1324633

+.AR11UQ41UQ5.2/1

+.AR11UQ41UQ5.4/1

Parts list

F01_001

Device tag	Quantity	Designation	Type number	Supplier	Part number
=V1AR11UQ41UQ5.4-BGS/R	1	Inductive sensor Monitoring Kit for Vario Clamps	1324633	TUNKERS	TUN.1324633

+.AR11UQ41UQ5.3/1

+.AR11UQ41UQ6.1/1

			Date	12/22/2022	Volvo Trucks North America	Valiant TMS	Parts list : TUN.1324633 - TUN.1324633	Drawing name: =2V04&EFS-EL	= + V1AR11UQ41UQ5.4
			Ed.	MKLEPADLO					
			Appr		P6700 Underbody Mainline - Cell 2V04	Scale 1:1		Document type: EPB	Project nr: 22-16151
Modification	Date	Name	Original		Replacement of	Replaced by			Page 1 / 1630

Parts list

F01_001

Device tag	Quantity	Designation	Type number	Supplier	Part number
=V1AR11UQ41UQ6.1-BGS/R	1	Inductive sensor Monitoring Kit for Vario Clamps	1324633	TUNKERS	TUN.1324633

+.AR11UQ41UQ5.4/1

+.AR11UQ41UQ7.1/1

			Date	12/22/2022	Volvo Trucks North America	Valiant TMS	Parts list : TUN.1324633 - TUN.1324633	Drawing name: =2V04&EFS-EL	= + V1AR11UQ41UQ6.1
			Ed.	MKLEPADLO					
			Appr		P6700 Underbody Mainline - Cell 2V04	Scale 1:1		Document type: EPB / Project nr: 22-16151	Page 1 / 1630
Modification	Date	Name	Original		Replacement of / Replaced by				

Parts list

F01_001

Device tag	Quantity	Designation	Type number	Supplier	Part number
=V1AR11UQ41UQ7.1-BGS/R	1	Pressure sensor with display	PN-010-RER14-QFRKG/US/ /V	IFM	IFM.PN7094

+.AR11UQ41UQ6.1/1

+.AR11UQ41UQ8.1/1

			Date	12/22/2022	Volvo Trucks North America	Valiant TMS	Parts list : IFM.PN7094 - IFM.PN7094	Drawing name: =2V04&EFS-EL	=	
			Ed.	MKLEPADLO					+ V1AR11UQ41UQ7.1	
			Appr		P6700 Underbody Mainline - Cell 2V04	Scale 1:1		Document type: EPB	Project nr: 22-16151	Page 1 / 1630
Modification	Date	Name	Original		Replacement of	Replaced by				

Parts list

F01_001

Device tag	Quantity	Designation	Type number	Supplier	Part number
=V1AR11UQ41UQ8.1-BGS/R	1	Inductive sensor Monitoring Kit for Vario Clamps	1324633	TUNKERS	TUN.1324633

+.AR11UQ41UQ7.1/1

+.AR11UQ41UQ8.2/1

			Date	12/22/2022	Volvo Trucks North America	Valiant TMS	Parts list : TUN.1324633 - TUN.1324633	Drawing name: =2V04&EFS-EL	= + V1AR11UQ41UQ8.1
			Ed.	MKLEPADLO					
			Appr		P6700 Underbody Mainline - Cell 2V04	Scale 1:1		Document type: EPB	Project nr: 22-16151
Modification	Date	Name	Original		Replacement of	Replaced by			Page 1 / 1630

Parts list

F01_001

Device tag	Quantity	Designation	Type number	Supplier	Part number
=V1AR11UQ41UQ8.2-BGS/R	1	Inductive sensor Monitoring Kit for Vario Clamps	1324633	TUNKERS	TUN.1324633

+.AR11UQ41UQ8.1/1

+.AR11UQ41UQ8.3/1

Parts list

F01_001

Device tag	Quantity	Designation	Type number	Supplier	Part number
=V1AR11UQ41UQ8.3-BGS/R	1	Inductive sensor Monitoring Kit for Vario Clamps	1324633	TUNKERS	TUN.1324633

+.AR11UQ41UQ8.2/1

+.AR11UQ41UQ8.4/1

Parts list

F01_001

Device tag	Quantity	Designation	Type number	Supplier	Part number
=V1AR11UQ41UQ8.4-BGS/R	1	Inductive sensor Monitoring Kit for Vario Clamps	1324633	TUNKERS	TUN.1324633

+.AR11UQ41UQ8.3/1

+.AR11UQ41UQ9.1/1

			Date	12/22/2022	Volvo Trucks North America	Valiant TMS	Parts list : TUN.1324633 - TUN.1324633	Drawing name: =2V04&EFS-EL	= + V1AR11UQ41UQ8.4
			Ed.	MKLEPADLO					
			Appr		P6700 Underbody Mainline - Cell 2V04	Scale 1:1		Document type: EPB	Project nr: 22-16151
Modification	Date	Name	Original		Replacement of	Replaced by			Page 1 / 1630

Parts list

F01_001

Device tag	Quantity	Designation	Type number	Supplier	Part number
=V1AR11UQ41UQ9.1-BGS/R	1	Inductive sensor Monitoring Kit for Vario Clamps	1324633	TUNKERS	TUN.1324633

+.AR11UQ41UQ8.4/1

+.AR11UQ41UQ9.2/1

Parts list

F01_001

Device tag	Quantity	Designation	Type number	Supplier	Part number
=V1AR11UQ41UQ9.2-BGS/R	1	Inductive sensor Monitoring Kit for Vario Clamps	1324633	TUNKERS	TUN.1324633

+.AR11UQ41UQ9.1/1

+.AR11UQ41UQ10.1/1

			Date	12/22/2022	Volvo Trucks North America	Valiant TMS	Parts list : TUN.1324633 - TUN.1324633	Drawing name: =2V04&EFS-EL	= + V1AR11UQ41UQ9.2
			Ed.	MKLEPADLO					
			Appr		P6700 Underbody Mainline - Cell 2V04	Scale 1:1		Document type: EPB	Project nr: 22-16151
Modification	Date	Name	Original		Replacement of	Replaced by			Page 1 / 1630

Parts list

F01_001

Device tag	Quantity	Designation	Type number	Supplier	Part number
=V1AR11UQ41UQ10.1-BGS/R	1	Inductive sensor Monitoring Kit for Vario Clamps	1324633	TUNKERS	TUN.1324633

+.AR11UQ41UQ9.2/1

+.AR11UQ41UQ10.2/1

			Date	12/22/2022	Volvo Trucks North America	Valiant TMS	Parts list : TUN.1324633 - TUN.1324633	Drawing name: =2V04&EFS-EL	=	
			Ed.	MKLEPADLO					+ V1AR11UQ41UQ10.1	
			Appr		P6700 Underbody Mainline - Cell 2V04	Scale 1:1		Document type: EPB	Project nr: 22-16151	Page 1 / 1630
Modification	Date	Name	Original		Replacement of	Replaced by				

Parts list

F01_001

Device tag	Quantity	Designation	Type number	Supplier	Part number
=V1AR11UQ41UQ10.2-BGS/R	1	Inductive sensor Monitoring Kit for Vario Clamps	1324633	TUNKERS	TUN.1324633

+.AR11UQ41UQ10.1/1

+.AR11UQ41UQ11.1/1

			Date	12/22/2022	Volvo Trucks North America	Valiant TMS	Parts list : TUN.1324633 - TUN.1324633	Drawing name: =2V04&EFS-EL	= + V1AR11UQ41UQ10.2
			Ed.	MKLEPADLO					
			Appr		P6700 Underbody Mainline - Cell 2V04	Scale 1:1		Document type: EPB	Project nr: 22-16151
Modification	Date	Name	Original		Replacement of	Replaced by			Page 1 / 1630

Parts list

F01_001

Device tag	Quantity	Designation	Type number	Supplier	Part number
=V1AR11UQ41UQ11.1-BGS/R	1	Inductive sensor Monitoring Kit for Vario Clamps	1324633	TUNKERS	TUN.1324633

			Date	12/22/2022	Volvo Trucks North America	Valiant TMS	Parts list : TUN.1324633 - TUN.1324633	Drawing name: =2V04&EFS-EL	=	
			Ed.	MKLEPADLO					+ V1AR11UQ41UQ11.1	
			Appr		P6700 Underbody Mainline - Cell 2V04	Scale 1:1		Document type: EPB	Project nr: 22-16151	Page 1 / 1630
Modification	Date	Name	Original		Replacement of	Replaced by				

Parts list

F01_001

Device tag	Quantity	Designation	Type number	Supplier	Part number
=V1AR11UQ41UQ12.1-BGS/R	1	Pressure sensor with display	PN-010-RER14-QFRKG/US/ /V	IFM	IFM.PN7094

+.AR11UQ41UQ11.1/1

+.AR11UQ41UQ13.1/1

			Date	12/22/2022	Volvo Trucks North America	Valiant TMS	Parts list : IFM.PN7094 - IFM.PN7094	Drawing name: =2V04&EFS-EL	=	
			Ed.	MKLEPADLO					+ V1AR11UQ41UQ12.1	
			Appr		P6700 Underbody Mainline - Cell 2V04	Scale 1:1		Document type: EPB	Project nr: 22-16151	Page 1 / 1630
Modification	Date	Name	Original		Replacement of	Replaced by				

Parts list

F01_001

Device tag	Quantity	Designation	Type number	Supplier	Part number
=V1AR11UQ41UQ13.1-BGS/R	1	Pressure sensor with display	PN-010-RER14-QFRKG/US/ /V	IFM	IFM.PN7094

+.AR11UQ41UQ12.1/1

+.AR11UQ41UQ14.1/1

			Date	12/22/2022	Volvo Trucks North America	Valiant TMS	Parts list : IFM.PN7094 - IFM.PN7094	Drawing name: =2V04&EFS-EL	=	
			Ed.	MKLEPADLO					+ V1AR11UQ41UQ13.1	
			Appr		P6700 Underbody Mainline - Cell 2V04	Scale 1:1		Document type: EPB	Project nr: 22-16151	Page 1 / 1630
Modification	Date	Name	Original		Replacement of	Replaced by				

Parts list

F01_001

Device tag	Quantity	Designation	Type number	Supplier	Part number
=V1AR11UQ41UQ14.1-BGS/R	1	Inductive sensor Monitoring Kit for Vario Clamps	1324633	TUNKERS	TUN.1324633

+.AR11UQ41UQ13.1/1

+.AR11UQ41UQ14.2/1

Parts list

F01_001

Device tag	Quantity	Designation	Type number	Supplier	Part number
=V1AR11UQ41UQ14.2-BGS/R	1	Inductive sensor Monitoring Kit for Vario Clamps	1324633	TUNKERS	TUN.1324633

+.AR11UQ41UQ14.1/1

+.AR11UQ41UQ15.1/1

Parts list

F01_001

Device tag	Quantity	Designation	Type number	Supplier	Part number
=V1AR11UQ41UQ15.1-BGS/R	1	Inductive sensor Monitoring Kit for Vario Clamps	1324633	TUNKERS	TUN.1324633

+.AR11UQ41UQ14.2/1

+.AR11UQ41UQ15.2/1

			Date	12/22/2022	Volvo Trucks North America	Valiant TMS	Parts list : TUN.1324633 - TUN.1324633	Drawing name: =2V04&EFS-EL	= + V1AR11UQ41UQ15.1
			Ed.	MKLEPADLO					
			Appr		P6700 Underbody Mainline - Cell 2V04	Scale 1:1		Document type: EPB	Project nr: 22-16151
Modification	Date	Name	Original		Replacement of	Replaced by			Page 1 / 1630

Parts list

F01_001

Device tag	Quantity	Designation	Type number	Supplier	Part number
=V1AR11UQ41UQ15.2-BGS/R	1	Inductive sensor Monitoring Kit for Vario Clamps	1324633	TUNKERS	TUN.1324633

+.AR11UQ41UQ15.1/1

+.AR11UQ41UQ16.1/1

			Date	12/22/2022	Volvo Trucks North America	Valiant TMS	Parts list : TUN.1324633 - TUN.1324633	Drawing name: =2V04&EFS-EL	= + V1AR11UQ41UQ15.2
			Ed.	MKLEPADLO					
			Appr		P6700 Underbody Mainline - Cell 2V04	Scale 1:1		Document type: EPB	Project nr: 22-16151
Modification	Date	Name	Original		Replacement of	Replaced by			Page 1 / 1630

Parts list

F01_001

Device tag	Quantity	Designation	Type number	Supplier	Part number
=V1AR11UQ41UQ16.1-BGS/R	1	Inductive sensor Monitoring Kit for Vario Clamps	1324633	TUNKERS	TUN.1324633

+.AR11UQ41UQ15.2/1

+.AR11UQ41UQ16.2/1

			Date	12/22/2022	Volvo Trucks North America	Valiant TMS	Parts list : TUN.1324633 - TUN.1324633	Drawing name: =2V04&EFS-EL	= + V1AR11UQ41UQ16.1
			Ed.	MKLEPADLO					
			Appr		P6700 Underbody Mainline - Cell 2V04	Scale 1:1		Document type: EPB	Project nr: 22-16151
Modification	Date	Name	Original		Replacement of	Replaced by			Page 1 / 1630

Parts list

F01_001

Device tag	Quantity	Designation	Type number	Supplier	Part number
=V1AR11UQ41UQ16.2-BGS/R	1	Inductive sensor Monitoring Kit for Vario Clamps	1324633	TUNKERS	TUN.1324633

+.AR11UQ41UQ16.1/1

+.AR11UQ41UQ17.1/1

			Date	12/22/2022	Volvo Trucks North America	Valiant TMS	Parts list : TUN.1324633 - TUN.1324633	Drawing name: =2V04&EFS-EL	= + V1AR11UQ41UQ16.2
			Ed.	MKLEPADLO					
			Appr		P6700 Underbody Mainline - Cell 2V04	Scale 1:1		Document type: EPB	Project nr: 22-16151
Modification	Date	Name	Original		Replacement of	Replaced by			Page 1 / 1630

Parts list

F01_001

Device tag	Quantity	Designation	Type number	Supplier	Part number
=V1AR11UQ41UQ17.1-BGS/R	1	Inductive sensor Monitoring Kit for Vario Clamps	1324633	TUNKERS	TUN.1324633

+.AR11UQ41UQ16.2/1

+.AR11UQ41UQ18.1/1

			Date	12/22/2022	Volvo Trucks North America	Valiant TMS	Parts list : TUN.1324633 - TUN.1324633	Drawing name: =2V04&EFS-EL	= + V1AR11UQ41UQ17.1
			Ed.	MKLEPADLO					
			Appr		P6700 Underbody Mainline - Cell 2V04	Scale 1:1		Document type: EPB	Project nr: 22-16151
Modification	Date	Name	Original		Replacement of	Replaced by			Page 1 / 1630

Parts list

F01_001

Device tag	Quantity	Designation	Type number	Supplier	Part number
=V1AR11UQ41UQ18.1-BGS/R	1	Pressure sensor with display	PN-010-RER14-QFRKG/US/ /V	IFM	IFM.PN7094

+.AR11UQ41UQ17.1/1

+.AR11UQ41UQ19.1/1

			Date	12/22/2022	Volvo Trucks North America	Valiant TMS	Parts list : IFM.PN7094 - IFM.PN7094	Drawing name: =2V04&EFS-EL	=	
			Ed.	MKLEPADLO					+ V1AR11UQ41UQ18.1	
			Appr		P6700 Underbody Mainline - Cell 2V04	Scale 1:1		Document type: EPB	Project nr: 22-16151	Page 1 / 1630
Modification	Date	Name	Original		Replacement of	Replaced by				

Parts list

F01_001

Device tag	Quantity	Designation	Type number	Supplier	Part number
=V1AR11UQ41UQ19.1-BGS/R	1	Pressure sensor with display	PN-010-RER14-QFRKG/US/ /V	IFM	IFM.PN7094

+.AR11UQ41UQ18.1/1

+.AR11UQ41UQ20.1/1

			Date	12/22/2022	Volvo Trucks North America	Valiant TMS	Parts list : IFM.PN7094 - IFM.PN7094	Drawing name: =2V04&EFS-EL	= + V1AR11UQ41UQ19.1
			Ed.	MKLEPADLO					
			Appr		P6700 Underbody Mainline - Cell 2V04	Scale 1:1		Document type: EPB	Project nr: 22-16151
Modification	Date	Name	Original		Replacement of	Replaced by			Page 1 / 1630

Parts list

F01_001

Device tag	Quantity	Designation	Type number	Supplier	Part number
=V1AR11UQ41UQ20.1-BGS/R	1	Inductive sensor Monitoring Kit for Vario Clamps	1324633	TUNKERS	TUN.1324633

+.AR11UQ41UQ19.1/1

+.AR11UQ41UQ20.2/1

			Date	12/22/2022	Volvo Trucks North America	Valiant TMS	Parts list : TUN.1324633 - TUN.1324633	Drawing name: =2V04&EFS-EL	= + V1AR11UQ41UQ20.1
			Ed.	MKLEPADLO					
			Appr		P6700 Underbody Mainline - Cell 2V04	Scale 1:1		Document type: EPB	Project nr: 22-16151
Modification	Date	Name	Original		Replacement of	Replaced by			Page 1 / 1630

Parts list

F01_001

Device tag	Quantity	Designation	Type number	Supplier	Part number
=V1AR11UQ41UQ20.2-BGS/R	1	Inductive sensor Monitoring Kit for Vario Clamps	1324633	TUNKERS	TUN.1324633

+.AR11UQ41UQ20.1/1

+.AR11UQ41UQ21.1/1

			Date	12/22/2022	Volvo Trucks North America	Valiant TMS	Parts list : TUN.1324633 - TUN.1324633	Drawing name: =2V04&EFS-EL	= + V1AR11UQ41UQ20.2
			Ed.	MKLEPADLO					
			Appr		P6700 Underbody Mainline - Cell 2V04	Scale 1:1		Document type: EPB	Project nr: 22-16151
Modification	Date	Name	Original		Replacement of	Replaced by			Page 1 / 1630

Parts list

F01_001

Device tag	Quantity	Designation	Type number	Supplier	Part number
=V1AR11UQ41UQ21.1-BGS/R	1	Inductive sensor Monitoring Kit for Vario Clamps	1324633	TUNKERS	TUN.1324633

+.AR11UQ41UQ20.2/1

+.AR11UQ41UQ21.2/1

			Date	12/22/2022	Volvo Trucks North America	Valiant TMS	Parts list : TUN.1324633 - TUN.1324633	Drawing name: =2V04&EFS-EL	= + V1AR11UQ41UQ21.1
			Ed.	MKLEPADLO					
			Appr		P6700 Underbody Mainline - Cell 2V04	Scale 1:1		Document type: EPB	Project nr: 22-16151
Modification	Date	Name	Original		Replacement of	Replaced by			Page 1 / 1630

Parts list

F01_001

Device tag	Quantity	Designation	Type number	Supplier	Part number
=V1AR11UQ41UQ21.2-BGS/R	1	Inductive sensor Monitoring Kit for Vario Clamps	1324633	TUNKERS	TUN.1324633

+.AR11UQ41UQ21.1/1

+.AR11UQ41UQ22.1/1

			Date	12/22/2022	Volvo Trucks North America	Valiant TMS	Parts list : TUN.1324633 - TUN.1324633	Drawing name: =2V04&EFS-EL	= + V1AR11UQ41UQ21.2
			Ed.	MKLEPADLO					
			Appr		P6700 Underbody Mainline - Cell 2V04	Scale 1:1		Document type: EPB	Project nr: 22-16151
Modification	Date	Name	Original		Replacement of	Replaced by			Page 1 / 1630

Parts list

F01_001

Device tag	Quantity	Designation	Type number	Supplier	Part number
=V1AR11UQ41UQ22.1-BGS/R	1	Inductive sensor Monitoring Kit for Vario Clamps	1324633	TUNKERS	TUN.1324633

+.AR11UQ41UQ21.2/1

+.AR11UQ41UQ23.1/1

			Date	12/22/2022	Volvo Trucks North America	Valiant TMS	Parts list : TUN.1324633 - TUN.1324633	Drawing name: =2V04&EFS-EL	= + V1AR11UQ41UQ22.1
			Ed.	MKLEPADLO					
			Appr		P6700 Underbody Mainline - Cell 2V04	Scale 1:1		Document type: EPB	Project nr: 22-16151
Modification	Date	Name	Original		Replacement of	Replaced by			Page 1 / 1630

Parts list

F01_001

Device tag	Quantity	Designation	Type number	Supplier	Part number
=V1AR11UQ41UQ23.1-BGS/R	1	Pressure sensor with display	PN-010-RER14-QFRKG/US/ /V	IFM	IFM.PN7094

+.AR11UQ41UQ22.1/1

+.AR11UQ41UQ24.1/1

			Date	12/22/2022	Volvo Trucks North America	Valiant TMS	Parts list : IFM.PN7094 - IFM.PN7094	Drawing name: =2V04&EFS-EL	=	
			Ed.	MKLEPADLO					+ V1AR11UQ41UQ23.1	
			Appr		P6700 Underbody Mainline - Cell 2V04	Scale 1:1		Document type: EPB	Project nr: 22-16151	Page 1 / 1630
Modification	Date	Name	Original		Replacement of	Replaced by				

Parts list

F01_001

Device tag	Quantity	Designation	Type number	Supplier	Part number
=V1AR11UQ41UQ24.1-BGS/R	1	Inductive sensor Monitoring Kit for Vario Clamps	1324633	TUNKERS	TUN.1324633

+.AR11UQ41UQ23.1/1

+.AR11UQ41UQ24.2/1

Parts list

F01_001

Device tag	Quantity	Designation	Type number	Supplier	Part number
=V1AR11UQ41UQ24.2-BGS/R	1	Inductive sensor Monitoring Kit for Vario Clamps	1324633	TUNKERS	TUN.1324633

+.AR11UQ41UQ24.1/1

+.AR12UQ41/1

Parts list

F01_001

Device tag	Quantity	Designation	Type number	Supplier	Part number
=V1AR12UQ41BG0-BG01	1	Inductive sensor With WeldGuard™ coating	NI50U-CK40-AP6X2-H1141/S1590 W/BS4	TURCK	TUR.NI50U-CK40-AP6X2-H1141/S1590 W/BS4
=V1AR12UQ41BG0-BG02	1	Inductive sensor With WeldGuard™ coating	NI50U-CK40-AP6X2-H1141/S1590 W/BS4	TURCK	TUR.NI50U-CK40-AP6X2-H1141/S1590 W/BS4
=V1AR12UQ41BG0-XG1/2	1	Y splitter	U2-30676	TURCK	TUR.VB2-FSM 4.4/2FKM 4/S3450
=V1AR12UQ41KF1-KF1	0	Bus node	CPX-FB33	FES	FES.548755
=V1AR12UQ41KF1-KF1	0	Interlinking block	CPX-M-GE-EV-S-7/8-5POL	FES	FES.550208
=V1AR12UQ41KF1-KF1.11	0	Manifold block	CPX-M-AB-8-M12X2-5POL	FES	FES.549335
=V1AR12UQ41KF1-KF1.12	0	Manifold block	CPX-M-AB-8-M12X2-5POL	FES	FES.549335
=V1AR12UQ41KF1-KF1.13	0	Manifold block	CPX-M-AB-8-M12X2-5POL	FES	FES.549335

+.AR11UQ41UQ24.2/1

+.AR12UQ41UQ1.1/1

			Date	12/22/2022	Volvo Trucks North America	Valiant TMS	Parts list : TUR.NI50U-CK40-AP6X2-H1141/S1590 W/BS4 - FES.549335	Drawing name: =2V04&EFS-EL	=	
			Ed.	MKLEPADLO					+ V1AR12UQ41	
			Appr		P6700 Underbody Mainline - Cell 2V04	Scale 1:1		Document type: EPB	Project nr: 22-16151	Page 1 / 1630
Modification	Date	Name	Original		Replacement of	Replaced by				

Parts list

F01_001

Device tag	Quantity	Designation	Type number	Supplier	Part number
=V1AR12UQ41UQ1.1-BGS/R	1	Pressure sensor with display	PN-010-RER14-QFRKG/US/ /V	IFM	IFM.PN7094

+V1AR12UQ41/1

+.AR12UQ41UQ2.1/1

			Date	12/22/2022	Volvo Trucks North America	Valiant TMS	Parts list : IFM.PN7094 - IFM.PN7094	Drawing name: =2V04&EFS-EL	= + V1AR12UQ41UQ1.1
			Ed.	MKLEPADLO					
			Appr		P6700 Underbody Mainline - Cell 2V04	Scale 1:1		Document type: EPB	Project nr: 22-16151
Modification	Date	Name	Original		Replacement of	Replaced by			Page 1 / 1630

Parts list

F01_001

Device tag	Quantity	Designation	Type number	Supplier	Part number
=V1AR12UQ41UQ2.1-BGS/R	1	Pressure sensor with display	PN-010-RER14-QFRKG/US/ /V	IFM	IFM.PN7094

+.AR12UQ41UQ1.1/1

+.AR12UQ41UQ3.1/1

			Date	12/22/2022	Volvo Trucks North America	Valiant TMS	Parts list : IFM.PN7094 - IFM.PN7094	Drawing name: =2V04&EFS-EL	=	
			Ed.	MKLEPADLO					+ V1AR12UQ41UQ2.1	
			Appr		P6700 Underbody Mainline - Cell 2V04	Scale 1:1		Document type: EPB	Project nr: 22-16151	Page 1 / 1630
Modification	Date	Name	Original		Replacement of	Replaced by				

Parts list

F01_001

Device tag	Quantity	Designation	Type number	Supplier	Part number
=V1AR12UQ41UQ3.1-BGS/R	1	Pressure sensor with display	PN-010-RER14-QFRKG/US/ /V	IFM	IFM.PN7094

+.AR12UQ41UQ2.1/1

+.AR12UQ41UQ4.1/1

			Date	12/22/2022	Volvo Trucks North America	Valiant TMS	Parts list : IFM.PN7094 - IFM.PN7094	Drawing name: =2V04&EFS-EL	=	
			Ed.	MKLEPADLO					+ V1AR12UQ41UQ3.1	
			Appr		P6700 Underbody Mainline - Cell 2V04	Scale 1:1		Document type: EPB	Project nr: 22-16151	Page 1 / 1630
Modification	Date	Name	Original		Replacement of	Replaced by				

Parts list

F01_001

Device tag	Quantity	Designation	Type number	Supplier	Part number
=V1AR12UQ41UQ4.1-BGS/R	1	Pressure sensor with display	PN-010-RER14-QFRKG/US/ /V	IFM	IFM.PN7094

+.AR12UQ41UQ3.1/1

+.AR12UQ41UQ5.1/1

			Date	12/22/2022	Volvo Trucks North America	Valiant TMS	Parts list : IFM.PN7094 - IFM.PN7094	Drawing name: =2V04&EFS-EL	=	
			Ed.	MKLEPADLO					+ V1AR12UQ41UQ4.1	
			Appr		P6700 Underbody Mainline - Cell 2V04	Scale 1:1		Document type: EPB	Project nr: 22-16151	Page 1 / 1630
Modification	Date	Name	Original		Replacement of	Replaced by				

Parts list

F01_001

Device tag	Quantity	Designation	Type number	Supplier	Part number
=V1AR12UQ41UQ5.1-BGS/R	1	Inductive sensor Monitoring Kit for Power Clamps	1324638	TUNKERS	TUN.1324638

+.AR12UQ41UQ4.1/1

+.AR12UQ41UQ5.2/1

Parts list

F01_001

Device tag	Quantity	Designation	Type number	Supplier	Part number
=V1AR12UQ41UQ5.2-BGS/R	1	Inductive sensor Monitoring Kit for Power Clamps	1324638	TUNKERS	TUN.1324638

+.AR12UQ41UQ5.1/1

+.AR12UQ41UQ6.1/1

			Date	12/22/2022	Volvo Trucks North America	Valiant TMS	Parts list : TUN.1324638 - TUN.1324638	Drawing name: =2V04&EFS-EL	= + V1AR12UQ41UQ5.2
			Ed.	MKLEPADLO					
			Appr		P6700 Underbody Mainline - Cell 2V04	Scale 1:1		Document type: EPB / Project nr: 22-16151	Page 1 / 1630
Modification	Date	Name	Original		Replacement of / Replaced by				

Parts list

F01_001

Device tag	Quantity	Designation	Type number	Supplier	Part number
=V1AR12UQ41UQ6.1-BGS/R	1	Inductive sensor Monitoring Kit for Power Clamps	1324638	TUNKERS	TUN.1324638

+.AR12UQ41UQ5.2/1

+.AR12UQ41UQ6.2/1

Parts list

F01_001

Device tag	Quantity	Designation	Type number	Supplier	Part number
=V1AR12UQ41UQ6.2-BGS/R	1	Inductive sensor Monitoring Kit for Power Clamps	1324638	TUNKERS	TUN.1324638

+.AR12UQ41UQ6.1/1

+.AR12UQ41UQ7.1/1

			Date	12/22/2022	Volvo Trucks North America	Valiant TMS	Parts list : TUN.1324638 - TUN.1324638	Drawing name: =2V04&EFS-EL	=	
			Ed.	MKLEPADLO					+ V1AR12UQ41UQ6.2	
			Appr		P6700 Underbody Mainline - Cell 2V04	Scale 1:1		Document type: EPB	Project nr: 22-16151	Page 1 / 1630
Modification	Date	Name	Original		Replacement of	Replaced by				

Parts list

F01_001

Device tag	Quantity	Designation	Type number	Supplier	Part number
=V1AR12UQ41UQ7.1-BGS/R	1	Inductive sensor Monitoring Kit for Power Clamps	1324638	TUNKERS	TUN.1324638

+.AR12UQ41UQ6.2/1

+.AR12UQ41UQ7.2/1

Parts list

F01_001

Device tag	Quantity	Designation	Type number	Supplier	Part number
=V1AR12UQ41UQ7.2-BGS/R	1	Inductive sensor Monitoring Kit for Power Clamps	1324638	TUNKERS	TUN.1324638

+.AR12UQ41UQ7.1/1

+.AR12UQ41UQ8.1/1

			Date	12/22/2022	Volvo Trucks North America	Valiant TMS	Parts list : TUN.1324638 - TUN.1324638	Drawing name: =2V04&EFS-EL	=	
			Ed.	MKLEPADLO					+ V1AR12UQ41UQ7.2	
			Appr		P6700 Underbody Mainline - Cell 2V04	Scale 1:1		Document type: EPB	Project nr: 22-16151	Page 1
Modification	Date	Name	Original		Replacement of	Replaced by				1630

Parts list

F01_001

Device tag	Quantity	Designation	Type number	Supplier	Part number
=V1AR12UQ41UQ8.1-BGS/R	1	Inductive sensor Monitoring Kit for Power Clamps	1324638	TUNKERS	TUN.1324638

+.AR12UQ41UQ7.2/1

+.AR12UQ41UQ8.2/1

Parts list

F01_001

Device tag	Quantity	Designation	Type number	Supplier	Part number
=V1AR12UQ41UQ8.2-BGS/R	1	Inductive sensor Monitoring Kit for Power Clamps	1324638	TUNKERS	TUN.1324638

+.AR12UQ41UQ8.1/1

+.AR12UQ41UQ9.1/1

			Date	12/22/2022	Volvo Trucks North America	Valiant TMS	Parts list : TUN.1324638 - TUN.1324638	Drawing name: =2V04&EFS-EL	= + V1AR12UQ41UQ8.2
			Ed.	MKLEPADLO					
			Appr		P6700 Underbody Mainline - Cell 2V04	Scale 1:1		Document type: EPB / Project nr: 22-16151	Page 1 / 1630
Modification	Date	Name	Original		Replacement of / Replaced by				

Parts list

F01_001

Device tag	Quantity	Designation	Type number	Supplier	Part number
=V1AR12UQ41UQ9.1-BGS/R	1	Inductive sensor Monitoring Kit for Power Clamps	1324638	TUNKERS	TUN.1324638

+.AR12UQ41UQ8.2/1

+.AR12UQ41UQ9.2/1

			Date	12/22/2022	Volvo Trucks North America	Valiant TMS	Parts list : TUN.1324638 - TUN.1324638	Drawing name: =2V04&EFS-EL	= + V1AR12UQ41UQ9.1
			Ed.	MKLEPADLO					
			Appr		P6700 Underbody Mainline - Cell 2V04	Scale 1:1		Document type: EPB / Project nr: 22-16151	Page 1 / 1630
Modification	Date	Name	Original		Replacement of / Replaced by				

Parts list

F01_001

Device tag	Quantity	Designation	Type number	Supplier	Part number
=V1AR12UQ41UQ9.2-BGS/R	1	Inductive sensor Monitoring Kit for Power Clamps	1324638	TUNKERS	TUN.1324638

+.AR12UQ41UQ9.1/1

+.AR13UQ41/1

			Date	12/22/2022	Volvo Trucks North America	Valiant TMS	Parts list : TUN.1324638 - TUN.1324638	Drawing name: =2V04&EFS-EL	= + V1AR12UQ41UQ9.2
			Ed.	MKLEPADLO					
			Appr		P6700 Underbody Mainline - Cell 2V04	Scale 1:1		Document type: EPB	Project nr: 22-16151
Modification	Date	Name	Original		Replacement of	Replaced by			Page 1 / 1630

Parts list

F01_001

Device tag	Quantity	Designation	Type number	Supplier	Part number
=V1AR13UQ41BG0-BG01	1	Inductive sensor With WeldGuard™ coating	NI50U-CK40-AP6X2-H1141/S1590 W/BS4	TURCK	TUR.NI50U-CK40-AP6X2-H1141/S1590 W/BS4
=V1AR13UQ41BG0-BG02	1	Inductive sensor With WeldGuard™ coating	NI50U-CK40-AP6X2-H1141/S1590 W/BS4	TURCK	TUR.NI50U-CK40-AP6X2-H1141/S1590 W/BS4
=V1AR13UQ41BG0-XG1/2	1	Y splitter	U2-30676	TURCK	TUR.VB2-FSM 4.4/2FKM 4/S3450
=V1AR13UQ41KF1-KF1	0	Bus node	CPX-FB33	FES	FES.548755
=V1AR13UQ41KF1-KF1	0	Interlinking block	CPX-M-GE-EV-S-7/8-5POL	FES	FES.550208
=V1AR13UQ41KF1-KF1.11	0	Manifold block	CPX-M-AB-8-M12X2-5POL	FES	FES.549335
=V1AR13UQ41KF1-KF1.12	0	Manifold block	CPX-M-AB-8-M12X2-5POL	FES	FES.549335
=V1AR13UQ41KF1-KF1.13	0	Manifold block	CPX-M-AB-8-M12X2-5POL	FES	FES.549335

+.AR12UQ41UQ9.2/1

+.AR13UQ41UQ1.1/1

			Date	12/22/2022	Volvo Trucks North America	Valiant TMS	Parts list : TUR.NI50U-CK40-AP6X2-H1141/S1590 W/BS4 - FES.549335	Drawing name: =2V04&EFS-EL	=	
			Ed.	MKLEPADLO					+ V1AR13UQ41	
			Appr		P6700 Underbody Mainline - Cell 2V04	Scale 1:1		Document type: EPB	Project nr: 22-16151	Page 1 / 1630
Modification	Date	Name	Original		Replacement of	Replaced by				

Parts list

F01_001

Device tag	Quantity	Designation	Type number	Supplier	Part number
=V1AR13UQ41UQ1.1-BGS/R	1	Pressure sensor with display	PN-010-RER14-QFRKG/US/ /V	IFM	IFM.PN7094

+V1AR13UQ41/1

+.AR13UQ41UQ2.1/1

			Date	12/22/2022	Volvo Trucks North America	Valiant TMS	Parts list : IFM.PN7094 - IFM.PN7094	Drawing name: =2V04&EFS-EL	= + V1AR13UQ41UQ1.1
			Ed.	MKLEPADLO					
			Appr		P6700 Underbody Mainline - Cell 2V04	Scale 1:1		Document type: EPB	Project nr: 22-16151
Modification	Date	Name	Original		Replacement of	Replaced by			Page 1 / 1630

Parts list

F01_001

Device tag	Quantity	Designation	Type number	Supplier	Part number
=V1AR13UQ41UQ2.1-BGS/R	1	Pressure sensor with display	PN-010-RER14-QFRKG/US/ /V	IFM	IFM.PN7094

+.AR13UQ41UQ1.1/1

+.AR13UQ41UQ3.1/1

			Date	12/22/2022	Volvo Trucks North America	Valiant TMS	Parts list : IFM.PN7094 - IFM.PN7094	Drawing name: =2V04&EFS-EL	=	
			Ed.	MKLEPADLO					+ V1AR13UQ41UQ2.1	
			Appr		P6700 Underbody Mainline - Cell 2V04	Scale 1:1		Document type: EPB	Project nr: 22-16151	Page 1 / 1630
Modification	Date	Name	Original		Replacement of	Replaced by				

Parts list

F01_001

Device tag	Quantity	Designation	Type number	Supplier	Part number
=V1AR13UQ41UQ3.1-BGS/R	1	Pressure sensor with display	PN-010-RER14-QFRKG/US/ /V	IFM	IFM.PN7094

+.AR13UQ41UQ2.1/1

+.AR13UQ41UQ4.1/1

			Date	12/22/2022	Volvo Trucks North America	Valiant TMS	Parts list : IFM.PN7094 - IFM.PN7094	Drawing name: =2V04&EFS-EL	=	
			Ed.	MKLEPADLO					+ V1AR13UQ41UQ3.1	
			Appr		P6700 Underbody Mainline - Cell 2V04	Scale 1:1		Document type: EPB	Project nr: 22-16151	Page 1 / 1630
Modification	Date	Name	Original		Replacement of	Replaced by				

Parts list

F01_001

Device tag	Quantity	Designation	Type number	Supplier	Part number
=V1AR13UQ41UQ4.1-BGS/R	1	Pressure sensor with display	PN-010-RER14-QFRKG/US/ /V	IFM	IFM.PN7094

+.AR13UQ41UQ3.1/1

+.AR13UQ41UQ5.1/1

			Date	12/22/2022	Volvo Trucks North America	Valiant TMS	Parts list : IFM.PN7094 - IFM.PN7094	Drawing name: =2V04&EFS-EL	=	
			Ed.	MKLEPADLO					+ V1AR13UQ41UQ4.1	
			Appr		P6700 Underbody Mainline - Cell 2V04	Scale 1:1		Document type: EPB	Project nr: 22-16151	Page 1 / 1630
Modification	Date	Name	Original		Replacement of	Replaced by				

Parts list

F01_001

Device tag	Quantity	Designation	Type number	Supplier	Part number
=V1AR13UQ41UQ5.1-BGS/R	1	Inductive sensor Monitoring Kit for Power Clamps	1324638	TUNKERS	TUN.1324638

+.AR13UQ41UQ4.1/1

+.AR13UQ41UQ5.2/1

Parts list

F01_001

Device tag	Quantity	Designation	Type number	Supplier	Part number
=V1AR13UQ41UQ5.2-BGS/R	1	Inductive sensor Monitoring Kit for Power Clamps	1324638	TUNKERS	TUN.1324638

+.AR13UQ41UQ5.1/1

+.AR13UQ41UQ6.1/1

			Date	12/22/2022	Volvo Trucks North America	Valiant TMS	Parts list : TUN.1324638 - TUN.1324638	Drawing name: =2V04&EFS-EL	= + V1AR13UQ41UQ5.2
			Ed.	MKLEPADLO					
			Appr		P6700 Underbody Mainline - Cell 2V04	Scale 1:1		Document type: EPB / Project nr: 22-16151	Page 1 / 1630
Modification	Date	Name	Original		Replacement of / Replaced by				

Parts list

F01_001

Device tag	Quantity	Designation	Type number	Supplier	Part number
=V1AR13UQ41UQ6.1-BGS/R	1	Inductive sensor Monitoring Kit for Power Clamps	1324638	TUNKERS	TUN.1324638

+.AR13UQ41UQ5.2/1

+.AR13UQ41UQ6.2/1

Parts list

F01_001

Device tag	Quantity	Designation	Type number	Supplier	Part number
=V1AR13UQ41UQ6.2-BGS/R	1	Inductive sensor Monitoring Kit for Power Clamps	1324638	TUNKERS	TUN.1324638

+.AR13UQ41UQ6.1/1

+.AR13UQ41UQ7.1/1

			Date	12/22/2022	Volvo Trucks North America	Valiant TMS	Parts list : TUN.1324638 - TUN.1324638	Drawing name: =2V04&EFS-EL	= + V1AR13UQ41UQ6.2
			Ed.	MKLEPADLO					
			Appr		P6700 Underbody Mainline - Cell 2V04	Scale 1:1		Document type: EPB / Project nr: 22-16151	Page 1 / 1630
Modification	Date	Name	Original		Replacement of / Replaced by				

Parts list

F01_001

Device tag	Quantity	Designation	Type number	Supplier	Part number
=V1AR13UQ41UQ7.1-BGS/R	1	Inductive sensor Monitoring Kit for Power Clamps	1324638	TUNKERS	TUN.1324638

+.AR13UQ41UQ6.2/1

+.AR13UQ41UQ7.2/1

Parts list

F01_001

Device tag	Quantity	Designation	Type number	Supplier	Part number
=V1AR13UQ41UQ7.2-BGS/R	1	Inductive sensor Monitoring Kit for Power Clamps	1324638	TUNKERS	TUN.1324638

+.AR13UQ41UQ7.1/1

+.AR13UQ41UQ8.1/1

			Date	12/22/2022	Volvo Trucks North America	Valiant TMS	Parts list : TUN.1324638 - TUN.1324638	Drawing name: =2V04&EFS-EL	=	
			Ed.	MKLEPADLO					+ V1AR13UQ41UQ7.2	
			Appr		P6700 Underbody Mainline - Cell 2V04	Scale 1:1		Document type: EPB	Project nr: 22-16151	Page 1 / 1630
Modification	Date	Name	Original		Replacement of	Replaced by				

Parts list

F01_001

Device tag	Quantity	Designation	Type number	Supplier	Part number
=V1AR13UQ41UQ8.1-BGS/R	1	Inductive sensor Monitoring Kit for Power Clamps	1324638	TUNKERS	TUN.1324638

+.AR13UQ41UQ7.2/1

+.AR13UQ41UQ8.2/1

Parts list

F01_001

Device tag	Quantity	Designation	Type number	Supplier	Part number
=V1AR13UQ41UQ8.2-BGS/R	1	Inductive sensor Monitoring Kit for Power Clamps	1324638	TUNKERS	TUN.1324638

+.AR13UQ41UQ8.1/1

+.AR13UQ41UQ9.1/1

			Date	12/22/2022	Volvo Trucks North America	Valiant TMS	Parts list : TUN.1324638 - TUN.1324638	Drawing name: =2V04&EFS-EL	=	
			Ed.	MKLEPADLO					+ V1AR13UQ41UQ8.2	
			Appr		P6700 Underbody Mainline - Cell 2V04	Scale 1:1		Document type: EPB	Project nr: 22-16151	Page 1 / 1630
Modification	Date	Name	Original		Replacement of	Replaced by				

Parts list

F01_001

Device tag	Quantity	Designation	Type number	Supplier	Part number
=V1AR13UQ41UQ9.1-BGS/R	1	Inductive sensor Monitoring Kit for Power Clamps	1324638	TUNKERS	TUN.1324638

+.AR13UQ41UQ8.2/1

+.AR13UQ41UQ9.2/1

Parts list

F01_001

Device tag	Quantity	Designation	Type number	Supplier	Part number
=V1AR13UQ41UQ9.2-BGS/R	1	Inductive sensor Monitoring Kit for Power Clamps	1324638	TUNKERS	TUN.1324638

+.AR13UQ41UQ9.1/1

+.AR14UQ41/1

Parts list

F01_001

Device tag	Quantity	Designation	Type number	Supplier	Part number
=V1AR14UQ41BG0-BG01	1	Inductive sensor With WeldGuard™ coating	NI50U-CK40-AP6X2-H1141/S1590 W/BS4	TURCK	TUR.NI50U-CK40-AP6X2-H1141/S1590 W/BS4
=V1AR14UQ41BG0-BG02	1	Inductive sensor With WeldGuard™ coating	NI50U-CK40-AP6X2-H1141/S1590 W/BS4	TURCK	TUR.NI50U-CK40-AP6X2-H1141/S1590 W/BS4
=V1AR14UQ41BG0-XG1/2	1	Y splitter	U2-30676	TURCK	TUR.VB2-FSM 4.4/2FKM 4/S3450
=V1AR14UQ41KF1-KF1	0	Bus node	CPX-FB33	FES	FES.548755
=V1AR14UQ41KF1-KF1	0	Interlinking block	CPX-M-GE-EV-S-7/8-5POL	FES	FES.550208
=V1AR14UQ41KF1-KF1.11	0	Manifold block	CPX-M-AB-8-M12X2-5POL	FES	FES.549335
=V1AR14UQ41KF1-KF1.12	0	Manifold block	CPX-M-AB-8-M12X2-5POL	FES	FES.549335
=V1AR14UQ41KF1-KF1.13	0	Manifold block	CPX-M-AB-8-M12X2-5POL	FES	FES.549335

+.AR13UQ41UQ9.2/1

+.AR14UQ41UQ1.1/1

			Date	12/22/2022	Volvo Trucks North America	Valiant TMS	Parts list : TUR.NI50U-CK40-AP6X2-H1141/S1590 W/BS4 - FES.549335	Drawing name: =2V04&EFS-EL	=	
			Ed.	MKLEPADLO					+ V1AR14UQ41	
			Appr		P6700 Underbody Mainline - Cell 2V04	Scale 1:1		Document type: EPB	Project nr: 22-16151	Page 1 / 1630
Modification	Date	Name	Original		Replacement of	Replaced by				

Parts list

F01_001

Device tag	Quantity	Designation	Type number	Supplier	Part number
=V1AR14UQ41UQ1.1-BGS/R	1	Pressure sensor with display	PN-010-RER14-QFRKG/US/ /V	IFM	IFM.PN7094

+V1AR14UQ41/1

+.AR14UQ41UQ2.1/1

			Date	12/22/2022	Volvo Trucks North America	Valiant TMS	Parts list : IFM.PN7094 - IFM.PN7094	Drawing name: =2V04&EFS-EL	= + V1AR14UQ41UQ1.1
			Ed.	MKLEPADLO					
			Appr		P6700 Underbody Mainline - Cell 2V04	Scale 1:1		Document type: EPB	Project nr: 22-16151
Modification	Date	Name	Original		Replacement of	Replaced by			Page 1 / 1630

Parts list

F01_001

Device tag	Quantity	Designation	Type number	Supplier	Part number
=V1AR14UQ41UQ2.1-BGS/R	1	Pressure sensor with display	PN-010-RER14-QFRKG/US/ /V	IFM	IFM.PN7094

+.AR14UQ41UQ1.1/1

+.AR14UQ41UQ3.1/1

			Date	12/22/2022	Volvo Trucks North America	Valiant TMS	Parts list : IFM.PN7094 - IFM.PN7094	Drawing name: =2V04&EFS-EL	=	
			Ed.	MKLEPADLO					+ V1AR14UQ41UQ2.1	
			Appr		P6700 Underbody Mainline - Cell 2V04	Scale 1:1		Document type: EPB	Project nr: 22-16151	Page 1
Modification	Date	Name	Original		Replacement of	Replaced by				1630

Parts list

F01_001

Device tag	Quantity	Designation	Type number	Supplier	Part number
=V1AR14UQ41UQ3.1-BGS/R	1	Pressure sensor with display	PN-010-RER14-QFRKG/US/ /V	IFM	IFM.PN7094

+.AR14UQ41UQ2.1/1

+.AR14UQ41UQ4.1/1

			Date	12/22/2022	Volvo Trucks North America	Valiant TMS	Parts list : IFM.PN7094 - IFM.PN7094	Drawing name: =2V04&EFS-EL	=	
			Ed.	MKLEPADLO					+ V1AR14UQ41UQ3.1	
			Appr		P6700 Underbody Mainline - Cell 2V04	Scale 1:1		Document type: EPB	Project nr: 22-16151	Page 1 / 1630
Modification	Date	Name	Original		Replacement of	Replaced by				

Parts list

F01_001

Device tag	Quantity	Designation	Type number	Supplier	Part number
=V1AR14UQ41UQ4.1-BGS/R	1	Pressure sensor with display	PN-010-RER14-QFRKG/US/ /V	IFM	IFM.PN7094

+.AR14UQ41UQ3.1/1

+.AR14UQ41UQ5.1/1

			Date	12/22/2022	Volvo Trucks North America	Valiant TMS	Parts list : IFM.PN7094 - IFM.PN7094	Drawing name: =2V04&EFS-EL	=	
			Ed.	MKLEPADLO					+ V1AR14UQ41UQ4.1	
			Appr		P6700 Underbody Mainline - Cell 2V04	Scale 1:1		Document type: EPB	Project nr: 22-16151	Page 1 / 1630
Modification	Date	Name	Original		Replacement of	Replaced by				

Parts list

F01_001

Device tag	Quantity	Designation	Type number	Supplier	Part number
=V1AR14UQ41UQ5.1-BGS/R	1	Inductive sensor Monitoring Kit for Power Clamps	1324638	TUNKERS	TUN.1324638

+.AR14UQ41UQ4.1/1

+.AR14UQ41UQ5.2/1

			Date	12/22/2022	Volvo Trucks North America	Valiant TMS	Parts list : TUN.1324638 - TUN.1324638	Drawing name: =2V04&EFS-EL	=	
			Ed.	MKLEPADLO					+ V1AR14UQ41UQ5.1	
			Appr		P6700 Underbody Mainline - Cell 2V04	Scale 1:1		Document type: EPB	Project nr: 22-16151	Page 1
Modification	Date	Name	Original		Replacement of	Replaced by				1630

Parts list

F01_001

Device tag	Quantity	Designation	Type number	Supplier	Part number
=V1AR14UQ41UQ5.2-BGS/R	1	Inductive sensor Monitoring Kit for Power Clamps	1324638	TUNKERS	TUN.1324638

+.AR14UQ41UQ5.1/1

+.AR14UQ41UQ6.1/1

			Date	12/22/2022	Volvo Trucks North America	Valiant TMS	Parts list : TUN.1324638 - TUN.1324638	Drawing name: =2V04&EFS-EL	=	
			Ed.	MKLEPADLO					+ V1AR14UQ41UQ5.2	
			Appr		P6700 Underbody Mainline - Cell 2V04	Scale 1:1		Document type: EPB	Project nr: 22-16151	Page 1
Modification	Date	Name	Original		Replacement of	Replaced by				1630

Parts list

F01_001

Device tag	Quantity	Designation	Type number	Supplier	Part number
=V1AR14UQ41UQ6.1-BGS/R	1	Inductive sensor Monitoring Kit for Power Clamps	1324638	TUNKERS	TUN.1324638

+.AR14UQ41UQ5.2/1

+.AR14UQ41UQ6.2/1

Parts list

F01_001

Device tag	Quantity	Designation	Type number	Supplier	Part number
=V1AR14UQ41UQ6.2-BGS/R	1	Inductive sensor Monitoring Kit for Power Clamps	1324638	TUNKERS	TUN.1324638

+.AR14UQ41UQ6.1/1

+.AR14UQ41UQ7.1/1

			Date	12/22/2022	Volvo Trucks North America	Valiant TMS	Parts list : TUN.1324638 - TUN.1324638	Drawing name: =2V04&EFS-EL	=	
			Ed.	MKLEPADLO					+ V1AR14UQ41UQ6.2	
			Appr		P6700 Underbody Mainline - Cell 2V04	Scale 1:1		Document type: EPB	Project nr: 22-16151	Page 1 / 1630
Modification	Date	Name	Original		Replacement of	Replaced by				

Parts list

F01_001

Device tag	Quantity	Designation	Type number	Supplier	Part number
=V1AR14UQ41UQ7.1-BGS/R	1	Inductive sensor Monitoring Kit for Power Clamps	1324638	TUNKERS	TUN.1324638

+.AR14UQ41UQ6.2/1

+.AR14UQ41UQ7.2/1

Parts list

F01_001

Device tag	Quantity	Designation	Type number	Supplier	Part number
=V1AR14UQ41UQ7.2-BGS/R	1	Inductive sensor Monitoring Kit for Power Clamps	1324638	TUNKERS	TUN.1324638

+.AR14UQ41UQ7.1/1

+.AR14UQ41UQ8.1/1

			Date	12/22/2022	Volvo Trucks North America	Valiant TMS	Parts list : TUN.1324638 - TUN.1324638	Drawing name: =2V04&EFS-EL	=	
			Ed.	MKLEPADLO					+ V1AR14UQ41UQ7.2	
			Appr		P6700 Underbody Mainline - Cell 2V04	Scale 1:1		Document type: EPB	Project nr: 22-16151	Page 1 / 1630
Modification	Date	Name	Original		Replacement of	Replaced by				

Parts list

F01_001

Device tag	Quantity	Designation	Type number	Supplier	Part number
=V1AR14UQ41UQ8.1-BGS/R	1	Inductive sensor Monitoring Kit for Power Clamps	1324638	TUNKERS	TUN.1324638

+.AR14UQ41UQ7.2/1

+.AR14UQ41UQ8.2/1

Parts list

F01_001

Device tag	Quantity	Designation	Type number	Supplier	Part number
=V1AR14UQ41UQ8.2-BGS/R	1	Inductive sensor Monitoring Kit for Power Clamps	1324638	TUNKERS	TUN.1324638

+.AR14UQ41UQ8.1/1

+.AR14UQ41UQ9.1/1

			Date	12/22/2022	Volvo Trucks North America	Valiant TMS	Parts list : TUN.1324638 - TUN.1324638	Drawing name: =2V04&EFS-EL	= + V1AR14UQ41UQ8.2
			Ed.	MKLEPADLO					
			Appr		P6700 Underbody Mainline - Cell 2V04	Scale 1:1		Document type: EPB	Project nr: 22-16151
Modification	Date	Name	Original		Replacement of	Replaced by			Page 1 / 1630

Parts list

F01_001

Device tag	Quantity	Designation	Type number	Supplier	Part number
=V1AR14UQ41UQ9.1-BGS/R	1	Inductive sensor Monitoring Kit for Power Clamps	1324638	TUNKERS	TUN.1324638

+.AR14UQ41UQ8.2/1

+.AR14UQ41UQ9.2/1

Parts list

F01_001

Device tag	Quantity	Designation	Type number	Supplier	Part number
=V1AR14UQ41UQ9.2-BGS/R	1	Inductive sensor Monitoring Kit for Power Clamps	1324638	TUNKERS	TUN.1324638

+.AR14UQ41UQ9.1/1

+.AR15UQ41/1

			Date	12/22/2022	Volvo Trucks North America	Valiant TMS	Parts list : TUN.1324638 - TUN.1324638	Drawing name: =2V04&EFS-EL	= + V1AR14UQ41UQ9.2
			Ed.	MKLEPADLO					
			Appr		P6700 Underbody Mainline - Cell 2V04	Scale 1:1		Document type: EPB	Project nr: 22-16151
Modification	Date	Name	Original		Replacement of	Replaced by			Page 1 / 1630

Parts list

F01_001

Device tag	Quantity	Designation	Type number	Supplier	Part number
=V1AR15UQ41BG0-BG01	1	Inductive sensor With WeldGuard™ coating	NI50U-CK40-AP6X2-H1141/S1590 W/BS4	TURCK	TUR.NI50U-CK40-AP6X2-H1141/S1590 W/BS4
=V1AR15UQ41BG0-BG02	1	Inductive sensor With WeldGuard™ coating	NI50U-CK40-AP6X2-H1141/S1590 W/BS4	TURCK	TUR.NI50U-CK40-AP6X2-H1141/S1590 W/BS4
=V1AR15UQ41BG0-XG1/2	1	Y splitter	U2-30676	TURCK	TUR.VB2-FSM 4.4/2FKM 4/S3450
=V1AR15UQ41KF1-KF1	0	Bus node	CPX-FB33	FES	FES.548755
=V1AR15UQ41KF1-KF1	0	Interlinking block	CPX-M-GE-EV-S-7/8-5POL	FES	FES.550208
=V1AR15UQ41KF1-KF1.11	0	Manifold block	CPX-M-AB-8-M12X2-5POL	FES	FES.549335
=V1AR15UQ41KF1-KF1.12	0	Manifold block	CPX-M-AB-8-M12X2-5POL	FES	FES.549335
=V1AR15UQ41KF1-KF1.13	0	Manifold block	CPX-M-AB-8-M12X2-5POL	FES	FES.549335

+.AR14UQ41UQ9.2/1

+.AR15UQ41UQ1.1/1

			Date	12/22/2022	Volvo Trucks North America	Valiant TMS	Parts list : TUR.NI50U-CK40-AP6X2-H1141/S1590 W/BS4 - FES.549335	Drawing name: =2V04&EFS-EL	= + V1AR15UQ41
			Ed.	MKLEPADLO					
			Appr		P6700 Underbody Mainline - Cell 2V04	Scale 1:1		Document type: EPB	Project nr: 22-16151
Modification	Date	Name	Original		Replacement of	Replaced by			Page 1 / 1630

Parts list

F01_001

Device tag	Quantity	Designation	Type number	Supplier	Part number
=V1AR15UQ41UQ1.1-BGS/R	1	Pressure sensor with display	PN-010-RER14-QFRKG/US/ /V	IFM	IFM.PN7094

+V1AR15UQ41/1

+.AR15UQ41UQ2.1/1

			Date	12/22/2022	Volvo Trucks North America	Valiant TMS	Parts list : IFM.PN7094 - IFM.PN7094	Drawing name: =2V04&EFS-EL	= + V1AR15UQ41UQ1.1
			Ed.	MKLEPADLO					
			Appr		P6700 Underbody Mainline - Cell 2V04	Scale 1:1		Document type: EPB	Project nr: 22-16151
Modification	Date	Name	Original		Replacement of	Replaced by			Page 1 / 1630

Parts list

F01_001

Device tag	Quantity	Designation	Type number	Supplier	Part number
=V1AR15UQ41UQ2.1-BGS/R	1	Pressure sensor with display	PN-010-RER14-QFRKG/US/ /V	IFM	IFM.PN7094

+.AR15UQ41UQ1.1/1

+.AR15UQ41UQ3.1/1

			Date	12/22/2022	Volvo Trucks North America	Valiant TMS	Parts list : IFM.PN7094 - IFM.PN7094	Drawing name: =2V04&EFS-EL	=	
			Ed.	MKLEPADLO					+ V1AR15UQ41UQ2.1	
			Appr		P6700 Underbody Mainline - Cell 2V04	Scale 1:1		Document type: EPB	Project nr: 22-16151	Page 1 / 1630
Modification	Date	Name	Original		Replacement of	Replaced by				

Parts list

F01_001

Device tag	Quantity	Designation	Type number	Supplier	Part number
=V1AR15UQ41UQ3.1-BGS/R	1	Pressure sensor with display	PN-010-RER14-QFRKG/US/ /V	IFM	IFM.PN7094

+.AR15UQ41UQ2.1/1

+.AR15UQ41UQ4.1/1

			Date	12/22/2022	Volvo Trucks North America	Valiant TMS	Parts list : IFM.PN7094 - IFM.PN7094	Drawing name: =2V04&EFS-EL	=	
			Ed.	MKLEPADLO					+ V1AR15UQ41UQ3.1	
			Appr		P6700 Underbody Mainline - Cell 2V04	Scale 1:1		Document type: EPB	Project nr: 22-16151	Page 1 / 1630
Modification	Date	Name	Original		Replacement of	Replaced by				

Parts list

F01_001

Device tag	Quantity	Designation	Type number	Supplier	Part number
=V1AR15UQ41UQ4.1-BGS/R	1	Pressure sensor with display	PN-010-RER14-QFRKG/US/ /V	IFM	IFM.PN7094

+.AR15UQ41UQ3.1/1

+.AR15UQ41UQ5.1/1

			Date	12/22/2022	Volvo Trucks North America	Valiant TMS	Parts list : IFM.PN7094 - IFM.PN7094	Drawing name: =2V04&EFS-EL	=	
			Ed.	MKLEPADLO					+ V1AR15UQ41UQ4.1	
			Appr		P6700 Underbody Mainline - Cell 2V04	Scale 1:1		Document type: EPB	Project nr: 22-16151	Page 1 / 1630
Modification	Date	Name	Original		Replacement of	Replaced by				

Parts list

F01_001

Device tag	Quantity	Designation	Type number	Supplier	Part number
=V1AR15UQ41UQ5.1-BGS/R	1	Inductive sensor Monitoring Kit for Power Clamps	1324638	TUNKERS	TUN.1324638

+.AR15UQ41UQ4.1/1

+.AR15UQ41UQ5.2/1

Parts list

F01_001

Device tag	Quantity	Designation	Type number	Supplier	Part number
=V1AR15UQ41UQ5.2-BGS/R	1	Inductive sensor Monitoring Kit for Power Clamps	1324638	TUNKERS	TUN.1324638

+.AR15UQ41UQ5.1/1

+.AR15UQ41UQ6.1/1

			Date	12/22/2022	Volvo Trucks North America	Valiant TMS	Parts list : TUN.1324638 - TUN.1324638	Drawing name: =2V04&EFS-EL	=	
			Ed.	MKLEPADLO					+ V1AR15UQ41UQ5.2	
			Appr		P6700 Underbody Mainline - Cell 2V04	Scale 1:1		Document type: EPB	Project nr: 22-16151	Page 1 / 1630
Modification	Date	Name	Original		Replacement of	Replaced by				

Parts list

F01_001

Device tag	Quantity	Designation	Type number	Supplier	Part number
=V1AR15UQ41UQ6.1-BGS/R	1	Inductive sensor Monitoring Kit for Power Clamps	1324638	TUNKERS	TUN.1324638

+.AR15UQ41UQ5.2/1

+.AR15UQ41UQ6.2/1

Parts list

F01_001

Device tag	Quantity	Designation	Type number	Supplier	Part number
=V1AR15UQ41UQ6.2-BGS/R	1	Inductive sensor Monitoring Kit for Power Clamps	1324638	TUNKERS	TUN.1324638

+.AR15UQ41UQ6.1/1

+.AR15UQ41UQ7.1/1

			Date	12/22/2022	Volvo Trucks North America	Valiant TMS	Parts list : TUN.1324638 - TUN.1324638	Drawing name: =2V04&EFS-EL	= + V1AR15UQ41UQ6.2
			Ed.	MKLEPADLO					
			Appr		P6700 Underbody Mainline - Cell 2V04	Scale 1:1		Document type: EPB	Project nr: 22-16151
Modification	Date	Name	Original		Replacement of	Replaced by			Page 1 / 1630

Parts list

F01_001

Device tag	Quantity	Designation	Type number	Supplier	Part number
=V1AR15UQ41UQ7.1-BGS/R	1	Inductive sensor Monitoring Kit for Power Clamps	1324638	TUNKERS	TUN.1324638

+.AR15UQ41UQ6.2/1

+.AR15UQ41UQ7.2/1

Parts list

F01_001

Device tag	Quantity	Designation	Type number	Supplier	Part number
=V1AR15UQ41UQ7.2-BGS/R	1	Inductive sensor Monitoring Kit for Power Clamps	1324638	TUNKERS	TUN.1324638

+.AR15UQ41UQ7.1/1

+.AR15UQ41UQ8.1/1

Parts list

F01_001

Device tag	Quantity	Designation	Type number	Supplier	Part number
=V1AR15UQ41UQ8.1-BGS/R	1	Inductive sensor Monitoring Kit for Power Clamps	1324638	TUNKERS	TUN.1324638

+.AR15UQ41UQ7.2/1

+.AR15UQ41UQ8.2/1

Parts list

F01_001

Device tag	Quantity	Designation	Type number	Supplier	Part number
=V1AR15UQ41UQ8.2-BGS/R	1	Inductive sensor Monitoring Kit for Power Clamps	1324638	TUNKERS	TUN.1324638

+.AR15UQ41UQ8.1/1

+.AR15UQ41UQ9.1/1

			Date	12/22/2022	Volvo Trucks North America	Valiant TMS	Parts list : TUN.1324638 - TUN.1324638	Drawing name: =2V04&EFS-EL	= + V1AR15UQ41UQ8.2
			Ed.	MKLEPADLO					
			Appr		P6700 Underbody Mainline - Cell 2V04	Scale 1:1		Document type: EPB	Project nr: 22-16151
Modification	Date	Name	Original		Replacement of	Replaced by			Page 1 / 1630

Parts list

F01_001

Device tag	Quantity	Designation	Type number	Supplier	Part number
=V1AR15UQ41UQ9.1-BGS/R	1	Inductive sensor Monitoring Kit for Power Clamps	1324638	TUNKERS	TUN.1324638

+.AR15UQ41UQ8.2/1

+.AR15UQ41UQ9.2/1

Parts list

F01_001

Device tag	Quantity	Designation	Type number	Supplier	Part number
=V1AR15UQ41UQ9.2-BGS/R	1	Inductive sensor Monitoring Kit for Power Clamps	1324638	TUNKERS	TUN.1324638

+.AR15UQ41UQ9.1/1

+.AR21XQ11UC01/1

			Date	12/22/2022	Volvo Trucks North America	Valiant TMS	Parts list : TUN.1324638 - TUN.1324638	Drawing name: =2V04&EFS-EL	=	
			Ed.	MKLEPADLO					+ V1AR15UQ41UQ9.2	
			Appr		P6700 Underbody Mainline - Cell 2V04	Scale 1:1		Document type: EPB	Project nr: 22-16151	Page 1 / 1630
Modification	Date	Name	Original		Replacement of	Replaced by				

Parts list

F01_001

Device tag	Quantity	Designation	Type number	Supplier	Part number
=V1AR21XQ11WC1-XG1	1	Surface socket-outlet		ABB	ABB.2CMA193115R1000

+.AR15UQ41UQ9.2/1

+.AR22XQ11UC01/1

			Date	12/22/2022	Volvo Trucks North America	Valiant TMS	Parts list : ABB.2CMA193115R1000 - ABB.2CMA193115R1000	Drawing name: =2V04&EFS-EL	= + V1AR21XQ11UC01
			Ed.	MKLEPADLO					
			Appr		P6700 Underbody Mainline - Cell 2V04	Scale 1:1		Document type: EPB	Project nr: 22-16151
Modification	Date	Name	Original		Replacement of	Replaced by			Page 1 / 1630

Parts list

F01_001

Device tag	Quantity	Designation	Type number	Supplier	Part number
=V1AR22XQ11WC1-XG1	1	Surface socket-outlet		ABB	ABB.2CMA193115R1000

+.AR21XQ11UC01/1

+.AR23XQ11UC01/1

			Date	12/22/2022	Volvo Trucks North America	Valiant TMS	Parts list : ABB.2CMA193115R1000 - ABB.2CMA193115R1000	Drawing name: =2V04&EFS-EL	= + V1AR22XQ11UC01
			Ed.	MKLEPADLO					
			Appr		P6700 Underbody Mainline - Cell 2V04			Document type: EPB	Project nr: 22-16151
Modification	Date	Name	Original		Replacement of	Replaced by	Scale 1:1		Page 1 / 1630

Parts list

F01_001

Device tag	Quantity	Designation	Type number	Supplier	Part number
=V1AR23XQ11WC1-XG1	1	Surface socket-outlet		ABB	ABB.2CMA193115R1000

+.AR22XQ11UC01/1

+.AR24XQ11UC01/1

			Date	12/22/2022	Volvo Trucks North America	Valiant TMS	Parts list : ABB.2CMA193115R1000 - ABB.2CMA193115R1000	Drawing name: =2V04&EFS-EL	= + V1AR23XQ11UC01
			Ed.	MKLEPADLO					
			Appr		P6700 Underbody Mainline - Cell 2V04	Scale 1:1		Document type: EPB	Project nr: 22-16151
Modification	Date	Name	Original		Replacement of	Replaced by			Page 1 / 1630

Parts list

F01_001

Device tag	Quantity	Designation	Type number	Supplier	Part number
=V1AR24XQ11WC1-XG1	1	Surface socket-outlet		ABB	ABB.2CMA193115R1000

+.AR23XQ11UC01/1

+.AR25XQ11UC01/1

			Date	12/22/2022	Volvo Trucks North America	Valiant TMS	Parts list : ABB.2CMA193115R1000 - ABB.2CMA193115R1000	Drawing name: =2V04&EFS-EL	=	
			Ed.	MKLEPADLO					+ V1AR24XQ11UC01	
			Appr		P6700 Underbody Mainline - Cell 2V04	Scale 1:1		Document type: EPB	Project nr: 22-16151	Page 1 / 1630
Modification	Date	Name	Original		Replacement of	Replaced by				

Parts list

F01_001

Device tag	Quantity	Designation	Type number	Supplier	Part number
=V1AR25XQ11WC1-XG1	1	Surface socket-outlet		ABB	ABB.2CMA193115R1000

+.AR24XQ11UC01/1

+.AR26XQ11UC01/1

			Date	12/22/2022	Volvo Trucks North America	Valiant TMS	Parts list : ABB.2CMA193115R1000 - ABB.2CMA193115R1000	Drawing name: =2V04&EFS-EL	= + V1AR25XQ11UC01
			Ed.	MKLEPADLO					
			Appr		P6700 Underbody Mainline - Cell 2V04			Document type: EPB	Project nr: 22-16151
Modification	Date	Name	Original		Replacement of	Replaced by	Scale 1:1		Page 1 / 1630

Parts list

F01_001

Device tag	Quantity	Designation	Type number	Supplier	Part number
=V1AR26XQ11WC1-XG1	1	Surface socket-outlet		ABB	ABB.2CMA193115R1000

+.AR25XQ11UC01/1

+.AR27XQ11UC01/1

			Date	12/22/2022	Volvo Trucks North America	Valiant TMS	Parts list : ABB.2CMA193115R1000 - ABB.2CMA193115R1000	Drawing name: =2V04&EFS-EL	= + V1AR26XQ11UC01
			Ed.	MKLEPADLO					
			Appr		P6700 Underbody Mainline - Cell 2V04	Scale 1:1		Document type: EPB	Project nr: 22-16151
Modification	Date	Name	Original		Replacement of	Replaced by			Page 1 / 1630

Parts list

F01_001

Device tag	Quantity	Designation	Type number	Supplier	Part number
=V1AR27XQ11WC1-XG1	1	Surface socket-outlet		ABB	ABB.2CMA193115R1000

+.AR26XQ11UC01/1

+.AR28XQ11UC01/1

			Date	12/22/2022	Volvo Trucks North America	Valiant TMS	Parts list : ABB.2CMA193115R1000 - ABB.2CMA193115R1000	Drawing name: =2V04&EFS-EL	= + V1AR27XQ11UC01
			Ed.	MKLEPADLO					
			Appr		P6700 Underbody Mainline - Cell 2V04	Scale 1:1		Document type: EPB	Project nr: 22-16151
Modification	Date	Name	Original		Replacement of	Replaced by			Page 1 / 1630

Parts list

F01_001

Device tag	Quantity	Designation	Type number	Supplier	Part number
=V1AR28XQ11WC1-XG1	1	Surface socket-outlet		ABB	ABB.2CMA193115R1000

+.AR27XQ11UC01/1

+.AR29XQ11UC01/1

			Date	12/22/2022	Volvo Trucks North America	Valiant TMS	Parts list : ABB.2CMA193115R1000 - ABB.2CMA193115R1000	Drawing name: =2V04&EFS-EL	= + V1AR28XQ11UC01
			Ed.	MKLEPADLO					
			Appr		P6700 Underbody Mainline - Cell 2V04	Scale 1:1		Document type: EPB	Project nr: 22-16151
Modification	Date	Name	Original		Replacement of	Replaced by			Page 1 / 1630

Parts list

F01_001

Device tag	Quantity	Designation	Type number	Supplier	Part number
=V1AR29XQ11WC1-XG1	1	Surface socket-outlet		ABB	ABB.2CMA193115R1000

+.AR28XQ11UC01/1

+.AR51XQ51UC01/1

			Date	12/22/2022	Volvo Trucks North America	Valiant TMS	Parts list : ABB.2CMA193115R1000 - ABB.2CMA193115R1000	Drawing name: =2V04&EFS-EL	=	
			Ed.	MKLEPADLO					+ V1AR29XQ11UC01	
			Appr		P6700 Underbody Mainline - Cell 2V04	Scale 1:1		Document type: EPB	Project nr: 22-16151	Page 1 / 1630
Modification	Date	Name	Original		Replacement of	Replaced by				

Parts list

F01_001

Device tag	Quantity	Designation	Type number	Supplier	Part number
=V1AR51XQ51WC1-XG1	1	Surface socket-outlet		ABB	ABB.2CMA193115R1000

+.AR29XQ11UC01/1

+.AR52XQ51UC01/1

			Date	12/22/2022	Volvo Trucks North America	Valiant TMS	Parts list : ABB.2CMA193115R1000 - ABB.2CMA193115R1000	Drawing name: =2V04&EFS-EL	= + V1AR51XQ51UC01
			Ed.	MKLEPADLO					
			Appr		P6700 Underbody Mainline - Cell 2V04	Scale 1:1		Document type: EPB	Project nr: 22-16151
Modification	Date	Name	Original		Replacement of	Replaced by			Page 1 / 1630

Parts list

F01_001

Device tag	Quantity	Designation	Type number	Supplier	Part number
=V1AR52XQ51WC1-XG1	1	Surface socket-outlet		ABB	ABB.2CMA193115R1000

+.AR51XQ51UC01/1

+.AR53XQ51UC01/1

			Date	12/22/2022	Volvo Trucks North America	Valiant TMS	Parts list : ABB.2CMA193115R1000 - ABB.2CMA193115R1000	Drawing name: =2V04&EFS-EL	= + V1AR52XQ51UC01
			Ed.	MKLEPADLO					
			Appr		P6700 Underbody Mainline - Cell 2V04	Scale 1:1		Document type: EPB	Project nr: 22-16151
Modification	Date	Name	Original		Replacement of	Replaced by			Page 1 / 1630

Parts list

F01_001

Device tag	Quantity	Designation	Type number	Supplier	Part number
=V1AR53XQ51WC1-XG1	1	Surface socket-outlet		ABB	ABB.2CMA193115R1000

+.AR52XQ51UC01/1

+.AR54XQ51UC01/1

			Date	12/22/2022	Volvo Trucks North America	Valiant TMS	Parts list : ABB.2CMA193115R1000 - ABB.2CMA193115R1000	Drawing name: =2V04&EFS-EL	= + V1AR53XQ51UC01
			Ed.	MKLEPADLO					
			Appr		P6700 Underbody Mainline - Cell 2V04	Scale 1:1		Document type: EPB	Project nr: 22-16151
Modification	Date	Name	Original		Replacement of	Replaced by			Page 1 / 1630

Parts list

F01_001

Device tag	Quantity	Designation	Type number	Supplier	Part number
=V1AR54XQ51WC1-XG1	1	Surface socket-outlet		ABB	ABB.2CMA193115R1000

+.AR53XQ51UC01/1

+.AR141XQ41UC01/1

			Date	12/22/2022	Volvo Trucks North America	Valiant TMS	Parts list : ABB.2CMA193115R1000 - ABB.2CMA193115R1000	Drawing name: =2V04&EFS-EL	= + V1AR54XQ51UC01
			Ed.	MKLEPADLO					
			Appr		P6700 Underbody Mainline - Cell 2V04	Scale 1:1		Document type: EPB	Project nr: 22-16151
Modification	Date	Name	Original		Replacement of	Replaced by			Page 1 / 1630

Parts list

F01_001

Device tag	Quantity	Designation	Type number	Supplier	Part number
=V1AR141XQ41WC1-XG1	1	Surface socket-outlet		ABB	ABB.2CMA193115R1000

+.AR54XQ51UC01/1

+.AR142XQ41UC01/1

			Date	12/22/2022	Volvo Trucks North America	Valiant TMS	Parts list : ABB.2CMA193115R1000 - ABB.2CMA193115R1000	Drawing name: =2V04&EFS-EL	= + V1AR141XQ41UC01
			Ed.	MKLEPADLO					
			Appr		P6700 Underbody Mainline - Cell 2V04	Scale 1:1		Document type: EPB	Project nr: 22-16151
Modification	Date	Name	Original		Replacement of	Replaced by			Page 1 / 1630

Parts list

F01_001

Device tag	Quantity	Designation	Type number	Supplier	Part number
=V1AR142XQ41WC1-XG1	1	Surface socket-outlet		ABB	ABB.2CMA193115R1000

+.AR141XQ41UC01/1

+.AR211XQ11UC01/1

			Date	12/22/2022	Volvo Trucks North America	Valiant TMS	Parts list : ABB.2CMA193115R1000 - ABB.2CMA193115R1000	Drawing name: =2V04&EFS-EL	= + V1AR142XQ41UC01
			Ed.	MKLEPADLO					
			Appr		P6700 Underbody Mainline - Cell 2V04	Scale 1:1		Document type: EPB	Project nr: 22-16151
Modification	Date	Name	Original		Replacement of	Replaced by			Page 1 / 1630

Parts list

F01_001

Device tag	Quantity	Designation	Type number	Supplier	Part number
=V1AR211XQ11WC1-XG1	1	Surface socket-outlet		ABB	ABB.2CMA193115R1000

+.AR142XQ41UC01/1

+.AR212XQ11UC01/1

			Date	12/22/2022	Volvo Trucks North America	Valiant TMS	Parts list : ABB.2CMA193115R1000 - ABB.2CMA193115R1000	Drawing name: =2V04&EFS-EL	= + V1AR211XQ11UC01
			Ed.	MKLEPADLO					
			Appr		P6700 Underbody Mainline - Cell 2V04	Scale 1:1		Document type: EPB	Project nr: 22-16151
Modification	Date	Name	Original		Replacement of	Replaced by			Page 1 / 1630

Parts list

F01_001

Device tag	Quantity	Designation	Type number	Supplier	Part number
=V1AR212XQ11WC1-XG1	1	Surface socket-outlet		ABB	ABB.2CMA193115R1000

+.AR211XQ11UC01/1

+.AR213XQ11UC01/1

			Date	12/22/2022	Volvo Trucks North America	Valiant TMS	Parts list : ABB.2CMA193115R1000 - ABB.2CMA193115R1000	Drawing name: =2V04&EFS-EL	= + V1AR212XQ11UC01
			Ed.	MKLEPADLO					
			Appr		P6700 Underbody Mainline - Cell 2V04	Scale 1:1		Document type: EPB	Project nr: 22-16151
Modification	Date	Name	Original		Replacement of	Replaced by			Page 1 / 1630

Parts list

F01_001

Device tag	Quantity	Designation	Type number	Supplier	Part number
=V1AR213XQ11WC1-XG1	1	Surface socket-outlet		ABB	ABB.2CMA193115R1000

+.AR212XQ11UC01/1

+.FQ1/1

			Date	12/22/2022	Volvo Trucks North America	Valiant TMS	Parts list : ABB.2CMA193115R1000 - ABB.2CMA193115R1000	Drawing name: =2V04&EFS-EL	= + V1AR213XQ11UC01
			Ed.	MKLEPADLO					
			Appr		P6700 Underbody Mainline - Cell 2V04	Scale 1:1		Document type: EPB	Project nr: 22-16151
Modification	Date	Name	Original		Replacement of	Replaced by			Page 1 / 1630

Parts list

F01_001

Device tag	Quantity	Designation	Type number	Supplier	Part number
=V1FQ1-BR11	1	EZ-Screen System	SLSCP30-1200P44NT	BANNER	BAN.SLSCP30-1200P44NT
=V1FQ1-BR12	1	EZ-Screen System	SLSCP30-1200P44NT	BANNER	BAN.SLSCP30-1200P44NT

+.AR213XQ11UC01/1

+.FQ1BG1/1

			Date	12/22/2022	Volvo Trucks North America	Valiant TMS	Parts list : BAN.SLSCP30-1200P44NT - BAN.SLSCP30-1200P44NT	Drawing name: =2V04&EFS-EL	= + V1FQ1
			Ed.	MKLEPADLO					
			Appr		P6700 Underbody Mainline - Cell 2V04	Scale 1:1		Document type: EPB	Project nr: 22-16151
Modification	Date	Name	Original		Replacement of	Replaced by			Page 1 / 1630

Parts list

F01_001

Device tag	Quantity	Designation	Type number	Supplier	Part number
=V1FQ1-BG1	1	SWITCH	MGB-L2B-PNA-L-121863	EUCHNER	EUC.MGB-L2B-PNA-L-121863
=V1FQ1-BG1	1	HANDLE	MGB-H-AA1A2-L-106221	EUCHNER	EUC.MGB-H-AA1A2-L-106221
=V1FQ1-BG1	1	MOUNTING PLATE	MGB-A-MOUNTINGPLATE-H-109491	EUCHNER	EUC.MGB-A-MOUNTINGPLATE-H-109491
=V1FQ1-BG1	1	ESCAPE RELEASE	MGB-E-A2-106051	EUCHNER	EUC.MGB-E-A2-106051

+V1FQ1/1

+.FQ1BG2/1

			Date	12/22/2022	Volvo Trucks North America	Valiant TMS	Parts list : EUC.MGB-L2B-PNA-L-121863 - EUC.MGB-E-A2-106051	Drawing name: =2V04&EFS-EL	= + V1FQ1BG1
			Ed.	MKLEPADLO					
			Appr		P6700 Underbody Mainline - Cell 2V04	Scale 1:1		Document type: EPB	Project nr: 22-16151
Modification	Date	Name	Original		Replacement of	Replaced by			Page 1 / 1630

Parts list

F01_001

Device tag	Quantity	Designation	Type number	Supplier	Part number
=V1FQ1-BG2	1	SWITCH	MGB-L2B-PNA-L-121863	EUCHNER	EUC.MGB-L2B-PNA-L-121863
=V1FQ1-BG2	1	HANDLE	MGB-H-AA1A2-L-106221	EUCHNER	EUC.MGB-H-AA1A2-L-106221
=V1FQ1-BG2	1	MOUNTING PLATE	MGB-A-MOUNTINGPLATE-H-109491	EUCHNER	EUC.MGB-A-MOUNTINGPLATE-H-109491
=V1FQ1-BG2	1	ESCAPE RELEASE	MGB-E-A2-106051	EUCHNER	EUC.MGB-E-A2-106051

+.FQ1BG1/1

+.FQ1BG3/1

			Date	12/22/2022	Volvo Trucks North America	Valiant TMS	Parts list : EUC.MGB-L2B-PNA-L-121863 - EUC.MGB-E-A2-106051	Drawing name: =2V04&EFS-EL	=	
			Ed.	MKLEPADLO					+ V1FQ1BG2	
			Appr		P6700 Underbody Mainline - Cell 2V04	Scale 1:1		Document type: EPB	Project nr: 22-16151	Page 1 / 1630
Modification	Date	Name	Original		Replacement of	Replaced by				

Parts list

F01_001

Device tag	Quantity	Designation	Type number	Supplier	Part number
=V1FQ1-BG3	1	SWITCH	MGB-L2B-PNA-L-121863	EUCHNER	EUC.MGB-L2B-PNA-L-121863
=V1FQ1-BG3	1	HANDLE	MGB-H-AA1A2-L-106221	EUCHNER	EUC.MGB-H-AA1A2-L-106221
=V1FQ1-BG3	1	MOUNTING PLATE	MGB-A-MOUNTINGPLATE-H-109491	EUCHNER	EUC.MGB-A-MOUNTINGPLATE-H-109491
=V1FQ1-BG3	1	ESCAPE RELEASE	MGB-E-A2-106051	EUCHNER	EUC.MGB-E-A2-106051

+.FQ1BG2/1

+.FQ1BG4/1

			Date	12/22/2022	Volvo Trucks North America	Valiant TMS	Parts list : EUC.MGB-L2B-PNA-L-121863 - EUC.MGB-E-A2-106051	Drawing name: =2V04&EFS-EL	= + V1FQ1BG3
			Ed.	MKLEPADLO					
			Appr		P6700 Underbody Mainline - Cell 2V04	Scale 1:1		Document type: EPB	Project nr: 22-16151
Modification	Date	Name	Original		Replacement of	Replaced by			Page 1 / 1630

Parts list

F01_001

Device tag	Quantity	Designation	Type number	Supplier	Part number
=V1FQ1-BG4	1	SWITCH	MGB-L2B-PNA-L-121863	EUCHNER	EUC.MGB-L2B-PNA-L-121863
=V1FQ1-BG4	1	HANDLE	MGB-H-AA1A2-L-106221	EUCHNER	EUC.MGB-H-AA1A2-L-106221
=V1FQ1-BG4	1	MOUNTING PLATE	MGB-A-MOUNTINGPLATE-H-109491	EUCHNER	EUC.MGB-A-MOUNTINGPLATE-H-109491
=V1FQ1-BG4	1	ESCAPE RELEASE	MGB-E-A2-106051	EUCHNER	EUC.MGB-E-A2-106051

+.FQ1BG3/1

+.FQ1BG5/1

			Date	12/22/2022	Volvo Trucks North America	Valiant TMS	Parts list : EUC.MGB-L2B-PNA-L-121863 - EUC.MGB-E-A2-106051	Drawing name: =2V04&EFS-EL	= + V1FQ1BG4
			Ed.	MKLEPADLO					
			Appr		P6700 Underbody Mainline - Cell 2V04	Scale 1:1		Document type: EPB	Project nr: 22-16151
Modification	Date	Name	Original		Replacement of	Replaced by			Page 1 / 1630

Parts list

F01_001

Device tag	Quantity	Designation	Type number	Supplier	Part number
=V1FQ1-BG5	1	SWITCH	MGB-L2B-PNA-R-121859	EUCHNER	EUC.MGB-L2B-PNA-R-121859
=V1FQ1-BG5	1	HANDLE	MGB-H-AA1A2-R-106049	EUCHNER	EUC.MGB-H-AA1A2-R-106049
=V1FQ1-BG5	1	MOUNTING PLATE	MGB-A-MOUNTINGPLATE-H-109491	EUCHNER	EUC.MGB-A-MOUNTINGPLATE-H-109491
=V1FQ1-BG5	1	ESCAPE RELEASE	MGB-E-A2-106051	EUCHNER	EUC.MGB-E-A2-106051

+.FQ1BG4/1

+.FQ1BG6/1

			Date	12/22/2022	Volvo Trucks North America	Valiant TMS	Parts list : EUC.MGB-L2B-PNA-R-121859 - EUC.MGB-E-A2-106051	Drawing name: =2V04&EFS-EL	=	
			Ed.	MKLEPADLO					+ V1FQ1BG5	
			Appr		P6700 Underbody Mainline - Cell 2V04	Scale 1:1		Document type: EPB	Project nr: 22-16151	Page 1 / 1630
Modification	Date	Name	Original		Replacement of	Replaced by				

Parts list

F01_001

Device tag	Quantity	Designation	Type number	Supplier	Part number
=V1FQ1-BG6	1	SWITCH	MGB-L2B-PNA-R-121859	EUCHNER	EUC.MGB-L2B-PNA-R-121859
=V1FQ1-BG6	1	HANDLE	MGB-H-AA1A2-R-106049	EUCHNER	EUC.MGB-H-AA1A2-R-106049
=V1FQ1-BG6	1	MOUNTING PLATE	MGB-A-MOUNTINGPLATE-H-109491	EUCHNER	EUC.MGB-A-MOUNTINGPLATE-H-109491
=V1FQ1-BG6	1	ESCAPE RELEASE	MGB-E-A2-106051	EUCHNER	EUC.MGB-E-A2-106051

+.FQ1BG5/1

+.FQ1BG7/1

			Date	12/22/2022	Volvo Trucks North America	Valiant TMS	Parts list : EUC.MGB-L2B-PNA-R-121859 - EUC.MGB-E-A2-106051	Drawing name: =2V04&EFS-EL	=
			Ed.	MKLEPADLO					+ V1FQ1BG6
			Appr		P6700 Underbody Mainline - Cell 2V04	Scale 1:1		Document type: EPB	Project nr: 22-16151
Modification	Date	Name	Original		Replacement of	Replaced by			Page 1 / 1630

Parts list

F01_001

Device tag	Quantity	Designation	Type number	Supplier	Part number
=V1FQ1-BG7	1	SWITCH	MGB-L2B-PNA-R-121859	EUCHNER	EUC.MGB-L2B-PNA-R-121859
=V1FQ1-BG7	1	HANDLE	MGB-H-AA1A2-R-106049	EUCHNER	EUC.MGB-H-AA1A2-R-106049
=V1FQ1-BG7	1	MOUNTING PLATE	MGB-A-MOUNTINGPLATE-H-109491	EUCHNER	EUC.MGB-A-MOUNTINGPLATE-H-109491
=V1FQ1-BG7	1	ESCAPE RELEASE	MGB-E-A2-106051	EUCHNER	EUC.MGB-E-A2-106051

+.FQ1BG6/1

+.FQ1BG8/1

			Date	12/22/2022	Volvo Trucks North America	Valiant TMS	Parts list : EUC.MGB-L2B-PNA-R-121859 - EUC.MGB-E-A2-106051	Drawing name: =2V04&EFS-EL	= + V1FQ1BG7
			Ed.	MKLEPADLO					
			Appr		P6700 Underbody Mainline - Cell 2V04	Scale 1:1		Document type: EPB	Project nr: 22-16151
Modification	Date	Name	Original		Replacement of	Replaced by			Page 1 / 1630

Parts list

F01_001

Device tag	Quantity	Designation	Type number	Supplier	Part number
=V1FQ1-BG8	1	SWITCH	MGB-L2B-PNA-R-121859	EUCHNER	EUC.MGB-L2B-PNA-R-121859
=V1FQ1-BG8	1	HANDLE	MGB-H-AA1A2-R-106049	EUCHNER	EUC.MGB-H-AA1A2-R-106049
=V1FQ1-BG8	1	MOUNTING PLATE	MGB-A-MOUNTINGPLATE-H-109491	EUCHNER	EUC.MGB-A-MOUNTINGPLATE-H-109491
=V1FQ1-BG8	1	ESCAPE RELEASE	MGB-E-A2-106051	EUCHNER	EUC.MGB-E-A2-106051

+.FQ1BG7/1

+.GL11KF2/1

			Date	12/22/2022	Volvo Trucks North America	Valiant TMS	Parts list : EUC.MGB-L2B-PNA-R-121859 - EUC.MGB-E-A2-106051	Drawing name: =2V04&EFS-EL	= + V1FQ1BG8
			Ed.	MKLEPADLO					
			Appr		P6700 Underbody Mainline - Cell 2V04	Scale 1:1		Document type: EPB	Project nr: 22-16151
Modification	Date	Name	Original		Replacement of	Replaced by			Page 1 / 1630

Parts list

F01_001

Device tag	Quantity	Designation	Type number	Supplier	Part number
=V1GL11KF2-BZ02	1	RF340R (GEN2)	6GT2801-2BA10	SIE	SIE.6GT2801-2BA10
=V1GL11KF2-KF2.11	1	SINAMICS G120D CONTROL UNIT CU240D-2 PN-F	6SL3544-0FB21-1FA0	SIEMENS	SIE.6SL3544-0FB21-1FA0
=V1GL11KF2-KF2.12	1	SIMATIC RF185C	6GT2002-0JE10		SIE.6GT2002-0JE10

+.FQ1BG8/1

+.GL11UC01/1

			Date	12/22/2022	Volvo Trucks North America	Valiant TMS	Parts list : SIE.6GT2801-2BA10 - SIE.6GT2002-0JE10	Drawing name: =2V04&EFS-EL	= + V1GL11KF2
			Ed.	MKLEPADLO					
			Appr		P6700 Underbody Mainline - Cell 2V04	Scale 1:1		Document type: EPB	Project nr: 22-16151
Modification	Date	Name	Original		Replacement of / Replaced by				Page 1 / 1630

Parts list

F01_001

Device tag	Quantity	Designation	Type number	Supplier	Part number
=V1GL11-TA1	1	SINAMICS G120D POWER MODULE PM250D 0,75KW	6SL3525-0PE17-5AA1	SIEMENS	SIE.6SL3525-0PE17-5AA1
=V1GL11WC1-Q1	1	DISCONNECT	EM3BMHANQ4SDCG10	E-M	EM.EM3BMHANQ4SDCG10

+.GL11KF2/1

+.GL11UQ51/1

			Date	12/22/2022	Volvo Trucks North America	Valiant TMS	Parts list : SIE.6SL3525-0PE17-5AA1 - EM.EM3BMHANQ4SDCG10	Drawing name: =2V04&EFS-EL	=		
			Ed.	MKLEPADLO					+ V1GL11UC01		
			Appr		P6700 Underbody Mainline - Cell 2V04	Scale 1:1		Document type: EPB	Project nr: 22-16151	Page	1
Modification	Date	Name	Original		Replacement of	Replaced by					1630

Parts list

F01_001

Device tag	Quantity	Designation	Type number	Supplier	Part number
=V1GL11UQ51BG0-BG02	1	Inductive sensor	BI8U-MT18M-AP6X2-H1141/S1589	TURCK	TUR.1644741
=V1GL11UQ51BG0-BG03	1	Inductive sensor	BI8U-MT18M-AP6X2-H1141/S1589	TURCK	TUR.1644741
=V1GL11UQ51BG0-BG04	1	Inductive sensor	BI8U-MT18M-AP6X2-H1141/S1589	TURCK	TUR.1644741
=V1GL11UQ51BG0-BG05	1	Inductive sensor	BI8U-MT18M-AP6X2-H1141/S1589	TURCK	TUR.1644741
=V1GL11UQ51BG0-BG06	1	Inductive sensor	BI8U-MT18M-AP6X2-H1141/S1589	TURCK	TUR.1644741
=V1GL11UQ51BG0-BG07	1	Inductive sensor	BI8U-MT18M-AP6X2-H1141/S1589	TURCK	TUR.1644741
=V1GL11UQ51BG0-BG08	1	Inductive sensor	BI8U-MT18M-AP6X2-H1141/S1589	TURCK	TUR.1644741
=V1GL11UQ51BG0-BG09	1	Inductive sensor	BI8U-MT18M-AP6X2-H1141/S1589	TURCK	TUR.1644741
=V1GL11UQ51BG0-BG13	1	Inductive sensor	BI8U-MT18M-AP6X2-H1141/S1589	TURCK	TUR.1644741
=V1GL11UQ51BG0-BG16	1	Inductive sensor	BI8U-MT18M-AP6X2-H1141/S1589	TURCK	TUR.1644741
=V1GL11UQ51BG0-BG17	1	Inductive sensor	BI8U-MT18M-AP6X2-H1141/S1589	TURCK	TUR.1644741
=V1GL11UQ51BG0-BG18	1	NEMA Limit Switch - NEMA Type 4 & 13 Oiltight Construction	802T-AP	A-B	A-B.802T-AP
=V1GL11UQ51BG0-BG20	1	Discrete Q60: Proximity Mode	Q60BB6AFV1000QPMA	BANNER	BAN.71959
=V1GL11UQ51BG0-BG22	1	Inductive sensor	BI8U-MT18M-AP6X2-H1141/S1589	TURCK	TUR.1644741
=V1GL11UQ51BG0-XG2/3	1	Y splitter	U2-30676	TURCK	TUR.VB2-FSM 4.4/2FKM 4/S3450
=V1GL11UQ51BG0-XG5/20	1	Y splitter	U2-30676	TURCK	TUR.VB2-FSM 4.4/2FKM 4/S3450
=V1GL11UQ51BG0-XG6/7	1	Y splitter	U2-30676	TURCK	TUR.VB2-FSM 4.4/2FKM 4/S3450
=V1GL11UQ51BG0-XG9/22	1	Y splitter	U2-30676	TURCK	TUR.VB2-FSM 4.4/2FKM 4/S3450
=V1GL11UQ51BG0-XG16/17	1	Y splitter	U2-30676	TURCK	TUR.VB2-FSM 4.4/2FKM 4/S3450
=V1GL11UQ51KF2-KF2	0	Bus node	CPX-FB33	FES	FES.548755
=V1GL11UQ51KF2-KF2	0	Interlinking block	CPX-M-GE-EV-S-7/8-5POL	FES	FES.550208
=V1GL11UQ51KF2-KF2.11	0	Manifold block	CPX-M-AB-8-M12X2-5POL	FES	FES.549335
=V1GL11UQ51KF2-KF2.12	0	Manifold block	CPX-M-AB-8-M12X2-5POL	FES	FES.549335
=V1GL11UQ51KF2-KF2.13	0	Manifold block	CPX-M-AB-8-M12X2-5POL	FES	FES.549335
=V1GL11UQ51KF2-KF2.14	0	Manifold block	CPX-M-AB-8-M12X2-5POL	FES	FES.549335
=V1GL11UQ51KF2-KF2.15	0	Manifold block	CPX-M-AB-8-M12X2-5POL	FES	FES.549335

+.GL11UC01/1

+.GL11UQ51UQ2.1/1

			Date	12/22/2022	Volvo Trucks North America	Valiant TMS	Parts list : TUR.1644741 - FES.549335	Drawing name: =2V04&EFS-EL	=	
			Ed.	MKLEPADLO					+ V1GL11UQ51	
			Appr		P6700 Underbody Mainline - Cell 2V04	Scale 1:1		Document type: EPB	Project nr: 22-16151	Page 1 / 1630
Modification	Date	Name	Original		Replacement of	Replaced by				

Parts list

F01_001

Device tag	Quantity	Designation	Type number	Supplier	Part number
=V1GL11UQ51UQ2.1-BGR	1	Inductive sensor	BI8U-MT18M-AP6X2-H1141/S1589	TURCK	TUR.1644741
=V1GL11UQ51UQ2.1-BGS	1	Inductive sensor	BI8U-MT18M-AP6X2-H1141/S1589	TURCK	TUR.1644741
=V1GL11UQ51UQ2.1-XGR/S	1	Y splitter	U2-30676	TURCK	TUR.VB2-FSM 4.4/2FKM 4/S3450

+V1GL11UQ51/1

+.GL11UQ51UQ3.1/1

			Date	12/22/2022	Volvo Trucks North America	Valiant TMS	Parts list : TUR.1644741 - TUR.VB2-FSM 4.4/2FKM 4/S3450	Drawing name: =2V04&EFS-EL	= + V1GL11UQ51UQ2.1
			Ed.	MKLEPADLO					
			Appr		P6700 Underbody Mainline - Cell 2V04	Scale 1:1		Document type: EPB	Project nr: 22-16151
Modification	Date	Name	Original		Replacement of	Replaced by			Page 1 / 1630

Parts list

F01_001

Device tag	Quantity	Designation	Type number	Supplier	Part number
=V1GL11UQ51UQ3.1-BGR	1	Inductive sensor	BI8U-MT18M-AP6X2-H1141/S1589	TURCK	TUR.1644741
=V1GL11UQ51UQ3.1-BGS	1	Inductive sensor	BI8U-MT18M-AP6X2-H1141/S1589	TURCK	TUR.1644741
=V1GL11UQ51UQ3.1-XGR/S	1	Y splitter	U2-30676	TURCK	TUR.VB2-FSM 4.4/2FKM 4/S3450

+.GL11UQ51UQ2.1/1

+.GL11UQ51UQ4.1/1

			Date	12/22/2022	Volvo Trucks North America	Valiant TMS	Parts list : TUR.1644741 - TUR.VB2-FSM 4.4/2FKM 4/S3450	Drawing name: =2V04&EFS-EL	=	
			Ed.	MKLEPADLO					+ V1GL11UQ51UQ3.1	
			Appr		P6700 Underbody Mainline - Cell 2V04	Scale 1:1		Document type: EPB	Project nr: 22-16151	Page 1 / 1630
Modification	Date	Name	Original		Replacement of	Replaced by				

Parts list

F01_001

Device tag	Quantity	Designation	Type number	Supplier	Part number
=V1GL11UQ51UQ4.1-BGR	1	Inductive sensor	BI8U-MT18M-AP6X2-H1141/S1589	TURCK	TUR.1644741
=V1GL11UQ51UQ4.1-BGS	1	Inductive sensor	BI8U-MT18M-AP6X2-H1141/S1589	TURCK	TUR.1644741
=V1GL11UQ51UQ4.1-XGR/S	1	Y splitter	U2-30676	TURCK	TUR.VB2-FSM 4.4/2FKM 4/S3450

+.GL11UQ51UQ3.1/1

+.GL11UQ51UQ5.1/1

			Date	12/22/2022	Volvo Trucks North America	Valiant TMS	Parts list : TUR.1644741 - TUR.VB2-FSM 4.4/2FKM 4/S3450	Drawing name: =2V04&EFS-EL	=	
			Ed.	MKLEPADLO					+ V1GL11UQ51UQ4.1	
			Appr		P6700 Underbody Mainline - Cell 2V04	Scale 1:1		Document type: EPB	Project nr: 22-16151	Page 1 / 1630
Modification	Date	Name	Original		Replacement of	Replaced by				

Parts list

F01_001

Device tag	Quantity	Designation	Type number	Supplier	Part number
=V1GL11UQ51UQ5.1-BGR	1	Inductive sensor	BI8U-MT18M-AP6X2-H1141/S1589	TURCK	TUR.1644741
=V1GL11UQ51UQ5.1-BGS	1	Inductive sensor	BI8U-MT18M-AP6X2-H1141/S1589	TURCK	TUR.1644741
=V1GL11UQ51UQ5.1-XGR/S	1	Y splitter	U2-30676	TURCK	TUR.VB2-FSM 4.4/2FKM 4/S3450

+.GL11UQ51UQ4.1/1

+.GL11UQ51UQ6.1/1

			Date	12/22/2022	Volvo Trucks North America	Valiant TMS	Parts list : TUR.1644741 - TUR.VB2-FSM 4.4/2FKM 4/S3450	Drawing name: =2V04&EFS-EL	=	
			Ed.	MKLEPADLO					+ V1GL11UQ51UQ5.1	
			Appr		P6700 Underbody Mainline - Cell 2V04	Scale 1:1		Document type: EPB	Project nr: 22-16151	Page 1 / 1630
Modification	Date	Name	Original		Replacement of	Replaced by				

Parts list

F01_001

Device tag	Quantity	Designation	Type number	Supplier	Part number
=V1GL11UQ51UQ6.1-BGR	1	Inductive sensor	BI8U-MT18M-AP6X2-H1141/S1589	TURCK	TUR.1644741
=V1GL11UQ51UQ6.1-BGS	1	Inductive sensor	BI8U-MT18M-AP6X2-H1141/S1589	TURCK	TUR.1644741
=V1GL11UQ51UQ6.1-XGR/S	1	Y splitter	U2-30676	TURCK	TUR.VB2-FSM 4.4/2FKM 4/S3450

+.GL11UQ51UQ5.1/1

+.GL11UQ51UQ7.1/1

			Date	12/22/2022	Volvo Trucks North America	Valiant TMS	Parts list : TUR.1644741 - TUR.VB2-FSM 4.4/2FKM 4/S3450	Drawing name: =2V04&EFS-EL	=	
			Ed.	MKLEPADLO					+ V1GL11UQ51UQ6.1	
			Appr		P6700 Underbody Mainline - Cell 2V04	Scale 1:1		Document type: EPB	Project nr: 22-16151	Page 1 / 1630
Modification	Date	Name	Original		Replacement of	Replaced by				

Parts list

F01_001

Device tag	Quantity	Designation	Type number	Supplier	Part number
=V1GL11UQ51UQ7.1-BGR	1	Inductive sensor	BI8U-MT18M-AP6X2-H1141/S1589	TURCK	TUR.1644741
=V1GL11UQ51UQ7.1-BGS	1	Inductive sensor	BI8U-MT18M-AP6X2-H1141/S1589	TURCK	TUR.1644741
=V1GL11UQ51UQ7.1-XGR/S	1	Y splitter	U2-30676	TURCK	TUR.VB2-FSM 4.4/2FKM 4/S3450

+.GL11UQ51UQ6.1/1

+.GL11UQ51UQ8.1/1

			Date	12/22/2022	Volvo Trucks North America	Valiant TMS	Parts list : TUR.1644741 - TUR.VB2-FSM 4.4/2FKM 4/S3450	Drawing name: =2V04&EFS-EL	= + V1GL11UQ51UQ7.1	
			Ed.	MKLEPADLO						
			Appr		P6700 Underbody Mainline - Cell 2V04	Scale 1:1		Document type: EPB	Project nr: 22-16151	Page 1 / 1630
Modification	Date	Name	Original		Replacement of	Replaced by				

Parts list

F01_001

Device tag	Quantity	Designation	Type number	Supplier	Part number
=V1GL11UQ51UQ8.1-BGR	1	Inductive sensor	BI8U-MT18M-AP6X2-H1141/S1589	TURCK	TUR.1644741
=V1GL11UQ51UQ8.1-BGS	1	Inductive sensor	BI8U-MT18M-AP6X2-H1141/S1589	TURCK	TUR.1644741
=V1GL11UQ51UQ8.1-XGR/S	1	Y splitter	U2-30676	TURCK	TUR.VB2-FSM 4.4/2FKM 4/S3450

+.GL11UQ51UQ7.1/1

+.GL12KF2/1

			Date	12/22/2022	Volvo Trucks North America	Valiant TMS	Parts list : TUR.1644741 - TUR.VB2-FSM 4.4/2FKM 4/S3450	Drawing name: =2V04&EFS-EL	=	
			Ed.	MKLEPADLO					+ V1GL11UQ51UQ8.1	
			Appr		P6700 Underbody Mainline - Cell 2V04	Scale 1:1		Document type: EPB	Project nr: 22-16151	Page 1 / 1630
Modification	Date	Name	Original		Replacement of	Replaced by				

Parts list

F01_001

Device tag	Quantity	Designation	Type number	Supplier	Part number
=V1GL12KF2-BZ02	1	RF340R (GEN2)	6GT2801-2BA10	SIE	SIE.6GT2801-2BA10
=V1GL12KF2-KF2.11	1	SINAMICS G120D CONTROL UNIT CU240D-2 PN-F	6SL3544-0FB21-1FA0	SIEMENS	SIE.6SL3544-0FB21-1FA0
=V1GL12KF2-KF2.12	1	SIMATIC RF185C	6GT2002-0JE10		SIE.6GT2002-0JE10

+.GL11UQ51UQ8.1/1

+.GL12UC01/1

			Date	12/22/2022	Volvo Trucks North America	Valiant TMS	Parts list : SIE.6GT2801-2BA10 - SIE.6GT2002-0JE10	Drawing name: =2V04&EFS-EL	= + V1GL12KF2
			Ed.	MKLEPADLO					
			Appr		P6700 Underbody Mainline - Cell 2V04	Scale 1:1		Document type: EPB	Project nr: 22-16151
Modification	Date	Name	Original		Replacement of	Replaced by			Page 1 / 1630

Parts list

F01_001

Device tag	Quantity	Designation	Type number	Supplier	Part number
=V1GL12-TA1	1	SINAMICS G120D POWER MODULE PM250D 0,75KW	6SL3525-0PE17-5AA1	SIEMENS	SIE.6SL3525-0PE17-5AA1
=V1GL12WC1-Q1	1	DISCONNECT	EM3BMHANQ4SDCG10	E-M	EM.EM3BMHANQ4SDCG10

+.GL12KF2/1

+.GL12UQ51/1

			Date	12/22/2022	Volvo Trucks North America	Valiant TMS	Parts list : SIE.6SL3525-0PE17-5AA1 - EM.EM3BMHANQ4SDCG10	Drawing name: =2V04&EFS-EL	=		
			Ed.	MKLEPADLO					+ V1GL12UC01		
			Appr		P6700 Underbody Mainline - Cell 2V04	Scale 1:1		Document type: EPB	Project nr: 22-16151	Page	1
Modification	Date	Name	Original		Replacement of	Replaced by					1630

Parts list

F01_001

Device tag	Quantity	Designation	Type number	Supplier	Part number
=V1GL12UQ51BG0-BG05	1	Inductive sensor	BI8U-MT18M-AP6X2-H1141/S1589	TURCK	TUR.1644741
=V1GL12UQ51BG0-BG06	1	Inductive sensor	BI8U-MT18M-AP6X2-H1141/S1589	TURCK	TUR.1644741
=V1GL12UQ51BG0-BG07	1	Inductive sensor	BI8U-MT18M-AP6X2-H1141/S1589	TURCK	TUR.1644741
=V1GL12UQ51BG0-BG08	1	Inductive sensor	BI8U-MT18M-AP6X2-H1141/S1589	TURCK	TUR.1644741
=V1GL12UQ51BG0-BG09	1	Inductive sensor	BI8U-MT18M-AP6X2-H1141/S1589	TURCK	TUR.1644741
=V1GL12UQ51BG0-BG10	1	Inductive sensor	BI8U-MT18M-AP6X2-H1141/S1589	TURCK	TUR.1644741
=V1GL12UQ51BG0-BG11	1	Inductive sensor	BI8U-MT18M-AP6X2-H1141/S1589	TURCK	TUR.1644741
=V1GL12UQ51BG0-BG14	1	Inductive sensor	BI8U-MT18M-AP6X2-H1141/S1589	TURCK	TUR.1644741
=V1GL12UQ51BG0-BG15	1	Inductive sensor	BI8U-MT18M-AP6X2-H1141/S1589	TURCK	TUR.1644741
=V1GL12UQ51BG0-BG16	1	Inductive sensor	BI8U-MT18M-AP6X2-H1141/S1589	TURCK	TUR.1644741
=V1GL12UQ51BG0-BG17	1	NEMA Limit Switch - NEMA Type 4 & 13 Oiltight Construction	802T-AP	A-B	A-B.802T-AP
=V1GL12UQ51BG0-BG19	1	Discrete Q60: Proximity Mode	Q60BB6AFV1000QPMA	BANNER	BAN.71959
=V1GL12UQ51BG0-XG6/19	1	Y splitter	U2-30676	TURCK	TUR.VB2-FSM 4.4/2FKM 4/S3450
=V1GL12UQ51BG0-XG7/14	1	Y splitter	U2-30676	TURCK	TUR.VB2-FSM 4.4/2FKM 4/S3450
=V1GL12UQ51BG0-XG8/9	1	Y splitter	U2-30676	TURCK	TUR.VB2-FSM 4.4/2FKM 4/S3450
=V1GL12UQ51BG0-XG10/11	1	Y splitter	U2-30676	TURCK	TUR.VB2-FSM 4.4/2FKM 4/S3450
=V1GL12UQ51BG0-XG15/16	1	Y splitter	U2-30676	TURCK	TUR.VB2-FSM 4.4/2FKM 4/S3450
=V1GL12UQ51KF2-KF2	0	Bus node	CPX-FB33	FES	FES.548755
=V1GL12UQ51KF2-KF2	0	Interlinking block	CPX-M-GE-EV-S-7/8-5POL	FES	FES.550208
=V1GL12UQ51KF2-KF2.11	0	Manifold block	CPX-M-AB-8-M12X2-5POL	FES	FES.549335
=V1GL12UQ51KF2-KF2.12	0	Manifold block	CPX-M-AB-8-M12X2-5POL	FES	FES.549335
=V1GL12UQ51KF2-KF2.13	0	Manifold block	CPX-M-AB-8-M12X2-5POL	FES	FES.549335
=V1GL12UQ51KF2-KF2.14	0	Manifold block	CPX-M-AB-8-M12X2-5POL	FES	FES.549335

Parts list

F01_001

Device tag	Quantity	Designation	Type number	Supplier	Part number
=V1GL12UQ51UQ3.1-BGR	1				TUR.16447411
=V1GL12UQ51UQ3.1-BGS	1				TUR.16447411
=V1GL12UQ51UQ3.1-XGR/S	1	Y splitter	U2-30676	TURCK	TUR.VB2-FSM 4.4/2FKM 4/S3450

+V1GL12UQ51/1

+.GL12UQ51UQ4.1/1

			Date	12/22/2022	Volvo Trucks North America	Valiant TMS	Parts list : TUR.16447411 - TUR.VB2-FSM 4.4/2FKM 4/S3450	Drawing name: =2V04&EFS-EL	=	
			Ed.	MKLEPADLO					+ V1GL12UQ51UQ3.1	
			Appr		P6700 Underbody Mainline - Cell 2V04	Scale 1:1		Document type: EPB	Project nr: 22-16151	Page 1 / 1630
Modification	Date	Name	Original		Replacement of	Replaced by				

Parts list

F01_001

Device tag	Quantity	Designation	Type number	Supplier	Part number
=V1GL12UQ51UQ4.1-BGR	1				TUR.16447411
=V1GL12UQ51UQ4.1-BGS	1				TUR.16447411
=V1GL12UQ51UQ4.1-XGR/S	1	Y splitter	U2-30676	TURCK	TUR.VB2-FSM 4.4/2FKM 4/S3450

+.GL12UQ51UQ3.1/1

+.GL12UQ51UQ4.2/1

			Date	12/22/2022	Volvo Trucks North America	Valiant TMS	Parts list : TUR.16447411 - TUR.VB2-FSM 4.4/2FKM 4/S3450	Drawing name: =2V04&EFS-EL	= + V1GL12UQ51UQ4.1	
			Ed.	MKLEPADLO						
			Appr		P6700 Underbody Mainline - Cell 2V04	Scale 1:1		Document type: EPB	Project nr: 22-16151	Page 1 / 1630
Modification	Date	Name	Original		Replacement of	Replaced by				

Parts list

F01_001

Device tag	Quantity	Designation	Type number	Supplier	Part number
=V1GL12UQ51UQ4.2-BGR	1				TUR.16447411
=V1GL12UQ51UQ4.2-BGS	1				TUR.16447411
=V1GL12UQ51UQ4.2-XGR/S	1	Y splitter	U2-30676	TURCK	TUR.VB2-FSM 4.4/2FKM 4/S3450

+.GL12UQ51UQ4.1/1

+.GL12UQ51UQ5.1/1

			Date	12/22/2022	Volvo Trucks North America	Valiant TMS	Parts list : TUR.16447411 - TUR.VB2-FSM 4.4/2FKM 4/S3450	Drawing name: =2V04&EFS-EL	=	
			Ed.	MKLEPADLO					+ V1GL12UQ51UQ4.2	
			Appr		P6700 Underbody Mainline - Cell 2V04	Scale 1:1		Document type: EPB	Project nr: 22-16151	Page 1 / 1630
Modification	Date	Name	Original		Replacement of	Replaced by				

Parts list

F01_001

Device tag	Quantity	Designation	Type number	Supplier	Part number
=V1GL12UQ51UQ5.1-BGR	1				TUR.16447411
=V1GL12UQ51UQ5.1-BGS	1				TUR.16447411
=V1GL12UQ51UQ5.1-XGR/S	1	Y splitter	U2-30676	TURCK	TUR.VB2-FSM 4.4/2FKM 4/S3450

+.GL12UQ51UQ4.2/1

+.GL12UQ51UQ6.1/1

			Date	12/22/2022	Volvo Trucks North America	Valiant TMS	Parts list : TUR.16447411 - TUR.VB2-FSM 4.4/2FKM 4/S3450	Drawing name: =2V04&EFS-EL	=	
			Ed.	MKLEPADLO					+ V1GL12UQ51UQ5.1	
			Appr		P6700 Underbody Mainline - Cell 2V04	Scale 1:1		Document type: EPB	Project nr: 22-16151	Page 1 / 1630
Modification	Date	Name	Original		Replacement of	Replaced by				

Parts list

F01_001

Device tag	Quantity	Designation	Type number	Supplier	Part number
=V1GL12UQ51UQ6.1-BGR	1				TUR.16447411
=V1GL12UQ51UQ6.1-BGS	1				TUR.16447411
=V1GL12UQ51UQ6.1-XGR/S	1	Y splitter	U2-30676	TURCK	TUR.VB2-FSM 4.4/2FKM 4/S3450

+.GL12UQ51UQ5.1/1

+.GL13KF1/1

			Date	12/22/2022	Volvo Trucks North America	Valiant TMS	Parts list : TUR.16447411 - TUR.VB2-FSM 4.4/2FKM 4/S3450	Drawing name: =2V04&EFS-EL	= + V1GL12UQ51UQ6.1
			Ed.	MKLEPADLO					
			Appr		P6700 Underbody Mainline - Cell 2V04	Scale 1:1		Document type: EPB	Project nr: 22-16151
Modification	Date	Name	Original		Replacement of	Replaced by			Page 1 / 1630

Parts list

F01_001

Device tag	Quantity	Designation	Type number	Supplier	Part number
=V1GL13KF1-BZ01	1	RF340R (GEN2)	6GT2801-2BA10	SIE	SIE.6GT2801-2BA10
=V1GL13KF1-KF1.12	1	SIMATIC RF185C	6GT2002-0JE10		SIE.6GT2002-0JE10

+.GL12UQ51UQ6.1/1

+.GL13UQ51/1

			Date	12/22/2022	Volvo Trucks North America	Valiant TMS	Parts list : SIE.6GT2801-2BA10 - SIE.6GT2002-0JE10	Drawing name: =2V04&EFS-EL	=	
			Ed.	MKLEPADLO					+ V1GL13KF1	
			Appr		P6700 Underbody Mainline - Cell 2V04	Scale 1:1		Document type: EPB	Project nr: 22-16151	Page 1 / 1630
Modification	Date	Name	Original		Replacement of	Replaced by				

Parts list

F01_001

Device tag	Quantity	Designation	Type number	Supplier	Part number
=V1GL13UQ51BG0-BG01	1	Inductive sensor	BI8U-MT18M-AP6X2-H1141/S1589	TURCK	TUR.1644741
=V1GL13UQ51BG0-BG02	1	Inductive sensor	BI8U-MT18M-AP6X2-H1141/S1589	TURCK	TUR.1644741
=V1GL13UQ51BG0-BG03	1	Inductive sensor	BI8U-MT18M-AP6X2-H1141/S1589	TURCK	TUR.1644741
=V1GL13UQ51BG0-BG04	1	Discrete Q60: Proximity Mode	Q60BB6AFV1000QPMA	BANNER	BAN.71959
=V1GL13UQ51BG0-BG05	1	Inductive sensor	BI8U-MT18M-AP6X2-H1141/S1589	TURCK	TUR.1644741
=V1GL13UQ51BG0-BG06	1	Inductive sensor	BI8U-MT18M-AP6X2-H1141/S1589	TURCK	TUR.1644741
=V1GL13UQ51BG0-BG07	1	Inductive sensor	BI8U-MT18M-AP6X2-H1141/S1589	TURCK	TUR.1644741
=V1GL13UQ51BG0-BG08	1	Inductive sensor	BI8U-MT18M-AP6X2-H1141/S1589	TURCK	TUR.1644741
=V1GL13UQ51BG0-BG09	1	Inductive sensor	BI8U-MT18M-AP6X2-H1141/S1589	TURCK	TUR.1644741
=V1GL13UQ51BG0-BG17	1	Inductive sensor	BI8U-MT18M-AP6X2-H1141/S1589	TURCK	TUR.1644741
=V1GL13UQ51BG0-XG1/3	1	Y splitter	U2-30676	TURCK	TUR.VB2-FSM 4.4/2FKM 4/S3450
=V1GL13UQ51BG0-XG2/4	1	Y splitter	U2-30676	TURCK	TUR.VB2-FSM 4.4/2FKM 4/S3450
=V1GL13UQ51BG0-XG5/6	1	Y splitter	U2-30676	TURCK	TUR.VB2-FSM 4.4/2FKM 4/S3450
=V1GL13UQ51BG0-XG8/9	1	Y splitter	U2-30676	TURCK	TUR.VB2-FSM 4.4/2FKM 4/S3450
=V1GL13UQ51KF1-KF1	0	Bus node	CPX-FB33	FES	FES.548755
=V1GL13UQ51KF1-KF1	0	Interlinking block	CPX-M-GE-EV-S-7/8-5POL	FES	FES.550208
=V1GL13UQ51KF1-KF1.11	0	Manifold block	CPX-M-AB-8-M12X2-5POL	FES	FES.549335
=V1GL13UQ51KF1-KF1.12	0	Manifold block	CPX-M-AB-8-M12X2-5POL	FES	FES.549335
=V1GL13UQ51KF1-KF1.13	0	Manifold block	CPX-M-AB-8-M12X2-5POL	FES	FES.549335
=V1GL13UQ51KF1-KF1.14	0	Manifold block	CPX-M-AB-8-M12X2-5POL	FES	FES.549335
=V1GL13UQ51WC4-XD51.1	1	5 PIN MINI FIELD ATTACHABLE, FEMALE, STRAIGHT	BS 4151-0/9	TURCK	TUR.BS 4151-0/9
=V1GL13UQ51WC4-XG51	1	TEE, 5-PIN MINI, STANDARD KEYWAY	U2109-9	TURCK	TUR.RSM-2RKM 50

+.GL13KF1/1

+.GL13UQ51UQ1.1/1

			Date	12/22/2022	Volvo Trucks North America	Valiant TMS	Parts list : TUR.1644741 - TUR.RSM-2RKM 50	Drawing name: =2V04&EFS-EL	=	
			Ed.	MKLEPADLO					+ V1GL13UQ51	
			Appr		P6700 Underbody Mainline - Cell 2V04	Scale 1:1		Document type: EPB	Project nr: 22-16151	Page 1 / 1630
Modification	Date	Name	Original		Replacement of	Replaced by				

Parts list

F01_001

Device tag	Quantity	Designation	Type number	Supplier	Part number
=V1GL13UQ51UQ1.1-BGR	1				TUR.16447411
=V1GL13UQ51UQ1.1-BGS	1				TUR.16447411
=V1GL13UQ51UQ1.1-XGR/S	1	Y splitter	U2-30676	TURCK	TUR.VB2-FSM 4.4/2FKM 4/S3450

+V1GL13UQ51/1

+.GL13UQ51UQ2.1/1

			Date	12/22/2022	Volvo Trucks North America	Valiant TMS	Parts list : TUR.16447411 - TUR.VB2-FSM 4.4/2FKM 4/S3450	Drawing name: =2V04&EFS-EL	=	
			Ed.	MKLEPADLO					+ V1GL13UQ51UQ1.1	
			Appr		P6700 Underbody Mainline - Cell 2V04	Scale 1:1		Document type: EPB	Project nr: 22-16151	Page 1 / 1630
Modification	Date	Name	Original		Replacement of	Replaced by				

Parts list

F01_001

Device tag	Quantity	Designation	Type number	Supplier	Part number
=V1GL13UQ51UQ2.1-BGR	1				TUR.16447411
=V1GL13UQ51UQ2.1-BGS	1				TUR.16447411
=V1GL13UQ51UQ2.1-XGR/S	1	Y splitter	U2-30676	TURCK	TUR.VB2-FSM 4.4/2FKM 4/S3450

+.GL13UQ51UQ1.1/1

+.GL13UQ51UQ3.1/1

			Date	12/22/2022	Volvo Trucks North America	Valiant TMS	Parts list : TUR.16447411 - TUR.VB2-FSM 4.4/2FKM 4/S3450	Drawing name: =2V04&EFS-EL	=	
			Ed.	MKLEPADLO					+ V1GL13UQ51UQ2.1	
			Appr		P6700 Underbody Mainline - Cell 2V04	Scale 1:1		Document type: EPB	Project nr: 22-16151	Page 1 / 1630
Modification	Date	Name	Original		Replacement of	Replaced by				

Parts list

F01_001

Device tag	Quantity	Designation	Type number	Supplier	Part number
=V1GL13UQ51UQ3.1-BGR	1				TUR.16447411
=V1GL13UQ51UQ3.1-BGS	1				TUR.16447411
=V1GL13UQ51UQ3.1-XGR/S	1	Y splitter	U2-30676	TURCK	TUR.VB2-FSM 4.4/2FKM 4/S3450

+.GL13UQ51UQ2.1/1

+.GL13UQ51UQ7.1/1

			Date	12/22/2022	Volvo Trucks North America	Valiant TMS	Parts list : TUR.16447411 - TUR.VB2-FSM 4.4/2FKM 4/S3450	Drawing name: =2V04&EFS-EL	= + V1GL13UQ51UQ3.1	
			Ed.	MKLEPADLO						
			Appr		P6700 Underbody Mainline - Cell 2V04	Scale 1:1		Document type: EPB	Project nr: 22-16151	Page 1 / 1630
Modification	Date	Name	Original		Replacement of	Replaced by				

Parts list

F01_001

Device tag	Quantity	Designation	Type number	Supplier	Part number
=V1GL13UQ51UQ7.1-BGR	1				TUR.16447411
=V1GL13UQ51UQ7.1-BGS	1				TUR.16447411
=V1GL13UQ51UQ7.1-XGR/S	1	Y splitter	U2-30676	TURCK	TUR.VB2-FSM 4.4/2FKM 4/S3450

+.GL13UQ51UQ3.1/1

+.GL13UQ51UQ8.1/1

			Date	12/22/2022	Volvo Trucks North America	Valiant TMS	Parts list : TUR.16447411 - TUR.VB2-FSM 4.4/2FKM 4/S3450	Drawing name: =2V04&EFS-EL	=	
			Ed.	MKLEPADLO					+ V1GL13UQ51UQ7.1	
			Appr		P6700 Underbody Mainline - Cell 2V04	Scale 1:1		Document type: EPB	Project nr: 22-16151	Page 1 / 1630
Modification	Date	Name	Original		Replacement of	Replaced by				

Parts list

F01_001

Device tag	Quantity	Designation	Type number	Supplier	Part number
=V1GL13UQ51UQ8.1-BGR	1				TUR.16447411
=V1GL13UQ51UQ8.1-BGS	1				TUR.16447411
=V1GL13UQ51UQ8.1-XGR/S	1	Y splitter	U2-30676	TURCK	TUR.VB2-FSM 4.4/2FKM 4/S3450

+.GL13UQ51UQ7.1/1

+.UC11/1

			Date	12/22/2022	Volvo Trucks North America	Valiant TMS	Parts list : TUR.16447411 - TUR.VB2-FSM 4.4/2FKM 4/S3450	Drawing name: =2V04&EFS-EL	= + V1GL13UQ51UQ8.1
			Ed.	MKLEPADLO					
			Appr		P6700 Underbody Mainline - Cell 2V04	Scale 1:1		Document type: EPB	Project nr: 22-16151
Modification	Date	Name	Original		Replacement of	Replaced by			Page 1 / 1630

Parts list

F01_001

Device tag	Quantity	Designation	Type number	Supplier	Part number
=V1AR11-FC1	1		EMPD3FBCB-025A-M	Electro-Matic	EMPD3FBCB-025A-M
=V1AR15-FC1	1		EMPD3FBCB-025A-M	Electro-Matic	EMPD3FBCB-025A-M
=V1AR21-FC1	1		EMPD3FBCB-025A-M	Electro-Matic	EMPD3FBCB-025A-M
=V1AR23-FC1	1		EMPD3FBCB-025A-M	Electro-Matic	EMPD3FBCB-025A-M
=V1AR26-FC1	1		EMPD3FBCB-025A-M	Electro-Matic	EMPD3FBCB-025A-M
=V1AR28-FC1	1		EMPD3FBCB-025A-M	Electro-Matic	EMPD3FBCB-025A-M
=V1AR52-FC1	1		EMPD3FBCB-025A-M	Electro-Matic	EMPD3FBCB-025A-M
=V1AR52XQ51-FC1	1		EMPD3FBCB-030A-M	Electro-Matic	EMPD3FBCB-030A-M
=V1AR54-FC1	1		EMPD3FBCB-025A-M	Electro-Matic	EMPD3FBCB-025A-M
=V1AR54XQ51-FC1	1		EMPD3FBCB-030A-M	Electro-Matic	EMPD3FBCB-030A-M
=V1AR142-FC1	1		EMPD3FBCB-025A-M	Electro-Matic	EMPD3FBCB-025A-M
=V1AR142XQ41-FC1	1		EMPD3FBCB-060A-M	Electro-Matic	EMPD3FBCB-060A-M
=V1AR211-FC1	1		EMPD3FBCB-025A-M	Electro-Matic	EMPD3FBCB-025A-M
=V1AR213-FC1	1		EMPD3FBCB-025A-M	Electro-Matic	EMPD3FBCB-025A-M
=V1GL12-FC1	1		EMPD3FBCB-005A-M	Electro-Matic	EMPD3FBCB-005A-M
=V1KF1-KF11	1				SIE.6ES7155-6AA01-0BN0_subassembly
=V1KF1-KF11	1	ET200SP, SERVERMODULE	6ES7193-6PA00-0AA0		SIE.6ES7193-6PA00-0AA0
=V1KF1-KF11.11	1	ET 200SP, DI 16x 24V DC ST, PU 1	6ES7131-6BH01-0BA0	SIE	SIE.6ES7131-6BH01-0BA0
=V1KF1-KF11.11	1	BASEUNIT TYPE A0, BU15-P16+A0+2D	6ES7193-6BP00-0DA0	SIE	SIE.6ES7193-6BP00-0DA0
=V1KF1-KF11.12	1	ET 200SP, DI 16x 24V DC ST, PU 1	6ES7131-6BH01-0BA0	SIE	SIE.6ES7131-6BH01-0BA0
=V1KF1-KF11.12	1	BASEUNIT TYPE A0, BU15-P16+A0+2D	6ES7193-6BP00-0DA0	SIE	SIE.6ES7193-6BP00-0DA0
=V1KF1-KF11.13	1	ET 200SP, DI 16x 24V DC ST, PU 1	6ES7131-6BH01-0BA0	SIE	SIE.6ES7131-6BH01-0BA0
=V1KF1-KF11.13	1	BASEUNIT TYPE A0, BU15-P16+A0+2D	6ES7193-6BP00-0DA0	SIE	SIE.6ES7193-6BP00-0DA0
=V1KF1-KF11.14	1	ET 200SP, DI 16x 24V DC ST, PU 1	6ES7131-6BH01-0BA0	SIE	SIE.6ES7131-6BH01-0BA0
=V1KF1-KF11.14	1	BASEUNIT TYPE A0, BU15-P16+A0+2D	6ES7193-6BP00-0DA0	SIE	SIE.6ES7193-6BP00-0DA0
=V1KF1-KF11.21	1	ET 200SP, DQ 16x 24V DC/0,5A ST, PU 1	6ES7132-6BH01-0BA0	SIE	SIE.6ES7132-6BH01-0BA0
=V1KF1-KF11.21	1	BASEUNIT TYPE A0, BU15-P16+A0+2D	6ES7193-6BP00-0DA0	SIE	SIE.6ES7193-6BP00-0DA0
=V1KF1-KF11.31	1	ET 200SP, El-Mod., F-DI 8x24VDC HF	6ES7136-6BA00-0CA0		SIE.6ES7136-6BA00-0CA0
=V1KF1-KF11.31	1	BASEUNIT TYPE A0, BU15-P16+A0+2B	6ES7193-6BP00-0BA0	SIE	SIE.6ES7193-6BP00-0BA0
=V1KF1-KF11.32	1	ET 200SP, El-Mod., F-DI 8x24VDC HF	6ES7136-6BA00-0CA0		SIE.6ES7136-6BA00-0CA0
=V1KF1-KF11.32	1	BASEUNIT TYPE A0, BU15-P16+A0+2B	6ES7193-6BP00-0BA0	SIE	SIE.6ES7193-6BP00-0BA0
=V1KF1-KF11.41	1	ET 200SP, El-Mod., F-DQ 4xDC 24V/2A	6ES7136-6DB00-0CA0		SIE.6ES7136-6DB00-0CA0
=V1KF1-KF11.41	1	BASEUNIT TYPE A0, BU15-P16+A0+2B	6ES7193-6BP00-0BA0	SIE	SIE.6ES7193-6BP00-0BA0
=V1KF1-KF11.42	1	ET 200SP, El-Mod., F-DQ 4xDC 24V/2A	6ES7136-6DB00-0CA0		SIE.6ES7136-6DB00-0CA0
=V1KF1-KF11.42	1	BASEUNIT TYPE A0, BU15-P16+A0+2B	6ES7193-6BP00-0BA0	SIE	SIE.6ES7193-6BP00-0BA0
=V1KF1-KF11.51	1	ET 200SP, F-RQ 1x24VDC/24..230VAC/5A ST	6ES7136-6RA00-0BF0		SIE.6ES7136-6RA00-0BF0
=V1KF1-KF11.51	1	BASEUNIT TYPE F0, BU20-P8+A4+0B	6ES7193-6BP20-0BF0	SIE	SIE.6ES7193-6BP20-0BF0
=V1KF1-KF11.52	1	ET 200SP, F-RQ 1x24VDC/24..230VAC/5A ST	6ES7136-6RA00-0BF0		SIE.6ES7136-6RA00-0BF0
=V1KF1-KF11.52	1	BASEUNIT TYPE F0, BU20-P8+A4+0B	6ES7193-6BP20-0BF0	SIE	SIE.6ES7193-6BP20-0BF0
=V1KF1-KF11.53	1	ET 200SP, F-RQ 1x24VDC/24..230VAC/5A ST	6ES7136-6RA00-0BF0		SIE.6ES7136-6RA00-0BF0
=V1KF1-KF11.53	1	BASEUNIT TYPE F0, BU20-P8+A4+0B	6ES7193-6BP20-0BF0	SIE	SIE.6ES7193-6BP20-0BF0
=V1KF1-KF11.54	1	ET 200SP, F-RQ 1x24VDC/24..230VAC/5A ST	6ES7136-6RA00-0BF0		SIE.6ES7136-6RA00-0BF0
=V1KF1-KF11.54	1	BASEUNIT TYPE F0, BU20-P8+A4+0B	6ES7193-6BP20-0BF0	SIE	SIE.6ES7193-6BP20-0BF0
=V1KF1-KF100.11	1	SCALANCE XC216	6GK5216-0BA00-2AC2	SIE	SIE.6GK5216-0BA00-2AC2
=V1KF1-KF100.11	1	C-PLUG	6GK1900-0AB10	SIE	SIE.6GK1900-0AB10
=V1WC1-FC1	1	MCCB_UL_FS125_15A_3P_65KA_TM_ FTFM	3VA5195-6ED31-0AA0	SIE	SIE.3VA5195-6ED31-0AA0
=V1WC1-KF1.1	1	BREAKER DATA SERVER, COM100	3VA9977-0TA20	SIE	SIE.3VA9977-0TA20
=V1WC1-KF1.2	1	Switched Ethernet PROFINET Module V3	7KM9300-0AE02-0AA0		SIE.7KM9300-0AE02-0AA0
=V1WC1-QB1	1	MCCB_UL_FS400_400A_3P_65KA_ETU8_LSI	3VA6340-6KP31-0AA0	SIE	SIE.3VA6340-6KP31-0AA0
=V1WC1-QB1-KF1	1	COMMUNICATION MODULE COM060	3VA9177-0TB10	SIE	SIE.3VA9177-0TB10
=V1WC1-TA1	1	Transformer	PTN102-3K	POWERTRAN	PTN102-3K
=V1WC2-A3	1	Multi-Environment Voltage Indicator and Safe-Test Point Combination Unit with Vertical Flange Mounting Label	R-3W2MT-LMF		GT.R-3W2MT-LMF
=V1WC2-FC1	1	MCCB_UL_FS125_20A_3P_65KA_TM_ FTFM	3VA5120-6ED31-0AA0	SIE	SIE.3VA5120-6ED31-0AA0
=V1WC2-FC1	1				SIE.3VA9978-0AA12
=V1WC2-TA2	1	Transformer	PTN102-7.5K	POWERTRAN	PTN102-7.5K
=V1WC3-FC2	1	CIRCUIT BREAKER 240V 14KA, 1-POLE, C, 20A, D=70MM	5SJ4120-7HG41	SIE	SIE.5SJ4120-7HG41

Parts list

F01_001

Device tag	Quantity	Designation	Type number	Supplier	Part number
=V1WC3-FC2	1	AUXILARY SWITCH 1NO1NC UL489	5ST3010-0HG	SIE	SIE.5ST3010-0HG
=V1WC3-FC3	1	CIRCUIT BREAKER 240V 14KA, 1-POLE, C, 10A, D=70MM	5SJ4110-7HG41	SIE	SIE.5SJ4110-7HG41
=V1WC3-FC3	1	AUXILARY SWITCH 1NO1NC UL489	5ST3010-0HG	SIE	SIE.5ST3010-0HG
=V1WC3-FC4	1	CIRCUIT BREAKER 240V 14KA, 1-POLE, C, 3A, D=70MM	5SJ4103-7HG41	SIE	SIE.5SJ4103-7HG41
=V1WC3-FC4	1	AUXILARY SWITCH 1NO1NC UL489	5ST3010-0HG	SIE	SIE.5ST3010-0HG
=V1WC3-FC5	1	CIRCUIT BREAKER 240V 14KA, 1-POLE, C, 16A, D=70MM	5SJ4116-7HG41	SIE	SIE.5SJ4116-7HG41
=V1WC3-FC6	1	CIRCUIT BREAKER 240V 14KA, 1-POLE, C, 16A, D=70MM	5SJ4116-7HG41	SIE	SIE.5SJ4116-7HG41
=V1WC3-FC6	1	AUXILARY SWITCH 1NO1NC UL489	5ST3010-0HG	SIE	SIE.5ST3010-0HG
=V1WC3-FC7	1	CIRCUIT BREAKER 240V 14KA, 1-POLE, C, 16A, D=70MM	5SJ4116-7HG41	SIE	SIE.5SJ4116-7HG41
=V1WC3-FC7	1	AUXILARY SWITCH 1NO1NC UL489	5ST3010-0HG	SIE	SIE.5ST3010-0HG
=V1WC3-FC8	1	CIRCUIT BREAKER 240V 14KA, 1-POLE, C, 16A, D=70MM	5SJ4116-7HG41	SIE	SIE.5SJ4116-7HG41
=V1WC3-FC8	1	AUXILARY SWITCH 1NO1NC UL489	5ST3010-0HG	SIE	SIE.5ST3010-0HG
=V1WC3-FC9	1	CIRCUIT BREAKER 240V 14KA, 1-POLE, C, 6A, D=70MM	5SJ4106-7HG41	SIE	SIE.5SJ4106-7HG41
=V1WC3-FC9	1	AUXILARY SWITCH 1NO1NC UL489	5ST3010-0HG	SIE	SIE.5ST3010-0HG
=V1WC3-FC10	1	CIRCUIT BREAKER 240V 14KA, 1-POLE, C, 30A, D=70MM	5SJ4130-7HG41	SIE	SIE.5SJ4130-7HG41
=V1WC3-FC10	1	AUXILARY SWITCH 1NO1NC UL489	5ST3010-0HG	SIE	SIE.5ST3010-0HG
=V1WC3-FC11	1	CIRCUIT BREAKER 240V 14KA, 1-POLE, C, 6A, D=70MM	5SJ4106-7HG41	SIE	SIE.5SJ4106-7HG41
=V1WC3-FC11	1	AUXILARY SWITCH 1NO1NC UL489	5ST3010-0HG	SIE	SIE.5ST3010-0HG
=V1WC3-FC12	1	CIRCUIT BREAKER 240V 14KA, 1-POLE, C, 16A, D=70MM	5SJ4116-7HG41	SIE	SIE.5SJ4116-7HG41
=V1WC3-XG1	2	DBL175 Series Distribution Block	1SNL317510R0000	ENTRELEC	1SNL317510R0000
=V1WC3-XG2	2	DBL175 Series Distribution Block	1SNL317510R0000	ENTRELEC	1SNL317510R0000
=V1WC3-XG3	1	Panel Interface Connector with USB Type A/F to USB Type A/M [Qty: 2]; Category 5e RJ45 Feed-Through; Housing; UL Type 4; Duplex Outlet; 5 Amp Circuit Breaker	GT_N.P-P11#2R2-K3RD5		GT_N.P-P11#2R2-K3RD5
=V1WC4-FC11	1	SITOP SEL1200 8 x 10A	6EP4438-7FB00-3DX0		SIE.6EP4438-7FB00-3DX0
=V1WC4-FC12	1	SITOP SEL1200 8 x 10A	6EP4438-7FB00-3DX0		SIE.6EP4438-7FB00-3DX0
=V1WC4-TA1	1	SITOP PSU6200 1ph 24 V/20 A	6EP3336-7SB00-3AX0		SIE.6EP3336-7SB00-3AX0
=V1WC4-TA2	1	SITOP PSU6200 1ph 24 V/20 A	6EP3336-7SB00-3AX0		SIE.6EP3336-7SB00-3AX0
=V1WC4-XD181.1	1	5 PIN MINI FIELD ATTACHABLE, FEMALE, STRAIGHT	BS 4151-0/9	TURCK	TUR.BS 4151-0/9
=V1WR1-FC1	1		EMPD3FBCB-020A-M	Electro-Matic	EMPD3FBCB-020A-M
=WC1-WC1	1	Golvskåp TS 8 sidskåp	TS8	RIT	RIT.SETS8205SID5
=WC1-WC1	1	TS Trim panel, sides, H: 100 mm, for W: 500 mm, RAL 7022, sheet steel	TS.8601050	RIT	RIT.8601050
=WC1-WC1	1	TS Base/plinth component, rear, H: 100 mm, for W: 1200 mm, RAL 7022, sheet steel	TS.8601200	RIT	RIT.8601200
=WC1-WC1	1	TS Side panel, screw-fastened, for TS, TS IT, for WD: 2000x500 mm, Sheet steel	TS.8105235	RIT	RIT.8105235
=WC1-WC1	1	PS Wiring plan pockets, for TS, CM, SE, PC, TP pedestal, sheet steel	TS.4115000	RIT	RIT.4115000

1

+.UC12/1

			Date	12/22/2022	Volvo Trucks North America	Valiant TMS	Parts list : SIE.5ST3010-0HG - RIT.4115000	Drawing name: =2V04&EFS-EL	=	
			Ed.	MKLEPADLO					+ V1UC11	
			Appr		P6700 Underbody Mainline - Cell 2V04	Scale 1:1		Document type: EPB	Project nr: 22-16151	Page 2 / 1630
Modification	Date	Name	Original		Replacement of	Replaced by				

Parts list

F01_001

Device tag	Quantity	Designation	Type number	Supplier	Part number
=V1AR12-FC1	1		EMPD3FBCB-025A-M	Electro-Matic	EMPD3FBCB-025A-M
=V1AR13-FC1	1		EMPD3FBCB-025A-M	Electro-Matic	EMPD3FBCB-025A-M
=V1AR14-FC1	1		EMPD3FBCB-025A-M	Electro-Matic	EMPD3FBCB-025A-M
=V1AR22-FC1	1		EMPD3FBCB-025A-M	Electro-Matic	EMPD3FBCB-025A-M
=V1AR24-FC1	1		EMPD3FBCB-025A-M	Electro-Matic	EMPD3FBCB-025A-M
=V1AR25-FC1	1		EMPD3FBCB-025A-M	Electro-Matic	EMPD3FBCB-025A-M
=V1AR27-FC1	1		EMPD3FBCB-025A-M	Electro-Matic	EMPD3FBCB-025A-M
=V1AR29-FC1	1		EMPD3FBCB-025A-M	Electro-Matic	EMPD3FBCB-025A-M
=V1AR51-FC1	1		EMPD3FBCB-025A-M	Electro-Matic	EMPD3FBCB-025A-M
=V1AR51XQ51-FC1	1		EMPD3FBCB-030A-M	Electro-Matic	EMPD3FBCB-030A-M
=V1AR53-FC1	1		EMPD3FBCB-025A-M	Electro-Matic	EMPD3FBCB-025A-M
=V1AR53XQ51-FC1	1		EMPD3FBCB-030A-M	Electro-Matic	EMPD3FBCB-030A-M
=V1AR141-FC1	1		EMPD3FBCB-025A-M	Electro-Matic	EMPD3FBCB-025A-M
=V1AR141XQ41-FC1	1		EMPD3FBCB-060A-M	Electro-Matic	EMPD3FBCB-060A-M
=V1AR191-FC1	1		EMPD3FBCB-025A-M	Electro-Matic	EMPD3FBCB-025A-M
=V1AR192-FC1	1		EMPD3FBCB-025A-M	Electro-Matic	EMPD3FBCB-025A-M
=V1AR212-FC1	1		EMPD3FBCB-025A-M	Electro-Matic	EMPD3FBCB-025A-M
=V1GL11-FC1	1		EMPD3FBCB-005A-M	Electro-Matic	EMPD3FBCB-005A-M
=V1KF1-KF12	1				SIE.6ES7155-6AA01-0BN0_subassembly
=V1KF1-KF12	1	ET200SP, SERVERMODULE	6ES7193-6PA00-0AA0		SIE.6ES7193-6PA00-0AA0
=V1KF1-KF12.11	1	ET 200SP, DI 16x 24V DC ST, PU 1	6ES7131-6BH01-0BA0	SIE	SIE.6ES7131-6BH01-0BA0
=V1KF1-KF12.11	1	BASEUNIT TYPE A0, BU15-P16+A0+2D	6ES7193-6BP00-0DA0	SIE	SIE.6ES7193-6BP00-0DA0
=V1KF1-KF12.12	1	ET 200SP, DI 16x 24V DC ST, PU 1	6ES7131-6BH01-0BA0	SIE	SIE.6ES7131-6BH01-0BA0
=V1KF1-KF12.12	1	BASEUNIT TYPE A0, BU15-P16+A0+2D	6ES7193-6BP00-0DA0	SIE	SIE.6ES7193-6BP00-0DA0
=V1KF1-KF12.13	1	ET 200SP, DI 16x 24V DC ST, PU 1	6ES7131-6BH01-0BA0	SIE	SIE.6ES7131-6BH01-0BA0
=V1KF1-KF12.13	1	BASEUNIT TYPE A0, BU15-P16+A0+2D	6ES7193-6BP00-0DA0	SIE	SIE.6ES7193-6BP00-0DA0
=V1KF1-KF12.14	1	ET 200SP, DI 16x 24V DC ST, PU 1	6ES7131-6BH01-0BA0	SIE	SIE.6ES7131-6BH01-0BA0
=V1KF1-KF12.14	1	BASEUNIT TYPE A0, BU15-P16+A0+2D	6ES7193-6BP00-0DA0	SIE	SIE.6ES7193-6BP00-0DA0
=V1KF1-KF12.14	1	ET 200SP, DI 16x 24V DC ST, PU 1	6ES7131-6BH01-0BA0	SIE	SIE.6ES7131-6BH01-0BA0
=V1KF1-KF12.14	1	BASEUNIT TYPE A0, BU15-P16+A0+2D	6ES7193-6BP00-0DA0	SIE	SIE.6ES7193-6BP00-0DA0
=V1KF1-KF12.21	1	ET 200SP, DQ 16x 24V DC/0,5A ST, PU 1	6ES7132-6BH01-0BA0	SIE	SIE.6ES7132-6BH01-0BA0
=V1KF1-KF12.21	1	BASEUNIT TYPE A0, BU15-P16+A0+2D	6ES7193-6BP00-0DA0	SIE	SIE.6ES7193-6BP00-0DA0
=V1KF1-KF12.31	1	ET 200SP, El-Mod., F-DI 8x24VDC HF	6ES7136-6BA00-0CA0		SIE.6ES7136-6BA00-0CA0
=V1KF1-KF12.31	1	BASEUNIT TYPE A0, BU15-P16+A0+2B	6ES7193-6BP00-0BA0	SIE	SIE.6ES7193-6BP00-0BA0
=V1KF1-KF12.32	1	ET 200SP, El-Mod., F-DI 8x24VDC HF	6ES7136-6BA00-0CA0		SIE.6ES7136-6BA00-0CA0
=V1KF1-KF12.32	1	BASEUNIT TYPE A0, BU15-P16+A0+2B	6ES7193-6BP00-0BA0	SIE	SIE.6ES7193-6BP00-0BA0
=V1KF1-KF12.41	1	ET 200SP, El-Mod., F-DQ 4xDC 24V/2A	6ES7136-6DB00-0CA0		SIE.6ES7136-6DB00-0CA0
=V1KF1-KF12.41	1	BASEUNIT TYPE A0, BU15-P16+A0+2B	6ES7193-6BP00-0BA0	SIE	SIE.6ES7193-6BP00-0BA0
=V1KF1-KF12.42	1	ET 200SP, El-Mod., F-DQ 4xDC 24V/2A	6ES7136-6DB00-0CA0		SIE.6ES7136-6DB00-0CA0
=V1KF1-KF12.42	1	BASEUNIT TYPE A0, BU15-P16+A0+2B	6ES7193-6BP00-0BA0	SIE	SIE.6ES7193-6BP00-0BA0
=V1KF1-KF12.51	1	ET 200SP, F-RQ 1x24VDC/24..230VAC/5A ST	6ES7136-6RA00-0BF0		SIE.6ES7136-6RA00-0BF0
=V1KF1-KF12.51	1	BASEUNIT TYPE F0, BU20-P8+A4+0B	6ES7193-6BP20-0BF0	SIE	SIE.6ES7193-6BP20-0BF0
=V1KF1-KF12.52	1	ET 200SP, F-RQ 1x24VDC/24..230VAC/5A ST	6ES7136-6RA00-0BF0		SIE.6ES7136-6RA00-0BF0
=V1KF1-KF12.52	1	BASEUNIT TYPE F0, BU20-P8+A4+0B	6ES7193-6BP20-0BF0	SIE	SIE.6ES7193-6BP20-0BF0
=V1KF1-KF12.53	1	ET 200SP, F-RQ 1x24VDC/24..230VAC/5A ST	6ES7136-6RA00-0BF0		SIE.6ES7136-6RA00-0BF0
=V1KF1-KF12.53	1	BASEUNIT TYPE F0, BU20-P8+A4+0B	6ES7193-6BP20-0BF0	SIE	SIE.6ES7193-6BP20-0BF0
=V1KF1-KF12.54	1	ET 200SP, F-RQ 1x24VDC/24..230VAC/5A ST	6ES7136-6RA00-0BF0		SIE.6ES7136-6RA00-0BF0
=V1KF1-KF12.54	1	BASEUNIT TYPE F0, BU20-P8+A4+0B	6ES7193-6BP20-0BF0	SIE	SIE.6ES7193-6BP20-0BF0
=V1KF1-KF100.12	1	SCALANCE XC216	6GK5216-0BA00-2AC2	SIE	SIE.6GK5216-0BA00-2AC2
=V1KF1-KF100.12	1	C-PLUG	6GK1900-0AB10	SIE	SIE.6GK1900-0AB10
=V1WC1-FC1	1	MCCB_UL_FS125_15A_3P_65KA_TM_ FTFM	3VA5195-6ED31-0AA0	SIE	SIE.3VA5195-6ED31-0AA0
=V1WC1-KF1.1	1	BREAKER DATA SERVER, COM100	3VA9977-0TA20	SIE	SIE.3VA9977-0TA20
=V1WC1-KF1.2	1	Switched Ethernet PROFINET Module V3	7KM9300-0AE02-0AA0		SIE.7KM9300-0AE02-0AA0
=V1WC1-QB1	1	MCCB_UL_FS400_400A_3P_65KA_ETU8_LSI	3VA6340-6KP31-0AA0	SIE	SIE.3VA6340-6KP31-0AA0
=V1WC1-QB1-KF1	1	COMMUNICATION MODULE COM060	3VA9177-0TB10	SIE	SIE.3VA9177-0TB10
=V1WC1-TA1	1	Transformer	PTN102-3K	POWERTRAN	PTN102-3K
=V1WC2-A3	1	Multi-Environment Voltage Indicator and Safe-Test Point Combination Unit with Vertical Flange Mounting Label	R-3W2MT-LMF		GT.R-3W2MT-LMF
=V1WC2-FC1	1	MCCB_UL_FS125_20A_3P_65KA_TM_ FTFM	3VA5120-6ED31-0AA0	SIE	SIE.3VA5120-6ED31-0AA0

			Date	12/22/2022	Volvo Trucks North America	Valiant TMS	Parts list : EMPD3FBCB-025A-M - SIE.3VA5120-6ED31-0AA0	Drawing name: =2V04&EFS-EL	= + V1UC12
			Ed.	MKLEPADLO					
			Appr		P6700 Underbody Mainline - Cell 2V04	Scale 1:1		Document type: EPB	Project nr: 22-16151
Modification	Date	Name	Original		Replacement of	Replaced by			Page 1 / 1630

Parts list

F01_001

Device tag	Quantity	Designation	Type number	Supplier	Part number
=V1WC2-FC1	1				SIE.3VA9978-0AA12
=V1WC2-TA2	1	Transformer	PTN102-7.5K	POWERTRAN	PTN102-7.5K
=V1WC3-FC2	1	CIRCUIT BREAKER 240V 14KA, 1-POLE, C, 20A, D=70MM	5SJ4120-7HG41	SIE	SIE.5SJ4120-7HG41
=V1WC3-FC2	1	AUXILARY SWITCH 1NO1NC UL489	5ST3010-0HG	SIE	SIE.5ST3010-0HG
=V1WC3-FC3	1	CIRCUIT BREAKER 240V 14KA, 1-POLE, C, 10A, D=70MM	5SJ4110-7HG41	SIE	SIE.5SJ4110-7HG41
=V1WC3-FC3	1	AUXILARY SWITCH 1NO1NC UL489	5ST3010-0HG	SIE	SIE.5ST3010-0HG
=V1WC3-FC4	1	CIRCUIT BREAKER 240V 14KA, 1-POLE, C, 3A, D=70MM	5SJ4103-7HG41	SIE	SIE.5SJ4103-7HG41
=V1WC3-FC4	1	AUXILARY SWITCH 1NO1NC UL489	5ST3010-0HG	SIE	SIE.5ST3010-0HG
=V1WC3-FC5	1	CIRCUIT BREAKER 240V 14KA, 1-POLE, C, 16A, D=70MM	5SJ4116-7HG41	SIE	SIE.5SJ4116-7HG41
=V1WC3-FC6	1	CIRCUIT BREAKER 240V 14KA, 1-POLE, C, 16A, D=70MM	5SJ4116-7HG41	SIE	SIE.5SJ4116-7HG41
=V1WC3-FC6	1	AUXILARY SWITCH 1NO1NC UL489	5ST3010-0HG	SIE	SIE.5ST3010-0HG
=V1WC3-FC7	1	CIRCUIT BREAKER 240V 14KA, 1-POLE, C, 16A, D=70MM	5SJ4116-7HG41	SIE	SIE.5SJ4116-7HG41
=V1WC3-FC7	1	AUXILARY SWITCH 1NO1NC UL489	5ST3010-0HG	SIE	SIE.5ST3010-0HG
=V1WC3-FC8	1	CIRCUIT BREAKER 240V 14KA, 1-POLE, C, 16A, D=70MM	5SJ4116-7HG41	SIE	SIE.5SJ4116-7HG41
=V1WC3-FC8	1	AUXILARY SWITCH 1NO1NC UL489	5ST3010-0HG	SIE	SIE.5ST3010-0HG
=V1WC3-FC9	1	CIRCUIT BREAKER 240V 14KA, 1-POLE, C, 6A, D=70MM	5SJ4106-7HG41	SIE	SIE.5SJ4106-7HG41
=V1WC3-FC9	1	AUXILARY SWITCH 1NO1NC UL489	5ST3010-0HG	SIE	SIE.5ST3010-0HG
=V1WC3-FC10	1	CIRCUIT BREAKER 240V 14KA, 1-POLE, C, 30A, D=70MM	5SJ4130-7HG41	SIE	SIE.5SJ4130-7HG41
=V1WC3-FC10	1	AUXILARY SWITCH 1NO1NC UL489	5ST3010-0HG	SIE	SIE.5ST3010-0HG
=V1WC3-FC11	1	CIRCUIT BREAKER 240V 14KA, 1-POLE, C, 6A, D=70MM	5SJ4106-7HG41	SIE	SIE.5SJ4106-7HG41
=V1WC3-FC11	1	AUXILARY SWITCH 1NO1NC UL489	5ST3010-0HG	SIE	SIE.5ST3010-0HG
=V1WC3-FC12	1	CIRCUIT BREAKER 240V 14KA, 1-POLE, C, 16A, D=70MM	5SJ4116-7HG41	SIE	SIE.5SJ4116-7HG41
=V1WC3-XG1	2	DBL175 Series Distribution Block	1SNL317510R0000	ENTRELEC	1SNL317510R0000
=V1WC3-XG2	2	DBL175 Series Distribution Block	1SNL317510R0000	ENTRELEC	1SNL317510R0000
=V1WC3-XG3	1	Panel Interface Connector with USB Type A/F to USB Type A/M [Qty: 2]; Category 5e RJ45 Feed-Through; Housing; UL Type 4; Duplex Outlet; 5 Amp Circuit Breaker	GT_N.P-P11#2R2-K3RD5		GT_N.P-P11#2R2-K3RD5
=V1WC4-FC11	1	SITOP SEL1200 8 x 10A	6EP4438-7FB00-3DX0		SIE.6EP4438-7FB00-3DX0
=V1WC4-FC12	1	SITOP SEL1200 8 x 10A	6EP4438-7FB00-3DX0		SIE.6EP4438-7FB00-3DX0
=V1WC4-TA1	1	SITOP PSU6200 1ph 24 V/20 A	6EP3336-7SB00-3AX0		SIE.6EP3336-7SB00-3AX0
=V1WC4-TA2	1	SITOP PSU6200 1ph 24 V/20 A	6EP3336-7SB00-3AX0		SIE.6EP3336-7SB00-3AX0
=WC1-WC1	1	Golvskåp TS 8 sidskåp	TS8	RIT	RIT.SETS8205SID5
=WC1-WC1	1	TS Trim panel, sides, H: 100 mm, for W: 500 mm, RAL 7022, sheet steel	TS.8601050	RIT	RIT.8601050
=WC1-WC1	1	TS Base/plinth component, rear, H: 100 mm, for W: 1200 mm, RAL 7022, sheet steel	TS.8601200	RIT	RIT.8601200
=WC1-WC1	1	TS Side panel, screw-fastened, for TS, TS IT, for WD: 2000x500 mm, Sheet steel	TS.8105235	RIT	RIT.8105235
=WC1-WC1	1	PS Wiring plan pockets, for TS, CM, SE, PC, TP pedestal, sheet steel	TS.4115000	RIT	RIT.4115000

1

+.UC14/1

			Date	12/22/2022	Volvo Trucks North America	Valiant TMS	Parts list : SIE.3VA9978-0AA12 - RIT.4115000	Drawing name: =2V04&EFS-EL	=	
			Ed.	MKLEPADLO					+ V1UC12	
			Appr		P6700 Underbody Mainline - Cell 2V04	Scale 1:1		Document type: EPB	Project nr: 22-16151	Page 2 / 1630
Modification	Date	Name	Original		Replacement of	Replaced by				

Parts list

F01_001

Device tag	Quantity	Designation	Type number	Supplier	Part number
=V1KF1-KF14	1				SIE.6ES7155-6AA01-0BN0_subassembly
=V1KF1-KF14	1	ET200SP, SERVERMODULE	6ES7193-6PA00-0AA0		SIE.6ES7193-6PA00-0AA0
=V1KF1-KF14.11	1	ET 200SP, DI 16x 24V DC ST, PU 1	6ES7131-6BH01-0BA0	SIE	SIE.6ES7131-6BH01-0BA0
=V1KF1-KF14.11	1	BASEUNIT TYPE A0, BU15-P16+A0+2D	6ES7193-6BP00-0DA0	SIE	SIE.6ES7193-6BP00-0DA0
=V1KF1-KF14.12	1	ET 200SP, DI 16x 24V DC ST, PU 1	6ES7131-6BH01-0BA0	SIE	SIE.6ES7131-6BH01-0BA0
=V1KF1-KF14.12	1	BASEUNIT TYPE A0, BU15-P16+A0+2D	6ES7193-6BP00-0DA0	SIE	SIE.6ES7193-6BP00-0DA0
=V1KF1-KF14.21	1	ET 200SP, DQ 16x 24V DC/0,5A ST, PU 1	6ES7132-6BH01-0BA0	SIE	SIE.6ES7132-6BH01-0BA0
=V1KF1-KF14.21	1	BASEUNIT TYPE A0, BU15-P16+A0+2D	6ES7193-6BP00-0DA0	SIE	SIE.6ES7193-6BP00-0DA0
=V1KF1-KF14.31	1	ET 200SP, El-Mod., F-DI 8x24VDC HF	6ES7136-6BA00-0CA0		SIE.6ES7136-6BA00-0CA0
=V1KF1-KF14.31	1	BASEUNIT TYPE A0, BU15-P16+A0+2B	6ES7193-6BP00-0BA0	SIE	SIE.6ES7193-6BP00-0BA0
=V1KF1-KF14.32	1	ET 200SP, El-Mod., F-DI 8x24VDC HF	6ES7136-6BA00-0CA0		SIE.6ES7136-6BA00-0CA0
=V1KF1-KF14.32	1	BASEUNIT TYPE A0, BU15-P16+A0+2B	6ES7193-6BP00-0BA0	SIE	SIE.6ES7193-6BP00-0BA0
=V1KF1-KF14.41	1	ET 200SP, El-Mod., F-DQ 4xDC 24V/2A	6ES7136-6DB00-0CA0		SIE.6ES7136-6DB00-0CA0
=V1KF1-KF14.41	1	BASEUNIT TYPE A0, BU15-P16+A0+2B	6ES7193-6BP00-0BA0	SIE	SIE.6ES7193-6BP00-0BA0
=V1KF1-KF14.42	1	ET 200SP, El-Mod., F-DQ 4xDC 24V/2A	6ES7136-6DB00-0CA0		SIE.6ES7136-6DB00-0CA0
=V1KF1-KF14.42	1	BASEUNIT TYPE A0, BU15-P16+A0+2B	6ES7193-6BP00-0BA0	SIE	SIE.6ES7193-6BP00-0BA0
=V1KF1-KF14.51	1	ET 200SP, F-RQ 1x24VDC/24..230VAC/5A ST	6ES7136-6RA00-0BF0		SIE.6ES7136-6RA00-0BF0
=V1KF1-KF14.51	1	BASEUNIT TYPE F0, BU20-P8+A4+0B	6ES7193-6BP20-0BF0	SIE	SIE.6ES7193-6BP20-0BF0
=V1KF1-KF14.52	1	ET 200SP, F-RQ 1x24VDC/24..230VAC/5A ST	6ES7136-6RA00-0BF0		SIE.6ES7136-6RA00-0BF0
=V1KF1-KF14.52	1	BASEUNIT TYPE F0, BU20-P8+A4+0B	6ES7193-6BP20-0BF0	SIE	SIE.6ES7193-6BP20-0BF0
=V1KF1-KF14.53	1	ET 200SP, F-RQ 1x24VDC/24..230VAC/5A ST	6ES7136-6RA00-0BF0		SIE.6ES7136-6RA00-0BF0
=V1KF1-KF14.53	1	BASEUNIT TYPE F0, BU20-P8+A4+0B	6ES7193-6BP20-0BF0	SIE	SIE.6ES7193-6BP20-0BF0
=V1KF1-KF14.54	1	ET 200SP, F-RQ 1x24VDC/24..230VAC/5A ST	6ES7136-6RA00-0BF0		SIE.6ES7136-6RA00-0BF0
=V1KF1-KF14.54	1	BASEUNIT TYPE F0, BU20-P8+A4+0B	6ES7193-6BP20-0BF0	SIE	SIE.6ES7193-6BP20-0BF0
=V1KF1-KF100.14	1	SCALANCE XC216	6GK5216-0BA00-2AC2	SIE	SIE.6GK5216-0BA00-2AC2
=V1KF1-KF100.14	1	C-PLUG	6GK1900-0AB10	SIE	SIE.6GK1900-0AB10
=V1WC3-FC1	1	CIRCUIT BREAKER 240V 14KA, 1-POLE, C, 16A, D=70MM	5SJ4116-7HG41	SIE	SIE.5SJ4116-7HG41
=V1WC3-FC1	1	AUXILARY SWITCH 1NO1NC UL489	5ST3010-0HG	SIE	SIE.5ST3010-0HG
=V1WC3-FC2	1	CIRCUIT BREAKER 240V 14KA, 1-POLE, C, 3A, D=70MM	5SJ4103-7HG41	SIE	SIE.5SJ4103-7HG41
=V1WC3-FC2	1	AUXILARY SWITCH 1NO1NC UL489	5ST3010-0HG	SIE	SIE.5ST3010-0HG
=V1WC3-FC3	1	CIRCUIT BREAKER 240V 14KA, 1-POLE, C, 16A, D=70MM	5SJ4116-7HG41	SIE	SIE.5SJ4116-7HG41
=V1WC3-XG2	1	Panel Interface Connector with USB Type A/F to USB Type A/M [Qty: 2]; Category 5e RJ45 Feed-Through; Housing; UL Type 4; Duplex Outlet; 5 Amp Circuit Breaker	GT_N.P-P11#2R2-K3RD5		GT_N.P-P11#2R2-K3RD5
=V1WC4-FC11	1	SITOP SEL1200 8 x 10A	6EP4438-7FB00-3DX0		SIE.6EP4438-7FB00-3DX0
=V1WC4-FC12	1	SITOP SEL1200 8 x 10A	6EP4438-7FB00-3DX0		SIE.6EP4438-7FB00-3DX0
=V1WC4-TA1	1	SITOP PSU6200 1ph 24 V/20 A	6EP3336-7SB00-3AX0		SIE.6EP3336-7SB00-3AX0

+.UC12/2

+.UC15/1

			Date	12/22/2022	Volvo Trucks North America	Valiant TMS	Parts list : SIE.6ES7155-6AA01-0BN0_subassembly - SIE.6EP3336-7SB00-3AX0	Drawing name: =2V04&EFS-EL	= + V1UC14
			Ed.	MKLEPADLO					
			Appr		P6700 Underbody Mainline - Cell 2V04	Scale 1:1		Document type: EPB	Project nr: 22-16151
Modification	Date	Name	Original		Replacement of	Replaced by			Page 1 / 1630

Parts list

F01_001

Device tag	Quantity	Designation	Type number	Supplier	Part number
=V1KF1-KF15	1				SIE.6ES7155-6AA01-0BN0_subassembly
=V1KF1-KF15	1	ET200SP, SERVERMODULE	6ES7193-6PA00-0AA0		SIE.6ES7193-6PA00-0AA0
=V1KF1-KF15.11	1	ET 200SP, DI 16x 24V DC ST, PU 1	6ES7131-6BH01-0BA0	SIE	SIE.6ES7131-6BH01-0BA0
=V1KF1-KF15.11	1	BASEUNIT TYPE A0, BU15-P16+A0+2D	6ES7193-6BP00-0DA0	SIE	SIE.6ES7193-6BP00-0DA0
=V1KF1-KF15.12	1	ET 200SP, DI 16x 24V DC ST, PU 1	6ES7131-6BH01-0BA0	SIE	SIE.6ES7131-6BH01-0BA0
=V1KF1-KF15.12	1	BASEUNIT TYPE A0, BU15-P16+A0+2D	6ES7193-6BP00-0DA0	SIE	SIE.6ES7193-6BP00-0DA0
=V1KF1-KF15.21	1	ET 200SP, DQ 16x 24V DC/0,5A ST, PU 1	6ES7132-6BH01-0BA0	SIE	SIE.6ES7132-6BH01-0BA0
=V1KF1-KF15.21	1	BASEUNIT TYPE A0, BU15-P16+A0+2D	6ES7193-6BP00-0DA0	SIE	SIE.6ES7193-6BP00-0DA0
=V1KF1-KF15.31	1	ET 200SP, El-Mod., F-DI 8x24VDC HF	6ES7136-6BA00-0CA0		SIE.6ES7136-6BA00-0CA0
=V1KF1-KF15.31	1	BASEUNIT TYPE A0, BU15-P16+A0+2B	6ES7193-6BP00-0BA0	SIE	SIE.6ES7193-6BP00-0BA0
=V1KF1-KF15.32	1	ET 200SP, El-Mod., F-DI 8x24VDC HF	6ES7136-6BA00-0CA0		SIE.6ES7136-6BA00-0CA0
=V1KF1-KF15.32	1	BASEUNIT TYPE A0, BU15-P16+A0+2B	6ES7193-6BP00-0BA0	SIE	SIE.6ES7193-6BP00-0BA0
=V1KF1-KF15.41	1	ET 200SP, El-Mod., F-DQ 4xDC 24V/2A	6ES7136-6DB00-0CA0		SIE.6ES7136-6DB00-0CA0
=V1KF1-KF15.41	1	BASEUNIT TYPE A0, BU15-P16+A0+2B	6ES7193-6BP00-0BA0	SIE	SIE.6ES7193-6BP00-0BA0
=V1KF1-KF15.42	1	ET 200SP, El-Mod., F-DQ 4xDC 24V/2A	6ES7136-6DB00-0CA0		SIE.6ES7136-6DB00-0CA0
=V1KF1-KF15.42	1	BASEUNIT TYPE A0, BU15-P16+A0+2B	6ES7193-6BP00-0BA0	SIE	SIE.6ES7193-6BP00-0BA0
=V1KF1-KF15.51	1	ET 200SP, F-RQ 1x24VDC/24..230VAC/5A ST	6ES7136-6RA00-0BF0		SIE.6ES7136-6RA00-0BF0
=V1KF1-KF15.51	1	BASEUNIT TYPE F0, BU20-P8+A4+0B	6ES7193-6BP20-0BF0	SIE	SIE.6ES7193-6BP20-0BF0
=V1KF1-KF15.52	1	ET 200SP, F-RQ 1x24VDC/24..230VAC/5A ST	6ES7136-6RA00-0BF0		SIE.6ES7136-6RA00-0BF0
=V1KF1-KF15.52	1	BASEUNIT TYPE F0, BU20-P8+A4+0B	6ES7193-6BP20-0BF0	SIE	SIE.6ES7193-6BP20-0BF0
=V1KF1-KF15.53	1	ET 200SP, F-RQ 1x24VDC/24..230VAC/5A ST	6ES7136-6RA00-0BF0		SIE.6ES7136-6RA00-0BF0
=V1KF1-KF15.53	1	BASEUNIT TYPE F0, BU20-P8+A4+0B	6ES7193-6BP20-0BF0	SIE	SIE.6ES7193-6BP20-0BF0
=V1KF1-KF15.54	1	ET 200SP, F-RQ 1x24VDC/24..230VAC/5A ST	6ES7136-6RA00-0BF0		SIE.6ES7136-6RA00-0BF0
=V1KF1-KF15.54	1	BASEUNIT TYPE F0, BU20-P8+A4+0B	6ES7193-6BP20-0BF0	SIE	SIE.6ES7193-6BP20-0BF0
=V1KF1-KF100.15	1	SCALANCE XC216	6GK5216-0BA00-2AC2	SIE	SIE.6GK5216-0BA00-2AC2
=V1KF1-KF100.15	1	C-PLUG	6GK1900-0AB10	SIE	SIE.6GK1900-0AB10
=V1WC3-FC1	1	CIRCUIT BREAKER 240V 14KA, 1-POLE, C, 16A, D=70MM	5SJ4116-7HG41	SIE	SIE.5SJ4116-7HG41
=V1WC3-FC1	1	AUXILARY SWITCH 1NO1NC UL489	5ST3010-0HG	SIE	SIE.5ST3010-0HG
=V1WC3-FC2	1	CIRCUIT BREAKER 240V 14KA, 1-POLE, C, 3A, D=70MM	5SJ4103-7HG41	SIE	SIE.5SJ4103-7HG41
=V1WC3-FC2	1	AUXILARY SWITCH 1NO1NC UL489	5ST3010-0HG	SIE	SIE.5ST3010-0HG
=V1WC3-FC3	1	CIRCUIT BREAKER 240V 14KA, 1-POLE, C, 16A, D=70MM	5SJ4116-7HG41	SIE	SIE.5SJ4116-7HG41
=V1WC3-XG2	1	Panel Interface Connector with USB Type A/F to USB Type A/M [Qty: 2]; Category 5e RJ45 Feed-Through Housing; UL Type 4; Duplex Outlet; 5 Amp Circuit Breaker	GT_N.P-P11#2R2-K3RD5		GT_N.P-P11#2R2-K3RD5
=V1WC4-FC11	1	SITOP SEL1200 8 x 10A	6EP4438-7FB00-3DX0		SIE.6EP4438-7FB00-3DX0
=V1WC4-FC12	1	SITOP SEL1200 8 x 10A	6EP4438-7FB00-3DX0		SIE.6EP4438-7FB00-3DX0
=V1WC4-TA1	1	SITOP PSU6200 1ph 24 V/20 A	6EP3336-7SB00-3AX0		SIE.6EP3336-7SB00-3AX0
=V1WC4-XD161.1	1	5 PIN MINI FIELD ATTACHABLE, FEMALE, STRAIGHT	BS 4151-0/9	TURCK	TUR.BS 4151-0/9

+.UC14/1

+.UC32/1

			Date	12/22/2022	Volvo Trucks North America	Valiant TMS	Parts list : SIE.6ES7155-6AA01-0BN0_subassembly - TUR.BS 4151-0/9	Drawing name: =2V04&EFS-EL	= + V1UC15	
			Ed.	MKLEPADLO						
			Appr		P6700 Underbody Mainline - Cell 2V04	Scale 1:1		Document type: EPB	Project nr: 22-16151	Page 1 / 1630
Modification	Date	Name	Original		Replacement of	Replaced by				

Parts list

F01_001

Device tag	Quantity	Designation	Type number	Supplier	Part number
=V1KF1-KF32	1				SIE.6ES7155-6AA01-0BN0_subassembly
=V1KF1-KF32	1	ET200SP, SERVERMODULE	6ES7193-6PA00-0AA0		SIE.6ES7193-6PA00-0AA0
=V1KF1-KF32.11	1	ET 200SP, DI 16x 24V DC ST, PU 1	6ES7131-6BH01-0BA0	SIE	SIE.6ES7131-6BH01-0BA0
=V1KF1-KF32.11	1	BASEUNIT TYPE A0, BU15-P16+A0+2D	6ES7193-6BP00-0DA0	SIE	SIE.6ES7193-6BP00-0DA0
=V1KF1-KF32.21	1	ET 200SP, DQ 16x 24V DC/0,5A ST, PU 1	6ES7132-6BH01-0BA0	SIE	SIE.6ES7132-6BH01-0BA0
=V1KF1-KF32.21	1	BASEUNIT TYPE A0, BU15-P16+A0+2D	6ES7193-6BP00-0DA0	SIE	SIE.6ES7193-6BP00-0DA0
=V1KF1-KF32.31	1	ET 200SP, El-Mod., F-DI 8x24VDC HF	6ES7136-6BA01-0CA0	SIE	SIE.6ES7136-6BA01-0CA0
=V1KF1-KF32.31	1	BASEUNIT TYPE A0, BU15-P16+A0+2D	6ES7193-6BP00-0DA0	SIE	SIE.6ES7193-6BP00-0DA0
=V1KF1-PNET1	1	Profinet cable - RJ45 plug to M12 Female receptacle; 1m long	RJ45S FKSDED 423-1M	TURCK	TUR.RJ45S FKSDED 423-1M
=V1SF0PG1-M1	1	Ground bar kit, 5 positions.	ECGB5	SIE	US2.ECGB5
=V1SF0PG1-M1	1	Wiring Duct Covers, PVC	C1.5LG6	PAN	PAN.C1.5LG6
=V1SF0PG1-M1	1	Wiring Duct Covers, PVC	C1LG6	PAN	PAN.C1LG6
=V1SF0PG1-M1	1	Wide Slotted Wiring Duct, PVC	G1.5X4LG6	PAN	PAN.G1.5X4LG6
=V1SF0PG1-M1	1	Wide Slotted Wiring Duct, PVC	G1X4LG6	PAN	PAN.G1X4LG6
=V1SF0PG1-PG1	1	SIMATIC HMI TP1500 COMFORT	6AV2124-0QC02-0AX1	SIE	SIE.6AV2124-0QC02-0AX1
=V1SF0PG1-PG1	1	SIMATIC HMI SD MEMORY CARD 2 GB	6AV2181-8XP00-0AX0	SIE	SIE.6AV2181-8XP00-0AX0
=V1SF0PG1-SF1	1	PUSHBUTTON CP1-10G-20	CP1-10G-20	ABB	ABB.1SFA619100R1022
=V1SF0PG1-SF2	1	PUSHBUTTON CP1-10Y-20	CP1-10Y-20	ABB	ABB.1SFA619100R1023
=V1SF0PG1-SF3/PF3	1	PUSHBUTTON CP1-11C-10	CP1-11C-10	ABB	ABB.1SFA619100R1118
=V1SF0PG1-UC01	1	Compact enclosure AX	AX.6315450	RIT	RIT.6315450
=V1SF0PG1-UC01	1	Pedestal, open	CP.6106500	RIT	RIT.6106500
=V1SF0PG1-UC01	1	Coupling CP 60	CP.6206300	RIT	RIT.6206300
=V1SF0PG1-UC01	1	Accessory bag, for AX	AX.5051300	RIT	RIT.5051300
=V1SF0PG1-UC01	1	Mounting plate, for AX	AX.5051375	RIT	RIT.5051375
=V1WC4-FC1	1	Miniature Circuit Breaker MCBs - S200UDC - Number of Poles 1 - Tripping characteristic K	S201UDC-K5	ABB	ABB.2CDS271517R0357
=V1WC4-FC1	1	S2C-H6RU - Auxiliary Contact	S2C-H6RU	ABB	ABB.2CDS200914R0001
=V1WC4-FC2	1	Miniature Circuit Breaker MCBs - S200UDC - Number of Poles 1 - Tripping characteristic K	S201UDC-K5	ABB	ABB.2CDS271517R0357
=V1WC4-FC2	1	S2C-H6RU - Auxiliary Contact	S2C-H6RU	ABB	ABB.2CDS200914R0001
=V1WC4-PG1	1	SIMATIC HMI TP1500 COMFORT	6AV2124-0QC02-0AX1	SIE	SIE.6AV2124-0QC02-0AX1
=V1WC4-XD1	1	RECEPTACLE MINI 5P MALE 1M	RSF 50-1M/NPT	TURCK	TUR.RSF 50-1M/NPT

			Date	12/22/2022	Volvo Trucks North America	Valiant TMS	Parts list : SIE.6ES7155-6AA01-0BN0_subassembly - TUR.RSF 50-1M/NPT	Drawing name: =2V04&EFS-EL	= + V1UC32
			Ed.	MKLEPADLO					
			Appr		P6700 Underbody Mainline - Cell 2V04	Scale 1:1		Document type: EPB	Project nr: 22-16151
Modification	Date	Name	Original		Replacement of	Replaced by			Page 1 / 1630

0	1	2	3	4	5	6	7	8	9

Parts list

F01_001

Device tag	Quantity	Designation	Type number	Supplier	Part number
=V1KF1-KF33	1				SIE.6ES7155-6AA01-0BN0_subassembly
=V1KF1-KF33	1	ET200SP, SERVERMODULE	6ES7193-6PA00-0AA0		SIE.6ES7193-6PA00-0AA0
=V1KF1-KF33.11	1	ET 200SP, DI 16x 24V DC ST, PU 1	6ES7131-6BH01-0BA0	SIE	SIE.6ES7131-6BH01-0BA0
=V1KF1-KF33.11	1	BASEUNIT TYPE A0, BU15-P16+A0+2D	6ES7193-6BP00-0DA0	SIE	SIE.6ES7193-6BP00-0DA0
=V1KF1-KF33.21	1	ET 200SP, DQ 16x 24V DC/0,5A ST, PU 1	6ES7132-6BH01-0BA0	SIE	SIE.6ES7132-6BH01-0BA0
=V1KF1-KF33.21	1	BASEUNIT TYPE A0, BU15-P16+A0+2D	6ES7193-6BP00-0DA0	SIE	SIE.6ES7193-6BP00-0DA0
=V1KF1-KF33.31	1	ET 200SP, El-Mod., F-DI 8x24VDC HF	6ES7136-6BA01-0CA0	SIE	SIE.6ES7136-6BA01-0CA0
=V1KF1-KF33.31	1	BASEUNIT TYPE A0, BU15-P16+A0+2D	6ES7193-6BP00-0DA0	SIE	SIE.6ES7193-6BP00-0DA0
=V1KF1-PNET1	1	Profinet cable - RJ45 plug to M12 Female receptacle; 1m long	RJ45S FKSDED 423-1M	TURCK	TUR.RJ45S FKSDED 423-1M
=V1SF0PG2-M1	1	Ground bar kit, 5 positions.	ECGB5	SIE	US2.ECGB5
=V1SF0PG2-M1	1	Wiring Duct Covers, PVC	C1.5LG6	PAN	PAN.C1.5LG6
=V1SF0PG2-M1	1	Wiring Duct Covers, PVC	C1LG6	PAN	PAN.C1LG6
=V1SF0PG2-M1	1	Wide Slotted Wiring Duct, PVC	G1.5X4LG6	PAN	PAN.G1.5X4LG6
=V1SF0PG2-M1	1	Wide Slotted Wiring Duct, PVC	G1X4LG6	PAN	PAN.G1X4LG6
=V1SF0PG2-PG1	1	SIMATIC HMI TP1500 COMFORT	6AV2124-0QC02-0AX1	SIE	SIE.6AV2124-0QC02-0AX1
=V1SF0PG2-PG1	1	SIMATIC HMI SD MEMORY CARD 2 GB	6AV2181-8XP00-0AX0	SIE	SIE.6AV2181-8XP00-0AX0
=V1SF0PG2-SF1	1	PUSHBUTTON CP1-10G-20	CP1-10G-20	ABB	ABB.1SFA619100R1022
=V1SF0PG2-SF2	1	PUSHBUTTON CP1-10Y-20	CP1-10Y-20	ABB	ABB.1SFA619100R1023
=V1SF0PG2-SF3/PF3	1	PUSHBUTTON CP1-11C-10	CP1-11C-10	ABB	ABB.1SFA619100R1118
=V1SF0PG2-UC01	1	Compact enclosure AX	AX.6315450	RIT	RIT.6315450
=V1SF0PG2-UC01	1	Pedestal, open	CP.6106500	RIT	RIT.6106500
=V1SF0PG2-UC01	1	Coupling CP 60	CP.6206300	RIT	RIT.6206300
=V1SF0PG2-UC01	1	Accessory bag, for AX	AX.5051300	RIT	RIT.5051300
=V1SF0PG2-UC01	1	Mounting plate, for AX	AX.5051375	RIT	RIT.5051375
=V1WC4-FC1	1	Miniature Circuit Breaker MCBs - S200UDC - Number of Poles 1 - Tripping characteristic K	S201UDC-K5	ABB	ABB.2CDS271517R0357
=V1WC4-FC1	1	S2C-H6RU - Auxiliary Contact	S2C-H6RU	ABB	ABB.2CDS200914R0001
=V1WC4-FC2	1	Miniature Circuit Breaker MCBs - S200UDC - Number of Poles 1 - Tripping characteristic K	S201UDC-K5	ABB	ABB.2CDS271517R0357
=V1WC4-FC2	1	S2C-H6RU - Auxiliary Contact	S2C-H6RU	ABB	ABB.2CDS200914R0001
=V1WC4-PG1	1	SIMATIC HMI TP1500 COMFORT	6AV2124-0QC02-0AX1	SIE	SIE.6AV2124-0QC02-0AX1
=V1WC4-XD1	1	RECEPTACLE MINI 5P MALE 1M	RSF 50-1M/NPT	TURCK	TUR.RSF 50-1M/NPT

+.UC32/1

+.UC161/1

			Date	12/22/2022	Volvo Trucks North America	Valiant TMS	Parts list : SIE.6ES7155-6AA01-0BN0_subassembly - TUR.RSF 50-1M/NPT	Drawing name: =2V04&EFS-EL	= + V1UC33
			Ed.	MKLEPADLO					
			Appr		P6700 Underbody Mainline - Cell 2V04			Document type: EPB	Project nr: 22-16151
Modification	Date	Name	Original		Replacement of	Replaced by	Scale 1:1		Page 1 / 1630

Parts list

F01_001

Device tag	Quantity	Designation	Type number	Supplier	Part number
=V1WC2-XG1	1	3P DISTRIBUTION BLOCK 1 LINE / 4 LOAD	MB-231-03	SYNDEVCO	MB-231-03
=V1WC2-XG2	1	3P GROUND BLOCK 3 LINE / 3 LOAD	STGS-3D-3D	SYNDEVCO	STGS-3D-3D
=WC1-WC1	1	Golvskåp TS 8 sidskåp	TS8	RIT	RIT.SETS8205SID5
=WC1-WC1	1	TS Trim panel, sides, H: 100 mm, for W: 500 mm, RAL 7022, sheet steel	TS.8601050	RIT	RIT.8601050
=WC1-WC1	1	TS Base/plinth component, rear, H: 100 mm, for W: 1200 mm, RAL 7022, sheet steel	TS.8601200	RIT	RIT.8601200
=WC1-WC1	1	TS Side panel, screw-fastened, for TS, TS IT, for WD: 2000x500 mm, Sheet steel	TS.8105235	RIT	RIT.8105235
=WC1-WC1	1	PS Wiring plan pockets, for TS, CM, SE, PC, TP pedestal, sheet steel	TS.4115000	RIT	RIT.4115000

+.UC33/1

+.UC162/1

			Date	12/22/2022	Volvo Trucks North America	Valiant TMS	Parts list : MB-231-03 - RIT.4115000	Drawing name: =2V04&EFS-EL	=	
			Ed.	MKLEPADLO					+ V1UC161	
			Appr		P6700 Underbody Mainline - Cell 2V04			Document type: EPB	Project nr: 22-16151	Page 1
Modification	Date	Name	Original		Replacement of	Replaced by	Scale 1:1			1630

Parts list

F01_001

Device tag	Quantity	Designation	Type number	Supplier	Part number
=V1WC2-XG1	0	3P DISTRIBUTION BLOCK 2 LINE / 6 LOAD	CPB-E2G06-03	SYNDEVCO	CPB-E2G06-03
=V1WC2-XG2	0	3P GROUND BLOCK 2 LINE / 6 LOAD	HCG-E2G06	SYNDEVCO	HCG-E2G06
=WC1-WC1	1	Golvskåp TS 8 sidskåp	TS8	RIT	RIT.SETS8205SID5
=WC1-WC1	1	TS Trim panel, sides, H: 100 mm, for W: 500 mm, RAL 7022, sheet steel	TS.8601050	RIT	RIT.8601050
=WC1-WC1	1	TS Base/plinth component, rear, H: 100 mm, for W: 1200 mm, RAL 7022, sheet steel	TS.8601200	RIT	RIT.8601200
=WC1-WC1	1	TS Side panel, screw-fastened, for TS, TS IT, for WD: 2000x500 mm, Sheet steel	TS.8105235	RIT	RIT.8105235
=WC1-WC1	1	PS Wiring plan pockets, for TS, CM, SE, PC, TP pedestal, sheet steel	TS.4115000	RIT	RIT.4115000

+.UC161/1

+.UC163/1

			Date	12/22/2022	Volvo Trucks North America	Valiant TMS	Parts list : CPB-E2G06-03 - RIT.4115000	Drawing name: =2V04&EFS-EL	=	
			Ed.	MKLEPADLO					+ V1UC162	
			Appr		P6700 Underbody Mainline - Cell 2V04			Document type: EPB	Project nr: 22-16151	Page 1
Modification	Date	Name	Original		Replacement of	Replaced by	Scale 1:1			1630

Parts list

F01_001

Device tag	Quantity	Designation	Type number	Supplier	Part number
=V1WC2-XG1	0	3P DISTRIBUTION BLOCK 2 LINE / 6 LOAD	CPB-E2G06-03	SYNDEVCO	CPB-E2G06-03
=V1WC2-XG2	0	3P GROUND BLOCK 2 LINE / 6 LOAD	HCG-E2G06	SYNDEVCO	HCG-E2G06
=WC1-WC1	1	Golvskåp TS 8 sidskåp	TS8	RIT	RIT.SETS8205SID5
=WC1-WC1	1	TS Trim panel, sides, H: 100 mm, for W: 500 mm, RAL 7022, sheet steel	TS.8601050	RIT	RIT.8601050
=WC1-WC1	1	TS Base/plinth component, rear, H: 100 mm, for W: 1200 mm, RAL 7022, sheet steel	TS.8601200	RIT	RIT.8601200
=WC1-WC1	1	TS Side panel, screw-fastened, for TS, TS IT, for WD: 2000x500 mm, Sheet steel	TS.8105235	RIT	RIT.8105235
=WC1-WC1	1	PS Wiring plan pockets, for TS, CM, SE, PC, TP pedestal, sheet steel	TS.4115000	RIT	RIT.4115000

+.UC162/1

+.UC164/1

			Date	12/22/2022	Volvo Trucks North America	Valiant TMS	Parts list : CPB-E2G06-03 - RIT.4115000	Drawing name: =2V04&EFS-EL	=	
			Ed.	MKLEPADLO					+ V1UC163	
			Appr		P6700 Underbody Mainline - Cell 2V04			Document type: EPB	Project nr: 22-16151	Page 1
Modification	Date	Name	Original		Replacement of	Replaced by	Scale 1:1			1630

Parts list

F01_001

Device tag	Quantity	Designation	Type number	Supplier	Part number
=V1WC2-XG1	1	3P DISTRIBUTION BLOCK 1 LINE / 4 LOAD	MB-231-03	SYNDEVCO	MB-231-03
=V1WC2-XG2	1	3P GROUND BLOCK 3 LINE / 3 LOAD	STGS-3D-3D	SYNDEVCO	STGS-3D-3D
=WC1-WC1	1	Golvskåp TS 8 sidskåp	TS8	RIT	RIT.SETS8205SID5
=WC1-WC1	1	TS Trim panel, sides, H: 100 mm, for W: 500 mm, RAL 7022, sheet steel	TS.8601050	RIT	RIT.8601050
=WC1-WC1	1	TS Base/plinth component, rear, H: 100 mm, for W: 1200 mm, RAL 7022, sheet steel	TS.8601200	RIT	RIT.8601200
=WC1-WC1	1	TS Side panel, screw-fastened, for TS, TS IT, for WD: 2000x500 mm, Sheet steel	TS.8105235	RIT	RIT.8105235
=WC1-WC1	1	PS Wiring plan pockets, for TS, CM, SE, PC, TP pedestal, sheet steel	TS.4115000	RIT	RIT.4115000

+.UC163/1

+.UQ51/1

			Date	12/22/2022	Volvo Trucks North America	Valiant TMS	Parts list : MB-231-03 - RIT.4115000	Drawing name: =2V04&EFS-EL	=	
			Ed.	MKLEPADLO					+ V1UC164	
			Appr		P6700 Underbody Mainline - Cell 2V04			Document type: EPB	Project nr: 22-16151	Page 1
Modification	Date	Name	Original		Replacement of	Replaced by	Scale 1:1			1630

Parts list

F01_001

Device tag	Quantity	Designation	Type number	Supplier	Part number
=V1UQ51BG0-BG01	1	Inductive sensor With WeldGuard™ coating	BI20U-CA40-AP6X2-H1141/S1590W/BS2.0	TURCK	TUR.BI20U-CA40-AP6X2-H1141/S1590W/BS2.0
=V1UQ51BG0-BG02	1	Inductive sensor With WeldGuard™ coating	BI20U-CA40-AP6X2-H1141/S1590W/BS2.0	TURCK	TUR.BI20U-CA40-AP6X2-H1141/S1590W/BS2.0
=V1UQ51BG0-BG03	1	Inductive sensor With WeldGuard™ coating	BI20U-CA40-AP6X2-H1141/S1590W/BS2.0	TURCK	TUR.BI20U-CA40-AP6X2-H1141/S1590W/BS2.0
=V1UQ51BG0-BG04	1	Inductive sensor With WeldGuard™ coating	BI20U-CA40-AP6X2-H1141/S1590W/BS2.0	TURCK	TUR.BI20U-CA40-AP6X2-H1141/S1590W/BS2.0
=V1UQ51BG0-XG1/2	1	Y splitter	U2-30676	TURCK	TUR.VB2-FSM 4.4/2FKM 4/S3450
=V1UQ51BG0-XG3/4	1	Y splitter	U2-30676	TURCK	TUR.VB2-FSM 4.4/2FKM 4/S3450
=V1UQ51KF1-KF1	0	Bus node	CPX-FB33	FES	FES.548755
=V1UQ51KF1-KF1	0	Interlinking block	CPX-M-GE-EV-S-7/8-5POL	FES	FES.550208
=V1UQ51KF1-KF1.11	0	Manifold block	CPX-M-AB-8-M12X2-5POL	FES	FES.549335
=V1UQ51KF1-KF1.12	0	Manifold block	CPX-M-AB-8-M12X2-5POL	FES	FES.549335
=V1UQ51KF1-KF1.13	0	Manifold block	CPX-M-AB-8-M12X2-5POL	FES	FES.549335
=V1UQ51KF2-KF2	0	Bus node	CPX-FB33	FES	FES.548755
=V1UQ51KF2-KF2	0	Interlinking block	CPX-M-GE-EV-S-7/8-5POL	FES	FES.550208
=V1UQ51KF2-KF2.11	0	Manifold block	CPX-M-AB-8-M12X2-5POL	FES	FES.549335
=V1UQ51KF2-KF2.12	0	Manifold block	CPX-M-AB-8-M12X2-5POL	FES	FES.549335
=V1UQ51KF2-KF2.13	0	Manifold block	CPX-M-AB-8-M12X2-5POL	FES	FES.549335
=V1UQ51KF3-KF3	0	Bus node	CPX-FB33	FES	FES.548755
=V1UQ51KF3-KF3	0	Interlinking block	CPX-M-GE-EV-S-7/8-5POL	FES	FES.550208
=V1UQ51KF3-KF3.11	0	Manifold block	CPX-M-AB-8-M12X2-5POL	FES	FES.549335
=V1UQ51KF3-KF3.12	0	Manifold block	CPX-M-AB-8-M12X2-5POL	FES	FES.549335
=V1UQ51KF3-KF3.13	0	Manifold block	CPX-M-AB-8-M12X2-5POL	FES	FES.549335
=V1UQ51WC4-XG51.1	1	TEE, 5-PIN MINI, STANDARD KEYWAY	U2109-9	TURCK	TUR.RSM-2RKM 50
=V1UQ51WC4-XG51.2	1	TEE, 5-PIN MINI, STANDARD KEYWAY	U2109-9	TURCK	TUR.RSM-2RKM 50

+.UC164/1

+.UQ51UQ1.1/1

			Date	12/22/2022	Volvo Trucks North America	Valiant TMS	Parts list : TUR.BI20U-CA40-AP6X2-H1141/S1590W/BS2.0 - TUR.RSM-2RKM 50	Drawing name: =2V04&EFS-EL	= + V1UQ51
			Ed.	MKLEPADLO					
			Appr		P6700 Underbody Mainline - Cell 2V04	Scale 1:1		Document type: EPB	Project nr: 22-16151
Modification	Date	Name	Original		Replacement of	Replaced by			Page 1 / 1630

Parts list

F01_001

Device tag	Quantity	Designation	Type number	Supplier	Part number
=V1UQ51UQ1.1-BGS/R	1	Inductive sensor Monitoring Kit for Power Clamps	WWS001A	WELKER	WELKER.WWS001A

+V1UQ51/1

+.UQ51UQ1.2/1

			Date	12/22/2022	Volvo Trucks North America	Valiant TMS	Parts list : WELKER.WWS001A - WELKER.WWS001A	Drawing name: =2V04&EFS-EL	=	
			Ed.	MKLEPADLO					+ V1UQ51UQ1.1	
			Appr		P6700 Underbody Mainline - Cell 2V04	Scale 1:1		Document type: EPB	Project nr: 22-16151	Page 1 / 1630
Modification	Date	Name	Original		Replacement of	Replaced by				

Parts list

F01_001

Device tag	Quantity	Designation	Type number	Supplier	Part number
=V1UQ51UQ1.2-BGS/R	1	Inductive sensor Monitoring Kit for Power Clamps	WWS001A	WELKER	WELKER.WWS001A

+.UQ51UQ1.1/1

+.UQ51UQ2.1/1

			Date	12/22/2022	Volvo Trucks North America	Valiant TMS	Parts list : WELKER.WWS001A - WELKER.WWS001A	Drawing name: =2V04&EFS-EL	=	
			Ed.	MKLEPADLO					+ V1UQ51UQ1.2	
			Appr		P6700 Underbody Mainline - Cell 2V04	Scale 1:1		Document type: EPB	Project nr: 22-16151	Page 1 / 1630
Modification	Date	Name	Original		Replacement of	Replaced by				

Parts list

F01_001

Device tag	Quantity	Designation	Type number	Supplier	Part number
=V1UQ51UQ2.1-BGS/R	1	Inductive sensor Monitoring Kit for Power Clamps	WWS001A	WELKER	WELKER.WWS001A

+.UQ51UQ1.2/1

+.UQ51UQ3.1/1

Parts list

F01_001

Device tag	Quantity	Designation	Type number	Supplier	Part number
=V1UQ51UQ3.1-BGS/R	1	Inductive sensor Monitoring Kit for Power Clamps	WWS001A	WELKER	WELKER.WWS001A

+.UQ51UQ2.1/1

+.UQ51UQ3.2/1

Parts list

F01_001

Device tag	Quantity	Designation	Type number	Supplier	Part number
=V1UQ51UQ3.2-BGS/R	1	Inductive sensor Monitoring Kit for Power Clamps	WWS001A	WELKER	WELKER.WWS001A

+.UQ51UQ3.1/1

+.UQ51UQ4.1/1

			Date	12/22/2022	Volvo Trucks North America	Valiant TMS	Parts list : WELKER.WWS001A - WELKER.WWS001A	Drawing name: =2V04&EFS-EL	= + V1UQ51UQ3.2
			Ed.	MKLEPADLO					
			Appr		P6700 Underbody Mainline - Cell 2V04	Scale 1:1		Document type: EPB	Project nr: 22-16151
Modification	Date	Name	Original		Replacement of	Replaced by			Page 1 / 1630

Parts list

F01_001

Device tag	Quantity	Designation	Type number	Supplier	Part number
=V1UQ51UQ4.1-BGS/R	1	Inductive sensor Monitoring Kit for Power Clamps	1324638	TUNKERS	TUN.1324638

+.UQ51UQ3.2/1

+.UQ51UQ4.2/1

Parts list

F01_001

Device tag	Quantity	Designation	Type number	Supplier	Part number
=V1UQ51UQ4.2-BGS/R	1	Inductive sensor Monitoring Kit for Power Clamps	1324638	TUNKERS	TUN.1324638

+.UQ51UQ4.1/1

+.UQ51UQ5.1/1

			Date	12/22/2022	Volvo Trucks North America	Valiant TMS	Parts list : TUN.1324638 - TUN.1324638	Drawing name: =2V04&EFS-EL	=	
			Ed.	MKLEPADLO					+ V1UQ51UQ4.2	
			Appr		P6700 Underbody Mainline - Cell 2V04	Scale 1:1		Document type: EPB	Project nr: 22-16151	Page 1 / 1630
Modification	Date	Name	Original		Replacement of	Replaced by				

Parts list

F01_001

Device tag	Quantity	Designation	Type number	Supplier	Part number
=V1UQ51UQ5.1-BGR	1	Inductive sensor With WeldGuard™ coating	BI20U-CA40-AP6X2-H1141/S1590W/BS2.0	TURCK	TUR.BI20U-CA40-AP6X2-H1141/S1590W/BS2.0
=V1UQ51UQ5.1-BGS	1	Inductive sensor With WeldGuard™ coating	BI20U-CA40-AP6X2-H1141/S1590W/BS2.0	TURCK	TUR.BI20U-CA40-AP6X2-H1141/S1590W/BS2.0
=V1UQ51UQ5.1-XGR/S	1	Y splitter	U2-30676	TURCK	TUR.VB2-FSM 4.4/2FKM 4/S3450

+.UQ51UQ4.2/1

+.UQ51UQ5.2/1

			Date	12/22/2022	Volvo Trucks North America	Valiant TMS	Parts list : TUR.BI20U-CA40-AP6X2-H1141/S1590W/BS2.0 - TUR.VB2-FSM 4.4/2FKM 4/S3450	Drawing name: =2V04&EFS-EL	= + V1UQ51UQ5.1
			Ed.	MKLEPADLO					
			Appr		P6700 Underbody Mainline - Cell 2V04	Scale 1:1		Document type: EPB	Project nr: 22-16151
Modification	Date	Name	Original		Replacement of	Replaced by			Page 1 / 1630

Parts list

F01_001

Device tag	Quantity	Designation	Type number	Supplier	Part number
=V1UQ51UQ5.2-BGR	1	Inductive sensor With WeldGuard™ coating	BI20U-CA40-AP6X2-H1141/S1590W/BS2.0	TURCK	TUR.BI20U-CA40-AP6X2-H1141/S1590W/BS2.0
=V1UQ51UQ5.2-BGS	1	Inductive sensor With WeldGuard™ coating	BI20U-CA40-AP6X2-H1141/S1590W/BS2.0	TURCK	TUR.BI20U-CA40-AP6X2-H1141/S1590W/BS2.0
=V1UQ51UQ5.2-XGR/S	1	Y splitter	U2-30676	TURCK	TUR.VB2-FSM 4.4/2FKM 4/S3450

+.UQ51UQ5.1/1

+.UQ51UQ6.1/1

			Date	12/22/2022	Volvo Trucks North America	Valiant TMS	Parts list : TUR.BI20U-CA40-AP6X2-H1141/S1590W/BS2.0 - TUR.VB2-FSM 4.4/2FKM 4/S3450	Drawing name: =2V04&EFS-EL	= + V1UQ51UQ5.2
			Ed.	MKLEPADLO					
			Appr		P6700 Underbody Mainline - Cell 2V04	Scale 1:1		Document type: EPB	Project nr: 22-16151
Modification	Date	Name	Original		Replacement of	Replaced by			Page 1 / 1630

Parts list

F01_001

Device tag	Quantity	Designation	Type number	Supplier	Part number
=V1UQ51UQ6.1-BGS/R	1	Inductive sensor Monitoring Kit for Power Clamps	WWS001A	WELKER	WELKER.WWS001A

+.UQ51UQ5.2/1

+.UQ51UQ6.2/1

			Date	12/22/2022	Volvo Trucks North America	Valiant TMS	Parts list : WELKER.WWS001A - WELKER.WWS001A	Drawing name: =2V04&EFS-EL	=	
			Ed.	MKLEPADLO					+ V1UQ51UQ6.1	
			Appr		P6700 Underbody Mainline - Cell 2V04	Scale 1:1		Document type: EPB	Project nr: 22-16151	Page 1 / 1630
Modification	Date	Name	Original		Replacement of	Replaced by				

Parts list

F01_001

Device tag	Quantity	Designation	Type number	Supplier	Part number
=V1UQ51UQ6.2-BGS/R	1	Inductive sensor Monitoring Kit for Power Clamps	WWS001A	WELKER	WELKER.WWS001A

+.UQ51UQ6.1/1

+.UQ51UQ7.1/1

			Date	12/22/2022	Volvo Trucks North America	Valiant TMS	Parts list : WELKER.WWS001A - WELKER.WWS001A	Drawing name: =2V04&EFS-EL	=	
			Ed.	MKLEPADLO					+ V1UQ51UQ6.2	
			Appr		P6700 Underbody Mainline - Cell 2V04	Scale 1:1		Document type: EPB	Project nr: 22-16151	Page 1 / 1630
Modification	Date	Name	Original		Replacement of	Replaced by				

Parts list

F01_001

Device tag	Quantity	Designation	Type number	Supplier	Part number
=V1UQ51UQ7.1-BGS/R	1	Inductive sensor Monitoring Kit for Power Clamps	1324638	TUNKERS	TUN.1324638

+.UQ51UQ6.2/1

+.UQ51UQ7.2/1

Parts list

F01_001

Device tag	Quantity	Designation	Type number	Supplier	Part number
=V1UQ51UQ7.2-BGS/R	1	Inductive sensor Monitoring Kit for Power Clamps	1324638	TUNKERS	TUN.1324638

+.UQ51UQ7.1/1

+.UQ51UQ7.3/1

Parts list

F01_001

Device tag	Quantity	Designation	Type number	Supplier	Part number
=V1UQ51UQ7.3-BGS/R	1	Inductive sensor Monitoring Kit for Power Clamps	1324638	TUNKERS	TUN.1324638

+.UQ51UQ7.2/1

+.UQ51UQ7.4/1

Parts list

F01_001

Device tag	Quantity	Designation	Type number	Supplier	Part number
=V1UQ51UQ7.4-BGS/R	1	Inductive sensor Monitoring Kit for Power Clamps	1324638	TUNKERS	TUN.1324638

+.UQ51UQ7.3/1

+.UQ51UQ7.5/1

Parts list

F01_001

Device tag	Quantity	Designation	Type number	Supplier	Part number
=V1UQ51UQ7.5-BGS/R	1	Inductive sensor Monitoring Kit for Power Clamps	1324638	TUNKERS	TUN.1324638

+.UQ51UQ7.4/1

+.UQ51UQ7.6/1

Parts list

F01_001

Device tag	Quantity	Designation	Type number	Supplier	Part number
=V1UQ51UQ7.6-BGS/R	1	Inductive sensor Monitoring Kit for Power Clamps	1324638	TUNKERS	TUN.1324638

+.UQ51UQ7.5/1

+.UQ51UQ7.7/1

			Date	12/22/2022	Volvo Trucks North America	Valiant TMS	Parts list : TUN.1324638 - TUN.1324638	Drawing name: =2V04&EFS-EL	= + V1UQ51UQ7.6
			Ed.	MKLEPADLO					
			Appr		P6700 Underbody Mainline - Cell 2V04	Scale 1:1		Document type: EPB	Project nr: 22-16151
Modification	Date	Name	Original		Replacement of	Replaced by			Page 1 / 1630

Parts list

F01_001

Device tag	Quantity	Designation	Type number	Supplier	Part number
=V1UQ51UQ7.7-BGS/R	1	Inductive sensor Monitoring Kit for Power Clamps	1324638	TUNKERS	TUN.1324638

+.UQ51UQ7.6/1

+.UQ51UQ8.1/1

Parts list

F01_001

Device tag	Quantity	Designation	Type number	Supplier	Part number
=V1UQ51UQ8.1-BGS/R	1	Inductive sensor Monitoring Kit for Power Clamps	1324638	TUNKERS	TUN.1324638

+.UQ51UQ7.7/1

+.UQ51UQ8.2/1

			Date	12/22/2022	Volvo Trucks North America	Valiant TMS	Parts list : TUN.1324638 - TUN.1324638	Drawing name: =2V04&EFS-EL	= + V1UQ51UQ8.1
			Ed.	MKLEPADLO					
			Appr		P6700 Underbody Mainline - Cell 2V04	Scale 1:1		Document type: EPB	Project nr: 22-16151
Modification	Date	Name	Original		Replacement of	Replaced by			Page 1 / 1630

Parts list

F01_001

Device tag	Quantity	Designation	Type number	Supplier	Part number
=V1UQ51UQ8.2-BGS/R	1	Inductive sensor Monitoring Kit for Power Clamps	1324638	TUNKERS	TUN.1324638

+.UQ51UQ8.1/1

+.UQ51UQ9.1/1

Parts list

F01_001

Device tag	Quantity	Designation	Type number	Supplier	Part number
=V1UQ51UQ9.1-BGS/R	1	Inductive sensor Monitoring Kit for Power Clamps	1324638	TUNKERS	TUN.1324638

+.UQ51UQ8.2/1

+.UQ51UQ9.2/1

Parts list

F01_001

Device tag	Quantity	Designation	Type number	Supplier	Part number
=V1UQ51UQ9.2-BGS/R	1	Inductive sensor Monitoring Kit for Power Clamps	1324638	TUNKERS	TUN.1324638

+.UQ51UQ9.1/1

+.UQ51UQ9.3/1

			Date	12/22/2022	Volvo Trucks North America	Valiant TMS	Parts list : TUN.1324638 - TUN.1324638	Drawing name: =2V04&EFS-EL	= + V1UQ51UQ9.2
			Ed.	MKLEPADLO					
			Appr		P6700 Underbody Mainline - Cell 2V04	Scale 1:1		Document type: EPB	Project nr: 22-16151
Modification	Date	Name	Original		Replacement of	Replaced by			Page 1 / 1630

Parts list

F01_001

Device tag	Quantity	Designation	Type number	Supplier	Part number
=V1UQ51UQ9.3-BGS/R	1	Inductive sensor Monitoring Kit for Power Clamps	1324638	TUNKERS	TUN.1324638

+.UQ51UQ9.2/1

+.UQ51UQ9.4/1

			Date	12/22/2022	Volvo Trucks North America	Valiant TMS	Parts list : TUN.1324638 - TUN.1324638	Drawing name: =2V04&EFS-EL	= + V1UQ51UQ9.3
			Ed.	MKLEPADLO					
			Appr		P6700 Underbody Mainline - Cell 2V04	Scale 1:1		Document type: EPB	Project nr: 22-16151
Modification	Date	Name	Original		Replacement of	Replaced by			Page 1 / 1630

Parts list

F01_001

Device tag	Quantity	Designation	Type number	Supplier	Part number
=V1UQ51UQ9.4-BGS/R	1	Inductive sensor Monitoring Kit for Power Clamps	1324638	TUNKERS	TUN.1324638

+.UQ51UQ9.3/1

+.UQ51UQ10.1/1

			Date	12/22/2022	Volvo Trucks North America	Valiant TMS	Parts list : TUN.1324638 - TUN.1324638	Drawing name: =2V04&EFS-EL	=	
			Ed.	MKLEPADLO					+ V1UQ51UQ9.4	
			Appr		P6700 Underbody Mainline - Cell 2V04	Scale 1:1		Document type: EPB	Project nr: 22-16151	Page 1 / 1630
Modification	Date	Name	Original		Replacement of	Replaced by				

Parts list

F01_001

Device tag	Quantity	Designation	Type number	Supplier	Part number
=V1UQ51UQ10.1-BGS/R	1	Inductive sensor Monitoring Kit for Power Clamps	1324638	TUNKERS	TUN.1324638

			Date	12/22/2022	Volvo Trucks North America	Valiant TMS	Parts list : TUN.1324638 - TUN.1324638	Drawing name: =2V04&EFS-EL	=	
			Ed.	MKLEPADLO					+ V1UQ51UQ10.1	
			Appr		P6700 Underbody Mainline - Cell 2V04	Scale 1:1		Document type: EPB	Project nr: 22-16151	Page 1 / 1630
Modification	Date	Name	Original		Replacement of	Replaced by				

Parts list

F01_001

Device tag	Quantity	Designation	Type number	Supplier	Part number
=V1UQ51UQ10.2-BGS/R	1	Inductive sensor Monitoring Kit for Power Clamps	1324638	TUNKERS	TUN.1324638

+.UQ51UQ10.1/1

+.UQ51UQ11.1/1

Parts list

F01_001

Device tag	Quantity	Designation	Type number	Supplier	Part number
=V1UQ51UQ11.1-BGS/R	1	Inductive sensor Monitoring Kit for Power Clamps	1324638	TUNKERS	TUN.1324638

+.UQ51UQ10.2/1

+.UQ51UQ12.1/1

			Date	12/22/2022	Volvo Trucks North America	Valiant TMS	Parts list : TUN.1324638 - TUN.1324638	Drawing name: =2V04&EFS-EL	= + V1UQ51UQ11.1
			Ed.	MKLEPADLO					
			Appr		P6700 Underbody Mainline - Cell 2V04	Scale 1:1		Document type: EPB	Project nr: 22-16151
Modification	Date	Name	Original		Replacement of	Replaced by			Page 1 / 1630

Parts list

F01_001

Device tag	Quantity	Designation	Type number	Supplier	Part number
=V1UQ51UQ12.1-BGS/R	1	Inductive sensor Monitoring Kit for Power Clamps	WWS001A	WELKER	WELKER.WWS001A

+.UQ51UQ11.1/1

+.UQ51UQ13.1/1

			Date	12/22/2022	Volvo Trucks North America	Valiant TMS	Parts list : WELKER.WWS001A - WELKER.WWS001A	Drawing name: =2V04&EFS-EL	=	
			Ed.	MKLEPADLO					+ V1UQ51UQ12.1	
			Appr		P6700 Underbody Mainline - Cell 2V04	Scale 1:1		Document type: EPB	Project nr: 22-16151	Page 1 / 1630
Modification	Date	Name	Original		Replacement of	Replaced by				

Parts list

F01_001

Device tag	Quantity	Designation	Type number	Supplier	Part number
=V1UQ51UQ13.1-BGS/R	1	Inductive sensor Monitoring Kit for Power Clamps	WWS001A	WELKER	WELKER.WWS001A

+.UQ51UQ12.1/1

+.UQ51UQ14.1/1

			Date	12/22/2022	Volvo Trucks North America	Valiant TMS	Parts list : WELKER.WWS001A - WELKER.WWS001A	Drawing name: =2V04&EFS-EL	= + V1UQ51UQ13.1
			Ed.	MKLEPADLO					
			Appr		P6700 Underbody Mainline - Cell 2V04	Scale 1:1		Document type: EPB	Project nr: 22-16151
Modification	Date	Name	Original		Replacement of	Replaced by			Page 1 / 1630

Parts list

F01_001

Device tag	Quantity	Designation	Type number	Supplier	Part number
=V1UQ51UQ14.1-BGS/R	1	Inductive sensor Monitoring Kit for Power Clamps	1324638	TUNKERS	TUN.1324638

+.UQ51UQ13.1/1

+.UQ51UQ14.2/1

Parts list

F01_001

Device tag	Quantity	Designation	Type number	Supplier	Part number
=V1UQ51UQ14.2-BGS/R	1	Inductive sensor Monitoring Kit for Power Clamps	1324638	TUNKERS	TUN.1324638

+.UQ51UQ14.1/1

+.UQ51UQ15.1/1

			Date	12/22/2022	Volvo Trucks North America	Valiant TMS	Parts list : TUN.1324638 - TUN.1324638	Drawing name: =2V04&EFS-EL	= + V1UQ51UQ14.2
			Ed.	MKLEPADLO					
			Appr		P6700 Underbody Mainline - Cell 2V04	Scale 1:1		Document type: EPB	Project nr: 22-16151
Modification	Date	Name	Original		Replacement of	Replaced by			Page 1 / 1630

Parts list

F01_001

Device tag	Quantity	Designation	Type number	Supplier	Part number
=V1UQ51UQ15.1-BGS/R	1	Inductive sensor Monitoring Kit for Power Clamps	1324638	TUNKERS	TUN.1324638

+.UQ51UQ14.2/1

+.UQ51UQ15.2/1

Parts list

F01_001

Device tag	Quantity	Designation	Type number	Supplier	Part number
=V1UQ51UQ15.2-BGS/R	1	Inductive sensor Monitoring Kit for Power Clamps	1324638	TUNKERS	TUN.1324638

+.UQ51UQ15.1/1

+.UQ51UQ16.1/1

			Date	12/22/2022	Volvo Trucks North America	Valiant TMS	Parts list : TUN.1324638 - TUN.1324638	Drawing name: =2V04&EFS-EL	= + V1UQ51UQ15.2
			Ed.	MKLEPADLO					
			Appr		P6700 Underbody Mainline - Cell 2V04	Scale 1:1		Document type: EPB	Project nr: 22-16151
Modification	Date	Name	Original		Replacement of	Replaced by			Page 1 / 1630

Parts list

F01_001

Device tag	Quantity	Designation	Type number	Supplier	Part number
=V1UQ51UQ16.1-BGS/R	1	Inductive sensor Monitoring Kit for Power Clamps	1324638	TUNKERS	TUN.1324638

+.UQ51UQ15.2/1

+.UQ51UQ17.1/1

Parts list

F01_001

Device tag	Quantity	Designation	Type number	Supplier	Part number
=V1UQ51UQ17.1-BGR	1	Inductive sensor With WeldGuard™ coating	BI20U-CA40-AP6X2-H1141/S1590W/BS2.0	TURCK	TUR.BI20U-CA40-AP6X2-H1141/S1590W/BS2.0
=V1UQ51UQ17.1-BGS	1	Inductive sensor With WeldGuard™ coating	BI20U-CA40-AP6X2-H1141/S1590W/BS2.0	TURCK	TUR.BI20U-CA40-AP6X2-H1141/S1590W/BS2.0
=V1UQ51UQ17.1-XGR/S	1	Y splitter	U2-30676	TURCK	TUR.VB2-FSM 4.4/2FKM 4/S3450

+.UQ51UQ16.1/1

+.UQ51UQ18.1/1

			Date	12/22/2022	Volvo Trucks North America	Valiant TMS	Parts list : TUR.BI20U-CA40-AP6X2-H1141/S1590W/BS2.0 - TUR.VB2-FSM 4.4/2FKM 4/S3450	Drawing name: =2V04&EFS-EL	= + V1UQ51UQ17.1
			Ed.	MKLEPADLO					
			Appr		P6700 Underbody Mainline - Cell 2V04	Scale 1:1		Document type: EPB	Project nr: 22-16151
Modification	Date	Name	Original		Replacement of	Replaced by			Page 1 / 1630

Parts list

F01_001

Device tag	Quantity	Designation	Type number	Supplier	Part number
=V1UQ51UQ18.1-BGR	1	Inductive sensor With WeldGuard™ coating	BI20U-CA40-AP6X2-H1141/S1590W/BS2.0	TURCK	TUR.BI20U-CA40-AP6X2-H1141/S1590W/BS2.0
=V1UQ51UQ18.1-BGS	1	Inductive sensor With WeldGuard™ coating	BI20U-CA40-AP6X2-H1141/S1590W/BS2.0	TURCK	TUR.BI20U-CA40-AP6X2-H1141/S1590W/BS2.0
=V1UQ51UQ18.1-XGR/S	1	Y splitter	U2-30676	TURCK	TUR.VB2-FSM 4.4/2FKM 4/S3450

+.UQ51UQ17.1/1

+.UQ51UQ19.1/1

			Date	12/22/2022	Volvo Trucks North America	Valiant TMS	Parts list : TUR.BI20U-CA40-AP6X2-H1141/S1590W/BS2.0 - TUR.VB2-FSM 4.4/2FKM 4/S3450	Drawing name: =2V04&EFS-EL	= + V1UQ51UQ18.1
			Ed.	MKLEPADLO					
			Appr		P6700 Underbody Mainline - Cell 2V04	Scale 1:1		Document type: EPB	Project nr: 22-16151
Modification	Date	Name	Original		Replacement of	Replaced by			Page 1 / 1630

Parts list

F01_001

Device tag	Quantity	Designation	Type number	Supplier	Part number
=V1UQ51UQ19.1-BGS/R	1	Inductive sensor Monitoring Kit for Power Clamps	1324638	TUNKERS	TUN.1324638

+.UQ51UQ18.1/1

+.UQ51UQ19.2/1

Parts list

F01_001

Device tag	Quantity	Designation	Type number	Supplier	Part number
=V1UQ51UQ19.2-BGS/R	1	Inductive sensor Monitoring Kit for Power Clamps	1324638	TUNKERS	TUN.1324638

+.UQ51UQ19.1/1

+.UQ51UQ20.1/1

Parts list

F01_001

Device tag	Quantity	Designation	Type number	Supplier	Part number
=V1UQ51UQ20.1-BGS/R	1	Inductive sensor Monitoring Kit for Power Clamps	WWS001A	WELKER	WELKER.WWS001A

+.UQ51UQ19.2/1

+.UQ51UQ20.2/1

Parts list

F01_001

Device tag	Quantity	Designation	Type number	Supplier	Part number
=V1UQ51UQ20.2-BGS/R	1	Inductive sensor Monitoring Kit for Power Clamps	WWS001A	WELKER	WELKER.WWS001A

+.UQ51UQ20.1/1

+.UQ51UQ21.1/1

Parts list

F01_001

Device tag	Quantity	Designation	Type number	Supplier	Part number
=V1UQ51UQ21.1-BGS/R	1	Inductive sensor Monitoring Kit for Power Clamps	1324638	TUNKERS	TUN.1324638

+.UQ51UQ20.2/1

+.UQ51UQ21.2/1

Parts list

F01_001

Device tag	Quantity	Designation	Type number	Supplier	Part number
=V1UQ51UQ21.2-BGS/R	1	Inductive sensor Monitoring Kit for Power Clamps	1324638	TUNKERS	TUN.1324638

+.UQ51UQ21.1/1

+.UQ51UQ22.1/1

Parts list

F01_001

Device tag	Quantity	Designation	Type number	Supplier	Part number
=V1UQ51UQ22.1-BGS/R	1	Inductive sensor Monitoring Kit for Power Clamps	1324638	TUNKERS	TUN.1324638

+.UQ51UQ21.2/1

+.UQ51UQ22.2/1

Parts list

F01_001

Device tag	Quantity	Designation	Type number	Supplier	Part number
=V1UQ51UQ22.2-BGS/R	1	Inductive sensor Monitoring Kit for Power Clamps	1324638	TUNKERS	TUN.1324638

+.UQ51UQ22.1/1

+.UQ51UQ22.3/1

Parts list

F01_001

Device tag	Quantity	Designation	Type number	Supplier	Part number
=V1UQ51UQ22.3-BGS/R	1	Inductive sensor Monitoring Kit for Power Clamps	1324638	TUNKERS	TUN.1324638

+.UQ51UQ22.2/1

+.UQ51UQ22.4/1

Parts list

F01_001

Device tag	Quantity	Designation	Type number	Supplier	Part number
=V1UQ51UQ22.4-BGS/R	1	Inductive sensor Monitoring Kit for Power Clamps	1324638	TUNKERS	TUN.1324638

+.UQ51UQ22.3/1

+.UQ51UQ23.1/1

Parts list

F01_001

Device tag	Quantity	Designation	Type number	Supplier	Part number
=V1UQ51UQ23.1-BGS/R	1	Inductive sensor Monitoring Kit for Vario Power Clamps	285425	TUNKERS	TUN.285425

+.UQ51UQ22.4/1

+.UQ51UQ24.1/1

Parts list

F01_001

Device tag	Quantity	Designation	Type number	Supplier	Part number
=V1UQ51UQ24.1-BGS/R	1	Inductive sensor Monitoring Kit for Vario Power Clamps	285425	TUNKERS	TUN.285425

+.UQ51UQ23.1/1

+.UQ52/1

			Date	12/22/2022	Volvo Trucks North America	Valiant TMS	Parts list : TUN.285425 - TUN.285425	Drawing name: =2V04&EFS-EL	=	
			Ed.	MKLEPADLO					+ V1UQ51UQ24.1	
			Appr		P6700 Underbody Mainline - Cell 2V04	Scale 1:1		Document type: EPB	Project nr: 22-16151	Page 1 / 1630
Modification	Date	Name	Original		Replacement of	Replaced by				

Parts list

F01_001

Device tag	Quantity	Designation	Type number	Supplier	Part number
=V1UQ52BG0-BG01	1	Inductive sensor With WeldGuard™ coating	BI20U-CA40-AP6X2-H1141/S1590W/BS2.0	TURCK	TUR.BI20U-CA40-AP6X2-H1141/S1590W/BS2.0
=V1UQ52BG0-BG02	1	Inductive sensor With WeldGuard™ coating	BI20U-CA40-AP6X2-H1141/S1590W/BS2.0	TURCK	TUR.BI20U-CA40-AP6X2-H1141/S1590W/BS2.0
=V1UQ52BG0-XG1/2	1	Y splitter	U2-30676	TURCK	TUR.VB2-FSM 4.4/2FKM 4/S3450
=V1UQ52KF1-KF1	0	Bus node	CPX-FB33	FES	FES.548755
=V1UQ52KF1-KF1	0	Interlinking block	CPX-M-GE-EV-S-7/8-5POL	FES	FES.550208
=V1UQ52KF1-KF1.11	0	Manifold block	CPX-M-AB-8-M12X2-5POL	FES	FES.549335
=V1UQ52KF1-KF1.12	0	Manifold block	CPX-M-AB-8-M12X2-5POL	FES	FES.549335

+.UQ51UQ24.1/1

+.UQ52UQ1.1/1

			Date	12/22/2022	Volvo Trucks North America	Valiant TMS	Parts list : TUR.BI20U-CA40-AP6X2-H1141/S1590W/BS2.0 - FES.549335	Drawing name: =2V04&EFS-EL	= + V1UQ52	
			Ed.	MKLEPADLO						
			Appr		P6700 Underbody Mainline - Cell 2V04	Scale 1:1		Document type: EPB	Project nr: 22-16151	Page 1 / 1630
Modification	Date	Name	Original		Replacement of	Replaced by				

Parts list

F01_001

Device tag	Quantity	Designation	Type number	Supplier	Part number
=V1UQ52UQ1.1-BGS/R	1	Inductive sensor Monitoring Kit for Power Clamps	1324644	TUNKERS	TUN.1324644

+V1UQ52/1

+.UQ52UQ1.2/1

			Date	12/22/2022	Volvo Trucks North America	Valiant TMS	Parts list : TUN.1324644 - TUN.1324644	Drawing name: =2V04&EFS-EL	=	
			Ed.	MKLEPADLO					+ V1UQ52UQ1.1	
			Appr		P6700 Underbody Mainline - Cell 2V04	Scale 1:1		Document type: EPB	Project nr: 22-16151	Page 1 / 1630
Modification	Date	Name	Original		Replacement of	Replaced by				

Parts list

F01_001

Device tag	Quantity	Designation	Type number	Supplier	Part number
=V1UQ52UQ1.2-BGS/R	1	Inductive sensor Monitoring Kit for Power Clamps	1324644	TUNKERS	TUN.1324644

+.UQ52UQ1.1/1

+.UQ52UQ1.3/1

			Date	12/22/2022	Volvo Trucks North America	Valiant TMS	Parts list : TUN.1324644 - TUN.1324644	Drawing name: =2V04&EFS-EL	= + V1UQ52UQ1.2
			Ed.	MKLEPADLO					
			Appr		P6700 Underbody Mainline - Cell 2V04	Scale 1:1		Document type: EPB	Project nr: 22-16151
Modification	Date	Name	Original		Replacement of	Replaced by			Page 1 / 1630

Parts list

F01_001

Device tag	Quantity	Designation	Type number	Supplier	Part number
=V1UQ52UQ1.3-BGS/R	1	Inductive sensor Monitoring Kit for Power Clamps	1324644	TUNKERS	TUN.1324644

+.UQ52UQ1.2/1

+.UQ52UQ1.4/1

			Date	12/22/2022	Volvo Trucks North America	Valiant TMS	Parts list : TUN.1324644 - TUN.1324644	Drawing name: =2V04&EFS-EL	= + V1UQ52UQ1.3
			Ed.	MKLEPADLO					
			Appr		P6700 Underbody Mainline - Cell 2V04	Scale 1:1		Document type: EPB	Project nr: 22-16151
Modification	Date	Name	Original		Replacement of	Replaced by			Page 1 / 1630

Parts list

F01_001

Device tag	Quantity	Designation	Type number	Supplier	Part number
=V1UQ52UQ1.4-BGS/R	1	Inductive sensor Monitoring Kit for Power Clamps	1324644	TUNKERS	TUN.1324644

+.UQ52UQ1.3/1

+.UQ52UQ2.1/1

			Date	12/22/2022	Volvo Trucks North America	Valiant TMS	Parts list : TUN.1324644 - TUN.1324644	Drawing name: =2V04&EFS-EL	= + V1UQ52UQ1.4
			Ed.	MKLEPADLO					
			Appr		P6700 Underbody Mainline - Cell 2V04	Scale 1:1		Document type: EPB	Project nr: 22-16151
Modification	Date	Name	Original		Replacement of	Replaced by			Page 1 / 1630

Parts list

F01_001

Device tag	Quantity	Designation	Type number	Supplier	Part number
=V1UQ52UQ2.1-BGS/R	1	Inductive sensor Monitoring Kit for Vario Power Clamps	285425	TUNKERS	TUN.285425

+.UQ52UQ1.4/1

+.UQ52UQ2.2/1

			Date	12/22/2022	Volvo Trucks North America	Valiant TMS	Parts list : TUN.285425 - TUN.285425	Drawing name: =2V04&EFS-EL	=	
			Ed.	MKLEPADLO					+ V1UQ52UQ2.1	
			Appr		P6700 Underbody Mainline - Cell 2V04	Scale 1:1		Document type: EPB	Project nr: 22-16151	Page 1 / 1630
Modification	Date	Name	Original		Replacement of	Replaced by				

Parts list

F01_001

Device tag	Quantity	Designation	Type number	Supplier	Part number
=V1UQ52UQ2.2-BGS/R	1	Inductive sensor Monitoring Kit for Vario Power Clamps	285425	TUNKERS	TUN.285425

+.UQ52UQ2.1/1

+.UQ52UQ3.1/1

			Date	12/22/2022	Volvo Trucks North America	Valiant TMS	Parts list : TUN.285425 - TUN.285425	Drawing name: =2V04&EFS-EL	=	
			Ed.	MKLEPADLO					+ V1UQ52UQ2.2	
			Appr		P6700 Underbody Mainline - Cell 2V04	Scale 1:1		Document type: EPB	Project nr: 22-16151	Page 1 / 1630
Modification	Date	Name	Original		Replacement of	Replaced by				

Parts list

F01_001

Device tag	Quantity	Designation	Type number	Supplier	Part number
=V1UQ52UQ3.1-BGS/R	1	Inductive sensor Monitoring Kit for Power Clamps	WWS001A	WELKER	WELKER.WWS001A

+.UQ52UQ2.2/1

+.UQ52UQ4.1/1

			Date	12/22/2022	Volvo Trucks North America	Valiant TMS	Parts list : WELKER.WWS001A - WELKER.WWS001A	Drawing name: =2V04&EFS-EL	=	
			Ed.	MKLEPADLO					+ V1UQ52UQ3.1	
			Appr		P6700 Underbody Mainline - Cell 2V04	Scale 1:1		Document type: EPB	Project nr: 22-16151	Page 1 / 1630
Modification	Date	Name	Original		Replacement of	Replaced by				

Parts list

F01_001

Device tag	Quantity	Designation	Type number	Supplier	Part number
=V1UQ52UQ4.1-BGS/R	1	Inductive sensor Monitoring Kit for Vario Power Clamps	285425	TUNKERS	TUN.285425

+.UQ52UQ3.1/1

+.UQ52UQ4.2/1

			Date	12/22/2022	Volvo Trucks North America	Valiant TMS	Parts list : TUN.285425 - TUN.285425	Drawing name: =2V04&EFS-EL	=	
			Ed.	MKLEPADLO					+ V1UQ52UQ4.1	
			Appr		P6700 Underbody Mainline - Cell 2V04	Scale 1:1		Document type: EPB	Project nr: 22-16151	Page 1 / 1630
Modification	Date	Name	Original		Replacement of	Replaced by				

Parts list

F01_001

Device tag	Quantity	Designation	Type number	Supplier	Part number
=V1UQ52UQ4.2-BGS/R	1	Inductive sensor Monitoring Kit for Vario Power Clamps	285425	TUNKERS	TUN.285425

+.UQ52UQ4.1/1

+.UQ52UQ5.1/1

Parts list

F01_001

Device tag	Quantity	Designation	Type number	Supplier	Part number
=V1UQ52UQ5.1-BGR	1	Inductive sensor With WeldGuard™ coating	BI20U-CA40-AP6X2-H1141/S1590W/BS2.0	TURCK	TUR.BI20U-CA40-AP6X2-H1141/S1590W/BS2.0
=V1UQ52UQ5.1-BGS1	1	Inductive sensor With WeldGuard™ coating	BI20U-CA40-AP6X2-H1141/S1590W/BS2.0	TURCK	TUR.BI20U-CA40-AP6X2-H1141/S1590W/BS2.0
=V1UQ52UQ5.1-BGS2	1	Inductive sensor With WeldGuard™ coating	BI20U-CA40-AP6X2-H1141/S1590W/BS2.0	TURCK	TUR.BI20U-CA40-AP6X2-H1141/S1590W/BS2.0
=V1UQ52UQ5.1-XGR/S	1	Y splitter	U2-30676	TURCK	TUR.VB2-FSM 4.4/2FKM 4/S3450

+.UQ52UQ4.2/1

+.UQ52UQ6.1/1

			Date	12/22/2022	Volvo Trucks North America	Valiant TMS	Parts list : TUR.BI20U-CA40-AP6X2-H1141/S1590W/BS2.0 - TUR.VB2-FSM 4.4/2FKM 4/S3450	Drawing name: =2V04&EFS-EL	= + V1UQ52UQ5.1
			Ed.	MKLEPADLO					
			Appr		P6700 Underbody Mainline - Cell 2V04	Scale 1:1		Document type: EPB	Project nr: 22-16151
Modification	Date	Name	Original		Replacement of	Replaced by			Page 1 / 1630

Parts list

F01_001

Device tag	Quantity	Designation	Type number	Supplier	Part number
=V1UQ52UQ6.1-BGS/R	1	Inductive sensor Monitoring Kit for Power Clamps	1324638	TUNKERS	TUN.1324638

+.UQ52UQ5.1/1

+.UQ53/1

			Date	12/22/2022	Volvo Trucks North America	Valiant TMS	Parts list : TUN.1324638 - TUN.1324638	Drawing name: =2V04&EFS-EL	=	
			Ed.	MKLEPADLO					+ V1UQ52UQ6.1	
			Appr		P6700 Underbody Mainline - Cell 2V04	Scale 1:1		Document type: EPB	Project nr: 22-16151	Page 1 / 1630
Modification	Date	Name	Original		Replacement of	Replaced by				

Parts list

F01_001

Device tag	Quantity	Designation	Type number	Supplier	Part number
=V1UQ53BG0-BG01	1	Inductive sensor With WeldGuard™ coating	BI20U-CA40-AP6X2-H1141/S1590W/BS2.0	TURCK	TUR.BI20U-CA40-AP6X2-H1141/S1590W/BS2.0
=V1UQ53BG0-BG02	1	Inductive sensor With WeldGuard™ coating	BI20U-CA40-AP6X2-H1141/S1590W/BS2.0	TURCK	TUR.BI20U-CA40-AP6X2-H1141/S1590W/BS2.0
=V1UQ53BG0-XG1/2	1	Y splitter	U2-30676	TURCK	TUR.VB2-FSM 4.4/2FKM 4/S3450
=V1UQ53KF1-KF1	0	Bus node	CPX-FB33	FES	FES.548755
=V1UQ53KF1-KF1	0	Interlinking block	CPX-M-GE-EV-S-7/8-5POL	FES	FES.550208
=V1UQ53KF1-KF1.11	0	Manifold block	CPX-M-AB-8-M12X2-5POL	FES	FES.549335
=V1UQ53KF1-KF1.12	0	Manifold block	CPX-M-AB-8-M12X2-5POL	FES	FES.549335

+.UQ52UQ6.1/1

+.UQ53UQ1.1/1

			Date	12/22/2022	Volvo Trucks North America	Valiant TMS	Parts list : TUR.BI20U-CA40-AP6X2-H1141/S1590W/BS2.0 - FES.549335	Drawing name: =2V04&EFS-EL	=	
			Ed.	MKLEPADLO					+ V1UQ53	
			Appr		P6700 Underbody Mainline - Cell 2V04	Scale 1:1		Document type: EPB	Project nr: 22-16151	Page 1 / 1630
Modification	Date	Name	Original		Replacement of	Replaced by				

Parts list

F01_001

Device tag	Quantity	Designation	Type number	Supplier	Part number
=V1UQ53UQ1.1-BGS/R	1	Inductive sensor Monitoring Kit for Power Clamps	1324644	TUNKERS	TUN.1324644

+V1UQ53/1

+.UQ53UQ1.2/1

			Date	12/22/2022	Volvo Trucks North America	Valiant TMS	Parts list : TUN.1324644 - TUN.1324644	Drawing name: =2V04&EFS-EL	=	
			Ed.	MKLEPADLO					+ V1UQ53UQ1.1	
			Appr		P6700 Underbody Mainline - Cell 2V04	Scale 1:1		Document type: EPB	Project nr: 22-16151	Page 1 / 1630
Modification	Date	Name	Original		Replacement of	Replaced by				

Parts list

F01_001

Device tag	Quantity	Designation	Type number	Supplier	Part number
=V1UQ53UQ1.2-BGS/R	1	Inductive sensor Monitoring Kit for Power Clamps	1324644	TUNKERS	TUN.1324644

+.UQ53UQ1.1/1

+.UQ53UQ1.3/1

			Date	12/22/2022	Volvo Trucks North America	Valiant TMS	Parts list : TUN.1324644 - TUN.1324644	Drawing name: =2V04&EFS-EL	= + V1UQ53UQ1.2
			Ed.	MKLEPADLO					
			Appr		P6700 Underbody Mainline - Cell 2V04	Scale 1:1		Document type: EPB	Project nr: 22-16151
Modification	Date	Name	Original		Replacement of	Replaced by			Page 1 / 1630

Parts list

F01_001

Device tag	Quantity	Designation	Type number	Supplier	Part number
=V1UQ53UQ1.3-BGS/R	1	Inductive sensor Monitoring Kit for Power Clamps	1324644	TUNKERS	TUN.1324644

			Date	12/22/2022	Volvo Trucks North America	Valiant TMS	Parts list : TUN.1324644 - TUN.1324644	Drawing name: =2V04&EFS-EL	= + V1UQ53UQ1.3
			Ed.	MKLEPADLO					
			Appr		P6700 Underbody Mainline - Cell 2V04	Scale 1:1		Document type: EPB	Project nr: 22-16151
Modification	Date	Name	Original		Replacement of	Replaced by			Page 1 / 1630

Parts list

F01_001

Device tag	Quantity	Designation	Type number	Supplier	Part number
=V1UQ53UQ1.4-BGS/R	1	Inductive sensor Monitoring Kit for Power Clamps	1324644	TUNKERS	TUN.1324644

+.UQ53UQ1.3/1

+.UQ53UQ2.1/1

			Date	12/22/2022	Volvo Trucks North America	Valiant TMS	Parts list : TUN.1324644 - TUN.1324644	Drawing name: =2V04&EFS-EL	= + V1UQ53UQ1.4
			Ed.	MKLEPADLO					
			Appr		P6700 Underbody Mainline - Cell 2V04	Scale 1:1		Document type: EPB	Project nr: 22-16151
Modification	Date	Name	Original		Replacement of	Replaced by			Page 1 / 1630

Parts list

F01_001

Device tag	Quantity	Designation	Type number	Supplier	Part number
=V1UQ53UQ2.1-BGS/R	1	Inductive sensor Monitoring Kit for Vario Power Clamps	285425	TUNKERS	TUN.285425

+.UQ53UQ1.4/1

+.UQ53UQ2.2/1

Parts list

F01_001

Device tag	Quantity	Designation	Type number	Supplier	Part number
=V1UQ53UQ2.2-BGS/R	1	Inductive sensor Monitoring Kit for Vario Power Clamps	285425	TUNKERS	TUN.285425

+.UQ53UQ2.1/1

+.UQ53UQ3.1/1

Parts list

F01_001

Device tag	Quantity	Designation	Type number	Supplier	Part number
=V1UQ53UQ3.1-BGS/R	1	Inductive sensor Monitoring Kit for Power Clamps	WWS001A	WELKER	WELKER.WWS001A

+.UQ53UQ2.2/1

+.UQ53UQ4.1/1

			Date	12/22/2022	Volvo Trucks North America	Valiant TMS	Parts list : WELKER.WWS001A - WELKER.WWS001A	Drawing name: =2V04&EFS-EL	= + V1UQ53UQ3.1
			Ed.	MKLEPADLO					
			Appr		P6700 Underbody Mainline - Cell 2V04	Scale 1:1		Document type: EPB	Project nr: 22-16151
Modification	Date	Name	Original		Replacement of	Replaced by			Page 1 / 1630

Parts list

F01_001

Device tag	Quantity	Designation	Type number	Supplier	Part number
=V1UQ53UQ4.1-BGS/R	1	Inductive sensor Monitoring Kit for Vario Power Clamps	285425	TUNKERS	TUN.285425

+.UQ53UQ3.1/1

+.UQ53UQ4.2/1

			Date	12/22/2022	Volvo Trucks North America	Valiant TMS	Parts list : TUN.285425 - TUN.285425	Drawing name: =2V04&EFS-EL	=	
			Ed.	MKLEPADLO					+ V1UQ53UQ4.1	
			Appr		P6700 Underbody Mainline - Cell 2V04	Scale 1:1		Document type: EPB	Project nr: 22-16151	Page 1 / 1630
Modification	Date	Name	Original		Replacement of	Replaced by				

Parts list

F01_001

Device tag	Quantity	Designation	Type number	Supplier	Part number
=V1UQ53UQ4.2-BGS/R	1	Inductive sensor Monitoring Kit for Vario Power Clamps	285425	TUNKERS	TUN.285425

+.UQ53UQ4.1/1

+.UQ53UQ5.1/1

			Date	12/22/2022	Volvo Trucks North America	Valiant TMS	Parts list : TUN.285425 - TUN.285425	Drawing name: =2V04&EFS-EL	=	
			Ed.	MKLEPADLO					+ V1UQ53UQ4.2	
			Appr		P6700 Underbody Mainline - Cell 2V04	Scale 1:1		Document type: EPB	Project nr: 22-16151	Page 1 / 1630
Modification	Date	Name	Original		Replacement of	Replaced by				

Parts list

F01_001

Device tag	Quantity	Designation	Type number	Supplier	Part number
=V1UQ53UQ5.1-BG03	1	Inductive sensor With WeldGuard™ coating	BI20U-CA40-AP6X2-H1141/S1590W/BS2.0	TURCK	TUR.BI20U-CA40-AP6X2-H1141/S1590W/BS2.0
=V1UQ53UQ5.1-BG04	1	Inductive sensor With WeldGuard™ coating	BI20U-CA40-AP6X2-H1141/S1590W/BS2.0	TURCK	TUR.BI20U-CA40-AP6X2-H1141/S1590W/BS2.0
=V1UQ53UQ5.1-BG05	1	Inductive sensor With WeldGuard™ coating	BI20U-CA40-AP6X2-H1141/S1590W/BS2.0	TURCK	TUR.BI20U-CA40-AP6X2-H1141/S1590W/BS2.0
=V1UQ53UQ5.1-XGR/S	1	Y splitter	U2-30676	TURCK	TUR.VB2-FSM 4.4/2FKM 4/S3450

+.UQ53UQ4.2/1

+.UQ53UQ6.1/1

			Date	12/22/2022	Volvo Trucks North America	Valiant TMS	Parts list : TUR.BI20U-CA40-AP6X2-H1141/S1590W/BS2.0 - TUR.VB2-FSM 4.4/2FKM 4/S3450	Drawing name: =2V04&EFS-EL	= + V1UQ53UQ5.1
			Ed.	MKLEPADLO					
			Appr		P6700 Underbody Mainline - Cell 2V04	Scale 1:1		Document type: EPB	Project nr: 22-16151
Modification	Date	Name	Original		Replacement of	Replaced by			Page 1 / 1630

Parts list

F01_001

Device tag	Quantity	Designation	Type number	Supplier	Part number
=V1UQ53UQ6.1-BGS/R	1	Inductive sensor Monitoring Kit for Power Clamps	1324638	TUNKERS	TUN.1324638

+.UQ53UQ5.1/1

+.UQ54/1

			Date	12/22/2022	Volvo Trucks North America	Valiant TMS	Parts list : TUN.1324638 - TUN.1324638	Drawing name: =2V04&EFS-EL	=	
			Ed.	MKLEPADLO					+ V1UQ53UQ6.1	
			Appr		P6700 Underbody Mainline - Cell 2V04	Scale 1:1		Document type: EPB	Project nr: 22-16151	Page 1 / 1630
Modification	Date	Name	Original		Replacement of	Replaced by				

Parts list

F01_001

Device tag	Quantity	Designation	Type number	Supplier	Part number
=V1UQ54BG0-BG01	1	Inductive sensor With WeldGuard™ coating	BI20U-CA40-AP6X2-H1141/S1590W/BS2.0	TURCK	TUR.BI20U-CA40-AP6X2-H1141/S1590W/BS2.0
=V1UQ54BG0-BG02	1	Inductive sensor With WeldGuard™ coating	BI20U-CA40-AP6X2-H1141/S1590W/BS2.0	TURCK	TUR.BI20U-CA40-AP6X2-H1141/S1590W/BS2.0
=V1UQ54BG0-XG1/2	1	Y splitter	U2-30676	TURCK	TUR.VB2-FSM 4.4/2FKM 4/S3450
=V1UQ54KF1-KF1	0	Bus node	CPX-FB33	FES	FES.548755
=V1UQ54KF1-KF1	0	Interlinking block	CPX-M-GE-EV-S-7/8-5POL	FES	FES.550208
=V1UQ54KF1-KF1.11	0	Manifold block	CPX-M-AB-8-M12X2-5POL	FES	FES.549335

+.UQ53UQ6.1/1

+.UQ54UQ1.1/1

			Date	12/22/2022	Volvo Trucks North America	Valiant TMS	Parts list : TUR.BI20U-CA40-AP6X2-H1141/S1590W/BS2.0 - FES.549335	Drawing name: =2V04&EFS-EL	= + V1UQ54	
			Ed.	MKLEPADLO						
			Appr		P6700 Underbody Mainline - Cell 2V04	Scale 1:1		Document type: EPB	Project nr: 22-16151	Page 1 / 1630
Modification	Date	Name	Original		Replacement of	Replaced by				

Parts list

F01_001

Device tag	Quantity	Designation	Type number	Supplier	Part number
=V1UQ54UQ1.1-BGS/R	1	Inductive sensor Monitoring Kit for Power Clamps	WWS001A	WELKER	WELKER.WWS001A

+V1UQ54/1

+.UQ54UQ2.1/1

			Date	12/22/2022	Volvo Trucks North America	Valiant TMS	Parts list : WELKER.WWS001A - WELKER.WWS001A	Drawing name: =2V04&EFS-EL	= + V1UQ54UQ1.1
			Ed.	MKLEPADLO					
			Appr		P6700 Underbody Mainline - Cell 2V04	Scale 1:1		Document type: EPB	Project nr: 22-16151
Modification	Date	Name	Original		Replacement of	Replaced by			Page 1 / 1630

Parts list

F01_001

Device tag	Quantity	Designation	Type number	Supplier	Part number
=V1UQ54UQ2.1-BGS/R	1	Inductive sensor Monitoring Kit for Power Clamps	WWS001A	WELKER	WELKER.WWS001A

+.UQ54UQ1.1/1

+.UQ54UQ2.2/1

			Date	12/22/2022	Volvo Trucks North America	Valiant TMS	Parts list : WELKER.WWS001A - WELKER.WWS001A	Drawing name: =2V04&EFS-EL	=	
			Ed.	MKLEPADLO					+ V1UQ54UQ2.1	
			Appr		P6700 Underbody Mainline - Cell 2V04	Scale 1:1		Document type: EPB	Project nr: 22-16151	Page 1 / 1630
Modification	Date	Name	Original		Replacement of	Replaced by				

Parts list

F01_001

Device tag	Quantity	Designation	Type number	Supplier	Part number
=V1UQ54UQ2.2-BGS/R	1	Inductive sensor Monitoring Kit for Power Clamps	WWS001A	WELKER	WELKER.WWS001A

+.UQ54UQ2.1/1

+.UQ54UQ3.1/1

			Date	12/22/2022	Volvo Trucks North America	Valiant TMS	Parts list : WELKER.WWS001A - WELKER.WWS001A	Drawing name: =2V04&EFS-EL	=	
			Ed.	MKLEPADLO					+ V1UQ54UQ2.2	
			Appr		P6700 Underbody Mainline - Cell 2V04	Scale 1:1		Document type: EPB	Project nr: 22-16151	Page 1 / 1630
Modification	Date	Name	Original		Replacement of	Replaced by				

Parts list

F01_001

Device tag	Quantity	Designation	Type number	Supplier	Part number
=V1UQ54UQ3.1-BGS/R	1	Inductive sensor Monitoring Kit for Power Clamps	WWS001A	WELKER	WELKER.WWS001A

+.UQ54UQ2.2/1

+.UQ54UQ3.2/1

			Date	12/22/2022	Volvo Trucks North America	Valiant TMS	Parts list : WELKER.WWS001A - WELKER.WWS001A	Drawing name: =2V04&EFS-EL	=	
			Ed.	MKLEPADLO					+ V1UQ54UQ3.1	
			Appr		P6700 Underbody Mainline - Cell 2V04	Scale 1:1		Document type: EPB	Project nr: 22-16151	Page 1 / 1630
Modification	Date	Name	Original		Replacement of	Replaced by				

Parts list

F01_001

Device tag	Quantity	Designation	Type number	Supplier	Part number
=V1UQ54UQ3.2-BGS/R	1	Inductive sensor Monitoring Kit for Power Clamps	WWS001A	WELKER	WELKER.WWS001A

+.UQ54UQ3.1/1

+.UQ54UQ4.1/1

			Date	12/22/2022	Volvo Trucks North America	Valiant TMS	Parts list : WELKER.WWS001A - WELKER.WWS001A	Drawing name: =2V04&EFS-EL	=	
			Ed.	MKLEPADLO					+ V1UQ54UQ3.2	
			Appr		P6700 Underbody Mainline - Cell 2V04	Scale 1:1		Document type: EPB	Project nr: 22-16151	Page 1 / 1630
Modification	Date	Name	Original		Replacement of	Replaced by				

Parts list

F01_001

Device tag	Quantity	Designation	Type number	Supplier	Part number
=V1UQ54UQ4.1-BGS/R	1	Inductive sensor Monitoring Kit for Power Clamps	WWS001A	WELKER	WELKER.WWS001A

+.UQ54UQ3.2/1

+.UQ55/1

			Date	12/22/2022	Volvo Trucks North America	Valiant TMS	Parts list : WELKER.WWS001A - WELKER.WWS001A	Drawing name: =2V04&EFS-EL	=	
			Ed.	MKLEPADLO					+ V1UQ54UQ4.1	
			Appr		P6700 Underbody Mainline - Cell 2V04	Scale 1:1		Document type: EPB	Project nr: 22-16151	Page 1
Modification	Date	Name	Original		Replacement of	Replaced by				1630

Parts list

F01_001

Device tag	Quantity	Designation	Type number	Supplier	Part number
=V1UQ55BG0-BG01	1	Inductive sensor With WeldGuard™ coating	BI20U-CA40-AP6X2-H1141/S1590W/BS2.0	TURCK	TUR.BI20U-CA40-AP6X2-H1141/S1590W/BS2.0
=V1UQ55BG0-BG02	1	Inductive sensor With WeldGuard™ coating	BI20U-CA40-AP6X2-H1141/S1590W/BS2.0	TURCK	TUR.BI20U-CA40-AP6X2-H1141/S1590W/BS2.0
=V1UQ55BG0-XG1/2	1	Y splitter	U2-30676	TURCK	TUR.VB2-FSM 4.4/2FKM 4/S3450
=V1UQ55KF1-KF1	0	Bus node	CPX-FB33	FES	FES.548755
=V1UQ55KF1-KF1	0	Interlinking block	CPX-M-GE-EV-S-7/8-5POL	FES	FES.550208
=V1UQ55KF1-KF1.11	0	Manifold block	CPX-M-AB-8-M12X2-5POL	FES	FES.549335
=V1UQ55KF1-KF1.12	0	Manifold block	CPX-M-AB-8-M12X2-5POL	FES	FES.549335
=V1UQ55KF1-KF1.13	0	Manifold block	CPX-M-AB-8-M12X2-5POL	FES	FES.549335

+.UQ54UQ4.1/1

+.UQ55UQ1.1/1

			Date	12/22/2022	Volvo Trucks North America	Valiant TMS	Parts list : TUR.BI20U-CA40-AP6X2-H1141/S1590W/BS2.0 - FES.549335	Drawing name: =2V04&EFS-EL	= + V1UQ55
			Ed.	MKLEPADLO					
			Appr		P6700 Underbody Mainline - Cell 2V04	Scale 1:1		Document type: EPB	Project nr: 22-16151
Modification	Date	Name	Original		Replacement of	Replaced by			Page 1 / 1630

Parts list

F01_001

Device tag	Quantity	Designation	Type number	Supplier	Part number
=V1UQ55UQ1.1-BGS/R	1	Inductive sensor Monitoring Kit for Power Clamps	1324644	TUNKERS	TUN.1324644

+V1UQ55/1

+.UQ55UQ1.2/1

			Date	12/22/2022	Volvo Trucks North America	Valiant TMS	Parts list : TUN.1324644 - TUN.1324644	Drawing name: =2V04&EFS-EL	= + V1UQ55UQ1.1
			Ed.	MKLEPADLO					
			Appr		P6700 Underbody Mainline - Cell 2V04	Scale 1:1		Document type: EPB	Project nr: 22-16151
Modification	Date	Name	Original		Replacement of	Replaced by			Page 1 / 1630

Parts list

F01_001

Device tag	Quantity	Designation	Type number	Supplier	Part number
=V1UQ55UQ1.2-BGS/R	1	Inductive sensor Monitoring Kit for Power Clamps	1324644	TUNKERS	TUN.1324644

+.UQ55UQ1.1/1

+.UQ55UQ1.3/1

			Date	12/22/2022	Volvo Trucks North America	Valiant TMS	Parts list : TUN.1324644 - TUN.1324644	Drawing name: =2V04&EFS-EL	= + V1UQ55UQ1.2
			Ed.	MKLEPADLO					
			Appr		P6700 Underbody Mainline - Cell 2V04	Scale 1:1		Document type: EPB	Project nr: 22-16151
Modification	Date	Name	Original		Replacement of	Replaced by			Page 1 / 1630

Parts list

F01_001

Device tag	Quantity	Designation	Type number	Supplier	Part number
=V1UQ55UQ1.3-BGS/R	1	Inductive sensor Monitoring Kit for Power Clamps	1324644	TUNKERS	TUN.1324644

+.UQ55UQ1.2/1

+.UQ55UQ1.4/1

			Date	12/22/2022	Volvo Trucks North America	Valiant TMS	Parts list : TUN.1324644 - TUN.1324644	Drawing name: =2V04&EFS-EL	= + V1UQ55UQ1.3
			Ed.	MKLEPADLO					
			Appr		P6700 Underbody Mainline - Cell 2V04	Scale 1:1		Document type: EPB	Project nr: 22-16151
Modification	Date	Name	Original		Replacement of	Replaced by			Page 1 / 1630

Parts list

F01_001

Device tag	Quantity	Designation	Type number	Supplier	Part number
=V1UQ55UQ1.4-BGS/R	1	Inductive sensor Monitoring Kit for Power Clamps	1324644	TUNKERS	TUN.1324644

+.UQ55UQ1.3/1

+.UQ55UQ2.1/1

			Date	12/22/2022	Volvo Trucks North America	Valiant TMS	Parts list : TUN.1324644 - TUN.1324644	Drawing name: =2V04&EFS-EL	= + V1UQ55UQ1.4
			Ed.	MKLEPADLO					
			Appr		P6700 Underbody Mainline - Cell 2V04	Scale 1:1		Document type: EPB	Project nr: 22-16151
Modification	Date	Name	Original		Replacement of	Replaced by			Page 1 / 1630

Parts list

F01_001

Device tag	Quantity	Designation	Type number	Supplier	Part number
=V1UQ55UQ2.1-BGS/R	1	Inductive sensor Monitoring Kit for Power Clamps	WWS001A	WELKER	WELKER.WWS001A

+.UQ55UQ1.4/1

+.UQ55UQ2.2/1

Parts list

F01_001

Device tag	Quantity	Designation	Type number	Supplier	Part number
=V1UQ55UQ2.2-BGS/R	1	Inductive sensor Monitoring Kit for Power Clamps	WWS001A	WELKER	WELKER.WWS001A

+.UQ55UQ2.1/1

+.UQ55UQ3.1/1

			Date	12/22/2022	Volvo Trucks North America	Valiant TMS	Parts list : WELKER.WWS001A - WELKER.WWS001A	Drawing name: =2V04&EFS-EL	=	
			Ed.	MKLEPADLO					+ V1UQ55UQ2.2	
			Appr		P6700 Underbody Mainline - Cell 2V04	Scale 1:1		Document type: EPB	Project nr: 22-16151	Page 1 / 1630
Modification	Date	Name	Original		Replacement of	Replaced by				

Parts list

F01_001

Device tag	Quantity	Designation	Type number	Supplier	Part number
=V1UQ55UQ3.1-BGS/R	1	Inductive sensor Monitoring Kit for Vario Power Clamps	285425	TUNKERS	TUN.285425

+.UQ55UQ2.2/1

+.UQ55UQ3.2/1

Parts list

F01_001

Device tag	Quantity	Designation	Type number	Supplier	Part number
=V1UQ55UQ3.2-BGS/R	1	Inductive sensor Monitoring Kit for Vario Power Clamps	285425	TUNKERS	TUN.285425

+.UQ55UQ3.1/1

+.UQ55UQ4.1/1

			Date	12/22/2022	Volvo Trucks North America	Valiant TMS	Parts list : TUN.285425 - TUN.285425	Drawing name: =2V04&EFS-EL	=	
			Ed.	MKLEPADLO					+ V1UQ55UQ3.2	
			Appr		P6700 Underbody Mainline - Cell 2V04	Scale 1:1		Document type: EPB	Project nr: 22-16151	Page 1 / 1630
Modification	Date	Name	Original		Replacement of	Replaced by				

Parts list

F01_001

Device tag	Quantity	Designation	Type number	Supplier	Part number
=V1UQ55UQ4.1-BGS/R	1	Inductive sensor Monitoring Kit for Power Clamps	WWS001A	WELKER	WELKER.WWS001A

+.UQ55UQ3.2/1

+.UQ55UQ4.2/1

			Date	12/22/2022	Volvo Trucks North America	Valiant TMS	Parts list : WELKER.WWS001A - WELKER.WWS001A	Drawing name: =2V04&EFS-EL	=	
			Ed.	MKLEPADLO					+ V1UQ55UQ4.1	
			Appr		P6700 Underbody Mainline - Cell 2V04	Scale 1:1		Document type: EPB	Project nr: 22-16151	Page 1 / 1630
Modification	Date	Name	Original		Replacement of	Replaced by				

Parts list

F01_001

Device tag	Quantity	Designation	Type number	Supplier	Part number
=V1UQ55UQ4.2-BGS/R	1	Inductive sensor Monitoring Kit for Power Clamps	WWS001A	WELKER	WELKER.WWS001A

+.UQ55UQ4.1/1

+.UQ55UQ5.1/1

			Date	12/22/2022	Volvo Trucks North America	Valiant TMS	Parts list : WELKER.WWS001A - WELKER.WWS001A	Drawing name: =2V04&EFS-EL	=	
			Ed.	MKLEPADLO					+ V1UQ55UQ4.2	
			Appr		P6700 Underbody Mainline - Cell 2V04	Scale 1:1		Document type: EPB	Project nr: 22-16151	Page 1
Modification	Date	Name	Original		Replacement of	Replaced by				1630

Parts list

F01_001

Device tag	Quantity	Designation	Type number	Supplier	Part number
=V1UQ55UQ5.1-BGS/R	1	Inductive sensor Monitoring Kit for Vario Power Clamps	285425	TUNKERS	TUN.285425

+.UQ55UQ4.2/1

+.UQ55UQ5.2/1

Parts list

F01_001

Device tag	Quantity	Designation	Type number	Supplier	Part number
=V1UQ55UQ5.2-BGS/R	1	Inductive sensor Monitoring Kit for Vario Power Clamps	285425	TUNKERS	TUN.285425

+.UQ55UQ5.1/1

+.UQ55UQ6.1/1

			Date	12/22/2022	Volvo Trucks North America	Valiant TMS	Parts list : TUN.285425 - TUN.285425	Drawing name: =2V04&EFS-EL	= + V1UQ55UQ5.2
			Ed.	MKLEPADLO					
			Appr		P6700 Underbody Mainline - Cell 2V04	Scale 1:1		Document type: EPB	Project nr: 22-16151
Modification	Date	Name	Original		Replacement of	Replaced by			Page 1 / 1630

Parts list

F01_001

Device tag	Quantity	Designation	Type number	Supplier	Part number
=V1UQ55UQ6.1-BGS/R	1	Inductive sensor Monitoring Kit for Power Clamps	WWS001A	WELKER	WELKER.WWS001A

+.UQ55UQ5.2/1

+.UQ55UQ6.2/1

			Date	12/22/2022	Volvo Trucks North America	Valiant TMS	Parts list : WELKER.WWS001A - WELKER.WWS001A	Drawing name: =2V04&EFS-EL	= + V1UQ55UQ6.1
			Ed.	MKLEPADLO					
			Appr		P6700 Underbody Mainline - Cell 2V04	Scale 1:1		Document type: EPB	Project nr: 22-16151
Modification	Date	Name	Original		Replacement of	Replaced by			Page 1 / 1630

Parts list

F01_001

Device tag	Quantity	Designation	Type number	Supplier	Part number
=V1UQ55UQ6.2-BGS/R	1	Inductive sensor Monitoring Kit for Power Clamps	WWS001A	WELKER	WELKER.WWS001A

+.UQ55UQ6.1/1

+.UQ55UQ7.1/1

			Date	12/22/2022	Volvo Trucks North America	Valiant TMS	Parts list : WELKER.WWS001A - WELKER.WWS001A	Drawing name: =2V04&EFS-EL	= + V1UQ55UQ6.2
			Ed.	MKLEPADLO					
			Appr		P6700 Underbody Mainline - Cell 2V04	Scale 1:1		Document type: EPB	Project nr: 22-16151
Modification	Date	Name	Original		Replacement of	Replaced by			Page 1 / 1630

Parts list

F01_001

Device tag	Quantity	Designation	Type number	Supplier	Part number
=V1UQ55UQ7.1-BGS/R	1	Inductive sensor Monitoring Kit for Vario Power Clamps	285425	TUNKERS	TUN.285425

+.UQ55UQ6.2/1

+.UQ55UQ7.2/1

Parts list

F01_001

Device tag	Quantity	Designation	Type number	Supplier	Part number
=V1UQ55UQ7.2-BGS/R	1	Inductive sensor Monitoring Kit for Vario Power Clamps	285425	TUNKERS	TUN.285425

+.UQ55UQ7.1/1

+.UQ55UQ8.1/1

			Date	12/22/2022	Volvo Trucks North America	Valiant TMS	Parts list : TUN.285425 - TUN.285425	Drawing name: =2V04&EFS-EL	= + V1UQ55UQ7.2
			Ed.	MKLEPADLO					
			Appr		P6700 Underbody Mainline - Cell 2V04			Document type: EPB	Project nr: 22-16151
Modification	Date	Name	Original		Replacement of	Replaced by	Scale 1:1		Page 1 / 1630

Parts list

F01_001

Device tag	Quantity	Designation	Type number	Supplier	Part number
=V1UQ55UQ8.1-BGS/R	1	Inductive sensor Monitoring Kit for Power Clamps	WWS001A	WELKER	WELKER.WWS001A

+.UQ55UQ7.2/1

+.UQ55UQ8.2/1

			Date	12/22/2022	Volvo Trucks North America	Valiant TMS	Parts list : WELKER.WWS001A - WELKER.WWS001A	Drawing name: =2V04&EFS-EL	=	
			Ed.	MKLEPADLO					+ V1UQ55UQ8.1	
			Appr		P6700 Underbody Mainline - Cell 2V04	Scale 1:1		Document type: EPB	Project nr: 22-16151	Page 1 / 1630
Modification	Date	Name	Original		Replacement of	Replaced by				

Parts list

F01_001

Device tag	Quantity	Designation	Type number	Supplier	Part number
=V1UQ55UQ8.2-BGS/R	1	Inductive sensor Monitoring Kit for Power Clamps	WWS001A	WELKER	WELKER.WWS001A

+.UQ55UQ8.1/1

+.UQ55UQ9.1/1

			Date	12/22/2022	Volvo Trucks North America	Valiant TMS	Parts list : WELKER.WWS001A - WELKER.WWS001A	Drawing name: =2V04&EFS-EL	=	
			Ed.	MKLEPADLO					+ V1UQ55UQ8.2	
			Appr		P6700 Underbody Mainline - Cell 2V04	Scale 1:1		Document type: EPB	Project nr: 22-16151	Page 1 / 1630
Modification	Date	Name	Original		Replacement of	Replaced by				

Parts list

F01_001

Device tag	Quantity	Designation	Type number	Supplier	Part number
=V1UQ55UQ9.1-BGS/R	1	Inductive sensor Monitoring Kit for Vario Power Clamps	285425	TUNKERS	TUN.285425

+.UQ55UQ8.2/1

+.UQ55UQ9.2/1

Parts list

F01_001

Device tag	Quantity	Designation	Type number	Supplier	Part number
=V1UQ55UQ9.2-BGS/R	1	Inductive sensor Monitoring Kit for Vario Power Clamps	285425	TUNKERS	TUN.285425

+.UQ55UQ9.1/1

+.WR1UQ51/1

			Date	12/22/2022	Volvo Trucks North America	Valiant TMS	Parts list : TUN.285425 - TUN.285425	Drawing name: =2V04&EFS-EL	=	
			Ed.	MKLEPADLO					+ V1UQ55UQ9.2	
			Appr		P6700 Underbody Mainline - Cell 2V04	Scale 1:1		Document type: EPB	Project nr: 22-16151	Page 1 / 1630
Modification	Date	Name	Original		Replacement of	Replaced by				

Parts list

F01_001

Device tag	Quantity	Designation	Type number	Supplier	Part number
=V1WR1UQ51BG0-BG01	1	Inductive sensor With WeldGuard™ coating	BI20U-CA40-AP6X2-H1141/S1590W/BS2.0	TURCK	TUR.BI20U-CA40-AP6X2-H1141/S1590W/BS2.0
=V1WR1UQ51BG0-BG02	1	Inductive sensor With WeldGuard™ coating	BI20U-CA40-AP6X2-H1141/S1590W/BS2.0	TURCK	TUR.BI20U-CA40-AP6X2-H1141/S1590W/BS2.0
=V1WR1UQ51BG0-XG1/2	1	Y splitter	U2-30676	TURCK	TUR.VB2-FSM 4.4/2FKM 4/S3450
=V1WR1UQ51KF1-KF1	0	Bus node	CPX-FB33	FES	FES.548755
=V1WR1UQ51KF1-KF1	0	Interlinking block	CPX-M-GE-EV-S-7/8-5POL	FES	FES.550208
=V1WR1UQ51KF1-KF1.11	0	Manifold block	CPX-M-AB-8-M12X2-5POL	FES	FES.549335
=V1WR1UQ51KF1-KF1.12	0	Manifold block	CPX-M-AB-8-M12X2-5POL	FES	FES.549335
=V1WR1UQ51KF1-KF1.13	0	Manifold block	CPX-M-AB-8-M12X2-5POL	FES	FES.549335

+.UQ55UQ9.2/1

+.WR1UQ51UQ1.1/1

			Date	12/22/2022	Volvo Trucks North America	Valiant TMS	Parts list : TUR.BI20U-CA40-AP6X2-H1141/S1590W/BS2.0 - FES.549335	Drawing name: =2V04&EFS-EL	= + V1WR1UQ51
			Ed.	MKLEPADLO					
			Appr		P6700 Underbody Mainline - Cell 2V04	Scale 1:1		Document type: EPB	Project nr: 22-16151
Modification	Date	Name	Original		Replacement of	Replaced by			Page 1 / 1630

Parts list

F01_001

Device tag	Quantity	Designation	Type number	Supplier	Part number
=V1WR1UQ51UQ1.1-BGS/R	1	Inductive sensor Monitoring Kit for Underbody Clamps	284395	P+F	P+F.284395

+V1WR1UQ51/1

+.WR1UQ51UQ1.2/1

			Date	12/22/2022	Volvo Trucks North America	Valiant TMS	Parts list : P+F.284395 - P+F.284395	Drawing name: =2V04&EFS-EL	= + V1WR1UQ51UQ1.1
			Ed.	MKLEPADLO					
			Appr		P6700 Underbody Mainline - Cell 2V04	Scale 1:1		Document type: EPB	Project nr: 22-16151
Modification	Date	Name	Original		Replacement of	Replaced by			Page 1 / 1630

Parts list

F01_001

Device tag	Quantity	Designation	Type number	Supplier	Part number
=V1WR1UQ51UQ1.2-BGS/R	1	Inductive sensor Monitoring Kit for Underbody Clamps	284395	P+F	P+F.284395

+.WR1UQ51UQ1.1/1

+.WR1UQ51UQ2.1/1

			Date	12/22/2022	Volvo Trucks North America	Valiant TMS	Parts list : P+F.284395 - P+F.284395	Drawing name: =2V04&EFS-EL	=
			Ed.	MKLEPADLO					+ V1WR1UQ51UQ1.2
			Appr		P6700 Underbody Mainline - Cell 2V04	Scale 1:1		Document type: EPB	Project nr: 22-16151
Modification	Date	Name	Original		Replacement of	Replaced by			Page 1 / 1630

Parts list

F01_001

Device tag	Quantity	Designation	Type number	Supplier	Part number
=V1WR1UQ51UQ2.1-BGS/R	1	Inductive sensor Monitoring Kit for Power Clamps	1324644	TUNKERS	TUN.1324644

+.WR1UQ51UQ1.2/1

+.WR1UQ51UQ2.2/1

			Date	12/22/2022	Volvo Trucks North America	Valiant TMS	Parts list : TUN.1324644 - TUN.1324644	Drawing name: =2V04&EFS-EL	= + V1WR1UQ51UQ2.1
			Ed.	MKLEPADLO					
			Appr		P6700 Underbody Mainline - Cell 2V04	Scale 1:1		Document type: EPB	Project nr: 22-16151
Modification	Date	Name	Original		Replacement of	Replaced by			Page 1 / 1630

Parts list

F01_001

Device tag	Quantity	Designation	Type number	Supplier	Part number
=V1WR1UQ51UQ2.2-BGS/R	1	Inductive sensor Monitoring Kit for Power Clamps	1324644	TUNKERS	TUN.1324644

+.WR1UQ51UQ2.1/1

+.WR1UQ51UQ2.3/1

Parts list

F01_001

Device tag	Quantity	Designation	Type number	Supplier	Part number
=V1WR1UQ51UQ2.3-BGS/R	1	Inductive sensor Monitoring Kit for Power Clamps	1324644	TUNKERS	TUN.1324644

+.WR1UQ51UQ2.2/1

+.WR1UQ51UQ2.4/1

Parts list

F01_001

Device tag	Quantity	Designation	Type number	Supplier	Part number
=V1WR1UQ51UQ2.4-BGS/R	1	Inductive sensor Monitoring Kit for Power Clamps	1324644	TUNKERS	TUN.1324644

			Date	12/22/2022	Volvo Trucks North America	Valiant TMS	Parts list : TUN.1324644 - TUN.1324644	Drawing name: =2V04&EFS-EL	=	
			Ed.	MKLEPADLO					+ V1WR1UQ51UQ2.4	
			Appr		P6700 Underbody Mainline - Cell 2V04	Scale 1:1		Document type: EPB	Project nr: 22-16151	Page 1 / 1630
Modification	Date	Name	Original		Replacement of	Replaced by				

Parts list

F01_001

Device tag	Quantity	Designation	Type number	Supplier	Part number
=V1WR1UQ51UQ3.1-BGS/R	1	Inductive sensor Monitoring Kit for Power Clamps	1324644	TUNKERS	TUN.1324644

+.WR1UQ51UQ2.4/1

+.WR1UQ51UQ3.2/1

Parts list

F01_001

Device tag	Quantity	Designation	Type number	Supplier	Part number
=V1WR1UQ51UQ3.2-BGS/R	1	Inductive sensor Monitoring Kit for Power Clamps	1324644	TUNKERS	TUN.1324644

+.WR1UQ51UQ3.1/1

+.WR1UQ51UQ4.1/1

			Date	12/22/2022	Volvo Trucks North America	Valiant TMS	Parts list : TUN.1324644 - TUN.1324644	Drawing name: =2V04&EFS-EL	=	
			Ed.	MKLEPADLO					+ V1WR1UQ51UQ3.2	
			Appr		P6700 Underbody Mainline - Cell 2V04	Scale 1:1		Document type: EPB	Project nr: 22-16151	Page 1 / 1630
Modification	Date	Name	Original		Replacement of	Replaced by				

Parts list

F01_001

Device tag	Quantity	Designation	Type number	Supplier	Part number
=V1WR1UQ51UQ4.1-BGS/R	1	Inductive sensor Monitoring Kit for Power Clamps	1324644	TUNKERS	TUN.1324644

+.WR1UQ51UQ3.2/1

+.WR1UQ51UQ4.2/1

			Date	12/22/2022	Volvo Trucks North America	Valiant TMS	Parts list : TUN.1324644 - TUN.1324644	Drawing name: =2V04&EFS-EL	= + V1WR1UQ51UQ4.1
			Ed.	MKLEPADLO					
			Appr		P6700 Underbody Mainline - Cell 2V04	Scale 1:1		Document type: EPB	Project nr: 22-16151
Modification	Date	Name	Original		Replacement of	Replaced by			Page 1 / 1630

Parts list

F01_001

Device tag	Quantity	Designation	Type number	Supplier	Part number
=V1WR1UQ51UQ4.2-BGS/R	1	Inductive sensor Monitoring Kit for Power Clamps	1324644	TUNKERS	TUN.1324644

+.WR1UQ51UQ4.1/1

+.WR1UQ51UQ5.1/1

			Date	12/22/2022	Volvo Trucks North America	Valiant TMS	Parts list : TUN.1324644 - TUN.1324644	Drawing name: =2V04&EFS-EL	= + V1WR1UQ51UQ4.2
			Ed.	MKLEPADLO					
			Appr		P6700 Underbody Mainline - Cell 2V04	Scale 1:1		Document type: EPB	Project nr: 22-16151
Modification	Date	Name	Original		Replacement of	Replaced by			Page 1 / 1630

Parts list

F01_001

Device tag	Quantity	Designation	Type number	Supplier	Part number
=V1WR1UQ51UQ5.1-BGS/R	1	Inductive sensor Monitoring Kit for Power Clamps	1324644	TUNKERS	TUN.1324644

+.WR1UQ51UQ4.2/1

+.WR1UQ51UQ5.2/1

			Date	12/22/2022	Volvo Trucks North America	Valiant TMS	Parts list : TUN.1324644 - TUN.1324644	Drawing name: =2V04&EFS-EL	=	
			Ed.	MKLEPADLO					+ V1WR1UQ51UQ5.1	
			Appr		P6700 Underbody Mainline - Cell 2V04	Scale 1:1		Document type: EPB	Project nr: 22-16151	Page 1 / 1630
Modification	Date	Name	Original		Replacement of	Replaced by				

Parts list

F01_001

Device tag	Quantity	Designation	Type number	Supplier	Part number
=V1WR1UQ51UQ5.2-BGS/R	1	Inductive sensor Monitoring Kit for Power Clamps	1324644	TUNKERS	TUN.1324644

+.WR1UQ51UQ5.1/1

+.WR1UQ51UQ6.1/1

			Date	12/22/2022	Volvo Trucks North America	Valiant TMS	Parts list : TUN.1324644 - TUN.1324644	Drawing name: =2V04&EFS-EL	= + V1WR1UQ51UQ5.2
			Ed.	MKLEPADLO					
			Appr		P6700 Underbody Mainline - Cell 2V04	Scale 1:1		Document type: EPB	Project nr: 22-16151
Modification	Date	Name	Original		Replacement of	Replaced by			Page 1 / 1630

Parts list

F01_001

Device tag	Quantity	Designation	Type number	Supplier	Part number
=V1WR1UQ51UQ6.1-BGS/R	1	Inductive sensor Monitoring Kit for Power Clamps	1324644	TUNKERS	TUN.1324644

+.WR1UQ51UQ5.2/1

+.WR1UQ51UQ6.2/1

			Date	12/22/2022	Volvo Trucks North America	Valiant TMS	Parts list : TUN.1324644 - TUN.1324644	Drawing name: =2V04&EFS-EL	=	
			Ed.	MKLEPADLO					+ V1WR1UQ51UQ6.1	
			Appr		P6700 Underbody Mainline - Cell 2V04	Scale 1:1		Document type: EPB	Project nr: 22-16151	Page 1
Modification	Date	Name	Original		Replacement of	Replaced by				1630

Parts list

F01_001

Device tag	Quantity	Designation	Type number	Supplier	Part number
=V1WR1UQ51UQ6.2-BGS/R	1	Inductive sensor Monitoring Kit for Power Clamps	1324644	TUNKERS	TUN.1324644

+.WR1UQ51UQ6.1/1

+.WR1UQ51UQ7.1/1

			Date	12/22/2022	Volvo Trucks North America	Valiant TMS	Parts list : TUN.1324644 - TUN.1324644	Drawing name: =2V04&EFS-EL	= + V1WR1UQ51UQ6.2
			Ed.	MKLEPADLO					
			Appr		P6700 Underbody Mainline - Cell 2V04	Scale 1:1		Document type: EPB	Project nr: 22-16151
Modification	Date	Name	Original		Replacement of	Replaced by			Page 1 / 1630

Parts list

F01_001

Device tag	Quantity	Designation	Type number	Supplier	Part number
=V1WR1UQ51UQ7.1-BGS/R	1	Inductive sensor Monitoring Kit for Power Clamps	WWS001A	WELKER	WELKER.WWS001A

+.WR1UQ51UQ6.2/1

+.WR1UQ51UQ7.2/1

Parts list

F01_001

Device tag	Quantity	Designation	Type number	Supplier	Part number
=V1WR1UQ51UQ7.2-BGS/R	1	Inductive sensor Monitoring Kit for Power Clamps	WWS001A	WELKER	WELKER.WWS001A

+.WR1UQ51UQ7.1/1

+.WR1UQ51UQ8.1/1

Parts list

F01_001

Device tag	Quantity	Designation	Type number	Supplier	Part number
=V1WR1UQ51UQ8.1-BGS/R	1	Inductive sensor Monitoring Kit for Power Clamps	WWS001A	WELKER	WELKER.WWS001A

+.WR1UQ51UQ7.2/1

+.WR1UQ51UQ8.2/1

			Date	12/22/2022	Volvo Trucks North America	Valiant TMS	Parts list : WELKER.WWS001A - WELKER.WWS001A	Drawing name: =2V04&EFS-EL	=	
			Ed.	MKLEPADLO					+ V1WR1UQ51UQ8.1	
			Appr		P6700 Underbody Mainline - Cell 2V04	Scale 1:1		Document type: EPB	Project nr: 22-16151	Page 1 / 1630
Modification	Date	Name	Original		Replacement of	Replaced by				

Parts list

F01_001

Device tag	Quantity	Designation	Type number	Supplier	Part number
=V1WR1UQ51UQ8.2-BGS/R	1	Inductive sensor Monitoring Kit for Power Clamps	WWS001A	WELKER	WELKER.WWS001A

+.WR1UQ51UQ8.1/1

+.WR1UQ51UQ9.1/1

Parts list

F01_001

Device tag	Quantity	Designation	Type number	Supplier	Part number
=V1WR1UQ51UQ9.1-BGS/R	1	Inductive sensor Monitoring Kit for Power Clamps	WWS001A	WELKER	WELKER.WWS001A

+.WR1UQ51UQ8.2/1

+.WR1UQ51UQ9.2/1

			Date	12/22/2022	Volvo Trucks North America	Valiant TMS	Parts list : WELKER.WWS001A - WELKER.WWS001A	Drawing name: =2V04&EFS-EL	=	
			Ed.	MKLEPADLO					+ V1WR1UQ51UQ9.1	
			Appr		P6700 Underbody Mainline - Cell 2V04	Scale 1:1		Document type: EPB	Project nr: 22-16151	Page 1 / 1630
Modification	Date	Name	Original		Replacement of	Replaced by				

Parts list

F01_001

Device tag	Quantity	Designation	Type number	Supplier	Part number
=V1WR1UQ51UQ9.2-BGS/R	1	Inductive sensor Monitoring Kit for Power Clamps	WWS001A	WELKER	WELKER.WWS001A

+.WR1UQ51UQ9.1/1

&ETT+/1

			Date	12/22/2022	Volvo Trucks North America	Valiant TMS	Parts list : WELKER.WWS001A - WELKER.WWS001A	Drawing name: =2V04&EFS-EL	= + V1WR1UQ51UQ9.2	
			Ed.	MKLEPADLO						
			Appr		P6700 Underbody Mainline - Cell 2V04	Scale 1:1		Document type: EPB	Project nr: 22-16151	Page 1 / 1630
Modification	Date	Name	Original		Replacement of	Replaced by				

Terminal line-up diagram

F12_001

Part number					
Mounting rail			Strip label	End angle rear	End plate

Terminal					
Part number	Type number	Cross-section	Terminal label	Jumper	Cover

Terminal line-up diagram

F12_001

Part number					
Mounting rail			Strip label	End angle rear	End plate

Terminal					
Part number	Type number	Cross-section	Terminal label	Jumper	Cover

Terminal line-up diagram

F12_001

Part number					
Mounting rail			Strip label	End angle rear	End plate

Terminal					
Part number	Type number	Cross-section	Terminal label	Jumper	Cover
WEI.1608510000	ZDU 2.5	2.5			
WEI.1608740000	ZAP/TW 1				
WEI.9540000000	ZEW 35				
WEI.1608520000	ZDU 2.5 BL	2.5 mm²			
WEI.1608520000	ZDU 2.5 BL	2.5 mm²			

=KF0WC3+UC31-XD1

'	L1	
'	N	
'		
'	PE	
'		

2 4

			Date	12/22/2022	Volvo Trucks North America	Valiant TMS	Terminal line-up diagram =KF0WC3+UC31-XD1	Drawing name: =2V04&EFS-EL	=
			Ed.	MKLEPADLO					+
			Appr		P6700 Underbody Mainline - Cell 2V04			Document type: ETT	Project nr: 22-16151
Modification	Date	Name	Original		Replacement of	Replaced by	Scale 1:1		Page 3 / 1630

Terminal line-up diagram

F12_001

Part number					
Mounting rail			Strip label	End angle rear	End plate

Terminal					
Part number	Type number	Cross-section	Terminal label	Jumper	Cover
WEI.1608510000	ZDU 2.5	2.5			
WEI.1608740000	ZAP/TW 1				
WEI.9540000000	ZEW 35				
WEI.1608520000	ZDU 2.5 BL	2.5 mm²			
WEI.1608520000	ZDU 2.5 BL	2.5 mm²			

=KF0WC3+UC31-XD2

'	1L1	
'	N	
'		
'	PE	
'		

3 5

			Date	12/22/2022	Volvo Trucks North America	Valiant TMS	Terminal line-up diagram =KF0WC3+UC31-XD2	Drawing name: =2V04&EFS-EL	=
			Ed.	MKLEPADLO					+
			Appr		P6700 Underbody Mainline - Cell 2V04			Document type: ETT	Project nr: 22-16151	Page 4
Modification	Date	Name	Original		Replacement of	Replaced by	Scale 1:1			1630

Terminal line-up diagram

F12_001

Part number					
Mounting rail			Strip label	End angle rear	End plate

Terminal					
Part number	Type number	Cross-section	Terminal label	Jumper	Cover
WEI.8731720000	ZTR 2.5/3AN	2.5			
WEI.1608800000	ZAP/TW 3				
WEI.9540000000	ZEW 35				
WEI.8731720000	ZTR 2.5/3AN	2.5			
WEI.8731720000	ZTR 2.5/3AN	2.5			
WEI.8731720000	ZTR 2.5/3AN	2.5			
WEI.8731720000	ZTR 2.5/3AN	2.5			
WEI.8731720000	ZTR 2.5/3AN	2.5			

=KF0WC4+UC31-XD11

	1	
	2	
	3	
	11	
	12	
	13	

4

6

			Date	12/22/2022	Volvo Trucks North America	Valiant TMS	Terminal line-up diagram =KF0WC4+UC31-XD11	Drawing name: =2V04&EFS-EL	=
			Ed.	MKLEPADLO					+
			Appr		P6700 Underbody Mainline - Cell 2V04			Document type: ETT	Project nr: 22-16151
Modification	Date	Name	Original		Replacement of	Replaced by	Scale 1:1		Page 5 / 1630

Terminal line-up diagram

F12_001

Part number					
Mounting rail			Strip label	End angle rear	End plate

Terminal					
Part number	Type number	Cross-section	Terminal label	Jumper	Cover
WEI.8731720000	ZTR 2.5/3AN	2.5			
WEI.1608800000	ZAP/TW 3				
WEI.9540000000	ZEW 35				
WEI.8731720000	ZTR 2.5/3AN	2.5			
WEI.8731720000	ZTR 2.5/3AN	2.5			
WEI.8731720000	ZTR 2.5/3AN	2.5			
WEI.8731720000	ZTR 2.5/3AN	2.5			
WEI.8731720000	ZTR 2.5/3AN	2.5			
WEI.8731720000	ZTR 2.5/3AN	2.5			
WEI.8731720000	ZTR 2.5/3AN	2.5			
WEI.8731720000	ZTR 2.5/3AN	2.5			

=KF0WC4+UC31-XD12

	1	
	2	
	3	
	4	
	11	
	12	
	13	
	14	

5 7

			Date	12/22/2022	Volvo Trucks North America	Valiant TMS	Terminal line-up diagram =KF0WC4+UC31-XD12	Drawing name: =2V04&EFS-EL	=
			Ed.	MKLEPADLO	P6700 Underbody Mainline - Cell 2V04				+
			Appr			Scale 1:1		Document type: ETT	Project nr: 22-16151
Modification	Date	Name	Original		Replacement of	Replaced by			Page 6 / 1630

Terminal line-up diagram

F12_001

Part number					
Mounting rail			Strip label	End angle rear	End plate

Terminal					
Part number	Type number	Cross-section	Terminal label	Jumper	Cover
WEI.8731720000	ZTR 2.5/3AN	2.5			
WEI.1608800000	ZAP/TW 3				
WEI.9540000000	ZEW 35				
WEI.8731720000	ZTR 2.5/3AN	2.5			
WEI.8731720000	ZTR 2.5/3AN	2.5			
WEI.8731720000	ZTR 2.5/3AN	2.5			
WEI.8731720000	ZTR 2.5/3AN	2.5			
WEI.8731720000	ZTR 2.5/3AN	2.5			

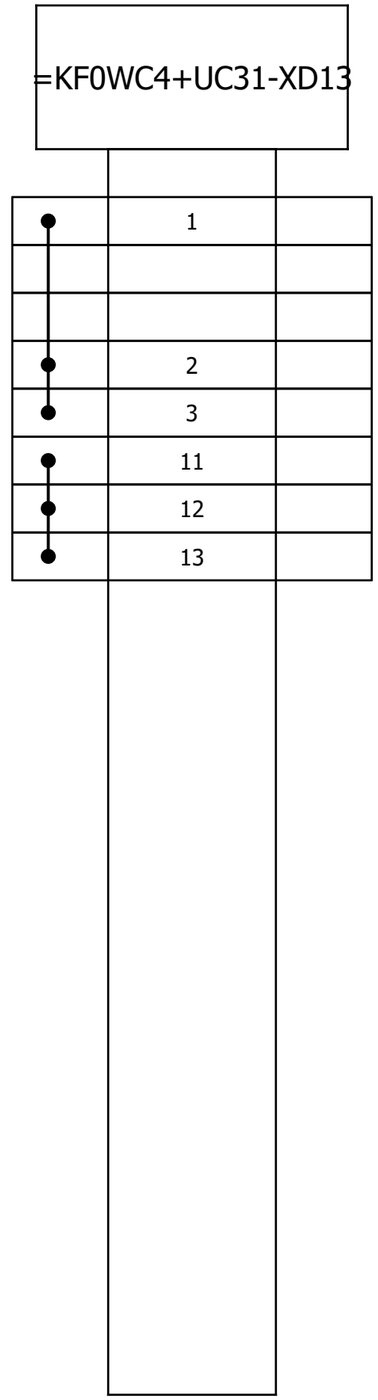

6

8

			Date	12/22/2022	Volvo Trucks North America	Valiant TMS	Terminal line-up diagram =KF0WC4+UC31-XD13	Drawing name: =2V04&EFS-EL	=
			Ed.	MKLEPADLO					+
			Appr		P6700 Underbody Mainline - Cell 2V04			Document type: ETT	Project nr: 22-16151
Modification	Date	Name	Original		Replacement of	Replaced by	Scale 1:1		Page 7 / 1630

Terminal line-up diagram

F12_001

Part number					
Mounting rail			Strip label	End angle rear	End plate

Terminal					
Part number	Type number	Cross-section	Terminal label	Jumper	Cover
WEI.8731720000	ZTR 2.5/3AN	2.5			
WEI.1608800000	ZAP/TW 3				
WEI.9540000000	ZEW 35				
WEI.8731720000	ZTR 2.5/3AN	2.5			
WEI.8731720000	ZTR 2.5/3AN	2.5			
WEI.8731720000	ZTR 2.5/3AN	2.5			
WEI.8731720000	ZTR 2.5/3AN	2.5			
WEI.8731720000	ZTR 2.5/3AN	2.5			
WEI.8731720000	ZTR 2.5/3AN	2.5			
WEI.8731720000	ZTR 2.5/3AN	2.5			
WEI.8731720000	ZTR 2.5/3AN	2.5			

=KF0WC4+UC31-XD14

	1	
	2	
	3	
	4	
	11	
	12	
	13	
	14	

7

9

			Date	12/22/2022	Volvo Trucks North America	Valiant TMS	Terminal line-up diagram =KF0WC4+UC31-XD14	Drawing name: =2V04&EFS-EL	=
			Ed.	MKLEPADLO					+
			Appr		P6700 Underbody Mainline - Cell 2V04			Document type: ETT	Project nr: 22-16151
Modification	Date	Name	Original		Replacement of	Replaced by	Scale 1:1		Page 8 / 1630

Terminal line-up diagram

F12_001

Part number					
Mounting rail			Strip label	End angle rear	End plate

Terminal					
Part number	Type number	Cross-section	Terminal label	Jumper	Cover

Terminal line-up diagram

F12_001

Part number					
Mounting rail			Strip label	End angle rear	End plate

Terminal					
Part number	Type number	Cross-section	Terminal label	Jumper	Cover
1SNK705012R0000	ZK2.5-4P	2.5			
1SNK705012R0000	ZK2.5-4P	2.5			
1SNK705012R0000	ZK2.5-4P	2.5			
1SNK705012R0000	ZK2.5-4P	2.5			
1SNK705012R0000	ZK2.5-4P	2.5			
1SNK705012R0000	ZK2.5-4P	2.5			
1SNK705012R0000	ZK2.5-4P	2.5			
1SNK705012R0000	ZK2.5-4P	2.5			
1SNK705012R0000	ZK2.5-4P	2.5			
1SNK705012R0000	ZK2.5-4P	2.5			
1SNK705012R0000	ZK2.5-4P	2.5			
1SNK705012R0000	ZK2.5-4P	2.5			
1SNK705012R0000	ZK2.5-4P	2.5			
1SNK705012R0000	ZK2.5-4P	2.5			
1SNK705012R0000	ZK2.5-4P	2.5			

=V1WC2+V1UC11-XD1

	1	
	2	
	3	
	4	
	5	
	6	
	7	
	8	
	9	
	10	
	11	
	12	
	13	
	14	
	15	
	16	

9

11

			Date	12/22/2022	Volvo Trucks North America	Valiant TMS	Terminal line-up diagram =V1WC2+V1UC11-XD1	Drawing name: =2V04&EFS-EL	=
			Ed.	MKLEPADLO					+
			Appr		P6700 Underbody Mainline - Cell 2V04			Document type: ETT	Project nr: 22-16151
Modification	Date	Name	Original		Replacement of	Replaced by	Scale 1:1		Page 10 / 1630

Terminal line-up diagram

F12_001

Part number					
Mounting rail			Strip label	End angle rear	End plate

Terminal					
Part number	Type number	Cross-section	Terminal label	Jumper	Cover
1SNK705012R0000	ZK2.5-4P	2.5			
1SNK705012R0000	ZK2.5-4P	2.5			
1SNK705012R0000	ZK2.5-4P	2.5			
1SNK705012R0000	ZK2.5-4P	2.5			
1SNK705012R0000	ZK2.5-4P	2.5			
1SNK705012R0000	ZK2.5-4P	2.5			
1SNK705012R0000	ZK2.5-4P	2.5			
1SNK705012R0000	ZK2.5-4P	2.5			

=V1WC2+V1UC11-XD2

	1	
	2	
	3	
	4	
	5	
	6	
	7	
	8	

			Date	12/22/2022	Volvo Trucks North America	Valiant TMS	Terminal line-up diagram =V1WC2+V1UC11-XD2	Drawing name: =2V04&EFS-EL	=
			Ed.	MKLEPADLO					+
			Appr		P6700 Underbody Mainline - Cell 2V04			Document type: ETT	Project nr: 22-16151
Modification	Date	Name	Original		Replacement of	Replaced by	Scale 1:1		Page 11 / 1630

Terminal line-up diagram

F12_001

Part number					
Mounting rail			Strip label	End angle rear	End plate
Terminal					
Part number	Type number	Cross-section	Terminal label	Jumper	Cover
1SNK705012R0000	ZK2.5-4P	2.5			
1SNK705012R0000	ZK2.5-4P	2.5			
1SNK705012R0000	ZK2.5-4P	2.5			
1SNK705012R0000	ZK2.5-4P	2.5			
1SNK705012R0000	ZK2.5-4P	2.5			

=V1WC2+V1UC11-XD3

	1	
	2	
	3	
	4	
	5	

11

13

			Date	12/22/2022	Volvo Trucks North America	Valiant TMS	Terminal line-up diagram =V1WC2+V1UC11-XD3	Drawing name: =2V04&EFS-EL	=
			Ed.	MKLEPADLO					+
			Appr		P6700 Underbody Mainline - Cell 2V04			Document type: ETT	Project nr: 22-16151
Modification	Date	Name	Original		Replacement of	Replaced by	Scale 1:1		Page 12 / 1630

Terminal line-up diagram

F12_001

Part number					
Mounting rail			Strip label	End angle rear	End plate
Terminal					
Part number	Type number	Cross-section	Terminal label	Jumper	Cover
1SNK706012R0000	ZK4-4P	4			
1SNK706012R0000	ZK4-4P	4			
1SNK706012R0000	ZK4-4P	4			
1SNK706012R0000	ZK4-4P	4			

=V1WC3+V1UC11-XD1

'	1	
'	2	
'	3	
'	4	

12

14

			Date	12/22/2022	Volvo Trucks North America	Valiant TMS	Terminal line-up diagram =V1WC3+V1UC11-XD1	Drawing name: =2V04&EFS-EL
			Ed.	MKLEPADLO	P6700 Underbody Mainline - Cell 2V04			
			Appr			Scale 1:1		Document type: ETT
Modification	Date	Name	Original		Replacement of	Replaced by		Project nr: 22-16151

=	
+	
Page	13
	1630

Terminal line-up diagram

F12_001

Part number					
Mounting rail			Strip label	End angle rear	End plate

Terminal					
Part number	Type number	Cross-section	Terminal label	Jumper	Cover
1SNK706012R0000	ZK4-4P	4			
1SNK706012R0000	ZK4-4P	4			
1SNK706012R0000	ZK4-4P	4			
1SNK706012R0000	ZK4-4P	4			
1SNK706012R0000	ZK4-4P	4			
1SNK706012R0000	ZK4-4P	4			
1SNK706012R0000	ZK4-4P	4			
1SNK706012R0000	ZK4-4P	4			
1SNK706012R0000	ZK4-4P	4			
1SNK706012R0000	ZK4-4P	4			
1SNK706012R0000	ZK4-4P	4			
1SNK706012R0000	ZK4-4P	4			

=V1WC3+V1UC11-XD2

'	1	
'	2	
'	3	
'	4	
'	5	
'	6	
'	7	
'	8	
'	9	
'	10	
'	11	
'	12	

13

15

			Date	12/22/2022	Volvo Trucks North America	Valiant TMS	Terminal line-up diagram =V1WC3+V1UC11-XD2	Drawing name: =2V04&EFS-EL	=	
			Ed.	MKLEPADLO					+	
			Appr		P6700 Underbody Mainline - Cell 2V04			Document type: ETT	Project nr: 22-16151	Page 14 / 1630
Modification	Date	Name	Original		Replacement of / Replaced by	Scale 1:1				

Terminal line-up diagram

F12_001

Part number					
Mounting rail			Strip label	End angle rear	End plate

Terminal					
Part number	Type number	Cross-section	Terminal label	Jumper	Cover
1SNK705012R0000	ZK2.5-4P	2.5			
1SNK705012R0000	ZK2.5-4P	2.5			
1SNK705012R0000	ZK2.5-4P	2.5			
1SNK705012R0000	ZK2.5-4P	2.5			
1SNK705012R0000	ZK2.5-4P	2.5			
1SNK705012R0000	ZK2.5-4P	2.5			
1SNK705012R0000	ZK2.5-4P	2.5			
1SNK705012R0000	ZK2.5-4P	2.5			
1SNK705012R0000	ZK2.5-4P	2.5			

=V1WC3+V1UC11-XD3

	1	
	2	
	3	
	4	
	5	
	6	
	7	
	8	
	9	

			Date	12/22/2022	Volvo Trucks North America	Valiant TMS	Terminal line-up diagram =V1WC3+V1UC11-XD3	Drawing name: =2V04&EFS-EL	=
			Ed.	MKLEPADLO					+
			Appr		P6700 Underbody Mainline - Cell 2V04			Document type: ETT	Project nr: 22-16151
Modification	Date	Name	Original		Replacement of	Replaced by	Scale 1:1		Page 15 / 1630

Terminal line-up diagram

F12_001

Part number					
Mounting rail			Strip label	End angle rear	End plate
Terminal					
Part number	Type number	Cross-section	Terminal label	Jumper	Cover
1SNK705012R0000	ZK2.5-4P	2.5			
1SNK705012R0000	ZK2.5-4P	2.5			
1SNK705012R0000	ZK2.5-4P	2.5			
1SNK705012R0000	ZK2.5-4P	2.5			

=V1WC4+V1UC11-KF11.14

'	1	
'	2	
'	3	
'	4	

15

17

			Date	12/22/2022	Volvo Trucks North America	Valiant TMS	Terminal line-up diagram =V1WC4+V1UC11-KF11.14	Drawing name: =2V04&EFS-EL	=
			Ed.	MKLEPADLO					+
			Appr		P6700 Underbody Mainline - Cell 2V04			Document type: ETT	Project nr: 22-16151
Modification	Date	Name	Original		Replacement of	Replaced by	Scale 1:1		Page 16 / 1630

Terminal line-up diagram

F12_001

Part number					
Mounting rail			Strip label	End angle rear	End plate

Terminal					
Part number	Type number	Cross-section	Terminal label	Jumper	Cover
1SNK705012R0000	ZK2.5-4P	2.5			

Terminal line-up diagram

F12_001

Part number					
Mounting rail			Strip label	End angle rear	End plate

Terminal					
Part number	Type number	Cross-section	Terminal label	Jumper	Cover
1SNK705012R0000	ZK2.5-4P	2.5			

=V1WC4+V1UC11-XD6

'	1	

			Date	12/22/2022	Volvo Trucks North America	Valiant TMS	Terminal line-up diagram =V1WC4+V1UC11-XD6	Drawing name: =2V04&EFS-EL = +
			Ed.	MKLEPADLO	P6700 Underbody Mainline - Cell 2V04			
			Appr					Document type: ETT / Project nr: 22-16151 / Page 18 / 1630
Modification	Date	Name	Original		Replacement of / Replaced by	Scale 1:1		

Terminal line-up diagram

F12_001

Part number					
Mounting rail			Strip label	End angle rear	End plate

Terminal					
Part number	Type number	Cross-section	Terminal label	Jumper	Cover
1SNK705012R0000	ZK2.5-4P	2.5			
1SNK705012R0000	ZK2.5-4P	2.5			
1SNK705012R0000	ZK2.5-4P	2.5			
1SNK705012R0000	ZK2.5-4P	2.5			
1SNK705012R0000	ZK2.5-4P	2.5			
1SNK705012R0000	ZK2.5-4P	2.5			
1SNK705012R0000	ZK2.5-4P	2.5			
1SNK705012R0000	ZK2.5-4P	2.5			
1SNK705012R0000	ZK2.5-4P	2.5			
1SNK705012R0000	ZK2.5-4P	2.5			
1SNK705012R0000	ZK2.5-4P	2.5			
1SNK705012R0000	ZK2.5-4P	2.5			
1SNK705012R0000	ZK2.5-4P	2.5			

=V1WC4+V1UC11-XD10

	1	
	2	
	3	
	5	
	4	
	6	
	7	
	8	
	9	
	10	
	11	
	12	
	13	
	14	

			Date	12/22/2022	Volvo Trucks North America	Valiant TMS	Terminal line-up diagram =V1WC4+V1UC11-XD10	Drawing name: =2V04&EFS-EL	=
			Ed.	MKLEPADLO					+
			Appr		P6700 Underbody Mainline - Cell 2V04			Document type: ETT	Project nr: 22-16151
Modification	Date	Name	Original		Replacement of / Replaced by	Scale 1:1			Page 19 / 1630

Terminal line-up diagram

F12_001

Part number					
Mounting rail			Strip label	End angle rear	End plate

Terminal					
Part number	Type number	Cross-section	Terminal label	Jumper	Cover
1SNK705012R0000	ZK2.5-4P	2.5			

Terminal line-up diagram

F12_001

Part number					
Mounting rail			Strip label	End angle rear	End plate

Terminal					
Part number	Type number	Cross-section	Terminal label	Jumper	Cover
1SNK705012R0000	ZK2.5-4P	2.5			
1SNK705012R0000	ZK2.5-4P	2.5			

Terminal line-up diagram

F12_001

Part number					
Mounting rail			Strip label	End angle rear	End plate

Terminal					
Part number	Type number	Cross-section	Terminal label	Jumper	Cover
1SNK705012R0000	ZK2.5-4P	2.5			
1SNK705012R0000	ZK2.5-4P	2.5			
1SNK705012R0000	ZK2.5-4P	2.5			
1SNK705012R0000	ZK2.5-4P	2.5			
1SNK705012R0000	ZK2.5-4P	2.5			
1SNK705012R0000	ZK2.5-4P	2.5			
1SNK705012R0000	ZK2.5-4P	2.5			

=V1WC4+V1UC11-XD13

	1	
	2	
	3	
	4	
	5	
	6	
	7	

			Date	12/22/2022	Volvo Trucks North America	Valiant TMS	Terminal line-up diagram =V1WC4+V1UC11-XD13	Drawing name: =2V04&EFS-EL	=
			Ed.	MKLEPADLO					+
			Appr		P6700 Underbody Mainline - Cell 2V04			Document type: ETT	Project nr: 22-16151
Modification	Date	Name	Original		Replacement of	Replaced by	Scale 1:1		Page 22 / 1630

Terminal line-up diagram

F12_001

Part number					
Mounting rail			Strip label	End angle rear	End plate
Terminal					
Part number	Type number	Cross-section	Terminal label	Jumper	Cover
1SNK705012R0000	ZK2.5-4P	2.5			
1SNK705012R0000	ZK2.5-4P	2.5			

Terminal line-up diagram

F12_001

Part number					
Mounting rail			Strip label	End angle rear	End plate

Terminal					
Part number	Type number	Cross-section	Terminal label	Jumper	Cover
1SNK705012R0000	ZK2.5-4P	2.5			
1SNK705012R0000	ZK2.5-4P	2.5			
1SNK705012R0000	ZK2.5-4P	2.5			
1SNK705012R0000	ZK2.5-4P	2.5			
1SNK705012R0000	ZK2.5-4P	2.5			
1SNK705012R0000	ZK2.5-4P	2.5			
1SNK705012R0000	ZK2.5-4P	2.5			
1SNK705012R0000	ZK2.5-4P	2.5			

=V1WC4+V1UC11-XD20

	1	
	2	
	3	
	4	
	5	
	6	
	7	
	8	

			Date	12/22/2022	Volvo Trucks North America	Valiant TMS	Terminal line-up diagram =V1WC4+V1UC11-XD20	Drawing name: =2V04&EFS-EL	=
			Ed.	MKLEPADLO					+
			Appr		P6700 Underbody Mainline - Cell 2V04			Document type: ETT	Project nr: 22-16151
Modification	Date	Name	Original		Replacement of	Replaced by	Scale 1:1		Page 24 / 1630

Terminal line-up diagram

F12_001

Part number					
Mounting rail			Strip label	End angle rear	End plate

Terminal					
Part number	Type number	Cross-section	Terminal label	Jumper	Cover
1SNK705012R0000	ZK2.5-4P	2.5			
1SNK705012R0000	ZK2.5-4P	2.5			

Terminal line-up diagram

F12_001

Part number					
Mounting rail			Strip label	End angle rear	End plate

Terminal					
Part number	Type number	Cross-section	Terminal label	Jumper	Cover
1SNK705012R0000	ZK2.5-4P	2.5			
1SNK705012R0000	ZK2.5-4P	2.5			

Terminal line-up diagram

F12_001

Part number					
Mounting rail			Strip label	End angle rear	End plate

Terminal					
Part number	Type number	Cross-section	Terminal label	Jumper	Cover
1SNK705012R0000	ZK2.5-4P	2.5			
1SNK705012R0000	ZK2.5-4P	2.5			

Terminal line-up diagram

F12_001

Part number					
Mounting rail			Strip label	End angle rear	End plate
Terminal					
Part number	Type number	Cross-section	Terminal label	Jumper	Cover
1SNK705012R0000	ZK2.5-4P	2.5			
1SNK705012R0000	ZK2.5-4P	2.5			

Terminal line-up diagram

F12_001

Part number					
Mounting rail			Strip label	End angle rear	End plate

Terminal					
Part number	Type number	Cross-section	Terminal label	Jumper	Cover

Terminal line-up diagram

F12_001

Part number					
Mounting rail			Strip label	End angle rear	End plate

Terminal					
Part number	Type number	Cross-section	Terminal label	Jumper	Cover
1SNK705012R0000	ZK2.5-4P	2.5			
1SNK705012R0000	ZK2.5-4P	2.5			
1SNK705012R0000	ZK2.5-4P	2.5			
1SNK705012R0000	ZK2.5-4P	2.5			
1SNK705012R0000	ZK2.5-4P	2.5			
1SNK705012R0000	ZK2.5-4P	2.5			
1SNK705012R0000	ZK2.5-4P	2.5			
1SNK705012R0000	ZK2.5-4P	2.5			
1SNK705012R0000	ZK2.5-4P	2.5			
1SNK705012R0000	ZK2.5-4P	2.5			
1SNK705012R0000	ZK2.5-4P	2.5			
1SNK705012R0000	ZK2.5-4P	2.5			
1SNK705012R0000	ZK2.5-4P	2.5			
1SNK705012R0000	ZK2.5-4P	2.5			
1SNK705012R0000	ZK2.5-4P	2.5			
1SNK705012R0000	ZK2.5-4P	2.5			

=V1WC2+V1UC12-XD1

	1	
	2	
	3	
	4	
	5	
	6	
	7	
	8	
	9	
	10	
	11	
	12	
	13	
	14	
	15	
	16	

			Date	12/22/2022	Volvo Trucks North America	Valiant TMS	Terminal line-up diagram =V1WC2+V1UC12-XD1	Drawing name: =2V04&EFS-EL	=
			Ed.	MKLEPADLO					+
			Appr		P6700 Underbody Mainline - Cell 2V04			Document type: ETT	Project nr: 22-16151
Modification	Date	Name	Original		Replacement of	Replaced by	Scale 1:1		Page 30 / 1630

Terminal line-up diagram

F12_001

Part number					
Mounting rail			Strip label	End angle rear	End plate

Terminal					
Part number	Type number	Cross-section	Terminal label	Jumper	Cover
1SNK705012R0000	ZK2.5-4P	2.5			
1SNK705012R0000	ZK2.5-4P	2.5			
1SNK705012R0000	ZK2.5-4P	2.5			
1SNK705012R0000	ZK2.5-4P	2.5			
1SNK705012R0000	ZK2.5-4P	2.5			
1SNK705012R0000	ZK2.5-4P	2.5			
1SNK705012R0000	ZK2.5-4P	2.5			
1SNK705012R0000	ZK2.5-4P	2.5			

=V1WC2+V1UC12-XD2

	1	
	2	
	3	
	4	
	5	
	6	
	7	
	8	

			Date	12/22/2022	Volvo Trucks North America	Valiant TMS	Terminal line-up diagram =V1WC2+V1UC12-XD2	Drawing name: =2V04&EFS-EL	=
			Ed.	MKLEPADLO					+
			Appr		P6700 Underbody Mainline - Cell 2V04			Document type: ETT	Project nr: 22-16151
Modification	Date	Name	Original		Replacement of	Replaced by	Scale 1:1		Page 31 / 1630

Terminal line-up diagram

F12_001

Part number					
Mounting rail			Strip label	End angle rear	End plate
Terminal					
Part number	Type number	Cross-section	Terminal label	Jumper	Cover
1SNK705012R0000	ZK2.5-4P	2.5			
1SNK705012R0000	ZK2.5-4P	2.5			
1SNK705012R0000	ZK2.5-4P	2.5			
1SNK705012R0000	ZK2.5-4P	2.5			
1SNK705012R0000	ZK2.5-4P	2.5			

=V1WC2+V1UC12-XD3

	1	
	2	
	3	
	4	
	5	

			Date	12/22/2022	Volvo Trucks North America	Valiant TMS	Terminal line-up diagram =V1WC2+V1UC12-XD3	Drawing name: =2V04&EFS-EL	=
			Ed.	MKLEPADLO					+
			Appr		P6700 Underbody Mainline - Cell 2V04			Document type: ETT	Project nr: 22-16151	Page 32
Modification	Date	Name	Original		Replacement of	Replaced by	Scale 1:1			1630

Terminal line-up diagram

F12_001

Part number					
Mounting rail			Strip label	End angle rear	End plate

Terminal					
Part number	Type number	Cross-section	Terminal label	Jumper	Cover
1SNK706012R0000	ZK4-4P	4			
1SNK706012R0000	ZK4-4P	4			
1SNK706012R0000	ZK4-4P	4			
1SNK706012R0000	ZK4-4P	4			

=V1WC3+V1UC12-XD1

'	1	
'	2	
'	3	
'	4	

			Date	12/22/2022	Volvo Trucks North America	Valiant TMS	Terminal line-up diagram =V1WC3+V1UC12-XD1	Drawing name: =2V04&EFS-EL	=
			Ed.	MKLEPADLO					+
			Appr		P6700 Underbody Mainline - Cell 2V04			Document type: ETT	Project nr: 22-16151	Page 33
Modification	Date	Name	Original		Replacement of	Replaced by	Scale 1:1			1630

Terminal line-up diagram

F12_001

Part number					
Mounting rail			Strip label	End angle rear	End plate

Terminal					
Part number	Type number	Cross-section	Terminal label	Jumper	Cover
1SNK706012R0000	ZK4-4P	4			
1SNK706012R0000	ZK4-4P	4			
1SNK706012R0000	ZK4-4P	4			
1SNK706012R0000	ZK4-4P	4			
1SNK706012R0000	ZK4-4P	4			
1SNK706012R0000	ZK4-4P	4			
1SNK706012R0000	ZK4-4P	4			
1SNK706012R0000	ZK4-4P	4			
1SNK706012R0000	ZK4-4P	4			
1SNK706012R0000	ZK4-4P	4			
1SNK706012R0000	ZK4-4P	4			
1SNK706012R0000	ZK4-4P	4			

=V1WC3+V1UC12-XD2

'	1	
'	2	
'	3	
'	4	
'	5	
'	6	
'	7	
'	8	
'	9	
'	10	
'	11	
'	12	

			Date	12/22/2022	Volvo Trucks North America	Valiant TMS	Terminal line-up diagram =V1WC3+V1UC12-XD2	Drawing name: =2V04&EFS-EL	=
			Ed.	MKLEPADLO					+
			Appr		P6700 Underbody Mainline - Cell 2V04			Document type: ETT	Project nr: 22-16151
Modification	Date	Name	Original		Replacement of / Replaced by	Scale 1:1			Page 34 / 1630

Terminal line-up diagram

F12_001

Part number					
Mounting rail			Strip label	End angle rear	End plate
Terminal					
Part number	Type number	Cross-section	Terminal label	Jumper	Cover
1SNK705012R0000	ZK2.5-4P	2.5			
1SNK705012R0000	ZK2.5-4P	2.5			
1SNK705012R0000	ZK2.5-4P	2.5			
1SNK705012R0000	ZK2.5-4P	2.5			
1SNK705012R0000	ZK2.5-4P	2.5			
1SNK705012R0000	ZK2.5-4P	2.5			
1SNK705012R0000	ZK2.5-4P	2.5			
1SNK705012R0000	ZK2.5-4P	2.5			
1SNK705012R0000	ZK2.5-4P	2.5			

=V1WC3+V1UC12-XD3

	1	
	2	
	3	
	4	
	5	
	6	
	7	
	8	
	9	

			Date	12/22/2022	Volvo Trucks North America	Valiant TMS	Terminal line-up diagram =V1WC3+V1UC12-XD3	Drawing name: =2V04&EFS-EL	=
			Ed.	MKLEPADLO					+
			Appr		P6700 Underbody Mainline - Cell 2V04			Document type: ETT	Project nr: 22-16151
Modification	Date	Name	Original		Replacement of	Replaced by	Scale 1:1		Page 35 / 1630

Terminal line-up diagram

F12_001

Part number					
Mounting rail			Strip label	End angle rear	End plate

Terminal					
Part number	Type number	Cross-section	Terminal label	Jumper	Cover
1SNK705012R0000	ZK2.5-4P	2.5			
1SNK705012R0000	ZK2.5-4P	2.5			
1SNK705012R0000	ZK2.5-4P	2.5			
1SNK705012R0000	ZK2.5-4P	2.5			

Terminal line-up diagram

F12_001

Part number					
Mounting rail			Strip label	End angle rear	End plate

Terminal					
Part number	Type number	Cross-section	Terminal label	Jumper	Cover
1SNK705012R0000	ZK2.5-4P	2.5			

Terminal line-up diagram

F12_001

Part number					
Mounting rail			Strip label	End angle rear	End plate

Terminal					
Part number	Type number	Cross-section	Terminal label	Jumper	Cover
1SNK705012R0000	ZK2.5-4P	2.5			

Terminal line-up diagram

F12_001

Part number					
Mounting rail			Strip label	End angle rear	End plate

Terminal					
Part number	Type number	Cross-section	Terminal label	Jumper	Cover
1SNK705012R0000	ZK2.5-4P	2.5			
1SNK705012R0000	ZK2.5-4P	2.5			
1SNK705012R0000	ZK2.5-4P	2.5			
1SNK705012R0000	ZK2.5-4P	2.5			
1SNK705012R0000	ZK2.5-4P	2.5			
1SNK705012R0000	ZK2.5-4P	2.5			
1SNK705012R0000	ZK2.5-4P	2.5			
1SNK705012R0000	ZK2.5-4P	2.5			
1SNK705012R0000	ZK2.5-4P	2.5			
1SNK705012R0000	ZK2.5-4P	2.5			
1SNK705012R0000	ZK2.5-4P	2.5			
1SNK705012R0000	ZK2.5-4P	2.5			
1SNK705012R0000	ZK2.5-4P	2.5			

=V1WC4+V1UC12-XD10

	1	
	2	
	3	
	5	
	4	
	6	
	7	
	8	
	9	
	10	
	11	
	12	
	13	
	14	

			Date	12/22/2022	Volvo Trucks North America	Valiant TMS	Terminal line-up diagram =V1WC4+V1UC12-XD10	Drawing name: =2V04&EFS-EL	=
			Ed.	MKLEPADLO					+
			Appr		P6700 Underbody Mainline - Cell 2V04			Document type: ETT	Project nr: 22-16151
Modification	Date	Name	Original		Replacement of / Replaced by	Scale 1:1			Page 39 / 1630

Terminal line-up diagram

F12_001

Part number					
Mounting rail			Strip label	End angle rear	End plate

Terminal					
Part number	Type number	Cross-section	Terminal label	Jumper	Cover
1SNK705012R0000	ZK2.5-4P	2.5			

=V1WC4+V1UC12-XD11

'	1	

			Date	12/22/2022	Volvo Trucks North America	Valiant TMS	Terminal line-up diagram =V1WC4+V1UC12-XD11	Drawing name: =2V04&EFS-EL	=
			Ed.	MKLEPADLO					+
			Appr		P6700 Underbody Mainline - Cell 2V04			Document type: ETT	Project nr: 22-16151
Modification	Date	Name	Original		Replacement of	Replaced by	Scale 1:1		Page 40 / 1630

Terminal line-up diagram

F12_001

Part number					
Mounting rail			Strip label	End angle rear	End plate

Terminal					
Part number	Type number	Cross-section	Terminal label	Jumper	Cover
1SNK705012R0000	ZK2.5-4P	2.5			
1SNK705012R0000	ZK2.5-4P	2.5			

Terminal line-up diagram

F12_001

Part number					
Mounting rail			Strip label	End angle rear	End plate

Terminal					
Part number	Type number	Cross-section	Terminal label	Jumper	Cover
1SNK705012R0000	ZK2.5-4P	2.5			
1SNK705012R0000	ZK2.5-4P	2.5			
1SNK705012R0000	ZK2.5-4P	2.5			
1SNK705012R0000	ZK2.5-4P	2.5			
1SNK705012R0000	ZK2.5-4P	2.5			
1SNK705012R0000	ZK2.5-4P	2.5			
1SNK705012R0000	ZK2.5-4P	2.5			

=V1WC4+V1UC12-XD13

	1	
	2	
	3	
	4	
	5	
	6	
	7	

			Date	12/22/2022	Volvo Trucks North America	Valiant TMS	Terminal line-up diagram =V1WC4+V1UC12-XD13	Drawing name: =2V04&EFS-EL	=
			Ed.	MKLEPADLO					+
			Appr		P6700 Underbody Mainline - Cell 2V04			Document type: ETT	Project nr: 22-16151
Modification	Date	Name	Original		Replacement of	Replaced by	Scale 1:1		Page 42 / 1630

Terminal line-up diagram

F12_001

Part number					
Mounting rail			Strip label	End angle rear	End plate

Terminal					
Part number	Type number	Cross-section	Terminal label	Jumper	Cover
1SNK705012R0000	ZK2.5-4P	2.5			
1SNK705012R0000	ZK2.5-4P	2.5			

Terminal line-up diagram

F12_001

Part number					
Mounting rail			Strip label	End angle rear	End plate

Terminal					
Part number	Type number	Cross-section	Terminal label	Jumper	Cover
1SNK705012R0000	ZK2.5-4P	2.5			
1SNK705012R0000	ZK2.5-4P	2.5			
1SNK705012R0000	ZK2.5-4P	2.5			
1SNK705012R0000	ZK2.5-4P	2.5			
1SNK705012R0000	ZK2.5-4P	2.5			
1SNK705012R0000	ZK2.5-4P	2.5			
1SNK705012R0000	ZK2.5-4P	2.5			
1SNK705012R0000	ZK2.5-4P	2.5			

=V1WC4+V1UC12-XD20

1	
2	
3	
4	
5	
6	
7	
8	

			Date	12/22/2022	Volvo Trucks North America	Valiant TMS	Terminal line-up diagram =V1WC4+V1UC12-XD20	Drawing name: =2V04&EFS-EL	=
			Ed.	MKLEPADLO					+
			Appr		P6700 Underbody Mainline - Cell 2V04			Document type: ETT	Project nr: 22-16151
Modification	Date	Name	Original		Replacement of	Replaced by	Scale 1:1		Page 44 / 1630

Terminal line-up diagram

F12_001

Part number					
Mounting rail			Strip label	End angle rear	End plate

Terminal					
Part number	Type number	Cross-section	Terminal label	Jumper	Cover
1SNK705012R0000	ZK2.5-4P	2.5			
1SNK705012R0000	ZK2.5-4P	2.5			

Terminal line-up diagram

F12_001

Part number					
Mounting rail			Strip label	End angle rear	End plate

Terminal					
Part number	Type number	Cross-section	Terminal label	Jumper	Cover
1SNK705012R0000	ZK2.5-4P	2.5			
1SNK705012R0000	ZK2.5-4P	2.5			

Terminal line-up diagram

F12_001

Part number					
Mounting rail			Strip label	End angle rear	End plate

Terminal					
Part number	Type number	Cross-section	Terminal label	Jumper	Cover
1SNK705012R0000	ZK2.5-4P	2.5			
1SNK705012R0000	ZK2.5-4P	2.5			

Terminal line-up diagram

F12_001

Part number					
Mounting rail			Strip label	End angle rear	End plate

Terminal					
Part number	Type number	Cross-section	Terminal label	Jumper	Cover
1SNK705012R0000	ZK2.5-4P	2.5			
1SNK705012R0000	ZK2.5-4P	2.5			

Terminal line-up diagram

F12_001

Part number					
Mounting rail			Strip label	End angle rear	End plate

Terminal					
Part number	Type number	Cross-section	Terminal label	Jumper	Cover
WEI.1608510000	ZDU 2.5	2.5			
WEI.1608740000	ZAP/TW 1				
WEI.9540000000	ZEW 35				
WEI.1608520000	ZDU 2.5 BL	2.5 mm²			
WEI.1608520000	ZDU 2.5 BL	2.5 mm²			

=V1WC3+V1UC14-XD1

'	L1	
'	N	
'		
'	PE	
'		

			Date	12/22/2022	Volvo Trucks North America	Valiant TMS	Terminal line-up diagram =V1WC3+V1UC14-XD1	Drawing name: =2V04&EFS-EL =
			Ed.	MKLEPADLO				+
			Appr		P6700 Underbody Mainline - Cell 2V04			Document type: ETT / Project nr: 22-16151 / Page 49
Modification	Date	Name	Original		Replacement of / Replaced by	Scale 1:1		1630

Terminal line-up diagram

F12_001

Part number					
Mounting rail			Strip label	End angle rear	End plate

Terminal					
Part number	Type number	Cross-section	Terminal label	Jumper	Cover
WEI.8731720000	ZTR 2.5/3AN	2.5			
WEI.8731720000	ZTR 2.5/3AN	2.5			
WEI.8731720000	ZTR 2.5/3AN	2.5			
WEI.8731720000	ZTR 2.5/3AN	2.5			

=V1WC4+V1UC14-KF14.12

'	1	
'	2	
'	3	
'	4	

			Date	12/22/2022	Volvo Trucks North America	Valiant TMS	Terminal line-up diagram =V1WC4+V1UC14-KF14.12	Drawing name: =2V04&EFS-EL	=
			Ed.	MKLEPADLO					+
			Appr		P6700 Underbody Mainline - Cell 2V04			Document type: ETT	Project nr: 22-16151
Modification	Date	Name	Original		Replacement of	Replaced by	Scale 1:1		Page 50 / 1630

Terminal line-up diagram

F12_001

Part number					
Mounting rail			Strip label	End angle rear	End plate

Terminal					
Part number	Type number	Cross-section	Terminal label	Jumper	Cover

Terminal line-up diagram

F12_001

Part number					
Mounting rail			Strip label	End angle rear	End plate

Terminal					
Part number	Type number	Cross-section	Terminal label	Jumper	Cover

Terminal line-up diagram

F12_001

Part number					
Mounting rail			Strip label	End angle rear	End plate

Terminal					
Part number	Type number	Cross-section	Terminal label	Jumper	Cover
WEI.8731720000	ZTR 2.5/3AN	2.5			
WEI.8731720000	ZTR 2.5/3AN	2.5			
WEI.8731720000	ZTR 2.5/3AN	2.5			
WEI.8731720000	ZTR 2.5/3AN	2.5			
WEI.8731720000	ZTR 2.5/3AN	2.5			
WEI.8731720000	ZTR 2.5/3AN	2.5			
WEI.8731720000	ZTR 2.5/3AN	2.5			
WEI.8731720000	ZTR 2.5/3AN	2.5			
WEI.8731720000	ZTR 2.5/3AN	2.5			
WEI.8731720000	ZTR 2.5/3AN	2.5			
WEI.8731720000	ZTR 2.5/3AN	2.5			
WEI.8731720000	ZTR 2.5/3AN	2.5			
WEI.8731720000	ZTR 2.5/3AN	2.5			
WEI.8731720000	ZTR 2.5/3AN	2.5			
WEI.8731720000	ZTR 2.5/3AN	2.5			
WEI.8731720000	ZTR 2.5/3AN	2.5			

=V1WC4+V1UC14-XD10

	1	
	2	
	4	
	3	
	5	
	6	
	7	
	8	
	9	
	10	
	11	
	12	
	13	
	14	
	15	
	16	
	17	

			Date	12/22/2022	Volvo Trucks North America	Valiant TMS	Terminal line-up diagram =V1WC4+V1UC14-XD10	Drawing name: =2V04&EFS-EL	=
			Ed.	MKLEPADLO					+
			Appr		P6700 Underbody Mainline - Cell 2V04	Scale 1:1		Document type: ETT	Project nr: 22-16151	Page 53 / 1630
Modification	Date	Name	Original		Replacement of	Replaced by			

Terminal line-up diagram

F12_001

Part number					
Mounting rail			Strip label	End angle rear	End plate

Terminal					
Part number	Type number	Cross-section	Terminal label	Jumper	Cover
WEI.8731720000	ZTR 2.5/3AN	2.5			

Terminal line-up diagram

F12_001

Part number					
Mounting rail			Strip label	End angle rear	End plate
Terminal					
Part number	Type number	Cross-section	Terminal label	Jumper	Cover
WEI.8731720000	ZTR 2.5/3AN	2.5			
WEI.8731720000	ZTR 2.5/3AN	2.5			

=V1WC4+V1UC14-XD12

	1	
	2	

			Date	12/22/2022	Volvo Trucks North America	Valiant TMS	Terminal line-up diagram =V1WC4+V1UC14-XD12	Drawing name: =2V04&EFS-EL / = / +
			Ed.	MKLEPADLO	P6700 Underbody Mainline - Cell 2V04			
			Appr			Scale 1:1		Document type: ETT / Project nr: 22-16151 / Page 55 / 1630
Modification	Date	Name	Original		Replacement of / Replaced by			

Terminal line-up diagram

F12_001

Part number					
Mounting rail			Strip label	End angle rear	End plate

Terminal					
Part number	Type number	Cross-section	Terminal label	Jumper	Cover
WEI.8731720000	ZTR 2.5/3AN	2.5			
WEI.8731720000	ZTR 2.5/3AN	2.5			

=V1WC4+V1UC14-XD13

	1	
	2	

			Date	12/22/2022	Volvo Trucks North America	Valiant TMS	Terminal line-up diagram =V1WC4+V1UC14-XD13	Drawing name: =2V04&EFS-EL	=
			Ed.	MKLEPADLO					+
			Appr		P6700 Underbody Mainline - Cell 2V04			Document type: ETT	Project nr: 22-16151
Modification	Date	Name	Original		Replacement of / Replaced by	Scale 1:1			Page 56 / 1630

Terminal line-up diagram

F12_001

Part number					
Mounting rail			Strip label	End angle rear	End plate

Terminal					
Part number	Type number	Cross-section	Terminal label	Jumper	Cover
WEI.8731720000	ZTR 2.5/3AN	2.5			

Terminal line-up diagram

F12_001

Part number					
Mounting rail			Strip label	End angle rear	End plate

Terminal					
Part number	Type number	Cross-section	Terminal label	Jumper	Cover
WEI.8731720000	ZTR 2.5/3AN	2.5			

=V1WC4+V1UC14-XD15

'	1	

			Date	12/22/2022	Volvo Trucks North America	Valiant TMS	Terminal line-up diagram =V1WC4+V1UC14-XD15	Drawing name: =2V04&EFS-EL	=
			Ed.	MKLEPADLO					+
			Appr		P6700 Underbody Mainline - Cell 2V04			Document type: ETT	Project nr: 22-16151
Modification	Date	Name	Original		Replacement of	Replaced by	Scale 1:1		Page 58 / 1630

Terminal line-up diagram

F12_001

Part number					
Mounting rail			Strip label	End angle rear	End plate

Terminal					
Part number	Type number	Cross-section	Terminal label	Jumper	Cover
WEI.8731720000	ZTR 2.5/3AN	2.5			

Terminal line-up diagram

F12_001

Part number					
Mounting rail			Strip label	End angle rear	End plate

Terminal					
Part number	Type number	Cross-section	Terminal label	Jumper	Cover
WEI.8731720000	ZTR 2.5/3AN	2.5			

=V1WC4+V1UC14-XD17

'	1	

			Date	12/22/2022	Volvo Trucks North America	Valiant TMS	Terminal line-up diagram =V1WC4+V1UC14-XD17	Drawing name: =2V04&EFS-EL	=
			Ed.	MKLEPADLO					+
			Appr		P6700 Underbody Mainline - Cell 2V04			Document type: ETT	Project nr: 22-16151
Modification	Date	Name	Original		Replacement of	Replaced by	Scale 1:1		Page 60 / 1630

Terminal line-up diagram

F12_001

Part number					
Mounting rail			Strip label	End angle rear	End plate

Terminal					
Part number	Type number	Cross-section	Terminal label	Jumper	Cover
WEI.8731720000	ZTR 2.5/3AN	2.5			

=V1WC4+V1UC14-XD18

'	1	

			Date	12/22/2022	Volvo Trucks North America	Valiant TMS	Terminal line-up diagram =V1WC4+V1UC14-XD18	Drawing name: =2V04&EFS-EL	=
			Ed.	MKLEPADLO					+
			Appr		P6700 Underbody Mainline - Cell 2V04			Document type: ETT	Project nr: 22-16151	Page 61
Modification	Date	Name	Original		Replacement of	Replaced by	Scale 1:1			1630

Terminal line-up diagram

F12_001

Part number					
Mounting rail			Strip label	End angle rear	End plate
Terminal					
Part number	Type number	Cross-section	Terminal label	Jumper	Cover
WEI.8731720000	ZTR 2.5/3AN	2.5			
WEI.8731720000	ZTR 2.5/3AN	2.5			

Terminal line-up diagram

F12_001

Part number					
Mounting rail			Strip label	End angle rear	End plate

Terminal					
Part number	Type number	Cross-section	Terminal label	Jumper	Cover
WEI.8731720000	ZTR 2.5/3AN	2.5			
WEI.8731720000	ZTR 2.5/3AN	2.5			

=V1WC4+V1UC14-XD52

	1	
	2	

			Date	12/22/2022	Volvo Trucks North America	Valiant TMS	Terminal line-up diagram =V1WC4+V1UC14-XD52	Drawing name: =2V04&EFS-EL
			Ed.	MKLEPADLO	P6700 Underbody Mainline - Cell 2V04			Document type: ETT
			Appr			Scale 1:1		Project nr: 22-16151
Modification	Date	Name	Original		Replacement of / Replaced by			Page 63 / 1630

Terminal line-up diagram

F12_001

Part number					
Mounting rail			Strip label	End angle rear	End plate

Terminal					
Part number	Type number	Cross-section	Terminal label	Jumper	Cover
WEI.8731720000	ZTR 2.5/3AN	2.5			
WEI.8731720000	ZTR 2.5/3AN	2.5			

=V1WC4+V1UC14-XD53

	1	
	2	

			Date	12/22/2022	Volvo Trucks North America	Valiant TMS	Terminal line-up diagram =V1WC4+V1UC14-XD53	Drawing name: =2V04&EFS-EL	=
			Ed.	MKLEPADLO					+
			Appr		P6700 Underbody Mainline - Cell 2V04			Document type: ETT	Project nr: 22-16151
Modification	Date	Name	Original		Replacement of	Replaced by	Scale 1:1		Page 64 / 1630

Terminal line-up diagram

F12_001

Part number					
Mounting rail			Strip label	End angle rear	End plate
Terminal					
Part number	Type number	Cross-section	Terminal label	Jumper	Cover
WEI.8731720000	ZTR 2.5/3AN	2.5			
WEI.8731720000	ZTR 2.5/3AN	2.5			

Terminal line-up diagram

F12_001

Part number					
Mounting rail			Strip label	End angle rear	End plate

Terminal					
Part number	Type number	Cross-section	Terminal label	Jumper	Cover
WEI.1608510000	ZDU 2.5	2.5			
WEI.1608740000	ZAP/TW 1				
WEI.9540000000	ZEW 35				
WEI.1608520000	ZDU 2.5 BL	2.5 mm²			
WEI.1608520000	ZDU 2.5 BL	2.5 mm²			

=V1WC3+V1UC15-XD1

'	L1	
'	N	
'		
'	PE	
'		

			Date	12/22/2022	Volvo Trucks North America	Valiant TMS	Terminal line-up diagram =V1WC3+V1UC15-XD1	Drawing name: =2V04&EFS-EL	=
			Ed.	MKLEPADLO					+
			Appr		P6700 Underbody Mainline - Cell 2V04			Document type: ETT	Project nr: 22-16151	Page 66
Modification	Date	Name	Original		Replacement of	Replaced by	Scale 1:1			1630

Terminal line-up diagram

F12_001

Part number					
Mounting rail			Strip label	End angle rear	End plate
Terminal					
Part number	Type number	Cross-section	Terminal label	Jumper	Cover
WEI.8731720000	ZTR 2.5/3AN	2.5			
WEI.8731720000	ZTR 2.5/3AN	2.5			
WEI.8731720000	ZTR 2.5/3AN	2.5			
WEI.8731720000	ZTR 2.5/3AN	2.5			

=V1WC4+V1UC15-KF15.12

'	1	
'	2	
'	3	
'	4	

			Date	12/22/2022	Volvo Trucks North America	Valiant TMS	Terminal line-up diagram =V1WC4+V1UC15-KF15.12	Drawing name: =2V04&EFS-EL / = / +
			Ed.	MKLEPADLO	P6700 Underbody Mainline - Cell 2V04			
			Appr			Scale 1:1		Document type: ETT / Project nr: 22-16151 / Page 67 / 1630
Modification	Date	Name	Original		Replacement of / Replaced by			

Terminal line-up diagram

F12_001

Part number					
Mounting rail			Strip label	End angle rear	End plate
Terminal					
Part number	Type number	Cross-section	Terminal label	Jumper	Cover

Terminal line-up diagram

F12_001

Part number					
Mounting rail			Strip label	End angle rear	End plate
Terminal					
Part number	Type number	Cross-section	Terminal label	Jumper	Cover

Terminal line-up diagram

F12_001

Part number					
Mounting rail			Strip label	End angle rear	End plate

Terminal					
Part number	Type number	Cross-section	Terminal label	Jumper	Cover
WEI.8731720000	ZTR 2.5/3AN	2.5			
WEI.8731720000	ZTR 2.5/3AN	2.5			
WEI.8731720000	ZTR 2.5/3AN	2.5			
WEI.8731720000	ZTR 2.5/3AN	2.5			
WEI.8731720000	ZTR 2.5/3AN	2.5			
WEI.8731720000	ZTR 2.5/3AN	2.5			
WEI.8731720000	ZTR 2.5/3AN	2.5			
WEI.8731720000	ZTR 2.5/3AN	2.5			
WEI.8731720000	ZTR 2.5/3AN	2.5			
WEI.8731720000	ZTR 2.5/3AN	2.5			
WEI.8731720000	ZTR 2.5/3AN	2.5			
WEI.8731720000	ZTR 2.5/3AN	2.5			
WEI.8731720000	ZTR 2.5/3AN	2.5			
WEI.8731720000	ZTR 2.5/3AN	2.5			
WEI.8731720000	ZTR 2.5/3AN	2.5			
WEI.8731720000	ZTR 2.5/3AN	2.5			

=V1WC4+V1UC15-XD10

	1	
	2	
	4	
	3	
	5	
	6	
	7	
	8	
	9	
	10	
	11	
	12	
	13	
	14	
	15	
	16	
	17	

			Date	12/22/2022	Volvo Trucks North America	Valiant TMS	Terminal line-up diagram =V1WC4+V1UC15-XD10	Drawing name: =2V04&EFS-EL	=
			Ed.	MKLEPADLO					+
			Appr		P6700 Underbody Mainline - Cell 2V04	Scale 1:1		Document type: ETT	Project nr: 22-16151	Page 70 / 1630
Modification	Date	Name	Original		Replacement of	Replaced by			

Terminal line-up diagram

F12_001

Part number					
Mounting rail			Strip label	End angle rear	End plate
Terminal					
Part number	Type number	Cross-section	Terminal label	Jumper	Cover
WEI.8731720000	ZTR 2.5/3AN	2.5			

=V1WC4+V1UC15-XD11

'	1	

			Date	12/22/2022	Volvo Trucks North America	Valiant TMS	Terminal line-up diagram =V1WC4+V1UC15-XD11	Drawing name: =2V04&EFS-EL	=
			Ed.	MKLEPADLO					+
			Appr		P6700 Underbody Mainline - Cell 2V04			Document type: ETT	Project nr: 22-16151	Page 71
Modification	Date	Name	Original		Replacement of	Replaced by	Scale 1:1			1630

Terminal line-up diagram

F12_001

Part number					
Mounting rail			Strip label	End angle rear	End plate
Terminal					
Part number	Type number	Cross-section	Terminal label	Jumper	Cover
WEI.8731720000	ZTR 2.5/3AN	2.5			
WEI.8731720000	ZTR 2.5/3AN	2.5			

=V1WC4+V1UC15-XD12

	1	
	2	

			Date	12/22/2022	Volvo Trucks North America	Valiant TMS	Terminal line-up diagram =V1WC4+V1UC15-XD12	Drawing name: =2V04&EFS-EL	=
			Ed.	MKLEPADLO					+
			Appr		P6700 Underbody Mainline - Cell 2V04			Document type: ETT	Project nr: 22-16151
Modification	Date	Name	Original		Replacement of	Replaced by	Scale 1:1		Page 72 / 1630

Terminal line-up diagram

F12_001

Part number					
Mounting rail			Strip label	End angle rear	End plate
Terminal					
Part number	Type number	Cross-section	Terminal label	Jumper	Cover
WEI.8731720000	ZTR 2.5/3AN	2.5			
WEI.8731720000	ZTR 2.5/3AN	2.5			

Terminal line-up diagram

F12_001

Part number					
Mounting rail			Strip label	End angle rear	End plate

Terminal					
Part number	Type number	Cross-section	Terminal label	Jumper	Cover
WEI.8731720000	ZTR 2.5/3AN	2.5			

Terminal line-up diagram

F12_001

Part number					
Mounting rail			Strip label	End angle rear	End plate

Terminal					
Part number	Type number	Cross-section	Terminal label	Jumper	Cover
WEI.8731720000	ZTR 2.5/3AN	2.5			

Terminal line-up diagram

F12_001

Part number					
Mounting rail			Strip label	End angle rear	End plate

Terminal					
Part number	Type number	Cross-section	Terminal label	Jumper	Cover
WEI.8731720000	ZTR 2.5/3AN	2.5			

=V1WC4+V1UC15-XD16

'	1	

			Date	12/22/2022	Volvo Trucks North America	Valiant TMS	Terminal line-up diagram =V1WC4+V1UC15-XD16	Drawing name: =2V04&EFS-EL	=
			Ed.	MKLEPADLO					+
			Appr		P6700 Underbody Mainline - Cell 2V04			Document type: ETT	Project nr: 22-16151
Modification	Date	Name	Original		Replacement of	Replaced by	Scale 1:1		Page 76 / 1630

Terminal line-up diagram

F12_001

Part number					
Mounting rail			Strip label	End angle rear	End plate
Terminal					
Part number	Type number	Cross-section	Terminal label	Jumper	Cover
WEI.8731720000	ZTR 2.5/3AN	2.5			

=V1WC4+V1UC15-XD17

'	1	

			Date	12/22/2022	Volvo Trucks North America	Valiant TMS	Terminal line-up diagram =V1WC4+V1UC15-XD17	Drawing name: =2V04&EFS-EL	=
			Ed.	MKLEPADLO					+
			Appr		P6700 Underbody Mainline - Cell 2V04			Document type: ETT	Project nr: 22-16151
Modification	Date	Name	Original		Replacement of	Replaced by	Scale 1:1		Page 77 / 1630

Terminal line-up diagram

F12_001

Part number					
Mounting rail			Strip label	End angle rear	End plate

Terminal					
Part number	Type number	Cross-section	Terminal label	Jumper	Cover
WEI.8731720000	ZTR 2.5/3AN	2.5			

Terminal line-up diagram

F12_001

Part number					
Mounting rail			Strip label	End angle rear	End plate

Terminal					
Part number	Type number	Cross-section	Terminal label	Jumper	Cover
WEI.8731720000	ZTR 2.5/3AN	2.5			
WEI.8731720000	ZTR 2.5/3AN	2.5			

=V1WC4+V1UC15-XD51

	1	
	2	

			Date	12/22/2022	Volvo Trucks North America	Valiant TMS	Terminal line-up diagram =V1WC4+V1UC15-XD51	Drawing name: =2V04&EFS-EL	=
			Ed.	MKLEPADLO					+
			Appr		P6700 Underbody Mainline - Cell 2V04			Document type: ETT	Project nr: 22-16151
Modification	Date	Name	Original		Replacement of / Replaced by	Scale 1:1			Page 79 / 1630

Terminal line-up diagram

F12_001

Part number					
Mounting rail			Strip label	End angle rear	End plate

Terminal					
Part number	Type number	Cross-section	Terminal label	Jumper	Cover
WEI.8731720000	ZTR 2.5/3AN	2.5			
WEI.8731720000	ZTR 2.5/3AN	2.5			

Terminal line-up diagram

F12_001

Part number					
Mounting rail			Strip label	End angle rear	End plate

Terminal					
Part number	Type number	Cross-section	Terminal label	Jumper	Cover
WEI.8731720000	ZTR 2.5/3AN	2.5			
WEI.8731720000	ZTR 2.5/3AN	2.5			

=V1WC4+V1UC15-XD53

	1	
	2	

			Date	12/22/2022	Volvo Trucks North America	Valiant TMS	Terminal line-up diagram =V1WC4+V1UC15-XD53	Drawing name: =2V04&EFS-EL	=
			Ed.	MKLEPADLO					+
			Appr		P6700 Underbody Mainline - Cell 2V04			Document type: ETT	Project nr: 22-16151
Modification	Date	Name	Original		Replacement of / Replaced by	Scale 1:1			Page 81 / 1630

Terminal line-up diagram

F12_001

Part number					
Mounting rail			Strip label	End angle rear	End plate

Terminal					
Part number	Type number	Cross-section	Terminal label	Jumper	Cover
WEI.8731720000	ZTR 2.5/3AN	2.5			
WEI.8731720000	ZTR 2.5/3AN	2.5			

=V1WC4+V1UC15-XD54

	1	
	2	

			Date	12/22/2022	Volvo Trucks North America	Valiant TMS	Terminal line-up diagram =V1WC4+V1UC15-XD54	Drawing name: =2V04&EFS-EL	=
			Ed.	MKLEPADLO					+
			Appr		P6700 Underbody Mainline - Cell 2V04			Document type: ETT	Project nr: 22-16151
Modification	Date	Name	Original		Replacement of	Replaced by	Scale 1:1		Page 82 / 1630

Terminal line-up diagram

F12_001

Part number					
Mounting rail			Strip label	End angle rear	End plate

Terminal					
Part number	Type number	Cross-section	Terminal label	Jumper	Cover
WEI.8731720000	ZTR 2.5/3AN	2.5			
WEI.1608800000	ZAP/TW 3				
WEI.9540000000	ZEW 35				
WEI.8731720000	ZTR 2.5/3AN	2.5			
WEI.8731720000	ZTR 2.5/3AN	2.5			
WEI.8731720000	ZTR 2.5/3AN	2.5			
WEI.8731720000	ZTR 2.5/3AN	2.5			
WEI.8731720000	ZTR 2.5/3AN	2.5			
WEI.8731720000	ZTR 2.5/3AN	2.5			
WEI.8731720000	ZTR 2.5/3AN	2.5			
WEI.8731720000	ZTR 2.5/3AN	2.5			
WEI.8731720000	ZTR 2.5/3AN	2.5			
WEI.8731720000	ZTR 2.5/3AN	2.5			
WEI.8731720000	ZTR 2.5/3AN	2.5			

=V1WC4+V1UC32-XD11

	1	
	2	
	3	
	4	
	5	
	6	
	7	
	11	
	12	
	13	
	14	
	15	
	16	
	17	

			Date	12/22/2022	Volvo Trucks North America	Valiant TMS	Terminal line-up diagram =V1WC4+V1UC32-XD11	Drawing name: =2V04&EFS-EL	=
			Ed.	MKLEPADLO					+
			Appr		P6700 Underbody Mainline - Cell 2V04			Document type: ETT	Project nr: 22-16151
Modification	Date	Name	Original		Replacement of	Replaced by	Scale 1:1		Page 83 / 1630

Terminal line-up diagram

F12_001

Part number					
Mounting rail			Strip label	End angle rear	End plate

Terminal					
Part number	Type number	Cross-section	Terminal label	Jumper	Cover
WEI.8731720000	ZTR 2.5/3AN	2.5			
WEI.1608800000	ZAP/TW 3				
WEI.9540000000	ZEW 35				
WEI.8731720000	ZTR 2.5/3AN	2.5			
WEI.8731720000	ZTR 2.5/3AN	2.5			
WEI.8731720000	ZTR 2.5/3AN	2.5			
WEI.8731720000	ZTR 2.5/3AN	2.5			
WEI.8731720000	ZTR 2.5/3AN	2.5			
WEI.8731720000	ZTR 2.5/3AN	2.5			
WEI.8731720000	ZTR 2.5/3AN	2.5			
WEI.8731720000	ZTR 2.5/3AN	2.5			
WEI.8731720000	ZTR 2.5/3AN	2.5			
WEI.8731720000	ZTR 2.5/3AN	2.5			
WEI.8731720000	ZTR 2.5/3AN	2.5			

=V1WC4+V1UC33-XD11

	1	
	2	
	3	
	4	
	5	
	6	
	7	
	11	
	12	
	13	
	14	
	15	
	16	
	17	

&EXX/1

			Date	12/22/2022	Volvo Trucks North America	Valiant TMS	Terminal line-up diagram =V1WC4+V1UC33-XD11	Drawing name: =2V04&EFS-EL	=
			Ed.	MKLEPADLO					+
			Appr		P6700 Underbody Mainline - Cell 2V04			Document type: ETT	Project nr: 22-16151
Modification	Date	Name	Original		Replacement of	Replaced by	Scale 1:1		Page 84 / 1630

Summarized parts list

F02_001

Order number	Quantity	Description Designation	Type number Part number	Manufacturer Supplier	Unit price	Total price	Pos
	7 Piece	Mounting rail EN 50 022 (35x7,5)	TS 35_7,5 TS 35_7,5		0.00	0.00	
1SFA619550R1051	3 PCE	EMERGENCY STOP CE4T-10R-02	CE4T-10R-02 ABB.1SFA619550R1051	ABB ABB	0.00	0.00	
1SFA616915R1005	4 Piece	LEGEND PLATET KTC15-1005	KTC15-1005 ABB.1SFA616915R1005	ABB	0.00	0.00	
	0					0.00	
ECGB5	3 Piece	Ground bar kit, 5 positions.	ECGB5 US2.ECGB5	SIE SIE	0.00	0.00	
C1.5LG6	3 ft	Wiring Duct Covers, PVC	C1.5LG6 PAN.C1.5LG6	PAN PAN	0.00	0.00	
C1LG6	3 ft	Wiring Duct Covers, PVC	C1LG6 PAN.C1LG6	PAN PAN	0.00	0.00	
G1.5X4LG6	3 ft	Wide Slotted Wiring Duct, PVC	G1.5X4LG6 PAN.G1.5X4LG6	PAN PAN	0.00	0.00	
G1X4LG6	3 ft	Wide Slotted Wiring Duct, PVC	G1X4LG6 PAN.G1X4LG6	PAN PAN	0.00	0.00	
6ES5710-8MA11	1	STAND.SECTIONAL RAIL 35MM, LENGTH 483MM	6ES5710-8MA11 SIE.6ES5710-8MA11	SIE Siemens AG	0.00	0.00	
5386050	1 pc(s).	PC PC enclosure system, WHD: 800x1600x600 mm, Sheet steel	PC.5386050 RIT.5386050	RIT RIT	0.00	0.00	
8617580	1 pc(s).	VX Partial mounting plate, for VX: 700x700 mm	VX.8617580 RIT.8617580	RIT RIT	0.00	0.00	
E4PBG	2 piece	Pushbutton Enclosure, Type 12, 4PB, 22.5mm holes, 10.00Hx3.25Wx2.75D, Gray, Steel	E4PBG HOFFMAN.E4PBG	HOFFMAN HOFFMAN	0.00	0.00	
ASPBG	2 piece	Hol-Sealers Hole Seal, 1.22" diameter, Gray, Steel	ASPBG ASPBG	HOFFMAN HOFFMAN	0.00	0.00	
6ES7517-3FP00-0AB0	1	CPU 1517F-3 PN/DP, 3MB PROG., 8MB DATA	6ES7517-3FP00-0AB0 SIE.6ES7517-3FP00-0AB0	SIE SIE	0.00	0.00	
6ES7590-1AC40-0AA0	1	MOUNTING RAIL 245MM (9.6")	6ES7590-1AC40-0AA0 SIE.6ES7590-1AC40-0AA0	SIE SIE	0.00	0.00	
6ES7155-6AA01-0BN0	7	ET 200SP, IM155-6PN ST INCL. BA 2XRJ45	6ES7155-6AA01-0BN0 SIE.6ES7155-6AA01-0BN0	SIE SIE	0.00	0.00	
6ES7131-6BH01-0BA0	15	ET 200SP, DI 16x 24V DC ST, PU 1	6ES7131-6BH01-0BA0 SIE.6ES7131-6BH01-0BA0	SIE SIE	0.00	0.00	
6ES7132-6BH01-0BA0	7	ET 200SP, DQ 16x 24V DC/0,5A ST, PU 1	6ES7132-6BH01-0BA0 SIE.6ES7132-6BH01-0BA0	SIE SIE	0.00	0.00	

Summarized parts list

F02_001

Order number	Quantity	Description Designation	Type number Part number	Manufacturer Supplier	Unit price	Total price	Pos
6ES7136-6BA01-0CA0	3	ET 200SP, El-Mod., F-DI 8x24VDC HF	6ES7136-6BA01-0CA0 SIE.6ES7136-6BA01-0CA0	SIE SIE	0.00	0.00	
6GK5615-0AA00-2AA2	1	SCALANCE S615	6GK5615-0AA00-2AA2 SIE.6GK5615-0AA00-2AA2	SIE SIE	0.00	0.00	
6GK1900-0AB10	5	C-PLUG	6GK1900-0AB10 SIE.6GK1900-0AB10	SIE SIE	0.00	0.00	
6GK5216-0BA00-2AC2	5	SCALANCE XC216	6GK5216-0BA00-2AC2 SIE.6GK5216-0BA00-2AC2	SIE SIE	0.00	0.00	
RJ45S FKSDED 423-1M	78	Profinet cable - RJ45 plug to M12 Female receptacle; 1m long	RJ45S FKSDED 423-1M TUR.RJ45S FKSDED 423-1M	TURCK TURCK	0.00	0.00	
	2		4000-73000-0180000		0.00	0.00	
8WD4408-0AA	1 piece	Signaling column connection element for pipe mounting incl. end cover and seal	8WD4408-0AA SIE.8WD4408-0AA	SIE SIE	0.00	0.00	
8WD4420-0EA2	1 piece	Signaling column multifunctional siren element different sounds can be selected	8WD4420-0EA2 SIE.8WD4420-0EA2	SIE	0.00	0.00	
8WD4420-5AB	1 piece	Signaling column continuous light element LED red, 24 V AC/DC	8WD4420-5AB SIE.8WD4420-5AB	SIE SIE	0.00	0.00	
8WD4420-5AC	1 piece	Signaling column continuous light element LED green, 24 V AC/DC	8WD4420-5AC SIE.8WD4420-5AC	SIE SIE	0.00	0.00	
1SFA619100R1022	3 PCE	PUSHBUTTON CP1-10G-20	CP1-10G-20 ABB.1SFA619100R1022	ABB ABB	0.00	0.00	
1SFA619100R1023	3 PCE	PUSHBUTTON CP1-10Y-20	CP1-10Y-20 ABB.1SFA619100R1023	ABB ABB	0.00	0.00	
1SFA619100R1111	1 PCE	PUSHBUTTON CP1-11R-10 24V AC/DC	CP1-11R-10 ABB.1SFA619100R1111	ABB ABB	0.00	0.00	
1SFA619100R1026	1 PCE	PUSHBUTTON CP1-10B-20	CP1-10B-20 ABB.1SFA619100R1026	ABB ABB	0.00	0.00	
1SFA619100R1118	3 PCE	PUSHBUTTON CP1-11C-10	CP1-11C-10 ABB.1SFA619100R1118	ABB ABB	0.00	0.00	
1SFA619200R1016	1 PCE	SELECTOR SWITCH C2SS1-10B-10	C2SS1-10B-10 ABB.1SFA619200R1016	ABB ABB	0.00	0.00	
2CDS271337R0104	2 PCE	Miniature Circuit Breaker MCBs - SU201M - Number of Poles 1 - Tripping Characteristic C	SU201M-C10 ABB.2CDS271337R0104	ABB ABB	0.00	0.00	
6EP19612BA41	1	4x3-10A	6EP1961-2BA41 SIE.6EP1961-2BA41	SIE SIE	0.00	0.00	
6EP4134-3AB00-2AY0	1	SITOP UPS1600	6EP4134-3AB00-2AY0 SIE.6EP4134-3AB00-2AY0	SIE	0.00	0.00	

Summarized parts list

F02_001

Order number	Quantity	Description Designation	Type number Part number	Manufacturer Supplier	Unit price	Total price	Pos
6EP4134-0GB00-0AY0	1	SITOP UPS1100	6EP4134-0GB00-0AY0 SIE.6EP4134-0GB00-0AY0	SIE SIE	0.00	0.00	
6EP3336-7SB00-3AX0	7	SITOP PSU6200 1ph 24 V/20 A	6EP3336-7SB00-3AX0 SIE.6EP3336-7SB00-3AX0	SIE	0.00	0.00	
BS 8251-0/PG9	1 piece	MALE 5-PIN M12 FIELD ATTACHABLE CONNECTOR	BS 8251-0/PG9 TUR.BS 8251-0/PG9	TURCK TURCK	0.00	0.00	
EMPD3FBCB-025A-M	25		EMPD3FBCB-025A-M EMPD3FBCB-025A-M	Electro-Matic Electro-Matic	0.00	0.00	
1625891	12 piece	Inductive sensor With WeldGuard™ coating	NI50U-CK40-AP6X2-H1141/S1590 W/BS4 TUR.NI50U-CK40-AP6X2-H1141/S1590 W/BS4	TURCK TURCK	0.00	0.00	
VB2-FSM 4.4/2FKM 4/S3450	50	Y splitter	U2-30676 TUR.VB2-FSM 4.4/2FKM 4/S3450	TURCK TURCK	0.00	0.00	
548755	0	Bus node	CPX-FB33 FES.548755	FES FES	0.00	0.00	
550208	0	Interlinking block	CPX-M-GE-EV-S-7/8-5POL FES.550208	FES FES	0.00	0.00	
549335	0	Manifold block	CPX-M-AB-8-M12X2-5POL FES.549335	FES FES	0.00	0.00	
RSM-2RKM 50	5 piece	TEE, 5-PIN MINI, STANDARD KEYWAY	U2109-9 TUR.RSM-2RKM 50	TURCK TURCK	0.00	0.00	
WWS001A	37 piece	Inductive sensor Monitoring Kit for Power Clamps	WWS001A WELKER.WWS001A	WELKER WELKER	0.00	0.00	
1324633	32 piece	Inductive sensor Monitoring Kit for Vario Clamps	1324633 TUN.1324633	TUNKERS TUNKERS	0.00	0.00	
PN7094	22 Piece	Pressure sensor with display	PN-010-RER14-QFRKG/US/ /V IFM.PN7094	IFM IFM	0.00	0.00	
1324638	73 piece	Inductive sensor Monitoring Kit for Power Clamps	1324638 TUN.1324638	TUNKERS TUNKERS	0.00	0.00	
2CMA193115R1000	18	Surface socket-outlet	ABB.2CMA193115R1000	ABB ABB	0.00	0.00	
EMPD3FBCB-030A-M	4		EMPD3FBCB-030A-M EMPD3FBCB-030A-M	Electro-Matic Electro-Matic	0.00	0.00	
EMPD3FBCB-060A-M	2		EMPD3FBCB-060A-M EMPD3FBCB-060A-M	Electro-Matic Electro-Matic	0.00	0.00	
SLSCP30-1200P44NT	2	EZ-Screen System	SLSCP30-1200P44NT BAN.SLSCP30-1200P44NT	BANNER BANNER	0.00	0.00	
MGB-L2B-PNA-L-121863	4 Piece	SWITCH	MGB-L2B-PNA-L-121863 EUC.MGB-L2B-PNA-L-121863	EUCHNER EUCHNER	0.00	0.00	

Summarized parts list

F02_001

Order number	Quantity	Description Designation	Type number Part number	Manufacturer Supplier	Unit price	Total price	Pos
MGB-H-AA1A2-L-106221	4 Piece	HANDLE	MGB-H-AA1A2-L-106221 EUC.MGB-H-AA1A2-L-106221	EUCHNER EUCHNER	0.00	0.00	
MGB-A-MOUNTINGPLATE-H-109491	8 Piece	MOUNTING PLATE	MGB-A-MOUNTINGPLATE-H-109491 EUC.MGB-A-MOUNTINGPLATE-H-109491	EUCHNER EUCHNER	0.00	0.00	
MGB-E-A2-106051	8 Piece	ESCAPE RELEASE	MGB-E-A2-106051 EUC.MGB-E-A2-106051	EUCHNER EUCHNER	0.00	0.00	
MGB-L2B-PNA-R-121859	4 Piece	SWITCH	MGB-L2B-PNA-R-121859 EUC.MGB-L2B-PNA-R-121859	EUCHNER EUCHNER	0.00	0.00	
MGB-H-AA1A2-R-106049	4 Piece	HANDLE	MGB-H-AA1A2-R-106049 EUC.MGB-H-AA1A2-R-106049	EUCHNER EUCHNER	0.00	0.00	
6SL3525-0PE17-5AA1	2 ST	SINAMICS G120D POWER MODULE PM250D 0,75KW	6SL3525-0PE17-5AA1 SIE.6SL3525-0PE17-5AA1	SIEMENS SIEMENS	0.00	0.00	
EMPD3FBCB-005A-M	2		EMPD3FBCB-005A-M EMPD3FBCB-005A-M	Electro-Matic Electro-Matic	0.00	0.00	
6GT2801-2BA10	3	RF340R (GEN2)	6GT2801-2BA10 SIE.6GT2801-2BA10	SIE SIE	0.00	0.00	
6SL3544-0FB21-1FA0	2 ST	SINAMICS G120D CONTROL UNIT CU240D-2 PN-F	6SL3544-0FB21-1FA0 SIE.6SL3544-0FB21-1FA0	SIEMENS SIEMENS	0.00	0.00	
6GT2002-0JE10	3	SIMATIC RF185C	6GT2002-0JE10 SIE.6GT2002-0JE10	SIE	0.00	0.00	
1644741	45 piece	Inductive sensor	BI8U-MT18M-AP6X2-H1141/S1589 TUR.1644741	TURCK TURCK	0.00	0.00	
802T-AP	2	NEMA Limit Switch - NEMA Type 4 & 13 Oiltight Construction	802T-AP A-B.802T-AP	A-B A-B	0.00	0.00	
71959	3 piece	Discrete Q60: Proximity Mode	Q60BB6AFV1000QPMA BAN.71959	BANNER BANNER	0.00	0.00	
	20		TUR.16447411			0.00	
BS 4151-0/9	3 piece	5 PIN MINI FIELD ATTACHABLE, FEMALE, STRAIGHT	BS 4151-0/9 TUR.BS 4151-0/9	TURCK TURCK	0.00	0.00	
6ES7193-6BP00-0DA0	12	BASEUNIT TYPE A0, BU15-P16+A0+2D	6ES7193-6BP00-0DA0 SIE.6ES7193-6BP00-0DA0	SIE SIE	0.00	0.00	
6ES7136-6BA00-0CA0	8	ET 200SP, El-Mod., F-DI 8x24VDC HF	6ES7136-6BA00-0CA0 SIE.6ES7136-6BA00-0CA0	SIE	0.00	0.00	
6ES7136-6DB00-0CA0	8	ET 200SP, El-Mod., F-DQ 4xDC 24V/2A	6ES7136-6DB00-0CA0 SIE.6ES7136-6DB00-0CA0	SIE	0.00	0.00	
6ES7136-6RA00-0BF0	16	ET 200SP, F-RQ 1x24VDC/24..230VAC/5A ST	6ES7136-6RA00-0BF0 SIE.6ES7136-6RA00-0BF0	SIE	0.00	0.00	

Summarized parts list

F02_001

Order number	Quantity	Description Designation	Type number Part number	Manufacturer Supplier	Unit price	Total price	Pos
6ES7193-6BP20-0BF0	16	BASEUNIT TYPE F0, BU20-P8+A4+0B	6ES7193-6BP20-0BF0 SIE.6ES7193-6BP20-0BF0	SIE SIE	0.00	0.00	
6AV2124-0QC02-0AX1	4	SIMATIC HMI TP1500 COMFORT	6AV2124-0QC02-0AX1 SIE.6AV2124-0QC02-0AX1	SIE SIE	0.00	0.00	
6315450	2 piece	Compact enclosure AX	AX.6315450 RIT.6315450	RIT RIT	0.00	0.00	
6106500	2 piece	Pedestal, open	CP.6106500 RIT.6106500	RIT RIT	0.00	0.00	
6206300	2 piece	Coupling CP 60	CP.6206300 RIT.6206300	RIT RIT	0.00	0.00	
5051300	2 pc(s).	Accessory bag, for AX	AX.5051300 RIT.5051300	RIT RIT	0.00	0.00	
5051375	2 pc(s).	Mounting plate, for AX	AX.5051375 RIT.5051375	RIT RIT	0.00	0.00	
1627297	28 piece	Inductive sensor With WeldGuard™ coating	BI20U-CA40-AP6X2-H1141/S1590W/BS2.0 TUR.BI20U-CA40-AP6X2-H1141/S1590W/BS2.0	TURCK TURCK	0.00	0.00	
285425	18 piece	Inductive sensor Monitoring Kit for Vario Power Clamps	285425 TUN.285425	TUNKERS TUNKERS	0.00	0.00	
1324644	24 piece	Inductive sensor Monitoring Kit for Power Clamps	1324644 TUN.1324644	TUNKERS TUNKERS	0.00	0.00	
3VA5195-6ED31-0AA0	2	MCCB_UL_FS125_15A_3P_65KA_TM_ FTFM	3VA5195-6ED31-0AA0 SIE.3VA5195-6ED31-0AA0	SIE SIE	0.00	0.00	
3VA9977-0TA20	2	BREAKER DATA SERVER, COM100	3VA9977-0TA20 SIE.3VA9977-0TA20	SIE SIE	0.00	0.00	
7KM9300-0AE02-0AA0	2 Piece	Switched Ethernet PROFINET Module V3	7KM9300-0AE02-0AA0 SIE.7KM9300-0AE02-0AA0	SIE	0.00	0.00	
3VA6340-6KP31-0AA0	2	MCCB_UL_FS400_400A_3P_65KA_ETU8_LSI	3VA6340-6KP31-0AA0 SIE.3VA6340-6KP31-0AA0	SIE SIE	0.00	0.00	
3VA9177-0TB10	2	COMMUNICATION MODULE COM060	3VA9177-0TB10 SIE.3VA9177-0TB10	SIE SIE	0.00	0.00	
PTN102-3K	2 Piece	Transformer	PTN102-3K PTN102-3K	POWERTRAN POWERTRAN	0.00	0.00	
R-3W2MT-LMF	2 piece	Multi-Environment Voltage Indicator and Safe-Test Point Combination R-3W2MT-LMF	R-3W2MT-LMF GT.R-3W2MT-LMF	GT	0.00	0.00	
3VA5120-6ED31-0AA0	2	MCCB_UL_FS125_20A_3P_65KA_TM_ FTFM	3VA5120-6ED31-0AA0 SIE.3VA5120-6ED31-0AA0	SIE SIE	0.00	0.00	
	2		SIE.3VA9978-0AA12			0.00	

Vertical/Flange Warning Label

			Date	12/22/2022	Volvo Trucks North America	Valiant TMS	Summarized parts list : SIE.6ES7193-6BP20-0BF0 - SIE.3VA9978-0AA12	Drawing name: =2V04&EFS-EL	=
			Ed.	MKLEPADLO					+
			Appr		P6700 Underbody Mainline - Cell 2V04			Document type: EXX	Project nr: 22-16151
Modification	Date	Name	Original		Replacement of / Replaced by	Scale 1:1			Page 5 / 1630

Summarized parts list

F02_001

Order number	Quantity	Description Designation	Type number Part number	Manufacturer Supplier	Unit price	Total price	Pos
PTN102-7.5K	2 Piece	Transformer	PTN102-7.5K PTN102-7.5K	POWERTRAN POWERTRAN	0.00	0.00	
MB-231-03	2	3P DISTRIBUTION BLOCK 1 LINE / 4 LOAD	MB-231-03 MB-231-03	SYNDEVCO SYNDEVCO	0.00	0.00	
STGS-3D-3D	2	3P GROUND BLOCK 3 LINE / 3 LOAD	STGS-3D-3D STGS-3D-3D	SYNDEVCO SYNDEVCO	0.00	0.00	
CPB-E2G06-03	0	3P DISTRIBUTION BLOCK 2 LINE / 6 LOAD	CPB-E2G06-03 CPB-E2G06-03	SYNDEVCO SYNDEVCO	0.00	0.00	
HCG-E2G06	0	3P GROUND BLOCK 2 LINE / 6 LOAD	HCG-E2G06 HCG-E2G06	SYNDEVCO SYNDEVCO	0.00	0.00	
5SJ4120-7HG41	2	CIRCUIT BREAKER 240V 14KA, 1-POLE, C, 20A, D=70MM	5SJ4120-7HG41 SIE.5SJ4120-7HG41	SIE SIE	0.00	0.00	
5ST3010-0HG	22	AUXILARY SWITCH 1NO1NC UL489	5ST3010-0HG SIE.5ST3010-0HG	SIE SIE	0.00	0.00	
5SJ4110-7HG41	2	CIRCUIT BREAKER 240V 14KA, 1-POLE, C, 10A, D=70MM	5SJ4110-7HG41 SIE.5SJ4110-7HG41	SIE SIE	0.00	0.00	
5SJ4103-7HG41	4	CIRCUIT BREAKER 240V 14KA, 1-POLE, C, 3A, D=70MM	5SJ4103-7HG41 SIE.5SJ4103-7HG41	SIE SIE	0.00	0.00	
5SJ4116-7HG41	14	CIRCUIT BREAKER 240V 14KA, 1-POLE, C, 16A, D=70MM	5SJ4116-7HG41 SIE.5SJ4116-7HG41	SIE SIE	0.00	0.00	
5SJ4106-7HG41	4	CIRCUIT BREAKER 240V 14KA, 1-POLE, C, 6A, D=70MM	5SJ4106-7HG41 SIE.5SJ4106-7HG41	SIE SIE	0.00	0.00	
5SJ4130-7HG41	2	CIRCUIT BREAKER 240V 14KA, 1-POLE, C, 30A, D=70MM	5SJ4130-7HG41 SIE.5SJ4130-7HG41	SIE SIE	0.00	0.00	
1SNL317510R0000	8	DBL175 Series Distribution Block	1SNL317510R0000 1SNL317510R0000	ENTRELEC ENTRELEC	0.00	0.00	
P-P11#2R2-K3RD5	4 piece	Panel Interface Connector with USB Type A/F to USB Type A/M [QTY: 2], Category 5 RJ45; Panel Mount Housing; UL Type 4; Duplex Outlet; 5 Amp Circuit Breaker	P-P11#2R2-K3RD5 GT_N.P-P11#2R2-K3RD5	GT_N GT_N	0.00	0.00	
6EP4438-7FB00-3DX0	8	SITOP SEL1200 8 x 10A	6EP4438-7FB00-3DX0 SIE.6EP4438-7FB00-3DX0	SIE	0.00	0.00	
2CDS271517R0357	4 PCE	Miniature Circuit Breaker MCBs - S200UDC - Number of Poles 1 - Tripping Characteristic K	S201UDC-K5 ABB.2CDS271517R0357	ABB ABB	0.00	0.00	
RSF 50-1M/NPT	2	RECEPTACLE MINI 5P MALE 1M	RSF 50-1M/NPT TUR.RSF 50-1M/NPT	TURCK TURCK	0.00	0.00	
EMPD3FBCB-020A-M	1		EMPD3FBCB-020A-M EMPD3FBCB-020A-M	Electro-Matic Electro-Matic	0.00	0.00	
284395	2 piece	Inductive sensor Monitoring Kit for Underbody Clamps	284395 P+F.284395	P+F P+F	0.00	0.00	

5 7

			Date	12/22/2022	Volvo Trucks North America	Valiant TMS	Summarized parts list : PTN102-7.5K - P+F.284395	Drawing name: =2V04&EFS-EL
			Ed.	MKLEPADLO				
			Appr		P6700 Underbody Mainline - Cell 2V04	Scale 1:1		Document type: EXX / Project nr: 22-16151 / Page 6 / 1630
Modification	Date	Name	Original		Replacement of / Replaced by			

Summarized parts list

F02_001

Order number	Quantity	Description Designation	Type number Part number	Manufacturer Supplier	Unit price	Total price	Pos
SETS8205SID5	6	Golvskåp TS 8 sidskåp	TS8 RIT.SETS8205SID5	RIT RIT	0.00	0.00	

			Date	12/22/2022	Volvo Trucks North America	Valiant TMS	Summarized parts list : RIT.SETS8205SID5 - RIT.SETS8205SID5	Drawing name: =2V04&EFS-EL	=
			Ed.	MKLEPADLO					+
			Appr		P6700 Underbody Mainline - Cell 2V04			Document type: EXX	Project nr: 22-16151
Modification	Date	Name	Original		Replacement of / Replaced by	Scale 1:1			Page 7 / 1630

Terminal-strip overview

F14_001

Terminal strip	Terminal strip definition text	Terminals					Graphical page of terminal diagrams
		first	last	Total PE	Total N	Total number	
=KF0KF1+UC31-PC1		DVI		0	0	4	
=KF0KF1+UC31-PH1		DVI	DVI	0	0	1	
=KF0WC3+UC31-XD1		L1	PE	0	0	5	
=KF0WC3+UC31-XD2		1L1	PE	0	0	5	
=KF0WC4+UC31-XD11		1	13	0	0	6	
=KF0WC4+UC31-XD12		1	14	0	0	8	
=KF0WC4+UC31-XD13		1	13	0	0	6	
=KF0WC4+UC31-XD14		1	14	0	0	8	

			Date	12/22/2022	Volvo Trucks North America	Valiant TMS	Terminal-strip overview : =KF0KF1+UC31-PC1 - =KF0WC4+UC31-XD14	Drawing name: =2V04&EFS-EL	=
			Ed.	MKLEPADLO					+
			Appr		P6700 Underbody Mainline - Cell 2V04	Scale 1:1		Document type: EYY	Project nr: 22-16151	Page 1 / 1630
Modification	Date	Name	Original		Replacement of	Replaced by			

Terminal-strip overview

F14_001

Terminal strip	Terminal strip definition text	Terminals					Graphical page of terminal diagrams
		first	last	Total PE	Total N	Total number	
=V1WC1+V1UC11-PE		PE	PE	0	0	1	
=V1WC2+V1UC11-XD1		1	16	0	0	16	
=V1WC2+V1UC11-XD2		1	8	0	0	8	
=V1WC2+V1UC11-XD3		1	5	0	0	5	
=V1WC3+V1UC11-XD1		1	4	0	0	4	
=V1WC3+V1UC11-XD2		1	12	0	0	12	
=V1WC3+V1UC11-XD3		1	9	0	0	9	
=V1WC4+V1UC11-KF11.14		1	4	0	0	4	
=V1WC4+V1UC11-XD5		1	1	0	0	1	
=V1WC4+V1UC11-XD6		1	1	0	0	1	
=V1WC4+V1UC11-XD10		1	14	0	0	14	
=V1WC4+V1UC11-XD11		1	1	0	0	1	
=V1WC4+V1UC11-XD12		1	2	0	0	2	
=V1WC4+V1UC11-XD13		1	7	0	0	7	
=V1WC4+V1UC11-XD14		1	2	0	0	2	
=V1WC4+V1UC11-XD20		1	8	0	0	8	
=V1WC4+V1UC11-XD51		1	2	0	0	2	
=V1WC4+V1UC11-XD52		1	2	0	0	2	
=V1WC4+V1UC11-XD53		1	2	0	0	2	
=V1WC4+V1UC11-XD54		1	2	0	0	2	

			Date	12/22/2022	Volvo Trucks North America	Valiant TMS	Terminal-strip overview : =V1WC1+V1UC11-PE - =V1WC4+V1UC11-XD54	Drawing name: =2V04&EFS-EL	=
			Ed.	MKLEPADLO					+
			Appr		P6700 Underbody Mainline - Cell 2V04	Scale 1:1		Document type: EYY	Project nr: 22-16151	Page 2 / 1630
Modification	Date	Name	Original		Replacement of	Replaced by			

Terminal-strip overview

F14_001

Terminal strip	Terminal strip definition text	Terminals					Graphical page of terminal diagrams
		first	last	Total PE	Total N	Total number	
=V1WC1+V1UC12-PE		PE	PE	0	0	1	
=V1WC2+V1UC12-XD1		1	16	0	0	16	
=V1WC2+V1UC12-XD2		1	8	0	0	8	
=V1WC2+V1UC12-XD3		1	5	0	0	5	
=V1WC3+V1UC12-XD1		1	4	0	0	4	
=V1WC3+V1UC12-XD2		1	12	0	0	12	
=V1WC3+V1UC12-XD3		1	9	0	0	9	
=V1WC4+V1UC12-KF12.14		1	4	0	0	4	
=V1WC4+V1UC12-XD5		1	1	0	0	1	
=V1WC4+V1UC12-XD6		1	1	0	0	1	
=V1WC4+V1UC12-XD10		1	14	0	0	14	
=V1WC4+V1UC12-XD11		1	1	0	0	1	
=V1WC4+V1UC12-XD12		1	2	0	0	2	
=V1WC4+V1UC12-XD13		1	7	0	0	7	
=V1WC4+V1UC12-XD14		1	2	0	0	2	
=V1WC4+V1UC12-XD20		1	8	0	0	8	
=V1WC4+V1UC12-XD51		1	2	0	0	2	
=V1WC4+V1UC12-XD52		1	2	0	0	2	
=V1WC4+V1UC12-XD53		1	2	0	0	2	
=V1WC4+V1UC12-XD54		1	2	0	0	2	

			Date	12/22/2022	Volvo Trucks North America	Valiant TMS	Terminal-strip overview : =V1WC1+V1UC12-PE - =V1WC4+V1UC12-XD54	Drawing name: =2V04&EFS-EL	=
			Ed.	MKLEPADLO					+
			Appr		P6700 Underbody Mainline - Cell 2V04	Scale 1:1		Document type: EYY	Project nr: 22-16151	Page 3 / 1630
Modification	Date	Name	Original		Replacement of	Replaced by			

Terminal-strip overview

F14_001

Terminal strip	Terminal strip definition text	Terminals					Graphical page of terminal diagrams
		first	last	Total PE	Total N	Total number	
=V1WC3+V1UC14-XD1		L1	PE	0	0	5	
=V1WC4+V1UC14-KF14.12		1	4	0	0	4	
=V1WC4+V1UC14-XD5		1	1	0	0	1	
=V1WC4+V1UC14-XD6		1	1	0	0	1	
=V1WC4+V1UC14-XD10		1	17	0	0	17	
=V1WC4+V1UC14-XD11		1	1	0	0	1	
=V1WC4+V1UC14-XD12		1	2	0	0	2	
=V1WC4+V1UC14-XD13		1	2	0	0	2	
=V1WC4+V1UC14-XD14		1	1	0	0	1	
=V1WC4+V1UC14-XD15		1	1	0	0	1	
=V1WC4+V1UC14-XD16		1	1	0	0	1	
=V1WC4+V1UC14-XD17		1	1	0	0	1	
=V1WC4+V1UC14-XD18		1	1	0	0	1	
=V1WC4+V1UC14-XD51		1	2	0	0	2	
=V1WC4+V1UC14-XD52		1	2	0	0	2	
=V1WC4+V1UC14-XD53		1	2	0	0	2	
=V1WC4+V1UC14-XD54		1	2	0	0	2	

			Date	12/22/2022	Volvo Trucks North America	Valiant TMS	Terminal-strip overview : =V1WC3+V1UC14-XD1 - =V1WC4+V1UC14-XD54	Drawing name: =2V04&EFS-EL	=
			Ed.	MKLEPADLO					+
			Appr		P6700 Underbody Mainline - Cell 2V04	Scale 1:1		Document type: EYY	Project nr: 22-16151	Page 4 / 1630
Modification	Date	Name	Original		Replacement of	Replaced by			

Terminal-strip overview

F14_001

Terminal strip	Terminal strip definition text	Terminals					Graphical page of terminal diagrams
		first	last	Total PE	Total N	Total number	
=V1WC3+V1UC15-XD1		L1	PE	0	0	5	
=V1WC4+V1UC15-KF15.12		1	4	0	0	4	
=V1WC4+V1UC15-XD5		1	1	0	0	1	
=V1WC4+V1UC15-XD6		1	1	0	0	1	
=V1WC4+V1UC15-XD10		1	17	0	0	17	
=V1WC4+V1UC15-XD11		1	1	0	0	1	
=V1WC4+V1UC15-XD12		1	2	0	0	2	
=V1WC4+V1UC15-XD13		1	2	0	0	2	
=V1WC4+V1UC15-XD14		1	1	0	0	1	
=V1WC4+V1UC15-XD15		1	1	0	0	1	
=V1WC4+V1UC15-XD16		1	1	0	0	1	
=V1WC4+V1UC15-XD17		1	1	0	0	1	
=V1WC4+V1UC15-XD18		1	1	0	0	1	
=V1WC4+V1UC15-XD51		1	2	0	0	2	
=V1WC4+V1UC15-XD52		1	2	0	0	2	
=V1WC4+V1UC15-XD53		1	2	0	0	2	
=V1WC4+V1UC15-XD54		1	2	0	0	2	

			Date	12/22/2022	Volvo Trucks North America	Valiant TMS	Terminal-strip overview : =V1WC3+V1UC15-XD1 - =V1WC4+V1UC15-XD54	Drawing name: =2V04&EFS-EL	=	
			Ed.	MKLEPADLO					+	
			Appr		P6700 Underbody Mainline - Cell 2V04	Scale 1:1		Document type: EYY	Project nr: 22-16151	Page 5 / 1630
Modification	Date	Name	Original		Replacement of	Replaced by				

Terminal-strip overview

F14_001

Terminal strip	Terminal strip definition text	Terminals					Graphical page of terminal diagrams
		first	last	Total PE	Total N	Total number	
=V1WC4+V1UC32-XD11		1	17	0	0	14	

			Date	12/22/2022	Volvo Trucks North America	Valiant TMS	Terminal-strip overview : =V1WC4+V1UC32-XD11 - =V1WC4+V1UC32-XD11	Drawing name: =2V04&EFS-EL	=
			Ed.	MKLEPADLO					+
			Appr		P6700 Underbody Mainline - Cell 2V04			Document type: EYY	Project nr: 22-16151
Modification	Date	Name	Original		Replacement of	Replaced by	Scale 1:1		Page 6 / 1630

Terminal-strip overview

F14_001

Terminal strip	Terminal strip definition text	Terminals					Graphical page of terminal diagrams
		first	last	Total PE	Total N	Total number	
=V1WC4+V1UC33-XD11		1	17	0	0	14	

			Date	12/22/2022	Volvo Trucks North America	Valiant TMS	Terminal-strip overview : =V1WC4+V1UC33-XD11 - =V1WC4+V1UC33-XD11	Drawing name: =2V04&EFS-EL	=
			Ed.	MKLEPADLO					+
			Appr		P6700 Underbody Mainline - Cell 2V04			Document type: EYY	Project nr: 22-16151
Modification	Date	Name	Original		Replacement of / Replaced by	Scale 1:1			Page 7 / 1630

1	2	3	4	5	6	7	8	9	10

MODIFIED DRAWINGS NOT REVISED IN THE ORIGINAL				DRAWINGS FOR REVISION			REPLACE AFTER REV. BY ORIGINAL		
DATE	SIGN.	DRAWING NR:	SHEET NR:	DATE	SIGN.	REV. AV	DATE	SIGN.	REV.

1	2	3	4	5	6	7	8	9	10

LATEST REVISION

REV.	DATE	SIGN.	DRAWING NR:	SHEET NR:
1	2022-10-28	KMAFFRE	&EFS=KH0+KH0	1,2,3,4,5,6,7,8,9
1	2022-11-01	KMAFFRE	&EFS=V1FQ1+V1FQ1	9
1	2022-11-01	KMAFFRE	&EFS=V1KF1+V1UC11	14
1	2022-11-01	KMAFFRE	&EFS=V1WC4+V1UC11	6

1 3

			Date	12/22/2022	Volvo Trucks North America	Valiant TMS	Amendment page	Drawing name: =2V04&EFS-EL	=
			Ed.	MKLEPADLO					+
			Appr		P6700 Underbody Mainline - Cell 2V04	Scale 1:10		Document type: EAZ / Project nr: 22-16151	Page 2 / 1630
Modification	Date	Name	Original		Replacement of / Replaced by				

1	2	3	4	5	6	7	8	9	10

LATEST REVISION

REV.	DATE	SIGN.	DRAWING NR:	SHEET NR:
2	2022-11-11	MKLEPADLO	&EFS=V1GL11UQ51BG0+V1GL11UQ51	1,2,3
2	2022-11-11	MKLEPADLO	&EFS=V1GL11UQ51KF2+V1GL11UQ51	1,2,3,4,5
2	2022-11-11	MKLEPADLO	&EFS=V1GL11UQ51UQ4+V1GL11UQ51UQ4	1
2	2022-11-11	MKLEPADLO	&EFS=V1GL11UQ51UQ5+V1GL11UQ51UQ5	1
2	2022-11-11	MKLEPADLO	&EFS=V1GL11UQ51UQ6+V1GL11UQ51UQ6	1
2	2022-11-11	MKLEPADLO	&EFS=V1GL11UQ51UQ7+V1GL11UQ51UQ7	1
2	2022-11-11	MKLEPADLO	&EFS=V1GL11UQ51UQ11+V1GL11UQ51UQ11	1
2	2022-11-11	MKLEPADLO	&EFS=V1GL11UQ51UQ12+V1GL11UQ51UQ12	1
2	2022-11-11	MKLEPADLO	&EFS=V1GL12UQ51BG0+V1GL12UQ51	1,2,3
2	2022-11-11	MKLEPADLO	&EFS=V1GL12UQ51KF2+V1GL12UQ51	1,2,3,4,5
2	2022-11-11	MKLEPADLO	&EFS=V1GL12UQ51UQ4+V1GL12UQ51UQ4	1
2	2022-11-11	MKLEPADLO	&EFS=V1GL12UQ51UQ5+V1GL12UQ51UQ5	1
2	2022-11-11	MKLEPADLO	&EFS=V1GL12UQ51UQ6+V1GL12UQ51UQ6	1
2	2022-11-11	MKLEPADLO	&EFS=V1GL12UQ51UQ11+V1GL12UQ51UQ11	1
2	2022-11-11	MKLEPADLO	&EFS=V1GL13UQ51BG0+V1GL13UQ51	1,2
2	2022-11-11	MKLEPADLO	&EFS=V1GL13UQ51KF1+V1GL13UQ51	1,2,3,4,5
2	2022-11-11	MKLEPADLO	&EFS=V1GL13UQ51UQ2+V1GL13UQ51UQ2	1
2	2022-11-11	MKLEPADLO	&EFS=V1GL13UQ51UQ3+V1GL13UQ51UQ3	1
2	2022-11-11	MKLEPADLO	&EFS=V1GL13UQ51UQ7+V1GL13UQ51UQ7	1
2	2022-11-11	MKLEPADLO	&EFS=V1GL13UQ51UQ8+V1GL13UQ51UQ8	1

2 4

			Date	12/22/2022	Volvo Trucks North America	Valiant TMS	Amendment page	Drawing name: =2V04&EFS-EL	=
			Ed.	MKLEPADLO					+
			Appr		P6700 Underbody Mainline - Cell 2V04	Scale 1:10		Document type: EAZ	Project nr: 22-16151
Modification	Date	Name	Original		Replacement of	Replaced by			Page 3 / 1630

1	2	3	4	5	6	7	8	9	10

LATEST REVISION

REV.	DATE	SIGN.	DRAWING NR:	SHEET NR:
3	2022-12-16	KMAFFRE	&EFS=KF0SF1+UC31	1
3	2022-12-16	KMAFFRE	&EFS=KF0KF1+UC31	21
3	2022-12-16	KMAFFRE	&EFS=V1KF1+V1UC32	5
3	2022-12-16	KMAFFRE	&EFS=V1KF1+V1UC33	5
3	2022-12-16	KMAFFRE	&EFS=V1SF0PG1+V1UC32	2
3	2022-12-16	KMAFFRE	&EFS=V1SF0PG2+V1UC33	2
3	2022-12-16	KMAFFRE	&ELU=KF0+UC31	3
3	2022-12-16	KMAFFRE	&ELU=V1SF0PG1+V1UC32	1
3	2022-12-16	KMAFFRE	&ELU=V1SF0PG2+V1UC33	1
3	2022-12-16	KMAFFRE	&EFS=V1GL11UQ51BG0+V1GL11UQ51	1,2,3
3	2022-12-16	KMAFFRE	&EFS=V1GL11UQ51KF2+V1GL11UQ51	1,2,4,5,6
3	2022-12-16	KMAFFRE	&EFS=V1GL11UQ51UQ2+V1GL11UQ51UQ2	1
3	2022-12-16	KMAFFRE	&EFS=V1GL11UQ51UQ3+V1GL11UQ51UQ3	1
3	2022-12-16	KMAFFRE	&EFS=V1GL11UQ51UQ4+V1GL11UQ51UQ4	1
3	2022-12-16	KMAFFRE	&EFS=V1GL11UQ51UQ5+V1GL11UQ51UQ5	1
3	2022-12-16	KMAFFRE	&EFS=V1GL11UQ51UQ6+V1GL11UQ51UQ6	1
3	2022-12-16	KMAFFRE	&EFS=V1GL11UQ51UQ7+V1GL11UQ51UQ7	1
3	2022-12-16	KMAFFRE	&EFS=V1GL11UQ51UQ8+V1GL11UQ51UQ8	1
3	2022-12-16	KMAFFRE	&EFS=V1GL11UQ51UQ12+V1GL11UQ51UQ12	1
3	2022-12-16	KMAFFRE	&EFS=V1GL13UQ51BG0+V1GL13UQ51	1,2
3	2022-12-16	KMAFFRE	&EFS=V1GL13UQ51KF1+V1GL13UQ51	1,2,4,5
3	2022-12-16	KMAFFRE	&EFS=V1GL13UQ51UQ2+V1GL13UQ51UQ2	1
3	2022-12-16	KMAFFRE	&EFS=V1GL13UQ51UQ3+V1GL13UQ51UQ3	1
3	2022-12-16	KMAFFRE	&EFS=V1GL13UQ51UQ4+V1GL13UQ51UQ4	1
3	2022-12-16	KMAFFRE	&EFS=V1GL13UQ51UQ8+V1GL13UQ51UQ8	1

3

			Date	12/22/2022	Volvo Trucks North America	Valiant TMS	Amendment page	Drawing name: =2V04&EFS-EL	=
			Ed.	MKLEPADLO					+
			Appr		P6700 Underbody Mainline - Cell 2V04			Document type: EAZ	Project nr: 22-16151
Modification	Date	Name	Original		Replacement of	Replaced by	Scale 1:10		Page 4 / 1630