Valiant TMS

Company / customer	Volvo Trucks NA
Project description	P6700 Bodyside LH - Robot Cell 2V09
drawing number	22-16150
Commission	Volvo Trucks North America
Manufacturer (company)	Valiant TMS
Project name	=2V09&EFS_EL
Type	P6700 Bodyside LH - Robot Cell 2V09

Created on 3/7/2022
Edit date 1/17/2023 by (short name) MKLEPADLO Number of pages 1533

			Date	1/17/2023	Volvo Trucks North America	Valiant TMS	Title page / cover sheet	Drawing name: =2V09&EFS-EL	=
			Ed.	MKLEPADLO	P6700 Bodyside LH - Robot Cell 2V09				+
			Appr			Scale 1:1		Document type: EAA / Project nr: 22-16150	Page 1 / 1533
Modification	Date	Name	Original		Replacement of / Replaced by				

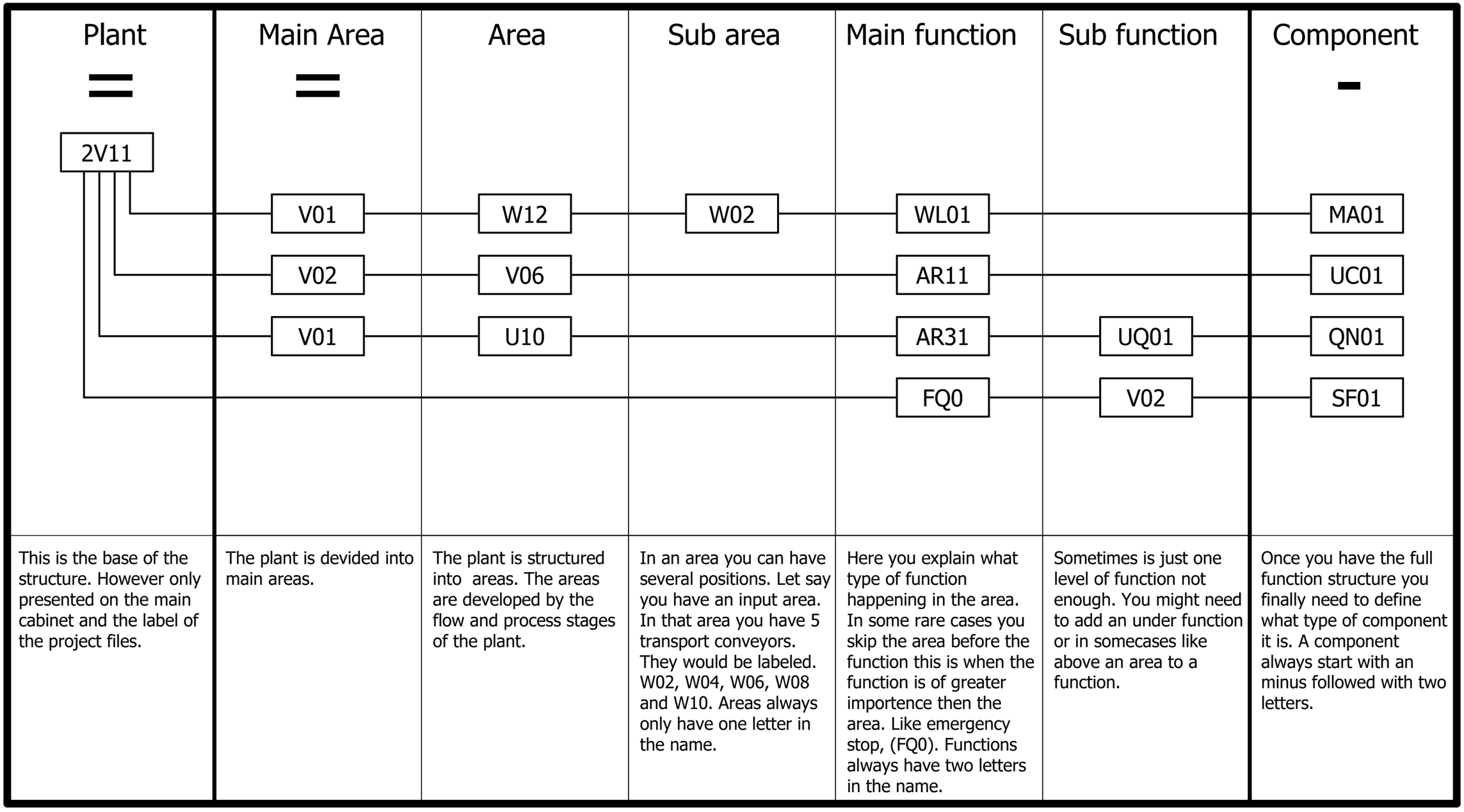

This is the base of the structure. However only presented on the main cabinet and the label of the project files.	The plant is devided into main areas.	The plant is structured into areas. The areas are developed by the flow and process stages of the plant.	In an area you can have several positions. Let say you have an input area. In that area you have 5 transport conveyors. They would be labeled. W02, W04, W06, W08 and W10. Areas always only have one letter in the name.

Here you explain what type of function happening in the area. In some rare cases you skip the area before the function this is when the function is of greater importence then the area. Like emergency stop, (FQ0). Functions always have two letters in the name.	Sometimes is just one level of function not enough. You might need to add an under function or in somecases like above an area to a function.	Once you have the full function structure you finally need to define what type of component it is. A component always start with an minus followed with two letters.

			Date	1/17/2023	Volvo Trucks North America	Valiant TMS	Project structure	Drawing name: =2V09&EFS-EL
			Ed.	MKLEPADLO				=
			Appr		P6700 Bodyside LH - Robot Cell 2V09	Scale 1:1		+
Modification	Date	Name	Original		Replacement of / Replaced by			Document type: EAA / Project nr: 22-16150 / Page 2 / 1533

1. VLU letter codes.

• Our interpretation of IEC 81346-2 is presented in the Excel document: “VLU 81346-2 (interpretation)”

2. Colour coding

Description	**Colour**	**IEC 60204**	**Minimum area**
Power circuits 400/230 VAC	Black	bk	1,5mm²
Control circuit 230 VAC	Red	rd	1,0mm²
Control circuit 24 VAC	Red	rd	1,0mm²
Control circuit 24 VDC	Dark blue	bu	1,0mm²
Control circuit before main switch or external control signals	Orange	og	1,5mm²
Protective conductor PE (Earth)	Green/yellow	gnye	1,5mm²
Neutral	Light blue	bu	1,5mm²
Test leads	Blue	bu	1,5mm²
EX safe circuit	Medium blue	bu	1,5mm²
Shield	Transparent	sh	1,5mm²

Purpose

This dokument is made to avoid any missconcenptions about the standards we have to uphold regarding PUS-grounding connections in compliance with the electrical regulations contained in SS-EN 60204-1.

Fundemental principles

All PUS-grounding connections originate from one PUS-grounding block, which is mounted either on the outside or directly on the main cabinet. This block is then connected with a 16mm² yellow/green wire from the main cabinets groundingbar, this wire is labled (PUS1).

From this block a network of unisnsulated copper wiring is spread across the plant. At every PUS connection point a 6mm² wire composed of a tapp-off clamp aswell as a cableharness is used to connect the surface to the PUS-grounding network.

PUS-grounding example

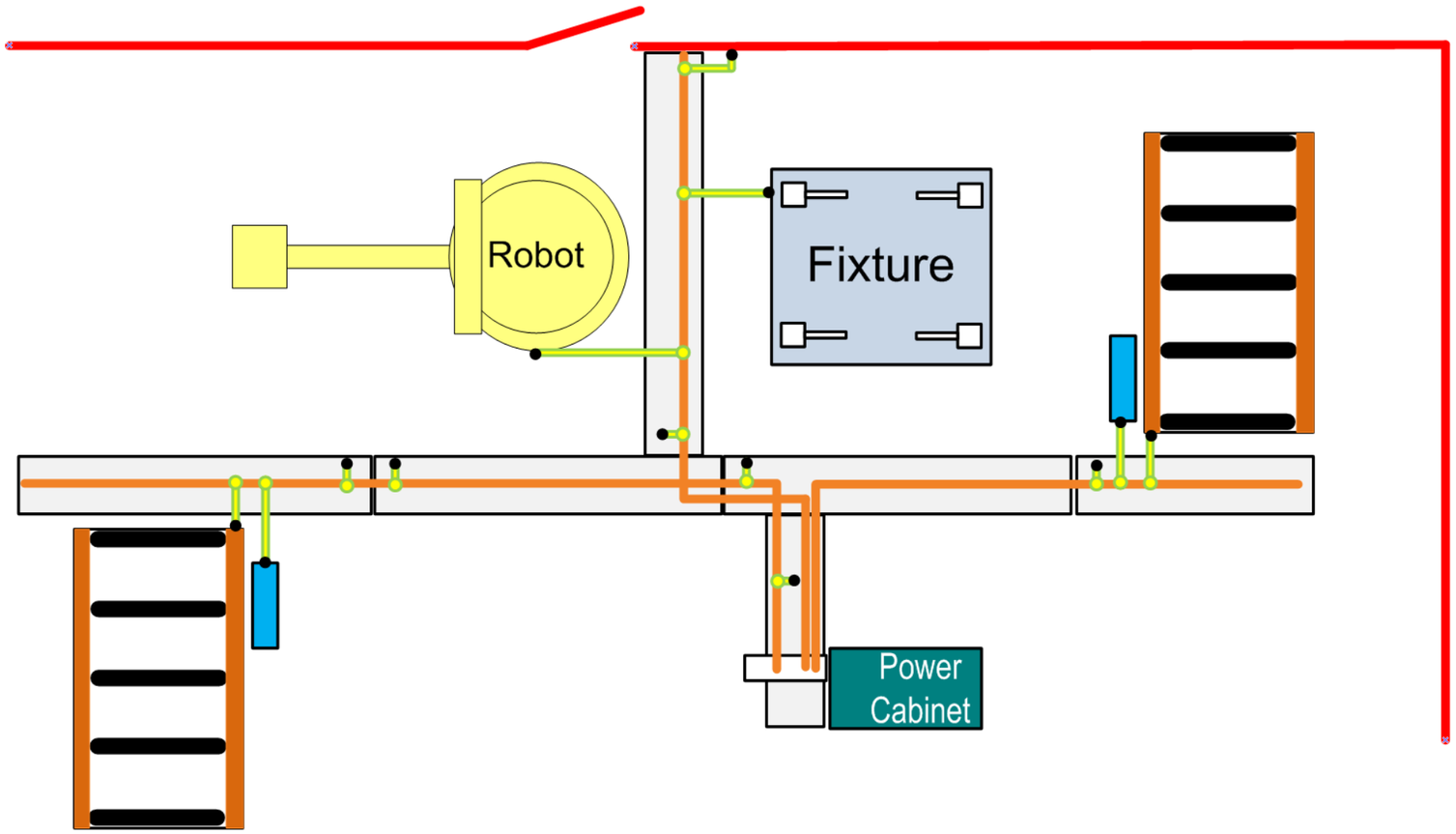

			Date	1/17/2023	Volvo Trucks North America		Valiant TMS	PUS policy	Drawing name: =2V09&EFS-EL	=	
			Ed.	MKLEPADLO						+	
			Appr		P6700 Bodyside LH - Robot Cell 2V09		Scale 1:1		Document type: EAA	Project nr: 22-16150	Page 4 / 1533
Modification	Date	Name	Original		Replacement of	Replaced by					

Table of contents

Column X: An automatically generated page was edited

F06_001

Page	Page description	supplementary page field	Date	Edited by	X
&EAA/1	Title page / cover sheet		1/17/2023	MKLEPADLO	
&EAA/2	Project structure	UC11	1/10/2023	MKLEPADLO	
&EAA/3	Letter codes/colors	UC11	1/10/2023	MKLEPADLO	
&EAA/4	PUS policy	UC11	1/10/2023	MKLEPADLO	
&EAB/1	Table of contents : &EAA/1 - &EAB/29		1/17/2023	MKLEPADLO	
&EAB/2	Table of contents : &EAB/30 - &EFS=KF0KF1+UC31/6		1/17/2023	MKLEPADLO	
&EAB/3	Table of contents : &EFS=KF0KF1+UC31/7 - &EFS=V1AR11UQ41KF1+V1AR11UQ41/1		1/17/2023	MKLEPADLO	
&EAB/4	Table of contents : &EFS=V1AR11UQ41KF1+V1AR11UQ41/2 - &EFS=V1AR26WC1+V1AR26UC01/1		1/17/2023	MKLEPADLO	
&EAB/5	Table of contents : &EFS=V1AR26XQ11WC1+V1AR26XQ11UC01/1 - &EFS=V1AR81UQ41KF1+V1AR81UQ41/2		1/17/2023	MKLEPADLO	
&EAB/6	Table of contents : &EFS=V1AR81UQ41KF1+V1AR81UQ41/3 - &EFS=V1FQ1+V1FQ1/9		1/17/2023	MKLEPADLO	
&EAB/7	Table of contents : &EFS=V1FQ1+V1FQ1/10 - &EFS=V1GL1UQ51KF2+V1GL1UQ51/4		1/17/2023	MKLEPADLO	
&EAB/8	Table of contents : &EFS=V1GL1UQ51KF2+V1GL1UQ51/5 - &EFS=V1GL1UQ52BG0+V1GL1UQ52/4		1/17/2023	MKLEPADLO	
&EAB/9	Table of contents : &EFS=V1GL1UQ52BG0+V1GL1UQ52/5 - &EFS=V1GL1UQ52UQ20+V1GL1UQ52UQ20/1		1/17/2023	MKLEPADLO	
&EAB/10	Table of contents : &EFS=V1GL1UQ52UQ21+V1GL1UQ52UQ21/1 - &EFS=V1GL1UQ53UQ13+V1GL1UQ53UQ13/1		1/17/2023	MKLEPADLO	
&EAB/11	Table of contents : &EFS=V1GL1UQ53UQ14+V1GL1UQ53UQ14/1 - &EFS=V1GL1UQ54UQ3+V1GL1UQ54UQ3/1		1/17/2023	MKLEPADLO	
&EAB/12	Table of contents : &EFS=V1GL1UQ54UQ4+V1GL1UQ54UQ4/1 - &EFS=V1GL2UQ51BG0+V1GL2UQ51/1		1/17/2023	MKLEPADLO	
&EAB/13	Table of contents : &EFS=V1GL2UQ51BG0+V1GL2UQ51/2 - &EFS=V1GL2UQ51UQ17+V1GL2UQ51UQ17/1		1/17/2023	MKLEPADLO	
&EAB/14	Table of contents : &EFS=V1GL2UQ51UQ18+V1GL2UQ51UQ18/1 - &EFS=V1KF1+V1UC11/6		1/17/2023	MKLEPADLO	
&EAB/15	Table of contents : &EFS=V1KF1+V1UC11/7 - &EFS=V1KF1+V1UC12/18		1/17/2023	MKLEPADLO	
&EAB/16	Table of contents : &EFS=V1KF1+V1UC12/19 - &EFS=V1KF1+V1UC15/12		1/17/2023	MKLEPADLO	
&EAB/17	Table of contents : &EFS=V1KF1+V1UC15/13 - &EFS=V1U10U01KF1+V1U10U01/10		1/17/2023	MKLEPADLO	
&EAB/18	Table of contents : &EFS=V1U10U01PF1+V1U10U01/2 - &EFS=V1UQ52KF3+V1UQ52/1		1/17/2023	MKLEPADLO	
&EAB/19	Table of contents : &EFS=V1UQ52KF3+V1UQ52/2 - &EFS=V1UQ52UQ23+V1UQ52UQ23/1		1/17/2023	MKLEPADLO	
&EAB/20	Table of contents : &EFS=V1UQ52UQ24+V1UQ52UQ24/1 - &EFS=V1UQ53KF2+V1UQ53/3		1/17/2023	MKLEPADLO	
&EAB/21	Table of contents : &EFS=V1UQ53UQ1+V1UQ53UQ1/1 - &EFS=V1UQ54UQ7+V1UQ54UQ7/1		1/17/2023	MKLEPADLO	
&EAB/22	Table of contents : &EFS=V1UQ54UQ8+V1UQ54UQ8/1 - &EFS=V1WC2+V1UC12/10		1/17/2023	MKLEPADLO	
&EAB/23	Table of contents : &EFS=V1WC2+V1UC12/11 - &EFS=V1WC4+V1UC11/8		1/17/2023	MKLEPADLO	
&EAB/24	Table of contents : &EFS=V1WC4+V1UC11/9 - &EFS=V1WC4+V1UC12/14		1/17/2023	MKLEPADLO	
&EAB/25	Table of contents : &EFS=V1WC4+V1UC12/15 - &EFS=V1WC4+V1UC14/20		1/17/2023	MKLEPADLO	
&EAB/26	Table of contents : &EFS=V1WC4+V1UC14/21 - &ELU=V1PZ1PF2+V1UC62/1		1/17/2023	MKLEPADLO	
&EAB/27	Table of contents : &ELU=V1PZ1PF2+V1UC62/2 - &EMC/10		1/17/2023	MKLEPADLO	
&EAB/28	Table of contents : &EMC/11 - &EPB+V1AR11UQ41UQ4.1/1		1/17/2023	MKLEPADLO	
&EAB/29	Table of contents : &EPB+V1AR11UQ41UQ4.2/1 - &EPB+V1AR31UQ41UQ7.2/1		1/17/2023	MKLEPADLO	

Table of contents

Column X: An automatically generated page was edited

F06_001

Page	Page description	supplementary page field	Date	Edited by	X
&EAB/30	Table of contents : &EPB+V1AR31UQ41UQ8.1/1 - &EPB+V1FQ1BG6/1		1/17/2023	MKLEPADLO	
&EAB/31	Table of contents : &EPB+V1GL1UQ51/1 - &EPB+V1GL1UQ51UQ14.4/1		1/17/2023	MKLEPADLO	
&EAB/32	Table of contents : &EPB+V1GL1UQ51UQ15.1/1 - &EPB+V1GL1UQ52UQ8.1/1		1/17/2023	MKLEPADLO	
&EAB/33	Table of contents : &EPB+V1GL1UQ52UQ9.1/1 - &EPB+V1GL1UQ52UQ22.1/1		1/17/2023	MKLEPADLO	
&EAB/34	Table of contents : &EPB+V1GL1UQ52UQ23.1/1 - &EPB+V1GL1UQ53UQ14.3/1		1/17/2023	MKLEPADLO	
&EAB/35	Table of contents : &EPB+V1GL1UQ53UQ14.4/1 - &EPB+V1GL1UQ54UQ7.1/1		1/17/2023	MKLEPADLO	
&EAB/36	Table of contents : &EPB+V1GL1UQ54UQ8.1/1 - &EPB+V1GL1UQ54UQ21.1/1		1/17/2023	MKLEPADLO	
&EAB/37	Table of contents : &EPB+V1GL1UQ54UQ22.1/1 - &EPB+V1GL2UQ51UQ12.1/1		1/17/2023	MKLEPADLO	
&EAB/38	Table of contents : &EPB+V1GL2UQ51UQ13.1/1 - &EPB+V1PF1UQ1.1/1		1/17/2023	MKLEPADLO	
&EAB/39	Table of contents : &EPB+V1U10/1 - &EPB+V1UQ51UQ4.2/1		1/17/2023	MKLEPADLO	
&EAB/40	Table of contents : &EPB+V1UQ51UQ5.1/1 - &EPB+V1UQ52UQ11.1/1		1/17/2023	MKLEPADLO	
&EAB/41	Table of contents : &EPB+V1UQ52UQ11.2/1 - &EPB+V1UQ52UQ39.1/1		1/17/2023	MKLEPADLO	
&EAB/42	Table of contents : &EPB+V1UQ52UQ40.1/1 - &EPB+V1UQ53UQ12.1/1		1/17/2023	MKLEPADLO	
&EAB/43	Table of contents : &EPB+V1UQ53UQ13.1/1 - &EPB+V1UQ55UQ2.1/1		1/17/2023	MKLEPADLO	
&EAB/44	Table of contents : &EPB+V1UQ55UQ3.1/1 - &ETT/30		1/17/2023	MKLEPADLO	
&EAB/45	Table of contents : &ETT/31 - &ETT/63		1/17/2023	MKLEPADLO	
&EAB/46	Table of contents : &ETT/64 - &EYY/1		1/17/2023	MKLEPADLO	
&EAB/47	Table of contents : &EYY/2 - &EAZ/6		1/17/2023	MKLEPADLO	
&EFA=FQ99V1+V1/1	EQUIPMENT BONDING		1/10/2023	MKLEPADLO	
&EFA=FQ99V1+V1/2	EQUIPMENT BONDING		1/10/2023	MKLEPADLO	
&EFA=FQ99V1+V1/3	EQUIPMENT BONDING		1/10/2023	MKLEPADLO	
&EFA=FQ99V1+V1/4	EQUIPMENT BONDING		1/10/2023	MKLEPADLO	
&EFA=FQ99V1+V1/5	EQUIPMENT BONDING		1/10/2023	MKLEPADLO	
&EFA=FQ99V1+V1/6	EQUIPMENT BONDING		1/10/2023	MKLEPADLO	
&EFA=FQ99V1+V1/7	EQUIPMENT BONDING		1/10/2023	MKLEPADLO	
&EFS=FQ0V1SF1S01+V1UC32/1	Emergency stop +V1SF1S01UC32		1/10/2023	MKLEPADLO	
&EFS=KF0FQ0+UC31/1	Operating box UC91 MOP		1/10/2023	MKLEPADLO	
&EFS=KF0KF1+UC31/1	CPU 1517-F-3PN, Failsafe		1/10/2023	MKLEPADLO	
&EFS=KF0KF1+UC31/2	Cell interface S615		1/10/2023	MKLEPADLO	
&EFS=KF0KF1+UC31/3	Switch, Scalance XC216		1/10/2023	MKLEPADLO	
&EFS=KF0KF1+UC31/4	MOP, PC		1/10/2023	MKLEPADLO	
&EFS=KF0KF1+UC31/5	Network overview		1/10/2023	MKLEPADLO	
&EFS=KF0KF1+UC31/6	IM 155 PN		1/10/2023	MKLEPADLO	

			Date	1/17/2023	Volvo Trucks North America	Valiant TMS	Table of contents : &EAB/30 - &EFS=KF0KF1+UC31/6	Drawing name: =2V09&EFS-EL	=
			Ed.	MKLEPADLO					+
			Appr		P6700 Bodyside LH - Robot Cell 2V09			Document type: EAB	Project nr: 22-16150
Modification	Date	Name	Original		Replacement of / Replaced by	Scale 1:1			Page 2 / 1533

Table of contents

Column X: An automatically generated page was edited

F06_001

Page	Page description	supplementary page field	Date	Edited by	X
&EFS=KF0KF1+UC31/7	ET200S Wiring DI		1/10/2023	MKLEPADLO	
&EFS=KF0KF1+UC31/8	ET200S Wiring DO		1/10/2023	MKLEPADLO	
&EFS=KF0KF1+UC31/9	ET200S Wiring F-DI		1/10/2023	MKLEPADLO	
&EFS=KF0KF1+UC31/10	ET200S Cross-reference Input module		1/10/2023	MKLEPADLO	
&EFS=KF0KF1+UC31/11	ET200S Cross-reference Output module		1/10/2023	MKLEPADLO	
&EFS=KF0KF1+UC31/12	ET200S Cross-reference Safe input module		1/10/2023	MKLEPADLO	
&EFS=KF0PZ1+UC31/1	Indication column		1/10/2023	MKLEPADLO	
&EFS=KF0SF1+UC31/1	Operating box UC91 MOP		1/10/2023	MKLEPADLO	
&EFS=KF0SF1+UC31/2	Operating box UC92 MOP		1/10/2023	MKLEPADLO	
&EFS=KF0WC3+UC31/1	Incomming power supply 120 VAC		1/10/2023	MKLEPADLO	
&EFS=KF0WC3+UC31/2	Outlet PLC 120VAC		1/10/2023	MKLEPADLO	
&EFS=KF0WC3+UC31/3	Monitoring 120VAC		1/10/2023	MKLEPADLO	
&EFS=KF0WC4+UC31/1	Power distribution 24VDC		1/10/2023	MKLEPADLO	
&EFS=KF0WC4+UC31/2	Power distribution, UPS		1/10/2023	MKLEPADLO	
&EFS=KF0WC4+UC31/3	Power distribution 24VDC 1L+		1/10/2023	MKLEPADLO	
&EFS=KF0WC4+UC31/4	Power distribution 24VDC 2L+		1/10/2023	MKLEPADLO	
&EFS=KF0WC4+UC31/5	Power distribution 24VDC 3L+		1/10/2023	MKLEPADLO	
&EFS=KF0WC4+UC31/6	Power distribution 24VDC 4L+		1/10/2023	MKLEPADLO	
&EFS=KH0+KH0/1	Incoming air supply (Main)		1/11/2023	MKLEPADLO	
&EFS=KH0+KH0/2	Incoming air supply (S010)		1/10/2023	MKLEPADLO	
&EFS=KH0+KH0/3	Incoming air supply (S020)		1/10/2023	MKLEPADLO	
&EFS=KH0+KH0/4	Incoming air supply (S030)		1/10/2023	MKLEPADLO	
&EFS=KH0+KH0/5	Incoming air supply (S040)		1/10/2023	MKLEPADLO	
&EFS=KH0+KH0/6	Incoming air supply (S050)		1/10/2023	MKLEPADLO	
&EFS=KH0+KH0/7	Incoming air supply (S055)		1/10/2023	MKLEPADLO	
&EFS=KH0+KH0/8	Incoming air supply (S060)		1/10/2023	MKLEPADLO	
&EFS=KH0+KH0/9	Incoming air supply (S080)		1/10/2023	MKLEPADLO	
&EFS=KH3+KH3/1	Incoming water supply (Filter)		1/10/2023	MKLEPADLO	
&EFS=KH3+KH3/2	Incoming water supply		1/10/2023	MKLEPADLO	
&EFS=V1AR11KF1+V1AR11UC01/1	Incoming Profinet		1/10/2023	MKLEPADLO	
&EFS=V1AR11UQ41BG0+V1AR11UQ41/1	SENSORS		1/10/2023	MKLEPADLO	
&EFS=V1AR11UQ41BG0+V1AR11UQ41/2	SENSORS		1/10/2023	MKLEPADLO	
&EFS=V1AR11UQ41KF1+V1AR11UQ41/1	24VDC SUPPLY AND PROFINET HANDLING MODULE		1/10/2023	MKLEPADLO	

			Date	1/17/2023	Volvo Trucks North America	Valiant TMS	Table of contents : &EFS=KF0KF1+UC31/7 - &EFS=V1AR11UQ41KF1+V1AR11UQ41/1	Drawing name: =2V09&EFS-EL	=
			Ed.	MKLEPADLO					+
			Appr		P6700 Bodyside LH - Robot Cell 2V09			Document type: EAB	Project nr: 22-16150
Modification	Date	Name	Original		Replacement of / Replaced by	Scale 1:1			Page 3 / 1533

Table of contents

Column X: An automatically generated page was edited

F06_001

Page	Page description	supplementary page field	Date	Edited by	X
&EFS=V1AR11UQ41KF1+V1AR11UQ41/2	CONNECTING MOD. FOR MPA MANIFOLD		1/10/2023	MKLEPADLO	
&EFS=V1AR11UQ41KF1+V1AR11UQ41/3	I/O MOD. DI16 (8 x M12) FOR MPA		1/10/2023	MKLEPADLO	
&EFS=V1AR11UQ41KF1+V1AR11UQ41/4	I/O MOD. DI16 (8 x M12) FOR MPA		1/10/2023	MKLEPADLO	
&EFS=V1AR11UQ41KF1+V1AR11UQ41/5	CONNECTING MOD. FOR FESTO DQ		1/10/2023	MKLEPADLO	
&EFS=V1AR11UQ41KF1+V1AR11UQ41/6	MURR MODULE 16 IN/OUT		1/10/2023	MKLEPADLO	
&EFS=V1AR11UQ41UQ1+V1AR11UQ41UE1/1	FESTO DQ CONNECTION QN1		1/10/2023	MKLEPADLO	
&EFS=V1AR11UQ41UQ2+V1AR11UQ41UE2/1	FESTO DQ CONNECTION QN2		1/10/2023	MKLEPADLO	
&EFS=V1AR11UQ41UQ3+V1AR11UQ41UE3/1	FESTO DQ CONNECTION QN3		1/10/2023	MKLEPADLO	
&EFS=V1AR11UQ41UQ4+V1AR11UQ41UE4/1	FESTO DQ CONNECTION QN4		1/10/2023	MKLEPADLO	
&EFS=V1AR11UQ41UQ5+V1AR11UQ41UE5/1	FESTO DQ CONNECTION QN5		1/10/2023	MKLEPADLO	
&EFS=V1AR11UQ41UQ6+V1AR11UQ41UE6/1	FESTO DQ CONNECTION QN6		1/10/2023	MKLEPADLO	
&EFS=V1AR11UQ41UQ7+V1AR11UQ41UE7/1	FESTO DQ CONNECTION QN7		1/10/2023	MKLEPADLO	
&EFS=V1AR11UQ41UQ8+V1AR11UQ41UE8/1	FESTO DQ CONNECTION QN8		1/10/2023	MKLEPADLO	
&EFS=V1AR11UQ41UQ9+V1AR11UQ41UE9/1	FESTO DQ CONNECTION QN9		1/10/2023	MKLEPADLO	
&EFS=V1AR11UQ41UQ10+V1AR11UQ41UE10/1	FESTO DQ CONNECTION QN10		1/10/2023	MKLEPADLO	
&EFS=V1AR11WC1+V1AR11UC01/1	Incoming power		1/10/2023	MKLEPADLO	
&EFS=V1AR21KF1+V1AR21UC01/1	Incoming Profinet		1/10/2023	MKLEPADLO	
&EFS=V1AR21WC1+V1AR21UC01/1	Incoming power		1/10/2023	MKLEPADLO	
&EFS=V1AR21XQ11WC1+V1AR21XQ11UC01/1	Incoming power		1/10/2023	MKLEPADLO	
&EFS=V1AR22KF1+V1AR22UC01/1	Incoming Profinet		1/10/2023	MKLEPADLO	
&EFS=V1AR22WC1+V1AR22UC01/1	Incoming power		1/10/2023	MKLEPADLO	
&EFS=V1AR22XQ11WC1+V1AR22XQ11UC01/1	Incoming power		1/10/2023	MKLEPADLO	
&EFS=V1AR23KF1+V1AR23UC01/1	Incoming Profinet		1/10/2023	MKLEPADLO	
&EFS=V1AR23WC1+V1AR23UC01/1	Incoming power		1/10/2023	MKLEPADLO	
&EFS=V1AR23XQ11WC1+V1AR23XQ11UC01/1	Incoming power		1/10/2023	MKLEPADLO	
&EFS=V1AR24KF1+V1AR24UC01/1	Incoming Profinet		1/10/2023	MKLEPADLO	
&EFS=V1AR24WC1+V1AR24UC01/1	Incoming power		1/10/2023	MKLEPADLO	
&EFS=V1AR24XQ11WC1+V1AR24XQ11UC01/1	Incoming power		1/10/2023	MKLEPADLO	
&EFS=V1AR25KF1+V1AR25UC01/1	Incoming Profinet		1/10/2023	MKLEPADLO	
&EFS=V1AR25WC1+V1AR25UC01/1	Incoming power		1/10/2023	MKLEPADLO	
&EFS=V1AR25XQ11WC1+V1AR25XQ11UC01/1	Incoming power		1/10/2023	MKLEPADLO	
&EFS=V1AR26KF1+V1AR26UC01/1	Incoming Profinet		1/10/2023	MKLEPADLO	
&EFS=V1AR26WC1+V1AR26UC01/1	Incoming power		1/10/2023	MKLEPADLO	

			Date	1/17/2023	Volvo Trucks North America	Valiant TMS	Table of contents : &EFS=V1AR11UQ41KF1+V1AR11UQ41/2 - &EFS=V1AR26WC1+V1AR26UC01/1	Drawing name: =2V09&EFS-EL	=
			Ed.	MKLEPADLO					+
			Appr		P6700 Bodyside LH - Robot Cell 2V09			Document type: EAB	Project nr: 22-16150
Modification	Date	Name	Original		Replacement of / Replaced by	Scale 1:1			Page 4 / 1533

Table of contents

Column X: An automatically generated page was edited

F06_001

Page	Page description	supplementary page field	Date	Edited by	X
&EFS=V1AR26XQ11WC1+V1AR26XQ11UC01/1	Incoming power		1/10/2023	MKLEPADLO	
&EFS=V1AR28KF1+V1AR28UC01/1	Incoming Profinet		1/10/2023	MKLEPADLO	
&EFS=V1AR28WC1+V1AR28UC01/1	Incoming power		1/13/2023	MKLEPADLO	
&EFS=V1AR28XQ11WC1+V1AR28XQ11UC01/1	Incoming power		1/10/2023	MKLEPADLO	
&EFS=V1AR29KF1+V1AR29UC01/1	Incoming Profinet		1/10/2023	MKLEPADLO	
&EFS=V1AR29WC1+V1AR29UC01/1	Incoming power		1/13/2023	MKLEPADLO	
&EFS=V1AR29XQ11WC1+V1AR29XQ11UC01/1	Incoming power		1/10/2023	MKLEPADLO	
&EFS=V1AR31KF1+V1AR31UC01/1	Incoming Profinet		1/10/2023	MKLEPADLO	
&EFS=V1AR31UQ41BG0+V1AR31UQ41/1	SENSORS		1/10/2023	MKLEPADLO	
&EFS=V1AR31UQ41KF1+V1AR31UQ41/1	24VDC SUPPLY AND PROFINET HANDLING MODULE		1/10/2023	MKLEPADLO	
&EFS=V1AR31UQ41KF1+V1AR31UQ41/2	CONNECTING MOD. FOR MPA MANIFOLD		1/10/2023	MKLEPADLO	
&EFS=V1AR31UQ41KF1+V1AR31UQ41/3	I/O MOD. DI16 (8 x M12) FOR MPA		1/10/2023	MKLEPADLO	
&EFS=V1AR31UQ41KF1+V1AR31UQ41/4	I/O MOD. DI16 (8 x M12) FOR MPA		1/10/2023	MKLEPADLO	
&EFS=V1AR31UQ41KF1+V1AR31UQ41/5	CONNECTING MOD. FOR FESTO DQ		1/12/2023	MKLEPADLO	
&EFS=V1AR31UQ41UQ1+V1AR31UQ41UE51	FESTO DQ CONNECTION QN1		1/10/2023	MKLEPADLO	
&EFS=V1AR31UQ41UQ2+V1AR31UQ41UE52	FESTO DQ CONNECTION QN2		1/10/2023	MKLEPADLO	
&EFS=V1AR31UQ41UQ3+V1AR31UQ41UE53	FESTO DQ CONNECTION QN3		1/10/2023	MKLEPADLO	
&EFS=V1AR31UQ41UQ4+V1AR31UQ41UE54	FESTO DQ CONNECTION QN4		1/10/2023	MKLEPADLO	
&EFS=V1AR31UQ41UQ5+V1AR31UQ41UE55	FESTO DQ CONNECTION QN5		1/10/2023	MKLEPADLO	
&EFS=V1AR31UQ41UQ6+V1AR31UQ41UE56	FESTO DQ CONNECTION QN6		1/10/2023	MKLEPADLO	
&EFS=V1AR31UQ41UQ7+V1AR31UQ41UE57	FESTO DQ CONNECTION QN7		1/10/2023	MKLEPADLO	
&EFS=V1AR31UQ41UQ8+V1AR31UQ41UE58	FESTO DQ CONNECTION QN8		1/10/2023	MKLEPADLO	
&EFS=V1AR31UQ41UQ9+V1AR31UQ41UE59	FESTO DQ CONNECTION QN9		1/10/2023	MKLEPADLO	
&EFS=V1AR31UQ41UQ10+V1AR31UQ41UE510	FESTO DQ CONNECTION QN10		1/10/2023	MKLEPADLO	
&EFS=V1AR31WC1+V1AR31UC01/1	Incoming power		1/10/2023	MKLEPADLO	
&EFS=V1AR31XQ41KF1+V1AR31XQ41/1	CONNECTING MOD. FOR VTSA MANIFOLD		1/10/2023	MKLEPADLO	
&EFS=V1AR31XQ41KF1+V1AR31XQ41/2	CONNECTING MOD. FOR FESTO DQ		1/10/2023	MKLEPADLO	
&EFS=V1AR31XQ41UQ1+V1AR31XQ41UE51	FESTO DQ CONNECTION QN1		1/10/2023	MKLEPADLO	
&EFS=V1AR31XQ41WC1+V1AR31XQ41UC01/1	Incoming power		1/10/2023	MKLEPADLO	
&EFS=V1AR81KF1+V1AR81UC01/1	Incoming Profinet		1/10/2023	MKLEPADLO	
&EFS=V1AR81UQ41BG0+V1AR81UQ41/1	SENSORS		1/10/2023	MKLEPADLO	
&EFS=V1AR81UQ41KF1+V1AR81UQ41/1	24VDC SUPPLY AND PROFINET HANDLING MODULE		1/10/2023	MKLEPADLO	
&EFS=V1AR81UQ41KF1+V1AR81UQ41/2	CONNECTING MOD. FOR MPA MANIFOLD		1/10/2023	MKLEPADLO	

			Date	1/17/2023	Volvo Trucks North America	Valiant TMS	Table of contents : &EFS=V1AR26XQ11WC1+V1AR26XQ11UC01/1 - &EFS=V1AR81UQ41KF1+V1AR81UQ41/2	Drawing name: =2V09&EFS-EL	=
			Ed.	MKLEPADLO					+
			Appr		P6700 Bodyside LH - Robot Cell 2V09	Scale 1:1		Document type: EAB	Project nr: 22-16150
Modification	Date	Name	Original		Replacement of	Replaced by			Page 5 / 1533

Table of contents

Column X: An automatically generated page was edited

F06_001

Page	Page description	supplementary page field	Date	Edited by	X
&EFS=V1AR81UQ41KF1+V1AR81UQ41/3	I/O MOD. DI16 (8 x M12) FOR MPA		1/10/2023	MKLEPADLO	
&EFS=V1AR81UQ41KF1+V1AR81UQ41/4	I/O MOD. DI16 (8 x M12) FOR MPA		1/10/2023	MKLEPADLO	
&EFS=V1AR81UQ41KF1+V1AR81UQ41/5	CONNECTING MOD. FOR FESTO DQ		1/10/2023	MKLEPADLO	
&EFS=V1AR81UQ41UQ1+V1AR81UQ41UE1/1	FESTO DQ CONNECTION QN1		1/10/2023	MKLEPADLO	
&EFS=V1AR81UQ41UQ2+V1AR81UQ41UE2/1	FESTO DQ CONNECTION QN2		1/10/2023	MKLEPADLO	
&EFS=V1AR81UQ41UQ3+V1AR81UQ41UE3/1	FESTO DQ CONNECTION QN3		1/10/2023	MKLEPADLO	
&EFS=V1AR81UQ41UQ4+V1AR81UQ41UE4/1	FESTO DQ CONNECTION QN4		1/10/2023	MKLEPADLO	
&EFS=V1AR81UQ41UQ5+V1AR81UQ41UE5/1	FESTO DQ CONNECTION QN5		1/10/2023	MKLEPADLO	
&EFS=V1AR81UQ41UQ6+V1AR81UQ41UE6/1	FESTO DQ CONNECTION QN6		1/10/2023	MKLEPADLO	
&EFS=V1AR81UQ41UQ7+V1AR81UQ41UE7/1	FESTO DQ CONNECTION QN7		1/10/2023	MKLEPADLO	
&EFS=V1AR81UQ41UQ8+V1AR81UQ41UE8/1	FESTO DQ CONNECTION QN8		1/10/2023	MKLEPADLO	
&EFS=V1AR81UQ41UQ9+V1AR81UQ41UE9/1	FESTO DQ CONNECTION QN9		1/10/2023	MKLEPADLO	
&EFS=V1AR81UQ41UQ10+V1AR81UQ41UE10/1	FESTO DQ CONNECTION QN10		1/10/2023	MKLEPADLO	
&EFS=V1AR81WC1+V1AR81UC01/1	Incoming power		1/10/2023	MKLEPADLO	
&EFS=V1AR81XQ51WC1+V1AR81XQ51UC01/1	Incoming power		1/10/2023	MKLEPADLO	
&EFS=V1AR81XQ52WC1+V1AR81XQ52UC01/1	Incoming power		1/10/2023	MKLEPADLO	
&EFS=V1AR191KF1+V1AR191UC01/1	Incoming Profinet		1/10/2023	MKLEPADLO	
&EFS=V1AR191WC1+V1AR191UC01/1	Incoming power		1/10/2023	MKLEPADLO	
&EFS=V1AR211KF1+V1AR211UC01/1	Incoming Profinet		1/10/2023	MKLEPADLO	
&EFS=V1AR211WC1+V1AR211UC01/1	Incoming power		1/10/2023	MKLEPADLO	
&EFS=V1AR211XQ11WC1+V1AR211XQ11UC01/1	Incoming power		1/10/2023	MKLEPADLO	
&EFS=V1AR212KF1+V1AR212UC01/1	Incoming Profinet		1/10/2023	MKLEPADLO	
&EFS=V1AR212WC1+V1AR212UC01/1	Incoming power		1/10/2023	MKLEPADLO	
&EFS=V1AR212XQ11WC1+V1AR212XQ11UC01/1	Incoming power		1/10/2023	MKLEPADLO	
&EFS=V1BX11WC3+V1BX11UC01/1	Incoming power & profinet		1/10/2023	MKLEPADLO	
&EFS=V1FQ1+V1FQ1/1	Door lock sensor -BG1		1/10/2023	MKLEPADLO	
&EFS=V1FQ1+V1FQ1/2	Door lock sensor -BG2		1/10/2023	MKLEPADLO	
&EFS=V1FQ1+V1FQ1/3	Door lock sensor -BG3		1/10/2023	MKLEPADLO	
&EFS=V1FQ1+V1FQ1/4	Door lock sensor -BG4		1/10/2023	MKLEPADLO	
&EFS=V1FQ1+V1FQ1/5	Door lock sensor -BG5		1/10/2023	MKLEPADLO	
&EFS=V1FQ1+V1FQ1/6	Door lock sensor -BG6		1/10/2023	MKLEPADLO	
&EFS=V1FQ1+V1FQ1/8	S010 Light Curtain		1/10/2023	MKLEPADLO	
&EFS=V1FQ1+V1FQ1/9	S010 Light Curtain		1/10/2023	MKLEPADLO	

			Date	1/17/2023	Volvo Trucks North America	Valiant TMS	Table of contents : &EFS=V1AR81UQ41KF1+V1AR81UQ41/3 - &EFS=V1FQ1+V1FQ1/9	Drawing name: =2V09&EFS-EL	=
			Ed.	MKLEPADLO					+
			Appr		P6700 Bodyside LH - Robot Cell 2V09			Document type: EAB	Project nr: 22-16150	Page 6
Modification	Date	Name	Original		Replacement of / Replaced by	Scale 1:1				1533

Table of contents

Column X: An automatically generated page was edited

F06_001

Page	Page description	supplementary page field	Date	Edited by	X
&EFS=V1FQ1+V1FQ1/10	S010 Light Curtain		1/10/2023	MKLEPADLO	
&EFS=V1FQ1+V1FQ1/11	S020 Light Curtain		1/10/2023	MKLEPADLO	
&EFS=V1FQ1+V1FQ1/12	S020 Light Curtain		1/10/2023	MKLEPADLO	
&EFS=V1FQ1+V1FQ1/13	S020 Light Curtain		1/10/2023	MKLEPADLO	
&EFS=V1FQ1+V1UC11/1	Safety power monitoring RQ - KF11.51		1/10/2023	MKLEPADLO	
&EFS=V1FQ1+V1UC11/2	Safety power monitoring RQ - KF11.52		1/10/2023	MKLEPADLO	
&EFS=V1FQ1+V1UC11/3	Safety power monitoring RQ - KF11.53		1/10/2023	MKLEPADLO	
&EFS=V1FQ1+V1UC11/4	Safety power monitoring RQ - KF11.54		1/10/2023	MKLEPADLO	
&EFS=V1FQ1+V1UC12/1	Safety power monitoring RQ - KF12.51		1/10/2023	MKLEPADLO	
&EFS=V1FQ1+V1UC12/2	Safety power monitoring RQ - KF12.52		1/10/2023	MKLEPADLO	
&EFS=V1FQ1+V1UC12/3	Safety power monitoring RQ - KF12.53		1/10/2023	MKLEPADLO	
&EFS=V1FQ1+V1UC12/4	Safety power monitoring RQ - KF12.54		1/10/2023	MKLEPADLO	
&EFS=V1FQ1+V1UC14/1	Safety power monitoring RQ - KF14.51		1/10/2023	MKLEPADLO	
&EFS=V1FQ1+V1UC14/2	Safety power monitoring RQ - KF14.52		1/10/2023	MKLEPADLO	
&EFS=V1FQ1+V1UC14/3	Safety power monitoring RQ - KF14.53		1/10/2023	MKLEPADLO	
&EFS=V1FQ1+V1UC14/4	Safety power monitoring RQ - KF14.54		1/10/2023	MKLEPADLO	
&EFS=V1FQ1+V1UC15/1	Safety power monitoring RQ - KF15.51		1/10/2023	MKLEPADLO	
&EFS=V1FQ1+V1UC15/2	Safety power monitoring RQ - KF15.52		1/10/2023	MKLEPADLO	
&EFS=V1FQ1+V1UC15/3	Safety power monitoring RQ - KF15.53		1/10/2023	MKLEPADLO	
&EFS=V1FQ1+V1UC15/4	Safety power monitoring RQ - KF15.54		1/10/2023	MKLEPADLO	
&EFS=V1GL1UQ51BG0+V1GL1UQ51/1	SENSORS		1/10/2023	MKLEPADLO	
&EFS=V1GL1UQ51BG0+V1GL1UQ51/2	SENSORS		1/10/2023	MKLEPADLO	
&EFS=V1GL1UQ51BG0+V1GL1UQ51/3	SENSORS		1/10/2023	MKLEPADLO	
&EFS=V1GL1UQ51BG0+V1GL1UQ51/4	SENSORS		1/10/2023	MKLEPADLO	
&EFS=V1GL1UQ51KF1+V1GL1UQ51/1	CONNECTING MOD. FOR VTSA MANIFOLD		1/10/2023	MKLEPADLO	
&EFS=V1GL1UQ51KF1+V1GL1UQ51/2	I/O MOD. DI16 (8 x M12) FOR VTSA-F		1/10/2023	MKLEPADLO	
&EFS=V1GL1UQ51KF1+V1GL1UQ51/3	I/O MOD. DI16 (8 x M12) FOR VTSA-F		1/10/2023	MKLEPADLO	
&EFS=V1GL1UQ51KF1+V1GL1UQ51/4	I/O MOD. DI16 (8 x M12) FOR VTSA-F		1/10/2023	MKLEPADLO	
&EFS=V1GL1UQ51KF1+V1GL1UQ51/5	CONNECTING MOD. FOR FESTO DQ		1/10/2023	MKLEPADLO	
&EFS=V1GL1UQ51KF2+V1GL1UQ51/1	CONNECTING MOD. FOR VTSA MANIFOLD		1/10/2023	MKLEPADLO	
&EFS=V1GL1UQ51KF2+V1GL1UQ51/2	I/O MOD. DI16 (8 x M12) FOR VTSA-F		1/10/2023	MKLEPADLO	
&EFS=V1GL1UQ51KF2+V1GL1UQ51/3	I/O MOD. DI16 (8 x M12) FOR VTSA-F		1/10/2023	MKLEPADLO	
&EFS=V1GL1UQ51KF2+V1GL1UQ51/4	I/O MOD. DI16 (8 x M12) FOR VTSA-F		1/10/2023	MKLEPADLO	

			Date	1/17/2023	Volvo Trucks North America	Valiant TMS	Table of contents : &EFS=V1FQ1+V1FQ1/10 - &EFS=V1GL1UQ51KF2+V1GL1UQ51/4	Drawing name: =2V09&EFS-EL	=
			Ed.	MKLEPADLO					+
			Appr		P6700 Bodyside LH - Robot Cell 2V09			Document type: EAB	Project nr: 22-16150
Modification	Date	Name	Original		Replacement of / Replaced by	Scale 1:1			Page 7 / 1533

Table of contents

Column X: An automatically generated page was edited

F06_001

Page	Page description	supplementary page field	Date	Edited by	X
&EFS=V1GL1UQ51KF2+V1GL1UQ51/5	CONNECTING MOD. FOR FESTO DQ		1/10/2023	MKLEPADLO	
&EFS=V1GL1UQ51KF3+V1GL1UQ51/1	CONNECTING MOD. FOR VTSA MANIFOLD		1/10/2023	MKLEPADLO	
&EFS=V1GL1UQ51KF3+V1GL1UQ51/2	CONNECTING MOD. FOR FESTO DQ		1/10/2023	MKLEPADLO	
&EFS=V1GL1UQ51UQ1+V1GL1UQ51UQ1/1	FESTO DQ CONNECTION QN1		1/10/2023	MKLEPADLO	
&EFS=V1GL1UQ51UQ2+V1GL1UQ51UQ2/1	FESTO DQ CONNECTION QN2		1/10/2023	MKLEPADLO	
&EFS=V1GL1UQ51UQ3+V1GL1UQ51UQ3/1	FESTO DQ CONNECTION QN3		1/10/2023	MKLEPADLO	
&EFS=V1GL1UQ51UQ4+V1GL1UQ51UQ4/1	FESTO DQ CONNECTION QN4		1/10/2023	MKLEPADLO	
&EFS=V1GL1UQ51UQ5+V1GL1UQ51UQ5/1	FESTO DQ CONNECTION QN5		1/10/2023	MKLEPADLO	
&EFS=V1GL1UQ51UQ6+V1GL1UQ51UQ6/1	FESTO DQ CONNECTION QN6		1/10/2023	MKLEPADLO	
&EFS=V1GL1UQ51UQ7+V1GL1UQ51UQ7/1	FESTO DQ CONNECTION QN7		1/10/2023	MKLEPADLO	
&EFS=V1GL1UQ51UQ8+V1GL1UQ51UQ8/1	FESTO DQ CONNECTION QN8		1/10/2023	MKLEPADLO	
&EFS=V1GL1UQ51UQ9+V1GL1UQ51UQ9/1	FESTO DQ CONNECTION QN9		1/10/2023	MKLEPADLO	
&EFS=V1GL1UQ51UQ10+V1GL1UQ51UQ10/1	FESTO DQ CONNECTION QN10		1/10/2023	MKLEPADLO	
&EFS=V1GL1UQ51UQ11+V1GL1UQ51UQ11/1	FESTO DQ CONNECTION QN11		1/10/2023	MKLEPADLO	
&EFS=V1GL1UQ51UQ12+V1GL1UQ51UQ12/1	FESTO DQ CONNECTION QN12		1/10/2023	MKLEPADLO	
&EFS=V1GL1UQ51UQ13+V1GL1UQ51UQ13/1	FESTO DQ CONNECTION QN13		1/10/2023	MKLEPADLO	
&EFS=V1GL1UQ51UQ14+V1GL1UQ51UQ14/1	FESTO DQ CONNECTION QN14		1/10/2023	MKLEPADLO	
&EFS=V1GL1UQ51UQ15+V1GL1UQ51UQ15/1	FESTO DQ CONNECTION QN15		1/10/2023	MKLEPADLO	
&EFS=V1GL1UQ51UQ16+V1GL1UQ51UQ16/1	FESTO DQ CONNECTION QN16		1/10/2023	MKLEPADLO	
&EFS=V1GL1UQ51UQ17+V1GL1UQ51UQ17/1	FESTO DQ CONNECTION QN17		1/10/2023	MKLEPADLO	
&EFS=V1GL1UQ51UQ18+V1GL1UQ51UQ18/1	FESTO DQ CONNECTION QN18		1/10/2023	MKLEPADLO	
&EFS=V1GL1UQ51UQ19+V1GL1UQ51UQ19/1	FESTO DQ CONNECTION QN19		1/10/2023	MKLEPADLO	
&EFS=V1GL1UQ51UQ20+V1GL1UQ51UQ20/1	FESTO DQ CONNECTION QN20		1/10/2023	MKLEPADLO	
&EFS=V1GL1UQ51UQ21+V1GL1UQ51UQ21/1	FESTO DQ CONNECTION QN21		1/10/2023	MKLEPADLO	
&EFS=V1GL1UQ51UQ22+V1GL1UQ51UQ22/1	FESTO DQ CONNECTION QN22		1/10/2023	MKLEPADLO	
&EFS=V1GL1UQ51UQ23+V1GL1UQ51UQ23/1	FESTO DQ CONNECTION QN23		1/10/2023	MKLEPADLO	
&EFS=V1GL1UQ51UQ24+V1GL1UQ51UQ24/1	FESTO DQ CONNECTION QN24		1/10/2023	MKLEPADLO	
&EFS=V1GL1UQ51UQ25+V1GL1UQ51UQ25/1	FESTO DQ CONNECTION QN25		1/10/2023	MKLEPADLO	
&EFS=V1GL1UQ51WC4+V1GL1UQ51/1	24VDC		1/10/2023	MKLEPADLO	
&EFS=V1GL1UQ52BG0+V1GL1UQ52/1	SENSORS		1/10/2023	MKLEPADLO	
&EFS=V1GL1UQ52BG0+V1GL1UQ52/2	SENSORS		1/10/2023	MKLEPADLO	
&EFS=V1GL1UQ52BG0+V1GL1UQ52/3	SENSORS		1/10/2023	MKLEPADLO	
&EFS=V1GL1UQ52BG0+V1GL1UQ52/4	SENSORS		1/10/2023	MKLEPADLO	

			Date	1/17/2023	Volvo Trucks North America	Valiant TMS	Table of contents : &EFS=V1GL1UQ51KF2+V1GL1UQ51/5 - &EFS=V1GL1UQ52BG0+V1GL1UQ52/4	Drawing name: =2V09&EFS-EL	=
			Ed.	MKLEPADLO					+
			Appr		P6700 Bodyside LH - Robot Cell 2V09	Scale 1:1		Document type: EAB	Project nr: 22-16150
Modification	Date	Name	Original		Replacement of / Replaced by				Page 8 / 1533

Table of contents

Column X: An automatically generated page was edited

F06_001

Page	Page description	supplementary page field	Date	Edited by	X
&EFS=V1GL1UQ52BG0+V1GL1UQ52/5	SENSORS		1/10/2023	MKLEPADLO	
&EFS=V1GL1UQ52KF1+V1GL1UQ52/1	CONNECTING MOD. FOR VTSA MANIFOLD		1/10/2023	MKLEPADLO	
&EFS=V1GL1UQ52KF1+V1GL1UQ52/2	I/O MOD. DI16 (8 x M12) FOR VTSA-F		1/10/2023	MKLEPADLO	
&EFS=V1GL1UQ52KF1+V1GL1UQ52/3	I/O MOD. DI16 (8 x M12) FOR VTSA-F		1/10/2023	MKLEPADLO	
&EFS=V1GL1UQ52KF1+V1GL1UQ52/4	I/O MOD. DI16 (8 x M12) FOR VTSA-F		1/10/2023	MKLEPADLO	
&EFS=V1GL1UQ52KF1+V1GL1UQ52/5	CONNECTING MOD. FOR FESTO DQ		1/10/2023	MKLEPADLO	
&EFS=V1GL1UQ52KF2+V1GL1UQ52/1	CONNECTING MOD. FOR VTSA MANIFOLD		1/10/2023	MKLEPADLO	
&EFS=V1GL1UQ52KF2+V1GL1UQ52/2	I/O MOD. DI16 (8 x M12) FOR VTSA-F		1/10/2023	MKLEPADLO	
&EFS=V1GL1UQ52KF2+V1GL1UQ52/3	I/O MOD. DI16 (8 x M12) FOR VTSA-F		1/10/2023	MKLEPADLO	
&EFS=V1GL1UQ52KF2+V1GL1UQ52/4	I/O MOD. DI16 (8 x M12) FOR VTSA-F		1/10/2023	MKLEPADLO	
&EFS=V1GL1UQ52KF2+V1GL1UQ52/5	CONNECTING MOD. FOR FESTO DQ		1/10/2023	MKLEPADLO	
&EFS=V1GL1UQ52KF3+V1GL1UQ52/1	CONNECTING MOD. FOR VTSA MANIFOLD		1/10/2023	MKLEPADLO	
&EFS=V1GL1UQ52KF3+V1GL1UQ52/2	CONNECTING MOD. FOR FESTO DQ		1/10/2023	MKLEPADLO	
&EFS=V1GL1UQ52UQ1+V1GL1UQ52UQ1/1	FESTO DQ CONNECTION QN1		1/10/2023	MKLEPADLO	
&EFS=V1GL1UQ52UQ2+V1GL1UQ52UQ2/1	FESTO DQ CONNECTION QN2		1/10/2023	MKLEPADLO	
&EFS=V1GL1UQ52UQ3+V1GL1UQ52UQ3/1	FESTO DQ CONNECTION QN3		1/10/2023	MKLEPADLO	
&EFS=V1GL1UQ52UQ4+V1GL1UQ52UQ4/1	FESTO DQ CONNECTION QN4		1/10/2023	MKLEPADLO	
&EFS=V1GL1UQ52UQ5+V1GL1UQ52UQ5/1	FESTO DQ CONNECTION QN5		1/10/2023	MKLEPADLO	
&EFS=V1GL1UQ52UQ6+V1GL1UQ52UQ6/1	FESTO DQ CONNECTION QN6		1/10/2023	MKLEPADLO	
&EFS=V1GL1UQ52UQ7+V1GL1UQ52UQ7/1	FESTO DQ CONNECTION QN7		1/10/2023	MKLEPADLO	
&EFS=V1GL1UQ52UQ8+V1GL1UQ52UQ8/1	FESTO DQ CONNECTION QN8		1/10/2023	MKLEPADLO	
&EFS=V1GL1UQ52UQ9+V1GL1UQ52UQ9/1	FESTO DQ CONNECTION QN9		1/10/2023	MKLEPADLO	
&EFS=V1GL1UQ52UQ10+V1GL1UQ52UQ10/1	FESTO DQ CONNECTION QN11		1/10/2023	MKLEPADLO	
&EFS=V1GL1UQ52UQ11+V1GL1UQ52UQ11/1	FESTO DQ CONNECTION QN12		1/10/2023	MKLEPADLO	
&EFS=V1GL1UQ52UQ12+V1GL1UQ52UQ12/1	FESTO DQ CONNECTION QN13		1/10/2023	MKLEPADLO	
&EFS=V1GL1UQ52UQ13+V1GL1UQ52UQ13/1	FESTO DQ CONNECTION QN14		1/10/2023	MKLEPADLO	
&EFS=V1GL1UQ52UQ14+V1GL1UQ52UQ14/1	FESTO DQ CONNECTION QN15		1/10/2023	MKLEPADLO	
&EFS=V1GL1UQ52UQ15+V1GL1UQ52UQ15/1	FESTO DQ CONNECTION QN16		1/10/2023	MKLEPADLO	
&EFS=V1GL1UQ52UQ16+V1GL1UQ52UQ16/1	FESTO DQ CONNECTION QN17		1/10/2023	MKLEPADLO	
&EFS=V1GL1UQ52UQ17+V1GL1UQ52UQ17/1	FESTO DQ CONNECTION QN18		1/10/2023	MKLEPADLO	
&EFS=V1GL1UQ52UQ18+V1GL1UQ52UQ18/1	FESTO DQ CONNECTION QN19		1/10/2023	MKLEPADLO	
&EFS=V1GL1UQ52UQ19+V1GL1UQ52UQ19/1	FESTO DQ CONNECTION QN20		1/10/2023	MKLEPADLO	
&EFS=V1GL1UQ52UQ20+V1GL1UQ52UQ20/1	FESTO DQ CONNECTION QN21		1/10/2023	MKLEPADLO	

			Date	1/17/2023	Volvo Trucks North America	Valiant TMS	Table of contents : &EFS=V1GL1UQ52BG0+V1GL1UQ52/5 - &EFS=V1GL1UQ52UQ20+V1GL1UQ52UQ20/1	Drawing name: =2V09&EFS-EL	=
			Ed.	MKLEPADLO					+
			Appr		P6700 Bodyside LH - Robot Cell 2V09	Scale 1:1		Document type: EAB	Project nr: 22-16150	Page 9 / 1533
Modification	Date	Name	Original		Replacement of	Replaced by			

Table of contents

Column X: An automatically generated page was edited F06_001

Page	Page description	supplementary page field	Date	Edited by	X
&EFS=V1GL1UQ52UQ21+V1GL1UQ52UQ21/1	FESTO DQ CONNECTION QN22		1/10/2023	MKLEPADLO	
&EFS=V1GL1UQ52UQ22+V1GL1UQ52UQ22/1	FESTO DQ CONNECTION QN23		1/10/2023	MKLEPADLO	
&EFS=V1GL1UQ52UQ23+V1GL1UQ52UQ23/1	FESTO DQ CONNECTION QN24		1/10/2023	MKLEPADLO	
&EFS=V1GL1UQ52WC4+V1GL1UQ52/1	24VDC		1/10/2023	MKLEPADLO	
&EFS=V1GL1UQ53BG0+V1GL1UQ53/1	SENSORS		1/10/2023	MKLEPADLO	
&EFS=V1GL1UQ53BG0+V1GL1UQ53/2	SENSORS		1/10/2023	MKLEPADLO	
&EFS=V1GL1UQ53BG0+V1GL1UQ53/3	SENSORS		1/10/2023	MKLEPADLO	
&EFS=V1GL1UQ53BG0+V1GL1UQ53/4	SENSORS		1/10/2023	MKLEPADLO	
&EFS=V1GL1UQ53KF1+V1GL1UQ53/1	CONNECTING MOD. FOR VTSA MANIFOLD		1/10/2023	MKLEPADLO	
&EFS=V1GL1UQ53KF1+V1GL1UQ53/2	I/O MOD. DI16 (8 x M12) FOR VTSA-F		1/10/2023	MKLEPADLO	
&EFS=V1GL1UQ53KF1+V1GL1UQ53/3	I/O MOD. DI16 (8 x M12) FOR VTSA-F		1/10/2023	MKLEPADLO	
&EFS=V1GL1UQ53KF1+V1GL1UQ53/4	I/O MOD. DI16 (8 x M12) FOR VTSA-F		1/10/2023	MKLEPADLO	
&EFS=V1GL1UQ53KF1+V1GL1UQ53/5	CONNECTING MOD. FOR FESTO DQ		1/10/2023	MKLEPADLO	
&EFS=V1GL1UQ53KF2+V1GL1UQ53/1	CONNECTING MOD. FOR VTSA MANIFOLD		1/10/2023	MKLEPADLO	
&EFS=V1GL1UQ53KF2+V1GL1UQ53/2	I/O MOD. DI16 (8 x M12) FOR VTSA-F		1/10/2023	MKLEPADLO	
&EFS=V1GL1UQ53KF2+V1GL1UQ53/3	I/O MOD. DI16 (8 x M12) FOR VTSA-F		1/10/2023	MKLEPADLO	
&EFS=V1GL1UQ53KF2+V1GL1UQ53/4	I/O MOD. DI16 (8 x M12) FOR VTSA-F		1/10/2023	MKLEPADLO	
&EFS=V1GL1UQ53KF2+V1GL1UQ53/5	CONNECTING MOD. FOR FESTO DQ		1/10/2023	MKLEPADLO	
&EFS=V1GL1UQ53KF3+V1GL1UQ53/1	CONNECTING MOD. FOR VTSA MANIFOLD		1/10/2023	MKLEPADLO	
&EFS=V1GL1UQ53KF3+V1GL1UQ53/2	CONNECTING MOD. FOR FESTO DQ		1/10/2023	MKLEPADLO	
&EFS=V1GL1UQ53UQ1+V1GL1UQ53UQ1/1	FESTO DQ CONNECTION QN1		1/10/2023	MKLEPADLO	
&EFS=V1GL1UQ53UQ2+V1GL1UQ53UQ2/1	FESTO DQ CONNECTION QN2		1/10/2023	MKLEPADLO	
&EFS=V1GL1UQ53UQ3+V1GL1UQ53UQ3/1	FESTO DQ CONNECTION QN3		1/10/2023	MKLEPADLO	
&EFS=V1GL1UQ53UQ4+V1GL1UQ53UQ4/1	FESTO DQ CONNECTION QN4		1/10/2023	MKLEPADLO	
&EFS=V1GL1UQ53UQ5+V1GL1UQ53UQ5/1	FESTO DQ CONNECTION QN5		1/10/2023	MKLEPADLO	
&EFS=V1GL1UQ53UQ6+V1GL1UQ53UQ6/1	FESTO DQ CONNECTION QN6		1/10/2023	MKLEPADLO	
&EFS=V1GL1UQ53UQ7+V1GL1UQ53UQ7/1	FESTO DQ CONNECTION QN7		1/10/2023	MKLEPADLO	
&EFS=V1GL1UQ53UQ8+V1GL1UQ53UQ8/1	FESTO DQ CONNECTION QN8		1/10/2023	MKLEPADLO	
&EFS=V1GL1UQ53UQ9+V1GL1UQ53UQ9/1	FESTO DQ CONNECTION QN9		1/10/2023	MKLEPADLO	
&EFS=V1GL1UQ53UQ10+V1GL1UQ53UQ10/1	FESTO DQ CONNECTION QN10		1/10/2023	MKLEPADLO	
&EFS=V1GL1UQ53UQ11+V1GL1UQ53UQ11/1	FESTO DQ CONNECTION QN11		1/10/2023	MKLEPADLO	
&EFS=V1GL1UQ53UQ12+V1GL1UQ53UQ12/1	FESTO DQ CONNECTION QN12		1/10/2023	MKLEPADLO	
&EFS=V1GL1UQ53UQ13+V1GL1UQ53UQ13/1	FESTO DQ CONNECTION QN13		1/10/2023	MKLEPADLO	

Table of contents

Column X: An automatically generated page was edited

F06_001

Page	Page description	supplementary page field	Date	Edited by	X
&EFS=V1GL1UQ53UQ14+V1GL1UQ53UQ14/1	FESTO DQ CONNECTION QN14		1/10/2023	MKLEPADLO	
&EFS=V1GL1UQ53UQ15+V1GL1UQ53UQ15/1	FESTO DQ CONNECTION QN15		1/10/2023	MKLEPADLO	
&EFS=V1GL1UQ53UQ16+V1GL1UQ53UQ16/1	FESTO DQ CONNECTION QN16		1/10/2023	MKLEPADLO	
&EFS=V1GL1UQ53UQ17+V1GL1UQ53UQ17/1	FESTO DQ CONNECTION QN17		1/10/2023	MKLEPADLO	
&EFS=V1GL1UQ53UQ18+V1GL1UQ53UQ18/1	FESTO DQ CONNECTION QN18		1/10/2023	MKLEPADLO	
&EFS=V1GL1UQ53UQ19+V1GL1UQ53UQ19/1	FESTO DQ CONNECTION QN19		1/10/2023	MKLEPADLO	
&EFS=V1GL1UQ53UQ20+V1GL1UQ53UQ20/1	FESTO DQ CONNECTION QN20		1/10/2023	MKLEPADLO	
&EFS=V1GL1UQ53UQ21+V1GL1UQ53UQ21/1	FESTO DQ CONNECTION QN21		1/10/2023	MKLEPADLO	
&EFS=V1GL1UQ53UQ22+V1GL1UQ53UQ22/1	FESTO DQ CONNECTION QN22		1/10/2023	MKLEPADLO	
&EFS=V1GL1UQ53UQ23+V1GL1UQ53UQ23/1	FESTO DQ CONNECTION QN23		1/10/2023	MKLEPADLO	
&EFS=V1GL1UQ53UQ24+V1GL1UQ53UQ24/1	FESTO DQ CONNECTION QN24		1/10/2023	MKLEPADLO	
&EFS=V1GL1UQ53UQ25+V1GL1UQ53UQ25/1	FESTO DQ CONNECTION QN25		1/10/2023	MKLEPADLO	
&EFS=V1GL1UQ53WC4+V1GL1UQ53/1	24VDC		1/10/2023	MKLEPADLO	
&EFS=V1GL1UQ54BG0+V1GL1UQ54/1	SENSORS		1/10/2023	MKLEPADLO	
&EFS=V1GL1UQ54BG0+V1GL1UQ54/2	SENSORS		1/10/2023	MKLEPADLO	
&EFS=V1GL1UQ54BG0+V1GL1UQ54/3	SENSORS		1/10/2023	MKLEPADLO	
&EFS=V1GL1UQ54BG0+V1GL1UQ54/4	SENSORS		1/10/2023	MKLEPADLO	
&EFS=V1GL1UQ54BG0+V1GL1UQ54/5	SENSORS		1/10/2023	MKLEPADLO	
&EFS=V1GL1UQ54KF1+V1GL1UQ54/1	CONNECTING MOD. FOR VTSA MANIFOLD		1/10/2023	MKLEPADLO	
&EFS=V1GL1UQ54KF1+V1GL1UQ54/2	I/O MOD. DI16 (8 x M12) FOR VTSA-F		1/10/2023	MKLEPADLO	
&EFS=V1GL1UQ54KF1+V1GL1UQ54/3	I/O MOD. DI16 (8 x M12) FOR VTSA-F		1/10/2023	MKLEPADLO	
&EFS=V1GL1UQ54KF1+V1GL1UQ54/4	I/O MOD. DI16 (8 x M12) FOR VTSA-F		1/10/2023	MKLEPADLO	
&EFS=V1GL1UQ54KF1+V1GL1UQ54/5	CONNECTING MOD. FOR FESTO DQ		1/10/2023	MKLEPADLO	
&EFS=V1GL1UQ54KF2+V1GL1UQ54/1	CONNECTING MOD. FOR VTSA MANIFOLD		1/10/2023	MKLEPADLO	
&EFS=V1GL1UQ54KF2+V1GL1UQ54/2	I/O MOD. DI16 (8 x M12) FOR VTSA-F		1/10/2023	MKLEPADLO	
&EFS=V1GL1UQ54KF2+V1GL1UQ54/3	I/O MOD. DI16 (8 x M12) FOR VTSA-F		1/10/2023	MKLEPADLO	
&EFS=V1GL1UQ54KF2+V1GL1UQ54/4	I/O MOD. DI16 (8 x M12) FOR VTSA-F		1/10/2023	MKLEPADLO	
&EFS=V1GL1UQ54KF2+V1GL1UQ54/5	CONNECTING MOD. FOR FESTO DQ		1/10/2023	MKLEPADLO	
&EFS=V1GL1UQ54KF3+V1GL1UQ54/1	CONNECTING MOD. FOR VTSA MANIFOLD		1/10/2023	MKLEPADLO	
&EFS=V1GL1UQ54KF3+V1GL1UQ54/2	CONNECTING MOD. FOR FESTO DQ		1/10/2023	MKLEPADLO	
&EFS=V1GL1UQ54UQ1+V1GL1UQ54UQ1/1	FESTO DQ CONNECTION QN1		1/10/2023	MKLEPADLO	
&EFS=V1GL1UQ54UQ2+V1GL1UQ54UQ2/1	FESTO DQ CONNECTION QN2		1/10/2023	MKLEPADLO	
&EFS=V1GL1UQ54UQ3+V1GL1UQ54UQ3/1	FESTO DQ CONNECTION QN3		1/10/2023	MKLEPADLO	

			Date	1/17/2023	Volvo Trucks North America	Valiant TMS	Table of contents : &EFS=V1GL1UQ53UQ14+V1GL1UQ53UQ14/1 - &EFS=V1GL1UQ54UQ3+V1GL1UQ54UQ3/1	Drawing name: =2V09&EFS-EL	=
			Ed.	MKLEPADLO					+
			Appr		P6700 Bodyside LH - Robot Cell 2V09	Scale 1:1		Document type: EAB	Project nr: 22-16150
Modification	Date	Name	Original		Replacement of / Replaced by				Page 11 / 1533

Table of contents

Column X: An automatically generated page was edited

F06_001

Page	Page description	supplementary page field	Date	Edited by	X
&EFS=V1GL1UQ54UQ4+V1GL1UQ54UQ4/1	FESTO DQ CONNECTION QN4		1/10/2023	MKLEPADLO	
&EFS=V1GL1UQ54UQ5+V1GL1UQ54UQ5/1	FESTO DQ CONNECTION QN5		1/10/2023	MKLEPADLO	
&EFS=V1GL1UQ54UQ6+V1GL1UQ54UQ6/1	FESTO DQ CONNECTION QN6		1/10/2023	MKLEPADLO	
&EFS=V1GL1UQ54UQ7+V1GL1UQ54UQ7/1	FESTO DQ CONNECTION QN7		1/10/2023	MKLEPADLO	
&EFS=V1GL1UQ54UQ8+V1GL1UQ54UQ8/1	FESTO DQ CONNECTION QN8		1/10/2023	MKLEPADLO	
&EFS=V1GL1UQ54UQ9+V1GL1UQ54UQ9/1	FESTO DQ CONNECTION QN9		1/10/2023	MKLEPADLO	
&EFS=V1GL1UQ54UQ10+V1GL1UQ54UQ10/1	FESTO DQ CONNECTION QN11		1/10/2023	MKLEPADLO	
&EFS=V1GL1UQ54UQ11+V1GL1UQ54UQ11/1	FESTO DQ CONNECTION QN12		1/10/2023	MKLEPADLO	
&EFS=V1GL1UQ54UQ12+V1GL1UQ54UQ12/1	FESTO DQ CONNECTION QN13		1/10/2023	MKLEPADLO	
&EFS=V1GL1UQ54UQ13+V1GL1UQ54UQ13/1	FESTO DQ CONNECTION QN14		1/10/2023	MKLEPADLO	
&EFS=V1GL1UQ54UQ14+V1GL1UQ54UQ14/1	FESTO DQ CONNECTION QN15		1/10/2023	MKLEPADLO	
&EFS=V1GL1UQ54UQ15+V1GL1UQ54UQ15/1	FESTO DQ CONNECTION QN16		1/10/2023	MKLEPADLO	
&EFS=V1GL1UQ54UQ16+V1GL1UQ54UQ16/1	FESTO DQ CONNECTION QN17		1/10/2023	MKLEPADLO	
&EFS=V1GL1UQ54UQ17+V1GL1UQ54UQ17/1	FESTO DQ CONNECTION QN18		1/10/2023	MKLEPADLO	
&EFS=V1GL1UQ54UQ18+V1GL1UQ54UQ18/1	FESTO DQ CONNECTION QN19		1/10/2023	MKLEPADLO	
&EFS=V1GL1UQ54UQ19+V1GL1UQ54UQ19/1	FESTO DQ CONNECTION QN20		1/10/2023	MKLEPADLO	
&EFS=V1GL1UQ54UQ20+V1GL1UQ54UQ20/1	FESTO DQ CONNECTION QN21		1/10/2023	MKLEPADLO	
&EFS=V1GL1UQ54UQ21+V1GL1UQ54UQ21/1	FESTO DQ CONNECTION QN22		1/10/2023	MKLEPADLO	
&EFS=V1GL1UQ54UQ22+V1GL1UQ54UQ22/1	FESTO DQ CONNECTION QN23		1/10/2023	MKLEPADLO	
&EFS=V1GL1UQ54UQ23+V1GL1UQ54UQ23/1	FESTO DQ CONNECTION QN24		1/10/2023	MKLEPADLO	
&EFS=V1GL1UQ54WC4+V1GL1UQ54/1	24VDC		1/10/2023	MKLEPADLO	
&EFS=V1GL1UQ56KF1+V1GL1UQ56/1	CONNECTING MOD. FOR VTSA MANIFOLD		1/10/2023	MKLEPADLO	
&EFS=V1GL1UQ56KF1+V1GL1UQ56/2	CONNECTING MOD. FOR FESTO DQ		1/10/2023	MKLEPADLO	
&EFS=V1GL1UQ56UQ1+V1GL1UQ56UQ1/1	FESTO DQ CONNECTION QN1		1/10/2023	MKLEPADLO	
&EFS=V1GL1UQ57KF1+V1GL1UQ57/1	CONNECTING MOD. FOR VTSA MANIFOLD		1/10/2023	MKLEPADLO	
&EFS=V1GL1UQ57KF1+V1GL1UQ57/2	CONNECTING MOD. FOR FESTO DQ		1/10/2023	MKLEPADLO	
&EFS=V1GL1UQ57UQ1+V1GL1UQ57UQ1/1	FESTO DQ CONNECTION QN1		1/10/2023	MKLEPADLO	
&EFS=V1GL1WC1+V1GL1UC01/1	Incoming power		1/10/2023	MKLEPADLO	
&EFS=V1GL2KF1+V1GL2/1	CONNECTING MOD. FOR VTSA MANIFOLD		1/10/2023	MKLEPADLO	
&EFS=V1GL2KF1+V1GL2/2	I/O MOD. DI8 (4 x M12) FOR VTSA-F		1/10/2023	MKLEPADLO	
&EFS=V1GL2KF1+V1GL2/3	I/O MOD. DO8 (4 x M12) FOR VTSA-F		1/10/2023	MKLEPADLO	
&EFS=V1GL2KF1+V1GL2/4	CONNECTING MOD. FOR FESTO DQ		1/10/2023	MKLEPADLO	
&EFS=V1GL2UQ51BG0+V1GL2UQ51/1	SENSORS		1/10/2023	MKLEPADLO	

			Date	1/17/2023	Volvo Trucks North America	Valiant TMS	Table of contents : &EFS=V1GL1UQ54UQ4+V1GL1UQ54UQ4/1 - &EFS=V1GL2UQ51BG0+V1GL2UQ51/1	Drawing name: =2V09&EFS-EL	=
			Ed.	MKLEPADLO					+
			Appr		P6700 Bodyside LH - Robot Cell 2V09	Scale 1:1		Document type: EAB	Project nr: 22-16150
Modification	Date	Name	Original		Replacement of / Replaced by				Page 12 / 1533

Table of contents

Column X: An automatically generated page was edited

F06_001

Page	Page description	supplementary page field	Date	Edited by	X
&EFS=V1GL2UQ51BG0+V1GL2UQ51/2	SENSORS		1/10/2023	MKLEPADLO	
&EFS=V1GL2UQ51BG0+V1GL2UQ51/3	SENSORS		1/10/2023	MKLEPADLO	
&EFS=V1GL2UQ51BG0+V1GL2UQ51/4	SENSORS		1/10/2023	MKLEPADLO	
&EFS=V1GL2UQ51KF1+V1GL2UQ51/1	CONNECTING MOD. FOR VTSA MANIFOLD		1/10/2023	MKLEPADLO	
&EFS=V1GL2UQ51KF1+V1GL2UQ51/2	I/O MOD. DI16 (8 x M12) FOR VTSA-F		1/10/2023	MKLEPADLO	
&EFS=V1GL2UQ51KF1+V1GL2UQ51/3	CONNECTING MOD. FOR FESTO DQ		1/10/2023	MKLEPADLO	
&EFS=V1GL2UQ51KF2+V1GL2UQ51/1	CONNECTING MOD. FOR VTSA MANIFOLD		1/10/2023	MKLEPADLO	
&EFS=V1GL2UQ51KF2+V1GL2UQ51/2	I/O MOD. DI16 (8 x M12) FOR VTSA-F		1/10/2023	MKLEPADLO	
&EFS=V1GL2UQ51KF2+V1GL2UQ51/3	I/O MOD. DI16 (8 x M12) FOR VTSA-F		1/10/2023	MKLEPADLO	
&EFS=V1GL2UQ51KF2+V1GL2UQ51/4	CONNECTING MOD. FOR FESTO DQ		1/10/2023	MKLEPADLO	
&EFS=V1GL2UQ51KF3+V1GL2UQ51/1	CONNECTING MOD. FOR VTSA MANIFOLD		1/10/2023	MKLEPADLO	
&EFS=V1GL2UQ51KF3+V1GL2UQ51/2	I/O MOD. DI16 (8 x M12) FOR VTSA-F		1/10/2023	MKLEPADLO	
&EFS=V1GL2UQ51KF3+V1GL2UQ51/3	I/O MOD. DI16 (8 x M12) FOR VTSA-F		1/10/2023	MKLEPADLO	
&EFS=V1GL2UQ51KF3+V1GL2UQ51/4	CONNECTING MOD. FOR FESTO DQ		1/10/2023	MKLEPADLO	
&EFS=V1GL2UQ51KF4+V1GL2UQ51/1	CONNECTING MOD. FOR VTSA MANIFOLD		1/10/2023	MKLEPADLO	
&EFS=V1GL2UQ51KF4+V1GL2UQ51/2	CONNECTING MOD. FOR FESTO DQ		1/10/2023	MKLEPADLO	
&EFS=V1GL2UQ51UQ1+V1GL2UQ51UQ1/1	FESTO DQ CONNECTION QN1		1/10/2023	MKLEPADLO	
&EFS=V1GL2UQ51UQ2+V1GL2UQ51UQ2/1	FESTO DQ CONNECTION QN2		1/10/2023	MKLEPADLO	
&EFS=V1GL2UQ51UQ3+V1GL2UQ51UQ3/1	FESTO DQ CONNECTION QN3		1/10/2023	MKLEPADLO	
&EFS=V1GL2UQ51UQ4+V1GL2UQ51UQ4/1	FESTO DQ CONNECTION QN4		1/10/2023	MKLEPADLO	
&EFS=V1GL2UQ51UQ5+V1GL2UQ51UQ5/1	FESTO DQ CONNECTION QN5		1/10/2023	MKLEPADLO	
&EFS=V1GL2UQ51UQ6+V1GL2UQ51UQ6/1	FESTO DQ CONNECTION QN6		1/10/2023	MKLEPADLO	
&EFS=V1GL2UQ51UQ7+V1GL2UQ51UQ7/1	FESTO DQ CONNECTION QN7		1/10/2023	MKLEPADLO	
&EFS=V1GL2UQ51UQ8+V1GL2UQ51UQ8/1	FESTO DQ CONNECTION QN8		1/10/2023	MKLEPADLO	
&EFS=V1GL2UQ51UQ9+V1GL2UQ51UQ9/1	FESTO DQ CONNECTION QN9		1/10/2023	MKLEPADLO	
&EFS=V1GL2UQ51UQ10+V1GL2UQ51UQ10/1	FESTO DQ CONNECTION QN10		1/10/2023	MKLEPADLO	
&EFS=V1GL2UQ51UQ11+V1GL2UQ51UQ11/1	FESTO DQ CONNECTION QN11		1/10/2023	MKLEPADLO	
&EFS=V1GL2UQ51UQ12+V1GL2UQ51UQ12/1	FESTO DQ CONNECTION QN12		1/10/2023	MKLEPADLO	
&EFS=V1GL2UQ51UQ13+V1GL2UQ51UQ13/1	FESTO DQ CONNECTION QN13		1/10/2023	MKLEPADLO	
&EFS=V1GL2UQ51UQ14+V1GL2UQ51UQ14/1	FESTO DQ CONNECTION QN14		1/10/2023	MKLEPADLO	
&EFS=V1GL2UQ51UQ15+V1GL2UQ51UQ15/1	FESTO DQ CONNECTION QN15		1/10/2023	MKLEPADLO	
&EFS=V1GL2UQ51UQ16+V1GL2UQ51UQ16/1	FESTO DQ CONNECTION QN16		1/10/2023	MKLEPADLO	
&EFS=V1GL2UQ51UQ17+V1GL2UQ51UQ17/1	FESTO DQ CONNECTION QN17		1/10/2023	MKLEPADLO	

			Date	1/17/2023	Volvo Trucks North America	Valiant TMS	Table of contents : &EFS=V1GL2UQ51BG0+V1GL2UQ51/2 - &EFS=V1GL2UQ51UQ17+V1GL2UQ51UQ17/1	Drawing name: =2V09&EFS-EL	=
			Ed.	MKLEPADLO					+
			Appr		P6700 Bodyside LH - Robot Cell 2V09	Scale 1:1		Document type: EAB	Project nr: 22-16150
Modification	Date	Name	Original		Replacement of / Replaced by				Page 13 / 1533

Table of contents

Column X: An automatically generated page was edited

F06_001

Page	Page description	supplementary page field	Date	Edited by	X
&EFS=V1GL2UQ51UQ18+V1GL2UQ51UQ18/1	FESTO DQ CONNECTION QN18		1/10/2023	MKLEPADLO	
&EFS=V1GL2UQ51UQ19+V1GL2UQ51UQ19/1	FESTO DQ CONNECTION QN19		1/10/2023	MKLEPADLO	
&EFS=V1GL2UQ51UQ20+V1GL2UQ51UQ20/1	FESTO DQ CONNECTION QN20		1/10/2023	MKLEPADLO	
&EFS=V1GL2UQ51UQ21+V1GL2UQ51UQ21/1	FESTO DQ CONNECTION QN21		1/10/2023	MKLEPADLO	
&EFS=V1GL2UQ51UQ22+V1GL2UQ51UQ22/1	FESTO DQ CONNECTION QN22		1/10/2023	MKLEPADLO	
&EFS=V1GL2UQ51UQ23+V1GL2UQ51UQ23/1	FESTO DQ CONNECTION QN23		1/10/2023	MKLEPADLO	
&EFS=V1GL2UQ51UQ24+V1GL2UQ51UQ24/1	FESTO DQ CONNECTION QN24		1/10/2023	MKLEPADLO	
&EFS=V1GL2UQ51UQ25+V1GL2UQ51UQ25/1	FESTO DQ CONNECTION QN25		1/10/2023	MKLEPADLO	
&EFS=V1GL2UQ51UQ26+V1GL2UQ51UQ26/1	FESTO DQ CONNECTION QN26		1/10/2023	MKLEPADLO	
&EFS=V1GL2UQ51UQ27+V1GL2UQ51UQ27/1	FESTO DQ CONNECTION QN27		1/10/2023	MKLEPADLO	
&EFS=V1GL2UQ51UQ28+V1GL2UQ51UQ28/1	FESTO DQ CONNECTION QN28		1/10/2023	MKLEPADLO	
&EFS=V1GL2UQ51UQ29+V1GL2UQ51UQ29/1	FESTO DQ CONNECTION QN29		1/10/2023	MKLEPADLO	
&EFS=V1GL2UQ51UQ30+V1GL2UQ51UQ30/1	FESTO DQ CONNECTION QN30		1/10/2023	MKLEPADLO	
&EFS=V1GL2UQ51UQ31+V1GL2UQ51UQ31/1	FESTO DQ CONNECTION QN31		1/10/2023	MKLEPADLO	
&EFS=V1GL2UQ51UQ32+V1GL2UQ51UQ32/1	FESTO DQ CONNECTION QN32		1/10/2023	MKLEPADLO	
&EFS=V1GL2UQ51WC4+V1GL1UQ52/1	24VDC		1/10/2023	MKLEPADLO	
&EFS=V1GL2WC1+V1GL2UC01/1	Incoming power		1/10/2023	MKLEPADLO	
&EFS=V1GL2WC4+V1GL2/1	24VDC		1/10/2023	MKLEPADLO	
&EFS=V1GL17UQ51BG0+V1GL17UQ51/1	SENSORS		1/10/2023	MKLEPADLO	
&EFS=V1GL17UQ51KF1+V1GL17UQ51/1	CONNECTING MOD. FOR VTSA MANIFOLD		1/10/2023	MKLEPADLO	
&EFS=V1GL17UQ51KF1+V1GL17UQ51/2	I/O MOD. DI16 (8 x M12) FOR VTSA-F		1/10/2023	MKLEPADLO	
&EFS=V1GL17UQ51KF1+V1GL17UQ51/3	I/O MOD. DI16 (8 x M12) FOR VTSA-F		1/10/2023	MKLEPADLO	
&EFS=V1GL17UQ51KF1+V1GL17UQ51/4	CONNECTING MOD. FOR FESTO DQ		1/10/2023	MKLEPADLO	
&EFS=V1GL17UQ51UQ1+V1GL17UQ51UQ1/1	FESTO DQ CONNECTION QN1		1/10/2023	MKLEPADLO	
&EFS=V1GL17UQ51UQ2+V1GL17UQ51UQ2/1	FESTO DQ CONNECTION QN2		1/10/2023	MKLEPADLO	
&EFS=V1GL17UQ51UQ6+V1GL17UQ51UQ6/1	FESTO DQ CONNECTION QN3		1/10/2023	MKLEPADLO	
&EFS=V1GL17UQ51UQx+V1GL17UQ51UQx/1	FESTO DQ CONNECTION QN4		1/10/2023	MKLEPADLO	
&EFS=V1KF1+V1UC11/1	Switch, Scalance X216		1/10/2023	MKLEPADLO	
&EFS=V1KF1+V1UC11/2	Network Overview		1/10/2023	MKLEPADLO	
&EFS=V1KF1+V1UC11/3	IM 155 PN		1/10/2023	MKLEPADLO	
&EFS=V1KF1+V1UC11/4	ET200S Wiring DI		1/10/2023	MKLEPADLO	
&EFS=V1KF1+V1UC11/5	ET200S Wiring DI		1/10/2023	MKLEPADLO	
&EFS=V1KF1+V1UC11/6	ET200S Wiring F-DI		1/10/2023	MKLEPADLO	

			Date	1/17/2023	Volvo Trucks North America	Valiant TMS	Table of contents : &EFS=V1GL2UQ51UQ18+V1GL2UQ51UQ18/1 - &EFS=V1KF1+V1UC11/6	Drawing name: =2V09&EFS-EL	=
			Ed.	MKLEPADLO					+
			Appr		P6700 Bodyside LH - Robot Cell 2V09	Scale 1:1		Document type: EAB	Project nr: 22-16150	Page 14 / 1533
Modification	Date	Name	Original		Replacement of / Replaced by				

Table of contents

Column X: An automatically generated page was edited

F06_001

Page	Page description	supplementary page field	Date	Edited by	X
&EFS=V1KF1+V1UC11/7	ET200S Wiring DQ		1/10/2023	MKLEPADLO	
&EFS=V1KF1+V1UC11/8	ET200S Wiring F-DQ		1/12/2023	MKLEPADLO	
&EFS=V1KF1+V1UC11/9	ET200S DI Overview KF11.11		1/10/2023	MKLEPADLO	
&EFS=V1KF1+V1UC11/10	ET200S DI Overview KF11.12		1/10/2023	MKLEPADLO	
&EFS=V1KF1+V1UC11/11	ET200S DI Overview KF11.13		1/10/2023	MKLEPADLO	
&EFS=V1KF1+V1UC11/12	ET200S DI Overview KF11.14		1/10/2023	MKLEPADLO	
&EFS=V1KF1+V1UC11/13	ET200S DQ Overview KF11.21		1/10/2023	MKLEPADLO	
&EFS=V1KF1+V1UC11/14	ET200S F-DI Overview KF11.31		1/10/2023	MKLEPADLO	
&EFS=V1KF1+V1UC11/15	ET200S F-DI Overview KF11.32		1/10/2023	MKLEPADLO	
&EFS=V1KF1+V1UC11/16	ET200S F-DQ Overview KF11.41		1/10/2023	MKLEPADLO	
&EFS=V1KF1+V1UC11/17	ET200S F-DQ Overview KF11.42		1/10/2023	MKLEPADLO	
&EFS=V1KF1+V1UC11/18	ET200S F-RQ Overview KF11.51		1/10/2023	MKLEPADLO	
&EFS=V1KF1+V1UC11/19	ET200S F-RQ Overview KF11.52		1/10/2023	MKLEPADLO	
&EFS=V1KF1+V1UC11/20	ET200S F-RQ Overview KF11.53		1/10/2023	MKLEPADLO	
&EFS=V1KF1+V1UC11/21	ET200S F-RQ Overview KF11.54		1/10/2023	MKLEPADLO	
&EFS=V1KF1+V1UC12/1	Switch, Scalance XC216		1/10/2023	MKLEPADLO	
&EFS=V1KF1+V1UC12/2	Network Overview		1/10/2023	MKLEPADLO	
&EFS=V1KF1+V1UC12/3	IM 155 PN		1/10/2023	MKLEPADLO	
&EFS=V1KF1+V1UC12/4	ET200S Wiring DI		1/10/2023	MKLEPADLO	
&EFS=V1KF1+V1UC12/5	ET200S Wiring DI		1/10/2023	MKLEPADLO	
&EFS=V1KF1+V1UC12/6	ET200S Wiring F-DI		1/10/2023	MKLEPADLO	
&EFS=V1KF1+V1UC12/7	ET200S Wiring DQ		1/10/2023	MKLEPADLO	
&EFS=V1KF1+V1UC12/8	ET200S Wiring F-DQ		1/10/2023	MKLEPADLO	
&EFS=V1KF1+V1UC12/9	ET200S DI Overview KF12.11		1/10/2023	MKLEPADLO	
&EFS=V1KF1+V1UC12/10	ET200S DI Overview KF12.12		1/10/2023	MKLEPADLO	
&EFS=V1KF1+V1UC12/11	ET200S DI Overview KF12.13		1/10/2023	MKLEPADLO	
&EFS=V1KF1+V1UC12/12	ET200S DI Overview KF12.14		1/10/2023	MKLEPADLO	
&EFS=V1KF1+V1UC12/13	ET200S DQ Overview KF12.21		1/10/2023	MKLEPADLO	
&EFS=V1KF1+V1UC12/14	ET200S F-DI Overview KF12.31		1/10/2023	MKLEPADLO	
&EFS=V1KF1+V1UC12/15	ET200S F-DI Overview KF12.32		1/10/2023	MKLEPADLO	
&EFS=V1KF1+V1UC12/16	ET200S F-DQ Overview KF12.41		1/10/2023	MKLEPADLO	
&EFS=V1KF1+V1UC12/17	ET200S F-DQ Overview KF12.42		1/10/2023	MKLEPADLO	
&EFS=V1KF1+V1UC12/18	ET200S F-RQ Overview KF12.51		1/10/2023	MKLEPADLO	

Table of contents

Column X: An automatically generated page was edited

F06_001

Page	Page description	supplementary page field	Date	Edited by	X
&EFS=V1KF1+V1UC12/19	ET200S F-RQ Overview KF12.52		1/10/2023	MKLEPADLO	
&EFS=V1KF1+V1UC12/20	ET200S F-RQ Overview KF12.53		1/10/2023	MKLEPADLO	
&EFS=V1KF1+V1UC12/21	ET200S F-RQ Overview KF12.54		1/10/2023	MKLEPADLO	
&EFS=V1KF1+V1UC14/1	Switch, Scalance XC216		1/10/2023	MKLEPADLO	
&EFS=V1KF1+V1UC14/2	Network Overview		1/10/2023	MKLEPADLO	
&EFS=V1KF1+V1UC14/3	IM 155 PN		1/10/2023	MKLEPADLO	
&EFS=V1KF1+V1UC14/4	ET200S Wiring DI		1/10/2023	MKLEPADLO	
&EFS=V1KF1+V1UC14/5	ET200S Wiring F-DI		1/10/2023	MKLEPADLO	
&EFS=V1KF1+V1UC14/6	ET200S Wiring DQ		1/10/2023	MKLEPADLO	
&EFS=V1KF1+V1UC14/7	ET200S Wiring F-DQ		1/10/2023	MKLEPADLO	
&EFS=V1KF1+V1UC14/8	ET200S DI Overview KF14.11		1/10/2023	MKLEPADLO	
&EFS=V1KF1+V1UC14/9	ET200S DI Overview KF14.12		1/10/2023	MKLEPADLO	
&EFS=V1KF1+V1UC14/10	ET200S DQ Overview KF14.21		1/10/2023	MKLEPADLO	
&EFS=V1KF1+V1UC14/11	ET200S F-DI Overview KF14.31		1/10/2023	MKLEPADLO	
&EFS=V1KF1+V1UC14/12	ET200S F-DI Overview KF14.32		1/10/2023	MKLEPADLO	
&EFS=V1KF1+V1UC14/13	ET200S F-DQ Overview KF14.41		1/10/2023	MKLEPADLO	
&EFS=V1KF1+V1UC14/14	ET200S F-DQ Overview KF14.42		1/10/2023	MKLEPADLO	
&EFS=V1KF1+V1UC14/15	ET200S F-RQ Overview KF14.51		1/10/2023	MKLEPADLO	
&EFS=V1KF1+V1UC14/16	ET200S F-RQ Overview KF14.52		1/10/2023	MKLEPADLO	
&EFS=V1KF1+V1UC14/17	ET200S F-RQ Overview KF14.53		1/10/2023	MKLEPADLO	
&EFS=V1KF1+V1UC14/18	ET200S F-RQ Overview KF14.54		1/10/2023	MKLEPADLO	
&EFS=V1KF1+V1UC15/1	Switch, Scalance XC216		1/10/2023	MKLEPADLO	
&EFS=V1KF1+V1UC15/2	Network Overview		1/10/2023	MKLEPADLO	
&EFS=V1KF1+V1UC15/3	IM 155 PN		1/10/2023	MKLEPADLO	
&EFS=V1KF1+V1UC15/4	ET200S Wiring DI		1/10/2023	MKLEPADLO	
&EFS=V1KF1+V1UC15/5	ET200S Wiring F-DI		1/10/2023	MKLEPADLO	
&EFS=V1KF1+V1UC15/6	ET200S Wiring DQ		1/10/2023	MKLEPADLO	
&EFS=V1KF1+V1UC15/7	ET200S Wiring F-DQ		1/10/2023	MKLEPADLO	
&EFS=V1KF1+V1UC15/8	ET200S DI Overview KF15.11		1/10/2023	MKLEPADLO	
&EFS=V1KF1+V1UC15/9	ET200S DI Overview KF15.12		1/10/2023	MKLEPADLO	
&EFS=V1KF1+V1UC15/10	ET200S DQ Overview KF15.21		1/10/2023	MKLEPADLO	
&EFS=V1KF1+V1UC15/11	ET200S F-DI Overview KF15.31		1/10/2023	MKLEPADLO	
&EFS=V1KF1+V1UC15/12	ET200S F-DI Overview KF15.32		1/10/2023	MKLEPADLO	

			Date	1/17/2023	Volvo Trucks North America	Valiant TMS	Table of contents : &EFS=V1KF1+V1UC12/19 - &EFS=V1KF1+V1UC15/12	Drawing name: =2V09&EFS-EL	=
			Ed.	MKLEPADLO					+
			Appr		P6700 Bodyside LH - Robot Cell 2V09			Document type: EAB	Project nr: 22-16150
Modification	Date	Name	Original		Replacement of	Replaced by	Scale 1:1		Page 16 / 1533

Table of contents

Column X: An automatically generated page was edited

F06_001

Page	Page description	supplementary page field	Date	Edited by	X
&EFS=V1KF1+V1UC15/13	ET200S F-DQ Overview KF15.41		1/10/2023	MKLEPADLO	
&EFS=V1KF1+V1UC15/14	ET200S F-DQ Overview KF15.42		1/10/2023	MKLEPADLO	
&EFS=V1KF1+V1UC15/15	ET200S F-RQ Overview KF15.51		1/10/2023	MKLEPADLO	
&EFS=V1KF1+V1UC15/16	ET200S F-RQ Overview KF15.52		1/10/2023	MKLEPADLO	
&EFS=V1KF1+V1UC15/17	ET200S F-RQ Overview KF15.53		1/10/2023	MKLEPADLO	
&EFS=V1KF1+V1UC15/18	ET200S F-RQ Overview KF15.54		1/10/2023	MKLEPADLO	
&EFS=V1KF1+V1UC32/1	IM 155 PN		1/10/2023	MKLEPADLO	
&EFS=V1KF1+V1UC32/2	ET200S Wiring DI		1/10/2023	MKLEPADLO	
&EFS=V1KF1+V1UC32/3	ET200S Wiring DO		1/10/2023	MKLEPADLO	
&EFS=V1KF1+V1UC32/4	ET200S Wiring F-DI		1/10/2023	MKLEPADLO	
&EFS=V1KF1+V1UC32/5	ET200S Cross-reference Input module		1/10/2023	MKLEPADLO	
&EFS=V1KF1+V1UC32/6	ET200S Cross-reference Output module		1/10/2023	MKLEPADLO	
&EFS=V1KF1+V1UC32/7	ET200S Cross-reference Safe input module		1/10/2023	MKLEPADLO	
&EFS=V1PF1KF1+V1PF1/1	CONNECTING MOD. FOR VTSA MANIFOLD		1/10/2023	MKLEPADLO	
&EFS=V1PF1KF1+V1PF1/2	CONNECTING MOD. FOR FESTO DQ		1/10/2023	MKLEPADLO	
&EFS=V1PF1UQ1+V1PF1UQ1/1	FESTO DQ CONNECTION QN1		1/10/2023	MKLEPADLO	
&EFS=V1PF1WC3+V1PF1UC01/1	Incoming power & profinet		1/10/2023	MKLEPADLO	
&EFS=V1PZ1PF1+V1UC61/1	S010 Indication column 1		1/10/2023	MKLEPADLO	
&EFS=V1PZ1PF2+V1UC62/1	S010 Indication column 2		1/10/2023	MKLEPADLO	
&EFS=V1PZ1PF3+V1UC63/1	S020 Indication column 1		1/10/2023	MKLEPADLO	
&EFS=V1PZ1PF4+V1UC64/1	S020 Indication column 2		1/10/2023	MKLEPADLO	
&EFS=V1SF0PG1+V1UC32/1	TP1500: SOP Display		1/10/2023	MKLEPADLO	
&EFS=V1SF0PG1+V1UC32/2	Operating box SOP		1/10/2023	MKLEPADLO	
&EFS=V1SF0PG2+V1UC51/1	TP700: S010 Display 1		1/10/2023	MKLEPADLO	
&EFS=V1SF0PG3+V1UC52/1	TP700: S010 Display 2		1/10/2023	MKLEPADLO	
&EFS=V1SF0PG4+V1UC53/1	TP700: S020 Display 1		1/10/2023	MKLEPADLO	
&EFS=V1SF0PG5+V1UC54/1	TP700: S020 Display 2		1/10/2023	MKLEPADLO	
&EFS=V1SF0SF1+V1UC71/1	S010 Operating box RB1		1/10/2023	MKLEPADLO	
&EFS=V1SF0SF2+V1UC72/1	S010 Operating box RB2		1/10/2023	MKLEPADLO	
&EFS=V1SF0SF3+V1UC73/1	S020 Operating box RB1		1/10/2023	MKLEPADLO	
&EFS=V1SF0SF4+V1UC74/1	S020 Operating box RB2		1/10/2023	MKLEPADLO	
&EFS=V1U10FQ1+V1U10/1	S010 Lift Assist Safety Switch		1/10/2023	MKLEPADLO	
&EFS=V1U10U01KF1+V1U10U01/10	MURR MODULE 8 IN/ 8 OUT		1/10/2023	MKLEPADLO	

			Date	1/17/2023	Volvo Trucks North America	Valiant TMS	Table of contents : &EFS=V1KF1+V1UC15/13 - &EFS=V1U10U01KF1+V1U10U01/10	Drawing name: =2V09&EFS-EL	=
			Ed.	MKLEPADLO					+
			Appr		P6700 Bodyside LH - Robot Cell 2V09			Document type: EAB	Project nr: 22-16150
Modification	Date	Name	Original		Replacement of	Replaced by	Scale 1:1		Page 17 / 1533

Table of contents

Column X: An automatically generated page was edited

F06_001

Page	Page description	supplementary page field	Date	Edited by	X
&EFS=V1U10U01PF1+V1U10U01/2	Station Dome Light		1/10/2023	MKLEPADLO	
&EFS=V1U20U01KF1+V1U20U01/10	MURR MODULE 8 IN/ 8 OUT		1/10/2023	MKLEPADLO	
&EFS=V1U20U01PF1+V1U20U01/2	Station Dome Light		1/10/2023	MKLEPADLO	
&EFS=V1UN1BG0+V1UN1/1	SENSORS		1/17/2023	MKLEPADLO	
&EFS=V1UN1FQ1+V1UN1/1	S070 Lift Assist Safety Switch		1/10/2023	MKLEPADLO	
&EFS=V1UN1KF1+V1UN1/10	MURR MODULE 8 IN/ 8 OUT		1/17/2023	MKLEPADLO	
&EFS=V1UN1PF1+V1UN1/2	Station Dome Light		1/10/2023	MKLEPADLO	
&EFS=V1UQ51BG0+V1UQ51/1	SENSORS		1/10/2023	MKLEPADLO	
&EFS=V1UQ51KF1+V1UQ51/1	CONNECTING MOD. FOR VTSA MANIFOLD		1/10/2023	MKLEPADLO	
&EFS=V1UQ51KF1+V1UQ51/2	I/O MOD. DI16 (8 x M12) FOR VTSA-F		1/10/2023	MKLEPADLO	
&EFS=V1UQ51KF1+V1UQ51/3	I/O MOD. DI16 (8 x M12) FOR VTSA-F		1/10/2023	MKLEPADLO	
&EFS=V1UQ51KF1+V1UQ51/4	CONNECTING MOD. FOR FESTO DQ		1/10/2023	MKLEPADLO	
&EFS=V1UQ51UQ1+V1UQ51UQ1/1	FESTO DQ CONNECTION QN1		1/10/2023	MKLEPADLO	
&EFS=V1UQ51UQ2+V1UQ51UQ2/1	FESTO DQ CONNECTION QN2		1/10/2023	MKLEPADLO	
&EFS=V1UQ51UQ3+V1UQ51UQ3/1	FESTO DQ CONNECTION QN3		1/10/2023	MKLEPADLO	
&EFS=V1UQ51UQ4+V1UQ51UQ4/1	FESTO DQ CONNECTION QN4		1/10/2023	MKLEPADLO	
&EFS=V1UQ51UQ5+V1UQ51UQ5/1	FESTO DQ CONNECTION QN5		1/10/2023	MKLEPADLO	
&EFS=V1UQ51UQ6+V1UQ51UQ6/1	FESTO DQ CONNECTION QN6		1/10/2023	MKLEPADLO	
&EFS=V1UQ51UQ7+V1UQ51UQ7/1	FESTO DQ CONNECTION QN7		1/10/2023	MKLEPADLO	
&EFS=V1UQ51UQ8+V1UQ51UQ8/1	FESTO DQ CONNECTION QN8		1/10/2023	MKLEPADLO	
&EFS=V1UQ51UQ9+V1UQ51UQ9/1	FESTO DQ CONNECTION QN9		1/10/2023	MKLEPADLO	
&EFS=V1UQ51UQ10+V1UQ51UQ10/1	FESTO DQ CONNECTION QN10		1/10/2023	MKLEPADLO	
&EFS=V1UQ52BG0+V1UQ52/1	SENSORS		1/10/2023	MKLEPADLO	
&EFS=V1UQ52BG0+V1UQ52/2	SENSORS		1/10/2023	MKLEPADLO	
&EFS=V1UQ52KF1+V1UQ52/1	CONNECTING MOD. FOR VTSA MANIFOLD		1/10/2023	MKLEPADLO	
&EFS=V1UQ52KF1+V1UQ52/2	I/O MOD. DI16 (8 x M12) FOR VTSA-F		1/10/2023	MKLEPADLO	
&EFS=V1UQ52KF1+V1UQ52/3	I/O MOD. DI16 (8 x M12) FOR VTSA-F		1/10/2023	MKLEPADLO	
&EFS=V1UQ52KF1+V1UQ52/4	CONNECTING MOD. FOR FESTO DQ		1/10/2023	MKLEPADLO	
&EFS=V1UQ52KF2+V1UQ52/1	CONNECTING MOD. FOR VTSA MANIFOLD		1/10/2023	MKLEPADLO	
&EFS=V1UQ52KF2+V1UQ52/2	I/O MOD. DI16 (8 x M12) FOR VTSA-F		1/10/2023	MKLEPADLO	
&EFS=V1UQ52KF2+V1UQ52/3	I/O MOD. DI16 (8 x M12) FOR VTSA-F		1/10/2023	MKLEPADLO	
&EFS=V1UQ52KF2+V1UQ52/4	CONNECTING MOD. FOR FESTO DQ		1/10/2023	MKLEPADLO	
&EFS=V1UQ52KF3+V1UQ52/1	CONNECTING MOD. FOR VTSA MANIFOLD		1/10/2023	MKLEPADLO	

Table of contents

Column X: An automatically generated page was edited

F06_001

Page	Page description	supplementary page field	Date	Edited by	X
&EFS=V1UQ52KF3+V1UQ52/2	I/O MOD. DI16 (8 x M12) FOR VTSA-F		1/10/2023	MKLEPADLO	
&EFS=V1UQ52KF3+V1UQ52/3	I/O MOD. DI16 (8 x M12) FOR VTSA-F		1/10/2023	MKLEPADLO	
&EFS=V1UQ52KF3+V1UQ52/4	CONNECTING MOD. FOR FESTO DQ		1/10/2023	MKLEPADLO	
&EFS=V1UQ52KF4+V1UQ52/1	CONNECTING MOD. FOR VTSA MANIFOLD		1/10/2023	MKLEPADLO	
&EFS=V1UQ52KF4+V1UQ52/2	I/O MOD. DI16 (8 x M12) FOR VTSA-F		1/10/2023	MKLEPADLO	
&EFS=V1UQ52KF4+V1UQ52/3	I/O MOD. DI16 (8 x M12) FOR VTSA-F		1/10/2023	MKLEPADLO	
&EFS=V1UQ52KF4+V1UQ52/4	CONNECTING MOD. FOR FESTO DQ		1/10/2023	MKLEPADLO	
&EFS=V1UQ52KF5+V1UQ52/1	CONNECTING MOD. FOR VTSA MANIFOLD		1/10/2023	MKLEPADLO	
&EFS=V1UQ52KF5+V1UQ52/2	I/O MOD. DI16 (8 x M12) FOR VTSA-F		1/10/2023	MKLEPADLO	
&EFS=V1UQ52KF5+V1UQ52/3	CONNECTING MOD. FOR FESTO DQ		1/10/2023	MKLEPADLO	
&EFS=V1UQ52UQ1+V1UQ52UQ1/1	FESTO DQ CONNECTION QN1		1/10/2023	MKLEPADLO	
&EFS=V1UQ52UQ2+V1UQ52UQ2/1	FESTO DQ CONNECTION QN2		1/10/2023	MKLEPADLO	
&EFS=V1UQ52UQ3+V1UQ52UQ3/1	FESTO DQ CONNECTION QN3		1/10/2023	MKLEPADLO	
&EFS=V1UQ52UQ4+V1UQ52UQ4/1	FESTO DQ CONNECTION QN4		1/10/2023	MKLEPADLO	
&EFS=V1UQ52UQ5+V1UQ52UQ5/1	FESTO DQ CONNECTION QN5		1/10/2023	MKLEPADLO	
&EFS=V1UQ52UQ6+V1UQ52UQ6/1	FESTO DQ CONNECTION QN6		1/10/2023	MKLEPADLO	
&EFS=V1UQ52UQ7+V1UQ52UQ7/1	FESTO DQ CONNECTION QN7		1/10/2023	MKLEPADLO	
&EFS=V1UQ52UQ8+V1UQ52UQ8/1	FESTO DQ CONNECTION QN8		1/10/2023	MKLEPADLO	
&EFS=V1UQ52UQ9+V1UQ52UQ9/1	FESTO DQ CONNECTION QN9		1/10/2023	MKLEPADLO	
&EFS=V1UQ52UQ10+V1UQ52UQ10/1	FESTO DQ CONNECTION QN10		1/10/2023	MKLEPADLO	
&EFS=V1UQ52UQ11+V1UQ52UQ11/1	FESTO DQ CONNECTION QN11		1/10/2023	MKLEPADLO	
&EFS=V1UQ52UQ12+V1UQ52UQ12/1	FESTO DQ CONNECTION QN12		1/10/2023	MKLEPADLO	
&EFS=V1UQ52UQ13+V1UQ52UQ13/1	FESTO DQ CONNECTION QN13		1/10/2023	MKLEPADLO	
&EFS=V1UQ52UQ14+V1UQ52UQ14/1	FESTO DQ CONNECTION QN14		1/10/2023	MKLEPADLO	
&EFS=V1UQ52UQ15+V1UQ52UQ15/1	FESTO DQ CONNECTION QN15		1/10/2023	MKLEPADLO	
&EFS=V1UQ52UQ16+V1UQ52UQ16/1	FESTO DQ CONNECTION QN16		1/10/2023	MKLEPADLO	
&EFS=V1UQ52UQ17+V1UQ52UQ17/1	FESTO DQ CONNECTION QN17		1/10/2023	MKLEPADLO	
&EFS=V1UQ52UQ18+V1UQ52UQ18/1	FESTO DQ CONNECTION QN18		1/10/2023	MKLEPADLO	
&EFS=V1UQ52UQ19+V1UQ52UQ19/1	FESTO DQ CONNECTION QN19		1/10/2023	MKLEPADLO	
&EFS=V1UQ52UQ20+V1UQ52UQ20/1	FESTO DQ CONNECTION QN20		1/10/2023	MKLEPADLO	
&EFS=V1UQ52UQ21+V1UQ52UQ21/1	FESTO DQ CONNECTION QN21		1/10/2023	MKLEPADLO	
&EFS=V1UQ52UQ22+V1UQ52UQ22/1	FESTO DQ CONNECTION QN22		1/10/2023	MKLEPADLO	
&EFS=V1UQ52UQ23+V1UQ52UQ23/1	FESTO DQ CONNECTION QN23		1/10/2023	MKLEPADLO	

			Date	1/17/2023	Volvo Trucks North America	Valiant TMS	Table of contents : &EFS=V1UQ52KF3+V1UQ52/2 - &EFS=V1UQ52UQ23+V1UQ52UQ23/1	Drawing name: =2V09&EFS-EL	=
			Ed.	MKLEPADLO					+
			Appr		P6700 Bodyside LH - Robot Cell 2V09			Document type: EAB	Project nr: 22-16150
Modification	Date	Name	Original		Replacement of / Replaced by	Scale 1:1			Page 19 / 1533

Table of contents

Column X: An automatically generated page was edited

F06_001

Page	Page description	supplementary page field	Date	Edited by	X
&EFS=V1UQ52UQ24+V1UQ52UQ24/1	FESTO DQ CONNECTION QN24		1/10/2023	MKLEPADLO	
&EFS=V1UQ52UQ25+V1UQ52UQ25/1	FESTO DQ CONNECTION QN25		1/10/2023	MKLEPADLO	
&EFS=V1UQ52UQ26+V1UQ52UQ26/1	FESTO DQ CONNECTION QN26		1/10/2023	MKLEPADLO	
&EFS=V1UQ52UQ27+V1UQ52UQ27/1	FESTO DQ CONNECTION QN27		1/10/2023	MKLEPADLO	
&EFS=V1UQ52UQ28+V1UQ52UQ28/1	FESTO DQ CONNECTION QN28		1/10/2023	MKLEPADLO	
&EFS=V1UQ52UQ29+V1UQ52UQ29/1	FESTO DQ CONNECTION QN29		1/10/2023	MKLEPADLO	
&EFS=V1UQ52UQ30+V1UQ52UQ30/1	FESTO DQ CONNECTION QN30		1/10/2023	MKLEPADLO	
&EFS=V1UQ52UQ31+V1UQ52UQ31/1	FESTO DQ CONNECTION QN31		1/10/2023	MKLEPADLO	
&EFS=V1UQ52UQ32+V1UQ52UQ32/1	FESTO DQ CONNECTION QN32		1/10/2023	MKLEPADLO	
&EFS=V1UQ52UQ33+V1UQ52UQ33/1	FESTO DQ CONNECTION QN34		1/10/2023	MKLEPADLO	
&EFS=V1UQ52UQ34+V1UQ52UQ34/1	FESTO DQ CONNECTION QN34		1/10/2023	MKLEPADLO	
&EFS=V1UQ52UQ35+V1UQ52UQ35/1	FESTO DQ CONNECTION QN35		1/10/2023	MKLEPADLO	
&EFS=V1UQ52UQ36+V1UQ52UQ36/1	FESTO DQ CONNECTION QN36		1/10/2023	MKLEPADLO	
&EFS=V1UQ52UQ37+V1UQ52UQ37/1	FESTO DQ CONNECTION QN37		1/10/2023	MKLEPADLO	
&EFS=V1UQ52UQ38+V1UQ52UQ38/1	FESTO DQ CONNECTION QN38		1/10/2023	MKLEPADLO	
&EFS=V1UQ52UQ39+V1UQ52UQ39/1	FESTO DQ CONNECTION QN39		1/10/2023	MKLEPADLO	
&EFS=V1UQ52UQ40+V1UQ52UQ40/1	FESTO DQ CONNECTION QN40		1/10/2023	MKLEPADLO	
&EFS=V1UQ52UQ41+V1UQ52UQ41/1	FESTO DQ CONNECTION QN41		1/10/2023	MKLEPADLO	
&EFS=V1UQ52UQ42+V1UQ52UQ42/1	FESTO DQ CONNECTION QN42		1/10/2023	MKLEPADLO	
&EFS=V1UQ52UQ43+V1UQ52UQ43/1	FESTO DQ CONNECTION QN43		1/10/2023	MKLEPADLO	
&EFS=V1UQ52UQ44+V1UQ52UQ44/1	FESTO DQ CONNECTION QN44		1/10/2023	MKLEPADLO	
&EFS=V1UQ52UQ45+V1UQ52UQ45/1	FESTO DQ CONNECTION QN45		1/10/2023	MKLEPADLO	
&EFS=V1UQ52UQ46+V1UQ52UQ46/1	FESTO DQ CONNECTION QN46		1/10/2023	MKLEPADLO	
&EFS=V1UQ52WC4+V1UQ52/1	24VDC		1/10/2023	MKLEPADLO	
&EFS=V1UQ52WC4+V1UQ52/2	24VDC		1/10/2023	MKLEPADLO	
&EFS=V1UQ53BG0+V1UQ53/1	SENSORS		1/10/2023	MKLEPADLO	
&EFS=V1UQ53KF1+V1UQ53/1	CONNECTING MOD. FOR VTSA MANIFOLD		1/10/2023	MKLEPADLO	
&EFS=V1UQ53KF1+V1UQ53/2	I/O MOD. DI16 (8 x M12) FOR VTSA-F		1/10/2023	MKLEPADLO	
&EFS=V1UQ53KF1+V1UQ53/3	I/O MOD. DI16 (8 x M12) FOR VTSA-F		1/10/2023	MKLEPADLO	
&EFS=V1UQ53KF1+V1UQ53/4	CONNECTING MOD. FOR FESTO DQ		1/10/2023	MKLEPADLO	
&EFS=V1UQ53KF2+V1UQ53/1	CONNECTING MOD. FOR VTSA MANIFOLD		1/10/2023	MKLEPADLO	
&EFS=V1UQ53KF2+V1UQ53/2	I/O MOD. DI16 (8 x M12) FOR VTSA-F		1/10/2023	MKLEPADLO	
&EFS=V1UQ53KF2+V1UQ53/3	CONNECTING MOD. FOR FESTO DQ		1/10/2023	MKLEPADLO	

			Date	1/17/2023	Volvo Trucks North America	Valiant TMS	Table of contents : &EFS=V1UQ52UQ24+V1UQ52UQ24/1 - &EFS=V1UQ53KF2+V1UQ53/3	Drawing name: =2V09&EFS-EL	=
			Ed.	MKLEPADLO					+
			Appr		P6700 Bodyside LH - Robot Cell 2V09			Document type: EAB	Project nr: 22-16150
Modification	Date	Name	Original		Replacement of / Replaced by	Scale 1:1			Page 20 / 1533

Table of contents

Column X: An automatically generated page was edited

F06_001

Page	Page description	supplementary page field	Date	Edited by	X
&EFS=V1UQ53UQ1+V1UQ53UQ1/1	FESTO DQ CONNECTION QN1		1/10/2023	MKLEPADLO	
&EFS=V1UQ53UQ2+V1UQ53UQ2/1	FESTO DQ CONNECTION QN2		1/10/2023	MKLEPADLO	
&EFS=V1UQ53UQ3+V1UQ53UQ3/1	FESTO DQ CONNECTION QN3		1/10/2023	MKLEPADLO	
&EFS=V1UQ53UQ4+V1UQ53UQ4/1	FESTO DQ CONNECTION QN4		1/10/2023	MKLEPADLO	
&EFS=V1UQ53UQ5+V1UQ53UQ5/1	FESTO DQ CONNECTION QN5		1/10/2023	MKLEPADLO	
&EFS=V1UQ53UQ6+V1UQ53UQ6/1	FESTO DQ CONNECTION QN6		1/10/2023	MKLEPADLO	
&EFS=V1UQ53UQ7+V1UQ53UQ7/1	FESTO DQ CONNECTION QN7		1/10/2023	MKLEPADLO	
&EFS=V1UQ53UQ8+V1UQ53UQ8/1	FESTO DQ CONNECTION QN8		1/10/2023	MKLEPADLO	
&EFS=V1UQ53UQ9+V1UQ53UQ9/1	FESTO DQ CONNECTION QN9		1/10/2023	MKLEPADLO	
&EFS=V1UQ53UQ10+V1UQ53UQ10/1	FESTO DQ CONNECTION QN10		1/10/2023	MKLEPADLO	
&EFS=V1UQ53UQ11+V1UQ53UQ11/1	FESTO DQ CONNECTION QN11		1/10/2023	MKLEPADLO	
&EFS=V1UQ53UQ12+V1UQ53UQ12/1	FESTO DQ CONNECTION QN12		1/10/2023	MKLEPADLO	
&EFS=V1UQ53UQ13+V1UQ53UQ13/1	FESTO DQ CONNECTION QN13		1/10/2023	MKLEPADLO	
&EFS=V1UQ53UQ14+V1UQ53UQ14/1	FESTO DQ CONNECTION QN14		1/10/2023	MKLEPADLO	
&EFS=V1UQ53UQ15+V1UQ53UQ15/1	FESTO DQ CONNECTION QN15		1/10/2023	MKLEPADLO	
&EFS=V1UQ53UQ16+V1UQ53UQ16/1	FESTO DQ CONNECTION QN16		1/10/2023	MKLEPADLO	
&EFS=V1UQ53UQ17+V1UQ53UQ17/1	FESTO DQ CONNECTION QN17		1/10/2023	MKLEPADLO	
&EFS=V1UQ53WC4+V1UQ53/1	24VDC		1/10/2023	MKLEPADLO	
&EFS=V1UQ54BG0+V1UQ54/1	SENSORS		1/10/2023	MKLEPADLO	
&EFS=V1UQ54KF1+V1UQ54/1	CONNECTING MOD. FOR VTSA MANIFOLD		1/10/2023	MKLEPADLO	
&EFS=V1UQ54KF1+V1UQ54/2	I/O MOD. DI16 (8 x M12) FOR VTSA-F		1/10/2023	MKLEPADLO	
&EFS=V1UQ54KF1+V1UQ54/3	I/O MOD. DI16 (8 x M12) FOR VTSA-F		1/10/2023	MKLEPADLO	
&EFS=V1UQ54KF1+V1UQ54/4	CONNECTING MOD. FOR FESTO DQ		1/10/2023	MKLEPADLO	
&EFS=V1UQ54KF2+V1UQ54/1	CONNECTING MOD. FOR VTSA MANIFOLD		1/10/2023	MKLEPADLO	
&EFS=V1UQ54KF2+V1UQ54/2	I/O MOD. DI16 (8 x M12) FOR VTSA-F		1/10/2023	MKLEPADLO	
&EFS=V1UQ54KF2+V1UQ54/3	CONNECTING MOD. FOR FESTO DQ		1/10/2023	MKLEPADLO	
&EFS=V1UQ54UQ1+V1UQ54UQ1/1	FESTO DQ CONNECTION QN1		1/10/2023	MKLEPADLO	
&EFS=V1UQ54UQ2+V1UQ54UQ2/1	FESTO DQ CONNECTION QN2		1/10/2023	MKLEPADLO	
&EFS=V1UQ54UQ3+V1UQ54UQ3/1	FESTO DQ CONNECTION QN3		1/10/2023	MKLEPADLO	
&EFS=V1UQ54UQ4+V1UQ54UQ4/1	FESTO DQ CONNECTION QN4		1/10/2023	MKLEPADLO	
&EFS=V1UQ54UQ5+V1UQ54UQ5/1	FESTO DQ CONNECTION QN5		1/10/2023	MKLEPADLO	
&EFS=V1UQ54UQ6+V1UQ54UQ6/1	FESTO DQ CONNECTION QN6		1/10/2023	MKLEPADLO	
&EFS=V1UQ54UQ7+V1UQ54UQ7/1	FESTO DQ CONNECTION QN7		1/10/2023	MKLEPADLO	

			Date	1/17/2023	Volvo Trucks North America	Valiant TMS	Table of contents : &EFS=V1UQ53UQ1+V1UQ53UQ1/1 - &EFS=V1UQ54UQ7+V1UQ54UQ7/1	Drawing name: =2V09&EFS-EL	=
			Ed.	MKLEPADLO					+
			Appr		P6700 Bodyside LH - Robot Cell 2V09	Scale 1:1		Document type: EAB	Project nr: 22-16150	Page 21 / 1533
Modification	Date	Name	Original		Replacement of / Replaced by				

Table of contents

Column X: An automatically generated page was edited

F06_001

Page	Page description	supplementary page field	Date	Edited by	X
&EFS=V1UQ54UQ8+V1UQ54UQ8/1	FESTO DQ CONNECTION QN8		1/10/2023	MKLEPADLO	
&EFS=V1UQ54UQ9+V1UQ54UQ9/1	FESTO DQ CONNECTION QN9		1/10/2023	MKLEPADLO	
&EFS=V1UQ54UQ10+V1UQ54UQ10/1	FESTO DQ CONNECTION QN10		1/10/2023	MKLEPADLO	
&EFS=V1UQ54UQ11+V1UQ54UQ11/1	FESTO DQ CONNECTION QN11		1/10/2023	MKLEPADLO	
&EFS=V1UQ54UQ12+V1UQ54UQ12/1	FESTO DQ CONNECTION QN12		1/10/2023	MKLEPADLO	
&EFS=V1UQ54UQ13+V1UQ54UQ13/1	FESTO DQ CONNECTION QN13		1/10/2023	MKLEPADLO	
&EFS=V1UQ54UQ14+V1UQ54UQ14/1	FESTO DQ CONNECTION QN14		1/10/2023	MKLEPADLO	
&EFS=V1UQ54WC4+V1UQ54/1	24VDC		1/10/2023	MKLEPADLO	
&EFS=V1UQ55BG0+V1UQ55/1	SENSORS		1/10/2023	MKLEPADLO	
&EFS=V1UQ55KF1+V1UQ55/1	CONNECTING MOD. FOR VTSA MANIFOLD		1/10/2023	MKLEPADLO	
&EFS=V1UQ55KF1+V1UQ55/2	I/O MOD. DI16 (8 x M12) FOR VTSA-F		1/10/2023	MKLEPADLO	
&EFS=V1UQ55KF1+V1UQ55/3	CONNECTING MOD. FOR FESTO DQ		1/10/2023	MKLEPADLO	
&EFS=V1UQ55UQ1+V1UQ55UQ1/1	FESTO DQ CONNECTION QN1		1/10/2023	MKLEPADLO	
&EFS=V1UQ55UQ2+V1UQ55UQ2/1	FESTO DQ CONNECTION QN2		1/10/2023	MKLEPADLO	
&EFS=V1UQ55UQ3+V1UQ55UQ3/1	FESTO DQ CONNECTION QN3		1/10/2023	MKLEPADLO	
&EFS=V1UQ55UQ4+V1UQ55UQ4/1	FESTO DQ CONNECTION QN4		1/10/2023	MKLEPADLO	
&EFS=V1WC1+V1UC11/1	Incoming power supply 480 VAC		1/10/2023	MKLEPADLO	
&EFS=V1WC1+V1UC12/1	Incoming power supply 480 VAC		1/10/2023	MKLEPADLO	
&EFS=V1WC1+V1UC161/1	Incoming weld power supply 480 VAC		1/10/2023	MKLEPADLO	
&EFS=V1WC1+V1UC162/1	Incoming weld power supply 480 VAC		1/10/2023	MKLEPADLO	
&EFS=V1WC1+V1UC163/1	Incoming weld power supply 480 VAC		1/10/2023	MKLEPADLO	
&EFS=V1WC1+V1UC164/1	Incoming weld power supply 480 VAC		1/10/2023	MKLEPADLO	
&EFS=V1WC2+V1UC11/10	Power distribution 480 VAC		1/10/2023	MKLEPADLO	
&EFS=V1WC2+V1UC11/11	Power distribution 480 VAC		1/10/2023	MKLEPADLO	
&EFS=V1WC2+V1UC11/12	Power distribution 480 VAC		1/13/2023	MKLEPADLO	
&EFS=V1WC2+V1UC11/13	Power distribution 480 VAC		1/13/2023	MKLEPADLO	
&EFS=V1WC2+V1UC11/14	Power distribution 480 VAC		1/10/2023	MKLEPADLO	
&EFS=V1WC2+V1UC11/15	Power distribution 480 VAC		1/10/2023	MKLEPADLO	
&EFS=V1WC2+V1UC11/16	Power distribution 480 VAC		1/10/2023	MKLEPADLO	
&EFS=V1WC2+V1UC11/41	Power distribution 480 VAC monitoring		1/10/2023	MKLEPADLO	
&EFS=V1WC2+V1UC11/42	Power distribution 480 VAC monitoring		1/10/2023	MKLEPADLO	
&EFS=V1WC2+V1UC11/43	Power distribution 480 VAC monitoring		1/10/2023	MKLEPADLO	
&EFS=V1WC2+V1UC12/10	Power distribution 480 VAC		1/10/2023	MKLEPADLO	

			Date	1/17/2023	Volvo Trucks North America	Valiant TMS	Table of contents : &EFS=V1UQ54UQ8+V1UQ54UQ8/1 - &EFS=V1WC2+V1UC12/10	Drawing name: =2V09&EFS-EL	=
			Ed.	MKLEPADLO					+
			Appr		P6700 Bodyside LH - Robot Cell 2V09	Scale 1:1		Document type: EAB	Project nr: 22-16150	Page 22 / 1533
Modification	Date	Name	Original		Replacement of / Replaced by				

Table of contents

Column X: An automatically generated page was edited

F06_001

Page	Page description	supplementary page field	Date	Edited by	X
&EFS=V1WC2+V1UC12/11	Power distribution 480 VAC		1/10/2023	MKLEPADLO	
&EFS=V1WC2+V1UC12/12	Power distribution 480 VAC		1/10/2023	MKLEPADLO	
&EFS=V1WC2+V1UC12/13	Power distribution 480 VAC		1/10/2023	MKLEPADLO	
&EFS=V1WC2+V1UC12/14	Power distribution 480 VAC		1/10/2023	MKLEPADLO	
&EFS=V1WC2+V1UC12/15	Power distribution 480 VAC		1/10/2023	MKLEPADLO	
&EFS=V1WC2+V1UC12/16	Power distribution 480 VAC		1/10/2023	MKLEPADLO	
&EFS=V1WC2+V1UC12/41	Power distribution 480 VAC monitoring		1/10/2023	MKLEPADLO	
&EFS=V1WC2+V1UC12/42	Power distribution 480 VAC monitoring		1/10/2023	MKLEPADLO	
&EFS=V1WC2+V1UC12/43	Power distribution 480 VAC monitoring		1/10/2023	MKLEPADLO	
&EFS=V1WC2+V1UC161/10	Weld power distribution 480 VAC		1/10/2023	MKLEPADLO	
&EFS=V1WC2+V1UC162/10	Weld power distribution 480 VAC		1/10/2023	MKLEPADLO	
&EFS=V1WC2+V1UC163/10	Weld power distribution 480 VAC		1/10/2023	MKLEPADLO	
&EFS=V1WC2+V1UC164/10	Weld power distribution 480 VAC		1/10/2023	MKLEPADLO	
&EFS=V1WC3+V1UC11/1	Power Distribution 120 VAC (Above Disconnect)		1/10/2023	MKLEPADLO	
&EFS=V1WC3+V1UC11/2	Power Distribution 120 VAC (Below Disconnect)		1/10/2023	MKLEPADLO	
&EFS=V1WC3+V1UC11/3	Power Distribution 120 VAC (Below Disconnect)		1/10/2023	MKLEPADLO	
&EFS=V1WC3+V1UC11/4	Power distribution 120 VAC monitoring (Above Disconnect)		1/10/2023	MKLEPADLO	
&EFS=V1WC3+V1UC12/1	Power Distribution 120 VAC (Above Disconnect)		1/10/2023	MKLEPADLO	
&EFS=V1WC3+V1UC12/2	Power Distribution 120 VAC (Below Disconnect)		1/10/2023	MKLEPADLO	
&EFS=V1WC3+V1UC12/3	Power Distribution 120 VAC (Below Disconnect)		1/10/2023	MKLEPADLO	
&EFS=V1WC3+V1UC12/4	Power distribution 120 VAC monitoring (Above Disconnect)		1/10/2023	MKLEPADLO	
&EFS=V1WC3+V1UC14/1	Power distribution 120 VAC		1/10/2023	MKLEPADLO	
&EFS=V1WC3+V1UC14/2	Monitoring 120VAC		1/10/2023	MKLEPADLO	
&EFS=V1WC3+V1UC15/1	Power distribution 120 VAC		1/10/2023	MKLEPADLO	
&EFS=V1WC3+V1UC15/2	Monitoring 120VAC		1/10/2023	MKLEPADLO	
&EFS=V1WC4+V1UC11/1	Power distribution 24VDC (Above Disconnect)		1/10/2023	MKLEPADLO	
&EFS=V1WC4+V1UC11/2	Power distribution 24VDC HL+		1/10/2023	MKLEPADLO	
&EFS=V1WC4+V1UC11/3	Power distribution 24VDC 1L+		1/10/2023	MKLEPADLO	
&EFS=V1WC4+V1UC11/4	Power distribution 24VDC 2L+		1/10/2023	MKLEPADLO	
&EFS=V1WC4+V1UC11/5	Power distribution 24VDC 3L+		1/10/2023	MKLEPADLO	
&EFS=V1WC4+V1UC11/6	Power distribution 24VDC 4L+		1/10/2023	MKLEPADLO	
&EFS=V1WC4+V1UC11/7	Power distribution 24VDC 5L+		1/10/2023	MKLEPADLO	
&EFS=V1WC4+V1UC11/8	Power distribution 24VDC 6L+		1/10/2023	MKLEPADLO	

			Date	1/17/2023	Volvo Trucks North America	Valiant TMS	Table of contents : &EFS=V1WC2+V1UC12/11 - &EFS=V1WC4+V1UC11/8	Drawing name: =2V09&EFS-EL	=
			Ed.	MKLEPADLO					+
			Appr		P6700 Bodyside LH - Robot Cell 2V09			Document type: EAB	Project nr: 22-16150
Modification	Date	Name	Original		Replacement of	Replaced by	Scale 1:1		Page 23 / 1533

Table of contents

Column X: An automatically generated page was edited

F06_001

Page	Page description	supplementary page field	Date	Edited by	X
&EFS=V1WC4+V1UC11/9	Power distribution 24VDC 7L+		1/10/2023	MKLEPADLO	
&EFS=V1WC4+V1UC11/10	Power distribution 24VDC 8L+		1/10/2023	MKLEPADLO	
&EFS=V1WC4+V1UC11/11	Power distribution 24VDC (Below Disconnect)		1/10/2023	MKLEPADLO	
&EFS=V1WC4+V1UC11/12	Power distribution 24VDC 11L+		1/10/2023	MKLEPADLO	
&EFS=V1WC4+V1UC11/13	Power distribution 24VDC 12L+		1/10/2023	MKLEPADLO	
&EFS=V1WC4+V1UC11/14	Power distribution 24VDC 13L+		1/10/2023	MKLEPADLO	
&EFS=V1WC4+V1UC11/15	Power distribution 24VDC 14L+		1/10/2023	MKLEPADLO	
&EFS=V1WC4+V1UC11/16	Power distribution 24VDC 15L+		1/10/2023	MKLEPADLO	
&EFS=V1WC4+V1UC11/17	Power distribution 24VDC 16L+		1/10/2023	MKLEPADLO	
&EFS=V1WC4+V1UC11/18	Power distribution 24VDC 17L+		1/10/2023	MKLEPADLO	
&EFS=V1WC4+V1UC11/19	Power distribution 24VDC 18L+		1/10/2023	MKLEPADLO	
&EFS=V1WC4+V1UC11/20	24VDC Unswitched Power 1		1/10/2023	MKLEPADLO	
&EFS=V1WC4+V1UC11/21	24VDC Unswitched Power 2		1/10/2023	MKLEPADLO	
&EFS=V1WC4+V1UC11/22	24VDC Unswitched Power 3		1/10/2023	MKLEPADLO	
&EFS=V1WC4+V1UC11/23	24VDC Unswitched Power 4		1/10/2023	MKLEPADLO	
&EFS=V1WC4+V1UC11/24	24VDC Switched Power 1		1/10/2023	MKLEPADLO	
&EFS=V1WC4+V1UC11/25	24VDC Switched Power 2		1/10/2023	MKLEPADLO	
&EFS=V1WC4+V1UC11/26	24VDC Switched Power 3		1/10/2023	MKLEPADLO	
&EFS=V1WC4+V1UC11/27	24VDC Switched Power 4		1/10/2023	MKLEPADLO	
&EFS=V1WC4+V1UC12/1	Power distribution 24VDC (Above Disconnect)		1/10/2023	MKLEPADLO	
&EFS=V1WC4+V1UC12/2	Power distribution 24VDC HL+		1/10/2023	MKLEPADLO	
&EFS=V1WC4+V1UC12/3	Power distribution 24VDC 1L+		1/10/2023	MKLEPADLO	
&EFS=V1WC4+V1UC12/4	Power distribution 24VDC 2L+		1/10/2023	MKLEPADLO	
&EFS=V1WC4+V1UC12/5	Power distribution 24VDC 3L+		1/10/2023	MKLEPADLO	
&EFS=V1WC4+V1UC12/6	Power distribution 24VDC 4L+		1/10/2023	MKLEPADLO	
&EFS=V1WC4+V1UC12/7	Power distribution 24VDC 5L+		1/10/2023	MKLEPADLO	
&EFS=V1WC4+V1UC12/8	Power distribution 24VDC 6L+		1/10/2023	MKLEPADLO	
&EFS=V1WC4+V1UC12/9	Power distribution 24VDC 7L+		1/10/2023	MKLEPADLO	
&EFS=V1WC4+V1UC12/10	Power distribution 24VDC 8L+		1/10/2023	MKLEPADLO	
&EFS=V1WC4+V1UC12/11	Power distribution 24VDC (Below Disconnect)		1/10/2023	MKLEPADLO	
&EFS=V1WC4+V1UC12/12	Power distribution 24VDC 11L+		1/10/2023	MKLEPADLO	
&EFS=V1WC4+V1UC12/13	Power distribution 24VDC 12L+		1/10/2023	MKLEPADLO	
&EFS=V1WC4+V1UC12/14	Power distribution 24VDC 13L+		1/10/2023	MKLEPADLO	

			Date	1/17/2023	Volvo Trucks North America	Valiant TMS	Table of contents : &EFS=V1WC4+V1UC11/9 - &EFS=V1WC4+V1UC12/14	Drawing name: =2V09&EFS-EL	=
			Ed.	MKLEPADLO					+
			Appr		P6700 Bodyside LH - Robot Cell 2V09			Document type: EAB	Project nr: 22-16150
Modification	Date	Name	Original		Replacement of / Replaced by	Scale 1:1			Page 24 / 1533

Table of contents

Column X: An automatically generated page was edited

F06_001

Page	Page description	supplementary page field	Date	Edited by	X
&EFS=V1WC4+V1UC12/15	Power distribution 24VDC 14L+		1/10/2023	MKLEPADLO	
&EFS=V1WC4+V1UC12/16	Power distribution 24VDC 15L+		1/10/2023	MKLEPADLO	
&EFS=V1WC4+V1UC12/17	Power distribution 24VDC 16L+		1/10/2023	MKLEPADLO	
&EFS=V1WC4+V1UC12/18	Power distribution 24VDC 17L+		1/10/2023	MKLEPADLO	
&EFS=V1WC4+V1UC12/19	Power distribution 24VDC 18L+		1/10/2023	MKLEPADLO	
&EFS=V1WC4+V1UC12/20	24VDC Unswitched Power 1		1/10/2023	MKLEPADLO	
&EFS=V1WC4+V1UC12/21	24VDC Unswitched Power 2		1/10/2023	MKLEPADLO	
&EFS=V1WC4+V1UC12/22	24VDC Unswitched Power 3		1/10/2023	MKLEPADLO	
&EFS=V1WC4+V1UC12/23	24VDC Unswitched Power 4		1/10/2023	MKLEPADLO	
&EFS=V1WC4+V1UC12/24	24VDC Switched Power 1		1/10/2023	MKLEPADLO	
&EFS=V1WC4+V1UC12/25	24VDC Switched Power 2		1/10/2023	MKLEPADLO	
&EFS=V1WC4+V1UC12/26	24VDC Switched Power 3		1/10/2023	MKLEPADLO	
&EFS=V1WC4+V1UC12/27	24VDC Switched Power 4		1/10/2023	MKLEPADLO	
&EFS=V1WC4+V1UC14/1	Power distribution 24VDC for Inputs		1/10/2023	MKLEPADLO	
&EFS=V1WC4+V1UC14/2	Power distribution 24VDC 1L+		1/10/2023	MKLEPADLO	
&EFS=V1WC4+V1UC14/3	Power distribution 24VDC 2L+		1/10/2023	MKLEPADLO	
&EFS=V1WC4+V1UC14/4	Power distribution 24VDC 3L+		1/10/2023	MKLEPADLO	
&EFS=V1WC4+V1UC14/5	Power distribution 24VDC 4L+		1/10/2023	MKLEPADLO	
&EFS=V1WC4+V1UC14/6	Power distribution 24VDC 5L+		1/10/2023	MKLEPADLO	
&EFS=V1WC4+V1UC14/7	Power distribution 24VDC 6L+		1/10/2023	MKLEPADLO	
&EFS=V1WC4+V1UC14/8	Power distribution 24VDC 7L+		1/10/2023	MKLEPADLO	
&EFS=V1WC4+V1UC14/9	Power distribution 24VDC 8L+		1/10/2023	MKLEPADLO	
&EFS=V1WC4+V1UC14/10	Power distribution 24VDC (Below Disconnect)		1/10/2023	MKLEPADLO	
&EFS=V1WC4+V1UC14/11	Power distribution 24VDC 11L+		1/10/2023	MKLEPADLO	
&EFS=V1WC4+V1UC14/12	Power distribution 24VDC 12L+		1/10/2023	MKLEPADLO	
&EFS=V1WC4+V1UC14/13	Power distribution 24VDC 13L+		1/10/2023	MKLEPADLO	
&EFS=V1WC4+V1UC14/14	Power distribution 24VDC 14L+		1/10/2023	MKLEPADLO	
&EFS=V1WC4+V1UC14/15	Power distribution 24VDC 15L+		1/10/2023	MKLEPADLO	
&EFS=V1WC4+V1UC14/16	Power distribution 24VDC 16L+		1/10/2023	MKLEPADLO	
&EFS=V1WC4+V1UC14/17	Power distribution 24VDC 17L+		1/10/2023	MKLEPADLO	
&EFS=V1WC4+V1UC14/18	Power distribution 24VDC 18L+		1/10/2023	MKLEPADLO	
&EFS=V1WC4+V1UC14/19	24VDC Switched Power 1		1/10/2023	MKLEPADLO	
&EFS=V1WC4+V1UC14/20	24VDC Switched Power 2		1/10/2023	MKLEPADLO	

			Date	1/17/2023	Volvo Trucks North America	Valiant TMS	Table of contents : &EFS=V1WC4+V1UC12/15 - &EFS=V1WC4+V1UC14/20	Drawing name: =2V09&EFS-EL	=	
			Ed.	MKLEPADLO					+	
			Appr		P6700 Bodyside LH - Robot Cell 2V09			Document type: EAB	Project nr: 22-16150	Page 25 / 1533
Modification	Date	Name	Original		Replacement of / Replaced by	Scale 1:1				

Table of contents

Column X: An automatically generated page was edited

F06_001

Page	Page description	supplementary page field	Date	Edited by	X
&EFS=V1WC4+V1UC14/21	24VDC Switched Power 3		1/10/2023	MKLEPADLO	
&EFS=V1WC4+V1UC14/22	24VDC Switched Power 4		1/10/2023	MKLEPADLO	
&EFS=V1WC4+V1UC15/1	Power distribution 24VDC for Inputs		1/10/2023	MKLEPADLO	
&EFS=V1WC4+V1UC15/2	Power distribution 24VDC 1L+		1/10/2023	MKLEPADLO	
&EFS=V1WC4+V1UC15/3	Power distribution 24VDC 2L+		1/10/2023	MKLEPADLO	
&EFS=V1WC4+V1UC15/4	Power distribution 24VDC 3L+		1/10/2023	MKLEPADLO	
&EFS=V1WC4+V1UC15/5	Power distribution 24VDC 4L+		1/10/2023	MKLEPADLO	
&EFS=V1WC4+V1UC15/6	Power distribution 24VDC 5L+		1/10/2023	MKLEPADLO	
&EFS=V1WC4+V1UC15/7	Power distribution 24VDC 6L+		1/10/2023	MKLEPADLO	
&EFS=V1WC4+V1UC15/8	Power distribution 24VDC 7L+		1/10/2023	MKLEPADLO	
&EFS=V1WC4+V1UC15/9	Power distribution 24VDC 8L+		1/10/2023	MKLEPADLO	
&EFS=V1WC4+V1UC15/10	Power distribution 24VDC (Below Disconnect)		1/10/2023	MKLEPADLO	
&EFS=V1WC4+V1UC15/11	Power distribution 24VDC 11L+		1/10/2023	MKLEPADLO	
&EFS=V1WC4+V1UC15/12	Power distribution 24VDC 12L+		1/10/2023	MKLEPADLO	
&EFS=V1WC4+V1UC15/13	Power distribution 24VDC 13L+		1/10/2023	MKLEPADLO	
&EFS=V1WC4+V1UC15/14	Power distribution 24VDC 14L+		1/10/2023	MKLEPADLO	
&EFS=V1WC4+V1UC15/15	Power distribution 24VDC 15L+		1/10/2023	MKLEPADLO	
&EFS=V1WC4+V1UC15/16	Power distribution 24VDC 16L+		1/10/2023	MKLEPADLO	
&EFS=V1WC4+V1UC15/17	Power distribution 24VDC 17L+		1/10/2023	MKLEPADLO	
&EFS=V1WC4+V1UC15/18	Power distribution 24VDC 18L+		1/10/2023	MKLEPADLO	
&EFS=V1WC4+V1UC15/19	24VDC Switched Power 1		1/10/2023	MKLEPADLO	
&EFS=V1WC4+V1UC15/20	24VDC Switched Power 2		1/10/2023	MKLEPADLO	
&EFS=V1WC4+V1UC15/21	24VDC Switched Power 3		1/10/2023	MKLEPADLO	
&EFS=V1WC4+V1UC15/22	24VDC Switched Power 4		1/10/2023	MKLEPADLO	
&EFS=V1WC4+V1UC32/1	Incomming power supply 24 VDC		1/10/2023	MKLEPADLO	
&EFS=V1WC4+V1UC32/2	Power distribution 24VDC 1L+		1/10/2023	MKLEPADLO	
&EFS=V1WC4+V1UC32/3	Monitoring 24VDC		1/10/2023	MKLEPADLO	
&ELU=KF0+UC31/1	Layout		1/10/2023	MKLEPADLO	
&ELU=KF0+UC31/2	Layout UC31 External View		1/10/2023	MKLEPADLO	
&ELU=KF0+UC31/3	Layout UC31 Internal View		1/10/2023	MKLEPADLO	
&ELU=V1PZ1PF1+V1UC61/1	Layout UC61 SL External View		1/10/2023	MKLEPADLO	
&ELU=V1PZ1PF1+V1UC61/2	Layout UC61 SL Internal View		1/10/2023	MKLEPADLO	
&ELU=V1PZ1PF2+V1UC62/1	Layout UC62 SL External View		1/10/2023	MKLEPADLO	

			Date	1/17/2023	Volvo Trucks North America	Valiant TMS	Table of contents : &EFS=V1WC4+V1UC14/21 - &ELU=V1PZ1PF2+V1UC62/1	Drawing name: =2V09&EFS-EL	=
			Ed.	MKLEPADLO					+
			Appr		P6700 Bodyside LH - Robot Cell 2V09			Document type: EAB	Project nr: 22-16150
Modification	Date	Name	Original		Replacement of / Replaced by	Scale 1:1			Page 26 / 1533

Table of contents

Column X: An automatically generated page was edited

F06_001

Page	Page description	supplementary page field	Date	Edited by	X
&ELU=V1PZ1PF2+V1UC62/2	Layout UC62 SL Internal View		1/10/2023	MKLEPADLO	
&ELU=V1PZ1PF3+V1UC63/1	Layout UC63 SL External View		1/10/2023	MKLEPADLO	
&ELU=V1PZ1PF3+V1UC63/2	Layout UC63 SL Internal View		1/10/2023	MKLEPADLO	
&ELU=V1PZ1PF4+V1UC64/1	Layout UC64 SL External View		1/10/2023	MKLEPADLO	
&ELU=V1PZ1PF4+V1UC64/2	Layout UC64 SL Internal View		1/10/2023	MKLEPADLO	
&ELU=V1SF0PG1+V1UC32/1	Layout UC32 SOP External View		1/10/2023	MKLEPADLO	
&ELU=V1SF0PG1+V1UC32/2	Layout UC32 SOP Internal View		1/10/2023	MKLEPADLO	
&ELU=V1SF0PG2+V1UC51/1	Layout UC51 OD External View		1/10/2023	MKLEPADLO	
&ELU=V1SF0PG3+V1UC52/1	Layout UC52 OD External View		1/10/2023	MKLEPADLO	
&ELU=V1SF0PG4+V1UC53/1	Layout UC53 OD External View		1/10/2023	MKLEPADLO	
&ELU=V1SF0PG5+V1UC54/1	Layout UC54 OD External View		1/10/2023	MKLEPADLO	
&ELU=V1SF0SF1+V1UC71/1	LAYOUT UC71 RB EXTERNAL VIEW		1/10/2023	MKLEPADLO	
&ELU=V1SF0SF2+V1UC72/1	LAYOUT UC72 RB EXTERNAL VIEW		1/10/2023	MKLEPADLO	
&ELU=V1SF0SF3+V1UC73/1	LAYOUT UC73 RB EXTERNAL VIEW		1/10/2023	MKLEPADLO	
&ELU=V1SF0SF4+V1UC74/1	LAYOUT UC74 RB EXTERNAL VIEW		1/10/2023	MKLEPADLO	
&ELU=V1UC11+V1UC11/1	Layout UC11 PDP External View		1/10/2023	MKLEPADLO	
&ELU=V1UC11+V1UC11/2	Layout UC11 PDP Internal View		1/10/2023	MKLEPADLO	
&ELU=V1UC12+V1UC12/1	Layout UC12 PDP External View		1/10/2023	MKLEPADLO	
&ELU=V1UC12+V1UC12/2	Layout UC12 PDP Internal View		1/10/2023	MKLEPADLO	
&ELU=V1UC14+V1UC14/1	Layout UC14 RIO External View		1/10/2023	MKLEPADLO	
&ELU=V1UC14+V1UC14/2	Layout UC14 RIO Internal Controls View		1/10/2023	MKLEPADLO	
&ELU=V1UC15+V1UC15/1	Layout UC15 RIO External View		1/10/2023	MKLEPADLO	
&ELU=V1UC15+V1UC15/2	Layout UC15 RIO Internal Controls View		1/10/2023	MKLEPADLO	
&EMC/1	Cable overview		1/17/2023	MKLEPADLO	
&EMC/2	Cable overview		1/17/2023	MKLEPADLO	
&EMC/3	Cable overview		1/17/2023	MKLEPADLO	
&EMC/4	Cable overview		1/17/2023	MKLEPADLO	
&EMC/5	Cable overview		1/17/2023	MKLEPADLO	
&EMC/6	Cable overview		1/17/2023	MKLEPADLO	
&EMC/7	Cable overview		1/17/2023	MKLEPADLO	
&EMC/8	Cable overview		1/17/2023	MKLEPADLO	
&EMC/9	Cable overview		1/17/2023	MKLEPADLO	
&EMC/10	Cable overview		1/17/2023	MKLEPADLO	

			Date	1/17/2023	Volvo Trucks North America	Valiant TMS	Table of contents : &ELU=V1PZ1PF2+V1UC62/2 - &EMC/10	Drawing name: =2V09&EFS-EL	=
			Ed.	MKLEPADLO					+
			Appr		P6700 Bodyside LH - Robot Cell 2V09			Document type: EAB	Project nr: 22-16150
Modification	Date	Name	Original		Replacement of	Replaced by	Scale 1:1		Page 27 / 1533

Table of contents

Column X: An automatically generated page was edited

F06_001

Page	Page description	supplementary page field	Date	Edited by	X
&EMC/11	Cable overview		1/17/2023	MKLEPADLO	
&EMC/12	Cable overview		1/17/2023	MKLEPADLO	
&EMC/13	Cable overview		1/17/2023	MKLEPADLO	
&EMC/14	Cable overview		1/17/2023	MKLEPADLO	
&EMC/15	Cable overview		1/17/2023	MKLEPADLO	
&EMC/16	Cable overview		1/17/2023	MKLEPADLO	
&EMC/17	Cable overview		1/17/2023	MKLEPADLO	
&EMC/18	Cable overview		1/17/2023	MKLEPADLO	
&EMC/19	Cable overview		1/17/2023	MKLEPADLO	
&EMC/20	Cable overview		1/17/2023	MKLEPADLO	
&EMC/21	Cable overview		1/17/2023	MKLEPADLO	
&EMC/22	Cable overview		1/17/2023	MKLEPADLO	
&EMC/23	Cable overview		1/17/2023	MKLEPADLO	
&EMC/24	Cable overview		1/17/2023	MKLEPADLO	
&EMC/25	Cable overview		1/17/2023	MKLEPADLO	
&EMC/26	Cable overview		1/17/2023	MKLEPADLO	
&EPB/1	Parts list : TS 35_7,5 - TS 35_7,5		1/17/2023	MKLEPADLO	
&EPB+KH0/1	Parts list : TUR.BS 8251-0/PG9 - TUR.BS 8251-0/PG9		1/17/2023	MKLEPADLO	
&EPB+UC31/1	Parts list : US2.ECGB5 - SIE.6EP3336-7SB00-3AX0		1/17/2023	MKLEPADLO	
&EPB+UC31UC91/1	Parts list : ABB.1SFA619550R1051 - ABB.1SFA619100R1023		1/17/2023	MKLEPADLO	
&EPB+UC31UC92/1	Parts list : ABB.1SFA619100R1111 - ABB.1SFA619200R1016		1/17/2023	MKLEPADLO	
&EPB+UC32/1	Parts list : ABB.1SFA619550R1051 - ABB.1SFA616915R1005		1/17/2023	MKLEPADLO	
&EPB+V1AR11UQ41/1	Parts list : TUR.1625891 - TUR.RSM-2RKM 50		1/17/2023	MKLEPADLO	
&EPB+V1AR11UQ41UQ1.1/1	Parts list : WELKER.WWS001A - WELKER.WWS001A		1/17/2023	MKLEPADLO	
&EPB+V1AR11UQ41UQ1.2/1	Parts list : WELKER.WWS001A - WELKER.WWS001A		1/17/2023	MKLEPADLO	
&EPB+V1AR11UQ41UQ1.3/1	Parts list : WELKER.WWS001A - WELKER.WWS001A		1/17/2023	MKLEPADLO	
&EPB+V1AR11UQ41UQ1.4/1	Parts list : WELKER.WWS001A - WELKER.WWS001A		1/17/2023	MKLEPADLO	
&EPB+V1AR11UQ41UQ2.1/1	Parts list : TUN.1324633 - TUN.1324633		1/17/2023	MKLEPADLO	
&EPB+V1AR11UQ41UQ2.2/1	Parts list : TUN.1324633 - TUN.1324633		1/17/2023	MKLEPADLO	
&EPB+V1AR11UQ41UQ2.3/1	Parts list : TUN.1324633 - TUN.1324633		1/17/2023	MKLEPADLO	
&EPB+V1AR11UQ41UQ3.1/1	Parts list : TUN.1324633 - TUN.1324633		1/17/2023	MKLEPADLO	
&EPB+V1AR11UQ41UQ3.2/1	Parts list : TUN.1324633 - TUN.1324633		1/17/2023	MKLEPADLO	
&EPB+V1AR11UQ41UQ4.1/1	Parts list : TUN.1324633 - TUN.1324633		1/17/2023	MKLEPADLO	

			Date	1/17/2023	Volvo Trucks North America	Valiant TMS	Table of contents : &EMC/11 - &EPB+V1AR11UQ41UQ4.1/1	Drawing name: =2V09&EFS-EL	=
			Ed.	MKLEPADLO					+
			Appr		P6700 Bodyside LH - Robot Cell 2V09			Document type: EAB	Project nr: 22-16150
Modification	Date	Name	Original		Replacement of	Replaced by	Scale 1:1		Page 28 / 1533

Table of contents

Column X: An automatically generated page was edited

F06_001

Page	Page description	supplementary page field	Date	Edited by	X
&EPB+V1AR11UQ41UQ4.2/1	Parts list : TUN.1324633 - TUN.1324633		1/17/2023	MKLEPADLO	
&EPB+V1AR11UQ41UQ4.3/1	Parts list : TUN.1324633 - TUN.1324633		1/17/2023	MKLEPADLO	
&EPB+V1AR11UQ41UQ5.1/1	Parts list : TUN.1324633 - TUN.1324633		1/17/2023	MKLEPADLO	
&EPB+V1AR11UQ41UQ5.2/1	Parts list : TUN.1324633 - TUN.1324633		1/17/2023	MKLEPADLO	
&EPB+V1AR11UQ41UQ5.3/1	Parts list : TUN.1324633 - TUN.1324633		1/17/2023	MKLEPADLO	
&EPB+V1AR11UQ41UQ6.1/1	Parts list : TUN.1324633 - TUN.1324633		1/17/2023	MKLEPADLO	
&EPB+V1AR11UQ41UQ7.1/1	Parts list : TUN.1324633 - TUN.1324633		1/17/2023	MKLEPADLO	
&EPB+V1AR11UQ41UQ7.2/1	Parts list : TUN.1324633 - TUN.1324633		1/17/2023	MKLEPADLO	
&EPB+V1AR11UQ41UQ8.1/1	Parts list : TUN.1324633 - TUN.1324633		1/17/2023	MKLEPADLO	
&EPB+V1AR11UQ41UQ9.1/1	Parts list : TUN.1324633 - TUN.1324633		1/17/2023	MKLEPADLO	
&EPB+V1AR11UQ41UQ9.2/1	Parts list : TUN.1324633 - TUN.1324633		1/17/2023	MKLEPADLO	
&EPB+V1AR21XQ11UC01/1	Parts list : ABB.2CMA193115R1000 - ABB.2CMA193115R1000		1/17/2023	MKLEPADLO	
&EPB+V1AR21XQ12UC01/1	Parts list : ABB.2CMA193115R1000 - ABB.2CMA193115R1000		1/17/2023	MKLEPADLO	
&EPB+V1AR22XQ11UC01/1	Parts list : ABB.2CMA193115R1000 - ABB.2CMA193115R1000		1/17/2023	MKLEPADLO	
&EPB+V1AR22XQ12UC01/1	Parts list : ABB.2CMA193115R1000 - ABB.2CMA193115R1000		1/17/2023	MKLEPADLO	
&EPB+V1AR23XQ11UC01/1	Parts list : ABB.2CMA193115R1000 - ABB.2CMA193115R1000		1/17/2023	MKLEPADLO	
&EPB+V1AR23XQ12UC01/1	Parts list : ABB.2CMA193115R1000 - ABB.2CMA193115R1000		1/17/2023	MKLEPADLO	
&EPB+V1AR24XQ11UC01/1	Parts list : ABB.2CMA193115R1000 - ABB.2CMA193115R1000		1/17/2023	MKLEPADLO	
&EPB+V1AR25XQ11UC01/1	Parts list : ABB.2CMA193115R1000 - ABB.2CMA193115R1000		1/17/2023	MKLEPADLO	
&EPB+V1AR26XQ11UC01/1	Parts list : ABB.2CMA193115R1000 - ABB.2CMA193115R1000		1/17/2023	MKLEPADLO	
&EPB+V1AR28XQ11UC01/1	Parts list : ABB.2CMA193115R1000 - ABB.2CMA193115R1000		1/17/2023	MKLEPADLO	
&EPB+V1AR28XQ12UC01/1	Parts list : ABB.2CMA193115R1000 - ABB.2CMA193115R1000		1/17/2023	MKLEPADLO	
&EPB+V1AR29XQ11UC01/1	Parts list : ABB.2CMA193115R1000 - ABB.2CMA193115R1000		1/17/2023	MKLEPADLO	
&EPB+V1AR31UQ41/1	Parts list : TUR.1625891 - FES.549335		1/17/2023	MKLEPADLO	
&EPB+V1AR31UQ41UQ1.1/1	Parts list : WEL.WWS001A - WEL.WWS001A		1/17/2023	MKLEPADLO	
&EPB+V1AR31UQ41UQ2.1/1	Parts list : TUN.1324638 - TUN.1324638		1/17/2023	MKLEPADLO	
&EPB+V1AR31UQ41UQ2.2/1	Parts list : TUN.1324638 - TUN.1324638		1/17/2023	MKLEPADLO	
&EPB+V1AR31UQ41UQ3.1/1	Parts list : TUN.1324638 - TUN.1324638		1/17/2023	MKLEPADLO	
&EPB+V1AR31UQ41UQ4.1/1	Parts list : TUN.1324638 - TUN.1324638		1/17/2023	MKLEPADLO	
&EPB+V1AR31UQ41UQ5.1/1	Parts list : TUN.1324638 - TUN.1324638		1/17/2023	MKLEPADLO	
&EPB+V1AR31UQ41UQ6.1/1	Parts list : TUN.1324638 - TUN.1324638		1/17/2023	MKLEPADLO	
&EPB+V1AR31UQ41UQ7.1/1	Parts list : TUN.1324638 - TUN.1324638		1/17/2023	MKLEPADLO	
&EPB+V1AR31UQ41UQ7.2/1	Parts list : TUN.1324638 - TUN.1324638		1/17/2023	MKLEPADLO	

			Date	1/17/2023	Volvo Trucks North America	Valiant TMS	Table of contents : &EPB+V1AR11UQ41UQ4.2/1 - &EPB+V1AR31UQ41UQ7.2/1	Drawing name: =2V09&EFS-EL	=
			Ed.	MKLEPADLO					+
			Appr		P6700 Bodyside LH - Robot Cell 2V09			Document type: EAB	Project nr: 22-16150
Modification	Date	Name	Original		Replacement of	Replaced by	Scale 1:1		Page 29 / 1533

Table of contents

Column X: An automatically generated page was edited

F06_001

Page	Page description	supplementary page field	Date	Edited by	X
&EPB+V1AR31UQ41UQ8.1/1	Parts list : TUN.1324638 - TUN.1324638		1/17/2023	MKLEPADLO	
&EPB+V1AR31UQ41UQ8.2/1	Parts list : TUN.1324638 - TUN.1324638		1/17/2023	MKLEPADLO	
&EPB+V1AR31UQ41UQ9.1/1	Parts list : TUN.1324638 - TUN.1324638		1/17/2023	MKLEPADLO	
&EPB+V1AR31UQ41UQ9.2/1	Parts list : TUN.1324638 - TUN.1324638		1/17/2023	MKLEPADLO	
&EPB+V1AR31XQ41/1	Parts list : FES.548755 - FES.549335		1/17/2023	MKLEPADLO	
&EPB+V1AR31XQ41UQ1.1/1	Parts list : TUR.1627205 - TUR.VB2-FSM 4.4/2FKM 4/S3450		1/17/2023	MKLEPADLO	
&EPB+V1AR81UQ41/1	Parts list : TUR.1625891 - FES.549335		1/17/2023	MKLEPADLO	
&EPB+V1AR81UQ41UQ1.1/1	Parts list : WEL.WWS001A - WEL.WWS001A		1/17/2023	MKLEPADLO	
&EPB+V1AR81UQ41UQ2.1/1	Parts list : WEL.WWS001A - WEL.WWS001A		1/17/2023	MKLEPADLO	
&EPB+V1AR81UQ41UQ3.1/1	Parts list : WEL.WWS001A - WEL.WWS001A		1/17/2023	MKLEPADLO	
&EPB+V1AR81UQ41UQ4.1/1	Parts list : WEL.WWS001A - WEL.WWS001A		1/17/2023	MKLEPADLO	
&EPB+V1AR81UQ41UQ5.1/1	Parts list : WEL.WWS001A - WEL.WWS001A		1/17/2023	MKLEPADLO	
&EPB+V1AR81UQ41UQ6.1/1	Parts list : TUN.1324638 - TUN.1324638		1/17/2023	MKLEPADLO	
&EPB+V1AR81UQ41UQ6.2/1	Parts list : TUN.1324638 - TUN.1324638		1/17/2023	MKLEPADLO	
&EPB+V1AR81UQ41UQ6.3/1	Parts list : TUN.1324638 - TUN.1324638		1/17/2023	MKLEPADLO	
&EPB+V1AR81UQ41UQ6.4/1	Parts list : TUN.1324638 - TUN.1324638		1/17/2023	MKLEPADLO	
&EPB+V1AR81UQ41UQ7.1/1	Parts list : TUN.1324638 - TUN.1324638		1/17/2023	MKLEPADLO	
&EPB+V1AR81UQ41UQ7.2/1	Parts list : TUN.1324638 - TUN.1324638		1/17/2023	MKLEPADLO	
&EPB+V1AR81UQ41UQ8.1/1	Parts list : TUN.1324638 - TUN.1324638		1/17/2023	MKLEPADLO	
&EPB+V1AR81UQ41UQ8.2/1	Parts list : TUN.1324638 - TUN.1324638		1/17/2023	MKLEPADLO	
&EPB+V1AR81UQ41UQ9.1/1	Parts list : TUN.1324638 - TUN.1324638		1/17/2023	MKLEPADLO	
&EPB+V1AR81UQ41UQ9.2/1	Parts list : TUN.1324638 - TUN.1324638		1/17/2023	MKLEPADLO	
&EPB+V1AR81XQ51UC01/1	Parts list : ABB.2CMA193115R1000 - ABB.2CMA193115R1000		1/17/2023	MKLEPADLO	
&EPB+V1AR81XQ52UC01/1	Parts list : ABB.2CMA193115R1000 - ABB.2CMA193115R1000		1/17/2023	MKLEPADLO	
&EPB+V1AR211XQ11UC01/1	Parts list : ABB.2CMA193115R1000 - ABB.2CMA193115R1000		1/17/2023	MKLEPADLO	
&EPB+V1AR212XQ11UC01/1	Parts list : ABB.2CMA193115R1000 - ABB.2CMA193115R1000		1/17/2023	MKLEPADLO	
&EPB+V1FQ1/1	Parts list : BAN.SLSCP30-1200P44NT - BAN.SLSCP30-1200P44NT		1/17/2023	MKLEPADLO	
&EPB+V1FQ1BG1/1	Parts list : EUC.MGB-L2B-PNA-L-121863 - EUC.MGB-E-A2-106051		1/17/2023	MKLEPADLO	
&EPB+V1FQ1BG2/1	Parts list : EUC.MGB-L2B-PNA-L-121863 - EUC.MGB-E-A2-106051		1/17/2023	MKLEPADLO	
&EPB+V1FQ1BG3/1	Parts list : EUC.MGB-L2B-PNA-L-121863 - EUC.MGB-E-A2-106051		1/17/2023	MKLEPADLO	
&EPB+V1FQ1BG4/1	Parts list : EUC.MGB-L2B-PNA-L-121863 - EUC.MGB-E-A2-106051		1/17/2023	MKLEPADLO	
&EPB+V1FQ1BG5/1	Parts list : EUC.MGB-L2B-PNA-L-121863 - EUC.MGB-E-A2-106051		1/17/2023	MKLEPADLO	
&EPB+V1FQ1BG6/1	Parts list : EUC.MGB-L2B-PNA-L-121863 - EUC.MGB-E-A2-106051		1/17/2023	MKLEPADLO	

Table of contents

Column X: An automatically generated page was edited

F06_001

Page	Page description	supplementary page field	Date	Edited by	X
&EPB+V1GL1UQ51/1	Parts list : TUR.1627297 - TUR.RSM-2RKM 50		1/17/2023	MKLEPADLO	
&EPB+V1GL1UQ51UQ1.1/1	Parts list : WEL.WWS001A - WEL.WWS001A		1/17/2023	MKLEPADLO	
&EPB+V1GL1UQ51UQ1.2/1	Parts list : WEL.WWS001A - WEL.WWS001A		1/17/2023	MKLEPADLO	
&EPB+V1GL1UQ51UQ1.3/1	Parts list : WEL.WWS001A - WEL.WWS001A		1/17/2023	MKLEPADLO	
&EPB+V1GL1UQ51UQ2.1/1	Parts list : WEL.WWS001A - WEL.WWS001A		1/17/2023	MKLEPADLO	
&EPB+V1GL1UQ51UQ3.1/1	Parts list : WEL.WWS001A - WEL.WWS001A		1/17/2023	MKLEPADLO	
&EPB+V1GL1UQ51UQ3.2/1	Parts list : WEL.WWS001A - WEL.WWS001A		1/17/2023	MKLEPADLO	
&EPB+V1GL1UQ51UQ4.1/1	Parts list : WEL.WWS001A - WEL.WWS001A		1/17/2023	MKLEPADLO	
&EPB+V1GL1UQ51UQ4.2/1	Parts list : WEL.WWS001A - WEL.WWS001A		1/17/2023	MKLEPADLO	
&EPB+V1GL1UQ51UQ5.1/1	Parts list : WEL.WWS001A - WEL.WWS001A		1/17/2023	MKLEPADLO	
&EPB+V1GL1UQ51UQ6.1/1	Parts list : WEL.WWS001A - WEL.WWS001A		1/17/2023	MKLEPADLO	
&EPB+V1GL1UQ51UQ7.1/1	Parts list : TUR.BI2-CRS260-AP4X2-H1141/S34 - TUR.VB2-FSM 4.4/2FKM 4/S3450		1/17/2023	MKLEPADLO	
&EPB+V1GL1UQ51UQ8.1/1	Parts list : WEL.WWS001A - WEL.WWS001A		1/17/2023	MKLEPADLO	
&EPB+V1GL1UQ51UQ8.2/1	Parts list : WEL.WWS001A - WEL.WWS001A		1/17/2023	MKLEPADLO	
&EPB+V1GL1UQ51UQ8.3/1	Parts list : WEL.WWS001A - WEL.WWS001A		1/17/2023	MKLEPADLO	
&EPB+V1GL1UQ51UQ9.1/1	Parts list : WEL.WWS001A - WEL.WWS001A		1/17/2023	MKLEPADLO	
&EPB+V1GL1UQ51UQ10.1/1	Parts list : WEL.WWS001A - WEL.WWS001A		1/17/2023	MKLEPADLO	
&EPB+V1GL1UQ51UQ11.1/1	Parts list : TUN.1324638 - TUN.1324638		1/17/2023	MKLEPADLO	
&EPB+V1GL1UQ51UQ11.2/1	Parts list : TUN.1324638 - TUN.1324638		1/17/2023	MKLEPADLO	
&EPB+V1GL1UQ51UQ11.3/1	Parts list : TUN.1324638 - TUN.1324638		1/17/2023	MKLEPADLO	
&EPB+V1GL1UQ51UQ11.4/1	Parts list : TUN.1324638 - TUN.1324638		1/17/2023	MKLEPADLO	
&EPB+V1GL1UQ51UQ11.5/1	Parts list : TUN.1324638 - TUN.1324638		1/17/2023	MKLEPADLO	
&EPB+V1GL1UQ51UQ11.6/1	Parts list : TUN.1324638 - TUN.1324638		1/17/2023	MKLEPADLO	
&EPB+V1GL1UQ51UQ12.1/1	Parts list : TUN.1324644 - TUN.1324644		1/17/2023	MKLEPADLO	
&EPB+V1GL1UQ51UQ12.2/1	Parts list : TUN.1324644 - TUN.1324644		1/17/2023	MKLEPADLO	
&EPB+V1GL1UQ51UQ12.3/1	Parts list : TUN.1324638 - TUN.1324638		1/17/2023	MKLEPADLO	
&EPB+V1GL1UQ51UQ12.4/1	Parts list : TUN.1324638 - TUN.1324638		1/17/2023	MKLEPADLO	
&EPB+V1GL1UQ51UQ13.1/1	Parts list : TUN.1324638 - TUN.1324638		1/17/2023	MKLEPADLO	
&EPB+V1GL1UQ51UQ13.2/1	Parts list : TUN.1324638 - TUN.1324638		1/17/2023	MKLEPADLO	
&EPB+V1GL1UQ51UQ14.1/1	Parts list : TUN.1324644 - TUN.1324644		1/17/2023	MKLEPADLO	
&EPB+V1GL1UQ51UQ14.2/1	Parts list : TUN.1324644 - TUN.1324644		1/17/2023	MKLEPADLO	
&EPB+V1GL1UQ51UQ14.3/1	Parts list : TUN.1324644 - TUN.1324644		1/17/2023	MKLEPADLO	
&EPB+V1GL1UQ51UQ14.4/1	Parts list : TUN.1324644 - TUN.1324644		1/17/2023	MKLEPADLO	

			Date	1/17/2023	Volvo Trucks North America	Valiant TMS	Table of contents : &EPB+V1GL1UQ51/1 - &EPB+V1GL1UQ51UQ14.4/1	Drawing name: =2V09&EFS-EL	=		
			Ed.	MKLEPADLO					+		
			Appr		P6700 Bodyside LH - Robot Cell 2V09			Document type: EAB	Project nr: 22-16150	Page	31
Modification	Date	Name	Original		Replacement of	Replaced by	Scale 1:1				1533

Table of contents

Column X: An automatically generated page was edited

F06_001

Page	Page description	supplementary page field	Date	Edited by	X
&EPB+V1GL1UQ51UQ15.1/1	Parts list : TUN.285425 - TUN.285425		1/17/2023	MKLEPADLO	
&EPB+V1GL1UQ51UQ16.1/1	Parts list : TUN.1324644 - TUN.1324644		1/17/2023	MKLEPADLO	
&EPB+V1GL1UQ51UQ17.1/1	Parts list : TUN.1324638 - TUN.1324638		1/17/2023	MKLEPADLO	
&EPB+V1GL1UQ51UQ18.1/1	Parts list : P+F.NBN2-F581-100S6-E8-V1 - P+F.NBN2-F581-100S6-E8-V1		1/17/2023	MKLEPADLO	
&EPB+V1GL1UQ51UQ19.1/1	Parts list : TUN.1324638 - TUN.1324638		1/17/2023	MKLEPADLO	
&EPB+V1GL1UQ51UQ20.1/1	Parts list : TUN.1324638 - TUN.1324638		1/17/2023	MKLEPADLO	
&EPB+V1GL1UQ51UQ21.1/1	Parts list : TUN.1324644 - TUN.1324644		1/17/2023	MKLEPADLO	
&EPB+V1GL1UQ51UQ22.1/1	Parts list : TUN.1324638 - TUN.1324638		1/17/2023	MKLEPADLO	
&EPB+V1GL1UQ51UQ23.1/1	Parts list : TUN.1324644 - TUN.1324644		1/17/2023	MKLEPADLO	
&EPB+V1GL1UQ51UQ24.1/1	Parts list : TUN.1324638 - TUN.1324638		1/17/2023	MKLEPADLO	
&EPB+V1GL1UQ51UQ25.1/1	Parts list : TUN.1324638 - TUN.1324638		1/17/2023	MKLEPADLO	
&EPB+V1GL1UQ51UQ25.2/1	Parts list : TUN.1324638 - TUN.1324638		1/17/2023	MKLEPADLO	
&EPB+V1GL1UQ52/1	Parts list : TUR.1627297 - FES.549335		1/17/2023	MKLEPADLO	
&EPB+V1GL1UQ52/2	Parts list : FES.549335 - TUR.RSM-2RKM 50		1/17/2023	MKLEPADLO	
&EPB+V1GL1UQ52UQ1.1/1	Parts list : WEL.WWS001A - WEL.WWS001A		1/17/2023	MKLEPADLO	
&EPB+V1GL1UQ52UQ1.2/1	Parts list : WEL.WWS001A - WEL.WWS001A		1/17/2023	MKLEPADLO	
&EPB+V1GL1UQ52UQ1.3/1	Parts list : WEL.WWS001A - WEL.WWS001A		1/17/2023	MKLEPADLO	
&EPB+V1GL1UQ52UQ1.4/1	Parts list : WEL.WWS001A - WEL.WWS001A		1/17/2023	MKLEPADLO	
&EPB+V1GL1UQ52UQ1.5/1	Parts list : WEL.WWS001A - WEL.WWS001A		1/17/2023	MKLEPADLO	
&EPB+V1GL1UQ52UQ1.6/1	Parts list : WEL.WWS001A - WEL.WWS001A		1/17/2023	MKLEPADLO	
&EPB+V1GL1UQ52UQ2.1/1	Parts list : WEL.WWS001A - WEL.WWS001A		1/17/2023	MKLEPADLO	
&EPB+V1GL1UQ52UQ3.1/1	Parts list : WEL.WWS001A - WEL.WWS001A		1/17/2023	MKLEPADLO	
&EPB+V1GL1UQ52UQ3.2/1	Parts list : WEL.WWS001A - WEL.WWS001A		1/17/2023	MKLEPADLO	
&EPB+V1GL1UQ52UQ3.3/1	Parts list : WEL.WWS001A - WEL.WWS001A		1/17/2023	MKLEPADLO	
&EPB+V1GL1UQ52UQ3.4/1	Parts list : WEL.WWS001A - WEL.WWS001A		1/17/2023	MKLEPADLO	
&EPB+V1GL1UQ52UQ3.5/1	Parts list : WEL.WWS001A - WEL.WWS001A		1/17/2023	MKLEPADLO	
&EPB+V1GL1UQ52UQ4.1/1	Parts list : WEL.WWS001A - WEL.WWS001A		1/17/2023	MKLEPADLO	
&EPB+V1GL1UQ52UQ4.2/1	Parts list : WEL.WWS001A - WEL.WWS001A		1/17/2023	MKLEPADLO	
&EPB+V1GL1UQ52UQ5.1/1	Parts list : WEL.WWS001A - WEL.WWS001A		1/17/2023	MKLEPADLO	
&EPB+V1GL1UQ52UQ5.2/1	Parts list : WEL.WWS001A - WEL.WWS001A		1/17/2023	MKLEPADLO	
&EPB+V1GL1UQ52UQ6.1/1	Parts list : WEL.WWS001A - WEL.WWS001A		1/17/2023	MKLEPADLO	
&EPB+V1GL1UQ52UQ7.1/1	Parts list : WEL.WWS001A - WEL.WWS001A		1/17/2023	MKLEPADLO	
&EPB+V1GL1UQ52UQ8.1/1	Parts list : TUR.16449050 - TUR.VB2-FSM 4.4/2FKM 4/S3450		1/17/2023	MKLEPADLO	

			Date	1/17/2023	Volvo Trucks North America	Valiant TMS	Table of contents : &EPB+V1GL1UQ51UQ15.1/1 - &EPB+V1GL1UQ52UQ8.1/1	Drawing name: =2V09&EFS-EL	=
			Ed.	MKLEPADLO					+
			Appr		P6700 Bodyside LH - Robot Cell 2V09			Document type: EAB	Project nr: 22-16150
Modification	Date	Name	Original		Replacement of	Replaced by	Scale 1:1		Page 32 / 1533

Table of contents

Column X: An automatically generated page was edited

F06_001

Page	Page description	supplementary page field	Date	Edited by	X
&EPB+V1GL1UQ52UQ9.1/1	Parts list : WEL.WWS001A - WEL.WWS001A		1/17/2023	MKLEPADLO	
&EPB+V1GL1UQ52UQ9.2/1	Parts list : WEL.WWS001A - WEL.WWS001A		1/17/2023	MKLEPADLO	
&EPB+V1GL1UQ52UQ10.1/1	Parts list : TUN.1324638 - TUN.1324638		1/17/2023	MKLEPADLO	
&EPB+V1GL1UQ52UQ10.2/1	Parts list : TUN.1324644 - TUN.1324644		1/17/2023	MKLEPADLO	
&EPB+V1GL1UQ52UQ10.3/1	Parts list : TUN.1324638 - TUN.1324638		1/17/2023	MKLEPADLO	
&EPB+V1GL1UQ52UQ10.4/1	Parts list : TUN.1324638 - TUN.1324638		1/17/2023	MKLEPADLO	
&EPB+V1GL1UQ52UQ10.5/1	Parts list : TUN.1324638 - TUN.1324638		1/17/2023	MKLEPADLO	
&EPB+V1GL1UQ52UQ10.6/1	Parts list : TUN.1324638 - TUN.1324638		1/17/2023	MKLEPADLO	
&EPB+V1GL1UQ52UQ11.1/1	Parts list : TUN.1324644 - TUN.1324644		1/17/2023	MKLEPADLO	
&EPB+V1GL1UQ52UQ11.2/1	Parts list : TUN.1324644 - TUN.1324644		1/17/2023	MKLEPADLO	
&EPB+V1GL1UQ52UQ11.3/1	Parts list : TUN.1324638 - TUN.1324638		1/17/2023	MKLEPADLO	
&EPB+V1GL1UQ52UQ11.4/1	Parts list : TUN.1324638 - TUN.1324638		1/17/2023	MKLEPADLO	
&EPB+V1GL1UQ52UQ11.5/1	Parts list : TUN.1324644 - TUN.1324644		1/17/2023	MKLEPADLO	
&EPB+V1GL1UQ52UQ12.1/1	Parts list : TUN.1324638 - TUN.1324638		1/17/2023	MKLEPADLO	
&EPB+V1GL1UQ52UQ12.2/1	Parts list : TUN.1324644 - TUN.1324644		1/17/2023	MKLEPADLO	
&EPB+V1GL1UQ52UQ12.3/1	Parts list : TUN.1324644 - TUN.1324644		1/17/2023	MKLEPADLO	
&EPB+V1GL1UQ52UQ12.4/1	Parts list : TUN.1324644 - TUN.1324644		1/17/2023	MKLEPADLO	
&EPB+V1GL1UQ52UQ12.5/1	Parts list : TUN.1324638 - TUN.1324638		1/17/2023	MKLEPADLO	
&EPB+V1GL1UQ52UQ12.6/1	Parts list : TUN.1324644 - TUN.1324644		1/17/2023	MKLEPADLO	
&EPB+V1GL1UQ52UQ13.1/1	Parts list : TUN.1324644 - TUN.1324644		1/17/2023	MKLEPADLO	
&EPB+V1GL1UQ52UQ14.1/1	Parts list : TUN.1324644 - TUN.1324644		1/17/2023	MKLEPADLO	
&EPB+V1GL1UQ52UQ15.1/1	Parts list : TUN.1324638 - TUN.1324638		1/17/2023	MKLEPADLO	
&EPB+V1GL1UQ52UQ16.1/1	Parts list : TUN.1324638 - TUN.1324638		1/17/2023	MKLEPADLO	
&EPB+V1GL1UQ52UQ16.2/1	Parts list : TUN.1324644 - TUN.1324644		1/17/2023	MKLEPADLO	
&EPB+V1GL1UQ52UQ16.3/1	Parts list : TUN.1324644 - TUN.1324644		1/17/2023	MKLEPADLO	
&EPB+V1GL1UQ52UQ17.1/1	Parts list : TUN.1324638 - TUN.1324638		1/17/2023	MKLEPADLO	
&EPB+V1GL1UQ52UQ18.1/1	Parts list : WEL.WWS001A - WEL.WWS001A		1/17/2023	MKLEPADLO	
&EPB+V1GL1UQ52UQ18.2/1	Parts list : WEL.WWS001A - WEL.WWS001A		1/17/2023	MKLEPADLO	
&EPB+V1GL1UQ52UQ19.1/1	Parts list : TUN.1324638 - TUN.1324638		1/17/2023	MKLEPADLO	
&EPB+V1GL1UQ52UQ19.2/1	Parts list : TUN.1324638 - TUN.1324638		1/17/2023	MKLEPADLO	
&EPB+V1GL1UQ52UQ20.1/1	Parts list : TUN.1324638 - TUN.1324638		1/17/2023	MKLEPADLO	
&EPB+V1GL1UQ52UQ21.1/1	Parts list : WEL.WWS001A - WEL.WWS001A		1/17/2023	MKLEPADLO	
&EPB+V1GL1UQ52UQ22.1/1	Parts list : WEL.WWS001A - WEL.WWS001A		1/17/2023	MKLEPADLO	

			Date	1/17/2023	Volvo Trucks North America	Valiant TMS	Table of contents : &EPB+V1GL1UQ52UQ9.1/1 - &EPB+V1GL1UQ52UQ22.1/1	Drawing name: =2V09&EFS-EL	=
			Ed.	MKLEPADLO					+
			Appr		P6700 Bodyside LH - Robot Cell 2V09			Document type: EAB	Project nr: 22-16150	Page 33
Modification	Date	Name	Original		Replacement of	Replaced by	Scale 1:1			1533

Table of contents

Column X: An automatically generated page was edited

F06_001

Page	Page description	supplementary page field	Date	Edited by	X
&EPB+V1GL1UQ52UQ23.1/1	Parts list : WEL.WWS001A - WEL.WWS001A		1/17/2023	MKLEPADLO	
&EPB+V1GL1UQ53/1	Parts list : TUR.1627297 - TUR.RSM-2RKM 50		1/17/2023	MKLEPADLO	
&EPB+V1GL1UQ53UQ1.1/1	Parts list : WEL.WWS001A - WEL.WWS001A		1/17/2023	MKLEPADLO	
&EPB+V1GL1UQ53UQ1.2/1	Parts list : WEL.WWS001A - WEL.WWS001A		1/17/2023	MKLEPADLO	
&EPB+V1GL1UQ53UQ1.3/1	Parts list : WEL.WWS001A - WEL.WWS001A		1/17/2023	MKLEPADLO	
&EPB+V1GL1UQ53UQ2.1/1	Parts list : WEL.WWS001A - WEL.WWS001A		1/17/2023	MKLEPADLO	
&EPB+V1GL1UQ53UQ3.1/1	Parts list : WEL.WWS001A - WEL.WWS001A		1/17/2023	MKLEPADLO	
&EPB+V1GL1UQ53UQ3.2/1	Parts list : WEL.WWS001A - WEL.WWS001A		1/17/2023	MKLEPADLO	
&EPB+V1GL1UQ53UQ4.1/1	Parts list : WEL.WWS001A - WEL.WWS001A		1/17/2023	MKLEPADLO	
&EPB+V1GL1UQ53UQ4.2/1	Parts list : WEL.WWS001A - WEL.WWS001A		1/17/2023	MKLEPADLO	
&EPB+V1GL1UQ53UQ5.1/1	Parts list : WEL.WWS001A - WEL.WWS001A		1/17/2023	MKLEPADLO	
&EPB+V1GL1UQ53UQ6.1/1	Parts list : WEL.WWS001A - WEL.WWS001A		1/17/2023	MKLEPADLO	
&EPB+V1GL1UQ53UQ7.1/1	Parts list : TUR.BI2-CRS260-AP4X2-H1141/S34 - TUR.VB2-FSM 4.4/2FKM 4/S3450		1/17/2023	MKLEPADLO	
&EPB+V1GL1UQ53UQ8.1/1	Parts list : WEL.WWS001A - WEL.WWS001A		1/17/2023	MKLEPADLO	
&EPB+V1GL1UQ53UQ8.2/1	Parts list : WEL.WWS001A - WEL.WWS001A		1/17/2023	MKLEPADLO	
&EPB+V1GL1UQ53UQ8.3/1	Parts list : WEL.WWS001A - WEL.WWS001A		1/17/2023	MKLEPADLO	
&EPB+V1GL1UQ53UQ9.1/1	Parts list : WEL.WWS001A - WEL.WWS001A		1/17/2023	MKLEPADLO	
&EPB+V1GL1UQ53UQ10.1/1	Parts list : WEL.WWS001A - WEL.WWS001A		1/17/2023	MKLEPADLO	
&EPB+V1GL1UQ53UQ11.1/1	Parts list : TUN.1324638 - TUN.1324638		1/17/2023	MKLEPADLO	
&EPB+V1GL1UQ53UQ11.2/1	Parts list : TUN.1324638 - TUN.1324638		1/17/2023	MKLEPADLO	
&EPB+V1GL1UQ53UQ11.3/1	Parts list : TUN.1324638 - TUN.1324638		1/17/2023	MKLEPADLO	
&EPB+V1GL1UQ53UQ11.4/1	Parts list : TUN.1324638 - TUN.1324638		1/17/2023	MKLEPADLO	
&EPB+V1GL1UQ53UQ11.5/1	Parts list : TUN.1324638 - TUN.1324638		1/17/2023	MKLEPADLO	
&EPB+V1GL1UQ53UQ11.6/1	Parts list : TUN.1324638 - TUN.1324638		1/17/2023	MKLEPADLO	
&EPB+V1GL1UQ53UQ12.1/1	Parts list : TUN.1324644 - TUN.1324644		1/17/2023	MKLEPADLO	
&EPB+V1GL1UQ53UQ12.2/1	Parts list : TUN.1324644 - TUN.1324644		1/17/2023	MKLEPADLO	
&EPB+V1GL1UQ53UQ12.3/1	Parts list : TUN.1324638 - TUN.1324638		1/17/2023	MKLEPADLO	
&EPB+V1GL1UQ53UQ12.4/1	Parts list : TUN.1324638 - TUN.1324638		1/17/2023	MKLEPADLO	
&EPB+V1GL1UQ53UQ13.1/1	Parts list : TUN.1324638 - TUN.1324638		1/17/2023	MKLEPADLO	
&EPB+V1GL1UQ53UQ13.2/1	Parts list : TUN.1324638 - TUN.1324638		1/17/2023	MKLEPADLO	
&EPB+V1GL1UQ53UQ14.1/1	Parts list : TUN.1324644 - TUN.1324644		1/17/2023	MKLEPADLO	
&EPB+V1GL1UQ53UQ14.2/1	Parts list : TUN.1324644 - TUN.1324644		1/17/2023	MKLEPADLO	
&EPB+V1GL1UQ53UQ14.3/1	Parts list : TUN.1324644 - TUN.1324644		1/17/2023	MKLEPADLO	

			Date	1/17/2023	Volvo Trucks North America	Valiant TMS	Table of contents : &EPB+V1GL1UQ52UQ23.1/1 - &EPB+V1GL1UQ53UQ14.3/1	Drawing name: =2V09&EFS-EL	=
			Ed.	MKLEPADLO					+
			Appr		P6700 Bodyside LH - Robot Cell 2V09	Scale 1:1		Document type: EAB	Project nr: 22-16150	Page 34 / 1533
Modification	Date	Name	Original		Replacement of	Replaced by			

Table of contents

Column X: An automatically generated page was edited

F06_001

Page	Page description	supplementary page field	Date	Edited by	X
&EPB+V1GL1UQ53UQ14.4/1	Parts list : TUN.1324644 - TUN.1324644		1/17/2023	MKLEPADLO	
&EPB+V1GL1UQ53UQ15.1/1	Parts list : TUN.285425 - TUN.285425		1/17/2023	MKLEPADLO	
&EPB+V1GL1UQ53UQ16.1/1	Parts list : TUN.1324644 - TUN.1324644		1/17/2023	MKLEPADLO	
&EPB+V1GL1UQ53UQ17.1/1	Parts list : TUN.1324638 - TUN.1324638		1/17/2023	MKLEPADLO	
&EPB+V1GL1UQ53UQ18.1/1	Parts list : P+F.NBN2-F581-100S6-E8-V1 - P+F.NBN2-F581-100S6-E8-V1		1/17/2023	MKLEPADLO	
&EPB+V1GL1UQ53UQ19.1/1	Parts list : TUN.1324638 - TUN.1324638		1/17/2023	MKLEPADLO	
&EPB+V1GL1UQ53UQ20.1/1	Parts list : TUN.1324638 - TUN.1324638		1/17/2023	MKLEPADLO	
&EPB+V1GL1UQ53UQ21.1/1	Parts list : TUN.1324644 - TUN.1324644		1/17/2023	MKLEPADLO	
&EPB+V1GL1UQ53UQ22.1/1	Parts list : TUN.1324638 - TUN.1324638		1/17/2023	MKLEPADLO	
&EPB+V1GL1UQ53UQ23.1/1	Parts list : TUN.1324644 - TUN.1324644		1/17/2023	MKLEPADLO	
&EPB+V1GL1UQ53UQ24.1/1	Parts list : TUN.1324638 - TUN.1324638		1/17/2023	MKLEPADLO	
&EPB+V1GL1UQ53UQ25.1/1	Parts list : TUN.1324638 - TUN.1324638		1/17/2023	MKLEPADLO	
&EPB+V1GL1UQ53UQ25.2/1	Parts list : TUN.1324638 - TUN.1324638		1/17/2023	MKLEPADLO	
&EPB+V1GL1UQ54/1	Parts list : TUR.1627297 - FES.549335		1/17/2023	MKLEPADLO	
&EPB+V1GL1UQ54/2	Parts list : FES.549335 - TUR.RSM-2RKM 50		1/17/2023	MKLEPADLO	
&EPB+V1GL1UQ54UQ1.1/1	Parts list : WEL.WWS001A - WEL.WWS001A		1/17/2023	MKLEPADLO	
&EPB+V1GL1UQ54UQ1.2/1	Parts list : WEL.WWS001A - WEL.WWS001A		1/17/2023	MKLEPADLO	
&EPB+V1GL1UQ54UQ1.3/1	Parts list : WEL.WWS001A - WEL.WWS001A		1/17/2023	MKLEPADLO	
&EPB+V1GL1UQ54UQ1.4/1	Parts list : WEL.WWS001A - WEL.WWS001A		1/17/2023	MKLEPADLO	
&EPB+V1GL1UQ54UQ1.5/1	Parts list : WEL.WWS001A - WEL.WWS001A		1/17/2023	MKLEPADLO	
&EPB+V1GL1UQ54UQ1.6/1	Parts list : WEL.WWS001A - WEL.WWS001A		1/17/2023	MKLEPADLO	
&EPB+V1GL1UQ54UQ2.1/1	Parts list : WEL.WWS001A - WEL.WWS001A		1/17/2023	MKLEPADLO	
&EPB+V1GL1UQ54UQ3.1/1	Parts list : WEL.WWS001A - WEL.WWS001A		1/17/2023	MKLEPADLO	
&EPB+V1GL1UQ54UQ3.2/1	Parts list : WEL.WWS001A - WEL.WWS001A		1/17/2023	MKLEPADLO	
&EPB+V1GL1UQ54UQ3.3/1	Parts list : WEL.WWS001A - WEL.WWS001A		1/17/2023	MKLEPADLO	
&EPB+V1GL1UQ54UQ3.4/1	Parts list : WEL.WWS001A - WEL.WWS001A		1/17/2023	MKLEPADLO	
&EPB+V1GL1UQ54UQ3.5/1	Parts list : WEL.WWS001A - WEL.WWS001A		1/17/2023	MKLEPADLO	
&EPB+V1GL1UQ54UQ4.1/1	Parts list : WEL.WWS001A - WEL.WWS001A		1/17/2023	MKLEPADLO	
&EPB+V1GL1UQ54UQ4.2/1	Parts list : WEL.WWS001A - WEL.WWS001A		1/17/2023	MKLEPADLO	
&EPB+V1GL1UQ54UQ5.1/1	Parts list : WEL.WWS001A - WEL.WWS001A		1/17/2023	MKLEPADLO	
&EPB+V1GL1UQ54UQ5.2/1	Parts list : WEL.WWS001A - WEL.WWS001A		1/17/2023	MKLEPADLO	
&EPB+V1GL1UQ54UQ6.1/1	Parts list : WEL.WWS001A - WEL.WWS001A		1/17/2023	MKLEPADLO	
&EPB+V1GL1UQ54UQ7.1/1	Parts list : WEL.WWS001A - WEL.WWS001A		1/17/2023	MKLEPADLO	

Table of contents

Column X: An automatically generated page was edited

F06_001

Page	Page description	supplementary page field	Date	Edited by	X
&EPB+V1GL1UQ54UQ8.1/1	Parts list : TUR.16449050 - TUR.VB2-FSM 4.4/2FKM 4/S3450		1/17/2023	MKLEPADLO	
&EPB+V1GL1UQ54UQ9.1/1	Parts list : WEL.WWS001A - WEL.WWS001A		1/17/2023	MKLEPADLO	
&EPB+V1GL1UQ54UQ9.2/1	Parts list : WEL.WWS001A - WEL.WWS001A		1/17/2023	MKLEPADLO	
&EPB+V1GL1UQ54UQ10.1/1	Parts list : TUN.1324638 - TUN.1324638		1/17/2023	MKLEPADLO	
&EPB+V1GL1UQ54UQ10.2/1	Parts list : TUN.1324644 - TUN.1324644		1/17/2023	MKLEPADLO	
&EPB+V1GL1UQ54UQ10.3/1	Parts list : TUN.1324638 - TUN.1324638		1/17/2023	MKLEPADLO	
&EPB+V1GL1UQ54UQ10.4/1	Parts list : TUN.1324638 - TUN.1324638		1/17/2023	MKLEPADLO	
&EPB+V1GL1UQ54UQ10.5/1	Parts list : TUN.1324638 - TUN.1324638		1/17/2023	MKLEPADLO	
&EPB+V1GL1UQ54UQ10.6/1	Parts list : TUN.1324638 - TUN.1324638		1/17/2023	MKLEPADLO	
&EPB+V1GL1UQ54UQ11.1/1	Parts list : TUN.1324644 - TUN.1324644		1/17/2023	MKLEPADLO	
&EPB+V1GL1UQ54UQ11.2/1	Parts list : TUN.1324644 - TUN.1324644		1/17/2023	MKLEPADLO	
&EPB+V1GL1UQ54UQ11.3/1	Parts list : TUN.1324638 - TUN.1324638		1/17/2023	MKLEPADLO	
&EPB+V1GL1UQ54UQ11.4/1	Parts list : TUN.1324638 - TUN.1324638		1/17/2023	MKLEPADLO	
&EPB+V1GL1UQ54UQ11.5/1	Parts list : TUN.1324644 - TUN.1324644		1/17/2023	MKLEPADLO	
&EPB+V1GL1UQ54UQ12.1/1	Parts list : TUN.1324638 - TUN.1324638		1/17/2023	MKLEPADLO	
&EPB+V1GL1UQ54UQ12.2/1	Parts list : TUN.1324644 - TUN.1324644		1/17/2023	MKLEPADLO	
&EPB+V1GL1UQ54UQ12.3/1	Parts list : TUN.1324644 - TUN.1324644		1/17/2023	MKLEPADLO	
&EPB+V1GL1UQ54UQ12.4/1	Parts list : TUN.1324644 - TUN.1324644		1/17/2023	MKLEPADLO	
&EPB+V1GL1UQ54UQ12.5/1	Parts list : TUN.1324638 - TUN.1324638		1/17/2023	MKLEPADLO	
&EPB+V1GL1UQ54UQ12.6/1	Parts list : TUN.1324644 - TUN.1324644		1/17/2023	MKLEPADLO	
&EPB+V1GL1UQ54UQ13.1/1	Parts list : TUN.1324644 - TUN.1324644		1/17/2023	MKLEPADLO	
&EPB+V1GL1UQ54UQ14.1/1	Parts list : TUN.1324644 - TUN.1324644		1/17/2023	MKLEPADLO	
&EPB+V1GL1UQ54UQ15.1/1	Parts list : TUN.1324638 - TUN.1324638		1/17/2023	MKLEPADLO	
&EPB+V1GL1UQ54UQ16.1/1	Parts list : TUN.1324638 - TUN.1324638		1/17/2023	MKLEPADLO	
&EPB+V1GL1UQ54UQ16.2/1	Parts list : TUN.1324644 - TUN.1324644		1/17/2023	MKLEPADLO	
&EPB+V1GL1UQ54UQ16.3/1	Parts list : TUN.1324644 - TUN.1324644		1/17/2023	MKLEPADLO	
&EPB+V1GL1UQ54UQ17.1/1	Parts list : TUN.1324638 - TUN.1324638		1/17/2023	MKLEPADLO	
&EPB+V1GL1UQ54UQ18.1/1	Parts list : WEL.WWS001A - WEL.WWS001A		1/17/2023	MKLEPADLO	
&EPB+V1GL1UQ54UQ18.2/1	Parts list : WEL.WWS001A - WEL.WWS001A		1/17/2023	MKLEPADLO	
&EPB+V1GL1UQ54UQ19.1/1	Parts list : TUN.1324638 - TUN.1324638		1/17/2023	MKLEPADLO	
&EPB+V1GL1UQ54UQ19.2/1	Parts list : TUN.1324638 - TUN.1324638		1/17/2023	MKLEPADLO	
&EPB+V1GL1UQ54UQ20.1/1	Parts list : TUN.1324638 - TUN.1324638		1/17/2023	MKLEPADLO	
&EPB+V1GL1UQ54UQ21.1/1	Parts list : WEL.WWS001A - WEL.WWS001A		1/17/2023	MKLEPADLO	

			Date	1/17/2023	Volvo Trucks North America	Valiant TMS	Table of contents : &EPB+V1GL1UQ54UQ8.1/1 - &EPB+V1GL1UQ54UQ21.1/1	Drawing name: =2V09&EFS-EL	=
			Ed.	MKLEPADLO					+
			Appr		P6700 Bodyside LH - Robot Cell 2V09			Document type: EAB	Project nr: 22-16150
Modification	Date	Name	Original		Replacement of	Replaced by	Scale 1:1		Page 36 / 1533

Table of contents

Column X: An automatically generated page was edited

F06_001

Page	Page description	supplementary page field	Date	Edited by	X
&EPB+V1GL1UQ54UQ22.1/1	Parts list : WEL.WWS001A - WEL.WWS001A		1/17/2023	MKLEPADLO	
&EPB+V1GL1UQ54UQ23.1/1	Parts list : WEL.WWS001A - WEL.WWS001A		1/17/2023	MKLEPADLO	
&EPB+V1GL1UQ56/1	Parts list : FES.548755 - FES.549335		1/17/2023	MKLEPADLO	
&EPB+V1GL1UQ56UQ1.1/1	Parts list : TUR.1644797 - TUR.VB2-FSM 4.4/2FKM 4/S3450		1/17/2023	MKLEPADLO	
&EPB+V1GL1UQ57/1	Parts list : FES.548755 - FES.549335		1/17/2023	MKLEPADLO	
&EPB+V1GL1UQ57UQ1.1/1	Parts list : TUR.1644797 - TUR.VB2-FSM 4.4/2FKM 4/S3450		1/17/2023	MKLEPADLO	
&EPB+V1GL2/1	Parts list : FES.548755 - TUR.BS 4151-0/9		1/17/2023	MKLEPADLO	
&EPB+V1GL2UQ51/1	Parts list : TUR.1627297 - FES.549335		1/17/2023	MKLEPADLO	
&EPB+V1GL2UQ51UQ1.1/1	Parts list : TUR.1644905 - TUR.VB2-FSM 4.4/2FKM 4/S3450		1/17/2023	MKLEPADLO	
&EPB+V1GL2UQ51UQ2.1/1	Parts list : TUR.1644905 - TUR.VB2-FSM 4.4/2FKM 4/S3450		1/17/2023	MKLEPADLO	
&EPB+V1GL2UQ51UQ3.1/1	Parts list : TUR.1644905 - TUR.VB2-FSM 4.4/2FKM 4/S3450		1/17/2023	MKLEPADLO	
&EPB+V1GL2UQ51UQ4.1/1	Parts list : TUR.BI2-CRS260-AP4X2-H1141/S34 - TUR.VB2-FSM 4.4/2FKM 4/S3450		1/17/2023	MKLEPADLO	
&EPB+V1GL2UQ51UQ4.2/1	Parts list : WEL.WWS001A - WEL.WWS001A		1/17/2023	MKLEPADLO	
&EPB+V1GL2UQ51UQ4.3/1	Parts list : TUR.BI2-CRS260-AP4X2-H1141/S34 - TUR.VB2-FSM 4.4/2FKM 4/S3450		1/17/2023	MKLEPADLO	
&EPB+V1GL2UQ51UQ5.1/1	Parts list : WEL.WWS001A - WEL.WWS001A		1/17/2023	MKLEPADLO	
&EPB+V1GL2UQ51UQ5.2/1	Parts list : WEL.WWS001A - WEL.WWS001A		1/17/2023	MKLEPADLO	
&EPB+V1GL2UQ51UQ5.3/1	Parts list : WEL.WWS001A - WEL.WWS001A		1/17/2023	MKLEPADLO	
&EPB+V1GL2UQ51UQ6.1/1	Parts list : TUR.BI2-CRS260-AP4X2-H1141/S34 - TUR.VB2-FSM 4.4/2FKM 4/S3450		1/17/2023	MKLEPADLO	
&EPB+V1GL2UQ51UQ6.2/1	Parts list : TUR.BI2-CRS260-AP4X2-H1141/S34 - TUR.VB2-FSM 4.4/2FKM 4/S3450		1/17/2023	MKLEPADLO	
&EPB+V1GL2UQ51UQ7.1/1	Parts list : TUR.BI2-CRS260-AP4X2-H1141/S34 - TUR.VB2-FSM 4.4/2FKM 4/S3450		1/17/2023	MKLEPADLO	
&EPB+V1GL2UQ51UQ8.1/1	Parts list : WEL.WWS001A - WEL.WWS001A		1/17/2023	MKLEPADLO	
&EPB+V1GL2UQ51UQ8.2/1	Parts list : WEL.WWS001A - WEL.WWS001A		1/17/2023	MKLEPADLO	
&EPB+V1GL2UQ51UQ8.3/1	Parts list : WEL.WWS001A - WEL.WWS001A		1/17/2023	MKLEPADLO	
&EPB+V1GL2UQ51UQ8.4/1	Parts list : WEL.WWS001A - WEL.WWS001A		1/17/2023	MKLEPADLO	
&EPB+V1GL2UQ51UQ9.1/1	Parts list : WEL.WWS001A - WEL.WWS001A		1/17/2023	MKLEPADLO	
&EPB+V1GL2UQ51UQ10.1/1	Parts list : TUN.1324638 - TUN.1324638		1/17/2023	MKLEPADLO	
&EPB+V1GL2UQ51UQ10.2/1	Parts list : TUN.1324638 - TUN.1324638		1/17/2023	MKLEPADLO	
&EPB+V1GL2UQ51UQ10.3/1	Parts list : TUN.1324638 - TUN.1324638		1/17/2023	MKLEPADLO	
&EPB+V1GL2UQ51UQ10.4/1	Parts list : TUN.1324638 - TUN.1324638		1/17/2023	MKLEPADLO	
&EPB+V1GL2UQ51UQ10.5/1	Parts list : TUN.1324638 - TUN.1324638		1/17/2023	MKLEPADLO	
&EPB+V1GL2UQ51UQ10.6/1	Parts list : TUN.1324644 - TUN.1324644		1/17/2023	MKLEPADLO	
&EPB+V1GL2UQ51UQ11.1/1	Parts list : TUN.1324644 - TUN.1324644		1/17/2023	MKLEPADLO	
&EPB+V1GL2UQ51UQ12.1/1	Parts list : TUN.1324638 - TUN.1324638		1/17/2023	MKLEPADLO	

			Date	1/17/2023	Volvo Trucks North America	Valiant TMS	Table of contents : &EPB+V1GL1UQ54UQ22.1/1 - &EPB+V1GL2UQ51UQ12.1/1	Drawing name: =2V09&EFS-EL	=	
			Ed.	MKLEPADLO					+	
			Appr		P6700 Bodyside LH - Robot Cell 2V09			Document type: EAB	Project nr: 22-16150	Page 37
Modification	Date	Name	Original		Replacement of	Replaced by	Scale 1:1			1533

Table of contents

Column X: An automatically generated page was edited

F06_001

Page	Page description	supplementary page field	Date	Edited by	X
&EPB+V1GL2UQ51UQ13.1/1	Parts list : TUN.1324644 - TUN.1324644		1/17/2023	MKLEPADLO	
&EPB+V1GL2UQ51UQ14.1/1	Parts list : TUN.1324644 - TUN.1324644		1/17/2023	MKLEPADLO	
&EPB+V1GL2UQ51UQ15.1/1	Parts list : TUN.1324638 - TUN.1324638		1/17/2023	MKLEPADLO	
&EPB+V1GL2UQ51UQ16.1/1	Parts list : TUN.1324644 - TUN.1324644		1/17/2023	MKLEPADLO	
&EPB+V1GL2UQ51UQ17.1/1	Parts list : TUN.1324638 - TUN.1324638		1/17/2023	MKLEPADLO	
&EPB+V1GL2UQ51UQ17.2/1	Parts list : TUN.1324638 - TUN.1324638		1/17/2023	MKLEPADLO	
&EPB+V1GL2UQ51UQ17.3/1	Parts list : TUN.1324638 - TUN.1324638		1/17/2023	MKLEPADLO	
&EPB+V1GL2UQ51UQ17.4/1	Parts list : TUN.1324638 - TUN.1324638		1/17/2023	MKLEPADLO	
&EPB+V1GL2UQ51UQ18.1/1	Parts list : TUN.1324638 - TUN.1324638		1/17/2023	MKLEPADLO	
&EPB+V1GL2UQ51UQ18.2/1	Parts list : TUN.1324638 - TUN.1324638		1/17/2023	MKLEPADLO	
&EPB+V1GL2UQ51UQ19.1/1	Parts list : TUN.1324638 - TUN.1324638		1/17/2023	MKLEPADLO	
&EPB+V1GL2UQ51UQ19.2/1	Parts list : TUN.1324638 - TUN.1324638		1/17/2023	MKLEPADLO	
&EPB+V1GL2UQ51UQ20.1/1	Parts list : TUN.1324644 - TUN.1324644		1/17/2023	MKLEPADLO	
&EPB+V1GL2UQ51UQ21.1/1	Parts list : TUN.1324644 - TUN.1324644		1/17/2023	MKLEPADLO	
&EPB+V1GL2UQ51UQ22.1/1	Parts list : TUN.1324638 - TUN.1324638		1/17/2023	MKLEPADLO	
&EPB+V1GL2UQ51UQ22.2/1	Parts list : TUN.1324638 - TUN.1324638		1/17/2023	MKLEPADLO	
&EPB+V1GL2UQ51UQ22.3/1	Parts list : TUN.1324638 - TUN.1324638		1/17/2023	MKLEPADLO	
&EPB+V1GL2UQ51UQ23.1/1	Parts list : TUN.1324638 - TUN.1324638		1/17/2023	MKLEPADLO	
&EPB+V1GL2UQ51UQ24.1/1	Parts list : TUN.1324638 - TUN.1324638		1/17/2023	MKLEPADLO	
&EPB+V1GL2UQ51UQ25.1/1	Parts list : TUN.1324638 - TUN.1324638		1/17/2023	MKLEPADLO	
&EPB+V1GL2UQ51UQ26.1/1	Parts list : TUN.1324638 - TUN.1324638		1/17/2023	MKLEPADLO	
&EPB+V1GL2UQ51UQ27.1/1	Parts list : TUN.1324638 - TUN.1324638		1/17/2023	MKLEPADLO	
&EPB+V1GL2UQ51UQ28.1/1	Parts list : TUN.1324638 - TUN.1324638		1/17/2023	MKLEPADLO	
&EPB+V1GL2UQ51UQ29.1/1	Parts list : TUR.BI2-CRS260-AP4X2-H1141/S34 - TUR.VB2-FSM 4.4/2FKM 4/S3450		1/17/2023	MKLEPADLO	
&EPB+V1GL2UQ51UQ30.1/1	Parts list : TUN.1324638 - TUN.1324638		1/17/2023	MKLEPADLO	
&EPB+V1GL2UQ51UQ31.1/1	Parts list : TUN.1329440 - TUN.1329440		1/17/2023	MKLEPADLO	
&EPB+V1GL2UQ51UQ32.1/1	Parts list : WEL.WWS001A - WEL.WWS001A		1/17/2023	MKLEPADLO	
&EPB+V1GL17UQ51/1	Parts list : TUR.16447411 - FES.549335		1/17/2023	MKLEPADLO	
&EPB+V1GL17UQ51UQ1.1/1	Parts list : TUR.16447411 - TUR.VB2-FSM 4.4/2FKM 4/S3450		1/17/2023	MKLEPADLO	
&EPB+V1GL17UQ51UQ2.1/1	Parts list : TUR.16447411 - TUR.VB2-FSM 4.4/2FKM 4/S3450		1/17/2023	MKLEPADLO	
&EPB+V1GL17UQ51UQ6.1/1	Parts list : TUR.16447411 - TUR.VB2-FSM 4.4/2FKM 4/S3450		1/17/2023	MKLEPADLO	
&EPB+V1PF1/1	Parts list : FES.548755 - FES.549335		1/17/2023	MKLEPADLO	
&EPB+V1PF1UQ1.1/1	Parts list : TUN.1324638 - TUN.1324638		1/17/2023	MKLEPADLO	

			Date	1/17/2023	Volvo Trucks North America	Valiant TMS	Table of contents : &EPB+V1GL2UQ51UQ13.1/1 - &EPB+V1PF1UQ1.1/1	Drawing name: =2V09&EFS-EL	=
			Ed.	MKLEPADLO					+
			Appr		P6700 Bodyside LH - Robot Cell 2V09			Document type: EAB	Project nr: 22-16150
Modification	Date	Name	Original		Replacement of	Replaced by	Scale 1:1		Page 38 / 1533

Table of contents

Column X: An automatically generated page was edited

F06_001

Page	Page description	supplementary page field	Date	Edited by	X
&EPB+V1U10/1	Parts list : A-B.802T-AMP - A-B.802T-AMP		1/17/2023	MKLEPADLO	
&EPB+V1U10U01/1	Parts list : MURR.55339 - BAN.32723		1/17/2023	MKLEPADLO	
&EPB+V1U20U01/1	Parts list : MURR.55339 - BAN.32723		1/17/2023	MKLEPADLO	
&EPB+V1UC11/1	Parts list : EMPD3FBCB-025A-M - GT.R-3W2MT-LMF		1/17/2023	MKLEPADLO	
&EPB+V1UC11/2	Parts list : SIE.3VA5120-6ED31-0AA0 - RIT.4115000		1/17/2023	MKLEPADLO	
&EPB+V1UC12/1	Parts list : EMPD3FBCB-025A-M - PTN102-7.5K		1/17/2023	MKLEPADLO	
&EPB+V1UC12/2	Parts list : SIE.5SJ4120-7HG41 - RIT.4115000		1/17/2023	MKLEPADLO	
&EPB+V1UC14/1	Parts list : SIE.6ES7155-6AA01-0BN0_subassembly - TUR.RSM-2RKM 50		1/17/2023	MKLEPADLO	
&EPB+V1UC15/1	Parts list : SIE.6ES7155-6AA01-0BN0_subassembly - SIE.6EP3336-7SB00-3AX0		1/17/2023	MKLEPADLO	
&EPB+V1UC32/1	Parts list : SIE.6ES7155-6AA01-0BN0_subassembly - TUR.RSF 50-1M/NPT		1/17/2023	MKLEPADLO	
&EPB+V1UC51/1	Parts list : RIT.6315150 - TUR.RSM-2RKM 50		1/17/2023	MKLEPADLO	
&EPB+V1UC52/1	Parts list : RIT.6315150 - TUR.RSF 50-1M/NPT		1/17/2023	MKLEPADLO	
&EPB+V1UC53/1	Parts list : RIT.6315150 - TUR.RSM-2RKM 50		1/17/2023	MKLEPADLO	
&EPB+V1UC54/1	Parts list : RIT.6315150 - TUR.RSM-2RKM 50		1/17/2023	MKLEPADLO	
&EPB+V1UC61/1	Parts list : SIE.8WD4408-0AA - TUR.RSF 106-2M/14.5/NPT/CS16486		1/17/2023	MKLEPADLO	
&EPB+V1UC62/1	Parts list : SIE.8WD4408-0AA - TUR.RSF 106-2M/14.5/NPT/CS16486		1/17/2023	MKLEPADLO	
&EPB+V1UC63/1	Parts list : SIE.8WD4408-0AA - TUR.RSF 106-2M/14.5/NPT/CS16486		1/17/2023	MKLEPADLO	
&EPB+V1UC64/1	Parts list : SIE.8WD4408-0AA - TUR.RSF 106-2M/14.5/NPT/CS16486		1/17/2023	MKLEPADLO	
&EPB+V1UC71/1	Parts list : BAN.SSA-EBM-12EB1Q8OTBB - BAN.SSA-EBM-12EB1Q8OTBB		1/17/2023	MKLEPADLO	
&EPB+V1UC72/1	Parts list : BAN.SSA-EBM-12EB1Q8OTBB - BAN.SSA-EBM-12EB1Q8OTBB		1/17/2023	MKLEPADLO	
&EPB+V1UC73/1	Parts list : BAN.SSA-EBM-12EB1Q8OTBB - BAN.SSA-EBM-12EB1Q8OTBB		1/17/2023	MKLEPADLO	
&EPB+V1UC74/1	Parts list : BAN.SSA-EBM-12EB1Q8OTBB - BAN.SSA-EBM-12EB1Q8OTBB		1/17/2023	MKLEPADLO	
&EPB+V1UC161/1	Parts list : CPB-E2G06-03 - RIT.4115000		1/17/2023	MKLEPADLO	
&EPB+V1UC162/1	Parts list : CPB-E2G06-03 - RIT.4115000		1/17/2023	MKLEPADLO	
&EPB+V1UC163/1	Parts list : MB-231-03 - RIT.4115000		1/17/2023	MKLEPADLO	
&EPB+V1UC164/1	Parts list : MB-231-03 - RIT.4115000		1/17/2023	MKLEPADLO	
&EPB+V1UN1/1	Parts list : BAN.801918 - BAN.32723		1/17/2023	MKLEPADLO	
&EPB+V1UQ51/1	Parts list : TUR.1627297 - FES.549335		1/17/2023	MKLEPADLO	
&EPB+V1UQ51UQ1.1/1	Parts list : WEL.WWS001A - WEL.WWS001A		1/17/2023	MKLEPADLO	
&EPB+V1UQ51UQ2.1/1	Parts list : WEL.WWS001A - WEL.WWS001A		1/17/2023	MKLEPADLO	
&EPB+V1UQ51UQ3.1/1	Parts list : WEL.WWS001A - WEL.WWS001A		1/17/2023	MKLEPADLO	
&EPB+V1UQ51UQ4.1/1	Parts list : TUN.1324638 - TUN.1324638		1/17/2023	MKLEPADLO	
&EPB+V1UQ51UQ4.2/1	Parts list : TUN.1324638 - TUN.1324638		1/17/2023	MKLEPADLO	

			Date	1/17/2023	Volvo Trucks North America	Valiant TMS	Table of contents : &EPB+V1U10/1 - &EPB+V1UQ51UQ4.2/1	Drawing name: =2V09&EFS-EL	=
			Ed.	MKLEPADLO					+
			Appr		P6700 Bodyside LH - Robot Cell 2V09			Document type: EAB	Project nr: 22-16150
Modification	Date	Name	Original		Replacement of / Replaced by	Scale 1:1			Page 39 / 1533

Table of contents

Column X: An automatically generated page was edited

F06_001

Page	Page description	supplementary page field	Date	Edited by	X
&EPB+V1UQ51UQ5.1/1	Parts list : TUN.1324638 - TUN.1324638		1/17/2023	MKLEPADLO	
&EPB+V1UQ51UQ5.2/1	Parts list : TUN.1324638 - TUN.1324638		1/17/2023	MKLEPADLO	
&EPB+V1UQ51UQ6.1/1	Parts list : TUN.1324638 - TUN.1324638		1/17/2023	MKLEPADLO	
&EPB+V1UQ51UQ7.1/1	Parts list : TUN.1324638 - TUN.1324638		1/17/2023	MKLEPADLO	
&EPB+V1UQ51UQ7.2/1	Parts list : TUN.1324638 - TUN.1324638		1/17/2023	MKLEPADLO	
&EPB+V1UQ51UQ7.3/1	Parts list : TUN.1324638 - TUN.1324638		1/17/2023	MKLEPADLO	
&EPB+V1UQ51UQ7.4/1	Parts list : TUN.1324638 - TUN.1324638		1/17/2023	MKLEPADLO	
&EPB+V1UQ51UQ7.5/1	Parts list : TUN.1324638 - TUN.1324638		1/17/2023	MKLEPADLO	
&EPB+V1UQ51UQ8.1/1	Parts list : TUN.1324638 - TUN.1324638		1/17/2023	MKLEPADLO	
&EPB+V1UQ51UQ9.1/1	Parts list : TUN.1324638 - TUN.1324638		1/17/2023	MKLEPADLO	
&EPB+V1UQ51UQ9.2/1	Parts list : TUN.1324638 - TUN.1324638		1/17/2023	MKLEPADLO	
&EPB+V1UQ51UQ10.1/1	Parts list : TUN.1324638 - TUN.1324638		1/17/2023	MKLEPADLO	
&EPB+V1UQ51UQ10.2/1	Parts list : TUN.1324638 - TUN.1324638		1/17/2023	MKLEPADLO	
&EPB+V1UQ52/1	Parts list : TUR.1627297 - TUR.RSM-2RKM 50		1/17/2023	MKLEPADLO	
&EPB+V1UQ52UQ1.1/1	Parts list : WEL.WWS001A - WEL.WWS001A		1/17/2023	MKLEPADLO	
&EPB+V1UQ52UQ2.1/1	Parts list : TUR.BI2-CRS260-AP4X2-H1141/S34 - TUR.VB2-FSM 4.4/2FKM 4/S3450		1/17/2023	MKLEPADLO	
&EPB+V1UQ52UQ2.2/1	Parts list : WEL.WWS001A - WEL.WWS001A		1/17/2023	MKLEPADLO	
&EPB+V1UQ52UQ2.3/1	Parts list : WEL.WWS001A - WEL.WWS001A		1/17/2023	MKLEPADLO	
&EPB+V1UQ52UQ3.1/1	Parts list : WEL.WWS001A - WEL.WWS001A		1/17/2023	MKLEPADLO	
&EPB+V1UQ52UQ4.1/1	Parts list : TUR.BI2-CRS260-AP4X2-H1141/S34 - TUR.VB2-FSM 4.4/2FKM 4/S3450		1/17/2023	MKLEPADLO	
&EPB+V1UQ52UQ5.1/1	Parts list : WEL.WWS001A - WEL.WWS001A		1/17/2023	MKLEPADLO	
&EPB+V1UQ52UQ6.1/1	Parts list : WEL.WWS001A - WEL.WWS001A		1/17/2023	MKLEPADLO	
&EPB+V1UQ52UQ7.1/1	Parts list : WEL.WWS001A - WEL.WWS001A		1/17/2023	MKLEPADLO	
&EPB+V1UQ52UQ8.1/1	Parts list : WEL.WWS001A - WEL.WWS001A		1/17/2023	MKLEPADLO	
&EPB+V1UQ52UQ8.2/1	Parts list : WEL.WWS001A - WEL.WWS001A		1/17/2023	MKLEPADLO	
&EPB+V1UQ52UQ9.1/1	Parts list : WEL.WWS001A - WEL.WWS001A		1/17/2023	MKLEPADLO	
&EPB+V1UQ52UQ10.1/1	Parts list : TUN.1324638 - TUN.1324638		1/17/2023	MKLEPADLO	
&EPB+V1UQ52UQ10.2/1	Parts list : TUN.1324638 - TUN.1324638		1/17/2023	MKLEPADLO	
&EPB+V1UQ52UQ10.3/1	Parts list : TUN.1324638 - TUN.1324638		1/17/2023	MKLEPADLO	
&EPB+V1UQ52UQ10.4/1	Parts list : TUN.1324638 - TUN.1324638		1/17/2023	MKLEPADLO	
&EPB+V1UQ52UQ10.5/1	Parts list : TUN.1324638 - TUN.1324638		1/17/2023	MKLEPADLO	
&EPB+V1UQ52UQ10.6/1	Parts list : TUN.1324638 - TUN.1324638		1/17/2023	MKLEPADLO	
&EPB+V1UQ52UQ11.1/1	Parts list : TUN.1324638 - TUN.1324638		1/17/2023	MKLEPADLO	

			Date	1/17/2023	Volvo Trucks North America	Valiant TMS	Table of contents : &EPB+V1UQ51UQ5.1/1 - &EPB+V1UQ52UQ11.1/1	Drawing name: =2V09&EFS-EL	=
			Ed.	MKLEPADLO					+
			Appr		P6700 Bodyside LH - Robot Cell 2V09			Document type: EAB	Project nr: 22-16150
Modification	Date	Name	Original		Replacement of	Replaced by	Scale 1:1		Page 40 / 1533

Table of contents

Column X: An automatically generated page was edited

F06_001

Page	Page description	supplementary page field	Date	Edited by	X
&EPB+V1UQ52UQ11.2/1	Parts list : TUN.1324644 - TUN.1324644		1/17/2023	MKLEPADLO	
&EPB+V1UQ52UQ11.3/1	Parts list : TUN.1324644 - TUN.1324644		1/17/2023	MKLEPADLO	
&EPB+V1UQ52UQ12.1/1	Parts list : TUN.1324638 - TUN.1324638		1/17/2023	MKLEPADLO	
&EPB+V1UQ52UQ12.2/1	Parts list : TUN.1324638 - TUN.1324638		1/17/2023	MKLEPADLO	
&EPB+V1UQ52UQ13.1/1	Parts list : TUN.1324638 - TUN.1324638		1/17/2023	MKLEPADLO	
&EPB+V1UQ52UQ14.1/1	Parts list : TUN.1324638 - TUN.1324638		1/17/2023	MKLEPADLO	
&EPB+V1UQ52UQ14.2/1	Parts list : TUN.1324638 - TUN.1324638		1/17/2023	MKLEPADLO	
&EPB+V1UQ52UQ14.3/1	Parts list : TUN.1324638 - TUN.1324638		1/17/2023	MKLEPADLO	
&EPB+V1UQ52UQ15.1/1	Parts list : TUN.1324638 - TUN.1324638		1/17/2023	MKLEPADLO	
&EPB+V1UQ52UQ16.1/1	Parts list : TUN.1324638 - TUN.1324638		1/17/2023	MKLEPADLO	
&EPB+V1UQ52UQ17.1/1	Parts list : TUN.1324638 - TUN.1324638		1/17/2023	MKLEPADLO	
&EPB+V1UQ52UQ18.1/1	Parts list : TUN.1324638 - TUN.1324638		1/17/2023	MKLEPADLO	
&EPB+V1UQ52UQ19.1/1	Parts list : TUN.1324638 - TUN.1324638		1/17/2023	MKLEPADLO	
&EPB+V1UQ52UQ20.1/1	Parts list : TUN.1324644 - TUN.1324644		1/17/2023	MKLEPADLO	
&EPB+V1UQ52UQ21.1/1	Parts list : TUN.1324638 - TUN.1324638		1/17/2023	MKLEPADLO	
&EPB+V1UQ52UQ22.1/1	Parts list : TUN.1324638 - TUN.1324638		1/17/2023	MKLEPADLO	
&EPB+V1UQ52UQ23.1/1	Parts list : WEL.WWS001A - WEL.WWS001A		1/17/2023	MKLEPADLO	
&EPB+V1UQ52UQ24.1/1	Parts list : TUN.1324638 - TUN.1324638		1/17/2023	MKLEPADLO	
&EPB+V1UQ52UQ25.1/1	Parts list : TUR.1644905 - TUR.VB2-FSM 4.4/2FKM 4/S3450		1/17/2023	MKLEPADLO	
&EPB+V1UQ52UQ26.1/1	Parts list : WEL.WWS001A - WEL.WWS001A		1/17/2023	MKLEPADLO	
&EPB+V1UQ52UQ27.1/1	Parts list : TUN.1324638 - TUN.1324638		1/17/2023	MKLEPADLO	
&EPB+V1UQ52UQ28.1/1	Parts list : TUN.1324638 - TUN.1324638		1/17/2023	MKLEPADLO	
&EPB+V1UQ52UQ29.1/1	Parts list : TUN.1324638 - TUN.1324638		1/17/2023	MKLEPADLO	
&EPB+V1UQ52UQ30.1/1	Parts list : TUN.1324638 - TUN.1324638		1/17/2023	MKLEPADLO	
&EPB+V1UQ52UQ31.1/1	Parts list : TUN.1324638 - TUN.1324638		1/17/2023	MKLEPADLO	
&EPB+V1UQ52UQ32.1/1	Parts list : TUN.1324638 - TUN.1324638		1/17/2023	MKLEPADLO	
&EPB+V1UQ52UQ33.1/1	Parts list : TUN.1324638 - TUN.1324638		1/17/2023	MKLEPADLO	
&EPB+V1UQ52UQ34.1/1	Parts list : TUN.1324638 - TUN.1324638		1/17/2023	MKLEPADLO	
&EPB+V1UQ52UQ35.1/1	Parts list : WEL.WWS001A - WEL.WWS001A		1/17/2023	MKLEPADLO	
&EPB+V1UQ52UQ36.1/1	Parts list : TUN.1324638 - TUN.1324638		1/17/2023	MKLEPADLO	
&EPB+V1UQ52UQ37.1/1	Parts list : TUN.1324638 - TUN.1324638		1/17/2023	MKLEPADLO	
&EPB+V1UQ52UQ38.1/1	Parts list : TUN.1324644 - TUN.1324644		1/17/2023	MKLEPADLO	
&EPB+V1UQ52UQ39.1/1	Parts list : WEL.WWS001A - WEL.WWS001A		1/17/2023	MKLEPADLO	

			Date	1/17/2023	Volvo Trucks North America	Valiant TMS	Table of contents : &EPB+V1UQ52UQ11.2/1 - &EPB+V1UQ52UQ39.1/1	Drawing name: =2V09&EFS-EL	=
			Ed.	MKLEPADLO					+
			Appr		P6700 Bodyside LH - Robot Cell 2V09			Document type: EAB	Project nr: 22-16150
Modification	Date	Name	Original		Replacement of	Replaced by	Scale 1:1		Page 41 / 1533

Table of contents

Column X: An automatically generated page was edited F06_001

Page	Page description	supplementary page field	Date	Edited by	X
&EPB+V1UQ52UQ40.1/1	Parts list : TUN.1324644 - TUN.1324644		1/17/2023	MKLEPADLO	
&EPB+V1UQ52UQ41.1/1	Parts list : TUN.1324644 - TUN.1324644		1/17/2023	MKLEPADLO	
&EPB+V1UQ52UQ42.1/1	Parts list : TUN.1324638 - TUN.1324638		1/17/2023	MKLEPADLO	
&EPB+V1UQ52UQ42.2/1	Parts list : TUN.1324638 - TUN.1324638		1/17/2023	MKLEPADLO	
&EPB+V1UQ52UQ43.1/1	Parts list : TUN.1324638 - TUN.1324638		1/17/2023	MKLEPADLO	
&EPB+V1UQ52UQ44.1/1	Parts list : WEL.WWS001A - WEL.WWS001A		1/17/2023	MKLEPADLO	
&EPB+V1UQ52UQ44.2/1	Parts list : WEL.WWS001A - WEL.WWS001A		1/17/2023	MKLEPADLO	
&EPB+V1UQ52UQ45.1/1	Parts list : TUN.1324638 - TUN.1324638		1/17/2023	MKLEPADLO	
&EPB+V1UQ52UQ46.1/1	Parts list : TUN.1324644 - TUN.1324644		1/17/2023	MKLEPADLO	
&EPB+V1UQ53/1	Parts list : TUR.1627297 - TUR.RSM-2RKM 50		1/17/2023	MKLEPADLO	
&EPB+V1UQ53UQ1.1/1	Parts list : WEL.WWS001A - WEL.WWS001A		1/17/2023	MKLEPADLO	
&EPB+V1UQ53UQ2.1/1	Parts list : WEL.WWS001A - WEL.WWS001A		1/17/2023	MKLEPADLO	
&EPB+V1UQ53UQ3.1/1	Parts list : TUN.1324638 - TUN.1324638		1/17/2023	MKLEPADLO	
&EPB+V1UQ53UQ3.2/1	Parts list : TUN.1324638 - TUN.1324638		1/17/2023	MKLEPADLO	
&EPB+V1UQ53UQ3.3/1	Parts list : TUN.1324638 - TUN.1324638		1/17/2023	MKLEPADLO	
&EPB+V1UQ53UQ3.4/1	Parts list : TUN.1324638 - TUN.1324638		1/17/2023	MKLEPADLO	
&EPB+V1UQ53UQ3.5/1	Parts list : TUN.1324638 - TUN.1324638		1/17/2023	MKLEPADLO	
&EPB+V1UQ53UQ4.1/1	Parts list : TUN.1324638 - TUN.1324638		1/17/2023	MKLEPADLO	
&EPB+V1UQ53UQ4.2/1	Parts list : TUN.1324638 - TUN.1324638		1/17/2023	MKLEPADLO	
&EPB+V1UQ53UQ4.3/1	Parts list : TUN.1324638 - TUN.1324638		1/17/2023	MKLEPADLO	
&EPB+V1UQ53UQ5.1/1	Parts list : TUN.1324638 - TUN.1324638		1/17/2023	MKLEPADLO	
&EPB+V1UQ53UQ5.2/1	Parts list : TUN.1324638 - TUN.1324638		1/17/2023	MKLEPADLO	
&EPB+V1UQ53UQ5.3/1	Parts list : TUN.1324638 - TUN.1324638		1/17/2023	MKLEPADLO	
&EPB+V1UQ53UQ6.1/1	Parts list : TUN.1324638 - TUN.1324638		1/17/2023	MKLEPADLO	
&EPB+V1UQ53UQ7.1/1	Parts list : TUN.1324638 - TUN.1324638		1/17/2023	MKLEPADLO	
&EPB+V1UQ53UQ8.1/1	Parts list : TUN.1324638 - TUN.1324638		1/17/2023	MKLEPADLO	
&EPB+V1UQ53UQ8.2/1	Parts list : TUN.1324638 - TUN.1324638		1/17/2023	MKLEPADLO	
&EPB+V1UQ53UQ9.1/1	Parts list : TUN.1324638 - TUN.1324638		1/17/2023	MKLEPADLO	
&EPB+V1UQ53UQ10.1/1	Parts list : TUN.1324638 - TUN.1324638		1/17/2023	MKLEPADLO	
&EPB+V1UQ53UQ10.2/1	Parts list : TUN.1324638 - TUN.1324638		1/17/2023	MKLEPADLO	
&EPB+V1UQ53UQ11.1/1	Parts list : TUN.1324638 - TUN.1324638		1/17/2023	MKLEPADLO	
&EPB+V1UQ53UQ11.2/1	Parts list : TUN.1324638 - TUN.1324638		1/17/2023	MKLEPADLO	
&EPB+V1UQ53UQ12.1/1	Parts list : TUN.1324638 - TUN.1324638		1/17/2023	MKLEPADLO	

			Date	1/17/2023	Volvo Trucks North America	Valiant TMS	Table of contents : &EPB+V1UQ52UQ40.1/1 - &EPB+V1UQ53UQ12.1/1	Drawing name: =2V09&EFS-EL	=
			Ed.	MKLEPADLO					+
			Appr		P6700 Bodyside LH - Robot Cell 2V09			Document type: EAB	Project nr: 22-16150
Modification	Date	Name	Original		Replacement of	Replaced by	Scale 1:1		Page 42 / 1533

Table of contents

Column X: An automatically generated page was edited

F06_001

Page	Page description	supplementary page field	Date	Edited by	X
&EPB+V1UQ53UQ13.1/1	Parts list : TUN.1324638 - TUN.1324638		1/17/2023	MKLEPADLO	
&EPB+V1UQ53UQ14.1/1	Parts list : WEL.WWS001A - WEL.WWS001A		1/17/2023	MKLEPADLO	
&EPB+V1UQ53UQ15.1/1	Parts list : WEL.WWS001A - WEL.WWS001A		1/17/2023	MKLEPADLO	
&EPB+V1UQ53UQ16.1/1	Parts list : WEL.WWS001A - WEL.WWS001A		1/17/2023	MKLEPADLO	
&EPB+V1UQ53UQ17.1/1	Parts list : WEL.WWS001A - WEL.WWS001A		1/17/2023	MKLEPADLO	
&EPB+V1UQ54/1	Parts list : TUR.1627297 - TUR.RSM-2RKM 50		1/17/2023	MKLEPADLO	
&EPB+V1UQ54UQ1.1/1	Parts list : WEL.WWS001A - WEL.WWS001A		1/17/2023	MKLEPADLO	
&EPB+V1UQ54UQ2.1/1	Parts list : WEL.WWS001A - WEL.WWS001A		1/17/2023	MKLEPADLO	
&EPB+V1UQ54UQ3.1/1	Parts list : TUN.1324638 - TUN.1324638		1/17/2023	MKLEPADLO	
&EPB+V1UQ54UQ3.2/1	Parts list : TUN.1324638 - TUN.1324638		1/17/2023	MKLEPADLO	
&EPB+V1UQ54UQ3.3/1	Parts list : TUN.1324638 - TUN.1324638		1/17/2023	MKLEPADLO	
&EPB+V1UQ54UQ4.1/1	Parts list : TUN.1324638 - TUN.1324638		1/17/2023	MKLEPADLO	
&EPB+V1UQ54UQ4.2/1	Parts list : TUN.1324638 - TUN.1324638		1/17/2023	MKLEPADLO	
&EPB+V1UQ54UQ4.3/1	Parts list : TUN.1324638 - TUN.1324638		1/17/2023	MKLEPADLO	
&EPB+V1UQ54UQ5.1/1	Parts list : TUN.1324638 - TUN.1324638		1/17/2023	MKLEPADLO	
&EPB+V1UQ54UQ5.2/1	Parts list : TUN.1324638 - TUN.1324638		1/17/2023	MKLEPADLO	
&EPB+V1UQ54UQ5.3/1	Parts list : TUN.1324638 - TUN.1324638		1/17/2023	MKLEPADLO	
&EPB+V1UQ54UQ5.4/1	Parts list : TUN.1324638 - TUN.1324638		1/17/2023	MKLEPADLO	
&EPB+V1UQ54UQ6.1/1	Parts list : TUN.1324638 - TUN.1324638		1/17/2023	MKLEPADLO	
&EPB+V1UQ54UQ6.2/1	Parts list : TUN.1324638 - TUN.1324638		1/17/2023	MKLEPADLO	
&EPB+V1UQ54UQ7.1/1	Parts list : TUN.1324638 - TUN.1324638		1/17/2023	MKLEPADLO	
&EPB+V1UQ54UQ8.1/1	Parts list : TUN.1324638 - TUN.1324638		1/17/2023	MKLEPADLO	
&EPB+V1UQ54UQ8.2/1	Parts list : TUN.1324638 - TUN.1324638		1/17/2023	MKLEPADLO	
&EPB+V1UQ54UQ9.1/1	Parts list : TUN.1324638 - TUN.1324638		1/17/2023	MKLEPADLO	
&EPB+V1UQ54UQ10.1/1	Parts list : TUN.1324638 - TUN.1324638		1/17/2023	MKLEPADLO	
&EPB+V1UQ54UQ10.2/1	Parts list : TUN.1324638 - TUN.1324638		1/17/2023	MKLEPADLO	
&EPB+V1UQ54UQ11.1/1	Parts list : WEL.WWS001A - WEL.WWS001A		1/17/2023	MKLEPADLO	
&EPB+V1UQ54UQ12.1/1	Parts list : WEL.WWS001A - WEL.WWS001A		1/17/2023	MKLEPADLO	
&EPB+V1UQ54UQ13.1/1	Parts list : WEL.WWS001A - WEL.WWS001A		1/17/2023	MKLEPADLO	
&EPB+V1UQ54UQ14.1/1	Parts list : WEL.WWS001A - WEL.WWS001A		1/17/2023	MKLEPADLO	
&EPB+V1UQ55/1	Parts list : TUR.1627297 - FES.549335		1/17/2023	MKLEPADLO	
&EPB+V1UQ55UQ1.1/1	Parts list : WEL.WWS001A - WEL.WWS001A		1/17/2023	MKLEPADLO	
&EPB+V1UQ55UQ2.1/1	Parts list : WEL.WWS001A - WEL.WWS001A		1/17/2023	MKLEPADLO	

			Date	1/17/2023	Volvo Trucks North America	Valiant TMS	Table of contents : &EPB+V1UQ53UQ13.1/1 - &EPB+V1UQ55UQ2.1/1	Drawing name: =2V09&EFS-EL	=
			Ed.	MKLEPADLO					+
			Appr		P6700 Bodyside LH - Robot Cell 2V09			Document type: EAB	Project nr: 22-16150
Modification	Date	Name	Original		Replacement of	Replaced by	Scale 1:1		Page 43 / 1533

Table of contents

Column X: An automatically generated page was edited

F06_001

Page	Page description	supplementary page field	Date	Edited by	X
&EPB+V1UQ55UQ3.1/1	Parts list : WEL.WWS001A - WEL.WWS001A		1/17/2023	MKLEPADLO	
&EPB+V1UQ55UQ4.1/1	Parts list : TUN.1324638 - TUN.1324638		1/17/2023	MKLEPADLO	
&EPB+V1UQ55UQ4.2/1	Parts list : TUN.1324638 - TUN.1324638		1/17/2023	MKLEPADLO	
&ETT/1	Terminal line-up diagram =KF0KF1+UC31-PC1		1/17/2023	MKLEPADLO	
&ETT/2	Terminal line-up diagram =KF0KF1+UC31-PH1		1/17/2023	MKLEPADLO	
&ETT/3	Terminal line-up diagram =KF0WC3+UC31-XD1		1/17/2023	MKLEPADLO	
&ETT/4	Terminal line-up diagram =KF0WC3+UC31-XD2		1/17/2023	MKLEPADLO	
&ETT/5	Terminal line-up diagram =KF0WC4+UC31-XD11		1/17/2023	MKLEPADLO	
&ETT/6	Terminal line-up diagram =KF0WC4+UC31-XD12		1/17/2023	MKLEPADLO	
&ETT/7	Terminal line-up diagram =KF0WC4+UC31-XD13		1/17/2023	MKLEPADLO	
&ETT/8	Terminal line-up diagram =KF0WC4+UC31-XD14		1/17/2023	MKLEPADLO	
&ETT/9	Terminal line-up diagram =V1WC1+V1UC11-PE		1/17/2023	MKLEPADLO	
&ETT/10	Terminal line-up diagram =V1WC2+V1UC11-XD1		1/17/2023	MKLEPADLO	
&ETT/11	Terminal line-up diagram =V1WC2+V1UC11-XD2		1/17/2023	MKLEPADLO	
&ETT/12	Terminal line-up diagram =V1WC2+V1UC11-XD3		1/17/2023	MKLEPADLO	
&ETT/13	Terminal line-up diagram =V1WC3+V1UC11-XD1		1/17/2023	MKLEPADLO	
&ETT/14	Terminal line-up diagram =V1WC3+V1UC11-XD2		1/17/2023	MKLEPADLO	
&ETT/15	Terminal line-up diagram =V1WC3+V1UC11-XD3		1/17/2023	MKLEPADLO	
&ETT/16	Terminal line-up diagram =V1WC4+V1UC11-KF11.14		1/17/2023	MKLEPADLO	
&ETT/17	Terminal line-up diagram =V1WC4+V1UC11-XD5		1/17/2023	MKLEPADLO	
&ETT/18	Terminal line-up diagram =V1WC4+V1UC11-XD6		1/17/2023	MKLEPADLO	
&ETT/19	Terminal line-up diagram =V1WC4+V1UC11-XD10		1/17/2023	MKLEPADLO	
&ETT/20	Terminal line-up diagram =V1WC4+V1UC11-XD11		1/17/2023	MKLEPADLO	
&ETT/21	Terminal line-up diagram =V1WC4+V1UC11-XD12		1/17/2023	MKLEPADLO	
&ETT/22	Terminal line-up diagram =V1WC4+V1UC11-XD13		1/17/2023	MKLEPADLO	
&ETT/23	Terminal line-up diagram =V1WC4+V1UC11-XD14		1/17/2023	MKLEPADLO	
&ETT/24	Terminal line-up diagram =V1WC4+V1UC11-XD20		1/17/2023	MKLEPADLO	
&ETT/25	Terminal line-up diagram =V1WC4+V1UC11-XD51		1/17/2023	MKLEPADLO	
&ETT/26	Terminal line-up diagram =V1WC4+V1UC11-XD52		1/17/2023	MKLEPADLO	
&ETT/27	Terminal line-up diagram =V1WC4+V1UC11-XD53		1/17/2023	MKLEPADLO	
&ETT/28	Terminal line-up diagram =V1WC4+V1UC11-XD54		1/17/2023	MKLEPADLO	
&ETT/29	Terminal line-up diagram =V1WC1+V1UC12-PE		1/17/2023	MKLEPADLO	
&ETT/30	Terminal line-up diagram =V1WC2+V1UC12-XD1		1/17/2023	MKLEPADLO	

			Date	1/17/2023	Volvo Trucks North America	Valiant TMS	Table of contents : &EPB+V1UQ55UQ3.1/1 - &ETT/30	Drawing name: =2V09&EFS-EL	=	
			Ed.	MKLEPADLO					+	
			Appr		P6700 Bodyside LH - Robot Cell 2V09			Document type: EAB	Project nr: 22-16150	Page 44 / 1533
Modification	Date	Name	Original		Replacement of	Replaced by	Scale 1:1			

Table of contents

Column X: An automatically generated page was edited

F06_001

Page	Page description	supplementary page field	Date	Edited by	X
&ETT/31	Terminal line-up diagram =V1WC2+V1UC12-XD2		1/17/2023	MKLEPADLO	
&ETT/32	Terminal line-up diagram =V1WC2+V1UC12-XD3		1/17/2023	MKLEPADLO	
&ETT/33	Terminal line-up diagram =V1WC3+V1UC12-XD1		1/17/2023	MKLEPADLO	
&ETT/34	Terminal line-up diagram =V1WC3+V1UC12-XD2		1/17/2023	MKLEPADLO	
&ETT/35	Terminal line-up diagram =V1WC3+V1UC12-XD3		1/17/2023	MKLEPADLO	
&ETT/36	Terminal line-up diagram =V1WC4+V1UC12-KF12.14		1/17/2023	MKLEPADLO	
&ETT/37	Terminal line-up diagram =V1WC4+V1UC12-XD5		1/17/2023	MKLEPADLO	
&ETT/38	Terminal line-up diagram =V1WC4+V1UC12-XD6		1/17/2023	MKLEPADLO	
&ETT/39	Terminal line-up diagram =V1WC4+V1UC12-XD10		1/17/2023	MKLEPADLO	
&ETT/40	Terminal line-up diagram =V1WC4+V1UC12-XD11		1/17/2023	MKLEPADLO	
&ETT/41	Terminal line-up diagram =V1WC4+V1UC12-XD12		1/17/2023	MKLEPADLO	
&ETT/42	Terminal line-up diagram =V1WC4+V1UC12-XD13		1/17/2023	MKLEPADLO	
&ETT/43	Terminal line-up diagram =V1WC4+V1UC12-XD14		1/17/2023	MKLEPADLO	
&ETT/44	Terminal line-up diagram =V1WC4+V1UC12-XD20		1/17/2023	MKLEPADLO	
&ETT/45	Terminal line-up diagram =V1WC4+V1UC12-XD51		1/17/2023	MKLEPADLO	
&ETT/46	Terminal line-up diagram =V1WC4+V1UC12-XD52		1/17/2023	MKLEPADLO	
&ETT/47	Terminal line-up diagram =V1WC4+V1UC12-XD53		1/17/2023	MKLEPADLO	
&ETT/48	Terminal line-up diagram =V1WC4+V1UC12-XD54		1/17/2023	MKLEPADLO	
&ETT/49	Terminal line-up diagram =V1WC3+V1UC14-XD1		1/17/2023	MKLEPADLO	
&ETT/50	Terminal line-up diagram =V1WC4+V1UC14-KF14.12		1/17/2023	MKLEPADLO	
&ETT/51	Terminal line-up diagram =V1WC4+V1UC14-XD5		1/17/2023	MKLEPADLO	
&ETT/52	Terminal line-up diagram =V1WC4+V1UC14-XD6		1/17/2023	MKLEPADLO	
&ETT/53	Terminal line-up diagram =V1WC4+V1UC14-XD10		1/17/2023	MKLEPADLO	
&ETT/54	Terminal line-up diagram =V1WC4+V1UC14-XD11		1/17/2023	MKLEPADLO	
&ETT/55	Terminal line-up diagram =V1WC4+V1UC14-XD12		1/17/2023	MKLEPADLO	
&ETT/56	Terminal line-up diagram =V1WC4+V1UC14-XD13		1/17/2023	MKLEPADLO	
&ETT/57	Terminal line-up diagram =V1WC4+V1UC14-XD14		1/17/2023	MKLEPADLO	
&ETT/58	Terminal line-up diagram =V1WC4+V1UC14-XD15		1/17/2023	MKLEPADLO	
&ETT/59	Terminal line-up diagram =V1WC4+V1UC14-XD16		1/17/2023	MKLEPADLO	
&ETT/60	Terminal line-up diagram =V1WC4+V1UC14-XD17		1/17/2023	MKLEPADLO	
&ETT/61	Terminal line-up diagram =V1WC4+V1UC14-XD18		1/17/2023	MKLEPADLO	
&ETT/62	Terminal line-up diagram =V1WC4+V1UC14-XD51		1/17/2023	MKLEPADLO	
&ETT/63	Terminal line-up diagram =V1WC4+V1UC14-XD52		1/17/2023	MKLEPADLO	

			Date	1/17/2023	Volvo Trucks North America	Valiant TMS	Table of contents : &ETT/31 - &ETT/63	Drawing name: =2V09&EFS-EL	=
			Ed.	MKLEPADLO					+
			Appr		P6700 Bodyside LH - Robot Cell 2V09			Document type: EAB	Project nr: 22-16150
Modification	Date	Name	Original		Replacement of / Replaced by	Scale 1:1			Page 45 / 1533

Table of contents

Column X: An automatically generated page was edited

F06_001

Page	Page description	supplementary page field	Date	Edited by	X
&ETT/64	Terminal line-up diagram =V1WC4+V1UC14-XD53		1/17/2023	MKLEPADLO	
&ETT/65	Terminal line-up diagram =V1WC4+V1UC14-XD54		1/17/2023	MKLEPADLO	
&ETT/66	Terminal line-up diagram =V1WC3+V1UC15-XD1		1/17/2023	MKLEPADLO	
&ETT/67	Terminal line-up diagram =V1WC4+V1UC15-KF15.12		1/17/2023	MKLEPADLO	
&ETT/68	Terminal line-up diagram =V1WC4+V1UC15-XD5		1/17/2023	MKLEPADLO	
&ETT/69	Terminal line-up diagram =V1WC4+V1UC15-XD6		1/17/2023	MKLEPADLO	
&ETT/70	Terminal line-up diagram =V1WC4+V1UC15-XD10		1/17/2023	MKLEPADLO	
&ETT/71	Terminal line-up diagram =V1WC4+V1UC15-XD11		1/17/2023	MKLEPADLO	
&ETT/72	Terminal line-up diagram =V1WC4+V1UC15-XD12		1/17/2023	MKLEPADLO	
&ETT/73	Terminal line-up diagram =V1WC4+V1UC15-XD13		1/17/2023	MKLEPADLO	
&ETT/74	Terminal line-up diagram =V1WC4+V1UC15-XD14		1/17/2023	MKLEPADLO	
&ETT/75	Terminal line-up diagram =V1WC4+V1UC15-XD15		1/17/2023	MKLEPADLO	
&ETT/76	Terminal line-up diagram =V1WC4+V1UC15-XD16		1/17/2023	MKLEPADLO	
&ETT/77	Terminal line-up diagram =V1WC4+V1UC15-XD17		1/17/2023	MKLEPADLO	
&ETT/78	Terminal line-up diagram =V1WC4+V1UC15-XD18		1/17/2023	MKLEPADLO	
&ETT/79	Terminal line-up diagram =V1WC4+V1UC15-XD51		1/17/2023	MKLEPADLO	
&ETT/80	Terminal line-up diagram =V1WC4+V1UC15-XD52		1/17/2023	MKLEPADLO	
&ETT/81	Terminal line-up diagram =V1WC4+V1UC15-XD53		1/17/2023	MKLEPADLO	
&ETT/82	Terminal line-up diagram =V1WC4+V1UC15-XD54		1/17/2023	MKLEPADLO	
&ETT/83	Terminal line-up diagram =V1WC4+V1UC32-XD11		1/17/2023	MKLEPADLO	
&ETT/84	Terminal line-up diagram =V1PZ1PF1+V1UC61-XD11		1/17/2023	MKLEPADLO	
&ETT/85	Terminal line-up diagram =V1PZ1PF2+V1UC62-XD11		1/17/2023	MKLEPADLO	
&ETT/86	Terminal line-up diagram =V1PZ1PF3+V1UC63-XD11		1/17/2023	MKLEPADLO	
&ETT/87	Terminal line-up diagram =V1PZ1PF4+V1UC64-XD11		1/17/2023	MKLEPADLO	
&EXX/1	Summarized parts list : TS 35_7,5 - SIE.6ES7132-6BH01-0BA0		1/17/2023	MKLEPADLO	
&EXX/2	Summarized parts list : SIE.6ES7136-6BA01-0CA0 - SIE.6EP4134-0GB00-0AY0		1/17/2023	MKLEPADLO	
&EXX/3	Summarized parts list : SIE.6EP3336-7SB00-3AX0 - BAN.SLSCP30-1200P44NT		1/17/2023	MKLEPADLO	
&EXX/4	Summarized parts list : BAN.SLSCP30-1200P88 - FES.541254		1/17/2023	MKLEPADLO	
&EXX/5	Summarized parts list : TUN.1329440 - RIT.5051375		1/17/2023	MKLEPADLO	
&EXX/6	Summarized parts list : RIT.6315150 - PTN102-3K		1/17/2023	MKLEPADLO	
&EXX/7	Summarized parts list : SIE.3VA6225-6KP31-0AA0 - ABB.2CDS271517R0357		1/17/2023	MKLEPADLO	
&EXX/8	Summarized parts list : RIT.SETS8205SID5 - RIT.SETS8205SID5		1/17/2023	MKLEPADLO	
&EYY/1	Terminal-strip overview : =KF0KF1+UC31-PC1 - =KF0WC4+UC31-XD14		1/17/2023	MKLEPADLO	

			Date	1/17/2023	Volvo Trucks North America	Valiant TMS	Table of contents : &ETT/64 - &EYY/1	Drawing name: =2V09&EFS-EL	=
			Ed.	MKLEPADLO					+
			Appr		P6700 Bodyside LH - Robot Cell 2V09			Document type: EAB	Project nr: 22-16150
Modification	Date	Name	Original		Replacement of	Replaced by	Scale 1:1		Page 46 / 1533

Table of contents

Column X: An automatically generated page was edited

F06_001

Page	Page description	supplementary page field	Date	Edited by	X
&EYY/2	Terminal-strip overview : =V1WC1+V1UC11-PE - =V1WC4+V1UC11-XD54		1/17/2023	MKLEPADLO	
&EYY/3	Terminal-strip overview : =V1WC1+V1UC12-PE - =V1WC4+V1UC12-XD54		1/17/2023	MKLEPADLO	
&EYY/4	Terminal-strip overview : =V1WC3+V1UC14-XD1 - =V1WC4+V1UC14-XD54		1/17/2023	MKLEPADLO	
&EYY/5	Terminal-strip overview : =V1WC3+V1UC15-XD1 - =V1WC4+V1UC15-XD54		1/17/2023	MKLEPADLO	
&EYY/6	Terminal-strip overview : =V1WC4+V1UC32-XD11 - =V1WC4+V1UC32-XD11		1/17/2023	MKLEPADLO	
&EYY/7	Terminal-strip overview : =V1PZ1PF1+V1UC61-XD11 - =V1PZ1PF1+V1UC61-XD11		1/17/2023	MKLEPADLO	
&EYY/8	Terminal-strip overview : =V1PZ1PF2+V1UC62-XD11 - =V1PZ1PF2+V1UC62-XD11		1/17/2023	MKLEPADLO	
&EYY/9	Terminal-strip overview : =V1PZ1PF3+V1UC63-XD11 - =V1PZ1PF3+V1UC63-XD11		1/17/2023	MKLEPADLO	
&EYY/10	Terminal-strip overview : =V1PZ1PF4+V1UC64-XD11 - =V1PZ1PF4+V1UC64-XD11		1/17/2023	MKLEPADLO	
&EAZ/1	Amendment page		1/10/2023	MKLEPADLO	
&EAZ/2	Amendment page		1/10/2023	MKLEPADLO	
&EAZ/3	Amendment page		1/10/2023	MKLEPADLO	
&EAZ/4	Amendment page		1/10/2023	MKLEPADLO	
&EAZ/5	Amendment page		1/10/2023	MKLEPADLO	
&EAZ/6	Amendment page		1/17/2023	MKLEPADLO	

			Date	1/17/2023	Volvo Trucks North America	Valiant TMS	Table of contents : &EYY/2 - &EAZ/6	Drawing name: =2V09&EFS-EL	=	
			Ed.	MKLEPADLO					+	
			Appr		P6700 Bodyside LH - Robot Cell 2V09			Document type: EAB	Project nr: 22-16150	Page 47
Modification	Date	Name	Original		Replacement of	Replaced by	Scale 1:1			1533

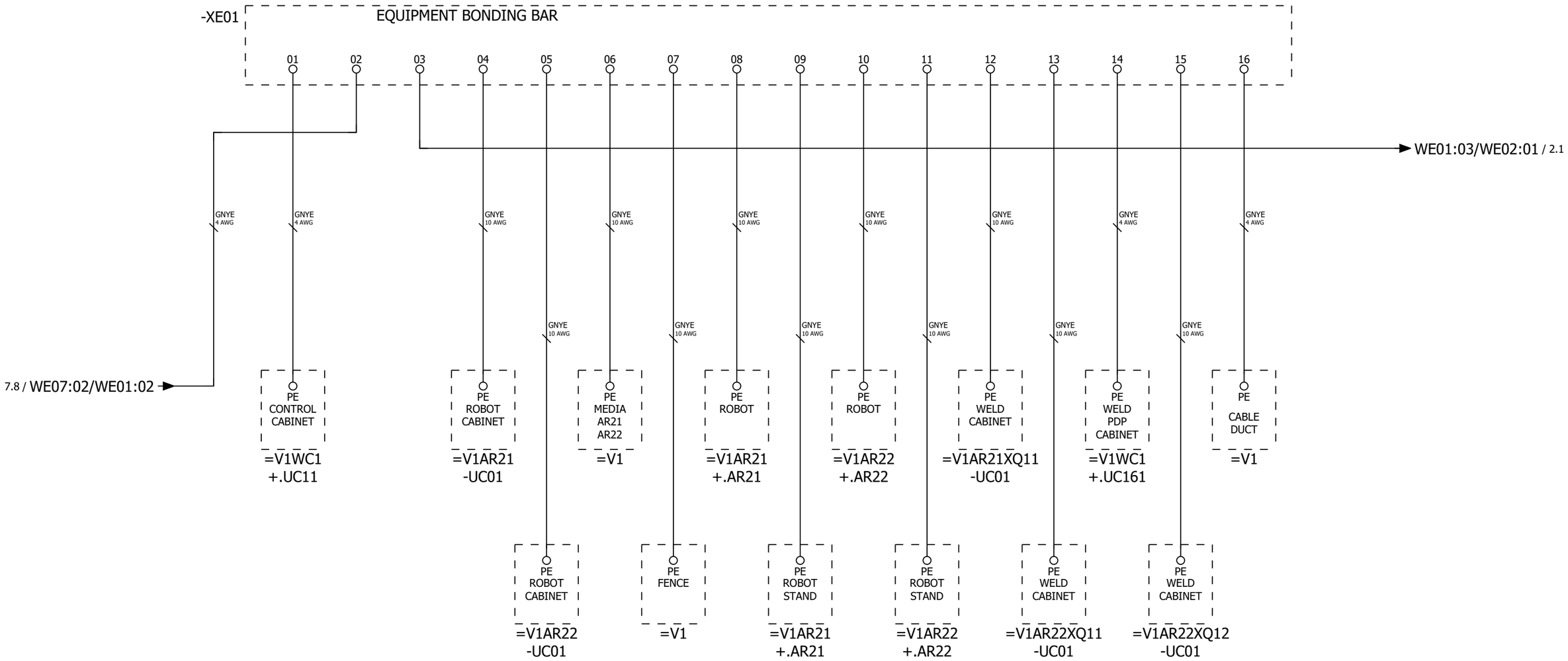

			Date	1/17/2023	Volvo Trucks North America	Valiant TMS	EQUIPMENT BONDING	Drawing name: =2V09&EFS-EL	= FQ99V1	
			Ed.	MKLEPADLO					+ V1	
			Appr		P6700 Bodyside LH - Robot Cell 2V09			Document type: EFA	Project nr: 22-16150	Page 1
Modification	Date	Name	Original		Replacement of / Replaced by	Scale 1:1				1533

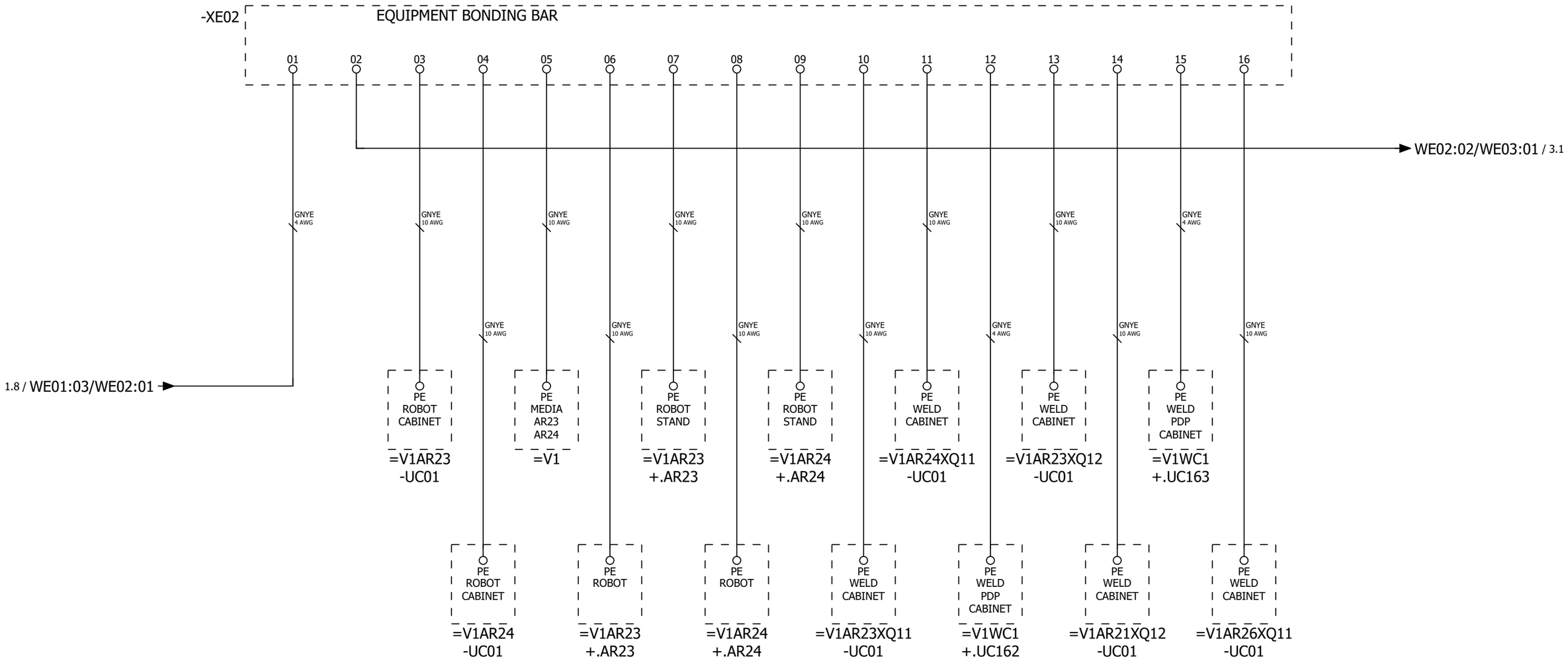

			Date	1/17/2023	Volvo Trucks North America	Valiant TMS	EQUIPMENT BONDING	Drawing name: =2V09&EFS-EL	= FQ99V1	
			Ed.	MKLEPADLO					+ V1	
			Appr		P6700 Bodyside LH - Robot Cell 2V09			Document type: EFA	Project nr: 22-16150	Page 2
Modification	Date	Name	Original		Replacement of / Replaced by	Scale 1:1				1533

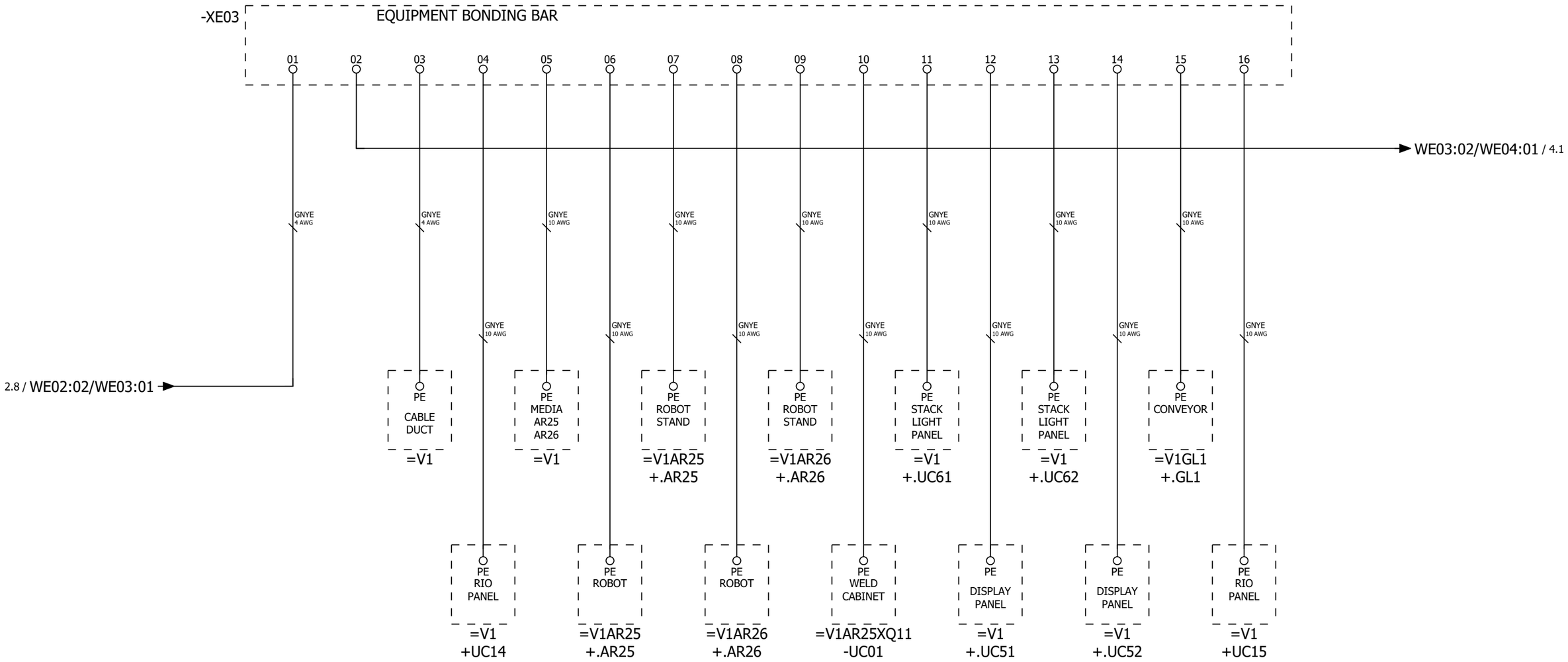

			Date	1/17/2023	Volvo Trucks North America	Valiant TMS	EQUIPMENT BONDING	Drawing name: =2V09&EFS-EL	= FQ99V1	
			Ed.	MKLEPADLO					+ V1	
			Appr		P6700 Bodyside LH - Robot Cell 2V09			Document type: EFA	Project nr: 22-16150	Page 3
Modification	Date	Name	Original		Replacement of / Replaced by	Scale 1:1				1533

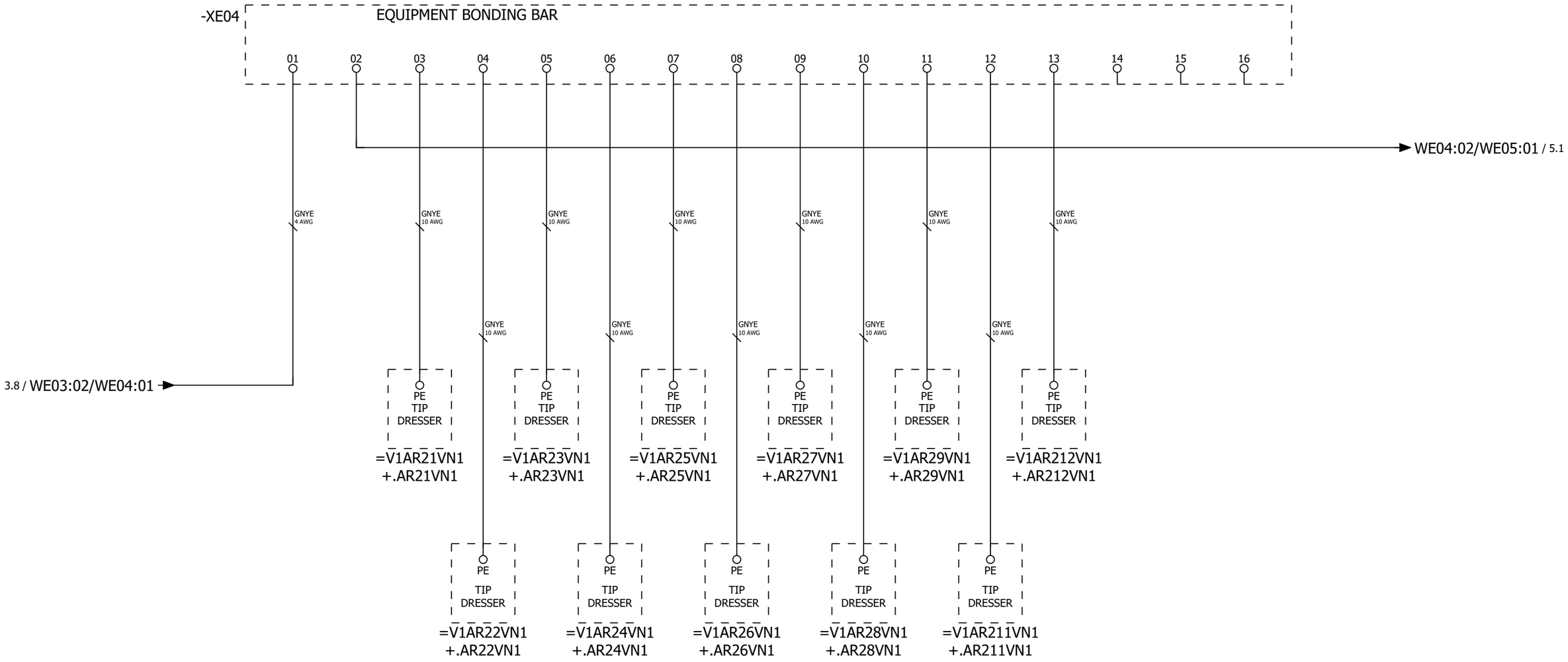

3 5

			Date	1/17/2023	Volvo Trucks North America	Valiant TMS	EQUIPMENT BONDING	Drawing name: =2V09&EFS-EL	= FQ99V1	
			Ed.	MKLEPADLO					+ V1	
			Appr		P6700 Bodyside LH - Robot Cell 2V09	Scale 1:1		Document type: EFA	Project nr: 22-16150	Page 4 / 1533
Modification	Date	Name	Original		Replacement of	Replaced by				

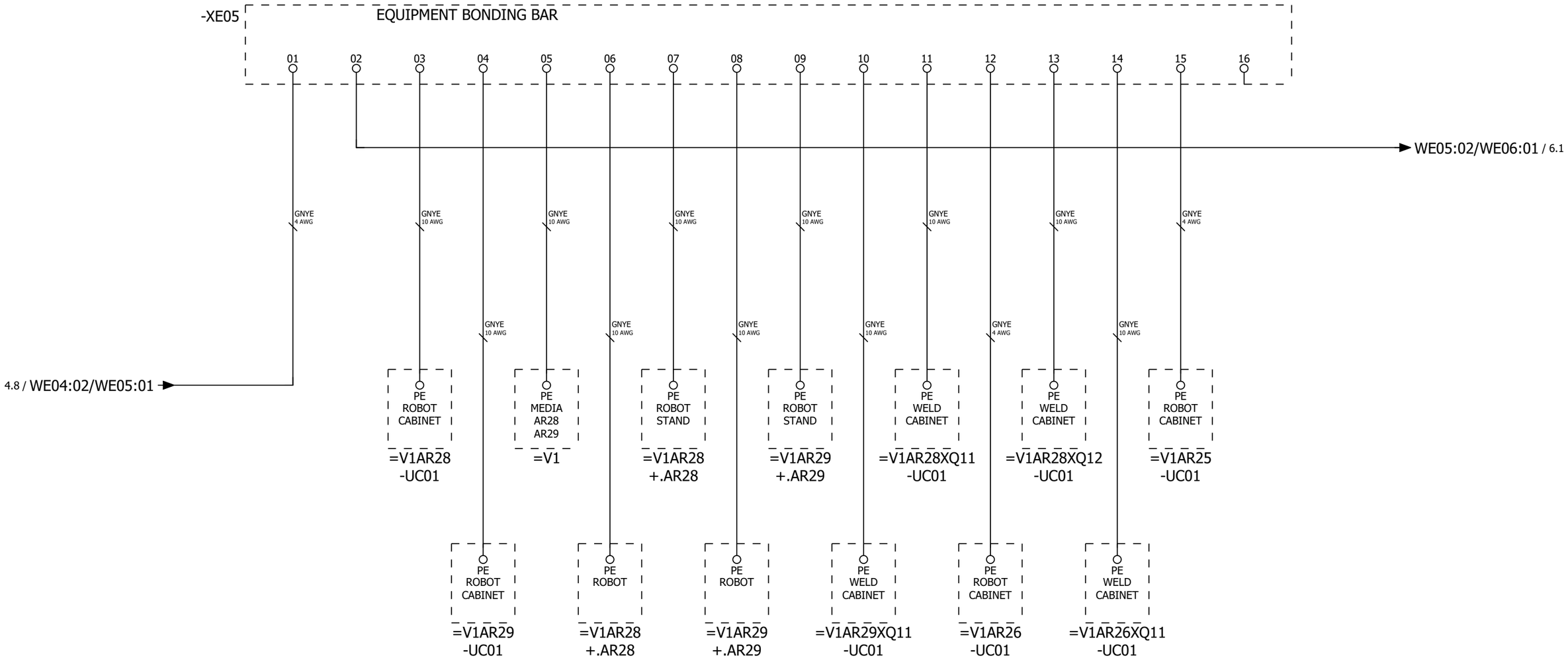

			Date	1/17/2023	Volvo Trucks North America	Valiant TMS	EQUIPMENT BONDING	Drawing name: =2V09&EFS-EL	= FQ99V1	
			Ed.	MKLEPADLO					+ V1	
			Appr		P6700 Bodyside LH - Robot Cell 2V09	Scale 1:1		Document type: EFA	Project nr: 22-16150	Page 5 / 1533
Modification	Date	Name	Original		Replacement of / Replaced by					

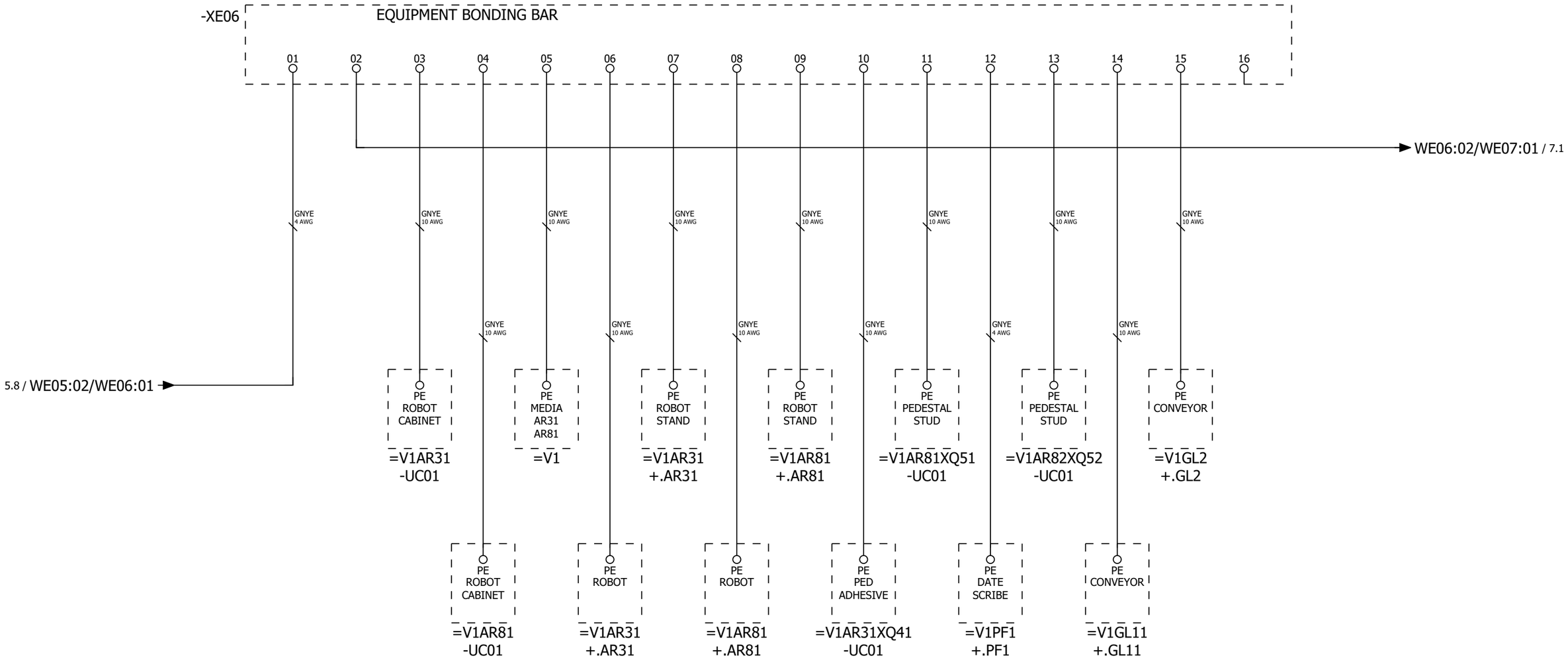

5 7

			Date	1/17/2023	Volvo Trucks North America	Valiant TMS	EQUIPMENT BONDING	Drawing name: =2V09&EFS-EL	= FQ99V1
			Ed.	MKLEPADLO					+ V1
			Appr		P6700 Bodyside LH - Robot Cell 2V09	Scale 1:1		Document type: EFA	Project nr: 22-16150
Modification	Date	Name	Original		Replacement of	Replaced by			Page 6 / 1533

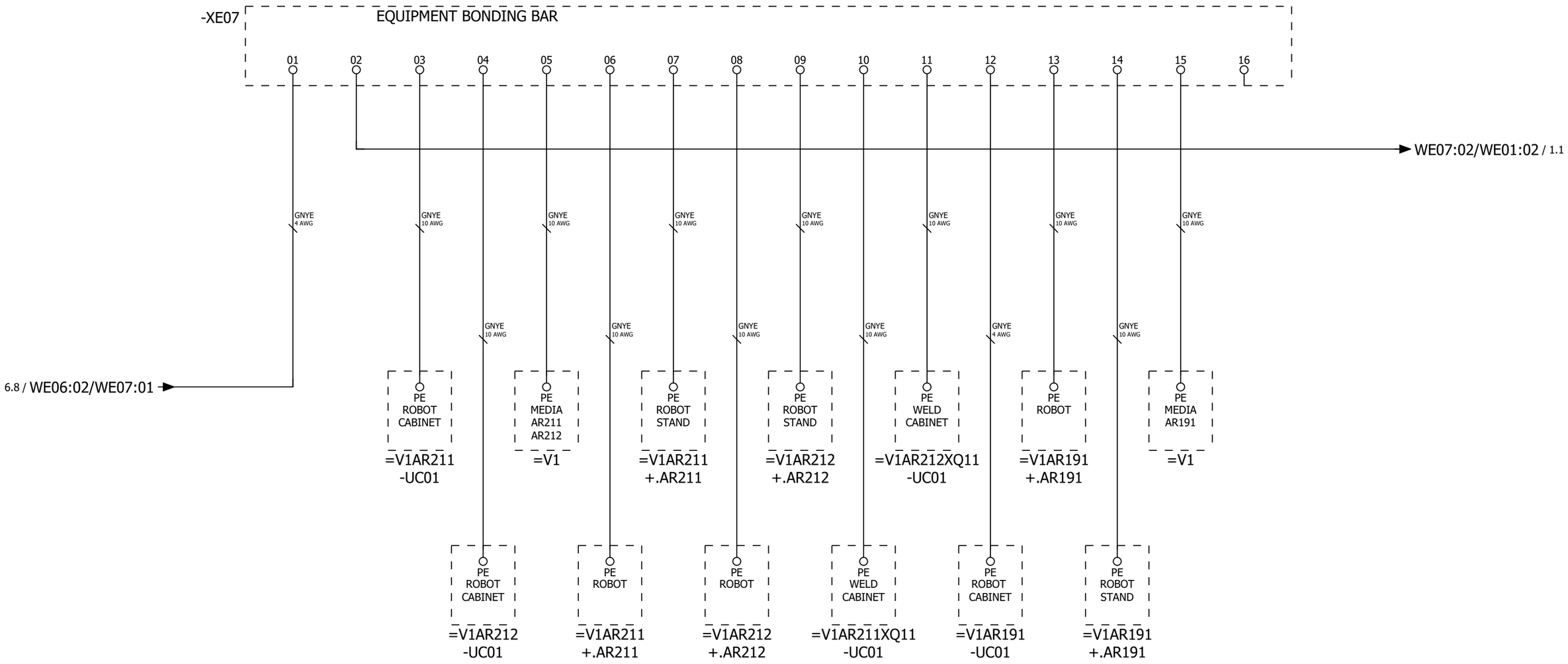

&EFS=FQ0V1SF1S01+.UC32/1

			Date	1/17/2023	Volvo Trucks North America	Valiant TMS	EQUIPMENT BONDING	Drawing name: =2V09&EFS-EL	= FQ99V1	
			Ed.	MKLEPADLO					+ V1	
			Appr		P6700 Bodyside LH - Robot Cell 2V09			Document type: EFA	Project nr: 22-16150	Page 7
Modification	Date	Name	Original		Replacement of	Replaced by	Scale 1:1			1533

0	1	2	3	4	5	6	7	8	9

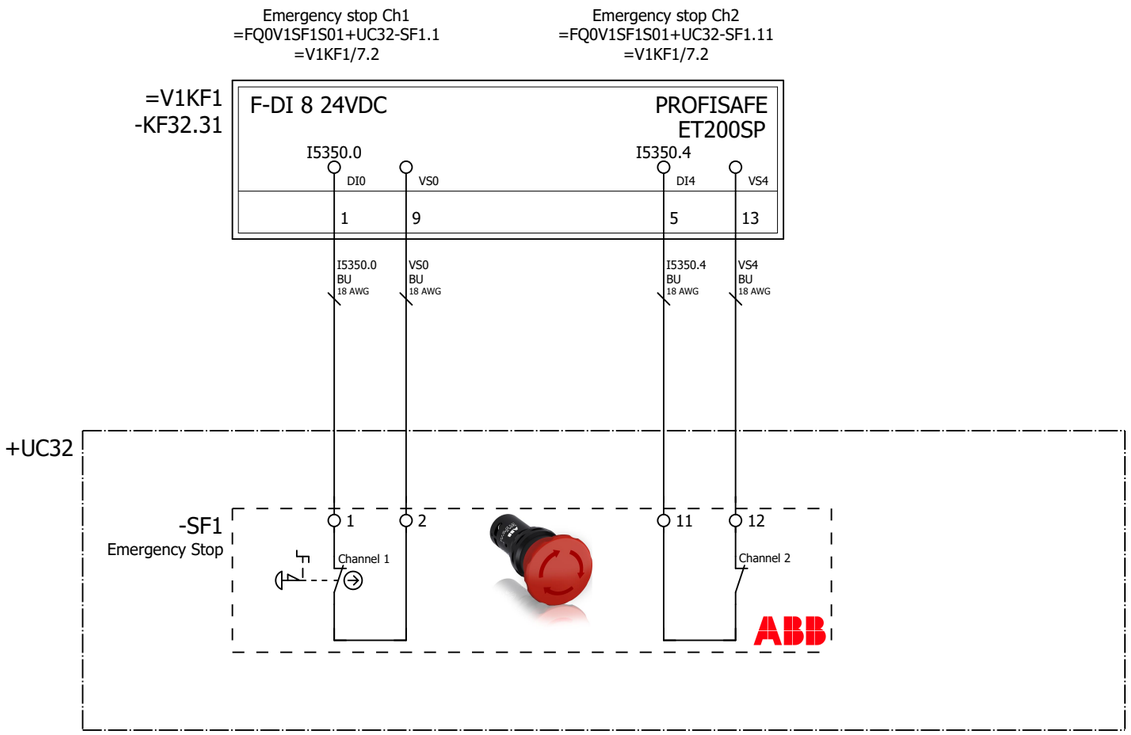

&EFA=FQ99V1+V1/7

=KF0FQ0+UC31/1

			Date	1/17/2023	Volvo Trucks North America	Valiant TMS	Emergency stop +V1SF1S01UC32	Drawing name: =2V09&EFS-EL	= FQ0V1SF1S01
			Ed.	MKLEPADLO					+ V1UC32
			Appr		P6700 Bodyside LH - Robot Cell 2V09	Scale 1:1		Document type: EFS	Project nr: 22-16150
Modification	Date	Name	Original		Replacement of	Replaced by			Page 1 / 1533

0	1	2	3	4	5	6	7	8	9

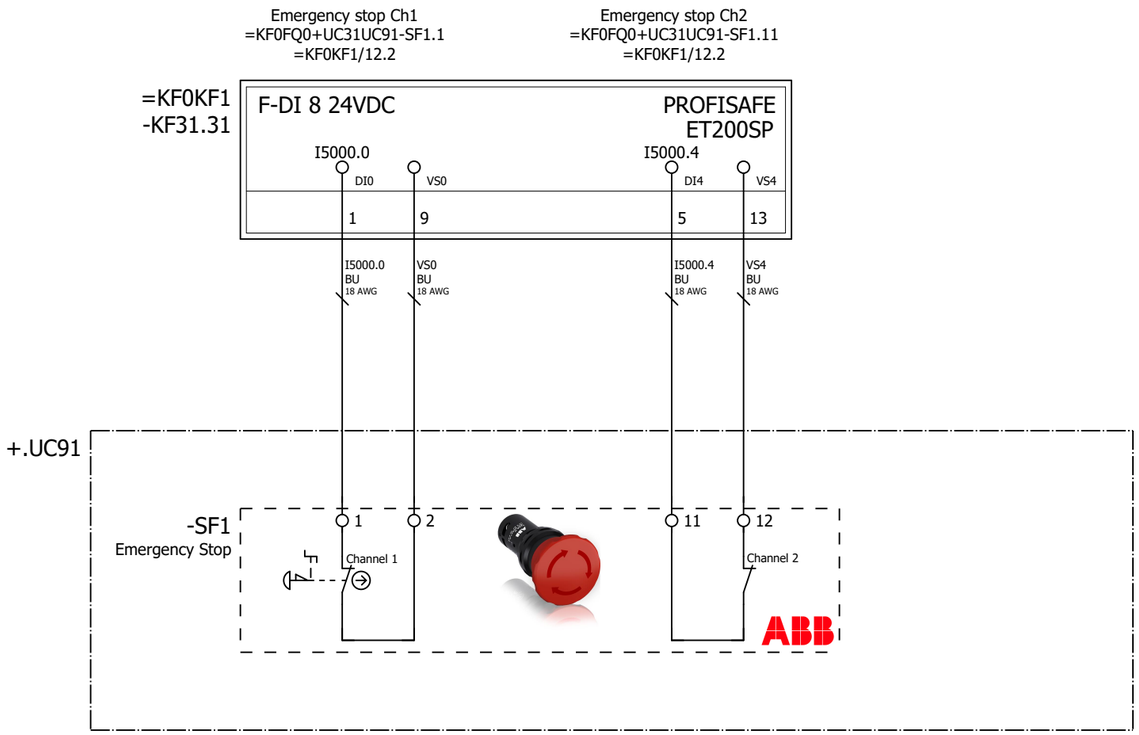

=FQ0V1SF1S01+V1UC32/1

=KF0KF1/1

			Date	1/17/2023	Volvo Trucks North America	Valiant TMS	Operating box UC91 MOP	Drawing name: =2V09&EFS-EL	= KF0FQ0
			Ed.	MKLEPADLO					+ UC31
			Appr		P6700 Bodyside LH - Robot Cell 2V09			Document type: EFS	Project nr: 22-16150
Modification	Date	Name	Original		Replacement of / Replaced by	Scale 1:1			Page 1 / 1533

0	1	2	3	4	5	6	7	8	9

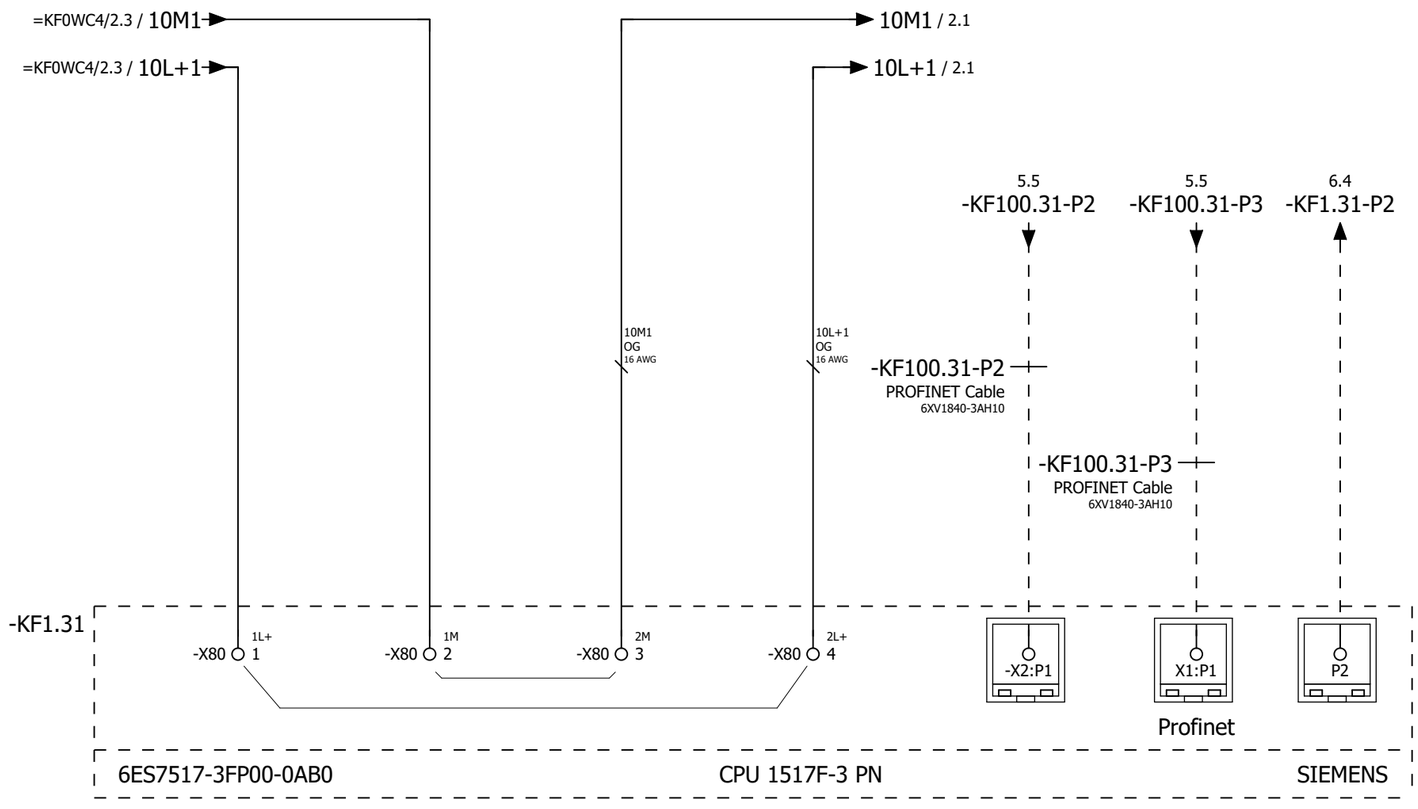

=KF0FQ0/1

2

			Date	1/17/2023	Volvo Trucks North America	Valiant TMS	CPU 1517-F-3PN, Failsafe	Drawing name: =2V09&EFS-EL	= KF0KF1
			Ed.	MKLEPADLO					+ UC31
			Appr		P6700 Bodyside LH - Robot Cell 2V09	Scale 1:1		Document type: EFS	Project nr: 22-16150
Modification	Date	Name	Original		Replacement of	Replaced by			Page 1 / 1533

0	1	2	3	4	5	6	7	8	9

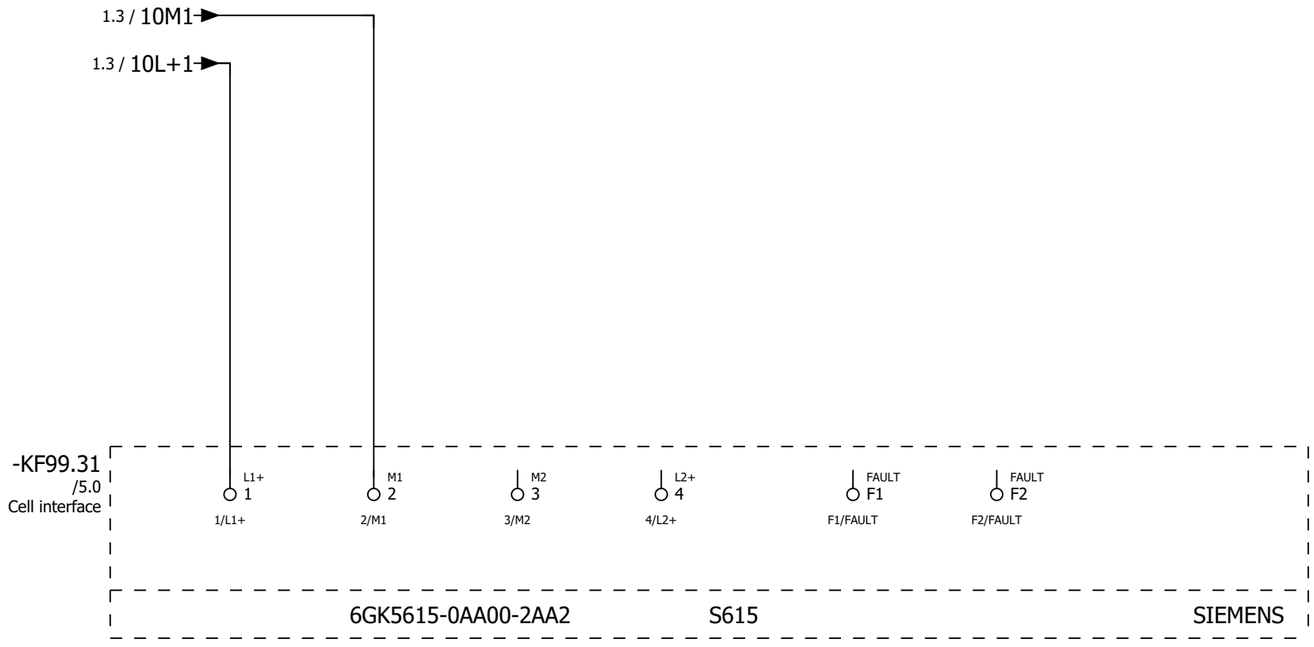

			Date	1/17/2023	Volvo Trucks North America	Valiant TMS	Cell interface S615	Drawing name: =2V09&EFS-EL	= KF0KF1	
			Ed.	MKLEPADLO					+ UC31	
			Appr		P6700 Bodyside LH - Robot Cell 2V09	Scale 1:1		Document type: EFS	Project nr: 22-16150	Page 2 / 1533
Modification	Date	Name	Original		Replacement of	Replaced by				

0	1	2	3	4	5	6	7	8	9

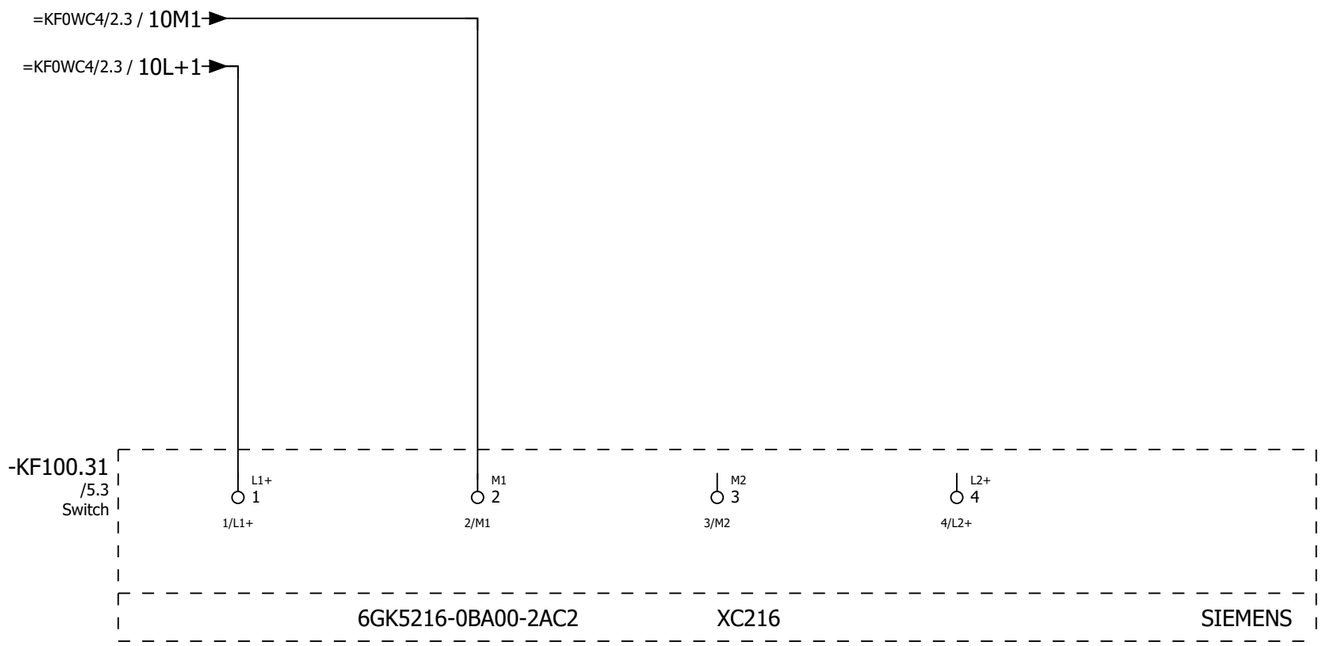

2 4

			Date	1/17/2023	Volvo Trucks North America	Valiant TMS	Switch, Scalance XC216	Drawing name: =2V09&EFS-EL	= KF0KF1	
			Ed.	MKLEPADLO					+ UC31	
			Appr		P6700 Bodyside LH - Robot Cell 2V09			Document type: EFS	Project nr: 22-16150	Page 3
Modification	Date	Name	Original		Replacement of / Replaced by	Scale 1:1				1533

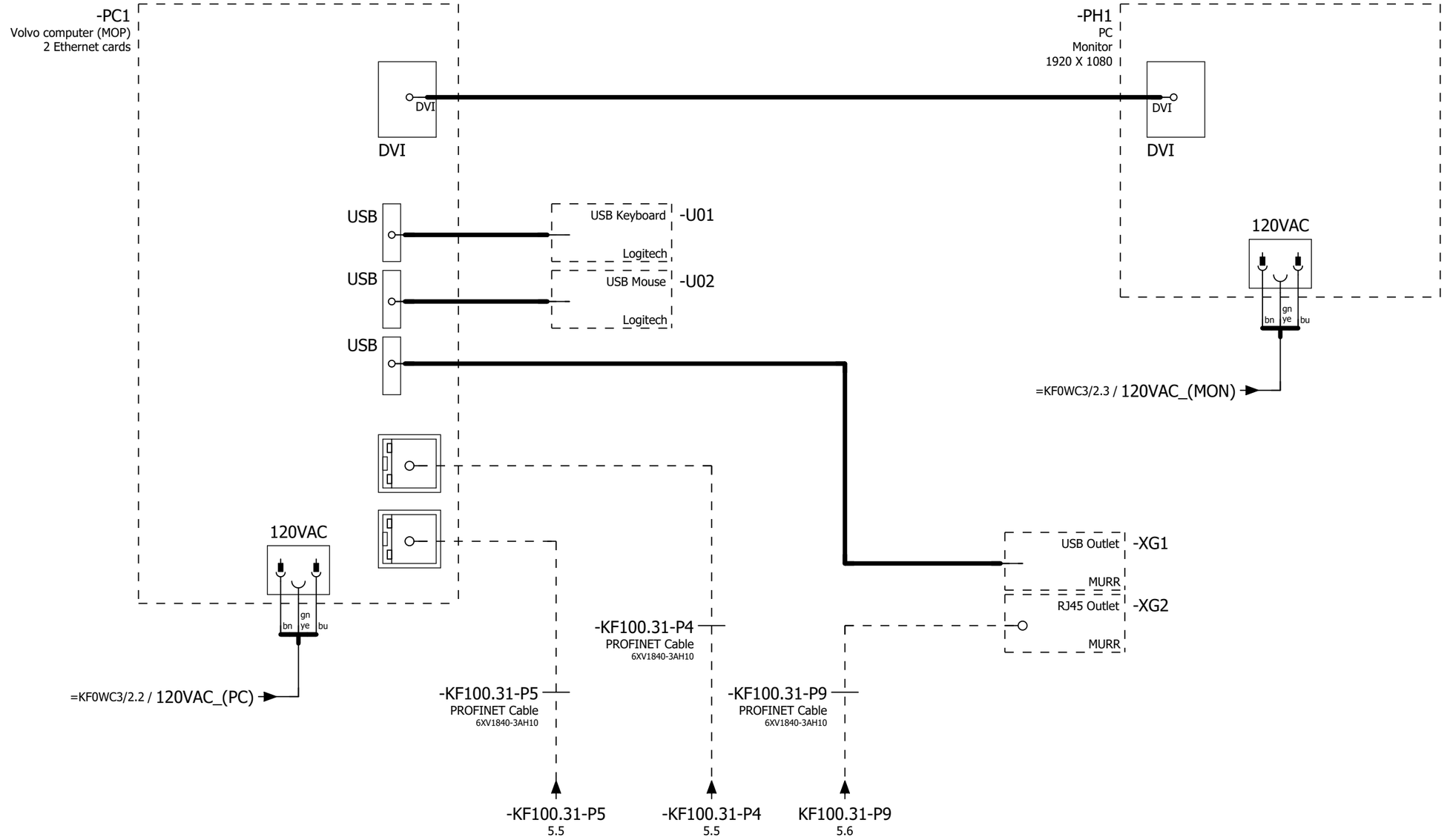

3 5

			Date	1/17/2023	Volvo Trucks North America	Valiant TMS	MOP, PC	Drawing name: =2V09&EFS-EL	= KF0KF1	
			Ed.	MKLEPADLO					+ UC31	
			Appr		P6700 Bodyside LH - Robot Cell 2V09			Document type: EFS	Project nr: 22-16150	Page 4
Modification	Date	Name	Original		Replacement of / Replaced by	Scale 1:1				1533

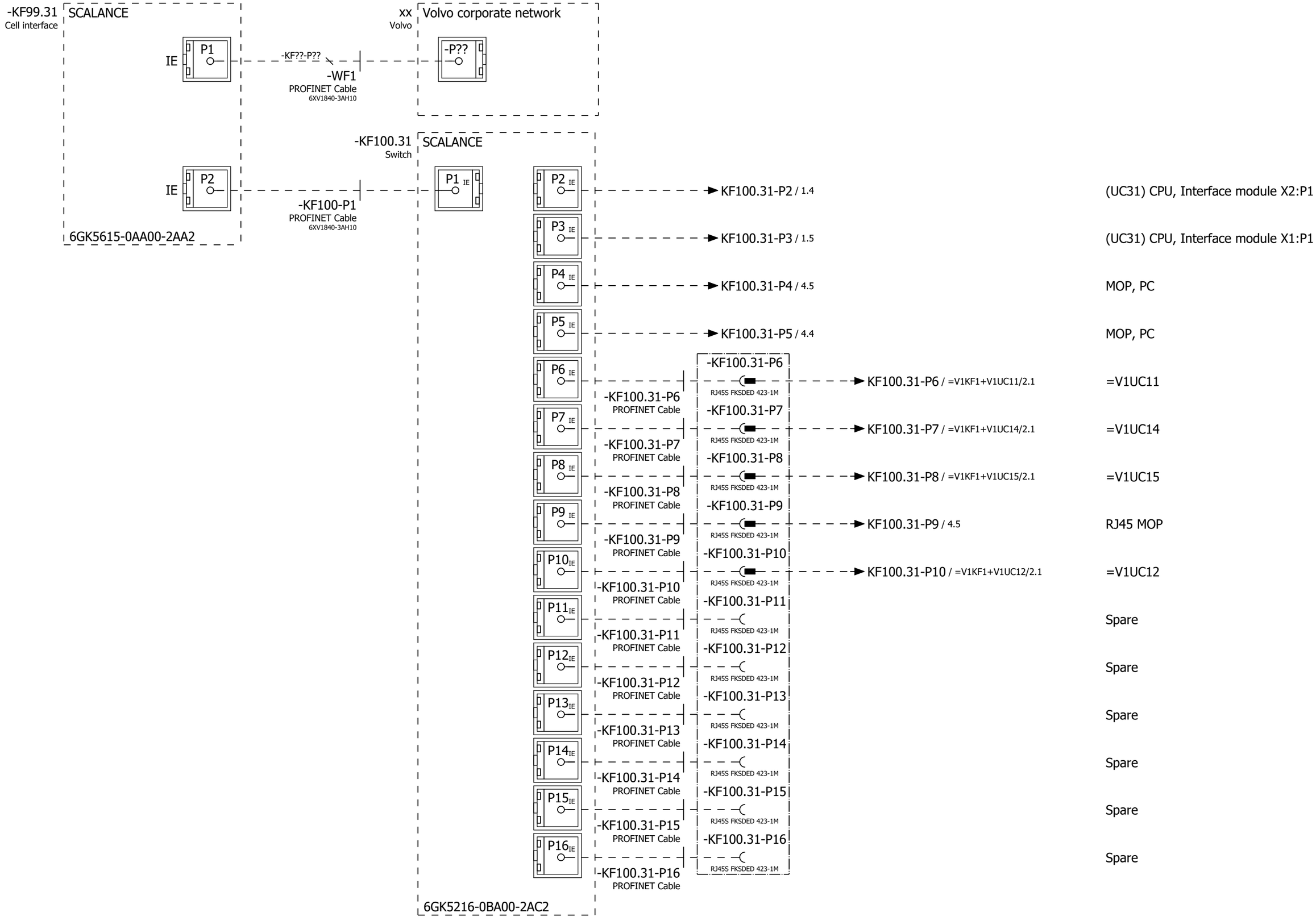

			Date	1/17/2023	Volvo Trucks North America	Valiant TMS	Network overview	Drawing name: =2V09&EFS-EL	= KF0KF1
			Ed.	MKLEPADLO					+ UC31
			Appr		P6700 Bodyside LH - Robot Cell 2V09			Document type: EFS	Project nr: 22-16150
Modification	Date	Name	Original		Replacement of	Replaced by	Scale 1:1		Page 5 / 1533

0	1	2	3	4	5	6	7	8	9

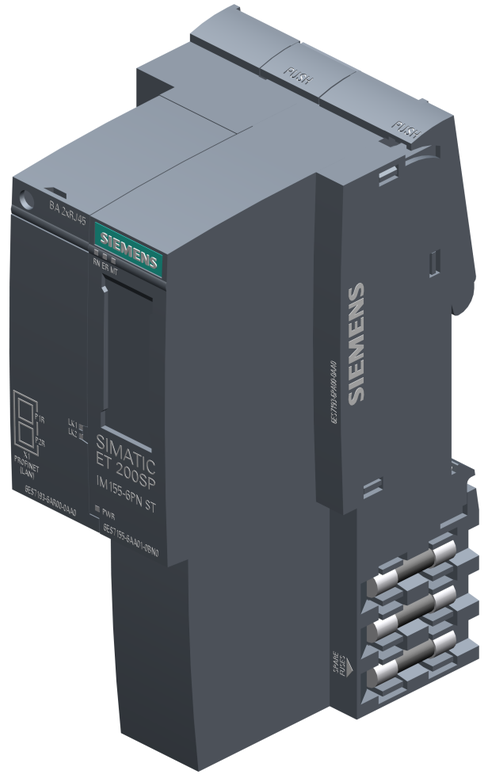

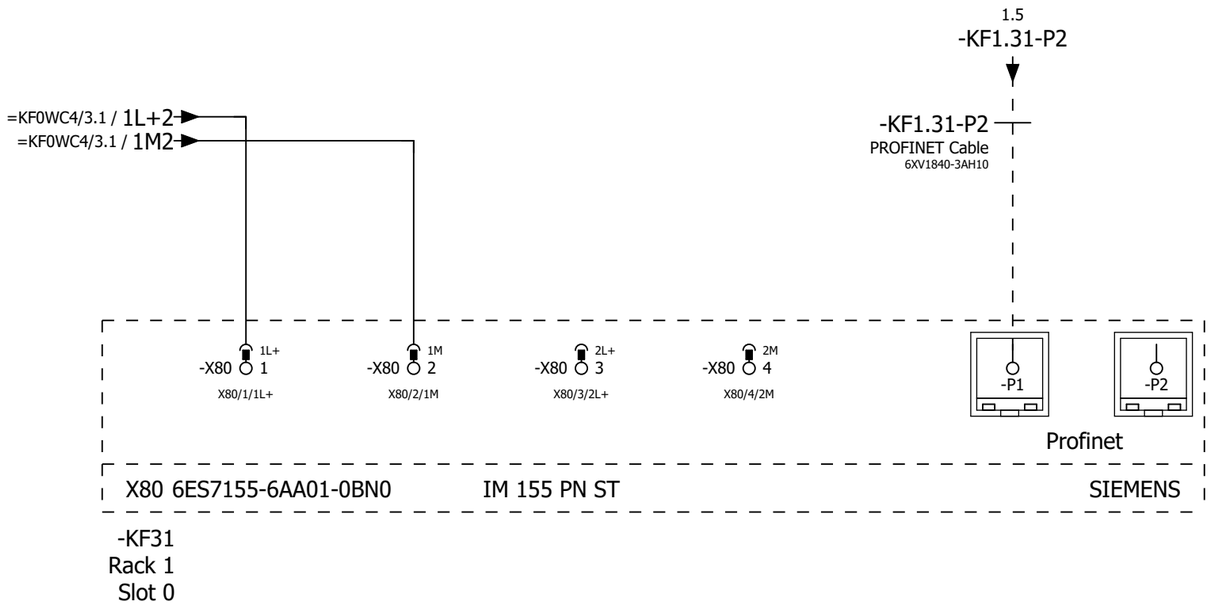

5 7

			Date	1/17/2023	Volvo Trucks North America	Valiant TMS	IM 155 PN	Drawing name: =2V09&EFS-EL	= KF0KF1
			Ed.	MKLEPADLO					+ UC31
			Appr		P6700 Bodyside LH - Robot Cell 2V09			Document type: EFS	Project nr: 22-16150
Modification	Date	Name	Original		Replacement of	Replaced by	Scale 1:1		Page 6 / 1533

0	1	2	3	4	5	6	7	8	9

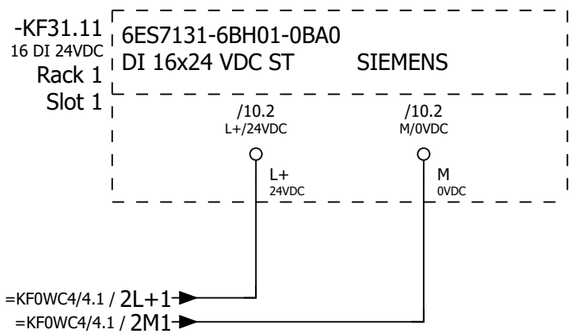

6

8

			Date	1/17/2023	Volvo Trucks North America	Valiant TMS	ET200S Wiring DI	Drawing name: =2V09&EFS-EL	= KF0KF1	
			Ed.	MKLEPADLO					+ UC31	
			Appr		P6700 Bodyside LH - Robot Cell 2V09	Scale 1:1		Document type: EFS	Project nr: 22-16150	Page 7 / 1533
Modification	Date	Name	Original		Replacement of	Replaced by				

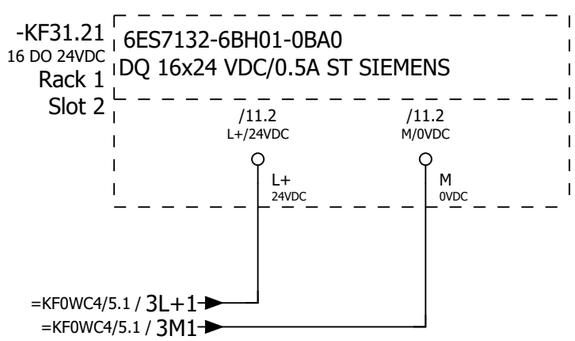

			Date	1/17/2023	Volvo Trucks North America		Valiant TMS	ET200S Wiring DO	Drawing name: =2V09&EFS-EL	= KF0KF1	
			Ed.	MKLEPADLO						+ UC31	
			Appr		P6700 Bodyside LH - Robot Cell 2V09		Scale 1:1		Document type: EFS	Project nr: 22-16150	Page 8 / 1533
Modification	Date	Name	Original		Replacement of	Replaced by					

0	1	2	3	4	5	6	7	8	9

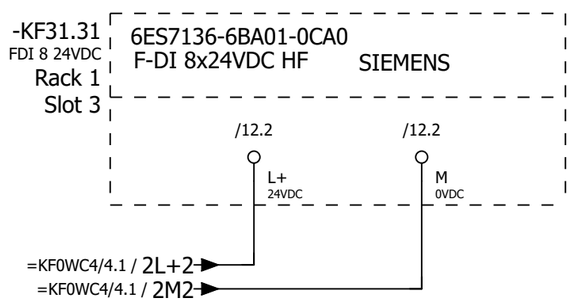

8

10

			Date	1/17/2023	Volvo Trucks North America		Valiant TMS	ET200S Wiring F-DI	Drawing name: =2V09&EFS-EL	= KF0KF1	
			Ed.	MKLEPADLO						+ UC31	
			Appr		P6700 Bodyside LH - Robot Cell 2V09				Document type: EFS	Project nr: 22-16150	Page 9
Modification	Date	Name	Original		Replacement of	Replaced by	Scale 1:1				1533

-KF31.11

ET 200SP SIEMENS
DI 16x24 VDC ST

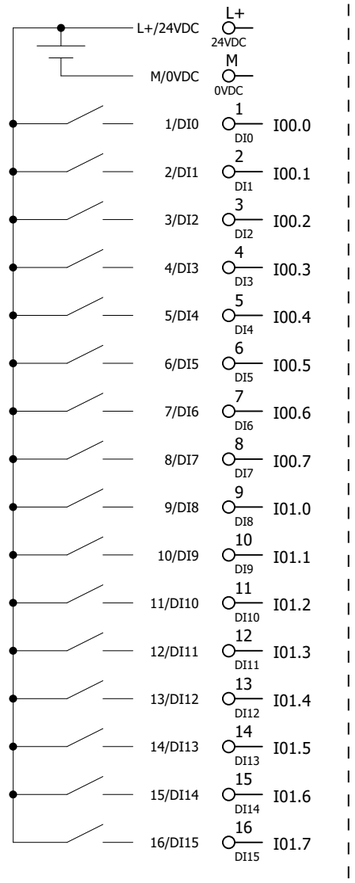

	/7.1			
	/7.2			
I00.0	=KF0SF1/2.2	=KF0SF1+UC31UC92-SF1_I	Emergency stop tripped/reset PB	
I00.1	=KF0SF1/2.5	=KF0SF1+UC31UC92-SF2_I	Enable power PB	
I00.2	=KF0SF1/2.7	=KF0SF1+UC31UC92-SF3_I	Start auto PB	
I00.3	=KF0SF1/2.7	=KF0SF1+UC31UC92-SF4_I	Man/Auto Sel Switch	
I00.4	=KF0SF1/1.5	=KF0SF1+UC31UC91-SF5	Set PB	
I00.5	=KF0SF1/1.2	=KF0SF1+UC31UC91-SF6	Reset PB	
I00.6		I00.6	Spare	
I00.7		I00.7	Spare	
I01.0	=KF0WC4/2.6	=K0WC4-GA1.1	UPS Battery	
I01.1	=KF0WC4/2.7	=K0WC4-GA1.2	UPS Alarm	
I01.2	=KF0WC3/3.2	=KF0WC3+UC31-FC1	Monitoring 120 VAC	
I01.3	=KF0WC3/3.4	=KF0WC3+UC31-FC2	Monitoring 120 VAC	
I01.4	=KF0WC4/1.3	=KF0WC4+UC31-FC11_I	Monitoring 24 VDC	
I01.5		I01.5	Spare	
I01.6		I01.6	Spare	
I01.7		I01.7	Spare	

6ES7131-6BH01-0BA0

			Date	1/17/2023	Volvo Trucks North America	Valiant TMS	ET200S Cross-reference Input module	Drawing name: =2V09&EFS-EL	= KF0KF1	
			Ed.	MKLEPADLO					+ UC31	
			Appr		P6700 Bodyside LH - Robot Cell 2V09			Document type: EFS	Project nr: 22-16150	Page 10
Modification	Date	Name	Original		Replacement of	Replaced by	Scale 1:1			1533

0	1	2	3	4	5	6	7	8	9

-KF31.21

ET 200SP SIEMENS
DQ 16x24 VDC/0.5A ST

L+/24VDC	L+ 24VDC		/8.1		
M/0VDC	M 0VDC		/8.2		
1/DQ0	1 DQ0	Q00.0	=KF0SF1/2.3	=KF0SF1+UC31UC92-PF1_Q	Emergency stop tripped/reset LT
2/DQ1	2 DQ1	Q00.1	=KF0SF1/2.8	=KF0SF1+UC31UC92-PF3_Q	Start auto LT
3/DQ2	3 DQ2	Q00.2		Q00.2	Spare
4/DQ3	4 DQ3	Q00.3		Q00.3	Spare
5/DQ4	5 DQ4	Q00.4		Q00.4	Spare
6/DQ5	6 DQ5	Q00.5		Q00.5	Spare
7/DQ6	7 DQ6	Q00.6		Q00.6	Spare
8/DQ7	8 DQ7	Q00.7		Q00.7	Spare
9/DQ8	9 DQ8	Q01.0	=KF0PZ1/1.3	=KF0PZ1+UC31-PF1_1	Indication column Green
10/DQ9	10 DQ9	Q01.1	=KF0PZ1/1.3	=KF0PZ1+UC31-PF1_2	Indication column Red
11/DQ10	11 DQ10	Q01.2	=KF0PZ1/1.4	=KF0PZ1+UC31-PF1_3	Indication column Siren
12/DQ11	12 DQ11	Q01.3		Q01.3	Spare
13/DQ12	13 DQ12	Q01.4		Q01.4	Spare
14/DQ13	14 DQ13	Q01.5		Q01.5	Spare
15/DQ14	15 DQ14	Q01.6		Q01.6	Spare
16/DQ15	16 DQ15	Q01.7		Q01.7	Spare

6ES7132-6BH01-0BA0

			Date	1/17/2023	Volvo Trucks North America	Valiant TMS	ET200S Cross-reference Output module	Drawing name: =2V09&EFS-EL	= KF0KF1	
			Ed.	MKLEPADLO					+ UC31	
			Appr		P6700 Bodyside LH - Robot Cell 2V09	Scale 1:1		Document type: EFS	Project nr: 22-16150	Page 11
Modification	Date	Name	Original		Replacement of	Replaced by				1533

0	1	2	3	4	5	6	7	8	9

-KF31.31
/9.0

ET 200SP SIEMENS
F-DI 8x24VDC HF

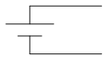

	L+ 24VDC	/9.1			
	M 0VDC	/9.2			
I5000.0	1 DI0	=KF0FQ0/1.3	=KF0FQ0+UC31UC91-SF1.1	Emergency stop Ch1	
	9 VS0	=KF0FQ0/1.3			
I5000.1	2 DI1		I5000.1	Spare	
	10 VS1				
I5000.2	3 DI2		I5000.2	Spare	
	11 VS2				
I5000.3	4 DI3		I5000.3	Spare	
	12 VS3				
I5000.4	5 DI4	=KF0FQ0/1.4	=KF0FQ0+UC31UC91-SF1.11	Emergency stop Ch2	
	13 VS4	=KF0FQ0/1.4			
I5000.5	6 DI5		I5000.5	Spare	
	14 VS5				
I5000.6	7 DI6		I5000.6	Spare	
	15 VS6				
I5000.7	8 DI7		I5000.7	Spare	
	16 VS7				

6ES7136-6BA01-0CA0

			Date	1/17/2023	Volvo Trucks North America		Valiant TMS	ET200S Cross-reference Safe input module	Drawing name: =2V09&EFS-EL	= KF0KF1	
			Ed.	MKLEPADLO						+ UC31	
			Appr		P6700 Bodyside LH - Robot Cell 2V09		Scale 1:1		Document type: EFS	Project nr: 22-16150	Page 12 / 1533
Modification	Date	Name	Original		Replacement of	Replaced by					

0	1	2	3	4	5	6	7	8	9

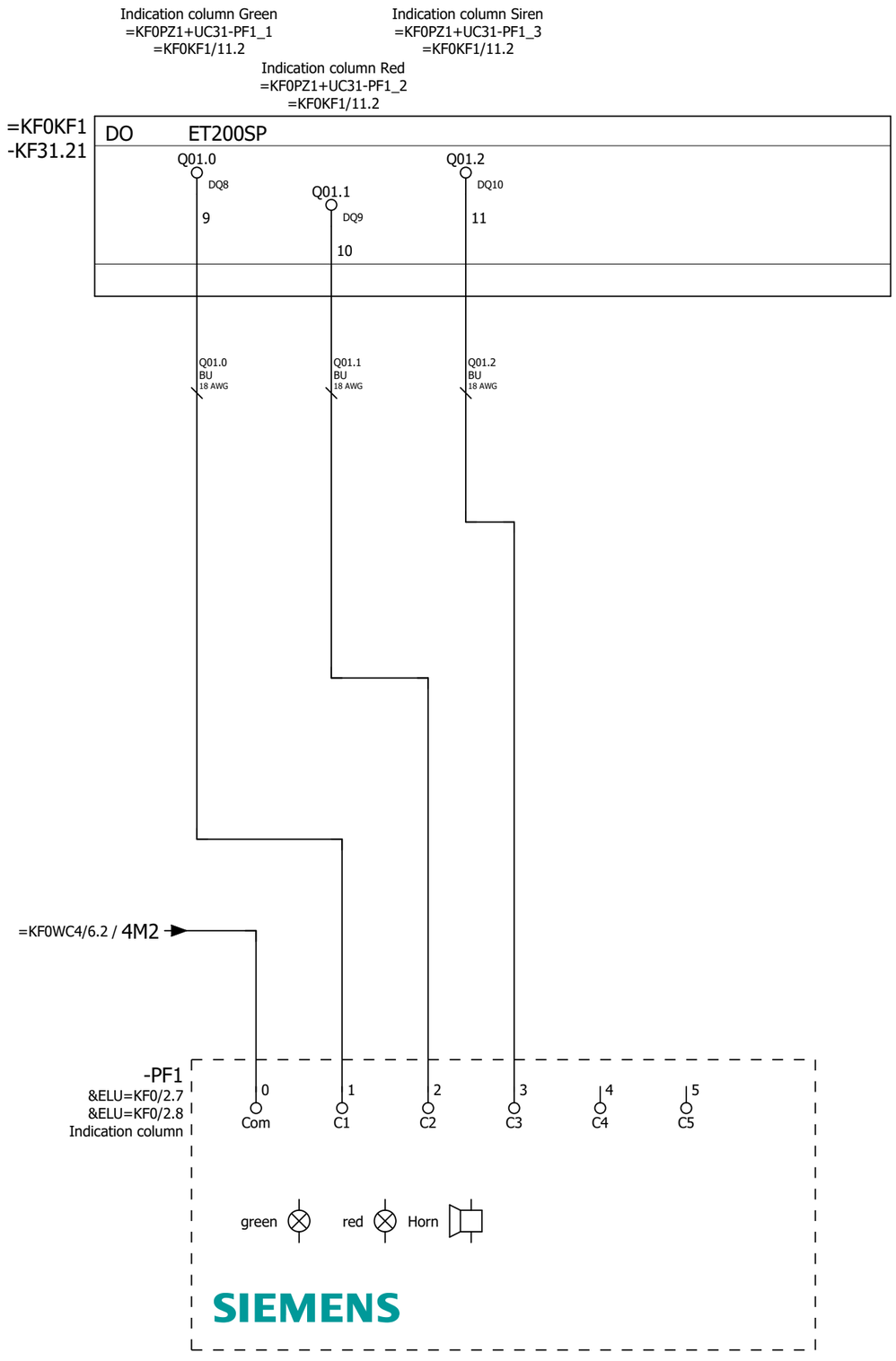

=KF0KF1/12

=KF0SF1/1

			Date	1/17/2023	Volvo Trucks North America		Valiant TMS	Indication column	Drawing name: =2V09&EFS-EL	= KF0PZ1
			Ed.	MKLEPADLO						+ UC31
			Appr		P6700 Bodyside LH - Robot Cell 2V09				Document type: EFS	Project nr: 22-16150
Modification	Date	Name	Original		Replacement of	Replaced by	Scale 1:1			Page 1 / 1533

Reset PB
=KF0SF1+UC31UC91-SF6
=KF0KF1/10.2

DI	ET200SP
I00.5 DI5	
6	

=KF0KF1
-KF31.11

I00.5
BU
18 AWG

Set PB
=KF0SF1+UC31UC91-SF5
=KF0KF1/10.2

DI	ET200SP
I00.4 DI4	
5	

=KF0KF1
-KF31.11

I00.4
BU
18 AWG

+.UC91

-SF6
&ELU=KF0/3.0
&ELU=KF0/3.1
CP1-10Y-20
Reset PB

1SFA619100R1023

-SF5
&ELU=KF0/3.0
CP1-10G-20
Set PB

1SFA619100R1022

=KF0WC4/6.2 / 4L+2

=KF0PZ1/1

2

			Date	1/17/2023	Volvo Trucks North America	Valiant TMS	Operating box UC91 MOP	Drawing name: =2V09&EFS-EL	= KF0SF1
			Ed.	MKLEPADLO					+ UC31
			Appr		P6700 Bodyside LH - Robot Cell 2V09	Scale 1:1		Document type: EFS	Project nr: 22-16150	Page 1
Modification	Date	Name	Original		Replacement of	Replaced by				1533

Emergency stop
tripped/reset PB
=KF0SF1+UC31UC92-SF1_I
=KF0KF1/10.2

Emergency stop
tripped/reset LT
=KF0SF1+UC31UC92-PF1_Q
=KF0KF1/11.2

Enable power PB
=KF0SF1+UC31UC92-SF2_I
=KF0KF1/10.2

Start auto PB
=KF0SF1+UC31UC92-SF3_I
=KF0KF1/10.2

Start auto LT
=KF0SF1+UC31UC92-PF3_Q
=KF0KF1/11.2

DI ET200SP
I00.0
DI0
1
=KF0KF1
-KF31.11
I00.0
BU
18 AWG

DO ET200SP
Q00.0
DQ0
1
=KF0KF1
-KF31.21
Q00.0
BU
18 AWG

DI ET200SP
I00.1
DI1
2
=KF0KF1
-KF31.11
I00.1
BU
18 AWG

DI ET200SP
I00.2
DI2
3
=KF0KF1
-KF31.11
I00.2
BU
18 AWG

DO ET200SP
Q00.1
DQ1
2
=KF0KF1
-KF31.21
Q00.1
BU
18 AWG

+.UC92

-SF1/PF1
&ELU=KF0/3.7
CP1-11R-10
Emergency stop
tripped/reset PBLT
4
E
3
1SFA619100R1111
x1
Red
x2

-SF2
&ELU=KF0/3.7
CP1-10B-20
Enable power PB
4
E
3
1SFA619100R1026
14
13

-SF3/PF3
&ELU=KF0/3.7
CP1-11C-10
Start auto PBLT
4
E
3
1SFA619100R1118
x1
White
x2

=KF0WC4/6.1 / 4L+2
=KF0WC4/6.1 / 4M2

-SF4
&ELU=KF0/3.7
C2SS1-10B-10
Man/Auto Sel Sw.
3
4
1SFA619200R1016

I00.3
BU
18 AWG

=KF0KF1
-KF31.11
4
DI3
I00.3
DI ET200SP

Man/Auto Sel Switch
=KF0SF1+UC31UC92-SF4_I
=KF0KF1/10.2

1

=KF0WC3/1

			Date	1/17/2023	Volvo Trucks North America	Valiant TMS	Operating box UC92 MOP	Drawing name: =2V09&EFS-EL	= KF0SF1	
			Ed.	MKLEPADLO					+ UC31	
			Appr		P6700 Bodyside LH - Robot Cell 2V09	Scale 1:1		Document type: EFS	Project nr: 22-16150	Page 2 / 1533
Modification	Date	Name	Original		Replacement of	Replaced by				

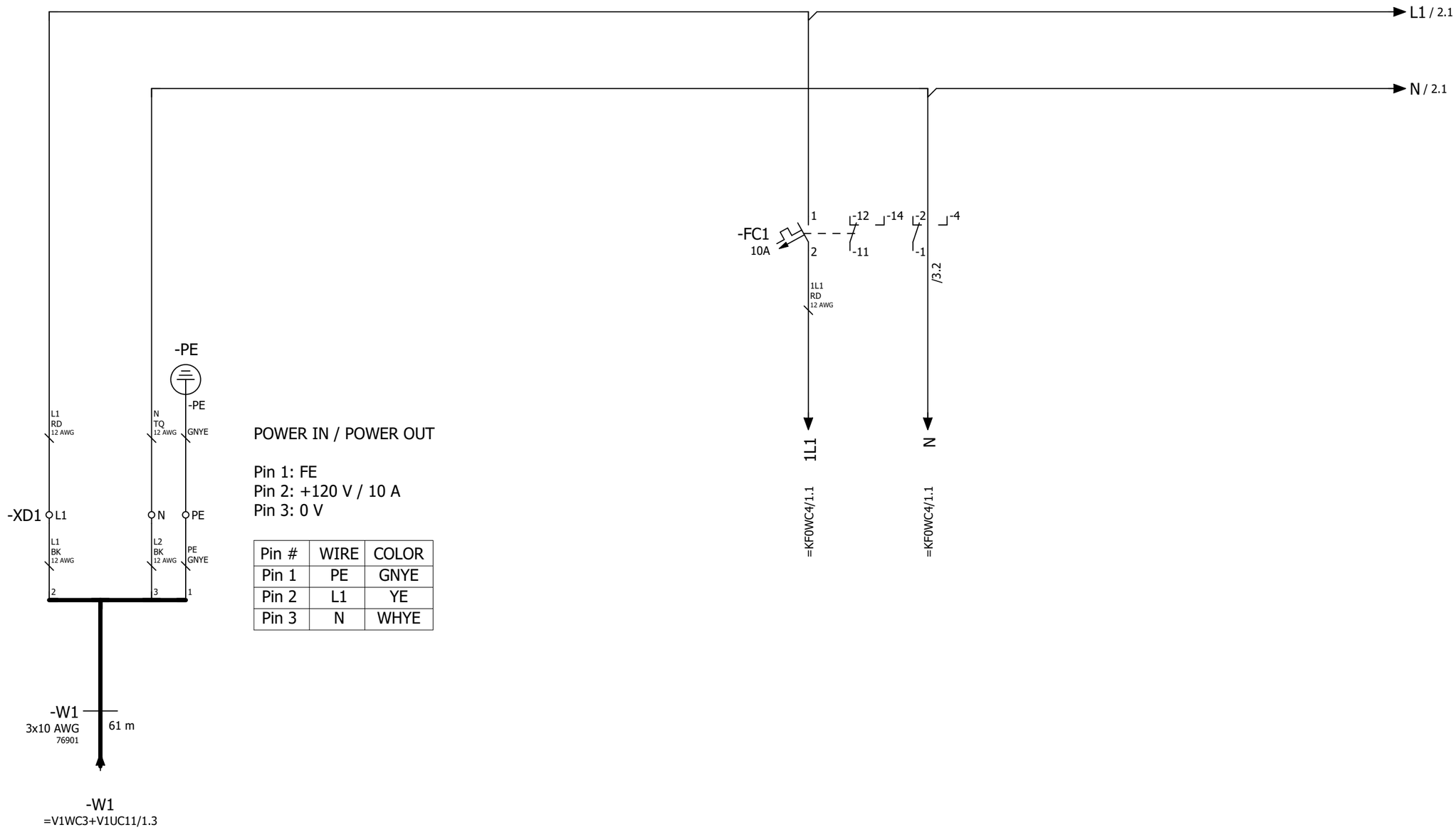

Power
Distribution
24 VDC
Power Supply

=KF0SF1/2

2

			Date	1/17/2023	Volvo Trucks North America		Valiant TMS	Incomming power supply 120 VAC	Drawing name: =2V09&EFS-EL	= KF0WC3
			Ed.	MKLEPADLO						+ UC31
			Appr		P6700 Bodyside LH - Robot Cell 2V09				Document type: EFS	Project nr: 22-16150
Modification	Date	Name	Original		Replacement of	Replaced by	Scale 1:1			Page 1 / 1533

0	1	2	3	4	5	6	7	8	9

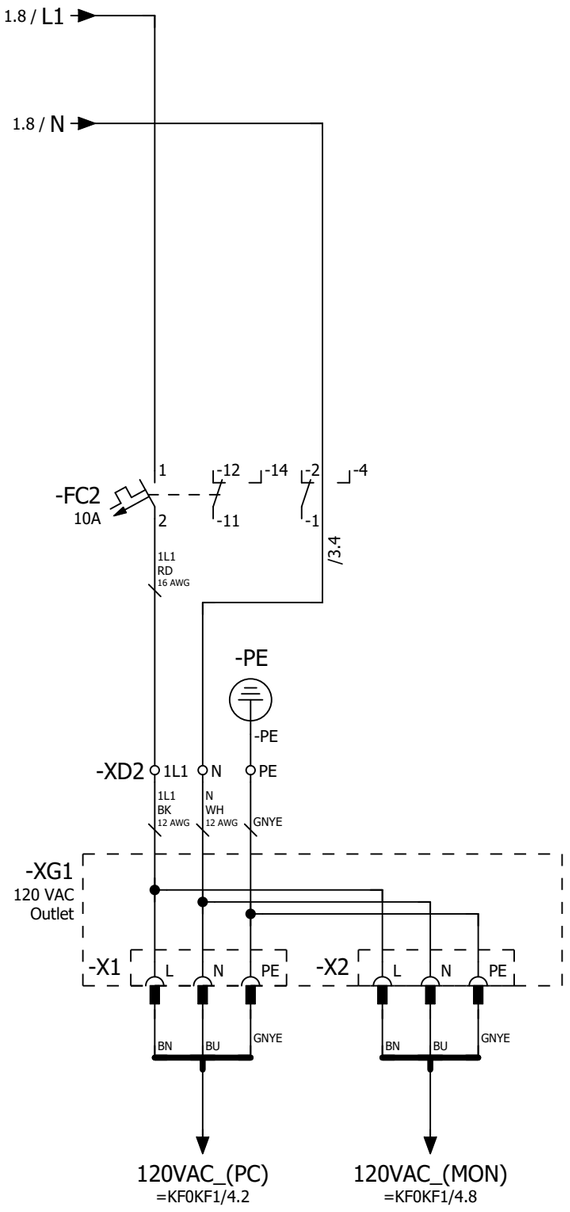

1

3

			Date	1/17/2023	Volvo Trucks North America		Valiant TMS	Outlet PLC 120VAC	Drawing name: =2V09&EFS-EL	= KF0WC3	
			Ed.	MKLEPADLO						+ UC31	
			Appr		P6700 Bodyside LH - Robot Cell 2V09				Document type: EFS	Project nr: 22-16150	Page 2
Modification	Date	Name	Original		Replacement of	Replaced by	Scale 1:1				1533

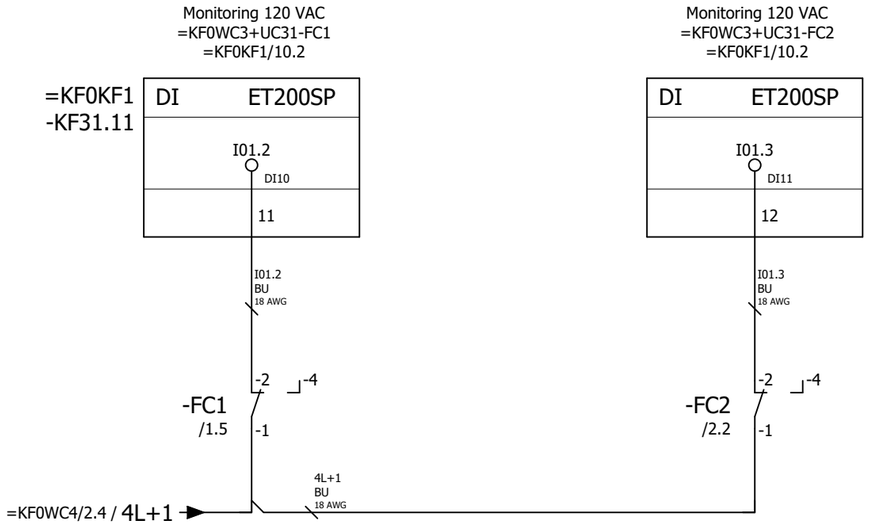

			Date	1/17/2023	Volvo Trucks North America	Valiant TMS	Monitoring 120VAC	Drawing name: =2V09&EFS-EL	= KF0WC3	
			Ed.	MKLEPADLO					+ UC31	
			Appr		P6700 Bodyside LH - Robot Cell 2V09			Document type: EFS	Project nr: 22-16150	Page 3
Modification	Date	Name	Original		Replacement of / Replaced by	Scale 1:1				1533

0	1	2	3	4	5	6	7	8	9

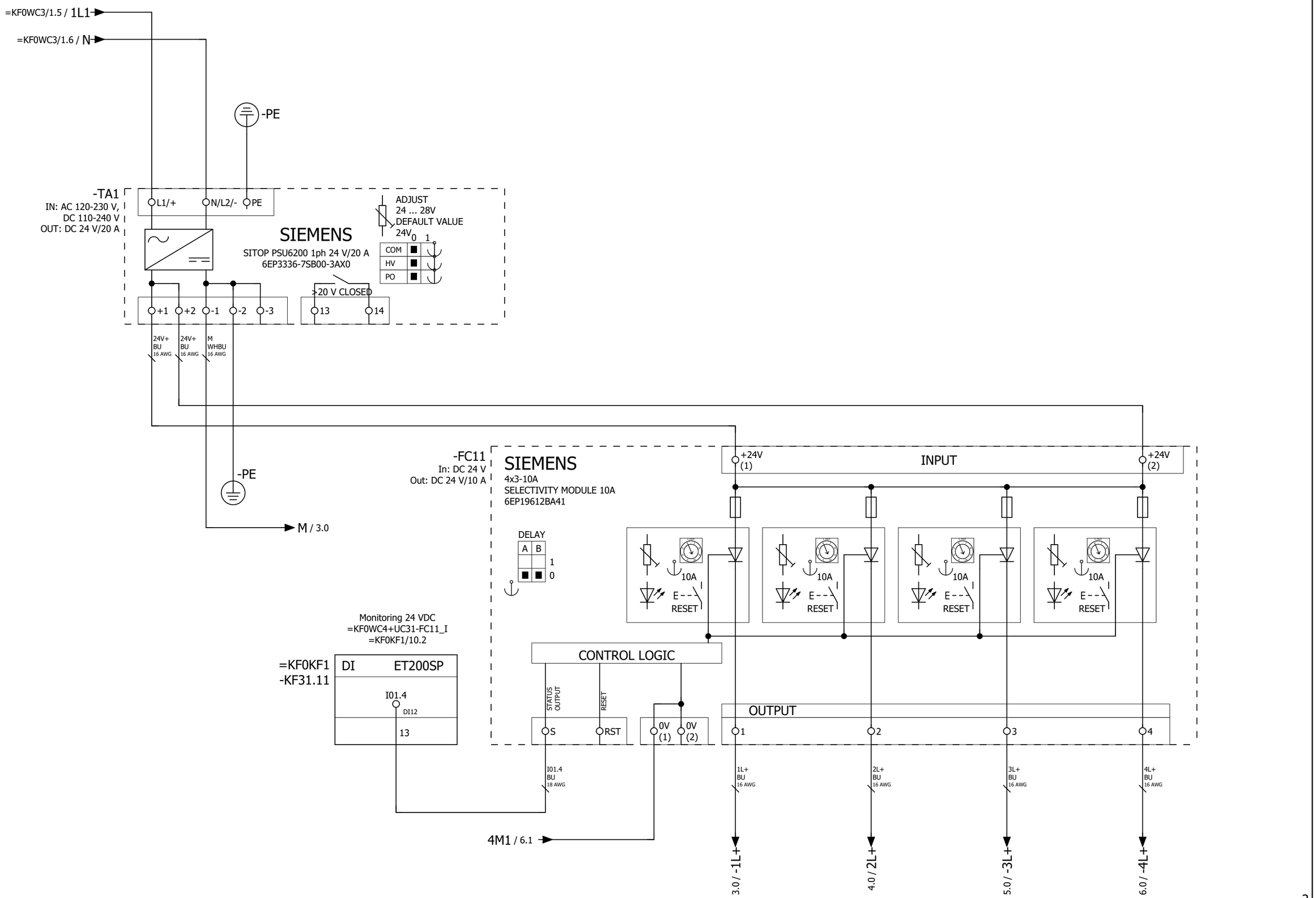

=KF0WC3/3

2

			Date	1/17/2023	Volvo Trucks North America	Valiant TMS	Power distribution 24VDC	Drawing name: =2V09&EFS-EL	= KF0WC4
			Ed.	MKLEPADLO					+ UC31
			Appr		P6700 Bodyside LH - Robot Cell 2V09	Scale 1:1		Document type: EFS	Project nr: 22-16150	Page 1
Modification	Date	Name	Original		Replacement of	Replaced by				1533

0	1	2	3	4	5	6	7	8	9

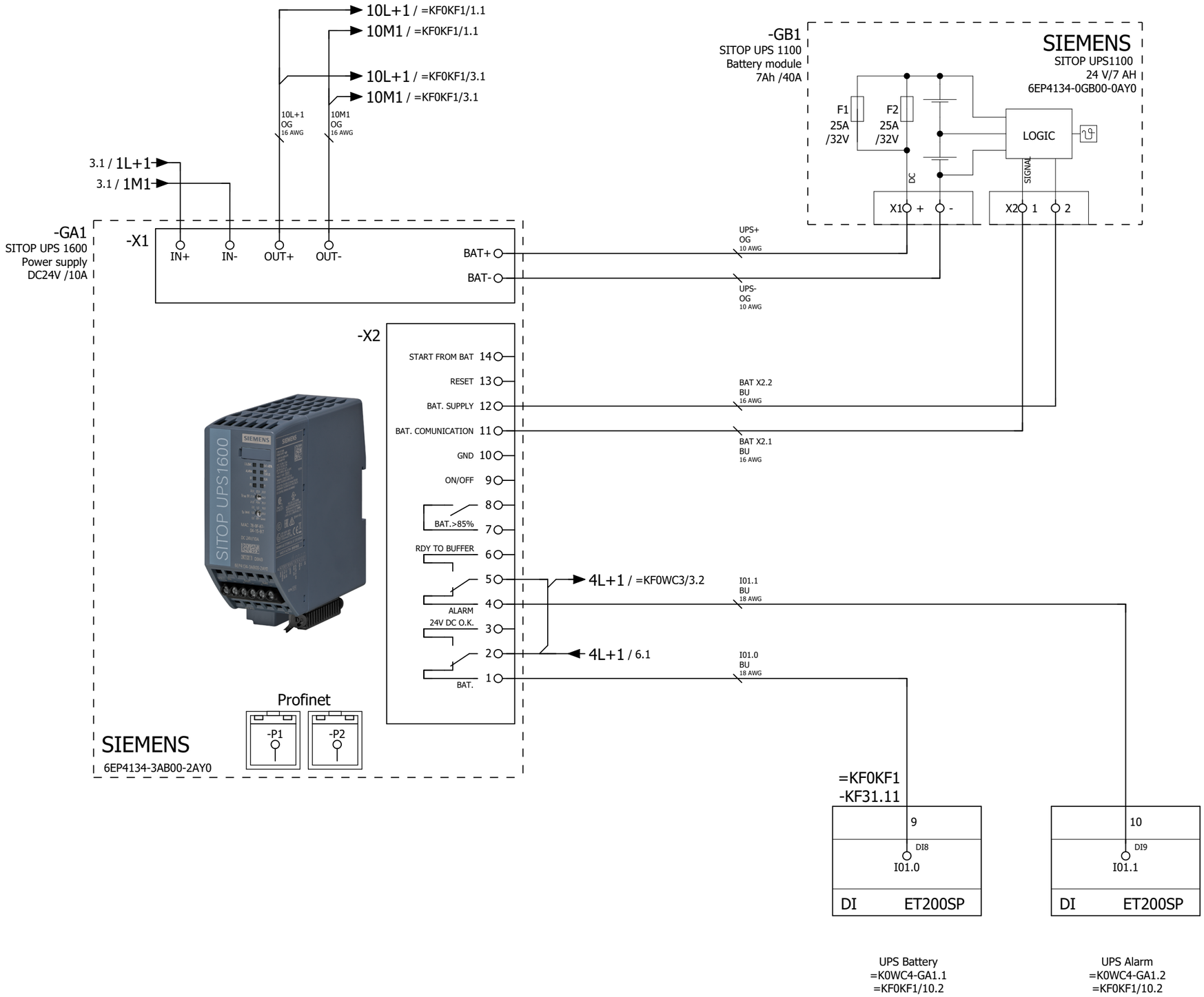

1 3

			Date	1/17/2023	Volvo Trucks North America		Valiant TMS	Power distribution, UPS	Drawing name: =2V09&EFS-EL	= KF0WC4	
			Ed.	MKLEPADLO						+ UC31	
			Appr		P6700 Bodyside LH - Robot Cell 2V09		Scale 1:1		Document type: EFS	Project nr: 22-16150	Page 2 / 1533
Modification	Date	Name	Original		Replacement of	Replaced by					

0	1	2	3	4	5	6	7	8	9

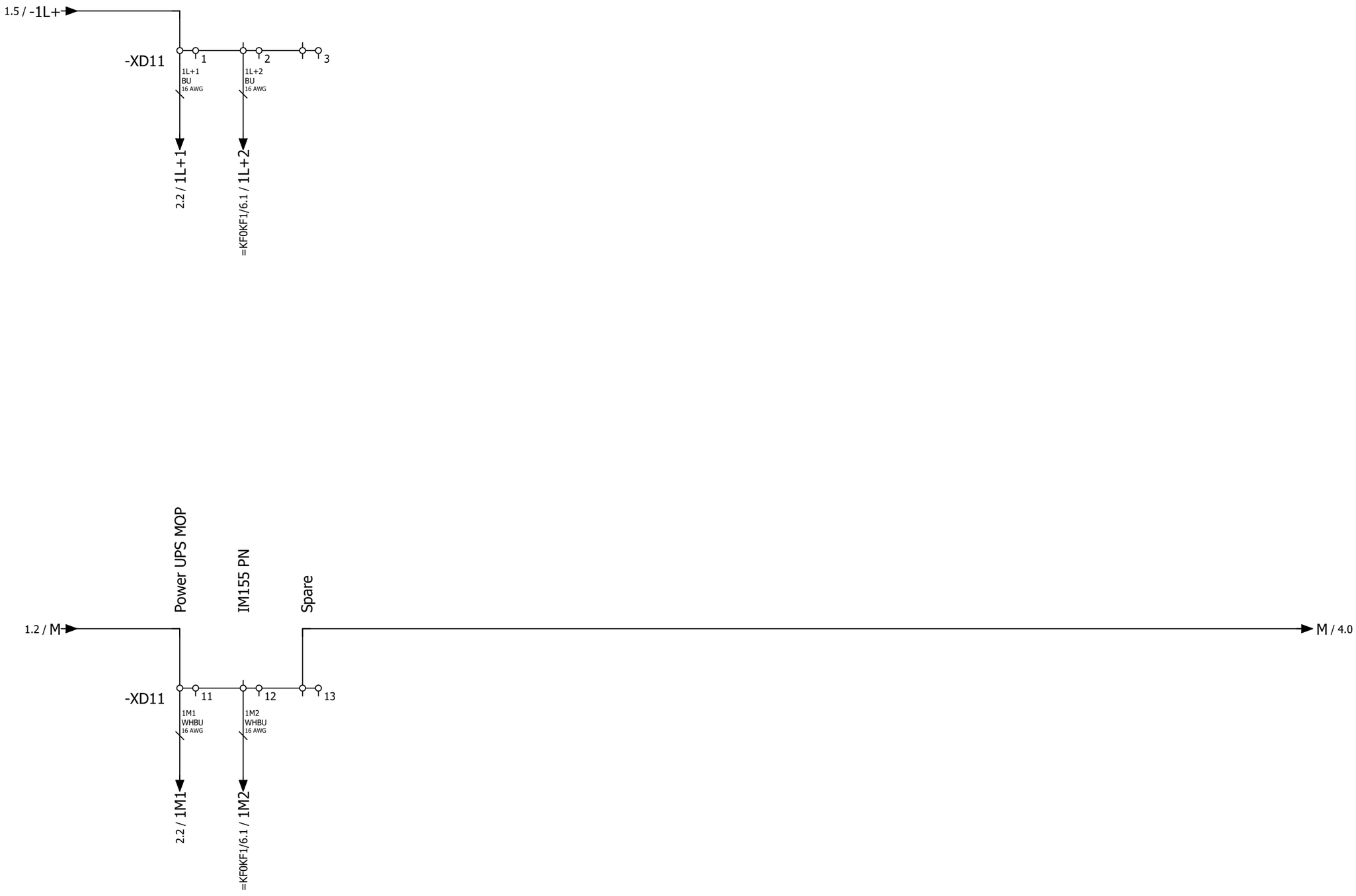

2									4
			Date	1/17/2023	Volvo Trucks North America	Valiant TMS	Power distribution 24VDC 1L+	Drawing name: =2V09&EFS-EL	= KF0WC4
			Ed.	MKLEPADLO					+ UC31
			Appr		P6700 Bodyside LH - Robot Cell 2V09	Scale 1:1		Document type: EFS	Project nr: 22-16150	Page 3
Modification	Date	Name	Original		Replacement of	Replaced by				1533

0	1	2	3	4	5	6	7	8	9

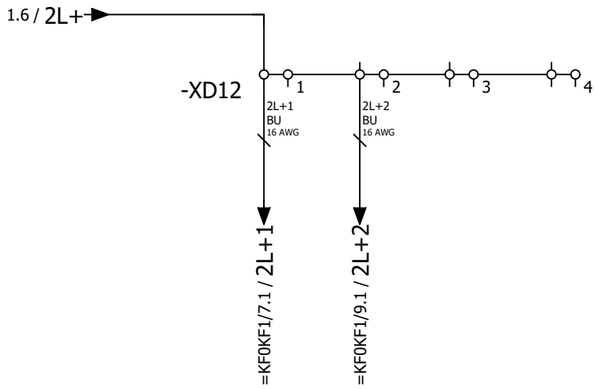

Power input cards (DI)

Power failsafe input cards (F-DI)

Spare

Spare

			Date	1/17/2023	Volvo Trucks North America	Valiant TMS	Power distribution 24VDC 2L+	Drawing name: =2V09&EFS-EL	= KF0WC4
			Ed.	MKLEPADLO					+ UC31
			Appr		P6700 Bodyside LH - Robot Cell 2V09	Scale 1:1		Document type: EFS	Project nr: 22-16150
Modification	Date	Name	Original		Replacement of	Replaced by			Page 4 / 1533

0	1	2	3	4	5	6	7	8	9

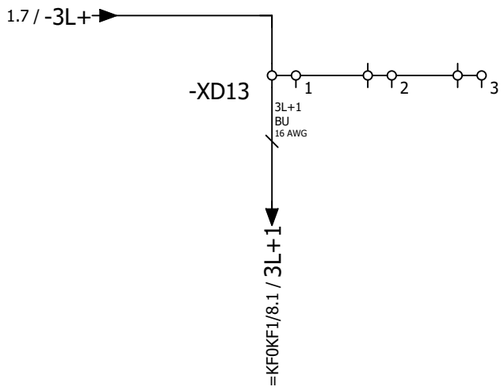

Output cards (DO)

Spare

Spare

4

6

			Date	1/17/2023	Volvo Trucks North America		Valiant TMS	Power distribution 24VDC 3L+	Drawing name: =2V09&EFS-EL	= KF0WC4
			Ed.	MKLEPADLO						+ UC31
			Appr		P6700 Bodyside LH - Robot Cell 2V09				Document type: EFS	Project nr: 22-16150
Modification	Date	Name	Original		Replacement of	Replaced by	Scale 1:1			Page 5 / 1533

0	1	2	3	4	5	6	7	8	9

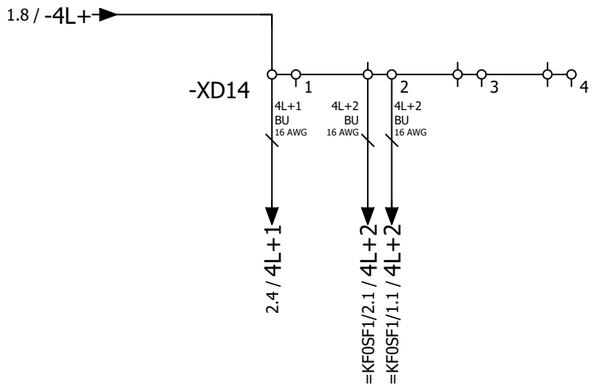

Signals inside cabinet

Signals operating boxes

Spare

Spare

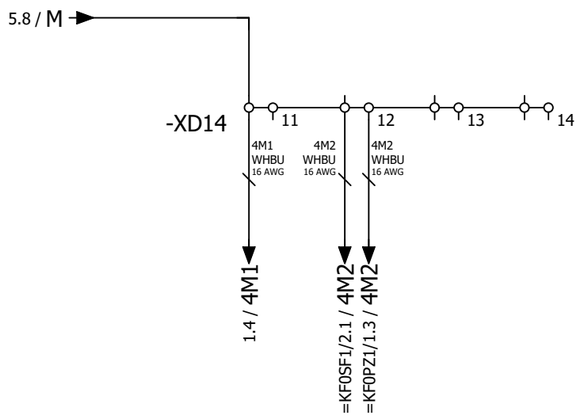

5

=KH0+KH0/1

			Date	1/17/2023	Volvo Trucks North America	Valiant TMS	Power distribution 24VDC 4L+	Drawing name: =2V09&EFS-EL	= KF0WC4
			Ed.	MKLEPADLO					+ UC31
			Appr		P6700 Bodyside LH - Robot Cell 2V09	Scale 1:1		Document type: EFS	Project nr: 22-16150
Modification	Date	Name	Original		Replacement of	Replaced by			Page 6 / 1533

0	1	2	3	4	5	6	7	8	9

=V1KF1+V1UC11

Monitoring Main AIR On
=KH0-BP1_I
=V1KF1+V1UC11/12.2

DI ET200SP

I57.1
DI9

10

=V1KF1
-KF11.14

I57.1
BUOG
16 AWG

=V1WC4+V1UC11/5.4 / 3L+7

=V1WC4+V1UC11/5.4 / 3M7

-KF11.14
10

bn wh bu bk

-W2
RKC 4.4T-10-RSC 4.4T/S3060
10m

BN WH BU BK

-W1-XD2
5-pin M12
Field Attachable
Connector

1-BN 4-BK 2-WH 3-BU

NEBS-L1G4-K-5-LE4
4x26AWG
5m

-W1

BN 26 AWG BK 26 AWG WH 26 AWG BU 26 AWG

-W1-XD1

1 2 3 4

1 2 3 4

BN +24V DC power supply
BK Output A
WH Output B
BU 0V DC

PNP NPN PNP NPN

p1

FESTO

-BP1

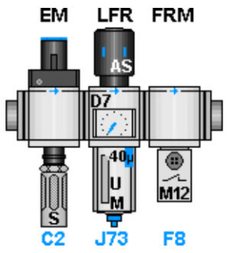

See drawing:
=2V09&MFS-PNEU

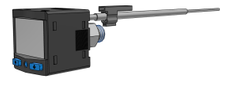

=KF0WC4+UC31/6

2

			Date	1/17/2023	Volvo Trucks North America		Valiant TMS	Incoming air supply (Main)	Drawing name: =2V09&EFS-EL	= KH0
			Ed.	MKLEPADLO						+ KH0
			Appr		P6700 Bodyside LH - Robot Cell 2V09				Document type: EFS	Project nr: 22-16150	Page 1
Modification	Date	Name	Original		Replacement of	Replaced by	Scale 1:1				1533

0	1	2	3	4	5	6	7	8	9

=V1KF1+V1UC12

Monitoring S010 Shuttle AIR On
=KH0-BP2_I
=V1KF1+V1UC12/12.2

DI	ET200SP
I87.0 DI8	
9	

=V1KF1
-KF12.14

I87.0
BUOG
16 AWG

=V1WC4+V1UC12/5.4 / 3L+7

=V1WC4+V1UC12/5.4 / 3M7

-KF12.14
9

bn wh bu bk

-W2
RKC 4.4T-20-RSC 4.4T/S3060
20m

bn bu bk wh

-BP2
1 L+
3 L-
4 Out
2 n.c.
M12
P

FESTO

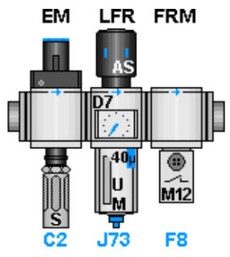

See drawing:
=2V09&MFS-PNEU

1

3

			Date	1/17/2023	Volvo Trucks North America		Valiant TMS	Incoming air supply (S010)	Drawing name: =2V09&EFS-EL	= KH0
			Ed.	MKLEPADLO						+ KH0
			Appr		P6700 Bodyside LH - Robot Cell 2V09				Document type: EFS	Project nr: 22-16150	Page 2
Modification	Date	Name	Original		Replacement of	Replaced by	Scale 1:1				1533

0	1	2	3	4	5	6	7	8	9

=V1KF1+V1UC14

Monitoring S020 Shuttle AIR On
=KH0-BP3_I
=V1KF1+V1UC14/9.2

DI	ET200SP
I203.0 DI8	
9	

=V1KF1
-KF14.12

I203.0
BUOG
16 AWG

=V1WC4+V1UC14/7.2 / 6L+2

=V1WC4+V1UC14/7.2 / 6M2

-KF14.12
9

bn wh bu bk

-W3
RKC 4.4T-10-RSC 4.4T/S3060
10m

bn bu bk wh

-BP3
1 L+
3 L-
4 Out
2 n.c.
M12
P

FESTO

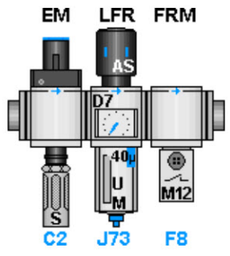

See drawing:
=2V09&MFS-PNEU

2 4

			Date	1/17/2023	Volvo Trucks North America	Valiant TMS	Incoming air supply (S020)	Drawing name: =2V09&EFS-EL	= KH0
			Ed.	MKLEPADLO					+ KH0
			Appr		P6700 Bodyside LH - Robot Cell 2V09			Document type: EFS	Project nr: 22-16150
Modification	Date	Name	Original		Replacement of / Replaced by	Scale 1:1			Page 3 / 1533

0	1	2	3	4	5	6	7	8	9

=V1KF1+V1UC15

Monitoring S030 Fixture AIR On
=KH0-BP4_I
=V1KF1+V1UC15/9.2

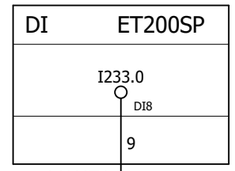

=V1KF1
-KF15.12

I233.0
BUOG
16 AWG

=V1WC4+V1UC15/7.1 / 6L+1

=V1WC4+V1UC15/7.1 / 6M1

-KF15.12
9

bn wh bu bk

See drawing:
=2V09&MFS-PNEU

-W4
RKC 4.4T-10-RSC 4.4T/S3060
10m

bn bu bk wh

-BP4

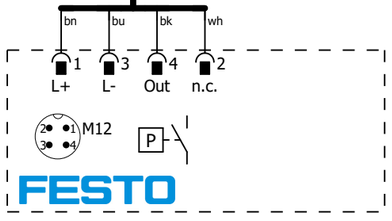

3

5

			Date	1/17/2023	Volvo Trucks North America	Valiant TMS	Incoming air supply (S030)	Drawing name: =2V09&EFS-EL	= KH0
			Ed.	MKLEPADLO					+ KH0
			Appr		P6700 Bodyside LH - Robot Cell 2V09			Document type: EFS	Project nr: 22-16150
Modification	Date	Name	Original		Replacement of / Replaced by	Scale 1:1			Page 4 / 1533

0	1	2	3	4	5	6	7	8	9

=V1KF1+V1UC11

Monitoring S040 Fixture AIR On
=KH0-BP5_I
=V1KF1+V1UC11/12.2

DI	ET200SP
I57.2 DI10	
11	

=V1KF1
-KF11.14

I57.2
BUOG
16 AWG

=V1WC4+V1UC11/5.3 / 3L+6

=V1WC4+V1UC11/5.3 / 3M6

-KF11.14
11

bn wh bu bk

-W5
RKC 4.4T-15-RSC 4.4T/S3060
15m

bn bu bk wh

-BP5
1 L+
3 L-
4 Out
2 n.c.
M12
P

FESTO

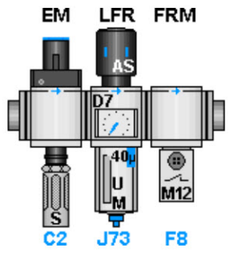

See drawing:
=2V09&MFS-PNEU

4 6

			Date	1/17/2023	Volvo Trucks North America		Valiant TMS	Incoming air supply (S040)	Drawing name: =2V09&EFS-EL	= KH0
			Ed.	MKLEPADLO						+ KH0
			Appr		P6700 Bodyside LH - Robot Cell 2V09				Document type: EFS	Project nr: 22-16150
Modification	Date	Name	Original		Replacement of	Replaced by	Scale 1:1			Page 5 / 1533

0	1	2	3	4	5	6	7	8	9

=V1KF1+V1UC11

Monitoring S050 Fixture AIR On
=KH0-BP6_I
=V1KF1+V1UC11/12.2

DI	ET200SP
I57.3	DI11
	12

=V1KF1
-KF11.14

I57.3
BUOG
16 AWG

=V1WC4+V1UC11/5.4 / 3L+7

=V1WC4+V1UC11/5.4 / 3M7

-KF11.14
12

bn wh bu bk

-W6
RKC 4.4T-20-RSC 4.4T/S3060
20m

bn bu bk wh

-BP6
1 L+
3 L-
4 Out
2 n.c.
M12
P
FESTO

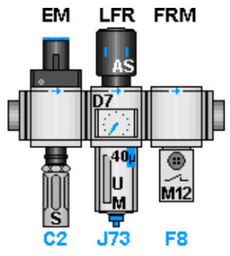

See drawing:
=2V09&MFS-PNEU

5 7

			Date	1/17/2023	Volvo Trucks North America	Valiant TMS	Incoming air supply (S050)	Drawing name: =2V09&EFS-EL	= KH0
			Ed.	MKLEPADLO					+ KH0
			Appr		P6700 Bodyside LH - Robot Cell 2V09			Document type: EFS	Project nr: 22-16150
Modification	Date	Name	Original		Replacement of	Replaced by	Scale 1:1		Page 6 / 1533

0	1	2	3	4	5	6	7	8	9

=V1KF1+V1UC11

Monitoring S055 Fixture AIR On
=KH0-BP7_I
=V1KF1+V1UC11/12.2

DI	ET200SP
I57.4	DI12
13	

=V1KF1
-KF11.14

I57.4
BUOG
16 AWG

=V1WC4+V1UC11/5.3 / 3L+6

=V1WC4+V1UC11/5.3 / 3M6

-KF11.14
13

bn wh bu bk

-W7
RKC 4.4T-40-RSC 4.4T/S3060
40m

bn bu bk wh

-BP7
1 L+
3 L-
4 Out
2 n.c.
M12
P

FESTO

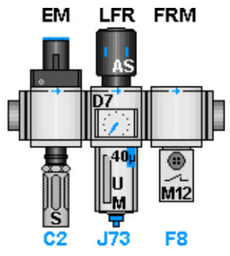

See drawing:
=2V09&MFS-PNEU

6 8

			Date	1/17/2023	Volvo Trucks North America		Valiant TMS	Incoming air supply (S055)	Drawing name: =2V09&EFS-EL	= KH0
			Ed.	MKLEPADLO						+ KH0
			Appr		P6700 Bodyside LH - Robot Cell 2V09				Document type: EFS	Project nr: 22-16150	Page 7
Modification	Date	Name	Original		Replacement of	Replaced by	Scale 1:1				1533

0	1	2	3	4	5	6	7	8	9

=V1KF1+V1UC11

Monitoring S060 Fixture AIR On
=KH0-BP8_I
=V1KF1+V1UC11/12.2

DI	ET200SP
I57.5	DI13
	14

=V1KF1
-KF11.14

I57.5
BUOG
16 AWG

=V1WC4+V1UC11/5.4 / 3L+8

=V1WC4+V1UC11/5.4 / 3M8

-KF11.14
14

bn wh bu bk

-W8
RKC 4.4T-30-RSC 4.4T/S3060
30m

bn bu bk wh

-BP8
1 L+
3 L-
4 Out
2 n.c.
M12
P

FESTO

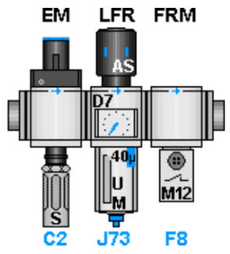

See drawing:
=2V09&MFS-PNEU

7

9

			Date	1/17/2023	Volvo Trucks North America		Valiant TMS	Incoming air supply (S060)	Drawing name: =2V09&EFS-EL	= KH0
			Ed.	MKLEPADLO						+ KH0
			Appr		P6700 Bodyside LH - Robot Cell 2V09				Document type: EFS	Project nr: 22-16150
Modification	Date	Name	Original		Replacement of	Replaced by	Scale 1:1			Page 8 / 1533

=V1KF1+V1UC11

Monitoring S080 Conveyor Load AIR On
=KH0-BP9_I
=V1KF1+V1UC11/12.2

DI	ET200SP
I57.6	DI14
	15

=V1KF1
-KF11.14

I57.6
BUOG
16 AWG

=V1WC4+V1UC11/5.4 / 3L+8

=V1WC4+V1UC11/5.4 / 3M8

-KF11.14
15

bn wh bu bk

-W9
RKC 4.4T-35-RSC 4.4T/S3060
35m

bn bu bk wh

-BP9
1 L+
3 L-
4 Out
2 n.c.
M12
P

FESTO

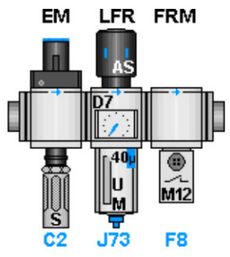

See drawing:
=2V09&MFS-PNEU

8

=KH3+KH3/1

			Date	1/17/2023	Volvo Trucks North America	Valiant TMS	Incoming air supply (S080)	Drawing name: =2V09&EFS-EL	= KH0
			Ed.	MKLEPADLO					+ KH0
			Appr		P6700 Bodyside LH - Robot Cell 2V09			Document type: EFS	Project nr: 22-16150
Modification	Date	Name	Original		Replacement of / Replaced by	Scale 1:1			Page 9 / 1533

0	1	2	3	4	5	6	7	8	9

=V1KF1+V1UC11

Monitoring Main Water Filter Dirty
=KH3-BF1_I
=V1KF1+V1UC11/12.2

DI	ET200SP
I56.6 DI6	
7	

=V1KF1
-KF1.14

I56.6
BUOG
16 AWG

=V1WC4+V1UC11/5.3 / 3L+5

=V1WC4+V1UC11/5.3 / 3M5

-KF11.14
7

bn wh bu bk

-W1
RKC 4.4T-20-RSC 4.4T/S3060
20m

bn bu bk wh

-BF1
1 L+
3 L-
4 Out
2 n.c.
M12
P

See drawing:
=2V09&MFS-WATER

=KH0+KH0/9

2

			Date	1/17/2023	Volvo Trucks North America	Valiant TMS	Incoming water supply (Filter)	Drawing name: =2V09&EFS-EL	= KH3
			Ed.	MKLEPADLO					+ KH3
			Appr		P6700 Bodyside LH - Robot Cell 2V09			Document type: EFS	Project nr: 22-16150
Modification	Date	Name	Original		Replacement of / Replaced by	Scale 1:1			Page 1 / 1533

=V1KF1+V1UC11

Monitoring Main Water On
=KH3-BF2_I
=V1KF1+V1UC11/12.2

DI ET200SP

I56.7
DI7

8

=V1KF1
-KF11.14

I56.7
BUOG
16 AWG

=V1WC4+V1UC11/5.3 / 3L+5

=V1WC4+V1UC11/5.3 / 3M5

-KF11.14
8

bn wh bu bk

-W2
RKC 4.4T-20-RSC 4.4T/S3060
20m

bn bu bk wh

-BF2
1 L+
3 L-
4 Out
2 n.c.
M12

TURCK

See drawing:
=2V09&MFS-WATER

1

=V1AR11KF1+V1AR11UC01/1

			Date	1/17/2023	Volvo Trucks North America	Valiant TMS	Incoming water supply	Drawing name: =2V09&EFS-EL	= KH3
			Ed.	MKLEPADLO					+ KH3
			Appr		P6700 Bodyside LH - Robot Cell 2V09			Document type: EFS	Project nr: 22-16150
Modification	Date	Name	Original		Replacement of	Replaced by	Scale 1:1		Page 2 / 1533

0	1	2	3	4	5	6	7	8	9

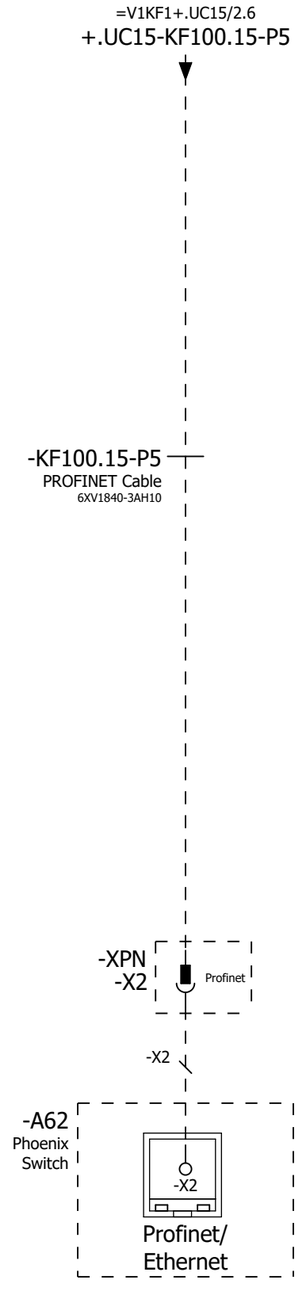

=KH3+KH3/2

=V1AR11UQ41BG0+.AR11UQ41/1

			Date	1/17/2023	Volvo Trucks North America	Valiant TMS	Incoming Profinet	Drawing name: =2V09&EFS-EL	= V1AR11KF1
			Ed.	MKLEPADLO					+ V1AR11UC01
			Appr		P6700 Bodyside LH - Robot Cell 2V09	Scale 1:1		Document type: EFS	Project nr: 22-16150
Modification	Date	Name	Original		Replacement of	Replaced by			Page 1 / 1533

0	1	2	3	4	5	6	7	8	9

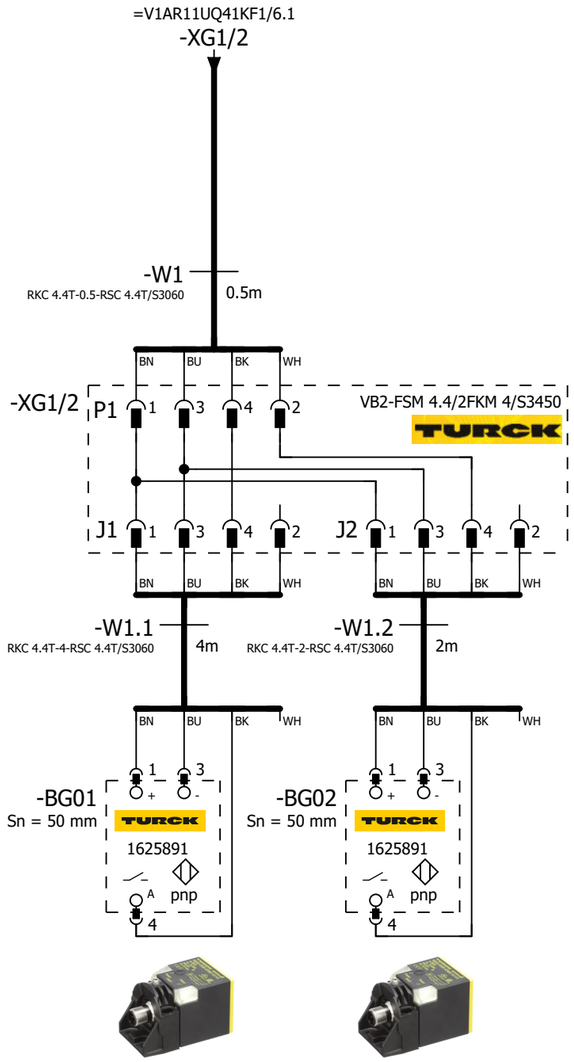

=V1AR11UQ41
-BG01
Common Outer

=V1AR11UQ41
-BG02
Day Cab Outer
78522975

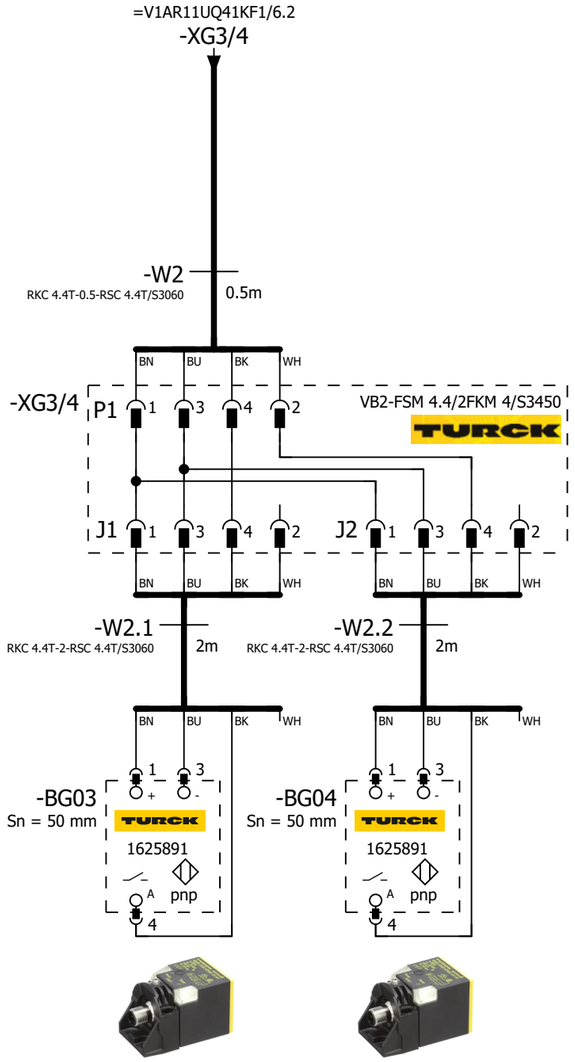

=V1AR11UQ41
-BG03
Short Outer L230
78521260

=V1AR11UQ41
-BG04
Middle Outer L290
78522139

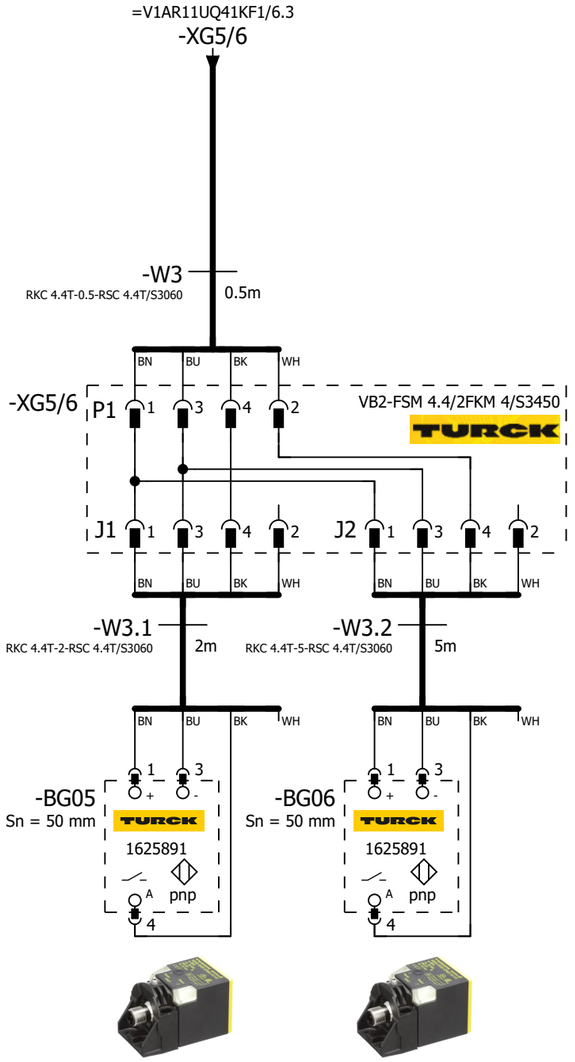

=V1AR11UQ41
-BG05
Long Outer L320
78519674

=V1AR11UQ41
-BG06
Common Inner

=V1AR11KF1+.AR11UC01/1

2

			Date	1/17/2023	Volvo Trucks North America	Valiant TMS	SENSORS	Drawing name: =2V09&EFS-EL	= V1AR11UQ41BG0
			Ed.	MKLEPADLO					+ V1AR11UQ41
			Appr		P6700 Bodyside LH - Robot Cell 2V09			Document type: EFS	Project nr: 22-16150
Modification	Date	Name	Original		Replacement of / Replaced by	Scale 1:1			Page 1 / 1533

0	1	2	3	4	5	6	7	8	9

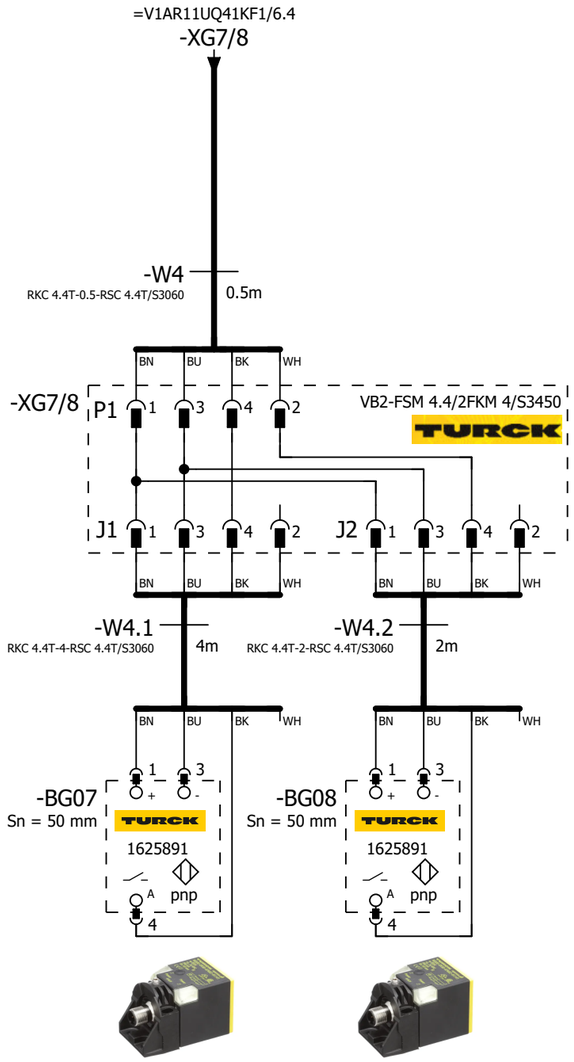

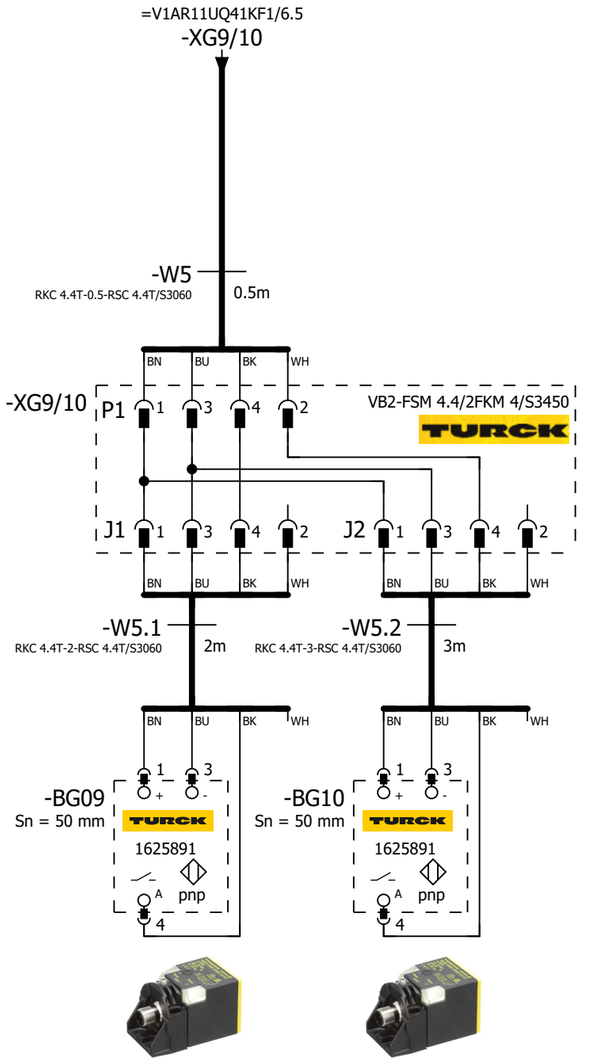

=V1AR11UQ41 -BG07 Common Inner	=V1AR11UQ41 -BG08 Short Inner L230 78521359	=V1AR11UQ41 -BG09 Middle Inner L290 78522140	=V1AR11UQ41 -BG10 Long Inner 78519675

1

=V1AR11UQ41KF1/1

			Date	1/17/2023	Volvo Trucks North America	Valiant TMS	SENSORS	Drawing name: =2V09&EFS-EL	= V1AR11UQ41BG0
			Ed.	MKLEPADLO					+ V1AR11UQ41
			Appr		P6700 Bodyside LH - Robot Cell 2V09			Document type: EFS	Project nr: 22-16150
Modification	Date	Name	Original		Replacement of / Replaced by	Scale 1:1			Page 2 / 1533

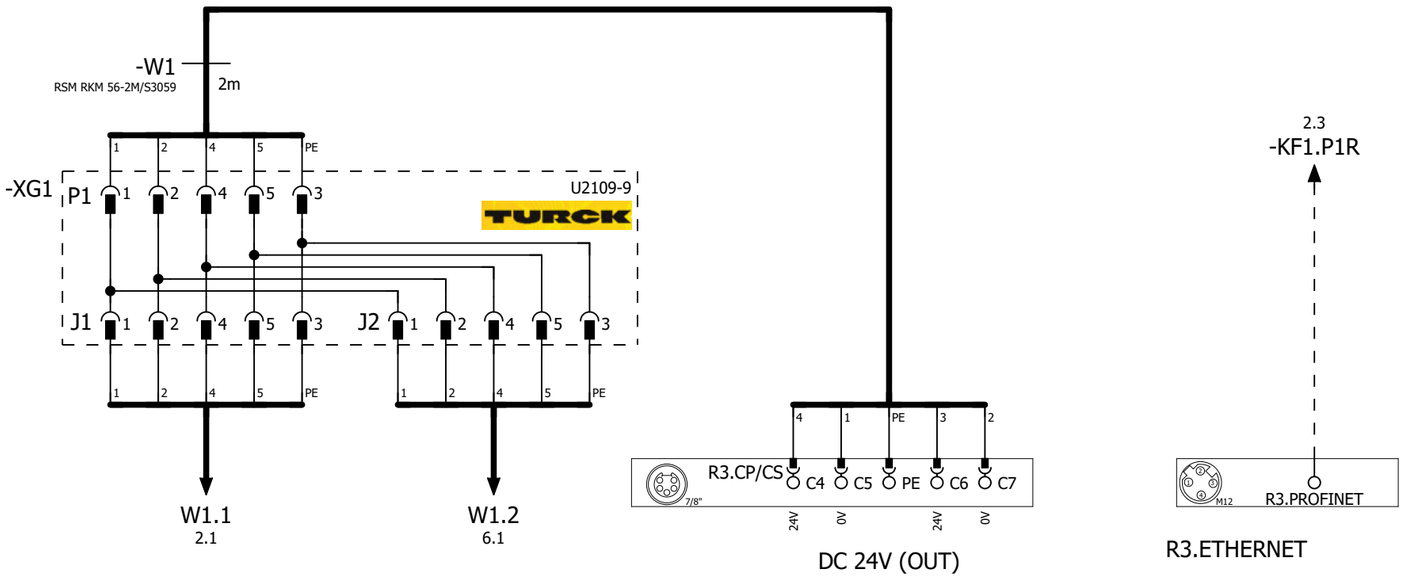

R3.ETHERNET

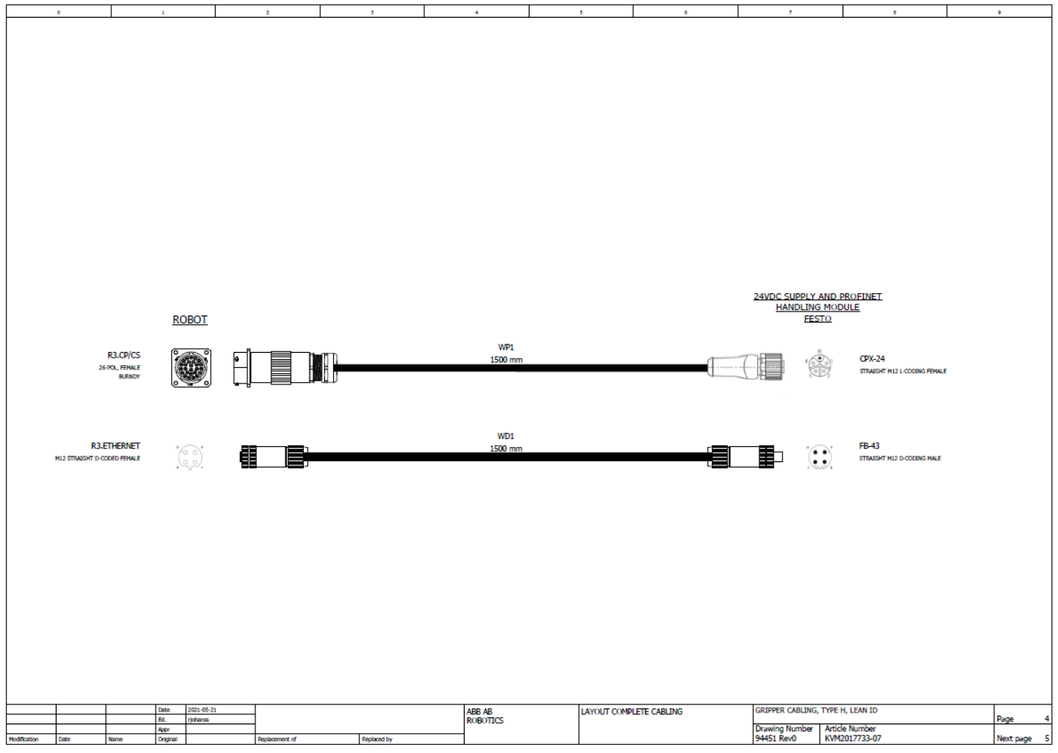

=V1AR11UQ41BG0/2

2

			Date	1/17/2023	Volvo Trucks North America	Valiant TMS	24VDC SUPPLY AND PROFINET HANDLING MODULE	Drawing name: =2V09&EFS-EL	= V1AR11UQ41KF1
			Ed.	MKLEPADLO					+ V1AR11UQ41
			Appr		P6700 Bodyside LH - Robot Cell 2V09			Document type: EFS	Project nr: 22-16150
Modification	Date	Name	Original		Replacement of / Replaced by	Scale 1:1			Page 1 / 1533

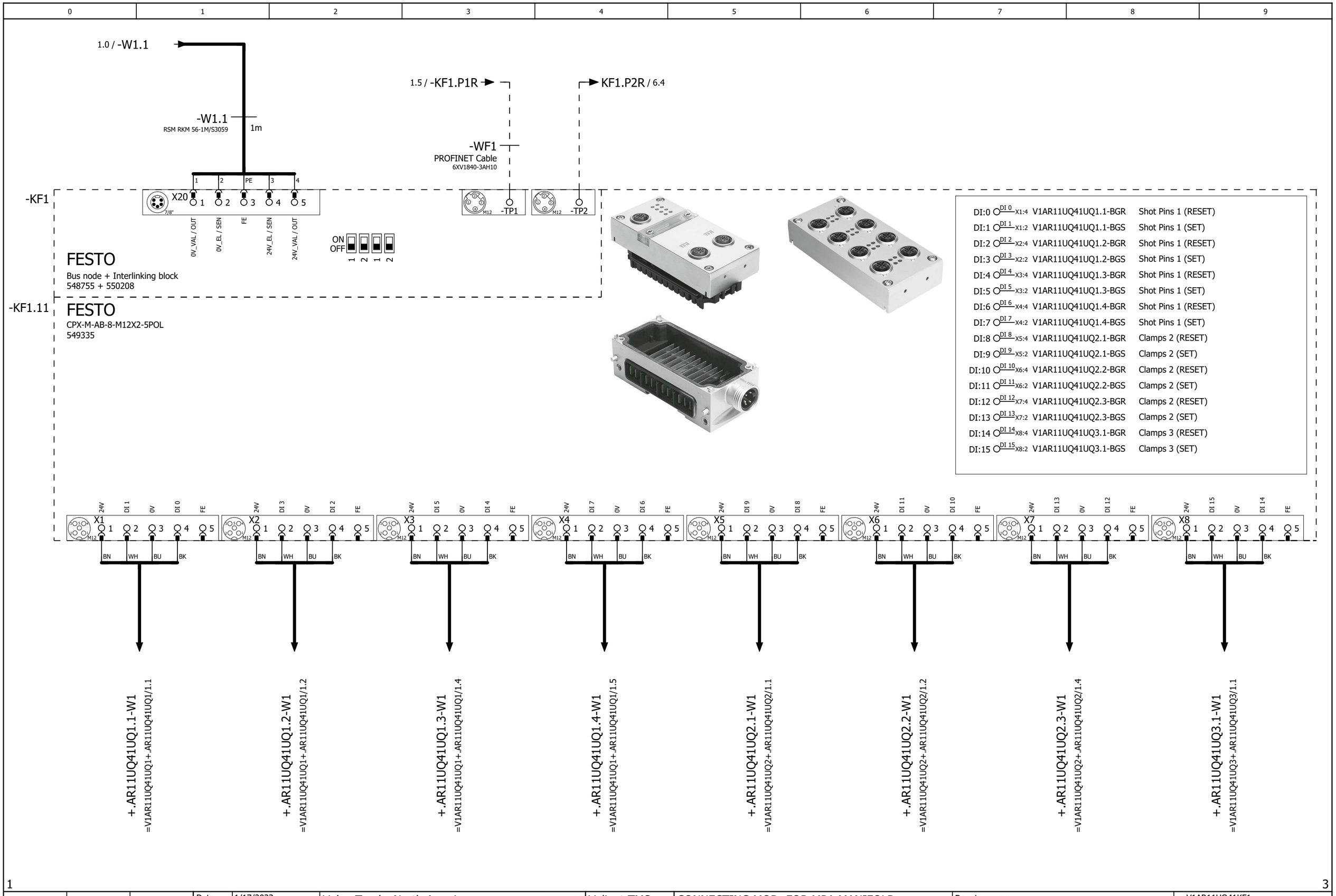

			Date	1/17/2023	Volvo Trucks North America	Valiant TMS	CONNECTING MOD. FOR MPA MANIFOLD	Drawing name: =2V09&EFS-EL	= V1AR11UQ41KF1 + V1AR11UQ41	
			Ed.	MKLEPADLO	P6700 Bodyside LH - Robot Cell 2V09					
			Appr					Document type: EFS	Project nr: 22-16150	Page 2
Modification	Date	Name	Original		Replacement of / Replaced by	Scale 1:1				1533

DI:16	DI 0 X1:4	V1AR11UQ41UQ3.2-BGR	Clamps 3 (RESET)
DI:17	DI 1 X1:2	V1AR11UQ41UQ3.2-BGS	Clamps 3 (SET)
DI:18	DI 2 X2:4	V1AR11UQ41UQ4.1-BGR	Clamps 4 (RESET)
DI:19	DI 3 X2:2	V1AR11UQ41UQ4.1-BGS	Clamps 4 (SET)
DI:20	DI 4 X3:4	V1AR11UQ41UQ4.2-BGR	Clamps 4 (RESET)
DI:21	DI 5 X3:2	V1AR11UQ41UQ4.2-BGS	Clamps 4 (SET)
DI:22	DI 6 X4:4	V1AR11UQ41UQ4.3-BGR	Clamps 4 (RESET)
DI:23	DI 7 X4:2	V1AR11UQ41UQ4.3-BGS	Clamps 4 (SET)
DI:24	DI 8 X5:4	V1AR11UQ41UQ5.1-BGR	Clamps 5 (RESET)
DI:25	DI 9 X5:2	V1AR11UQ41UQ5.1-BGS	Clamps 5 (SET)
DI:26	DI 10 X6:4	V1AR11UQ41UQ5.2-BGR	Clamps 5 (RESET)
DI:27	DI 11 X6:2	V1AR11UQ41UQ5.2-BGS	Clamps 5 (SET)
DI:28	DI 12 X7:4	V1AR11UQ41UQ5.3-BGR	Clamps 5 (RESET)
DI:29	DI 13 X7:2	V1AR11UQ41UQ5.3-BGS	Clamps 5 (SET)
DI:30	DI 14 X8:4	V1AR11UQ41UQ6.1-BGR	Clamp 6 (RESET)
DI:31	DI 15 X8:2	V1AR11UQ41UQ6.1-BGS	Clamp 6 (SET)

-KF1.12

FESTO

CPX-M-AB-8-M12X2-5POL
549335

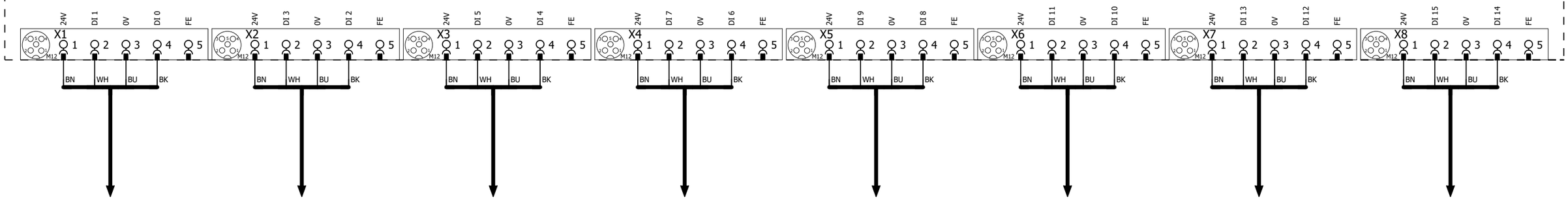

+.AR11UQ41UQ3.2-W1
=V1AR11UQ41UQ3+.AR11UQ41UQ3/1.2

+.AR11UQ41UQ4.1-W1
=V1AR11UQ41UQ4+.AR11UQ41UQ4/1.1

+.AR11UQ41UQ4.2-W1
=V1AR11UQ41UQ4+.AR11UQ41UQ4/1.2

+.AR11UQ41UQ4.3-W1
=V1AR11UQ41UQ4+.AR11UQ41UQ4/1.4

+.AR11UQ41UQ5.1-W1
=V1AR11UQ41UQ5+.AR11UQ41UQ5/1.1

+.AR11UQ41UQ5.2-W1
=V1AR11UQ41UQ5+.AR11UQ41UQ5/1.2

+.AR11UQ41UQ5.3-W1
=V1AR11UQ41UQ5+.AR11UQ41UQ5/1.4

+.AR11UQ41UQ6.1-W1
=V1AR11UQ41UQ6+.AR11UQ41UQ6/1.1

2 4

			Date	1/17/2023	Volvo Trucks North America	Valiant TMS	I/O MOD. DI16 (8 x M12) FOR MPA	Drawing name: =2V09&EFS-EL	= V1AR11UQ41KF1 + V1AR11UQ41
			Ed.	MKLEPADLO	P6700 Bodyside LH - Robot Cell 2V09				
			Appr					Document type: EFS	Project nr: 22-16150
Modification	Date	Name	Original		Replacement of / Replaced by	Scale 1:1			Page 3 / 1533

0	1	2	3	4	5	6	7	8	9

-KF1.13

FESTO

CPX-M-AB-8-M12X2-5POL

549335

DI:32	DI 0 X1:4	V1AR11UQ41UQ7.1-BGR	Clamps 7 (RESET)
DI:33	DI 1 X1:2	V1AR11UQ41UQ7.1-BGS	Clamps 7 (SET)
DI:34	DI 2 X2:4	V1AR11UQ41UQ7.2-BGR	Clamps 7 (RESET)
DI:35	DI 3 X2:2	V1AR11UQ41UQ7.2-BGS	Clamps 7 (SET)
DI:36	DI 4 X3:4	V1AR11UQ41UQ8.1-BGR	Clamp 8 (RESET)
DI:37	DI 5 X3:2	V1AR11UQ41UQ8.1-BGS	Clamp 8 (SET)
DI:38	DI 6 X4:4	V1AR11UQ41UQ9.1-BGS	Clamps 9 (RESET)
DI:39	DI 7 X4:2	V1AR11UQ41UQ9.1-BGS	Clamps 9 (SET)
DI:40	DI 8 X5:4	V1AR11UQ41UQ9.2-BGR	Clamps 9 (RESET)
DI:41	DI 9 X5:2	V1AR11UQ41UQ9.2-BGS	Clamps 9 (SET)
DI:42	DI 10 X6:4	DI:42	Spare
DI:43	DI 11 X6:2	DI:43	Spare
DI:44	DI 12 X7:4	DI:44	Spare
DI:45	DI 13 X7:2	DI:45	Spare
DI:46	DI 14 X8:4	DI:46	Spare
DI:47	DI 15 X8:2	DI:47	Spare

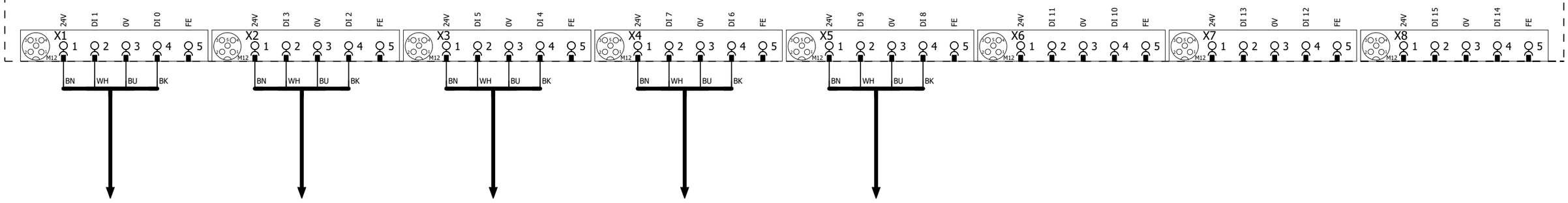

+.AR11UQ41UQ7.1-W1
=V1AR11UQ41UQ7+.AR11UQ41UQ7/1.1

+.AR11UQ41UQ7.2-W1
=V1AR11UQ41UQ7+.AR11UQ41UQ7/1.2

+.AR11UQ41UQ8.1-W1
=V1AR11UQ41UQ8+.AR11UQ41UQ8/1.1

+.AR11UQ41UQ9.1-W1
=V1AR11UQ41UQ9+.AR11UQ41UQ9/1.1

+.AR11UQ41UQ9.2-W1
=V1AR11UQ41UQ9+.AR11UQ41UQ9/1.2

3 5

			Date	1/17/2023	Volvo Trucks North America	Valiant TMS	I/O MOD. DI16 (8 x M12) FOR MPA	Drawing name: =2V09&EFS-EL	= V1AR11UQ41KF1
			Ed.	MKLEPADLO					+ V1AR11UQ41
			Appr		P6700 Bodyside LH - Robot Cell 2V09			Document type: EFS	Project nr: 22-16150
Modification	Date	Name	Original		Replacement of	Replaced by	Scale 1:1		Page 4 / 1533

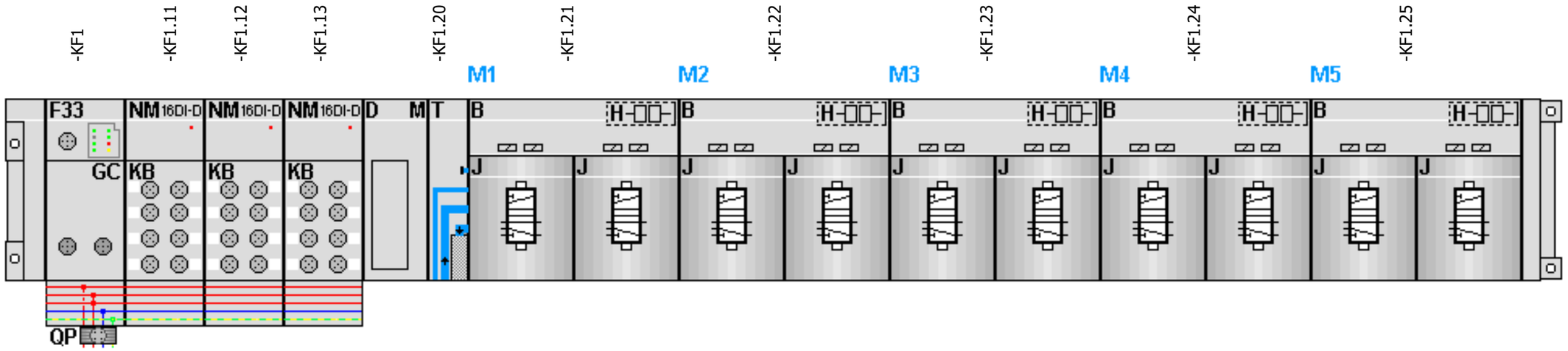

-KF1.21
=V1AR11UQ41UQ1+.AR11UQ41UQ1/1.3
=V1AR11UQ41UQ2+.AR11UQ41UQ2/1.3

FESTO

=V1AR11UQ41UQ1+.AR11UQ41UQ1/1.4	DO:0 DO 0 1.1	-QN1.1_Q	Shot Pins 1 (RST)
=V1AR11UQ41UQ1+.AR11UQ41UQ1/1.4	DO:1 DO 1 1.2	-QN1.2_Q	Shot Pins 1 (SET)
=V1AR11UQ41UQ2+.AR11UQ41UQ2/1.4	DO:2 DO 2 2.1	-QN2.1_Q	Clamps 2 (RST)
=V1AR11UQ41UQ2+.AR11UQ41UQ2/1.4	DO:3 DO 3 2.2	-QN2.2_Q	Clamps 2 (SET)

-KF1.22
=V1AR11UQ41UQ3+.AR11UQ41UQ3/1.3
=V1AR11UQ41UQ4+.AR11UQ41UQ4/1.3

FESTO

=V1AR11UQ41UQ3+.AR11UQ41UQ3/1.4	DO:4 DO 0 1.1	-QN3.1_Q	Clamps 3 (RST)
=V1AR11UQ41UQ3+.AR11UQ41UQ3/1.4	DO:5 DO 1 1.2	-QN3.2_Q	Clamps 3 (SET)
=V1AR11UQ41UQ4+.AR11UQ41UQ4/1.4	DO:6 DO 2 2.1	-QN4.1_Q	Clamps 4 (RST)
=V1AR11UQ41UQ4+.AR11UQ41UQ4/1.4	DO:7 DO 3 2.2	-QN4.2_Q	Clamps 4 (SET)

-KF1.23
=V1AR11UQ41UQ5+.AR11UQ41UQ5/1.3
=V1AR11UQ41UQ6+.AR11UQ41UQ6/1.3

FESTO

=V1AR11UQ41UQ5+.AR11UQ41UQ5/1.4	DO:8 DO 0 1.1	-QN5.1_Q	Clamps 5 (RST)
=V1AR11UQ41UQ5+.AR11UQ41UQ5/1.4	DO:9 DO 1 1.2	-QN5.2_Q	Clamps 5 (SET)
=V1AR11UQ41UQ6+.AR11UQ41UQ6/1.4	DO:10 DO 2 2.1	-QN6.1_Q	Clamp 6 (RST)
=V1AR11UQ41UQ6+.AR11UQ41UQ6/1.4	DO:11 DO 3 2.2	-QN6.2_Q	Clamp 6 (SET)

-KF1.24
=V1AR11UQ41UQ7+.AR11UQ41UQ7/1.3
=V1AR11UQ41UQ8+.AR11UQ41UQ8/1.3

FESTO

=V1AR11UQ41UQ7+.AR11UQ41UQ7/1.4	DO:12 DO 0 1.1	-QN7.1_Q	Clamps 7 (RST)
=V1AR11UQ41UQ7+.AR11UQ41UQ7/1.4	DO:13 DO 1 1.2	-QN7.2_Q	Clamps 7 (SET)
=V1AR11UQ41UQ8+.AR11UQ41UQ8/1.4	DO:14 DO 2 2.1	-QN8.1_Q	Clamp 8 (RST)
=V1AR11UQ41UQ8+.AR11UQ41UQ8/1.4	DO:15 DO 3 2.2	-QN8.2_Q	Clamp 8 (SET)

-KF1.25
=V1AR11UQ41UQ9+.AR11UQ41UQ9/1.3
=V1AR11UQ41UQ10+.AR11UQ41UQ10/1.3

FESTO

=V1AR11UQ41UQ9+.AR11UQ41UQ9/1.4	DO:16 DO 0 1.1	-QN9.1_Q	Clamps 9 (RST)
=V1AR11UQ41UQ9+.AR11UQ41UQ9/1.4	DO:17 DO 1 1.2	-QN9.2_Q	Clamps 9 (SET)
=V1AR11UQ41UQ10+.AR11UQ41UQ10/1.4	DO:18 DO 2 2.1	-QN10.1_Q	Spare (RST)
=V1AR11UQ41UQ10+.AR11UQ41UQ10/1.4	DO:19 DO 3 2.2	-QN10.2_Q	Spare (SET)

			Date	1/17/2023	Volvo Trucks North America	Valiant TMS	CONNECTING MOD. FOR FESTO DQ	Drawing name: =2V09&EFS-EL	= V1AR11UQ41KF1
			Ed.	MKLEPADLO					+ V1AR11UQ41
			Appr		P6700 Bodyside LH - Robot Cell 2V09	Scale 1:1		Document type: EFS	Project nr: 22-16150
Modification	Date	Name	Original		Replacement of	Replaced by			Page 5 / 1533

0	1	2	3	4	5	6	7	8	9

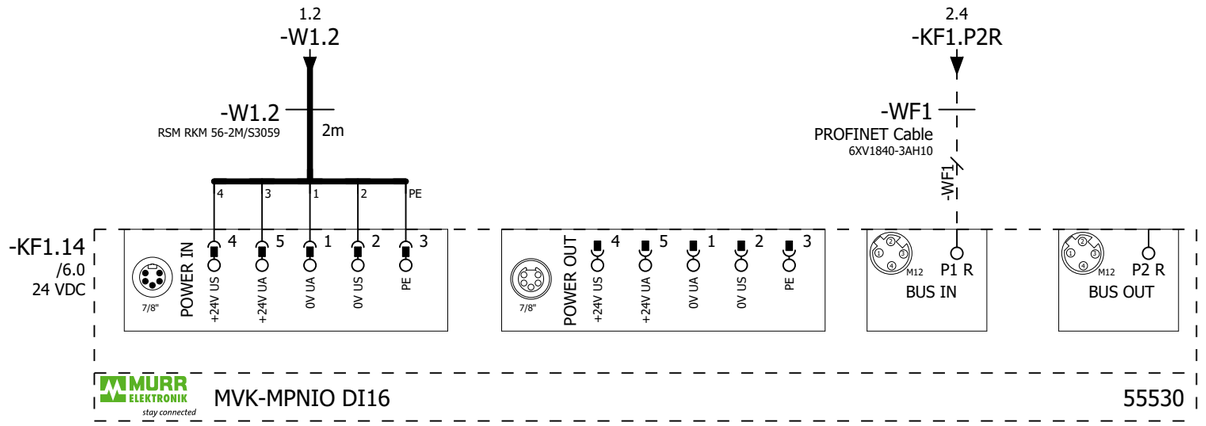

Day Cab Outer 7822975 | Middle Outer L290 78522139 | Common Inner | Short Inner L230 78521359 | Long Inner L320 78519675 | Spare | Spare | Spare

Common Outer | Short Outer L230 78521360 | Long Outer L320 78519674 | Common Inner | Middle Inner L290 78522140 | Spare | Spare | Spare

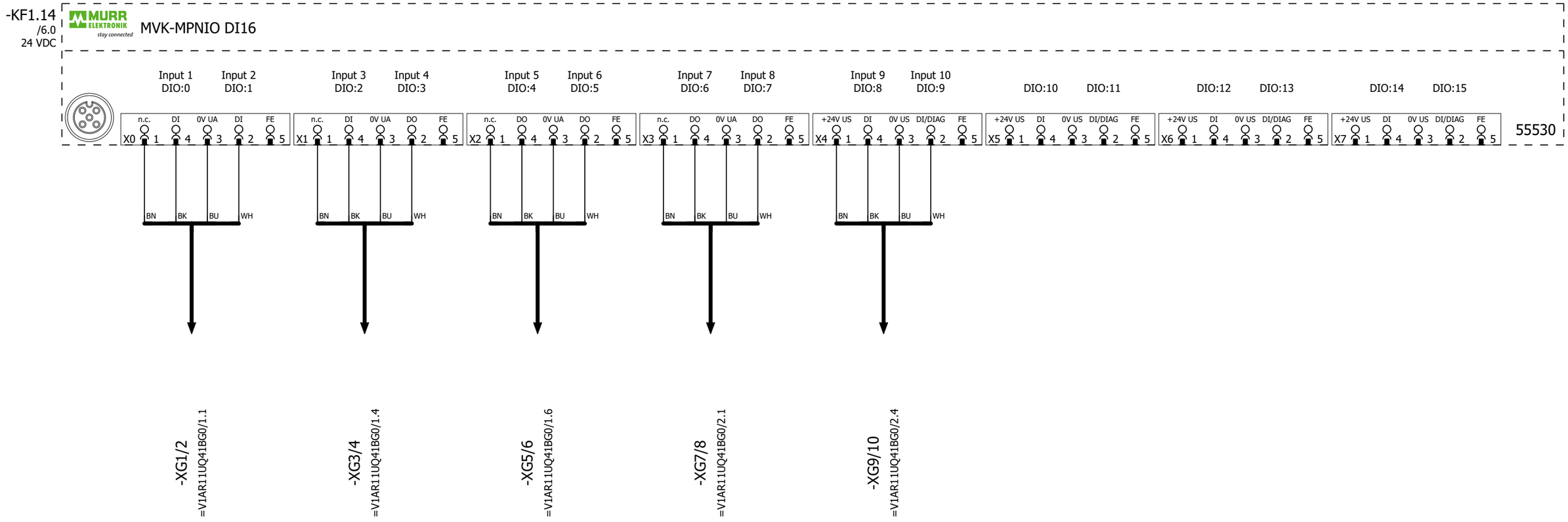

=V1AR11UQ41UQ1+.AR11UQ41UQ1/1

			Date	1/17/2023	Volvo Trucks North America	Valiant TMS	MURR MODULE 16 IN/OUT	Drawing name: =2V09&EFS-EL	= V1AR11UQ41KF1
			Ed.	MKLEPADLO					+ V1AR11UQ41
			Appr		P6700 Bodyside LH - Robot Cell 2V09	Scale 1:1		Document type: EFS	Project nr: 22-16150
Modification	Date	Name	Original		Replacement of / Replaced by				Page 6 / 1533

0	1	2	3	4	5	6	7	8	9

=V1AR11UQ41KF1
+V1AR11UQ41

-KF1.21
=V1AR11UQ41KF1+V1AR11UQ41/5.1

Shot Pins 1 (RST)
=V1AR11UQ41KF1
+V1AR11UQ41
-QN1.1_Q
=V1AR11UQ41KF1
+V1AR11UQ41/5.3
DO:0

Shot Pins 1 (SET)
=V1AR11UQ41KF1
+V1AR11UQ41
-QN1.2_Q
=V1AR11UQ41KF1
+V1AR11UQ41/5.3
DO:1

1.1
Pneumatic Valve

1.2
Pneumatic Valve

.1

.2

-QN1

=V1AR11UQ41KF1+V1AR11UQ41/2.1
+.AR11UQ41UQ1.1-W1

-W1
RKC 4.4T-4-RSC 4.4T/S3060
4m

BN BU BK WH
1 3
+ -

-BGS/R

WELKER
WWS001A

A2 A1
2 4

Shot Pins 1

=V1AR11UQ41UQ1.1
+.AR11UQ41UQ1.1
-UQ1.1

=V1AR11UQ41
-UQ1.1-BGS/R
Shot Pins 1

=V1AR11UQ41KF1+V1AR11UQ41/2.2
+.AR11UQ41UQ1.2-W1

-W1
RKC 4.4T-2-RSC 4.4T/S3060
2m

BN BU BK WH
1 3
+ -

-BGS/R

WELKER
WWS001A

A2 A1
2 4

Shot Pins 1

=V1AR11UQ41UQ1.2
+.AR11UQ41UQ1.2
-UQ1.2

=V1AR11UQ41
-UQ1.2-BGS/R
Shot Pins 1

=V1AR11UQ41KF1+V1AR11UQ41/2.3
+.AR11UQ41UQ1.3-W1

-W1
RKC 4.4T-2-RSC 4.4T/S3060
2m

BN BU BK WH
1 3
+ -

-BGS/R

WELKER
WWS001A

A2 A1
2 4

Shot Pins 1

=V1AR11UQ41UQ1.3
+.AR11UQ41UQ1.3
-UQ1.3

=V1AR11UQ41
-UQ1.3-BGS/R
Shot Pins 1

=V1AR11UQ41KF1+V1AR11UQ41/2.4
+.AR11UQ41UQ1.4-W1

-W1
RKC 4.4T-2-RSC 4.4T/S3060
2m

BN BU BK WH
1 3
+ -

-BGS/R

WELKER
WWS001A

A2 A1
2 4

Shot Pins 1

=V1AR11UQ41UQ1.4
+.AR11UQ41UQ1.4
-UQ1.4

=V1AR11UQ41
-UQ1.4-BGS/R
Shot Pins 1

=V1AR11UQ41KF1+V1AR11UQ41/6

=V1AR11UQ41UQ2+.AR11UQ41UQ2/1

			Date	1/17/2023	Volvo Trucks North America	Valiant TMS	FESTO DQ CONNECTION QN1	Drawing name: =2V09&EFS-EL	= V1AR11UQ41UQ1
			Ed.	MKLEPADLO					+ V1AR11UQ41UQ1
			Appr		P6700 Bodyside LH - Robot Cell 2V09			Document type: EFS	Project nr: 22-16150
Modification	Date	Name	Original		Replacement of	Replaced by	Scale 1:1		Page 1 / 1533

0	1	2	3	4	5	6	7	8	9

=V1AR11UQ41KF1
+V1AR11UQ41

-KF1.21
=V1AR11UQ41KF1+V1AR11UQ41/5.1

Clamps 2 (RST)
=V1AR11UQ41KF1
+V1AR11UQ41
-QN2.1_Q
=V1AR11UQ41KF1
+V1AR11UQ41/5.3
DO:2

Clamps 2 (SET)
=V1AR11UQ41KF1
+V1AR11UQ41
-QN2.2_Q
=V1AR11UQ41KF1
+V1AR11UQ41/5.3
DO:3

2.1 Pneumatic Valve

2.2 Pneumatic Valve

-QN2 .1 .2

=V1AR11UQ41KF1+V1AR11UQ41/2.5
+.AR11UQ41UQ2.1-W1

=V1AR11UQ41KF1+V1AR11UQ41/2.6
+.AR11UQ41UQ2.2-W1

=V1AR11UQ41KF1+V1AR11UQ41/2.8
+.AR11UQ41UQ2.3-W1

-W1 4m
RKC 4.4T-4-RSC 4.4T/S3060
BN BU BK WH

-BGS/R
1 3
+ -
TÜNKERS
1324633
A2 A1
2 4

Clamps 2
=V1AR11UQ41UQ2.1
+.AR11UQ41UQ2.1
-UQ2.1

Clamps 2
=V1AR11UQ41UQ2.2
+.AR11UQ41UQ2.2
-UQ2.2

Clamps 2
=V1AR11UQ41UQ2.3
+.AR11UQ41UQ2.3
-UQ2.3

=V1AR11UQ41
-UQ2.1-BGS/R
Clamps 2

=V1AR11UQ41
-UQ2.2-BGS/R
Clamps 2

=V1AR11UQ41
-UQ2.3-BGS/R
Clamps 2

=V1AR11UQ41UQ1+.AR11UQ41UQ1/1

=V1AR11UQ41UQ3+.AR11UQ41UQ3/1

			Date	1/17/2023	Volvo Trucks North America	Valiant TMS	FESTO DQ CONNECTION QN2	Drawing name: =2V09&EFS-EL	= V1AR11UQ41UQ2
			Ed.	MKLEPADLO					+ V1AR11UQ41UQ2
			Appr		P6700 Bodyside LH - Robot Cell 2V09			Document type: EFS	Project nr: 22-16150
Modification	Date	Name	Original		Replacement of	Replaced by	Scale 1:1		Page 1 / 1533

0	1	2	3	4	5	6	7	8	9

=V1AR11UQ41KF1
+V1AR11UQ41

-KF1.22
=V1AR11UQ41KF1+V1AR11UQ41/5.1

Clamps 3 (RST)	Clamps 3 (SET)
=V1AR11UQ41KF1	=V1AR11UQ41KF1
+V1AR11UQ41	+V1AR11UQ41
-QN3.1_Q	-QN3.2_Q
=V1AR11UQ41KF1	=V1AR11UQ41KF1
+V1AR11UQ41/5.3	+V1AR11UQ41/5.3
DO:4	DO:5
1.1 Pneumatic Valve	1.2 Pneumatic Valve

-QN3 .1 .2

=V1AR11UQ41KF1+V1AR11UQ41/2.9
+.AR11UQ41UQ3.1-W1

-W1
RKC 4.4T-2-RSC 4.4T/S3060
2m

-BGS/R
BN 1 + BU 3 - BK WH
TÜNKERS
1324633
A2 2 A1 4

Clamps 3
=V1AR11UQ41UQ3.1
+.AR11UQ41UQ3.1
-UQ3.1

=V1AR11UQ41
-UQ3.1-BGS/R
Clamps 3

=V1AR11UQ41KF1+V1AR11UQ41/3.1
+.AR11UQ41UQ3.2-W1

-W1
RKC 4.4T-1-RSC 4.4T/S3060
1m

-BGS/R
BN 1 + BU 3 - BK WH
TÜNKERS
1324633
A2 2 A1 4

Clamps 3
=V1AR11UQ41UQ3.2
+.AR11UQ41UQ3.2
-UQ3.2

=V1AR11UQ41
-UQ3.2-BGS/R
Clamps 3

=V1AR11UQ41UQ2+.AR11UQ41UQ2/1

=V1AR11UQ41UQ4+.AR11UQ41UQ4/1

			Date	1/17/2023	Volvo Trucks North America		Valiant TMS	FESTO DQ CONNECTION QN3	Drawing name: =2V09&EFS-EL	= V1AR11UQ41UQ3
			Ed.	MKLEPADLO						+ V1AR11UQ41UQ3
			Appr		P6700 Bodyside LH - Robot Cell 2V09				Document type: EFS	Project nr: 22-16150
Modification	Date	Name	Original		Replacement of	Replaced by	Scale 1:1			Page 1 / 1533

0	1	2	3	4	5	6	7	8	9

=V1AR11UQ41KF1
+V1AR11UQ41

-KF1.22
=V1AR11UQ41KF1+V1AR11UQ41/5.1

Clamps 4 (RST)
=V1AR11UQ41KF1
+V1AR11UQ41
-QN4.1_Q
=V1AR11UQ41KF1
+V1AR11UQ41/5.3
DO:6

Clamps 4 (SET)
=V1AR11UQ41KF1
+V1AR11UQ41
-QN4.2_Q
=V1AR11UQ41KF1
+V1AR11UQ41/5.3
DO:7

2.1 Pneumatic Valve
2.2 Pneumatic Valve

-QN4 .1 .2

=V1AR11UQ41KF1+V1AR11UQ41/3.2
+V1AR11UQ41UQ4.1-W1

-W1
RKC 4.4T-5-RSC 4.4T/S3060
5m

BN BU BK WH
1 3
-BGS/R
TÜNKERS
1324633
A2 A1
2 4

Clamps 4
=V1AR11UQ41UQ4.1
+.AR11UQ41UQ4.1
-UQ4.1

=V1AR11UQ41
-UQ4.1-BGS/R
Clamps 4

=V1AR11UQ41KF1+V1AR11UQ41/3.3
+V1AR11UQ41UQ4.2-W1

-W1
RKC 4.4T-4-RSC 4.4T/S3060
4m

BN BU BK WH
1 3
-BGS/R
TÜNKERS
1324633
A2 A1
2 4

Clamps 4
=V1AR11UQ41UQ4.2
+.AR11UQ41UQ4.2
-UQ4.2

=V1AR11UQ41
-UQ4.2-BGS/R
Clamps 4

=V1AR11UQ41KF1+V1AR11UQ41/3.4
+V1AR11UQ41UQ4.3-W1

-W1
RKC 4.4T-3-RSC 4.4T/S3060
3m

BN BU BK WH
1 3
-BGS/R
TÜNKERS
1324633
A2 A1
2 4

Clamps 4
=V1AR11UQ41UQ4.3
+.AR11UQ41UQ4.3
-UQ4.3

=V1AR11UQ41
-UQ4.3-BGS/R
Clamps 4

=V1AR11UQ41UQ3+.AR11UQ41UQ3/1

=V1AR11UQ41UQ5+.AR11UQ41UQ5/1

			Date	1/17/2023	Volvo Trucks North America	Valiant TMS	FESTO DQ CONNECTION QN4	Drawing name: =2V09&EFS-EL	= V1AR11UQ41UQ4
			Ed.	MKLEPADLO					+ V1AR11UQ41UQ4
			Appr		P6700 Bodyside LH - Robot Cell 2V09			Document type: EFS	Project nr: 22-16150
Modification	Date	Name	Original		Replacement of	Replaced by	Scale 1:1		Page 1 / 1533

0	1	2	3	4	5	6	7	8	9

=V1AR11UQ41KF1
+V1AR11UQ41

-KF1.23
=V1AR11UQ41KF1+V1AR11UQ41/5.1

Clamps 5 (RST)	Clamps 5 (SET)
=V1AR11UQ41KF1	=V1AR11UQ41KF1
+V1AR11UQ41	+V1AR11UQ41
-QN5.1_Q	-QN5.2_Q
=V1AR11UQ41KF1	=V1AR11UQ41KF1
+V1AR11UQ41/5.3	+V1AR11UQ41/5.3
DO:8	DO:9
1.1 Pneumatic Valve	1.2 Pneumatic Valve

-QN5 .1 .2

=V1AR11UQ41KF1+V1AR11UQ41/3.5
+V1AR11UQ41UQ5.1-W1

=V1AR11UQ41KF1+V1AR11UQ41/3.6
+V1AR11UQ41UQ5.2-W1

=V1AR11UQ41KF1+V1AR11UQ41/3.8
+V1AR11UQ41UQ5.3-W1

-W1 2m
RKC 4.4T-2-RSC 4.4T/S3060

BN BU BK WH

-BGS/R
1 3
+ -
TÜNKERS
1324633
A2 A1
2 4

Clamps 5

=V1AR11UQ41UQ5.1
+.AR11UQ41UQ5.1
-UQ5.1

=V1AR11UQ41
-UQ5.1-BGS/R
Clamps 5

Clamps 5

=V1AR11UQ41UQ5.2
+.AR11UQ41UQ5.2
-UQ5.2

=V1AR11UQ41
-UQ5.2-BGS/R
Clamps 5

Clamps 5

=V1AR11UQ41UQ5.3
+.AR11UQ41UQ5.3
-UQ5.3

=V1AR11UQ41
-UQ5.3-BGS/R
Clamps 5

=V1AR11UQ41UQ4+.AR11UQ41UQ4/1

=V1AR11UQ41UQ6+.AR11UQ41UQ6/1

			Date	1/17/2023	Volvo Trucks North America	Valiant TMS	FESTO DQ CONNECTION QN5	Drawing name: =2V09&EFS-EL	= V1AR11UQ41UQ5
			Ed.	MKLEPADLO					+ V1AR11UQ41UQ5
			Appr		P6700 Bodyside LH - Robot Cell 2V09			Document type: EFS	Project nr: 22-16150
Modification	Date	Name	Original		Replacement of	Replaced by	Scale 1:1		Page 1 / 1533

0	1	2	3	4	5	6	7	8	9

=V1AR11UQ41KF1
+V1AR11UQ41

-KF1.23
=V1AR11UQ41KF1+V1AR11UQ41/5.1

Clamp 6 (RST)	Clamp 6 (SET)
=V1AR11UQ41KF1	=V1AR11UQ41KF1
+V1AR11UQ41	+V1AR11UQ41
-QN6.1_Q	-QN6.2_Q
=V1AR11UQ41KF1	=V1AR11UQ41KF1
+V1AR11UQ41/5.3	+V1AR11UQ41/5.3
DO:10	DO:11
2.1 Pneumatic Valve	2.2 Pneumatic Valve

-QN6 .1 .2

=V1AR11UQ41KF1+V1AR11UQ41/3.9
+V1AR11UQ41UQ6.1-W1

-W1
RKC 4.4T-2-RSC 4.4T/S3060
2m

BN BU BK WH

-BGS/R
1 3
+ -
TÜNKERS
1324633
A2 A1
2 4

Clamp 6

=V1AR11UQ41UQ6.1
+.AR11UQ41UQ6.1
-UQ6.1

=V1AR11UQ41
-UQ6.1-BGS/R
Clamp 6

=V1AR11UQ41UQ5+.AR11UQ41UQ5/1

=V1AR11UQ41UQ7+.AR11UQ41UQ7/1

			Date	1/17/2023	Volvo Trucks North America	Valiant TMS	FESTO DQ CONNECTION QN6	Drawing name: =2V09&EFS-EL	= V1AR11UQ41UQ6
			Ed.	MKLEPADLO					+ V1AR11UQ41UQ6
			Appr		P6700 Bodyside LH - Robot Cell 2V09			Document type: EFS	Project nr: 22-16150
Modification	Date	Name	Original		Replacement of	Replaced by	Scale 1:1		Page 1 / 1533

0	1	2	3	4	5	6	7	8	9

=V1AR11UQ41KF1
+V1AR11UQ41

-KF1.24
=V1AR11UQ41KF1+V1AR11UQ41/5.1

Clamps 7 (RST)	Clamps 7 (SET)
=V1AR11UQ41KF1	=V1AR11UQ41KF1
+V1AR11UQ41	+V1AR11UQ41
-QN7.1_Q	-QN7.2_Q
=V1AR11UQ41KF1	=V1AR11UQ41KF1
+V1AR11UQ41/5.3	+V1AR11UQ41/5.3
DO:12	DO:13

1.1 Pneumatic Valve
1.2 Pneumatic Valve

-QN7 .1 .2

=V1AR11UQ41KF1+V1AR11UQ41/4.1
+.AR11UQ41UQ7.1-W1

-W1 3m
RKC 4.4T-3-RSC 4.4T/S3060

-BGS/R
BN BU BK WH
1 3
TÜNKERS
1324633
A2 A1
2 4

Clamps 7
=V1AR11UQ41UQ7.1
+.AR11UQ41UQ7.1
-UQ7.1

=V1AR11UQ41
-UQ7.1-BGS/R
Clamps 7

=V1AR11UQ41KF1+V1AR11UQ41/4.2
+.AR11UQ41UQ7.2-W1

-W1 1m
RKC 4.4T-1-RSC 4.4T/S3060

-BGS/R
BN BU BK WH
1 3
TÜNKERS
1324633
A2 A1
2 4

Clamps 7
=V1AR11UQ41UQ7.2
+.AR11UQ41UQ7.2
-UQ7.2

=V1AR11UQ41
-UQ7.2-BGS/R
Clamps 7

			Date	1/17/2023	Volvo Trucks North America	Valiant TMS	FESTO DQ CONNECTION QN7	Drawing name: =2V09&EFS-EL	= V1AR11UQ41UQ7
			Ed.	MKLEPADLO					+ V1AR11UQ41UQ7
			Appr		P6700 Bodyside LH - Robot Cell 2V09			Document type: EFS	Project nr: 22-16150
Modification	Date	Name	Original		Replacement of	Replaced by	Scale 1:1		Page 1 / 1533

0	1	2	3	4	5	6	7	8	9

=V1AR11UQ41KF1
+V1AR11UQ41

-KF1.24
=V1AR11UQ41KF1+V1AR11UQ41/5.1

Clamp 8 (RST)	Clamp 8 (SET)
=V1AR11UQ41KF1	=V1AR11UQ41KF1
+V1AR11UQ41	+V1AR11UQ41
-QN8.1_Q	-QN8.2_Q
=V1AR11UQ41KF1	=V1AR11UQ41KF1
+V1AR11UQ41/5.3	+V1AR11UQ41/5.3
DO:14	DO:15
2.1 Pneumatic Valve	2.2 Pneumatic Valve

-QN8 .1 .2

=V1AR11UQ41KF1+V1AR11UQ41/4.3
+.AR11UQ41UQ8.1-W1

-W1
RKC 4.4T-3-RSC 4.4T/S3060
3m

BN BU BK WH

-BGS/R
1 3
+ -
TÜNKERS
1324633
A2 A1
2 4

Clamp 8

=V1AR11UQ41UQ8.1
+.AR11UQ41UQ8.1
-UQ8.1

=V1AR11UQ41
-UQ8.1-BGS/R
Clamp 8

=V1AR11UQ41UQ7+.AR11UQ41UQ7/1

=V1AR11UQ41UQ9+.AR11UQ41UQ9/1

			Date	1/17/2023	Volvo Trucks North America	Valiant TMS	FESTO DQ CONNECTION QN8	Drawing name: =2V09&EFS-EL	= V1AR11UQ41UQ8
			Ed.	MKLEPADLO					+ V1AR11UQ41UQ8
			Appr		P6700 Bodyside LH - Robot Cell 2V09			Document type: EFS	Project nr: 22-16150
Modification	Date	Name	Original		Replacement of	Replaced by	Scale 1:1		Page 1 / 1533

0	1	2	3	4	5	6	7	8	9

=V1AR11UQ41KF1
+V1AR11UQ41

-KF1.25
=V1AR11UQ41KF1+V1AR11UQ41/5.1

Clamps 9 (RST)	Clamps 9 (SET)
=V1AR11UQ41KF1	=V1AR11UQ41KF1
+V1AR11UQ41	+V1AR11UQ41
-QN9.1_Q	-QN9.2_Q
=V1AR11UQ41KF1	=V1AR11UQ41KF1
+V1AR11UQ41/5.3	+V1AR11UQ41/5.3
DO:16	DO:17
1.1 Pneumatic Valve	1.2 Pneumatic Valve

-QN9 .1 .2

=V1AR11UQ41KF1+V1AR11UQ41/4.4
+.AR11UQ41UQ9.1-W1

-W1
RKC 4.4T-2-RSC 4.4T/S3060
2m

BN BU BK WH

-BGS/R
1 3
+ -
TÜNKERS
1324633
A2 A1
2 4

Clamps 9

=V1AR11UQ41UQ9.1
+.AR11UQ41UQ9.1
-UQ9.1

=V1AR11UQ41
-UQ9.1-BGS/R
Clamps 9

=V1AR11UQ41KF1+V1AR11UQ41/4.5
+.AR11UQ41UQ9.2-W1

-W1
RKC 4.4T-2-RSC 4.4T/S3060
2m

BN BU BK WH

-BGS/R
1 3
+ -
TÜNKERS
1324633
A2 A1
2 4

Clamps 9

=V1AR11UQ41UQ9.2
+.AR11UQ41UQ9.2
-UQ9.2

=V1AR11UQ41
-UQ9.2-BGS/R
Clamps 9

			Date	1/17/2023	Volvo Trucks North America	Valiant TMS	FESTO DQ CONNECTION QN9	Drawing name: =2V09&EFS-EL	= V1AR11UQ41UQ9
			Ed.	MKLEPADLO					+ V1AR11UQ41UQ9
			Appr		P6700 Bodyside LH - Robot Cell 2V09			Document type: EFS	Project nr: 22-16150
Modification	Date	Name	Original		Replacement of / Replaced by	Scale 1:1			Page 1 / 1533

0	1	2	3	4	5	6	7	8	9

=V1AR11UQ41KF1
+V1AR11UQ41

-KF1.25
=V1AR11UQ41KF1+V1AR11UQ41/5.1

Spare (RST)	Spare (SET)
=V1AR11UQ41KF1	=V1AR11UQ41KF1
+V1AR11UQ41	+V1AR11UQ41
-QN10.1_Q	-QN10.2_Q
=V1AR11UQ41KF1	=V1AR11UQ41KF1
+V1AR11UQ41/5.3	+V1AR11UQ41/5.3
DO:18	DO:19

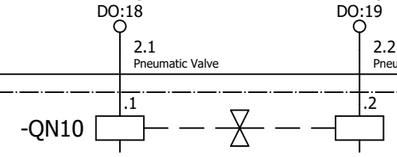

=V1AR11UQ41UQ9+.AR11UQ41UQ9/1

=V1AR11WC1+.AR11UC01/1

			Date	1/17/2023	Volvo Trucks North America	Valiant TMS	FESTO DQ CONNECTION QN10	Drawing name: =2V09&EFS-EL	= V1AR11UQ41UQ10
			Ed.	MKLEPADLO					+ V1AR11UQ41UQ10
			Appr		P6700 Bodyside LH - Robot Cell 2V09			Document type: EFS	Project nr: 22-16150
Modification	Date	Name	Original		Replacement of / Replaced by	Scale 1:1			Page 1 / 1533

0	1	2	3	4	5	6	7	8	9

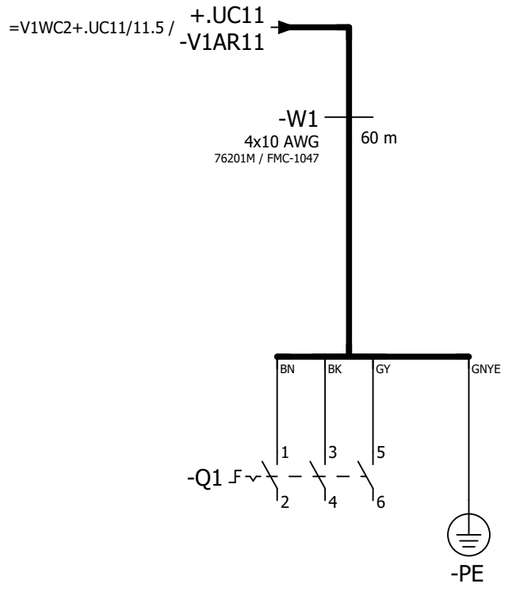

=V1AR11UQ41UQ10+.AR11UQ41UQ10/1

=V1AR21KF1+.AR21UC01/1

			Date	1/17/2023	Volvo Trucks North America		Valiant TMS	Incoming power	Drawing name: =2V09&EFS-EL	= V1AR11WC1
			Ed.	MKLEPADLO						+ V1AR11UC01
			Appr		P6700 Bodyside LH - Robot Cell 2V09				Document type: EFS	Project nr: 22-16150
Modification	Date	Name	Original		Replacement of	Replaced by	Scale 1:1			Page 1 / 1533

0	1	2	3	4	5	6	7	8	9

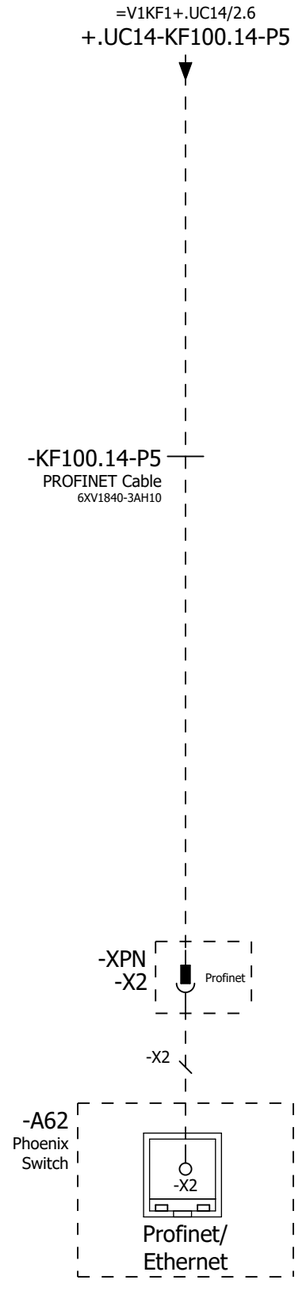

=V1AR11WC1+.AR11UC01/1

=V1AR21WC1/1

			Date	1/17/2023	Volvo Trucks North America	Valiant TMS	Incoming Profinet	Drawing name: =2V09&EFS-EL	= V1AR21KF1
			Ed.	MKLEPADLO					+ V1AR21UC01
			Appr		P6700 Bodyside LH - Robot Cell 2V09			Document type: EFS	Project nr: 22-16150
Modification	Date	Name	Original		Replacement of	Replaced by	Scale 1:1		Page 1 / 1533

0	1	2	3	4	5	6	7	8	9

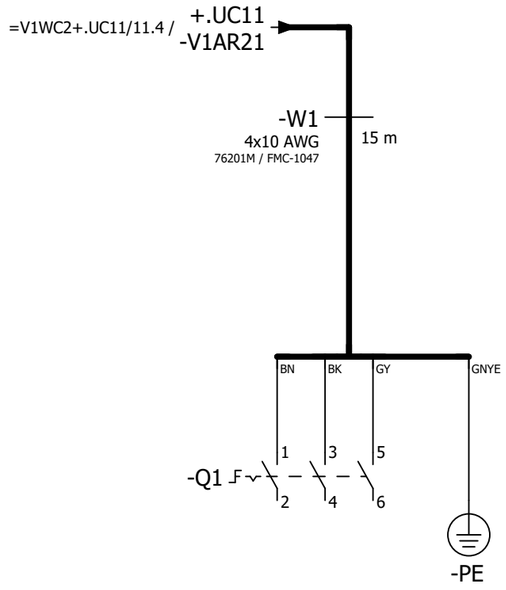

=V1AR21KF1/1

=V1AR21XQ11WC1+.AR21XQ11UC01/1

			Date	1/17/2023	Volvo Trucks North America	Valiant TMS	Incoming power	Drawing name: =2V09&EFS-EL	= V1AR21WC1
			Ed.	MKLEPADLO					+ V1AR21UC01
			Appr		P6700 Bodyside LH - Robot Cell 2V09			Document type: EFS	Project nr: 22-16150
Modification	Date	Name	Original		Replacement of / Replaced by	Scale 1:1			Page 1 / 1533

0	1	2	3	4	5	6	7	8	9

Tool-Change Application, One Weld Gun Connected at a Time (XQ11/XQ12)

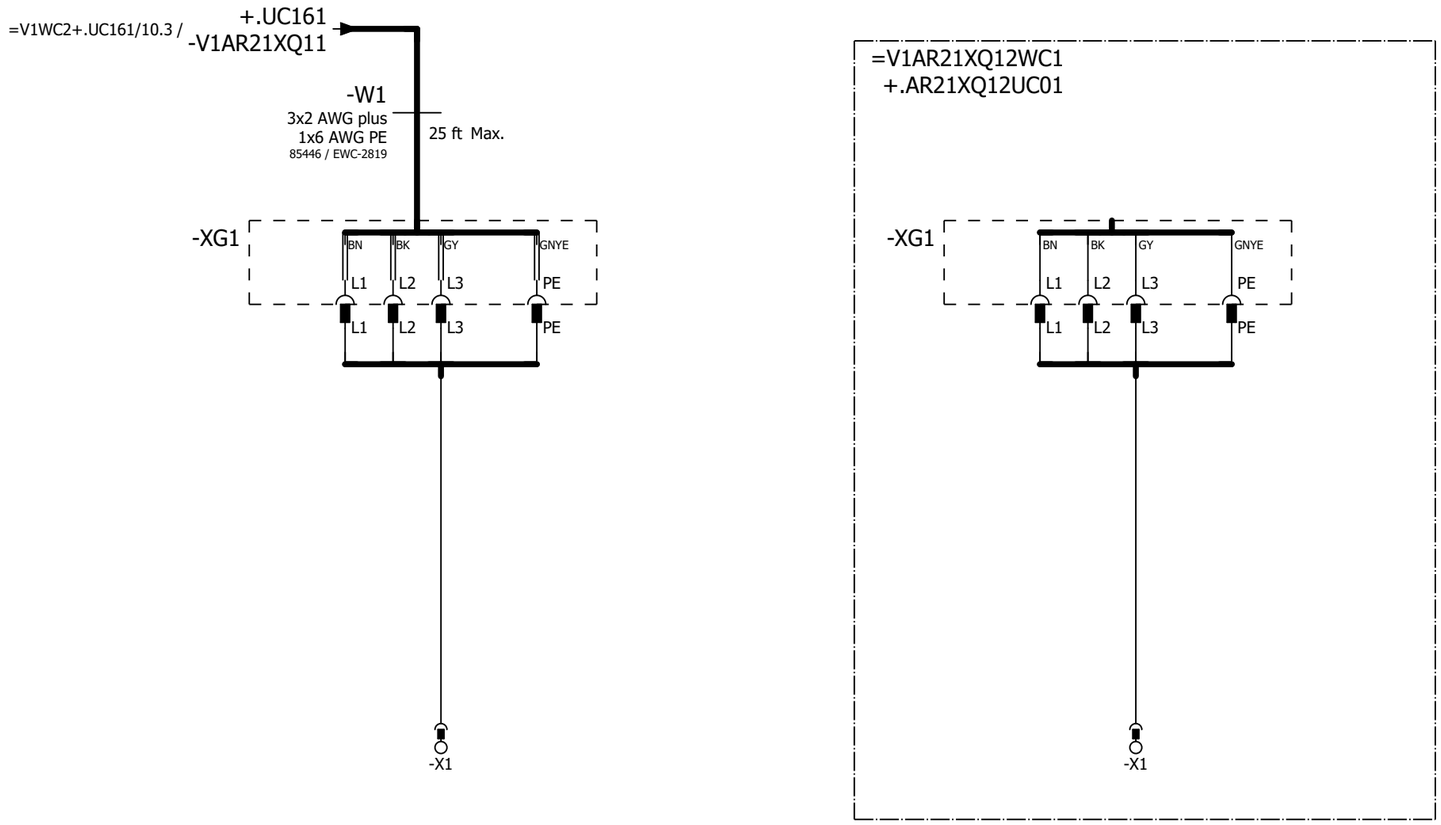

=V1AR21WC1+.AR21UC01/1

=V1AR22KF1+.AR22UC01/1

			Date	1/17/2023	Volvo Trucks North America	Valiant TMS	Incoming power	Drawing name: =2V09&EFS-EL	= V1AR21XQ11WC1	
			Ed.	MKLEPADLO					+ V1AR21XQ11UC01	
			Appr		P6700 Bodyside LH - Robot Cell 2V09			Document type: EFS	Project nr: 22-16150	Page 1
Modification	Date	Name	Original		Replacement of	Replaced by	Scale 1:1			1533

0	1	2	3	4	5	6	7	8	9

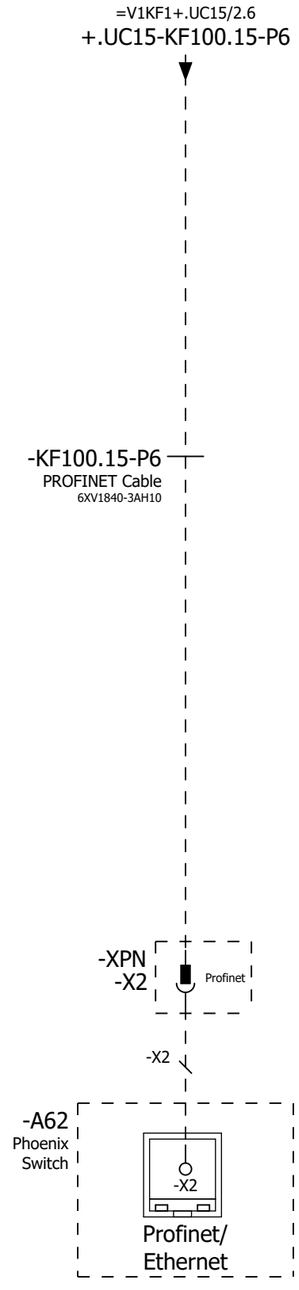

=V1AR21XQ11WC1+.AR21XQ11UC01/1

=V1AR22WC1/1

			Date	1/17/2023	Volvo Trucks North America	Valiant TMS	Incoming Profinet	Drawing name: =2V09&EFS-EL	= V1AR22KF1
			Ed.	MKLEPADLO					+ V1AR22UC01
			Appr		P6700 Bodyside LH - Robot Cell 2V09	Scale 1:1		Document type: EFS	Project nr: 22-16150
Modification	Date	Name	Original		Replacement of	Replaced by			Page 1 / 1533

0	1	2	3	4	5	6	7	8	9

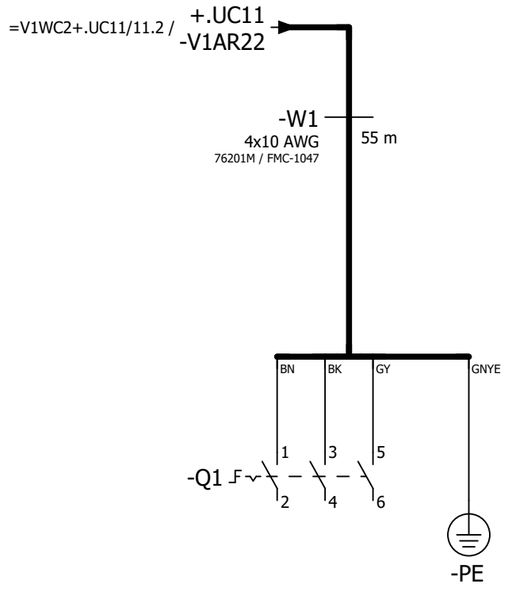

=V1AR22KF1/1

=V1AR22XQ11WC1+.AR22XQ11UC01/1

			Date	1/17/2023	Volvo Trucks North America	Valiant TMS	Incoming power	Drawing name: =2V09&EFS-EL	= V1AR22WC1
			Ed.	MKLEPADLO					+ V1AR22UC01
			Appr		P6700 Bodyside LH - Robot Cell 2V09			Document type: EFS	Project nr: 22-16150
Modification	Date	Name	Original		Replacement of	Replaced by	Scale 1:1		Page 1 / 1533

0	1	2	3	4	5	6	7	8	9

Tool-Change Application, One Weld Gun Connected at a Time (XQ11/XQ12)

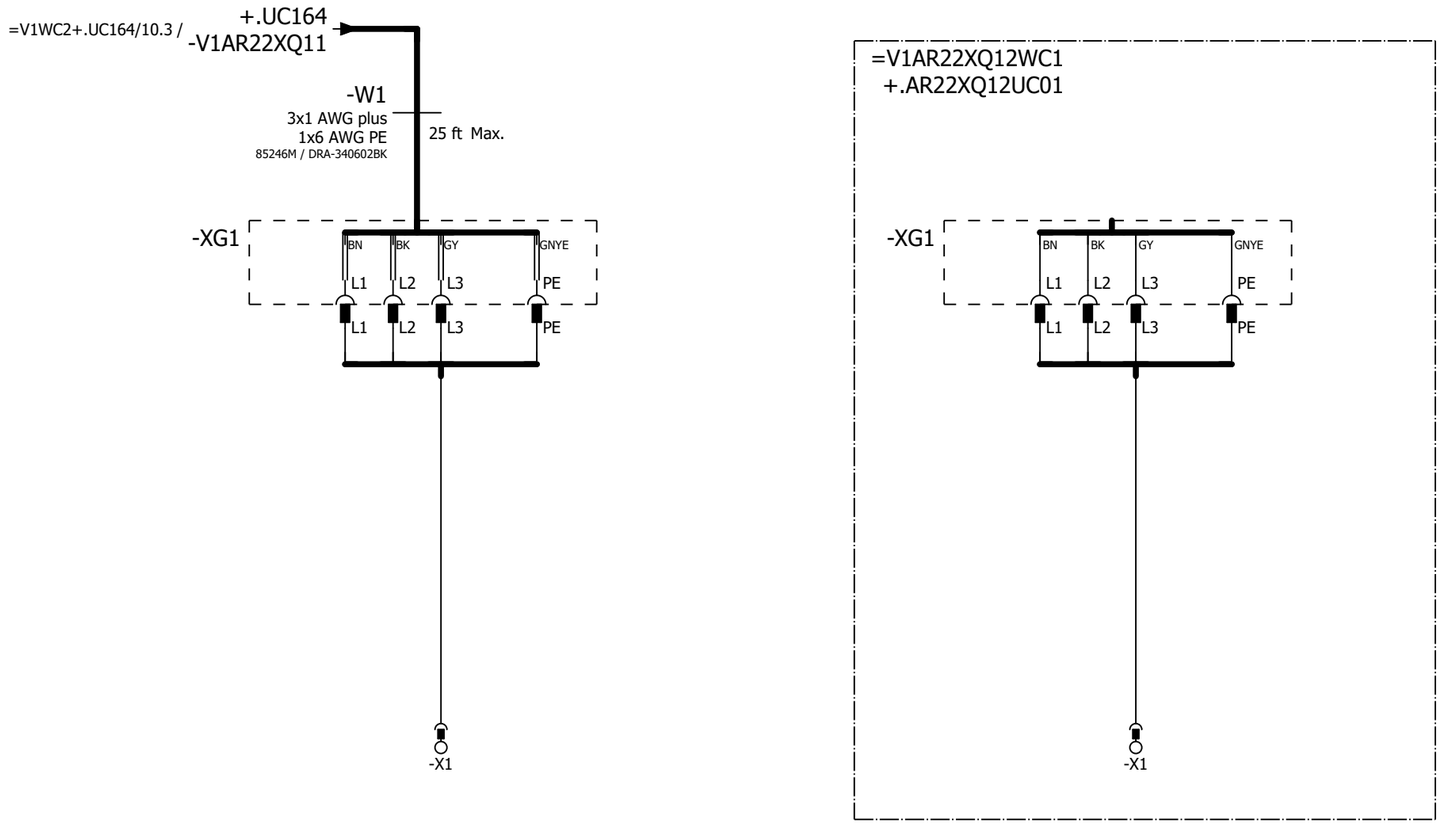

=V1AR22WC1+.AR22UC01/1

=V1AR23KF1+.AR23UC01/1

			Date	1/17/2023	Volvo Trucks North America	Valiant TMS	Incoming power	Drawing name: =2V09&EFS-EL	= V1AR22XQ11WC1
			Ed.	MKLEPADLO					+ V1AR22XQ11UC01
			Appr		P6700 Bodyside LH - Robot Cell 2V09			Document type: EFS	Project nr: 22-16150
Modification	Date	Name	Original		Replacement of	Replaced by	Scale 1:1		Page 1 / 1533

0	1	2	3	4	5	6	7	8	9

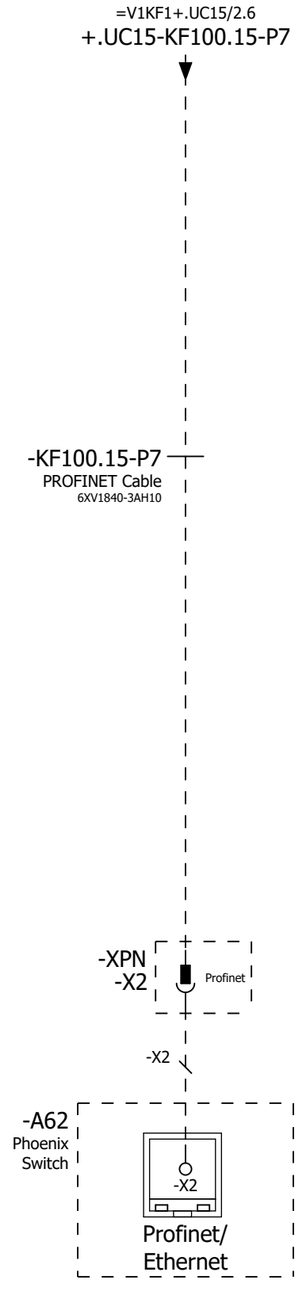

=V1AR22XQ11WC1+.AR22XQ11UC01/1

=V1AR23WC1/1

			Date	1/17/2023	Volvo Trucks North America	Valiant TMS	Incoming Profinet	Drawing name: =2V09&EFS-EL	= V1AR23KF1
			Ed.	MKLEPADLO					+ V1AR23UC01
			Appr		P6700 Bodyside LH - Robot Cell 2V09	Scale 1:1		Document type: EFS	Project nr: 22-16150
Modification	Date	Name	Original		Replacement of	Replaced by			Page 1 / 1533

0	1	2	3	4	5	6	7	8	9

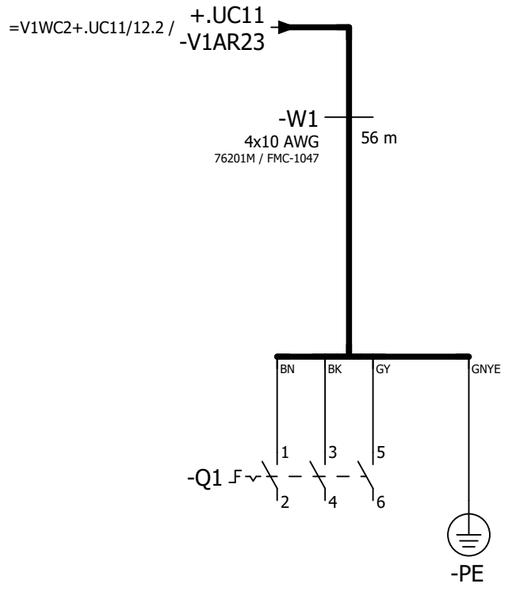

=V1AR23KF1/1

=V1AR23XQ11WC1+.AR23XQ11UC01/1

			Date	1/17/2023	Volvo Trucks North America	Valiant TMS	Incoming power	Drawing name: =2V09&EFS-EL	= V1AR23WC1
			Ed.	MKLEPADLO					+ V1AR23UC01
			Appr		P6700 Bodyside LH - Robot Cell 2V09			Document type: EFS	Project nr: 22-16150
Modification	Date	Name	Original		Replacement of	Replaced by	Scale 1:1		Page 1 / 1533

0	1	2	3	4	5	6	7	8	9

Tool-Change Application, One Weld Gun Connected at a Time (XQ11/XQ12)

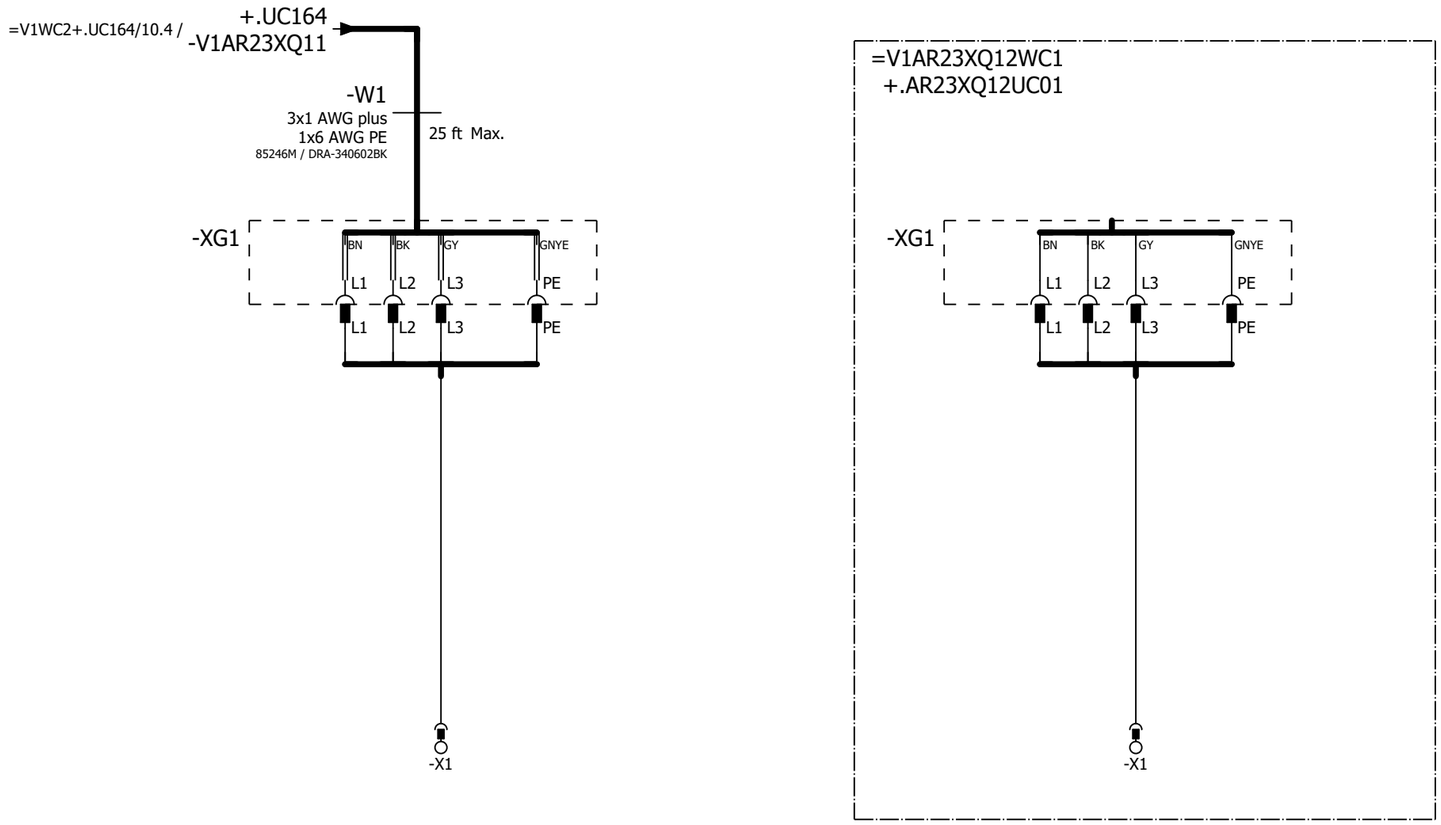

=V1AR23WC1+.AR23UC01/1

=V1AR24KF1+.AR24UC01/1

			Date	1/17/2023	Volvo Trucks North America	Valiant TMS	Incoming power	Drawing name: =2V09&EFS-EL	= V1AR23XQ11WC1
			Ed.	MKLEPADLO					+ V1AR23XQ11UC01
			Appr		P6700 Bodyside LH - Robot Cell 2V09			Document type: EFS	Project nr: 22-16150
Modification	Date	Name	Original		Replacement of	Replaced by	Scale 1:1		Page 1 / 1533

0	1	2	3	4	5	6	7	8	9

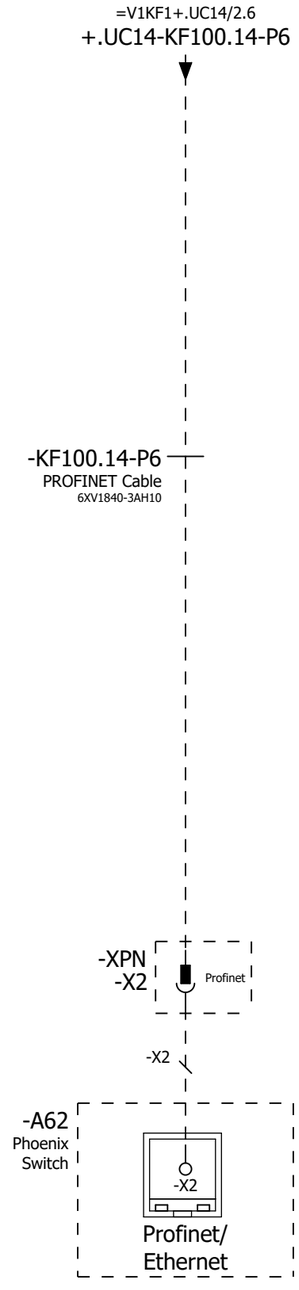

=V1AR23XQ11WC1+.AR23XQ11UC01/1

=V1AR24WC1/1

			Date	1/17/2023	Volvo Trucks North America	Valiant TMS	Incoming Profinet	Drawing name: =2V09&EFS-EL	= V1AR24KF1
			Ed.	MKLEPADLO					+ V1AR24UC01
			Appr		P6700 Bodyside LH - Robot Cell 2V09			Document type: EFS	Project nr: 22-16150
Modification	Date	Name	Original		Replacement of	Replaced by	Scale 1:1		Page 1 / 1533

0	1	2	3	4	5	6	7	8	9

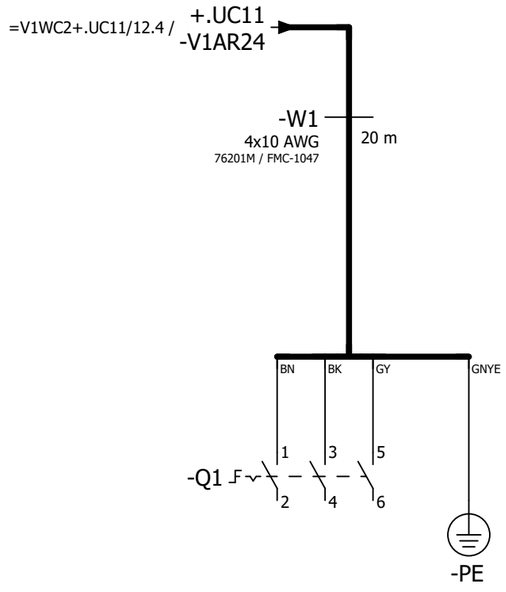

=V1AR24KF1/1

=V1AR24XQ11WC1+.AR24XQ11UC01/1

			Date	1/17/2023	Volvo Trucks North America		Valiant TMS	Incoming power	Drawing name: =2V09&EFS-EL	= V1AR24WC1
			Ed.	MKLEPADLO						+ V1AR24UC01
			Appr		P6700 Bodyside LH - Robot Cell 2V09				Document type: EFS	Project nr: 22-16150
Modification	Date	Name	Original		Replacement of	Replaced by	Scale 1:1			Page 1 / 1533

0	1	2	3	4	5	6	7	8	9

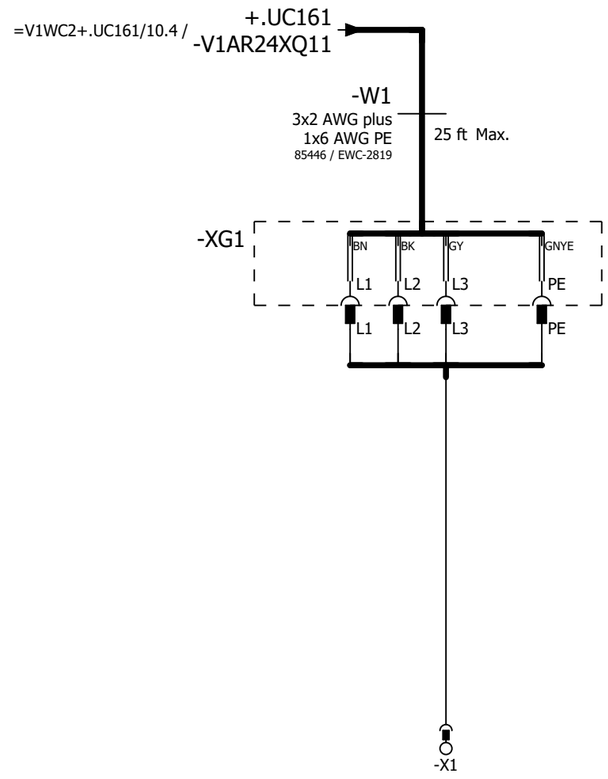

=V1AR24WC1+.AR24UC01/1

=V1AR25KF1+.AR25UC01/1

			Date	1/17/2023	Volvo Trucks North America	Valiant TMS	Incoming power	Drawing name: =2V09&EFS-EL	= V1AR24XQ11WC1	
			Ed.	MKLEPADLO					+ V1AR24XQ11UC01	
			Appr		P6700 Bodyside LH - Robot Cell 2V09	Scale 1:1		Document type: EFS	Project nr: 22-16150	Page 1 / 1533
Modification	Date	Name	Original		Replacement of	Replaced by				

0	1	2	3	4	5	6	7	8	9

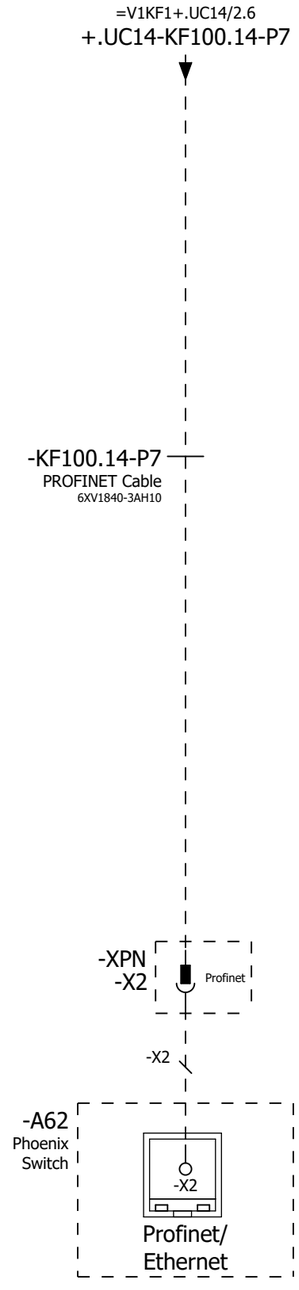

=V1AR24XQ11WC1+.AR24XQ11UC01/1

=V1AR25WC1/1

			Date	1/17/2023	Volvo Trucks North America	Valiant TMS	Incoming Profinet	Drawing name: =2V09&EFS-EL	= V1AR25KF1
			Ed.	MKLEPADLO					+ V1AR25UC01
			Appr		P6700 Bodyside LH - Robot Cell 2V09			Document type: EFS	Project nr: 22-16150
Modification	Date	Name	Original		Replacement of	Replaced by	Scale 1:1		Page 1 / 1533

0	1	2	3	4	5	6	7	8	9

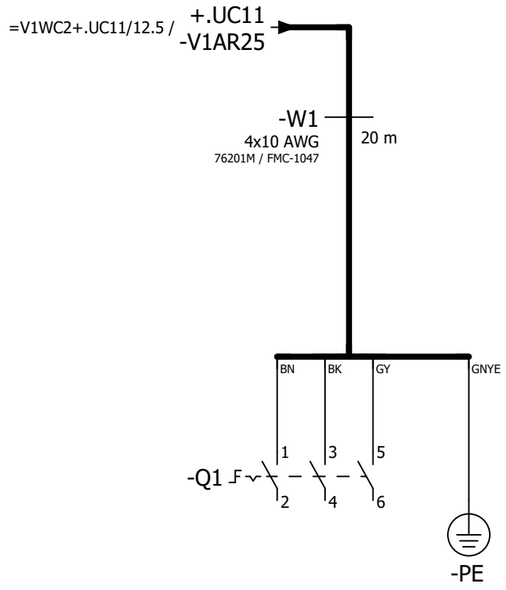

=V1AR25KF1/1

=V1AR25XQ11WC1+.AR25XQ11UC01/1

			Date	1/17/2023	Volvo Trucks North America	Valiant TMS	Incoming power	Drawing name: =2V09&EFS-EL	= V1AR25WC1
			Ed.	MKLEPADLO					+ V1AR25UC01
			Appr		P6700 Bodyside LH - Robot Cell 2V09			Document type: EFS	Project nr: 22-16150
Modification	Date	Name	Original		Replacement of	Replaced by	Scale 1:1		Page 1 / 1533

0	1	2	3	4	5	6	7	8	9

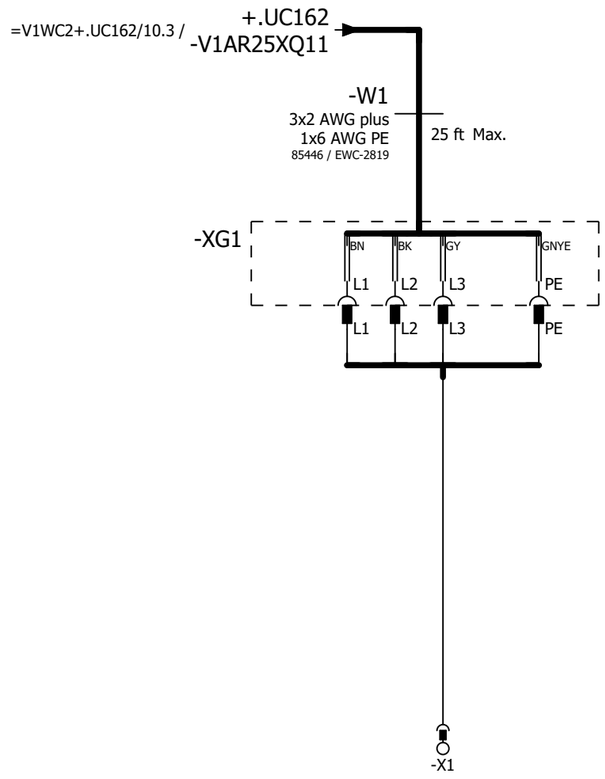

=V1AR25WC1+.AR25UC01/1

=V1AR26KF1+.AR26UC01/1

			Date	1/17/2023	Volvo Trucks North America	Valiant TMS	Incoming power	Drawing name: =2V09&EFS-EL	= V1AR25XQ11WC1	
			Ed.	MKLEPADLO					+ V1AR25XQ11UC01	
			Appr		P6700 Bodyside LH - Robot Cell 2V09	Scale 1:1		Document type: EFS	Project nr: 22-16150	Page 1
Modification	Date	Name	Original		Replacement of	Replaced by				1533

0	1	2	3	4	5	6	7	8	9

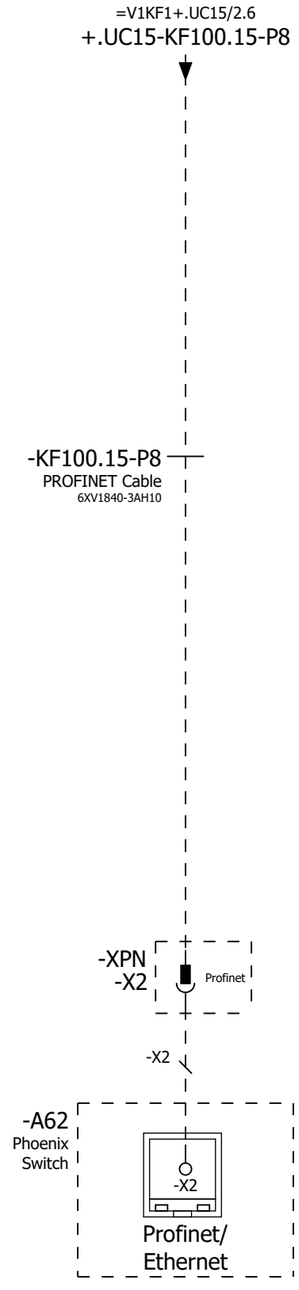

=V1AR25XQ11WC1+.AR25XQ11UC01/1

=V1AR26WC1/1

			Date	1/17/2023	Volvo Trucks North America	Valiant TMS	Incoming Profinet	Drawing name: =2V09&EFS-EL	= V1AR26KF1
			Ed.	MKLEPADLO					+ V1AR26UC01
			Appr		P6700 Bodyside LH - Robot Cell 2V09			Document type: EFS	Project nr: 22-16150
Modification	Date	Name	Original		Replacement of	Replaced by	Scale 1:1		Page 1 / 1533

0	1	2	3	4	5	6	7	8	9

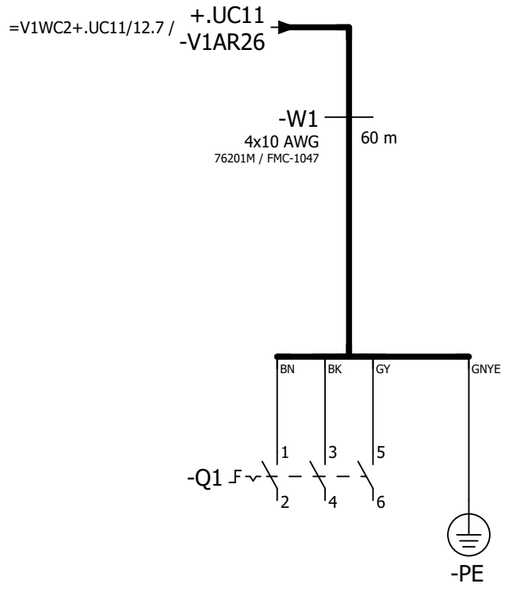

=V1AR26KF1/1

=V1AR26XQ11WC1+.AR26XQ11UC01/1

			Date	1/17/2023	Volvo Trucks North America		Valiant TMS	Incoming power	Drawing name: =2V09&EFS-EL	= V1AR26WC1
			Ed.	MKLEPADLO						+ V1AR26UC01
			Appr		P6700 Bodyside LH - Robot Cell 2V09				Document type: EFS	Project nr: 22-16150
Modification	Date	Name	Original		Replacement of	Replaced by	Scale 1:1			Page 1 / 1533

0	1	2	3	4	5	6	7	8	9

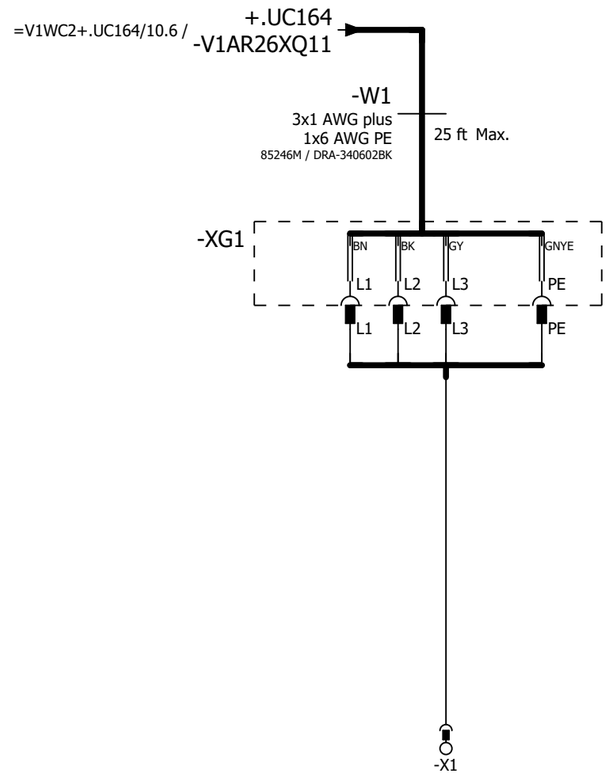

=V1AR26WC1+.AR26UC01/1

=V1AR28KF1+.AR28UC01/1

			Date	1/17/2023	Volvo Trucks North America	Valiant TMS	Incoming power	Drawing name: =2V09&EFS-EL	= V1AR26XQ11WC1
			Ed.	MKLEPADLO					+ V1AR26XQ11UC01
			Appr		P6700 Bodyside LH - Robot Cell 2V09			Document type: EFS	Project nr: 22-16150
Modification	Date	Name	Original		Replacement of	Replaced by	Scale 1:1		Page 1 / 1533

0	1	2	3	4	5	6	7	8	9

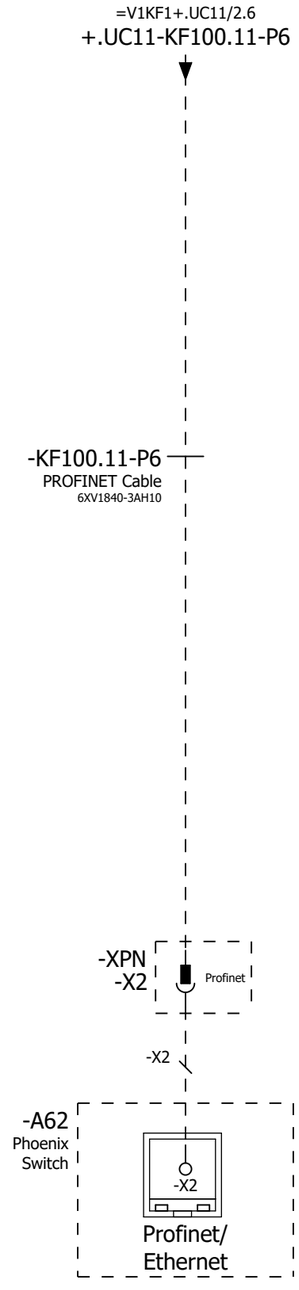

=V1AR26XQ11WC1+.AR26XQ11UC01/1

=V1AR28WC1/1

			Date	1/17/2023	Volvo Trucks North America	Valiant TMS	Incoming Profinet	Drawing name: =2V09&EFS-EL	= V1AR28KF1
			Ed.	MKLEPADLO					+ V1AR28UC01
			Appr		P6700 Bodyside LH - Robot Cell 2V09			Document type: EFS	Project nr: 22-16150
Modification	Date	Name	Original		Replacement of	Replaced by	Scale 1:1		Page 1 / 1533

0	1	2	3	4	5	6	7	8	9

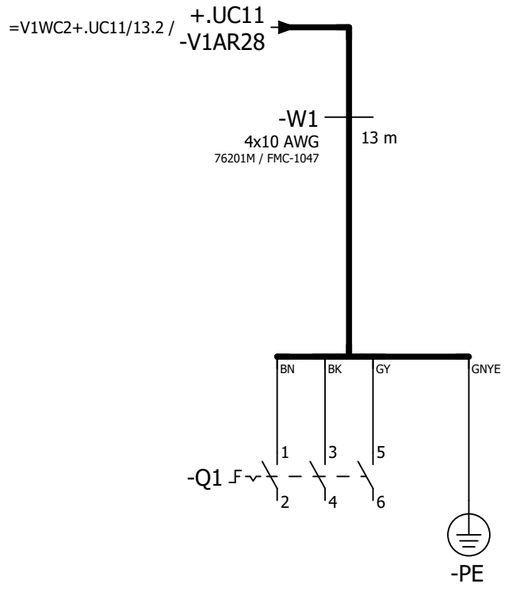

=V1AR28KF1/1

=V1AR28XQ11WC1+.AR28XQ11UC01/1

			Date	1/17/2023	Volvo Trucks North America		Valiant TMS	Incoming power	Drawing name: =2V09&EFS-EL	= V1AR28WC1
			Ed.	MKLEPADLO						+ V1AR28UC01
			Appr		P6700 Bodyside LH - Robot Cell 2V09				Document type: EFS	Project nr: 22-16150
Modification	Date	Name	Original		Replacement of	Replaced by	Scale 1:1			Page 1 / 1533

0	1	2	3	4	5	6	7	8	9

Tool-Change Application, One Weld Gun Connected at a Time (XQ11/XQ12)

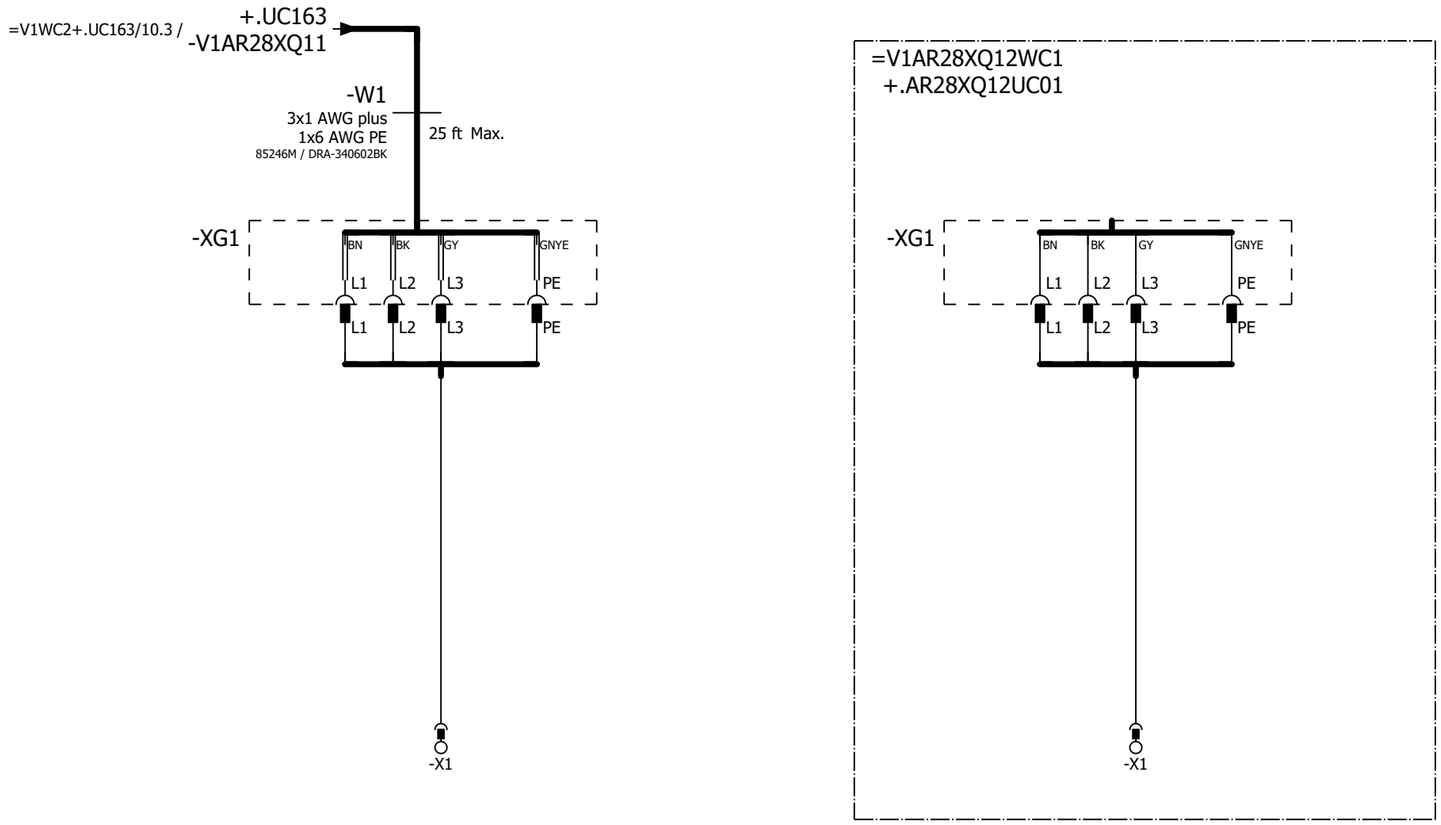

=V1AR28WC1+.AR28UC01/1

=V1AR29KF1+.AR29UC01/1

			Date	1/17/2023	Volvo Trucks North America	Valiant TMS	Incoming power	Drawing name: =2V09&EFS-EL	= V1AR28XQ11WC1	
			Ed.	MKLEPADLO					+ V1AR28XQ11UC01	
			Appr		P6700 Bodyside LH - Robot Cell 2V09			Document type: EFS	Project nr: 22-16150	Page 1
Modification	Date	Name	Original		Replacement of	Replaced by	Scale 1:1			1533

0	1	2	3	4	5	6	7	8	9

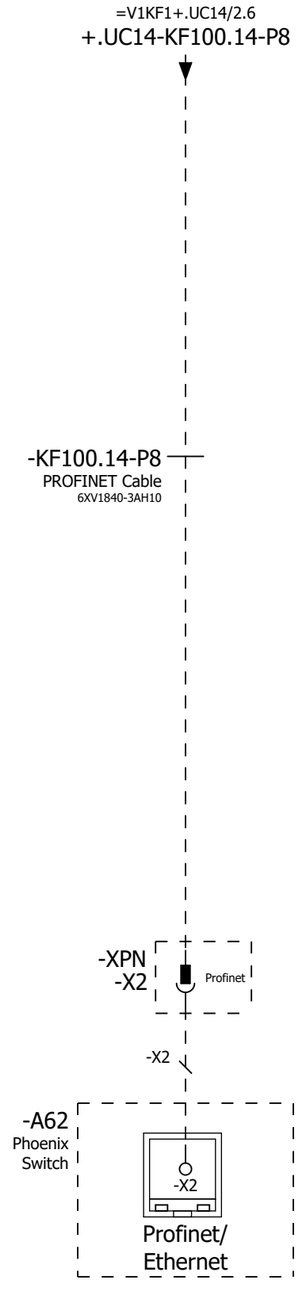

=V1AR28XQ11WC1+.AR28XQ11UC01/1

=V1AR29WC1/1

			Date	1/17/2023	Volvo Trucks North America	Valiant TMS	Incoming Profinet	Drawing name: =2V09&EFS-EL	= V1AR29KF1
			Ed.	MKLEPADLO					+ V1AR29UC01
			Appr		P6700 Bodyside LH - Robot Cell 2V09			Document type: EFS	Project nr: 22-16150
Modification	Date	Name	Original		Replacement of	Replaced by	Scale 1:1		Page 1 / 1533

0	1	2	3	4	5	6	7	8	9

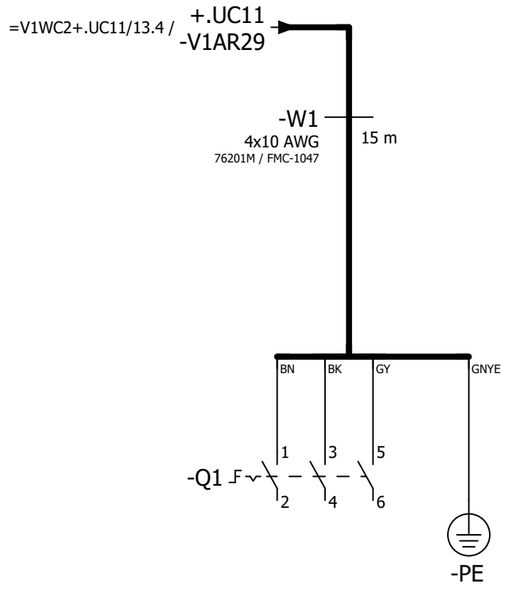

=V1AR29KF1/1

=V1AR29XQ11WC1+.AR29XQ11UC01/1

			Date	1/17/2023	Volvo Trucks North America		Valiant TMS	Incoming power	Drawing name: =2V09&EFS-EL	= V1AR29WC1
			Ed.	MKLEPADLO						+ V1AR29UC01
			Appr		P6700 Bodyside LH - Robot Cell 2V09				Document type: EFS	Project nr: 22-16150
Modification	Date	Name	Original		Replacement of	Replaced by	Scale 1:1			Page 1 / 1533

0	1	2	3	4	5	6	7	8	9

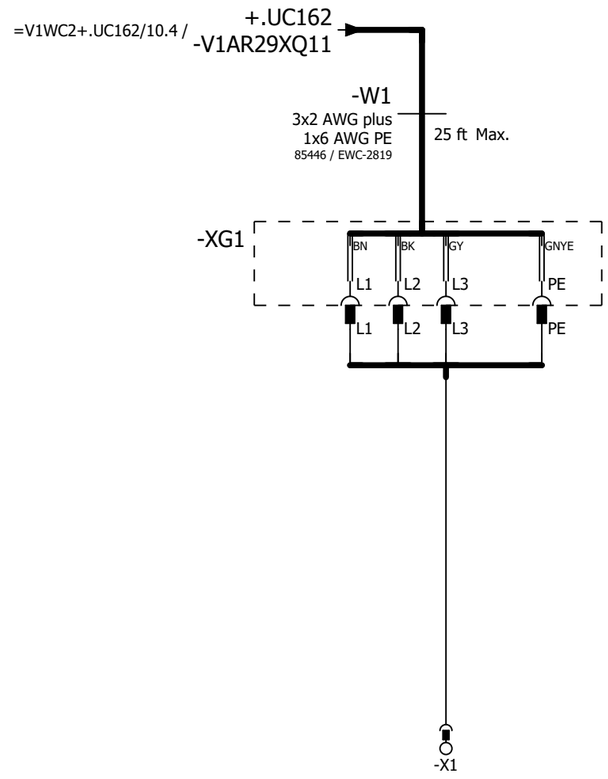

=V1AR29WC1+.AR29UC01/1

=V1AR31KF1+.AR31UC01/1

			Date	1/17/2023	Volvo Trucks North America		Valiant TMS	Incoming power	Drawing name: =2V09&EFS-EL	= V1AR29XQ11WC1	
			Ed.	MKLEPADLO						+ V1AR29XQ11UC01	
			Appr		P6700 Bodyside LH - Robot Cell 2V09				Document type: EFS	Project nr: 22-16150	Page 1
Modification	Date	Name	Original		Replacement of	Replaced by	Scale 1:1				1533

0	1	2	3	4	5	6	7	8	9

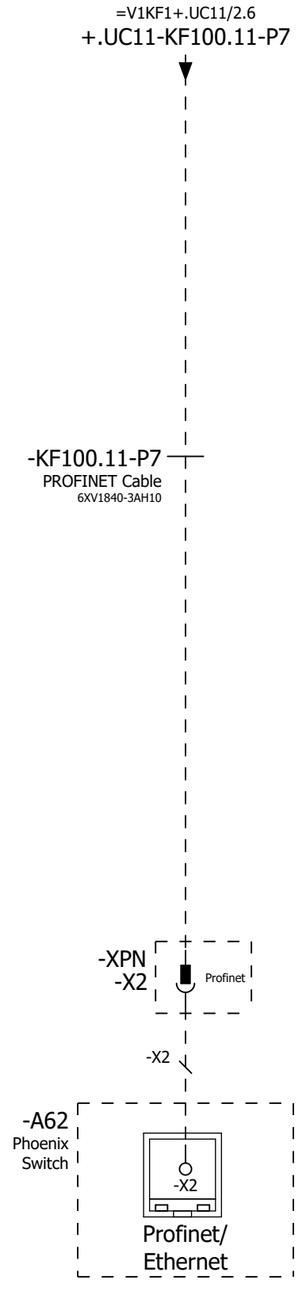

=V1AR29XQ11WC1+.AR29XQ11UC01/1

=V1AR31UQ41BG0+.AR31UQ41/1

			Date	1/17/2023	Volvo Trucks North America	Valiant TMS	Incoming Profinet	Drawing name: =2V09&EFS-EL	= V1AR31KF1
			Ed.	MKLEPADLO					+ V1AR31UC01
			Appr		P6700 Bodyside LH - Robot Cell 2V09	Scale 1:1		Document type: EFS	Project nr: 22-16150
Modification	Date	Name	Original		Replacement of	Replaced by			Page 1 / 1533

0	1	2	3	4	5	6	7	8	9

=V1AR31UQ41KF1/4.1

-XG1/2

-W1
RKC 4.4T-0.5-RSC 4.4T/S3060
0.5m

BN BU BK WH

-XG1/2 P1 1 3 4 2 VB2-FSM 4.4/2FKM 4/S3450

J1 1 3 4 2 J2 1 3 4 2

BN BU BK WH

-W1.1
RKC 4.4T-2-RSC 4.4T/S3060
2m

-W1.2
RKC 4.4T-3-RSC 4.4T/S3060
3m

BN BU BK WH

-BG01
Sn = 50 mm
1 3
+ -
TURCK
1625891
A pnp
4

-BG02
Sn = 50 mm
1 3
+ -
TURCK
1625891
A pnp
4

=V1AR31UQ41
-BG01
6576 ASSY

=V1AR31UQ41
-BG02
1360/0637 ASSY

=V1AR31UQ41KF1/4.2

-XG3/4

-W2
RKC 4.4T-0.5-RSC 4.4T/S3060
0.5m

BN BU BK WH

-XG3/4 P1 1 3 4 2 VB2-FSM 4.4/2FKM 4/S3450

J1 1 3 4 2 J2 1 3 4 2

BN BU BK WH

-W2.1
RKC 4.4T-3-RSC 4.4T/S3060
3m

-W2.2
RKC 4.4T-3-RSC 4.4T/S3060
3m

BN BU BK WH

-BG03
Sn = 50 mm
1 3
+ -
TURCK
1625891
A pnp
4

-BG04
Sn = 50 mm
1 3
+ -
TURCK
1625891
A pnp
4

=V1AR31UQ41
-BG03
2139/0486 ASSY

=V1AR31UQ41
-BG04
9674/9670 ASSY

=V1AR31UQ41KF1/4.3

-BG05

-W3
RKC 4.4T-3-RSC 4.4T/S3060
3m

BN BU BK WH

-BG05
Sn = 50 mm
1 3
+ -
TURCK
1625891
A pnp
4

=V1AR31UQ41
-BG05
Common

=V1AR31KF1+.AR31UC01/1

=V1AR31UQ41KF1/1

			Date	1/17/2023	Volvo Trucks North America		Valiant TMS	SENSORS	Drawing name: =2V09&EFS-EL	= V1AR31UQ41BG0
			Ed.	MKLEPADLO						+ V1AR31UQ41
			Appr		P6700 Bodyside LH - Robot Cell 2V09		Scale 1:1		Document type: EFS	Project nr: 22-16150
Modification	Date	Name	Original		Replacement of	Replaced by				Page 1 / 1533

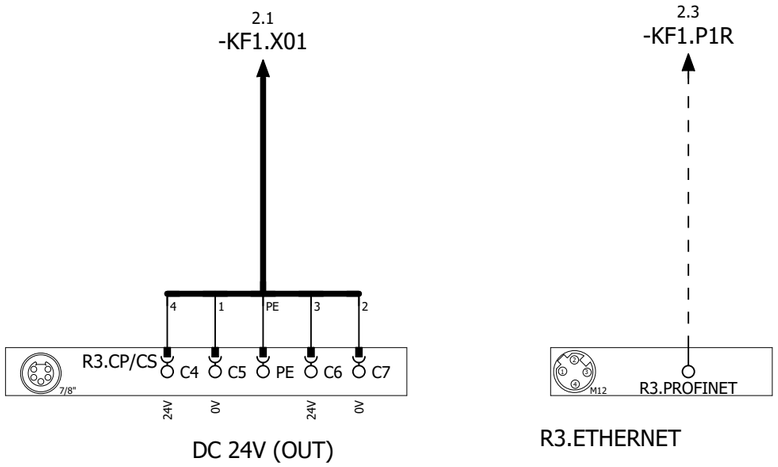

DC 24V (OUT)

R3.ETHERNET

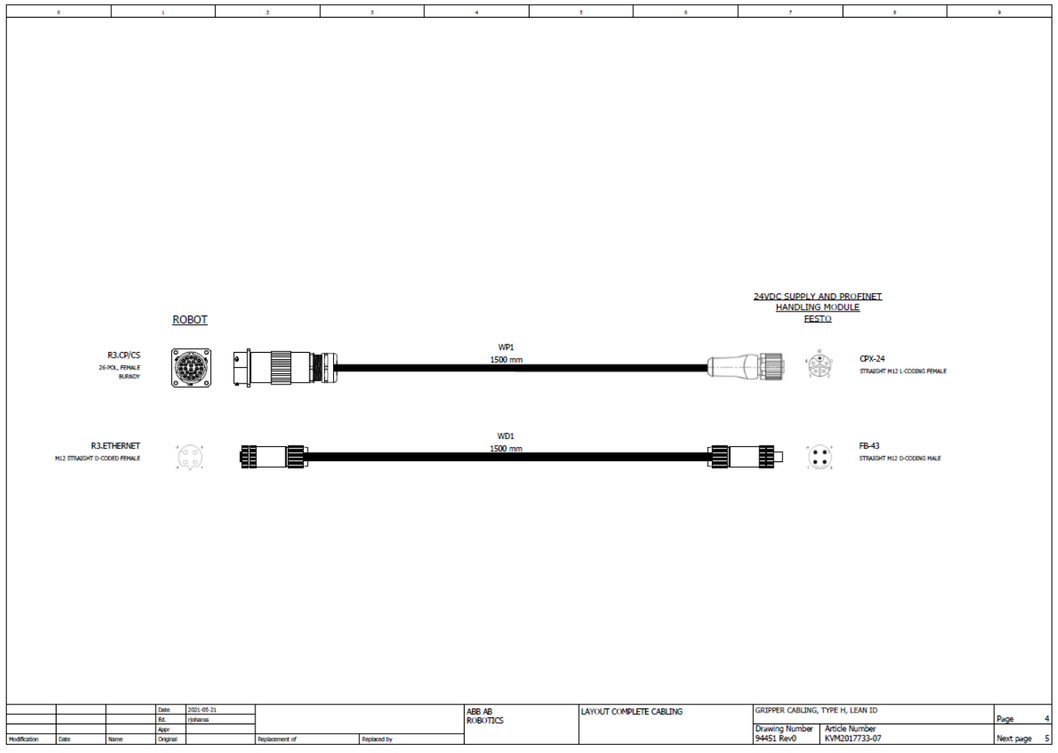

=V1AR31UQ41BG0/1

2

			Date	1/17/2023	Volvo Trucks North America	Valiant TMS	24VDC SUPPLY AND PROFINET HANDLING MODULE	Drawing name: =2V09&EFS-EL	= V1AR31UQ41KF1
			Ed.	MKLEPADLO					+ V1AR31UQ41
			Appr		P6700 Bodyside LH - Robot Cell 2V09			Document type: EFS	Project nr: 22-16150
Modification	Date	Name	Original		Replacement of / Replaced by	Scale 1:1			Page 1 / 1533

0	1	2	3	4	5	6	7	8	9

1.3 / -KF1.X01

-W1
RSM RKM 56-1M/S3059
1m

1.5 / -KF1.P1R

-WF1
PROFINET Cable
6XV1840-3AH10

-KF1

X20 7/8" 1 2 3 4 5
1 2 PE 3 4
0V_VAL / OUT
0V_EL / SEN
FE
24V_EL / SEN
24V_VAL / OUT

ON
OFF
1 2 1 2

M12 -TP1
M12 -TP2

FESTO
Bus node + Interlinking block
548755 + 550208

DI:0	DI 0 X1:4	V1AR31UQ41UQ1.1-BGR	Shot Pin (RESET)
DI:1	DI 1 X1:2	V1AR31UQ41UQ1.1-BGS	Shot Pin (SET)
DI:2	DI 2 X2:4	V1AR31UQ41UQ2.1-BGR	Clamps 2 (RESET)
DI:3	DI 3 X2:2	V1AR31UQ41UQ2.1-BGS	Clamps 2 (SET)
DI:4	DI 4 X3:4	V1AR31UQ41UQ2.2-BGR	Clamps 2 (RESET)
DI:5	DI 5 X3:2	V1AR31UQ41UQ2.2-BGS	Clamps 2 (SET)
DI:6	DI 6 X4:4	V1AR31UQ41UQ3.1-BGR	Clamp 3 (RESET)
DI:7	DI 7 X4:2	V1AR31UQ41UQ3.1-BGS	Clamp 3 (SET)
DI:8	DI 8 X5:4	V1AR31UQ41UQ4.1-BGR	Clamp 4 (RESET)
DI:9	DI 9 X5:2	V1AR31UQ41UQ4.1-BGS	Clamp 4 (SET)
DI:10	DI 10 X6:4	V1AR31UQ41UQ5.1-BGR	Clamps 5 (RESET)
DI:11	DI 11 X6:2	V1AR31UQ41UQ5.1-BGS	Clamp 5 (SET)
DI:12	DI 12 X7:4	V1AR31UQ41UQ6.1-BGR	Clamp 6 (RESET)
DI:13	DI 13 X7:2	V1AR31UQ41UQ6.1-BGS	Clamp 6 (SET)
DI:14	DI 14 X8:4	V1AR31UQ41UQ7.1-BGR	Clamps 7 (RESET)
DI:15	DI 15 X8:2	V1AR31UQ41UQ7.1-BGS	Clamps 7 (SET)

-KF1.11

FESTO
CPX-M-AB-8-M12X2-5POL
549335

X1 M12: 24V | DI 1 | 0V | DI 0 | FE — 1 2 3 4 5 — BN WH BU BK
X2 M12: 24V | DI 3 | 0V | DI 2 | FE — 1 2 3 4 5 — BN WH BU BK
X3 M12: 24V | DI 5 | 0V | DI 4 | FE — 1 2 3 4 5 — BN WH BU BK
X4 M12: 24V | DI 7 | 0V | DI 6 | FE — 1 2 3 4 5 — BN WH BU BK
X5 M12: 24V | DI 9 | 0V | DI 8 | FE — 1 2 3 4 5 — BN WH BU BK
X6 M12: 24V | DI 11 | 0V | DI 10 | FE — 1 2 3 4 5 — BN WH BU BK
X7 M12: 24V | DI 13 | 0V | DI 12 | FE — 1 2 3 4 5 — BN WH BU BK
X8 M12: 24V | DI 15 | 0V | DI 14 | FE — 1 2 3 4 5 — BN WH BU BK

+V1AR31UQ41UQ1.1-W1
=V1AR31UQ41UQ1+.AR31UQ41UQ1/1.1

+V1AR31UQ41UQ2.1-W1
=V1AR31UQ41UQ2+.AR31UQ41UQ2/1.1

+V1AR31UQ41UQ2.2-W1
=V1AR31UQ41UQ2+.AR31UQ41UQ2/1.2

+V1AR31UQ41UQ3.1-W1
=V1AR31UQ41UQ3+.AR31UQ41UQ3/1.1

+V1AR31UQ41UQ4.1-W1
=V1AR31UQ41UQ4+.AR31UQ41UQ4/1.1

+V1AR31UQ41UQ5.1-W1
=V1AR31UQ41UQ5+.AR31UQ41UQ5/1.1

+V1AR31UQ41UQ6.1-W1
=V1AR31UQ41UQ6+.AR31UQ41UQ6/1.1

+V1AR31UQ41UQ7.1-W1
=V1AR31UQ41UQ7+.AR31UQ41UQ7/1.1

1

3

			Date	1/17/2023	Volvo Trucks North America	Valiant TMS	CONNECTING MOD. FOR MPA MANIFOLD	Drawing name: =2V09&EFS-EL	= V1AR31UQ41KF1
			Ed.	MKLEPADLO					+ V1AR31UQ41
			Appr		P6700 Bodyside LH - Robot Cell 2V09	Scale 1:1		Document type: EFS	Project nr: 22-16150
Modification	Date	Name	Original		Replacement of	Replaced by			Page 2 / 1533

0	1	2	3	4	5	6	7	8	9

-KF1.12

FESTO
CPX-M-AB-8-M12X2-5POL
549335

DI:16	DI 0 X1:4	V1AR31UQ41UQ7.2-BGR	Clamps 7 (RESET)
DI:17	DI 1 X1:2	V1AR31UQ41UQ7.2-BGS	Clamps 7 (SET)
DI:18	DI 2 X2:4	V1AR31UQ41UQ8.1-BGR	Clamps 8 (RESET)
DI:19	DI 3 X2:2	V1AR31UQ41UQ8.1-BGS	Clamps 8 (SET)
DI:20	DI 4 X3:4	V1AR31UQ41UQ8.2-BGR	Clamps 8 (RESET)
DI:21	DI 5 X3:2	V1AR31UQ41UQ8.2-BGS	Clamps 8 (SET)
DI:22	DI 6 X4:4	V1AR31UQ41UQ9.1-BGR	Clamps 9 (RESET)
DI:23	DI 7 X4:2	V1AR31UQ41UQ9.1-BGS	Clamps 9 (SET)
DI:24	DI 8 X5:4	V1AR31UQ41UQ9.2-BGR	Clamps 9 (RESET)
DI:25	DI 9 X5:2	V1AR31UQ41UQ9.2-BGS	Clamps 9 (SET)
DI:26	DI 10 X6:4	DI:26	Spare
DI:27	DI 11 X6:2	DI:27	Spare
DI:28	DI 12 X7:4	DI:28	Spare
DI:29	DI 13 X7:2	DI:29	Spare
DI:30	DI 14 X8:4	DI:30	Spare
DI:31	DI 15 X8:2	DI:31	Spare

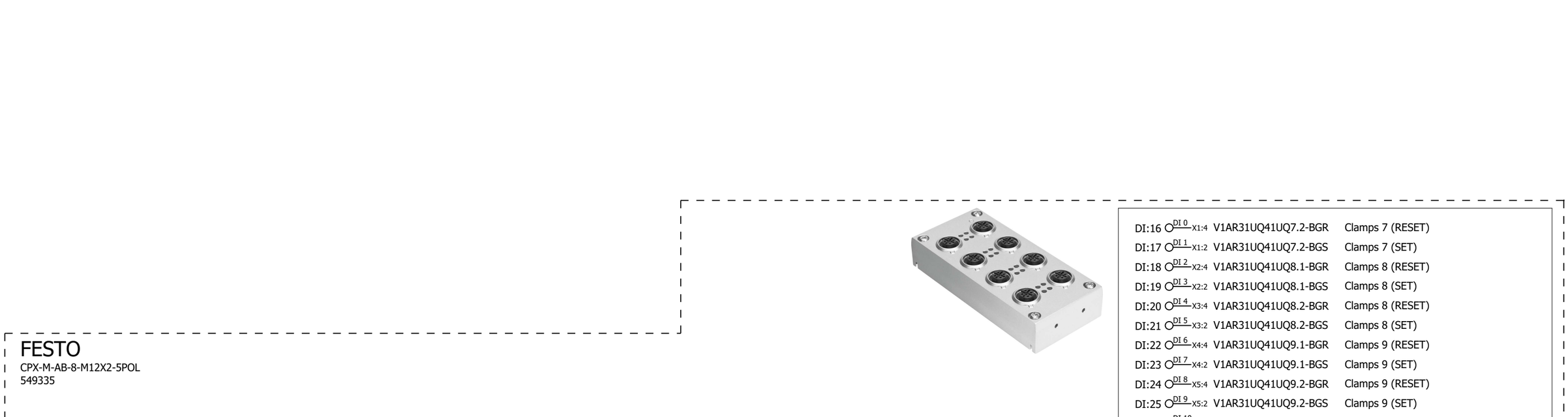

2 4

			Date	1/17/2023	Volvo Trucks North America	Valiant TMS	I/O MOD. DI16 (8 x M12) FOR MPA	Drawing name: =2V09&EFS-EL	= V1AR31UQ41KF1
			Ed.	MKLEPADLO					+ V1AR31UQ41
			Appr		P6700 Bodyside LH - Robot Cell 2V09			Document type: EFS	Project nr: 22-16150
Modification	Date	Name	Original		Replacement of / Replaced by	Scale 1:1			Page 3 / 1533

0	1	2	3	4	5	6	7	8	9

-KF1.13

FESTO

CPX-M-AB-8-M12X2-5POL

549335

DI:32	DI 0 X1:4	V1AR31UQ41-BG01 6576 ASSY
DI:33	DI 1 X1:2	V1AR31UQ41-BG02 1360/0637 ASSY
DI:34	DI 2 X2:4	V1AR31UQ41-BG03 2139/0486 ASSY
DI:35	DI 3 X2:2	V1AR31UQ41-BG04 9674/9670 ASSY
DI:36	DI 4 X3:4	V1AR31UQ41-BG05 BGO5
DI:37	DI 5 X3:2	DI:37 Spare
DI:38	DI 6 X4:4	DI:38 Spare
DI:39	DI 7 X4:2	DI:39 Spare
DI:40	DI 8 X5:4	DI:40 Spare
DI:41	DI 9 X5:2	DI:41 Spare
DI:42	DI 10 X6:4	DI:42 Spare
DI:43	DI 11 X6:2	DI:43 Spare
DI:44	DI 12 X7:4	DI:44 Spare
DI:45	DI 13 X7:2	DI:45 Spare
DI:46	DI 14 X8:4	DI:46 Spare
DI:47	DI 15 X8:2	DI:47 Spare

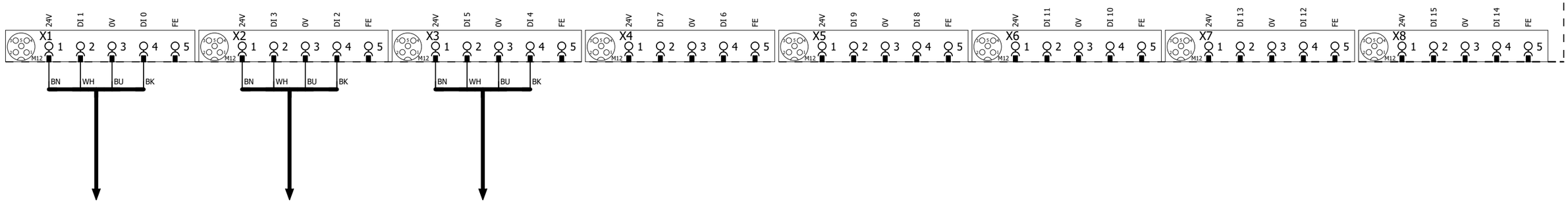

3 5

			Date	1/17/2023	Volvo Trucks North America	Valiant TMS	I/O MOD. DI16 (8 x M12) FOR MPA	Drawing name: =2V09&EFS-EL	= V1AR31UQ41KF1
			Ed.	MKLEPADLO					+ V1AR31UQ41
			Appr		P6700 Bodyside LH - Robot Cell 2V09			Document type: EFS	Project nr: 22-16150
Modification	Date	Name	Original		Replacement of / Replaced by	Scale 1:1			Page 4 / 1533

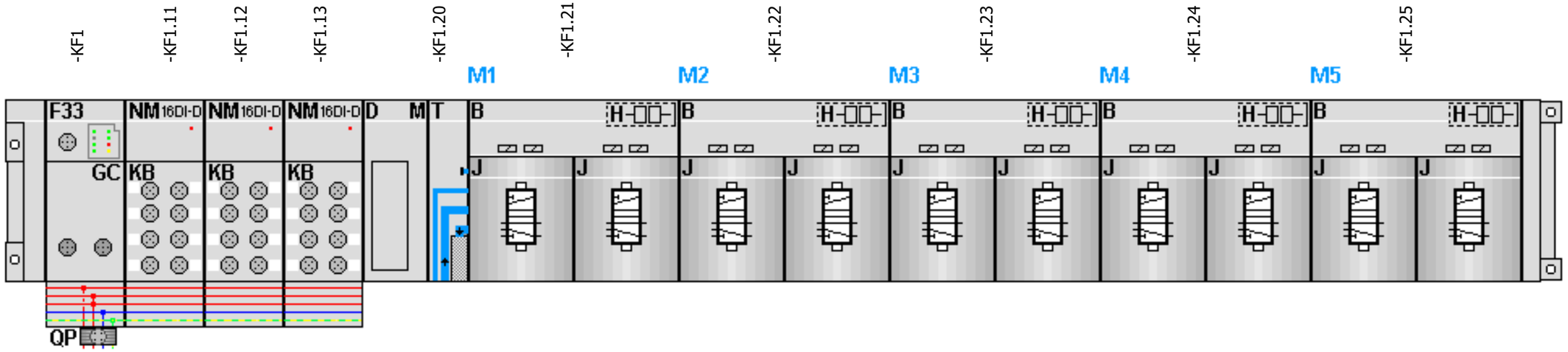

-KF1.21
=V1AR31UQ41UQ1+.AR31UQ41UQ1/1.3
=V1AR31UQ41UQ2+.AR31UQ41UQ2/1.3

FESTO

=V1AR31UQ41UQ1+.AR31UQ41UQ1/1.4	DO:0 DO 0 1.1	-QN1.1_Q	Shot Pin 1 (RST)
=V1AR31UQ41UQ1+.AR31UQ41UQ1/1.4	DO:1 DO 1 1.2	-QN1.2_Q	Shot Pin 1 (SET)
=V1AR31UQ41UQ2+.AR31UQ41UQ2/1.4	DO:2 DO 2 2.1	-QN2.1_Q	Clamps 2 (RST)
=V1AR31UQ41UQ2+.AR31UQ41UQ2/1.4	DO:3 DO 3 2.2	-QN2.2_Q	Clamps 2 (SET)

-KF1.22
=V1AR31UQ41UQ3+.AR31UQ41UQ3/1.3
=V1AR31UQ41UQ4+.AR31UQ41UQ4/1.3

FESTO

=V1AR31UQ41UQ3+.AR31UQ41UQ3/1.4	DO:4 DO 0 1.1	-QN3.1_Q	Clamp 3 (RST)
=V1AR31UQ41UQ3+.AR31UQ41UQ3/1.4	DO:5 DO 1 1.2	-QN3.2_Q	Clamp 3 (SET)
=V1AR31UQ41UQ4+.AR31UQ41UQ4/1.4	DO:6 DO 2 2.1	-QN4.1_Q	Clamp 4 (RST)
=V1AR31UQ41UQ4+.AR31UQ41UQ4/1.4	DO:7 DO 3 2.2	-QN4.2_Q	Clamp 4 (SET)

-KF1.23
=V1AR31UQ41UQ5+.AR31UQ41UQ5/1.3
=V1AR31UQ41UQ6+.AR31UQ41UQ6/1.3

FESTO

=V1AR31UQ41UQ5+.AR31UQ41UQ5/1.4	DO:8 DO 0 1.1	-QN5.1_Q	Clamp 5 (RST)
=V1AR31UQ41UQ5+.AR31UQ41UQ5/1.4	DO:9 DO 1 1.2	-QN5.2_Q	Clamp 5 (SET)
=V1AR31UQ41UQ6+.AR31UQ41UQ6/1.4	DO:10 DO 2 2.1	-QN6.1_Q	Clamp 6 (RST)
=V1AR31UQ41UQ6+.AR31UQ41UQ6/1.4	DO:11 DO 3 2.2	-QN6.2_Q	Clamp 6 (SET)

-KF1.24
=V1AR31UQ41UQ7+.AR31UQ41UQ7/1.3
=V1AR31UQ41UQ8+.AR31UQ41UQ8/1.3

FESTO

=V1AR31UQ41UQ7+.AR31UQ41UQ7/1.4	DO:12 DO 0 1.1	-QN7.1_Q	Clamps 7 (RST)
=V1AR31UQ41UQ7+.AR31UQ41UQ7/1.4	DO:13 DO 1 1.2	-QN7.2_Q	Clamps 7 (SET)
=V1AR31UQ41UQ8+.AR31UQ41UQ8/1.4	DO:14 DO 2 2.1	-QN8.1_Q	Clamps 8 (RST)
=V1AR31UQ41UQ8+.AR31UQ41UQ8/1.4	DO:15 DO 3 2.2	-QN8.2_Q	Clamps 8 (SET)

-KF1.25
=V1AR31UQ41UQ9+.AR31UQ41UQ9/1.3
=V1AR31UQ41UQ10+.AR31UQ41UQ10/1.3

FESTO

=V1AR31UQ41UQ9+.AR31UQ41UQ9/1.4	DO:16 DO 0 1.1	-QN9.1_Q	Clamps 9 (RST)
=V1AR31UQ41UQ9+.AR31UQ41UQ9/1.4	DO:17 DO 1 1.2	-QN9.2_Q	Clamps 9 (SET)
=V1AR31UQ41UQ10+.AR31UQ41UQ10/1.4	DO:18 DO 2 2.1	-QN10.1_Q	Spare (RST)
=V1AR31UQ41UQ10+.AR31UQ41UQ10/1.4	DO:19 DO 3 2.2	-QN10.2_Q	Spare (SET)

=V1AR31UQ41UQ1+.AR31UQ41UQ1/1

			Date	1/17/2023	Volvo Trucks North America	Valiant TMS	CONNECTING MOD. FOR FESTO DQ	Drawing name: =2V09&EFS-EL / = V1AR31UQ41KF1 / + V1AR31UQ41
			Ed.	MKLEPADLO	P6700 Bodyside LH - Robot Cell 2V09			
			Appr			Scale 1:1		Document type: EFS / Project nr: 22-16150 / Page 5 / 1533
Modification	Date	Name	Original		Replacement of	Replaced by		

0	1	2	3	4	5	6	7	8	9

=V1AR31UQ41KF1
+V1AR31UQ41

-KF1.21
=V1AR31UQ41KF1+V1AR31UQ41/5.1

Shot Pin 1 (RST)
=V1AR31UQ41KF1
+V1AR31UQ41
-QN1.1_Q
=V1AR31UQ41KF1
+V1AR31UQ41/5.3
DO:0

Shot Pin 1 (SET)
=V1AR31UQ41KF1
+V1AR31UQ41
-QN1.2_Q
=V1AR31UQ41KF1
+V1AR31UQ41/5.3
DO:1

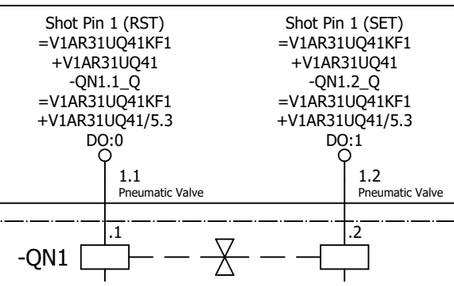

=V1AR31UQ41KF1+V1AR31UQ41/2.1
+.AR31UQ41UQ1.1-W1

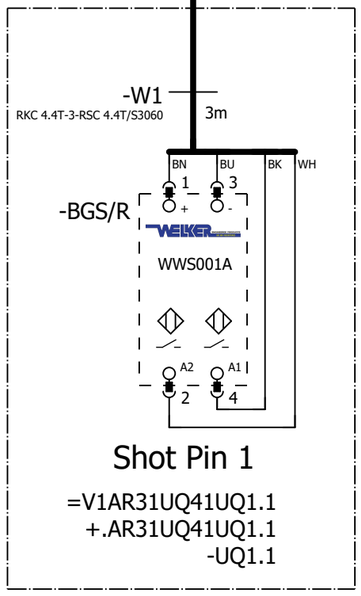

Shot Pin 1

=V1AR31UQ41UQ1.1
+.AR31UQ41UQ1.1
-UQ1.1

=V1AR31UQ41
-UQ1.1-BGS/R
Shot Pin 1

=V1AR31UQ41KF1+V1AR31UQ41/5

=V1AR31UQ41UQ2+.AR31UQ41UQ2/1

			Date	1/17/2023	Volvo Trucks North America	Valiant TMS	FESTO DQ CONNECTION QN1	Drawing name: =2V09&EFS-EL	= V1AR31UQ41UQ1
			Ed.	MKLEPADLO					+ V1AR31UQ41UQ1
			Appr		P6700 Bodyside LH - Robot Cell 2V09			Document type: EFS	Project nr: 22-16150
Modification	Date	Name	Original		Replacement of	Replaced by	Scale 1:1		Page 1 / 1533

0	1	2	3	4	5	6	7	8	9

=V1AR31UQ41KF1
+V1AR31UQ41

-KF1.21
=V1AR31UQ41KF1+V1AR31UQ41/5.1

Clamps 2 (RST)
=V1AR31UQ41KF1
+V1AR31UQ41
-QN2.1_Q
=V1AR31UQ41KF1
+V1AR31UQ41/5.3
DO:2

Clamps 2 (SET)
=V1AR31UQ41KF1
+V1AR31UQ41
-QN2.2_Q
=V1AR31UQ41KF1
+V1AR31UQ41/5.3
DO:3

2.1
Pneumatic Valve

2.2
Pneumatic Valve

-QN1 .1 .2

=V1AR31UQ41KF1+V1AR31UQ41/2.2
+.AR31UQ41UQ2.1-W1

-W1
RKC 4.4T-3-RSC 4.4T/S3060
3m

BN BU BK WH

-BGS/R
1 3
+ -
TÜNKERS
1324638
A2 A1
2 4

Clamps 2
=V1AR31UQ41UQ2.1
+.AR31UQ41UQ2.1
-UQ2.1

=V1AR31UQ41
-UQ2.1-BGS/R
Clamps 2

=V1AR31UQ41KF1+V1AR31UQ41/2.3
+.AR31UQ41UQ2.2-W1

-W1
RKC 4.4T-3-RSC 4.4T/S3060
3m

BN BU BK WH

-BGS/R
1 3
+ -
TÜNKERS
1324638
A2 A1
2 4

Clamps 2
=V1AR31UQ41UQ2.2
+.AR31UQ41UQ2.2
-UQ2.2

=V1AR31UQ41
-UQ2.2-BGS/R
Clamps 2

=V1AR31UQ41UQ1+.AR31UQ41UQ1/1

=V1AR31UQ41UQ3+.AR31UQ41UQ3/1

			Date	1/17/2023	Volvo Trucks North America	Valiant TMS	FESTO DQ CONNECTION QN2	Drawing name: =2V09&EFS-EL	= V1AR31UQ41UQ2
			Ed.	MKLEPADLO					+ V1AR31UQ41UQ2
			Appr		P6700 Bodyside LH - Robot Cell 2V09			Document type: EFS	Project nr: 22-16150
Modification	Date	Name	Original		Replacement of	Replaced by	Scale 1:1		Page 1 / 1533

0	1	2	3	4	5	6	7	8	9

=V1AR31UQ41KF1
+V1AR31UQ41

-KF1.22
=V1AR31UQ41KF1+V1AR31UQ41/5.1

Clamp 3 (RST)	Clamp 3 (SET)
=V1AR31UQ41KF1	=V1AR31UQ41KF1
+V1AR31UQ41	+V1AR31UQ41
-QN3.1_Q	-QN3.2_Q
=V1AR31UQ41KF1	=V1AR31UQ41KF1
+V1AR31UQ41/5.3	+V1AR31UQ41/5.3
DO:4	DO:5
1.1 Pneumatic Valve	1.2 Pneumatic Valve

-QN3 .1 .2

=V1AR31UQ41KF1+V1AR31UQ41/2.4
+.AR31UQ41UQ3.1-W1

-W1
RKC 4.4T-3-RSC 4.4T/S3060
3m

BN BU BK WH

-BGS/R
1 3
+ -
TÜNKERS
1324638
A2 A1
2 4

Clamp 3

=V1AR31UQ41UQ3.1
+.AR31UQ41UQ3.1
-UQ3.1

=V1AR31UQ41
-UQ3.1-BGS/R
Clamp 3

=V1AR31UQ41UQ2+.AR31UQ41UQ2/1

=V1AR31UQ41UQ4+.AR31UQ41UQ4/1

			Date	1/17/2023	Volvo Trucks North America	Valiant TMS	FESTO DQ CONNECTION QN3	Drawing name: =2V09&EFS-EL	= V1AR31UQ41UQ3
			Ed.	MKLEPADLO					+ V1AR31UQ41UQ3
			Appr		P6700 Bodyside LH - Robot Cell 2V09			Document type: EFS	Project nr: 22-16150
Modification	Date	Name	Original		Replacement of	Replaced by	Scale 1:1		Page 1 / 1533

0	1	2	3	4	5	6	7	8	9

=V1AR31UQ41KF1
+V1AR31UQ41

-KF1.22
=V1AR31UQ41KF1+V1AR31UQ41/5.1

Clamp 4 (RST)	Clamp 4 (SET)
=V1AR31UQ41KF1	=V1AR31UQ41KF1
+V1AR31UQ41	+V1AR31UQ41
-QN4.1_Q	-QN4.2_Q
=V1AR31UQ41KF1	=V1AR31UQ41KF1
+V1AR31UQ41/5.3	+V1AR31UQ41/5.3
DO:6	DO:7
2.1 Pneumatic Valve	2.2 Pneumatic Valve

-QN4 .1 .2

=V1AR31UQ41KF1+V1AR31UQ41/2.5
+.AR31UQ41UQ4.1-W1

-W1
RKC 4.4T-2-RSC 4.4T/S3060
2m

BN BU BK WH

-BGS/R
1 3
+ -
TÜNKERS
1324638
A2 A1
2 4

Clamp 4

=V1AR31UQ41UQ4.1
+.AR31UQ41UQ4.1
-UQ4.1

=V1AR31UQ41
-UQ4.1-BGS/R
Clamp 4

=V1AR31UQ41UQ3+.AR31UQ41UQ3/1

=V1AR31UQ41UQ5+.AR31UQ41UQ5/1

			Date	1/17/2023	Volvo Trucks North America	Valiant TMS	FESTO DQ CONNECTION QN4	Drawing name: =2V09&EFS-EL	= V1AR31UQ41UQ4
			Ed.	MKLEPADLO					+ V1AR31UQ41UQ4
			Appr		P6700 Bodyside LH - Robot Cell 2V09			Document type: EFS	Project nr: 22-16150
Modification	Date	Name	Original		Replacement of	Replaced by	Scale 1:1		Page 1 / 1533

0	1	2	3	4	5	6	7	8	9

=V1AR31UQ41KF1
+V1AR31UQ41

-KF1.23
=V1AR31UQ41KF1+V1AR31UQ41/5.1

Clamp 5 (RST)
=V1AR31UQ41KF1
+V1AR31UQ41
-QN5.1_Q
=V1AR31UQ41KF1
+V1AR31UQ41/5.3
DO:8

Clamp 5 (SET)
=V1AR31UQ41KF1
+V1AR31UQ41
-QN5.2_Q
=V1AR31UQ41KF1
+V1AR31UQ41/5.3
DO:9

1.1
Pneumatic Valve

1.2
Pneumatic Valve

-QN5 .1 .2

=V1AR31UQ41KF1+V1AR31UQ41/2.6
+.AR31UQ41UQ5.1-W1

-W1
RKC 4.4T-3-RSC 4.4T/S3060
3m

BN BU BK WH

-BGS/R
1 3
+ -
TÜNKERS
1324638
A2 A1
2 4

Clamp 5

=V1AR31UQ41UQ5.1
+.AR31UQ41UQ5.1
-UQ5.1

=V1AR31UQ41
-UQ5.1-BGS/R
Clamp 5

=V1AR31UQ41UQ4+.AR31UQ41UQ4/1

=V1AR31UQ41UQ6+.AR31UQ41UQ6/1

			Date	1/17/2023	Volvo Trucks North America	Valiant TMS	FESTO DQ CONNECTION QN5	Drawing name: =2V09&EFS-EL	= V1AR31UQ41UQ5
			Ed.	MKLEPADLO					+ V1AR31UQ41UQ5
			Appr		P6700 Bodyside LH - Robot Cell 2V09			Document type: EFS	Project nr: 22-16150
Modification	Date	Name	Original		Replacement of	Replaced by	Scale 1:1		Page 1 / 1533

0	1	2	3	4	5	6	7	8	9

=V1AR31UQ41KF1
+V1AR31UQ41

-KF1.23
=V1AR31UQ41KF1+V1AR31UQ41/5.1

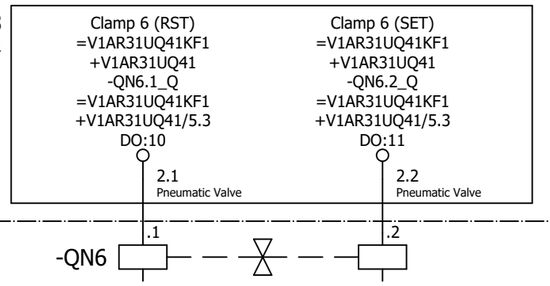

=V1AR31UQ41KF1+V1AR31UQ41/2.8
+.AR31UQ41UQ6.1-W1

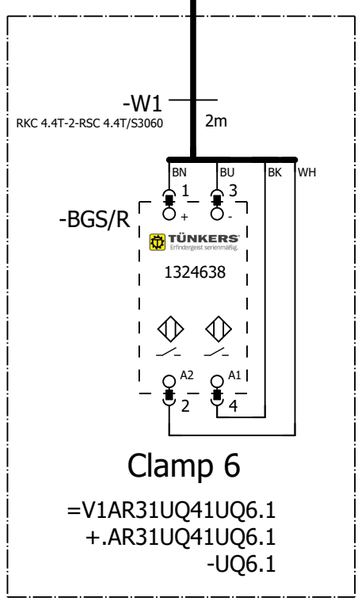

Clamp 6

=V1AR31UQ41UQ6.1
+.AR31UQ41UQ6.1
-UQ6.1

=V1AR31UQ41
-UQ6.1-BGS/R
Clamp 6

=V1AR31UQ41UQ5+.AR31UQ41UQ5/1

=V1AR31UQ41UQ7+.AR31UQ41UQ7/1

			Date	1/17/2023	Volvo Trucks North America		Valiant TMS	FESTO DQ CONNECTION QN6	Drawing name: =2V09&EFS-EL	= V1AR31UQ41UQ6
			Ed.	MKLEPADLO						+ V1AR31UQ41UQ6
			Appr		P6700 Bodyside LH - Robot Cell 2V09				Document type: EFS	Project nr: 22-16150
Modification	Date	Name	Original		Replacement of	Replaced by	Scale 1:1			Page 1 / 1533

0	1	2	3	4	5	6	7	8	9

=V1AR31UQ41KF1
+V1AR31UQ41

-KF1.24
=V1AR31UQ41KF1+V1AR31UQ41/5.1

Clamps 7 (RST)	Clamps 7 (SET)
=V1AR31UQ41KF1	=V1AR31UQ41KF1
+V1AR31UQ41	+V1AR31UQ41
-QN7.1_Q	-QN7.2_Q
=V1AR31UQ41KF1	=V1AR31UQ41KF1
+V1AR31UQ41/5.3	+V1AR31UQ41/5.3
DO:12	DO:13
1.1 Pneumatic Valve	1.2 Pneumatic Valve

-QN7 .1 .2

=V1AR31UQ41KF1+V1AR31UQ41/2.9
+.AR31UQ41UQ7.1-W1

-W1
RKC 4.4T-2-RSC 4.4T/S3060
2m

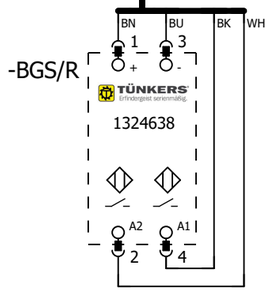

Clamps 7

=V1AR31UQ41UQ7.1
+.AR31UQ41UQ7.1
-UQ7.1

=V1AR31UQ41
-UQ7.1-BGS/R
Clamps 7

=V1AR31UQ41KF1+V1AR31UQ41/3.1
+.AR31UQ41UQ7.2-W1

-W1
RKC 4.4T-3-RSC 4.4T/S3060
3m

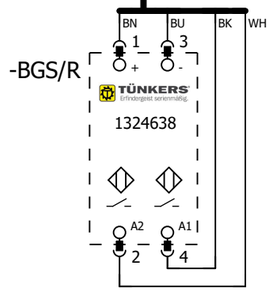

Clamps 7

=V1AR31UQ41UQ7.2
+.AR31UQ41UQ7.2
-UQ7.2

=V1AR31UQ41
-UQ7.2-BGS/R
Clamps 7

=V1AR31UQ41UQ6+.AR31UQ41UQ6/1

=V1AR31UQ41UQ8+.AR31UQ41UQ8/1

			Date	1/17/2023	Volvo Trucks North America	Valiant TMS	FESTO DQ CONNECTION QN7	Drawing name: =2V09&EFS-EL	= V1AR31UQ41UQ7
			Ed.	MKLEPADLO					+ V1AR31UQ41UQ7
			Appr		P6700 Bodyside LH - Robot Cell 2V09			Document type: EFS	Project nr: 22-16150
Modification	Date	Name	Original		Replacement of	Replaced by	Scale 1:1		Page 1 / 1533

0	1	2	3	4	5	6	7	8	9

=V1AR31UQ41KF1
+V1AR31UQ41

-KF1.24
=V1AR31UQ41KF1+V1AR31UQ41/5.1

Clamps 8 (RST)	Clamps 8 (SET)
=V1AR31UQ41KF1	=V1AR31UQ41KF1
+V1AR31UQ41	+V1AR31UQ41
-QN8.1_Q	-QN8.2_Q
=V1AR31UQ41KF1	=V1AR31UQ41KF1
+V1AR31UQ41/5.3	+V1AR31UQ41/5.3
DO:14	DO:15
2.1 Pneumatic Valve	2.2 Pneumatic Valve

-QN8 .1 .2

=V1AR31UQ41KF1+V1AR31UQ41/3.2
+.AR31UQ41UQ8.1-W1

-W1
RKC 4.4T-3-RSC 4.4T/S3060
3m

BN BU BK WH

-BGS/R
1 3
+ -
TÜNKERS
1324638
A2 A1
2 4

Clamps 8

=V1AR31UQ41UQ8.1
+.AR31UQ41UQ8.1
-UQ8.1

=V1AR31UQ41
-UQ8.1-BGS/R
Clamps 8

=V1AR31UQ41KF1+V1AR31UQ41/3.3
+.AR31UQ41UQ8.2-W1

-W1
RKC 4.4T-3-RSC 4.4T/S3060
3m

BN BU BK WH

-BGS/R
1 3
+ -
TÜNKERS
1324638
A2 A1
2 4

Clamps 8

=V1AR31UQ41UQ8.2
+.AR31UQ41UQ8.2
-UQ8.2

=V1AR31UQ41
-UQ8.2-BGS/R
Clamps 8

			Date	1/17/2023	Volvo Trucks North America	Valiant TMS	FESTO DQ CONNECTION QN8	Drawing name: =2V09&EFS-EL	= V1AR31UQ41UQ8
			Ed.	MKLEPADLO					+ V1AR31UQ41UQ8
			Appr		P6700 Bodyside LH - Robot Cell 2V09			Document type: EFS	Project nr: 22-16150
Modification	Date	Name	Original		Replacement of / Replaced by	Scale 1:1			Page 1 / 1533

0	1	2	3	4	5	6	7	8	9

=V1AR31UQ41KF1
+V1AR31UQ41

-KF1.25
=V1AR31UQ41KF1+V1AR31UQ41/5.1

Clamps 9 (RST)
=V1AR31UQ41KF1
+V1AR31UQ41
-QN9.1_Q
=V1AR31UQ41KF1
+V1AR31UQ41/5.3
DO:16

Clamps 9 (SET)
=V1AR31UQ41KF1
+V1AR31UQ41
-QN9.2_Q
=V1AR31UQ41KF1
+V1AR31UQ41/5.3
DO:17

1.1
Pneumatic Valve

1.2
Pneumatic Valve

-QN9 .1 .2

=V1AR31UQ41KF1+V1AR31UQ41/3.4
+.AR31UQ41UQ9.1-W1

-W1
RKC 4.4T-4-RSC 4.4T/S3060
4m

BN BU BK WH

-BGS/R
1 3
+ -
TÜNKERS
1324638
A2 A1
2 4

Clamps 9
=V1AR31UQ41UQ9.1
+.AR31UQ41UQ9.1
-UQ9.1

=V1AR31UQ41
-UQ9.1-BGS/R
Clamps 9

=V1AR31UQ41KF1+V1AR31UQ41/3.5
+.AR31UQ41UQ9.2-W1

-W1
RKC 4.4T-4-RSC 4.4T/S3060
4m

BN BU BK WH

-BGS/R
1 3
+ -
TÜNKERS
1324638
A2 A1
2 4

Clamps 9
=V1AR31UQ41UQ9.2
+.AR31UQ41UQ9.2
-UQ9.2

=V1AR31UQ41
-UQ9.2-BGS/R
Clamps 9

=V1AR31UQ41UQ8+.AR31UQ41UQ8/1

=V1AR31UQ41UQ10+.AR31UQ41UQ10/1

			Date	1/17/2023	Volvo Trucks North America	Valiant TMS	FESTO DQ CONNECTION QN9	Drawing name: =2V09&EFS-EL	= V1AR31UQ41UQ9
			Ed.	MKLEPADLO					+ V1AR31UQ41UQ9
			Appr		P6700 Bodyside LH - Robot Cell 2V09			Document type: EFS	Project nr: 22-16150
Modification	Date	Name	Original		Replacement of	Replaced by	Scale 1:1		Page 1 / 1533

0	1	2	3	4	5	6	7	8	9

=V1AR31UQ41KF1
+V1AR31UQ41

-KF1.25
=V1AR31UQ41KF1+V1AR31UQ41/5.1

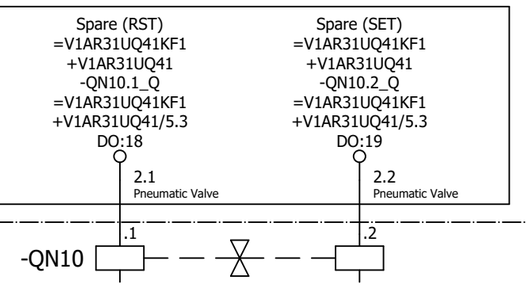

=V1AR31UQ41UQ9+.AR31UQ41UQ9/1

=V1AR31WC1+.AR31UC01/1

			Date	1/17/2023	Volvo Trucks North America	Valiant TMS	FESTO DQ CONNECTION QN10	Drawing name: =2V09&EFS-EL	= V1AR31UQ41UQ10
			Ed.	MKLEPADLO					+ V1AR31UQ41UQ10
			Appr		P6700 Bodyside LH - Robot Cell 2V09			Document type: EFS	Project nr: 22-16150
Modification	Date	Name	Original		Replacement of / Replaced by	Scale 1:1			Page 1 / 1533

0	1	2	3	4	5	6	7	8	9

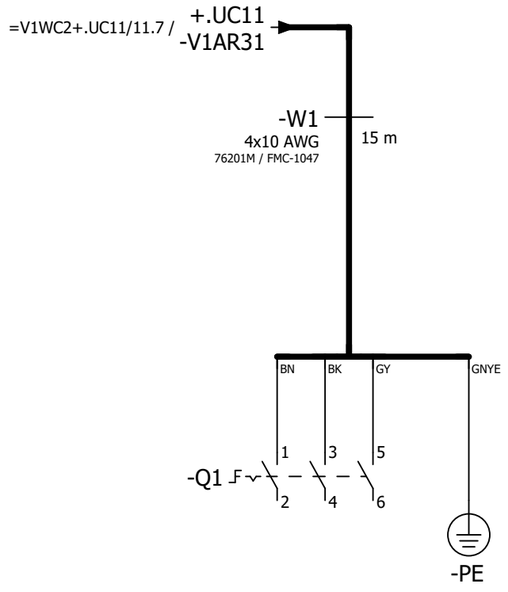

=V1AR31UQ41UQ10+.AR31UQ41UQ10/1

=V1AR31XQ41KF1+.AR31XQ41/1

			Date	1/17/2023	Volvo Trucks North America		Valiant TMS	Incoming power	Drawing name: =2V09&EFS-EL	= V1AR31WC1
			Ed.	MKLEPADLO						+ V1AR31UC01
			Appr		P6700 Bodyside LH - Robot Cell 2V09				Document type: EFS	Project nr: 22-16150	Page 1
Modification	Date	Name	Original		Replacement of	Replaced by	Scale 1:1				1533

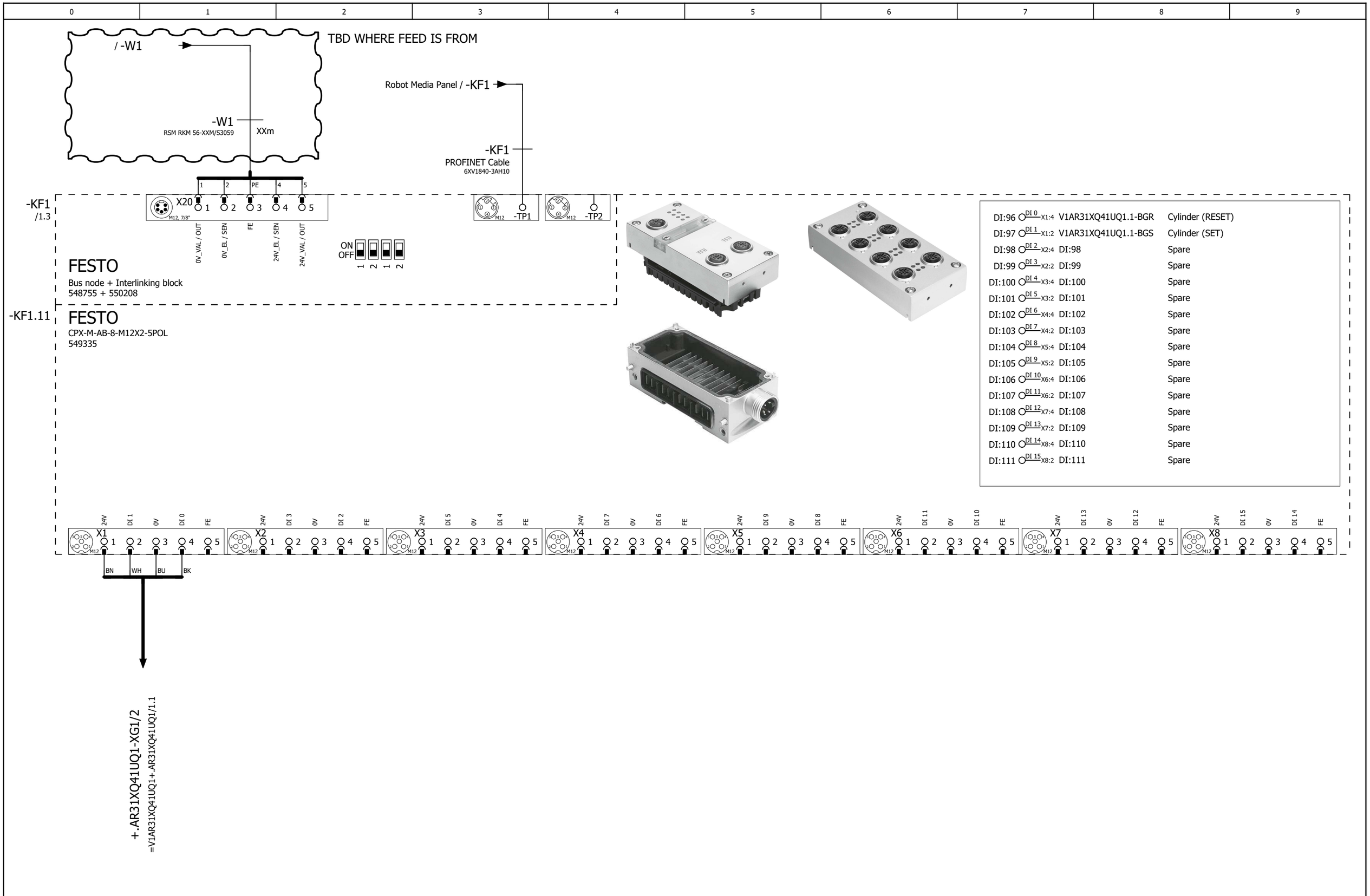

=V1AR31WC1+.AR31UC01/1

2

			Date	1/17/2023	Volvo Trucks North America	Valiant TMS	CONNECTING MOD. FOR VTSA MANIFOLD	Drawing name: =2V09&EFS-EL	= V1AR31XQ41KF1 + V1AR31XQ41
			Ed.	MKLEPADLO	P6700 Bodyside LH - Robot Cell 2V09			Document type: EFS	Project nr: 22-16150
			Appr			Scale 1:1			Page 1
Modification	Date	Name	Original		Replacement of / Replaced by				1533

-KF1 -KF1.11 -KF1.20 -KF1.21 -KF1.22 -KF1.23

M1

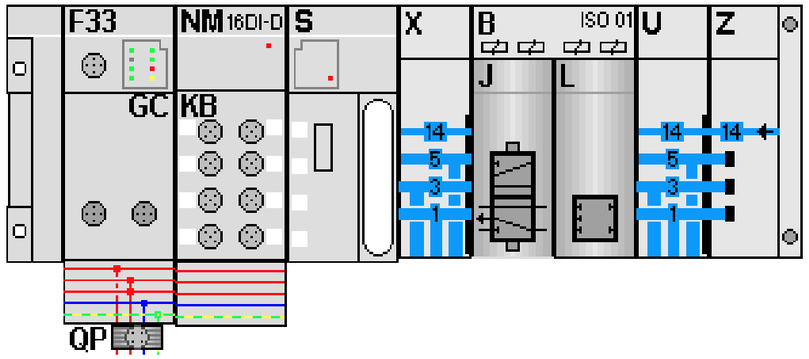

-KF1.21
=V1AR31XQ41UQ1+.AR31XQ41UQ1/1.3

FESTO

=V1AR31XQ41UQ1+.AR31XQ41UQ1/1.4	DO:32 DO 0 1.1	-QN1.1_Q	Cylinder (RST)
=V1AR31XQ41UQ1+.AR31XQ41UQ1/1.4	DO:33 DO 1 1.2	-QN1.2_Q	Cylinder (SET)
	DO:34 DO 2 2.1	-QN2.1_Q	Spare (RST)
	DO:35 DO 3 2.2	-QN2.2_Q	Spare (SET)

1

=V1AR31XQ41UQ1+.AR31XQ41UQ1/1

			Date	1/17/2023	Volvo Trucks North America	Valiant TMS	CONNECTING MOD. FOR FESTO DQ	Drawing name: =2V09&EFS-EL	= V1AR31XQ41KF1
			Ed.	MKLEPADLO					+ V1AR31XQ41
			Appr		P6700 Bodyside LH - Robot Cell 2V09			Document type: EFS	Project nr: 22-16150
Modification	Date	Name	Original		Replacement of / Replaced by	Scale 1:1			Page 2 / 1533

0	1	2	3	4	5	6	7	8	9

=V1AR31XQ41KF1
+V1AR31XQ41

-KF1.21
=V1AR31XQ41KF1+V1AR31XQ41/2.1

Cylinder (RST)	Cylinder (SET)
=V1AR31XQ41KF1	=V1AR31XQ41KF1
+V1AR31XQ41	+V1AR31XQ41
-QN1.1_Q	-QN1.2_Q
=V1AR31XQ41KF1	=V1AR31XQ41KF1
+V1AR31XQ41/2.3	+V1AR31XQ41/2.3
DO:32	DO:33
1.1 Pneumatic Valve	1.2 Pneumatic Valve

-QN1 .1 .2

=V1AR31XQ41KF1+V1AR31XQ41/1.1
-XG1/2

-W1
RKC 4.4T-0.5-RSC 4.4T/S3060
0.5m
BN BU BK WH

-XG1/2 P1 1 3 4 2 VB2-FSM 4.4/2FKM 4/S3450
TURCK

J1 1 3 4 2 J2 1 3 4 2
BN BU BK WH BN BU BK WH

-W1.1
RKC 4.4T-0.5-RSC 4.4T/S3060
0.5m
-W1.2
RKC 4.4T-0.5-RSC 4.4T/S3060
0.5m
BN BU BK WH BN BU BK WH

-BGR
Sn = 2 mm
TURCK
1627205
pnp
1 3 A 4

-BGS
Sn = 2 mm
TURCK
1627205
pnp
1 3 A 4

Cylinder
=V1AR31XQ41UQ1.1
+.AR31XQ41UQ1.1
-UQ1.1

=V1AR31XQ41 -UQ1.1-BGR Cylinder	=V1AR31XQ41 -UQ1.1-BGS Cylinder

=V1AR31XQ41KF1+V1AR31XQ41/2

=V1AR31XQ41WC1+.AR31XQ41UC01/1

			Date	1/17/2023	Volvo Trucks North America	Valiant TMS	FESTO DQ CONNECTION QN1	Drawing name: =2V09&EFS-EL	= V1AR31XQ41UQ1
			Ed.	MKLEPADLO					+ V1AR31XQ41UQ1
			Appr		P6700 Bodyside LH - Robot Cell 2V09	Scale 1:1		Document type: EFS	Project nr: 22-16150
Modification	Date	Name	Original		Replacement of	Replaced by			Page 1 / 1533

0	1	2	3	4	5	6	7	8	9

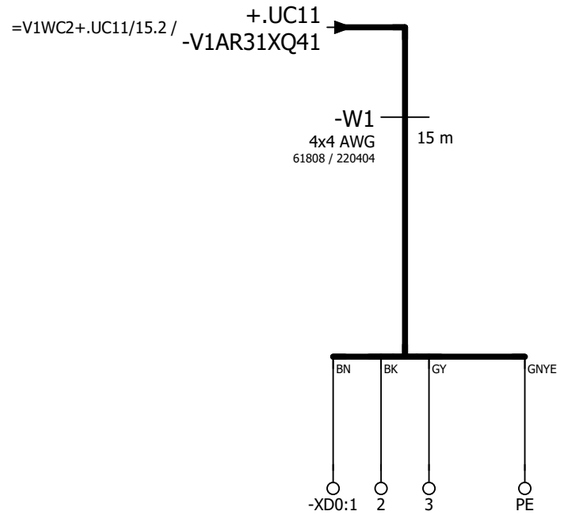

=V1AR31XQ41UQ1+.AR31XQ41UQ1/1

=V1AR81KF1+.AR81UC01/1

			Date	1/17/2023	Volvo Trucks North America	Valiant TMS	Incoming power	Drawing name: =2V09&EFS-EL	= V1AR31XQ41WC1	
			Ed.	MKLEPADLO					+ V1AR31XQ41UC01	
			Appr		P6700 Bodyside LH - Robot Cell 2V09			Document type: EFS	Project nr: 22-16150	Page 1
Modification	Date	Name	Original		Replacement of	Replaced by	Scale 1:1			1533

0	1	2	3	4	5	6	7	8	9

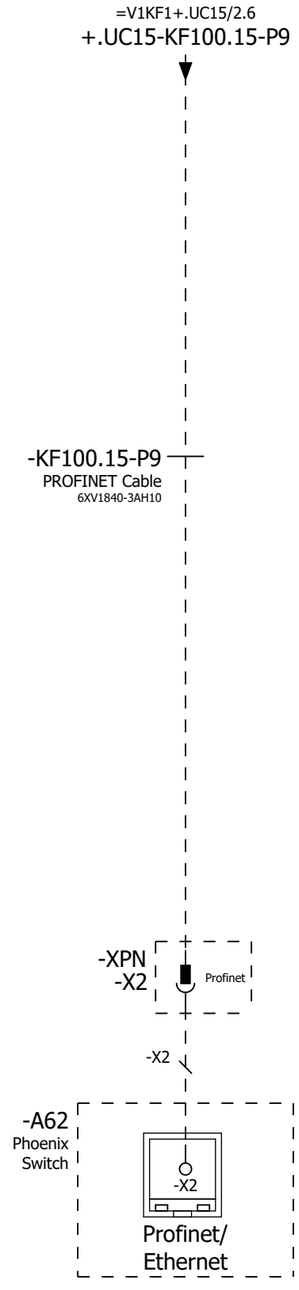

=V1AR31XQ41WC1+.AR31XQ41UC01/1

=V1AR81UQ41BG0+.AR81UQ41/1

			Date	1/17/2023	Volvo Trucks North America	Valiant TMS	Incoming Profinet	Drawing name: =2V09&EFS-EL	= V1AR81KF1
			Ed.	MKLEPADLO					+ V1AR81UC01
			Appr		P6700 Bodyside LH - Robot Cell 2V09	Scale 1:1		Document type: EFS	Project nr: 22-16150
Modification	Date	Name	Original		Replacement of	Replaced by			Page 1 / 1533

0	1	2	3	4	5	6	7	8	9

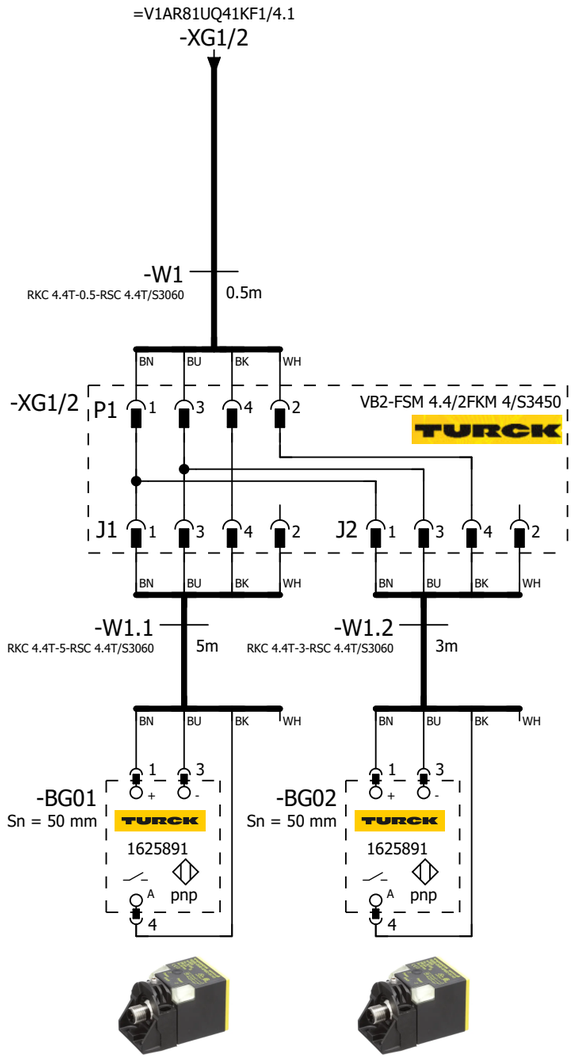

=V1AR81UQ41
-BG01
Day Cab Outer

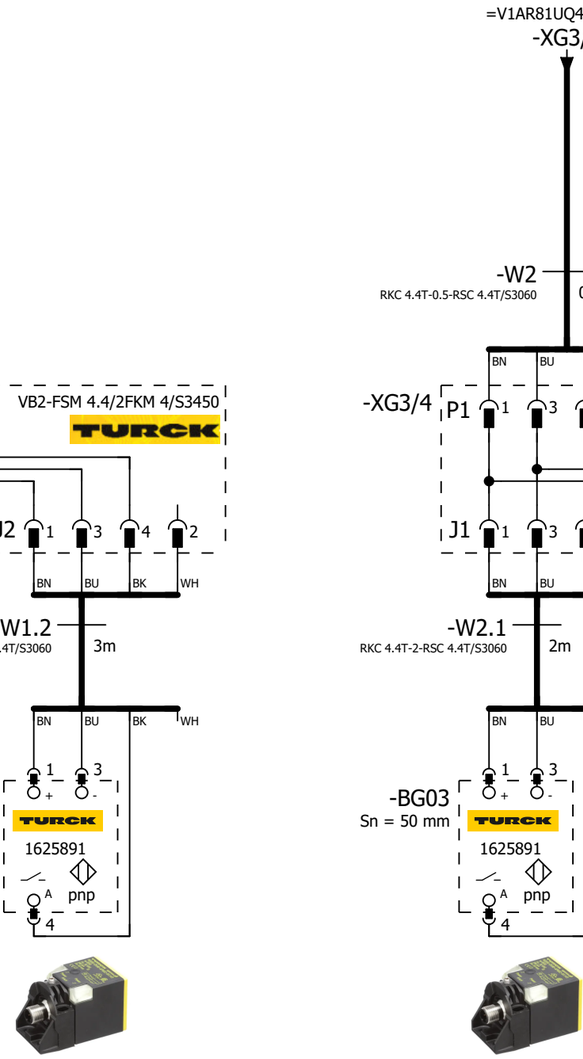

=V1AR81UQ41
-BG02
Day Cab Outer

=V1AR81UQ41
-BG03
Short Outer

=V1AR81UQ41
-BG04
Medium Outer

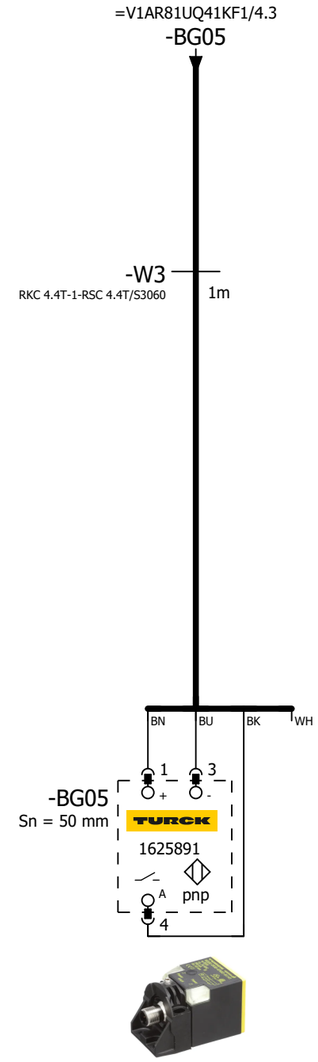

=V1AR81UQ41
-BG05
Long Outer

=V1AR81KF1+.AR81UC01/1

=V1AR81UQ41KF1/1

			Date	1/17/2023	Volvo Trucks North America		Valiant TMS	SENSORS	Drawing name: =2V09&EFS-EL	= V1AR81UQ41BG0
			Ed.	MKLEPADLO						+ V1AR81UQ41
			Appr		P6700 Bodyside LH - Robot Cell 2V09		Scale 1:1		Document type: EFS	Project nr: 22-16150
Modification	Date	Name	Original		Replacement of	Replaced by				Page 1 / 1533

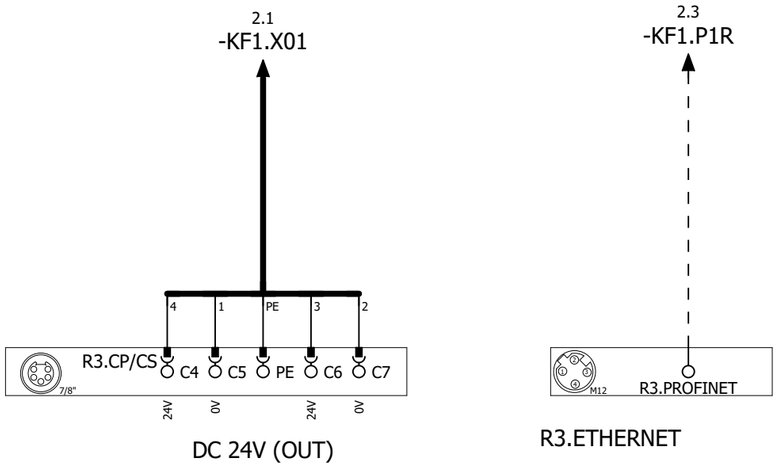

DC 24V (OUT)

R3.ETHERNET

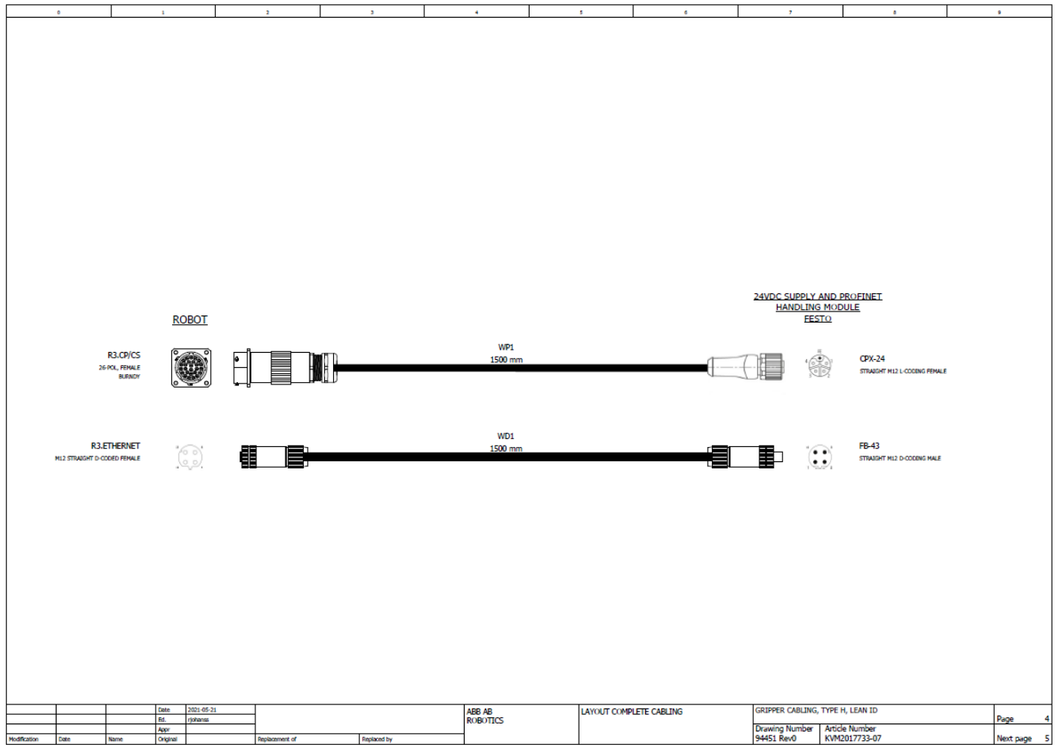

=V1AR81UQ41BG0/1

2

			Date	1/17/2023	Volvo Trucks North America	Valiant TMS	24VDC SUPPLY AND PROFINET HANDLING MODULE	Drawing name: =2V09&EFS-EL	= V1AR81UQ41KF1
			Ed.	MKLEPADLO					+ V1AR81UQ41
			Appr		P6700 Bodyside LH - Robot Cell 2V09			Document type: EFS	Project nr: 22-16150
Modification	Date	Name	Original		Replacement of / Replaced by	Scale 1:1			Page 1 / 1533

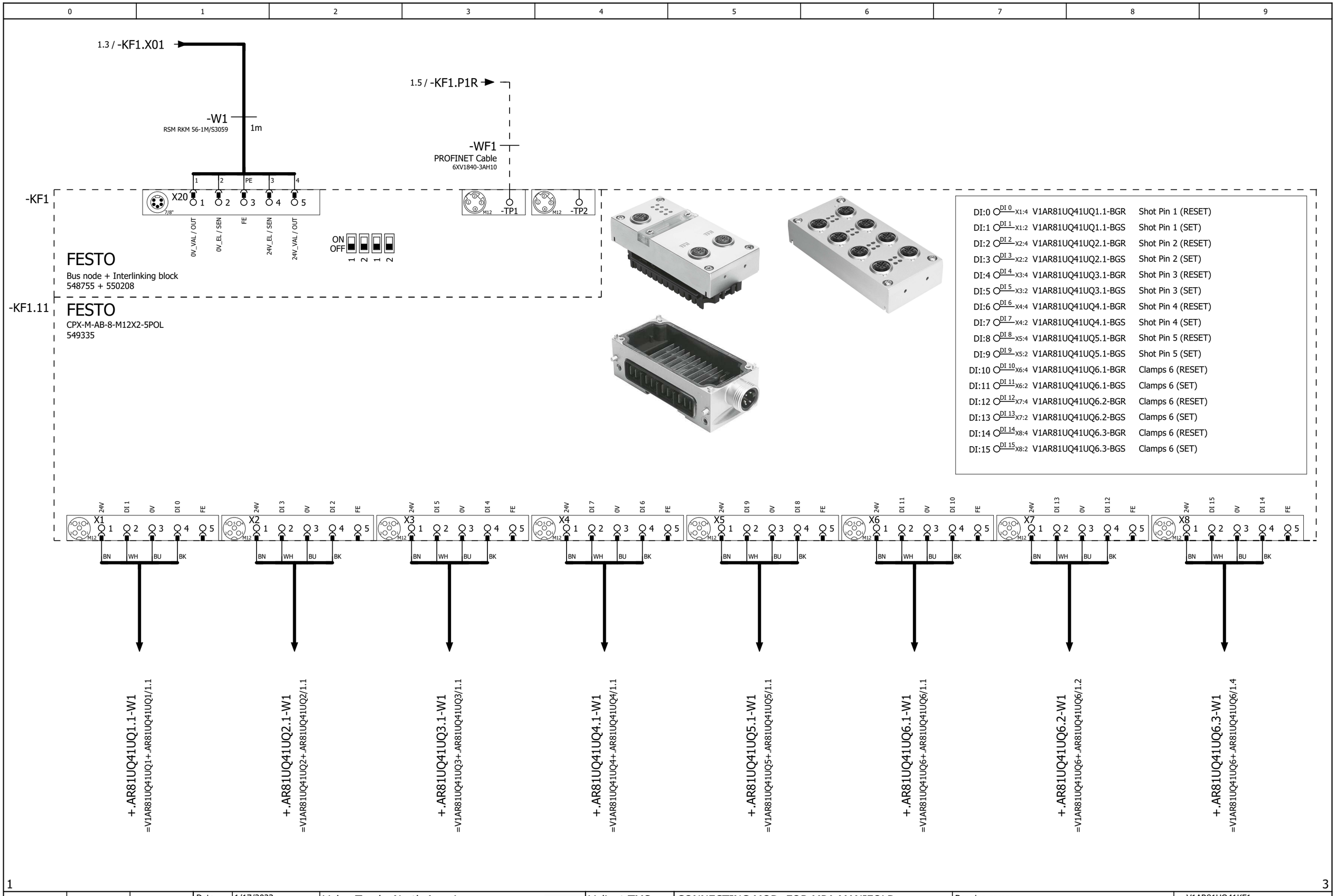

1 3

			Date	1/17/2023	Volvo Trucks North America	Valiant TMS	CONNECTING MOD. FOR MPA MANIFOLD	Drawing name: =2V09&EFS-EL	= V1AR81UQ41KF1 + V1AR81UQ41	
			Ed.	MKLEPADLO	P6700 Bodyside LH - Robot Cell 2V09					
			Appr					Document type: EFS	Project nr: 22-16150	Page 2
Modification	Date	Name	Original		Replacement of / Replaced by	Scale 1:1				1533

0	1	2	3	4	5	6	7	8	9

-KF1.12

FESTO

CPX-M-AB-8-M12X2-5POL

549335

DI:16	DI 0 X1:4	V1AR81UQ41UQ6.4-BGR	Clamps 6 (RESET)
DI:17	DI 1 X1:2	V1AR81UQ41UQ6.4-BGS	Clamps 6 (SET)
DI:18	DI 2 X2:4	V1AR81UQ41UQ7.1-BGR	Clamps 7 (RESET)
DI:19	DI 3 X2:2	V1AR81UQ41UQ7.1-BGS	Clamps 7 (SET)
DI:20	DI 4 X3:4	V1AR81UQ41UQ7.2-BGR	Clamps 7 (RESET)
DI:21	DI 5 X3:2	V1AR81UQ41UQ7.2-BGS	Clamps 7 (SET)
DI:22	DI 6 X4:4	V1AR81UQ41UQ8.1-BGR	Clamps 8 (RESET)
DI:23	DI 7 X4:2	V1AR81UQ41UQ8.1-BGS	Clamps 8 (SET)
DI:24	DI 8 X5:4	V1AR81UQ41UQ8.2-BGR	Clamps 8 (RESET)
DI:25	DI 9 X5:2	V1AR81UQ41UQ8.2-BGS	Clamps8 (SET)
DI:26	DI 10 X6:4	V1AR81UQ41UQ9.1-BGR	Clamps 9 (RESET)
DI:27	DI 11 X6:2	V1AR81UQ41UQ9.1-BGS	Clamps 9 (SET)
DI:28	DI 12 X7:4	V1AR81UQ41UQ9.2-BGR	Clamps 9 (RESET)
DI:29	DI 13 X7:2	V1AR81UQ41UQ9.2-BGS	Clamps 9 (SET)
DI:30	DI 14 X8:4	DI:30	Spare
DI:31	DI 15 X8:2	DI:31	Spare

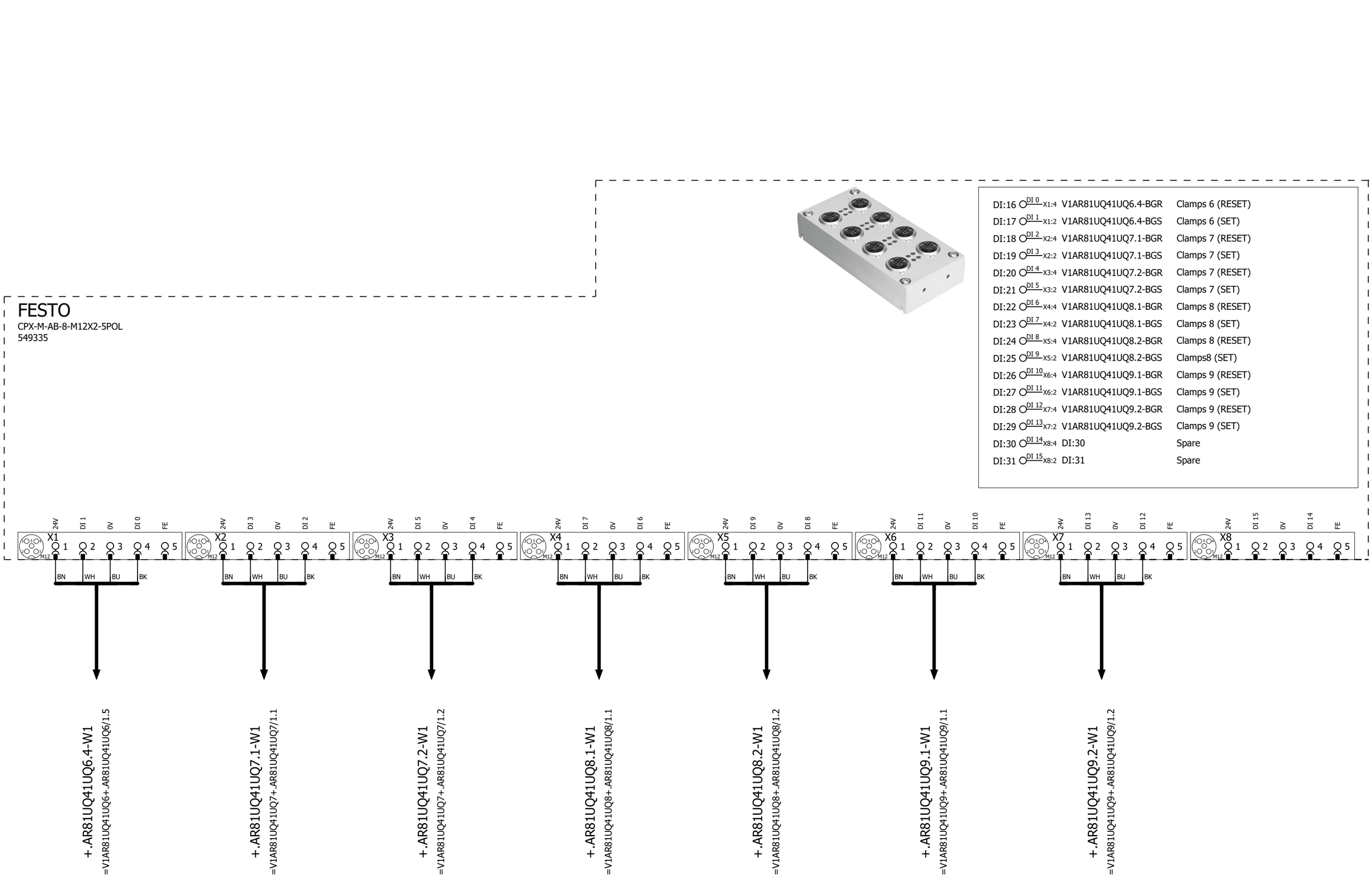

2 4

			Date	1/17/2023	Volvo Trucks North America		Valiant TMS	I/O MOD. DI16 (8 x M12) FOR MPA	Drawing name: =2V09&EFS-EL	= V1AR81UQ41KF1
			Ed.	MKLEPADLO						+ V1AR81UQ41
			Appr		P6700 Bodyside LH - Robot Cell 2V09				Document type: EFS	Project nr: 22-16150
Modification	Date	Name	Original		Replacement of	Replaced by	Scale 1:1			Page 3 / 1533

0	1	2	3	4	5	6	7	8	9

-KF1.13

FESTO

CPX-M-AB-8-M12X2-5POL

549335

DI:32	DI 0 X1:4	V1AR81UQ41-BG01 Day Cab Outer 78526576
DI:33	DI 1 X1:2	V1AR81UQ41-BG02 Day Cab Outer 78526576
DI:34	DI 2 X2:4	V1AR81UQ41-BG03 Short Outer 78520637
DI:35	DI 3 X2:2	V1AR81UQ41-BG04 Medium Outer 78520486
DI:36	DI 4 X3:4	V1AR81UQ41-BG05 Long Outer 78519670
DI:37	DI 5 X3:2	DI:37 Spare
DI:38	DI 6 X4:4	DI:38 Spare
DI:39	DI 7 X4:2	DI:39 Spare
DI:40	DI 8 X5:4	DI:40 Spare
DI:41	DI 9 X5:2	DI:41 Spare
DI:42	DI 10 X6:4	DI:42 Spare
DI:43	DI 11 X6:2	DI:43 Spare
DI:44	DI 12 X7:4	DI:44 Spare
DI:45	DI 13 X7:2	DI:45 Spare
DI:46	DI 14 X8:4	DI:46 Spare
DI:47	DI 15 X8:2	DI:47 Spare

-XG1/2
=V1AR81UQ41BG0/1.1

-XG3/4
=V1AR81UQ41BG0/1.4

-BG05
=V1AR81UQ41BG0/1.6

3 5

			Date	1/17/2023	Volvo Trucks North America	Valiant TMS	I/O MOD. DI16 (8 x M12) FOR MPA	Drawing name: =2V09&EFS-EL	= V1AR81UQ41KF1
			Ed.	MKLEPADLO					+ V1AR81UQ41
			Appr		P6700 Bodyside LH - Robot Cell 2V09	Scale 1:1		Document type: EFS	Project nr: 22-16150
Modification	Date	Name	Original		Replacement of	Replaced by			Page 4 / 1533

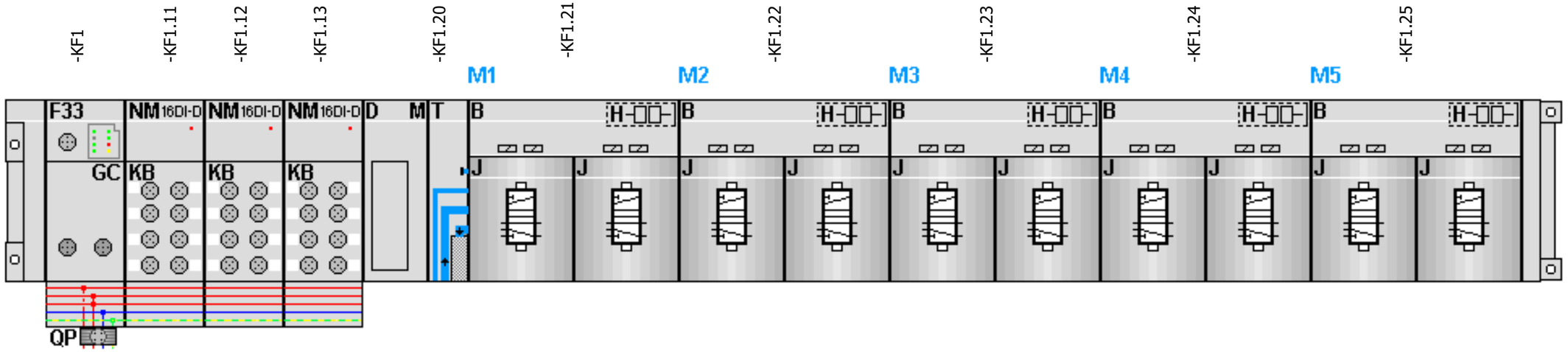

-KF1.21
=V1AR81UQ41UQ1+.AR81UQ41UQ1/1.3
=V1AR81UQ41UQ2+.AR81UQ41UQ2/1.3

FESTO

=V1AR81UQ41UQ1+.AR81UQ41UQ1/1.4	DO:0 DO 0 1.1	-QN1.1_Q	Shot Pin 1 (RST)
=V1AR81UQ41UQ1+.AR81UQ41UQ1/1.4	DO:1 DO 1 1.2	-QN1.2_Q	Shot Pin 1 (SET)
=V1AR81UQ41UQ2+.AR81UQ41UQ2/1.4	DO:2 DO 2 2.1	-QN2.1_Q	Shot Pin 2 (RST)
=V1AR81UQ41UQ2+.AR81UQ41UQ2/1.4	DO:3 DO 3 2.2	-QN2.2_Q	Shot Pin 2 (SET)

-KF1.22
=V1AR81UQ41UQ3+.AR81UQ41UQ3/1.3
=V1AR81UQ41UQ4+.AR81UQ41UQ4/1.3

FESTO

=V1AR81UQ41UQ3+.AR81UQ41UQ3/1.4	DO:4 DO 0 1.1	-QN3.1_Q	Shot Pin 3 (RST)
=V1AR81UQ41UQ3+.AR81UQ41UQ3/1.4	DO:5 DO 1 1.2	-QN3.2_Q	Shot Pin 3 (SET)
=V1AR81UQ41UQ4+.AR81UQ41UQ4/1.4	DO:6 DO 2 2.1	-QN4.1_Q	Shot Pin 4 (RST)
=V1AR81UQ41UQ4+.AR81UQ41UQ4/1.4	DO:7 DO 3 2.2	-QN4.2_Q	Shot Pin 4 (SET)

-KF1.23
=V1AR81UQ41UQ5+.AR81UQ41UQ5/1.3
=V1AR81UQ41UQ6+.AR81UQ41UQ6/1.3

FESTO

=V1AR81UQ41UQ5+.AR81UQ41UQ5/1.4	DO:8 DO 0 1.1	-QN5.1_Q	Shot Pin 5 (RST)
=V1AR81UQ41UQ5+.AR81UQ41UQ5/1.4	DO:9 DO 1 1.2	-QN5.2_Q	Shot Pin 5 (SET)
=V1AR81UQ41UQ6+.AR81UQ41UQ6/1.4	DO:10 DO 2 2.1	-QN6.1_Q	Clamps 6 (RST)
=V1AR81UQ41UQ6+.AR81UQ41UQ6/1.4	DO:11 DO 3 2.2	-QN6.2_Q	Clamps 6 (SET)

-KF1.24
=V1AR81UQ41UQ7+.AR81UQ41UQ7/1.3
=V1AR81UQ41UQ8+.AR81UQ41UQ8/1.3

FESTO

=V1AR81UQ41UQ7+.AR81UQ41UQ7/1.4	DO:12 DO 0 1.1	-QN7.1_Q	Clamps 7 (RST)
=V1AR81UQ41UQ7+.AR81UQ41UQ7/1.4	DO:13 DO 1 1.2	-QN7.2_Q	Clamps 7 (SET)
=V1AR81UQ41UQ8+.AR81UQ41UQ8/1.4	DO:14 DO 2 2.1	-QN8.1_Q	Clamps 8 (RST)
=V1AR81UQ41UQ8+.AR81UQ41UQ8/1.4	DO:15 DO 3 2.2	-QN8.2_Q	Clamps 8 (SET)

-KF1.25
=V1AR81UQ41UQ9+.AR81UQ41UQ9/1.3
=V1AR81UQ41UQ10+.AR81UQ41UQ10/1.3

FESTO

=V1AR81UQ41UQ9+.AR81UQ41UQ9/1.4	DO:16 DO 0 1.1	-QN9.1_Q	Clamps 9 (RST)
=V1AR81UQ41UQ9+.AR81UQ41UQ9/1.4	DO:17 DO 1 1.2	-QN9.2_Q	Clamps 9 (SET)
=V1AR81UQ41UQ10+.AR81UQ41UQ10/1.4	DO:18 DO 2 2.1	-QN10.1_Q	Spare (RST)
=V1AR81UQ41UQ10+.AR81UQ41UQ10/1.4	DO:19 DO 3 2.2	-QN10.2_Q	Spare (SET)

=V1AR81UQ41UQ1+.AR81UQ41UQ1/1

			Date	1/17/2023	Volvo Trucks North America		Valiant TMS	CONNECTING MOD. FOR FESTO DQ	Drawing name: =2V09&EFS-EL	= V1AR81UQ41KF1
			Ed.	MKLEPADLO						+ V1AR81UQ41
			Appr		P6700 Bodyside LH - Robot Cell 2V09				Document type: EFS	Project nr: 22-16150
Modification	Date	Name	Original		Replacement of	Replaced by	Scale 1:1			Page 5 / 1533

0	1	2	3	4	5	6	7	8	9

=V1AR81UQ41KF1
+V1AR81UQ41

-KF1.21
=V1AR81UQ41KF1+V1AR81UQ41/5.1

Shot Pin 1 (RST)
=V1AR81UQ41KF1
+V1AR81UQ41
-QN1.1_Q
=V1AR81UQ41KF1
+V1AR81UQ41/5.3
DO:0

Shot Pin 1 (SET)
=V1AR81UQ41KF1
+V1AR81UQ41
-QN1.2_Q
=V1AR81UQ41KF1
+V1AR81UQ41/5.3
DO:1

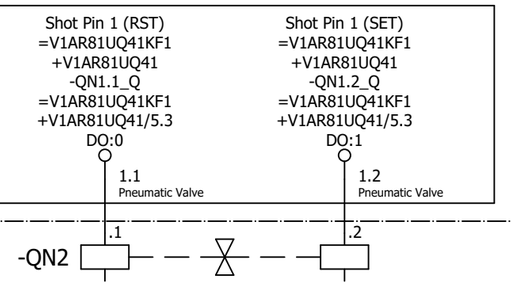

=V1AR81UQ41KF1+V1AR81UQ41/2.1
+.AR81UQ41UQ1.1-W1

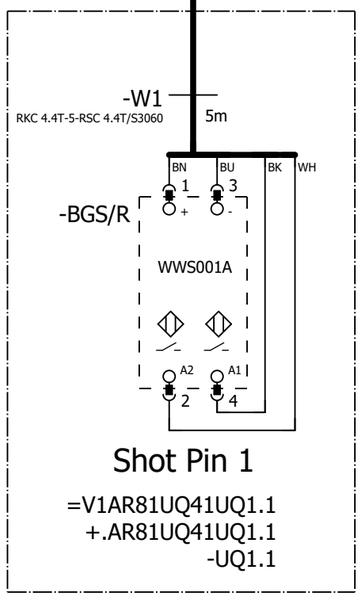

Shot Pin 1

=V1AR81UQ41UQ1.1
+.AR81UQ41UQ1.1
-UQ1.1

=V1AR81UQ41 -UQ1.1-BGS/R Shot Pin 1

=V1AR81UQ41KF1+V1AR81UQ41/5

=V1AR81UQ41UQ2+.AR81UQ41UQ2/1

			Date	1/17/2023	Volvo Trucks North America	Valiant TMS	FESTO DQ CONNECTION QN1	Drawing name: =2V09&EFS-EL	= V1AR81UQ41UQ1
			Ed.	MKLEPADLO					+ V1AR81UQ41UQ1
			Appr		P6700 Bodyside LH - Robot Cell 2V09			Document type: EFS	Project nr: 22-16150
Modification	Date	Name	Original		Replacement of	Replaced by	Scale 1:1		Page 1 / 1533

0	1	2	3	4	5	6	7	8	9

=V1AR81UQ41KF1
+V1AR81UQ41

-KF1.21
=V1AR81UQ41KF1+V1AR81UQ41/5.1

Shot Pin 2 (RST)
=V1AR81UQ41KF1
+V1AR81UQ41
-QN2.1_Q
=V1AR81UQ41KF1
+V1AR81UQ41/5.3
DO:2

Shot Pin 2 (SET)
=V1AR13UQ41KF1
+V1AR13UQ41
-QN2.2_Q
=V1AR81UQ41KF1
+V1AR81UQ41/5.3
DO:3

2.1 Pneumatic Valve
2.2 Pneumatic Valve

-QN1 .1 .2

=V1AR81UQ41KF1+V1AR81UQ41/2.2
+.AR81UQ41UQ2.1-W1

-W1
RKC 4.4T-3-RSC 4.4T/S3060
3m

BN BU BK WH

-BGS/R
1 3
WWS001A
A2 A1
2 4

Shot Pin 2

=V1AR81UQ41UQ2.1
+.AR81UQ41UQ2.1
-UQ2.1

=V1AR81UQ41
-UQ2.1-BGS/R
Shot Pin 2

=V1AR81UQ41UQ1+.AR81UQ41UQ1/1

=V1AR81UQ41UQ3+.AR81UQ41UQ3/1

			Date	1/17/2023	Volvo Trucks North America	Valiant TMS	FESTO DQ CONNECTION QN2	Drawing name: =2V09&EFS-EL	= V1AR81UQ41UQ2
			Ed.	MKLEPADLO					+ V1AR81UQ41UQ2
			Appr		P6700 Bodyside LH - Robot Cell 2V09			Document type: EFS	Project nr: 22-16150
Modification	Date	Name	Original		Replacement of	Replaced by	Scale 1:1		Page 1 / 1533

0	1	2	3	4	5	6	7	8	9

=V1AR81UQ41KF1
+V1AR81UQ41

-KF1.22
=V1AR81UQ41KF1+V1AR81UQ41/5.1

Shot Pin 3 (RST)
=V1AR81UQ41KF1
+V1AR81UQ41
-QN3.1_Q
=V1AR81UQ41KF1
+V1AR81UQ41/5.3
DO:4

Shot Pin 3 (SET)
=V1AR81UQ41KF1
+V1AR81UQ41
-QN3.2_Q
=V1AR81UQ41KF1
+V1AR81UQ41/5.3
DO:5

1.1
Pneumatic Valve

1.2
Pneumatic Valve

.1

.2

-QN3

=V1AR81UQ41KF1+V1AR81UQ41/2.3
+.AR81UQ41UQ3.1-W1

-W1
RKC 4.4T-2-RSC 4.4T/S3060
2m

BN BU BK WH

-BGS/R

1 3

WWS001A

A2 A1

2 4

Shot Pin 3

=V1AR81UQ41UQ3.1
+.AR81UQ41UQ3.1
-UQ3.1

=V1AR81UQ41
-UQ3.1-BGS/R
Shot Pin 3

=V1AR81UQ41UQ2+.AR81UQ41UQ2/1

=V1AR81UQ41UQ4+.AR81UQ41UQ4/1

			Date	1/17/2023	Volvo Trucks North America	Valiant TMS	FESTO DQ CONNECTION QN3	Drawing name: =2V09&EFS-EL	= V1AR81UQ41UQ3
			Ed.	MKLEPADLO					+ V1AR81UQ41UQ3
			Appr		P6700 Bodyside LH - Robot Cell 2V09			Document type: EFS	Project nr: 22-16150
Modification	Date	Name	Original		Replacement of	Replaced by	Scale 1:1		Page 1 / 1533

0	1	2	3	4	5	6	7	8	9

=V1AR81UQ41KF1
+V1AR81UQ41

-KF1.22
=V1AR81UQ41KF1+V1AR81UQ41/5.1

Shot Pin 4 (RST)
=V1AR81UQ41KF1
+V1AR81UQ41
-QN4.1_Q
=V1AR81UQ41KF1
+V1AR81UQ41/5.3
DO:6

Shot Pin 4 (SET)
=V1AR81UQ41KF1
+V1AR81UQ41
-QN4.2_Q
=V1AR81UQ41KF1
+V1AR81UQ41/5.3
DO:7

2.1 Pneumatic Valve
2.2 Pneumatic Valve

-QN4 .1 .2

=V1AR81UQ41KF1+V1AR81UQ41/2.4
+.AR81UQ41UQ4.1-W1

-W1
RKC 4.4T-2-RSC 4.4T/S3060
2m

BN BU BK WH

-BGS/R
1 3
WWS001A
A2 A1
2 4

Shot Pin 4

=V1AR81UQ41UQ4.1
+.AR81UQ41UQ4.1
-UQ4.1

=V1AR81UQ41
-UQ4.1-BGS/R
Shot Pin 4

=V1AR81UQ41UQ3+.AR81UQ41UQ3/1

=V1AR81UQ41UQ5+.AR81UQ41UQ5/1

			Date	1/17/2023	Volvo Trucks North America	Valiant TMS	FESTO DQ CONNECTION QN4	Drawing name: =2V09&EFS-EL	= V1AR81UQ41UQ4
			Ed.	MKLEPADLO					+ V1AR81UQ41UQ4
			Appr		P6700 Bodyside LH - Robot Cell 2V09			Document type: EFS	Project nr: 22-16150
Modification	Date	Name	Original		Replacement of	Replaced by	Scale 1:1		Page 1 / 1533

0	1	2	3	4	5	6	7	8	9

=V1AR81UQ41KF1
+V1AR81UQ41

-KF1.23
=V1AR81UQ41KF1+V1AR81UQ41/5.1

Shot Pin 5 (RST)
=V1AR81UQ41KF1
+V1AR81UQ41
-QN5.1_Q
=V1AR81UQ41KF1
+V1AR81UQ41/5.3
DO:8

Shot Pin 5 (SET)
=V1AR81UQ41KF1
+V1AR81UQ41
-QN5.2_Q
=V1AR81UQ41KF1
+V1AR81UQ41/5.3
DO:9

1.1
Pneumatic Valve

1.2
Pneumatic Valve

-QN5 .1 .2

=V1AR81UQ41KF1+V1AR81UQ41/2.5
+.AR81UQ41UQ5.1-W1

-W1
RKC 4.4T-2-RSC 4.4T/S3060
2m

BN BU BK WH

-BGS/R
1 3
WWS001A
A2 A1
2 4

Shot Pin 5

=V1AR81UQ41UQ5.1
+.AR81UQ41UQ5.1
-UQ5.1

=V1AR81UQ41
-UQ5.1-BGS/R
Shot Pin 5

=V1AR81UQ41UQ4+.AR81UQ41UQ4/1

=V1AR81UQ41UQ6+.AR81UQ41UQ6/1

			Date	1/17/2023	Volvo Trucks North America	Valiant TMS	FESTO DQ CONNECTION QN5	Drawing name: =2V09&EFS-EL	= V1AR81UQ41UQ5
			Ed.	MKLEPADLO					+ V1AR81UQ41UQ5
			Appr		P6700 Bodyside LH - Robot Cell 2V09			Document type: EFS	Project nr: 22-16150
Modification	Date	Name	Original		Replacement of	Replaced by	Scale 1:1		Page 1 / 1533

0	1	2	3	4	5	6	7	8	9

=V1AR81UQ41KF1
+V1AR81UQ41

-KF1.23
=V1AR81UQ41KF1+V1AR81UQ41/5.1

Clamps 6 (RST)	Clamps 6 (SET)
=V1AR81UQ41KF1	=V1AR81UQ41KF1
+V1AR81UQ41	+V1AR81UQ41
-QN6.1_Q	-QN6.2_Q
=V1AR81UQ41KF1	=V1AR81UQ41KF1
+V1AR81UQ41/5.3	+V1AR81UQ41/5.3
DO:10	DO:11
2.1 Pneumatic Valve	2.2 Pneumatic Valve

-QN6 .1 .2

=V1AR81UQ41KF1+V1AR81UQ41/2.6
+.AR81UQ41UQ6.1-W1

-W1 RKC 4.4T-4-RSC 4.4T/S3060 4m

-BGS/R
BN 1 + BU 3 - BK WH
TÜNKERS
1324638
A2 2 A1 4

Clamps 6
=V1AR81UQ41UQ6.1
+.AR81UQ41UQ6.1
-UQ6.1

=V1AR81UQ41
-UQ6.1-BGS/R
Clamps 6

=V1AR81UQ41KF1+V1AR81UQ41/2.8
+.AR81UQ41UQ6.2-W1

-W1 RKC 4.4T-4-RSC 4.4T/S3060 4m

-BGS/R
BN 1 + BU 3 - BK WH
TÜNKERS
1324638
A2 2 A1 4

Clamps 6
=V1AR81UQ41UQ6.2
+.AR81UQ41UQ6.2
-UQ6.2

=V1AR81UQ41
-UQ6.2-BGS/R
Clamps 6

=V1AR81UQ41KF1+V1AR81UQ41/2.9
+.AR81UQ41UQ6.3-W1

-W1 RKC 4.4T-4-RSC 4.4T/S3060 4m

-BGS/R
BN 1 + BU 3 - BK WH
TÜNKERS
1324638
A2 2 A1 4

Clamps 6
=V1AR81UQ41UQ6.3
+.AR81UQ41UQ6.3
-UQ6.3

=V1AR81UQ41
-UQ6.3-BGS/R
Clamps 6

=V1AR81UQ41KF1+V1AR81UQ41/3.1
+.AR81UQ41UQ6.4-W1

-W1 RKC 4.4T-5-RSC 4.4T/S3060 5m

-BGS/R
BN 1 + BU 3 - BK WH
TÜNKERS
1324638
A2 2 A1 4

Clamps 6
=V1AR81UQ41UQ6.4
+.AR81UQ41UQ6.4
-UQ6.4

=V1AR81UQ41
-UQ6.4-BGS/R
Clamps 6

=V1AR81UQ41UQ5+.AR81UQ41UQ5/1

=V1AR81UQ41UQ7+.AR81UQ41UQ7/1

			Date	1/17/2023	Volvo Trucks North America	Valiant TMS	FESTO DQ CONNECTION QN6	Drawing name: =2V09&EFS-EL	= V1AR81UQ41UQ6
			Ed.	MKLEPADLO					+ V1AR81UQ41UQ6
			Appr		P6700 Bodyside LH - Robot Cell 2V09			Document type: EFS	Project nr: 22-16150
Modification	Date	Name	Original		Replacement of	Replaced by	Scale 1:1		Page 1 / 1533

0	1	2	3	4	5	6	7	8	9

=V1AR81UQ41KF1
+V1AR81UQ41

-KF1.24
=V1AR81UQ41KF1+V1AR81UQ41/5.1

Clamps 7 (RST)	Clamps 7 (SET)
=V1AR81UQ41KF1	=V1AR81UQ41KF1
+V1AR81UQ41	+V1AR81UQ41
-QN7.1_Q	-QN7.2_Q
=V1AR81UQ41KF1	=V1AR81UQ41KF1
+V1AR81UQ41/5.3	+V1AR81UQ41/5.3
DO:12	DO:13
1.1 Pneumatic Valve	1.2 Pneumatic Valve

-QN7 .1 .2

=V1AR81UQ41KF1+V1AR81UQ41/3.2
+.AR81UQ41UQ7.1-W1

-W1 2m
RKC 4.4T-2-RSC 4.4T/S3060

-BGS/R
BN 1 + BU 3 - BK WH
TÜNKERS
1324638
A2 2 A1 4

Clamps 7
=V1AR81UQ41UQ7.1
+.AR81UQ41UQ7.1
-UQ7.1

=V1AR81UQ41
-UQ7.1-BGS/R
Clamps 7

=V1AR81UQ41KF1+V1AR81UQ41/3.3
+.AR81UQ41UQ7.2-W1

-W1 2m
RKC 4.4T-2-RSC 4.4T/S3060

-BGS/R
BN 1 + BU 3 - BK WH
TÜNKERS
1324638
A2 2 A1 4

Clamps 7
=V1AR81UQ41UQ7.2
+.AR81UQ41UQ7.2
-UQ7.2

=V1AR81UQ41
-UQ7.2-BGS/R
Clamps 7

=V1AR81UQ41UQ6+.AR81UQ41UQ6/1

=V1AR81UQ41UQ8+.AR81UQ41UQ8/1

			Date	1/17/2023	Volvo Trucks North America	Valiant TMS	FESTO DQ CONNECTION QN7	Drawing name: =2V09&EFS-EL	= V1AR81UQ41UQ7
			Ed.	MKLEPADLO					+ V1AR81UQ41UQ7
			Appr		P6700 Bodyside LH - Robot Cell 2V09			Document type: EFS	Project nr: 22-16150
Modification	Date	Name	Original		Replacement of / Replaced by	Scale 1:1			Page 1 / 1533

0	1	2	3	4	5	6	7	8	9

=V1AR81UQ41KF1
+V1AR81UQ41

-KF1.24
=V1AR81UQ41KF1+V1AR81UQ41/5.1

Clamps 8 (RST)	Clamps 8 (SET)
=V1AR81UQ41KF1	=V1AR13UQ41KF1
+V1AR81UQ41	+V1AR13UQ41
-QN8.1_Q	-QN8.2_Q
=V1AR81UQ41KF1	=V1AR81UQ41KF1
+V1AR81UQ41/5.3	+V1AR81UQ41/5.3
DO:14	DO:15
2.1 Pneumatic Valve	2.2 Pneumatic Valve

-QN8 .1 .2

=V1AR81UQ41KF1+V1AR81UQ41/3.4
+.AR81UQ41UQ8.1-W1

-W1
RKC 4.4T-2-RSC 4.4T/S3060
2m

BN BU BK WH

-BGS/R
1 3
+ -
TÜNKERS
1324638
A2 A1
2 4

Clamps 8
=V1AR81UQ41UQ8.1
+.AR81UQ41UQ8.1
-UQ8.1

=V1AR81UQ41
-UQ8.1-BGS/R
Clamps 8

=V1AR81UQ41KF1+V1AR81UQ41/3.5
+.AR81UQ41UQ8.2-W1

-W1
RKC 4.4T-2-RSC 4.4T/S3060
2m

BN BU BK WH

-BGS/R
1 3
+ -
TÜNKERS
1324638
A2 A1
2 4

Clamps 8
=V1AR81UQ41UQ8.2
+.AR81UQ41UQ8.2
-UQ8.2

=V1AR81UQ41
-UQ8.2-BGS/R
Clamps 8

=V1AR81UQ41UQ7+.AR81UQ41UQ7/1

=V1AR81UQ41UQ9+.AR81UQ41UQ9/1

			Date	1/17/2023	Volvo Trucks North America	Valiant TMS	FESTO DQ CONNECTION QN8	Drawing name: =2V09&EFS-EL	= V1AR81UQ41UQ8
			Ed.	MKLEPADLO					+ V1AR81UQ41UQ8
			Appr		P6700 Bodyside LH - Robot Cell 2V09			Document type: EFS	Project nr: 22-16150
Modification	Date	Name	Original		Replacement of	Replaced by	Scale 1:1		Page 1 / 1533

0	1	2	3	4	5	6	7	8	9

=V1AR81UQ41KF1
+V1AR81UQ41

-KF1.25
=V1AR81UQ41KF1+V1AR81UQ41/5.1

Clamps 9 (RST)
=V1AR81UQ41KF1
+V1AR81UQ41
-QN9.1_Q
=V1AR81UQ41KF1
+V1AR81UQ41/5.3
DO:16

Clamps 9 (SET)
=V1AR81UQ41KF1
+V1AR81UQ41
-QN9.2_Q
=V1AR81UQ41KF1
+V1AR81UQ41/5.3
DO:17

1.1 Pneumatic Valve

1.2 Pneumatic Valve

-QN9 .1 .2

=V1AR81UQ41KF1+V1AR81UQ41/3.6
+.AR81UQ41UQ9.1-W1

-W1
RKC 4.4T-2-RSC 4.4T/S3060
2m

BN BU BK WH

-BGS/R
1 3
+ -
TÜNKERS
1324638
A2 A1
2 4

Clamps 9
=V1AR81UQ41UQ9.1
+.AR81UQ41UQ9.1
-UQ9.1

=V1AR81UQ41
-UQ9.1-BGS/R
Clamps 9

=V1AR81UQ41KF1+V1AR81UQ41/3.8
+.AR81UQ41UQ9.2-W1

-W1
RKC 4.4T-2-RSC 4.4T/S3060
2m

BN BU BK WH

-BGS/R
1 3
+ -
TÜNKERS
1324638
A2 A1
2 4

Clamps 9
=V1AR81UQ41UQ9.2
+.AR81UQ41UQ9.2
-UQ9.2

=V1AR81UQ41
-UQ9.2-BGS/R
Clamps 9

=V1AR81UQ41UQ8+.AR81UQ41UQ8/1

=V1AR81UQ41UQ10+.AR81UQ41UQ10/1

			Date	1/17/2023	Volvo Trucks North America	Valiant TMS	FESTO DQ CONNECTION QN9	Drawing name: =2V09&EFS-EL	= V1AR81UQ41UQ9
			Ed.	MKLEPADLO					+ V1AR81UQ41UQ9
			Appr		P6700 Bodyside LH - Robot Cell 2V09			Document type: EFS	Project nr: 22-16150
Modification	Date	Name	Original		Replacement of	Replaced by	Scale 1:1		Page 1 / 1533

0	1	2	3	4	5	6	7	8	9

=V1AR81UQ41KF1
+V1AR81UQ41

-KF1.25
=V1AR81UQ41KF1+V1AR81UQ41/5.1

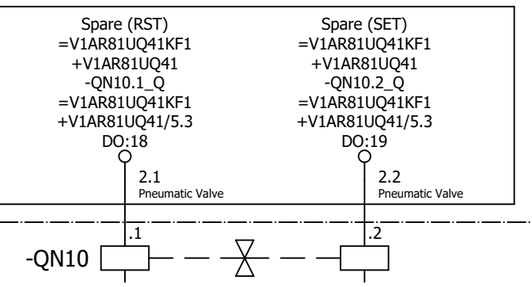

=V1AR81UQ41UQ9+.AR81UQ41UQ9/1

=V1AR81WC1+.AR81UC01/1

			Date	1/17/2023	Volvo Trucks North America	Valiant TMS	FESTO DQ CONNECTION QN10	Drawing name: =2V09&EFS-EL	= V1AR81UQ41UQ10
			Ed.	MKLEPADLO					+ V1AR81UQ41UQ10
			Appr		P6700 Bodyside LH - Robot Cell 2V09			Document type: EFS	Project nr: 22-16150
Modification	Date	Name	Original		Replacement of / Replaced by	Scale 1:1			Page 1 / 1533

0	1	2	3	4	5	6	7	8	9

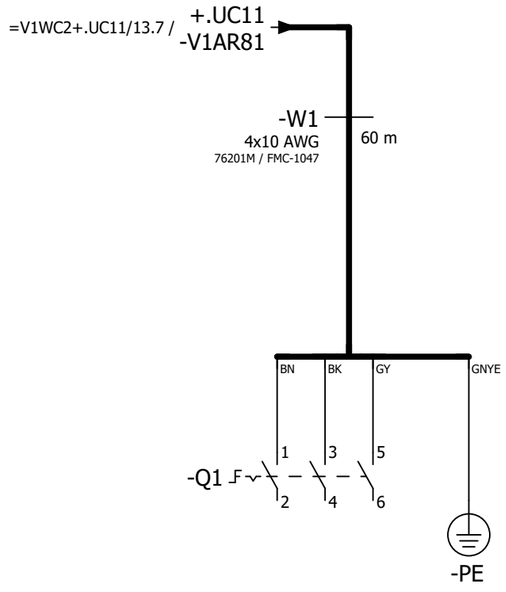

=V1AR81UQ41UQ10+.AR81UQ41UQ10/1

=V1AR81XQ51WC1+.AR81XQ51UC01/1

			Date	1/17/2023	Volvo Trucks North America	Valiant TMS	Incoming power	Drawing name: =2V09&EFS-EL	= V1AR81WC1
			Ed.	MKLEPADLO					+ V1AR81UC01
			Appr		P6700 Bodyside LH - Robot Cell 2V09	Scale 1:1		Document type: EFS / Project nr: 22-16150	Page 1 / 1533
Modification	Date	Name	Original		Replacement of / Replaced by				

0	1	2	3	4	5	6	7	8	9

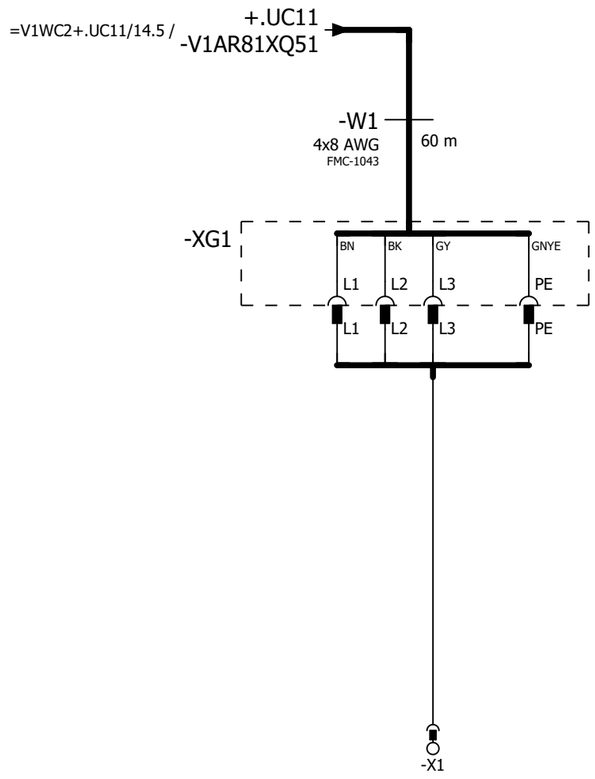

=V1AR81WC1+.AR81UC01/1

=V1AR81XQ52WC1+.AR81XQ52UC01/1

			Date	1/17/2023	Volvo Trucks North America	Valiant TMS	Incoming power	Drawing name: =2V09&EFS-EL	= V1AR81XQ51WC1
			Ed.	MKLEPADLO					+ V1AR81XQ51UC01
			Appr		P6700 Bodyside LH - Robot Cell 2V09	Scale 1:1		Document type: EFS	Project nr: 22-16150
Modification	Date	Name	Original		Replacement of	Replaced by			Page 1 / 1533

0	1	2	3	4	5	6	7	8	9

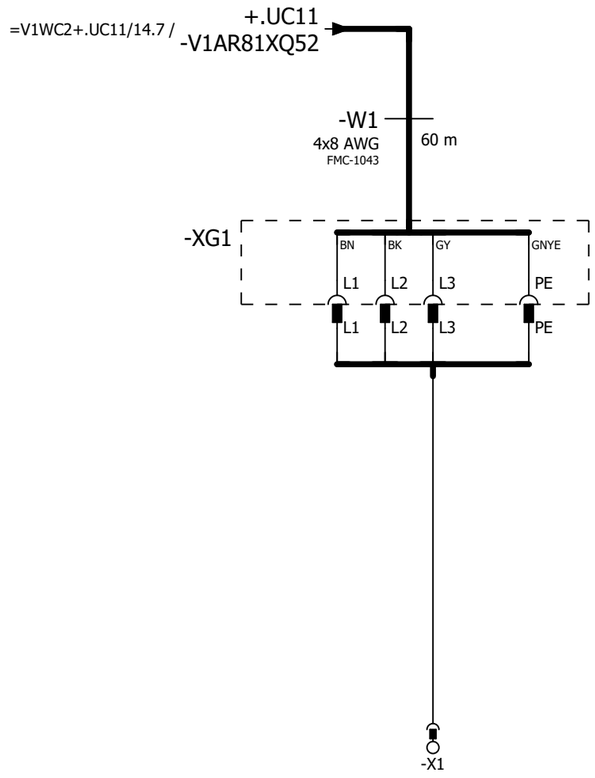

=V1AR81XQ51WC1+.AR81XQ51UC01/1

=V1AR191KF1+.AR191UC01/1

			Date	1/17/2023	Volvo Trucks North America	Valiant TMS	Incoming power	Drawing name: =2V09&EFS-EL	= V1AR81XQ52WC1
			Ed.	MKLEPADLO					+ V1AR81XQ52UC01
			Appr		P6700 Bodyside LH - Robot Cell 2V09			Document type: EFS	Project nr: 22-16150
Modification	Date	Name	Original		Replacement of	Replaced by	Scale 1:1		Page 1 / 1533

0	1	2	3	4	5	6	7	8	9

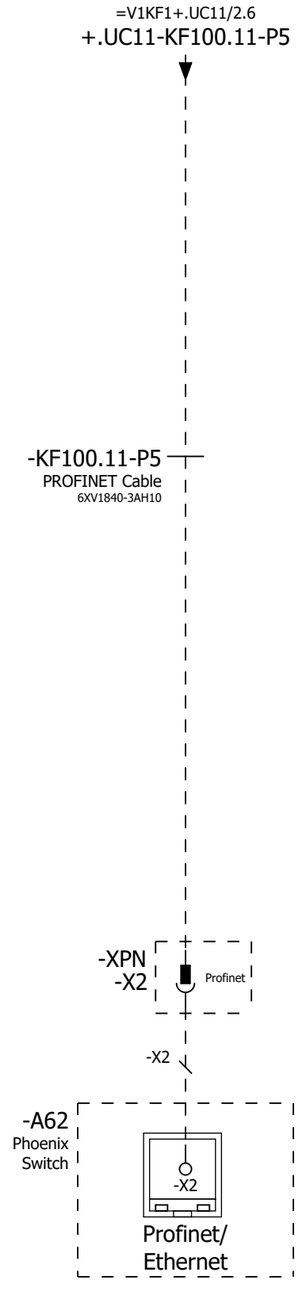

=V1AR81XQ52WC1+.AR81XQ52UC01/1

=V1AR191WC1/1

			Date	1/17/2023	Volvo Trucks North America	Valiant TMS	Incoming Profinet	Drawing name: =2V09&EFS-EL	= V1AR191KF1
			Ed.	MKLEPADLO					+ V1AR191UC01
			Appr		P6700 Bodyside LH - Robot Cell 2V09			Document type: EFS	Project nr: 22-16150
Modification	Date	Name	Original		Replacement of	Replaced by	Scale 1:1		Page 1 / 1533

0	1	2	3	4	5	6	7	8	9

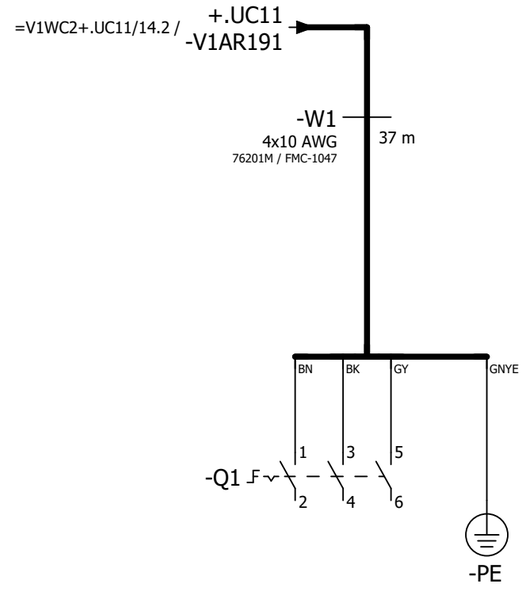

=V1AR191KF1/1

=V1AR211KF1+.AR211UC01/1

			Date	1/17/2023	Volvo Trucks North America		Valiant TMS	Incoming power	Drawing name: =2V09&EFS-EL	= V1AR191WC1
			Ed.	MKLEPADLO						+ V1AR191UC01
			Appr		P6700 Bodyside LH - Robot Cell 2V09				Document type: EFS	Project nr: 22-16150	Page 1
Modification	Date	Name	Original		Replacement of	Replaced by	Scale 1:1				1533

0	1	2	3	4	5	6	7	8	9

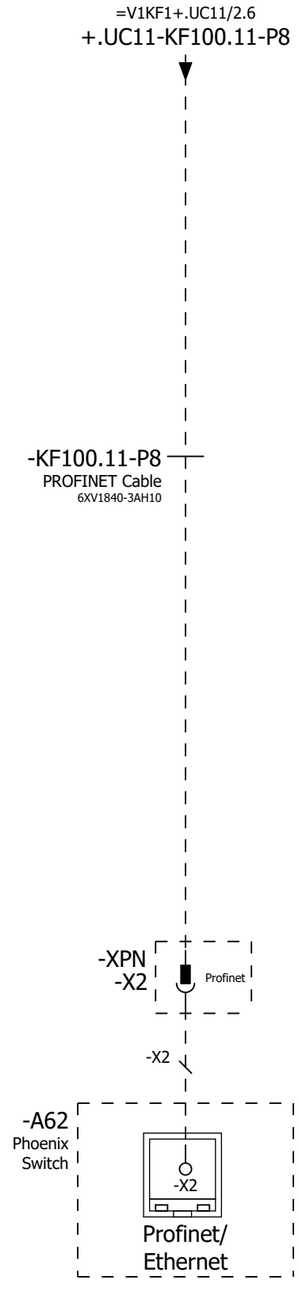

=V1AR191WC1+.AR191UC01/1

=V1AR211WC1/1

			Date	1/17/2023	Volvo Trucks North America	Valiant TMS	Incoming Profinet	Drawing name: =2V09&EFS-EL	= V1AR211KF1
			Ed.	MKLEPADLO					+ V1AR211UC01
			Appr		P6700 Bodyside LH - Robot Cell 2V09	Scale 1:1		Document type: EFS	Project nr: 22-16150
Modification	Date	Name	Original		Replacement of	Replaced by			Page 1 / 1533

0	1	2	3	4	5	6	7	8	9

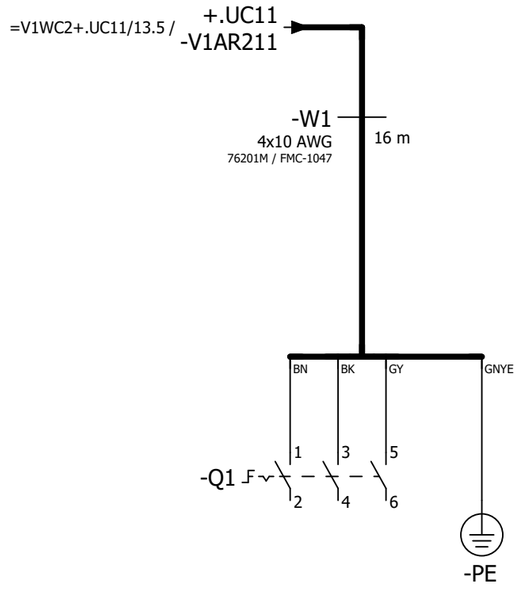

=V1AR211KF1/1

=V1AR211XQ11WC1+.AR211XQ11UC01/1

			Date	1/17/2023	Volvo Trucks North America		Valiant TMS	Incoming power	Drawing name: =2V09&EFS-EL	= V1AR211WC1
			Ed.	MKLEPADLO						+ V1AR211UC01
			Appr		P6700 Bodyside LH - Robot Cell 2V09				Document type: EFS	Project nr: 22-16150
Modification	Date	Name	Original		Replacement of	Replaced by	Scale 1:1			Page 1 / 1533

0	1	2	3	4	5	6	7	8	9

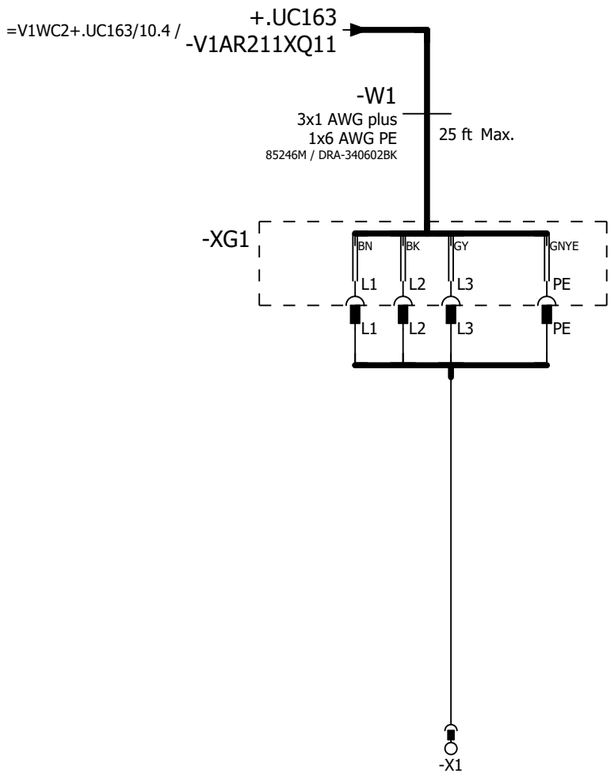

=V1AR211WC1+.AR211UC01/1

=V1AR212KF1+.AR212UC01/1

			Date	1/17/2023	Volvo Trucks North America	Valiant TMS	Incoming power	Drawing name: =2V09&EFS-EL	= V1AR211XQ11WC1	
			Ed.	MKLEPADLO					+ V1AR211XQ11UC01	
			Appr		P6700 Bodyside LH - Robot Cell 2V09	Scale 1:1		Document type: EFS	Project nr: 22-16150	Page 1 / 1533
Modification	Date	Name	Original		Replacement of	Replaced by				

0	1	2	3	4	5	6	7	8	9

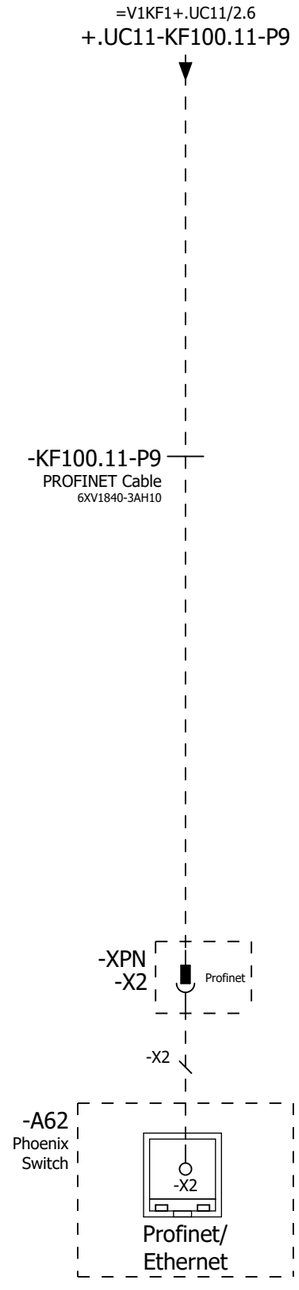

=V1AR211XQ11WC1+.AR211XQ11UC01/1

=V1AR212WC1/1

			Date	1/17/2023	Volvo Trucks North America	Valiant TMS	Incoming Profinet	Drawing name: =2V09&EFS-EL	= V1AR212KF1
			Ed.	MKLEPADLO					+ V1AR212UC01
			Appr		P6700 Bodyside LH - Robot Cell 2V09			Document type: EFS	Project nr: 22-16150
Modification	Date	Name	Original		Replacement of / Replaced by	Scale 1:1			Page 1 / 1533

0	1	2	3	4	5	6	7	8	9

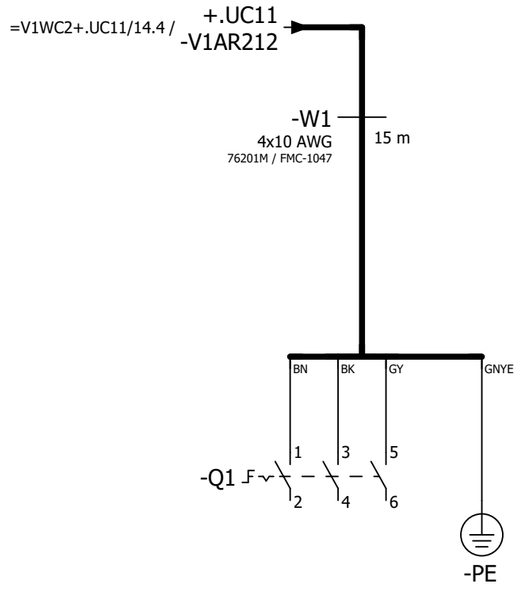

=V1AR212KF1/1

=V1AR212XQ11WC1+.AR212XQ11UC01/1

			Date	1/17/2023	Volvo Trucks North America		Valiant TMS	Incoming power	Drawing name: =2V09&EFS-EL	= V1AR212WC1
			Ed.	MKLEPADLO						+ V1AR212UC01
			Appr		P6700 Bodyside LH - Robot Cell 2V09				Document type: EFS	Project nr: 22-16150
Modification	Date	Name	Original		Replacement of	Replaced by	Scale 1:1			Page 1 / 1533

0	1	2	3	4	5	6	7	8	9

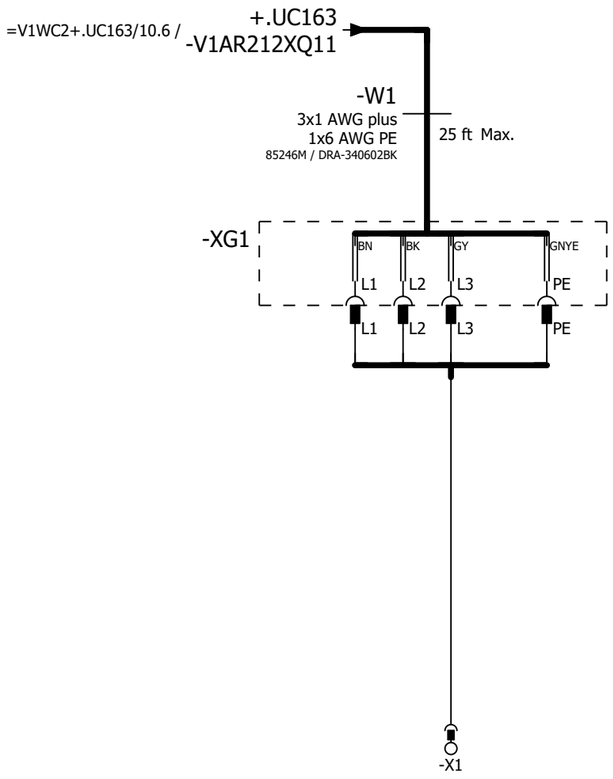

=V1AR212WC1+.AR212UC01/1

=V1BX11WC3+.BX11UC01/1

			Date	1/17/2023	Volvo Trucks North America	Valiant TMS	Incoming power	Drawing name: =2V09&EFS-EL	= V1AR212XQ11WC1
			Ed.	MKLEPADLO					+ V1AR212XQ11UC01
			Appr		P6700 Bodyside LH - Robot Cell 2V09			Document type: EFS	Project nr: 22-16150
Modification	Date	Name	Original		Replacement of	Replaced by	Scale 1:1		Page 1 / 1533

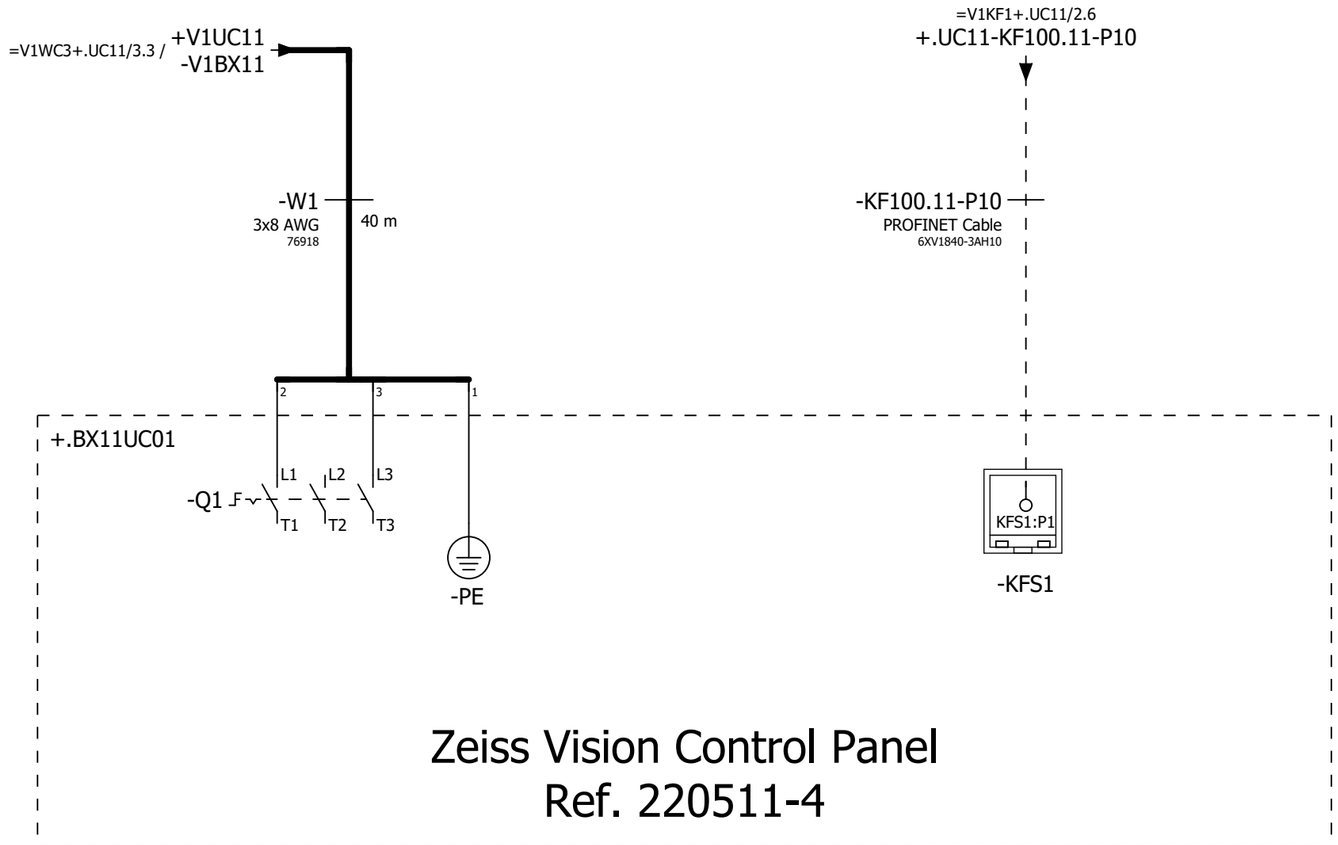

=V1AR212XQ11WC1+.AR212XQ11UC01/1

=V1FQ1+.FQ1/1

			Date	1/17/2023	Volvo Trucks North America	Valiant TMS	Incoming power & profinet	Drawing name: =2V09&EFS-EL		= V1BX11WC3	
			Ed.	MKLEPADLO						+ V1BX11UC01	
			Appr		P6700 Bodyside LH - Robot Cell 2V09			Document type: EFS	Project nr: 22-16150	Page	1
Modification	Date	Name	Original		Replacement of	Replaced by	Scale 1:1				1533

=V1KF1+V1UC11

=V1WC4+.UC11/21.5
+.FQ1-BG1

=V1KF1+.UC11/2.6
-KF100.11-P16

-KF100.11-P16
PROFINET Cable
6XV1840-3AH10

2.3
+.FQ1-BG2

2.6
-KF100.11-P16

-W1
RSM RKM 56-15M/S3059
15m

+.FQ1BG1

-BG1
24 V
MGB-L2B-PNA-L-121863
MGB-L2B-PNA-L-121863

-X1 WH RD GNYE OG BK
7/8" MINI 1 2 3 4 5

-X2 WH RD GNYE OG BK
7/8" MINI 1 2 3 4 5

MGB
0V 0V FE 24V 24V
N2 N1 Earth L1 L2

EUCHNER

-X3
Profinet/
Ethernet

-X4
Profinet/
Ethernet

=V1BX11WC3+.BX11UC01/1

2

			Date	1/17/2023	Volvo Trucks North America	Valiant TMS	Door lock sensor -BG1	Drawing name: =2V09&EFS-EL	= V1FQ1
			Ed.	MKLEPADLO					+ V1FQ1
			Appr		P6700 Bodyside LH - Robot Cell 2V09	Scale 1:1		Document type: EFS	Project nr: 22-16150
Modification	Date	Name	Original		Replacement of	Replaced by			Page 1 / 1533

0	1	2	3	4	5	6	7	8	9

=V1KF1+V1UC11

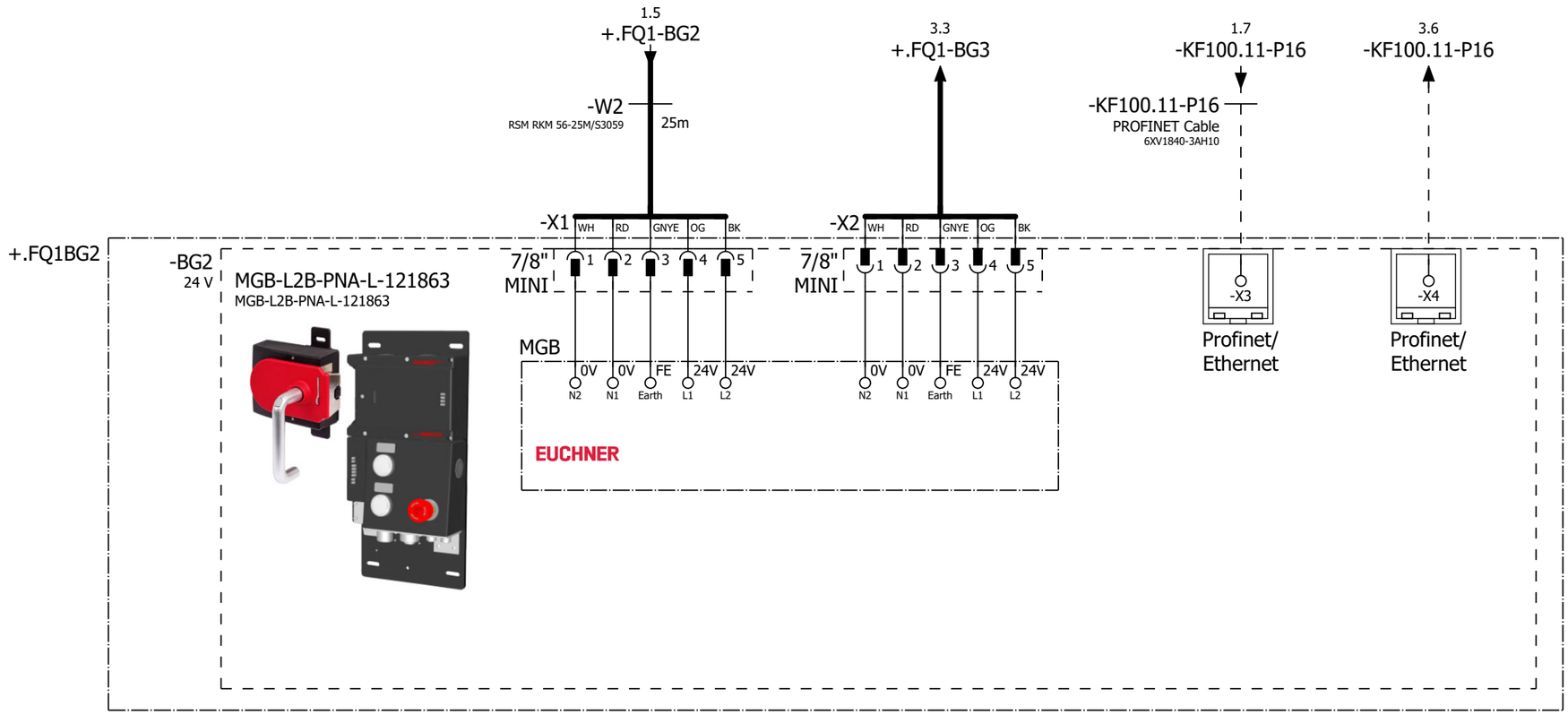

1 3

			Date	1/17/2023	Volvo Trucks North America	Valiant TMS	Door lock sensor -BG2	Drawing name: =2V09&EFS-EL	= V1FQ1
			Ed.	MKLEPADLO					+ V1FQ1
			Appr		P6700 Bodyside LH - Robot Cell 2V09	Scale 1:1		Document type: EFS	Project nr: 22-16150
Modification	Date	Name	Original		Replacement of	Replaced by			Page 2 / 1533

0	1	2	3	4	5	6	7	8	9

=V1KF1+V1UC11

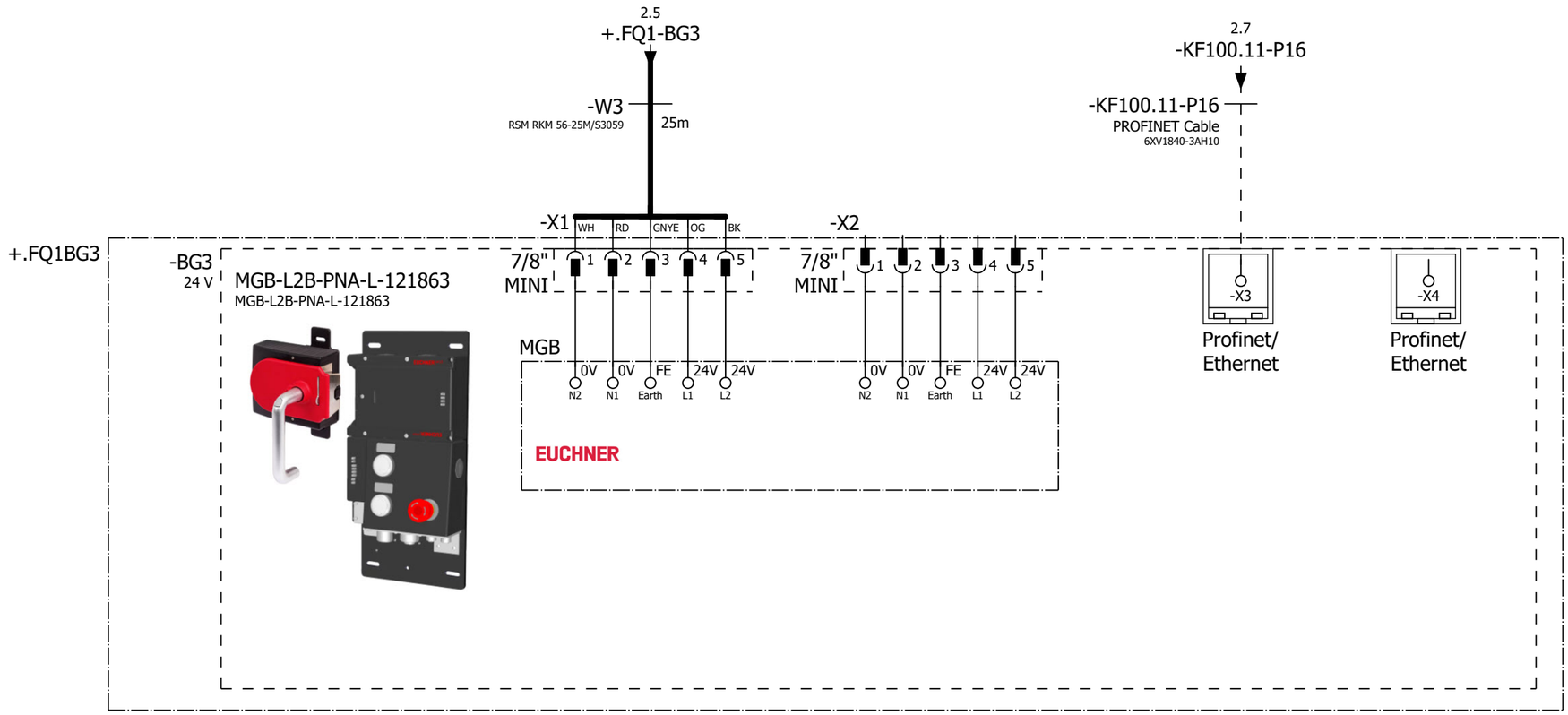

2

4

			Date	1/17/2023	Volvo Trucks North America	Valiant TMS	Door lock sensor -BG3	Drawing name: =2V09&EFS-EL	= V1FQ1
			Ed.	MKLEPADLO					+ V1FQ1
			Appr		P6700 Bodyside LH - Robot Cell 2V09	Scale 1:1		Document type: EFS	Project nr: 22-16150
Modification	Date	Name	Original		Replacement of	Replaced by			Page 3 / 1533

=V1KF1+V1UC15

=V1WC4+.UC15/22.5
+.FQ1-BG4

=V1KF1+.UC15/2.6
-KF100.15-P16

-KF100.15-P16
PROFINET Cable
6XV1840-3AH10

-W4
RSM RKM 56-20M/S3059
20m

5.3
+.FQ1-BG5

5.6
-KF100.15-P16

+.FQ1BG4

-BG4
24 V

MGB-L2B-PNA-L-121863
MGB-L2B-PNA-L-121863

-X1 WH RD GNYE OG BK
7/8" MINI 1 2 3 4 5

-X2 WH RD GNYE OG BK
7/8" MINI 1 2 3 4 5

MGB
0V 0V FE 24V 24V
N2 N1 Earth L1 L2

EUCHNER

-X3
Profinet/
Ethernet

-X4
Profinet/
Ethernet

3 5

			Date	1/17/2023	Volvo Trucks North America	Valiant TMS	Door lock sensor -BG4	Drawing name: =2V09&EFS-EL	= V1FQ1
			Ed.	MKLEPADLO					+ V1FQ1
			Appr		P6700 Bodyside LH - Robot Cell 2V09	Scale 1:1		Document type: EFS	Project nr: 22-16150
Modification	Date	Name	Original		Replacement of	Replaced by			Page 4 / 1533

0	1	2	3	4	5	6	7	8	9

=V1KF1+V1UC12

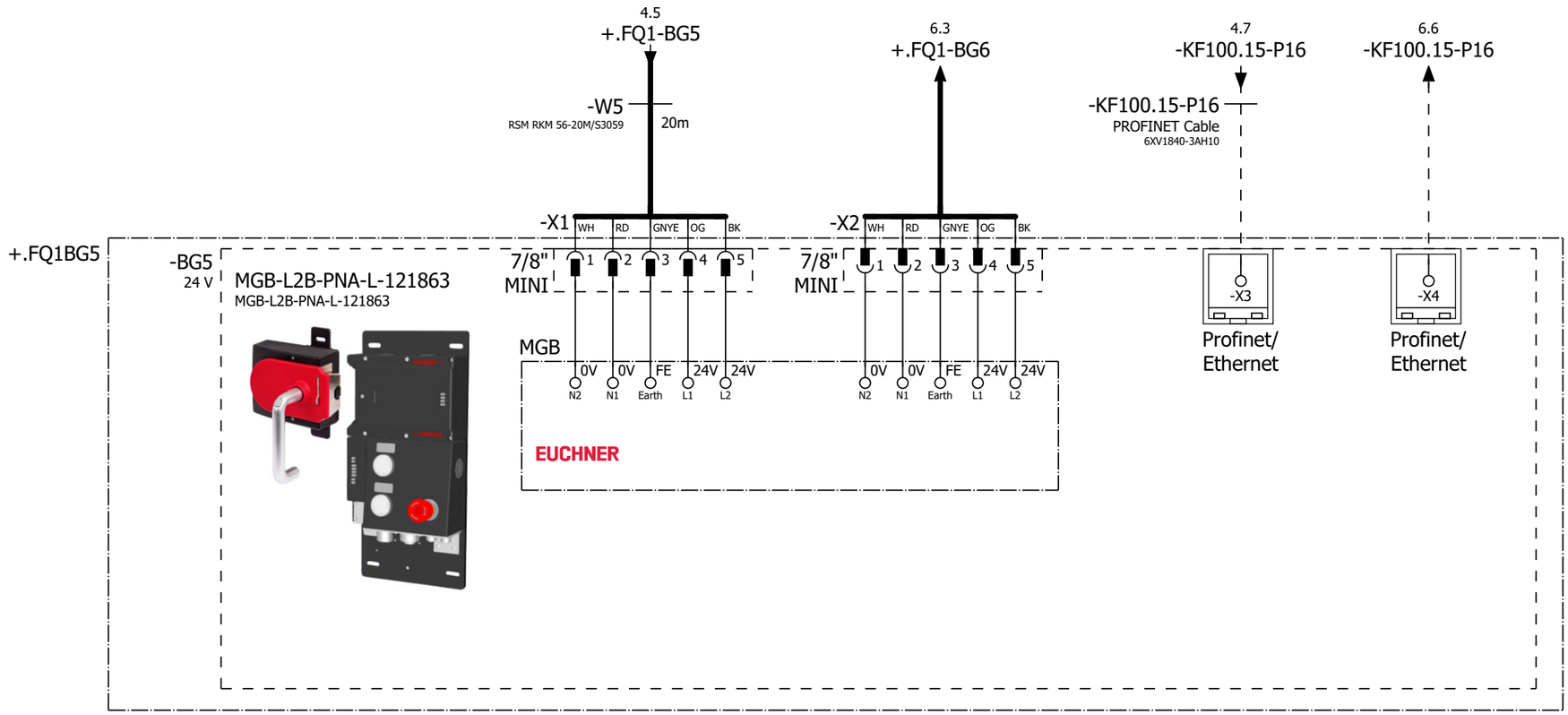

4 6

			Date	1/17/2023	Volvo Trucks North America	Valiant TMS	Door lock sensor -BG5	Drawing name: =2V09&EFS-EL	= V1FQ1
			Ed.	MKLEPADLO					+ V1FQ1
			Appr		P6700 Bodyside LH - Robot Cell 2V09	Scale 1:1		Document type: EFS	Project nr: 22-16150
Modification	Date	Name	Original		Replacement of	Replaced by			Page 5 / 1533

0	1	2	3	4	5	6	7	8	9

=V1KF1+V1UC12

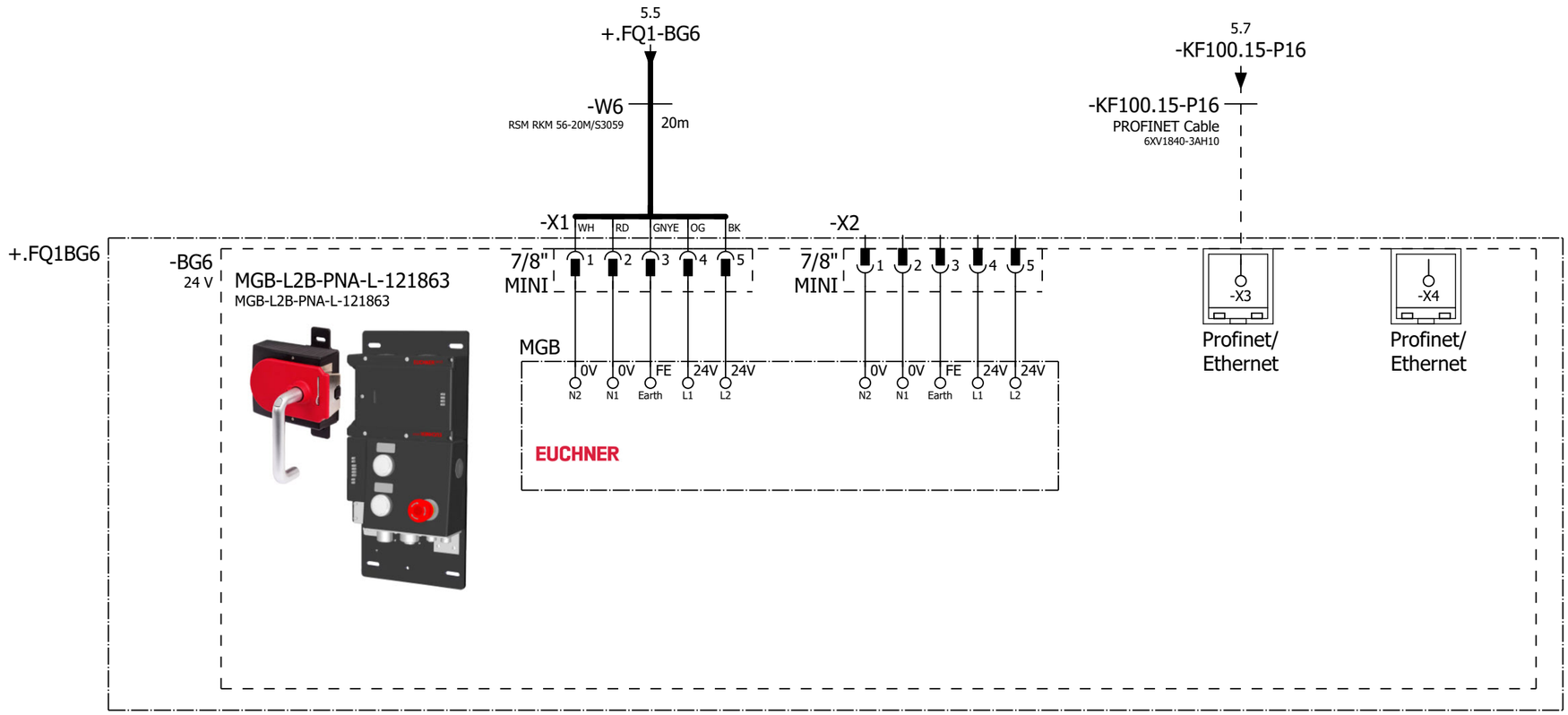

5

8

			Date	1/17/2023	Volvo Trucks North America	Valiant TMS	Door lock sensor -BG6	Drawing name: =2V09&EFS-EL	= V1FQ1
			Ed.	MKLEPADLO					+ V1FQ1
			Appr		P6700 Bodyside LH - Robot Cell 2V09	Scale 1:1		Document type: EFS	Project nr: 22-16150
Modification	Date	Name	Original		Replacement of	Replaced by			Page 6 / 1533

=V1KF1+V1UC12

S010 Light Curtain 1&2 Ch1
=V1FQ1-BR11.1
=V1KF1+.UC12/14.2

S010 Light Curtain 1&2 Ch2
=V1FQ1-BR11.2
=V1KF1+.UC12/14.2

=V1KF1
-KF12.31

F-DI 8 24VDC
PROFISAFE
ET200SP

I5080.0 DI0 VS0 I5080.4 DI4 VS4

1 9 5 13

I5080.0 BUOG 16 AWG
VS0 BUOG 16 AWG
I5080.4 BUOG 16 AWG
VS4 BUOG 16 AWG

=V1WC4+.UC12/5.3 / 3L+5
=V1WC4+.UC12/5.3 / 3M5

-KF12.31 1 9 5 13

BN WH BU BK
BU BK BN WH

-W11T
RKC 4.4T-30-RSC 4.4T/S3060
30m

-W11R
RKC 4.4T-25-RSC 4.4T/S3060
25m

-BR11

-T

1 +24V
2 Test2
3 0V
4 Test1

Transmitter

-R

1 +24V
2 OSSD2
3 0V
4 OSSD1

Receiver

+24V EDM2 EDM1 OSSD2 OSSD1 0V FE Reset
1 2 3 4 5 6 7 8
BN OGBK OG WH BK BU GNYE VT

-W12T
DEE2R-82D
0.61m

-W12R
DEE2R-82D
0.61m

-BR12

-T

BN OGBK OG WH BK BU GNYE VT
1 2 3 4 5 6 7 8
+24V EDM2 EDM1 OSSD2 OSSD1 0V FE Reset

Transmitter

-R

Receiver

6 9

			Date	1/17/2023	Volvo Trucks North America	Valiant TMS	S010 Light Curtain	Drawing name: =2V09&EFS-EL	= V1FQ1
			Ed.	MKLEPADLO					+ V1FQ1
			Appr		P6700 Bodyside LH - Robot Cell 2V09	Scale 1:1		Document type: EFS	Project nr: 22-16150
Modification	Date	Name	Original		Replacement of	Replaced by			Page 8 / 1533

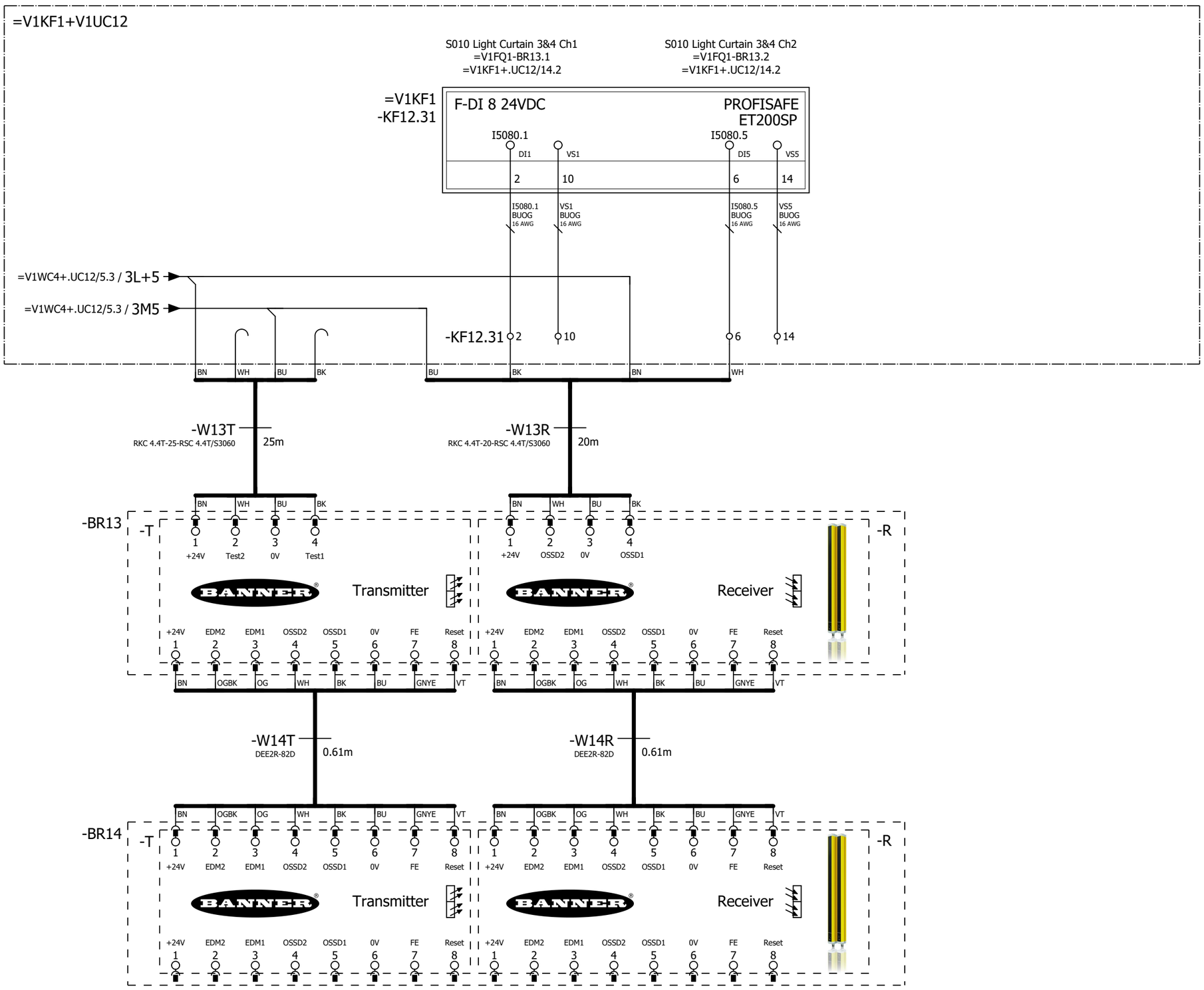

8 10

			Date	1/17/2023	Volvo Trucks North America	Valiant TMS	S010 Light Curtain	Drawing name: =2V09&EFS-EL	= V1FQ1	
			Ed.	MKLEPADLO					+ V1FQ1	
			Appr		P6700 Bodyside LH - Robot Cell 2V09	Scale 1:1		Document type: EFS	Project nr: 22-16150	Page 9 / 1533
Modification	Date	Name	Original		Replacement of	Replaced by				

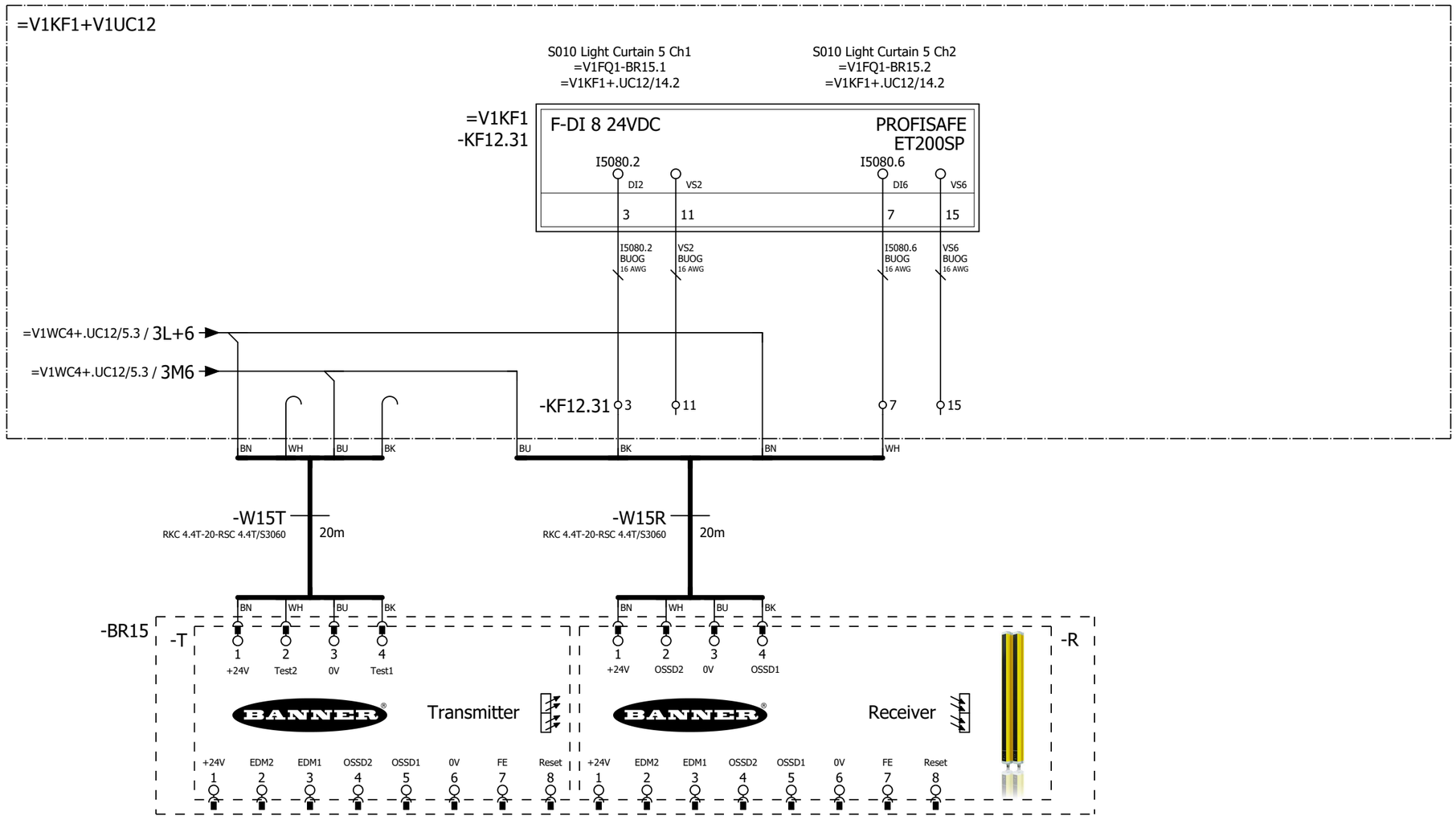

			Date	1/17/2023	Volvo Trucks North America		Valiant TMS	S010 Light Curtain	Drawing name: =2V09&EFS-EL	= V1FQ1	
			Ed.	MKLEPADLO						+ V1FQ1	
			Appr		P6700 Bodyside LH - Robot Cell 2V09		Scale 1:1		Document type: EFS	Project nr: 22-16150	Page 10 / 1533
Modification	Date	Name	Original		Replacement of	Replaced by					

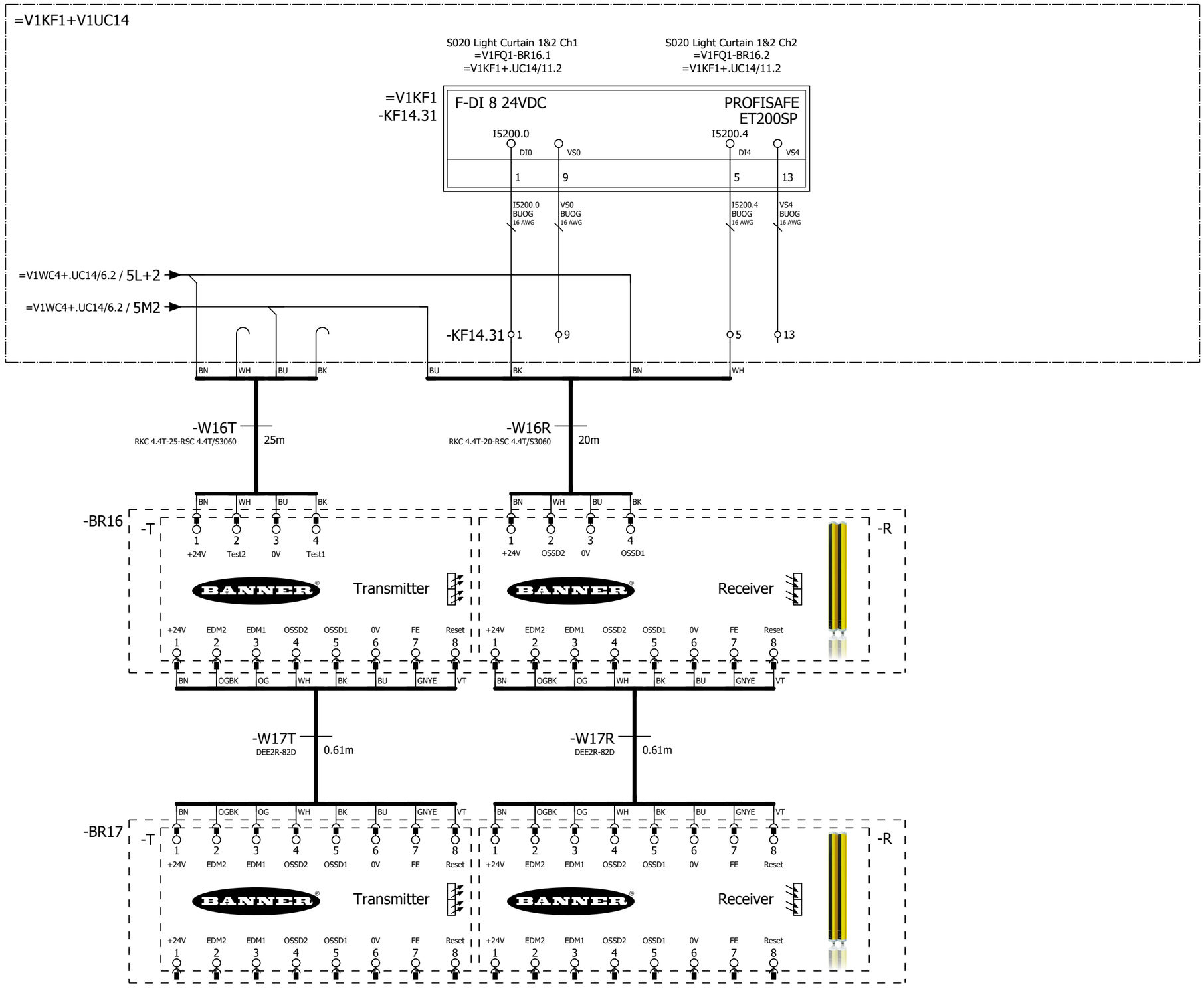

10

12

			Date	1/17/2023	Volvo Trucks North America	Valiant TMS	S020 Light Curtain	Drawing name: =2V09&EFS-EL	= V1FQ1
			Ed.	MKLEPADLO					+ V1FQ1
			Appr		P6700 Bodyside LH - Robot Cell 2V09			Document type: EFS	Project nr: 22-16150
Modification	Date	Name	Original		Replacement of / Replaced by	Scale 1:1			Page 11 / 1533

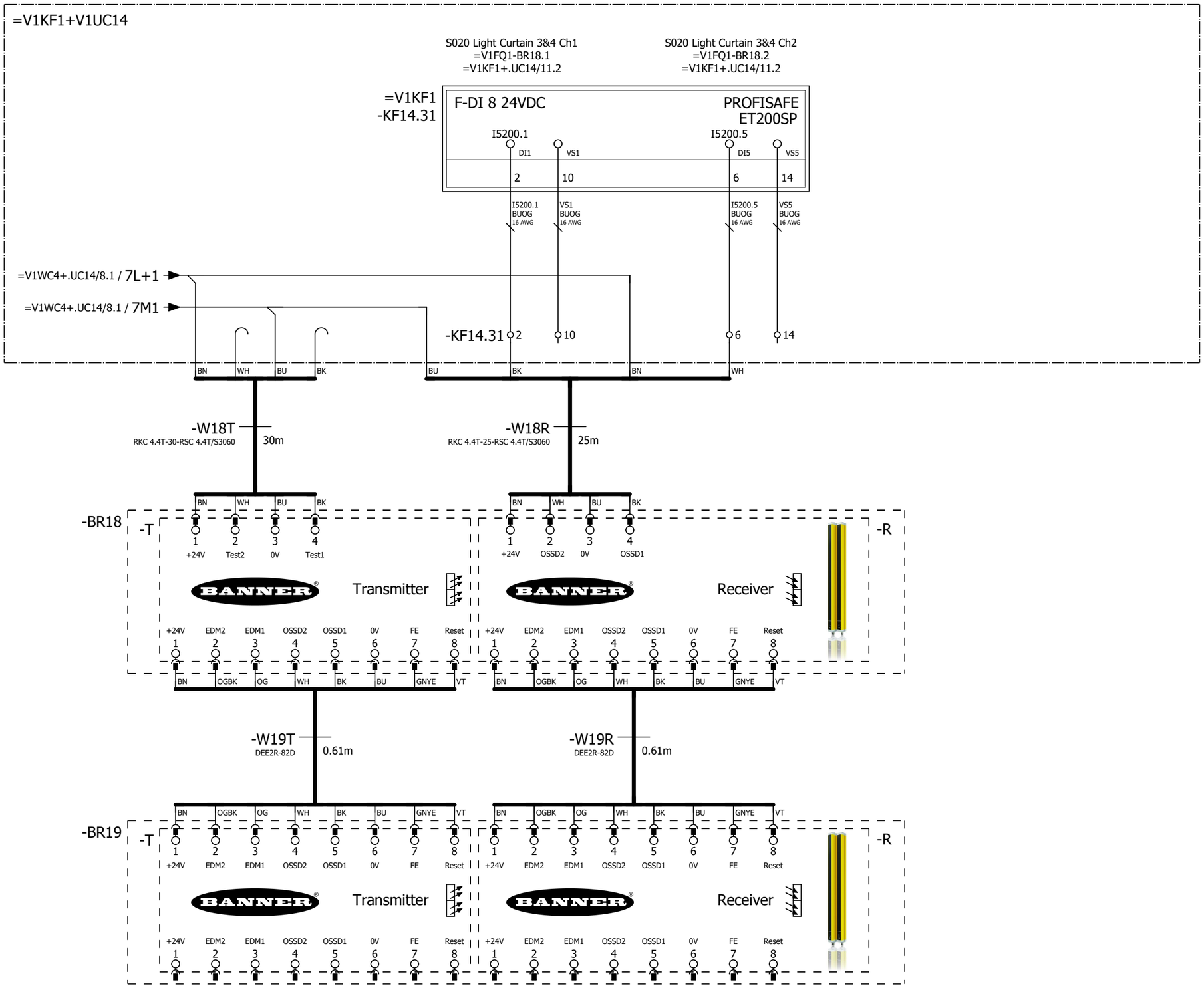

11

13

			Date	1/17/2023	Volvo Trucks North America	Valiant TMS	S020 Light Curtain	Drawing name: =2V09&EFS-EL	= V1FQ1 + V1FQ1
			Ed.	MKLEPADLO	P6700 Bodyside LH - Robot Cell 2V09				
			Appr					Document type: EFS	Project nr: 22-16150
Modification	Date	Name	Original		Replacement of / Replaced by	Scale 1:1			Page 12 / 1533

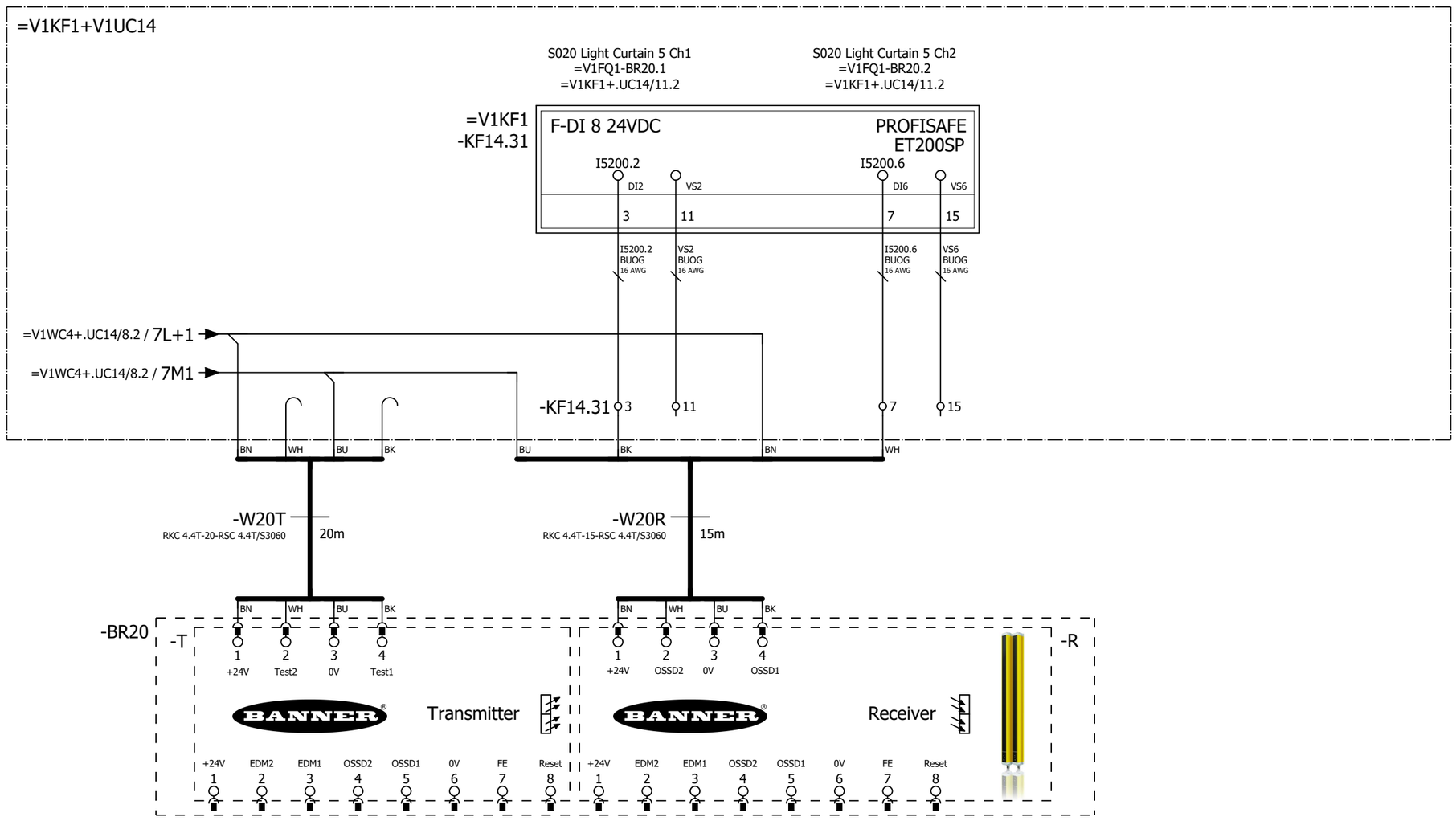

			Date	1/17/2023	Volvo Trucks North America	Valiant TMS	S020 Light Curtain	Drawing name: =2V09&EFS-EL	= V1FQ1	
			Ed.	MKLEPADLO					+ V1FQ1	
			Appr		P6700 Bodyside LH - Robot Cell 2V09	Scale 1:1		Document type: EFS	Project nr: 22-16150	Page 13
Modification	Date	Name	Original		Replacement of	Replaced by				1533

Switched Power 1 11.1L+
-KF11.51
=V1KF1/16.2

=V1KF1
-KF11.41

F 4DO 24 DC PROFISAFE
ET200SP

Q5062.0 QX.0
DQ-P0 DQ-M0
1 9

Q5062.0
BU
16 AWG

QX.0
BU
16 AWG

=V1KF1/18.2
Switched Power 1 11.1L+P

=V1KF1/18.2
SPARE

=V1KF1/18.2
Switched Power 1 11.1L+M

=V1KF1/18.2
SPARE

=V1KF1
-KF11.51
=V1KF1/18.1

F-RQ 1x24VDC/24..230VAC/5A PROFISAFE
ET200SP

9 IN P
10 OUT P
11 IN M
12 OUT M

Monitoring Safety contactors 11.1L+
-KF11.51RQ
=V1KF1/12.2

=V1KF1
-KF11.14

DI ET200SP
I56.0
DI0
1

=V1WC4/12.2 / -11.1L+1_2

+.FQ1/13

2

			Date	1/17/2023	Volvo Trucks North America	Valiant TMS	Safety power monitoring RQ - KF11.51	Drawing name: =2V09&EFS-EL	= V1FQ1	
			Ed.	MKLEPADLO					+ V1UC11	
			Appr		P6700 Bodyside LH - Robot Cell 2V09			Document type: EFS	Project nr: 22-16150	Page 1
Modification	Date	Name	Original		Replacement of / Replaced by	Scale 1:1				1533

Switched Power 2 12.1L+
-KF11.52
=V1KF1/16.2

=V1KF1
-KF11.41

F 4DO 24 DC PROFISAFE
ET200SP

Q5062.1 QX.1

DQ-P1 DQ-M1

2 10

Q5062.1
BU
16 AWG

QX.1
BU
16 AWG

=V1KF1/19.2
Switched Power 2 12.1L+P

=V1KF1/19.2
SPARE

=V1KF1/19.2
Switched Power 2 12.1L+M

=V1KF1/19.2
SPARE

=V1KF1
-KF11.52
=V1KF1/19.1

F-RQ 1x24VDC/24..230VAC/5A PROFISAFE
ET200SP

9 IN P | 10 OUT P | 11 IN M | 12 OUT M

Monitoring Safety contactors 12.1L+
-KF11.52RQ
=V1KF1/12.2

=V1KF1
-KF11.14

DI ET200SP

I56.1
DI1

2

=V1WC4/13.2 / -12.1L+1_2

1 3

			Date	1/17/2023	Volvo Trucks North America	Valiant TMS	Safety power monitoring RQ - KF11.52	Drawing name: =2V09&EFS-EL	= V1FQ1	
			Ed.	MKLEPADLO					+ V1UC11	
			Appr		P6700 Bodyside LH - Robot Cell 2V09			Document type: EFS	Project nr: 22-16150	Page 2
Modification	Date	Name	Original		Replacement of	Replaced by	Scale 1:1			1533

Switched Power 3 13.1L+
-KF11.53
=V1KF1/16.2

=V1KF1/20.2
Switched Power 3 13.1L+P

=V1KF1/20.2
SPARE

=V1KF1/20.2
Switched Power 3 13.1L+M

=V1KF1/20.2
SPARE

Monitoring Safety contactors 13.1L+
-KF11.53RQ
=V1KF1/12.2

=V1KF1
-KF11.41

F 4DO 24 DC PROFISAFE
ET200SP

Q5062.2 QX.2

DQ-P2 DQ-M2

3 11

=V1KF1
-KF11.53
=V1KF1/20.1

F-RQ 1x24VDC/24..230VAC/5A PROFISAFE
ET200SP

9 IN P | 10 OUT P | 11 IN M | 12 OUT M

Q5062.2
BU
16 AWG

QX.2
BU
16 AWG

=V1KF1
-KF11.14

DI ET200SP

I56.2

DI2

3

=V1WC4/14.2 / -13.1L+1_2

			Date	1/17/2023	Volvo Trucks North America	Valiant TMS	Safety power monitoring RQ - KF11.53	Drawing name: =2V09&EFS-EL	= V1FQ1	
			Ed.	MKLEPADLO					+ V1UC11	
			Appr		P6700 Bodyside LH - Robot Cell 2V09			Document type: EFS	Project nr: 22-16150	Page 3
Modification	Date	Name	Original		Replacement of	Replaced by	Scale 1:1			1533

Switched Power 4 14.1L+
-KF11.54
=V1KF1/16.2

=V1KF1
-KF11.41

F 4DO 24 DC PROFISAFE
ET200SP

Q5062.3 QX.3

DQ-P3 DQ-M3

4 12

=V1KF1/21.2
Switched Power 4 14.1L+P

=V1KF1/21.2
SPARE

=V1KF1/21.2
Switched Power 4 14.1L+M

=V1KF1/21.2
SPARE

=V1KF1
-KF11.54
=V1KF1/21.1

F-RQ 1x24VDC/24..230VAC/5A PROFISAFE
ET200SP

9 IN P
10 OUT P
11 IN M
12 OUT M

Q5062.3
BU
16 AWG

QX.3
BU
16 AWG

Monitoring Safety contactors 14.1L+
-KF11.54RQ
=V1KF1/12.2

=V1KF1
-KF11.14

DI ET200SP

I56.3
DI3

4

=V1WC4/15.2 / -14.1L+1_2

3 +.UC12/1

			Date	1/17/2023	Volvo Trucks North America	Valiant TMS	Safety power monitoring RQ - KF11.54	Drawing name: =2V09&EFS-EL	= V1FQ1	
			Ed.	MKLEPADLO					+ V1UC11	
			Appr		P6700 Bodyside LH - Robot Cell 2V09			Document type: EFS	Project nr: 22-16150	Page 4
Modification	Date	Name	Original		Replacement of / Replaced by	Scale 1:1				1533

Switched Power 1 11.1L+
-KF12.51
=V1KF1/16.2

=V1KF1
-KF12.41

F 4DO 24 DC PROFISAFE
ET200SP

Q5092.0 QX.0
DQ-P0 DQ-M0
1 9

Q5092.0
BU
16 AWG

QX.0
BU
16 AWG

=V1KF1/18.2 Switched Power 1 11.1L+P
=V1KF1/18.2 SPARE
=V1KF1/18.2 Switched Power 1 11.1L+M
=V1KF1/18.2 SPARE

=V1KF1
-KF12.51
=V1KF1/18.1

F-RQ 1x24VDC/24..230VAC/5A PROFISAFE
ET200SP

9 IN P
10 OUT P
11 IN M
12 OUT M

Monitoring Safety contactors 11.1L+
-KF12.51RQ
=V1KF1/12.2

=V1KF1
-KF12.14

DI ET200SP
I86.0
DI0
1

=V1WC4/12.2 / -11.1L+1_2

+.UC11/4

2

			Date	1/17/2023	Volvo Trucks North America	Valiant TMS	Safety power monitoring RQ - KF12.51	Drawing name: =2V09&EFS-EL	= V1FQ1	
			Ed.	MKLEPADLO					+ V1UC12	
			Appr		P6700 Bodyside LH - Robot Cell 2V09			Document type: EFS	Project nr: 22-16150	Page 1
Modification	Date	Name	Original		Replacement of / Replaced by	Scale 1:1				1533

Switched Power 2 12.1L+
-KF12.52
=V1KF1/16.2

=V1KF1
-KF12.41

F 4DO 24 DC PROFISAFE
ET200SP

Q5092.1 QX.1

DQ-P1 DQ-M1

2 10

Q5092.1
BU
16 AWG

QX.1
BU
16 AWG

=V1KF1/19.2
Switched Power 2 12.1L+P

=V1KF1/19.2
SPARE

=V1KF1/19.2
Switched Power 2 12.1L+M

=V1KF1/19.2
SPARE

=V1KF1
-KF12.52
=V1KF1/19.1

F-RQ 1x24VDC/24..230VAC/5A PROFISAFE
ET200SP

9 IN P
10 OUT P
11 IN M
12 OUT M

Monitoring Safety contactors 12.1L+
-KF12.52RQ
=V1KF1/12.2

=V1KF1
-KF12.14

DI ET200SP

I86.1
DI1

2

=V1WC4/13.2 / -12.1L+1_2

1 3

			Date	1/17/2023	Volvo Trucks North America	Valiant TMS	Safety power monitoring RQ - KF12.52	Drawing name: =2V09&EFS-EL	= V1FQ1	
			Ed.	MKLEPADLO					+ V1UC12	
			Appr		P6700 Bodyside LH - Robot Cell 2V09			Document type: EFS	Project nr: 22-16150	Page 2
Modification	Date	Name	Original		Replacement of / Replaced by	Scale 1:1				1533

Switched Power 3 13.1L+
-KF12.53
=V1KF1/16.2

=V1KF1/20.2
Switched Power 3 13.1L+P

=V1KF1/20.2
SPARE

=V1KF1/20.2
Switched Power 3 13.1L+M

=V1KF1/20.2
SPARE

Monitoring Safety contactors 13.1L+
-KF12.53RQ
=V1KF1/12.2

=V1KF1
-KF12.41

F 4DO 24 DC PROFISAFE
ET200SP

Q5092.2 QX.2

DQ-P2 DQ-M2

3 11

=V1KF1
-KF12.53
=V1KF1/20.1

F-RQ 1x24VDC/24..230VAC/5A PROFISAFE
ET200SP

9 IN P | 10 OUT P | 11 IN M | 12 OUT M

Q5092.2
BU
16 AWG

QX.2
BU
16 AWG

=V1KF1
-KF12.14

DI ET200SP

I86.2

DI2

3

=V1WC4/14.2 / -13.1L+1_2

			Date	1/17/2023	Volvo Trucks North America	Valiant TMS	Safety power monitoring RQ - KF12.53	Drawing name: =2V09&EFS-EL	= V1FQ1	
			Ed.	MKLEPADLO					+ V1UC12	
			Appr		P6700 Bodyside LH - Robot Cell 2V09			Document type: EFS	Project nr: 22-16150	Page 3
Modification	Date	Name	Original		Replacement of / Replaced by	Scale 1:1				1533

Switched Power 4 14.1L+
-KF12.54
=V1KF1/16.2

=V1KF1
-KF12.41

F 4DO 24 DC PROFISAFE
ET200SP

Q5092.3 QX.3

DQ-P3 DQ-M3

4 12

Q5092.3
BU
16 AWG

QX.3
BU
16 AWG

=V1KF1/21.2
Switched Power 4 14.1L+P

=V1KF1/21.2
SPARE

=V1KF1/21.2
Switched Power 4 14.1L+M

=V1KF1/21.2
SPARE

=V1KF1
-KF12.54
=V1KF1/21.1

F-RQ 1x24VDC/24..230VAC/5A PROFISAFE
ET200SP

9 IN P
10 OUT P
11 IN M
12 OUT M

Monitoring Safety contactors 14.1L+
-KF12.54RQ
=V1KF1/12.2

=V1KF1
-KF12.14

DI ET200SP

I86.3
DI3

4

=V1WC4/15.2 / -14.1L+1_2

			Date	1/17/2023	Volvo Trucks North America	Valiant TMS	Safety power monitoring RQ - KF12.54	Drawing name: =2V09&EFS-EL	= V1FQ1	
			Ed.	MKLEPADLO					+ V1UC12	
			Appr		P6700 Bodyside LH - Robot Cell 2V09	Scale 1:1		Document type: EFS	Project nr: 22-16150	Page 4 / 1533
Modification	Date	Name	Original		Replacement of / Replaced by					

Switched Power 1 11.1L+
-KF14.51
=V1KF1/13.2

=V1KF1/15.2
Switched Power 1 11.1L+P

=V1KF1/15.2
Spare

=V1KF1/15.2
Switched Power 1 11.1L+M

=V1KF1/15.2
Spare

Monitoring Safety contactors 11.1L+
-KF14.51RQ
=V1KF1/9.2

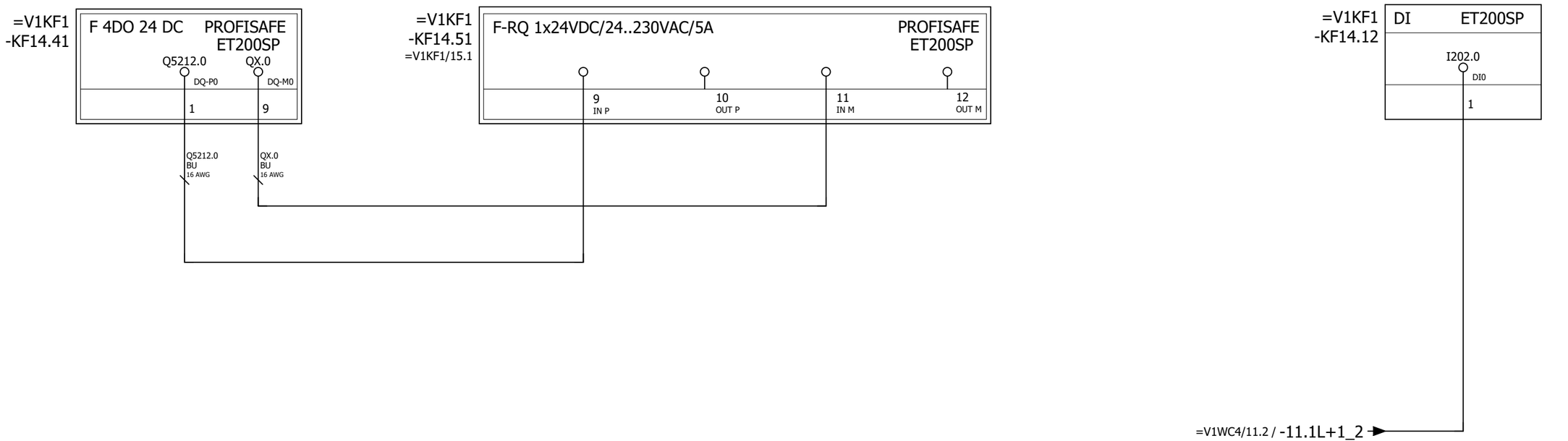

+.UC12/4

2

			Date	1/17/2023	Volvo Trucks North America	Valiant TMS	Safety power monitoring RQ - KF14.51	Drawing name: =2V09&EFS-EL	= V1FQ1
			Ed.	MKLEPADLO					+ V1UC14
			Appr		P6700 Bodyside LH - Robot Cell 2V09			Document type: EFS	Project nr: 22-16150
Modification	Date	Name	Original		Replacement of / Replaced by	Scale 1:1			Page 1 / 1533

Switched Power 2 12.1L+
-KF14.52
=V1KF1/13.2

=V1KF1
-KF14.41

F 4DO 24 DC PROFISAFE
ET200SP

Q5212.1 QX.1

DQ-P1 DQ-M1

2 10

Q5212.1
BU
16 AWG

QX.1
BU
16 AWG

=V1KF1/16.2
Switched Power 2 12.1L+P

=V1KF1/16.2
Spare

=V1KF1/16.2
Switched Power 2 12.1L+M

=V1KF1/16.2
Spare

=V1KF1
-KF14.52
=V1KF1/16.1

F-RQ 1x24VDC/24..230VAC/5A PROFISAFE
ET200SP

9 IN P
10 OUT P
11 IN M
12 OUT M

Monitoring Safety contactors 12.1L+
-KF14.52RQ
=V1KF1/9.2

=V1KF1
-KF14.12

DI ET200SP

I202.1
DI1

2

=V1WC4/12.2 / -12.1L+1_2

1 3

			Date	1/17/2023	Volvo Trucks North America		Valiant TMS	Safety power monitoring RQ - KF14.52	Drawing name: =2V09&EFS-EL	= V1FQ1	
			Ed.	MKLEPADLO						+ V1UC14	
			Appr		P6700 Bodyside LH - Robot Cell 2V09				Document type: EFS	Project nr: 22-16150	Page 2
Modification	Date	Name	Original		Replacement of	Replaced by	Scale 1:1				1533

Switched Power 3 13.1L+
-KF14.53
=V1KF1/13.2

=V1KF1/17.2
Switched Power 3 13.1L+P

=V1KF1/17.2
Spare

=V1KF1/17.2
Switched Power 3 13.1L+M

=V1KF1/17.2
Spare

Monitoring Safety contactors 13.1L+
-KF14.53RQ
=V1KF1/9.2

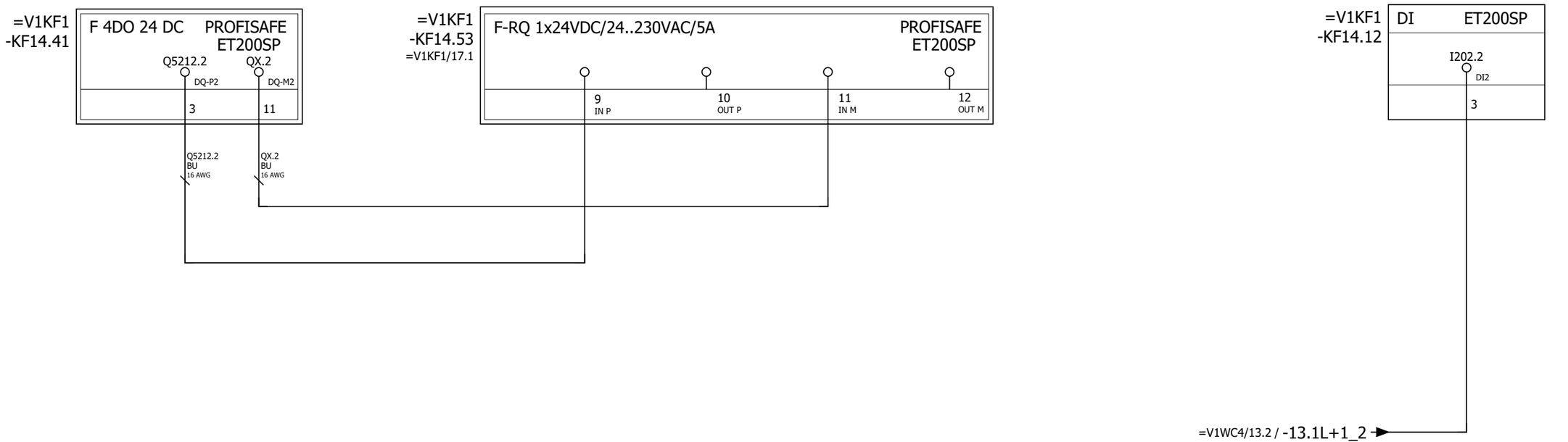

2 4

			Date	1/17/2023	Volvo Trucks North America	Valiant TMS	Safety power monitoring RQ - KF14.53	Drawing name: =2V09&EFS-EL	= V1FQ1	
			Ed.	MKLEPADLO					+ V1UC14	
			Appr		P6700 Bodyside LH - Robot Cell 2V09			Document type: EFS	Project nr: 22-16150	Page 3
Modification	Date	Name	Original		Replacement of	Replaced by	Scale 1:1			1533

Switched Power 4 14.1L+
-KF14.54
=V1KF1/13.2

=V1KF1
-KF14.41

F 4DO 24 DC PROFISAFE
ET200SP

Q5212.3 QX.3

DQ-P3 DQ-M3

4 12

Q5212.3
BU
16 AWG

QX.3
BU
16 AWG

=V1KF1/18.2
Switched Power 4 14.1L+P

=V1KF1/18.2
Spare

=V1KF1/18.2
Switched Power 4 14.1L+M

=V1KF1/18.2
Spare

=V1KF1
-KF14.54
=V1KF1/18.1

F-RQ 1x24VDC/24..230VAC/5A PROFISAFE
ET200SP

9 IN P
10 OUT P
11 IN M
12 OUT M

Monitoring Safety contactors 14.1L+
-KF14.54RQ
=V1KF1/9.2

=V1KF1
-KF14.12

DI ET200SP

I202.3
DI3

4

=V1WC4/14.2 / -14.1L+1_2

			Date	1/17/2023	Volvo Trucks North America	Valiant TMS	Safety power monitoring RQ - KF14.54	Drawing name: =2V09&EFS-EL	= V1FQ1	
			Ed.	MKLEPADLO					+ V1UC14	
			Appr		P6700 Bodyside LH - Robot Cell 2V09			Document type: EFS	Project nr: 22-16150	Page 4
Modification	Date	Name	Original		Replacement of / Replaced by	Scale 1:1				1533

Switched Power 1 11.1L+
-KF15.51
=V1KF1/13.2

=V1KF1
-KF15.41

F 4DO 24 DC PROFISAFE
ET200SP

Q5242.0 QX.0
DQ-P0 DQ-M0
1 9

Q5242.0
BU
16 AWG

QX.0
BU
16 AWG

=V1KF1/15.2
Switched Power 1 11.1L+P

=V1KF1/15.2
Spare

=V1KF1/15.2
Switched Power 1 11.1L+M

=V1KF1/15.2
Spare

=V1KF1
-KF15.51
=V1KF1/15.1

F-RQ 1x24VDC/24..230VAC/5A PROFISAFE
ET200SP

9 IN P
10 OUT P
11 IN M
12 OUT M

Monitoring Safety contactors 11.1L+
-KF15.51RQ
=V1KF1/9.2

=V1KF1
-KF15.12

DI ET200SP
I232.0
DI0
1

=V1WC4/11.2 / -11.1L+1_2

+.UC14/4

			Date	1/17/2023	Volvo Trucks North America	Valiant TMS	Safety power monitoring RQ - KF15.51	Drawing name: =2V09&EFS-EL	= V1FQ1	
			Ed.	MKLEPADLO					+ V1UC15	
			Appr		P6700 Bodyside LH - Robot Cell 2V09			Document type: EFS	Project nr: 22-16150	Page 1
Modification	Date	Name	Original		Replacement of / Replaced by	Scale 1:1				1533

Switched Power 2 12.1L+
-KF15.52
=V1KF1/13.2

=V1KF1
-KF15.41

F 4DO 24 DC PROFISAFE
ET200SP

Q5242.1 QX.1
DQ-P1 DQ-M1
2 10

Q5242.1
BU
16 AWG

QX.1
BU
16 AWG

=V1KF1/16.2
Switched Power 2 12.1L+P

=V1KF1/16.2
Spare

=V1KF1/16.2
Switched Power 2 12.1L+M

=V1KF1/16.2
Spare

=V1KF1
-KF15.52
=V1KF1/16.1

F-RQ 1x24VDC/24..230VAC/5A PROFISAFE
ET200SP

9 IN P
10 OUT P
11 IN M
12 OUT M

Monitoring Safety contactors 12.1L+
-KF15.52RQ
=V1KF1/9.2

=V1KF1
-KF15.12

DI ET200SP
I232.1
DI1
2

=V1WC4/12.2 / -12.1L+1_2

			Date	1/17/2023	Volvo Trucks North America		Valiant TMS	Safety power monitoring RQ - KF15.52	Drawing name: =2V09&EFS-EL	= V1FQ1
			Ed.	MKLEPADLO						+ V1UC15
			Appr		P6700 Bodyside LH - Robot Cell 2V09				Document type: EFS	Project nr: 22-16150
Modification	Date	Name	Original		Replacement of	Replaced by	Scale 1:1			Page 2 / 1533

Switched Power 3 13.1L+
-KF15.53
=V1KF1/13.2

=V1KF1/17.2
Switched Power 3 13.1L+P

=V1KF1/17.2
Spare

=V1KF1/17.2
Switched Power 3 13.1L+M

=V1KF1/17.2
Spare

Monitoring Safety contactors 13.1L+
-KF15.53RQ
=V1KF1/9.2

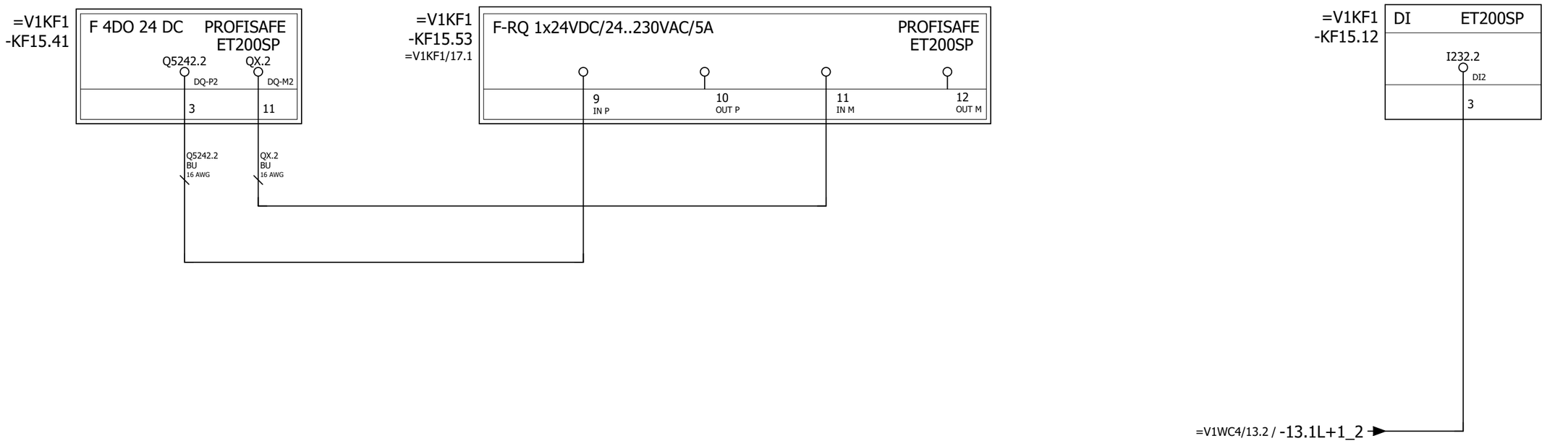

			Date	1/17/2023	Volvo Trucks North America	Valiant TMS	Safety power monitoring RQ - KF15.53	Drawing name: =2V09&EFS-EL	= V1FQ1	
			Ed.	MKLEPADLO					+ V1UC15	
			Appr		P6700 Bodyside LH - Robot Cell 2V09	Scale 1:1		Document type: EFS	Project nr: 22-16150	Page 3 / 1533
Modification	Date	Name	Original		Replacement of	Replaced by				

Switched Power 4 14.1L+
-KF15.54
=V1KF1/13.2

=V1KF1/18.2
Switched Power 4 14.1L+P

=V1KF1/18.2
Spare

=V1KF1/18.2
Switched Power 4 14.1L+M

=V1KF1/18.2
Spare

Monitoring Safety contactors 14.1L+
-KF15.54RQ
=V1KF1/9.2

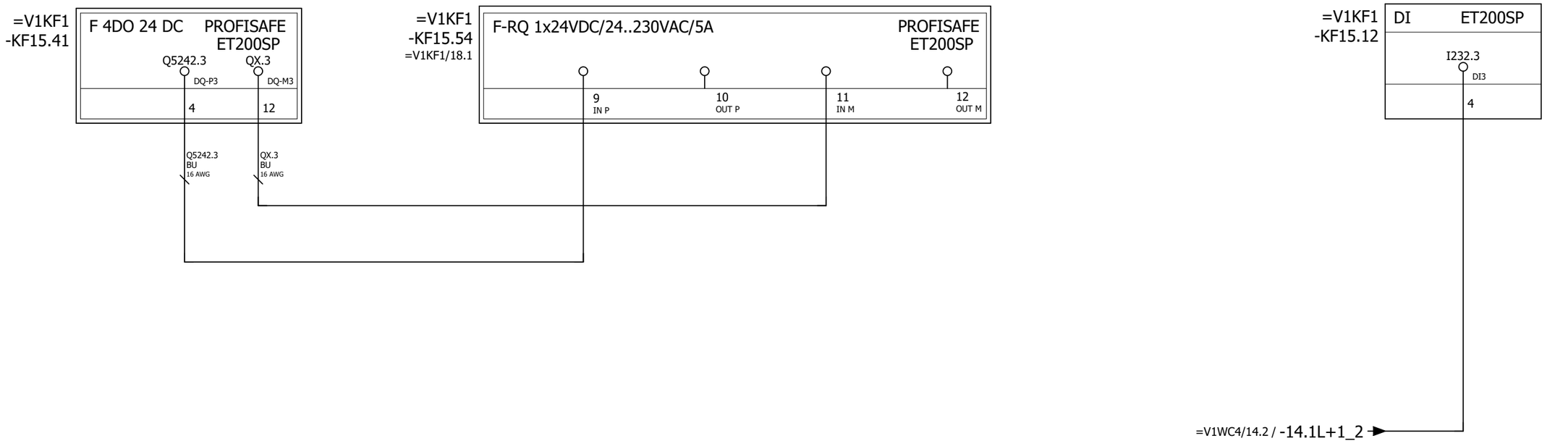

3

=V1GL1UQ51BG0+.GL1UQ51/1

			Date	1/17/2023	Volvo Trucks North America	Valiant TMS	Safety power monitoring RQ - KF15.54	Drawing name: =2V09&EFS-EL	= V1FQ1	
			Ed.	MKLEPADLO					+ V1UC15	
			Appr		P6700 Bodyside LH - Robot Cell 2V09	Scale 1:1		Document type: EFS	Project nr: 22-16150	Page 4 / 1533
Modification	Date	Name	Original		Replacement of / Replaced by					

0	1	2	3	4	5	6	7	8	9

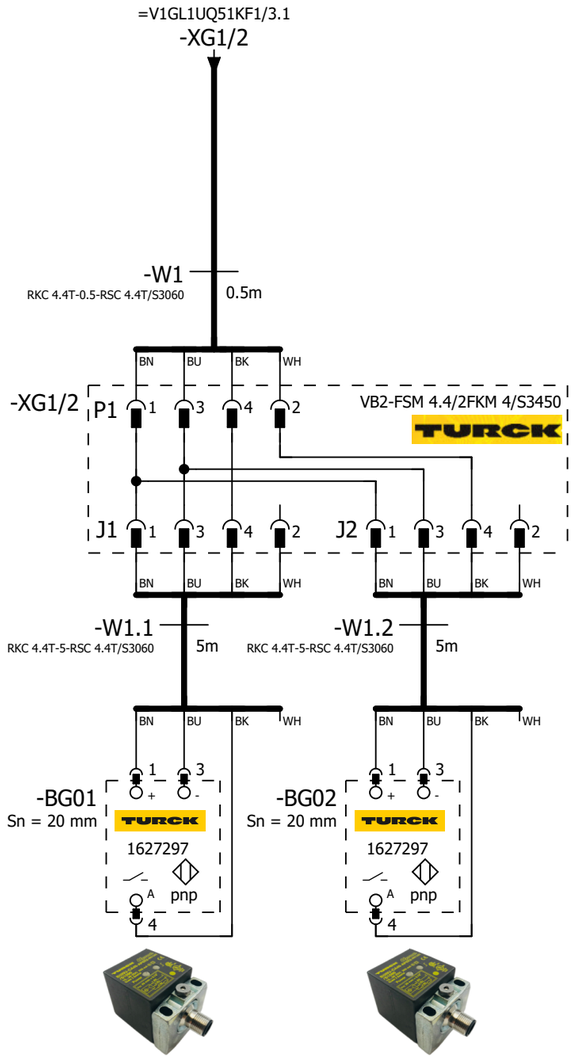

=V1GL1UQ51
-BG01
Header Sub
Assembly

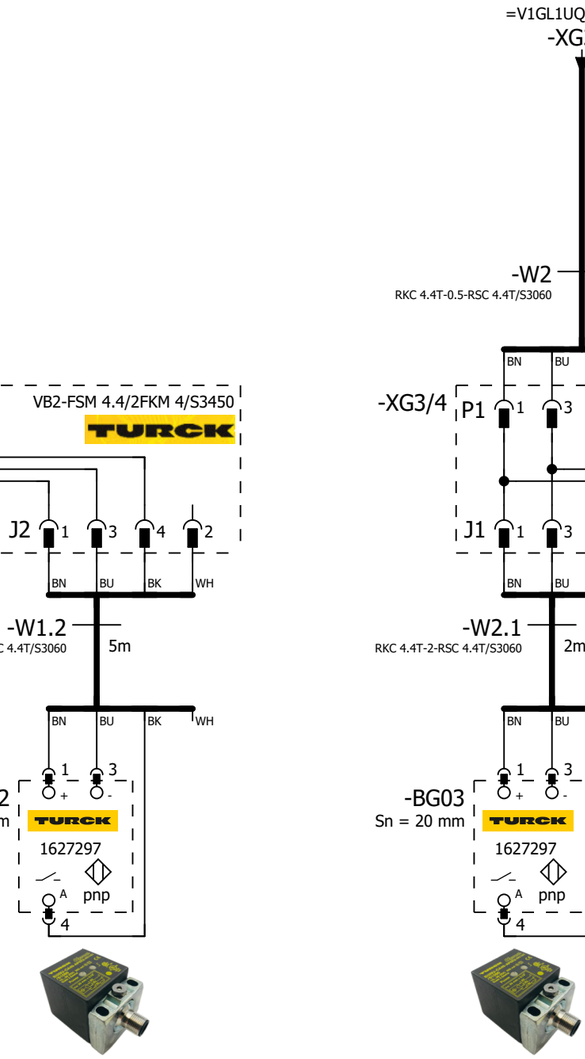

=V1GL1UQ51
-BG02
Header Sub
Assembly

=V1GL1UQ51
-BG03
Door Frame
Assembly

=V1GL1UQ51
-BG04
Outer Sill Member

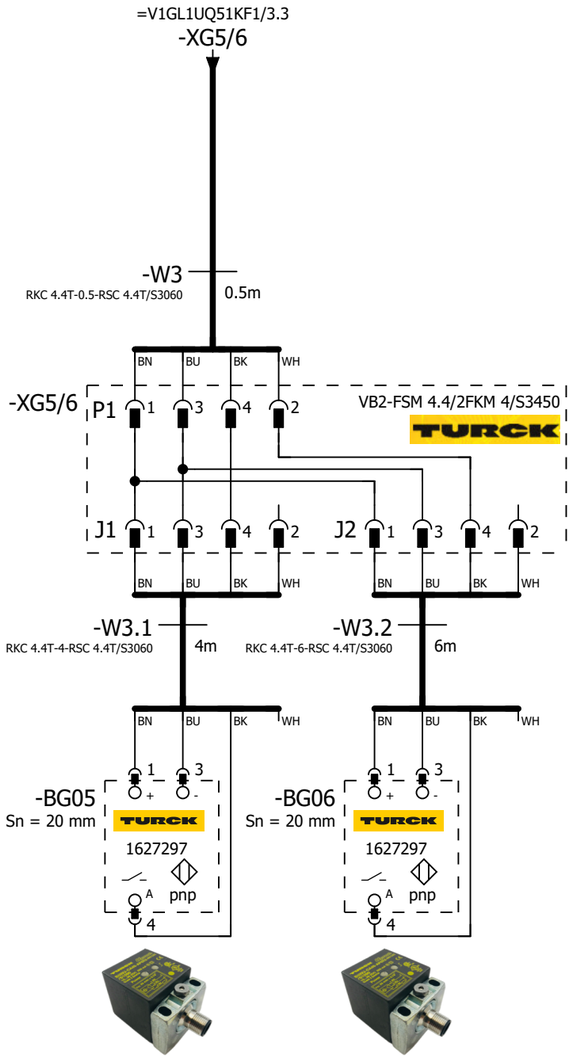

=V1GL1UQ51
-BG05
Door Frame
Assembly

=V1GL1UQ51
-BG06
Rocker Short
Sleeper

=V1FQ1+.UC15/4

			Date	1/17/2023	Volvo Trucks North America	Valiant TMS	SENSORS	Drawing name: =2V09&EFS-EL	= V1GL1UQ51BG0
			Ed.	MKLEPADLO					+ V1GL1UQ51
			Appr		P6700 Bodyside LH - Robot Cell 2V09	Scale 1:1		Document type: EFS	Project nr: 22-16150
Modification	Date	Name	Original		Replacement of	Replaced by			Page 1 / 1533

0	1	2	3	4	5	6	7	8	9

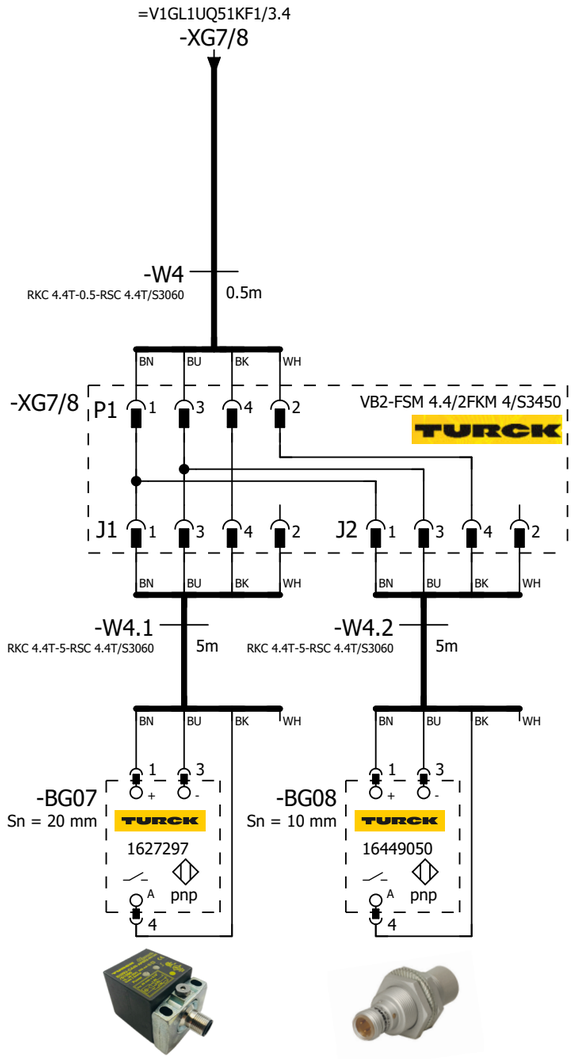

=V1GL1UQ51 -BG07 Outer Sill Member	=V1GL1UQ51 -BG08 Hinge Box

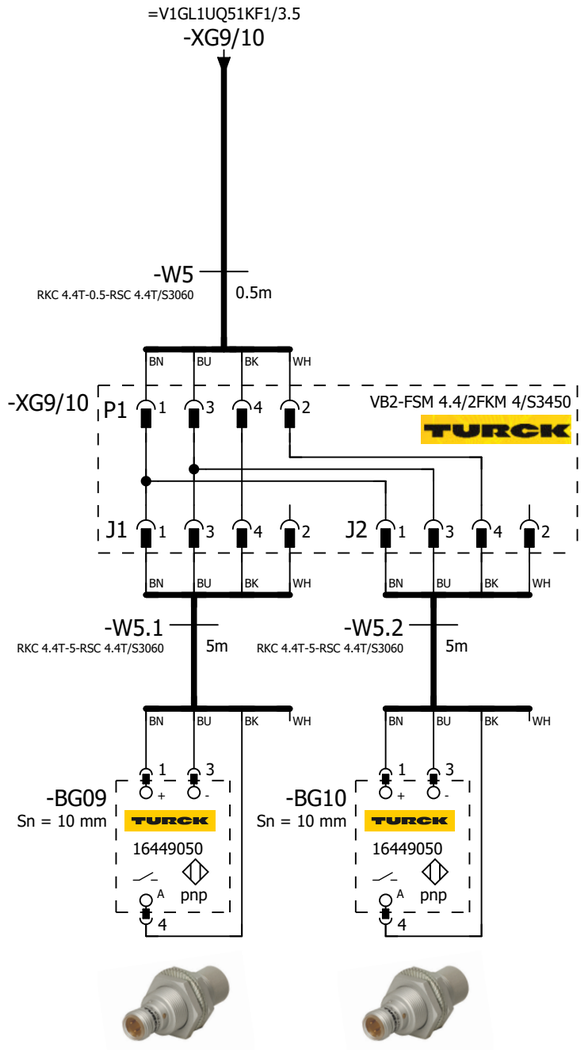

=V1GL1UQ51 -BG09 Hinge Box	=V1GL1UQ51 -BG10 Side Reinforcement

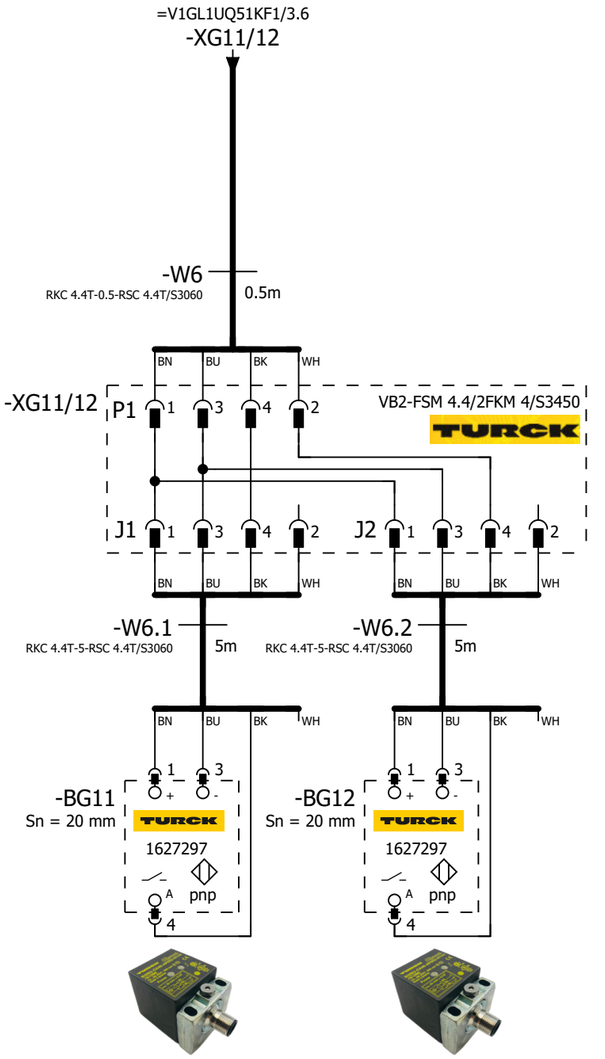

=V1GL1UQ51 -BG11 Bunk Support	=V1GL1UQ51 -BG12 Bunk Support

1 3

			Date	1/17/2023	Volvo Trucks North America		Valiant TMS	SENSORS	Drawing name: =2V09&EFS-EL	= V1GL1UQ51BG0
			Ed.	MKLEPADLO						+ V1GL1UQ51
			Appr		P6700 Bodyside LH - Robot Cell 2V09		Scale 1:1		Document type: EFS	Project nr: 22-16150
Modification	Date	Name	Original		Replacement of	Replaced by				Page 2 / 1533

0	1	2	3	4	5	6	7	8	9

=V1GL1UQ51KF2/4.1
-XG13/14

-W7
RKC 4.4T-0.5-RSC 4.4T/S3060
0.5m

BN BU BK WH

-XG13/14 P1 1 3 4 2 VB2-FSM 4.4/2FKM 4/S3450 TURCK

J1 1 3 4 2 J2 1 3 4 2

BN BU BK WH

-W7.1
RKC 4.4T-5-RSC 4.4T/S3060
5m

-W7.2
RKC 4.4T-5-RSC 4.4T/S3060
5m

BN BU BK WH

-BG13
Sn = 10 mm
TURCK
16449050
1 3
A pnp
4

-BG14
Sn = 10 mm
TURCK
16449050
1 3
A pnp
4

=V1GL1UQ51
-BG13
Bunk Support

=V1GL1UQ51
-BG14
Bridge Member

=V1GL1UQ51KF2/4.2
-XG15/16

-W8
RKC 4.4T-0.5-RSC 4.4T/S3060
0.5m

BN BU BK WH

-XG15/16 P1 1 3 4 2 VB2-FSM 4.4/2FKM 4/S3450 TURCK

J1 1 3 4 2 J2 1 3 4 2

BN BU BK WH

-W8.1
RKC 4.4T-5-RSC 4.4T/S3060
5m

-W8.2
RKC 4.4T-5-RSC 4.4T/S3060
5m

BN BU BK WH

-BG15
Sn = 10 mm
TURCK
16449050
1 3
A pnp
4

-BG16
Sn = 20 mm
TURCK
1627297
1 3
A pnp
4

=V1GL1UQ51
-BG15
Bridge Member

=V1GL1UQ51
-BG16
Horizontal Crash Beam

=V1GL1UQ51KF2/4.3
-XG17/18

-W9
RKC 4.4T-0.5-RSC 4.4T/S3060
0.5m

BN BU BK WH

-XG17/18 P1 1 3 4 2 VB2-FSM 4.4/2FKM 4/S3450 TURCK

J1 1 3 4 2 J2 1 3 4 2

BN BU BK WH

-W9.1
RKC 4.4T-5-RSC 4.4T/S3060
5m

-W9.2
RKC 4.4T-5-RSC 4.4T/S3060
5m

BN BU BK WH

-BG17
Sn = 20 mm
TURCK
1627297
1 3
A pnp
4

-BG18
Sn = 10 mm
TURCK
16449050
1 3
A pnp
4

=V1GL1UQ51
-BG17
Horizontal Crash Beam

=V1GL1UQ51
-BG18
Bridge Horizontal Beam

2 4

			Date	1/17/2023	Volvo Trucks North America	Valiant TMS	SENSORS	Drawing name: =2V09&EFS-EL	= V1GL1UQ51BG0
			Ed.	MKLEPADLO					+ V1GL1UQ51
			Appr		P6700 Bodyside LH - Robot Cell 2V09	Scale 1:1		Document type: EFS	Project nr: 22-16150
Modification	Date	Name	Original		Replacement of	Replaced by			Page 3 / 1533

0	1	2	3	4	5	6	7	8	9

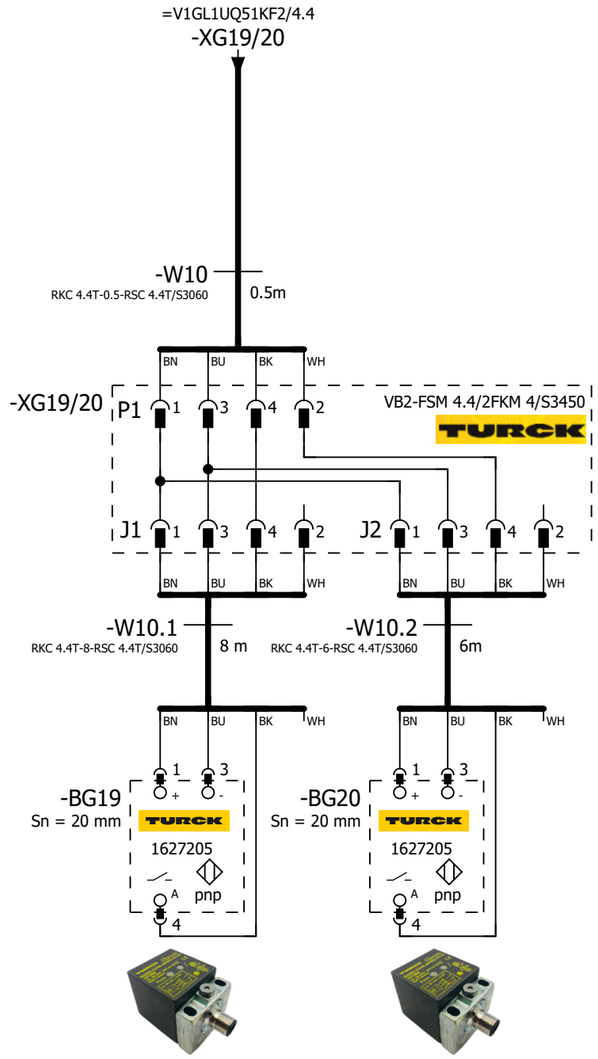

=V1GL1UQ51
-BG19
C-Pillar Assembly

=V1GL1UQ51
-BG20
C-Pillar Assembly

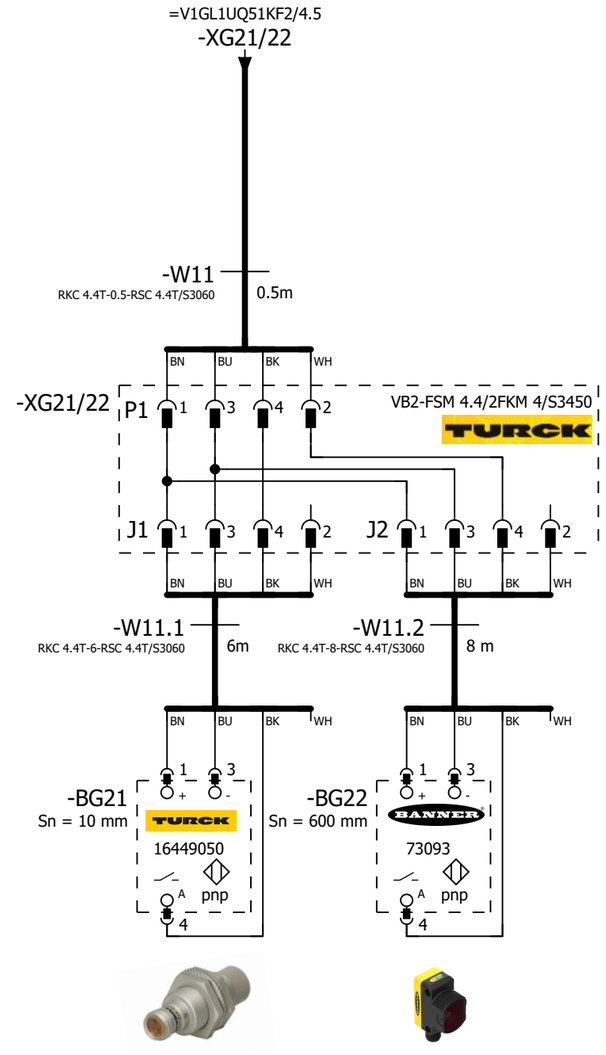

=V1GL1UQ51
-BG21
Head Sub
Assembly

=V1GL1UQ51
-BG22
Extruded Seal
Sleeper

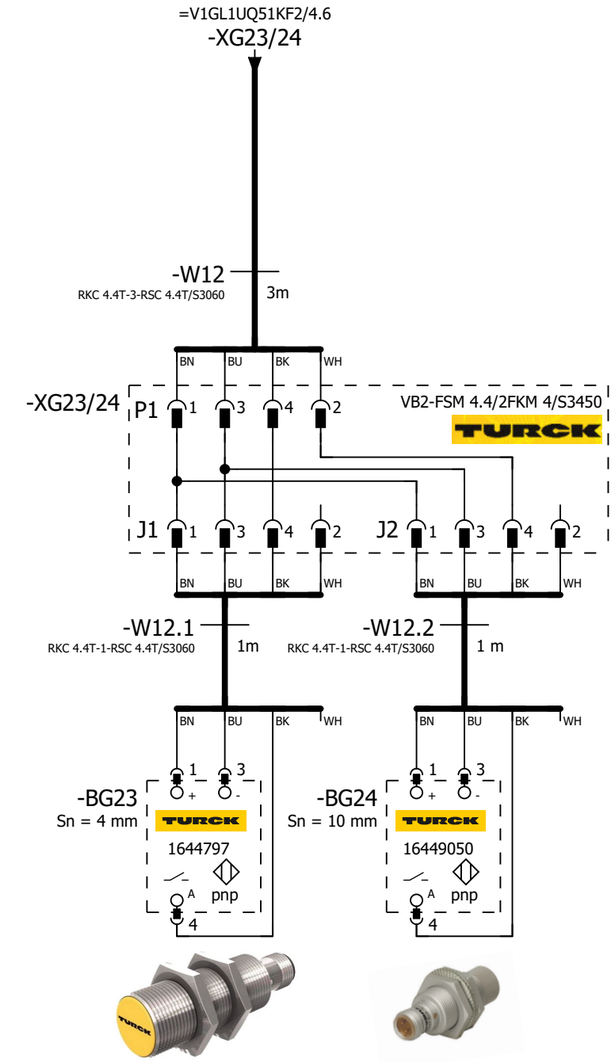

=V1GL1UQ51
-BG23
Reinforcement

=V1GL1UQ51
-BG24
Reinforcement

3

=V1GL1UQ51KF1/1

			Date	1/17/2023	Volvo Trucks North America	Valiant TMS	SENSORS	Drawing name: =2V09&EFS-EL	= V1GL1UQ51BG0
			Ed.	MKLEPADLO					+ V1GL1UQ51
			Appr		P6700 Bodyside LH - Robot Cell 2V09			Document type: EFS	Project nr: 22-16150
Modification	Date	Name	Original		Replacement of / Replaced by	Scale 1:1			Page 4 / 1533

0	1	2	3	4	5	6	7	8	9

=V1GL1UQ51WC4/1.6 / W1.1

-W1.1
RSM RKM 56-2M/S3059
2m

Media Panel Assembly / -WF1

-WF1
PROFINET Cable
6XV1840-3AH10

KF1-P2 / =V1GL1UQ51KF2/1.3

-KF1

X20 M12, 7/8" 1 2 PE 4 5

0V_VAL / OUT | 0V_EL / SEN | FE | 24V_EL / SEN | 24V_VAL / OUT

ON OFF 1 2 1 2

M12 -TP1 M12 -TP2

FESTO
Bus node + Interlinking block
548755 + 550208

-KF1.11

FESTO
CPX-M-AB-8-M12X2-5POL
549335

I2000.0	DI 0 X1:4	V1GL1UQ51UQ1.1-BGR	Shot Pins 1 (RESET)
I2000.1	DI 1 X1:2	V1GL1UQ51UQ1.1-BGS	Shot Pins 1 (SET)
I2000.2	DI 2 X2:4	V1GL1UQ51UQ1.2-BGR	Shot Pins 1 (RESET)
I2000.3	DI 3 X2:2	V1GL1UQ51UQ1.2-BGS	Shot Pins 1 (SET)
I2000.4	DI 4 X3:4	V1GL1UQ51UQ1.3-BGR	Shot Pins 1 (RESET)
I2000.5	DI 5 X3:2	V1GL1UQ51UQ1.3-BGS	Shot Pins 1 (SET)
I2000.6	DI 6 X4:4	V1GL1UQ51UQ2.1-BGR	Shot Pin 2 (RESET)
I2000.7	DI 7 X4:2	V1GL1UQ51UQ2.1-BGS	Shot Pin 2 (SET)
I2001.0	DI 8 X5:4	V1GL1UQ51UQ3.1-BGR	Shot Pins 3 (RESET)
I2001.1	DI 9 X5:2	V1GL1UQ51UQ3.1-BGS	Shot Pins 3 (SET)
I2001.2	DI 10 X6:4	V1GL1UQ51UQ3.2-BGR	Shot Pins 3 (RESET)
I2001.3	DI 11 X6:2	V1GL1UQ51UQ3.2-BGS	Shot Pins 3 (SET)
I2001.4	DI 12 X7:4	V1GL1UQ51UQ4.1-BGR	Shot Pins 4 (RESET)
I2001.5	DI 13 X7:2	V1GL1UQ51UQ4.1-BGS	Shot Pins 4 (SET)
I2001.6	DI 14 X8:4	V1GL1UQ51UQ4.2-BGR	Shot Pins 4 (RESET)
I2001.7	DI 15 X8:2	V1GL1UQ51UQ4.2-BGS	Shot Pins 4 (SET)

X1 M12 1 2 3 4 5 — 24V | DI 1 | 0V | DI 0 | FE — BN | WH | BU | BK

X2 M12 1 2 3 4 5 — 24V | DI 3 | 0V | DI 2 | FE — BN | WH | BU | BK

X3 M12 1 2 3 4 5 — 24V | DI 5 | 0V | DI 4 | FE — BN | WH | BU | BK

X4 M12 1 2 3 4 5 — 24V | DI 7 | 0V | DI 6 | FE — BN | WH | BU | BK

X5 M12 1 2 3 4 5 — 24V | DI 9 | 0V | DI 8 | FE — BN | WH | BU | BK

X6 M12 1 2 3 4 5 — 24V | DI 11 | 0V | DI 10 | FE — BN | WH | BU | BK

X7 M12 1 2 3 4 5 — 24V | DI 13 | 0V | DI 12 | FE — BN | WH | BU | BK

X8 M12 1 2 3 4 5 — 24V | DI 15 | 0V | DI 14 | FE — BN | WH | BU | BK

+.GL1UQ51UQ1.1-W1
=V1GL1UQ51UQ1+.GL1UQ51UQ1/1.1

+.GL1UQ51UQ1.2-W1
=V1GL1UQ51UQ1+.GL1UQ51UQ1/1.2

+.GL1UQ51UQ1.3-W1
=V1GL1UQ51UQ1+.GL1UQ51UQ1/1.4

+.GL1UQ51UQ2.1-W1
=V1GL1UQ51UQ2+.GL1UQ51UQ2/1.1

+.GL1UQ51UQ3.1-W1
=V1GL1UQ51UQ3+.GL1UQ51UQ3/1.1

+.GL1UQ51UQ3.2-W1
=V1GL1UQ51UQ3+.GL1UQ51UQ3/1.2

+.GL1UQ51UQ4.1-W1
=V1GL1UQ51UQ4+.GL1UQ51UQ4/1.1

+.GL1UQ51UQ4.2-W1
=V1GL1UQ51UQ4+.GL1UQ51UQ4/1.2

=V1GL1UQ51BG0/4

2

			Date	1/17/2023	Volvo Trucks North America	Valiant TMS	CONNECTING MOD. FOR VTSA MANIFOLD	Drawing name: =2V09&EFS-EL	= V1GL1UQ51KF1
			Ed.	MKLEPADLO					+ V1GL1UQ51
			Appr		P6700 Bodyside LH - Robot Cell 2V09			Document type: EFS	Project nr: 22-16150
Modification	Date	Name	Original		Replacement of / Replaced by	Scale 1:1			Page 1 / 1533

0	1	2	3	4	5	6	7	8	9

-KF1.12

FESTO

CPX-M-AB-8-M12X2-5POL

549335

I2002.0	DI 0 X1:4	V1GL1UQ51UQ5.1-BGR	Shot Pin 5 (RESET)
I2002.1	DI 1 X1:2	V1GL1UQ51UQ5.1-BGS	Shot Pin 5 (SET)
I2002.2	DI 2 X2:4	V1GL1UQ51UQ6.1-BGR	Shot Pin 6 (RESET)
I2002.3	DI 3 X2:2	V1GL1UQ51UQ6.1-BGS	Shot Pin 6 (SET)
I2002.4	DI 4 X3:4	V1GL1UQ51UQ7.1-BGR	Shot Pin 7 (RESET)
I2002.5	DI 5 X3:2	V1GL1UQ51UQ7.1-BGS	Shot Pin 7 (SET)
I2002.6	DI 6 X4:4	V1GL1UQ51UQ8.1-BGR	Shot Pins 8 (RESET)
I2002.7	DI 7 X4:2	V1GL1UQ51UQ8.1-BGS	Shot Pins 8 (SET)
I2003.0	DI 8 X5:4	V1GL1UQ51UQ8.2-BGR	Shot Pins 8 (RESET)
I2003.1	DI 9 X5:2	V1GL1UQ51UQ8.2-BGS	Shot Pins 8 (SET)
I2003.2	DI 10 X6:4	V1GL1UQ51UQ8.3-BGR	Shot Pins 8 (RESET)
I2003.3	DI 11 X6:2	V1GL1UQ51UQ8.3-BGS	Shot Pins 8 (SET)
I2003.4	DI 12 X7:4	V1GL1UQ51UQ9.1-BGR	Shot Pin 9 (RESET)
I2003.5	DI 13 X7:2	V1GL1UQ51UQ9.1-BGS	Shot Pin 9 (SET)
I2003.6	DI 14 X8:4	V1GL1UQ51UQ10.1-BGR	Shot Pin 10 (RESET)
I2003.7	DI 15 X8:2	V1GL1UQ51UQ10.1-BGS	Shot Pin 10 (SET)

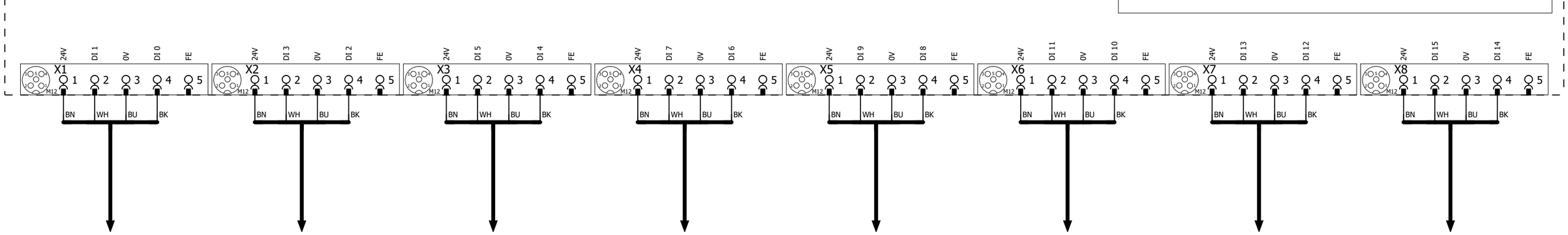

+.GL1UQ51UQ5.1-W1
=V1GL1UQ51UQ5+.GL1UQ51UQ5/1.1

+.GL1UQ51UQ6.1-W1
=V1GL1UQ51UQ6+.GL1UQ51UQ6/1.1

+.GL1UQ51UQ7.1-W1
=V1GL1UQ51UQ7+.GL1UQ51UQ7/1.1

+.GL1UQ51UQ8.1-W1
=V1GL1UQ51UQ8+.GL1UQ51UQ8/1.1

+.GL1UQ51UQ8.2-W1
=V1GL1UQ51UQ8+.GL1UQ51UQ8/1.2

+.GL1UQ51UQ8.3-W1
=V1GL1UQ51UQ8+.GL1UQ51UQ8/1.4

+.GL1UQ51UQ9.1-W1
=V1GL1UQ51UQ9+.GL1UQ51UQ9/1.1

+.GL1UQ51UQ10.1-W1
=V1GL1UQ51UQ10+.GL1UQ51UQ10/1.1

1 3

			Date	1/17/2023	Volvo Trucks North America	Valiant TMS	I/O MOD. DI16 (8 x M12) FOR VTSA-F	Drawing name: =2V09&EFS-EL	= V1GL1UQ51KF1
			Ed.	MKLEPADLO					+ V1GL1UQ51
			Appr		P6700 Bodyside LH - Robot Cell 2V09	Scale 1:1		Document type: EFS	Project nr: 22-16150
Modification	Date	Name	Original		Replacement of	Replaced by			Page 2 / 1533

0	1	2	3	4	5	6	7	8	9

-KF1.13

FESTO

CPX-M-AB-8-M12X2-5POL

549335

I2004.0 DI 0 X1:4	V1GL1UQ51-BG01	Sensor Header Sub Assembly
I2004.1 DI 1 X1:2	V1GL1UQ51-BG02	Sensor Header Sub Assembly
I2004.2 DI 2 X2:4	V1GL1UQ51-BG03	Sensor Door Frame Assembly
I2004.3 DI 3 X2:2	V1GL1UQ51-BG04	Sensor Outer Sill Member
I2004.4 DI 4 X3:4	V1GL1UQ51-BG05	Sensor Door Frame Assembly
I2004.5 DI 5 X3:2	V1GL1UQ51-BG06	Sensor Rocker Short Sleeper
I2004.6 DI 6 X4:4	V1GL1UQ51-BG07	Sensor Outer Sill Member
I2004.7 DI 7 X4:2	V1GL1UQ51-BG08	Sensor Hinge Box
I2005.0 DI 8 X5:4	V1GL1UQ51-BG09	Sensor Hinge Box
I2005.1 DI 9 X5:2	V1GL1UQ51-BG10	Sensor Side Reinforcement
I2005.2 DI 10 X6:4	V1GL1UQ51-BG11	Sensor Bunk Support
I2005.3 DI 11 X6:2	V1GL1UQ51-BG12	Sensor Bunk Support
I2005.4 DI 12 X7:4	I2005.4	Spare
I2005.5 DI 13 X7:2	I2005.5	Spare
I2005.6 DI 14 X8:4	I2005.6	Spare
I2005.7 DI 15 X8:2	I2005.7	Spare

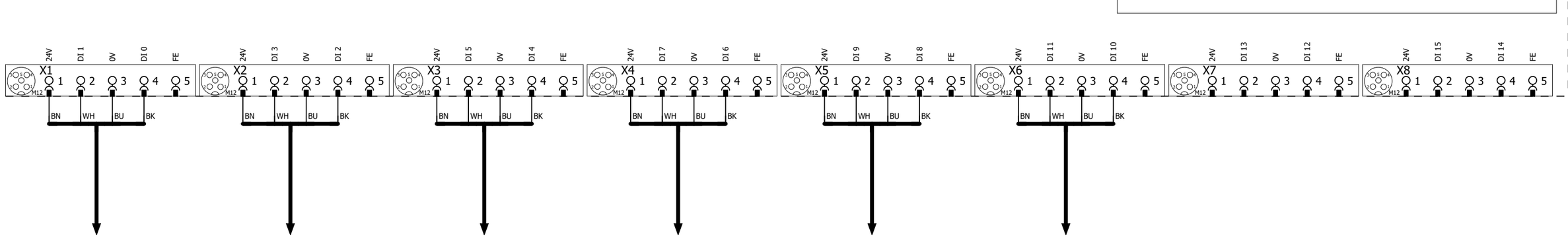

-XG1/2
=V1GL1UQ51BG0/1.1

-XG3/4
=V1GL1UQ51BG0/1.4

-XG5/6
=V1GL1UQ51BG0/1.6

-XG7/8
=V1GL1UQ51BG0/2.1

-XG9/10
=V1GL1UQ51BG0/2.4

-XG11/12
=V1GL1UQ51BG0/2.6

2 4

			Date	1/17/2023	Volvo Trucks North America		Valiant TMS	I/O MOD. DI16 (8 x M12) FOR VTSA-F	Drawing name: =2V09&EFS-EL	= V1GL1UQ51KF1
			Ed.	MKLEPADLO						+ V1GL1UQ51
			Appr		P6700 Bodyside LH - Robot Cell 2V09		Scale 1:1		Document type: EFS	Project nr: 22-16150
Modification	Date	Name	Original		Replacement of	Replaced by				Page 3 / 1533

0	1	2	3	4	5	6	7	8	9

-KF1.14

FESTO

CPX-M-AB-8-M12X2-5POL

549335

I2006.0	DI 0 X1:4	I2006.0	Spare
I2006.1	DI 1 X1:2	I2006.1	Spare
I2006.2	DI 2 X2:4	I2006.2	Spare
I2006.3	DI 3 X2:2	I2006.3	Spare
I2006.4	DI 4 X3:4	I2006.4	Spare
I2006.5	DI 5 X3:2	I2006.5	Spare
I2006.6	DI 6 X4:4	I2006.6	Spare
I2006.7	DI 7 X4:2	I2006.7	Spare
I2007.0	DI 8 X5:4	I2007.0	Spare
I2007.1	DI 9 X5:2	I2007.1	Spare
I2007.2	DI 10 X6:4	I2007.2	Spare
I2007.3	DI 11 X6:2	I2007.3	Spare
I2007.4	DI 12 X7:4	I2007.4	Spare
I2007.5	DI 13 X7:2	I2007.5	Spare
I2007.6	DI 14 X8:4	I2007.6	Spare
I2007.7	DI 15 X8:2	I2007.7	Spare

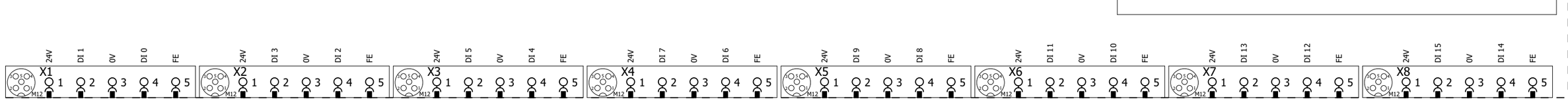

			Date	1/17/2023	Volvo Trucks North America	Valiant TMS	I/O MOD. DI16 (8 x M12) FOR VTSA-F	Drawing name: =2V09&EFS-EL	= V1GL1UQ51KF1	
			Ed.	MKLEPADLO					+ V1GL1UQ51	
			Appr		P6700 Bodyside LH - Robot Cell 2V09			Document type: EFS	Project nr: 22-16150	Page 4
Modification	Date	Name	Original		Replacement of / Replaced by	Scale 1:1				1533

-KF1 -KF1.11 -KF1.12 -KF1.13 -KF1.14 -KF1.20 -KF1.21 -KF1.22 -KF1.23 -KF1.24 -KF1.25 -KF1.26 -KF1.27

M1 M2 M3 M4 M5

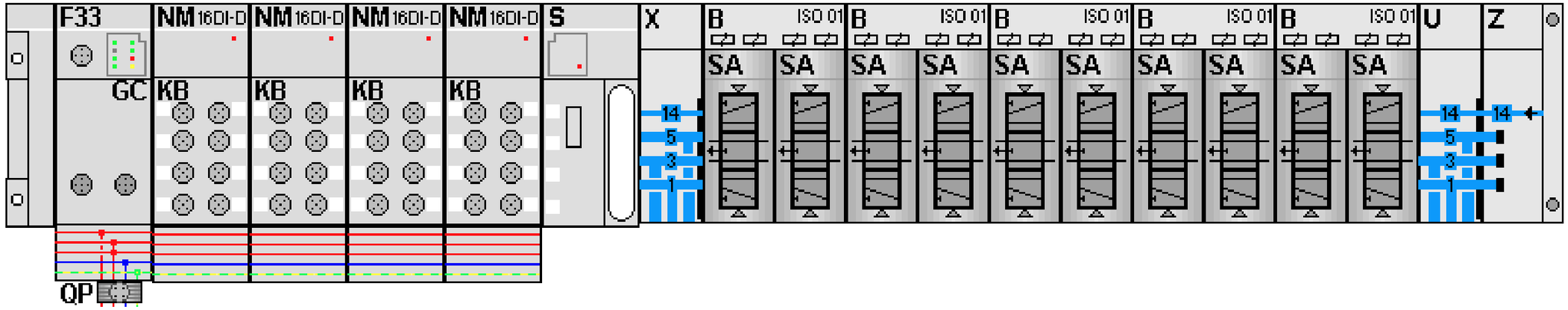

-KF1.21
=V1GL1UQ51UQ1+.GL1UQ51UQ1/1.3
=V1GL1UQ51UQ2+.GL1UQ51UQ2/1.3

FESTO

=V1GL1UQ51UQ1+.GL1UQ51UQ1/1.4	Q2000.0 DO 0 1.1	-QN1.1_Q	Shot Pins 1 (RST)
=V1GL1UQ51UQ1+.GL1UQ51UQ1/1.4	Q2000.1 DO 1 1.2	-QN1.2_Q	Shot Pins 1 (SET)
=V1GL1UQ51UQ2+.GL1UQ51UQ2/1.4	Q2000.2 DO 2 2.1	-QN2.1_Q	Shot Pin 2 (RST)
=V1GL1UQ51UQ2+.GL1UQ51UQ2/1.4	Q2000.3 DO 3 2.2	-QN2.2_Q	Shot Pin 2 (SET)

-KF1.22
=V1GL1UQ51UQ3+.GL1UQ51UQ3/1.3
=V1GL1UQ51UQ4+.GL1UQ51UQ4/1.3

FESTO

=V1GL1UQ51UQ3+.GL1UQ51UQ3/1.4	Q2000.4 DO 0 1.1	-QN3.1_Q	Shot Pins 3 (RST)
=V1GL1UQ51UQ3+.GL1UQ51UQ3/1.4	Q2000.5 DO 1 1.2	-QN3.2_Q	Shot Pins 3 (SET)
=V1GL1UQ51UQ4+.GL1UQ51UQ4/1.4	Q2000.6 DO 2 2.1	-QN4.1_Q	Shot Pins 4 (RST)
=V1GL1UQ51UQ4+.GL1UQ51UQ4/1.4	Q2000.7 DO 3 2.2	-QN4.2_Q	Shot Pins 4 (SET)

-KF1.23
=V1GL1UQ51UQ5+.GL1UQ51UQ5/1.3
=V1GL1UQ51UQ6+.GL1UQ51UQ6/1.3

FESTO

=V1GL1UQ51UQ5+.GL1UQ51UQ5/1.4	Q2001.0 DO 0 1.1	-QN5.1_Q	Shot Pin 5 (RST)
=V1GL1UQ51UQ5+.GL1UQ51UQ5/1.4	Q2001.1 DO 1 1.2	-QN5.2_Q	Shot Pin 5 (SET)
=V1GL1UQ51UQ6+.GL1UQ51UQ6/1.4	Q2001.2 DO 0 2.1	-QN6.1_Q	Shot Pin 6 (RST)
=V1GL1UQ51UQ6+.GL1UQ51UQ6/1.4	Q2001.3 DO 1 2.2	-QN6.2_Q	Shot Pin 6 (SET)

-KF1.24
=V1GL1UQ51UQ7+.GL1UQ51UQ7/1.3
=V1GL1UQ51UQ8+.GL1UQ51UQ8/1.3

FESTO

=V1GL1UQ51UQ7+.GL1UQ51UQ7/1.4	Q2001.4 DO 0 1.1	-QN7.1_Q	Shot Pin 7 (RST)
=V1GL1UQ51UQ7+.GL1UQ51UQ7/1.4	Q2001.5 DO 1 1.2	-QN7.2_Q	Shot Pin 7 (SET)
=V1GL1UQ51UQ8+.GL1UQ51UQ8/1.4	Q2001.6 DO 0 2.1	-QN8.1_Q	Shot Pins 8 (RST)
=V1GL1UQ51UQ8+.GL1UQ51UQ8/1.4	Q2001.7 DO 1 2.2	-QN8.2_Q	Shot Pins 8 (SET)

-KF1.25
=V1GL1UQ51UQ9+.GL1UQ51UQ9/1.3
=V1GL1UQ51UQ10+.GL1UQ51UQ10/1.3

FESTO

=V1GL1UQ51UQ9+.GL1UQ51UQ9/1.4	Q2002.0 DO 0 1.1	-QN9.1_Q	Shot Pin 9 (RST)
=V1GL1UQ51UQ9+.GL1UQ51UQ9/1.4	Q2002.1 DO 1 1.2	-QN9.2_Q	Shot Pin 9 (SET)
=V1GL1UQ51UQ10+.GL1UQ51UQ10/1.4	Q2002.2 DO 0 2.1	-QN10.1_Q	Shot Pin 10 (RST)
=V1GL1UQ51UQ10+.GL1UQ51UQ10/1.4	Q2002.3 DO 1 2.2	-QN10.2_Q	Shot Pin 10 (SET)

=V1GL1UQ51KF2/1

			Date	1/17/2023	Volvo Trucks North America	Valiant TMS	CONNECTING MOD. FOR FESTO DQ	Drawing name: =2V09&EFS-EL	= V1GL1UQ51KF1
			Ed.	MKLEPADLO					+ V1GL1UQ51
			Appr		P6700 Bodyside LH - Robot Cell 2V09			Document type: EFS	Project nr: 22-16150
Modification	Date	Name	Original		Replacement of	Replaced by	Scale 1:1		Page 5 / 1533

0	1	2	3	4	5	6	7	8	9

=V1GL1UQ51WC4/1.5 / W2.1

-W2.1
RSM RKM 56-2M/S3059
2m

=V1GL1UQ51KF1/1.4 / KF1-P2

KF2-P2 / =V1GL1UQ51KF3/1.3

-WF2
PROFINET Cable
6XV1840-3AH10

-KF2

X20 M12, 7/8" 1 2 PE 4 5

0V_VAL / OUT | 0V_EL / SEN | FE | 24V_EL / SEN | 24V_VAL / OUT

ON OFF 1 2 1 2

M12 -TP1 M12 -TP2

FESTO
Bus node + Interlinking block
548755 + 550208

I2025.0	DI 0 X1:4	V1GL1UQ51UQ11.1-BGR	Clamps 11 (RESET)
I2025.1	DI 1 X1:2	V1GL1UQ51UQ11.1-BGS	Clamps 11 (SET)
I2025.2	DI 2 X2:4	V1GL1UQ51UQ11.2-BGR	Clamps 11 (RESET)
I2025.3	DI 3 X2:2	V1GL1UQ51UQ11.2-BGS	Clamps 11 (SET)
I2025.4	DI 4 X3:4	V1GL1UQ51UQ11.3-BGR	Clamps 11 (RESET)
I2025.5	DI 5 X3:2	V1GL1UQ51UQ11.3-BGS	Clamps 11 (SET)
I2025.6	DI 6 X4:4	V1GL1UQ51UQ11.4-BGR	Clamps 11 (RESET)
I2025.7	DI 7 X4:2	V1GL1UQ51UQ11.4-BGS	Clamps 11 (SET)
I2026.0	DI 8 X5:4	V1GL1UQ51UQ11.5-BGR	Clamps 11 (RESET)
I2026.1	DI 9 X5:2	V1GL1UQ51UQ11.5-BGS	Clamps 11 (SET)
I2026.2	DI 10 X6:4	V1GL1UQ51UQ11.6-BGR	Clamps 11 (RESET)
I2026.3	DI 11 X6:2	V1GL1UQ51UQ11.6-BGS	Clamps 11 (SET)
I2026.4	DI 12 X7:4	V1GL1UQ51UQ12.1-BGR	Clamps 12 (RESET)
I2026.5	DI 13 X7:2	V1GL1UQ51UQ12.1-BGS	Clamps 12 (SET)
I2026.6	DI 14 X8:4	V1GL1UQ51UQ12.2-BGR	Clamps 12 (RESET)
I2026.7	DI 15 X8:2	V1GL1UQ51UQ12.2-BGS	Clamps 12 (SET)

-KF2.11

FESTO
CPX-M-AB-8-M12X2-5POL
549335

X1 X2 X3 X4 X5 X6 X7 X8 M12

24V | DI 1 | 0V | DI 0 | FE
24V | DI 3 | 0V | DI 2 | FE
24V | DI 5 | 0V | DI 4 | FE
24V | DI 7 | 0V | DI 6 | FE
24V | DI 9 | 0V | DI 8 | FE
24V | DI 11 | 0V | DI 10 | FE
24V | DI 13 | 0V | DI 12 | FE
24V | DI 15 | 0V | DI 14 | FE

1 2 3 4 5

BN WH BU BK

+.GL1UQ51UQ11.1-W1
=V1GL1UQ51UQ11+.GL1UQ51UQ11/1.1

+.GL1UQ51UQ11.2-W1
=V1GL1UQ51UQ11+.GL1UQ51UQ11/1.2

+.GL1UQ51UQ11.3-W1
=V1GL1UQ51UQ11+.GL1UQ51UQ11/1.4

+.GL1UQ51UQ11.4-W1
=V1GL1UQ51UQ11+.GL1UQ51UQ11/1.5

+.GL1UQ51UQ11.5-W1
=V1GL1UQ51UQ11+.GL1UQ51UQ11/1.7

+.GL1UQ51UQ11.6-W1
=V1GL1UQ51UQ11+.GL1UQ51UQ11/1.9

+.GL1UQ51UQ12.1-W1
=V1GL1UQ51UQ12+.GL1UQ51UQ12/1.1

+.GL1UQ51UQ12.2-W1
=V1GL1UQ51UQ12+.GL1UQ51UQ12/1.2

=V1GL1UQ51KF1/5

2

			Date	1/17/2023	Volvo Trucks North America	Valiant TMS	CONNECTING MOD. FOR VTSA MANIFOLD	Drawing name: =2V09&EFS-EL	= V1GL1UQ51KF2
			Ed.	MKLEPADLO					+ V1GL1UQ51
			Appr		P6700 Bodyside LH - Robot Cell 2V09			Document type: EFS	Project nr: 22-16150
Modification	Date	Name	Original		Replacement of / Replaced by	Scale 1:1			Page 1 / 1533

0	1	2	3	4	5	6	7	8	9

I2027.0	DI 0 X1:4	V1GL1UQ51UQ12.3-BGR	Clamps 12 (RESET)
I2027.1	DI 1 X1:2	V1GL1UQ51UQ12.3-BGS	Clamps 12 (SET)
I2027.2	DI 2 X2:4	V1GL1UQ51UQ12.4-BGR	Clamps 12 (RESET)
I2027.3	DI 3 X2:2	V1GL1UQ51UQ12.4-BGS	Clamps 12 (SET)
I2027.4	DI 4 X3:4	V1GL1UQ51UQ13.1-BGR	Clamps 13 (RESET)
I2027.5	DI 5 X3:2	V1GL1UQ51UQ13.1-BGS	Clamps 13 (SET)
I2027.6	DI 6 X4:4	V1GL1UQ51UQ13.2-BGR	Clamps 13 (RESET)
I2027.7	DI 7 X4:2	V1GL1UQ51UQ13.2-BGS	Clamps 13 (SET)
I2028.0	DI 8 X5:4	V1GL1UQ51UQ14.1-BGR	Clamps 14 (RESET)
I2028.1	DI 9 X5:2	V1GL1UQ51UQ14.1-BGS	Clamps 14 (SET)
I2028.2	DI 10 X6:4	V1GL1UQ51UQ14.2-BGR	Clamps 14 (RESET)
I2028.3	DI 11 X6:2	V1GL1UQ51UQ14.2-BGS	Clamps 14 (SET)
I2028.4	DI 12 X7:4	V1GL1UQ51UQ14.3-BGR	Clamps 14 (RESET)
I2028.5	DI 13 X7:2	V1GL1UQ51UQ14.3-BGS	Clamps 14 (SET)
I2028.6	DI 14 X8:4	V1GL1UQ51UQ14.4-BGR	Clamps 14 (RESET)
I2028.7	DI 15 X8:2	V1GL1UQ51UQ14.4-BGS	Clamps 14 (SET)

-KF2.12

FESTO

CPX-M-AB-8-M12X2-5POL

549335

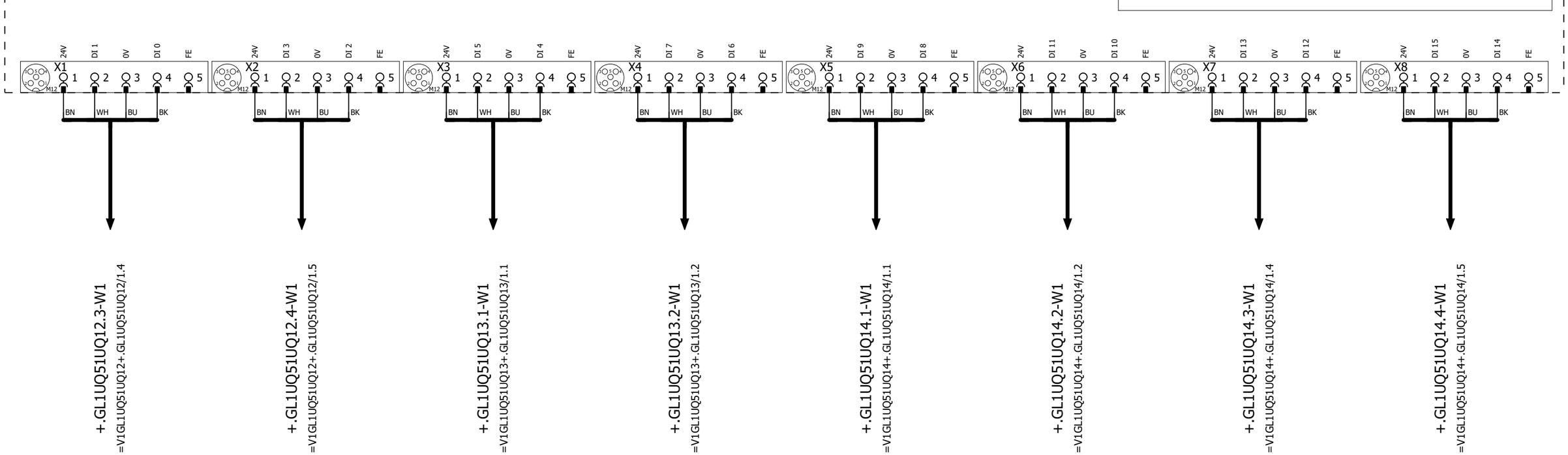

1 3

			Date	1/17/2023	Volvo Trucks North America	Valiant TMS	I/O MOD. DI16 (8 x M12) FOR VTSA-F	Drawing name: =2V09&EFS-EL	= V1GL1UQ51KF2
			Ed.	MKLEPADLO					+ V1GL1UQ51
			Appr		P6700 Bodyside LH - Robot Cell 2V09	Scale 1:1		Document type: EFS	Project nr: 22-16150
Modification	Date	Name	Original		Replacement of / Replaced by				Page 2 / 1533

I2029.0	DI 0 X1:4	V1GL1UQ51UQ15.1-BGR	Clamp 15 (RESET)
I2029.1	DI 1 X1:2	V1GL1UQ51UQ15.1-BGS	Clamp 15 (SET)
I2029.2	DI 2 X2:4	V1GL1UQ51UQ16.1-BGR	Clamp 16 (RESET)
I2029.3	DI 3 X2:2	V1GL1UQ51UQ16.1-BGS	Clamp 16 (SET)
I2029.4	DI 4 X3:4	V1GL1UQ51UQ17.1-BGR	Clamp 17 (RESET)
I2029.5	DI 5 X3:2	V1GL1UQ51UQ17.1-BGS	Clamp 17 (SET)
I2029.6	DI 6 X4:4	V1GL1UQ51UQ18.1-BGR	Shot Pin 18 (RESET)
I2029.7	DI 7 X4:2	V1GL1UQ51UQ18.1-BGS	Shot Pin 18 (SET)
I2030.0	DI 8 X5:4	V1GL1UQ51UQ19.1-BGR	Clamp 19 (RESET)
I2030.1	DI 9 X5:2	V1GL1UQ51UQ19.1-BGS	Clamp 19 (SET)
I2030.2	DI 10 X6:4	V1GL1UQ51UQ20.1-BGR	Clamp 20 (RESET)
I2030.3	DI 11 X6:2	V1GL1UQ51UQ20.1-BGS	Clamp 20 (SET)
I2030.4	DI 12 X7:4	I2030.4	Spare
I2030.5	DI 13 X7:2	I2030.5	Spare
I2030.6	DI 14 X8:4	I2030.6	Spare
I2030.7	DI 15 X8:2	I2030.7	Spare

-KF2.13

FESTO

CPX-M-AB-8-M12X2-5POL

549335

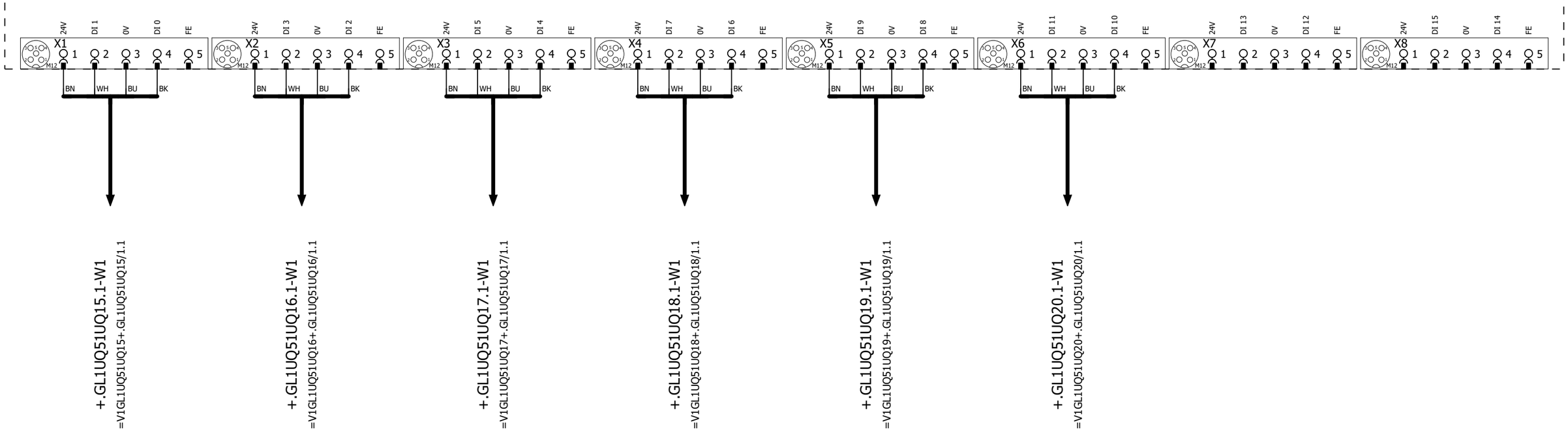

2 4

			Date	1/17/2023	Volvo Trucks North America	Valiant TMS	I/O MOD. DI16 (8 x M12) FOR VTSA-F	Drawing name: =2V09&EFS-EL	= V1GL1UQ51KF2 + V1GL1UQ51
			Ed.	MKLEPADLO	P6700 Bodyside LH - Robot Cell 2V09				
			Appr					Document type: EFS	Project nr: 22-16150
Modification	Date	Name	Original		Replacement of / Replaced by	Scale 1:1			Page 3 / 1533

0	1	2	3	4	5	6	7	8	9

-KF2.14

FESTO

CPX-M-AB-8-M12X2-5POL

549335

I2031.0 DI 0 X1:4	V1GL1UQ51-BG13	Sensor Bunk Support
I2031.1 DI 1 X1:2	V1GL1UQ51-BG14	Sensor Bridge Member
I2031.2 DI 2 X2:4	V1GL1UQ51-BG15	Sensor Bridge Member
I2031.3 DI 3 X2:2	V1GL1UQ51-BG16	Sensor Horizontal Crash Beam
I2031.4 DI 4 X3:4	V1GL1UQ51-BG17	Sensor Horizontal Crash Beam
I2031.5 DI 5 X3:2	V1GL1UQ51-BG18	Sensor Bridge Horizontal Beam
I2031.6 DI 6 X4:4	V1GL1UQ51-BG19	Sensor C-Pillar Assembly
I2031.7 DI 7 X4:2	V1GL1UQ51-BG20	Sensor C-Pillar Assembly
I2032.0 DI 8 X5:4	V1GL1UQ51-BG21	Sensor Head Sub Assembly
I2032.1 DI 9 X5:2	V1GL1UQ51-BG22	Sensor Extruded Seal Sleeper
I2032.2 DI 10 X6:4	V1GL1UQ51-BG23	Sensor Reinforcement
I2032.3 DI 11 X6:2	V1GL1UQ51-BG24	Sensor Reinforcement
I2032.4 DI 12 X7:4	I2032.4	Spare
I2032.5 DI 13 X7:2	I2032.5	Spare
I2032.6 DI 14 X8:4	I2032.6	Spare
I2032.7 DI 15 X8:2	I2032.7	Spare

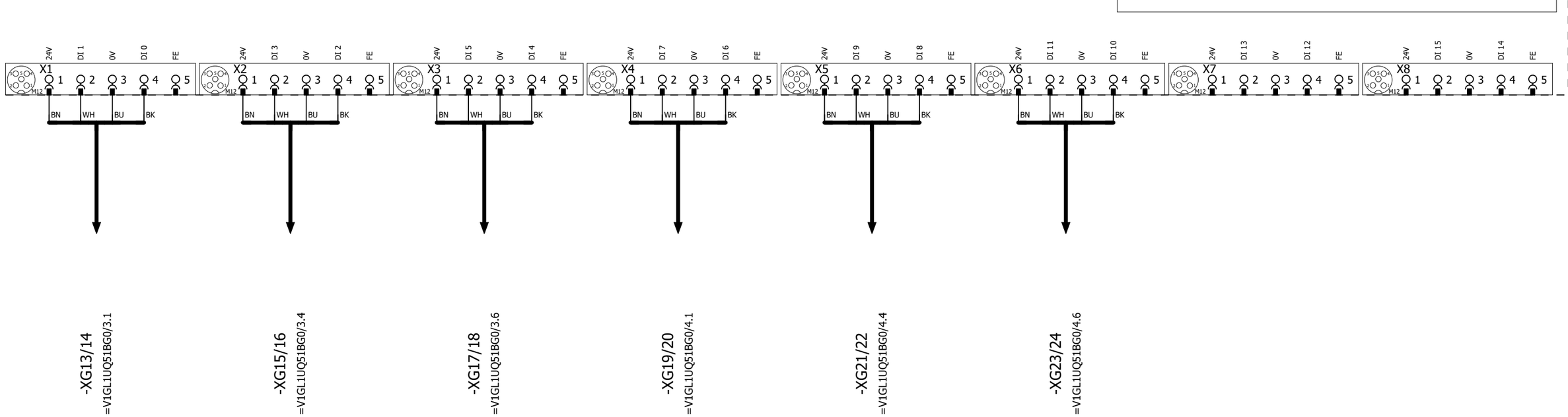

			Date	1/17/2023	Volvo Trucks North America	Valiant TMS	I/O MOD. DI16 (8 x M12) FOR VTSA-F	Drawing name: =2V09&EFS-EL	= V1GL1UQ51KF2
			Ed.	MKLEPADLO					+ V1GL1UQ51
			Appr		P6700 Bodyside LH - Robot Cell 2V09	Scale 1:1		Document type: EFS	Project nr: 22-16150
Modification	Date	Name	Original		Replacement of / Replaced by				Page 4 / 1533

-KF2 -KF2.11 -KF2.12 -KF2.13 -KF2.14 -KF2.20 -KF2.21 -KF2.22 -KF2.23 -KF2.24 -KF2.25 -KF2.26 -KF2.27

M1 M2 M3 M4 M5

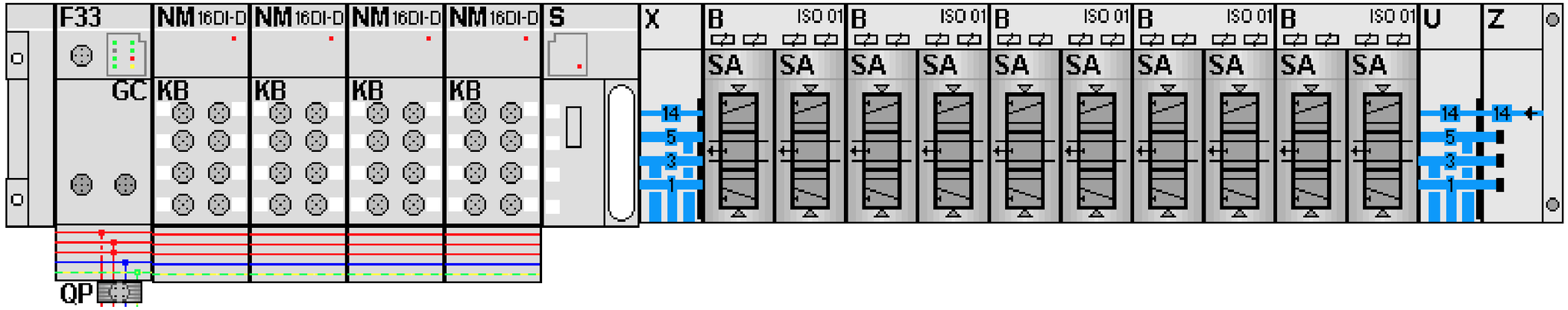

-KF2.21
=V1GL1UQ51UQ11+.GL1UQ51UQ11/1.3
=V1GL1UQ51UQ12+.GL1UQ51UQ12/1.3

FESTO

=V1GL1UQ51UQ11+.GL1UQ51UQ11/1.4	Q2025.0 DO 0 1.1	-QN11.1_Q	Clamps 11 (RST)
=V1GL1UQ51UQ11+.GL1UQ51UQ11/1.4	Q2025.1 DO 1 1.2	-QN11.2_Q	Clamps 11 (SET)
=V1GL1UQ51UQ12+.GL1UQ51UQ12/1.4	Q2025.2 DO 2 2.1	-QN12.1_Q	Clamps 12 (RST)
=V1GL1UQ51UQ12+.GL1UQ51UQ12/1.4	Q2025.3 DO 3 2.2	-QN12.2_Q	Clamps 12 (SET)

-KF2.22
=V1GL1UQ51UQ13+.GL1UQ51UQ13/1.3
=V1GL1UQ51UQ14+.GL1UQ51UQ14/1.3

FESTO

=V1GL1UQ51UQ13+.GL1UQ51UQ13/1.4	Q2025.4 DO 0 1.1	-QN13.1_Q	Clamps 13 (RST)
=V1GL1UQ51UQ13+.GL1UQ51UQ13/1.4	Q2025.5 DO 1 1.2	-QN13.2_Q	Clamps 13 (SET)
=V1GL1UQ51UQ14+.GL1UQ51UQ14/1.4	Q2025.6 DO 2 2.1	-QN14.1_Q	Clamps 14 (RST)
=V1GL1UQ51UQ14+.GL1UQ51UQ14/1.4	Q2025.7 DO 3 2.2	-QN14.2_Q	Clamps 14 (SET)

-KF2.23
=V1GL1UQ51UQ15+.GL1UQ51UQ15/1.3
=V1GL1UQ51UQ16+.GL1UQ51UQ16/1.3

FESTO

=V1GL1UQ51UQ15+.GL1UQ51UQ15/1.4	Q2026.0 DO 0 1.1	-QN15.1_Q	Clamp 15 (RST)
=V1GL1UQ51UQ15+.GL1UQ51UQ15/1.4	Q2026.1 DO 1 1.2	-QN15.2_Q	Clamp 15 (SET)
=V1GL1UQ51UQ16+.GL1UQ51UQ16/1.4	Q2026.2 DO 0 2.1	-QN16.1_Q	Clamp 16 (RST)
=V1GL1UQ51UQ16+.GL1UQ51UQ16/1.4	Q2026.3 DO 1 2.2	-QN16.2_Q	Clamp 16 (SET)

-KF2.24
=V1GL1UQ51UQ17+.GL1UQ51UQ17/1.3
=V1GL1UQ51UQ18+.GL1UQ51UQ18/1.3

FESTO

=V1GL1UQ51UQ17+.GL1UQ51UQ17/1.4	Q2026.4 DO 0 1.1	-QN17.1_Q	Clamp 17 (RST)
=V1GL1UQ51UQ17+.GL1UQ51UQ17/1.4	Q2026.5 DO 1 1.2	-QN17.2_Q	Clamp 17 (SET)
=V1GL1UQ51UQ18+.GL1UQ51UQ18/1.4	Q2026.6 DO 0 2.1	-QN18.1_Q	Shot Pin 18 (RST)
=V1GL1UQ51UQ18+.GL1UQ51UQ18/1.4	Q2026.7 DO 1 2.2	-QN18.2_Q	Shot Pin 18 (SET)

-KF2.25
=V1GL1UQ51UQ19+.GL1UQ51UQ19/1.3
=V1GL1UQ51UQ20+.GL1UQ51UQ20/1.3

FESTO

=V1GL1UQ51UQ19+.GL1UQ51UQ19/1.4	Q2027.0 DO 0 1.1	-QN19.1_Q	Clamp 19 (RST)
=V1GL1UQ51UQ19+.GL1UQ51UQ19/1.4	Q2027.1 DO 1 1.2	-QN19.2_Q	Clamp 19 (SET)
=V1GL1UQ51UQ20+.GL1UQ51UQ20/1.4	Q2027.2 DO 0 2.1	-QN20.1_Q	Clamp 20 (RST)
=V1GL1UQ51UQ20+.GL1UQ51UQ20/1.4	Q2027.3 DO 1 2.2	-QN20.2_Q	Clamp 20 (SET)

			Date	1/17/2023	Volvo Trucks North America	Valiant TMS	CONNECTING MOD. FOR FESTO DQ	Drawing name: =2V09&EFS-EL	= V1GL1UQ51KF2
			Ed.	MKLEPADLO					+ V1GL1UQ51
			Appr		P6700 Bodyside LH - Robot Cell 2V09			Document type: EFS	Project nr: 22-16150
Modification	Date	Name	Original		Replacement of	Replaced by	Scale 1:1		Page 5 / 1533

0	1	2	3	4	5	6	7	8	9

=V1GL1UQ51WC4/1.6 / W3.1

-W3.1
RSM RKM 56-5M/S3059
5m

=V1GL1UQ51KF2/1.4 / KF2-P2

-WF3
PROFINET Cable
6XV1840-3AH10

-KF3

X20 M12, 7/8" 1 2 PE 4 5
0V_VAL / OUT
0V_EL / SEN
FE
24V_EL / SEN
24V_VAL / OUT

M12 -TP1
M12 -TP2

ON
OFF
1 2 1 2

FESTO
Bus node + Interlinking block
548755 + 550208

-KF3.11

FESTO
CPX-M-AB-8-M12X2-5POL
549335

I2050.0	DI 0 X1:4	V1GL1UQ51UQ21.1-BGR	Clamp 21 (RESET)
I2050.1	DI 1 X1:2	V1GL1UQ51UQ21.1-BGS	Clamp 21 (SET)
I2050.2	DI 2 X2:4	V1GL1UQ51UQ22.1-BGR	Clamp 22 (RESET)
I2050.3	DI 3 X2:2	V1GL1UQ51UQ22.1-BGS	Clamp 22 (SET)
I2050.4	DI 4 X3:4	V1GL1UQ51UQ23.1-BGR	Clamp 23 (RESET)
I2050.5	DI 5 X3:2	V1GL1UQ51UQ23.1-BGS	Clamp 23 (SET)
I2050.6	DI 6 X4:4	V1GL1UQ51UQ24.1-BGR	Clamp 24 (RESET)
I2050.7	DI 7 X4:2	V1GL1UQ51UQ24.1-BGS	Clamp 24 (SET)
I2051.0	DI 8 X5:4	V1GL1UQ51UQ25.1-BGR	Clamps 25 (RESET)
I2051.1	DI 9 X5:2	V1GL1UQ51UQ25.1-BGS	Clamps 25 (SET)
I2051.2	DI 10 X6:4	V1GL1UQ51UQ25.2-BGR	Clamps 25 (RESET)
I2051.3	DI 11 X6:2	V1GL1UQ51UQ25.2-BGS	Clamps 25 (SET)
I2051.4	DI 12 X7:4	I2051.4	Spare
I2051.5	DI 13 X7:2	I2051.5	Spare
I2051.6	DI 14 X8:4	I2051.6	Spare
I2051.7	DI 15 X8:2	I2051.7	Spare

X1 M12: 24V DI 1 0V DI 0 FE — 1 2 3 4 5 — BN WH BU BK
X2 M12: 24V DI 3 0V DI 2 FE — 1 2 3 4 5 — BN WH BU BK
X3 M12: 24V DI 5 0V DI 4 FE — 1 2 3 4 5 — BN WH BU BK
X4 M12: 24V DI 7 0V DI 6 FE — 1 2 3 4 5 — BN WH BU BK
X5 M12: 24V DI 9 0V DI 8 FE — 1 2 3 4 5 — BN WH BU BK
X6 M12: 24V DI 11 0V DI 10 FE — 1 2 3 4 5 — BN WH BU BK
X7 M12: 24V DI 13 0V DI 12 FE — 1 2 3 4 5
X8 M12: 24V DI 15 0V DI 14 FE — 1 2 3 4 5

+.GL1UQ51UQ21.1-W1
=V1GL1UQ51UQ21+.GL1UQ51UQ21/1.1

+.GL1UQ51UQ22.1-W1
=V1GL1UQ51UQ22+.GL1UQ51UQ22/1.1

+.GL1UQ51UQ23.1-W1
=V1GL1UQ51UQ23+.GL1UQ51UQ23/1.1

+.GL1UQ51UQ24.1-W1
=V1GL1UQ51UQ24+.GL1UQ51UQ24/1.1

+.GL1UQ51UQ25.1-W1
=V1GL1UQ51UQ25+.GL1UQ51UQ25/1.1

+.GL1UQ51UQ25.2-W1
=V1GL1UQ51UQ25+.GL1UQ51UQ25/1.2

=V1GL1UQ51KF2/5

2

			Date	1/17/2023	Volvo Trucks North America	Valiant TMS	CONNECTING MOD. FOR VTSA MANIFOLD	Drawing name: =2V09&EFS-EL	= V1GL1UQ51KF3	
			Ed.	MKLEPADLO					+ V1GL1UQ51	
			Appr		P6700 Bodyside LH - Robot Cell 2V09			Document type: EFS	Project nr: 22-16150	Page 1
Modification	Date	Name	Original		Replacement of / Replaced by	Scale 1:1				1533

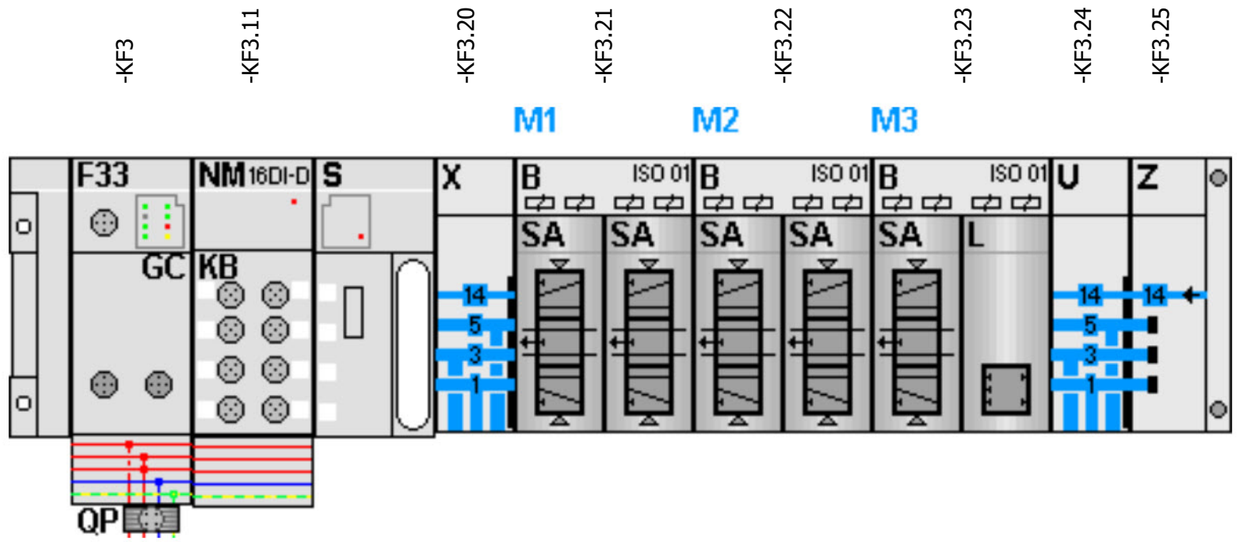

-KF3.21
=V1GL1UQ51UQ21+.GL1UQ51UQ21/1.3
=V1GL1UQ51UQ22+.GL1UQ51UQ22/1.3

FESTO

=V1GL1UQ51UQ21+.GL1UQ51UQ21/1.4	Q2050.0 DO 0 1.1	-QN21.1_Q	Clamp 21 (RST)
=V1GL1UQ51UQ21+.GL1UQ51UQ21/1.4	Q2050.1 DO 1 1.2	-QN21.2_Q	Clamp 21 (SET)
=V1GL1UQ51UQ22+.GL1UQ51UQ22/1.4	Q2050.2 DO 2 2.1	-QN22.1_Q	Clamp 22 (RST)
=V1GL1UQ51UQ22+.GL1UQ51UQ22/1.4	Q2050.3 DO 3 2.2	-QN22.2_Q	Clamp 22 (SET)

-KF3.22
=V1GL1UQ51UQ23+.GL1UQ51UQ23/1.3
=V1GL1UQ51UQ24+.GL1UQ51UQ24/1.3

FESTO

=V1GL1UQ51UQ23+.GL1UQ51UQ23/1.4	Q2050.4 DO 0 1.1	-QN23.1_Q	Clamp 23 (RST)
=V1GL1UQ51UQ23+.GL1UQ51UQ23/1.4	Q2050.5 DO 1 1.2	-QN23.2_Q	Clamp 23 (SET)
=V1GL1UQ51UQ24+.GL1UQ51UQ24/1.4	Q2050.6 DO 2 2.1	-QN24.1_Q	Clamp 24 (RST)
=V1GL1UQ51UQ24+.GL1UQ51UQ24/1.4	Q2050.7 DO 3 2.2	-QN24.2_Q	Clamp 24 (SET)

-KF3.23
=V1GL1UQ51UQ25+.GL1UQ51UQ25/1.3

FESTO

=V1GL1UQ51UQ25+.GL1UQ51UQ25/1.4	Q2051.0 DO 0 1.1	-QN25.1_Q	Clamps 25 (RST)
=V1GL1UQ51UQ25+.GL1UQ51UQ25/1.4	Q2051.1 DO 1 1.2	-QN25.2_Q	Clamps 25 (SET)
	Q2051.2 DO 2 2.1	-QN26.1_Q	Spare
	Q2051.3 DO 3 2.2	-QN26.2_Q	Spare

1

=V1GL1UQ51UQ1+.GL1UQ51UQ1/1

			Date	1/17/2023	Volvo Trucks North America	Valiant TMS	CONNECTING MOD. FOR FESTO DQ	Drawing name: =2V09&EFS-EL	= V1GL1UQ51KF3 + V1GL1UQ51
			Ed.	MKLEPADLO	P6700 Bodyside LH - Robot Cell 2V09			Document type: EFS	Project nr: 22-16150
			Appr						Page 2
Modification	Date	Name	Original		Replacement of / Replaced by	Scale 1:1			1533

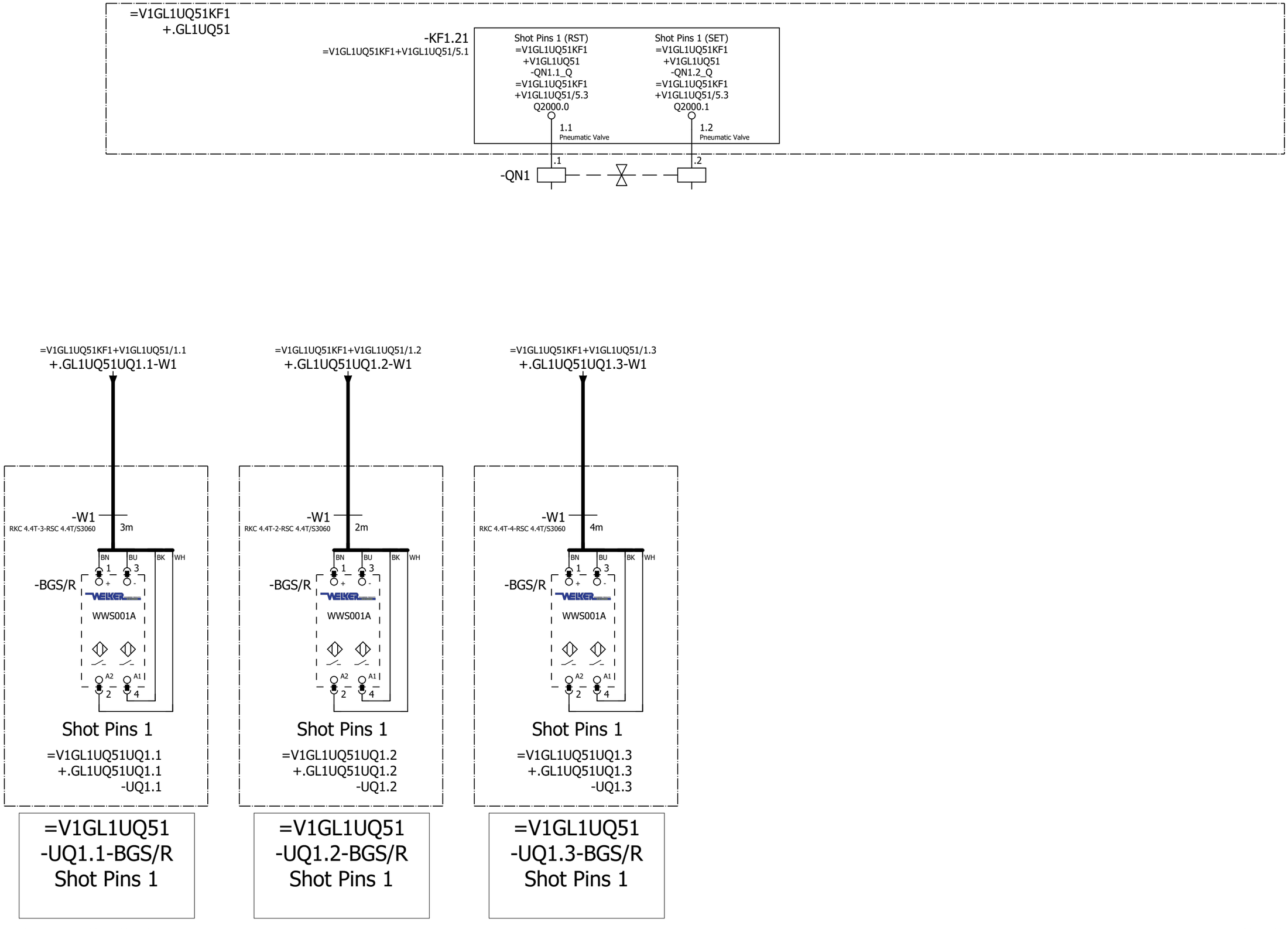

=V1GL1UQ51KF3+V1GL1UQ51/2

=V1GL1UQ51UQ2+.GL1UQ51UQ2/1

			Date	1/17/2023	Volvo Trucks North America	Valiant TMS	FESTO DQ CONNECTION QN1	Drawing name: =2V09&EFS-EL	= V1GL1UQ51UQ1 + V1GL1UQ51UQ1
			Ed.	MKLEPADLO	P6700 Bodyside LH - Robot Cell 2V09			Document type: EFS	Project nr: 22-16150
			Appr						Page 1
Modification	Date	Name	Original		Replacement of / Replaced by	Scale 1:1			1533

0	1	2	3	4	5	6	7	8	9

=V1GL1UQ51KF1
+.GL1UQ51

-KF1.21
=V1GL1UQ51KF1+V1GL1UQ51/5.1

Shot Pin 2 (RST)
=V1GL1UQ51KF1
+V1GL1UQ51
-QN2.1_Q
=V1GL1UQ51KF1
+V1GL1UQ51/5.3
Q2000.2

Shot Pin 2 (SET)
=V1GL1UQ51KF1
+V1GL1UQ51
-QN2.2_Q
=V1GL1UQ51KF1
+V1GL1UQ51/5.3
Q2000.3

2.1
Pneumatic Valve

2.2
Pneumatic Valve

.1

.2

-QN2

=V1GL1UQ51KF1+V1GL1UQ51/1.4
+.GL1UQ51UQ2.1-W1

-W1
RKC 4.4T-4-RSC 4.4T/S3060
4m

BN BU BK WH

1 3

-BGS/R

WWS001A

A2 A1

2 4

Shot Pin 2

=V1GL1UQ51UQ2.1
+.GL1UQ51UQ2.1
-UQ2.1

=V1GL1UQ51
-UQ2.1-BGS/R
Shot Pin 2

=V1GL1UQ51UQ1+.GL1UQ51UQ1/1

=V1GL1UQ51UQ3+.GL1UQ51UQ3/1

			Date	1/17/2023	Volvo Trucks North America	Valiant TMS	FESTO DQ CONNECTION QN2	Drawing name: =2V09&EFS-EL	= V1GL1UQ51UQ2
			Ed.	MKLEPADLO					+ V1GL1UQ51UQ2
			Appr		P6700 Bodyside LH - Robot Cell 2V09			Document type: EFS	Project nr: 22-16150
Modification	Date	Name	Original		Replacement of	Replaced by	Scale 1:1		Page 1 / 1533

0	1	2	3	4	5	6	7	8	9

=V1GL1UQ51KF1
+.GL1UQ51

-KF1.22
=V1GL1UQ51KF1+V1GL1UQ51/5.1

Shot Pins 3 (RST)
=V1GL1UQ51KF1
+V1GL1UQ51
-QN3.1_Q
=V1GL1UQ51KF1
+V1GL1UQ51/5.3
Q2000.4

Shot Pins 3 (SET)
=V1GL1UQ51KF1
+V1GL1UQ51
-QN3.2_Q
=V1GL1UQ51KF1
+V1GL1UQ51/5.3
Q2000.5

1.1
Pneumatic Valve

1.2
Pneumatic Valve

.1

.2

-QN3

=V1GL1UQ51KF1+V1GL1UQ51/1.5
+.GL1UQ51UQ3.1-W1

=V1GL1UQ51KF1+V1GL1UQ51/1.6
+.GL1UQ51UQ3.2-W1

-W1
RKC 4.4T-5-RSC 4.4T/S3060
5m

BN BU BK WH

1 3

-BGS/R

WWS001A

A2 A1

2 4

Shot Pins 3

=V1GL1UQ51UQ3.1
+.GL1UQ51UQ3.1
-UQ3.1

=V1GL1UQ51UQ3.2
+.GL1UQ51UQ3.2
-UQ3.2

=V1GL1UQ51
-UQ3.1-BGS/R
Shot Pins 3

=V1GL1UQ51
-UQ3.2-BGS/R
Shot Pins 3

=V1GL1UQ51UQ2+.GL1UQ51UQ2/1

=V1GL1UQ51UQ4+.GL1UQ51UQ4/1

			Date	1/17/2023	Volvo Trucks North America		Valiant TMS	FESTO DQ CONNECTION QN3	Drawing name: =2V09&EFS-EL	= V1GL1UQ51UQ3
			Ed.	MKLEPADLO						+ V1GL1UQ51UQ3
			Appr		P6700 Bodyside LH - Robot Cell 2V09				Document type: EFS	Project nr: 22-16150
Modification	Date	Name	Original		Replacement of	Replaced by	Scale 1:1			Page 1 / 1533

0	1	2	3	4	5	6	7	8	9

=V1GL1UQ51KF1
+.GL1UQ51

-KF1.22
=V1GL1UQ51KF1+V1GL1UQ51/5.1

Shot Pins 4 (RST)	Shot Pins 4 (SET)
=V1GL1UQ51KF1	=V1GL1UQ51KF1
+V1GL1UQ51	+V1GL1UQ51
-QN4.1_Q	-QN4.2_Q
=V1GL1UQ51KF1	=V1GL1UQ51KF1
+V1GL1UQ51/5.3	+V1GL1UQ51/5.3
Q2000.6	Q2000.7
2.1 Pneumatic Valve	2.2 Pneumatic Valve

-QN4 .1 .2

=V1GL1UQ51KF1+V1GL1UQ51/1.8
+.GL1UQ51UQ4.1-W1

-W1
RKC 4.4T-4-RSC 4.4T/S3060
4m

BN BU BK WH

-BGS/R
1 3
WELKER
WWS001A
A2 A1
2 4

Shot Pins 4

=V1GL1UQ51UQ4.1
+.GL1UQ51UQ4.1
-UQ4.1

=V1GL1UQ51
-UQ4.1-BGS/R
Shot Pins 4

=V1GL1UQ51KF1+V1GL1UQ51/1.9
+.GL1UQ51UQ4.2-W1

-W1
RKC 4.4T-4-RSC 4.4T/S3060
4m

BN BU BK WH

-BGS/R
1 3
WELKER
WWS001A
A2 A1
2 4

Shot Pins 4

=V1GL1UQ51UQ4.2
+.GL1UQ51UQ4.2
-UQ4.2

=V1GL1UQ51
-UQ4.2-BGS/R
Shot Pins 4

=V1GL1UQ51UQ3+.GL1UQ51UQ3/1

=V1GL1UQ51UQ5+.GL1UQ51UQ5/1

			Date	1/17/2023	Volvo Trucks North America		Valiant TMS	FESTO DQ CONNECTION QN4	Drawing name: =2V09&EFS-EL	= V1GL1UQ51UQ4
			Ed.	MKLEPADLO						+ V1GL1UQ51UQ4
			Appr		P6700 Bodyside LH - Robot Cell 2V09				Document type: EFS	Project nr: 22-16150
Modification	Date	Name	Original		Replacement of	Replaced by	Scale 1:1			Page 1 / 1533

0	1	2	3	4	5	6	7	8	9

=V1GL1UQ51KF1
+.GL1UQ51

-KF1.23
=V1GL1UQ51KF1+V1GL1UQ51/5.1

Shot Pin 5 (RST)
=V1GL1UQ51KF1
+V1GL1UQ51
-QN5.1_Q
=V1GL1UQ51KF1
+V1GL1UQ51/5.3
Q2001.0

Shot Pin 5 (SET)
=V1GL1UQ51KF1
+V1GL1UQ51
-QN5.2_Q
=V1GL1UQ51KF1
+V1GL1UQ51/5.3
Q2001.1

1.1
Pneumatic Valve

1.2
Pneumatic Valve

-QN5
.1
.2

=V1GL1UQ51KF1+V1GL1UQ51/2.1
+.GL1UQ51UQ5.1-W1

-W1
RKC 4.4T-4-RSC 4.4T/S3060
4m

BN BU BK WH

-BGS/R
1 3
2 4
A2 A1

WWS001A

Shot Pin 5

=V1GL1UQ51UQ5.1
+.GL1UQ51UQ5.1
-UQ5.1

=V1GL1UQ51
-UQ5.1-BGS/R
Shot Pin 5

=V1GL1UQ51UQ4+.GL1UQ51UQ4/1

=V1GL1UQ51UQ6+.GL1UQ51UQ6/1

			Date	1/17/2023	Volvo Trucks North America	Valiant TMS	FESTO DQ CONNECTION QN5	Drawing name: =2V09&EFS-EL	= V1GL1UQ51UQ5
			Ed.	MKLEPADLO					+ V1GL1UQ51UQ5
			Appr		P6700 Bodyside LH - Robot Cell 2V09			Document type: EFS	Project nr: 22-16150
Modification	Date	Name	Original		Replacement of	Replaced by	Scale 1:1		Page 1 / 1533

0	1	2	3	4	5	6	7	8	9

=V1GL1UQ51KF1
+.GL1UQ51

-KF1.23
=V1GL1UQ51KF1+V1GL1UQ51/5.1

Shot Pin 6 (RST)
=V1GL1UQ51KF1
+V1GL1UQ51
-QN6.1_Q
=V1GL1UQ51KF1
+V1GL1UQ51/5.3
Q2001.2

Shot Pin 6 (SET)
=V1GL1UQ51KF1
+V1GL1UQ51
-QN6.2_Q
=V1GL1UQ51KF1
+V1GL1UQ51/5.3
Q2001.3

2.1
Pneumatic Valve

2.2
Pneumatic Valve

-QN6 .1 .2

=V1GL1UQ51KF1+V1GL1UQ51/2.2
+.GL1UQ51UQ6.1-W1

-W1
RKC 4.4T-4-RSC 4.4T/S3060
4m

BN BU BK WH

-BGS/R
1 3
2 4
A2 A1

WWS001A

Shot Pin 6

=V1GL1UQ51UQ6.1
+.GL1UQ51UQ6.1
-UQ6.1

=V1GL1UQ51 -UQ6.1-BGS/R Shot Pin 6

=V1GL1UQ51UQ5+.GL1UQ51UQ5/1

=V1GL1UQ51UQ7+.GL1UQ51UQ7/1

			Date	1/17/2023	Volvo Trucks North America	Valiant TMS	FESTO DQ CONNECTION QN6	Drawing name: =2V09&EFS-EL	= V1GL1UQ51UQ6
			Ed.	MKLEPADLO					+ V1GL1UQ51UQ6
			Appr		P6700 Bodyside LH - Robot Cell 2V09			Document type: EFS	Project nr: 22-16150
Modification	Date	Name	Original		Replacement of	Replaced by	Scale 1:1		Page 1 / 1533

0	1	2	3	4	5	6	7	8	9

=V1GL1UQ51KF1
+.GL1UQ51

-KF1.24
=V1GL1UQ51KF1+V1GL1UQ51/5.1

Shot Pin 7 (RST)	Shot Pin 7 (SET)
=V1GL1UQ51KF1	=V1GL1UQ51KF1
+V1GL1UQ51	+V1GL1UQ51
-QN7.1_Q	-QN7.2_Q
=V1GL1UQ51KF1	=V1GL1UQ51KF1
+V1GL1UQ51/5.3	+V1GL1UQ51/5.3
Q2001.4	Q2001.5
1.1 Pneumatic Valve	1.2 Pneumatic Valve

-QN7 .1 .2

=V1GL1UQ51KF1+V1GL1UQ51/2.3
+.GL1UQ51UQ7.1-W1

-W1
RKC 4.4T-4-RSC 4.4T/S3060
4m
BN BU BK WH

-XGR/S
P1 1 3 4 2
VB2-FSM 4.4/2FKM 4/S3450
TURCK
J1 1 3 4 2
J2 1 3 4 2
BN BU BK WH

-W1.1
RKC 4.4T-0.5-RSC 4.4T/S3060
0.5m
-W1.2
RKC 4.4T-0.5-RSC 4.4T/S3060
0.5m
BN BU BK WH

-BGR
Sn = 2 mm
TURCK
4570890
pnp
1 3 A 4

-BGS
Sn = 2 mm
TURCK
4570890
pnp
1 3 A 4

Shot Pin 7
=V1GL1UQ51UQ7.1
+.GL1UQ51UQ7.1
-UQ7.1

=V1GL1UQ51
-UQ7.1-BGR
Shot Pin 7

=V1GL1UQ51
-UQ7.1-BGS
Shot Pin 7

=V1GL1UQ51UQ6+.GL1UQ51UQ6/1

=V1GL1UQ51UQ8+.GL1UQ51UQ8/1

			Date	1/17/2023	Volvo Trucks North America	Valiant TMS	FESTO DQ CONNECTION QN7	Drawing name: =2V09&EFS-EL	= V1GL1UQ51UQ7
			Ed.	MKLEPADLO					+ V1GL1UQ51UQ7
			Appr		P6700 Bodyside LH - Robot Cell 2V09			Document type: EFS	Project nr: 22-16150
Modification	Date	Name	Original		Replacement of	Replaced by	Scale 1:1		Page 1 / 1533

0	1	2	3	4	5	6	7	8	9

=V1GL1UQ51KF1
+.GL1UQ51

-KF1.24
=V1GL1UQ51KF1+V1GL1UQ51/5.1

Shot Pins 8 (RST)
=V1GL1UQ51KF1
+V1GL1UQ51
-QN8.1_Q
=V1GL1UQ51KF1
+V1GL1UQ51/5.3
Q2001.6

Shot Pins 8 (SET)
=V1GL1UQ51KF1
+V1GL1UQ51
-QN8.2_Q
=V1GL1UQ51KF1
+V1GL1UQ51/5.3
Q2001.7

2.1
Pneumatic Valve

2.2
Pneumatic Valve

-QN8
.1
.2

=V1GL1UQ51KF1+V1GL1UQ51/2.4
+.GL1UQ51UQ8.1-W1

=V1GL1UQ51KF1+V1GL1UQ51/2.5
+.GL1UQ51UQ8.2-W1

=V1GL1UQ51KF1+V1GL1UQ51/2.6
+.GL1UQ51UQ8.3-W1

-W1
RKC 4.4T-5-RSC 4.4T/S3060
5m

BN BU BK WH
1 3
+ -

-BGS/R

WELKER
WWS001A

A2 A1
2 4

Shot Pins 8
=V1GL1UQ51UQ8.1
+.GL1UQ51UQ8.1
-UQ8.1

Shot Pins 8
=V1GL1UQ51UQ8.2
+.GL1UQ51UQ8.2
-UQ8.2

Shot Pins 8
=V1GL1UQ51UQ8.3
+.GL1UQ51UQ8.3
-UQ8.3

=V1GL1UQ51
-UQ8.1-BGS/R
Shot Pins 8

=V1GL1UQ51
-UQ8.2-BGS/R
Shot Pins 8

=V1GL1UQ51
-UQ8.3-BGS/R
Shot Pins 8

=V1GL1UQ51UQ7+.GL1UQ51UQ7/1

=V1GL1UQ51UQ9+.GL1UQ51UQ9/1

			Date	1/17/2023	Volvo Trucks North America	Valiant TMS	FESTO DQ CONNECTION QN8	Drawing name: =2V09&EFS-EL	= V1GL1UQ51UQ8
			Ed.	MKLEPADLO					+ V1GL1UQ51UQ8
			Appr		P6700 Bodyside LH - Robot Cell 2V09			Document type: EFS	Project nr: 22-16150
Modification	Date	Name	Original		Replacement of	Replaced by	Scale 1:1		Page 1 / 1533

0	1	2	3	4	5	6	7	8	9

=V1GL1UQ51KF1
+.GL1UQ51

-KF1.25
=V1GL1UQ51KF1+V1GL1UQ51/5.1

Shot Pin 9 (RST)
=V1GL1UQ51KF1
+V1GL1UQ51
-QN9.1_Q
=V1GL1UQ51KF1
+V1GL1UQ51/5.3
Q2002.0

Shot Pin 9 (SET)
=V1GL1UQ51KF1
+V1GL1UQ51
-QN9.2_Q
=V1GL1UQ51KF1
+V1GL1UQ51/5.3
Q2002.1

1.1
Pneumatic Valve

1.2
Pneumatic Valve

-QN9 .1 .2

=V1GL1UQ51KF1+V1GL1UQ51/2.8
+.GL1UQ51UQ9.1-W1

-W1
RKC 4.4T-6-RSC 4.4T/S3060
6m

BN BU BK WH

-BGS/R
1 3
2 4
A2 A1

WWS001A

Shot Pin 9

=V1GL1UQ51UQ9.1
+.GL1UQ51UQ9.1
-UQ9.1

=V1GL1UQ51
-UQ9.1-BGS/R
Shot Pin 9

=V1GL1UQ51UQ8+.GL1UQ51UQ8/1

=V1GL1UQ51UQ10+.GL1UQ51UQ10/1

			Date	1/17/2023	Volvo Trucks North America	Valiant TMS	FESTO DQ CONNECTION QN9	Drawing name: =2V09&EFS-EL	= V1GL1UQ51UQ9
			Ed.	MKLEPADLO					+ V1GL1UQ51UQ9
			Appr		P6700 Bodyside LH - Robot Cell 2V09			Document type: EFS	Project nr: 22-16150
Modification	Date	Name	Original		Replacement of	Replaced by	Scale 1:1		Page 1 / 1533

0	1	2	3	4	5	6	7	8	9

=V1GL1UQ51KF1
+.GL1UQ51

-KF1.25
=V1GL1UQ51KF1+V1GL1UQ51/5.1

Shot Pin 10 (RST)
=V1GL1UQ51KF1
+V1GL1UQ51
-QN10.1_Q
=V1GL1UQ51KF1
+V1GL1UQ51/5.3
Q2002.2

Shot Pin 10 (SET)
=V1GL1UQ51KF1
+V1GL1UQ51
-QN10.2_Q
=V1GL1UQ51KF1
+V1GL1UQ51/5.3
Q2002.3

2.1
Pneumatic Valve

2.2
Pneumatic Valve

-QN10 .1 .2

=V1GL1UQ51KF1+V1GL1UQ51/2.9
+.GL1UQ51UQ10.1-W1

-W1
RKC 4.4T-6-RSC 4.4T/S3060
6m

BN BU BK WH

-BGS/R
1 3
2 4
A2 A1

WWS001A

Shot Pin 10

=V1GL1UQ51UQ10.1
+.GL1UQ51UQ10.1
-UQ10.1

=V1GL1UQ51
-UQ10.1-BGS/R
Shot Pin 10

=V1GL1UQ51UQ9+.GL1UQ51UQ9/1

=V1GL1UQ51UQ11+.GL1UQ51UQ11/1

			Date	1/17/2023	Volvo Trucks North America	Valiant TMS	FESTO DQ CONNECTION QN10	Drawing name: =2V09&EFS-EL	= V1GL1UQ51UQ10
			Ed.	MKLEPADLO					+ V1GL1UQ51UQ10
			Appr		P6700 Bodyside LH - Robot Cell 2V09			Document type: EFS	Project nr: 22-16150
Modification	Date	Name	Original		Replacement of	Replaced by	Scale 1:1		Page 1 / 1533

0	1	2	3	4	5	6	7	8	9

=V1GL1UQ51KF2
+.GL1UQ51

-KF2.21
=V1GL1UQ51KF2+V1GL1UQ51/5.1

Clamps 11 (RST)
=V1GL1UQ51KF2
+V1GL1UQ51
-QN11.1_Q
=V1GL1UQ51KF2
+V1GL1UQ51/5.3
Q2025.0

Clamps 11 (SET)
=V1GL1UQ51KF2
+V1GL1UQ51
-QN11.2_Q
=V1GL1UQ51KF2
+V1GL1UQ51/5.3
Q2025.1

1.1 Pneumatic Valve

1.2 Pneumatic Valve

-QN11 .1 .2

=V1GL1UQ51KF2+V1GL1UQ51/1.1
+.GL1UQ51UQ11.1-W1

=V1GL1UQ51KF2+V1GL1UQ51/1.2
+.GL1UQ51UQ11.2-W1

=V1GL1UQ51KF2+V1GL1UQ51/1.3
+.GL1UQ51UQ11.3-W1

=V1GL1UQ51KF2+V1GL1UQ51/1.4
+.GL1UQ51UQ11.4-W1

=V1GL1UQ51KF2+V1GL1UQ51/1.5
+.GL1UQ51UQ11.5-W1

=V1GL1UQ51KF2+V1GL1UQ51/1.6
+.GL1UQ51UQ11.6-W1

-W1 RKC 4.4T-4-RSC 4.4T/S3060 4m

-W1 RKC 4.4T-4-RSC 4.4T/S3060 4m

-W1 RKC 4.4T-4-RSC 4.4T/S3060 4m

-W1 RKC 4.4T-5-RSC 4.4T/S3060 5m

-W1 RKC 4.4T-3-RSC 4.4T/S3060 3m

-W1 RKC 4.4T-3-RSC 4.4T/S3060 3m

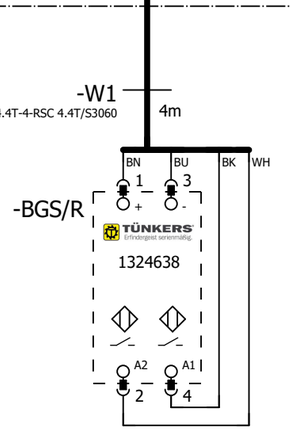

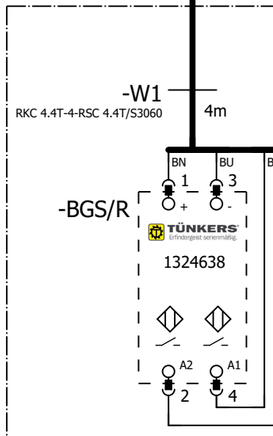

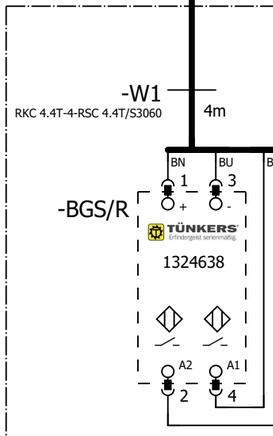

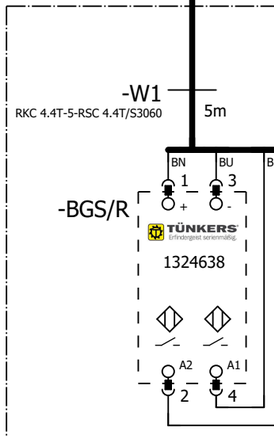

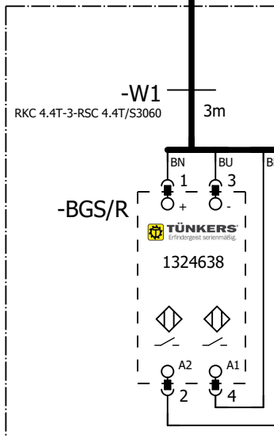

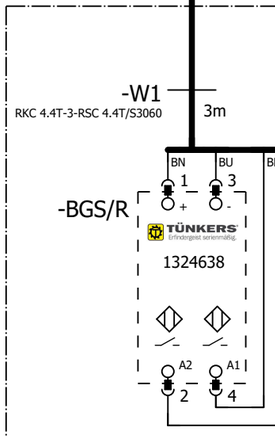

Clamps 11
=V1GL1UQ51UQ11.1
+.GL1UQ51UQ11.1
-UQ11.1

Clamps 11
=V1GL1UQ51UQ11.2
+.GL1UQ51UQ11.2
-UQ11.2

Clamps 11
=V1GL1UQ51UQ11.3
+.GL1UQ51UQ11.3
-UQ11.3

Clamps 11
=V1GL1UQ51UQ11.4
+.GL1UQ51UQ11.4
-UQ11.4

Clamps 11
=V1GL1UQ51UQ11.5
+.GL1UQ51UQ11.5
-UQ11.5

Clamps 11
=V1GL1UQ51UQ11.6
+.GL1UQ51UQ11.6
-UQ11.6

=V1GL1UQ51
-UQ11.1-BGS/R
Clamps 11

=V1GL1UQ51
-UQ11.2-BGS/R
Clamps 11

=V1GL1UQ51
-UQ11.3-BGS/R
Clamps 11

=V1GL1UQ51
-UQ11.4-BGS/R
Clamps 11

=V1GL1UQ51
-UQ11.5-BGS/R
Clamps 11

=V1GL1UQ51
-UQ11.6-BGS/R
Clamps 11

=V1GL1UQ51UQ10+.GL1UQ51UQ10/1

=V1GL1UQ51UQ12+.GL1UQ51UQ12/1

			Date	1/17/2023	Volvo Trucks North America	Valiant TMS	FESTO DQ CONNECTION QN11	Drawing name: =2V09&EFS-EL	= V1GL1UQ51UQ11
			Ed.	MKLEPADLO					+ V1GL1UQ51UQ11
			Appr		P6700 Bodyside LH - Robot Cell 2V09			Document type: EFS	Project nr: 22-16150
Modification	Date	Name	Original		Replacement of	Replaced by	Scale 1:1		Page 1 / 1533

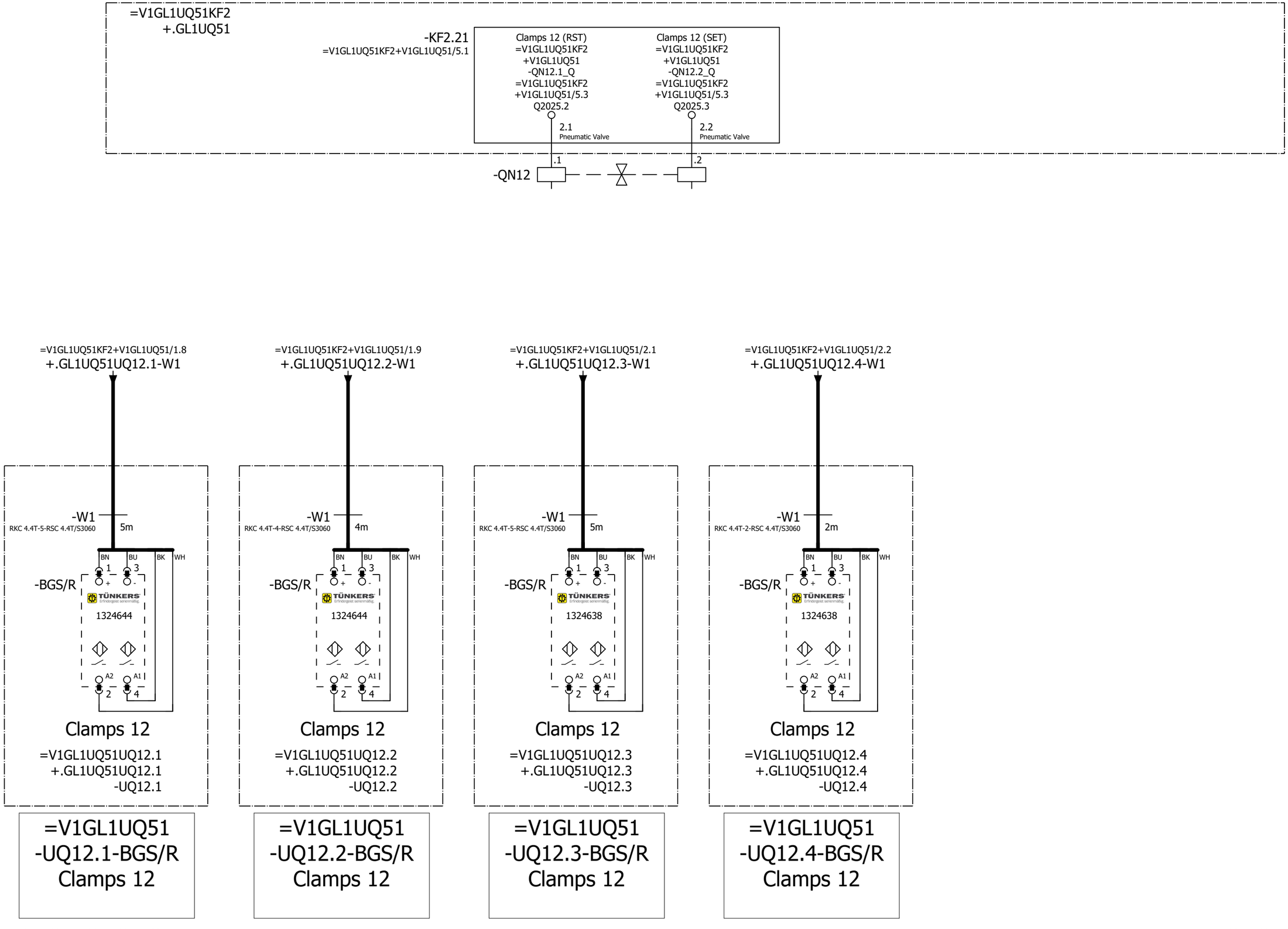

=V1GL1UQ51UQ11+.GL1UQ51UQ11/1

=V1GL1UQ51UQ13+.GL1UQ51UQ13/1

			Date	1/17/2023	Volvo Trucks North America	Valiant TMS	FESTO DQ CONNECTION QN12	Drawing name: =2V09&EFS-EL	= V1GL1UQ51UQ12 + V1GL1UQ51UQ12
			Ed.	MKLEPADLO	P6700 Bodyside LH - Robot Cell 2V09			Document type: EFS	Project nr: 22-16150
			Appr						Page 1
Modification	Date	Name	Original		Replacement of / Replaced by	Scale 1:1			1533

0	1	2	3	4	5	6	7	8	9

=V1GL1UQ51KF2
+.GL1UQ51

-KF2.22
=V1GL1UQ51KF2+V1GL1UQ51/5.1

Clamps 13 (RST)
=V1GL1UQ51KF2
+V1GL1UQ51
-QN13.1_Q
=V1GL1UQ51KF2
+V1GL1UQ51/5.3
Q2025.4

Clamps 13 (SET)
=V1GL1UQ51KF2
+V1GL1UQ51
-QN13.2_Q
=V1GL1UQ51KF2
+V1GL1UQ51/5.3
Q2025.5

1.1 Pneumatic Valve

1.2 Pneumatic Valve

-QN13 .1 .2

=V1GL1UQ51KF2+V1GL1UQ51/2.3
+.GL1UQ51UQ13.1-W1

-W1
RKC 4.4T-5-RSC 4.4T/S3060
5m

BN BU BK WH

-BGS/R
1 3
+ -
TÜNKERS
1324638
A2 A1
2 4

Clamps 13
=V1GL1UQ51UQ13.1
+.GL1UQ51UQ13.1
-UQ13.1

=V1GL1UQ51
-UQ13.1-BGS/R
Clamps 13

=V1GL1UQ51KF2+V1GL1UQ51/2.4
+.GL1UQ51UQ13.2-W1

-W1
RKC 4.4T-4-RSC 4.4T/S3060
4m

BN BU BK WH

-BGS/R
1 3
+ -
TÜNKERS
1324638
A2 A1
2 4

Clamps 13
=V1GL1UQ51UQ13.2
+.GL1UQ51UQ13.2
-UQ13.2

=V1GL1UQ51
-UQ13.2-BGS/R
Clamps 13

=V1GL1UQ51UQ12+.GL1UQ51UQ12/1

=V1GL1UQ51UQ14+.GL1UQ51UQ14/1

			Date	1/17/2023	Volvo Trucks North America	Valiant TMS	FESTO DQ CONNECTION QN13	Drawing name: =2V09&EFS-EL	= V1GL1UQ51UQ13
			Ed.	MKLEPADLO					+ V1GL1UQ51UQ13
			Appr		P6700 Bodyside LH - Robot Cell 2V09			Document type: EFS	Project nr: 22-16150
Modification	Date	Name	Original		Replacement of	Replaced by	Scale 1:1		Page 1 / 1533

0	1	2	3	4	5	6	7	8	9

=V1GL1UQ51KF2
+.GL1UQ51

-KF2.22
=V1GL1UQ51KF2+V1GL1UQ51/5.1

Clamps 14 (RST)
=V1GL1UQ51KF2
+V1GL1UQ51
-QN14.1_Q
=V1GL1UQ51KF2
+V1GL1UQ51/5.3
Q2025.6

Clamps 14 (SET)
=V1GL1UQ51KF2
+V1GL1UQ51
-QN14.2_Q
=V1GL1UQ51KF2
+V1GL1UQ51/5.3
Q2025.7

2.1 Pneumatic Valve

2.2 Pneumatic Valve

-QN14 .1 .2

=V1GL1UQ51KF2+V1GL1UQ51/2.5
+.GL1UQ51UQ14.1-W1

=V1GL1UQ51KF2+V1GL1UQ51/2.6
+.GL1UQ51UQ14.2-W1

=V1GL1UQ51KF2+V1GL1UQ51/2.8
+.GL1UQ51UQ14.3-W1

=V1GL1UQ51KF2+V1GL1UQ51/2.9
+.GL1UQ51UQ14.4-W1

-W1 RKC 4.4T-5-RSC 4.4T/S3060 5m

-W1 RKC 4.4T-6-RSC 4.4T/S3060 6m

-W1 RKC 4.4T-7-RSC 4.4T/S3060 7m

-W1 RKC 4.4T-5-RSC 4.4T/S3060 5m

-BGS/R

BN BU BK WH
1 3
TÜNKERS
1324644
A2 A1
2 4

Clamps 14

=V1GL1UQ51UQ14.1
+.GL1UQ51UQ14.1
-UQ14.1

=V1GL1UQ51UQ14.2
+.GL1UQ51UQ14.2
-UQ14.2

=V1GL1UQ51UQ14.3
+.GL1UQ51UQ14.3
-UQ14.3

=V1GL1UQ51UQ14.4
+.GL1UQ51UQ14.4
-UQ14.4

=V1GL1UQ51
-UQ14.1-BGS/R
Clamps 14

=V1GL1UQ51
-UQ14.2-BGS/R
Clamps 14

=V1GL1UQ51
-UQ14.3-BGS/R
Clamps 14

=V1GL1UQ51
-UQ14.4-BGS/R
Clamps 14

=V1GL1UQ51UQ13+.GL1UQ51UQ13/1

=V1GL1UQ51UQ15+.GL1UQ51UQ15/1

			Date	1/17/2023	Volvo Trucks North America	Valiant TMS	FESTO DQ CONNECTION QN14	Drawing name: =2V09&EFS-EL	= V1GL1UQ51UQ14
			Ed.	MKLEPADLO					+ V1GL1UQ51UQ14
			Appr		P6700 Bodyside LH - Robot Cell 2V09			Document type: EFS	Project nr: 22-16150
Modification	Date	Name	Original		Replacement of	Replaced by	Scale 1:1		Page 1 / 1533

0	1	2	3	4	5	6	7	8	9

=V1GL1UQ51KF2
+.GL1UQ51

-KF2.23
=V1GL1UQ51KF2+V1GL1UQ51/5.1

Clamp 15 (RST)	Clamp 15 (SET)
=V1GL1UQ51KF2	=V1GL1UQ51KF2
+V1GL1UQ51	+V1GL1UQ51
-QN15.1_Q	-QN15.2_Q
=V1GL1UQ51KF2	=V1GL1UQ51KF2
+V1GL1UQ51/5.3	+V1GL1UQ51/5.3
Q2026.0	Q2026.1

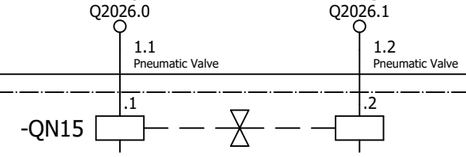

=V1GL1UQ51KF2+V1GL1UQ51/3.1
+.GL1UQ51UQ15.1-W1

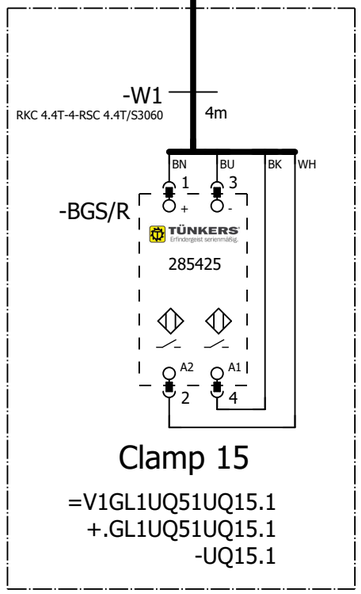

Clamp 15

=V1GL1UQ51UQ15.1
+.GL1UQ51UQ15.1
-UQ15.1

=V1GL1UQ51 -UQ15.1-BGS/R Clamp 15

=V1GL1UQ51UQ14+.GL1UQ51UQ14/1

=V1GL1UQ51UQ16+.GL1UQ51UQ16/1

			Date	1/17/2023	Volvo Trucks North America	Valiant TMS	FESTO DQ CONNECTION QN15	Drawing name: =2V09&EFS-EL	= V1GL1UQ51UQ15
			Ed.	MKLEPADLO					+ V1GL1UQ51UQ15
			Appr		P6700 Bodyside LH - Robot Cell 2V09			Document type: EFS	Project nr: 22-16150
Modification	Date	Name	Original		Replacement of	Replaced by	Scale 1:1		Page 1 / 1533

0	1	2	3	4	5	6	7	8	9

=V1GL1UQ51KF2
+.GL1UQ51

-KF2.23
=V1GL1UQ51KF2+V1GL1UQ51/5.1

Clamp 16 (RST)	Clamp 16 (SET)
=V1GL1UQ51KF2	=V1GL1UQ51KF2
+V1GL1UQ51	+V1GL1UQ51
-QN16.1_Q	-QN16.2_Q
=V1GL1UQ51KF2	=V1GL1UQ51KF2
+V1GL1UQ51/5.3	+V1GL1UQ51/5.3
Q2026.2	Q2026.3

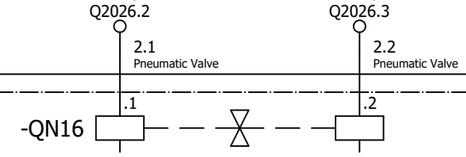

=V1GL1UQ51KF2+V1GL1UQ51/3.2
+.GL1UQ51UQ16.1-W1

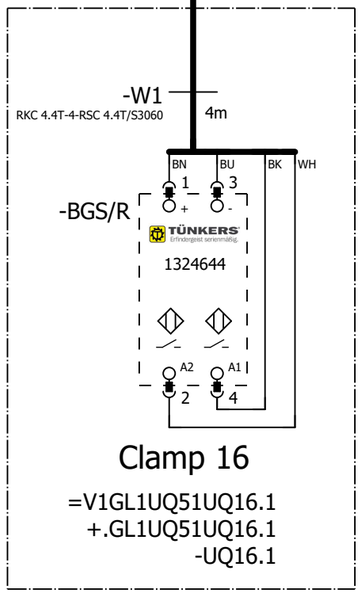

Clamp 16

=V1GL1UQ51UQ16.1
+.GL1UQ51UQ16.1
-UQ16.1

=V1GL1UQ51 -UQ16.1-BGS/R Clamp 16

=V1GL1UQ51UQ15+.GL1UQ51UQ15/1

=V1GL1UQ51UQ17+.GL1UQ51UQ17/1

			Date	1/17/2023	Volvo Trucks North America	Valiant TMS	FESTO DQ CONNECTION QN16	Drawing name: =2V09&EFS-EL	= V1GL1UQ51UQ16
			Ed.	MKLEPADLO					+ V1GL1UQ51UQ16
			Appr		P6700 Bodyside LH - Robot Cell 2V09			Document type: EFS	Project nr: 22-16150
Modification	Date	Name	Original		Replacement of	Replaced by	Scale 1:1		Page 1 / 1533

0	1	2	3	4	5	6	7	8	9

=V1GL1UQ51KF2
+.GL1UQ51

-KF2.24
=V1GL1UQ51KF2+V1GL1UQ51/5.1

Clamp 17 (RST)	Clamp 17 (SET)
=V1GL1UQ51KF2	=V1GL1UQ51KF2
+V1GL1UQ51	+V1GL1UQ51
-QN17.1_Q	-QN17.2_Q
=V1GL1UQ51KF2	=V1GL1UQ51KF2
+V1GL1UQ51/5.3	+V1GL1UQ51/5.3
Q2026.4	Q2026.5
1.1 Pneumatic Valve	1.2 Pneumatic Valve

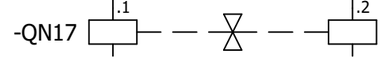

=V1GL1UQ51KF2+V1GL1UQ51/3.3
+.GL1UQ51UQ17.1-W1

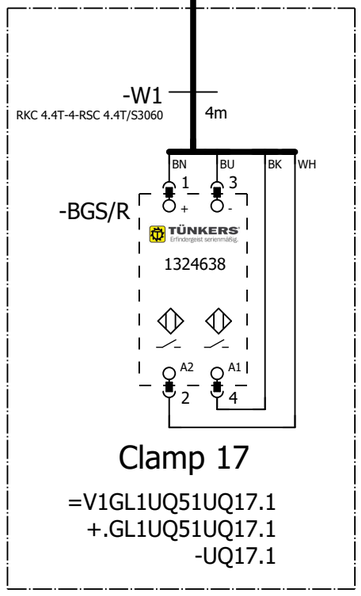

Clamp 17

=V1GL1UQ51UQ17.1
+.GL1UQ51UQ17.1
-UQ17.1

=V1GL1UQ51 -UQ17.1-BGS/R Clamp 17

=V1GL1UQ51UQ16+.GL1UQ51UQ16/1

=V1GL1UQ51UQ18+.GL1UQ51UQ18/1

			Date	1/17/2023	Volvo Trucks North America	Valiant TMS	FESTO DQ CONNECTION QN17	Drawing name: =2V09&EFS-EL	= V1GL1UQ51UQ17
			Ed.	MKLEPADLO					+ V1GL1UQ51UQ17
			Appr		P6700 Bodyside LH - Robot Cell 2V09			Document type: EFS	Project nr: 22-16150
Modification	Date	Name	Original		Replacement of	Replaced by	Scale 1:1		Page 1 / 1533

0	1	2	3	4	5	6	7	8	9

=V1GL1UQ51KF2
+.GL1UQ51

-KF2.24
=V1GL1UQ51KF2+V1GL1UQ51/5.1

Shot Pin 18 (RST)
=V1GL1UQ51KF2
+V1GL1UQ51
-QN18.1_Q
=V1GL1UQ51KF2
+V1GL1UQ51/5.3
Q2026.6

Shot Pin 18 (SET)
=V1GL1UQ51KF2
+V1GL1UQ51
-QN18.2_Q
=V1GL1UQ51KF2
+V1GL1UQ51/5.3
Q2026.7

2.1
Pneumatic Valve

2.2
Pneumatic Valve

-QN18 .1 .2

=V1GL1UQ51KF2+V1GL1UQ51/3.4
+.GL1UQ51UQ18.1-W1

-W1
RKC 4.4T-6-RSC 4.4T/S3060
6m

BN BU BK WH

-BGS/R
1 3
PEPPERL+FUCHS
NBN2-F581-
100S6-E8-V1
A2 A1
2 4

Shot Pin 18

=V1GL1UQ51UQ18.1
+.GL1UQ51UQ18.1
-UQ18.1

=V1GL1UQ51 -UQ18.1-BGS/R Shot Pin 18

=V1GL1UQ51UQ17+.GL1UQ51UQ17/1

=V1GL1UQ51UQ19+.GL1UQ51UQ19/1

			Date	1/17/2023	Volvo Trucks North America		Valiant TMS	FESTO DQ CONNECTION QN18	Drawing name: =2V09&EFS-EL	= V1GL1UQ51UQ18
			Ed.	MKLEPADLO						+ V1GL1UQ51UQ18
			Appr		P6700 Bodyside LH - Robot Cell 2V09				Document type: EFS	Project nr: 22-16150
Modification	Date	Name	Original		Replacement of	Replaced by	Scale 1:1			Page 1 / 1533

0	1	2	3	4	5	6	7	8	9

=V1GL1UQ51KF2
+.GL1UQ51

-KF2.25
=V1GL1UQ51KF2+V1GL1UQ51/5.1

Clamp 19 (RST)	Clamp 19 (SET)
=V1GL1UQ51KF2	=V1GL1UQ51KF2
+V1GL1UQ51	+V1GL1UQ51
-QN19.1_Q	-QN19.2_Q
=V1GL1UQ51KF2	=V1GL1UQ51KF2
+V1GL1UQ51/5.3	+V1GL1UQ51/5.3
Q2027.0	Q2027.1

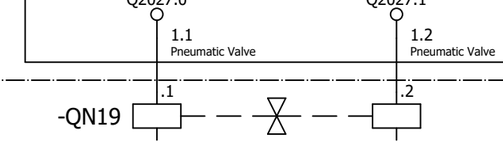

=V1GL1UQ51KF2+V1GL1UQ51/3.5
+.GL1UQ51UQ19.1-W1

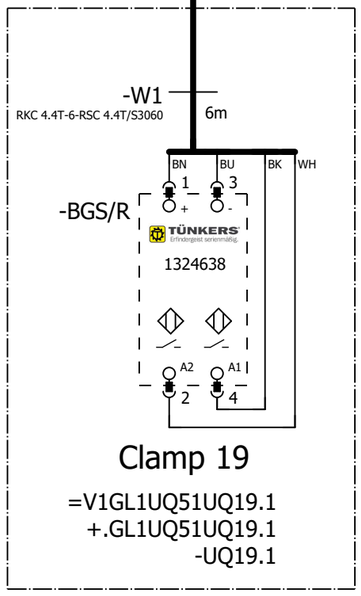

Clamp 19

=V1GL1UQ51UQ19.1
+.GL1UQ51UQ19.1
-UQ19.1

=V1GL1UQ51 -UQ19.1-BGS/R Clamp 19

=V1GL1UQ51UQ18+.GL1UQ51UQ18/1

=V1GL1UQ51UQ20+.GL1UQ51UQ20/1

			Date	1/17/2023	Volvo Trucks North America	Valiant TMS	FESTO DQ CONNECTION QN19	Drawing name: =2V09&EFS-EL	= V1GL1UQ51UQ19
			Ed.	MKLEPADLO					+ V1GL1UQ51UQ19
			Appr		P6700 Bodyside LH - Robot Cell 2V09			Document type: EFS	Project nr: 22-16150
Modification	Date	Name	Original		Replacement of	Replaced by	Scale 1:1		Page 1 / 1533

0	1	2	3	4	5	6	7	8	9

=V1GL1UQ51KF2
+.GL1UQ51

-KF2.25
=V1GL1UQ51KF2+V1GL1UQ51/5.1

Clamp 20 (RST)	Clamp 20 (SET)
=V1GL1UQ51KF2	=V1GL1UQ51KF2
+V1GL1UQ51	+V1GL1UQ51
-QN20.1_Q	-QN20.2_Q
=V1GL1UQ51KF2	=V1GL1UQ51KF2
+V1GL1UQ51/5.3	+V1GL1UQ51/5.3
Q2027.2	Q2027.3
2.1 Pneumatic Valve	2.2 Pneumatic Valve

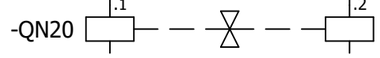

=V1GL1UQ51KF2+V1GL1UQ51/3.6
+.GL1UQ51UQ20.1-W1

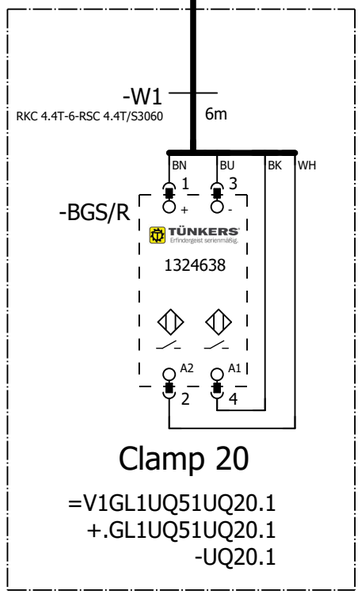

Clamp 20

=V1GL1UQ51UQ20.1
+.GL1UQ51UQ20.1
-UQ20.1

=V1GL1UQ51 -UQ20.1-BGS/R Clamp 20

=V1GL1UQ51UQ19+.GL1UQ51UQ19/1

=V1GL1UQ51UQ21+.GL1UQ51UQ21/1

			Date	1/17/2023	Volvo Trucks North America	Valiant TMS	FESTO DQ CONNECTION QN20	Drawing name: =2V09&EFS-EL	= V1GL1UQ51UQ20
			Ed.	MKLEPADLO					+ V1GL1UQ51UQ20
			Appr		P6700 Bodyside LH - Robot Cell 2V09			Document type: EFS	Project nr: 22-16150
Modification	Date	Name	Original		Replacement of	Replaced by	Scale 1:1		Page 1 / 1533

0	1	2	3	4	5	6	7	8	9

=V1GL1UQ51KF3
+.GL1UQ51

-KF3.21
=V1GL1UQ51KF3+V1GL1UQ51/2.1

Clamp 21 (RST)
=V1GL1UQ51KF3
+V1GL1UQ51
-QN21.1_Q
=V1GL1UQ51KF3
+V1GL1UQ51/2.3
Q2050.0

Clamp 21 (SET)
=V1GL1UQ51KF3
+V1GL1UQ51
-QN21.2_Q
=V1GL1UQ51KF3
+V1GL1UQ51/2.3
Q2050.1

1.1 Pneumatic Valve

1.2 Pneumatic Valve

-QN21 .1 .2

=V1GL1UQ51KF3+V1GL1UQ51/1.1
+.GL1UQ51UQ21.1-W1

-W1
RKC 4.4T-5-RSC 4.4T/S3060
5m

BN BU BK WH

-BGS/R
1 3
+ -
TÜNKERS
1324644
A2 A1
2 4

Clamp 21
=V1GL1UQ51UQ21.1
+.GL1UQ51UQ21.1
-UQ21.1

=V1GL1UQ51
-UQ21.1-BGS/R
Clamp 21

=V1GL1UQ51UQ20+.GL1UQ51UQ20/1

=V1GL1UQ51UQ22+.GL1UQ51UQ22/1

			Date	1/17/2023	Volvo Trucks North America	Valiant TMS	FESTO DQ CONNECTION QN21	Drawing name: =2V09&EFS-EL	= V1GL1UQ51UQ21
			Ed.	MKLEPADLO					+ V1GL1UQ51UQ21
			Appr		P6700 Bodyside LH - Robot Cell 2V09			Document type: EFS	Project nr: 22-16150
Modification	Date	Name	Original		Replacement of	Replaced by	Scale 1:1		Page 1 / 1533

0	1	2	3	4	5	6	7	8	9

=V1GL1UQ51KF3
+.GL1UQ51

-KF3.21
=V1GL1UQ51KF3+V1GL1UQ51/2.1

Clamp 22 (RST)
=V1GL1UQ51KF3
+V1GL1UQ51
-QN22.1_Q
=V1GL1UQ51KF3
+V1GL1UQ51/2.3
Q2050.2

Clamp 22 (SET)
=V1GL1UQ51KF3
+V1GL1UQ51
-QN22.2_Q
=V1GL1UQ51KF3
+V1GL1UQ51/2.3
Q2050.3

2.1
Pneumatic Valve

2.2
Pneumatic Valve

-QN22 .1 .2

=V1GL1UQ51KF3+V1GL1UQ51/1.2
+.GL1UQ51UQ22.1-W1

-W1
RKC 4.4T-5-RSC 4.4T/S3060
5m

BN BU BK WH

-BGS/R
1 3
+ -
TÜNKERS
1324638
A2 A1
2 4

Clamp 22

=V1GL1UQ51UQ22.1
+.GL1UQ51UQ22.1
-UQ22.1

=V1GL1UQ51
-UQ22.1-BGS/R
Clamp 22

=V1GL1UQ51UQ21+.GL1UQ51UQ21/1

=V1GL1UQ51UQ23+.GL1UQ51UQ23/1

			Date	1/17/2023	Volvo Trucks North America	Valiant TMS	FESTO DQ CONNECTION QN22	Drawing name: =2V09&EFS-EL	= V1GL1UQ51UQ22
			Ed.	MKLEPADLO					+ V1GL1UQ51UQ22
			Appr		P6700 Bodyside LH - Robot Cell 2V09			Document type: EFS	Project nr: 22-16150
Modification	Date	Name	Original		Replacement of	Replaced by	Scale 1:1		Page 1 / 1533

0	1	2	3	4	5	6	7	8	9

=V1GL1UQ51KF3
+.GL1UQ51

-KF3.22
=V1GL1UQ51KF3+V1GL1UQ51/2.1

Clamp 23 (RST)
=V1GL1UQ51KF3
+V1GL1UQ51
-QN23.1_Q
=V1GL1UQ51KF3
+V1GL1UQ51/2.3
Q2050.4

Clamp 23 (SET)
=V1GL1UQ51KF3
+V1GL1UQ51
-QN23.2_Q
=V1GL1UQ51KF3
+V1GL1UQ51/2.3
Q2050.5

1.1 Pneumatic Valve

1.2 Pneumatic Valve

-QN23 .1 .2

=V1GL1UQ51KF3+V1GL1UQ51/1.3
+.GL1UQ51UQ23.1-W1

-W1
RKC 4.4T-5-RSC 4.4T/S3060
5m

BN BU BK WH

-BGS/R
1 3
+ -
TÜNKERS
1324644
A2 A1
2 4

Clamp 23

=V1GL1UQ51UQ23.1
+.GL1UQ51UQ23.1
-UQ23.1

=V1GL1UQ51 -UQ23.1-BGS/R Clamp 23

=V1GL1UQ51UQ22+.GL1UQ51UQ22/1

=V1GL1UQ51UQ24+.GL1UQ51UQ24/1

			Date	1/17/2023	Volvo Trucks North America	Valiant TMS	FESTO DQ CONNECTION QN23	Drawing name: =2V09&EFS-EL	= V1GL1UQ51UQ23
			Ed.	MKLEPADLO					+ V1GL1UQ51UQ23
			Appr		P6700 Bodyside LH - Robot Cell 2V09			Document type: EFS	Project nr: 22-16150
Modification	Date	Name	Original		Replacement of	Replaced by	Scale 1:1		Page 1 / 1533

0	1	2	3	4	5	6	7	8	9

=V1GL1UQ51KF3
+.GL1UQ51

-KF3.22
=V1GL1UQ51KF3+V1GL1UQ51/2.1

Clamp 24 (RST)	Clamp 24 (SET)
=V1GL1UQ51KF3 +V1GL1UQ51 -QN24.1_Q =V1GL1UQ51KF3 +V1GL1UQ51/2.3 Q2050.6	=V1GL1UQ51KF3 +V1GL1UQ51 -QN24.2_Q =V1GL1UQ51KF3 +V1GL1UQ51/2.3 Q2050.7
2.1 Pneumatic Valve	2.2 Pneumatic Valve
.1	.2

-QN24

=V1GL1UQ51KF3+V1GL1UQ51/1.4
+.GL1UQ51UQ24.1-W1

-W1
RKC 4.4T-4-RSC 4.4T/S3060
4m

BN BU BK WH

-BGS/R
1 3
+ -
TÜNKERS
1324638
A2 A1
2 4

Clamp 24

=V1GL1UQ51UQ24.1
+.GL1UQ51UQ24.1
-UQ24.1

=V1GL1UQ51 -UQ24.1-BGS/R Clamp 24

=V1GL1UQ51UQ23+.GL1UQ51UQ23/1

=V1GL1UQ51UQ25+.GL1UQ51UQ25/1

			Date	1/17/2023	Volvo Trucks North America		Valiant TMS	FESTO DQ CONNECTION QN24	Drawing name: =2V09&EFS-EL	= V1GL1UQ51UQ24
			Ed.	MKLEPADLO						+ V1GL1UQ51UQ24
			Appr		P6700 Bodyside LH - Robot Cell 2V09				Document type: EFS	Project nr: 22-16150
Modification	Date	Name	Original		Replacement of	Replaced by	Scale 1:1			Page 1 / 1533

0	1	2	3	4	5	6	7	8	9

=V1GL1UQ51KF3
+.GL1UQ51

-KF3.23
=V1GL1UQ51KF3+V1GL1UQ51/2.1

Clamps 25 (RST)
=V1GL1UQ51KF3
+V1GL1UQ51
-QN25.1_Q
=V1GL1UQ51KF3
+V1GL1UQ51/2.3
Q2051.0

Clamps 25 (SET)
=V1GL1UQ51KF3
+V1GL1UQ51
-QN25.2_Q
=V1GL1UQ51KF3
+V1GL1UQ51/2.3
Q2051.1

1.1 Pneumatic Valve

1.2 Pneumatic Valve

.1

.2

-QN25

=V1GL1UQ51KF3+V1GL1UQ51/1.5
+.GL1UQ51UQ25.1-W1

=V1GL1UQ51KF3+V1GL1UQ51/1.6
+.GL1UQ51UQ25.2-W1

-W1
RKC 4.4T-3-RSC 4.4T/S3060
3m

BN BU BK WH

1 3

+ -

-BGS/R

TÜNKERS
Erfindergeist serienmäßig.

1324638

A2 A1

2 4

Clamps 25

=V1GL1UQ51UQ25.1
+.GL1UQ51UQ25.1
-UQ25.1

=V1GL1UQ51
-UQ25.1-BGS/R
Clamps 25

Clamps 25

=V1GL1UQ51UQ25.2
+.GL1UQ51UQ25.2
-UQ25.2

=V1GL1UQ51
-UQ25.2-BGS/R
Clamps 25

=V1GL1UQ51UQ24+.GL1UQ51UQ24/1

=V1GL1UQ51WC4+V1GL1UQ51/1

			Date	1/17/2023	Volvo Trucks North America		Valiant TMS	FESTO DQ CONNECTION QN25	Drawing name: =2V09&EFS-EL	= V1GL1UQ51UQ25
			Ed.	MKLEPADLO						+ V1GL1UQ51UQ25
			Appr		P6700 Bodyside LH - Robot Cell 2V09				Document type: EFS	Project nr: 22-16150
Modification	Date	Name	Original		Replacement of	Replaced by	Scale 1:1			Page 1 / 1533

0	1	2	3	4	5	6	7	8	9

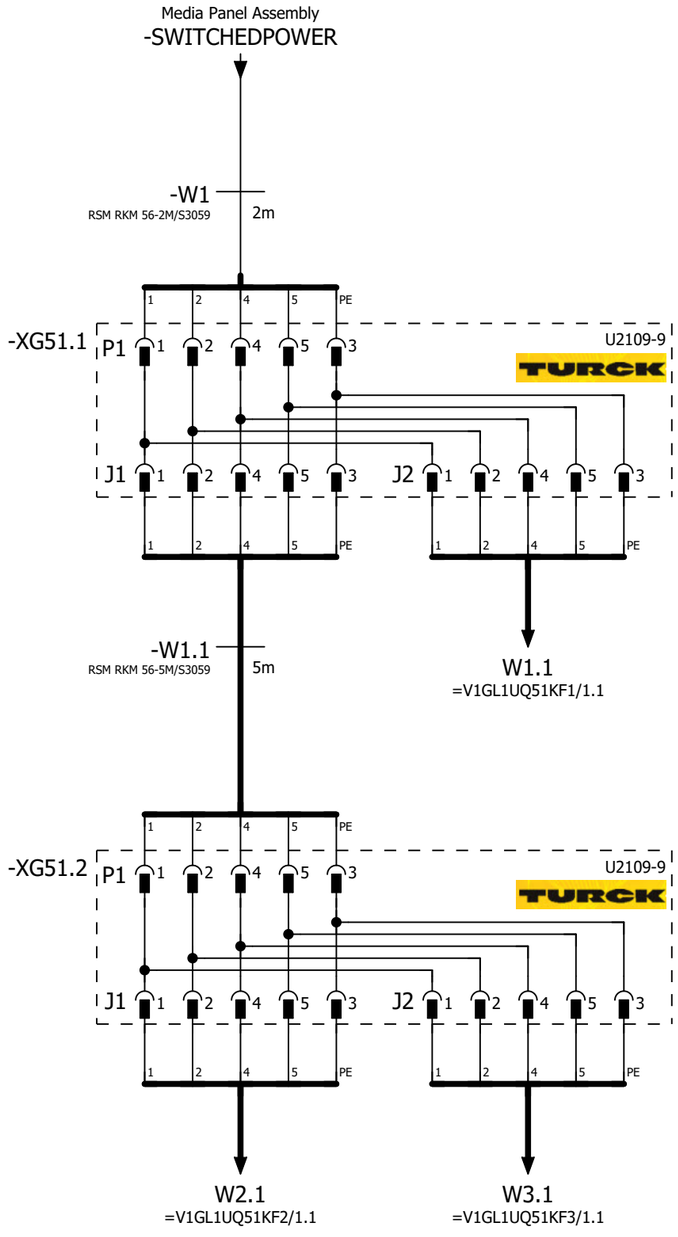

=V1GL1UQ51UQ25+.GL1UQ51UQ25/1

=V1GL1UQ52BG0+.GL1UQ52/1

			Date	1/17/2023	Volvo Trucks North America	Valiant TMS	24VDC	Drawing name: =2V09&EFS-EL	= V1GL1UQ51WC4
			Ed.	MKLEPADLO					+ V1GL1UQ51
			Appr		P6700 Bodyside LH - Robot Cell 2V09	Scale 1:1		Document type: EFS	Project nr: 22-16150
Modification	Date	Name	Original		Replacement of	Replaced by			Page 1 / 1533

0	1	2	3	4	5	6	7	8	9

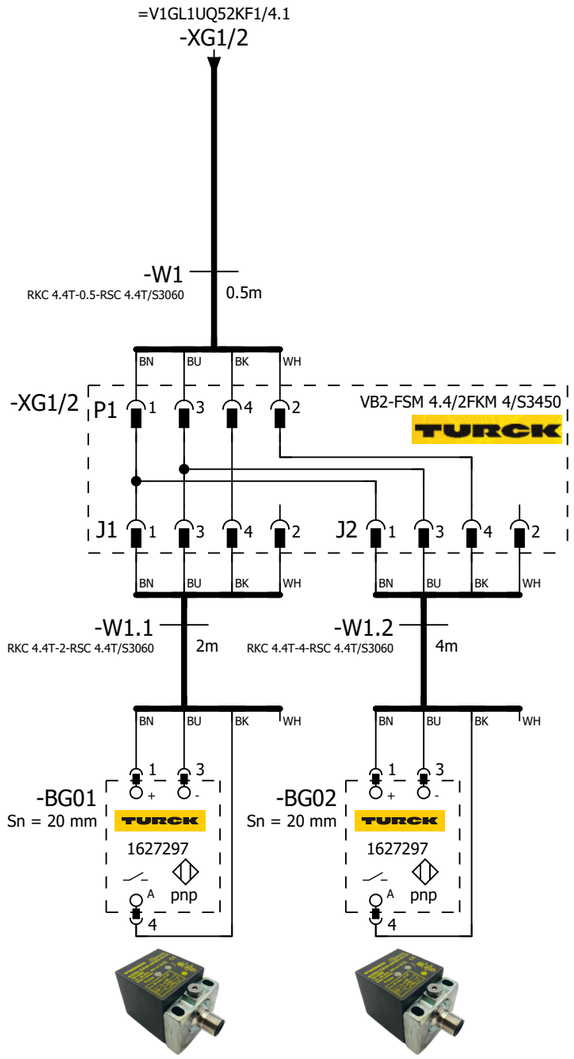

=V1GL1UQ52
-BG01
Door Frame
Assembly

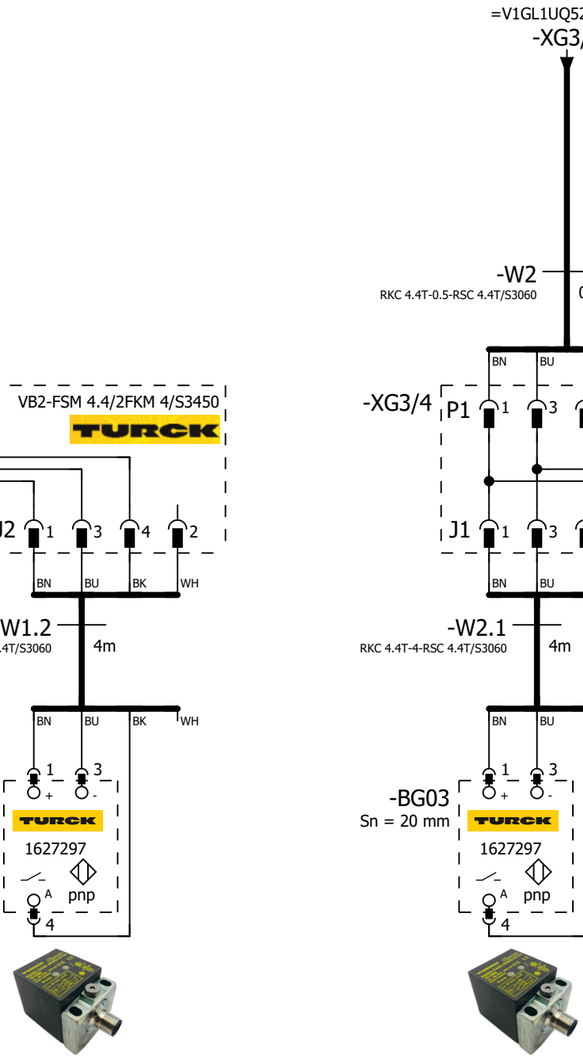

=V1GL1UQ52
-BG02
Door Frame
Assembly

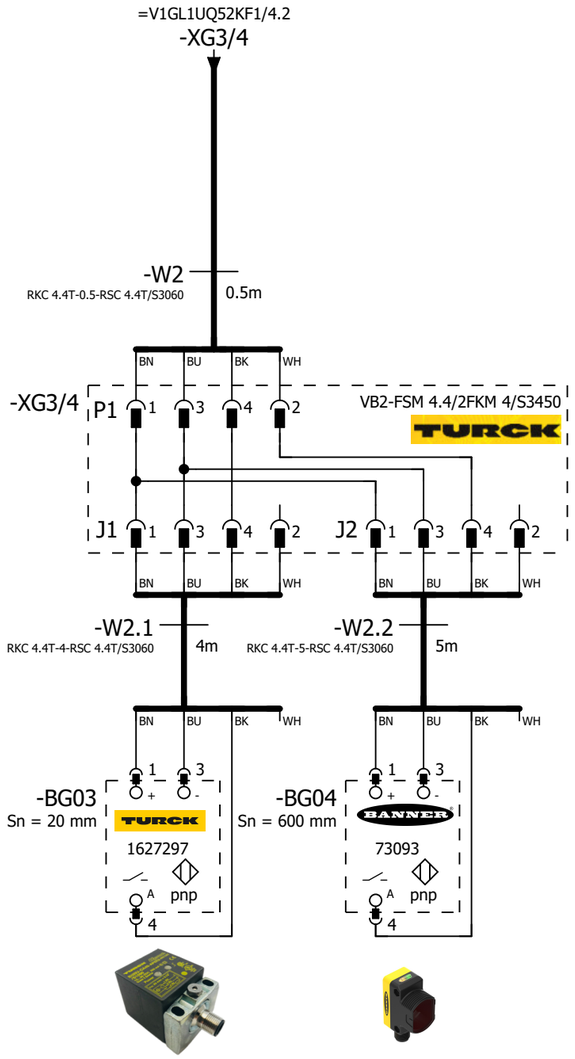

=V1GL1UQ52
-BG03
Outer Front Sill

=V1GL1UQ52
-BG04
Extruded Seal
Front

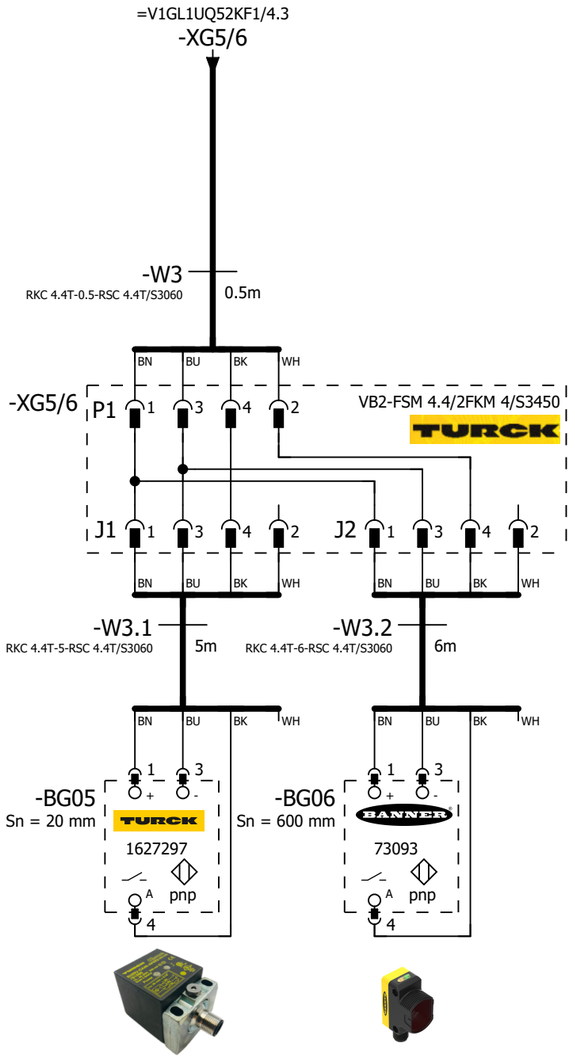

=V1GL1UQ52
-BG05
Outer Front Sill

=V1GL1UQ52
-BG06
Extruded Seal
Rear

=V1GL1UQ51WC4+.GL1UQ51/1

			Date	1/17/2023	Volvo Trucks North America	Valiant TMS	SENSORS	Drawing name: =2V09&EFS-EL	= V1GL1UQ52BG0
			Ed.	MKLEPADLO					+ V1GL1UQ52
			Appr		P6700 Bodyside LH - Robot Cell 2V09	Scale 1:1		Document type: EFS / Project nr: 22-16150	Page 1 / 1533
Modification	Date	Name	Original		Replacement of / Replaced by				

0	1	2	3	4	5	6	7	8	9

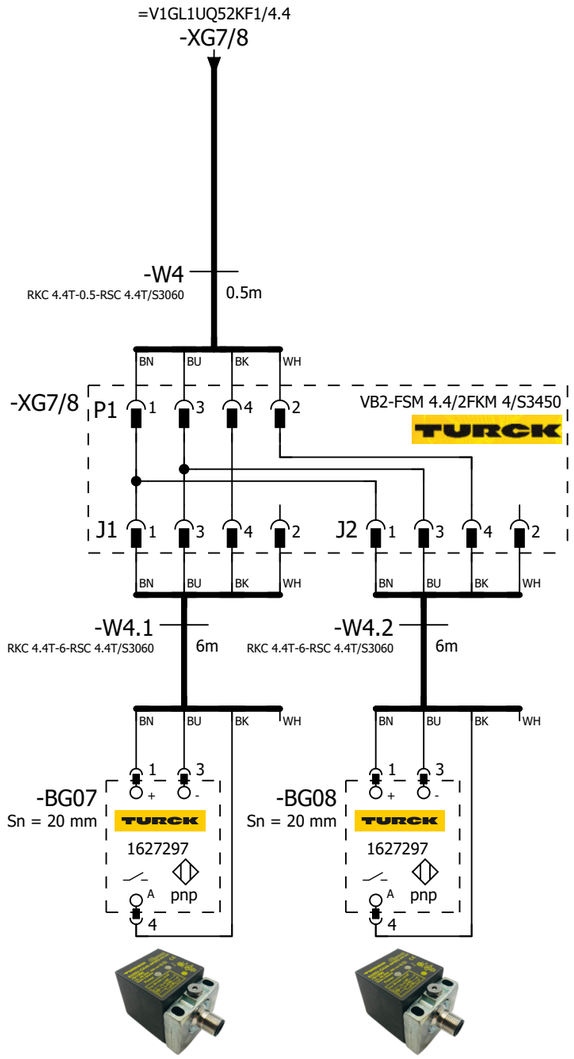

=V1GL1UQ52
-BG07
Rear Sill Sleeper

=V1GL1UQ52
-BG08
Rear Sill Sleeper

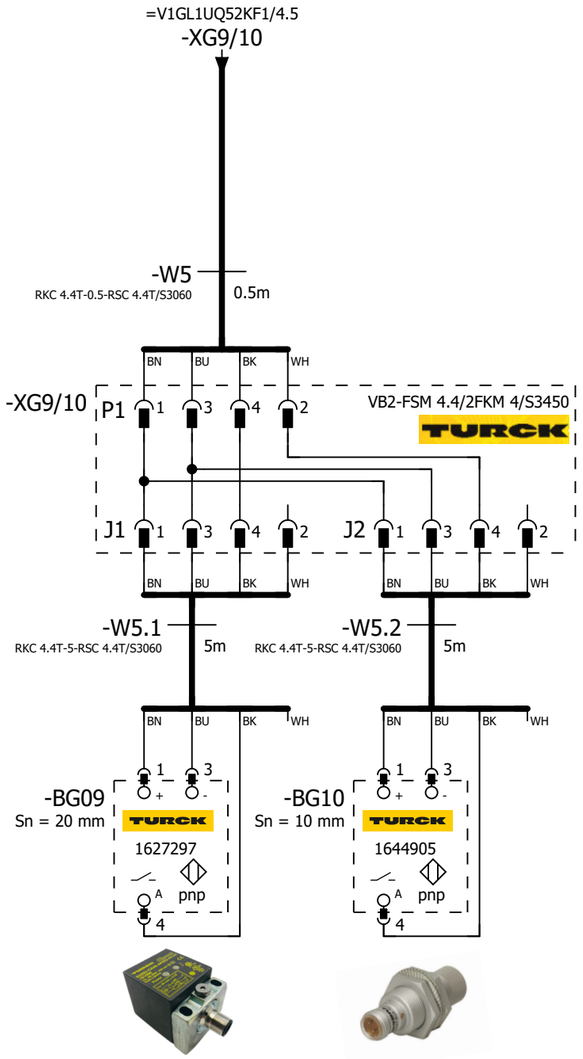

=V1GL1UQ52
-BG09
Lug Door Mnt
Assembly

=V1GL1UQ52
-BG10
Lug Door Mnt
Assembly

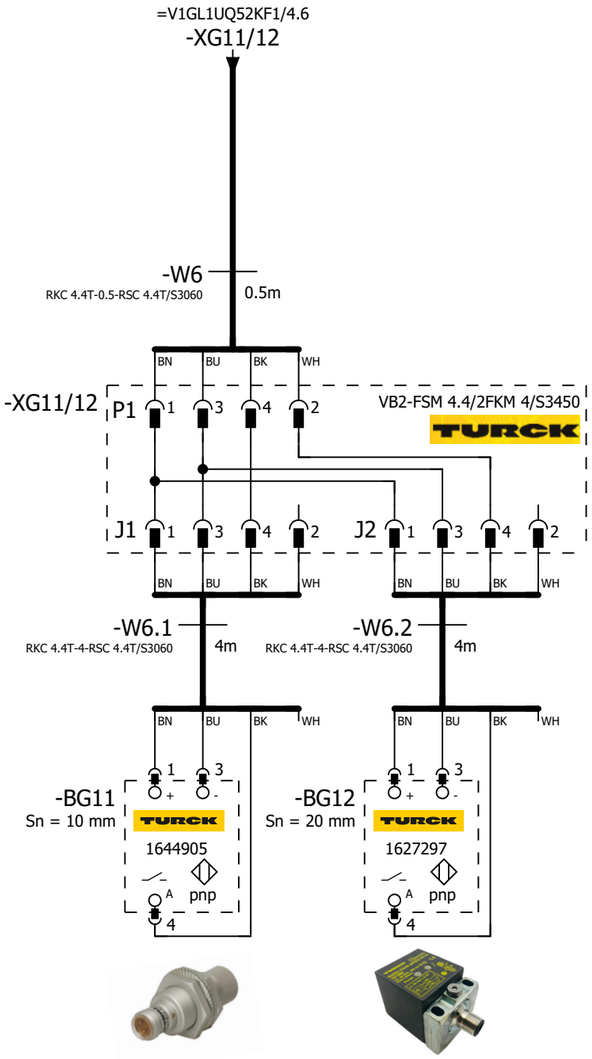

=V1GL1UQ52
-BG11
Lwr Cabinet Mnt
Assembly

=V1GL1UQ52
-BG12
Header Sub
Assembly

1 3

			Date	1/17/2023	Volvo Trucks North America	Valiant TMS	SENSORS	Drawing name: =2V09&EFS-EL	= V1GL1UQ52BG0
			Ed.	MKLEPADLO					+ V1GL1UQ52
			Appr		P6700 Bodyside LH - Robot Cell 2V09			Document type: EFS	Project nr: 22-16150
Modification	Date	Name	Original		Replacement of / Replaced by	Scale 1:1			Page 2 / 1533

0	1	2	3	4	5	6	7	8	9

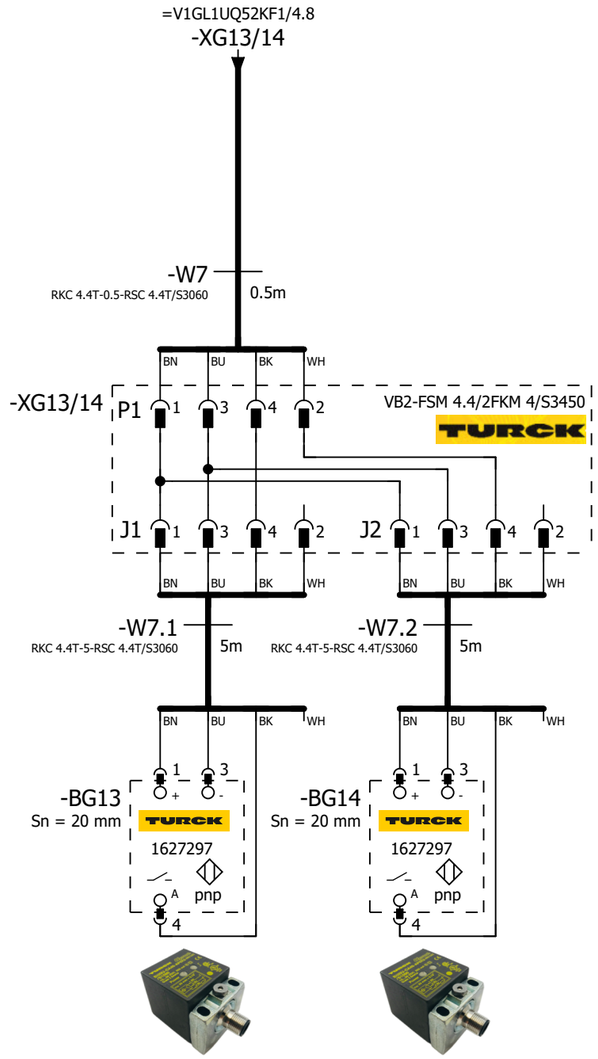

=V1GL1UQ52
-BG13
Header Sub
Assembly

=V1GL1UQ52
-BG14
Bunk Support

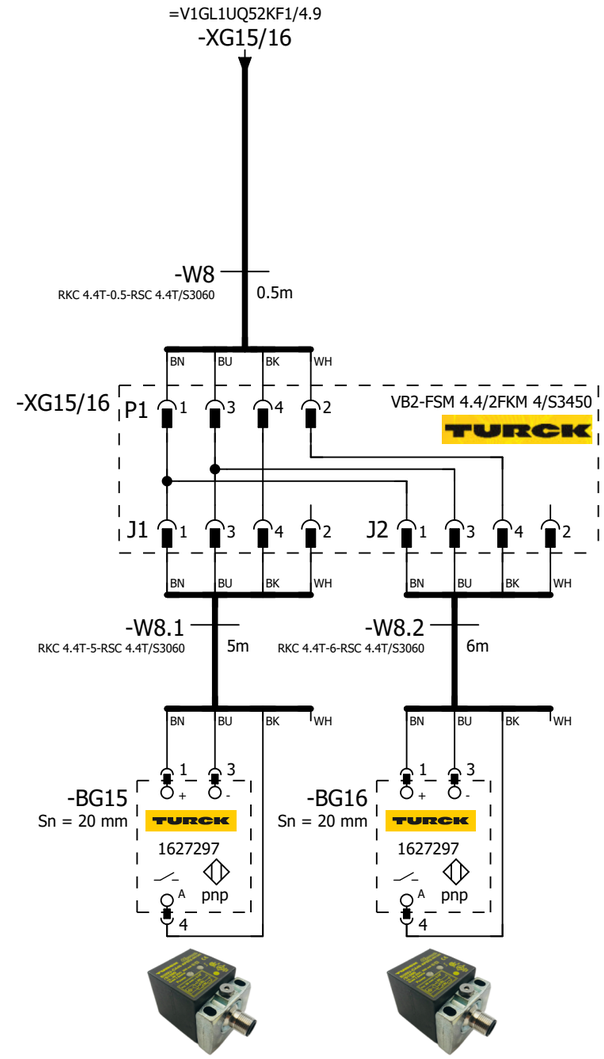

=V1GL1UQ52
-BG15
Rear Lower
Assembly

=V1GL1UQ52
-BG16
Rear Lower
Assembly

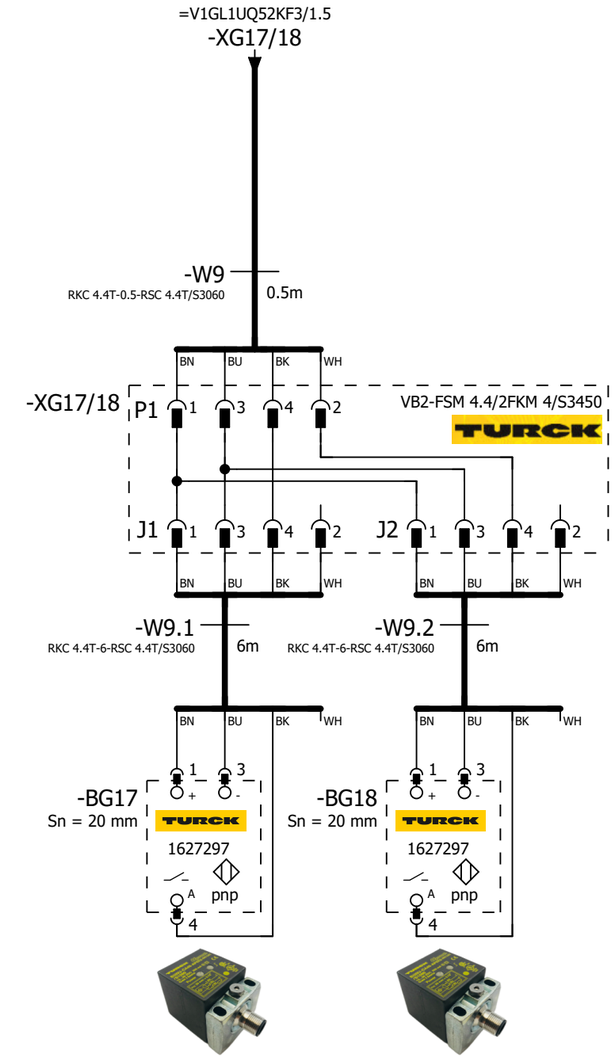

=V1GL1UQ52
-BG17
Bunk Support

=V1GL1UQ52
-BG18
C-Pillar Assembly

2 4

			Date	1/17/2023	Volvo Trucks North America	Valiant TMS	SENSORS	Drawing name: =2V09&EFS-EL	= V1GL1UQ52BG0
			Ed.	MKLEPADLO					+ V1GL1UQ52
			Appr		P6700 Bodyside LH - Robot Cell 2V09			Document type: EFS	Project nr: 22-16150
Modification	Date	Name	Original		Replacement of / Replaced by	Scale 1:1			Page 3 / 1533

0	1	2	3	4	5	6	7	8	9

=V1GL1UQ52KF3/1.6
-XG19/20

-W10
RKC 4.4T-0.5-RSC 4.4T/S3060
0.5m

BN BU BK WH

-XG19/20 P1 1 3 4 2 VB2-FSM 4.4/2FKM 4/S3450

J1 1 3 4 2 J2 1 3 4 2

BN BU BK WH

-W10.1
RKC 4.4T-5-RSC 4.4T/S3060
5m

-W10.2
RKC 4.4T-4-RSC 4.4T/S3060
4m

BN BU BK WH

-BG19
Sn = 20 mm
TURCK
1627297
1 3
+ -
A pnp
4

-BG20
Sn = 20 mm
TURCK
1627297
1 3
+ -
A pnp
4

=V1GL1UQ52
-BG19
C-Pillar Assembly

=V1GL1UQ52
-BG20
Blind Lower

=V1GL1UQ52KF3/1.8
-XG21/22

-W11
RKC 4.4T-0.5-RSC 4.4T/S3060
0.5m

BN BU BK WH

-XG21/22 P1 1 3 4 2 VB2-FSM 4.4/2FKM 4/S3450

J1 1 3 4 2 J2 1 3 4 2

BN BU BK WH

-W11.1
RKC 4.4T-5-RSC 4.4T/S3060
5m

-W11.2
RKC 4.4T-5-RSC 4.4T/S3060
5m

BN BU BK WH

-BG21
Sn = 20 mm
TURCK
1627297
1 3
+ -
A pnp
4

-BG22
Sn = 10 mm
TURCK
1644905
1 3
+ -
A pnp
4

=V1GL1UQ52
-BG21
Blind Lower

=V1GL1UQ52
-BG22
Vertical Member

=V1GL1UQ52KF3/1.9
-XG23/24

-W12
RKC 4.4T-0.5-RSC 4.4T/S3060
0.5m

BN BU BK WH

-XG23/24 P1 1 3 4 2 VB2-FSM 4.4/2FKM 4/S3450

J1 1 3 4 2 J2 1 3 4 2

BN BU BK WH

-W12.1
RKC 4.4T-4-RSC 4.4T/S3060
4m

-W12.2
RKC 4.4T-4-RSC 4.4T/S3060
4m

BN BU BK WH

-BG23
Sn = 20 mm
TURCK
1627297
1 3
+ -
A pnp
4

-BG24
Sn = 10 mm
TURCK
1644905
1 3
+ -
A pnp
4

=V1GL1UQ52
-BG23
Vertical Member

=V1GL1UQ52
-BG24
Horizontal Mbr /
Cabinet Mnt

3

5

			Date	1/17/2023	Volvo Trucks North America	Valiant TMS	SENSORS	Drawing name: =2V09&EFS-EL	= V1GL1UQ52BG0
			Ed.	MKLEPADLO					+ V1GL1UQ52
			Appr		P6700 Bodyside LH - Robot Cell 2V09	Scale 1:1		Document type: EFS	Project nr: 22-16150
Modification	Date	Name	Original		Replacement of	Replaced by			Page 4 / 1533

0	1	2	3	4	5	6	7	8	9

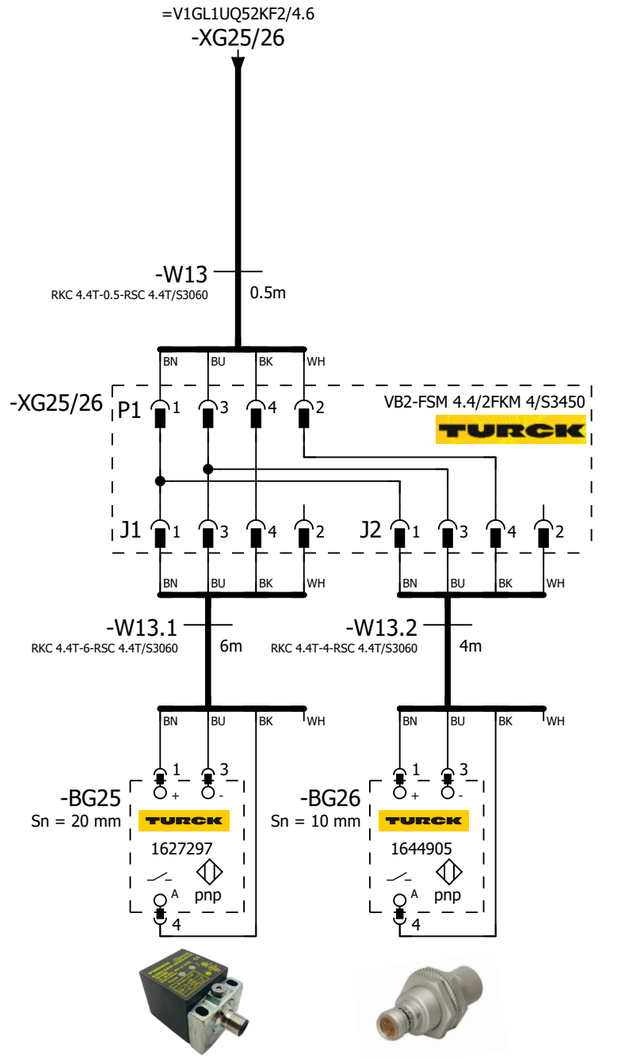

=V1GL1UQ52
-BG25
Header Sub
Assembly

=V1GL1UQ52
-BG26
Cabinet Mount

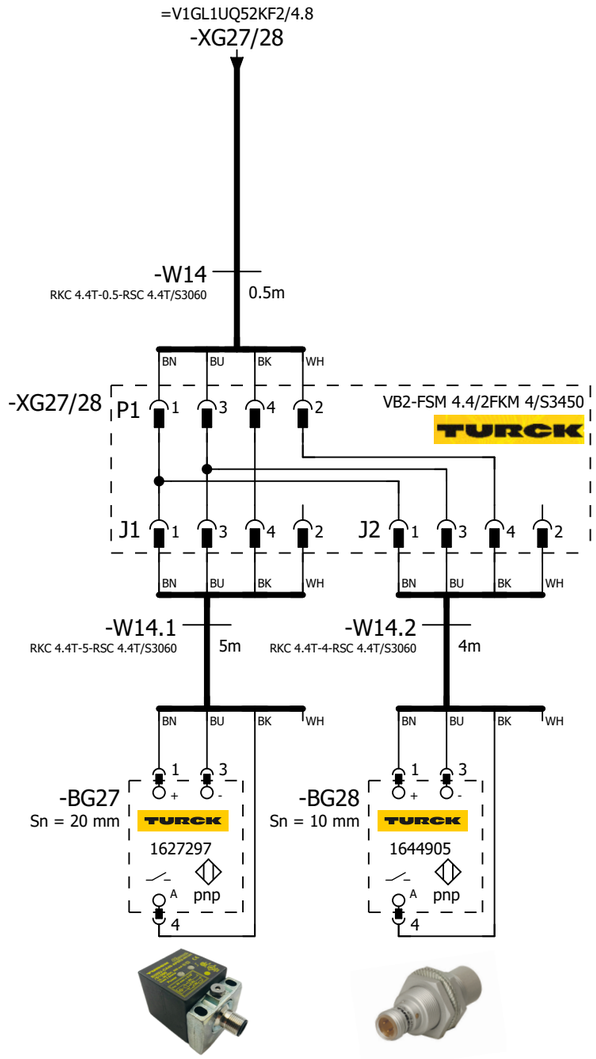

=V1GL1UQ52
-BG27
Lw Cabinet Mnt
Assembly LH/RH

=V1GL1UQ52
-BG28
Intermed H R
Long

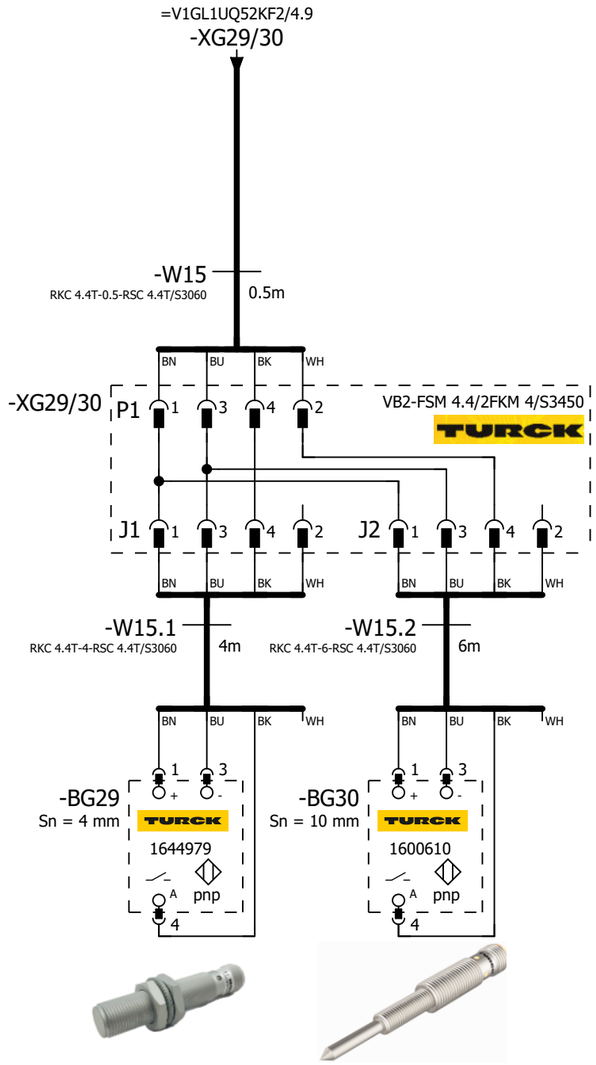

=V1GL1UQ52
-BG29
Horizontal
Member

=V1GL1UQ52
-BG30
Nut L320 Part

4

=V1GL1UQ52KF1/1

			Date	1/17/2023	Volvo Trucks North America	Valiant TMS	SENSORS	Drawing name: =2V09&EFS-EL	= V1GL1UQ52BG0
			Ed.	MKLEPADLO					+ V1GL1UQ52
			Appr		P6700 Bodyside LH - Robot Cell 2V09			Document type: EFS	Project nr: 22-16150
Modification	Date	Name	Original		Replacement of / Replaced by	Scale 1:1			Page 5 / 1533

0	1	2	3	4	5	6	7	8	9

=V1GL1UQ52WC4/1.6 / W1.1

-W1.1
RSM RKM 56-2M/S3059
2m

Media Panel Assembly / -WF1

-WF1
PROFINET Cable
6XV1840-3AH10

KF1-P2 / =V1GL1UQ52KF2/1.3

-KF1

X20 M12, 7/8" 1 2 PE 4 5
0V_VAL / OUT
0V_EL / SEN
FE
24V_EL / SEN
24V_VAL / OUT

ON OFF 1 2 1 2

M12 -TP1
M12 -TP2

FESTO
Bus node + Interlinking block
548755 + 550208

I2075.0	DI 0 X1:4	V1GL1UQ52UQ1.1-BGR	Shot Pins 1 (RESET)
I2075.1	DI 1 X1:2	V1GL1UQ52UQ1.1-BGS	Shot Pins 1 (SET)
I2075.2	DI 2 X2:4	V1GL1UQ52UQ1.2-BGR	Shot Pins 1 (RESET)
I2075.3	DI 3 X2:2	V1GL1UQ52UQ1.2-BGS	Shot Pins 1 (SET)
I2075.4	DI 4 X3:4	V1GL1UQ52UQ1.3-BGR	Shot Pins 1 (RESET)
I2075.5	DI 5 X3:2	V1GL1UQ52UQ1.3-BGS	Shot Pins 1 (SET)
I2075.6	DI 6 X4:4	V1GL1UQ52UQ1.4-BGR	Shot Pins 1 (RESET)
I2075.7	DI 7 X4:2	V1GL1UQ52UQ1.4-BGS	Shot Pins 1 (SET)
I2076.0	DI 8 X5:4	V1GL1UQ52UQ1.5-BGR	Shot Pins 1 (RESET)
I2076.1	DI 9 X5:2	V1GL1UQ52UQ1.5-BGS	Shot Pins 1 (SET)
I2076.2	DI 10 X6:4	V1GL1UQ52UQ1.6-BGR	Shot Pins 1 (RESET)
I2076.3	DI 11 X6:2	V1GL1UQ52UQ1.6-BGS	Shot Pins 1 (SET)
I2076.4	DI 12 X7:4	V1GL1UQ52UQ2.1-BGR	Shot Pin 2 (RESET)
I2076.5	DI 13 X7:2	V1GL1UQ52UQ2.1-BGS	Shot Pin 2 (SET)
I2076.6	DI 14 X8:4	V1GL1UQ52UQ3.1-BGR	Shot Pins 3 (RESET)
I2076.7	DI 15 X8:2	V1GL1UQ52UQ3.1-BGS	Shot Pins 3 (SET)

-KF1.11

FESTO
CPX-M-AB-8-M12X2-5POL
549335

X1 M12 1 2 3 4 5 — 24V DI 1 0V DI 0 FE — BN WH BU BK
X2 M12 1 2 3 4 5 — 24V DI 3 0V DI 2 FE — BN WH BU BK
X3 M12 1 2 3 4 5 — 24V DI 5 0V DI 4 FE — BN WH BU BK
X4 M12 1 2 3 4 5 — 24V DI 7 0V DI 6 FE — BN WH BU BK
X5 M12 1 2 3 4 5 — 24V DI 9 0V DI 8 FE — BN WH BU BK
X6 M12 1 2 3 4 5 — 24V DI 11 0V DI 10 FE — BN WH BU BK
X7 M12 1 2 3 4 5 — 24V DI 13 0V DI 12 FE — BN WH BU BK
X8 M12 1 2 3 4 5 — 24V DI 15 0V DI 14 FE — BN WH BU BK

+V1GL1UQ52UQ1.1-W1
=V1GL1UQ52UQ1+.GL1UQ52UQ1/1.1

+V1GL1UQ52UQ1.2-W1
=V1GL1UQ52UQ1+.GL1UQ52UQ1/1.2

+V1GL1UQ52UQ1.3-W1
=V1GL1UQ52UQ1+.GL1UQ52UQ1/1.4

+V1GL1UQ52UQ1.4-W1
=V1GL1UQ52UQ1+.GL1UQ52UQ1/1.5

+V1GL1UQ52UQ1.5-W1
=V1GL1UQ52UQ1+.GL1UQ52UQ1/1.7

+V1GL1UQ52UQ1.6-W1
=V1GL1UQ52UQ1+.GL1UQ52UQ1/1.9

+V1GL1UQ52UQ2.1-W1
=V1GL1UQ52UQ2+.GL1UQ52UQ2/1.1

+V1GL1UQ52UQ3.1-W1
=V1GL1UQ52UQ3+.GL1UQ52UQ3/1.1

=V1GL1UQ52BG0/5

			Date	1/17/2023	Volvo Trucks North America	Valiant TMS	CONNECTING MOD. FOR VTSA MANIFOLD	Drawing name: =2V09&EFS-EL	= V1GL1UQ52KF1
			Ed.	MKLEPADLO					+ V1GL1UQ52
			Appr		P6700 Bodyside LH - Robot Cell 2V09			Document type: EFS	Project nr: 22-16150
Modification	Date	Name	Original		Replacement of / Replaced by	Scale 1:1			Page 1 / 1533

0	1	2	3	4	5	6	7	8	9

-KF1.12

FESTO

CPX-M-AB-8-M12X2-5POL

549335

I2077.0	DI 0 X1:4	V1GL1UQ52UQ3.2-BGR	Shot Pins 3 (RESET)
I2077.1	DI 1 X1:2	V1GL1UQ52UQ3.2-BGS	Shot Pins 3 (SET)
I2077.2	DI 2 X2:4	V1GL1UQ52UQ3.3-BGR	Shot Pins 3 (RESET)
I2077.3	DI 3 X2:2	V1GL1UQ52UQ3.3-BGS	Shot Pins 3 (SET)
I2077.4	DI 4 X3:4	V1GL1UQ52UQ3.4-BGR	Shot Pins 3 (RESET)
I2077.5	DI 5 X3:2	V1GL1UQ52UQ3.4-BGS	Shot Pins 3 (SET)
I2077.6	DI 6 X4:4	V1GL1UQ52UQ3.5-BGR	Shot Pins 3 (RESET)
I2077.7	DI 7 X4:2	V1GL1UQ52UQ3.5-BGS	Shot Pins 3 (SET)
I2078.0	DI 8 X5:4	V1GL1UQ52UQ4.1-BGR	Shot Pins 4 (RESET)
I2078.1	DI 9 X5:2	V1GL1UQ52UQ4.1-BGS	Shot Pins 4 (SET)
I2078.2	DI 10 X6:4	V1GL1UQ52UQ4.2-BGR	Shot Pins 4 (RESET)
I2078.3	DI 11 X6:2	V1GL1UQ52UQ4.2-BGS	Shot Pins 4 (SET)
I2078.4	DI 12 X7:4	V1GL1UQ52UQ5.1-BGR	Shot Pins 5 (RESET)
I2078.5	DI 13 X7:2	V1GL1UQ52UQ5.1-BGS	Shot Pins 5 (SET)
I2078.6	DI 14 X8:4	V1GL1UQ52UQ5.2-BGR	Shot Pins 5 (RESET)
I2078.7	DI 15 X8:2	V1GL1UQ52UQ5.2-BGS	Shot Pins 5 (SET)

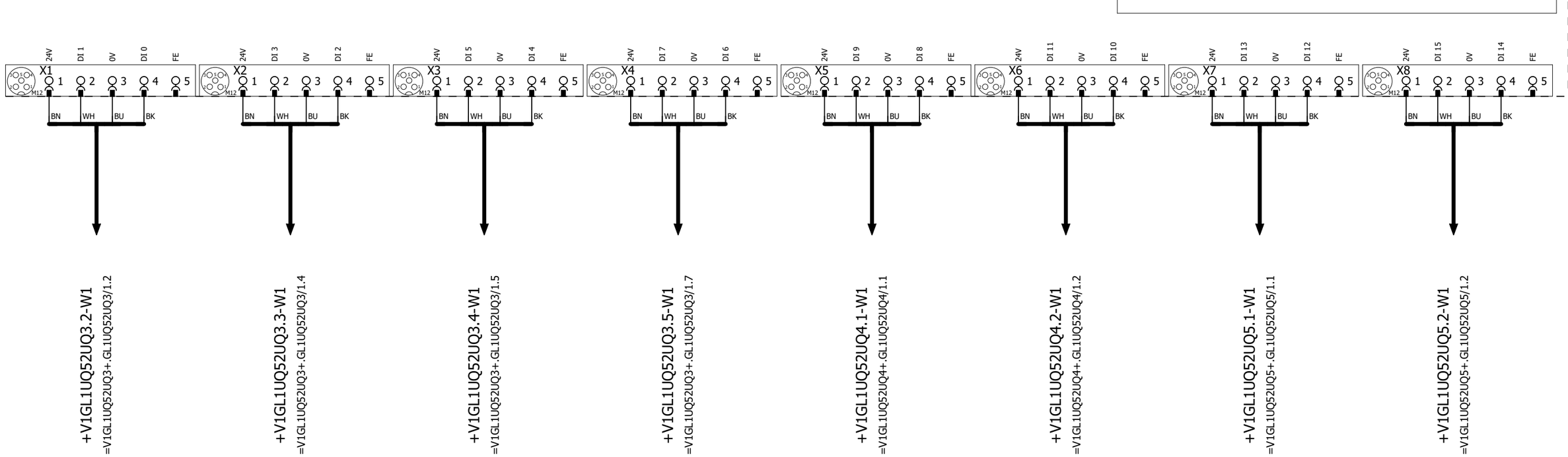

1 3

			Date	1/17/2023	Volvo Trucks North America	Valiant TMS	I/O MOD. DI16 (8 x M12) FOR VTSA-F	Drawing name: =2V09&EFS-EL	= V1GL1UQ52KF1
			Ed.	MKLEPADLO					+ V1GL1UQ52
			Appr		P6700 Bodyside LH - Robot Cell 2V09			Document type: EFS	Project nr: 22-16150
Modification	Date	Name	Original		Replacement of / Replaced by	Scale 1:1			Page 2 / 1533

I2079.0	DI 0 X1:4	V1GL1UQ52UQ6.1-BGR	Shot Pin 6 (RESET)
I2079.1	DI 1 X1:2	V1GL1UQ52UQ6.1-BGS	Shot Pin 6 (SET)
I2079.2	DI 2 X2:4	V1GL1UQ52UQ7.1-BGR	Shot Pin 7 (RESET)
I2079.3	DI 3 X2:2	V1GL1UQ52UQ7.1-BGS	Shot Pin 7 (SET)
I2079.4	DI 4 X3:4	V1GL1UQ52UQ8.1-BGR	Slide 8 (RESET)
I2079.5	DI 5 X3:2	V1GL1UQ52UQ8.1-BGS	Slide 8 (SET)
I2079.6	DI 6 X4:4	V1GL1UQ52UQ9.1-BGR	Shot Pins 9 (RESET)
I2079.7	DI 7 X4:2	V1GL1UQ52UQ9.1-BGS	Shot Pins 9 (SET)
I2080.0	DI 8 X5:4	V1GL1UQ52UQ9.2-BGR	Shot Pins 9 (RESET)
I2080.1	DI 9 X5:2	V1GL1UQ52UQ9.2-BGS	Shot Pins 9 (SET)
I2080.2	DI 10 X6:4	I2080.2	Spare
I2080.3	DI 11 X6:2	I2080.3	Spare
I2080.4	DI 12 X7:4	I2080.4	Spare
I2080.5	DI 13 X7:2	I2080.5	Spare
I2080.6	DI 14 X8:4	I2080.6	Spare
I2080.7	DI 15 X8:2	I2080.7	Spare

-KF1.13

FESTO

CPX-M-AB-8-M12X2-5POL

549335

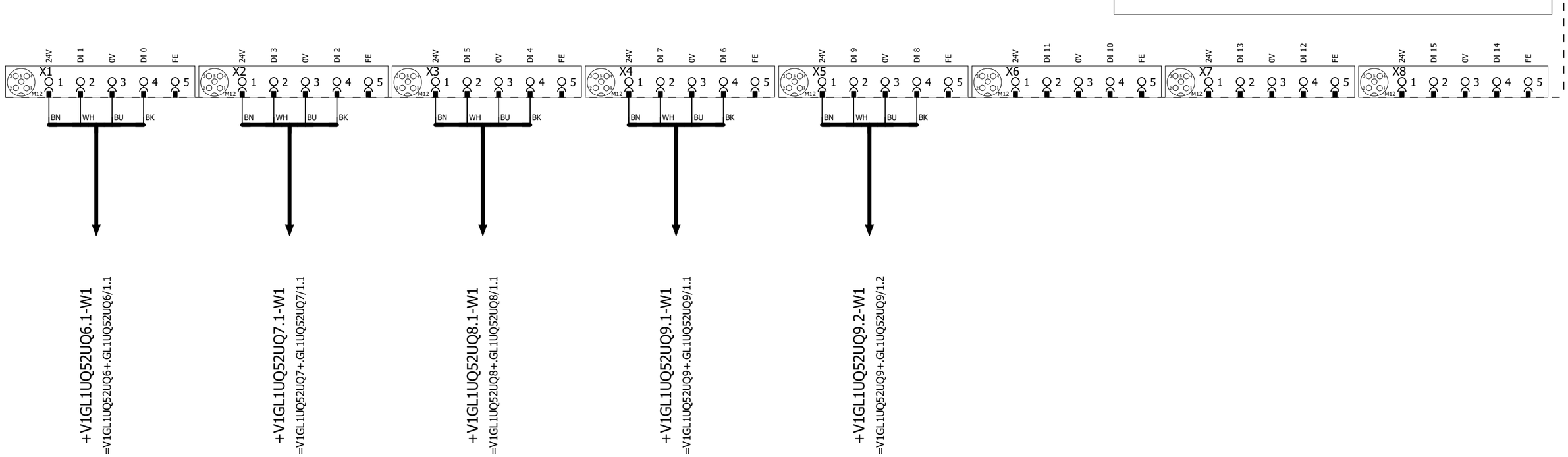

2 4

			Date	1/17/2023	Volvo Trucks North America	Valiant TMS	I/O MOD. DI16 (8 x M12) FOR VTSA-F	Drawing name: =2V09&EFS-EL	= V1GL1UQ52KF1	
			Ed.	MKLEPADLO					+ V1GL1UQ52	
			Appr		P6700 Bodyside LH - Robot Cell 2V09	Scale 1:1		Document type: EFS	Project nr: 22-16150	Page 3
Modification	Date	Name	Original		Replacement of	Replaced by				1533

0	1	2	3	4	5	6	7	8	9

I2081.0	DI 0 X1:4	V1GL1UQ52-BG01	Sensor Door Frame Assembly
I2081.1	DI 1 X1:2	V1GL1UQ52-BG02	Sensor Door Frame Assembly
I2081.2	DI 2 X2:4	V1GL1UQ52-BG03	Sensor Outer Front Sill
I2081.3	DI 3 X2:2	V1GL1UQ52-BG04	Sensor Extruded Seal Front
I2081.4	DI 4 X3:4	V1GL1UQ52-BG05	Sensor Outer Front Sill
I2081.5	DI 5 X3:2	V1GL1UQ52-BG06	Sensor Extruded Seal Rear
I2081.6	DI 6 X4:4	V1GL1UQ52-BG07	Sensor Rear Sill Sleeper
I2081.7	DI 7 X4:2	V1GL1UQ52-BG08	Sensor Rear Sill Sleeper
I2082.0	DI 8 X5:4	V1GL1UQ52-BG09	Sensor Lug Door Mnt Assembly
I2082.1	DI 9 X5:2	V1GL1UQ52-BG10	Sensor Lug Door Mnt Assembly
I2082.2	DI 10 X6:4	V1GL1UQ52-BG11	Sensor Lower Cabinet Mnt Assembly
I2082.3	DI 11 X6:2	V1GL1UQ52-BG12	Sensor Header Sub Assembly
I2082.4	DI 12 X7:4	V1GL1UQ52-BG13	Sensor Header Sub Assembly
I2082.5	DI 13 X7:2	V1GL1UQ52-BG14	Sensor Bunk Support
I2082.6	DI 14 X8:4	V1GL1UQ52-BG15	Sensor Rear Lower Assembly
I2082.7	DI 15 X8:2	V1GL1UQ52-BG16	Sensor Rear Lower Assembly

-KF1.14

FESTO

CPX-M-AB-8-M12X2-5POL

549335

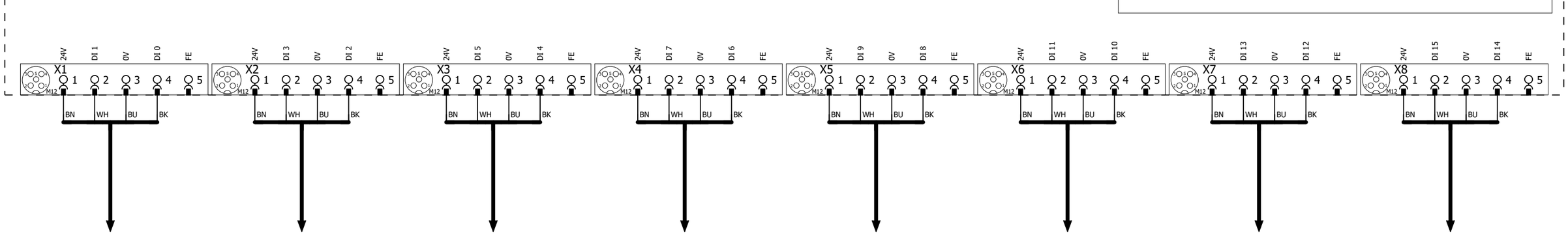

-XG1/2 =V1GL1UQ52BG0/1.1

-XG3/4 =V1GL1UQ52BG0/1.4

-XG5/6 =V1GL1UQ52BG0/1.6

-XG7/8 =V1GL1UQ52BG0/2.1

-XG9/10 =V1GL1UQ52BG0/2.4

-XG11/12 =V1GL1UQ52BG0/2.6

-XG13/14 =V1GL1UQ52BG0/3.1

-XG15/16 =V1GL1UQ52BG0/3.4

3 5

			Date	1/17/2023	Volvo Trucks North America	Valiant TMS	I/O MOD. DI16 (8 x M12) FOR VTSA-F	Drawing name: =2V09&EFS-EL	= V1GL1UQ52KF1
			Ed.	MKLEPADLO					+ V1GL1UQ52
			Appr		P6700 Bodyside LH - Robot Cell 2V09	Scale 1:1		Document type: EFS	Project nr: 22-16150
Modification	Date	Name	Original		Replacement of / Replaced by				Page 4 / 1533

-KF1 -KF1.11 -KF1.12 -KF1.13 -KF1.14 -KF1.20 -KF1.21 -KF1.22 -KF1.23 -KF1.24 -KF1.25 -KF1.26 -KF1.27

M1 M2 M3 M4 M5

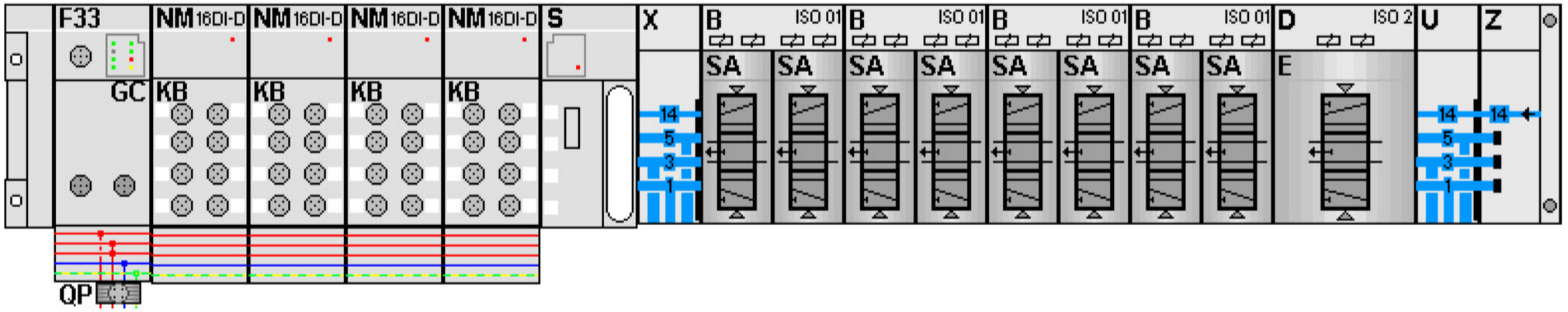

-KF1.21
=V1GL1UQ52UQ1+.GL1UQ52UQ1/1.3
=V1GL1UQ52UQ2+.GL1UQ52UQ2/1.3

FESTO

=V1GL1UQ52UQ1+.GL1UQ52UQ1/1.4	Q2075.0 DO 0 1.1	-QN1.1_Q	Shot Pins 1 (RST)
=V1GL1UQ52UQ1+.GL1UQ52UQ1/1.4	Q2075.1 DO 1 1.2	-QN1.2_Q	Shot Pins 1 (SET)
=V1GL1UQ52UQ2+.GL1UQ52UQ2/1.4	Q2075.2 DO 2 2.1	-QN2.1_Q	Shot Pin 2 (RST)
=V1GL1UQ52UQ2+.GL1UQ52UQ2/1.4	Q2075.3 DO 3 2.2	-QN2.2_Q	Shot Pin 2 (SET)

-KF1.22
=V1GL1UQ52UQ3+.GL1UQ52UQ3/1.3
=V1GL1UQ52UQ4+.GL1UQ52UQ4/1.3

FESTO

=V1GL1UQ52UQ3+.GL1UQ52UQ3/1.4	Q2075.4 DO 0 1.1	-QN3.1_Q	Shot Pins 3 (RST)
=V1GL1UQ52UQ3+.GL1UQ52UQ3/1.4	Q2075.5 DO 1 1.2	-QN3.2_Q	Shot Pins 3 (SET)
=V1GL1UQ52UQ4+.GL1UQ52UQ4/1.4	Q2075.6 DO 2 2.1	-QN4.1_Q	Shot Pins 4 (RST)
=V1GL1UQ52UQ4+.GL1UQ52UQ4/1.4	Q2075.7 DO 3 2.2	-QN4.2_Q	Shot Pins 4 (SET)

-KF1.23
=V1GL1UQ52UQ5+.GL1UQ52UQ5/1.3
=V1GL1UQ52UQ6+.GL1UQ52UQ6/1.3

FESTO

=V1GL1UQ52UQ5+.GL1UQ52UQ5/1.4	Q2076.0 DO 0 1.1	-QN5.1_Q	Shot Pins 5 (RST)
=V1GL1UQ52UQ5+.GL1UQ52UQ5/1.4	Q2076.1 DO 1 1.2	-QN5.2_Q	Shot Pins 5 (SET)
=V1GL1UQ52UQ6+.GL1UQ52UQ6/1.4	Q2076.2 DO 0 2.1	-QN6.1_Q	Shot Pin 6 (RST)
=V1GL1UQ52UQ6+.GL1UQ52UQ6/1.4	Q2076.3 DO 1 2.2	-QN6.2_Q	Shot Pin 6 (SET)

-KF1.24
=V1GL1UQ52UQ7+.GL1UQ52UQ7/1.3
=V1GL1UQ52UQ9+.GL1UQ52UQ9/1.3

FESTO

=V1GL1UQ52UQ7+.GL1UQ52UQ7/1.4	Q2076.4 DO 0 1.1	-QN7.1_Q	Shot Pin 7 (RST)
=V1GL1UQ52UQ7+.GL1UQ52UQ7/1.4	Q2076.5 DO 1 1.2	-QN7.2_Q	Shot Pin 7 (SET)
=V1GL1UQ52UQ9+.GL1UQ52UQ9/1.4	Q2076.6 DO 0 2.1	-QN8.1_Q	Shot Pins 9 (RST)
=V1GL1UQ52UQ9+.GL1UQ52UQ9/1.4	Q2076.7 DO 1 2.2	-QN8.2_Q	Shot Pins 9 (SET)

-KF1.25
=V1GL1UQ52UQ8+.GL1UQ52UQ8/1.3

FESTO

=V1GL1UQ52UQ8+.GL1UQ52UQ8/1.4	Q2077.0 DO 0 1.1	-QN9.1_Q	Slide 8 (RST)
=V1GL1UQ52UQ8+.GL1UQ52UQ8/1.4	Q2077.1 DO 1 1.2	-QN9.2_Q	Slide 8 (SET)
	Q2077.2 DO 0 2.1	Spare	Reserved
	Q2077.3 DO 1 2.2	Spare	Reserved

=V1GL1UQ52KF2/1

			Date	1/17/2023	Volvo Trucks North America	Valiant TMS	CONNECTING MOD. FOR FESTO DQ	Drawing name: =2V09&EFS-EL	= V1GL1UQ52KF1
			Ed.	MKLEPADLO					+ V1GL1UQ52
			Appr		P6700 Bodyside LH - Robot Cell 2V09			Document type: EFS	Project nr: 22-16150
Modification	Date	Name	Original		Replacement of	Replaced by	Scale 1:1		Page 5 / 1533

0	1	2	3	4	5	6	7	8	9

=V1GL1UQ52WC4/1.5 / W2.1

-W2.1
RSM RKM 56-5M/S3059
5m

=V1GL1UQ52KF1/1.4 / KF1-P2

KF2-P2 / =V1GL1UQ52KF3/1.3

-WF2
PROFINET Cable
6XV1840-3AH10

-KF2

X20 M12, 7/8" 1 2 PE 4 5

0V_VAL / OUT | 0V_EL / SEN | FE | 24V_EL / SEN | 24V_VAL / OUT

ON OFF 1 2 1 2

M12 -TP1 M12 -TP2

FESTO
Bus node + Interlinking block
548755 + 550208

-KF2.11

FESTO
CPX-M-AB-8-M12X2-5POL
549335

I2100.0	DI 0 X1:4	V1GL1UQ52UQ10.1-BGR	Clamps 10 (RESET)
I2100.1	DI 1 X1:2	V1GL1UQ52UQ10.1-BGS	Clamps 10 (SET)
I2100.2	DI 2 X2:4	V1GL1UQ52UQ10.2-BGR	Clamps 10 (RESET)
I2100.3	DI 3 X2:2	V1GL1UQ52UQ10.2-BGS	Clamps 10 (SET)
I2100.4	DI 4 X3:4	V1GL1UQ52UQ10.3-BGR	Clamps 10 (RESET)
I2100.5	DI 5 X3:2	V1GL1UQ52UQ10.3-BGS	Clamps 10 (SET)
I2100.6	DI 6 X4:4	V1GL1UQ52UQ10.4-BGR	Clamps 10 (RESET)
I2100.7	DI 7 X4:2	V1GL1UQ52UQ10.4-BGS	Clamps 10 (SET)
I2101.0	DI 8 X5:4	V1GL1UQ52UQ10.5-BGR	Clamps 10 (RESET)
I2101.1	DI 9 X5:2	V1GL1UQ52UQ10.5-BGS	Clamps 10 (SET)
I2101.2	DI 10 X6:4	V1GL1UQ52UQ10.6-BGR	Clamps 10 (RESET)
I2101.3	DI 11 X6:2	V1GL1UQ52UQ10.6-BGS	Clamps 10 (SET)
I2101.4	DI 12 X7:4	V1GL1UQ52UQ11.1-BGR	Clamps 11 (RESET)
I2101.5	DI 13 X7:2	V1GL1UQ52UQ11.1-BGS	Clamps 11 (SET)
I2101.6	DI 14 X8:4	V1GL1UQ52UQ11.2-BGR	Clamps 11 (RESET)
I2101.7	DI 15 X8:2	V1GL1UQ52UQ11.2-BGS	Clamps 11 (SET)

X1 M12 24V 1 | DI 1 2 | 0V 3 | DI 0 4 | FE 5 — BN WH BU BK

X2 M12 24V 1 | DI 3 2 | 0V 3 | DI 2 4 | FE 5 — BN WH BU BK

X3 M12 24V 1 | DI 5 2 | 0V 3 | DI 4 4 | FE 5 — BN WH BU BK

X4 M12 24V 1 | DI 7 2 | 0V 3 | DI 6 4 | FE 5 — BN WH BU BK

X5 M12 24V 1 | DI 9 2 | 0V 3 | DI 8 4 | FE 5 — BN WH BU BK

X6 M12 24V 1 | DI 11 2 | 0V 3 | DI 10 4 | FE 5 — BN WH BU BK

X7 M12 24V 1 | DI 13 2 | 0V 3 | DI 12 4 | FE 5 — BN WH BU BK

X8 M12 24V 1 | DI 15 2 | 0V 3 | DI 14 4 | FE 5 — BN WH BU BK

+.GL1UQ52UQ10.1-W1
=V1GL1UQ52UQ10+.GL1UQ52UQ10/1.1

+.GL1UQ52UQ10.2-W1
=V1GL1UQ52UQ10+.GL1UQ52UQ10/1.2

+.GL1UQ52UQ10.3-W1
=V1GL1UQ52UQ10+.GL1UQ52UQ10/1.4

+.GL1UQ52UQ10.4-W1
=V1GL1UQ52UQ10+.GL1UQ52UQ10/1.5

+.GL1UQ52UQ10.5-W1
=V1GL1UQ52UQ10+.GL1UQ52UQ10/1.7

+.GL1UQ52UQ10.6-W1
=V1GL1UQ52UQ10+.GL1UQ52UQ10/1.9

+.GL1UQ52UQ11.1-W1
=V1GL1UQ52UQ11+.GL1UQ52UQ11/1.1

+.GL1UQ52UQ11.2-W1
=V1GL1UQ52UQ11+.GL1UQ52UQ11/1.2

=V1GL1UQ52KF1/5

2

			Date	1/17/2023	Volvo Trucks North America	Valiant TMS	CONNECTING MOD. FOR VTSA MANIFOLD	Drawing name: =2V09&EFS-EL	= V1GL1UQ52KF2
			Ed.	MKLEPADLO					+ V1GL1UQ52
			Appr		P6700 Bodyside LH - Robot Cell 2V09			Document type: EFS	Project nr: 22-16150
Modification	Date	Name	Original		Replacement of / Replaced by	Scale 1:1			Page 1 / 1533

0	1	2	3	4	5	6	7	8	9

-KF2.12

FESTO

CPX-M-AB-8-M12X2-5POL

549335

I2102.0	DI 0 X1:4	V1GL1UQ52UQ11.3-BGR	Clamps 11 (RESET)
I2102.1	DI 1 X1:2	V1GL1UQ52UQ11.3-BGS	Clamps 11 (SET)
I2102.2	DI 2 X2:4	V1GL1UQ52UQ11.4-BGR	Clamps 11 (RESET)
I2102.3	DI 3 X2:2	V1GL1UQ52UQ11.4-BGS	Clamps 11 (SET)
I2102.4	DI 4 X3:4	V1GL1UQ52UQ11.5-BGR	Clamps 11 (RESET)
I2102.5	DI 5 X3:2	V1GL1UQ52UQ11.5-BGS	Clamps 11 (SET)
I2102.6	DI 6 X4:4	V1GL1UQ52UQ12.1-BGR	Clamps 12 (RESET)
I2102.7	DI 7 X4:2	V1GL1UQ52UQ12.1-BGS	Clamps 12 (SET)
I2103.0	DI 8 X5:4	V1GL1UQ52UQ12.2-BGR	Clamps 12 (RESET)
I2103.1	DI 9 X5:2	V1GL1UQ52UQ12.2-BGS	Clamps 12 (SET)
I2103.2	DI 10 X6:4	V1GL1UQ52UQ12.3-BGR	Clamps 12 (RESET)
I2103.3	DI 11 X6:2	V1GL1UQ52UQ12.3-BGS	Clamps 12 (SET)
I2103.4	DI 12 X7:4	V1GL1UQ52UQ12.4-BGR	Clamps 12 (RESET)
I2103.5	DI 13 X7:2	V1GL1UQ52UQ12.4-BGS	Clamps 12 (SET)
I2103.6	DI 14 X8:4	V1GL1UQ52UQ12.5-BGR	Clamps 12 (RESET)
I2103.7	DI 15 X8:2	V1GL1UQ52UQ12.5-BGS	Clamps 12 (SET)

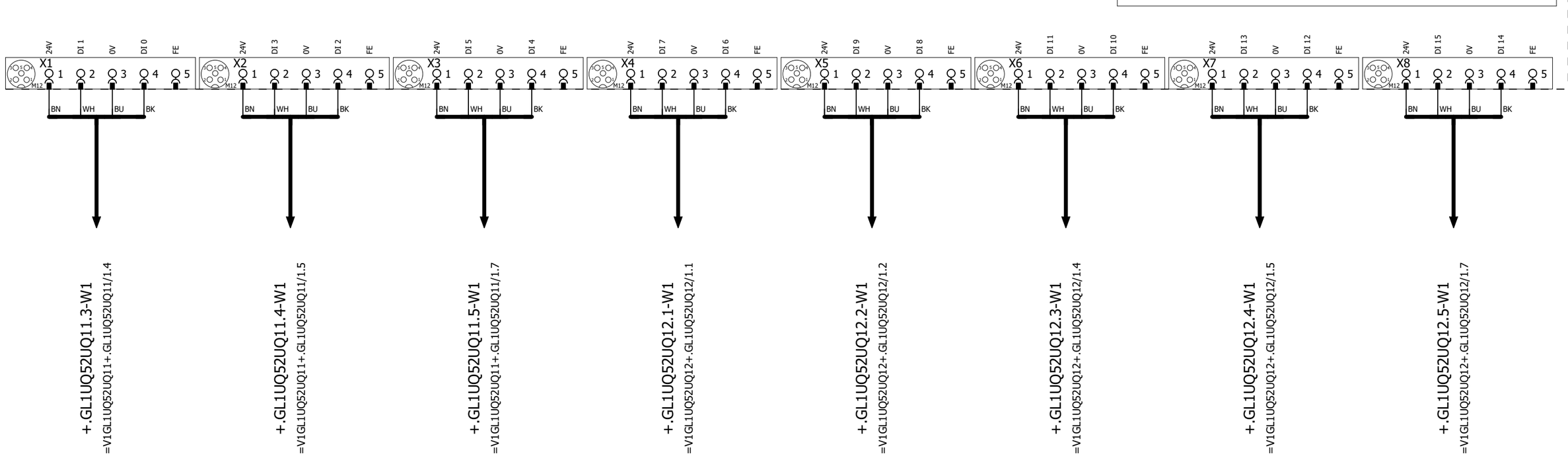

1 3

			Date	1/17/2023	Volvo Trucks North America	Valiant TMS	I/O MOD. DI16 (8 x M12) FOR VTSA-F	Drawing name: =2V09&EFS-EL	= V1GL1UQ52KF2
			Ed.	MKLEPADLO					+ V1GL1UQ52
			Appr		P6700 Bodyside LH - Robot Cell 2V09	Scale 1:1		Document type: EFS	Project nr: 22-16150
Modification	Date	Name	Original		Replacement of / Replaced by				Page 2 / 1533

0	1	2	3	4	5	6	7	8	9

-KF2.13

FESTO

CPX-M-AB-8-M12X2-5POL

549335

I2104.0	DI 0 X1:4	V1GL1UQ52UQ12.6-BGR	Clamps 12 (RESET)
I2104.1	DI 1 X1:2	V1GL1UQ52UQ12.6-BGS	Clamps 12 (SET)
I2104.2	DI 2 X2:4	V1GL1UQ52UQ13.1-BGR	Clamp 13 (RESET)
I2104.3	DI 3 X2:2	V1GL1UQ52UQ13.1-BGS	Clamp 13 (SET)
I2104.4	DI 4 X3:4	V1GL1UQ52UQ14.1-BGR	Clamp 14 (RESET)
I2104.5	DI 5 X3:2	V1GL1UQ52UQ14.1-BGS	Clamp 14 (SET)
I2104.6	DI 6 X4:4	V1GL1UQ52UQ15.1-BGR	Clamp 15 (RESET)
I2104.7	DI 7 X4:2	V1GL1UQ52UQ15.1-BGS	CLamp 15 (SET)
I2105.0	DI 8 X5:4	V1GL1UQ52UQ16.1-BGR	Clamps 16 (RESET)
I2105.1	DI 9 X5:2	V1GL1UQ52UQ16.1-BGS	Clamps 16 (SET)
I2105.2	DI 10 X6:4	V1GL1UQ52UQ16.2-BGR	Clamps 16 (RESET)
I2105.3	DI 11 X6:2	V1GL1UQ52UQ16.2-BGS	Clamps 16 (SET)
I2105.4	DI 12 X7:4	V1GL1UQ52UQ16.3-BGR	Clamps 16 (RESET)
I2105.5	DI 13 X7:2	V1GL1UQ52UQ16.3-BGS	Clamps 16 (SET)
I2105.6	DI 14 X8:4	V1GL1UQ52UQ17.1-BGR	Clamp 17 (RESET)
I2105.7	DI 15 X8:2	V1GL1UQ52UQ17.1-BGS	Clamp 17 (SET)

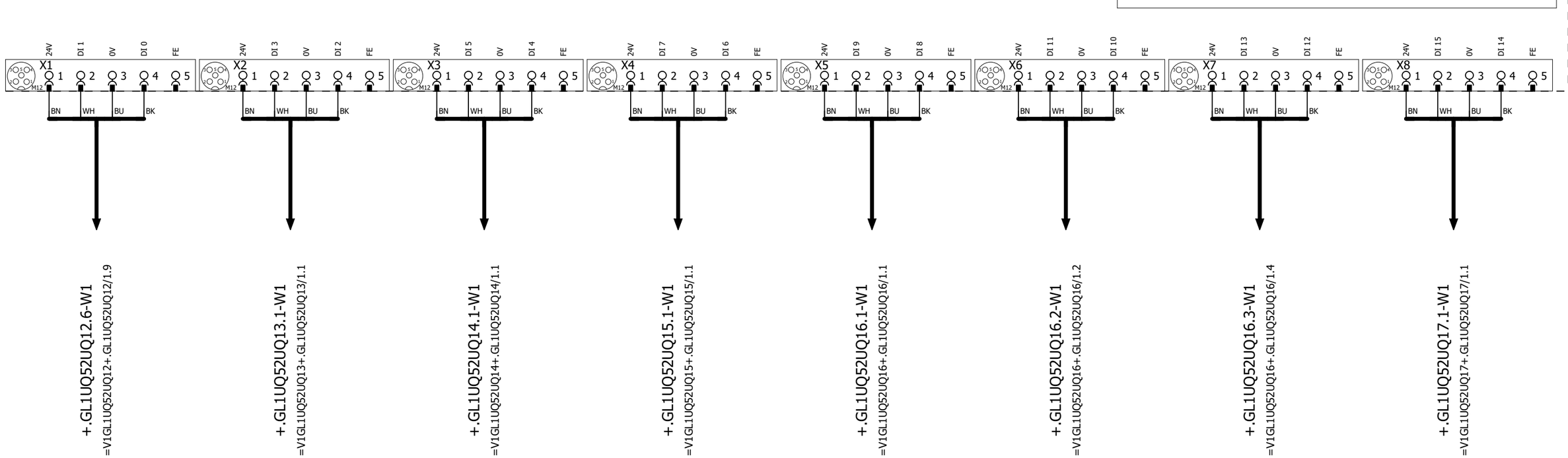

2 4

			Date	1/17/2023	Volvo Trucks North America	Valiant TMS	I/O MOD. DI16 (8 x M12) FOR VTSA-F	Drawing name: =2V09&EFS-EL	= V1GL1UQ52KF2
			Ed.	MKLEPADLO					+ V1GL1UQ52
			Appr		P6700 Bodyside LH - Robot Cell 2V09	Scale 1:1		Document type: EFS	Project nr: 22-16150
Modification	Date	Name	Original		Replacement of / Replaced by				Page 3 / 1533

I2106.0	DI 0 X1:4	V1GL1UQ52UQ18.1-BGR	Clamps 18 (RESET)
I2106.1	DI 1 X1:2	V1GL1UQ52UQ18.1-BGS	Clamps 18 (SET)
I2106.2	DI 2 X2:4	V1GL1UQ52UQ18.2-BGR	Clamps 18 (RESET)
I2106.3	DI 3 X2:2	V1GL1UQ52UQ18.2-BGS	Clamps 18 (SET)
I2106.4	DI 4 X3:4	V1GL1UQ52UQ19.1-BGR	Clamps 19 (RESET)
I2106.5	DI 5 X3:2	V1GL1UQ52UQ19.1-BGS	Clamps 19 (SET)
I2106.6	DI 6 X4:4	V1GL1UQ52UQ19.2-BGR	Clamps 19 (RESET)
I2106.7	DI 7 X4:2	V1GL1UQ52UQ19.2-BGS	Clamps 19 (SET)
I2107.0	DI 8 X5:4	I2107.0	Spare
I2107.1	DI 9 X5:2	I2107.1	Spare
I2107.2	DI 10 X6:4	V1GL1UQ52-BG25	Sensor Header Sub Assembly
I2107.3	DI 11 X6:2	V1GL1UQ52-BG26	Sensor Cabinet Mounting
I2107.4	DI 12 X7:4	V1GL1UQ52-BG27	Sensor Lower Cabinet Mnt Assembly
I2107.5	DI 13 X7:2	V1GL1UQ52-BG28	Sensor Intermed H R Long
I2107.6	DI 14 X8:4	V1GL1UQ52-BG29	Sensor Horizontal Member
I2107.7	DI 15 X8:2	V1GL1UQ52-BG30	Sensor Nut L320 Part

-KF2.14

FESTO

CPX-M-AB-8-M12X2-5POL

549335

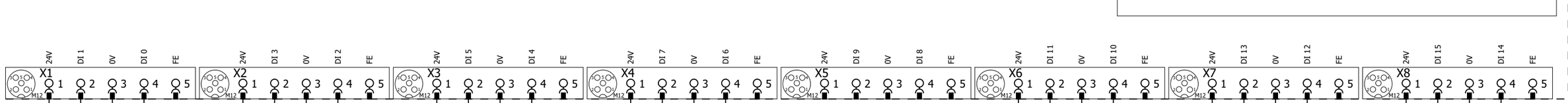

+.GL1UQ52UQ18.1-W1
=V1GL1UQ52UQ18+.GL1UQ52UQ18/1.1

+.GL1UQ52UQ18.2-W1
=V1GL1UQ52UQ18+.GL1UQ52UQ18/1.2

+.GL1UQ52UQ19.1-W1
=V1GL1UQ52UQ19+.GL1UQ52UQ19/1.1

+.GL1UQ52UQ19.2-W1
=V1GL1UQ52UQ19+.GL1UQ52UQ19/1.2

-XG25/26
=V1GL1UQ52BG0/5.1

-XG27/28
=V1GL1UQ52BG0/5.4

-XG29/30
=V1GL1UQ52BG0/5.6

3

5

			Date	1/17/2023	Volvo Trucks North America	Valiant TMS	I/O MOD. DI16 (8 x M12) FOR VTSA-F	Drawing name: =2V09&EFS-EL		= V1GL1UQ52KF2	
			Ed.	MKLEPADLO						+ V1GL1UQ52	
			Appr		P6700 Bodyside LH - Robot Cell 2V09	Scale 1:1		Document type: EFS	Project nr: 22-16150	Page	4
Modification	Date	Name	Original		Replacement of	Replaced by					1533

-KF2 -KF1.21 -KF2.12 -KF2.13 -KF2.14 -KF2.20 -KF2.21 -KF2.22 -KF2.23 -KF2.24 -KF2.25 -KF2.26 -KF2.27

M1 M2 M3 M4 M5

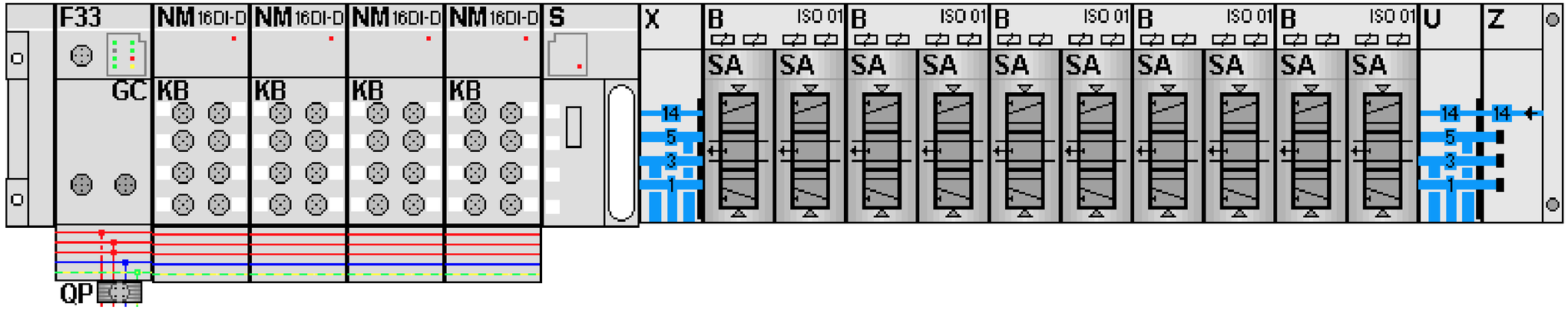

-KF2.21
=V1GL1UQ52UQ10+.GL1UQ52UQ10/1.3
=V1GL1UQ52UQ11+.GL1UQ52UQ11/1.3

FESTO

=V1GL1UQ52UQ10+.GL1UQ52UQ10/1.4	Q2100.0 DO 0 1.1	-QN11.1_Q	Clamps 10 (RST)
=V1GL1UQ52UQ10+.GL1UQ52UQ10/1.4	Q2100.1 DO 1 1.2	-QN11.2_Q	Clamps 10 (SET)
=V1GL1UQ52UQ11+.GL1UQ52UQ11/1.4	Q2100.2 DO 2 2.1	-QN12.1_Q	Clamps 11 (RST)
=V1GL1UQ52UQ11+.GL1UQ52UQ11/1.4	Q2100.3 DO 3 2.2	-QN12.2_Q	Clamps 11 (SET)

-KF2.22
=V1GL1UQ52UQ12+.GL1UQ52UQ12/1.3
=V1GL1UQ52UQ13+.GL1UQ52UQ13/1.3

FESTO

=V1GL1UQ52UQ12+.GL1UQ52UQ12/1.4	Q2100.4 DO 0 1.1	-QN13.1_Q	Clamps 12 (RST)
=V1GL1UQ52UQ12+.GL1UQ52UQ12/1.4	Q2100.5 DO 1 1.2	-QN13.2_Q	Clamps 12 (SET)
=V1GL1UQ52UQ13+.GL1UQ52UQ13/1.4	Q2100.6 DO 2 2.1	-QN14.1_Q	Clamp 13 (RST)
=V1GL1UQ52UQ13+.GL1UQ52UQ13/1.4	Q2100.7 DO 3 2.2	-QN14.2_Q	Clamp 13 (SET)

-KF2.23
=V1GL1UQ52UQ14+.GL1UQ52UQ14/1.3
=V1GL1UQ52UQ15+.GL1UQ52UQ15/1.3

FESTO

=V1GL1UQ52UQ14+.GL1UQ52UQ14/1.4	Q2101.0 DO 0 1.1	-QN15.1_Q	Clamp 14 (RST)
=V1GL1UQ52UQ14+.GL1UQ52UQ14/1.4	Q2101.1 DO 1 1.2	-QN15.2_Q	Clamp 14 (SET)
=V1GL1UQ52UQ15+.GL1UQ52UQ15/1.4	Q2101.2 DO 0 2.1	-QN16.1_Q	Clamp 15 (RST)
=V1GL1UQ52UQ15+.GL1UQ52UQ15/1.4	Q2101.3 DO 1 2.2	-QN16.2_Q	Clamp 15 (SET)

-KF2.24
=V1GL1UQ52UQ16+.GL1UQ52UQ16/1.3
=V1GL1UQ52UQ17+.GL1UQ52UQ17/1.3

FESTO

=V1GL1UQ52UQ16+.GL1UQ52UQ16/1.4	Q2101.4 DO 0 1.1	-QN17.1_Q	Clamps 16 (RST)
=V1GL1UQ52UQ16+.GL1UQ52UQ16/1.4	Q2101.5 DO 1 1.2	-QN17.2_Q	Clamps 16 (SET)
=V1GL1UQ52UQ17+.GL1UQ52UQ17/1.4	Q2101.6 DO 0 2.1	-QN18.1_Q	Clamp 17 (RST)
=V1GL1UQ52UQ17+.GL1UQ52UQ17/1.4	Q2101.7 DO 1 2.2	-QN18.2_Q	Clamp 17 (SET)

-KF2.25
=V1GL1UQ52UQ18+.GL1UQ52UQ18/1.3
=V1GL1UQ52UQ19+.GL1UQ52UQ19/1.3

FESTO

=V1GL1UQ52UQ18+.GL1UQ52UQ18/1.4	Q2102.0 DO 0 1.1	-QN19.1_Q	Shot Pins 18 (RST)
=V1GL1UQ52UQ18+.GL1UQ52UQ18/1.4	Q2102.1 DO 1 1.2	-QN19.2_Q	Shot Pins 18 (SET)
=V1GL1UQ52UQ19+.GL1UQ52UQ19/1.4	Q2102.2 DO 0 2.1	-QN20.1_Q	Clamps 19 (RST)
=V1GL1UQ52UQ19+.GL1UQ52UQ19/1.4	Q2102.3 DO 1 2.2	-QN20.2_Q	Clamps 19 (SET)

			Date	1/17/2023	Volvo Trucks North America	Valiant TMS	CONNECTING MOD. FOR FESTO DQ	Drawing name: =2V09&EFS-EL	= V1GL1UQ52KF2
			Ed.	MKLEPADLO					+ V1GL1UQ52
			Appr		P6700 Bodyside LH - Robot Cell 2V09			Document type: EFS	Project nr: 22-16150
Modification	Date	Name	Original		Replacement of	Replaced by	Scale 1:1		Page 5 / 1533

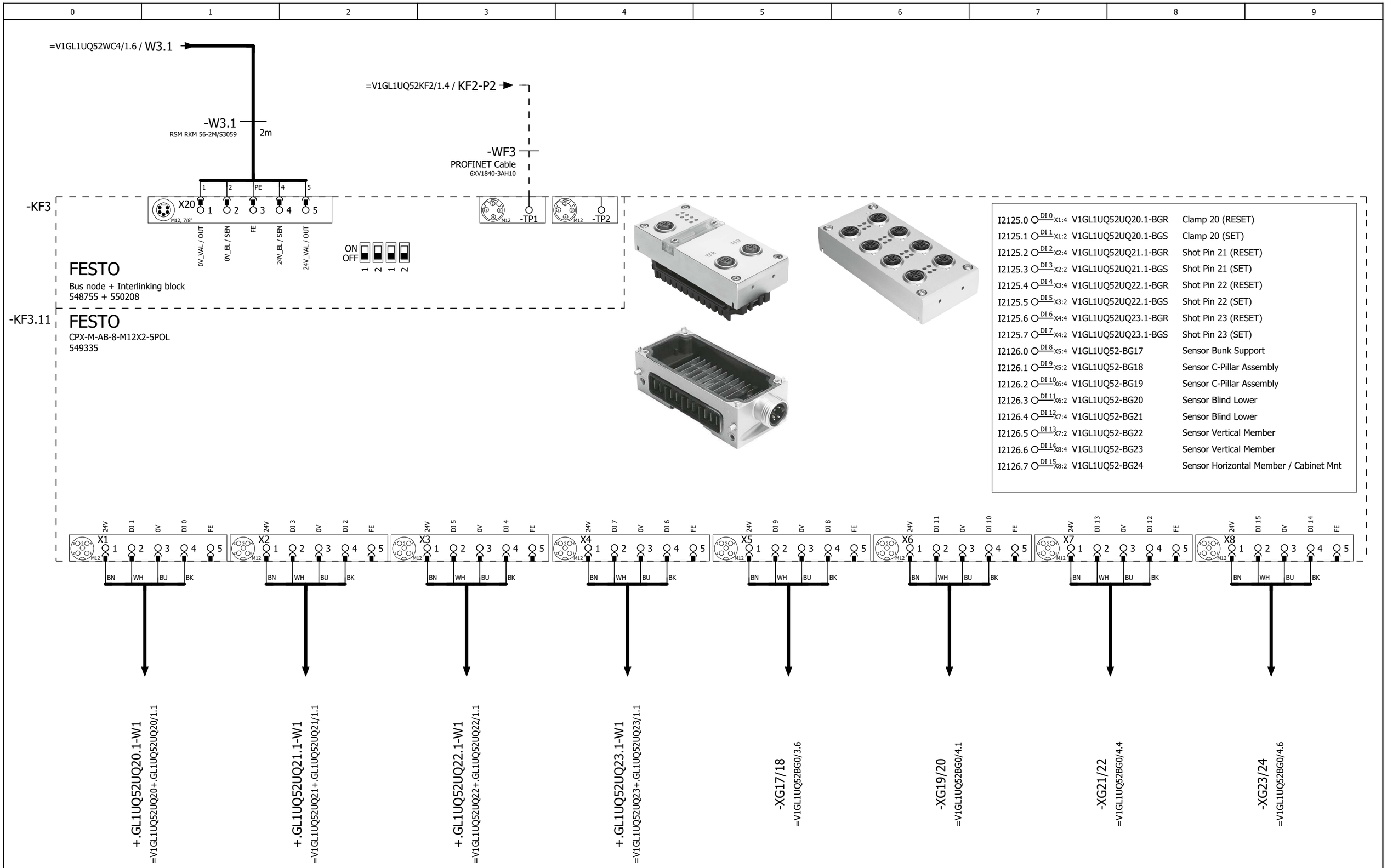

=V1GL1UQ52KF2/5

2

			Date	1/17/2023	Volvo Trucks North America	Valiant TMS	CONNECTING MOD. FOR VTSA MANIFOLD	Drawing name: =2V09&EFS-EL	= V1GL1UQ52KF3 + V1GL1UQ52
			Ed.	MKLEPADLO	P6700 Bodyside LH - Robot Cell 2V09				
			Appr					Document type: EFS	Project nr: 22-16150
Modification	Date	Name	Original		Replacement of / Replaced by	Scale 1:1			Page 1 / 1533

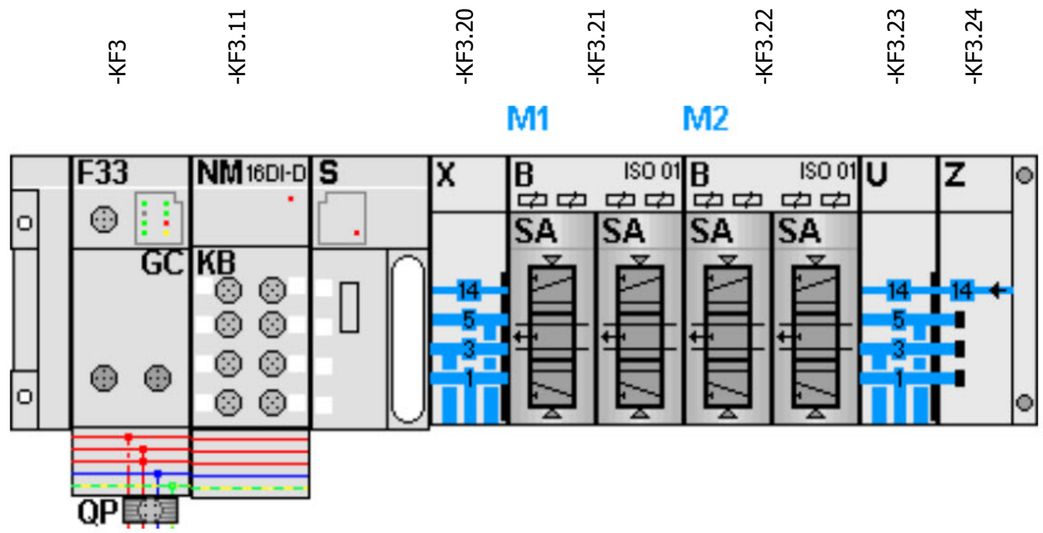

-KF3.21
=V1GL1UQ52UQ20+.GL1UQ52UQ20/1.3
=V1GL1UQ52UQ21+.GL1UQ52UQ21/1.3

FESTO

=V1GL1UQ52UQ20+.GL1UQ52UQ20/1.4	Q2125.0 DO 0 1.1	-QN21.1_Q	Clamp 20 (RST)
=V1GL1UQ52UQ20+.GL1UQ52UQ20/1.4	Q2125.1 DO 1 1.2	-QN21.2_Q	Clamp 20 (SET)
=V1GL1UQ52UQ21+.GL1UQ52UQ21/1.4	Q2125.2 DO 2 2.1	-QN22.1_Q	Shot Pin 21 (RST)
=V1GL1UQ52UQ21+.GL1UQ52UQ21/1.4	Q2125.3 DO 3 2.2	-QN22.2_Q	Shot Pin 21 (SET)

-KF3.22
=V1GL1UQ52UQ22+.GL1UQ52UQ22/1.3
=V1GL1UQ52UQ23+.GL1UQ52UQ23/1.3

FESTO

=V1GL1UQ52UQ22+.GL1UQ52UQ22/1.4	Q2125.4 DO 0 1.1	-QN23.1_Q	Shot Pin 22 (RST)
=V1GL1UQ52UQ22+.GL1UQ52UQ22/1.4	Q2125.5 DO 1 1.2	-QN23.2_Q	Shot Pin 22 (SET)
=V1GL1UQ52UQ23+.GL1UQ52UQ23/1.4	Q2125.6 DO 2 2.1	-QN24.1_Q	Shot Pin 23 (RST)
=V1GL1UQ52UQ23+.GL1UQ52UQ23/1.4	Q2125.7 DO 3 2.2	-QN24.2_Q	Shot Pin 23 (SET)

1

=V1GL1UQ52UQ1+.GL1UQ52UQ1/1

			Date	1/17/2023	Volvo Trucks North America	Valiant TMS	CONNECTING MOD. FOR FESTO DQ	Drawing name: =2V09&EFS-EL	= V1GL1UQ52KF3 + V1GL1UQ52
			Ed.	MKLEPADLO	P6700 Bodyside LH - Robot Cell 2V09			Document type: EFS	Project nr: 22-16150
			Appr						Page 2
Modification	Date	Name	Original		Replacement of / Replaced by	Scale 1:1			1533

0	1	2	3	4	5	6	7	8	9

=V1GL1UQ52KF1
+.GL1UQ52

-KF1.21
=V1GL1UQ52KF1+V1GL1UQ52/5.1

Shot Pins 1 (RST)
=V1GL1UQ52KF1
+V1GL1UQ52
-QN1.1_Q
=V1GL1UQ52KF1
+V1GL1UQ52/5.3
Q2075.0

Shot Pins 1 (SET)
=V1GL1UQ52KF1
+V1GL1UQ52
-QN1.2_Q
=V1GL1UQ52KF1
+V1GL1UQ52/5.3
Q2075.1

1.1 Pneumatic Valve

1.2 Pneumatic Valve

-QN1 .1 .2

=V1GL1UQ52KF1+V1GL1UQ52/1.1
+V1GL1UQ52UQ1.1-W1

-W1
RKC 4.4T-3-RSC 4.4T/S3060
3m

BN BU BK WH
1 3
-BGS/R
WWS001A
A2 A1
2 4

Shot Pins 1
=V1GL1UQ52UQ1.1
+V1GL1UQ52UQ1.1
-UQ1.1

=V1GL1UQ52
-UQ1.1-BGS/R
Shot Pins 1

=V1GL1UQ52KF1+V1GL1UQ52/1.2
+V1GL1UQ52UQ1.2-W1

-W1
RKC 4.4T-2-RSC 4.4T/S3060
2m

BN BU BK WH
1 3
-BGS/R
WWS001A
A2 A1
2 4

Shot Pins 1
=V1GL1UQ52UQ1.2
+V1GL1UQ52UQ1.2
-UQ1.2

=V1GL1UQ52
-UQ1.2-BGS/R
Shot Pins 1

=V1GL1UQ52KF1+V1GL1UQ52/1.3
+V1GL1UQ52UQ1.3-W1

-W1
RKC 4.4T-5-RSC 4.4T/S3060
5m

BN BU BK WH
1 3
-BGS/R
WWS001A
A2 A1
2 4

Shot Pins 1
=V1GL1UQ52UQ1.3
+V1GL1UQ52UQ1.3
-UQ1.3

=V1GL1UQ52
-UQ1.3-BGS/R
Shot Pins 1

=V1GL1UQ52KF1+V1GL1UQ52/1.4
+V1GL1UQ52UQ1.4-W1

-W1
RKC 4.4T-6-RSC 4.4T/S3060
6m

BN BU BK WH
1 3
-BGS/R
WWS001A
A2 A1
2 4

Shot Pins 1
=V1GL1UQ52UQ1.4
+V1GL1UQ52UQ1.4
-UQ1.4

=V1GL1UQ52
-UQ1.4-BGS/R
Shot Pins 1

=V1GL1UQ52KF1+V1GL1UQ52/1.5
+V1GL1UQ52UQ1.5-W1

-W1
RKC 4.4T-6-RSC 4.4T/S3060
6m

BN BU BK WH
1 3
-BGS/R
WWS001A
A2 A1
2 4

Shot Pins 1
=V1GL1UQ52UQ1.5
+V1GL1UQ52UQ1.5
-UQ1.5

=V1GL1UQ52
-UQ1.5-BGS/R
Shot Pins 1

=V1GL1UQ52KF1+V1GL1UQ52/1.6
+V1GL1UQ52UQ1.6-W1

-W1
RKC 4.4T-4-RSC 4.4T/S3060
4m

BN BU BK WH
1 3
-BGS/R
WWS001A
A2 A1
2 4

Shot Pins 1
=V1GL1UQ52UQ1.6
+V1GL1UQ52UQ1.6
-UQ1.6

=V1GL1UQ52
-UQ1.6-BGS/R
Shot Pins 1

=V1GL1UQ52KF3+V1GL1UQ52/2

=V1GL1UQ52UQ2+.GL1UQ52UQ2/1

			Date	1/17/2023	Volvo Trucks North America		Valiant TMS	FESTO DQ CONNECTION QN1	Drawing name: =2V09&EFS-EL	= V1GL1UQ52UQ1
			Ed.	MKLEPADLO						+ V1GL1UQ52UQ1
			Appr		P6700 Bodyside LH - Robot Cell 2V09				Document type: EFS	Project nr: 22-16150
Modification	Date	Name	Original		Replacement of	Replaced by	Scale 1:1			Page 1 / 1533

0	1	2	3	4	5	6	7	8	9

=V1GL1UQ52KF1
+.GL1UQ52

-KF1.21
=V1GL1UQ52KF1+V1GL1UQ52/5.1

Shot Pin 2 (RST)
=V1GL1UQ52KF1
+V1GL1UQ52
-QN2.1_Q
=V1GL1UQ52KF1
+V1GL1UQ52/5.3
Q2075.2

Shot Pin 2 (SET)
=V1GL1UQ52KF1
+V1GL1UQ52
-QN2.2_Q
=V1GL1UQ52KF1
+V1GL1UQ52/5.3
Q2075.3

2.1
Pneumatic Valve

2.2
Pneumatic Valve

.1

.2

-QN2

=V1GL1UQ52KF1+V1GL1UQ52/1.8
+V1GL1UQ52UQ2.1-W1

-W1
RKC 4.4T-4-RSC 4.4T/S3060
4m

BN BU BK WH

1 3

+ -

-BGS/R

WWS001A

A2 A1

2 4

Shot Pin 2

=V1GL1UQ52UQ2.1
+V1GL1UQ52UQ2.1
-UQ2.1

=V1GL1UQ52 -UQ2.1-BGS/R Shot Pin 2

=V1GL1UQ52UQ1+.GL1UQ52UQ1/1

=V1GL1UQ52UQ3+.GL1UQ52UQ3/1

			Date	1/17/2023	Volvo Trucks North America	Valiant TMS	FESTO DQ CONNECTION QN2	Drawing name: =2V09&EFS-EL	= V1GL1UQ52UQ2
			Ed.	MKLEPADLO					+ V1GL1UQ52UQ2
			Appr		P6700 Bodyside LH - Robot Cell 2V09			Document type: EFS	Project nr: 22-16150
Modification	Date	Name	Original		Replacement of	Replaced by	Scale 1:1		Page 1 / 1533

0	1	2	3	4	5	6	7	8	9

=V1GL1UQ52KF1
+.GL1UQ52

-KF1.22
=V1GL1UQ52KF1+V1GL1UQ52/5.1

Shot Pins 3 (RST)
=V1GL1UQ52KF1
+V1GL1UQ52
-QN3.1_Q
=V1GL1UQ52KF1
+V1GL1UQ52/5.3
Q2075.4

Shot Pins 3 (SET)
=V1GL1UQ52KF1
+V1GL1UQ52
-QN3.2_Q
=V1GL1UQ52KF1
+V1GL1UQ52/5.3
Q2075.5

1.1
Pneumatic Valve

1.2
Pneumatic Valve

.1

.2

-QN3

=V1GL1UQ52KF1+V1GL1UQ52/1.9
+V1GL1UQ52UQ3.1-W1

-W1
RKC 4.4T-4-RSC 4.4T/S3060
4m

BN BU BK WH
1 3
+ -

-BGS/R

WELKER

WWS001A

A2 A1
2 4

Shot Pins 3

=V1GL1UQ52UQ3.1
+V1GL1UQ52UQ3.1
-UQ3.1

=V1GL1UQ52
-UQ3.1-BGS/R
Shot Pins 3

=V1GL1UQ52KF1+V1GL1UQ52/2.1
+V1GL1UQ52UQ3.2-W1

-W1
RKC 4.4T-5-RSC 4.4T/S3060
5m

BN BU BK WH
1 3
+ -

-BGS/R

WELKER

WWS001A

A2 A1
2 4

Shot Pins 3

=V1GL1UQ52UQ3.2
+V1GL1UQ52UQ3.2
-UQ3.2

=V1GL1UQ52
-UQ3.2-BGS/R
Shot Pins 3

=V1GL1UQ52KF1+V1GL1UQ52/2.2
+V1GL1UQ52UQ3.3-W1

-W1
RKC 4.4T-5-RSC 4.4T/S3060
5m

BN BU BK WH
1 3
+ -

-BGS/R

WELKER

WWS001A

A2 A1
2 4

Shot Pins 3

=V1GL1UQ52UQ3.3
+V1GL1UQ52UQ3.3
-UQ3.3

=V1GL1UQ52
-UQ3.3-BGS/R
Shot Pins 3

=V1GL1UQ52KF1+V1GL1UQ52/2.3
+V1GL1UQ52UQ3.4-W1

-W1
RKC 4.4T-5-RSC 4.4T/S3060
5m

BN BU BK WH
1 3
+ -

-BGS/R

WELKER

WWS001A

A2 A1
2 4

Shot Pins 3

=V1GL1UQ52UQ3.4
+V1GL1UQ52UQ3.4
-UQ3.4

=V1GL1UQ52
-UQ3.4-BGS/R
Shot Pins 3

=V1GL1UQ52KF1+V1GL1UQ52/2.4
+V1GL1UQ52UQ3.5-W1

-W1
RKC 4.4T-4-RSC 4.4T/S3060
4m

BN BU BK WH
1 3
+ -

-BGS/R

WELKER

WWS001A

A2 A1
2 4

Shot Pins 3

=V1GL1UQ52UQ3.5
+V1GL1UQ52UQ3.5
-UQ3.5

=V1GL1UQ52
-UQ3.5-BGS/R
Shot Pins 3

=V1GL1UQ52UQ2+.GL1UQ52UQ2/1

=V1GL1UQ52UQ4+.GL1UQ52UQ4/1

			Date	1/17/2023	Volvo Trucks North America	Valiant TMS	FESTO DQ CONNECTION QN3	Drawing name: =2V09&EFS-EL	= V1GL1UQ52UQ3
			Ed.	MKLEPADLO					+ V1GL1UQ52UQ3
			Appr		P6700 Bodyside LH - Robot Cell 2V09			Document type: EFS	Project nr: 22-16150
Modification	Date	Name	Original		Replacement of	Replaced by	Scale 1:1		Page 1 / 1533

0	1	2	3	4	5	6	7	8	9

=V1GL1UQ52KF1
+.GL1UQ52

-KF1.22
=V1GL1UQ52KF1+V1GL1UQ52/5.1

Shot Pins 4 (RST)
=V1GL1UQ52KF1
+V1GL1UQ52
-QN4.1_Q
=V1GL1UQ52KF1
+V1GL1UQ52/5.3
Q2075.6

Shot Pins 4 (SET)
=V1GL1UQ52KF1
+V1GL1UQ52
-QN4.2_Q
=V1GL1UQ52KF1
+V1GL1UQ52/5.3
Q2075.7

2.1 Pneumatic Valve

2.2 Pneumatic Valve

-QN4 .1 .2

=V1GL1UQ52KF1+V1GL1UQ52/2.5
+V1GL1UQ52UQ4.1-W1

-W1
RKC 4.4T-4-RSC 4.4T/S3060
4m

BN BU BK WH

-BGS/R
1 3
WELKER
WWS001A
A2 A1
2 4

Shot Pins 4

=V1GL1UQ52UQ4.1
+V1GL1UQ52UQ4.1
-UQ4.1

=V1GL1UQ52
-UQ4.1-BGS/R
Shot Pins 4

=V1GL1UQ52KF1+V1GL1UQ52/2.6
+V1GL1UQ52UQ4.2-W1

-W1
RKC 4.4T-5-RSC 4.4T/S3060
5m

BN BU BK WH

-BGS/R
1 3
WELKER
WWS001A
A2 A1
2 4

Shot Pins 4

=V1GL1UQ52UQ4.2
+V1GL1UQ52UQ4.2
-UQ4.2

=V1GL1UQ52
-UQ4.2-BGS/R
Shot Pins 4

=V1GL1UQ52UQ3+.GL1UQ52UQ3/1

=V1GL1UQ52UQ5+.GL1UQ52UQ5/1

			Date	1/17/2023	Volvo Trucks North America	Valiant TMS	FESTO DQ CONNECTION QN4	Drawing name: =2V09&EFS-EL	= V1GL1UQ52UQ4
			Ed.	MKLEPADLO					+ V1GL1UQ52UQ4
			Appr		P6700 Bodyside LH - Robot Cell 2V09			Document type: EFS	Project nr: 22-16150
Modification	Date	Name	Original		Replacement of	Replaced by	Scale 1:1		Page 1 / 1533

0	1	2	3	4	5	6	7	8	9

=V1GL1UQ52KF1
+.GL1UQ52

-KF1.23
=V1GL1UQ52KF1+V1GL1UQ52/5.1

Shot Pins 5 (RST)
=V1GL1UQ52KF1
+V1GL1UQ52
-QN5.1_Q
=V1GL1UQ52KF1
+V1GL1UQ52/5.3
Q2076.0

Shot Pins 5 (SET)
=V1GL1UQ52KF1
+V1GL1UQ52
-QN5.2_Q
=V1GL1UQ52KF1
+V1GL1UQ52/5.3
Q2076.1

1.1 Pneumatic Valve

1.2 Pneumatic Valve

-QN5 .1 .2

=V1GL1UQ52KF1+V1GL1UQ52/2.8
+V1GL1UQ52UQ5.1-W1

-W1
RKC 4.4T-4-RSC 4.4T/S3060
4m

BN BU BK WH

-BGS/R
1 3
WELKER
WWS001A
A2 A1
2 4

Shot Pins 5

=V1GL1UQ52UQ5.1
+V1GL1UQ52UQ5.1
-UQ5.1

=V1GL1UQ52
-UQ5.1-BGS/R
Shot Pins 5

=V1GL1UQ52KF1+V1GL1UQ52/2.9
+V1GL1UQ52UQ5.2-W1

-W1
RKC 4.4T-5-RSC 4.4T/S3060
5m

BN BU BK WH

-BGS/R
1 3
WELKER
WWS001A
A2 A1
2 4

Shot Pins 5

=V1GL1UQ52UQ5.2
+V1GL1UQ52UQ5.2
-UQ5.2

=V1GL1UQ52
-UQ5.2-BGS/R
Shot Pins 5

=V1GL1UQ52UQ4+.GL1UQ52UQ4/1

=V1GL1UQ52UQ6+.GL1UQ52UQ6/1

			Date	1/17/2023	Volvo Trucks North America	Valiant TMS	FESTO DQ CONNECTION QN5	Drawing name: =2V09&EFS-EL	= V1GL1UQ52UQ5
			Ed.	MKLEPADLO					+ V1GL1UQ52UQ5
			Appr		P6700 Bodyside LH - Robot Cell 2V09			Document type: EFS	Project nr: 22-16150
Modification	Date	Name	Original		Replacement of	Replaced by	Scale 1:1		Page 1 / 1533

0	1	2	3	4	5	6	7	8	9

=V1GL1UQ52KF1
+.GL1UQ52

-KF1.23
=V1GL1UQ52KF1+V1GL1UQ52/5.1

Shot Pin 6 (RST)
=V1GL1UQ52KF1
+V1GL1UQ52
-QN6.1_Q
=V1GL1UQ52KF1
+V1GL1UQ52/5.3
Q2076.2

Shot Pin 6 (SET)
=V1GL1UQ52KF1
+V1GL1UQ52
-QN6.2_Q
=V1GL1UQ52KF1
+V1GL1UQ52/5.3
Q2076.3

2.1
Pneumatic Valve

2.2
Pneumatic Valve

-QN6
.1
.2

=V1GL1UQ52KF1+V1GL1UQ52/3.1
+V1GL1UQ52UQ6.1-W1

-W1
RKC 4.4T-6-RSC 4.4T/S3060
6m

BN BU BK WH

-BGS/R
1 3
2 4
A2 A1

WWS001A

Shot Pin 6

=V1GL1UQ52UQ6.1
+V1GL1UQ52UQ6.1
-UQ6.1

=V1GL1UQ52 -UQ6.1-BGS/R Shot Pin 6

=V1GL1UQ52UQ5+.GL1UQ52UQ5/1

=V1GL1UQ52UQ7+.GL1UQ52UQ7/1

			Date	1/17/2023	Volvo Trucks North America	Valiant TMS	FESTO DQ CONNECTION QN6	Drawing name: =2V09&EFS-EL	= V1GL1UQ52UQ6
			Ed.	MKLEPADLO					+ V1GL1UQ52UQ6
			Appr		P6700 Bodyside LH - Robot Cell 2V09			Document type: EFS	Project nr: 22-16150
Modification	Date	Name	Original		Replacement of	Replaced by	Scale 1:1		Page 1 / 1533

0	1	2	3	4	5	6	7	8	9

=V1GL1UQ52KF1
+.GL1UQ52

-KF1.24
=V1GL1UQ52KF1+V1GL1UQ52/5.1

Shot Pin 7 (RST)
=V1GL1UQ52KF1
+V1GL1UQ52
-QN7.1_Q
=V1GL1UQ52KF1
+V1GL1UQ52/5.3
Q2076.4

Shot Pin 7 (SET)
=V1GL1UQ52KF1
+V1GL1UQ52
-QN7.2_Q
=V1GL1UQ52KF1
+V1GL1UQ52/5.3
Q2076.5

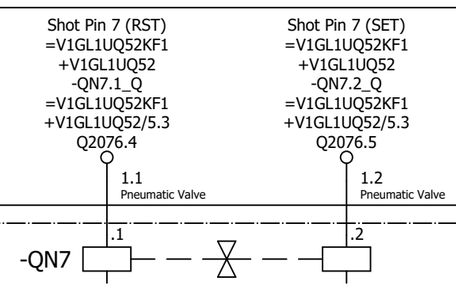

=V1GL1UQ52KF1+V1GL1UQ52/3.2
+V1GL1UQ52UQ7.1-W1

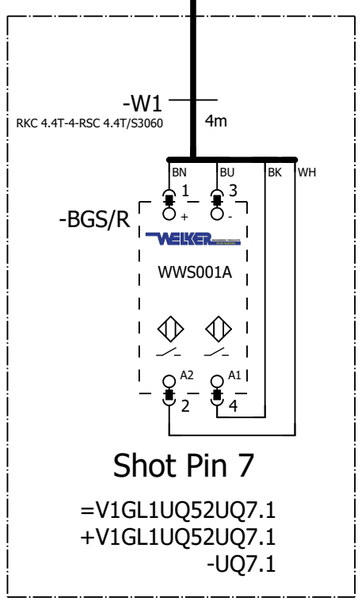

Shot Pin 7

=V1GL1UQ52UQ7.1
+V1GL1UQ52UQ7.1
-UQ7.1

=V1GL1UQ52 -UQ7.1-BGS/R Shot Pin 7

=V1GL1UQ52UQ6+.GL1UQ52UQ6/1

=V1GL1UQ52UQ8+.GL1UQ52UQ8/1

			Date	1/17/2023	Volvo Trucks North America	Valiant TMS	FESTO DQ CONNECTION QN7	Drawing name: =2V09&EFS-EL	= V1GL1UQ52UQ7
			Ed.	MKLEPADLO					+ V1GL1UQ52UQ7
			Appr		P6700 Bodyside LH - Robot Cell 2V09			Document type: EFS	Project nr: 22-16150
Modification	Date	Name	Original		Replacement of	Replaced by	Scale 1:1		Page 1 / 1533

0	1	2	3	4	5	6	7	8	9

=V1GL1UQ52KF1
+.GL1UQ52

-KF1.25
=V1GL1UQ52KF1+V1GL1UQ52/5.1

Slide 8 (RST)
=V1GL1UQ52KF1
+V1GL1UQ52
-QN9.1_Q
=V1GL1UQ52KF1
+V1GL1UQ52/5.3
Q2077.0

Slide 8 (SET)
=V1GL1UQ52KF1
+V1GL1UQ52
-QN9.2_Q
=V1GL1UQ52KF1
+V1GL1UQ52/5.3
Q2077.1

1.1 Pneumatic Valve

1.2 Pneumatic Valve

-QN9 .1 .2

=V1GL1UQ52KF1+V1GL1UQ52/3.3
+.GL1UQ52UQ8.1-W1

-W1
RKC 4.4T-4-RSC 4.4T/S3060
4m
BN BU BK WH

-XGR/S
P1 1 3 4 2
VB2-FSM 4.4/2FKM 4/S3450
TURCK

J1 1 3 4 2
J2 1 3 4 2
BN BU BK WH

-W1.1
RKC 4.4T-0.5-RSC 4.4T/S3060
0.5m

-W1.2
RKC 4.4T-0.5-RSC 4.4T/S3060
0.5m

BN BU BK WH

-BGR
Sn = 10 mm
TURCK
16449050
pnp
1 3 A 4

-BGS
Sn = 10 mm
TURCK
16449050
pnp
1 3 A 4

Slide 8
=V1GL1UQ52UQ8.1
+.GL1UQ52UQ8.1
-UQ8.1

=V1GL1UQ52
-UQ8.1-BGR
Slide 8

=V1GL1UQ52
-UQ8.1-BGS
Slide 8

=V1GL1UQ52UQ7+.GL1UQ52UQ7/1

=V1GL1UQ52UQ9+.GL1UQ52UQ9/1

			Date	1/17/2023	Volvo Trucks North America	Valiant TMS	FESTO DQ CONNECTION QN8	Drawing name: =2V09&EFS-EL	= V1GL1UQ52UQ8
			Ed.	MKLEPADLO					+ V1GL1UQ52UQ8
			Appr		P6700 Bodyside LH - Robot Cell 2V09			Document type: EFS	Project nr: 22-16150
Modification	Date	Name	Original		Replacement of	Replaced by	Scale 1:1		Page 1 / 1533

0	1	2	3	4	5	6	7	8	9

=V1GL1UQ52KF1
+.GL1UQ52

-KF1.24
=V1GL1UQ52KF1+V1GL1UQ52/5.1

Shot Pins 9 (RST)
=V1GL1UQ52KF1
+V1GL1UQ52
-QN8.1_Q
=V1GL1UQ52KF1
+V1GL1UQ52/5.3
Q2076.6

Shot Pins 9 (SET)
=V1GL1UQ52KF1
+V1GL1UQ52
-QN8.2_Q
=V1GL1UQ52KF1
+V1GL1UQ52/5.3
Q2076.7

2.1
Pneumatic Valve

2.2
Pneumatic Valve

-QN8 .1 .2

=V1GL1UQ52KF1+V1GL1UQ52/3.4
+V1GL1UQ52UQ9.1-W1

-W1
RKC 4.4T-5-RSC 4.4T/S3060
5m

BN BU BK WH
1 3
+ -
-BGS/R
WELKER
WWS001A
A2 A1
2 4

Shot Pins 9

=V1GL1UQ52UQ9.1
+V1GL1UQ52UQ9.1
-UQ9.1

=V1GL1UQ52
-UQ9.1-BGS/R
Shot Pins 9

=V1GL1UQ52KF1+V1GL1UQ52/3.5
+V1GL1UQ52UQ9.2-W1

-W1
RKC 4.4T-4-RSC 4.4T/S3060
4m

BN BU BK WH
1 3
+ -
-BGS/R
WELKER
WWS001A
A2 A1
2 4

Shot Pins 9

=V1GL1UQ52UQ9.2
+V1GL1UQ52UQ9.2
-UQ9.2

=V1GL1UQ52
-UQ9.2-BGS/R
Shot Pins 9

=V1GL1UQ52UQ8+.GL1UQ52UQ8/1

=V1GL1UQ52UQ10+.GL1UQ52UQ10/1

			Date	1/17/2023	Volvo Trucks North America		Valiant TMS	FESTO DQ CONNECTION QN9	Drawing name: =2V09&EFS-EL	= V1GL1UQ52UQ9
			Ed.	MKLEPADLO						+ V1GL1UQ52UQ9
			Appr		P6700 Bodyside LH - Robot Cell 2V09				Document type: EFS	Project nr: 22-16150
Modification	Date	Name	Original		Replacement of	Replaced by	Scale 1:1			Page 1 / 1533

0	1	2	3	4	5	6	7	8	9

=V1GL1UQ52KF2
+.GL1UQ52

-KF2.21
=V1GL1UQ52KF2+V1GL1UQ52/5.1

Clamps 10 (RST)
=V1GL1UQ52KF2
+V1GL1UQ52
-QN11.1_Q
=V1GL1UQ52KF2
+V1GL1UQ52/5.3
Q2100.0

Clamps 10 (SET)
=V1GL1UQ52KF2
+V1GL1UQ52
-QN11.2_Q
=V1GL1UQ52KF2
+V1GL1UQ52/5.3
Q2100.1

1.1 Pneumatic Valve

1.2 Pneumatic Valve

-QN11 .1 .2

=V1GL1UQ52KF2+V1GL1UQ52/1.1
+V1GL1UQ52UQ10.1-W1

-W1 3m
RKC 4.4T-3-RSC 4.4T/S3060

-BGS/R
BN 1 + BU 3 -
TÜNKERS
1324638
A2 2 A1 4
BK WH

Clamps 10
=V1GL1UQ52UQ10.1
+V1GL1UQ52UQ10.1
-UQ10.1

=V1GL1UQ52
-UQ10.1-BGS/R
Clamps 10

=V1GL1UQ52KF2+V1GL1UQ52/1.2
+V1GL1UQ52UQ10.2-W1

-W1 3m
RKC 4.4T-3-RSC 4.4T/S3060

-BGS/R
BN 1 + BU 3 -
TÜNKERS
1324644
A2 2 A1 4
BK WH

Clamps 10
=V1GL1UQ52UQ10.2
+V1GL1UQ52UQ10.2
-UQ10.2

=V1GL1UQ52
-UQ10.2-BGS/R
Clamps 10

=V1GL1UQ52KF2+V1GL1UQ52/1.3
+V1GL1UQ52UQ10.3-W1

-W1 3m
RKC 4.4T-3-RSC 4.4T/S3060

-BGS/R
BN 1 + BU 3 -
TÜNKERS
1324638
A2 2 A1 4
BK WH

Clamps 10
=V1GL1UQ52UQ10.3
+V1GL1UQ52UQ10.3
-UQ10.3

=V1GL1UQ52
-UQ10.3-BGS/R
Clamps 10

=V1GL1UQ52KF2+V1GL1UQ52/1.4
+V1GL1UQ52UQ10.4-W1

-W1 3m
RKC 4.4T-3-RSC 4.4T/S3060

-BGS/R
BN 1 + BU 3 -
TÜNKERS
1324638
A2 2 A1 4
BK WH

Clamps 10
=V1GL1UQ52UQ10.4
+V1GL1UQ52UQ10.4
-UQ10.4

=V1GL1UQ52
-UQ10.4-BGS/R
Clamps 10

=V1GL1UQ52KF2+V1GL1UQ52/1.5
+V1GL1UQ52UQ10.5-W1

-W1 2m
RKC 4.4T-2-RSC 4.4T/S3060

-BGS/R
BN 1 + BU 3 -
TÜNKERS
1324638
A2 2 A1 4
BK WH

Clamps 10
=V1GL1UQ52UQ10.5
+V1GL1UQ52UQ10.5
-UQ10.5

=V1GL1UQ52
-UQ10.5-BGS/R
Clamps 10

=V1GL1UQ52KF2+V1GL1UQ52/1.6
+V1GL1UQ52UQ10.6-W1

-W1 3m
RKC 4.4T-3-RSC 4.4T/S3060

-BGS/R
BN 1 + BU 3 -
TÜNKERS
1324638
A2 2 A1 4
BK WH

Clamps 10
=V1GL1UQ52UQ10.6
+V1GL1UQ52UQ10.6
-UQ10.6

=V1GL1UQ52
-UQ10.6-BGS/R
Clamps 10

=V1GL1UQ52UQ9+.GL1UQ52UQ9/1

=V1GL1UQ52UQ11+.GL1UQ52UQ11/1

			Date	1/17/2023	Volvo Trucks North America	Valiant TMS	FESTO DQ CONNECTION QN11	Drawing name: =2V09&EFS-EL	= V1GL1UQ52UQ10
			Ed.	MKLEPADLO					+ V1GL1UQ52UQ10
			Appr		P6700 Bodyside LH - Robot Cell 2V09			Document type: EFS	Project nr: 22-16150
Modification	Date	Name	Original		Replacement of	Replaced by	Scale 1:1		Page 1 / 1533

0	1	2	3	4	5	6	7	8	9

=V1GL1UQ52KF2
+.GL1UQ52

-KF2.21
=V1GL1UQ52KF2+V1GL1UQ52/5.1

Clamps 11 (RST)
=V1GL1UQ52KF2
+V1GL1UQ52
-QN12.1_Q
=V1GL1UQ52KF2
+V1GL1UQ52/5.3
Q2100.2

Clamps 11 (SET)
=V1GL1UQ52KF2
+V1GL1UQ52
-QN12.2_Q
=V1GL1UQ52KF2
+V1GL1UQ52/5.3
Q2100.3

2.1 Pneumatic Valve

2.2 Pneumatic Valve

-QN12 .1 .2

=V1GL1UQ52KF2+V1GL1UQ52/1.8
+V1GL1UQ52UQ11.1-W1

=V1GL1UQ52KF2+V1GL1UQ52/1.9
+V1GL1UQ52UQ11.2-W1

=V1GL1UQ52KF2+V1GL1UQ52/2.1
+V1GL1UQ52UQ11.3-W1

=V1GL1UQ52KF2+V1GL1UQ52/2.2
+V1GL1UQ52UQ11.4-W1

=V1GL1UQ52KF2+V1GL1UQ52/2.3
+V1GL1UQ52UQ11.5-W1

-W1 RKC 4.4T-3-RSC 4.4T/S3060 3m

-W1 RKC 4.4T-4-RSC 4.4T/S3060 4m

-W1 RKC 4.4T-5-RSC 4.4T/S3060 5m

-W1 RKC 4.4T-6-RSC 4.4T/S3060 6m

-W1 RKC 4.4T-7-RSC 4.4T/S3060 7 m

BN BU BK WH

-BGS/R

TÜNKERS

1324644

1324644

1324638

1324638

1324644

A2 A1

Clamps 11
=V1GL1UQ52UQ11.1
+V1GL1UQ52UQ11.1
-UQ11.1

Clamps 11
=V1GL1UQ52UQ11.2
+V1GL1UQ52UQ11.2
-UQ11.2

Clamps 11
=V1GL1UQ52UQ11.3
+V1GL1UQ52UQ11.3
-UQ11.3

Clamps 11
=V1GL1UQ52UQ11.4
+V1GL1UQ52UQ11.4
-UQ11.4

Clamps 11
=V1GL1UQ52UQ11.5
+V1GL1UQ52UQ11.5
-UQ11.5

=V1GL1UQ52
-UQ11.1-BGS/R
Clamps 11

=V1GL1UQ52
-UQ11.2-BGS/R
Clamps 11

=V1GL1UQ52
-UQ11.3-BGS/R
Clamps 11

=V1GL1UQ52
-UQ11.4-BGS/R
Clamps 11

=V1GL1UQ52
-UQ11.5-BGS/R
Clamps 11

=V1GL1UQ52UQ10+.GL1UQ52UQ10/1

=V1GL1UQ52UQ12+.GL1UQ52UQ12/1

			Date	1/17/2023	Volvo Trucks North America	Valiant TMS	FESTO DQ CONNECTION QN12	Drawing name: =2V09&EFS-EL	= V1GL1UQ52UQ11
			Ed.	MKLEPADLO					+ V1GL1UQ52UQ11
			Appr		P6700 Bodyside LH - Robot Cell 2V09			Document type: EFS	Project nr: 22-16150
Modification	Date	Name	Original		Replacement of	Replaced by	Scale 1:1		Page 1 / 1533

0	1	2	3	4	5	6	7	8	9

=V1GL1UQ52KF2
+.GL1UQ52

-KF2.22
=V1GL1UQ52KF2+V1GL1UQ52/5.1

Clamps 12 (RST)
=V1GL1UQ52KF2
+V1GL1UQ52
-QN13.1_Q
=V1GL1UQ52KF2
+V1GL1UQ52/5.3
Q2100.4

Clamps 12 (SET)
=V1GL1UQ52KF2
+V1GL1UQ52
-QN13.2_Q
=V1GL1UQ52KF2
+V1GL1UQ52/5.3
Q2100.5

1.1 Pneumatic Valve

1.2 Pneumatic Valve

-QN13 .1 .2

=V1GL1UQ52KF2+V1GL1UQ52/2.4
+V1GL1UQ52UQ12.1-W1

-W1
RKC 4.4T-5-RSC 4.4T/S3060
5m

BN BU BK WH
1 3
-BGS/R
TÜNKERS
1324638
A2 A1
2 4

Clamps 12
=V1GL1UQ52UQ12.1
+V1GL1UQ52UQ12.1
-UQ12.1

=V1GL1UQ52
-UQ12.1-BGS/R
Clamps 12

=V1GL1UQ52KF2+V1GL1UQ52/2.5
+V1GL1UQ52UQ12.2-W1

-W1
RKC 4.4T-3-RSC 4.4T/S3060
3m

BN BU BK WH
1 3
-BGS/R
TÜNKERS
1324644
A2 A1
2 4

Clamps 12
=V1GL1UQ52UQ12.2
+V1GL1UQ52UQ12.2
-UQ12.2

=V1GL1UQ52
-UQ12.2-BGS/R
Clamps 12

=V1GL1UQ52KF2+V1GL1UQ52/2.6
+V1GL1UQ52UQ12.3-W1

-W1
RKC 4.4T-6-RSC 4.4T/S3060
6m

BN BU BK WH
1 3
-BGS/R
TÜNKERS
1324644
A2 A1
2 4

Clamps 12
=V1GL1UQ52UQ12.3
+V1GL1UQ52UQ12.3
-UQ12.3

=V1GL1UQ52
-UQ12.3-BGS/R
Clamps 12

=V1GL1UQ52KF2+V1GL1UQ52/2.8
+V1GL1UQ52UQ12.4-W1

-W1
RKC 4.4T-5-RSC 4.4T/S3060
5m

BN BU BK WH
1 3
-BGS/R
TÜNKERS
1324644
A2 A1
2 4

Clamps 12
=V1GL1UQ52UQ12.4
+V1GL1UQ52UQ12.4
-UQ12.4

=V1GL1UQ52
-UQ12.4-BGS/R
Clamps 12

=V1GL1UQ52KF2+V1GL1UQ52/2.9
+V1GL1UQ52UQ12.5-W1

-W1
RKC 4.4T-3-RSC 4.4T/S3060
3m

BN BU BK WH
1 3
-BGS/R
TÜNKERS
1324638
A2 A1
2 4

Clamps 12
=V1GL1UQ52UQ12.5
+V1GL1UQ52UQ12.5
-UQ12.5

=V1GL1UQ52
-UQ12.5-BGS/R
Clamps 12

=V1GL1UQ52KF2+V1GL1UQ52/3.1
+V1GL1UQ52UQ12.6-W1

-W1
RKC 4.4T-3-RSC 4.4T/S3060
3m

BN BU BK WH
1 3
-BGS/R
TÜNKERS
1324644
A2 A1
2 4

Clamps 12
=V1GL1UQ52UQ12.6
+.GL1UQ52UQ12.6
-UQ12.6

=V1GL1UQ52
-UQ12.6-BGS/R
Clamps 12

=V1GL1UQ52UQ11+.GL1UQ52UQ11/1

=V1GL1UQ52UQ13+.GL1UQ52UQ13/1

			Date	1/17/2023	Volvo Trucks North America	Valiant TMS	FESTO DQ CONNECTION QN13	Drawing name: =2V09&EFS-EL	= V1GL1UQ52UQ12
			Ed.	MKLEPADLO					+ V1GL1UQ52UQ12
			Appr		P6700 Bodyside LH - Robot Cell 2V09			Document type: EFS	Project nr: 22-16150
Modification	Date	Name	Original		Replacement of	Replaced by	Scale 1:1		Page 1 / 1533

0	1	2	3	4	5	6	7	8	9

=V1GL1UQ52KF2
+.GL1UQ52

-KF2.22
=V1GL1UQ52KF2+V1GL1UQ52/5.1

Clamp 13 (RST)	Clamp 13 (SET)
=V1GL1UQ52KF2	=V1GL1UQ52KF2
+V1GL1UQ52	+V1GL1UQ52
-QN14.1_Q	-QN14.2_Q
=V1GL1UQ52KF2	=V1GL1UQ52KF2
+V1GL1UQ52/5.3	+V1GL1UQ52/5.3
Q2100.6	Q2100.7
2.1 Pneumatic Valve	2.2 Pneumatic Valve

-QN14 .1 .2

=V1GL1UQ52KF2+V1GL1UQ52/3.2
+V1GL1UQ52UQ13.1-W1

-W1
RKC 4.4T-4-RSC 4.4T/S3060
4m

-BGS/R
BN 1 +
BU 3 -
BK
WH
TÜNKERS
1324644
A2 2
A1 4

Clamp 13
=V1GL1UQ52UQ13.1
+V1GL1UQ52UQ13.1
-UQ13.1

=V1GL1UQ52 -UQ13.1-BGS/R Clamp 13

=V1GL1UQ52UQ12+.GL1UQ52UQ12/1

=V1GL1UQ52UQ14+.GL1UQ52UQ14/1

			Date	1/17/2023	Volvo Trucks North America	Valiant TMS	FESTO DQ CONNECTION QN14	Drawing name: =2V09&EFS-EL	= V1GL1UQ52UQ13
			Ed.	MKLEPADLO					+ V1GL1UQ52UQ13
			Appr		P6700 Bodyside LH - Robot Cell 2V09			Document type: EFS	Project nr: 22-16150
Modification	Date	Name	Original		Replacement of / Replaced by	Scale 1:1			Page 1 / 1533

0	1	2	3	4	5	6	7	8	9

=V1GL1UQ52KF2
+.GL1UQ52

-KF2.23
=V1GL1UQ52KF2+V1GL1UQ52/5.1

Clamp 14 (RST)	Clamp 14 (SET)
=V1GL1UQ52KF2	=V1GL1UQ52KF2
+V1GL1UQ52	+V1GL1UQ52
-QN15.1_Q	-QN15.2_Q
=V1GL1UQ52KF2	=V1GL1UQ52KF2
+V1GL1UQ52/5.3	+V1GL1UQ52/5.3
Q2101.0	Q2101.1
1.1 Pneumatic Valve	1.2 Pneumatic Valve

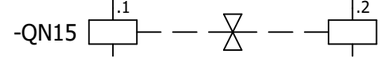

=V1GL1UQ52KF2+V1GL1UQ52/3.3
+V1GL1UQ52UQ14.1-W1

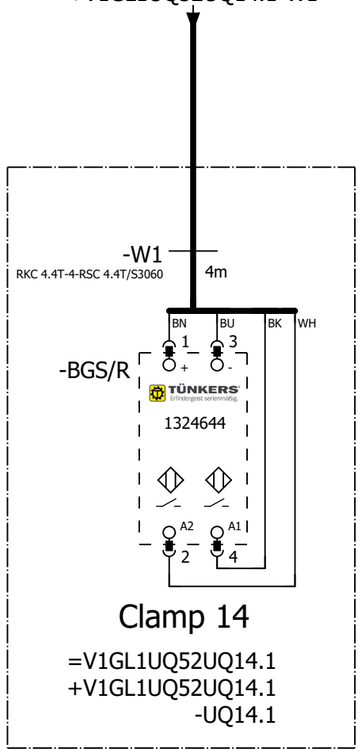

Clamp 14

=V1GL1UQ52UQ14.1
+V1GL1UQ52UQ14.1
-UQ14.1

=V1GL1UQ52 -UQ14.1-BGS/R Clamp 14

=V1GL1UQ52UQ13+.GL1UQ52UQ13/1

=V1GL1UQ52UQ15+.GL1UQ52UQ15/1

			Date	1/17/2023	Volvo Trucks North America	Valiant TMS	FESTO DQ CONNECTION QN15	Drawing name: =2V09&EFS-EL	= V1GL1UQ52UQ14
			Ed.	MKLEPADLO					+ V1GL1UQ52UQ14
			Appr		P6700 Bodyside LH - Robot Cell 2V09			Document type: EFS	Project nr: 22-16150
Modification	Date	Name	Original		Replacement of	Replaced by	Scale 1:1		Page 1 / 1533

0	1	2	3	4	5	6	7	8	9

=V1GL1UQ52KF2
+.GL1UQ52

-KF2.23
=V1GL1UQ52KF2+V1GL1UQ52/5.1

Clamp 15 (RST)	Clamp 15 (SET)
=V1GL1UQ52KF2	=V1GL1UQ52KF2
+V1GL1UQ52	+V1GL1UQ52
-QN16.1_Q	-QN16.2_Q
=V1GL1UQ52KF2	=V1GL1UQ52KF2
+V1GL1UQ52/5.3	+V1GL1UQ52/5.3
Q2101.2	Q2101.3

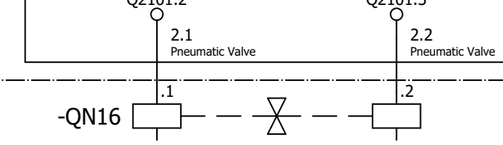

=V1GL1UQ52KF2+V1GL1UQ52/3.4
+V1GL1UQ52UQ15.1-W1

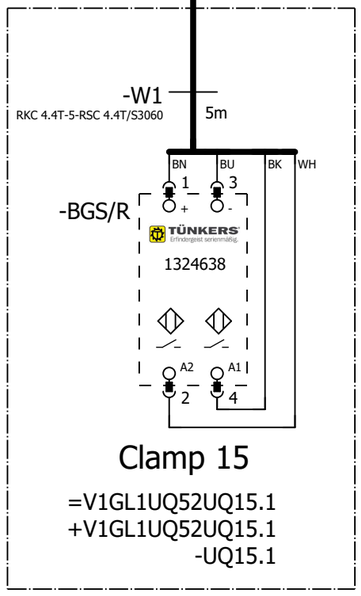

Clamp 15

=V1GL1UQ52UQ15.1
+V1GL1UQ52UQ15.1
-UQ15.1

=V1GL1UQ52 -UQ15.1-BGS/R Clamp 15

=V1GL1UQ52UQ14+.GL1UQ52UQ14/1

=V1GL1UQ52UQ16+.GL1UQ52UQ16/1

			Date	1/17/2023	Volvo Trucks North America	Valiant TMS	FESTO DQ CONNECTION QN16	Drawing name: =2V09&EFS-EL	= V1GL1UQ52UQ15
			Ed.	MKLEPADLO					+ V1GL1UQ52UQ15
			Appr		P6700 Bodyside LH - Robot Cell 2V09	Scale 1:1		Document type: EFS	Project nr: 22-16150
Modification	Date	Name	Original		Replacement of	Replaced by			Page 1 / 1533

0	1	2	3	4	5	6	7	8	9

=V1GL1UQ52KF2
+.GL1UQ52

-KF2.24
=V1GL1UQ52KF2+V1GL1UQ52/5.1

Clamps 16 (RST)
=V1GL1UQ52KF2
+V1GL1UQ52
-QN17.1_Q
=V1GL1UQ52KF2
+V1GL1UQ52/5.3
Q2101.4

Clamps 16 (SET)
=V1GL1UQ52KF2
+V1GL1UQ52
-QN17.2_Q
=V1GL1UQ52KF2
+V1GL1UQ52/5.3
Q2101.5

1.1 Pneumatic Valve

1.2 Pneumatic Valve

-QN17 .1 .2

=V1GL1UQ52KF2+V1GL1UQ52/3.5
+V1GL1UQ52UQ16.1-W1

=V1GL1UQ52KF2+V1GL1UQ52/3.6
+V1GL1UQ52UQ16.2-W1

=V1GL1UQ52KF2+V1GL1UQ52/3.8
+V1GL1UQ52UQ16.3-W1

-W1 4m
RKC 4.4T-4-RSC 4.4T/S3060

-W1 4m
RKC 4.4T-4-RSC 4.4T/S3060

-W1 5m
RKC 4.4T-5-RSC 4.4T/S3060

BN BU BK WH

-BGS/R
1 3
+ -
TÜNKERS
1324638
A2 A1
2 4

-BGS/R
1 3
+ -
TÜNKERS
1324644
A2 A1
2 4

-BGS/R
1 3
+ -
TÜNKERS
1324644
A2 A1
2 4

Clamps 16
=V1GL1UQ52UQ16.1
+V1GL1UQ52UQ16.1
-UQ16.1

Clamps 16
=V1GL1UQ52UQ16.2
+V1GL1UQ52UQ16.2
-UQ16.2

Clamps 16
=V1GL1UQ52UQ16.3
+V1GL1UQ52UQ16.3
-UQ16.3

=V1GL1UQ52
-UQ16.1-BGS/R
Clamps 16

=V1GL1UQ52
-UQ16.2-BGS/R
Clamps 16

=V1GL1UQ52
-UQ16.3-BGS/R
Clamps 16

=V1GL1UQ52UQ15+.GL1UQ52UQ15/1

=V1GL1UQ52UQ17+.GL1UQ52UQ17/1

			Date	1/17/2023	Volvo Trucks North America		Valiant TMS	FESTO DQ CONNECTION QN17	Drawing name: =2V09&EFS-EL	= V1GL1UQ52UQ16
			Ed.	MKLEPADLO						+ V1GL1UQ52UQ16
			Appr		P6700 Bodyside LH - Robot Cell 2V09				Document type: EFS	Project nr: 22-16150
Modification	Date	Name	Original		Replacement of	Replaced by	Scale 1:1			Page 1 / 1533

0	1	2	3	4	5	6	7	8	9

=V1GL1UQ52KF2
+.GL1UQ52

-KF2.24
=V1GL1UQ52KF2+V1GL1UQ52/5.1

Clamp 17 (RST)	Clamp 17 (SET)
=V1GL1UQ52KF2	=V1GL1UQ52KF2
+V1GL1UQ52	+V1GL1UQ52
-QN18.1_Q	-QN18.2_Q
=V1GL1UQ52KF2	=V1GL1UQ52KF2
+V1GL1UQ52/5.3	+V1GL1UQ52/5.3
Q2101.6	Q2101.7
2.1 Pneumatic Valve	2.2 Pneumatic Valve

-QN18 .1 .2

=V1GL1UQ52KF2+V1GL1UQ52/3.9
+V1GL1UQ52UQ17.1-W1

-W1
RKC 4.4T-3-RSC 4.4T/S3060
3m

BN BU BK WH

-BGS/R
1 3
+ -
TÜNKERS
1324638
A2 A1
2 4

Clamp 17

=V1GL1UQ52UQ17.1
+V1GL1UQ52UQ17.1
-UQ17.1

=V1GL1UQ52
-UQ17.1-BGS/R
Clamp 17

=V1GL1UQ52UQ16+.GL1UQ52UQ16/1

=V1GL1UQ52UQ18+.GL1UQ52UQ18/1

			Date	1/17/2023	Volvo Trucks North America	Valiant TMS	FESTO DQ CONNECTION QN18	Drawing name: =2V09&EFS-EL	= V1GL1UQ52UQ17
			Ed.	MKLEPADLO					+ V1GL1UQ52UQ17
			Appr		P6700 Bodyside LH - Robot Cell 2V09			Document type: EFS	Project nr: 22-16150
Modification	Date	Name	Original		Replacement of	Replaced by	Scale 1:1		Page 1 / 1533

0	1	2	3	4	5	6	7	8	9

=V1GL1UQ52KF2
+.GL1UQ52

-KF2.25
=V1GL1UQ52KF2+V1GL1UQ52/5.1

Shot Pins 18 (RST)
=V1GL1UQ52KF2
+V1GL1UQ52
-QN20.1_Q
=V1GL1UQ52KF2
+V1GL1UQ52/5.3
Q2102.0

Shot Pins 18 (SET)
=V1GL1UQ52KF2
+V1GL1UQ52
-QN20.2_Q
=V1GL1UQ52KF2
+V1GL1UQ52/5.3
Q2102.1

1.1 Pneumatic Valve

1.2 Pneumatic Valve

-QN20 .1 .2

=V1GL1UQ52KF2+V1GL1UQ52/4.1
+V1GL1UQ52UQ18.1-W1

-W1 4m
RKC 4.4T-4-RSC 4.4T/S3060

BN BU BK WH

-BGS/R
1 3
WELKER
WWS001A
A2 A1
2 4

Shot Pins 18
=V1GL1UQ52UQ18.1
+V1GL1UQ52UQ18.1
-UQ18.1

=V1GL1UQ52
-UQ18.1-BGS/R
Shot Pins 18

=V1GL1UQ52KF2+V1GL1UQ52/4.2
+V1GL1UQ52UQ18.2-W1

-W1 5m
RKC 4.4T-5-RSC 4.4T/S3060

BN BU BK WH

-BGS/R
1 3
WELKER
WWS001A
A2 A1
2 4

Shot Pins 18
=V1GL1UQ52UQ18.2
+V1GL1UQ52UQ18.2
-UQ18.2

=V1GL1UQ52
-UQ18.2-BGS/R
Shot Pins 18

=V1GL1UQ52UQ17+.GL1UQ52UQ17/1

=V1GL1UQ52UQ19+.GL1UQ52UQ19/1

			Date	1/17/2023	Volvo Trucks North America		Valiant TMS	FESTO DQ CONNECTION QN19	Drawing name: =2V09&EFS-EL	= V1GL1UQ52UQ18
			Ed.	MKLEPADLO						+ V1GL1UQ52UQ18
			Appr		P6700 Bodyside LH - Robot Cell 2V09				Document type: EFS	Project nr: 22-16150
Modification	Date	Name	Original		Replacement of	Replaced by	Scale 1:1			Page 1 / 1533

0	1	2	3	4	5	6	7	8	9

=V1GL1UQ52KF2
+.GL1UQ52

-KF2.25
=V1GL1UQ52KF2+V1GL1UQ52/5.1

Clamps 19 (RST)
=V1GL1UQ52KF2
+V1GL1UQ52
-QN20.1_Q
=V1GL1UQ52KF2
+V1GL1UQ52/5.3
Q2102.2

Clamps 19 (SET)
=V1GL1UQ52KF2
+V1GL1UQ52
-QN20.2_Q
=V1GL1UQ52KF2
+V1GL1UQ52/5.3
Q2102.3

2.1
Pneumatic Valve

2.2
Pneumatic Valve

.1

.2

-QN20

=V1GL1UQ52KF2+V1GL1UQ52/4.3
+V1GL1UQ52UQ19.1-W1

=V1GL1UQ52KF2+V1GL1UQ52/4.4
+V1GL1UQ52UQ19.2-W1

-W1
RKC 4.4T-4-RSC 4.4T/S3060
4m

-W1
RKC 4.4T-3-RSC 4.4T/S3060
3m

BN BU BK WH

1 3

-BGS/R

TÜNKERS
Erfindergeist serienmäßig.

1324638

A2 A1

2 4

Clamps 19

=V1GL1UQ52UQ19.1
+V1GL1UQ52UQ19.1
-UQ19.1

Clamps 19

=V1GL1UQ52UQ19.2
+V1GL1UQ52UQ19.2
-UQ19.2

=V1GL1UQ52
-UQ19.1-BGS/R
Clamps 19

=V1GL1UQ52
-UQ19.2-BGS/R
Clamps 19

=V1GL1UQ52UQ18+.GL1UQ52UQ18/1

=V1GL1UQ52UQ20+.GL1UQ52UQ20/1

			Date	1/17/2023	Volvo Trucks North America		Valiant TMS	FESTO DQ CONNECTION QN20	Drawing name: =2V09&EFS-EL	= V1GL1UQ52UQ19
			Ed.	MKLEPADLO						+ V1GL1UQ52UQ19
			Appr		P6700 Bodyside LH - Robot Cell 2V09				Document type: EFS	Project nr: 22-16150
Modification	Date	Name	Original		Replacement of	Replaced by	Scale 1:1			Page 1 / 1533

0	1	2	3	4	5	6	7	8	9

=V1GL1UQ52KF3
+.GL1UQ52

-KF3.21
=V1GL1UQ52KF3+V1GL1UQ52/2.1

Clamp 20 (RST)
=V1GL1UQ52KF2
+V1GL1UQ52
-QN21.1_Q
=V1GL1UQ52KF3
+V1GL1UQ52/2.3
Q2125.0

Clamp 20 (SET)
=V1GL1UQ52KF2
+V1GL1UQ52
-QN21.2_Q
=V1GL1UQ52KF3
+V1GL1UQ52/2.3
Q2125.1

1.1 Pneumatic Valve

1.2 Pneumatic Valve

-QN21 .1 .2

=V1GL1UQ52KF3+V1GL1UQ52/1.1
+V1GL1UQ52UQ20.1-W1

-W1
RKC 4.4T-5-RSC 4.4T/S3060
5m

BN BU BK WH

-BGS/R
1 3
+ -
TÜNKERS
1324638
A2 A1
2 4

Clamp 20

=V1GL1UQ52UQ20.1
+V1GL1UQ52UQ20.1
-UQ20.1

=V1GL1UQ52
-UQ20.1-BGS/R
Clamp 20

=V1GL1UQ52UQ19+.GL1UQ52UQ19/1

=V1GL1UQ52UQ21+.GL1UQ52UQ21/1

			Date	1/17/2023	Volvo Trucks North America		Valiant TMS	FESTO DQ CONNECTION QN21	Drawing name: =2V09&EFS-EL	= V1GL1UQ52UQ20
			Ed.	MKLEPADLO						+ V1GL1UQ52UQ20
			Appr		P6700 Bodyside LH - Robot Cell 2V09				Document type: EFS	Project nr: 22-16150
Modification	Date	Name	Original		Replacement of	Replaced by	Scale 1:1			Page 1 / 1533

0	1	2	3	4	5	6	7	8	9

=V1GL1UQ52KF3
+.GL1UQ52

-KF3.21
=V1GL1UQ52KF3+V1GL1UQ52/2.1

Shot Pin 21 (RST)
=V1GL1UQ52KF2
+V1GL1UQ52
-QN22.1_Q
=V1GL1UQ52KF3
+V1GL1UQ52/2.3
Q2125.2

Shot Pin 21 (SET)
=V1GL1UQ52KF2
+V1GL1UQ52
-QN22.2_Q
=V1GL1UQ52KF3
+V1GL1UQ52/2.3
Q2125.3

2.1
Pneumatic Valve

2.2
Pneumatic Valve

-QN22 .1 .2

=V1GL1UQ52KF3+V1GL1UQ52/1.2
+V1GL1UQ52UQ21.1-W1

-W1
RKC 4.4T-4-RSC 4.4T/S3060
4m

BN BU BK WH

-BGS/R
1 3
2 4
A2 A1

WWS001A

Shot Pins 21

=V1GL1UQ52UQ21.1
+.GL1UQ52UQ21.1
-UQ21.1

=V1GL1UQ52
-UQ21.1-BGS/R
Shot Pins 21

=V1GL1UQ52UQ20+.GL1UQ52UQ20/1

=V1GL1UQ52UQ22+.GL1UQ52UQ22/1

			Date	1/17/2023	Volvo Trucks North America	Valiant TMS	FESTO DQ CONNECTION QN22	Drawing name: =2V09&EFS-EL	= V1GL1UQ52UQ21
			Ed.	MKLEPADLO					+ V1GL1UQ52UQ21
			Appr		P6700 Bodyside LH - Robot Cell 2V09			Document type: EFS	Project nr: 22-16150
Modification	Date	Name	Original		Replacement of	Replaced by	Scale 1:1		Page 1 / 1533

0	1	2	3	4	5	6	7	8	9

=V1GL1UQ52KF3
+.GL1UQ52

-KF3.22
=V1GL1UQ52KF3+V1GL1UQ52/2.1

Shot Pin 22 (RST)	Shot Pin 22 (SET)
=V1GL1UQ52KF2	=V1GL1UQ52KF2
+V1GL1UQ52	+V1GL1UQ52
-QN23.1_Q	-QN23.2_Q
=V1GL1UQ52KF3	=V1GL1UQ52KF3
+V1GL1UQ52/2.3	+V1GL1UQ52/2.3
Q2125.4	Q2125.5
1.1 Pneumatic Valve	1.2 Pneumatic Valve

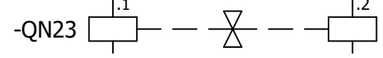

=V1GL1UQ52KF3+V1GL1UQ52/1.3
+V1GL1UQ52UQ22.1-W1

-W1
RKC 4.4T-4-RSC 4.4T/S3060
4m

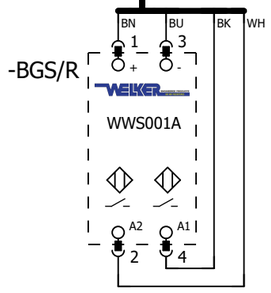

Shot Pin 22

=V1GL1UQ52UQ22.1
+.GL1UQ52UQ22.1
-UQ22.1

=V1GL1UQ52
-UQ22.1-BGS/R
Shot Pin 22

=V1GL1UQ52UQ21+.GL1UQ52UQ21/1

=V1GL1UQ52UQ23+.GL1UQ52UQ23/1

			Date	1/17/2023	Volvo Trucks North America	Valiant TMS	FESTO DQ CONNECTION QN23	Drawing name: =2V09&EFS-EL	= V1GL1UQ52UQ22
			Ed.	MKLEPADLO					+ V1GL1UQ52UQ22
			Appr		P6700 Bodyside LH - Robot Cell 2V09			Document type: EFS	Project nr: 22-16150
Modification	Date	Name	Original		Replacement of	Replaced by	Scale 1:1		Page 1 / 1533

0	1	2	3	4	5	6	7	8	9

=V1GL1UQ52KF3
+.GL1UQ52

-KF3.22
=V1GL1UQ52KF3+V1GL1UQ52/2.1

Shot Pin 23 (RST)	Shot Pin 23 (SET)
=V1GL1UQ52KF2	=V1GL1UQ52KF2
+V1GL1UQ52	+V1GL1UQ52
-QN24.1_Q	-QN24.2_Q
=V1GL1UQ52KF3	=V1GL1UQ52KF3
+V1GL1UQ52/2.3	+V1GL1UQ52/2.3
Q2125.6	Q2125.7
2.1 Pneumatic Valve	2.2 Pneumatic Valve

-QN24 .1 .2

=V1GL1UQ52KF3+V1GL1UQ52/1.4
+V1GL1UQ52UQ23.1-W1

-W1
RKC 4.4T-4-RSC 4.4T/S3060
4m

BN BU BK WH

-BGS/R
1 3
2 4
A2 A1

WWS001A

Shot Pin 23

=V1GL1UQ52UQ23.1
+.GL1UQ52UQ23.1
-UQ23.1

=V1GL1UQ52 -UQ23.1-BGS/R Shot Pin 23

=V1GL1UQ52UQ22+.GL1UQ52UQ22/1

=V1GL1UQ52WC4+V1GL1UQ52/1

			Date	1/17/2023	Volvo Trucks North America	Valiant TMS	FESTO DQ CONNECTION QN24	Drawing name: =2V09&EFS-EL	= V1GL1UQ52UQ23
			Ed.	MKLEPADLO					+ V1GL1UQ52UQ23
			Appr		P6700 Bodyside LH - Robot Cell 2V09			Document type: EFS	Project nr: 22-16150
Modification	Date	Name	Original		Replacement of	Replaced by	Scale 1:1		Page 1 / 1533

0	1	2	3	4	5	6	7	8	9

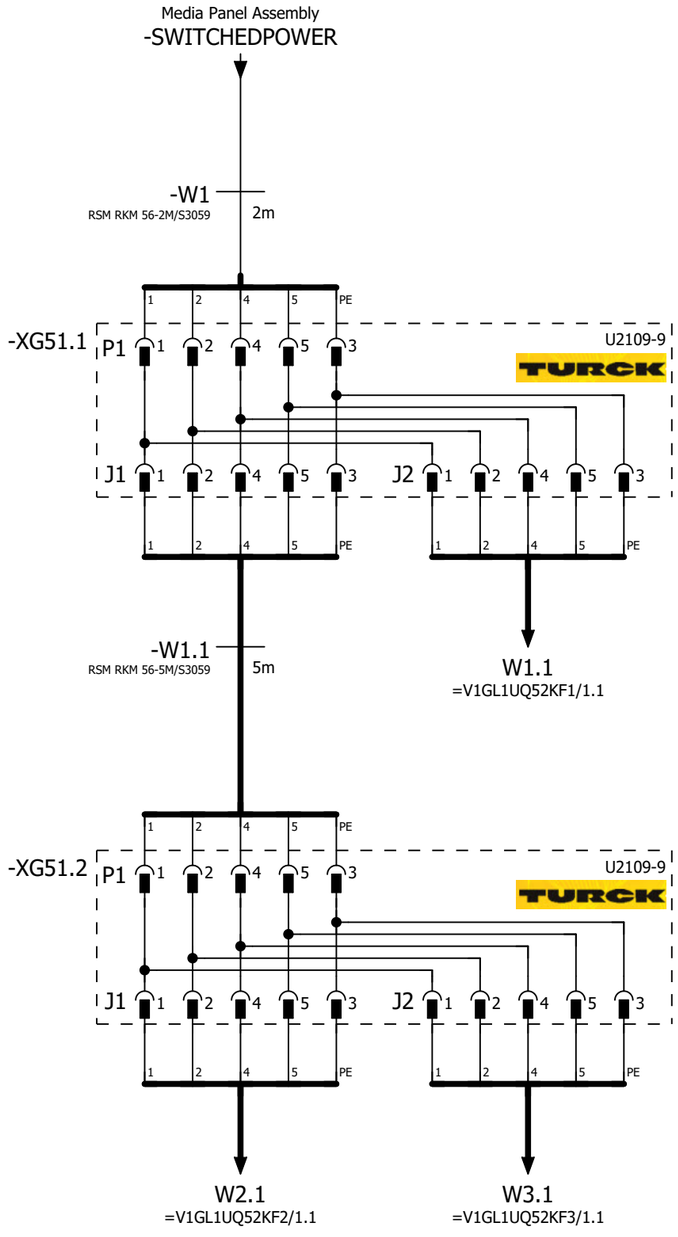

=V1GL1UQ52UQ23+.GL1UQ52UQ23/1

=V1GL1UQ53BG0+.GL1UQ53/1

			Date	1/17/2023	Volvo Trucks North America	Valiant TMS	24VDC	Drawing name: =2V09&EFS-EL	= V1GL1UQ52WC4
			Ed.	MKLEPADLO					+ V1GL1UQ52
			Appr		P6700 Bodyside LH - Robot Cell 2V09	Scale 1:1		Document type: EFS	Project nr: 22-16150
Modification	Date	Name	Original		Replacement of	Replaced by			Page 1 / 1533

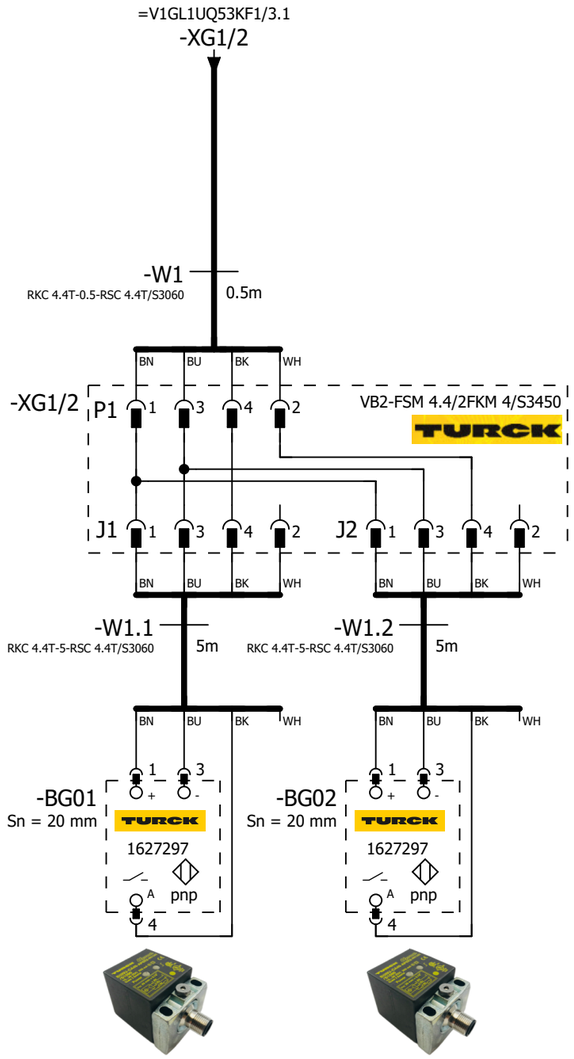

=V1GL1UQ53
-BG01
Header Sub
Assembly

=V1GL1UQ53
-BG02
Header Sub
Assembly

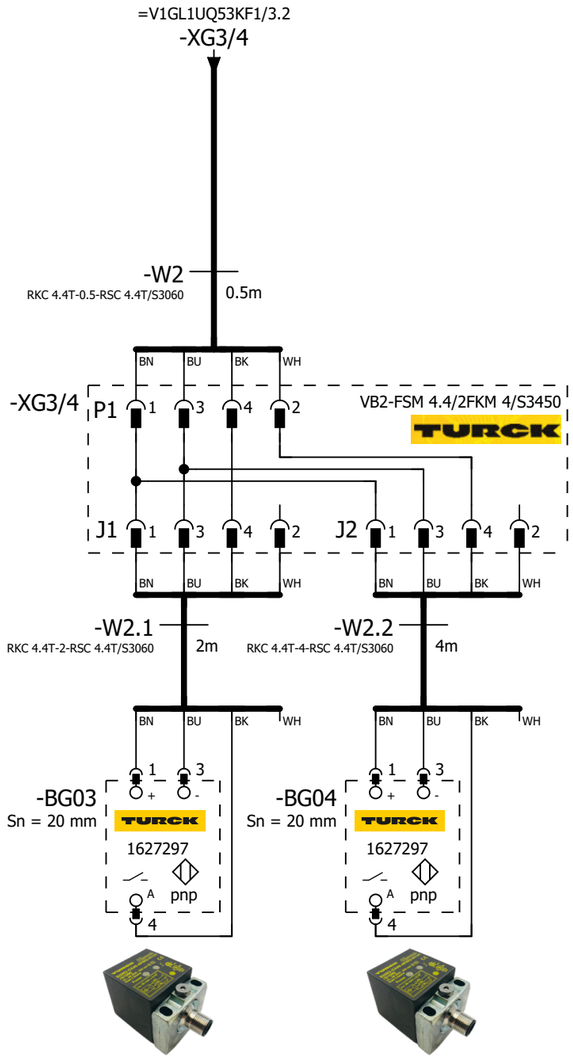

=V1GL1UQ53
-BG03
Door Frame
Assembly

=V1GL1UQ53
-BG04
Outer Sill Member

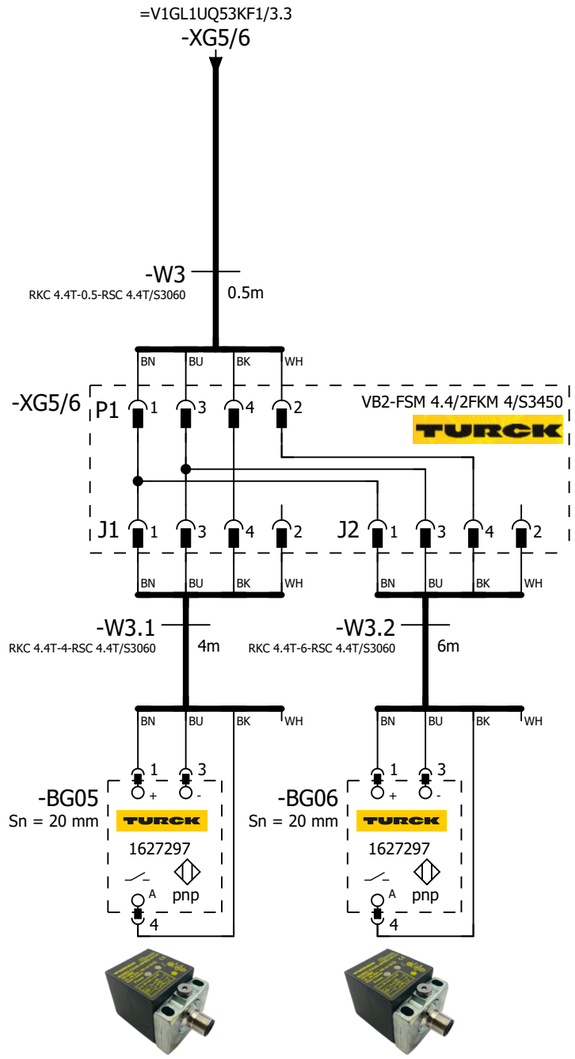

=V1GL1UQ53
-BG05
Door Frame
Assembly

=V1GL1UQ53
-BG06
Rocker Short
Sleeper

=V1GL1UQ52WC4+.GL1UQ52/1

2

			Date	1/17/2023	Volvo Trucks North America	Valiant TMS	SENSORS	Drawing name: =2V09&EFS-EL	= V1GL1UQ53BG0
			Ed.	MKLEPADLO					+ V1GL1UQ53
			Appr		P6700 Bodyside LH - Robot Cell 2V09	Scale 1:1		Document type: EFS	Project nr: 22-16150
Modification	Date	Name	Original		Replacement of	Replaced by			Page 1 / 1533

0	1	2	3	4	5	6	7	8	9

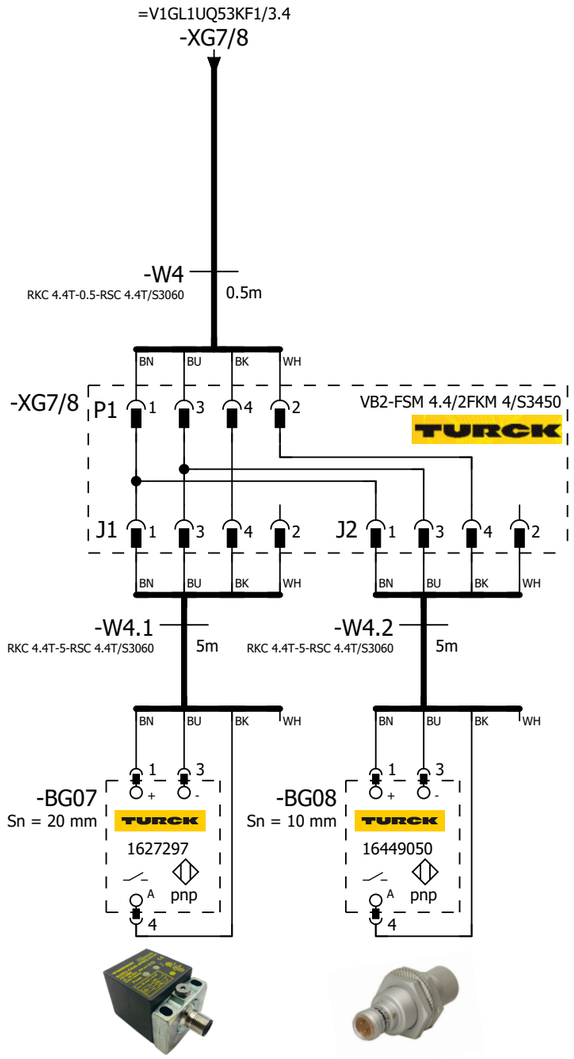

=V1GL1UQ53 -BG07 Outer Sill Member	=V1GL1UQ53 -BG08 Hinge Box

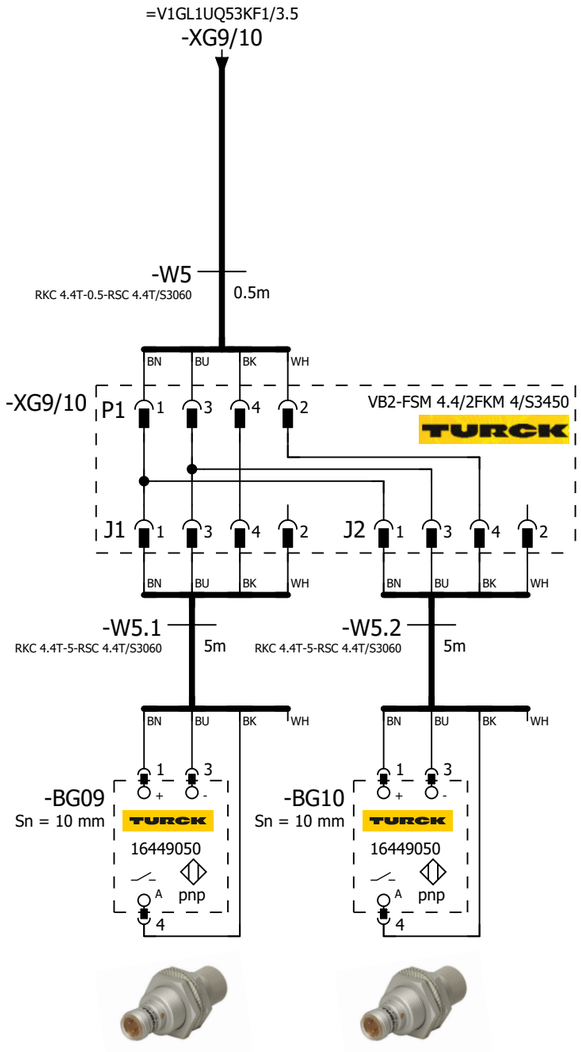

=V1GL1UQ53 -BG09 Hinge Box	=V1GL1UQ53 -BG10 Side Reinforcement

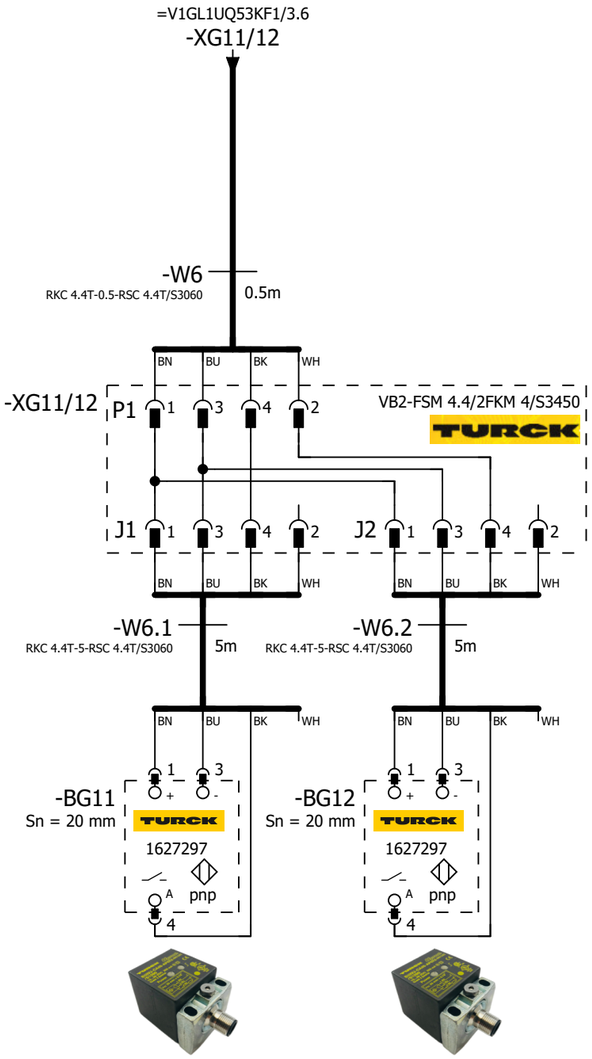

=V1GL1UQ53 -BG11 Bunk Support	=V1GL1UQ53 -BG12 Bunk Support

1 3

			Date	1/17/2023	Volvo Trucks North America		Valiant TMS	SENSORS	Drawing name: =2V09&EFS-EL	= V1GL1UQ53BG0
			Ed.	MKLEPADLO						+ V1GL1UQ53
			Appr		P6700 Bodyside LH - Robot Cell 2V09		Scale 1:1		Document type: EFS	Project nr: 22-16150
Modification	Date	Name	Original		Replacement of	Replaced by				Page 2 / 1533

0	1	2	3	4	5	6	7	8	9

=V1GL1UQ53KF2/4.1
-XG13/14

-W7
RKC 4.4T-0.5-RSC 4.4T/S3060
0.5m

BN BU BK WH

-XG13/14 P1 1 3 4 2 VB2-FSM 4.4/2FKM 4/S3450 TURCK

J1 1 3 4 2 J2 1 3 4 2

BN BU BK WH

-W7.1
RKC 4.4T-5-RSC 4.4T/S3060
5m

-W7.2
RKC 4.4T-5-RSC 4.4T/S3060
5m

BN BU BK WH

-BG13
Sn = 10 mm
TURCK
16449050
1 3
+ -
A pnp
4

-BG14
Sn = 10 mm
TURCK
16449050
1 3
+ -
A pnp
4

=V1GL1UQ53
-BG13
Bunk Support

=V1GL1UQ53
-BG14
Bridge Member

=V1GL1UQ53KF2/4.2
-XG15/16

-W8
RKC 4.4T-0.5-RSC 4.4T/S3060
0.5m

BN BU BK WH

-XG15/16 P1 1 3 4 2 VB2-FSM 4.4/2FKM 4/S3450 TURCK

J1 1 3 4 2 J2 1 3 4 2

BN BU BK WH

-W8.1
RKC 4.4T-5-RSC 4.4T/S3060
5m

-W8.2
RKC 4.4T-5-RSC 4.4T/S3060
5m

BN BU BK WH

-BG15
Sn = 10 mm
TURCK
16449050
1 3
+ -
A pnp
4

-BG16
Sn = 20 mm
TURCK
1627297
1 3
+ -
A pnp
4

=V1GL1UQ53
-BG15
Bridge Member

=V1GL1UQ53
-BG16
Horizontal Crash Beam

=V1GL1UQ53KF2/4.3
-XG17/18

-W9
RKC 4.4T-0.5-RSC 4.4T/S3060
0.5m

BN BU BK WH

-XG17/18 P1 1 3 4 2 VB2-FSM 4.4/2FKM 4/S3450 TURCK

J1 1 3 4 2 J2 1 3 4 2

BN BU BK WH

-W9.1
RKC 4.4T-5-RSC 4.4T/S3060
5m

-W9.2
RKC 4.4T-5-RSC 4.4T/S3060
5m

BN BU BK WH

-BG17
Sn = 20 mm
TURCK
1627297
1 3
+ -
A pnp
4

-BG18
Sn = 10 mm
TURCK
16449050
1 3
+ -
A pnp
4

=V1GL1UQ53
-BG17
Horizontal Crash Beam

=V1GL1UQ53
-BG18
Bridge Horizontal Beam

2 4

			Date	1/17/2023	Volvo Trucks North America	Valiant TMS	SENSORS	Drawing name: =2V09&EFS-EL	= V1GL1UQ53BG0
			Ed.	MKLEPADLO					+ V1GL1UQ53
			Appr		P6700 Bodyside LH - Robot Cell 2V09	Scale 1:1		Document type: EFS	Project nr: 22-16150
Modification	Date	Name	Original		Replacement of	Replaced by			Page 3 / 1533

0	1	2	3	4	5	6	7	8	9

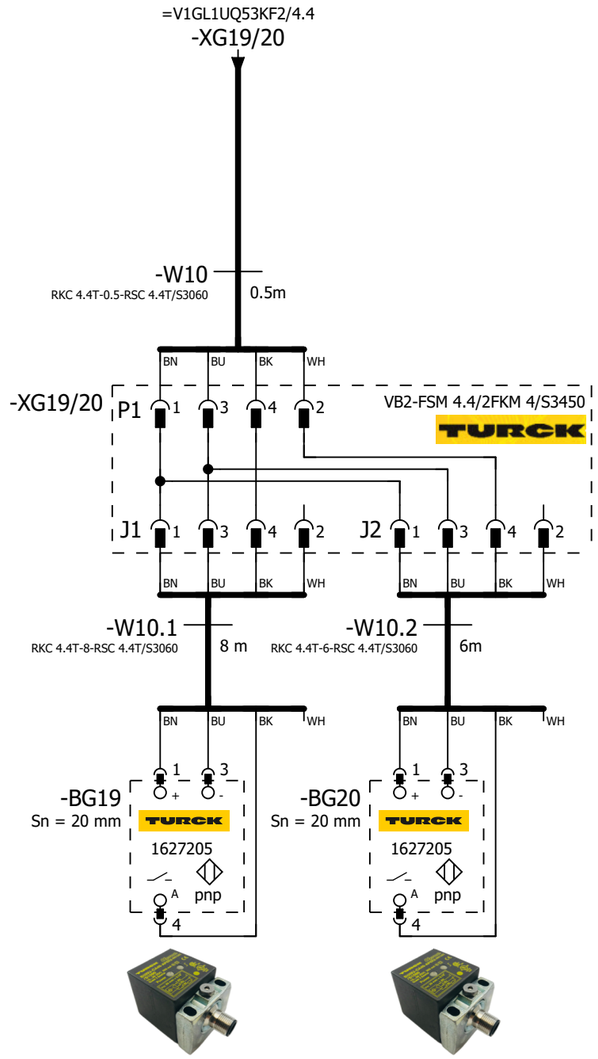

=V1GL1UQ53
-BG19
C-Pillar Assembly

=V1GL1UQ53
-BG20
C-Pillar Assembly

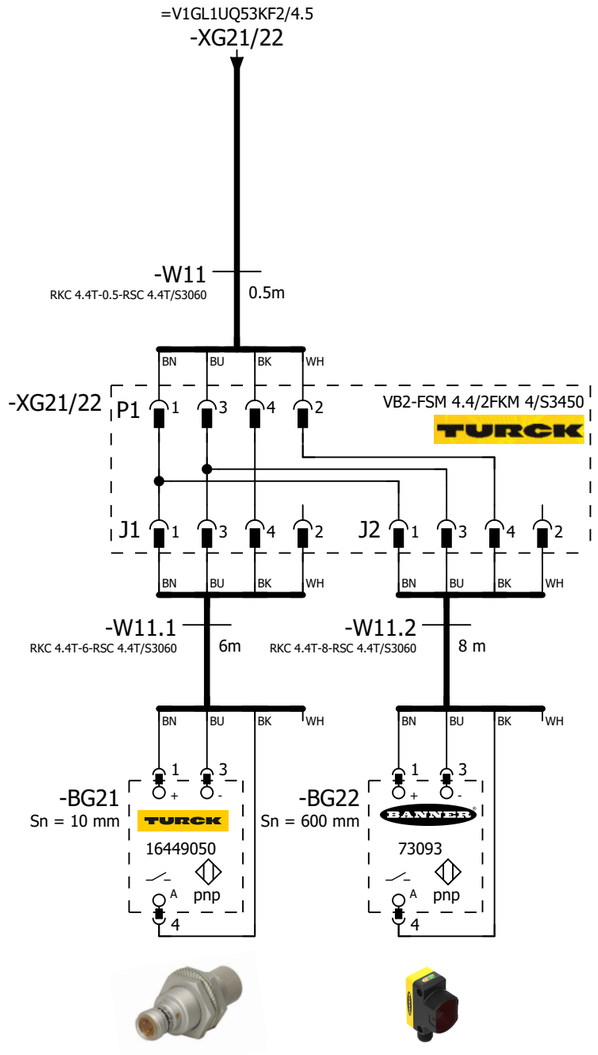

=V1GL1UQ53
-BG21
Head Sub
Assembly

=V1GL1UQ53
-BG22
Extruded Seal
Sleeper

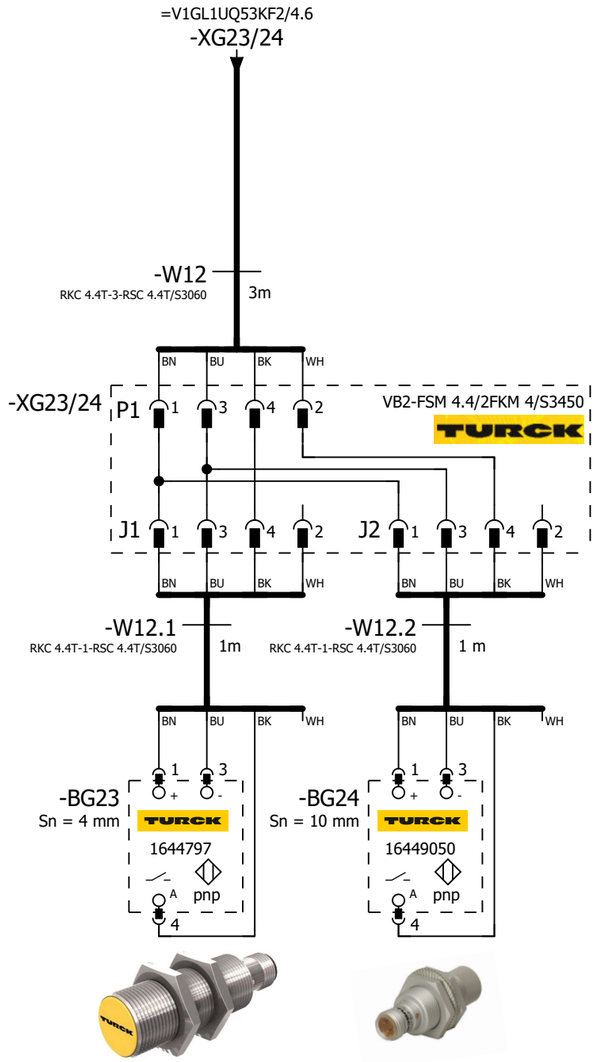

=V1GL1UQ53
-BG23
Reinforcement

=V1GL1UQ53
-BG24
Reinforcement

3

=V1GL1UQ53KF1/1

			Date	1/17/2023	Volvo Trucks North America	Valiant TMS	SENSORS	Drawing name: =2V09&EFS-EL	= V1GL1UQ53BG0
			Ed.	MKLEPADLO					+ V1GL1UQ53
			Appr		P6700 Bodyside LH - Robot Cell 2V09	Scale 1:1		Document type: EFS	Project nr: 22-16150
Modification	Date	Name	Original		Replacement of	Replaced by			Page 4 / 1533

0	1	2	3	4	5	6	7	8	9

=V1GL1UQ53WC4/1.6 / W1.1

-W1.1
RSM RKM 56-2M/S3059
2m

Media Panel Assembly / -WF1

-WF1
PROFINET Cable
6XV1840-3AH10

KF1-P2 / =V1GL1UQ53KF2/1.3

-KF1

X20 M12, 7/8" 1 2 PE 4 5

0V_VAL / OUT | 0V_EL / SEN | FE | 24V_EL / SEN | 24V_VAL / OUT

ON OFF 1 2 1 2

M12 -TP1 M12 -TP2

FESTO
Bus node + Interlinking block
548755 + 550208

I2800.0	DI 0 X1:4	V1GL1UQ53UQ1.1-BGR	Shot Pins 1 (RESET)
I2800.1	DI 1 X1:2	V1GL1UQ53UQ1.1-BGS	Shot Pins 1 (SET)
I2800.2	DI 2 X2:4	V1GL1UQ53UQ1.2-BGR	Shot Pins 1 (RESET)
I2800.3	DI 3 X2:2	V1GL1UQ53UQ1.2-BGS	Shot Pins 1 (SET)
I2800.4	DI 4 X3:4	V1GL1UQ53UQ1.3-BGR	Shot Pins 1 (RESET)
I2800.5	DI 5 X3:2	V1GL1UQ53UQ1.3-BGS	Shot Pins 1 (SET)
I2800.6	DI 6 X4:4	V1GL1UQ53UQ2.1-BGR	Shot Pin 2 (RESET)
I2800.7	DI 7 X4:2	V1GL1UQ53UQ2.1-BGS	Shot Pin 2 (SET)
I2801.0	DI 8 X5:4	V1GL1UQ53UQ3.1-BGR	Shot Pins 3 (RESET)
I2801.1	DI 9 X5:2	V1GL1UQ53UQ3.1-BGS	Shot Pins 3 (SET)
I2801.2	DI 10 X6:4	V1GL1UQ53UQ3.2-BGR	Shot Pins 3 (RESET)
I2801.3	DI 11 X6:2	V1GL1UQ53UQ3.2-BGS	Shot Pins 3 (SET)
I2801.4	DI 12 X7:4	V1GL1UQ53UQ4.1-BGR	Shot Pins 4 (RESET)
I2801.5	DI 13 X7:2	V1GL1UQ53UQ4.1-BGS	Shot Pins 4 (SET)
I2801.6	DI 14 X8:4	V1GL1UQ53UQ4.2-BGR	Shot Pins 4 (RESET)
I2801.7	DI 15 X8:2	V1GL1UQ53UQ4.2-BGS	Shot Pins 4 (SET)

-KF1.11

FESTO
CPX-M-AB-8-M12X2-5POL
549335

X1 X2 X3 X4 X5 X6 X7 X8 M12

24V | DI 1 | 0V | DI 0 | FE
24V | DI 3 | 0V | DI 2 | FE
24V | DI 5 | 0V | DI 4 | FE
24V | DI 7 | 0V | DI 6 | FE
24V | DI 9 | 0V | DI 8 | FE
24V | DI 11 | 0V | DI 10 | FE
24V | DI 13 | 0V | DI 12 | FE
24V | DI 15 | 0V | DI 14 | FE

1 2 3 4 5

BN | WH | BU | BK

+.GL1UQ53UQ1.1-W1
=V1GL1UQ53UQ1+.GL1UQ53UQ1/1.1

+.GL1UQ53UQ1.2-W1
=V1GL1UQ53UQ1+.GL1UQ53UQ1/1.2

+.GL1UQ53UQ1.3-W1
=V1GL1UQ53UQ1+.GL1UQ53UQ1/1.4

+.GL1UQ53UQ2.1-W1
=V1GL1UQ53UQ2+.GL1UQ53UQ2/1.1

+.GL1UQ53UQ3.1-W1
=V1GL1UQ53UQ3+.GL1UQ53UQ3/1.1

+.GL1UQ53UQ3.2-W1
=V1GL1UQ53UQ3+.GL1UQ53UQ3/1.2

+.GL1UQ53UQ4.1-W1
=V1GL1UQ53UQ4+.GL1UQ53UQ4/1.1

+.GL1UQ53UQ4.2-W1
=V1GL1UQ53UQ4+.GL1UQ53UQ4/1.2

=V1GL1UQ53BG0/4

2

			Date	1/17/2023	Volvo Trucks North America	Valiant TMS	CONNECTING MOD. FOR VTSA MANIFOLD	Drawing name: =2V09&EFS-EL	= V1GL1UQ53KF1
			Ed.	MKLEPADLO					+ V1GL1UQ53
			Appr		P6700 Bodyside LH - Robot Cell 2V09			Document type: EFS	Project nr: 22-16150
Modification	Date	Name	Original		Replacement of / Replaced by	Scale 1:1			Page 1 / 1533

0	1	2	3	4	5	6	7	8	9

-KF1.12

FESTO

CPX-M-AB-8-M12X2-5POL

549335

I2802.0	DI 0 X1:4	V1GL1UQ53UQ5.1-BGR	Shot Pin 5 (RESET)
I2802.1	DI 1 X1:2	V1GL1UQ53UQ5.1-BGS	Shot Pin 5 (SET)
I2802.2	DI 2 X2:4	V1GL1UQ53UQ6.1-BGR	Shot Pin 6 (RESET)
I2802.3	DI 3 X2:2	V1GL1UQ53UQ6.1-BGS	Shot Pin 6 (SET)
I2802.4	DI 4 X3:4	V1GL1UQ53UQ7.1-BGR	Shot Pin 7 (RESET)
I2802.5	DI 5 X3:2	V1GL1UQ53UQ7.1-BGS	Shot Pin 7 (SET)
I2802.6	DI 6 X4:4	V1GL1UQ53UQ8.1-BGR	Shot Pins 8 (RESET)
I2802.7	DI 7 X4:2	V1GL1UQ53UQ8.1-BGS	Shot Pins 8 (SET)
I2803.0	DI 8 X5:4	V1GL1UQ53UQ8.2-BGR	Shot Pins 8 (RESET)
I2803.1	DI 9 X5:2	V1GL1UQ53UQ8.2-BGS	Shot Pins 8 (SET)
I2803.2	DI 10 X6:4	V1GL1UQ53UQ8.3-BGR	Shot Pins 8 (RESET)
I2803.3	DI 11 X6:2	V1GL1UQ53UQ8.3-BGS	Shot Pins 8 (SET)
I2803.4	DI 12 X7:4	V1GL1UQ53UQ9.1-BGR	Shot Pin 9 (RESET)
I2803.5	DI 13 X7:2	V1GL1UQ53UQ9.1-BGS	Shot Pin 9 (SET)
I2803.6	DI 14 X8:4	V1GL1UQ53UQ10.1-BGR	Shot Pin 10 (RESET)
I2803.7	DI 15 X8:2	V1GL1UQ53UQ10.1-BGS	Shot Pin 10 (SET)

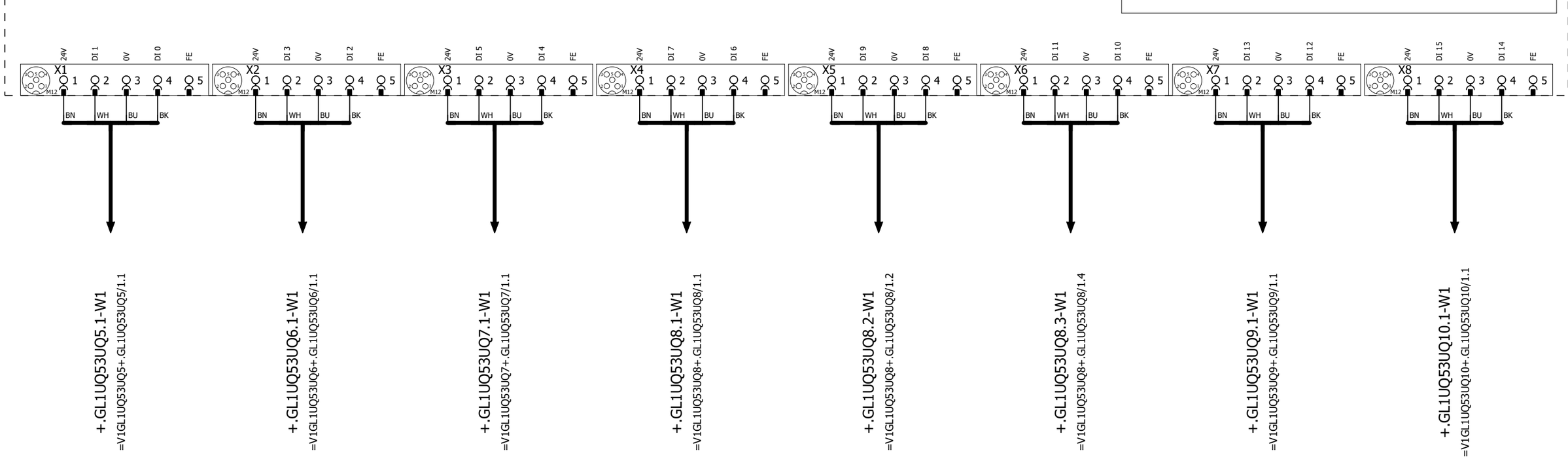

			Date	1/17/2023	Volvo Trucks North America	Valiant TMS	I/O MOD. DI16 (8 x M12) FOR VTSA-F	Drawing name: =2V09&EFS-EL	= V1GL1UQ53KF1
			Ed.	MKLEPADLO					+ V1GL1UQ53
			Appr		P6700 Bodyside LH - Robot Cell 2V09	Scale 1:1		Document type: EFS	Project nr: 22-16150
Modification	Date	Name	Original		Replacement of / Replaced by				Page 2 / 1533

0	1	2	3	4	5	6	7	8	9

-KF1.13

FESTO

CPX-M-AB-8-M12X2-5POL

549335

I2804.0 DI 0 X1:4	V1GL1UQ53-BG01	Sensor Header Sub Assembly
I2804.1 DI 1 X1:2	V1GL1UQ53-BG02	Sensor Header Sub Assembly
I2804.2 DI 2 X2:4	V1GL1UQ53-BG03	Sensor Door Frame Assembly
I2804.3 DI 3 X2:2	V1GL1UQ53-BG04	Sensor Outer Sill Member
I2804.4 DI 4 X3:4	V1GL1UQ53-BG05	Sensor Door Frame Assembly
I2804.5 DI 5 X3:2	V1GL1UQ53-BG06	Sensor Rocker Short Sleeper
I2804.6 DI 6 X4:4	V1GL1UQ53-BG07	Sensor Outer Sill Member
I2804.7 DI 7 X4:2	V1GL1UQ53-BG08	Sensor Hinge Box
I2805.0 DI 8 X5:4	V1GL1UQ53-BG09	Sensor Hinge Box
I2805.1 DI 9 X5:2	V1GL1UQ53-BG10	Sensor Side Reinforcement
I2805.2 DI 10 X6:4	V1GL1UQ53-BG11	Sensor Bunk Support
I2805.3 DI 11 X6:2	V1GL1UQ53-BG12	Sensor Bunk Support
I2805.4 DI 12 X7:4	I2805.4	Spare
I2805.5 DI 13 X7:2	I2805.5	Spare
I2805.6 DI 14 X8:4	I2805.6	Spare
I2805.7 DI 15 X8:2	I2805.7	Spare

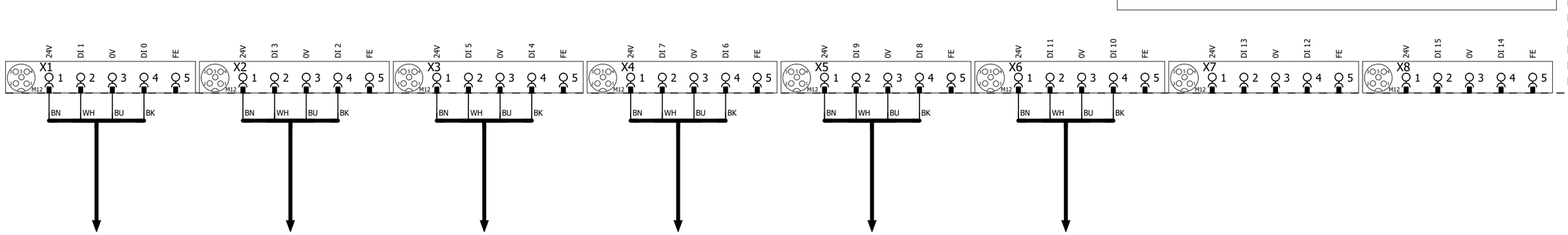

			Date	1/17/2023	Volvo Trucks North America		Valiant TMS	I/O MOD. DI16 (8 x M12) FOR VTSA-F	Drawing name: =2V09&EFS-EL	= V1GL1UQ53KF1
			Ed.	MKLEPADLO						+ V1GL1UQ53
			Appr		P6700 Bodyside LH - Robot Cell 2V09				Document type: EFS	Project nr: 22-16150
Modification	Date	Name	Original		Replacement of	Replaced by	Scale 1:1			Page 3 / 1533

0	1	2	3	4	5	6	7	8	9

-KF1.14

FESTO

CPX-M-AB-8-M12X2-5POL

549335

I2806.0	DI 0 X1:4	I2806.0	Spare
I2806.1	DI 1 X1:2	I2806.1	Spare
I2806.2	DI 2 X2:4	I2806.2	Spare
I2806.3	DI 3 X2:2	I2806.3	Spare
I2806.4	DI 4 X3:4	I2806.4	Spare
I2806.5	DI 5 X3:2	I2806.5	Spare
I2806.6	DI 6 X4:4	I2806.6	Spare
I2806.7	DI 7 X4:2	I2806.7	Spare
I2807.0	DI 8 X5:4	I2807.0	Spare
I2807.1	DI 9 X5:2	I2807.1	Spare
I2807.2	DI 10 X6:4	I2807.2	Spare
I2807.3	DI 11 X6:2	I2807.3	Spare
I2807.4	DI 12 X7:4	I2807.4	Spare
I2807.5	DI 13 X7:2	I2807.5	Spare
I2807.6	DI 14 X8:4	I2807.6	Spare
I2807.7	DI 15 X8:2	I2807.7	Spare

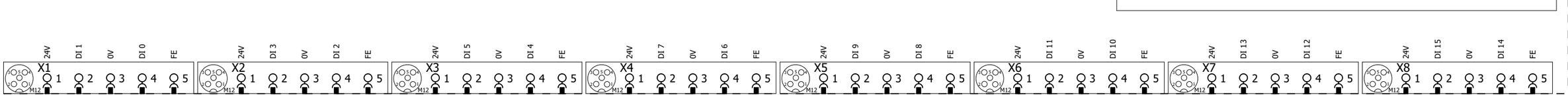

3 5

			Date	1/17/2023	Volvo Trucks North America	Valiant TMS	I/O MOD. DI16 (8 x M12) FOR VTSA-F	Drawing name: =2V09&EFS-EL	= V1GL1UQ53KF1	
			Ed.	MKLEPADLO					+ V1GL1UQ53	
			Appr		P6700 Bodyside LH - Robot Cell 2V09			Document type: EFS	Project nr: 22-16150	Page 4
Modification	Date	Name	Original		Replacement of / Replaced by	Scale 1:1				1533

-KF1 -KF1.11 -KF1.12 -KF1.13 -KF1.14 -KF1.20 -KF1.21 -KF1.22 -KF1.23 -KF1.24 -KF1.25 -KF1.26 -KF1.27

M1 M2 M3 M4 M5

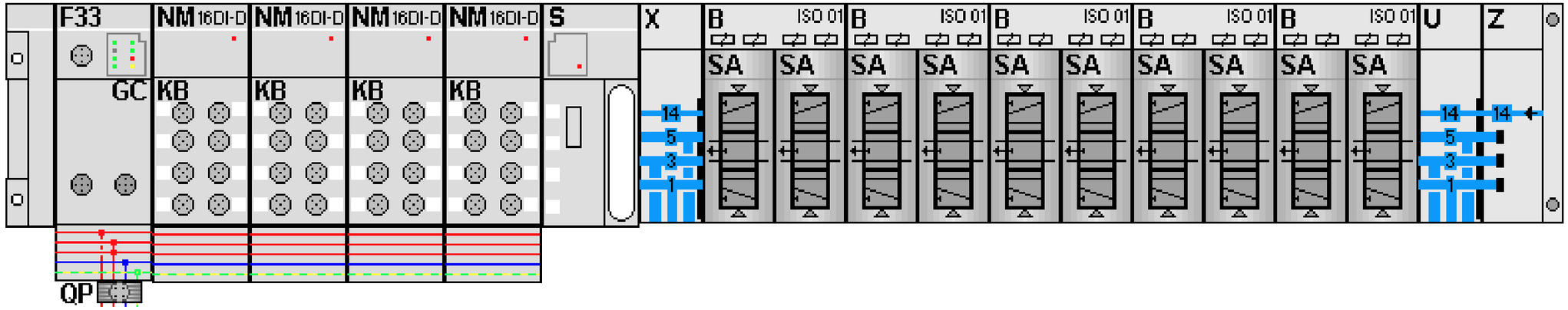

-KF1.21
=V1GL1UQ53UQ1+.GL1UQ53UQ1/1.3
=V1GL1UQ53UQ2+.GL1UQ53UQ2/1.3

FESTO

=V1GL1UQ53UQ1+.GL1UQ53UQ1/1.4	Q2800.0 DO 0 1.1	-QN1.1_Q	Shot Pins 1 (RST)
=V1GL1UQ53UQ1+.GL1UQ53UQ1/1.4	Q2800.1 DO 1 1.2	-QN1.2_Q	Shot Pins 1 (SET)
=V1GL1UQ53UQ2+.GL1UQ53UQ2/1.4	Q2800.2 DO 2 2.1	-QN2.1_Q	Shot Pin 2 (RST)
=V1GL1UQ53UQ2+.GL1UQ53UQ2/1.4	Q2800.3 DO 3 2.2	-QN2.2_Q	Shot Pin 2 (SET)

-KF1.22
=V1GL1UQ53UQ3+.GL1UQ53UQ3/1.3
=V1GL1UQ53UQ4+.GL1UQ53UQ4/1.3

FESTO

=V1GL1UQ53UQ3+.GL1UQ53UQ3/1.4	Q2800.4 DO 0 1.1	-QN3.1_Q	Shot Pins 3 (RST)
=V1GL1UQ53UQ3+.GL1UQ53UQ3/1.4	Q2800.5 DO 1 1.2	-QN3.2_Q	Shot Pins 3 (SET)
=V1GL1UQ53UQ4+.GL1UQ53UQ4/1.4	Q2800.6 DO 2 2.1	-QN4.1_Q	Shot Pins 4 (RST)
=V1GL1UQ53UQ4+.GL1UQ53UQ4/1.4	Q2800.7 DO 3 2.2	-QN4.2_Q	Shot Pins 4 (SET)

-KF1.23
=V1GL1UQ53UQ5+.GL1UQ53UQ5/1.3
=V1GL1UQ53UQ6+.GL1UQ53UQ6/1.3

FESTO

=V1GL1UQ53UQ5+.GL1UQ53UQ5/1.4	Q2801.0 DO 0 1.1	-QN5.1_Q	Shot Pin 5 (RST)
=V1GL1UQ53UQ5+.GL1UQ53UQ5/1.4	Q2801.1 DO 1 1.2	-QN5.2_Q	Shot Pin 5 (SET)
=V1GL1UQ53UQ6+.GL1UQ53UQ6/1.4	Q2801.2 DO 0 2.1	-QN6.1_Q	Shot Pin 6 (RST)
=V1GL1UQ53UQ6+.GL1UQ53UQ6/1.4	Q2801.3 DO 1 2.2	-QN6.2_Q	Shot Pin 6 (SET)

-KF1.24
=V1GL1UQ53UQ7+.GL1UQ53UQ7/1.3
=V1GL1UQ53UQ8+.GL1UQ53UQ8/1.3

FESTO

=V1GL1UQ53UQ7+.GL1UQ53UQ7/1.4	Q2801.4 DO 0 1.1	-QN7.1_Q	Shot Pin 7 (RST)
=V1GL1UQ53UQ7+.GL1UQ53UQ7/1.4	Q2801.5 DO 1 1.2	-QN7.2_Q	Shot Pin 7 (SET)
=V1GL1UQ53UQ8+.GL1UQ53UQ8/1.4	Q2801.6 DO 0 2.1	-QN8.1_Q	Shot Pins 8 (RST)
=V1GL1UQ53UQ8+.GL1UQ53UQ8/1.4	Q2801.7 DO 1 2.2	-QN8.2_Q	Shot Pins 8 (SET)

-KF1.25
=V1GL1UQ53UQ9+.GL1UQ53UQ9/1.3
=V1GL1UQ53UQ10+.GL1UQ53UQ10/1.3

FESTO

=V1GL1UQ53UQ9+.GL1UQ53UQ9/1.4	Q2802.0 DO 0 1.1	-QN9.1_Q	Shot Pin 9 (RST)
=V1GL1UQ53UQ9+.GL1UQ53UQ9/1.4	Q2802.1 DO 1 1.2	-QN9.2_Q	Shot Pin 9 (SET)
=V1GL1UQ53UQ10+.GL1UQ53UQ10/1.4	Q2802.2 DO 0 2.1	-QN10.1_Q	Shot Pin 10 (RST)
=V1GL1UQ53UQ10+.GL1UQ53UQ10/1.4	Q2802.3 DO 1 2.2	-QN10.2_Q	Shot Pin 10 (SET)

			Date	1/17/2023	Volvo Trucks North America	Valiant TMS	CONNECTING MOD. FOR FESTO DQ	Drawing name: =2V09&EFS-EL	= V1GL1UQ53KF1
			Ed.	MKLEPADLO					+ V1GL1UQ53
			Appr		P6700 Bodyside LH - Robot Cell 2V09			Document type: EFS	Project nr: 22-16150
Modification	Date	Name	Original		Replacement of	Replaced by	Scale 1:1		Page 5 / 1533

0	1	2	3	4	5	6	7	8	9

=V1GL1UQ53WC4/1.5 / W2.1

-W2.1
RSM RKM 56-5M/S3059
5m

=V1GL1UQ53KF1/1.4 / KF1-P2

KF2-P2 / =V1GL1UQ53KF3/1.3

-WF2
PROFINET Cable
6XV1840-3AH10

-KF2

X20 M12, 7/8" 1 2 PE 4 5

0V_VAL / OUT | 0V_EL / SEN | FE | 24V_EL / SEN | 24V_VAL / OUT

ON OFF 1 2 1 2

M12 -TP1 M12 -TP2

FESTO
Bus node + Interlinking block
548755 + 550208

I2825.0	DI 0 X1:4	V1GL1UQ53UQ11.1-BGR	Clamps 11 (RESET)
I2825.1	DI 1 X1:2	V1GL1UQ53UQ11.1-BGS	Clamps 11 (SET)
I2825.2	DI 2 X2:4	V1GL1UQ53UQ11.2-BGR	Clamps 11 (RESET)
I2825.3	DI 3 X2:2	V1GL1UQ53UQ11.2-BGS	Clamps 11 (SET)
I2825.4	DI 4 X3:4	V1GL1UQ53UQ11.3-BGR	Clamps 11 (RESET)
I2825.5	DI 5 X3:2	V1GL1UQ53UQ11.3-BGS	Clamps 11 (SET)
I2825.6	DI 6 X4:4	V1GL1UQ53UQ11.4-BGR	Clamps 11 (RESET)
I2825.7	DI 7 X4:2	V1GL1UQ53UQ11.4-BGS	Clamps 11 (SET)
I2826.0	DI 8 X5:4	V1GL1UQ53UQ11.5-BGR	Clamps 11 (RESET)
I2826.1	DI 9 X5:2	V1GL1UQ53UQ11.5-BGS	Clamps 11 (SET)
I2826.2	DI 10 X6:4	V1GL1UQ53UQ11.6-BGR	Clamps 11 (RESET)
I2826.3	DI 11 X6:2	V1GL1UQ53UQ11.6-BGS	Clamps 11 (SET)
I2826.4	DI 12 X7:4	V1GL1UQ53UQ12.1-BGR	Clamps 12 (RESET)
I2826.5	DI 13 X7:2	V1GL1UQ53UQ12.1-BGS	Clamps 12 (SET)
I2826.6	DI 14 X8:4	V1GL1UQ53UQ12.2-BGR	Clamps 12 (RESET)
I2826.7	DI 15 X8:2	V1GL1UQ53UQ12.2-BGS	Clamps 12 (SET)

-KF2.11

FESTO
CPX-M-AB-8-M12X2-5POL
549335

X1 X2 X3 X4 X5 X6 X7 X8 M12

24V | DI 1 | 0V | DI 0 | FE
24V | DI 3 | 0V | DI 2 | FE
24V | DI 5 | 0V | DI 4 | FE
24V | DI 7 | 0V | DI 6 | FE
24V | DI 9 | 0V | DI 8 | FE
24V | DI 11 | 0V | DI 10 | FE
24V | DI 13 | 0V | DI 12 | FE
24V | DI 15 | 0V | DI 14 | FE

1 2 3 4 5

BN | WH | BU | BK

+.GL1UQ53UQ11.1-W1
=V1GL1UQ53UQ11+.GL1UQ53UQ11/1.1

+.GL1UQ53UQ11.2-W1
=V1GL1UQ53UQ11+.GL1UQ53UQ11/1.2

+.GL1UQ53UQ11.3-W1
=V1GL1UQ53UQ11+.GL1UQ53UQ11/1.4

+.GL1UQ53UQ11.4-W1
=V1GL1UQ53UQ11+.GL1UQ53UQ11/1.5

+.GL1UQ53UQ11.5-W1
=V1GL1UQ53UQ11+.GL1UQ53UQ11/1.7

+.GL1UQ53UQ11.6-W1
=V1GL1UQ53UQ11+.GL1UQ53UQ11/1.9

+.GL1UQ53UQ12.1-W1
=V1GL1UQ53UQ12+.GL1UQ53UQ12/1.1

+.GL1UQ53UQ12.2-W1
=V1GL1UQ53UQ12+.GL1UQ53UQ12/1.2

=V1GL1UQ53KF1/5

2

			Date	1/17/2023	Volvo Trucks North America	Valiant TMS	CONNECTING MOD. FOR VTSA MANIFOLD	Drawing name: =2V09&EFS-EL	= V1GL1UQ53KF2
			Ed.	MKLEPADLO					+ V1GL1UQ53
			Appr		P6700 Bodyside LH - Robot Cell 2V09			Document type: EFS	Project nr: 22-16150
Modification	Date	Name	Original		Replacement of / Replaced by	Scale 1:1			Page 1 / 1533

0	1	2	3	4	5	6	7	8	9

-KF2.12

FESTO

CPX-M-AB-8-M12X2-5POL

549335

I2827.0	DI 0 X1:4	V1GL1UQ53UQ12.3-BGR	Clamps 12 (RESET)
I2827.1	DI 1 X1:2	V1GL1UQ53UQ12.3-BGS	Clamps 12 (SET)
I2827.2	DI 2 X2:4	V1GL1UQ53UQ12.4-BGR	Clamps 12 (RESET)
I2827.3	DI 3 X2:2	V1GL1UQ53UQ12.4-BGS	Clamps 12 (SET)
I2827.4	DI 4 X3:4	V1GL1UQ53UQ13.1-BGR	Clamps 13 (RESET)
I2827.5	DI 5 X3:2	V1GL1UQ53UQ13.1-BGS	Clamps 13 (SET)
I2827.6	DI 6 X4:4	V1GL1UQ53UQ13.2-BGR	Clamps 13 (RESET)
I2827.7	DI 7 X4:2	V1GL1UQ53UQ13.2-BGS	Clamps 13 (SET)
I2828.0	DI 8 X5:4	V1GL1UQ53UQ14.1-BGR	Clamps 14 (RESET)
I2828.1	DI 9 X5:2	V1GL1UQ53UQ14.1-BGS	Clamps 14 (SET)
I2828.2	DI 10 X6:4	V1GL1UQ53UQ14.2-BGR	Clamps 14 (RESET)
I2828.3	DI 11 X6:2	V1GL1UQ53UQ14.2-BGS	Clamps 14 (SET)
I2828.4	DI 12 X7:4	V1GL1UQ53UQ14.3-BGR	Clamps 14 (RESET)
I2828.5	DI 13 X7:2	V1GL1UQ53UQ14.3-BGS	Clamps 14 (SET)
I2828.6	DI 14 X8:4	V1GL1UQ53UQ14.4-BGR	Clamps 14 (RESET)
I2828.7	DI 15 X8:2	V1GL1UQ53UQ14.4-BGS	Clamps 14 (SET)

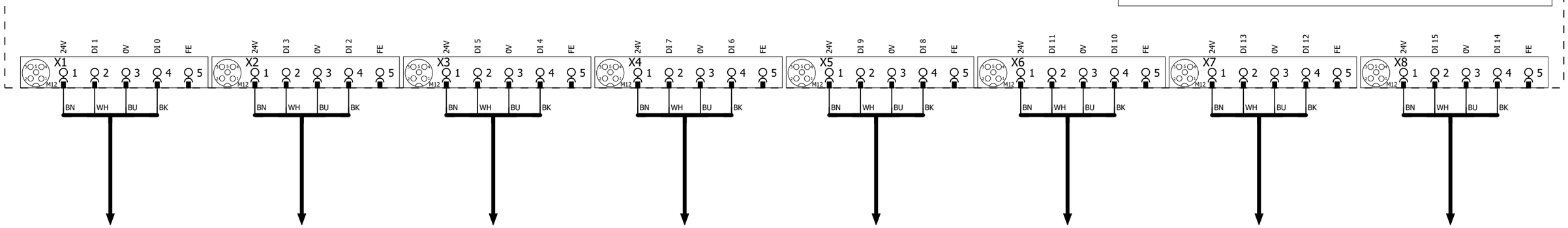

1 3

			Date	1/17/2023	Volvo Trucks North America	Valiant TMS	I/O MOD. DI16 (8 x M12) FOR VTSA-F	Drawing name: =2V09&EFS-EL	= V1GL1UQ53KF2
			Ed.	MKLEPADLO					+ V1GL1UQ53
			Appr		P6700 Bodyside LH - Robot Cell 2V09			Document type: EFS	Project nr: 22-16150
Modification	Date	Name	Original		Replacement of / Replaced by	Scale 1:1			Page 2 / 1533

0	1	2	3	4	5	6	7	8	9

-KF2.13

FESTO

CPX-M-AB-8-M12X2-5POL
549335

I2829.0	DI 0 X1:4	V1GL1UQ53UQ15.1-BGR	Clamp 15 (RESET)
I2829.1	DI 1 X1:2	V1GL1UQ53UQ15.1-BGS	Clamp 15 (SET)
I2829.2	DI 2 X2:4	V1GL1UQ53UQ16.1-BGR	Clamp 16 (RESET)
I2829.3	DI 3 X2:2	V1GL1UQ53UQ16.1-BGS	Clamp 16 (SET)
I2829.4	DI 4 X3:4	V1GL1UQ53UQ17.1-BGR	Clamp 17 (RESET)
I2829.5	DI 5 X3:2	V1GL1UQ53UQ17.1-BGS	Clamp 17 (SET)
I2829.6	DI 6 X4:4	V1GL1UQ53UQ18.1-BGR	Shot Pin 18 (RESET)
I2829.7	DI 7 X4:2	V1GL1UQ53UQ18.1-BGS	Shot Pin 18 (SET)
I2830.0	DI 8 X5:4	V1GL1UQ53UQ19.1-BGR	Clamp 19 (RESET)
I2830.1	DI 9 X5:2	V1GL1UQ53UQ19.1-BGS	Clamp 19 (SET)
I2830.2	DI 10 X6:4	V1GL1UQ53UQ20.1-BGR	Clamp 20 (RESET)
I2830.3	DI 11 X6:2	V1GL1UQ53UQ20.1-BGS	Clamp 20 (SET)
I2830.4	DI 12 X7:4	I2830.4	Spare
I2830.5	DI 13 X7:2	I2830.5	Spare
I2830.6	DI 14 X8:4	I2830.6	Spare
I2830.7	DI 15 X8:2	I2830.7	Spare

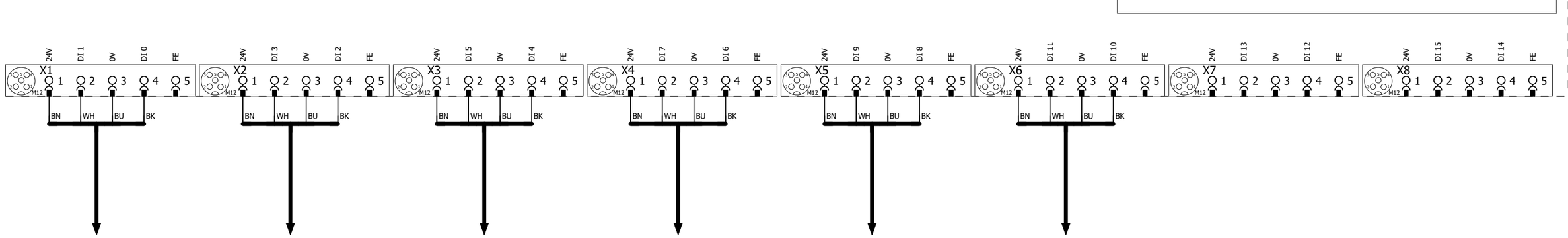

2 4

			Date	1/17/2023	Volvo Trucks North America	Valiant TMS	I/O MOD. DI16 (8 x M12) FOR VTSA-F	Drawing name: =2V09&EFS-EL	= V1GL1UQ53KF2
			Ed.	MKLEPADLO					+ V1GL1UQ53
			Appr		P6700 Bodyside LH - Robot Cell 2V09	Scale 1:1		Document type: EFS	Project nr: 22-16150
Modification	Date	Name	Original		Replacement of	Replaced by			Page 3 / 1533

0	1	2	3	4	5	6	7	8	9

-KF2.14

FESTO

CPX-M-AB-8-M12X2-5POL

549335

I2831.0 DI 0 X1:4	V1GL1UQ53-BG13	Sensor Bunk Support
I2831.1 DI 1 X1:2	V1GL1UQ53-BG14	Sensor Bridge Member
I2831.2 DI 2 X2:4	V1GL1UQ53-BG15	Sensor Bridge Member
I2831.3 DI 3 X2:2	V1GL1UQ53-BG16	Sensor Horizontal Crash Beam
I2831.4 DI 4 X3:4	V1GL1UQ53-BG17	Sensor Horizontal Crash Beam
I2831.5 DI 5 X3:2	V1GL1UQ53-BG18	Sensor Bridge Horizontal Beam
I2831.6 DI 6 X4:4	V1GL1UQ53-BG19	Sensor C-Pillar Assembly
I2831.7 DI 7 X4:2	V1GL1UQ53-BG20	Sensor C-Pillar Assembly
I2832.0 DI 8 X5:4	V1GL1UQ53-BG21	Sensor Head Sub Assembly
I2832.1 DI 9 X5:2	V1GL1UQ53-BG22	Sensor Extruded Seal Sleeper
I2832.2 DI 10 X6:4	V1GL1UQ53-BG23	Sensor Reinforcement
I2832.3 DI 11 X6:2	V1GL1UQ53-BG24	Sensor Reinforcement
I2832.4 DI 12 X7:4	I2832.4	Spare
I2832.5 DI 13 X7:2	I2832.5	Spare
I2832.6 DI 14 X8:4	I2832.6	Spare
I2832.7 DI 15 X8:2	I2832.7	Spare

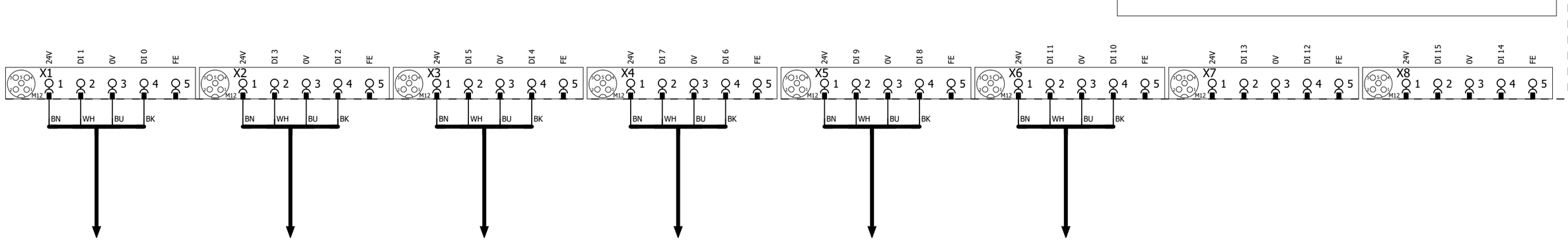

3 5

			Date	1/17/2023	Volvo Trucks North America	Valiant TMS	I/O MOD. DI16 (8 x M12) FOR VTSA-F	Drawing name: =2V09&EFS-EL	= V1GL1UQ53KF2
			Ed.	MKLEPADLO					+ V1GL1UQ53
			Appr		P6700 Bodyside LH - Robot Cell 2V09			Document type: EFS	Project nr: 22-16150
Modification	Date	Name	Original		Replacement of	Replaced by	Scale 1:1		Page 4 / 1533

-KF2 -KF2.11 -KF2.12 -KF2.13 -KF2.14 -KF2.20 -KF2.21 -KF2.22 -KF2.23 -KF2.24 -KF2.25 -KF2.26 -KF2.27

M1 M2 M3 M4 M5

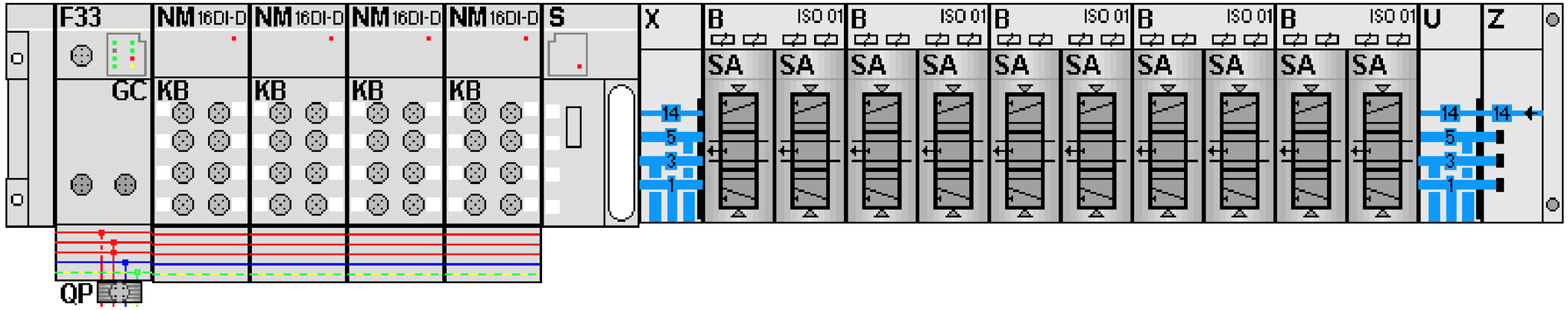

-KF2.21
=V1GL1UQ53UQ11+.GL1UQ53UQ11/1.3
=V1GL1UQ53UQ12+.GL1UQ53UQ12/1.3

FESTO

=V1GL1UQ53UQ11+.GL1UQ53UQ11/1.4	Q2825.0 DO 0 1.1	-QN11.1_Q	Clamps 11 (RST)
=V1GL1UQ53UQ11+.GL1UQ53UQ11/1.4	Q2825.1 DO 1 1.2	-QN11.2_Q	Clamps 11 (SET)
=V1GL1UQ53UQ12+.GL1UQ53UQ12/1.4	Q2825.2 DO 2 2.1	-QN12.1_Q	Clamps 12 (RST)
=V1GL1UQ53UQ12+.GL1UQ53UQ12/1.4	Q2825.3 DO 3 2.2	-QN12.2_Q	Clamps 12 (SET)

-KF2.22
=V1GL1UQ53UQ13+.GL1UQ53UQ13/1.3
=V1GL1UQ53UQ14+.GL1UQ53UQ14/1.3

FESTO

=V1GL1UQ53UQ13+.GL1UQ53UQ13/1.4	Q2825.4 DO 0 1.1	-QN13.1_Q	Clamps 13 (RST)
=V1GL1UQ53UQ13+.GL1UQ53UQ13/1.4	Q2825.5 DO 1 1.2	-QN13.2_Q	Clamps 13 (SET)
=V1GL1UQ53UQ14+.GL1UQ53UQ14/1.4	Q2825.6 DO 2 2.1	-QN14.1_Q	Clamps 14 (RST)
=V1GL1UQ53UQ14+.GL1UQ53UQ14/1.4	Q2825.7 DO 3 2.2	-QN14.2_Q	Clamps 14 (SET)

-KF2.23
=V1GL1UQ53UQ15+.GL1UQ53UQ15/1.3
=V1GL1UQ53UQ16+.GL1UQ53UQ16/1.3

FESTO

=V1GL1UQ53UQ15+.GL1UQ53UQ15/1.4	Q2826.0 DO 0 1.1	-QN15.1_Q	Clamp 15 (RST)
=V1GL1UQ53UQ15+.GL1UQ53UQ15/1.4	Q2826.1 DO 1 1.2	-QN15.2_Q	Clamp 15 (SET)
=V1GL1UQ53UQ16+.GL1UQ53UQ16/1.4	Q2826.2 DO 0 2.1	-QN16.1_Q	Clamp 16 (RST)
=V1GL1UQ53UQ16+.GL1UQ53UQ16/1.4	Q2826.3 DO 1 2.2	-QN16.2_Q	Clamp 16 (SET)

-KF2.24
=V1GL1UQ53UQ17+.GL1UQ53UQ17/1.3
=V1GL1UQ53UQ18+.GL1UQ53UQ18/1.3

FESTO

=V1GL1UQ53UQ17+.GL1UQ53UQ17/1.4	Q2826.4 DO 0 1.1	-QN17.1_Q	Clamp 17 (RST)
=V1GL1UQ53UQ17+.GL1UQ53UQ17/1.4	Q2826.5 DO 1 1.2	-QN17.2_Q	Clamp 17 (SET)
=V1GL1UQ53UQ18+.GL1UQ53UQ18/1.4	Q2826.6 DO 0 2.1	-QN18.1_Q	Shot Pin 18 (RST)
=V1GL1UQ53UQ18+.GL1UQ53UQ18/1.4	Q2826.7 DO 1 2.2	-QN18.2_Q	Shot Pin 18 (SET)

-KF2.25
=V1GL1UQ53UQ19+.GL1UQ53UQ19/1.3
=V1GL1UQ53UQ20+.GL1UQ53UQ20/1.3

FESTO

=V1GL1UQ53UQ19+.GL1UQ53UQ19/1.4	Q2827.0 DO 0 1.1	-QN19.1_Q	Clamp 19 (RST)
=V1GL1UQ53UQ19+.GL1UQ53UQ19/1.4	Q2827.1 DO 1 1.2	-QN19.2_Q	Clamp 19 (SET)
=V1GL1UQ53UQ20+.GL1UQ53UQ20/1.4	Q2827.2 DO 0 2.1	-QN20.1_Q	Clamp 20 (RST)
=V1GL1UQ53UQ20+.GL1UQ53UQ20/1.4	Q2827.3 DO 1 2.2	-QN20.2_Q	Clamp 20 (SET)

			Date	1/17/2023	Volvo Trucks North America	Valiant TMS	CONNECTING MOD. FOR FESTO DQ	Drawing name: =2V09&EFS-EL	= V1GL1UQ53KF2
			Ed.	MKLEPADLO					+ V1GL1UQ53
			Appr		P6700 Bodyside LH - Robot Cell 2V09	Scale 1:1		Document type: EFS	Project nr: 22-16150
Modification	Date	Name	Original		Replacement of	Replaced by			Page 5 / 1533

0	1	2	3	4	5	6	7	8	9

=V1GL1UQ53WC4/1.6 / W3.1

-W3.1
RSM RKM 56-2M/S3059
2m

=V1GL1UQ53KF2/1.4 / KF2-P2

-WF3
PROFINET Cable
6XV1840-3AH10

-KF3

X20 M12, 7/8" 1 2 PE 4 5
0V_VAL / OUT | 0V_EL / SEN | FE | 24V_EL / SEN | 24V_VAL / OUT

ON OFF 1 2 1 2

M12 -TP1 M12 -TP2

FESTO
Bus node + Interlinking block
548755 + 550208

I2850.0 DI 0 X1:4	V1GL1UQ53UQ21.1-BGR	Clamp 21 (RESET)
I2850.1 DI 1 X1:2	V1GL1UQ53UQ21.1-BGS	Clamp 21 (SET)
I2850.2 DI 2 X2:4	V1GL1UQ53UQ22.1-BGR	Clamp 22 (RESET)
I2850.3 DI 3 X2:2	V1GL1UQ53UQ22.1-BGS	Clamp 22 (SET)
I2850.4 DI 4 X3:4	V1GL1UQ53UQ23.1-BGR	Clamp 23 (RESET)
I2850.5 DI 5 X3:2	V1GL1UQ53UQ23.1-BGS	Clamp 23 (SET)
I2850.6 DI 6 X4:4	V1GL1UQ53UQ24.1-BGR	Clamp 24 (RESET)
I2850.7 DI 7 X4:2	V1GL1UQ53UQ24.1-BGS	Clamp 24 (SET)
I2851.0 DI 8 X5:4	V1GL1UQ53UQ25.1-BGR	Clamps 25 (RESET)
I2851.1 DI 9 X5:2	V1GL1UQ53UQ25.1-BGS	Clamps 25 (SET)
I2851.2 DI 10 X6:4	V1GL1UQ53UQ25.2-BGR	Clamps 25 (RESET)
I2851.3 DI 11 X6:2	V1GL1UQ53UQ25.2-BGS	Clamps 25 (SET)
I2851.4 DI 12 X7:4	I2851.4	Spare
I2851.5 DI 13 X7:2	I2851.5	Spare
I2851.6 DI 14 X8:4	I2851.6	Spare
I2851.7 DI 15 X8:2	I2851.7	Spare

-KF3.11

FESTO
CPX-M-AB-8-M12X2-5POL
549335

X1 M12 1 2 3 4 5 — 24V | DI 1 | 0V | DI 0 | FE — BN WH BU BK
X2 M12 1 2 3 4 5 — 24V | DI 3 | 0V | DI 2 | FE — BN WH BU BK
X3 M12 1 2 3 4 5 — 24V | DI 5 | 0V | DI 4 | FE — BN WH BU BK
X4 M12 1 2 3 4 5 — 24V | DI 7 | 0V | DI 6 | FE — BN WH BU BK
X5 M12 1 2 3 4 5 — 24V | DI 9 | 0V | DI 8 | FE — BN WH BU BK
X6 M12 1 2 3 4 5 — 24V | DI 11 | 0V | DI 10 | FE — BN WH BU BK
X7 M12 1 2 3 4 5 — 24V | DI 13 | 0V | DI 12 | FE
X8 M12 1 2 3 4 5 — 24V | DI 15 | 0V | DI 14 | FE

+.GL1UQ53UQ21.1-W1
=V1GL1UQ53UQ21+.GL1UQ53UQ21/1.1

+.GL1UQ53UQ22.1-W1
=V1GL1UQ53UQ22+.GL1UQ53UQ22/1.1

+.GL1UQ53UQ23.1-W1
=V1GL1UQ53UQ23+.GL1UQ53UQ23/1.1

+.GL1UQ53UQ24.1-W1
=V1GL1UQ53UQ24+.GL1UQ53UQ24/1.1

+.GL1UQ53UQ25.1-W1
=V1GL1UQ53UQ25+.GL1UQ53UQ25/1.1

+.GL1UQ53UQ25.2-W1
=V1GL1UQ53UQ25+.GL1UQ53UQ25/1.2

=V1GL1UQ53KF2/5

2

			Date	1/17/2023	Volvo Trucks North America	Valiant TMS	CONNECTING MOD. FOR VTSA MANIFOLD	Drawing name: =2V09&EFS-EL	= V1GL1UQ53KF3
			Ed.	MKLEPADLO					+ V1GL1UQ53
			Appr		P6700 Bodyside LH - Robot Cell 2V09			Document type: EFS	Project nr: 22-16150
Modification	Date	Name	Original		Replacement of / Replaced by	Scale 1:1			Page 1 / 1533

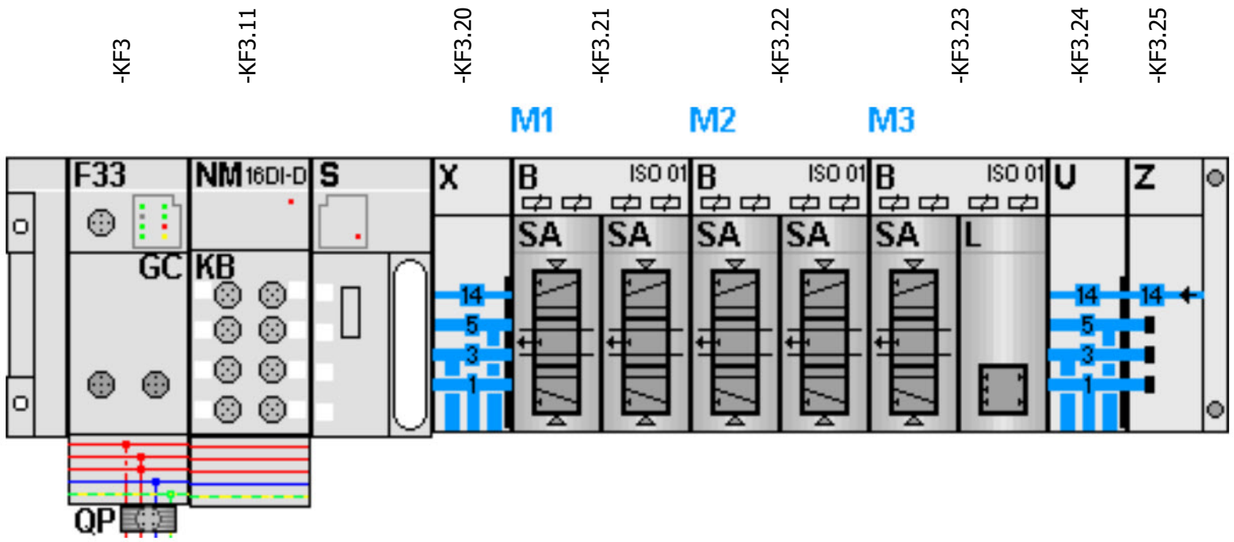

-KF3.21

=V1GL1UQ53UQ21+.GL1UQ53UQ21/1.3
=V1GL1UQ53UQ22+.GL1UQ53UQ22/1.3

FESTO

=V1GL1UQ53UQ21+.GL1UQ53UQ21/1.4	Q2850.0 DO 0 1.1	-QN21.1_Q	Clamp 21 (RST)
=V1GL1UQ53UQ21+.GL1UQ53UQ21/1.4	Q2850.1 DO 1 1.2	-QN21.2_Q	Clamp 21 (SET)
=V1GL1UQ53UQ22+.GL1UQ53UQ22/1.4	Q2850.2 DO 2 2.1	-QN22.1_Q	Clamp 22 (RST)
=V1GL1UQ53UQ22+.GL1UQ53UQ22/1.4	Q2850.3 DO 3 2.2	-QN22.2_Q	Clamp 22 (SET)

-KF3.22

=V1GL1UQ53UQ23+.GL1UQ53UQ23/1.3
=V1GL1UQ53UQ24+.GL1UQ53UQ24/1.3

FESTO

=V1GL1UQ53UQ23+.GL1UQ53UQ23/1.4	Q2850.4 DO 0 1.1	-QN23.1_Q	Clamp 23 (RST)
=V1GL1UQ53UQ23+.GL1UQ53UQ23/1.4	Q2850.5 DO 1 1.2	-QN23.2_Q	Clamp 23 (SET)
=V1GL1UQ53UQ24+.GL1UQ53UQ24/1.4	Q2850.6 DO 2 2.1	-QN24.1_Q	Clamp 24 (RST)
=V1GL1UQ53UQ24+.GL1UQ53UQ24/1.4	Q2850.7 DO 3 2.2	-QN24.2_Q	Clamp 24 (SET)

-KF3.23

=V1GL1UQ53UQ25+.GL1UQ53UQ25/1.3

FESTO

=V1GL1UQ53UQ25+.GL1UQ53UQ25/1.4	Q2851.0 DO 0 1.1	-QN25.1_Q	Clamps 25 (RST)
=V1GL1UQ53UQ25+.GL1UQ53UQ25/1.4	Q2851.1 DO 1 1.2	-QN25.2_Q	Clamps 25 (SET)
	Q2851.2 DO 2 2.1	-QN26.1_Q	Spare
	Q2851.3 DO 3 2.2	-QN26.2_Q	Spare

=V1GL1UQ53UQ1+.GL1UQ53UQ1/1

			Date	1/17/2023	Volvo Trucks North America	Valiant TMS	CONNECTING MOD. FOR FESTO DQ	Drawing name: =2V09&EFS-EL	= V1GL1UQ53KF3
			Ed.	MKLEPADLO					+ V1GL1UQ53
			Appr		P6700 Bodyside LH - Robot Cell 2V09			Document type: EFS	Project nr: 22-16150
Modification	Date	Name	Original		Replacement of	Replaced by	Scale 1:1		Page 2 / 1533

0	1	2	3	4	5	6	7	8	9

=V1GL1UQ53KF1
+.GL1UQ53

-KF1.21
=V1GL1UQ53KF1+V1GL1UQ53/5.1

Shot Pins 1 (RST)
=V1GL1UQ53KF1
+V1GL1UQ53
-QN1.1_Q
=V1GL1UQ53KF1
+V1GL1UQ53/5.3
Q2800.0

Shot Pins 1 (SET)
=V1GL1UQ53KF1
+V1GL1UQ53
-QN1.2_Q
=V1GL1UQ53KF1
+V1GL1UQ53/5.3
Q2800.1

1.1
Pneumatic Valve

1.2
Pneumatic Valve

.1

.2

-QN1

=V1GL1UQ53KF1+V1GL1UQ53/1.1
+.GL1UQ53UQ1.1-W1

=V1GL1UQ53KF1+V1GL1UQ53/1.2
+.GL1UQ53UQ1.2-W1

=V1GL1UQ53KF1+V1GL1UQ53/1.3
+.GL1UQ53UQ1.3-W1

-W1
RKC 4.4T-3-RSC 4.4T/S3060
3m

-W1
RKC 4.4T-2-RSC 4.4T/S3060
2m

-W1
RKC 4.4T-4-RSC 4.4T/S3060
4m

BN BU BK WH

-BGS/R

WWS001A

A2 A1

Shot Pins 1
=V1GL1UQ53UQ1.1
+.GL1UQ53UQ1.1
-UQ1.1

Shot Pins 1
=V1GL1UQ53UQ1.2
+.GL1UQ53UQ1.2
-UQ1.2

Shot Pins 1
=V1GL1UQ53UQ1.3
+.GL1UQ53UQ1.3
-UQ1.3

=V1GL1UQ53
-UQ1.1-BGS/R
Shot Pins 1

=V1GL1UQ53
-UQ1.2-BGS/R
Shot Pins 1

=V1GL1UQ53
-UQ1.3-BGS/R
Shot Pins 1

=V1GL1UQ53KF3+V1GL1UQ53/2

=V1GL1UQ53UQ2+.GL1UQ53UQ2/1

			Date	1/17/2023	Volvo Trucks North America		Valiant TMS	FESTO DQ CONNECTION QN1	Drawing name: =2V09&EFS-EL	= V1GL1UQ53UQ1
			Ed.	MKLEPADLO						+ V1GL1UQ53UQ1
			Appr		P6700 Bodyside LH - Robot Cell 2V09				Document type: EFS	Project nr: 22-16150
Modification	Date	Name	Original		Replacement of	Replaced by	Scale 1:1			Page 1 / 1533

0	1	2	3	4	5	6	7	8	9

=V1GL1UQ53KF1
+.GL1UQ53

-KF1.21
=V1GL1UQ53KF1+V1GL1UQ53/5.1

Shot Pin 2 (RST)
=V1GL1UQ53KF1
+V1GL1UQ53
-QN2.1_Q
=V1GL1UQ53KF1
+V1GL1UQ53/5.3
Q2800.2

Shot Pin 2 (SET)
=V1GL1UQ53KF1
+V1GL1UQ53
-QN2.2_Q
=V1GL1UQ53KF1
+V1GL1UQ53/5.3
Q2800.3

2.1
Pneumatic Valve

2.2
Pneumatic Valve

.1

.2

-QN2

=V1GL1UQ53KF1+V1GL1UQ53/1.4
+.GL1UQ53UQ2.1-W1

-W1
RKC 4.4T-4-RSC 4.4T/S3060
4m

BN BU BK WH

1 3

-BGS/R

WWS001A

A2 A1

2 4

Shot Pin 2

=V1GL1UQ53UQ2.1
+.GL1UQ53UQ2.1
-UQ2.1

=V1GL1UQ53
-UQ2.1-BGS/R
Shot Pin 2

=V1GL1UQ53UQ1+.GL1UQ53UQ1/1

=V1GL1UQ53UQ3+.GL1UQ53UQ3/1

			Date	1/17/2023	Volvo Trucks North America	Valiant TMS	FESTO DQ CONNECTION QN2	Drawing name: =2V09&EFS-EL	= V1GL1UQ53UQ2
			Ed.	MKLEPADLO					+ V1GL1UQ53UQ2
			Appr		P6700 Bodyside LH - Robot Cell 2V09			Document type: EFS	Project nr: 22-16150
Modification	Date	Name	Original		Replacement of	Replaced by	Scale 1:1		Page 1 / 1533

0	1	2	3	4	5	6	7	8	9

=V1GL1UQ53KF1
+.GL1UQ53

-KF1.22
=V1GL1UQ53KF1+V1GL1UQ53/5.1

Shot Pins 3 (RST)
=V1GL1UQ53KF1
+V1GL1UQ53
-QN3.1_Q
=V1GL1UQ53KF1
+V1GL1UQ53/5.3
Q2800.4

Shot Pins 3 (SET)
=V1GL1UQ53KF1
+V1GL1UQ53
-QN3.2_Q
=V1GL1UQ53KF1
+V1GL1UQ53/5.3
Q2800.5

1.1
Pneumatic Valve

1.2
Pneumatic Valve

.1

.2

-QN3

=V1GL1UQ53KF1+V1GL1UQ53/1.5
+.GL1UQ53UQ3.1-W1

=V1GL1UQ53KF1+V1GL1UQ53/1.6
+.GL1UQ53UQ3.2-W1

-W1
RKC 4.4T-5-RSC 4.4T/S3060
5m

BN BU BK WH

1 3

-BGS/R

WWS001A

A2 A1

2 4

Shot Pins 3

=V1GL1UQ53UQ3.1
+.GL1UQ53UQ3.1
-UQ3.1

Shot Pins 3

=V1GL1UQ53UQ3.2
+.GL1UQ53UQ3.2
-UQ3.2

=V1GL1UQ53
-UQ3.1-BGS/R
Shot Pins 3

=V1GL1UQ53
-UQ3.2-BGS/R
Shot Pins 3

=V1GL1UQ53UQ2+.GL1UQ53UQ2/1

=V1GL1UQ53UQ4+.GL1UQ53UQ4/1

			Date	1/17/2023	Volvo Trucks North America		Valiant TMS	FESTO DQ CONNECTION QN3	Drawing name: =2V09&EFS-EL	= V1GL1UQ53UQ3
			Ed.	MKLEPADLO						+ V1GL1UQ53UQ3
			Appr		P6700 Bodyside LH - Robot Cell 2V09				Document type: EFS	Project nr: 22-16150
Modification	Date	Name	Original		Replacement of	Replaced by	Scale 1:1			Page 1 / 1533

0	1	2	3	4	5	6	7	8	9

=V1GL1UQ53KF1
+.GL1UQ53

-KF1.22
=V1GL1UQ53KF1+V1GL1UQ53/5.1

Shot Pins 4 (RST)
=V1GL1UQ53KF1
+V1GL1UQ53
-QN4.1_Q
=V1GL1UQ53KF1
+V1GL1UQ53/5.3
Q2800.6

Shot Pins 4 (SET)
=V1GL1UQ53KF1
+V1GL1UQ53
-QN4.2_Q
=V1GL1UQ53KF1
+V1GL1UQ53/5.3
Q2800.7

2.1 Pneumatic Valve

2.2 Pneumatic Valve

-QN4 .1 .2

=V1GL1UQ53KF1+V1GL1UQ53/1.8
+.GL1UQ53UQ4.1-W1

-W1 4m
RKC 4.4T-4-RSC 4.4T/S3060

-BGS/R
BN 1 +
BU 3 -
BK
WH
WWS001A
A2 2
A1 4

Shot Pins 4

=V1GL1UQ53UQ4.1
+.GL1UQ53UQ4.1
-UQ4.1

=V1GL1UQ53
-UQ4.1-BGS/R
Shot Pins 4

=V1GL1UQ53KF1+V1GL1UQ53/1.9
+.GL1UQ53UQ4.2-W1

-W1 4m
RKC 4.4T-4-RSC 4.4T/S3060

-BGS/R
BN 1 +
BU 3 -
BK
WH
WWS001A
A2 2
A1 4

Shot Pins 4

=V1GL1UQ53UQ4.2
+.GL1UQ53UQ4.2
-UQ4.2

=V1GL1UQ53
-UQ4.2-BGS/R
Shot Pins 4

=V1GL1UQ53UQ3+.GL1UQ53UQ3/1

=V1GL1UQ53UQ5+.GL1UQ53UQ5/1

			Date	1/17/2023	Volvo Trucks North America		Valiant TMS	FESTO DQ CONNECTION QN4	Drawing name: =2V09&EFS-EL	= V1GL1UQ53UQ4
			Ed.	MKLEPADLO						+ V1GL1UQ53UQ4
			Appr		P6700 Bodyside LH - Robot Cell 2V09				Document type: EFS	Project nr: 22-16150
Modification	Date	Name	Original		Replacement of	Replaced by	Scale 1:1			Page 1 / 1533

0	1	2	3	4	5	6	7	8	9

=V1GL1UQ53KF1
+.GL1UQ53

-KF1.23
=V1GL1UQ53KF1+V1GL1UQ53/5.1

Shot Pin 5 (RST)
=V1GL1UQ53KF1
+V1GL1UQ53
-QN5.1_Q
=V1GL1UQ53KF1
+V1GL1UQ53/5.3
Q2801.0

Shot Pin 5 (SET)
=V1GL1UQ53KF1
+V1GL1UQ53
-QN5.2_Q
=V1GL1UQ53KF1
+V1GL1UQ53/5.3
Q2801.1

1.1
Pneumatic Valve

1.2
Pneumatic Valve

-QN5 .1 .2

=V1GL1UQ53KF1+V1GL1UQ53/2.1
+.GL1UQ53UQ5.1-W1

-W1
RKC 4.4T-4-RSC 4.4T/S3060
4m

BN BU BK WH

-BGS/R
1 3
2 4
A2 A1

WWS001A

Shot Pin 5

=V1GL1UQ53UQ5.1
+.GL1UQ53UQ5.1
-UQ5.1

=V1GL1UQ53
-UQ5.1-BGS/R
Shot Pin 5

=V1GL1UQ53UQ4+.GL1UQ53UQ4/1

=V1GL1UQ53UQ6+.GL1UQ53UQ6/1

			Date	1/17/2023	Volvo Trucks North America	Valiant TMS	FESTO DQ CONNECTION QN5	Drawing name: =2V09&EFS-EL	= V1GL1UQ53UQ5
			Ed.	MKLEPADLO					+ V1GL1UQ53UQ5
			Appr		P6700 Bodyside LH - Robot Cell 2V09			Document type: EFS	Project nr: 22-16150
Modification	Date	Name	Original		Replacement of	Replaced by	Scale 1:1		Page 1 / 1533

0	1	2	3	4	5	6	7	8	9

=V1GL1UQ53KF1
+.GL1UQ53

-KF1.23
=V1GL1UQ53KF1+V1GL1UQ53/5.1

Shot Pin 6 (RST)
=V1GL1UQ53KF1
+V1GL1UQ53
-QN6.1_Q
=V1GL1UQ53KF1
+V1GL1UQ53/5.3
Q2801.2

Shot Pin 6 (SET)
=V1GL1UQ53KF1
+V1GL1UQ53
-QN6.2_Q
=V1GL1UQ53KF1
+V1GL1UQ53/5.3
Q2801.3

2.1
Pneumatic Valve

2.2
Pneumatic Valve

-QN6
.1
.2

=V1GL1UQ53KF1+V1GL1UQ53/2.2
+.GL1UQ53UQ6.1-W1

-W1
RKC 4.4T-4-RSC 4.4T/S3060
4m

BN BU BK WH

-BGS/R
1 3
2 4
A2 A1

WWS001A

Shot Pin 6

=V1GL1UQ53UQ6.1
+.GL1UQ53UQ6.1
-UQ6.1

=V1GL1UQ53 -UQ6.1-BGS/R Shot Pin 6

=V1GL1UQ53UQ5+.GL1UQ53UQ5/1

=V1GL1UQ53UQ7+.GL1UQ53UQ7/1

			Date	1/17/2023	Volvo Trucks North America	Valiant TMS	FESTO DQ CONNECTION QN6	Drawing name: =2V09&EFS-EL	= V1GL1UQ53UQ6
			Ed.	MKLEPADLO					+ V1GL1UQ53UQ6
			Appr		P6700 Bodyside LH - Robot Cell 2V09			Document type: EFS	Project nr: 22-16150
Modification	Date	Name	Original		Replacement of	Replaced by	Scale 1:1		Page 1 / 1533

0	1	2	3	4	5	6	7	8	9

=V1GL1UQ53KF1
+.GL1UQ53

-KF1.24
=V1GL1UQ53KF1+V1GL1UQ53/5.1

Shot Pin 7 (RST)
=V1GL1UQ53KF1
+V1GL1UQ53
-QN7.1_Q
=V1GL1UQ53KF1
+V1GL1UQ53/5.3
Q2801.4

Shot Pin 7 (SET)
=V1GL1UQ53KF1
+V1GL1UQ53
-QN7.2_Q
=V1GL1UQ53KF1
+V1GL1UQ53/5.3
Q2801.5

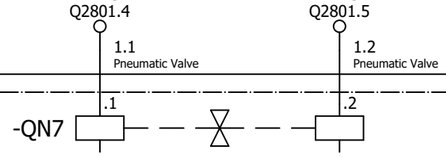

=V1GL1UQ53KF1+V1GL1UQ53/2.3
+.GL1UQ53UQ7.1-W1

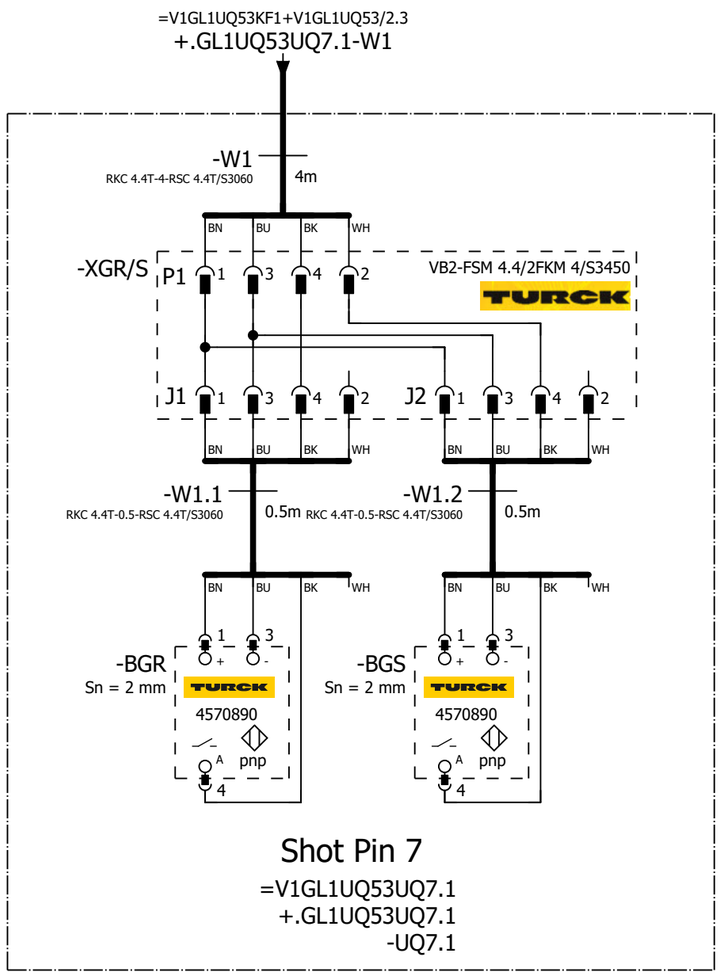

Shot Pin 7
=V1GL1UQ53UQ7.1
+.GL1UQ53UQ7.1
-UQ7.1

=V1GL1UQ53 -UQ7.1-BGR Shot Pin 7	=V1GL1UQ53 -UQ7.1-BGS Shot Pin 7

=V1GL1UQ53UQ6+.GL1UQ53UQ6/1

=V1GL1UQ53UQ8+.GL1UQ53UQ8/1

			Date	1/17/2023	Volvo Trucks North America	Valiant TMS	FESTO DQ CONNECTION QN7	Drawing name: =2V09&EFS-EL	= V1GL1UQ53UQ7
			Ed.	MKLEPADLO					+ V1GL1UQ53UQ7
			Appr		P6700 Bodyside LH - Robot Cell 2V09			Document type: EFS	Project nr: 22-16150
Modification	Date	Name	Original		Replacement of / Replaced by	Scale 1:1			Page 1 / 1533

0	1	2	3	4	5	6	7	8	9

=V1GL1UQ53KF1
+.GL1UQ53

-KF1.24
=V1GL1UQ53KF1+V1GL1UQ53/5.1

Shot Pins 8 (RST)
=V1GL1UQ53KF1
+V1GL1UQ53
-QN8.1_Q
=V1GL1UQ53KF1
+V1GL1UQ53/5.3
Q2801.6

Shot Pins 8 (SET)
=V1GL1UQ53KF1
+V1GL1UQ53
-QN8.2_Q
=V1GL1UQ53KF1
+V1GL1UQ53/5.3
Q2801.7

2.1
Pneumatic Valve

2.2
Pneumatic Valve

-QN8 .1 .2

=V1GL1UQ53KF1+V1GL1UQ53/2.4
+.GL1UQ53UQ8.1-W1

=V1GL1UQ53KF1+V1GL1UQ53/2.5
+.GL1UQ53UQ8.2-W1

=V1GL1UQ53KF1+V1GL1UQ53/2.6
+.GL1UQ53UQ8.3-W1

-W1
RKC 4.4T-5-RSC 4.4T/S3060
5m

BN BU BK WH
1 3
+ -
-BGS/R
WELKER
WWS001A
A2 A1
2 4

Shot Pins 8
=V1GL1UQ53UQ8.1
+.GL1UQ53UQ8.1
-UQ8.1

Shot Pins 8
=V1GL1UQ53UQ8.2
+.GL1UQ53UQ8.2
-UQ8.2

Shot Pins 8
=V1GL1UQ53UQ8.3
+.GL1UQ53UQ8.3
-UQ8.3

=V1GL1UQ53
-UQ8.1-BGS/R
Shot Pins 8

=V1GL1UQ53
-UQ8.2-BGS/R
Shot Pins 8

=V1GL1UQ53
-UQ8.3-BGS/R
Shot Pins 8

			Date	1/17/2023	Volvo Trucks North America	Valiant TMS	FESTO DQ CONNECTION QN8	Drawing name: =2V09&EFS-EL	= V1GL1UQ53UQ8
			Ed.	MKLEPADLO					+ V1GL1UQ53UQ8
			Appr		P6700 Bodyside LH - Robot Cell 2V09			Document type: EFS	Project nr: 22-16150
Modification	Date	Name	Original		Replacement of	Replaced by	Scale 1:1		Page 1 / 1533

0	1	2	3	4	5	6	7	8	9

=V1GL1UQ53KF1
+.GL1UQ53

-KF1.25
=V1GL1UQ53KF1+V1GL1UQ53/5.1

Shot Pin 9 (RST)
=V1GL1UQ53KF1
+V1GL1UQ53
-QN9.1_Q
=V1GL1UQ53KF1
+V1GL1UQ53/5.3
Q2802.0

Shot Pin 9 (SET)
=V1GL1UQ53KF1
+V1GL1UQ53
-QN9.2_Q
=V1GL1UQ53KF1
+V1GL1UQ53/5.3
Q2802.1

1.1
Pneumatic Valve

1.2
Pneumatic Valve

-QN9 .1 .2

=V1GL1UQ53KF1+V1GL1UQ53/2.8
+.GL1UQ53UQ9.1-W1

-W1
RKC 4.4T-6-RSC 4.4T/S3060
6m

BN BU BK WH

-BGS/R
1 3
2 4
A2 A1

WWS001A

Shot Pin 9

=V1GL1UQ53UQ9.1
+.GL1UQ53UQ9.1
-UQ9.1

=V1GL1UQ53
-UQ9.1-BGS/R
Shot Pin 9

=V1GL1UQ53UQ8+.GL1UQ53UQ8/1

=V1GL1UQ53UQ10+.GL1UQ53UQ10/1

			Date	1/17/2023	Volvo Trucks North America	Valiant TMS	FESTO DQ CONNECTION QN9	Drawing name: =2V09&EFS-EL	= V1GL1UQ53UQ9
			Ed.	MKLEPADLO					+ V1GL1UQ53UQ9
			Appr		P6700 Bodyside LH - Robot Cell 2V09			Document type: EFS	Project nr: 22-16150
Modification	Date	Name	Original		Replacement of	Replaced by	Scale 1:1		Page 1 / 1533

0	1	2	3	4	5	6	7	8	9

=V1GL1UQ53KF1
+.GL1UQ53

-KF1.25
=V1GL1UQ53KF1+V1GL1UQ53/5.1

Shot Pin 10 (RST)
=V1GL1UQ53KF1
+V1GL1UQ53
-QN10.1_Q
=V1GL1UQ53KF1
+V1GL1UQ53/5.3
Q2802.2

Shot Pin 10 (SET)
=V1GL1UQ53KF1
+V1GL1UQ53
-QN10.2_Q
=V1GL1UQ53KF1
+V1GL1UQ53/5.3
Q2802.3

2.1
Pneumatic Valve

2.2
Pneumatic Valve

-QN10 .1 .2

=V1GL1UQ53KF1+V1GL1UQ53/2.9
+.GL1UQ53UQ10.1-W1

-W1
RKC 4.4T-6-RSC 4.4T/S3060
6m

BN BU BK WH

-BGS/R
1 3
2 4
A2 A1

WWS001A

Shot Pin 10

=V1GL1UQ53UQ10.1
+.GL1UQ53UQ10.1
-UQ10.1

=V1GL1UQ53 -UQ10.1-BGS/R Shot Pin 10

=V1GL1UQ53UQ9+.GL1UQ53UQ9/1

=V1GL1UQ53UQ11+.GL1UQ53UQ11/1

			Date	1/17/2023	Volvo Trucks North America	Valiant TMS	FESTO DQ CONNECTION QN10	Drawing name: =2V09&EFS-EL	= V1GL1UQ53UQ10
			Ed.	MKLEPADLO					+ V1GL1UQ53UQ10
			Appr		P6700 Bodyside LH - Robot Cell 2V09			Document type: EFS	Project nr: 22-16150
Modification	Date	Name	Original		Replacement of	Replaced by	Scale 1:1		Page 1 / 1533

0	1	2	3	4	5	6	7	8	9

=V1GL1UQ53KF2
+.GL1UQ53

-KF2.21
=V1GL1UQ53KF2+V1GL1UQ53/5.1

Clamps 11 (RST)
=V1GL1UQ53KF2
+V1GL1UQ53
-QN11.1_Q
=V1GL1UQ53KF2
+V1GL1UQ53/5.3
Q2825.0

Clamps 11 (SET)
=V1GL1UQ53KF2
+V1GL1UQ53
-QN11.2_Q
=V1GL1UQ53KF2
+V1GL1UQ53/5.3
Q2825.1

1.1 Pneumatic Valve
1.2 Pneumatic Valve

-QN11 .1 .2

=V1GL1UQ53KF2+V1GL1UQ53/1.1
+.GL1UQ53UQ11.1-W1

-W1 4m
RKC 4.4T-4-RSC 4.4T/S3060

-BGS/R
BN BU BK WH
1 3
TÜNKERS
1324638
A2 A1
2 4

Clamps 11
=V1GL1UQ53UQ11.1
+.GL1UQ53UQ11.1
-UQ11.1

=V1GL1UQ53
-UQ11.1-BGS/R
Clamps 11

=V1GL1UQ53KF2+V1GL1UQ53/1.2
+.GL1UQ53UQ11.2-W1

-W1 4m
RKC 4.4T-4-RSC 4.4T/S3060

-BGS/R
BN BU BK WH
1 3
TÜNKERS
1324638
A2 A1
2 4

Clamps 11
=V1GL1UQ53UQ11.2
+.GL1UQ53UQ11.2
-UQ11.2

=V1GL1UQ53
-UQ11.2-BGS/R
Clamps 11

=V1GL1UQ53KF2+V1GL1UQ53/1.3
+.GL1UQ53UQ11.3-W1

-W1 4m
RKC 4.4T-4-RSC 4.4T/S3060

-BGS/R
BN BU BK WH
1 3
TÜNKERS
1324638
A2 A1
2 4

Clamps 11
=V1GL1UQ53UQ11.3
+.GL1UQ53UQ11.3
-UQ11.3

=V1GL1UQ53
-UQ11.3-BGS/R
Clamps 11

=V1GL1UQ53KF2+V1GL1UQ53/1.4
+.GL1UQ53UQ11.4-W1

-W1 5m
RKC 4.4T-5-RSC 4.4T/S3060

-BGS/R
BN BU BK WH
1 3
TÜNKERS
1324638
A2 A1
2 4

Clamps 11
=V1GL1UQ53UQ11.4
+.GL1UQ53UQ11.4
-UQ11.4

=V1GL1UQ53
-UQ11.4-BGS/R
Clamps 11

=V1GL1UQ53KF2+V1GL1UQ53/1.5
+.GL1UQ53UQ11.5-W1

-W1 3m
RKC 4.4T-3-RSC 4.4T/S3060

-BGS/R
BN BU BK WH
1 3
TÜNKERS
1324638
A2 A1
2 4

Clamps 11
=V1GL1UQ53UQ11.5
+.GL1UQ53UQ11.5
-UQ11.5

=V1GL1UQ53
-UQ11.5-BGS/R
Clamps 11

=V1GL1UQ53KF2+V1GL1UQ53/1.6
+.GL1UQ53UQ11.6-W1

-W1 3m
RKC 4.4T-3-RSC 4.4T/S3060

-BGS/R
BN BU BK WH
1 3
TÜNKERS
1324638
A2 A1
2 4

Clamps 11
=V1GL1UQ53UQ11.6
+.GL1UQ53UQ11.6
-UQ11.6

=V1GL1UQ53
-UQ11.6-BGS/R
Clamps 11

=V1GL1UQ53UQ10+.GL1UQ53UQ10/1

=V1GL1UQ53UQ12+.GL1UQ53UQ12/1

			Date	1/17/2023	Volvo Trucks North America	Valiant TMS	FESTO DQ CONNECTION QN11	Drawing name: =2V09&EFS-EL	= V1GL1UQ53UQ11
			Ed.	MKLEPADLO					+ V1GL1UQ53UQ11
			Appr		P6700 Bodyside LH - Robot Cell 2V09			Document type: EFS	Project nr: 22-16150
Modification	Date	Name	Original		Replacement of	Replaced by	Scale 1:1		Page 1 / 1533

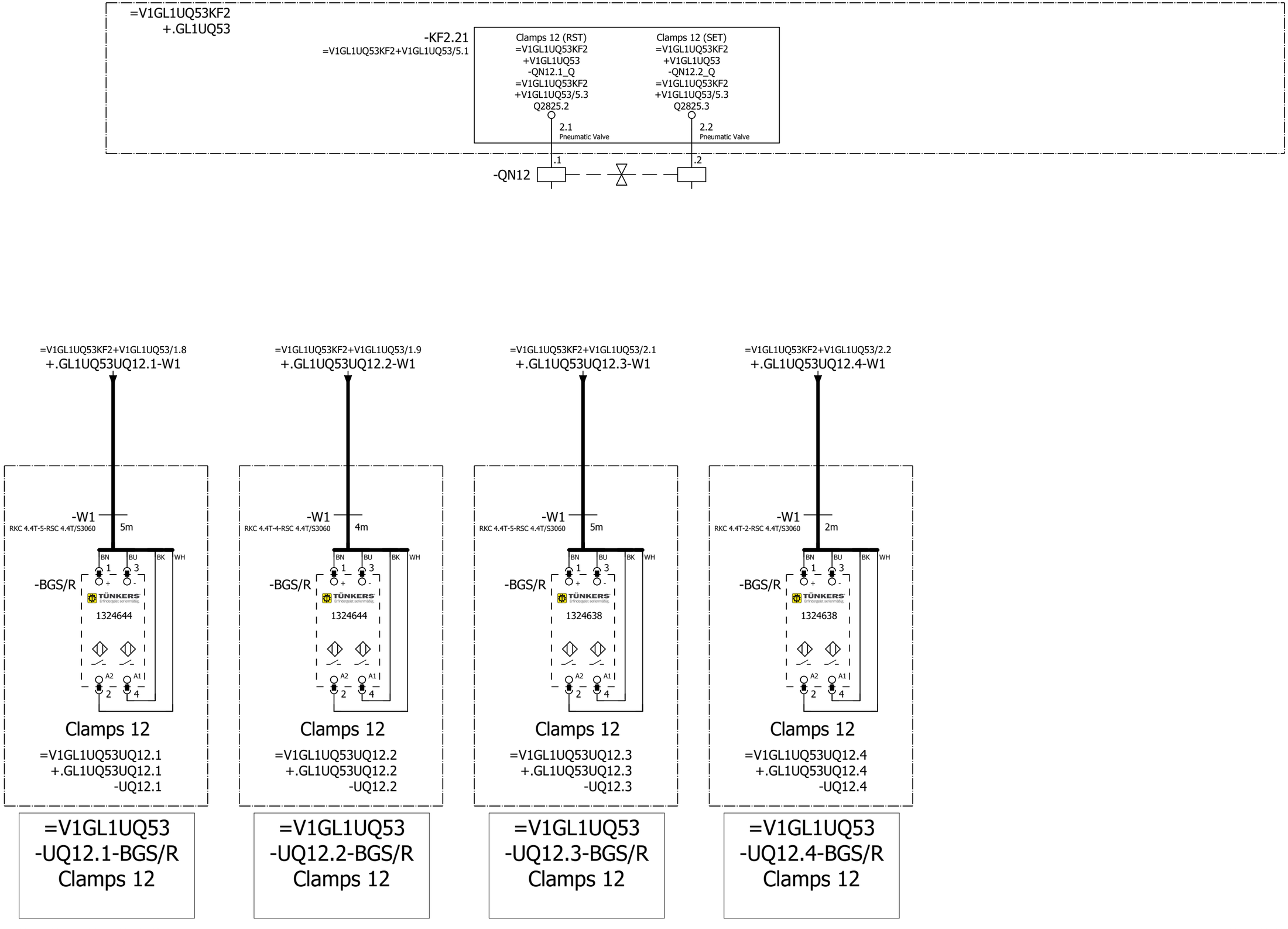

=V1GL1UQ53UQ11+.GL1UQ53UQ11/1

=V1GL1UQ53UQ13+.GL1UQ53UQ13/1

			Date	1/17/2023	Volvo Trucks North America	Valiant TMS	FESTO DQ CONNECTION QN12	Drawing name: =2V09&EFS-EL	= V1GL1UQ53UQ12 + V1GL1UQ53UQ12
			Ed.	MKLEPADLO	P6700 Bodyside LH - Robot Cell 2V09			Document type: EFS	Project nr: 22-16150
			Appr						Page 1
Modification	Date	Name	Original		Replacement of / Replaced by	Scale 1:1			1533

0	1	2	3	4	5	6	7	8	9

=V1GL1UQ53KF2
+.GL1UQ53

-KF2.22
=V1GL1UQ53KF2+V1GL1UQ53/5.1

Clamps 13 (RST)
=V1GL1UQ53KF2
+V1GL1UQ53
-QN13.1_Q
=V1GL1UQ53KF2
+V1GL1UQ53/5.3
Q2825.4

Clamps 13 (SET)
=V1GL1UQ53KF2
+V1GL1UQ53
-QN13.2_Q
=V1GL1UQ53KF2
+V1GL1UQ53/5.3
Q2825.5

1.1 Pneumatic Valve

1.2 Pneumatic Valve

-QN13 .1 .2

=V1GL1UQ53KF2+V1GL1UQ53/2.3
+.GL1UQ53UQ13.1-W1

-W1
RKC 4.4T-5-RSC 4.4T/S3060
5m

BN BU BK WH
1 3
+ -
-BGS/R
TÜNKERS
1324638
A2 A1
2 4

Clamps 13
=V1GL1UQ53UQ13.1
+.GL1UQ53UQ13.1
-UQ13.1

=V1GL1UQ53
-UQ13.1-BGS/R
Clamps 13

=V1GL1UQ53KF2+V1GL1UQ53/2.4
+.GL1UQ53UQ13.2-W1

-W1
RKC 4.4T-4-RSC 4.4T/S3060
4m

BN BU BK WH
1 3
+ -
-BGS/R
TÜNKERS
1324638
A2 A1
2 4

Clamps 13
=V1GL1UQ53UQ13.2
+.GL1UQ53UQ13.2
-UQ13.2

=V1GL1UQ53
-UQ13.2-BGS/R
Clamps 13

=V1GL1UQ53UQ12+.GL1UQ53UQ12/1

=V1GL1UQ53UQ14+.GL1UQ53UQ14/1

			Date	1/17/2023	Volvo Trucks North America	Valiant TMS	FESTO DQ CONNECTION QN13	Drawing name: =2V09&EFS-EL	= V1GL1UQ53UQ13
			Ed.	MKLEPADLO					+ V1GL1UQ53UQ13
			Appr		P6700 Bodyside LH - Robot Cell 2V09			Document type: EFS	Project nr: 22-16150
Modification	Date	Name	Original		Replacement of	Replaced by	Scale 1:1		Page 1 / 1533

0	1	2	3	4	5	6	7	8	9

=V1GL1UQ53KF2
+.GL1UQ53

-KF2.22
=V1GL1UQ53KF2+V1GL1UQ53/5.1

Clamps 14 (RST)
=V1GL1UQ53KF2
+V1GL1UQ53
-QN14.1_Q
=V1GL1UQ53KF2
+V1GL1UQ53/5.3
Q2825.6

Clamps 14 (SET)
=V1GL1UQ53KF2
+V1GL1UQ53
-QN14.2_Q
=V1GL1UQ53KF2
+V1GL1UQ53/5.3
Q2825.7

2.1 Pneumatic Valve

2.2 Pneumatic Valve

-QN14 .1 .2

=V1GL1UQ53KF2+V1GL1UQ53/2.5
+.GL1UQ53UQ14.1-W1

-W1
RKC 4.4T-5-RSC 4.4T/S3060
5m

BN BU BK WH
1 3
-BGS/R
TÜNKERS
1324644
A2 A1
2 4

Clamps 14
=V1GL1UQ53UQ14.1
+.GL1UQ53UQ14.1
-UQ14.1

=V1GL1UQ53
-UQ14.1-BGS/R
Clamps 14

=V1GL1UQ53KF2+V1GL1UQ53/2.6
+.GL1UQ53UQ14.2-W1

-W1
RKC 4.4T-6-RSC 4.4T/S3060
6m

BN BU BK WH
1 3
-BGS/R
TÜNKERS
1324644
A2 A1
2 4

Clamps 14
=V1GL1UQ53UQ14.2
+.GL1UQ53UQ14.2
-UQ14.2

=V1GL1UQ53
-UQ14.2-BGS/R
Clamps 14

=V1GL1UQ53KF2+V1GL1UQ53/2.8
+.GL1UQ53UQ14.3-W1

-W1
RKC 4.4T-7-RSC 4.4T/S3060
7m

BN BU BK WH
1 3
-BGS/R
TÜNKERS
1324644
A2 A1
2 4

Clamps 14
=V1GL1UQ53UQ14.3
+.GL1UQ53UQ14.3
-UQ14.3

=V1GL1UQ53
-UQ14.3-BGS/R
Clamps 14

=V1GL1UQ53KF2+V1GL1UQ53/2.9
+.GL1UQ53UQ14.4-W1

-W1
RKC 4.4T-5-RSC 4.4T/S3060
5m

BN BU BK WH
1 3
-BGS/R
TÜNKERS
1324644
A2 A1
2 4

Clamps 14
=V1GL1UQ53UQ14.4
+.GL1UQ53UQ14.4
-UQ14.4

=V1GL1UQ53
-UQ14.4-BGS/R
Clamps 14

=V1GL1UQ53UQ13+.GL1UQ53UQ13/1

=V1GL1UQ53UQ15+.GL1UQ53UQ15/1

			Date	1/17/2023	Volvo Trucks North America	Valiant TMS	FESTO DQ CONNECTION QN14	Drawing name: =2V09&EFS-EL	= V1GL1UQ53UQ14
			Ed.	MKLEPADLO					+ V1GL1UQ53UQ14
			Appr		P6700 Bodyside LH - Robot Cell 2V09			Document type: EFS	Project nr: 22-16150
Modification	Date	Name	Original		Replacement of	Replaced by	Scale 1:1		Page 1 / 1533

0	1	2	3	4	5	6	7	8	9

=V1GL1UQ53KF2
+.GL1UQ53

-KF2.23
=V1GL1UQ53KF2+V1GL1UQ53/5.1

Clamp 15 (RST)	Clamp 15 (SET)
=V1GL1UQ53KF2	=V1GL1UQ53KF2
+V1GL1UQ53	+V1GL1UQ53
-QN15.1_Q	-QN15.2_Q
=V1GL1UQ53KF2	=V1GL1UQ53KF2
+V1GL1UQ53/5.3	+V1GL1UQ53/5.3
Q2826.0	Q2826.1

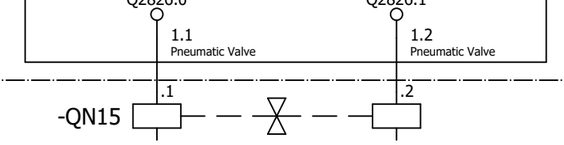

=V1GL1UQ53KF2+V1GL1UQ53/3.1
+.GL1UQ53UQ15.1-W1

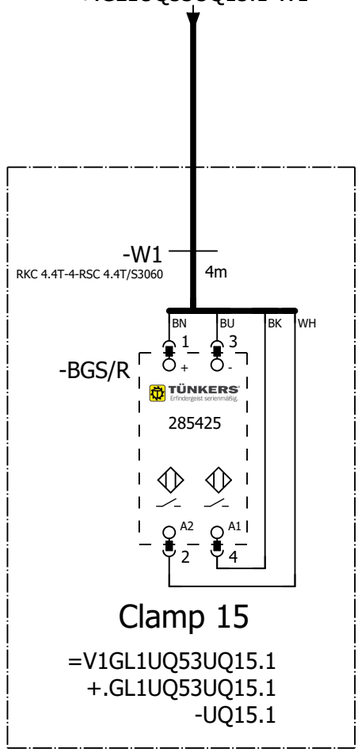

Clamp 15

=V1GL1UQ53UQ15.1
+.GL1UQ53UQ15.1
-UQ15.1

=V1GL1UQ53
-UQ15.1-BGS/R
Clamp 15

=V1GL1UQ53UQ14+.GL1UQ53UQ14/1

=V1GL1UQ53UQ16+.GL1UQ53UQ16/1

			Date	1/17/2023	Volvo Trucks North America		Valiant TMS	FESTO DQ CONNECTION QN15	Drawing name: =2V09&EFS-EL	= V1GL1UQ53UQ15
			Ed.	MKLEPADLO						+ V1GL1UQ53UQ15
			Appr		P6700 Bodyside LH - Robot Cell 2V09				Document type: EFS	Project nr: 22-16150
Modification	Date	Name	Original		Replacement of	Replaced by	Scale 1:1			Page 1 / 1533

0	1	2	3	4	5	6	7	8	9

=V1GL1UQ53KF2
+.GL1UQ53

-KF2.23
=V1GL1UQ53KF2+V1GL1UQ53/5.1

Clamp 16 (RST)	Clamp 16 (SET)
=V1GL1UQ53KF2	=V1GL1UQ53KF2
+V1GL1UQ53	+V1GL1UQ53
-QN16.1_Q	-QN16.2_Q
=V1GL1UQ53KF2	=V1GL1UQ53KF2
+V1GL1UQ53/5.3	+V1GL1UQ53/5.3
Q2826.2	Q2826.3

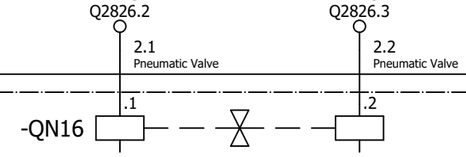

=V1GL1UQ53KF2+V1GL1UQ53/3.2
+.GL1UQ53UQ16.1-W1

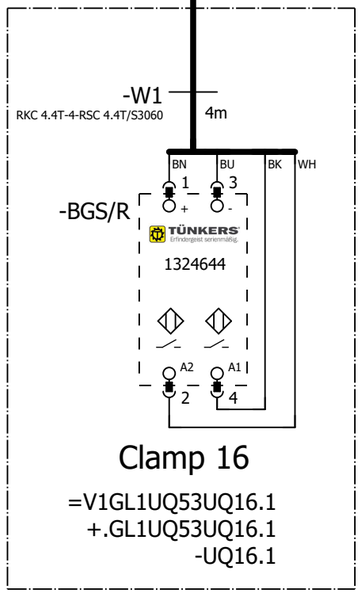

Clamp 16

=V1GL1UQ53UQ16.1
+.GL1UQ53UQ16.1
-UQ16.1

=V1GL1UQ53 -UQ16.1-BGS/R Clamp 16

=V1GL1UQ53UQ15+.GL1UQ53UQ15/1

=V1GL1UQ53UQ17+.GL1UQ53UQ17/1

			Date	1/17/2023	Volvo Trucks North America	Valiant TMS	FESTO DQ CONNECTION QN16	Drawing name: =2V09&EFS-EL	= V1GL1UQ53UQ16
			Ed.	MKLEPADLO					+ V1GL1UQ53UQ16
			Appr		P6700 Bodyside LH - Robot Cell 2V09			Document type: EFS	Project nr: 22-16150
Modification	Date	Name	Original		Replacement of	Replaced by	Scale 1:1		Page 1 / 1533

0	1	2	3	4	5	6	7	8	9

=V1GL1UQ53KF2
+.GL1UQ53

-KF2.24
=V1GL1UQ53KF2+V1GL1UQ53/5.1

Clamp 17 (RST)	Clamp 17 (SET)
=V1GL1UQ53KF2	=V1GL1UQ53KF2
+V1GL1UQ53	+V1GL1UQ53
-QN17.1_Q	-QN17.2_Q
=V1GL1UQ53KF2	=V1GL1UQ53KF2
+V1GL1UQ53/5.3	+V1GL1UQ53/5.3
Q2826.4	Q2826.5
1.1 Pneumatic Valve	1.2 Pneumatic Valve

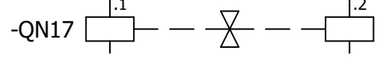

=V1GL1UQ53KF2+V1GL1UQ53/3.3
+.GL1UQ53UQ17.1-W1

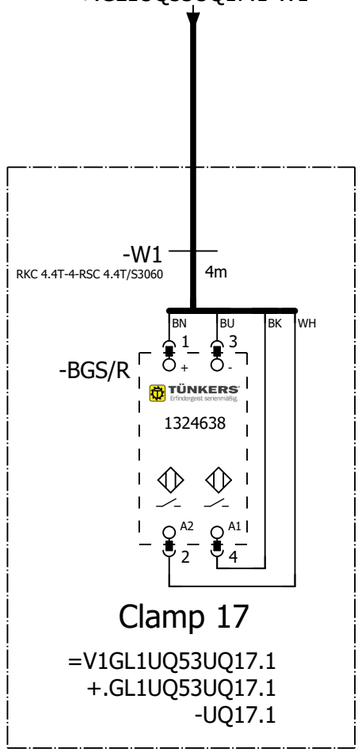

Clamp 17

=V1GL1UQ53UQ17.1
+.GL1UQ53UQ17.1
-UQ17.1

=V1GL1UQ53 -UQ17.1-BGS/R Clamp 17

=V1GL1UQ53UQ16+.GL1UQ53UQ16/1

=V1GL1UQ53UQ18+.GL1UQ53UQ18/1

			Date	1/17/2023	Volvo Trucks North America	Valiant TMS	FESTO DQ CONNECTION QN17	Drawing name: =2V09&EFS-EL	= V1GL1UQ53UQ17
			Ed.	MKLEPADLO					+ V1GL1UQ53UQ17
			Appr		P6700 Bodyside LH - Robot Cell 2V09			Document type: EFS	Project nr: 22-16150
Modification	Date	Name	Original		Replacement of	Replaced by	Scale 1:1		Page 1 / 1533

0	1	2	3	4	5	6	7	8	9

=V1GL1UQ53KF2
+.GL1UQ53

-KF2.24
=V1GL1UQ53KF2+V1GL1UQ53/5.1

Shot Pin 18 (RST)
=V1GL1UQ53KF2
+V1GL1UQ53
-QN18.1_Q
=V1GL1UQ53KF2
+V1GL1UQ53/5.3
Q2826.6

Shot Pin 18 (SET)
=V1GL1UQ53KF2
+V1GL1UQ53
-QN18.2_Q
=V1GL1UQ53KF2
+V1GL1UQ53/5.3
Q2826.7

2.1
Pneumatic Valve

2.2
Pneumatic Valve

-QN18 .1 .2

=V1GL1UQ53KF2+V1GL1UQ53/3.4
+.GL1UQ53UQ18.1-W1

-W1
RKC 4.4T-6-RSC 4.4T/S3060
6m

BN BU BK WH

-BGS/R
1 3
PEPPERL+FUCHS
NBN2-F581-
100S6-E8-V1
A2 A1
2 4

Shot Pin 18

=V1GL1UQ53UQ18.1
+.GL1UQ53UQ18.1
-UQ18.1

=V1GL1UQ53 -UQ18.1-BGS/R Shot Pin 18

=V1GL1UQ53UQ17+.GL1UQ53UQ17/1

=V1GL1UQ53UQ19+.GL1UQ53UQ19/1

			Date	1/17/2023	Volvo Trucks North America	Valiant TMS	FESTO DQ CONNECTION QN18	Drawing name: =2V09&EFS-EL	= V1GL1UQ53UQ18
			Ed.	MKLEPADLO					+ V1GL1UQ53UQ18
			Appr		P6700 Bodyside LH - Robot Cell 2V09			Document type: EFS	Project nr: 22-16150
Modification	Date	Name	Original		Replacement of / Replaced by	Scale 1:1			Page 1 / 1533

0	1	2	3	4	5	6	7	8	9

=V1GL1UQ53KF2
+.GL1UQ53

-KF2.25
=V1GL1UQ53KF2+V1GL1UQ53/5.1

Clamp 19 (RST)	Clamp 19 (SET)
=V1GL1UQ53KF2	=V1GL1UQ53KF2
+V1GL1UQ53	+V1GL1UQ53
-QN19.1_Q	-QN19.2_Q
=V1GL1UQ53KF2	=V1GL1UQ53KF2
+V1GL1UQ53/5.3	+V1GL1UQ53/5.3
Q2827.0	Q2827.1
1.1 Pneumatic Valve	1.2 Pneumatic Valve

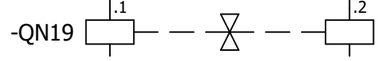

=V1GL1UQ53KF2+V1GL1UQ53/3.5
+.GL1UQ53UQ19.1-W1

-W1
RKC 4.4T-6-RSC 4.4T/S3060
6m

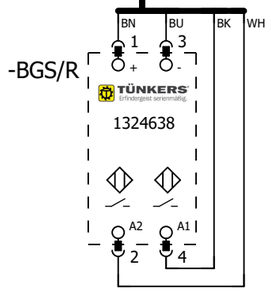

Clamp 19

=V1GL1UQ53UQ19.1
+.GL1UQ53UQ19.1
-UQ19.1

=V1GL1UQ53 -UQ19.1-BGS/R Clamp 19

=V1GL1UQ53UQ18+.GL1UQ53UQ18/1

=V1GL1UQ53UQ20+.GL1UQ53UQ20/1

			Date	1/17/2023	Volvo Trucks North America	Valiant TMS	FESTO DQ CONNECTION QN19	Drawing name: =2V09&EFS-EL	= V1GL1UQ53UQ19
			Ed.	MKLEPADLO					+ V1GL1UQ53UQ19
			Appr		P6700 Bodyside LH - Robot Cell 2V09			Document type: EFS	Project nr: 22-16150
Modification	Date	Name	Original		Replacement of	Replaced by	Scale 1:1		Page 1 / 1533

0	1	2	3	4	5	6	7	8	9

=V1GL1UQ53KF2
+.GL1UQ53

-KF2.25
=V1GL1UQ53KF2+V1GL1UQ53/5.1

Clamp 20 (RST)	Clamp 20 (SET)
=V1GL1UQ53KF2	=V1GL1UQ53KF2
+V1GL1UQ53	+V1GL1UQ53
-QN20.1_Q	-QN20.2_Q
=V1GL1UQ53KF2	=V1GL1UQ53KF2
+V1GL1UQ53/5.3	+V1GL1UQ53/5.3
Q2827.2	Q2827.3
2.1 Pneumatic Valve	2.2 Pneumatic Valve

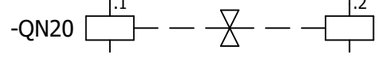

=V1GL1UQ53KF2+V1GL1UQ53/3.6
+.GL1UQ53UQ20.1-W1

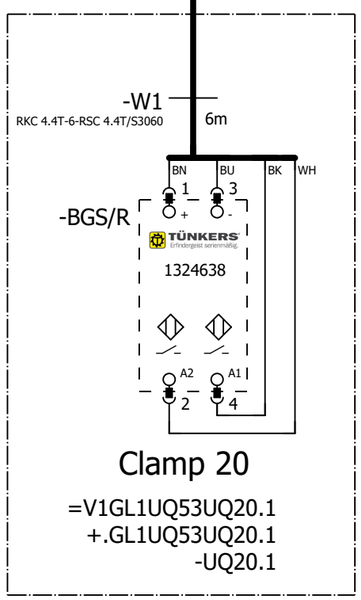

Clamp 20

=V1GL1UQ53UQ20.1
+.GL1UQ53UQ20.1
-UQ20.1

=V1GL1UQ53 -UQ20.1-BGS/R Clamp 20

=V1GL1UQ53UQ19+.GL1UQ53UQ19/1

=V1GL1UQ53UQ21+.GL1UQ53UQ21/1

			Date	1/17/2023	Volvo Trucks North America	Valiant TMS	FESTO DQ CONNECTION QN20	Drawing name: =2V09&EFS-EL	= V1GL1UQ53UQ20
			Ed.	MKLEPADLO					+ V1GL1UQ53UQ20
			Appr		P6700 Bodyside LH - Robot Cell 2V09			Document type: EFS	Project nr: 22-16150
Modification	Date	Name	Original		Replacement of	Replaced by	Scale 1:1		Page 1 / 1533

0	1	2	3	4	5	6	7	8	9

=V1GL1UQ53KF3
+.GL1UQ53

-KF3.21
=V1GL1UQ53KF3+V1GL1UQ53/2.1

Clamp 21 (RST)
=V1GL1UQ53KF3
+V1GL1UQ53
-QN21.1_Q
=V1GL1UQ53KF3
+V1GL1UQ53/2.3
Q2850.0

Clamp 21 (SET)
=V1GL1UQ53KF3
+V1GL1UQ53
-QN21.2_Q
=V1GL1UQ53KF3
+V1GL1UQ53/2.3
Q2850.1

1.1 Pneumatic Valve

1.2 Pneumatic Valve

-QN21 .1 .2

=V1GL1UQ53KF3+V1GL1UQ53/1.1
+.GL1UQ53UQ21.1-W1

-W1
RKC 4.4T-5-RSC 4.4T/S3060
5m

BN BU BK WH

-BGS/R
1 3
2 4
A2 A1
TÜNKERS
1324644

Clamp 21

=V1GL1UQ53UQ21.1
+.GL1UQ53UQ21.1
-UQ21.1

=V1GL1UQ53 -UQ21.1-BGS/R Clamp 21

=V1GL1UQ53UQ20+.GL1UQ53UQ20/1

=V1GL1UQ53UQ22+.GL1UQ53UQ22/1

			Date	1/17/2023	Volvo Trucks North America	Valiant TMS	FESTO DQ CONNECTION QN21	Drawing name: =2V09&EFS-EL	= V1GL1UQ53UQ21
			Ed.	MKLEPADLO					+ V1GL1UQ53UQ21
			Appr		P6700 Bodyside LH - Robot Cell 2V09			Document type: EFS	Project nr: 22-16150
Modification	Date	Name	Original		Replacement of	Replaced by	Scale 1:1		Page 1 / 1533

0	1	2	3	4	5	6	7	8	9

=V1GL1UQ53KF3
+.GL1UQ53

-KF3.21
=V1GL1UQ53KF3+V1GL1UQ53/2.1

Clamp 22 (RST)
=V1GL1UQ53KF3
+V1GL1UQ53
-QN22.1_Q
=V1GL1UQ53KF3
+V1GL1UQ53/2.3
Q2850.2

Clamp 22 (SET)
=V1GL1UQ53KF3
+V1GL1UQ53
-QN22.2_Q
=V1GL1UQ53KF3
+V1GL1UQ53/2.3
Q2850.3

2.1
Pneumatic Valve

2.2
Pneumatic Valve

-QN22 .1 .2

=V1GL1UQ53KF3+V1GL1UQ53/1.2
+.GL1UQ53UQ22.1-W1

-W1
RKC 4.4T-5-RSC 4.4T/S3060
5m

BN BU BK WH

-BGS/R
1 3
+ -
TÜNKERS
1324638
A2 A1
2 4

Clamp 22

=V1GL1UQ53UQ22.1
+.GL1UQ53UQ22.1
-UQ22.1

=V1GL1UQ53 -UQ22.1-BGS/R Clamp 22

=V1GL1UQ53UQ21+.GL1UQ53UQ21/1

=V1GL1UQ53UQ23+.GL1UQ53UQ23/1

			Date	1/17/2023	Volvo Trucks North America	Valiant TMS	FESTO DQ CONNECTION QN22	Drawing name: =2V09&EFS-EL	= V1GL1UQ53UQ22
			Ed.	MKLEPADLO					+ V1GL1UQ53UQ22
			Appr		P6700 Bodyside LH - Robot Cell 2V09			Document type: EFS	Project nr: 22-16150
Modification	Date	Name	Original		Replacement of	Replaced by	Scale 1:1		Page 1 / 1533

0	1	2	3	4	5	6	7	8	9

=V1GL1UQ53KF3
+.GL1UQ53

-KF3.22
=V1GL1UQ53KF3+V1GL1UQ53/2.1

Clamp 23 (RST)
=V1GL1UQ53KF3
+V1GL1UQ53
-QN23.1_Q
=V1GL1UQ53KF3
+V1GL1UQ53/2.3
Q2850.4

Clamp 23 (SET)
=V1GL1UQ53KF3
+V1GL1UQ53
-QN23.2_Q
=V1GL1UQ53KF3
+V1GL1UQ53/2.3
Q2850.5

1.1
Pneumatic Valve

1.2
Pneumatic Valve

-QN23 .1 .2

=V1GL1UQ53KF3+V1GL1UQ53/1.3
+.GL1UQ53UQ23.1-W1

-W1
RKC 4.4T-5-RSC 4.4T/S3060
5m

BN BU BK WH

-BGS/R
1 3
+ -
TÜNKERS
1324644
A2 A1
2 4

Clamp 23

=V1GL1UQ53UQ23.1
+.GL1UQ53UQ23.1
-UQ23.1

=V1GL1UQ53 -UQ23.1-BGS/R Clamp 23

=V1GL1UQ53UQ22+.GL1UQ53UQ22/1

=V1GL1UQ53UQ24+.GL1UQ53UQ24/1

			Date	1/17/2023	Volvo Trucks North America	Valiant TMS	FESTO DQ CONNECTION QN23	Drawing name: =2V09&EFS-EL	= V1GL1UQ53UQ23
			Ed.	MKLEPADLO					+ V1GL1UQ53UQ23
			Appr		P6700 Bodyside LH - Robot Cell 2V09			Document type: EFS	Project nr: 22-16150
Modification	Date	Name	Original		Replacement of	Replaced by	Scale 1:1		Page 1 / 1533

0	1	2	3	4	5	6	7	8	9

=V1GL1UQ53KF3
+.GL1UQ53

-KF3.22
=V1GL1UQ53KF3+V1GL1UQ53/2.1

Clamp 24 (RST)
=V1GL1UQ53KF3
+V1GL1UQ53
-QN24.1_Q
=V1GL1UQ53KF3
+V1GL1UQ53/2.3
Q2850.6

Clamp 24 (SET)
=V1GL1UQ53KF3
+V1GL1UQ53
-QN24.2_Q
=V1GL1UQ53KF3
+V1GL1UQ53/2.3
Q2850.7

2.1
Pneumatic Valve

2.2
Pneumatic Valve

-QN24 .1 .2

=V1GL1UQ53KF3+V1GL1UQ53/1.4
+.GL1UQ53UQ24.1-W1

-W1
RKC 4.4T-4-RSC 4.4T/S3060
4m

BN BU BK WH

-BGS/R
1 3
+ -
TÜNKERS
1324638
A2 A1
2 4

Clamp 24

=V1GL1UQ53UQ24.1
+.GL1UQ53UQ24.1
-UQ24.1

=V1GL1UQ53 -UQ24.1-BGS/R Clamp 24

=V1GL1UQ53UQ23+.GL1UQ53UQ23/1

=V1GL1UQ53UQ25+.GL1UQ53UQ25/1

			Date	1/17/2023	Volvo Trucks North America	Valiant TMS	FESTO DQ CONNECTION QN24	Drawing name: =2V09&EFS-EL	= V1GL1UQ53UQ24
			Ed.	MKLEPADLO					+ V1GL1UQ53UQ24
			Appr		P6700 Bodyside LH - Robot Cell 2V09			Document type: EFS	Project nr: 22-16150
Modification	Date	Name	Original		Replacement of	Replaced by	Scale 1:1		Page 1 / 1533

0	1	2	3	4	5	6	7	8	9

=V1GL1UQ53KF3
+.GL1UQ53

-KF3.23
=V1GL1UQ53KF3+V1GL1UQ53/2.1

Clamps 25 (RST)
=V1GL1UQ53KF3
+V1GL1UQ53
-QN25.1_Q
=V1GL1UQ53KF3
+V1GL1UQ53/2.3
Q2851.0

Clamps 25 (SET)
=V1GL1UQ53KF3
+V1GL1UQ53
-QN25.2_Q
=V1GL1UQ53KF3
+V1GL1UQ53/2.3
Q2851.1

1.1 Pneumatic Valve

1.2 Pneumatic Valve

.1

.2

-QN25

=V1GL1UQ53KF3+V1GL1UQ53/1.5
+.GL1UQ53UQ25.1-W1

=V1GL1UQ53KF3+V1GL1UQ53/1.6
+.GL1UQ53UQ25.2-W1

-W1
RKC 4.4T-3-RSC 4.4T/S3060
3m

BN BU BK WH
1 3
+ -
TÜNKERS
1324638
A2 A1
2 4

-BGS/R

Clamps 25
=V1GL1UQ53UQ25.1
+.GL1UQ53UQ25.1
-UQ25.1

Clamps 25
=V1GL1UQ53UQ25.2
+.GL1UQ53UQ25.2
-UQ25.2

=V1GL1UQ53
-UQ25.1-BGS/R
Clamps 25

=V1GL1UQ53
-UQ25.2-BGS/R
Clamps 25

=V1GL1UQ53UQ24+.GL1UQ53UQ24/1

=V1GL1UQ53WC4+V1GL1UQ53/1

			Date	1/17/2023	Volvo Trucks North America		Valiant TMS	FESTO DQ CONNECTION QN25	Drawing name: =2V09&EFS-EL	= V1GL1UQ53UQ25
			Ed.	MKLEPADLO						+ V1GL1UQ53UQ25
			Appr		P6700 Bodyside LH - Robot Cell 2V09				Document type: EFS	Project nr: 22-16150
Modification	Date	Name	Original		Replacement of	Replaced by	Scale 1:1			Page 1 / 1533

0	1	2	3	4	5	6	7	8	9

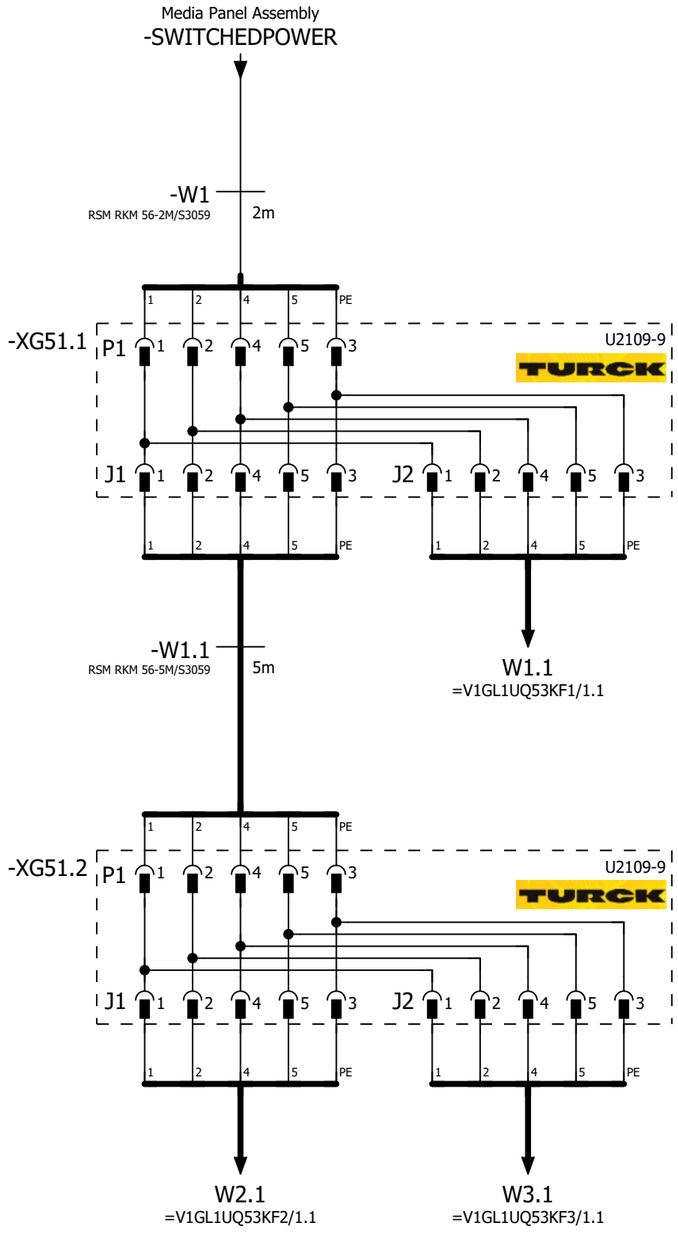

=V1GL1UQ53UQ25+.GL1UQ53UQ25/1

=V1GL1UQ54BG0+.GL1UQ54/1

			Date	1/17/2023	Volvo Trucks North America	Valiant TMS	24VDC	Drawing name: =2V09&EFS-EL	= V1GL1UQ53WC4
			Ed.	MKLEPADLO					+ V1GL1UQ53
			Appr		P6700 Bodyside LH - Robot Cell 2V09	Scale 1:1		Document type: EFS	Project nr: 22-16150
Modification	Date	Name	Original		Replacement of	Replaced by			Page 1 / 1533

0	1	2	3	4	5	6	7	8	9

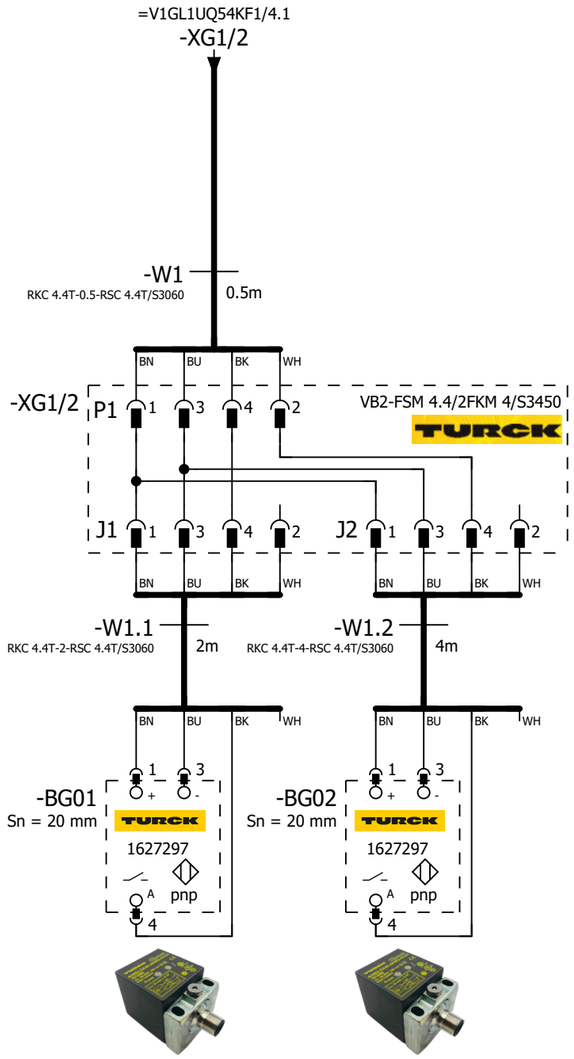

=V1GL1UQ54
-BG01
Door Frame
Assembly

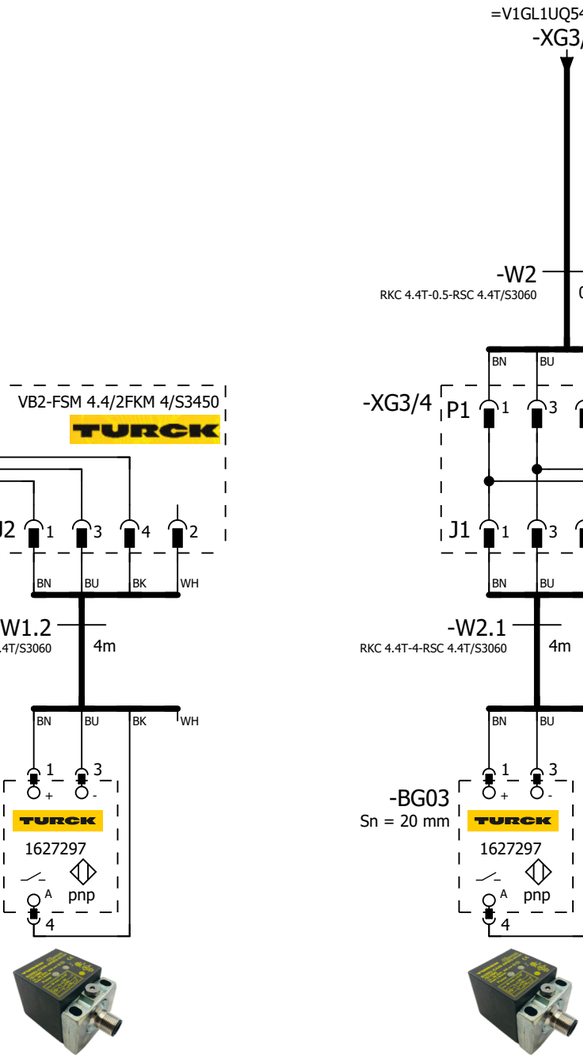

=V1GL1UQ54
-BG02
Door Frame
Assembly

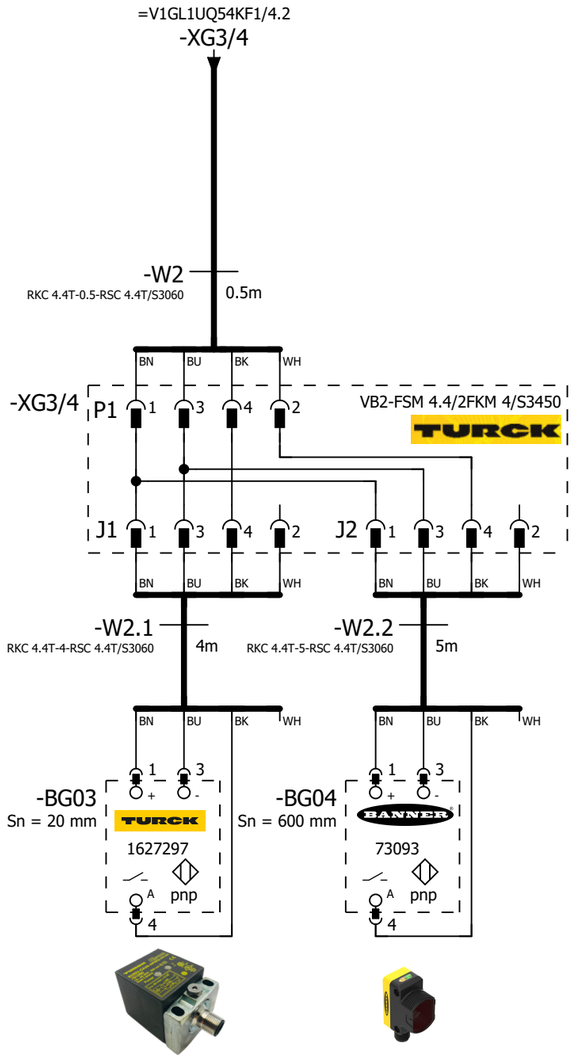

=V1GL1UQ54
-BG03
Outer Front Sill

=V1GL1UQ54
-BG04
Extruded Seal
Front

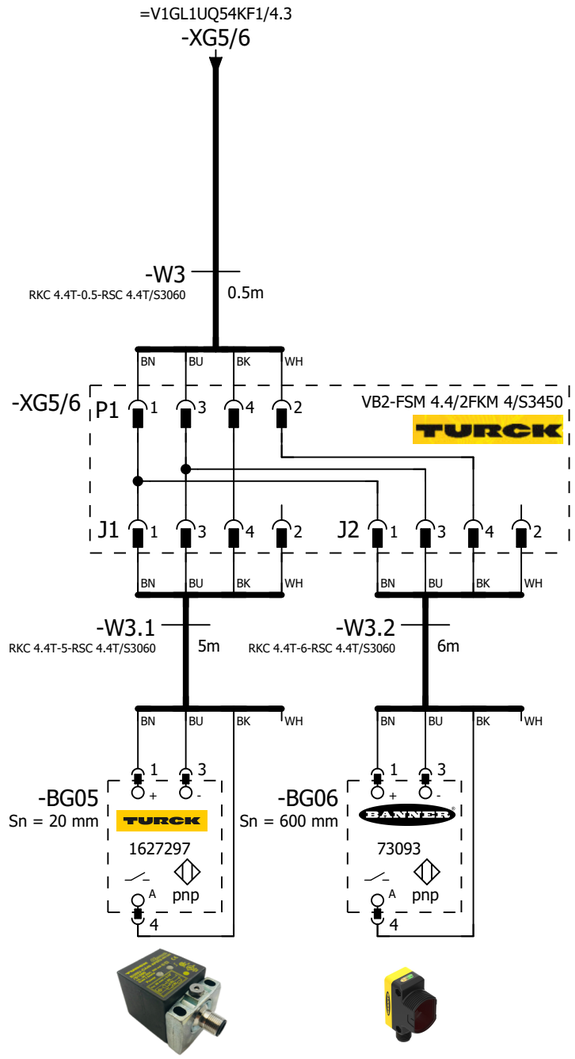

=V1GL1UQ54
-BG05
Outer Front Sill

=V1GL1UQ54
-BG06
Extruded Seal
Rear

=V1GL1UQ53WC4+.GL1UQ53/1

2

			Date	1/17/2023	Volvo Trucks North America		Valiant TMS	SENSORS	Drawing name: =2V09&EFS-EL	= V1GL1UQ54BG0
			Ed.	MKLEPADLO						+ V1GL1UQ54
			Appr		P6700 Bodyside LH - Robot Cell 2V09		Scale 1:1		Document type: EFS	Project nr: 22-16150
Modification	Date	Name	Original		Replacement of	Replaced by				Page 1 / 1533

0	1	2	3	4	5	6	7	8	9

=V1GL1UQ54KF1/4.4
-XG7/8

-W4
RKC 4.4T-0.5-RSC 4.4T/S3060
0.5m

BN BU BK WH

-XG7/8 P1 1 3 4 2 VB2-FSM 4.4/2FKM 4/S3450

J1 1 3 4 2 J2 1 3 4 2

BN BU BK WH

-W4.1
RKC 4.4T-6-RSC 4.4T/S3060
6m

-W4.2
RKC 4.4T-6-RSC 4.4T/S3060
6m

BN BU BK WH

-BG07
Sn = 20 mm
1627297
1 3
+ -
A pnp
4

-BG08
Sn = 20 mm
1627297
1 3
+ -
A pnp
4

=V1GL1UQ54
-BG07
Rear Sill Sleeper

=V1GL1UQ54
-BG08
Rear Sill Sleeper

=V1GL1UQ54KF1/4.5
-XG9/10

-W5
RKC 4.4T-0.5-RSC 4.4T/S3060
0.5m

BN BU BK WH

-XG9/10 P1 1 3 4 2 VB2-FSM 4.4/2FKM 4/S3450

J1 1 3 4 2 J2 1 3 4 2

BN BU BK WH

-W5.1
RKC 4.4T-5-RSC 4.4T/S3060
5m

-W5.2
RKC 4.4T-5-RSC 4.4T/S3060
5m

BN BU BK WH

-BG09
Sn = 20 mm
1627297
1 3
+ -
A pnp
4

-BG10
Sn = 10 mm
1644905
1 3
+ -
A pnp
4

=V1GL1UQ54
-BG09
Lug Door Mnt
Assembly

=V1GL1UQ54
-BG10
Lug Door Mnt
Assembly

=V1GL1UQ54KF1/4.6
-XG11/12

-W6
RKC 4.4T-0.5-RSC 4.4T/S3060
0.5m

BN BU BK WH

-XG11/12 P1 1 3 4 2 VB2-FSM 4.4/2FKM 4/S3450

J1 1 3 4 2 J2 1 3 4 2

BN BU BK WH

-W6.1
RKC 4.4T-4-RSC 4.4T/S3060
4m

-W6.2
RKC 4.4T-4-RSC 4.4T/S3060
4m

BN BU BK WH

-BG11
Sn = 10 mm
1644905
1 3
+ -
A pnp
4

-BG12
Sn = 20 mm
1627297
1 3
+ -
A pnp
4

=V1GL1UQ54
-BG11
Lwr Cabinet Mnt
Assembly

=V1GL1UQ54
-BG12
Header Sub
Assembly

1

3

			Date	1/17/2023	Volvo Trucks North America	Valiant TMS	SENSORS	Drawing name: =2V09&EFS-EL	= V1GL1UQ54BG0
			Ed.	MKLEPADLO					+ V1GL1UQ54
			Appr		P6700 Bodyside LH - Robot Cell 2V09	Scale 1:1		Document type: EFS	Project nr: 22-16150
Modification	Date	Name	Original		Replacement of	Replaced by			Page 2 / 1533

0	1	2	3	4	5	6	7	8	9

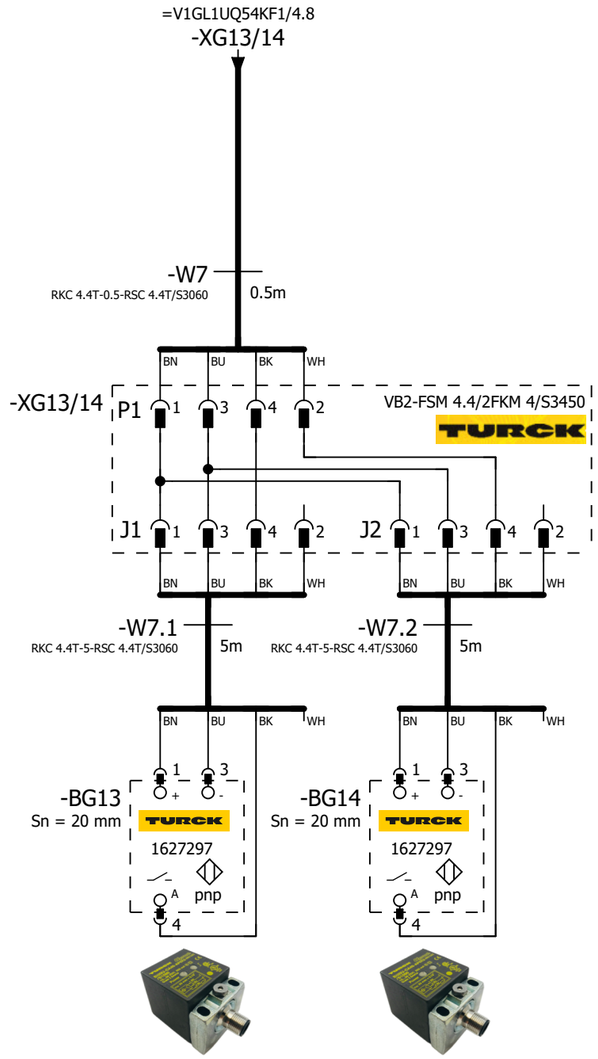

=V1GL1UQ54
-BG13
Header Sub
Assembly

=V1GL1UQ54
-BG14
Bunk Support

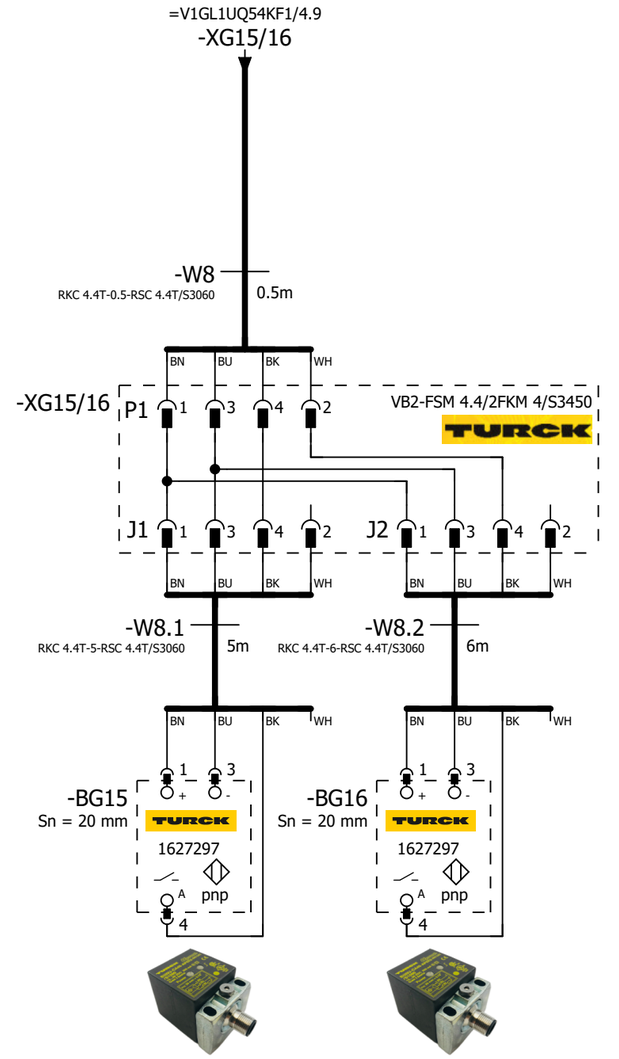

=V1GL1UQ54
-BG15
Rear Lower
Assembly

=V1GL1UQ54
-BG16
Rear Lower
Assembly

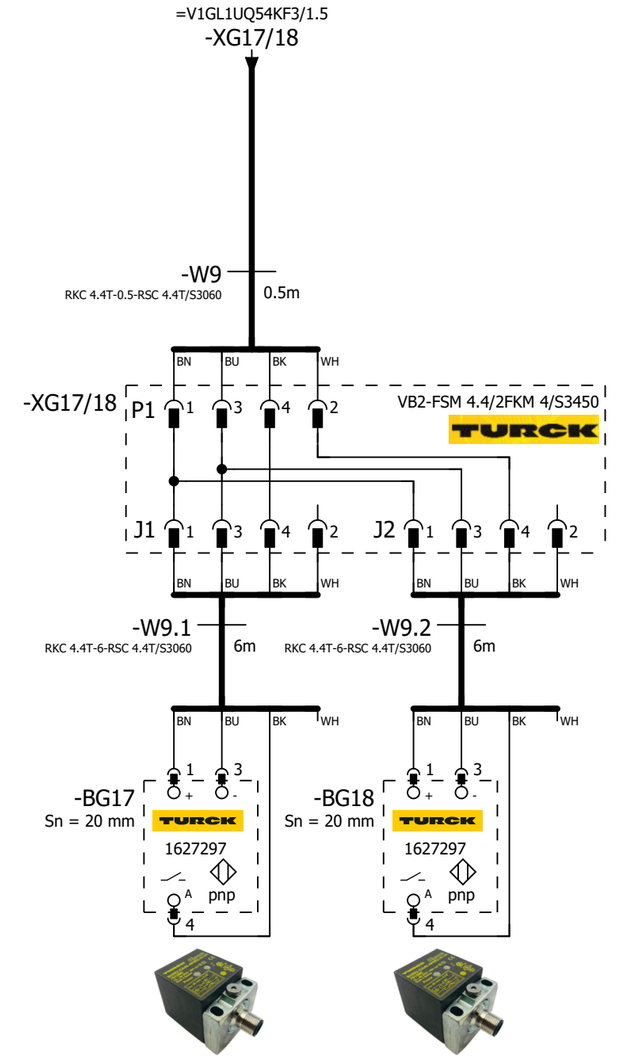

=V1GL1UQ54
-BG17
Bunk Support

=V1GL1UQ54
-BG18
C-Pillar Assembly

			Date	1/17/2023	Volvo Trucks North America	Valiant TMS	SENSORS	Drawing name: =2V09&EFS-EL	= V1GL1UQ54BG0
			Ed.	MKLEPADLO					+ V1GL1UQ54
			Appr		P6700 Bodyside LH - Robot Cell 2V09			Document type: EFS	Project nr: 22-16150 / Page 3 / 1533
Modification	Date	Name	Original		Replacement of / Replaced by	Scale 1:1			

0	1	2	3	4	5	6	7	8	9

=V1GL1UQ54KF3/1.6
-XG19/20

-W10
RKC 4.4T-0.5-RSC 4.4T/S3060
0.5m

BN BU BK WH

-XG19/20 P1 1 3 4 2 VB2-FSM 4.4/2FKM 4/S3450

J1 1 3 4 2 J2 1 3 4 2

BN BU BK WH

-W10.1
RKC 4.4T-5-RSC 4.4T/S3060
5m

-W10.2
RKC 4.4T-4-RSC 4.4T/S3060
4m

BN BU BK WH

-BG19
Sn = 20 mm
TURCK
1627297
1 3
+ -
A pnp
4

-BG20
Sn = 20 mm
TURCK
1627297
1 3
+ -
A pnp
4

=V1GL1UQ54
-BG19
C-Pillar Assembly

=V1GL1UQ54
-BG20
Blind Lower

=V1GL1UQ54KF3/1.8
-XG21/22

-W11
RKC 4.4T-0.5-RSC 4.4T/S3060
0.5m

BN BU BK WH

-XG21/22 P1 1 3 4 2 VB2-FSM 4.4/2FKM 4/S3450

J1 1 3 4 2 J2 1 3 4 2

BN BU BK WH

-W11.1
RKC 4.4T-5-RSC 4.4T/S3060
5m

-W11.2
RKC 4.4T-5-RSC 4.4T/S3060
5m

BN BU BK WH

-BG21
Sn = 20 mm
TURCK
1627297
1 3
+ -
A pnp
4

-BG22
Sn = 10 mm
TURCK
1644905
1 3
+ -
A pnp
4

=V1GL1UQ54
-BG21
Blind Lower

=V1GL1UQ54
-BG22
Vertical Member

=V1GL1UQ54KF3/1.9
-XG23/24

-W12
RKC 4.4T-0.5-RSC 4.4T/S3060
0.5m

BN BU BK WH

-XG23/24 P1 1 3 4 2 VB2-FSM 4.4/2FKM 4/S3450

J1 1 3 4 2 J2 1 3 4 2

BN BU BK WH

-W12.1
RKC 4.4T-4-RSC 4.4T/S3060
4m

-W12.2
RKC 4.4T-4-RSC 4.4T/S3060
4m

BN BU BK WH

-BG23
Sn = 20 mm
TURCK
1627297
1 3
+ -
A pnp
4

-BG24
Sn = 10 mm
TURCK
1644905
1 3
+ -
A pnp
4

=V1GL1UQ54
-BG23
Vertical Member

=V1GL1UQ54
-BG24
Horizontal Mbr /
Cabinet Mnt

3 5

			Date	1/17/2023	Volvo Trucks North America	Valiant TMS	SENSORS	Drawing name: =2V09&EFS-EL	= V1GL1UQ54BG0
			Ed.	MKLEPADLO					+ V1GL1UQ54
			Appr		P6700 Bodyside LH - Robot Cell 2V09	Scale 1:1		Document type: EFS	Project nr: 22-16150 / Page 4 / 1533
Modification	Date	Name	Original		Replacement of / Replaced by				

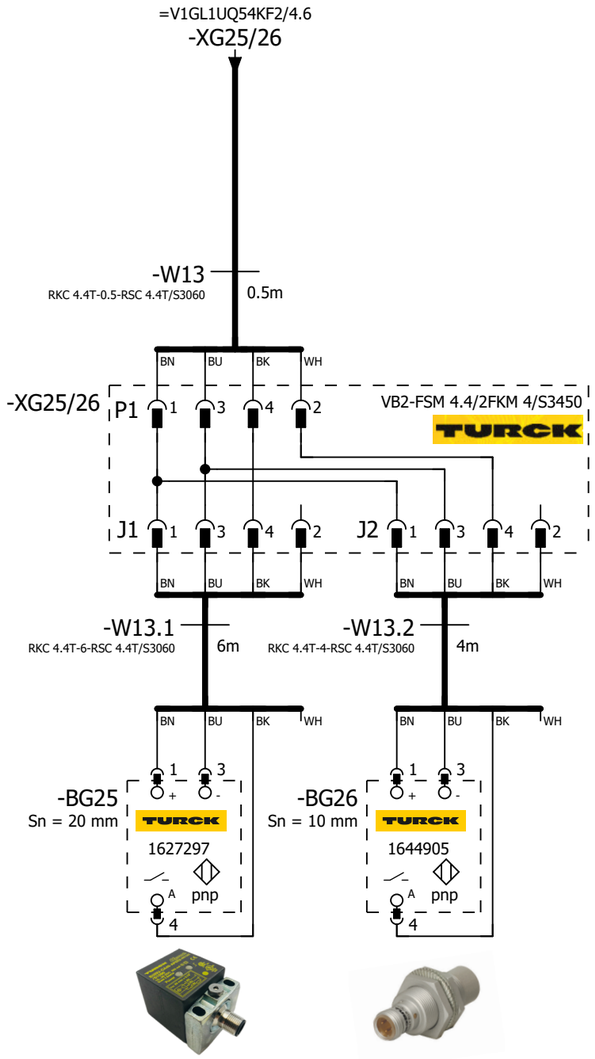

=V1GL1UQ54
-BG25
Header Sub
Assembly

=V1GL1UQ54
-BG26
Cabinet Mount

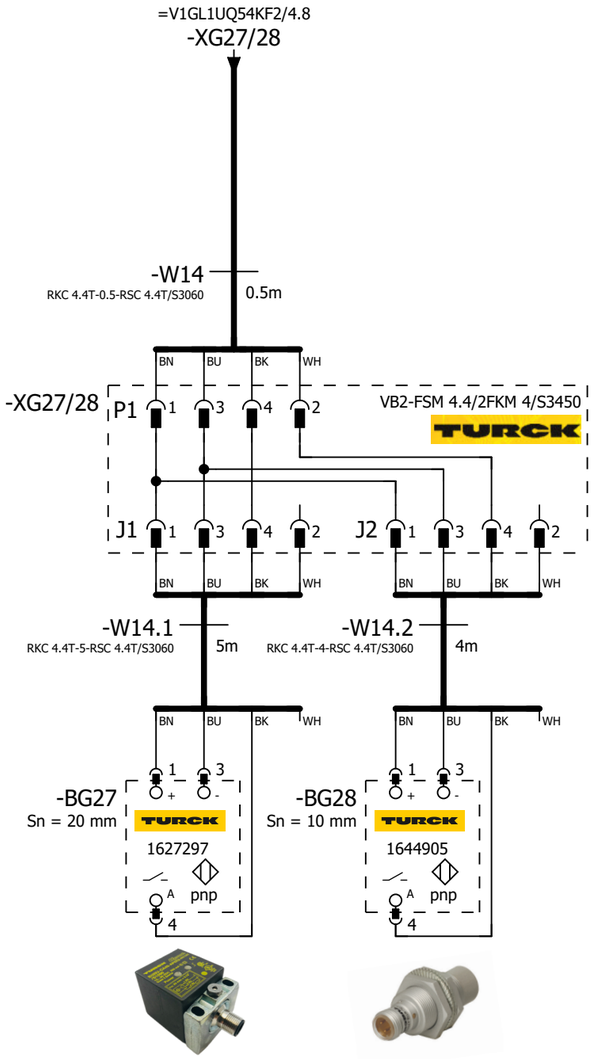

=V1GL1UQ54
-BG27
Lw Cabinet Mnt
Assembly LH/RH

=V1GL1UQ54
-BG28
Intermed H R
Long

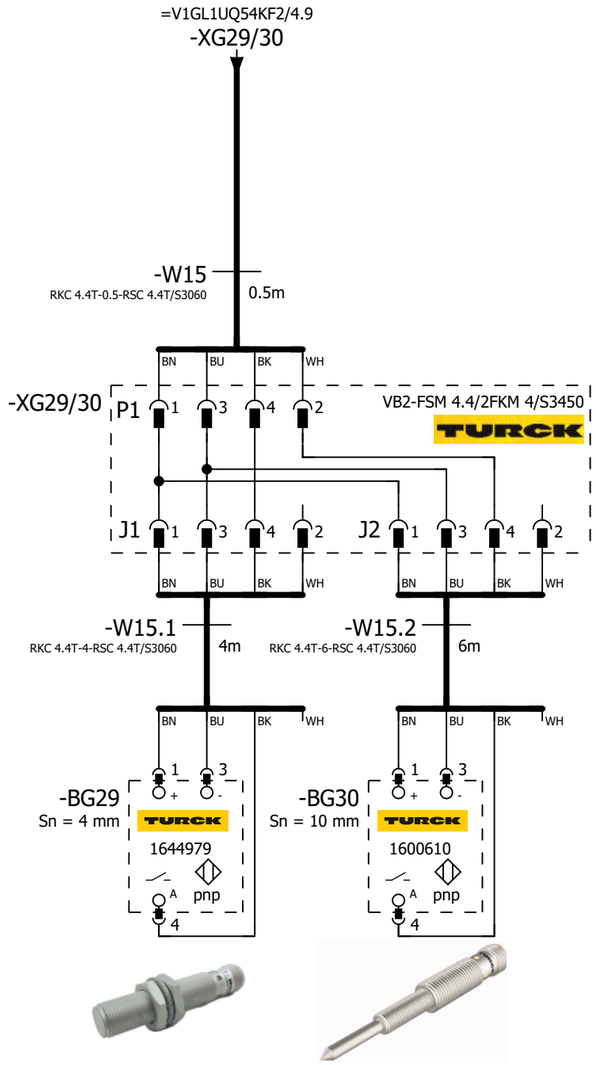

=V1GL1UQ54
-BG29
Horizontal
Member

=V1GL1UQ54
-BG30
Nut L320 Part

4

=V1GL1UQ54KF1/1

			Date	1/17/2023	Volvo Trucks North America	Valiant TMS	SENSORS	Drawing name: =2V09&EFS-EL	= V1GL1UQ54BG0
			Ed.	MKLEPADLO					+ V1GL1UQ54
			Appr		P6700 Bodyside LH - Robot Cell 2V09			Document type: EFS	Project nr: 22-16150
Modification	Date	Name	Original		Replacement of / Replaced by	Scale 1:1			Page 5 / 1533

0	1	2	3	4	5	6	7	8	9

=V1GL1UQ54WC4/1.6 / W1.1

-W1.1
RSM RKM 56-2M/S3059
2m

Media Panel Assembly / -WF1

-WF1
PROFINET Cable
6XV1840-3AH10

KF1-P2 / =V1GL1UQ54KF2/1.3

-KF1

X20 M12, 7/8" 1 2 PE 4 5
0V_VAL / OUT
0V_EL / SEN
FE
24V_EL / SEN
24V_VAL / OUT

ON OFF 1 2 1 2

M12 -TP1

M12 -TP2

FESTO
Bus node + Interlinking block
548755 + 550208

-KF1.11

FESTO
CPX-M-AB-8-M12X2-5POL
549335

I2875.0	DI 0 X1:4	V1GL1UQ54UQ1.1-BGR	Shot Pins 1 (RESET)
I2875.1	DI 1 X1:2	V1GL1UQ54UQ1.1-BGS	Shot Pins 1 (SET)
I2875.2	DI 2 X2:4	V1GL1UQ54UQ1.2-BGR	Shot Pins 1 (RESET)
I2875.3	DI 3 X2:2	V1GL1UQ54UQ1.2-BGS	Shot Pins 1 (SET)
I2875.4	DI 4 X3:4	V1GL1UQ54UQ1.3-BGR	Shot Pins 1 (RESET)
I2875.5	DI 5 X3:2	V1GL1UQ54UQ1.3-BGS	Shot Pins 1 (SET)
I2875.6	DI 6 X4:4	V1GL1UQ54UQ1.4-BGR	Shot Pins 1 (RESET)
I2875.7	DI 7 X4:2	V1GL1UQ54UQ1.4-BGS	Shot Pins 1 (SET)
I2876.0	DI 8 X5:4	V1GL1UQ54UQ1.5-BGR	Shot Pins 1 (RESET)
I2876.1	DI 9 X5:2	V1GL1UQ54UQ1.5-BGS	Shot Pins 1 (SET)
I2876.2	DI 10 X6:4	V1GL1UQ54UQ1.6-BGR	Shot Pins 1 (RESET)
I2876.3	DI 11 X6:2	V1GL1UQ54UQ1.6-BGS	Shot Pins 1 (SET)
I2876.4	DI 12 X7:4	V1GL1UQ54UQ2.1-BGR	Shot Pin 2 (RESET)
I2876.5	DI 13 X7:2	V1GL1UQ54UQ2.1-BGS	Shot Pin 2 (SET)
I2876.6	DI 14 X8:4	V1GL1UQ54UQ3.1-BGR	Shot Pins 3 (RESET)
I2876.7	DI 15 X8:2	V1GL1UQ54UQ3.1-BGS	Shot Pins 3 (SET)

X1 M12 1 2 3 4 5 — 24V DI 1 0V DI 0 FE — BN WH BU BK
X2 M12 1 2 3 4 5 — 24V DI 3 0V DI 2 FE — BN WH BU BK
X3 M12 1 2 3 4 5 — 24V DI 5 0V DI 4 FE — BN WH BU BK
X4 M12 1 2 3 4 5 — 24V DI 7 0V DI 6 FE — BN WH BU BK
X5 M12 1 2 3 4 5 — 24V DI 9 0V DI 8 FE — BN WH BU BK
X6 M12 1 2 3 4 5 — 24V DI 11 0V DI 10 FE — BN WH BU BK
X7 M12 1 2 3 4 5 — 24V DI 13 0V DI 12 FE — BN WH BU BK
X8 M12 1 2 3 4 5 — 24V DI 15 0V DI 14 FE — BN WH BU BK

+V1GL1UQ54UQ1.1-W1
=V1GL1UQ54UQ1+.GL1UQ54UQ1/1.1

+V1GL1UQ54UQ1.2-W1
=V1GL1UQ54UQ1+.GL1UQ54UQ1/1.2

+V1GL1UQ54UQ1.3-W1
=V1GL1UQ54UQ1+.GL1UQ54UQ1/1.4

+V1GL1UQ54UQ1.4-W1
=V1GL1UQ54UQ1+.GL1UQ54UQ1/1.5

+V1GL1UQ54UQ1.5-W1
=V1GL1UQ54UQ1+.GL1UQ54UQ1/1.7

+V1GL1UQ54UQ1.6-W1
=V1GL1UQ54UQ1+.GL1UQ54UQ1/1.9

+V1GL1UQ54UQ2.1-W1
=V1GL1UQ54UQ2+.GL1UQ54UQ2/1.1

+V1GL1UQ54UQ3.1-W1
=V1GL1UQ54UQ3+.GL1UQ54UQ3/1.1

=V1GL1UQ54BG0/5

			Date	1/17/2023	Volvo Trucks North America	Valiant TMS	CONNECTING MOD. FOR VTSA MANIFOLD	Drawing name: =2V09&EFS-EL	= V1GL1UQ54KF1
			Ed.	MKLEPADLO					+ V1GL1UQ54
			Appr		P6700 Bodyside LH - Robot Cell 2V09	Scale 1:1		Document type: EFS	Project nr: 22-16150
Modification	Date	Name	Original		Replacement of / Replaced by				Page 1 / 1533

0	1	2	3	4	5	6	7	8	9

I2877.0	DI 0 X1:4	V1GL1UQ54UQ3.2-BGR	Shot Pins 3 (RESET)
I2877.1	DI 1 X1:2	V1GL1UQ54UQ3.2-BGS	Shot Pins 3 (SET)
I2877.2	DI 2 X2:4	V1GL1UQ54UQ3.3-BGR	Shot Pins 3 (RESET)
I2877.3	DI 3 X2:2	V1GL1UQ54UQ3.3-BGS	Shot Pins 3 (SET)
I2877.4	DI 4 X3:4	V1GL1UQ54UQ3.4-BGR	Shot Pins 3 (RESET)
I2877.5	DI 5 X3:2	V1GL1UQ54UQ3.4-BGS	Shot Pins 3 (SET)
I2877.6	DI 6 X4:4	V1GL1UQ54UQ3.5-BGR	Shot Pins 3 (RESET)
I2877.7	DI 7 X4:2	V1GL1UQ54UQ3.5-BGS	Shot Pins 3 (SET)
I2878.0	DI 8 X5:4	V1GL1UQ54UQ4.1-BGR	Shot Pins 4 (RESET)
I2878.1	DI 9 X5:2	V1GL1UQ54UQ4.1-BGS	Shot Pins 4 (SET)
I2878.2	DI 10 X6:4	V1GL1UQ54UQ4.2-BGR	Shot Pins 4 (RESET)
I2878.3	DI 11 X6:2	V1GL1UQ54UQ4.2-BGS	Shot Pins 4 (SET)
I2878.4	DI 12 X7:4	V1GL1UQ54UQ5.1-BGR	Shot Pins 5 (RESET)
I2878.5	DI 13 X7:2	V1GL1UQ54UQ5.1-BGS	Shot Pins 5 (SET)
I2878.6	DI 14 X8:4	V1GL1UQ54UQ5.2-BGR	Shot Pins 5 (RESET)
I2878.7	DI 15 X8:2	V1GL1UQ54UQ5.2-BGS	Shot Pins 5 (SET)

-KF1.12

FESTO

CPX-M-AB-8-M12X2-5POL

549335

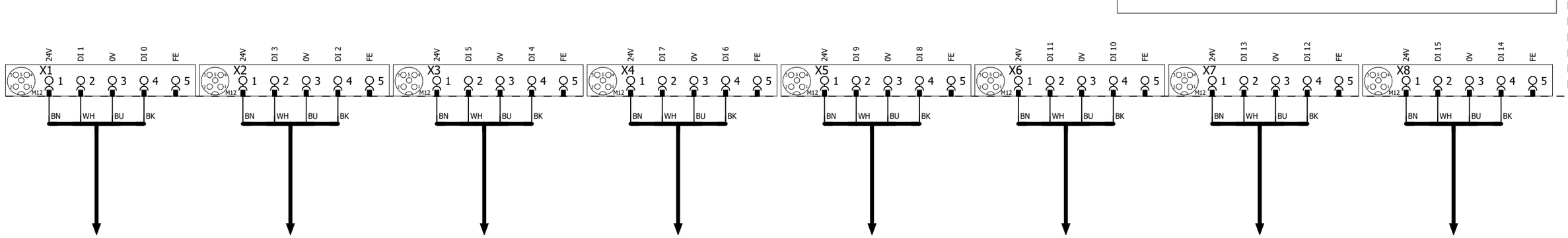

1 3

			Date	1/17/2023	Volvo Trucks North America	Valiant TMS	I/O MOD. DI16 (8 x M12) FOR VTSA-F	Drawing name: =2V09&EFS-EL	= V1GL1UQ54KF1
			Ed.	MKLEPADLO					+ V1GL1UQ54
			Appr		P6700 Bodyside LH - Robot Cell 2V09	Scale 1:1		Document type: EFS	Project nr: 22-16150
Modification	Date	Name	Original		Replacement of / Replaced by				Page 2 / 1533

I2879.0	DI 0 X1:4	V1GL1UQ54UQ6.1-BGR	Shot Pin 6 (RESET)
I2879.1	DI 1 X1:2	V1GL1UQ54UQ6.1-BGS	Shot Pin 6 (SET)
I2879.2	DI 2 X2:4	V1GL1UQ54UQ7.1-BGR	Shot Pin 7 (RESET)
I2879.3	DI 3 X2:2	V1GL1UQ54UQ7.1-BGS	Shot Pin 7 (SET)
I2879.4	DI 4 X3:4	V1GL1UQ54UQ8.1-BGR	Slide 8 (RESET)
I2879.5	DI 5 X3:2	V1GL1UQ54UQ8.1-BGS	Slide 8 (SET)
I2879.6	DI 6 X4:4	V1GL1UQ54UQ9.1-BGR	Shot Pins 9 (RESET)
I2879.7	DI 7 X4:2	V1GL1UQ54UQ9.1-BGS	Shot Pins 9 (SET)
I2880.0	DI 8 X5:4	V1GL1UQ54UQ9.2-BGR	Shot Pins 9 (RESET)
I2880.1	DI 9 X5:2	V1GL1UQ54UQ9.2-BGS	Shot Pins 9 (SET)
I2880.2	DI 10 X6:4	I2880.2	Spare
I2880.3	DI 11 X6:2	I2880.3	Spare
I2880.4	DI 12 X7:4	I2880.4	Spare
I2880.5	DI 13 X7:2	I2880.5	Spare
I2880.6	DI 14 X8:4	I2880.6	Spare
I2880.7	DI 15 X8:2	I2880.7	Spare

-KF1.13

FESTO

CPX-M-AB-8-M12X2-5POL

549335

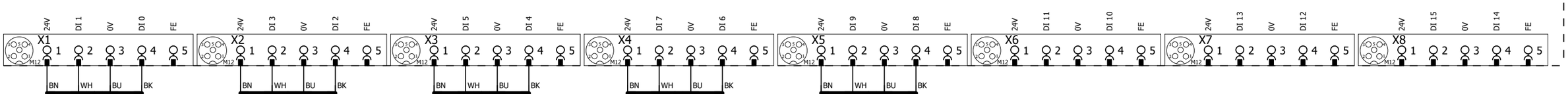

+V1GL1UQ54UQ6.1-W1
=V1GL1UQ54UQ6+.GL1UQ54UQ6/1.1

+V1GL1UQ54UQ7.1-W1
=V1GL1UQ54UQ7+.GL1UQ54UQ7/1.1

+V1GL1UQ54UQ8.1-W1
=V1GL1UQ54UQ8+.GL1UQ54UQ8/1.1

+V1GL1UQ54UQ9.1-W1
=V1GL1UQ54UQ9+.GL1UQ54UQ9/1.1

+V1GL1UQ54UQ9.2-W1
=V1GL1UQ54UQ9+.GL1UQ54UQ9/1.2

2 4

			Date	1/17/2023	Volvo Trucks North America	Valiant TMS	I/O MOD. DI16 (8 x M12) FOR VTSA-F	Drawing name: =2V09&EFS-EL	= V1GL1UQ54KF1 + V1GL1UQ54
			Ed.	MKLEPADLO	P6700 Bodyside LH - Robot Cell 2V09				
			Appr					Document type: EFS	Project nr: 22-16150
Modification	Date	Name	Original		Replacement of / Replaced by	Scale 1:1			Page 3 / 1533

0	1	2	3	4	5	6	7	8	9

I2881.0	DI 0 X1:4	V1GL1UQ54-BG01	Sensor Door Frame Assembly
I2881.1	DI 1 X1:2	V1GL1UQ54-BG02	Sensor Door Frame Assembly
I2881.2	DI 2 X2:4	V1GL1UQ54-BG03	Sensor Outer Front Sill
I2881.3	DI 3 X2:2	V1GL1UQ54-BG04	Sensor Extruded Seal Front
I2881.4	DI 4 X3:4	V1GL1UQ54-BG05	Sensor Outer Front Sill
I2881.5	DI 5 X3:2	V1GL1UQ54-BG06	Sensor Extruded Seal Rear
I2881.6	DI 6 X4:4	V1GL1UQ54-BG07	Sensor Rear Sill Sleeper
I2881.7	DI 7 X4:2	V1GL1UQ54-BG08	Sensor Rear Sill Sleeper
I2882.0	DI 8 X5:4	V1GL1UQ54-BG09	Sensor Lug Door Mnt Assembly
I2882.1	DI 9 X5:2	V1GL1UQ54-BG10	Sensor Lug Door Mnt Assembly
I2882.2	DI 10 X6:4	V1GL1UQ54-BG11	Sensor Lower Cabinet Mnt Assembly
I2882.3	DI 11 X6:2	V1GL1UQ54-BG12	Sensor Header Sub Assembly
I2882.4	DI 12 X7:4	V1GL1UQ54-BG13	Sensor Header Sub Assembly
I2882.5	DI 13 X7:2	V1GL1UQ54-BG14	Sensor Bunk Support
I2882.6	DI 14 X8:4	V1GL1UQ54-BG15	Sensor Rear Lower Assembly
I2882.7	DI 15 X8:2	V1GL1UQ54-BG16	Sensor Rear Lower Assembly

-KF1.14

FESTO

CPX-M-AB-8-M12X2-5POL

549335

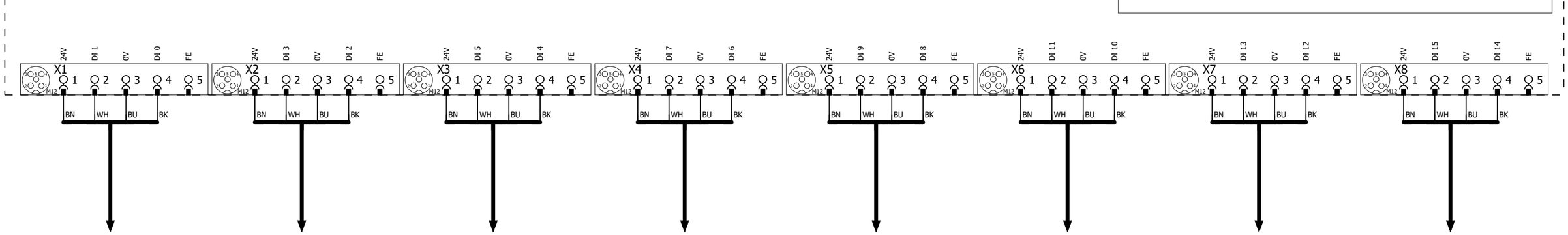

-XG1/2 =V1GL1UQ54BG0/1.1

-XG3/4 =V1GL1UQ54BG0/1.4

-XG5/6 =V1GL1UQ54BG0/1.6

-XG7/8 =V1GL1UQ54BG0/2.1

-XG9/10 =V1GL1UQ54BG0/2.4

-XG11/12 =V1GL1UQ54BG0/2.6

-XG13/14 =V1GL1UQ54BG0/3.1

-XG15/16 =V1GL1UQ54BG0/3.4

			Date	1/17/2023	Volvo Trucks North America	Valiant TMS	I/O MOD. DI16 (8 x M12) FOR VTSA-F	Drawing name: =2V09&EFS-EL	= V1GL1UQ54KF1
			Ed.	MKLEPADLO					+ V1GL1UQ54
			Appr		P6700 Bodyside LH - Robot Cell 2V09			Document type: EFS	Project nr: 22-16150
Modification	Date	Name	Original		Replacement of / Replaced by	Scale 1:1			Page 4 / 1533

-KF1 -KF1.11 -KF1.12 -KF1.13 -KF1.14 -KF1.20 -KF1.21 -KF1.22 -KF1.23 -KF1.24 -KF1.25 -KF1.26 -KF1.27

M1 M2 M3 M4 M5

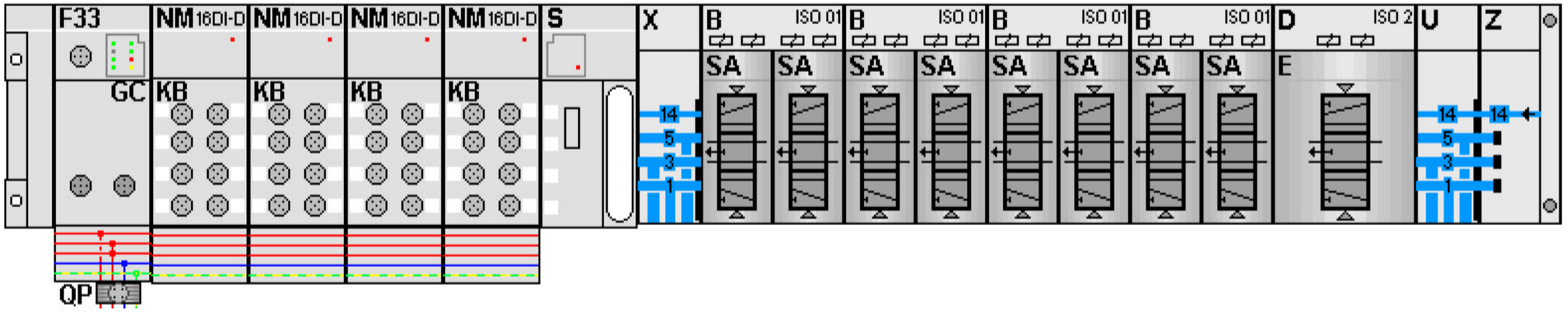

-KF1.21
=V1GL1UQ54UQ1+.GL1UQ54UQ1/1.3
=V1GL1UQ54UQ2+.GL1UQ54UQ2/1.3

FESTO

=V1GL1UQ54UQ1+.GL1UQ54UQ1/1.4	Q2875.0 DO 0 1.1	-QN1.1_Q	Shot Pins 1 (RST)
=V1GL1UQ54UQ1+.GL1UQ54UQ1/1.4	Q2875.1 DO 1 1.2	-QN1.2_Q	Shot Pins 1 (SET)
=V1GL1UQ54UQ2+.GL1UQ54UQ2/1.4	Q2875.2 DO 2 2.1	-QN2.1_Q	Shot Pin 2 (RST)
=V1GL1UQ54UQ2+.GL1UQ54UQ2/1.4	Q2875.3 DO 3 2.2	-QN2.2_Q	Shot Pin 2 (SET)

-KF1.22
=V1GL1UQ54UQ3+.GL1UQ54UQ3/1.3
=V1GL1UQ54UQ4+.GL1UQ54UQ4/1.3

FESTO

=V1GL1UQ54UQ3+.GL1UQ54UQ3/1.4	Q2875.4 DO 0 1.1	-QN3.1_Q	Shot Pins 3 (RST)
=V1GL1UQ54UQ3+.GL1UQ54UQ3/1.4	Q2875.5 DO 1 1.2	-QN3.2_Q	Shot Pins 3 (SET)
=V1GL1UQ54UQ4+.GL1UQ54UQ4/1.4	Q2875.6 DO 2 2.1	-QN4.1_Q	Shot Pins 4 (RST)
=V1GL1UQ54UQ4+.GL1UQ54UQ4/1.4	Q2875.7 DO 3 2.2	-QN4.2_Q	Shot Pins 4 (SET)

-KF1.23
=V1GL1UQ54UQ5+.GL1UQ54UQ5/1.3
=V1GL1UQ54UQ6+.GL1UQ54UQ6/1.3

FESTO

=V1GL1UQ54UQ5+.GL1UQ54UQ5/1.4	Q2876.0 DO 0 1.1	-QN5.1_Q	Shot Pins 5 (RST)
=V1GL1UQ54UQ5+.GL1UQ54UQ5/1.4	Q2876.1 DO 1 1.2	-QN5.2_Q	Shot Pins 5 (SET)
=V1GL1UQ54UQ6+.GL1UQ54UQ6/1.4	Q2876.2 DO 0 2.1	-QN6.1_Q	Shot Pin 6 (RST)
=V1GL1UQ54UQ6+.GL1UQ54UQ6/1.4	Q2876.3 DO 1 2.2	-QN6.2_Q	Shot Pin 6 (SET)

-KF1.24
=V1GL1UQ54UQ7+.GL1UQ54UQ7/1.3
=V1GL1UQ54UQ9+.GL1UQ54UQ9/1.3

FESTO

=V1GL1UQ54UQ7+.GL1UQ54UQ7/1.4	Q2876.4 DO 0 1.1	-QN7.1_Q	Shot Pin 7 (RST)
=V1GL1UQ54UQ7+.GL1UQ54UQ7/1.4	Q2876.5 DO 1 1.2	-QN7.2_Q	Shot Pin 7 (SET)
=V1GL1UQ54UQ9+.GL1UQ54UQ9/1.4	Q2876.6 DO 0 2.1	-QN8.1_Q	Shot Pins 9 (RST)
=V1GL1UQ54UQ9+.GL1UQ54UQ9/1.4	Q2876.7 DO 1 2.2	-QN8.2_Q	Shot Pins 9 (SET)

-KF1.25
=V1GL1UQ54UQ8+.GL1UQ54UQ8/1.3

FESTO

=V1GL1UQ54UQ8+.GL1UQ54UQ8/1.4	Q2877.0 DO 0 1.1	-QN9.1_Q	Slide 8 (RST)
=V1GL1UQ54UQ8+.GL1UQ54UQ8/1.4	Q2877.1 DO 1 1.2	-QN9.2_Q	Slide 8 (SET)
	Q2877.2 DO 0 2.1	Spare	Reserved
	Q2877.3 DO 1 2.2	Spare	Reserved

=V1GL1UQ54KF2/1

			Date	1/17/2023	Volvo Trucks North America		Valiant TMS	CONNECTING MOD. FOR FESTO DQ	Drawing name: =2V09&EFS-EL	= V1GL1UQ54KF1
			Ed.	MKLEPADLO						+ V1GL1UQ54
			Appr		P6700 Bodyside LH - Robot Cell 2V09				Document type: EFS	Project nr: 22-16150
Modification	Date	Name	Original		Replacement of	Replaced by	Scale 1:1			Page 5 / 1533

0	1	2	3	4	5	6	7	8	9

=V1GL1UQ54WC4/1.5 / W2.1

-W2.1
RSM RKM 56-5M/S3059
5m

=V1GL1UQ54KF1/1.4 / KF1-P2

KF2-P2 / =V1GL1UQ54KF3/1.3

-WF2
PROFINET Cable
6XV1840-3AH10

-KF2

X20 M12, 7/8" 1 2 PE 4 5

0V_VAL / OUT | 0V_EL / SEN | FE | 24V_EL / SEN | 24V_VAL / OUT

ON OFF 1 2 1 2

-TP1 -TP2

FESTO
Bus node + Interlinking block
548755 + 550208

-KF2.11

FESTO
CPX-M-AB-8-M12X2-5POL
549335

I2900.0	DI 0 X1:4	V1GL1UQ54UQ10.1-BGR	Clamps 10 (RESET)
I2900.1	DI 1 X1:2	V1GL1UQ54UQ10.1-BGS	Clamps 10 (SET)
I2900.2	DI 2 X2:4	V1GL1UQ54UQ10.2-BGR	Clamps 10 (RESET)
I2900.3	DI 3 X2:2	V1GL1UQ54UQ10.2-BGS	Clamps 10 (SET)
I2900.4	DI 4 X3:4	V1GL1UQ54UQ10.3-BGR	Clamps 10 (RESET)
I2900.5	DI 5 X3:2	V1GL1UQ54UQ10.3-BGS	Clamps 10 (SET)
I2900.6	DI 6 X4:4	V1GL1UQ54UQ10.4-BGR	Clamps 10 (RESET)
I2900.7	DI 7 X4:2	V1GL1UQ54UQ10.4-BGS	Clamps 10 (SET)
I2901.0	DI 8 X5:4	V1GL1UQ54UQ10.5-BGR	Clamps 10 (RESET)
I2901.1	DI 9 X5:2	V1GL1UQ54UQ10.5-BGS	Clamps 10 (SET)
I2901.2	DI 10 X6:4	V1GL1UQ54UQ10.6-BGR	Clamps 10 (RESET)
I2901.3	DI 11 X6:2	V1GL1UQ54UQ10.6-BGS	Clamps 10 (SET)
I2901.4	DI 12 X7:4	V1GL1UQ54UQ11.1-BGR	Clamps 11 (RESET)
I2901.5	DI 13 X7:2	V1GL1UQ54UQ11.1-BGS	Clamps 11 (SET)
I2901.6	DI 14 X8:4	V1GL1UQ54UQ11.2-BGR	Clamps 11 (RESET)
I2901.7	DI 15 X8:2	V1GL1UQ54UQ11.2-BGS	Clamps 11 (SET)

X1 X2 X3 X4 X5 X6 X7 X8 M12

24V | DI 1 | 0V | DI 0 | FE
24V | DI 3 | 0V | DI 2 | FE
24V | DI 5 | 0V | DI 4 | FE
24V | DI 7 | 0V | DI 6 | FE
24V | DI 9 | 0V | DI 8 | FE
24V | DI 11 | 0V | DI 10 | FE
24V | DI 13 | 0V | DI 12 | FE
24V | DI 15 | 0V | DI 14 | FE

1 2 3 4 5

BN | WH | BU | BK

+V1GL1UQ54UQ10.1-W1
=V1GL1UQ54UQ10+.GL1UQ54UQ10/1.1

+V1GL1UQ54UQ10.2-W1
=V1GL1UQ54UQ10+.GL1UQ54UQ10/1.2

+V1GL1UQ54UQ10.3-W1
=V1GL1UQ54UQ10+.GL1UQ54UQ10/1.4

+V1GL1UQ54UQ10.4-W1
=V1GL1UQ54UQ10+.GL1UQ54UQ10/1.5

+V1GL1UQ54UQ10.5-W1
=V1GL1UQ54UQ10+.GL1UQ54UQ10/1.7

+V1GL1UQ54UQ10.6-W1
=V1GL1UQ54UQ10+.GL1UQ54UQ10/1.9

+V1GL1UQ54UQ11.1-W1
=V1GL1UQ54UQ11+.GL1UQ54UQ11/1.1

+V1GL1UQ54UQ11.2-W1
=V1GL1UQ54UQ11+.GL1UQ54UQ11/1.2

=V1GL1UQ54KF1/5

			Date	1/17/2023	Volvo Trucks North America	Valiant TMS	CONNECTING MOD. FOR VTSA MANIFOLD	Drawing name: =2V09&EFS-EL	= V1GL1UQ54KF2
			Ed.	MKLEPADLO					+ V1GL1UQ54
			Appr		P6700 Bodyside LH - Robot Cell 2V09			Document type: EFS	Project nr: 22-16150
Modification	Date	Name	Original		Replacement of / Replaced by	Scale 1:1			Page 1 / 1533

0	1	2	3	4	5	6	7	8	9

-KF2.12

FESTO

CPX-M-AB-8-M12X2-5POL

549335

I2902.0	DI 0 X1:4	V1GL1UQ54UQ11.3-BGR	Clamps 11 (RESET)
I2902.1	DI 1 X1:2	V1GL1UQ54UQ11.3-BGS	Clamps 11 (SET)
I2902.2	DI 2 X2:4	V1GL1UQ54UQ11.4-BGR	Clamps 11 (RESET)
I2902.3	DI 3 X2:2	V1GL1UQ54UQ11.4-BGS	Clamps 11 (SET)
I2902.4	DI 4 X3:4	V1GL1UQ54UQ11.5-BGR	Clamps 11 (RESET)
I2902.5	DI 5 X3:2	V1GL1UQ54UQ11.5-BGS	Clamps 11 (SET)
I2902.6	DI 6 X4:4	V1GL1UQ54UQ12.1-BGR	Clamps 12 (RESET)
I2902.7	DI 7 X4:2	V1GL1UQ54UQ12.1-BGS	Clamps 12 (SET)
I2903.0	DI 8 X5:4	V1GL1UQ54UQ12.2-BGR	Clamps 12 (RESET)
I2903.1	DI 9 X5:2	V1GL1UQ54UQ12.2-BGS	Clamps 12 (SET)
I2903.2	DI 10 X6:4	V1GL1UQ54UQ12.3-BGR	Clamps 12 (RESET)
I2903.3	DI 11 X6:2	V1GL1UQ54UQ12.3-BGS	Clamps 12 (SET)
I2903.4	DI 12 X7:4	V1GL1UQ54UQ12.4-BGR	Clamps 12 (RESET)
I2903.5	DI 13 X7:2	V1GL1UQ54UQ12.4-BGS	Clamps 12 (SET)
I2903.6	DI 14 X8:4	V1GL1UQ54UQ12.5-BGR	Clamps 12 (RESET)
I2903.7	DI 15 X8:2	V1GL1UQ54UQ12.5-BGS	Clamps 12 (SET)

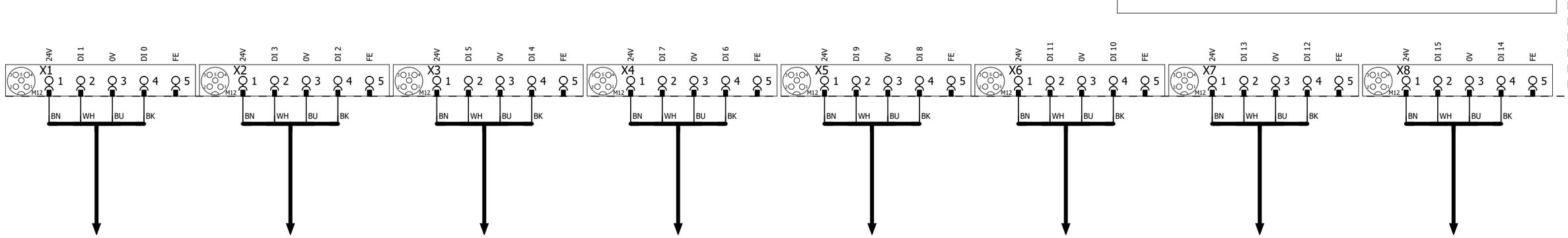

1 3

			Date	1/17/2023	Volvo Trucks North America	Valiant TMS	I/O MOD. DI16 (8 x M12) FOR VTSA-F	Drawing name: =2V09&EFS-EL	= V1GL1UQ54KF2
			Ed.	MKLEPADLO					+ V1GL1UQ54
			Appr		P6700 Bodyside LH - Robot Cell 2V09	Scale 1:1		Document type: EFS	Project nr: 22-16150
Modification	Date	Name	Original		Replacement of / Replaced by				Page 2 / 1533

0	1	2	3	4	5	6	7	8	9

-KF2.13

FESTO

CPX-M-AB-8-M12X2-5POL

549335

I2904.0	DI 0 X1:4	V1GL1UQ54UQ12.6-BGR	Clamps 12 (RESET)
I2904.1	DI 1 X1:2	V1GL1UQ54UQ12.6-BGS	Clamps 12 (SET)
I2904.2	DI 2 X2:4	V1GL1UQ54UQ13.1-BGR	Clamp 13 (RESET)
I2904.3	DI 3 X2:2	V1GL1UQ54UQ13.1-BGS	Clamp 13 (SET)
I2904.4	DI 4 X3:4	V1GL1UQ54UQ14.1-BGR	Clamp 14 (RESET)
I2904.5	DI 5 X3:2	V1GL1UQ54UQ14.1-BGS	Clamp 14 (SET)
I2904.6	DI 6 X4:4	V1GL1UQ54UQ15.1-BGR	Clamp 15 (RESET)
I2904.7	DI 7 X4:2	V1GL1UQ54UQ15.1-BGS	CLamp 15 (SET)
I2905.0	DI 8 X5:4	V1GL1UQ54UQ16.1-BGR	Clamps 16 (RESET)
I2905.1	DI 9 X5:2	V1GL1UQ54UQ16.1-BGS	Clamps 16 (SET)
I2905.2	DI 10 X6:4	V1GL1UQ54UQ16.2-BGR	Clamps 16 (RESET)
I2905.3	DI 11 X6:2	V1GL1UQ54UQ16.2-BGS	Clamps 16 (SET)
I2905.4	DI 12 X7:4	V1GL1UQ54UQ16.3-BGR	Clamps 16 (RESET)
I2905.5	DI 13 X7:2	V1GL1UQ54UQ16.3-BGS	Clamps 16 (SET)
I2905.6	DI 14 X8:4	V1GL1UQ54UQ17.1-BGR	Clamp 17 (RESET)
I2905.7	DI 15 X8:2	V1GL1UQ54UQ17.1-BGS	Clamp 17 (SET)

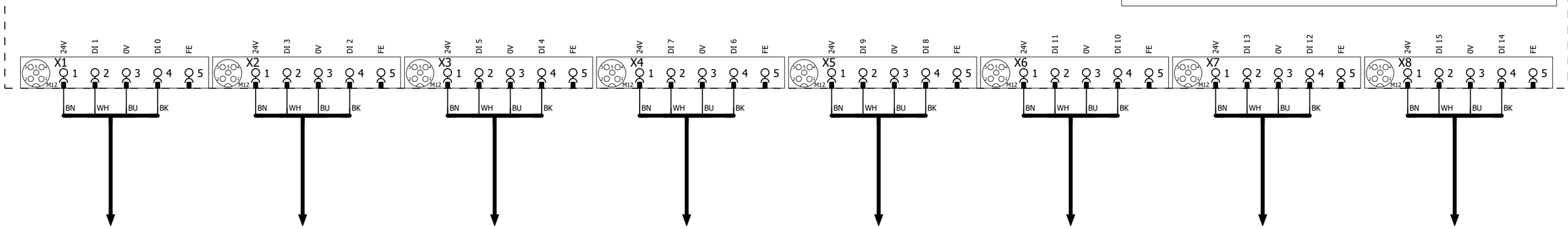

+V1GL1UQ54UQ12.6-W1
=V1GL1UQ54UQ12+.GL1UQ54UQ12/1.9

+V1GL1UQ54UQ13.1-W1
=V1GL1UQ54UQ13+.GL1UQ54UQ13/1.1

+V1GL1UQ54UQ14.1-W1
=V1GL1UQ54UQ14+.GL1UQ54UQ14/1.1

+V1GL1UQ54UQ15.1-W1
=V1GL1UQ54UQ15+.GL1UQ54UQ15/1.1

+V1GL1UQ54UQ16.1-W1
=V1GL1UQ54UQ16+.GL1UQ54UQ16/1.1

+V1GL1UQ54UQ16.2-W1
=V1GL1UQ54UQ16+.GL1UQ54UQ16/1.2

+V1GL1UQ54UQ16.3-W1
=V1GL1UQ54UQ16+.GL1UQ54UQ16/1.4

+V1GL1UQ54UQ17.1-W1
=V1GL1UQ54UQ17+.GL1UQ54UQ17/1.1

2 4

			Date	1/17/2023	Volvo Trucks North America	Valiant TMS	I/O MOD. DI16 (8 x M12) FOR VTSA-F	Drawing name: =2V09&EFS-EL	= V1GL1UQ54KF2
			Ed.	MKLEPADLO					+ V1GL1UQ54
			Appr		P6700 Bodyside LH - Robot Cell 2V09			Document type: EFS	Project nr: 22-16150
Modification	Date	Name	Original		Replacement of / Replaced by	Scale 1:1			Page 3 / 1533

I2906.0	V1GL1UQ54UQ18.1-BGR	Clamps 18 (RESET)
I2906.1	V1GL1UQ54UQ18.1-BGS	Clamps 18 (SET)
I2906.2	V1GL1UQ54UQ18.2-BGR	Clamps 18 (RESET)
I2906.3	V1GL1UQ54UQ18.2-BGS	Clamps 18 (SET)
I2906.4	V1GL1UQ54UQ19.1-BGR	Clamps 19 (RESET)
I2906.5	V1GL1UQ54UQ19.1-BGS	Clamps 19 (SET)
I2906.6	V1GL1UQ54UQ19.2-BGR	Clamps 19 (RESET)
I2906.7	V1GL1UQ54UQ19.2-BGS	Clamps 19 (SET)
I2907.0	I2907.0	Spare
I2907.1	I2907.1	Spare
I2907.2	V1GL1UQ54-BG25	Sensor Header Sub Assembly
I2907.3	V1GL1UQ54-BG26	Sensor Cabinet Mounting
I2907.4	V1GL1UQ54-BG27	Sensor Lower Cabinet Mnt Assembly
I2907.5	V1GL1UQ54-BG28	Sensor Intermed H R Long
I2907.6	V1GL1UQ54-BG29	Sensor Horizontal Member
I2907.7	V1GL1UQ54-BG30	Sensor Nut L320 Part

-KF2.14

FESTO

CPX-M-AB-8-M12X2-5POL

549335

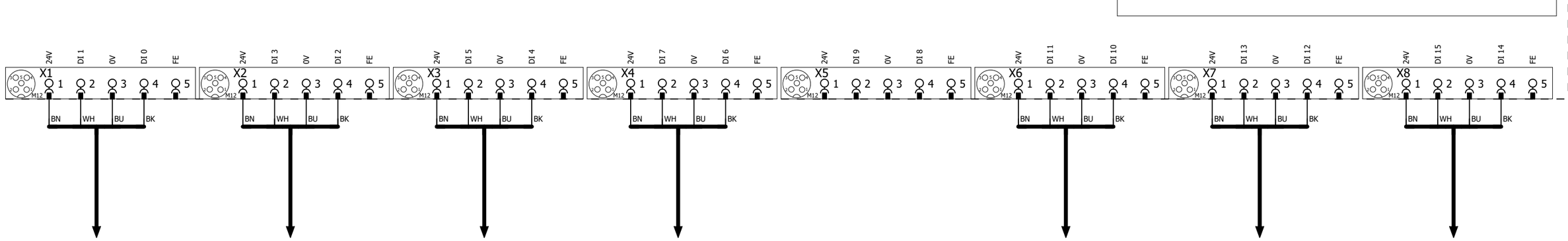

+V1GL1UQ54UQ18.1-W1
=V1GL1UQ54UQ18+.GL1UQ54UQ18/1.1

+V1GL1UQ54UQ18.2-W1
=V1GL1UQ54UQ18+.GL1UQ54UQ18/1.2

+V1GL1UQ54UQ19.1-W1
=V1GL1UQ54UQ19+.GL1UQ54UQ19/1.1

+V1GL1UQ54UQ19.2-W1
=V1GL1UQ54UQ19+.GL1UQ54UQ19/1.2

-XG25/26
=V1GL1UQ54BG0/5.1

-XG27/28
=V1GL1UQ54BG0/5.4

-XG29/30
=V1GL1UQ54BG0/5.6

			Date	1/17/2023	Volvo Trucks North America	Valiant TMS	I/O MOD. DI16 (8 x M12) FOR VTSA-F	Drawing name: =2V09&EFS-EL	= V1GL1UQ54KF2	
			Ed.	MKLEPADLO					+ V1GL1UQ54	
			Appr		P6700 Bodyside LH - Robot Cell 2V09	Scale 1:1		Document type: EFS	Project nr: 22-16150	Page 4
Modification	Date	Name	Original		Replacement of	Replaced by				1533

-KF2 -KF1.21 -KF2.12 -KF2.13 -KF2.14 -KF2.20 -KF2.21 -KF2.22 -KF2.23 -KF2.24 -KF2.25 -KF2.26 -KF2.27

M1 M2 M3 M4 M5

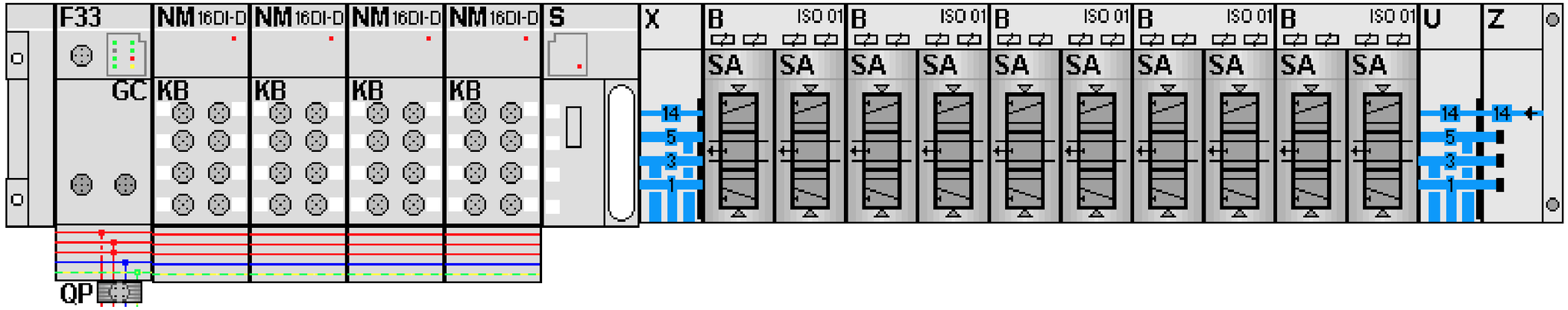

-KF2.21
=V1GL1UQ54UQ10+.GL1UQ54UQ10/1.3
=V1GL1UQ54UQ11+.GL1UQ54UQ11/1.3

FESTO

=V1GL1UQ54UQ10+.GL1UQ54UQ10/1.4	Q2900.0 DO 0 1.1	-QN11.1_Q	Clamps 10 (RST)
=V1GL1UQ54UQ10+.GL1UQ54UQ10/1.4	Q2900.1 DO 1 1.2	-QN11.2_Q	Clamps 10 (SET)
=V1GL1UQ54UQ11+.GL1UQ54UQ11/1.4	Q2900.2 DO 2 2.1	-QN12.1_Q	Clamps 11 (RST)
=V1GL1UQ54UQ11+.GL1UQ54UQ11/1.4	Q2900.3 DO 3 2.2	-QN12.2_Q	Clamps 11 (SET)

-KF2.22
=V1GL1UQ54UQ12+.GL1UQ54UQ12/1.3
=V1GL1UQ54UQ13+.GL1UQ54UQ13/1.3

FESTO

=V1GL1UQ54UQ12+.GL1UQ54UQ12/1.4	Q2900.4 DO 0 1.1	-QN13.1_Q	Clamps 12 (RST)
=V1GL1UQ54UQ12+.GL1UQ54UQ12/1.4	Q2900.5 DO 1 1.2	-QN13.2_Q	Clamps 12 (SET)
=V1GL1UQ54UQ13+.GL1UQ54UQ13/1.4	Q2900.6 DO 2 2.1	-QN14.1_Q	Clamp 13 (RST)
=V1GL1UQ54UQ13+.GL1UQ54UQ13/1.4	Q2900.7 DO 3 2.2	-QN14.2_Q	Clamp 13 (SET)

-KF2.23
=V1GL1UQ54UQ14+.GL1UQ54UQ14/1.3
=V1GL1UQ54UQ15+.GL1UQ54UQ15/1.3

FESTO

=V1GL1UQ54UQ14+.GL1UQ54UQ14/1.4	Q2901.0 DO 0 1.1	-QN15.1_Q	Clamp 14 (RST)
=V1GL1UQ54UQ14+.GL1UQ54UQ14/1.4	Q2901.1 DO 1 1.2	-QN15.2_Q	Clamp 14 (SET)
=V1GL1UQ54UQ15+.GL1UQ54UQ15/1.4	Q2901.2 DO 0 2.1	-QN16.1_Q	Clamp 15 (RST)
=V1GL1UQ54UQ15+.GL1UQ54UQ15/1.4	Q2901.3 DO 1 2.2	-QN16.2_Q	Clamp 15 (SET)

-KF2.24
=V1GL1UQ54UQ16+.GL1UQ54UQ16/1.3
=V1GL1UQ54UQ17+.GL1UQ54UQ17/1.3

FESTO

=V1GL1UQ54UQ16+.GL1UQ54UQ16/1.4	Q2901.4 DO 0 1.1	-QN17.1_Q	Clamps 16 (RST)
=V1GL1UQ54UQ16+.GL1UQ54UQ16/1.4	Q2901.5 DO 1 1.2	-QN17.2_Q	Clamps 16 (SET)
=V1GL1UQ54UQ17+.GL1UQ54UQ17/1.4	Q2901.6 DO 0 2.1	-QN18.1_Q	Clamp 17 (RST)
=V1GL1UQ54UQ17+.GL1UQ54UQ17/1.4	Q2901.7 DO 1 2.2	-QN18.2_Q	Clamp 17 (SET)

-KF2.25
=V1GL1UQ54UQ18+.GL1UQ54UQ18/1.3
=V1GL1UQ54UQ19+.GL1UQ54UQ19/1.3

FESTO

=V1GL1UQ54UQ18+.GL1UQ54UQ18/1.4	Q2902.0 DO 0 1.1	-QN19.1_Q	Shot Pins 18 (RST)
=V1GL1UQ54UQ18+.GL1UQ54UQ18/1.4	Q2902.1 DO 1 1.2	-QN19.2_Q	Shot Pins 18 (SET)
=V1GL1UQ54UQ19+.GL1UQ54UQ19/1.4	Q2902.2 DO 0 2.1	-QN20.1_Q	Clamps 19 (RST)
=V1GL1UQ54UQ19+.GL1UQ54UQ19/1.4	Q2902.3 DO 1 2.2	-QN20.2_Q	Clamps 19 (SET)

			Date	1/17/2023	Volvo Trucks North America	Valiant TMS	CONNECTING MOD. FOR FESTO DQ	Drawing name: =2V09&EFS-EL	= V1GL1UQ54KF2
			Ed.	MKLEPADLO					+ V1GL1UQ54
			Appr		P6700 Bodyside LH - Robot Cell 2V09	Scale 1:1		Document type: EFS	Project nr: 22-16150
Modification	Date	Name	Original		Replacement of	Replaced by			Page 5 / 1533

0	1	2	3	4	5	6	7	8	9

=V1GL1UQ54WC4/1.6 / W3.1

-W3.1
RSM RKM 56-5M/S3059
5m

=V1GL1UQ54KF2/1.4 / KF2-P2

-WF3
PROFINET Cable
6XV1840-3AH10

-KF3

X20 M12, 7/8" 1 2 PE 4 5
0V_VAL / OUT
0V_EL / SEN
FE
24V_EL / SEN
24V_VAL / OUT

ON OFF 1 2 1 2

M12 -TP1
M12 -TP2

FESTO
Bus node + Interlinking block
548755 + 550208

I2925.0	DI 0 X1:4	V1GL1UQ54UQ20.1-BGR	Clamp 20 (RESET)
I2925.1	DI 1 X1:2	V1GL1UQ54UQ20.1-BGS	Clamp 20 (SET)
I2925.2	DI 2 X2:4	V1GL1UQ54UQ21.1-BGR	Shot Pin 21 (RESET)
I2925.3	DI 3 X2:2	V1GL1UQ54UQ21.1-BGS	Shot Pin 21 (SET)
I2925.4	DI 4 X3:4	V1GL1UQ54UQ22.1-BGR	Shot Pin 22 (RESET)
I2925.5	DI 5 X3:2	V1GL1UQ54UQ22.1-BGS	Shot Pin 22 (SET)
I2925.6	DI 6 X4:4	V1GL1UQ54UQ23.1-BGR	Shot Pin 23 (RESET)
I2925.7	DI 7 X4:2	V1GL1UQ54UQ23.1-BGS	Shot Pin 23 (SET)
I2926.0	DI 8 X5:4	V1GL1UQ54-BG17	Sensor Bunk Support
I2926.1	DI 9 X5:2	V1GL1UQ54-BG18	Sensor C-Pillar Assembly
I2926.2	DI 10 X6:4	V1GL1UQ54-BG19	Sensor C-Pillar Assembly
I2926.3	DI 11 X6:2	V1GL1UQ54-BG20	Sensor Blind Lower
I2926.4	DI 12 X7:4	V1GL1UQ54-BG21	Sensor Blind Lower
I2926.5	DI 13 X7:2	V1GL1UQ54-BG22	Sensor Vertical Member
I2926.6	DI 14 X8:4	V1GL1UQ54-BG23	Sensor Vertical Member
I2926.7	DI 15 X8:2	V1GL1UQ54-BG24	Sensor Horizontal Member / Cabinet Mnt

-KF3.11

FESTO
CPX-M-AB-8-M12X2-5POL
549335

X1 X2 X3 X4 X5 X6 X7 X8 M12
1 2 3 4 5
24V DI 1 0V DI 0 FE
24V DI 3 0V DI 2 FE
24V DI 5 0V DI 4 FE
24V DI 7 0V DI 6 FE
24V DI 9 0V DI 8 FE
24V DI 11 0V DI 10 FE
24V DI 13 0V DI 12 FE
24V DI 15 0V DI 14 FE
BN WH BU BK

+V1GL1UQ54UQ20.1-W1
=V1GL1UQ54UQ20+.GL1UQ54UQ20/1.1

+V1GL1UQ54UQ21.1-W1
=V1GL1UQ54UQ21+.GL1UQ54UQ21/1.1

+V1GL1UQ54UQ22.1-W1
=V1GL1UQ54UQ22+.GL1UQ54UQ22/1.1

+V1GL1UQ54UQ23.1-W1
=V1GL1UQ54UQ23+.GL1UQ54UQ23/1.1

-XG17/18
=V1GL1UQ54BG0/3.6

-XG19/20
=V1GL1UQ54BG0/4.1

-XG21/22
=V1GL1UQ54BG0/4.4

-XG23/24
=V1GL1UQ54BG0/4.6

=V1GL1UQ54KF2/5

2

			Date	1/17/2023	Volvo Trucks North America	Valiant TMS	CONNECTING MOD. FOR VTSA MANIFOLD	Drawing name: =2V09&EFS-EL	= V1GL1UQ54KF3
			Ed.	MKLEPADLO					+ V1GL1UQ54
			Appr		P6700 Bodyside LH - Robot Cell 2V09			Document type: EFS	Project nr: 22-16150
Modification	Date	Name	Original		Replacement of / Replaced by	Scale 1:1			Page 1 / 1533

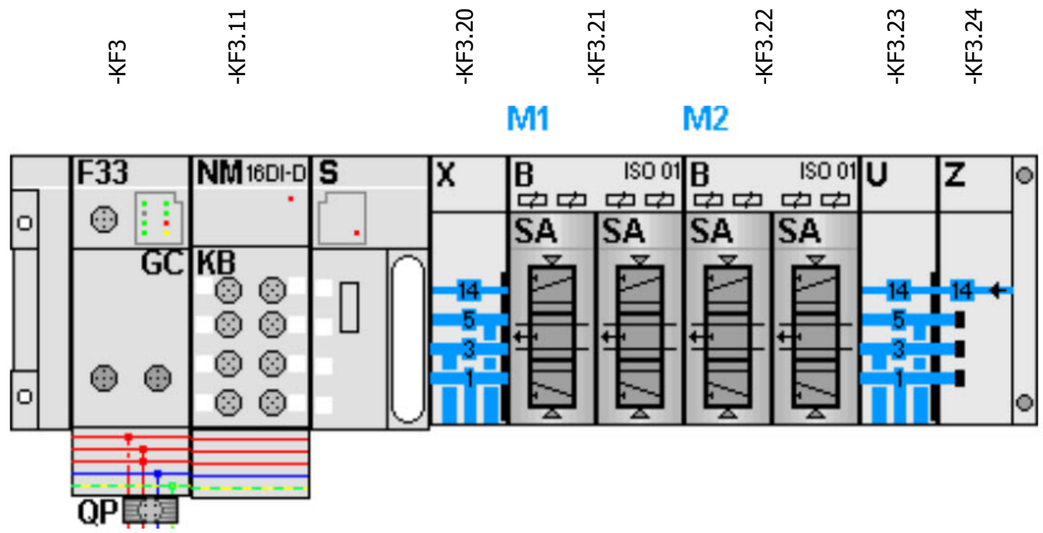

-KF3.21
=V1GL1UQ54UQ20+.GL1UQ54UQ20/1.3
=V1GL1UQ54UQ21+.GL1UQ54UQ21/1.3

FESTO

=V1GL1UQ54UQ20+.GL1UQ54UQ20/1.4	Q2925.0 DO 0 1.1	-QN21.1_Q	Clamp 20 (RST)
=V1GL1UQ54UQ20+.GL1UQ54UQ20/1.4	Q2925.1 DO 1 1.2	-QN21.2_Q	Clamp 20 (SET)
=V1GL1UQ54UQ21+.GL1UQ54UQ21/1.4	Q2925.2 DO 2 2.1	-QN22.1_Q	Shot Pin 21 (RST)
=V1GL1UQ54UQ21+.GL1UQ54UQ21/1.4	Q2925.3 DO 3 2.2	-QN22.2_Q	Shot Pin 21 (SET)

-KF3.22
=V1GL1UQ54UQ22+.GL1UQ54UQ22/1.3
=V1GL1UQ54UQ23+.GL1UQ54UQ23/1.3

FESTO

=V1GL1UQ54UQ22+.GL1UQ54UQ22/1.4	Q2925.4 DO 0 1.1	-QN23.1_Q	Shot Pin 22 (RST)
=V1GL1UQ54UQ22+.GL1UQ54UQ22/1.4	Q2925.5 DO 1 1.2	-QN23.2_Q	Shot Pin 22 (SET)
=V1GL1UQ54UQ23+.GL1UQ54UQ23/1.4	Q2925.6 DO 2 2.1	-QN24.1_Q	Shot Pin 23 (RST)
=V1GL1UQ54UQ23+.GL1UQ54UQ23/1.4	Q2925.7 DO 3 2.2	-QN24.2_Q	Shot Pin 23 (SET)

1

=V1GL1UQ54UQ1+.GL1UQ54UQ1/1

			Date	1/17/2023	Volvo Trucks North America	Valiant TMS	CONNECTING MOD. FOR FESTO DQ	Drawing name: =2V09&EFS-EL	= V1GL1UQ54KF3 + V1GL1UQ54
			Ed.	MKLEPADLO	P6700 Bodyside LH - Robot Cell 2V09			Document type: EFS	Project nr: 22-16150
			Appr						Page 2
Modification	Date	Name	Original		Replacement of / Replaced by	Scale 1:1			1533

0	1	2	3	4	5	6	7	8	9

=V1GL1UQ54KF1
+.GL1UQ54

-KF1.21
=V1GL1UQ54KF1+V1GL1UQ54/5.1

Shot Pins 1 (RST)
=V1GL1UQ54KF1
+V1GL1UQ54
-QN1.1_Q
=V1GL1UQ54KF1
+V1GL1UQ54/5.3
Q2875.0

Shot Pins 1 (SET)
=V1GL1UQ54KF1
+V1GL1UQ54
-QN1.2_Q
=V1GL1UQ54KF1
+V1GL1UQ54/5.3
Q2875.1

1.1 Pneumatic Valve
1.2 Pneumatic Valve

-QN1 .1 .2

=V1GL1UQ54KF1+V1GL1UQ54/1.1
+V1GL1UQ54UQ1.1-W1

-W1 3m
RKC 4.4T-3-RSC 4.4T/S3060
BN BU BK WH
-BGS/R
WWS001A

Shot Pins 1
=V1GL1UQ54UQ1.1
+V1GL1UQ54UQ1.1
-UQ1.1

=V1GL1UQ54
-UQ1.1-BGS/R
Shot Pins 1

=V1GL1UQ54KF1+V1GL1UQ54/1.2
+V1GL1UQ54UQ1.2-W1

-W1 2m
RKC 4.4T-2-RSC 4.4T/S3060
BN BU BK WH
-BGS/R
WWS001A

Shot Pins 1
=V1GL1UQ54UQ1.2
+V1GL1UQ54UQ1.2
-UQ1.2

=V1GL1UQ54
-UQ1.2-BGS/R
Shot Pins 1

=V1GL1UQ54KF1+V1GL1UQ54/1.3
+V1GL1UQ54UQ1.3-W1

-W1 5m
RKC 4.4T-5-RSC 4.4T/S3060
BN BU BK WH
-BGS/R
WWS001A

Shot Pins 1
=V1GL1UQ54UQ1.3
+V1GL1UQ54UQ1.3
-UQ1.3

=V1GL1UQ54
-UQ1.3-BGS/R
Shot Pins 1

=V1GL1UQ54KF1+V1GL1UQ54/1.4
+V1GL1UQ54UQ1.4-W1

-W1 6m
RKC 4.4T-6-RSC 4.4T/S3060
BN BU BK WH
-BGS/R
WWS001A

Shot Pins 1
=V1GL1UQ54UQ1.4
+V1GL1UQ54UQ1.4
-UQ1.4

=V1GL1UQ54
-UQ1.4-BGS/R
Shot Pins 1

=V1GL1UQ54KF1+V1GL1UQ54/1.5
+V1GL1UQ54UQ1.5-W1

-W1 6m
RKC 4.4T-6-RSC 4.4T/S3060
BN BU BK WH
-BGS/R
WWS001A

Shot Pins 1
=V1GL1UQ54UQ1.5
+V1GL1UQ54UQ1.5
-UQ1.5

=V1GL1UQ54
-UQ1.5-BGS/R
Shot Pins 1

=V1GL1UQ54KF1+V1GL1UQ54/1.6
+V1GL1UQ54UQ1.6-W1

-W1 4m
RKC 4.4T-4-RSC 4.4T/S3060
BN BU BK WH
-BGS/R
WWS001A

Shot Pins 1
=V1GL1UQ54UQ1.6
+V1GL1UQ54UQ1.6
-UQ1.6

=V1GL1UQ54
-UQ1.6-BGS/R
Shot Pins 1

=V1GL1UQ54KF3+V1GL1UQ54/2

=V1GL1UQ54UQ2+.GL1UQ54UQ2/1

			Date	1/17/2023	Volvo Trucks North America	Valiant TMS	FESTO DQ CONNECTION QN1	Drawing name: =2V09&EFS-EL
			Ed.	MKLEPADLO				= V1GL1UQ54UQ1
			Appr		P6700 Bodyside LH - Robot Cell 2V09			+ V1GL1UQ54UQ1
Modification	Date	Name	Original		Replacement of / Replaced by	Scale 1:1		Document type: EFS / Project nr: 22-16150 / Page 1 / 1533

0	1	2	3	4	5	6	7	8	9

=V1GL1UQ54KF1
+.GL1UQ54

-KF1.21
=V1GL1UQ54KF1+V1GL1UQ54/5.1

Shot Pin 2 (RST)
=V1GL1UQ54KF1
+V1GL1UQ54
-QN2.1_Q
=V1GL1UQ54KF1
+V1GL1UQ54/5.3
Q2875.2

Shot Pin 2 (SET)
=V1GL1UQ54KF1
+V1GL1UQ54
-QN2.2_Q
=V1GL1UQ54KF1
+V1GL1UQ54/5.3
Q2875.3

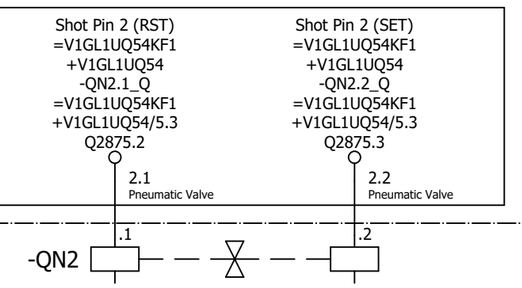

=V1GL1UQ54KF1+V1GL1UQ54/1.8
+V1GL1UQ54UQ2.1-W1

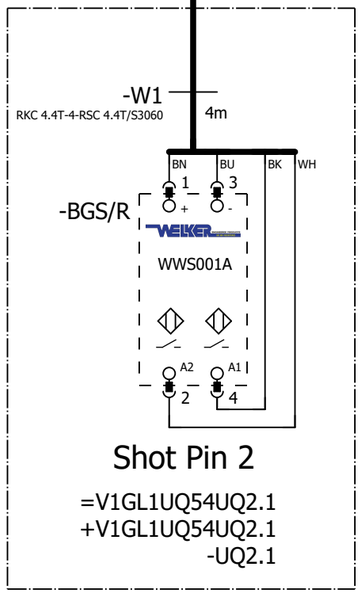

Shot Pin 2

=V1GL1UQ54UQ2.1
+V1GL1UQ54UQ2.1
-UQ2.1

=V1GL1UQ54 -UQ2.1-BGS/R Shot Pin 2

=V1GL1UQ54UQ1+.GL1UQ54UQ1/1

=V1GL1UQ54UQ3+.GL1UQ54UQ3/1

			Date	1/17/2023	Volvo Trucks North America	Valiant TMS	FESTO DQ CONNECTION QN2	Drawing name: =2V09&EFS-EL	= V1GL1UQ54UQ2
			Ed.	MKLEPADLO					+ V1GL1UQ54UQ2
			Appr		P6700 Bodyside LH - Robot Cell 2V09			Document type: EFS	Project nr: 22-16150
Modification	Date	Name	Original		Replacement of	Replaced by	Scale 1:1		Page 1 / 1533

0	1	2	3	4	5	6	7	8	9

=V1GL1UQ54KF1
+.GL1UQ54

-KF1.22
=V1GL1UQ54KF1+V1GL1UQ54/5.1

Shot Pins 3 (RST)
=V1GL1UQ54KF1
+V1GL1UQ54
-QN3.1_Q
=V1GL1UQ54KF1
+V1GL1UQ54/5.3
Q2875.4

Shot Pins 3 (SET)
=V1GL1UQ54KF1
+V1GL1UQ54
-QN3.2_Q
=V1GL1UQ54KF1
+V1GL1UQ54/5.3
Q2875.5

1.1 Pneumatic Valve

1.2 Pneumatic Valve

-QN3 .1 .2

=V1GL1UQ54KF1+V1GL1UQ54/1.9
+V1GL1UQ54UQ3.1-W1

=V1GL1UQ54KF1+V1GL1UQ54/2.1
+V1GL1UQ54UQ3.2-W1

=V1GL1UQ54KF1+V1GL1UQ54/2.2
+V1GL1UQ54UQ3.3-W1

=V1GL1UQ54KF1+V1GL1UQ54/2.3
+V1GL1UQ54UQ3.4-W1

=V1GL1UQ54KF1+V1GL1UQ54/2.4
+V1GL1UQ54UQ3.5-W1

-W1 RKC 4.4T-4-RSC 4.4T/S3060 4m

-W1 RKC 4.4T-5-RSC 4.4T/S3060 5m

-W1 RKC 4.4T-5-RSC 4.4T/S3060 5m

-W1 RKC 4.4T-5-RSC 4.4T/S3060 5m

-W1 RKC 4.4T-4-RSC 4.4T/S3060 4m

BN BU BK WH

-BGS/R

WELKER

WWS001A

A2 A1

1 3 2 4

Shot Pins 3
=V1GL1UQ54UQ3.1
+V1GL1UQ54UQ3.1
-UQ3.1

Shot Pins 3
=V1GL1UQ54UQ3.2
+V1GL1UQ54UQ3.2
-UQ3.2

Shot Pins 3
=V1GL1UQ54UQ3.3
+V1GL1UQ54UQ3.3
-UQ3.3

Shot Pins 3
=V1GL1UQ54UQ3.4
+V1GL1UQ54UQ3.4
-UQ3.4

Shot Pins 3
=V1GL1UQ54UQ3.5
+V1GL1UQ54UQ3.5
-UQ3.5

=V1GL1UQ54
-UQ3.1-BGS/R
Shot Pins 3

=V1GL1UQ54
-UQ3.2-BGS/R
Shot Pins 3

=V1GL1UQ54
-UQ3.3-BGS/R
Shot Pins 3

=V1GL1UQ54
-UQ3.4-BGS/R
Shot Pins 3

=V1GL1UQ54
-UQ3.5-BGS/R
Shot Pins 3

=V1GL1UQ54UQ2+.GL1UQ54UQ2/1

=V1GL1UQ54UQ4+.GL1UQ54UQ4/1

			Date	1/17/2023	Volvo Trucks North America	Valiant TMS	FESTO DQ CONNECTION QN3	Drawing name: =2V09&EFS-EL	= V1GL1UQ54UQ3
			Ed.	MKLEPADLO					+ V1GL1UQ54UQ3
			Appr		P6700 Bodyside LH - Robot Cell 2V09			Document type: EFS	Project nr: 22-16150
Modification	Date	Name	Original		Replacement of	Replaced by	Scale 1:1		Page 1 / 1533

0	1	2	3	4	5	6	7	8	9

=V1GL1UQ54KF1
+.GL1UQ54

-KF1.22
=V1GL1UQ54KF1+V1GL1UQ54/5.1

Shot Pins 4 (RST)
=V1GL1UQ54KF1
+V1GL1UQ54
-QN4.1_Q
=V1GL1UQ54KF1
+V1GL1UQ54/5.3
Q2875.6

Shot Pins 4 (SET)
=V1GL1UQ54KF1
+V1GL1UQ54
-QN4.2_Q
=V1GL1UQ54KF1
+V1GL1UQ54/5.3
Q2875.7

2.1
Pneumatic Valve

2.2
Pneumatic Valve

-QN4 .1 .2

=V1GL1UQ54KF1+V1GL1UQ54/2.5
+V1GL1UQ54UQ4.1-W1

-W1
RKC 4.4T-4-RSC 4.4T/S3060
4m

BN BU BK WH

-BGS/R
1 3
WELKER
WWS001A
A2 A1
2 4

Shot Pins 4

=V1GL1UQ54UQ4.1
+V1GL1UQ54UQ4.1
-UQ4.1

=V1GL1UQ54
-UQ4.1-BGS/R
Shot Pins 4

=V1GL1UQ54KF1+V1GL1UQ54/2.6
+V1GL1UQ54UQ4.2-W1

-W1
RKC 4.4T-5-RSC 4.4T/S3060
5m

BN BU BK WH

-BGS/R
1 3
WELKER
WWS001A
A2 A1
2 4

Shot Pins 4

=V1GL1UQ54UQ4.2
+V1GL1UQ54UQ4.2
-UQ4.2

=V1GL1UQ54
-UQ4.2-BGS/R
Shot Pins 4

=V1GL1UQ54UQ3+.GL1UQ54UQ3/1

=V1GL1UQ54UQ5+.GL1UQ54UQ5/1

			Date	1/17/2023	Volvo Trucks North America		Valiant TMS	FESTO DQ CONNECTION QN4	Drawing name: =2V09&EFS-EL	= V1GL1UQ54UQ4
			Ed.	MKLEPADLO						+ V1GL1UQ54UQ4
			Appr		P6700 Bodyside LH - Robot Cell 2V09				Document type: EFS	Project nr: 22-16150
Modification	Date	Name	Original		Replacement of	Replaced by	Scale 1:1			Page 1 / 1533

0	1	2	3	4	5	6	7	8	9

=V1GL1UQ54KF1
+.GL1UQ54

-KF1.23
=V1GL1UQ54KF1+V1GL1UQ54/5.1

Shot Pins 5 (RST)
=V1GL1UQ54KF1
+V1GL1UQ54
-QN5.1_Q
=V1GL1UQ54KF1
+V1GL1UQ54/5.3
Q2876.0

Shot Pins 5 (SET)
=V1GL1UQ54KF1
+V1GL1UQ54
-QN5.2_Q
=V1GL1UQ54KF1
+V1GL1UQ54/5.3
Q2876.1

1.1 Pneumatic Valve

1.2 Pneumatic Valve

-QN5 .1 .2

=V1GL1UQ54KF1+V1GL1UQ54/2.8
+V1GL1UQ54UQ5.1-W1

-W1
RKC 4.4T-4-RSC 4.4T/S3060
4m

BN BU BK WH
1 3
+ -
-BGS/R
WELKER
WWS001A
A2 A1
2 4

Shot Pins 5

=V1GL1UQ54UQ5.1
+V1GL1UQ54UQ5.1
-UQ5.1

=V1GL1UQ54
-UQ5.1-BGS/R
Shot Pins 5

=V1GL1UQ54KF1+V1GL1UQ54/2.9
+V1GL1UQ54UQ5.2-W1

-W1
RKC 4.4T-5-RSC 4.4T/S3060
5m

BN BU BK WH
1 3
+ -
-BGS/R
WELKER
WWS001A
A2 A1
2 4

Shot Pins 5

=V1GL1UQ54UQ5.2
+V1GL1UQ54UQ5.2
-UQ5.2

=V1GL1UQ54
-UQ5.2-BGS/R
Shot Pins 5

=V1GL1UQ54UQ4+.GL1UQ54UQ4/1

=V1GL1UQ54UQ6+.GL1UQ54UQ6/1

			Date	1/17/2023	Volvo Trucks North America	Valiant TMS	FESTO DQ CONNECTION QN5	Drawing name: =2V09&EFS-EL	= V1GL1UQ54UQ5
			Ed.	MKLEPADLO					+ V1GL1UQ54UQ5
			Appr		P6700 Bodyside LH - Robot Cell 2V09			Document type: EFS	Project nr: 22-16150
Modification	Date	Name	Original		Replacement of	Replaced by	Scale 1:1		Page 1 / 1533

0	1	2	3	4	5	6	7	8	9

=V1GL1UQ54KF1
+.GL1UQ54

-KF1.23
=V1GL1UQ54KF1+V1GL1UQ54/5.1

Shot Pin 6 (RST)
=V1GL1UQ54KF1
+V1GL1UQ54
-QN6.1_Q
=V1GL1UQ54KF1
+V1GL1UQ54/5.3
Q2876.2

Shot Pin 6 (SET)
=V1GL1UQ54KF1
+V1GL1UQ54
-QN6.2_Q
=V1GL1UQ54KF1
+V1GL1UQ54/5.3
Q2876.3

2.1
Pneumatic Valve

2.2
Pneumatic Valve

-QN6 .1 .2

=V1GL1UQ54KF1+V1GL1UQ54/3.1
+V1GL1UQ54UQ6.1-W1

-W1
RKC 4.4T-6-RSC 4.4T/S3060
6m

BN BU BK WH

-BGS/R
1 3
2 4
A2 A1

WWS001A

Shot Pin 6

=V1GL1UQ54UQ6.1
+V1GL1UQ54UQ6.1
-UQ6.1

=V1GL1UQ54 -UQ6.1-BGS/R Shot Pin 6

=V1GL1UQ54UQ5+.GL1UQ54UQ5/1

=V1GL1UQ54UQ7+.GL1UQ54UQ7/1

			Date	1/17/2023	Volvo Trucks North America	Valiant TMS	FESTO DQ CONNECTION QN6	Drawing name: =2V09&EFS-EL	= V1GL1UQ54UQ6
			Ed.	MKLEPADLO					+ V1GL1UQ54UQ6
			Appr		P6700 Bodyside LH - Robot Cell 2V09			Document type: EFS	Project nr: 22-16150
Modification	Date	Name	Original		Replacement of	Replaced by	Scale 1:1		Page 1 / 1533

0	1	2	3	4	5	6	7	8	9

=V1GL1UQ54KF1
+.GL1UQ54

-KF1.24
=V1GL1UQ54KF1+V1GL1UQ54/5.1

Shot Pin 7 (RST)	Shot Pin 7 (SET)
=V1GL1UQ54KF1	=V1GL1UQ54KF1
+V1GL1UQ54	+V1GL1UQ54
-QN7.1_Q	-QN7.2_Q
=V1GL1UQ54KF1	=V1GL1UQ54KF1
+V1GL1UQ54/5.3	+V1GL1UQ54/5.3
Q2876.4	Q2876.5
1.1 Pneumatic Valve	1.2 Pneumatic Valve

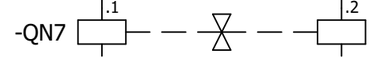

=V1GL1UQ54KF1+V1GL1UQ54/3.2
+V1GL1UQ54UQ7.1-W1

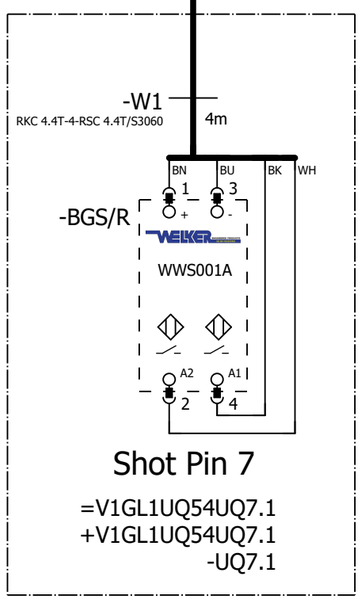

Shot Pin 7

=V1GL1UQ54UQ7.1
+V1GL1UQ54UQ7.1
-UQ7.1

=V1GL1UQ54 -UQ7.1-BGS/R Shot Pin 7

=V1GL1UQ54UQ6+.GL1UQ54UQ6/1

=V1GL1UQ54UQ8+.GL1UQ54UQ8/1

			Date	1/17/2023	Volvo Trucks North America	Valiant TMS	FESTO DQ CONNECTION QN7	Drawing name: =2V09&EFS-EL	= V1GL1UQ54UQ7
			Ed.	MKLEPADLO					+ V1GL1UQ54UQ7
			Appr		P6700 Bodyside LH - Robot Cell 2V09			Document type: EFS	Project nr: 22-16150
Modification	Date	Name	Original		Replacement of	Replaced by	Scale 1:1		Page 1 / 1533

0	1	2	3	4	5	6	7	8	9

=V1GL1UQ54KF1
+.GL1UQ54

-KF1.25
=V1GL1UQ54KF1+V1GL1UQ54/5.1

Slide 8 (RST)
=V1GL1UQ54KF1
+V1GL1UQ54
-QN9.1_Q
=V1GL1UQ54KF1
+V1GL1UQ54/5.3
Q2877.0

Slide 8 (SET)
=V1GL1UQ54KF1
+V1GL1UQ54
-QN9.2_Q
=V1GL1UQ54KF1
+V1GL1UQ54/5.3
Q2877.1

1.1 Pneumatic Valve

1.2 Pneumatic Valve

-QN9 .1 .2

=V1GL1UQ54KF1+V1GL1UQ54/3.3
+V1GL1UQ54UQ8.1-W1

-W1
RKC 4.4T-4-RSC 4.4T/S3060
4m
BN BU BK WH

-XGR/S
P1 1 3 4 2
VB2-FSM 4.4/2FKM 4/S3450
TURCK
J1 1 3 4 2
J2 1 3 4 2
BN BU BK WH

-W1.1
RKC 4.4T-0.5-RSC 4.4T/S3060
0.5m
BN BU BK WH

-W1.2
RKC 4.4T-0.5-RSC 4.4T/S3060
0.5m
BN BU BK WH

-BGR
Sn = 10 mm
TURCK
16449050
1 3
+ -
A pnp
4

-BGS
Sn = 10 mm
TURCK
16449050
1 3
+ -
A pnp
4

Slide 8
=V1GL1UQ54UQ8.1
+.GL1UQ54UQ8.1
-UQ8.1

=V1GL1UQ54
-UQ8.1-BGR
Slide 8

=V1GL1UQ54
-UQ8.1-BGS
Slide 8

=V1GL1UQ54UQ7+.GL1UQ54UQ7/1

=V1GL1UQ54UQ9+.GL1UQ54UQ9/1

			Date	1/17/2023	Volvo Trucks North America	Valiant TMS	FESTO DQ CONNECTION QN8	Drawing name: =2V09&EFS-EL	= V1GL1UQ54UQ8
			Ed.	MKLEPADLO					+ V1GL1UQ54UQ8
			Appr		P6700 Bodyside LH - Robot Cell 2V09			Document type: EFS	Project nr: 22-16150
Modification	Date	Name	Original		Replacement of	Replaced by	Scale 1:1		Page 1 / 1533

0	1	2	3	4	5	6	7	8	9

=V1GL1UQ54KF1
+.GL1UQ54

-KF1.24
=V1GL1UQ54KF1+V1GL1UQ54/5.1

Shot Pins 9 (RST)
=V1GL1UQ54KF1
+V1GL1UQ54
-QN8.1_Q
=V1GL1UQ54KF1
+V1GL1UQ54/5.3
Q2876.6

Shot Pins 9 (SET)
=V1GL1UQ54KF1
+V1GL1UQ54
-QN8.2_Q
=V1GL1UQ54KF1
+V1GL1UQ54/5.3
Q2876.7

2.1
Pneumatic Valve

2.2
Pneumatic Valve

-QN8 .1 .2

=V1GL1UQ54KF1+V1GL1UQ54/3.4
+V1GL1UQ54UQ9.1-W1

-W1
RKC 4.4T-5-RSC 4.4T/S3060
5m

BN BU BK WH
1 3
+ -
-BGS/R
WELKER
WWS001A
A2 A1
2 4

Shot Pins 9

=V1GL1UQ54UQ9.1
+V1GL1UQ54UQ9.1
-UQ9.1

=V1GL1UQ54
-UQ9.1-BGS/R
Shot Pins 9

=V1GL1UQ54KF1+V1GL1UQ54/3.5
+V1GL1UQ54UQ9.2-W1

-W1
RKC 4.4T-4-RSC 4.4T/S3060
4m

BN BU BK WH
1 3
+ -
-BGS/R
WELKER
WWS001A
A2 A1
2 4

Shot Pins 9

=V1GL1UQ54UQ9.2
+V1GL1UQ54UQ9.2
-UQ9.2

=V1GL1UQ54
-UQ9.2-BGS/R
Shot Pins 9

=V1GL1UQ54UQ8+.GL1UQ54UQ8/1

=V1GL1UQ54UQ10+.GL1UQ54UQ10/1

			Date	1/17/2023	Volvo Trucks North America	Valiant TMS	FESTO DQ CONNECTION QN9	Drawing name: =2V09&EFS-EL	= V1GL1UQ54UQ9
			Ed.	MKLEPADLO					+ V1GL1UQ54UQ9
			Appr		P6700 Bodyside LH - Robot Cell 2V09			Document type: EFS	Project nr: 22-16150
Modification	Date	Name	Original		Replacement of	Replaced by	Scale 1:1		Page 1 / 1533

0	1	2	3	4	5	6	7	8	9

=V1GL1UQ54KF2
+.GL1UQ54

-KF2.21
=V1GL1UQ54KF2+V1GL1UQ54/5.1

Clamps 10 (RST)
=V1GL1UQ54KF2
+V1GL1UQ54
-QN11.1_Q
=V1GL1UQ54KF2
+V1GL1UQ54/5.3
Q2900.0

Clamps 10 (SET)
=V1GL1UQ54KF2
+V1GL1UQ54
-QN11.2_Q
=V1GL1UQ54KF2
+V1GL1UQ54/5.3
Q2900.1

1.1 Pneumatic Valve
1.2 Pneumatic Valve

-QN11 .1 .2

=V1GL1UQ54KF2+V1GL1UQ54/1.1
+V1GL1UQ54UQ10.1-W1

-W1
RKC 4.4T-3-RSC 4.4T/S3060
3m

-BGS/R
BN 1 + BU 3 - BK WH
TÜNKERS
1324638
A2 2 A1 4

Clamps 10
=V1GL1UQ54UQ10.1
+V1GL1UQ54UQ10.1
-UQ10.1

=V1GL1UQ54
-UQ10.1-BGS/R
Clamps 10

=V1GL1UQ54KF2+V1GL1UQ54/1.2
+V1GL1UQ54UQ10.2-W1

-W1
RKC 4.4T-3-RSC 4.4T/S3060
3m

-BGS/R
BN 1 + BU 3 - BK WH
TÜNKERS
1324644
A2 2 A1 4

Clamps 10
=V1GL1UQ54UQ10.2
+V1GL1UQ54UQ10.2
-UQ10.2

=V1GL1UQ54
-UQ10.2-BGS/R
Clamps 10

=V1GL1UQ54KF2+V1GL1UQ54/1.3
+V1GL1UQ54UQ10.3-W1

-W1
RKC 4.4T-3-RSC 4.4T/S3060
3m

-BGS/R
BN 1 + BU 3 - BK WH
TÜNKERS
1324638
A2 2 A1 4

Clamps 10
=V1GL1UQ54UQ10.3
+V1GL1UQ54UQ10.3
-UQ10.3

=V1GL1UQ54
-UQ10.3-BGS/R
Clamps 10

=V1GL1UQ54KF2+V1GL1UQ54/1.4
+V1GL1UQ54UQ10.4-W1

-W1
RKC 4.4T-3-RSC 4.4T/S3060
3m

-BGS/R
BN 1 + BU 3 - BK WH
TÜNKERS
1324638
A2 2 A1 4

Clamps 10
=V1GL1UQ54UQ10.4
+V1GL1UQ54UQ10.4
-UQ10.4

=V1GL1UQ54
-UQ10.4-BGS/R
Clamps 10

=V1GL1UQ54KF2+V1GL1UQ54/1.5
+V1GL1UQ54UQ10.5-W1

-W1
RKC 4.4T-2-RSC 4.4T/S3060
2m

-BGS/R
BN 1 + BU 3 - BK WH
TÜNKERS
1324638
A2 2 A1 4

Clamps 10
=V1GL1UQ54UQ10.5
+V1GL1UQ54UQ10.5
-UQ10.5

=V1GL1UQ54
-UQ10.5-BGS/R
Clamps 10

=V1GL1UQ54KF2+V1GL1UQ54/1.6
+V1GL1UQ54UQ10.6-W1

-W1
RKC 4.4T-3-RSC 4.4T/S3060
3m

-BGS/R
BN 1 + BU 3 - BK WH
TÜNKERS
1324638
A2 2 A1 4

Clamps 10
=V1GL1UQ54UQ10.6
+V1GL1UQ54UQ10.6
-UQ10.6

=V1GL1UQ54
-UQ10.6-BGS/R
Clamps 10

=V1GL1UQ54UQ9+.GL1UQ54UQ9/1

=V1GL1UQ54UQ11+.GL1UQ54UQ11/1

			Date	1/17/2023	Volvo Trucks North America	Valiant TMS	FESTO DQ CONNECTION QN11	Drawing name: =2V09&EFS-EL	= V1GL1UQ54UQ10
			Ed.	MKLEPADLO					+ V1GL1UQ54UQ10
			Appr		P6700 Bodyside LH - Robot Cell 2V09			Document type: EFS	Project nr: 22-16150
Modification	Date	Name	Original		Replacement of	Replaced by	Scale 1:1		Page 1 / 1533

0	1	2	3	4	5	6	7	8	9

=V1GL1UQ54KF2
+.GL1UQ54

-KF2.21
=V1GL1UQ54KF2+V1GL1UQ54/5.1

Clamps 11 (RST)
=V1GL1UQ54KF2
+V1GL1UQ54
-QN12.1_Q
=V1GL1UQ54KF2
+V1GL1UQ54/5.3
Q2900.2

Clamps 11 (SET)
=V1GL1UQ54KF2
+V1GL1UQ54
-QN12.2_Q
=V1GL1UQ54KF2
+V1GL1UQ54/5.3
Q2900.3

2.1 Pneumatic Valve

2.2 Pneumatic Valve

-QN12 .1 .2

=V1GL1UQ54KF2+V1GL1UQ54/1.8
+V1GL1UQ54UQ11.1-W1

=V1GL1UQ54KF2+V1GL1UQ54/1.9
+V1GL1UQ54UQ11.2-W1

=V1GL1UQ54KF2+V1GL1UQ54/2.1
+V1GL1UQ54UQ11.3-W1

=V1GL1UQ54KF2+V1GL1UQ54/2.2
+V1GL1UQ54UQ11.4-W1

=V1GL1UQ54KF2+V1GL1UQ54/2.3
+V1GL1UQ54UQ11.5-W1

-W1 RKC 4.4T-3-RSC 4.4T/S3060 3m

-W1 RKC 4.4T-4-RSC 4.4T/S3060 4m

-W1 RKC 4.4T-5-RSC 4.4T/S3060 5m

-W1 RKC 4.4T-6-RSC 4.4T/S3060 6m

-W1 RKC 4.4T-7-RSC 4.4T/S3060 7 m

-BGS/R
BN BU BK WH
1 3
TÜNKERS
1324644 / 1324638
A2 A1
2 4

Clamps 11

=V1GL1UQ54UQ11.1
+V1GL1UQ54UQ11.1
-UQ11.1

=V1GL1UQ54UQ11.2
+V1GL1UQ54UQ11.2
-UQ11.2

=V1GL1UQ54UQ11.3
+V1GL1UQ54UQ11.3
-UQ11.3

=V1GL1UQ54UQ11.4
+V1GL1UQ54UQ11.4
-UQ11.4

=V1GL1UQ54UQ11.5
+V1GL1UQ54UQ11.5
-UQ11.5

=V1GL1UQ54
-UQ11.1-BGS/R
Clamps 11

=V1GL1UQ54
-UQ11.2-BGS/R
Clamps 11

=V1GL1UQ54
-UQ11.3-BGS/R
Clamps 11

=V1GL1UQ54
-UQ11.4-BGS/R
Clamps 11

=V1GL1UQ54
-UQ11.5-BGS/R
Clamps 11

=V1GL1UQ54UQ10+.GL1UQ54UQ10/1

=V1GL1UQ54UQ12+.GL1UQ54UQ12/1

			Date	1/17/2023	Volvo Trucks North America	Valiant TMS	FESTO DQ CONNECTION QN12	Drawing name: =2V09&EFS-EL	= V1GL1UQ54UQ11
			Ed.	MKLEPADLO					+ V1GL1UQ54UQ11
			Appr		P6700 Bodyside LH - Robot Cell 2V09			Document type: EFS	Project nr: 22-16150
Modification	Date	Name	Original		Replacement of	Replaced by	Scale 1:1		Page 1 / 1533

0	1	2	3	4	5	6	7	8	9

=V1GL1UQ54KF2
+.GL1UQ54

-KF2.22
=V1GL1UQ54KF2+V1GL1UQ54/5.1

Clamps 12 (RST)
=V1GL1UQ54KF2
+V1GL1UQ54
-QN13.1_Q
=V1GL1UQ54KF2
+V1GL1UQ54/5.3
Q2900.4

Clamps 12 (SET)
=V1GL1UQ54KF2
+V1GL1UQ54
-QN13.2_Q
=V1GL1UQ54KF2
+V1GL1UQ54/5.3
Q2900.5

1.1 Pneumatic Valve
1.2 Pneumatic Valve

-QN13 .1 .2

=V1GL1UQ54KF2+V1GL1UQ54/2.4
+V1GL1UQ54UQ12.1-W1

=V1GL1UQ54KF2+V1GL1UQ54/2.5
+V1GL1UQ54UQ12.2-W1

=V1GL1UQ54KF2+V1GL1UQ54/2.6
+V1GL1UQ54UQ12.3-W1

=V1GL1UQ54KF2+V1GL1UQ54/2.8
+V1GL1UQ54UQ12.4-W1

=V1GL1UQ54KF2+V1GL1UQ54/2.9
+V1GL1UQ54UQ12.5-W1

=V1GL1UQ54KF2+V1GL1UQ54/3.1
+V1GL1UQ54UQ12.6-W1

-W1 RKC 4.4T-5-RSC 4.4T/S3060 5m
-BGS/R TÜNKERS 1324638
BN 1 + BU 3 - BK WH
A2 2 A1 4

Clamps 12
=V1GL1UQ54UQ12.1
+V1GL1UQ54UQ12.1
-UQ12.1

-W1 RKC 4.4T-3-RSC 4.4T/S3060 3m
-BGS/R TÜNKERS 1324644
BN 1 + BU 3 - BK WH
A2 2 A1 4

Clamps 12
=V1GL1UQ54UQ12.2
+V1GL1UQ54UQ12.2
-UQ12.2

-W1 RKC 4.4T-6-RSC 4.4T/S3060 6m
-BGS/R TÜNKERS 1324644
BN 1 + BU 3 - BK WH
A2 2 A1 4

Clamps 12
=V1GL1UQ54UQ12.3
+V1GL1UQ54UQ12.3
-UQ12.3

-W1 RKC 4.4T-5-RSC 4.4T/S3060 5m
-BGS/R TÜNKERS 1324644
BN 1 + BU 3 - BK WH
A2 2 A1 4

Clamps 12
=V1GL1UQ54UQ12.4
+V1GL1UQ54UQ12.4
-UQ12.4

-W1 RKC 4.4T-3-RSC 4.4T/S3060 3m
-BGS/R TÜNKERS 1324638
BN 1 + BU 3 - BK WH
A2 2 A1 4

Clamps 12
=V1GL1UQ54UQ12.5
+V1GL1UQ54UQ12.5
-UQ12.5

-W1 RKC 4.4T-3-RSC 4.4T/S3060 3m
-BGS/R TÜNKERS 1324644
BN 1 + BU 3 - BK WH
A2 2 A1 4

Clamps 12
=V1GL1UQ54UQ12.6
+.GL1UQ54UQ12.6
-UQ12.6

=V1GL1UQ54
-UQ12.1-BGS/R
Clamps 12

=V1GL1UQ54
-UQ12.2-BGS/R
Clamps 12

=V1GL1UQ54
-UQ12.3-BGS/R
Clamps 12

=V1GL1UQ54
-UQ12.4-BGS/R
Clamps 12

=V1GL1UQ54
-UQ12.5-BGS/R
Clamps 12

=V1GL1UQ54
-UQ12.6-BGS/R
Clamps 12

=V1GL1UQ54UQ11+.GL1UQ54UQ11/1

=V1GL1UQ54UQ13+.GL1UQ54UQ13/1

			Date	1/17/2023	Volvo Trucks North America	Valiant TMS	FESTO DQ CONNECTION QN13	Drawing name: =2V09&EFS-EL	= V1GL1UQ54UQ12
			Ed.	MKLEPADLO					+ V1GL1UQ54UQ12
			Appr		P6700 Bodyside LH - Robot Cell 2V09			Document type: EFS	Project nr: 22-16150
Modification	Date	Name	Original		Replacement of	Replaced by	Scale 1:1		Page 1 / 1533

0	1	2	3	4	5	6	7	8	9

=V1GL1UQ54KF2
+.GL1UQ54

-KF2.22
=V1GL1UQ54KF2+V1GL1UQ54/5.1

Clamp 13 (RST)	Clamp 13 (SET)
=V1GL1UQ54KF2	=V1GL1UQ54KF2
+V1GL1UQ54	+V1GL1UQ54
-QN14.1_Q	-QN14.2_Q
=V1GL1UQ54KF2	=V1GL1UQ54KF2
+V1GL1UQ54/5.3	+V1GL1UQ54/5.3
Q2900.6	Q2900.7
2.1 Pneumatic Valve	2.2 Pneumatic Valve

-QN14 .1 .2

=V1GL1UQ54KF2+V1GL1UQ54/3.2
+V1GL1UQ54UQ13.1-W1

-W1
RKC 4.4T-4-RSC 4.4T/S3060
4m

BN BU BK WH

-BGS/R
1 3
+ -
TÜNKERS
1324644
A2 A1
2 4

Clamp 13

=V1GL1UQ54UQ13.1
+V1GL1UQ54UQ13.1
-UQ13.1

=V1GL1UQ54
-UQ13.1-BGS/R
Clamp 13

=V1GL1UQ54UQ12+.GL1UQ54UQ12/1

=V1GL1UQ54UQ14+.GL1UQ54UQ14/1

			Date	1/17/2023	Volvo Trucks North America	Valiant TMS	FESTO DQ CONNECTION QN14	Drawing name: =2V09&EFS-EL	= V1GL1UQ54UQ13
			Ed.	MKLEPADLO					+ V1GL1UQ54UQ13
			Appr		P6700 Bodyside LH - Robot Cell 2V09			Document type: EFS	Project nr: 22-16150
Modification	Date	Name	Original		Replacement of	Replaced by	Scale 1:1		Page 1 / 1533

0	1	2	3	4	5	6	7	8	9

=V1GL1UQ54KF2
+.GL1UQ54

-KF2.23
=V1GL1UQ54KF2+V1GL1UQ54/5.1

Clamp 14 (RST)	Clamp 14 (SET)
=V1GL1UQ54KF2	=V1GL1UQ54KF2
+V1GL1UQ54	+V1GL1UQ54
-QN15.1_Q	-QN15.2_Q
=V1GL1UQ54KF2	=V1GL1UQ54KF2
+V1GL1UQ54/5.3	+V1GL1UQ54/5.3
Q2901.0	Q2901.1
1.1 Pneumatic Valve	1.2 Pneumatic Valve

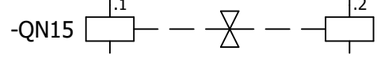

=V1GL1UQ54KF2+V1GL1UQ54/3.3
+V1GL1UQ54UQ14.1-W1

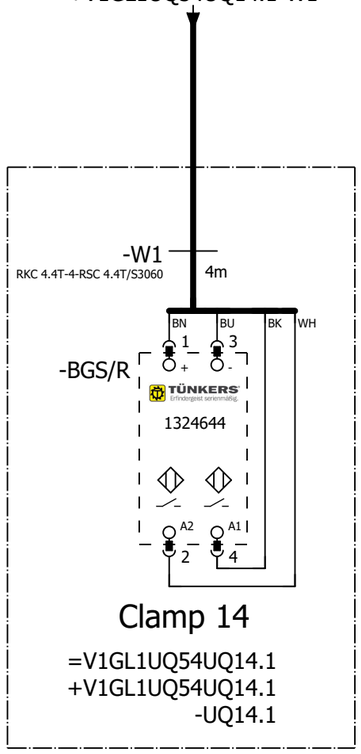

Clamp 14

=V1GL1UQ54UQ14.1
+V1GL1UQ54UQ14.1
-UQ14.1

=V1GL1UQ54
-UQ14.1-BGS/R
Clamp 14

=V1GL1UQ54UQ13+.GL1UQ54UQ13/1

=V1GL1UQ54UQ15+.GL1UQ54UQ15/1

			Date	1/17/2023	Volvo Trucks North America	Valiant TMS	FESTO DQ CONNECTION QN15	Drawing name: =2V09&EFS-EL	= V1GL1UQ54UQ14
			Ed.	MKLEPADLO					+ V1GL1UQ54UQ14
			Appr		P6700 Bodyside LH - Robot Cell 2V09			Document type: EFS	Project nr: 22-16150
Modification	Date	Name	Original		Replacement of	Replaced by	Scale 1:1		Page 1 / 1533

0	1	2	3	4	5	6	7	8	9

=V1GL1UQ54KF2
+.GL1UQ54

-KF2.23
=V1GL1UQ54KF2+V1GL1UQ54/5.1

Clamp 15 (RST)	Clamp 15 (SET)
=V1GL1UQ54KF2	=V1GL1UQ54KF2
+V1GL1UQ54	+V1GL1UQ54
-QN16.1_Q	-QN16.2_Q
=V1GL1UQ54KF2	=V1GL1UQ54KF2
+V1GL1UQ54/5.3	+V1GL1UQ54/5.3
Q2901.2	Q2901.3
2.1 Pneumatic Valve	2.2 Pneumatic Valve

-QN16 .1 .2

=V1GL1UQ54KF2+V1GL1UQ54/3.4
+V1GL1UQ54UQ15.1-W1

-W1
RKC 4.4T-5-RSC 4.4T/S3060
5m

-BGS/R
BN 1 + BU 3 - BK WH
TÜNKERS
1324638
A2 2 A1 4

Clamp 15
=V1GL1UQ54UQ15.1
+V1GL1UQ54UQ15.1
-UQ15.1

=V1GL1UQ54 -UQ15.1-BGS/R Clamp 15

=V1GL1UQ54UQ14+.GL1UQ54UQ14/1

=V1GL1UQ54UQ16+.GL1UQ54UQ16/1

			Date	1/17/2023	Volvo Trucks North America	Valiant TMS	FESTO DQ CONNECTION QN16	Drawing name: =2V09&EFS-EL	= V1GL1UQ54UQ15
			Ed.	MKLEPADLO					+ V1GL1UQ54UQ15
			Appr		P6700 Bodyside LH - Robot Cell 2V09			Document type: EFS	Project nr: 22-16150
Modification	Date	Name	Original		Replacement of	Replaced by	Scale 1:1		Page 1 / 1533

0	1	2	3	4	5	6	7	8	9

=V1GL1UQ54KF2
+.GL1UQ54

-KF2.24
=V1GL1UQ54KF2+V1GL1UQ54/5.1

Clamps 16 (RST)
=V1GL1UQ54KF2
+V1GL1UQ54
-QN17.1_Q
=V1GL1UQ54KF2
+V1GL1UQ54/5.3
Q2901.4

Clamps 16 (SET)
=V1GL1UQ54KF2
+V1GL1UQ54
-QN17.2_Q
=V1GL1UQ54KF2
+V1GL1UQ54/5.3
Q2901.5

1.1 Pneumatic Valve

1.2 Pneumatic Valve

-QN17 .1 .2

=V1GL1UQ54KF2+V1GL1UQ54/3.5
+V1GL1UQ54UQ16.1-W1

=V1GL1UQ54KF2+V1GL1UQ54/3.6
+V1GL1UQ54UQ16.2-W1

=V1GL1UQ54KF2+V1GL1UQ54/3.8
+V1GL1UQ54UQ16.3-W1

-W1
RKC 4.4T-4-RSC 4.4T/S3060
4m

-W1
RKC 4.4T-4-RSC 4.4T/S3060
4m

-W1
RKC 4.4T-5-RSC 4.4T/S3060
5m

BN BU BK WH

-BGS/R
1 3
+ -
TÜNKERS
1324638
A2 A1
2 4

-BGS/R
1 3
+ -
TÜNKERS
1324644
A2 A1
2 4

-BGS/R
1 3
+ -
TÜNKERS
1324644
A2 A1
2 4

Clamps 16
=V1GL1UQ54UQ16.1
+V1GL1UQ54UQ16.1
-UQ16.1

Clamps 16
=V1GL1UQ54UQ16.2
+V1GL1UQ54UQ16.2
-UQ16.2

Clamps 16
=V1GL1UQ54UQ16.3
+V1GL1UQ54UQ16.3
-UQ16.3

=V1GL1UQ54
-UQ16.1-BGS/R
Clamps 16

=V1GL1UQ54
-UQ16.2-BGS/R
Clamps 16

=V1GL1UQ54
-UQ16.3-BGS/R
Clamps 16

=V1GL1UQ54UQ15+.GL1UQ54UQ15/1

=V1GL1UQ54UQ17+.GL1UQ54UQ17/1

			Date	1/17/2023	Volvo Trucks North America		Valiant TMS	FESTO DQ CONNECTION QN17	Drawing name: =2V09&EFS-EL	= V1GL1UQ54UQ16
			Ed.	MKLEPADLO						+ V1GL1UQ54UQ16
			Appr		P6700 Bodyside LH - Robot Cell 2V09				Document type: EFS	Project nr: 22-16150
Modification	Date	Name	Original		Replacement of	Replaced by	Scale 1:1			Page 1 / 1533

0	1	2	3	4	5	6	7	8	9

=V1GL1UQ54KF2
+.GL1UQ54

-KF2.24
=V1GL1UQ54KF2+V1GL1UQ54/5.1

Clamp 17 (RST)	Clamp 17 (SET)
=V1GL1UQ54KF2	=V1GL1UQ54KF2
+V1GL1UQ54	+V1GL1UQ54
-QN18.1_Q	-QN18.2_Q
=V1GL1UQ54KF2	=V1GL1UQ54KF2
+V1GL1UQ54/5.3	+V1GL1UQ54/5.3
Q2901.6	Q2901.7
2.1 Pneumatic Valve	2.2 Pneumatic Valve

-QN18 .1 .2

=V1GL1UQ54KF2+V1GL1UQ54/3.9
+V1GL1UQ54UQ17.1-W1

-W1
RKC 4.4T-3-RSC 4.4T/S3060
3m

BN BU BK WH

-BGS/R
1 3
+ -
TÜNKERS
1324638
A2 A1
2 4

Clamp 17

=V1GL1UQ54UQ17.1
+V1GL1UQ54UQ17.1
-UQ17.1

=V1GL1UQ54
-UQ17.1-BGS/R
Clamp 17

=V1GL1UQ54UQ16+.GL1UQ54UQ16/1

=V1GL1UQ54UQ18+.GL1UQ54UQ18/1

			Date	1/17/2023	Volvo Trucks North America	Valiant TMS	FESTO DQ CONNECTION QN18	Drawing name: =2V09&EFS-EL	= V1GL1UQ54UQ17
			Ed.	MKLEPADLO					+ V1GL1UQ54UQ17
			Appr		P6700 Bodyside LH - Robot Cell 2V09			Document type: EFS	Project nr: 22-16150
Modification	Date	Name	Original		Replacement of	Replaced by	Scale 1:1		Page 1 / 1533

0	1	2	3	4	5	6	7	8	9

=V1GL1UQ54KF2
+.GL1UQ54

-KF2.25
=V1GL1UQ54KF2+V1GL1UQ54/5.1

Shot Pins 18 (RST)
=V1GL1UQ54KF2
+V1GL1UQ54
-QN20.1_Q
=V1GL1UQ54KF2
+V1GL1UQ54/5.3
Q2902.0

Shot Pins 18 (SET)
=V1GL1UQ54KF2
+V1GL1UQ54
-QN20.2_Q
=V1GL1UQ54KF2
+V1GL1UQ54/5.3
Q2902.1

1.1
Pneumatic Valve

1.2
Pneumatic Valve

-QN20 .1 .2

=V1GL1UQ54KF2+V1GL1UQ54/4.1
+V1GL1UQ54UQ18.1-W1

-W1
RKC 4.4T-4-RSC 4.4T/S3060
4m

BN BU BK WH
1 3
+ -
-BGS/R
WELKER
WWS001A
A2 A1
2 4

Shot Pins 18
=V1GL1UQ54UQ18.1
+V1GL1UQ54UQ18.1
-UQ18.1

=V1GL1UQ54
-UQ18.1-BGS/R
Shot Pins 18

=V1GL1UQ54KF2+V1GL1UQ54/4.2
+V1GL1UQ54UQ18.2-W1

-W1
RKC 4.4T-5-RSC 4.4T/S3060
5m

BN BU BK WH
1 3
+ -
-BGS/R
WELKER
WWS001A
A2 A1
2 4

Shot Pins 18
=V1GL1UQ54UQ18.2
+V1GL1UQ54UQ18.2
-UQ18.2

=V1GL1UQ54
-UQ18.2-BGS/R
Shot Pins 18

=V1GL1UQ54UQ17+.GL1UQ54UQ17/1

=V1GL1UQ54UQ19+.GL1UQ54UQ19/1

			Date	1/17/2023	Volvo Trucks North America		Valiant TMS	FESTO DQ CONNECTION QN19	Drawing name: =2V09&EFS-EL	= V1GL1UQ54UQ18
			Ed.	MKLEPADLO						+ V1GL1UQ54UQ18
			Appr		P6700 Bodyside LH - Robot Cell 2V09				Document type: EFS	Project nr: 22-16150
Modification	Date	Name	Original		Replacement of	Replaced by	Scale 1:1			Page 1 / 1533

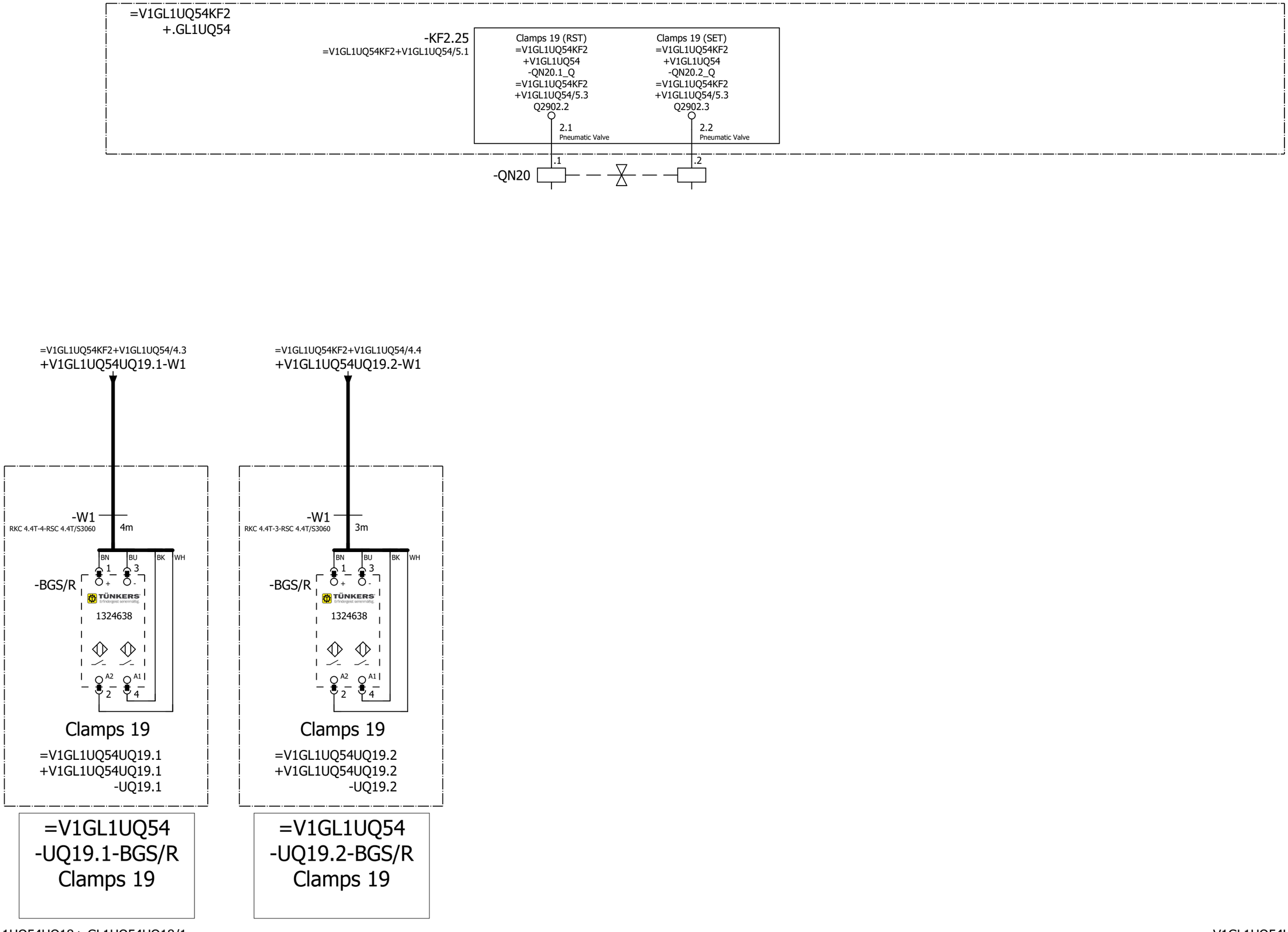

=V1GL1UQ54UQ18+.GL1UQ54UQ18/1

=V1GL1UQ54UQ20+.GL1UQ54UQ20/1

			Date	1/17/2023	Volvo Trucks North America	Valiant TMS	FESTO DQ CONNECTION QN20	Drawing name: =2V09&EFS-EL	= V1GL1UQ54UQ19 + V1GL1UQ54UQ19
			Ed.	MKLEPADLO	P6700 Bodyside LH - Robot Cell 2V09			Document type: EFS	Project nr: 22-16150
			Appr						Page 1
Modification	Date	Name	Original		Replacement of / Replaced by	Scale 1:1			1533

0	1	2	3	4	5	6	7	8	9

=V1GL1UQ54KF3
+.GL1UQ54

-KF3.21
=V1GL1UQ54KF3+V1GL1UQ54/2.1

Clamp 20 (RST)
=V1GL1UQ54KF2
+V1GL1UQ54
-QN21.1_Q
=V1GL1UQ54KF3
+V1GL1UQ54/2.3
Q2925.0

Clamp 20 (SET)
=V1GL1UQ54KF2
+V1GL1UQ54
-QN21.2_Q
=V1GL1UQ54KF3
+V1GL1UQ54/2.3
Q2925.1

1.1 Pneumatic Valve

1.2 Pneumatic Valve

-QN21 .1 .2

=V1GL1UQ54KF3+V1GL1UQ54/1.1
+V1GL1UQ54UQ20.1-W1

-W1
RKC 4.4T-5-RSC 4.4T/S3060
5m

BN BU BK WH

-BGS/R
1 3
+ -
TÜNKERS
1324638
A2 A1
2 4

Clamp 20

=V1GL1UQ54UQ20.1
+V1GL1UQ54UQ20.1
-UQ20.1

=V1GL1UQ54
-UQ20.1-BGS/R
Clamp 20

=V1GL1UQ54UQ19+.GL1UQ54UQ19/1

=V1GL1UQ54UQ21+.GL1UQ54UQ21/1

			Date	1/17/2023	Volvo Trucks North America	Valiant TMS	FESTO DQ CONNECTION QN21	Drawing name: =2V09&EFS-EL	= V1GL1UQ54UQ20
			Ed.	MKLEPADLO					+ V1GL1UQ54UQ20
			Appr		P6700 Bodyside LH - Robot Cell 2V09			Document type: EFS	Project nr: 22-16150
Modification	Date	Name	Original		Replacement of	Replaced by	Scale 1:1		Page 1 / 1533

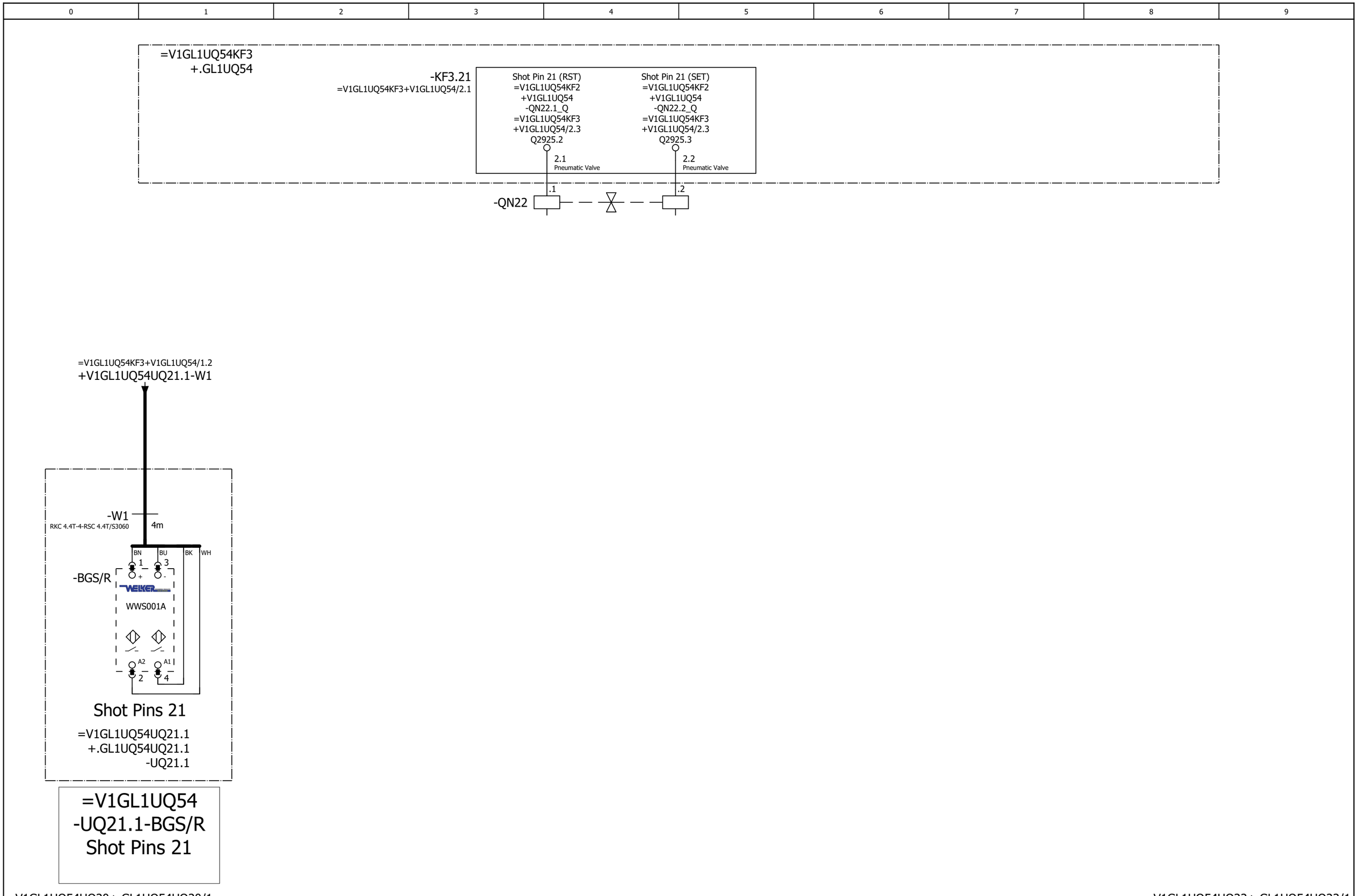

=V1GL1UQ54UQ20+.GL1UQ54UQ20/1

=V1GL1UQ54UQ22+.GL1UQ54UQ22/1

			Date	1/17/2023	Volvo Trucks North America	Valiant TMS	FESTO DQ CONNECTION QN22	Drawing name: =2V09&EFS-EL	= V1GL1UQ54UQ21 + V1GL1UQ54UQ21
			Ed.	MKLEPADLO	P6700 Bodyside LH - Robot Cell 2V09			Document type: EFS	Project nr: 22-16150
			Appr						Page 1
Modification	Date	Name	Original		Replacement of / Replaced by	Scale 1:1			1533

0	1	2	3	4	5	6	7	8	9

=V1GL1UQ54KF3
+.GL1UQ54

-KF3.22
=V1GL1UQ54KF3+V1GL1UQ54/2.1

Shot Pin 22 (RST)
=V1GL1UQ54KF2
+V1GL1UQ54
-QN23.1_Q
=V1GL1UQ54KF3
+V1GL1UQ54/2.3
Q2925.4

Shot Pin 22 (SET)
=V1GL1UQ54KF2
+V1GL1UQ54
-QN23.2_Q
=V1GL1UQ54KF3
+V1GL1UQ54/2.3
Q2925.5

1.1
Pneumatic Valve

1.2
Pneumatic Valve

-QN23 .1 .2

=V1GL1UQ54KF3+V1GL1UQ54/1.3
+V1GL1UQ54UQ22.1-W1

-W1
RKC 4.4T-4-RSC 4.4T/S3060
4m

BN BU BK WH

-BGS/R
1 3
2 4
A2 A1

WWS001A

Shot Pin 22

=V1GL1UQ54UQ22.1
+.GL1UQ54UQ22.1
-UQ22.1

=V1GL1UQ54
-UQ22.1-BGS/R
Shot Pin 22

=V1GL1UQ54UQ21+.GL1UQ54UQ21/1

=V1GL1UQ54UQ23+.GL1UQ54UQ23/1

			Date	1/17/2023	Volvo Trucks North America	Valiant TMS	FESTO DQ CONNECTION QN23	Drawing name: =2V09&EFS-EL	= V1GL1UQ54UQ22
			Ed.	MKLEPADLO					+ V1GL1UQ54UQ22
			Appr		P6700 Bodyside LH - Robot Cell 2V09			Document type: EFS	Project nr: 22-16150
Modification	Date	Name	Original		Replacement of	Replaced by	Scale 1:1		Page 1 / 1533

0	1	2	3	4	5	6	7	8	9

=V1GL1UQ54KF3
+.GL1UQ54

-KF3.22
=V1GL1UQ54KF3+V1GL1UQ54/2.1

Shot Pin 23 (RST)	Shot Pin 23 (SET)
=V1GL1UQ54KF2	=V1GL1UQ54KF2
+V1GL1UQ54	+V1GL1UQ54
-QN24.1_Q	-QN24.2_Q
=V1GL1UQ54KF3	=V1GL1UQ54KF3
+V1GL1UQ54/2.3	+V1GL1UQ54/2.3
Q2925.6	Q2925.7
2.1 Pneumatic Valve	2.2 Pneumatic Valve

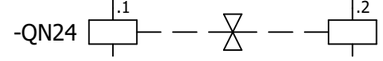

=V1GL1UQ54KF3+V1GL1UQ54/1.4
+V1GL1UQ54UQ23.1-W1

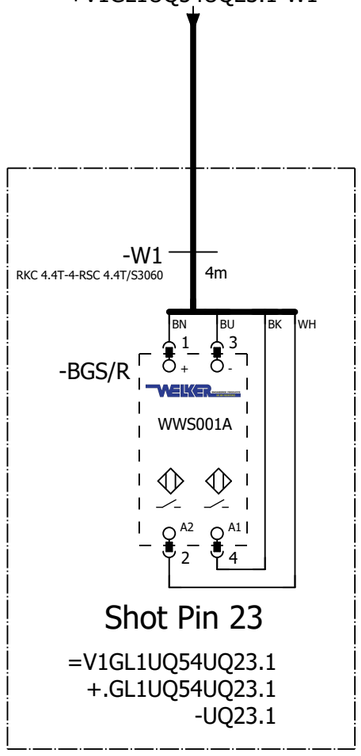

Shot Pin 23

=V1GL1UQ54UQ23.1
+.GL1UQ54UQ23.1
-UQ23.1

=V1GL1UQ54 -UQ23.1-BGS/R Shot Pin 23

=V1GL1UQ54UQ22+.GL1UQ54UQ22/1

=V1GL1UQ54WC4+V1GL1UQ54/1

			Date	1/17/2023	Volvo Trucks North America	Valiant TMS	FESTO DQ CONNECTION QN24	Drawing name: =2V09&EFS-EL	= V1GL1UQ54UQ23
			Ed.	MKLEPADLO					+ V1GL1UQ54UQ23
			Appr		P6700 Bodyside LH - Robot Cell 2V09			Document type: EFS	Project nr: 22-16150
Modification	Date	Name	Original		Replacement of	Replaced by	Scale 1:1		Page 1 / 1533

0	1	2	3	4	5	6	7	8	9

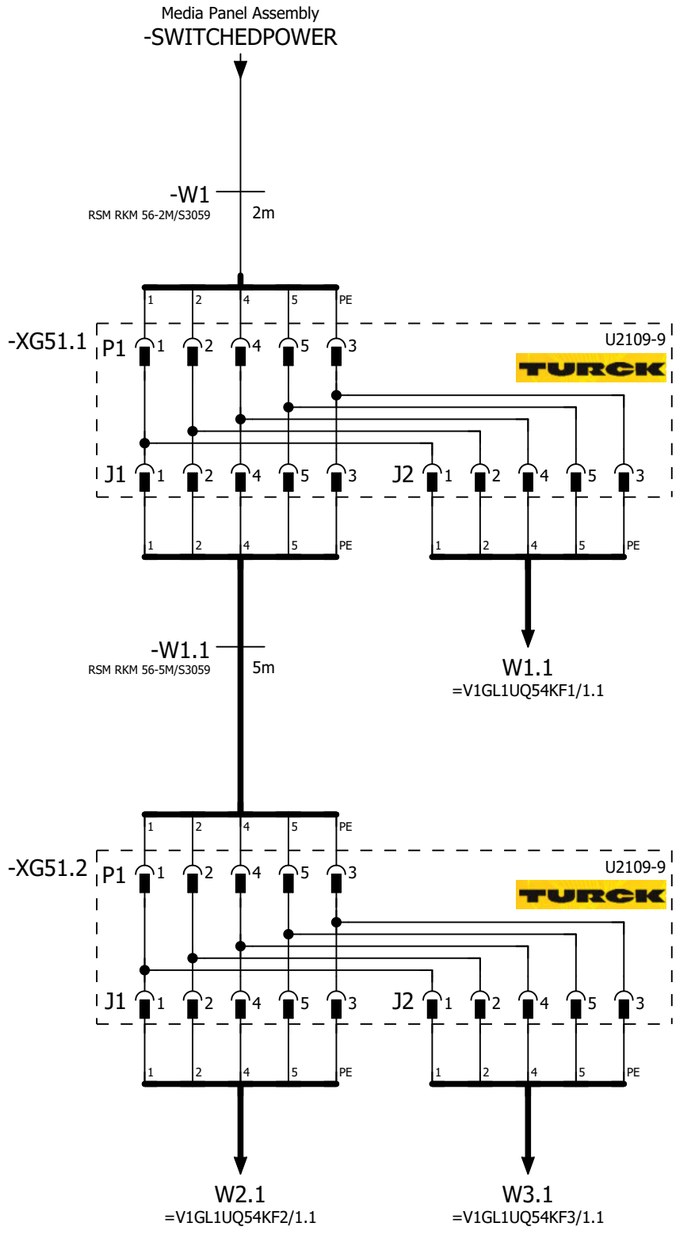

=V1GL1UQ54UQ23+.GL1UQ54UQ23/1

=V1GL1UQ56KF1+.GL1UQ56/1

			Date	1/17/2023	Volvo Trucks North America	Valiant TMS	24VDC	Drawing name: =2V09&EFS-EL	= V1GL1UQ54WC4
			Ed.	MKLEPADLO					+ V1GL1UQ54
			Appr		P6700 Bodyside LH - Robot Cell 2V09	Scale 1:1		Document type: EFS	Project nr: 22-16150
Modification	Date	Name	Original		Replacement of	Replaced by			Page 1 / 1533

0	1	2	3	4	5	6	7	8	9

=V1WC4+.UC12/24.5 / W1

-W1
RSM RKM 56-25M/S3059
25m

=V1KF1+.UC12/2.6 / +.UC12-KF100.12-P10

-KF100.12-P10
PROFINET Cable
6XV1840-3AH10

-KF1

X20 M12, 7/8" 1 2 PE 4 5
0V_VAL / OUT
0V_EL / SEN
FE
24V_EL / SEN
24V_VAL / OUT

ON
OFF
1 2 1 2

M12 -TP1
M12 -TP2

FESTO
Bus node + Interlinking block
548755 + 550208

I2950.0	DI 0 X1:4	V1GL1UQ56UQ1.1-BGR	Modile Supply Assembly (RESET)
I2950.1	DI 1 X1:2	V1GL1UQ56UQ1.1-BGS	Modile Supply Assembly (SET)
I2950.2	DI 2 X2:4	I2950.2	Spare
I2950.3	DI 3 X2:2	I2950.3	Spare
I2950.4	DI 4 X3:4	I2950.4	Spare
I2950.5	DI 5 X3:2	I2950.5	Spare
I2950.6	DI 6 X4:4	I2950.6	Spare
I2950.7	DI 7 X4:2	I2950.7	Spare
I2951.0	DI 8 X5:4	I2951.0	Spare
I2951.1	DI 9 X5:2	I2951.1	Spare
I2951.2	DI 10 X6:4	I2951.2	Spare
I2951.3	DI 11 X6:2	I2951.3	Spare
I2951.4	DI 12 X7:4	I2951.4	Spare
I2951.5	DI 13 X7:2	I2951.5	Spare
I2951.6	DI 14 X8:4	I2951.6	Spare
I2951.7	DI 15 X8:2	I2951.7	Spare

-KF1.11

FESTO
CPX-M-AB-8-M12X2-5POL
549335

X1 M12 1 2 3 4 5 — 24V DI 1 0V DI 0 FE
X2 M12 1 2 3 4 5 — 24V DI 3 0V DI 2 FE
X3 M12 1 2 3 4 5 — 24V DI 5 0V DI 4 FE
X4 M12 1 2 3 4 5 — 24V DI 7 0V DI 6 FE
X5 M12 1 2 3 4 5 — 24V DI 9 0V DI 8 FE
X6 M12 1 2 3 4 5 — 24V DI 11 0V DI 10 FE
X7 M12 1 2 3 4 5 — 24V DI 13 0V DI 12 FE
X8 M12 1 2 3 4 5 — 24V DI 15 0V DI 14 FE

BN WH BU BK

+.GL1UQ56UQ1.1-W1
=V1GL1UQ56UQ1+.GL1UQ56UQ1/1.1

=V1GL1UQ54WC4+.GL1UQ54/1

2

			Date	1/17/2023	Volvo Trucks North America	Valiant TMS	CONNECTING MOD. FOR VTSA MANIFOLD	Drawing name: =2V09&EFS-EL	= V1GL1UQ56KF1
			Ed.	MKLEPADLO					+ V1GL1UQ56
			Appr		P6700 Bodyside LH - Robot Cell 2V09			Document type: EFS	Project nr: 22-16150
Modification	Date	Name	Original		Replacement of	Replaced by	Scale 1:1		Page 1 / 1533

-KF1 -KF1.11 -KF1.20 -KF1.21 -KF1.22 -KF1.23

M1

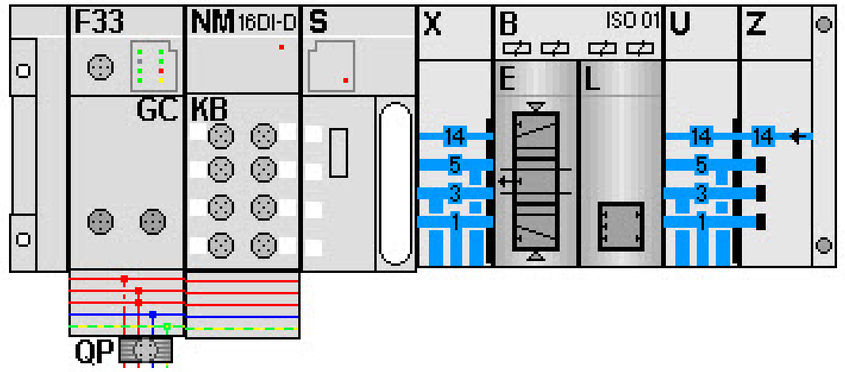

-KF1.21
=V1GL1UQ56UQ1+.GL1UQ56UQ1/1.3

FESTO

=V1GL1UQ56UQ1+.GL1UQ56UQ1/1.4	Q2950.0 DO 0 1.1	-QN1.1_Q	Mobile Supply Assembly (RST)
=V1GL1UQ56UQ1+.GL1UQ56UQ1/1.4	Q2950.1 DO 1 1.2	-QN1.2_Q	Mobile Supply Assembly (SET)
	Q2950.2 DO 2 2.1	-QN2.1_Q	Spare
	Q2950.3 DO 3 2.2	-QN2.2_Q	Spare

1

=V1GL1UQ56UQ1+.GL1UQ56UQ1/1

			Date	1/17/2023	Volvo Trucks North America	Valiant TMS	CONNECTING MOD. FOR FESTO DQ	Drawing name: =2V09&EFS-EL	= V1GL1UQ56KF1
			Ed.	MKLEPADLO					+ V1GL1UQ56
			Appr		P6700 Bodyside LH - Robot Cell 2V09			Document type: EFS	Project nr: 22-16150
Modification	Date	Name	Original		Replacement of / Replaced by	Scale 1:1			Page 2 / 1533

0	1	2	3	4	5	6	7	8	9

=V1GL1UQ56KF1
+.GL1UQ56

-KF1.21
=V1GL1UQ56KF1+V1GL1UQ56/2.1

Mobile Supply Assembly (RST)	Mobile Supply Assembly (SET)
=V1GL1UQ56KF1	=V1GL1UQ56KF1
+V1GL1UQ56	+V1GL1UQ56
-QN1.1_Q	-QN1.2_Q
=V1GL1UQ56KF1	=V1GL1UQ56KF1
+V1GL1UQ56/2.3	+V1GL1UQ56/2.3
Q2950.0	Q2950.1
1.1 Pneumatic Valve	1.2 Pneumatic Valve

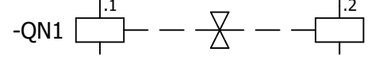

=V1GL1UQ56KF1+V1GL1UQ56/1.1
+.GL1UQ56UQ1.1-W1

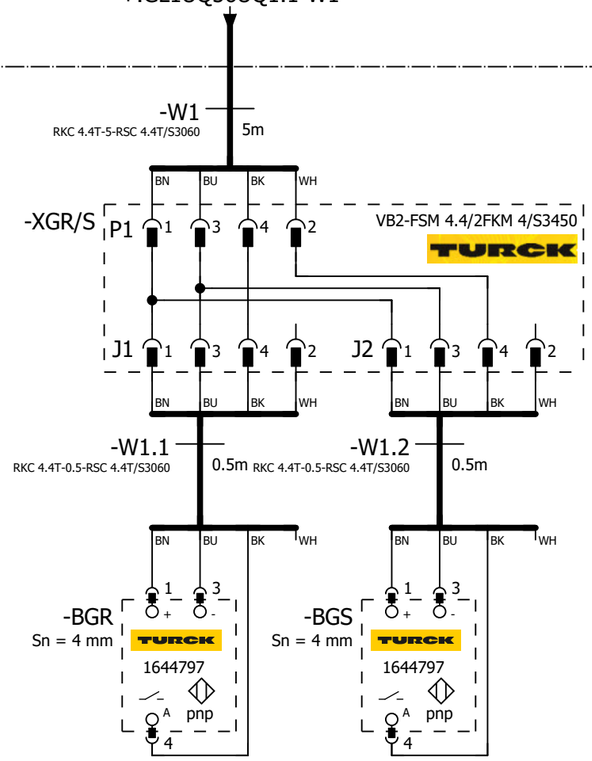

Mobile Supply Assembly
=V1GL1UQ56UQ1.1
+.GL1UQ56UQ1.1
-UQ1.1

=V1GL1UQ56
-UQ1.1-BGR
Mobile Supply
Assembly

=V1GL1UQ56
-UQ1.1-BGS
Mobile Supply
Assembly

=V1GL1UQ56KF1+V1GL1UQ56/2

=V1GL1UQ57KF1+.GL1UQ57/1

			Date	1/17/2023	Volvo Trucks North America	Valiant TMS	FESTO DQ CONNECTION QN1	Drawing name: =2V09&EFS-EL	= V1GL1UQ56UQ1
			Ed.	MKLEPADLO					+ V1GL1UQ56UQ1
			Appr		P6700 Bodyside LH - Robot Cell 2V09			Document type: EFS	Project nr: 22-16150
Modification	Date	Name	Original		Replacement of / Replaced by	Scale 1:1			Page 1 / 1533

0	1	2	3	4	5	6	7	8	9

=V1WC4+.UC12/25.5 / W1

=V1KF1+.UC12/2.6 / +.UC12-KF100.12-P11

-W1
RSM RKM 56-25M/S3059
25m

-KF100.12-P11
PROFINET Cable
6XV1840-3AH10

-KF1

X20 M12, 7/8" 1 2 PE 4 5

0V_VAL / OUT | 0V_EL / SEN | FE | 24V_EL / SEN | 24V_VAL / OUT

ON / OFF 1 2 1 2

M12 -TP1 M12 -TP2

FESTO
Bus node + Interlinking block
548755 + 550208

I2975.0 DI 0 X1:4	V1GL1UQ57UQ1.1-BGR	Modile Supply Assembly (RESET)
I2975.1 DI 1 X1:2	V1GL1UQ57UQ1.1-BGS	Modile Supply Assembly (SET)
I2975.2 DI 2 X2:4	I2975.2	Spare
I2975.3 DI 3 X2:2	I2975.3	Spare
I2975.4 DI 4 X3:4	I2975.4	Spare
I2975.5 DI 5 X3:2	I2975.5	Spare
I2975.6 DI 6 X4:4	I2975.6	Spare
I2975.7 DI 7 X4:2	I2975.7	Spare
I2976.0 DI 8 X5:4	I2976.0	Spare
I2976.1 DI 9 X5:2	I2976.1	Spare
I2976.2 DI 10 X6:4	I2976.2	Spare
I2976.3 DI 11 X6:2	I2976.3	Spare
I2976.4 DI 12 X7:4	I2976.4	Spare
I2976.5 DI 13 X7:2	I2976.5	Spare
I2976.6 DI 14 X8:4	I2976.6	Spare
I2976.7 DI 15 X8:2	I2976.7	Spare

-KF1.11

FESTO
CPX-M-AB-8-M12X2-5POL
549335

X1 M12 1 2 3 4 5 — 24V | DI 1 | 0V | DI 0 | FE

X2 M12 1 2 3 4 5 — 24V | DI 3 | 0V | DI 2 | FE

X3 M12 1 2 3 4 5 — 24V | DI 5 | 0V | DI 4 | FE

X4 M12 1 2 3 4 5 — 24V | DI 7 | 0V | DI 6 | FE

X5 M12 1 2 3 4 5 — 24V | DI 9 | 0V | DI 8 | FE

X6 M12 1 2 3 4 5 — 24V | DI 11 | 0V | DI 10 | FE

X7 M12 1 2 3 4 5 — 24V | DI 13 | 0V | DI 12 | FE

X8 M12 1 2 3 4 5 — 24V | DI 15 | 0V | DI 14 | FE

BN | WH | BU | BK

+.GL1UQ57UQ1.1-W1
=V1GL1UQ57UQ1+.GL1UQ57UQ1/1.1

=V1GL1UQ56UQ1+.GL1UQ56UQ1/1

2

			Date	1/17/2023	Volvo Trucks North America	Valiant TMS	CONNECTING MOD. FOR VTSA MANIFOLD	Drawing name: =2V09&EFS-EL	= V1GL1UQ57KF1
			Ed.	MKLEPADLO					+ V1GL1UQ57
			Appr		P6700 Bodyside LH - Robot Cell 2V09			Document type: EFS	Project nr: 22-16150
Modification	Date	Name	Original		Replacement of / Replaced by	Scale 1:1			Page 1 / 1533

0	1	2	3	4	5	6	7	8	9

-KF1 -KF1.11 -KF1.20 -KF1.21 -KF1.22 -KF1.23

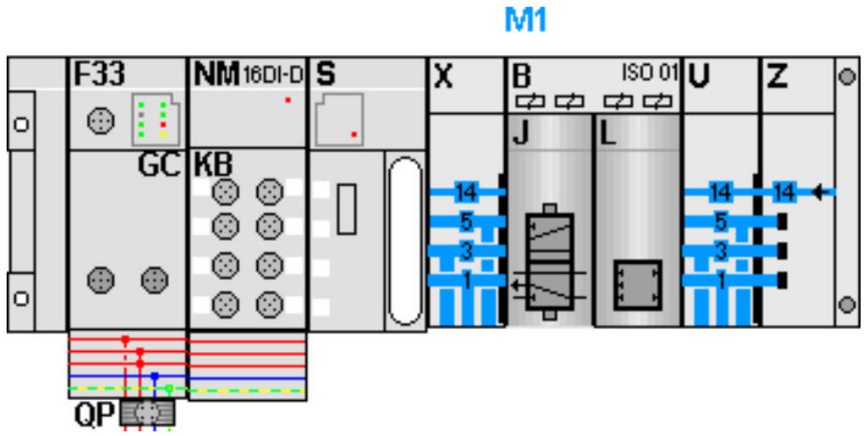

-KF1.21
=V1GL1UQ57UQ1+.GL1UQ57UQ1/1.3

FESTO

=V1GL1UQ57UQ1+.GL1UQ57UQ1/1.4	Q2975.0 DO 0 1.1	-QN1.1_Q	Mobile Supply Assembly (RST)
=V1GL1UQ57UQ1+.GL1UQ57UQ1/1.4	Q2975.1 DO 1 1.2	-QN1.2_Q	Mobile Supply Assembly (SET)
	Q2975.2 DO 2 2.1	-QN2.1_Q	Spare
	Q2975.3 DO 3 2.2	-QN2.2_Q	Spare

1

=V1GL1UQ57UQ1+.GL1UQ57UQ1/1

			Date	1/17/2023	Volvo Trucks North America	Valiant TMS	CONNECTING MOD. FOR FESTO DQ	Drawing name: =2V09&EFS-EL	= V1GL1UQ57KF1	
			Ed.	MKLEPADLO					+ V1GL1UQ57	
			Appr		P6700 Bodyside LH - Robot Cell 2V09			Document type: EFS	Project nr: 22-16150	Page 2
Modification	Date	Name	Original		Replacement of	Replaced by	Scale 1:1			1533

0	1	2	3	4	5	6	7	8	9

=V1GL1UQ57KF1
+.GL1UQ57

-KF1.21
=V1GL1UQ57KF1+V1GL1UQ57/2.1

Mobile Supply Assembly (RST)	Mobile Supply Assembly (SET)
=V1GL1UQ57KF1	=V1GL1UQ57KF1
+V1GL1UQ57	+V1GL1UQ57
-QN1.1_Q	-QN1.2_Q
=V1GL1UQ57KF1	=V1GL1UQ57KF1
+V1GL1UQ57/2.3	+V1GL1UQ57/2.3
Q2975.0	Q2975.1
1.1 Pneumatic Valve	1.2 Pneumatic Valve

=V1GL1UQ57KF1+V1GL1UQ57/1.1
+.GL1UQ57UQ1.1-W1

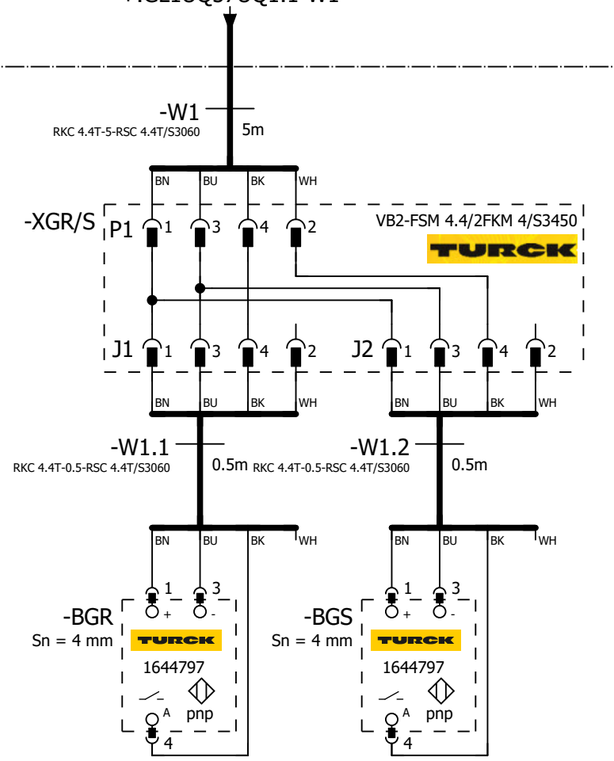

Mobile Supply Assembly
=V1GL1UQ57UQ1.1
+.GL1UQ57UQ1.1
-UQ1.1

=V1GL1UQ57 -UQ1.1-BGR Mobile Supply Assembly	=V1GL1UQ57 -UQ1.1-BGS Mobile Supply Assembly

=V1GL1UQ57KF1+V1GL1UQ57/2

=V1GL1WC1+.GL1UC01/1

			Date	1/17/2023	Volvo Trucks North America	Valiant TMS	FESTO DQ CONNECTION QN1	Drawing name: =2V09&EFS-EL	= V1GL1UQ57UQ1
			Ed.	MKLEPADLO					+ V1GL1UQ57UQ1
			Appr		P6700 Bodyside LH - Robot Cell 2V09			Document type: EFS	Project nr: 22-16150
Modification	Date	Name	Original		Replacement of	Replaced by	Scale 1:1		Page 1 / 1533

0	1	2	3	4	5	6	7	8	9

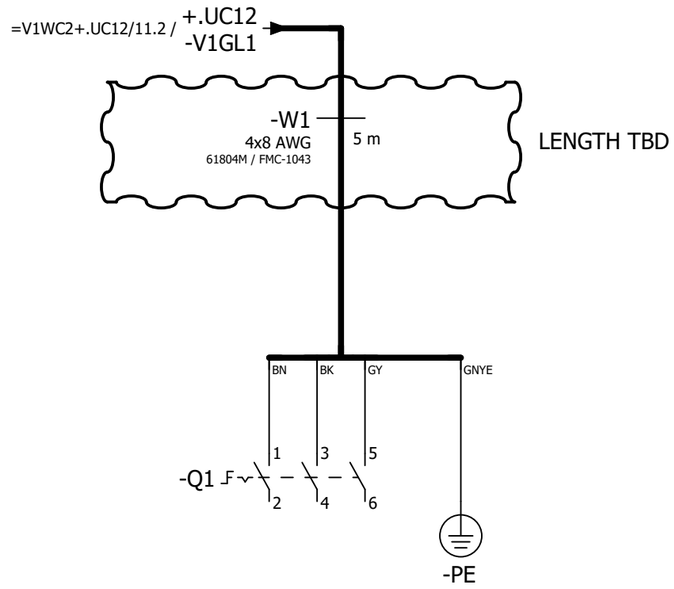

=V1GL1UQ57UQ1+.GL1UQ57UQ1/1

=V1GL2KF1+.GL2/1

			Date	1/17/2023	Volvo Trucks North America	Valiant TMS	Incoming power	Drawing name: =2V09&EFS-EL	= V1GL1WC1
			Ed.	MKLEPADLO					+ V1GL1UC01
			Appr		P6700 Bodyside LH - Robot Cell 2V09	Scale 1:1		Document type: EFS	Project nr: 22-16150
Modification	Date	Name	Original		Replacement of	Replaced by			Page 1 / 1533

0	1	2	3	4	5	6	7	8	9

=V1GL2WC4/1.7 / W5

=V1GL2WC4/1.8 / -WF5

FESTO Manifold
Provided by ABB

-KF1

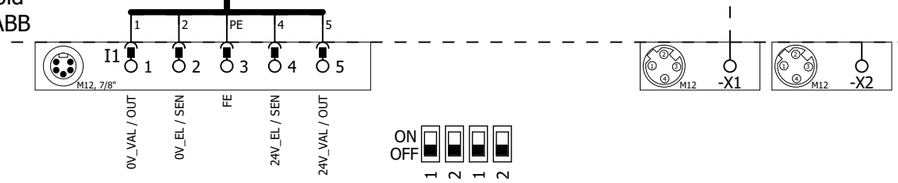

FESTO

Bus node + Interlinking block
548755 + 550208

-KF1.11

FESTO

CPX-AB-4-M12X2-5POL-R
541254

I2700.0	DI 0 X1:4	CRC1-BGR	Cylindrical Pin (RESET)
I2700.1	DI 1 X1:2	CRC1-BGS	Cylindrical Pin (SET)
I2700.2	DI 2 X2:4	CRC2-BGR	Cylindrical Pin (RESET)
I2700.3	DI 3 X2:2	CRC2-BGS	Cylindrical Pin (SET)
I2700.4	DI 4 X3:4	CRC3-BGR	Utility Coupler Guide (RESET)
I2700.5	DI 5 X3:2	CRC3-BGS	Utility Coupler Guide (SET)
I2700.6	DI 6 X4:4	CR-PP1	Pallet Detect Sensor 1
I2700.7	DI 7 X4:2	CR-PP2	Pallet Detect Sensor 2

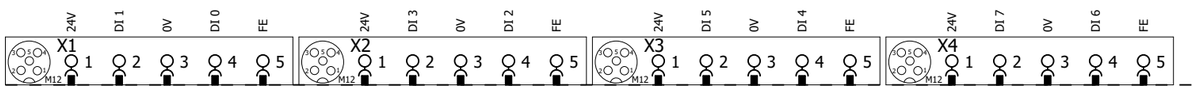

See ABB 3HAW050043350 Package for details.

=V1GL1WC1+.GL1UC01/1

2

			Date	1/17/2023	Volvo Trucks North America	Valiant TMS	CONNECTING MOD. FOR VTSA MANIFOLD	Drawing name: =2V09&EFS-EL	= V1GL2KF1
			Ed.	MKLEPADLO					+ V1GL2
			Appr		P6700 Bodyside LH - Robot Cell 2V09			Document type: EFS	Project nr: 22-16150 / Page 1
Modification	Date	Name	Original		Replacement of / Replaced by	Scale 1:1			1533

0	1	2	3	4	5	6	7	8	9

-KF1.12

FESTO

CPX-AB-4-M12X2-5POL-R

541254

I2701.0	DI 0 X1:4	CR-PT1	Pallet Identifier Sensor 1
I2701.1	DI 1 X1:2	CR-PT2	Pallet Identifier Sensor 2
I2701.2	DI 2 X2:4	CR-PT3	Pallet Identifier Sensor 3
I2701.3	DI 3 X2:2	I2701.3	Spare
I2701.4	DI 4 X3:4	I2701.4	Spare
I2701.5	DI 5 X3:2	I2701.5	Spare
I2701.6	DI 6 X4:4	I2701.6	Spare
I2701.7	DI 7 X4:2	I2701.7	Spare

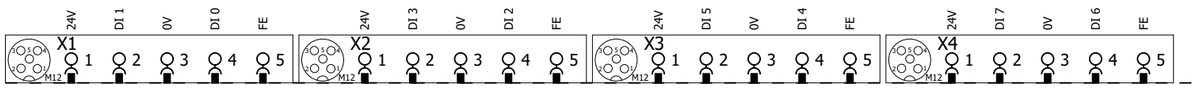

See ABB 3HAW050043350 Package for details.

1 3

			Date	1/17/2023	Volvo Trucks North America	Valiant TMS	I/O MOD. DI8 (4 x M12) FOR VTSA-F	Drawing name: =2V09&EFS-EL	= V1GL2KF1
			Ed.	MKLEPADLO					+ V1GL2
			Appr		P6700 Bodyside LH - Robot Cell 2V09	Scale 1:1		Document type: EFS	Project nr: 22-16150
Modification	Date	Name	Original		Replacement of	Replaced by			Page 2 / 1533

0	1	2	3	4	5	6	7	8	9

-KF1.13

FESTO

CPX-AB-4-M12X2-5POL-R

541254

Q2705.0	DO 0 X1:4	Q2705.0	Spare
Q2705.1	DO 1 X1:2	Q2705.1	Spare
Q2705.2	DO 2 X2:4	Q2705.2	Spare
Q2705.3	DO 3 X2:2	Q2705.3	Spare
Q2705.4	DO 4 X3:4	Q2705.4	Spare
Q2705.5	DO 5 X3:2	Q2705.5	Spare
Q2705.6	DO 6 X4:4	Q2705.6	Spare
Q2705.7	DO 7 X4:2	Q2705.7	Spare

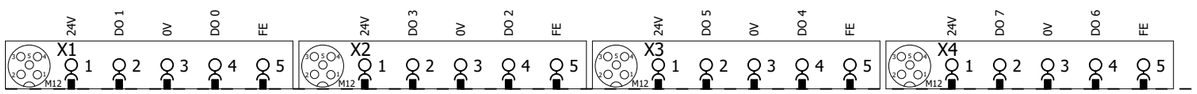

See ABB 3HAW050043350 Package for details.

2

4

			Date	1/17/2023	Volvo Trucks North America	Valiant TMS	I/O MOD. DO8 (4 x M12) FOR VTSA-F	Drawing name: =2V09&EFS-EL	= V1GL2KF1
			Ed.	MKLEPADLO					+ V1GL2
			Appr		P6700 Bodyside LH - Robot Cell 2V09	Scale 1:1		Document type: EFS	Project nr: 22-16150
Modification	Date	Name	Original		Replacement of	Replaced by			Page 3 / 1533

0	1	2	3	4	5	6	7	8	9

-KF1 -KF1.11 -KF1.12 -KF1.13 -KF1.20 -KF1.21 -KF1.22

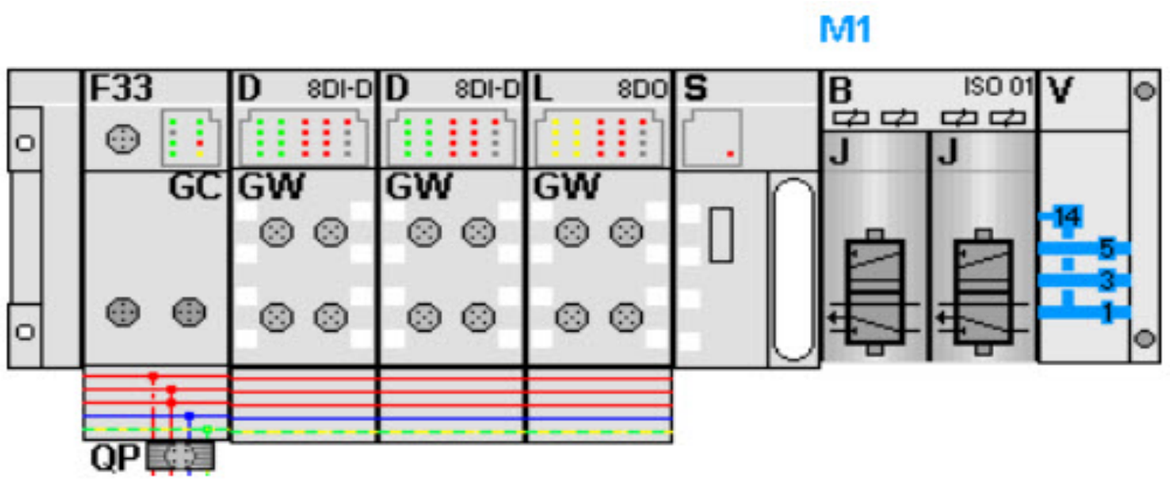

-KF1.21

FESTO

Q2700.0	DO 0 1.1	-QN1.1_Q	Pin Cylinder (RESET)
Q2700.1	DO 1 1.2	-QN1.2_Q	Pin Cylinder (SET)
Q2700.2	DO 2 2.1	-QN2.1_Q	Utility Coupler Guide Cylinder (RESET)
Q2700.3	DO 3 2.2	-QN2.2_Q	Utility Coupler Guide Cylinder (SET)

See ABB 3HAW050043350 Package for details.

			Date	1/17/2023	Volvo Trucks North America	Valiant TMS	CONNECTING MOD. FOR FESTO DQ	Drawing name: =2V09&EFS-EL	= V1GL2KF1	
			Ed.	MKLEPADLO					+ V1GL2	
			Appr		P6700 Bodyside LH - Robot Cell 2V09	Scale 1:1		Document type: EFS	Project nr: 22-16150	Page 4 / 1533
Modification	Date	Name	Original		Replacement of	Replaced by				

0	1	2	3	4	5	6	7	8	9

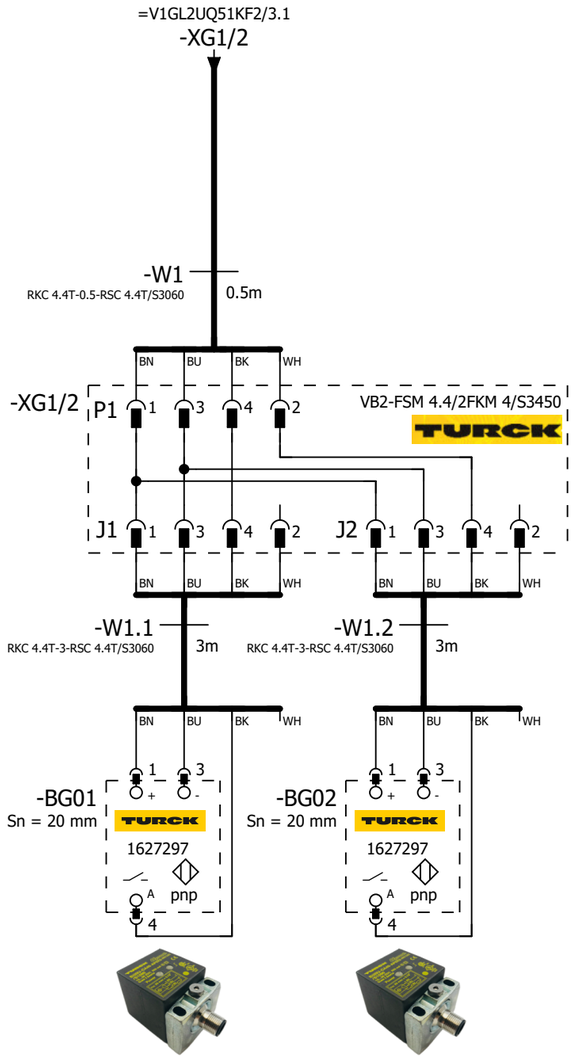

=V1GL2UQ51
-BG01
B-Pillar Inner
Assembly

=V1GL2UQ51
-BG02
B-Pillar Inner
Assembly

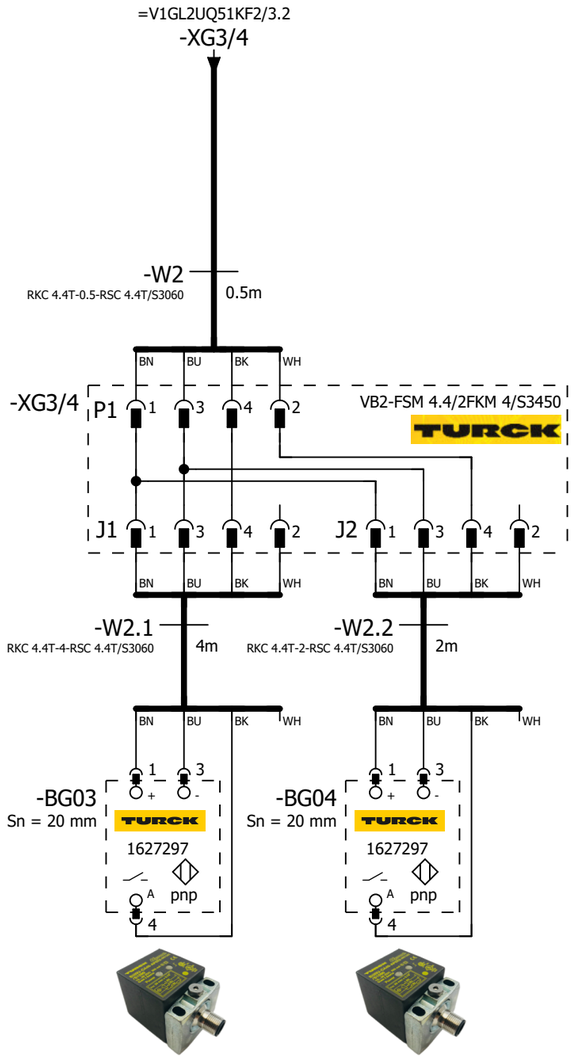

=V1GL2UQ51
-BG03
B-Pillar Inner
Assembly

=V1GL2UQ51
-BG04
A-Pillar Inner
Assembly

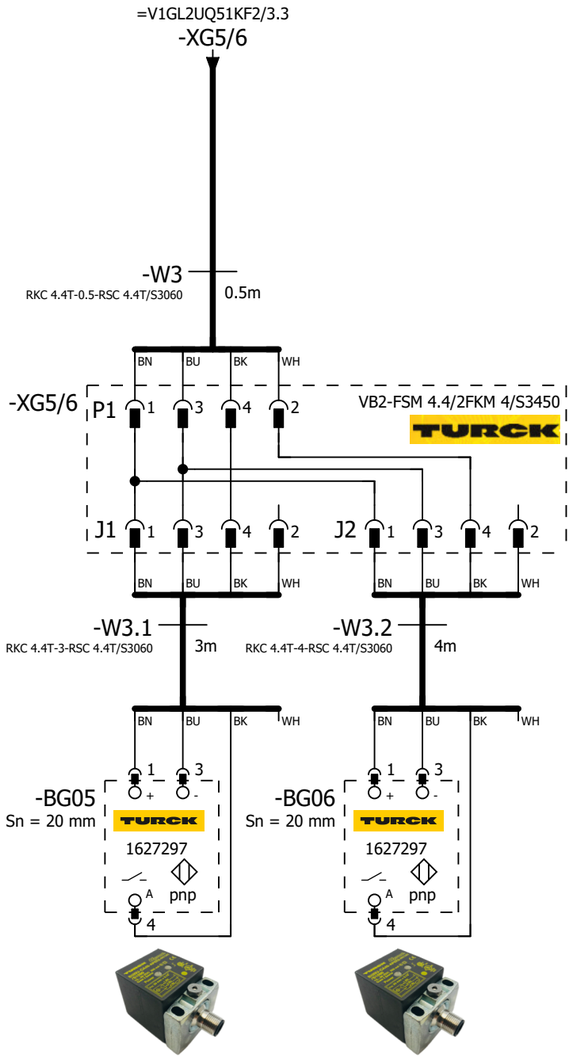

=V1GL2UQ51
-BG05
A-Pillar Inner
Assembly

=V1GL2UQ51
-BG06
Header Inner
Assembly

=V1GL2KF1+V1GL2/4

2

			Date	1/17/2023	Volvo Trucks North America		Valiant TMS	SENSORS	Drawing name: =2V09&EFS-EL	= V1GL2UQ51BG0
			Ed.	MKLEPADLO						+ V1GL2UQ51
			Appr		P6700 Bodyside LH - Robot Cell 2V09		Scale 1:1		Document type: EFS	Project nr: 22-16150 / Page 1 / 1533
Modification	Date	Name	Original		Replacement of	Replaced by				

0	1	2	3	4	5	6	7	8	9

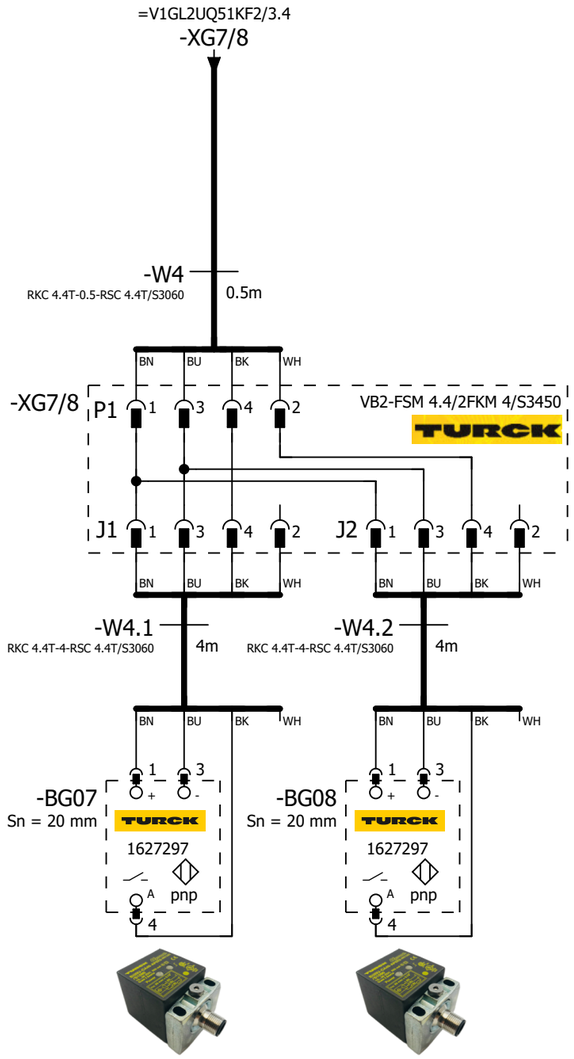

=V1GL2UQ51
-BG07
Header Inner
Assembly

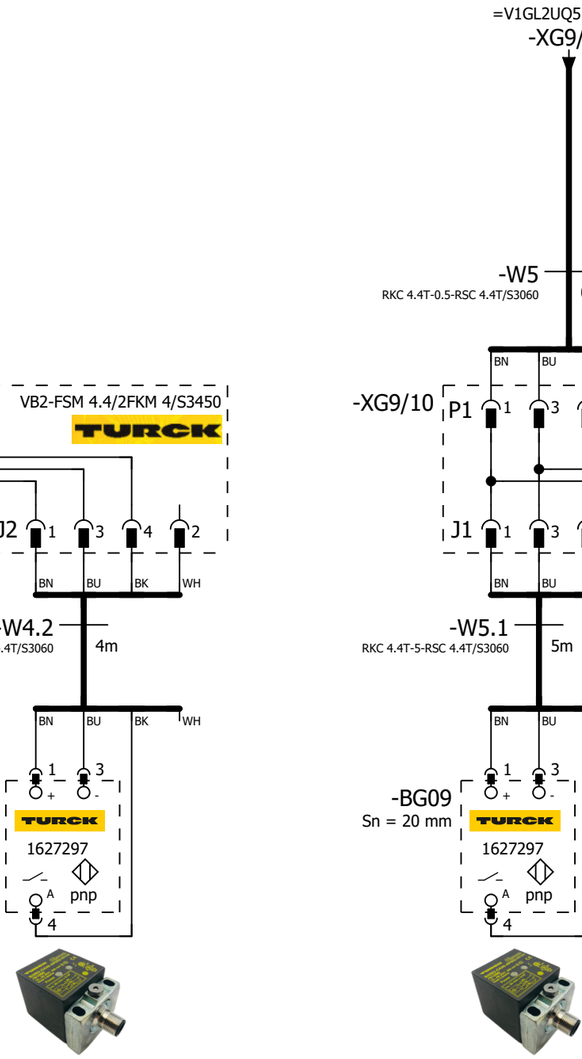

=V1GL2UQ51
-BG08
Salem Vent
Reinf/L230

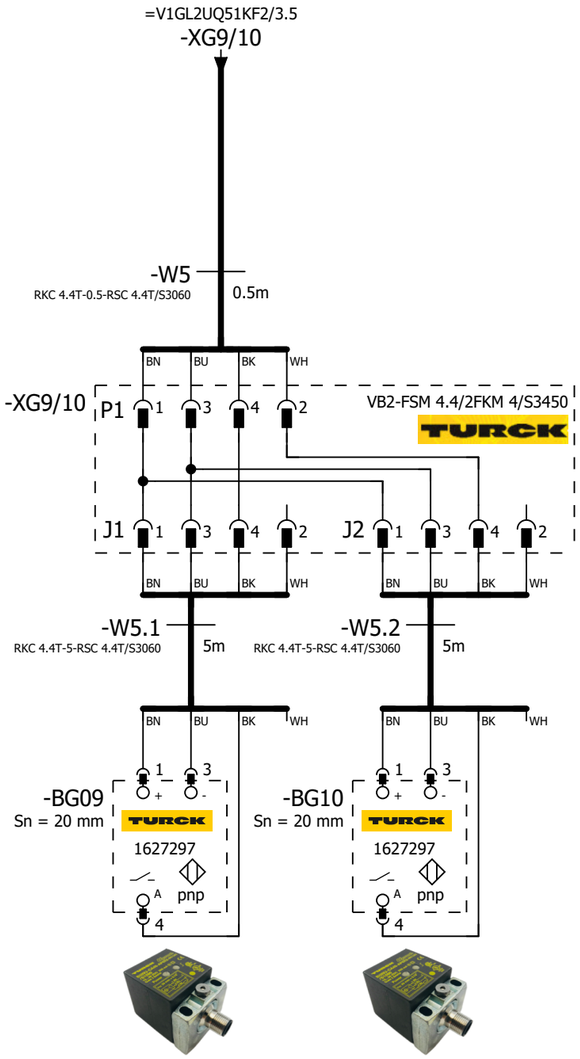

=V1GL2UQ51
-BG09
Salem Vent
Reinf/L230

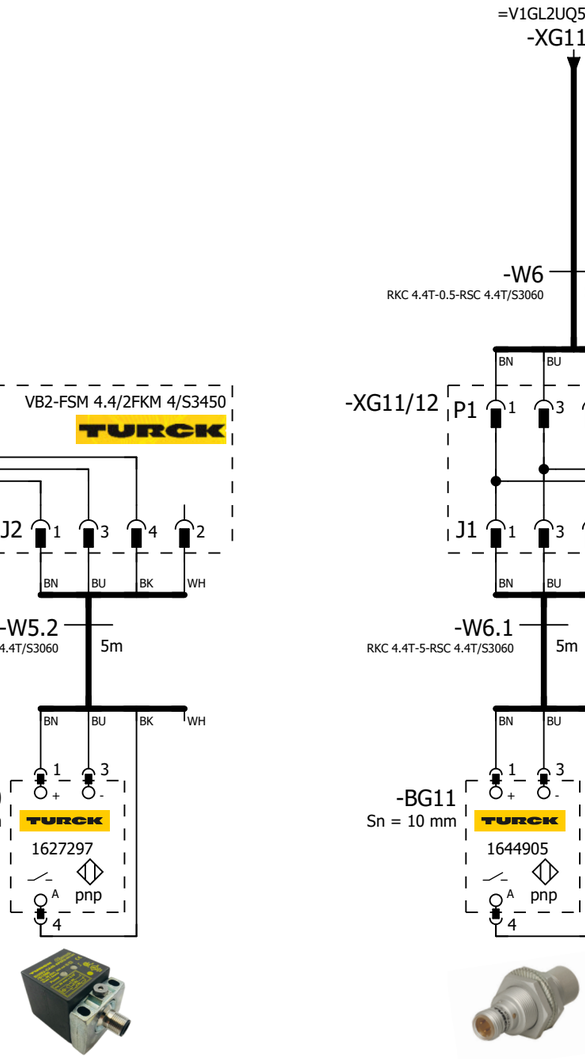

=V1GL2UQ51
-BG10
Salem Vent
Reinf/L230

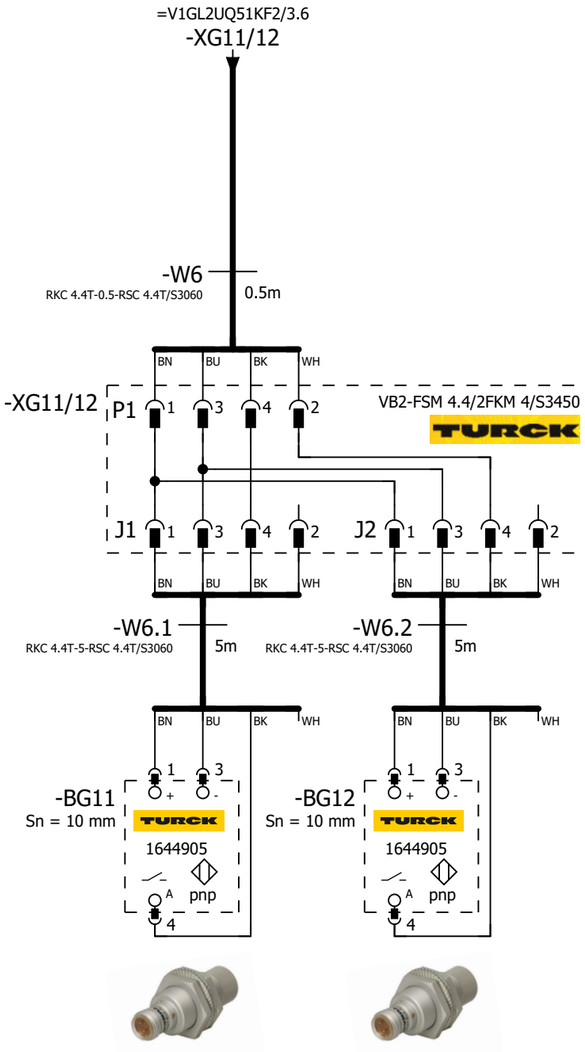

=V1GL2UQ51
-BG11
Baffle Inner
Header/L230

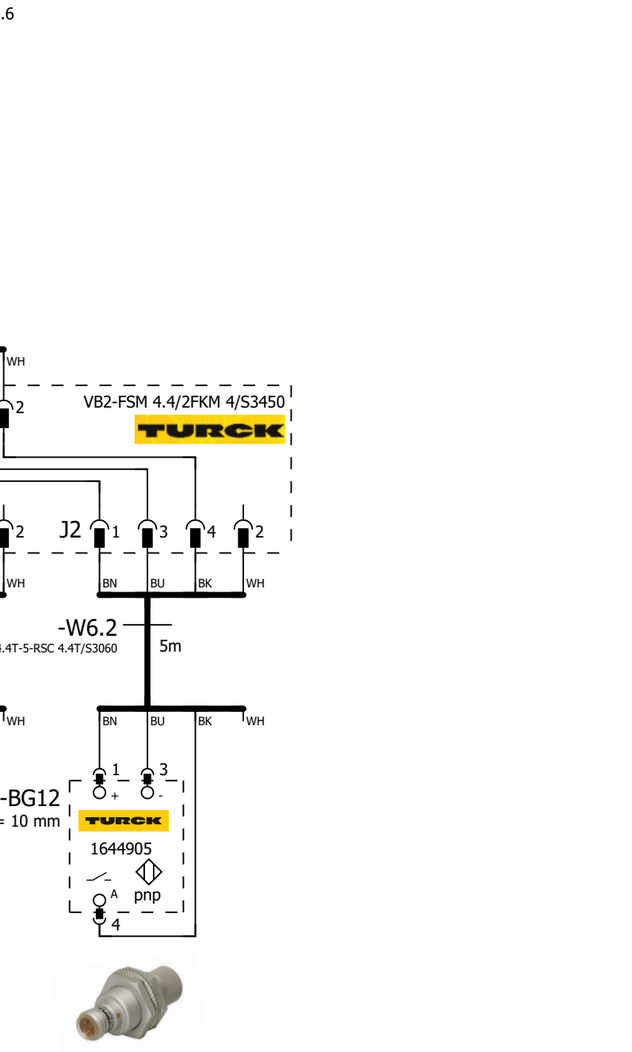

=V1GL2UQ51
-BG12
Baffle Inner
Header/L230

1

3

			Date	1/17/2023	Volvo Trucks North America		Valiant TMS	SENSORS	Drawing name: =2V09&EFS-EL	= V1GL2UQ51BG0
			Ed.	MKLEPADLO						+ V1GL2UQ51
			Appr		P6700 Bodyside LH - Robot Cell 2V09		Scale 1:1		Document type: EFS	Project nr: 22-16150
Modification	Date	Name	Original		Replacement of	Replaced by				Page 2 / 1533

0	1	2	3	4	5	6	7	8	9

=V1GL2UQ51KF3/3.1
-XG13/14

-W7
RKC 4.4T-0.5-RSC 4.4T/S3060
0.5m

BN BU BK WH

-XG13/14 P1 1 3 4 2 VB2-FSM 4.4/2FKM 4/S3450

J1 1 3 4 2 J2 1 3 4 2

BN BU BK WH

-W7.1
RKC 4.4T-6-RSC 4.4T/S3060
6m

-W7.2
RKC 4.4T-5-RSC 4.4T/S3060
5m

BN BU BK WH

-BG13
Sn = 20 mm
TURCK
1627297
pnp
1 3 4

-BG14
Sn = 20 mm
TURCK
1627297
pnp
1 3 4

=V1GL2UQ51
-BG13
Side Inner Header
Asm/L230

=V1GL2UQ51
-BG14
Header Inner
Rear/L290

=V1GL2UQ51KF3/3.2
-XG15/16

-W8
RKC 4.4T-0.5-RSC 4.4T/S3060
0.5m

BN BU BK WH

-XG15/16 P1 1 3 4 2 VB2-FSM 4.4/2FKM 4/S3450

J1 1 3 4 2 J2 1 3 4 2

BN BU BK WH

-W8.1
RKC 4.4T-6-RSC 4.4T/S3060
6m

-W8.2
RKC 4.4T-6-RSC 4.4T/S3060
6m

BN BU BK WH

-BG15
Sn = 20 mm
TURCK
1627297
pnp
1 3 4

-BG16
Sn = 20 mm
TURCK
1627297
pnp
1 3 4

=V1GL2UQ51
-BG15
Window Blind
Mnt/L290

=V1GL2UQ51
-BG16
Window Blind
Mnt/L290

=V1GL2UQ51KF3/3.3
-BG17

-W9
RKC 4.4T-8-RSC 4.4T/S3060
8 m

BN BU BK WH

-BG17
Sn = 20 mm
TURCK
1627297
pnp
1 3 4

=V1GL2UQ51
-BG17
Header Inner
Mid/L320

2 4

			Date	1/17/2023	Volvo Trucks North America		Valiant TMS	SENSORS	Drawing name: =2V09&EFS-EL	= V1GL2UQ51BG0
			Ed.	MKLEPADLO						+ V1GL2UQ51
			Appr		P6700 Bodyside LH - Robot Cell 2V09		Scale 1:1		Document type: EFS	Project nr: 22-16150
Modification	Date	Name	Original		Replacement of	Replaced by				Page 3 / 1533

0	1	2	3	4	5	6	7	8	9

=V1GL2UQ51KF3/3.4
-BG18

-W10
RKC 4.4T-8-RSC 4.4T/S3060
8m

BN BU BK WH

-BG18
Sn = 20 mm
1 3
+ -
TURCK
1627297
A pnp
4

=V1GL2UQ51 -BG18 Side Inner Header Asm/L230

3

=V1GL2UQ51KF1/1

			Date	1/17/2023	Volvo Trucks North America		Valiant TMS	SENSORS	Drawing name: =2V09&EFS-EL	= V1GL2UQ51BG0
			Ed.	MKLEPADLO						+ V1GL2UQ51
			Appr		P6700 Bodyside LH - Robot Cell 2V09		Scale 1:1		Document type: EFS	Project nr: 22-16150
Modification	Date	Name	Original		Replacement of	Replaced by				Page 4 / 1533

0	1	2	3	4	5	6	7	8	9

=V1GL2UQ51WC4+.GL1UQ52/1.6 / W3.2

-W3.2
RSM RKM 56-1M/S3059
1m

=V1GL2WC4+V1GL2/1.8 / -WF2

-WF2
PROFINET Cable
6XV1840-3AH10

KF1-P2 / =V1GL2UQ51KF2/1.3

-KF1

X20 M12, 7/8" 1 2 PE 4 5
0V_VAL / OUT | 0V_EL / SEN | FE | 24V_EL / SEN | 24V_VAL / OUT

ON OFF 1 2 1 2

M12 -TP1 M12 -TP2

FESTO
Bus node + Interlinking block
548755 + 550208

I2150.0	DI 0 X1:4	V1GL2UQ51UQ1.1-BGR	SLide 1 (RESET)
I2150.1	DI 1 X1:2	V1GL2UQ51UQ1.1-BGS	Slide 1 (SET)
I2150.2	DI 2 X2:4	V1GL2UQ51UQ2.1-BGR	Slide 2 (RESET)
I2150.3	DI 3 X2:2	V1GL2UQ51UQ2.1-BGS	Slide 2 (SET)
I2150.4	DI 4 X3:4	V1GL2UQ51UQ3.1-BGR	Slide 3 (RESET)
I2150.5	DI 5 X3:2	V1GL2UQ51UQ3.1-BGS	Slide 3 (SET)
I2150.6	DI 6 X4:4	V1GL2UQ51UQ4.1-BGR	Shot Pins 4 (RESET)
I2150.7	DI 7 X4:2	V1GL2UQ51UQ4.1-BGS	Shot Pins 4 (SET)
I2151.0	DI 8 X5:4	V1GL2UQ51UQ4.2-BGR	Shot Pins 4 (RESET)
I2151.1	DI 9 X5:2	V1GL2UQ51UQ4.2-BGS	Shot Pins 4 (SET)
I2151.2	DI 10 X6:4	V1GL2UQ51UQ4.3-BGR	Shot Pins 4 (RESET)
I2151.3	DI 11 X6:2	V1GL2UQ51UQ4.3-BGS	Shot Pins 4 (SET)
I2151.4	DI 12 X7:4	V1GL2UQ51UQ5.1-BGR	Shot Pins 5 (RESET)
I2151.5	DI 13 X7:2	V1GL2UQ51UQ5.1-BGS	Shot Pins 5 (SET)
I2151.6	DI 14 X8:4	V1GL2UQ51UQ5.2-BGR	Shot Pins 5 (RESET)
I2151.7	DI 15 X8:2	V1GL2UQ51UQ5.2-BGS	Shot Pins 5 (SET)

-KF1.11

FESTO
CPX-M-AB-8-M12X2-5POL
549335

X1 M12 24V 1 | DI 1 2 | 0V 3 | DI 0 4 | FE 5 — BN WH BU BK
X2 M12 24V 1 | DI 3 2 | 0V 3 | DI 2 4 | FE 5 — BN WH BU BK
X3 M12 24V 1 | DI 5 2 | 0V 3 | DI 4 4 | FE 5 — BN WH BU BK
X4 M12 24V 1 | DI 7 2 | 0V 3 | DI 6 4 | FE 5 — BN WH BU BK
X5 M12 24V 1 | DI 9 2 | 0V 3 | DI 8 4 | FE 5 — BN WH BU BK
X6 M12 24V 1 | DI 11 2 | 0V 3 | DI 10 4 | FE 5 — BN WH BU BK
X7 M12 24V 1 | DI 13 2 | 0V 3 | DI 12 4 | FE 5 — BN WH BU BK
X8 M12 24V 1 | DI 15 2 | 0V 3 | DI 14 4 | FE 5 — BN WH BU BK

+V1GL2UQ51UQ1.1-W1 =V1GL2UQ51UQ1+.GL2UQ51UQ1/1.1
+V1GL2UQ51UQ2.1-W1 =V1GL2UQ51UQ2+.GL2UQ51UQ2/1.1
+V1GL2UQ51UQ3.1-W1 =V1GL2UQ51UQ3+.GL2UQ51UQ3/1.1
+V1GL2UQ51UQ4.1-W1 =V1GL2UQ51UQ4+.GL2UQ51UQ4/1.1
+V1GL2UQ51UQ4.2-W1 =V1GL2UQ51UQ4+.GL2UQ51UQ4/1.4
+V1GL2UQ51UQ4.3-W1 =V1GL2UQ51UQ4+.GL2UQ51UQ4/1.6
+V1GL2UQ51UQ5.1-W1 =V1GL2UQ51UQ5+.GL2UQ51UQ5/1.1
+V1GL2UQ51UQ5.2-W1 =V1GL2UQ51UQ5+.GL2UQ51UQ5/1.2

=V1GL2UQ51BG0/4

2

			Date	1/17/2023	Volvo Trucks North America	Valiant TMS	CONNECTING MOD. FOR VTSA MANIFOLD	Drawing name: =2V09&EFS-EL	= V1GL2UQ51KF1
			Ed.	MKLEPADLO					+ V1GL2UQ51
			Appr		P6700 Bodyside LH - Robot Cell 2V09	Scale 1:1		Document type: EFS	Project nr: 22-16150
Modification	Date	Name	Original		Replacement of / Replaced by				Page 1 / 1533

0	1	2	3	4	5	6	7	8	9

-KF1.12

FESTO

CPX-M-AB-8-M12X2-5POL

549335

I2152.0	DI 0 X1:4	V1GL2UQ51UQ5.3-BGR	Shot Pins 5 (RESET)
I2152.1	DI 1 X1:2	V1GL2UQ51UQ5.3-BGS	Shot Pins 5 (SET)
I2152.2	DI 2 X2:4	V1GL2UQ51UQ6.1-BGR	Shot Pins 6 (RESET)
I2152.3	DI 3 X2:2	V1GL2UQ51UQ6.1-BGS	Shot Pins 6 (SET)
I2152.4	DI 4 X3:4	V1GL2UQ51UQ6.2-BGR	Shot Pins 6 (RESET)
I2152.5	DI 5 X3:2	V1GL2UQ51UQ6.2-BGS	Shot Pins 6 (SET)
I2152.6	DI 6 X4:4	V1GL2UQ51UQ7.1-BGR	Shot Pin 7 (RESET)
I2152.7	DI 7 X4:2	V1GL2UQ51UQ7.1-BGS	Shot Pin 7 (SET)
I2153.0	DI 8 X5:4	V1GL2UQ51UQ8.1-BGR	Shot Pins 8 (RESET)
I2153.1	DI 9 X5:2	V1GL2UQ51UQ8.1-BGS	Shot Pins 8 (SET)
I2153.2	DI 10 X6:4	V1GL2UQ51UQ8.2-BGR	Shot Pins 8 (RESET)
I2153.3	DI 11 X6:2	V1GL2UQ51UQ8.2-BGS	Shot Pins 8 (SET)
I2153.4	DI 12 X7:4	V1GL2UQ51UQ8.3-BGR	Shot Pins 8 (RESET)
I2153.5	DI 13 X7:2	V1GL2UQ51UQ8.3-BGS	Shot Pins 8 (SET)
I2153.6	DI 14 X8:4	V1GL2UQ51UQ8.4-BGR	Shot Pins 8 (RESET)
I2153.7	DI 15 X8:2	V1GL2UQ51UQ8.4-BGS	Shot Pins 8 (SET)

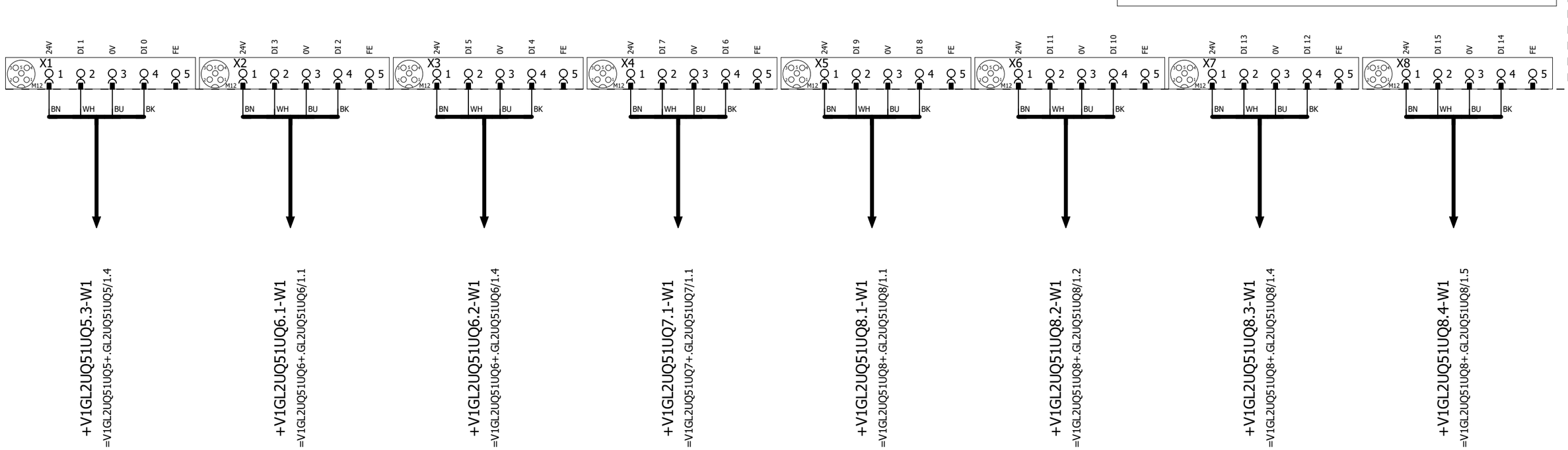

1 3

			Date	1/17/2023	Volvo Trucks North America	Valiant TMS	I/O MOD. DI16 (8 x M12) FOR VTSA-F	Drawing name: =2V09&EFS-EL	= V1GL2UQ51KF1
			Ed.	MKLEPADLO					+ V1GL2UQ51
			Appr		P6700 Bodyside LH - Robot Cell 2V09	Scale 1:1		Document type: EFS	Project nr: 22-16150
Modification	Date	Name	Original		Replacement of / Replaced by				Page 2 / 1533

0	1	2	3	4	5	6	7	8	9

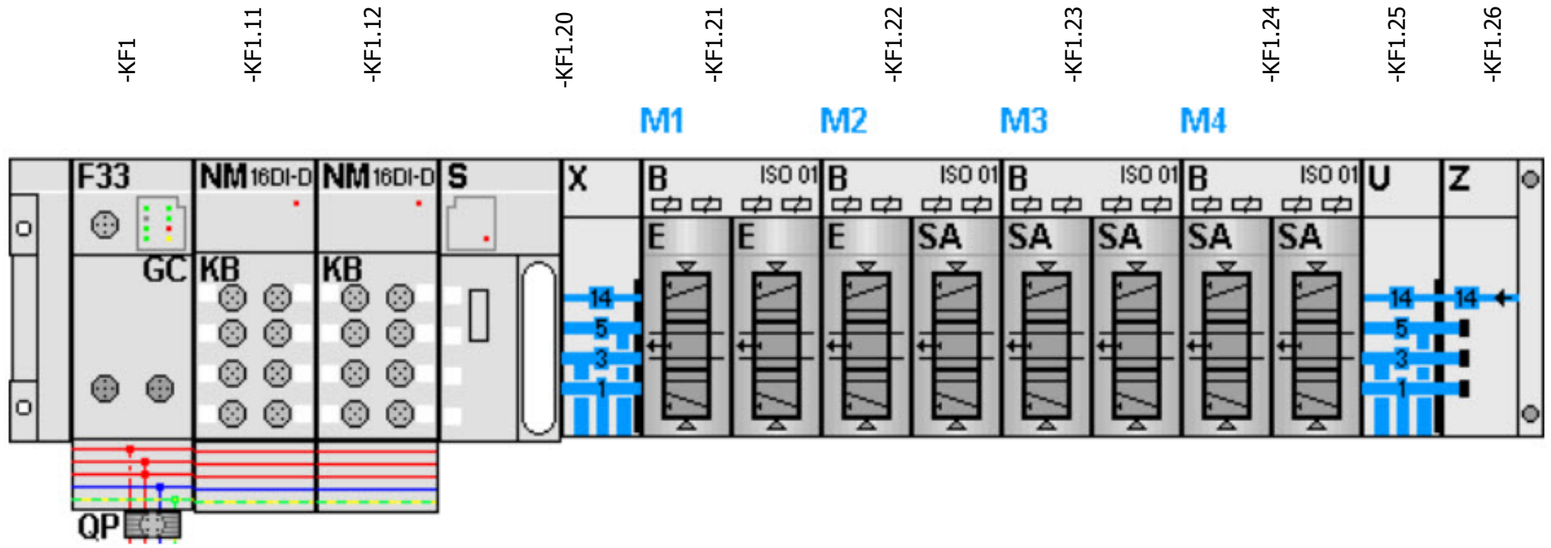

-KF1.21
=V1GL2UQ51UQ1+.GL2UQ51UQ1/1.3
=V1GL2UQ51UQ2+.GL2UQ51UQ2/1.3

FESTO

=V1GL2UQ51UQ1+.GL2UQ51UQ1/1.4	Q2150.0 DO 0 1.1	-QN1.1_Q	Slide 1 (RST)
=V1GL2UQ51UQ1+.GL2UQ51UQ1/1.4	Q2150.1 DO 1 1.2	-QN1.2_Q	Slide 1 (SET)
=V1GL2UQ51UQ2+.GL2UQ51UQ2/1.4	Q2150.2 DO 2 2.1	-QN2.1_Q	Slide 2 (RST)
=V1GL2UQ51UQ2+.GL2UQ51UQ2/1.4	Q2150.3 DO 3 2.2	-QN2.2_Q	Slide 2 (SET)

-KF1.22
=V1GL2UQ51UQ3+.GL2UQ51UQ3/1.3
=V1GL2UQ51UQ4+.GL2UQ51UQ4/1.3

FESTO

=V1GL2UQ51UQ3+.GL2UQ51UQ3/1.4	Q2150.4 DO 0 1.1	-QN3.1_Q	Slide 3 (RST)
=V1GL2UQ51UQ3+.GL2UQ51UQ3/1.4	Q2150.5 DO 1 1.2	-QN3.2_Q	Slide 3 (SET)
=V1GL2UQ51UQ4+.GL2UQ51UQ4/1.4	Q2150.6 DO 2 2.1	-QN4.1_Q	Shot Pins 4 (RST)
=V1GL2UQ51UQ4+.GL2UQ51UQ4/1.4	Q2150.7 DO 3 2.2	-QN4.2_Q	Shot Pins 4 (SET)

-KF1.23
=V1GL2UQ51UQ5+.GL2UQ51UQ5/1.3
=V1GL2UQ51UQ6+.GL2UQ51UQ6/1.3

FESTO

=V1GL2UQ51UQ5+.GL2UQ51UQ5/1.4	Q2151.0 DO 0 1.1	-QN5.1_Q	Shot Pins 5 (RST)
=V1GL2UQ51UQ5+.GL2UQ51UQ5/1.4	Q2151.1 DO 1 1.2	-QN5.2_Q	Shot Pins 5 (SET)
=V1GL2UQ51UQ6+.GL2UQ51UQ6/1.4	Q2151.2 DO 0 2.1	-QN6.1_Q	Shot Pins 6 (RST)
=V1GL2UQ51UQ6+.GL2UQ51UQ6/1.4	Q2151.3 DO 1 2.2	-QN6.2_Q	Shot Pins 6 (SET)

-KF1.24
=V1GL2UQ51UQ7+.GL2UQ51UQ7/1.3
=V1GL2UQ51UQ8+.GL2UQ51UQ8/1.3

FESTO

=V1GL2UQ51UQ7+.GL2UQ51UQ7/1.4	Q2151.4 DO 0 1.1	-QN7.1_Q	Shot Pin 7 (RST)
=V1GL2UQ51UQ7+.GL2UQ51UQ7/1.4	Q2151.5 DO 1 1.2	-QN7.2_Q	Shot Pin 7 (SET)
=V1GL2UQ51UQ8+.GL2UQ51UQ8/1.4	Q2151.6 DO 0 2.1	-QN8.1_Q	Shot Pins 8 (RST)
=V1GL2UQ51UQ8+.GL2UQ51UQ8/1.4	Q2151.7 DO 1 2.2	-QN8.2_Q	Shot Pins 8 (SET)

			Date	1/17/2023	Volvo Trucks North America		Valiant TMS	CONNECTING MOD. FOR FESTO DQ	Drawing name: =2V09&EFS-EL	= V1GL2UQ51KF1
			Ed.	MKLEPADLO						+ V1GL2UQ51
			Appr		P6700 Bodyside LH - Robot Cell 2V09				Document type: EFS	Project nr: 22-16150
Modification	Date	Name	Original		Replacement of	Replaced by	Scale 1:1			Page 3 / 1533

0	1	2	3	4	5	6	7	8	9

=V1GL2UQ51WC4+.GL1UQ52/1.6 / W4.2

-W4.2
RSM RKM 56-1M/S3059
1m

=V1GL2UQ51KF1/1.4 / KF1-P2

KF2-P2 / =V1GL2UQ51KF3/1.3

-WF3
PROFINET Cable
6XV1840-3AH10

-KF2

X20 M12, 7/8" 1 2 PE 4 5

0V_VAL / OUT | 0V_EL / SEN | FE | 24V_EL / SEN | 24V_VAL / OUT

ON OFF 1 2 1 2

M12 -TP1 M12 -TP2

FESTO

Bus node + Interlinking block
548755 + 550208

-KF2.11

FESTO

CPX-M-AB-8-M12X2-5POL
549335

I2175.0	DI 0 X1:4	V1GL2UQ51UQ9.1-BGR	Shot Pin 9 (RESET)
I2175.1	DI 1 X1:2	V1GL2UQ51UQ9.1-BGS	Shot Pin 9 (SET)
I2175.2	DI 2 X2:4	V1GL2UQ51UQ10.1-BGR	Clamps 10 (RESET)
I2175.3	DI 3 X2:2	V1GL2UQ51UQ10.1-BGS	Clamps 10 (SET)
I2175.4	DI 4 X3:4	V1GL2UQ51UQ10.2-BGR	Clamps 10 (RESET)
I2175.5	DI 5 X3:2	V1GL2UQ51UQ10.2-BGS	Clamps 10 (SET)
I2175.6	DI 6 X4:4	V1GL2UQ51UQ10.3-BGR	Clamps 10 (RESET)
I2175.7	DI 7 X4:2	V1GL2UQ51UQ10.3-BGS	Clamps 10 (SET)
I2176.0	DI 8 X5:4	V1GL2UQ51UQ10.4-BGR	Clamps 10 (RESET)
I2176.1	DI 9 X5:2	V1GL2UQ51UQ10.4-BGS	Clamps 10 (SET)
I2176.2	DI 10 X6:4	V1GL2UQ51UQ10.5-BGR	Clamps 10 (RESET)
I2176.3	DI 11 X6:2	V1GL2UQ51UQ10.5-BGS	Clamps 10 (SET)
I2176.4	DI 12 X7:4	V1GL2UQ51UQ10.6-BGR	Clamps 10 (RESET)
I2176.5	DI 13 X7:2	V1GL2UQ51UQ10.6-BGS	Clamps 10 (SET)
I2176.6	DI 14 X8:4	V1GL2UQ51UQ11.1-BGR	Clamp 11 (RESET)
I2176.7	DI 15 X8:2	V1GL2UQ51UQ11.1-BGS	Clamp 11 (SET)

X1 X2 X3 X4 X5 X6 X7 X8 M12

24V | DI 1 | 0V | DI 0 | FE
24V | DI 3 | 0V | DI 2 | FE
24V | DI 5 | 0V | DI 4 | FE
24V | DI 7 | 0V | DI 6 | FE
24V | DI 9 | 0V | DI 8 | FE
24V | DI 11 | 0V | DI 10 | FE
24V | DI 13 | 0V | DI 12 | FE
24V | DI 15 | 0V | DI 14 | FE

1 2 3 4 5

BN | WH | BU | BK

+V1GL2UQ51UQ9.1-W1
=V1GL2UQ51UQ9+.GL2UQ51UQ9/1.1

+V1GL2UQ51UQ10.1-W1
=V1GL2UQ51UQ10+.GL2UQ51UQ10/1.1

+V1GL2UQ51UQ10.2-W1
=V1GL2UQ51UQ10+.GL2UQ51UQ10/1.2

+V1GL2UQ51UQ10.3-W1
=V1GL2UQ51UQ10+.GL2UQ51UQ10/1.4

+V1GL2UQ51UQ10.4-W1
=V1GL2UQ51UQ10+.GL2UQ51UQ10/1.5

+V1GL2UQ51UQ10.5-W1
=V1GL2UQ51UQ10+.GL2UQ51UQ10/1.7

+V1GL2UQ51UQ10.6-W1
=V1GL2UQ51UQ10+.GL2UQ51UQ10/1.9

+V1GL2UQ51UQ11.1-W1
=V1GL2UQ51UQ11+.GL2UQ51UQ11/1.1

=V1GL2UQ51KF1/3

			Date	1/17/2023	Volvo Trucks North America	Valiant TMS	CONNECTING MOD. FOR VTSA MANIFOLD	Drawing name: =2V09&EFS-EL	= V1GL2UQ51KF2
			Ed.	MKLEPADLO					+ V1GL2UQ51
			Appr		P6700 Bodyside LH - Robot Cell 2V09			Document type: EFS	Project nr: 22-16150
Modification	Date	Name	Original		Replacement of / Replaced by	Scale 1:1			Page 1 / 1533

0	1	2	3	4	5	6	7	8	9

-KF2.12

FESTO

CPX-M-AB-8-M12X2-5POL

549335

I2177.0	DI 0 X1:4	V1GL2UQ51UQ12.1-BGR	Clamp 12 (RESET)
I2177.1	DI 1 X1:2	V1GL2UQ51UQ12.1-BGS	Clamp 12 (SET)
I2177.2	DI 2 X2:4	V1GL2UQ51UQ13.1-BGR	Clamp 13 (RESET)
I2177.3	DI 3 X2:2	V1GL2UQ51UQ13.1-BGS	Clamp 13 (SET)
I2177.4	DI 4 X3:4	V1GL2UQ51UQ14.1-BGR	Clamp 14 (RESET)
I2177.5	DI 5 X3:2	V1GL2UQ51UQ14.1-BGS	Clamp 14 (SET)
I2177.6	DI 6 X4:4	V1GL2UQ51UQ15.1-BGR	Clamp 15 (RESET)
I2177.7	DI 7 X4:2	V1GL2UQ51UQ15.1-BGS	Clamp 15 (SET)
I2178.0	DI 8 X5:4	V1GL2UQ51UQ16.1-BGR	Clamp 16 (RESET)
I2178.1	DI 9 X5:2	V1GL2UQ51UQ16.1-BGS	Clamp 16 (SET)
I2178.2	DI 10 X6:4	I2178.2	Spare
I2178.3	DI 11 X6:2	I2178.3	Spare
I2178.4	DI 12 X7:4	I2178.4	Spare
I2178.5	DI 13 X7:2	I2178.5	Spare
I2178.6	DI 14 X8:4	I2178.6	Spare
I2178.7	DI 15 X8:2	I2178.7	Spare

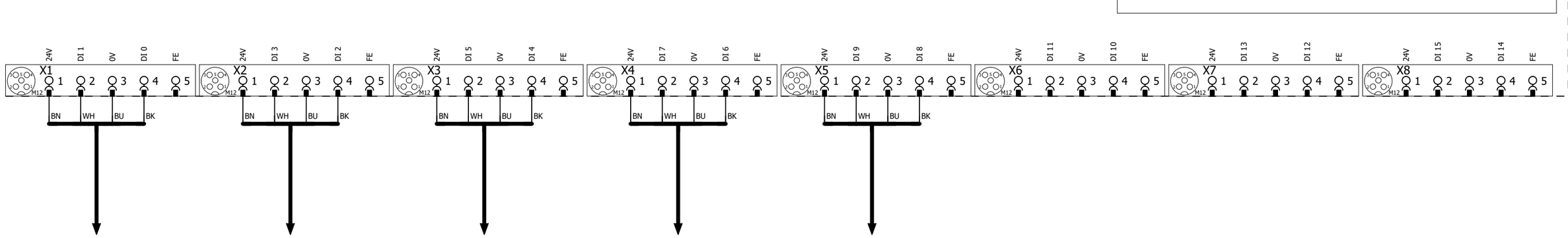

+V1GL2UQ51UQ12.1-W1
=V1GL2UQ51UQ12+.GL2UQ51UQ12/1.1

+V1GL2UQ51UQ13.1-W1
=V1GL2UQ51UQ13+.GL2UQ51UQ13/1.1

+V1GL2UQ51UQ14.1-W1
=V1GL2UQ51UQ14+.GL2UQ51UQ14/1.1

+V1GL2UQ51UQ15.1-W1
=V1GL2UQ51UQ15+.GL2UQ51UQ15/1.1

+V1GL2UQ51UQ16.1-W1
=V1GL2UQ51UQ16+.GL2UQ51UQ16/1.1

1

3

			Date	1/17/2023	Volvo Trucks North America	Valiant TMS	I/O MOD. DI16 (8 x M12) FOR VTSA-F	Drawing name: =2V09&EFS-EL	= V1GL2UQ51KF2
			Ed.	MKLEPADLO					+ V1GL2UQ51
			Appr		P6700 Bodyside LH - Robot Cell 2V09			Document type: EFS	Project nr: 22-16150
Modification	Date	Name	Original		Replacement of / Replaced by	Scale 1:1			Page 2 / 1533

0	1	2	3	4	5	6	7	8	9

-KF2.13

FESTO

CPX-M-AB-8-M12X2-5POL

549335

I2179.0	DI 0 X1:4	V1GL2UQ51-BG01	Sensor B-Pillar Inner Assembly
I2179.1	DI 1 X1:2	V1GL2UQ51-BG02	Sensor B-Pillar Inner Assembly
I2179.2	DI 2 X2:4	V1GL2UQ51-BG03	Sensor B-Pillar Inner Assembly
I2179.3	DI 3 X2:2	V1GL2UQ51-BG04	Sensor A-Pillar Inner Assembly
I2179.4	DI 4 X3:4	V1GL2UQ51-BG05	Sensor A-Pillar Inner Assembly
I2179.5	DI 5 X3:2	V1GL2UQ51-BG06	Sensor Header Inner Assembly
I2179.6	DI 6 X4:4	V1GL2UQ51-BG07	Sensor Header Inner Assembly
I2179.7	DI 7 X4:2	V1GL2UQ51-BG08	Sensor Salem Vent Reinf/L230
I2180.0	DI 8 X5:4	V1GL2UQ51-BG09	Sensor Salem Vent Reinf/L230
I2180.1	DI 9 X5:2	V1GL2UQ51-BG10	Sensor Salem Vent Reinf/L230
I2180.2	DI 10 X6:4	V1GL2UQ51-BG11	Sensor Baffle Inner Header/L230
I2180.3	DI 11 X6:2	V1GL2UQ51-BG12	Sensor Baffle Inner Header/L230
I2180.4	DI 12 X7:4	I2180.4	Spare
I2180.5	DI 13 X7:2	I2180.5	Spare
I2180.6	DI 14 X8:4	I2180.6	Spare
I2180.7	DI 15 X8:2	I2180.7	Spare

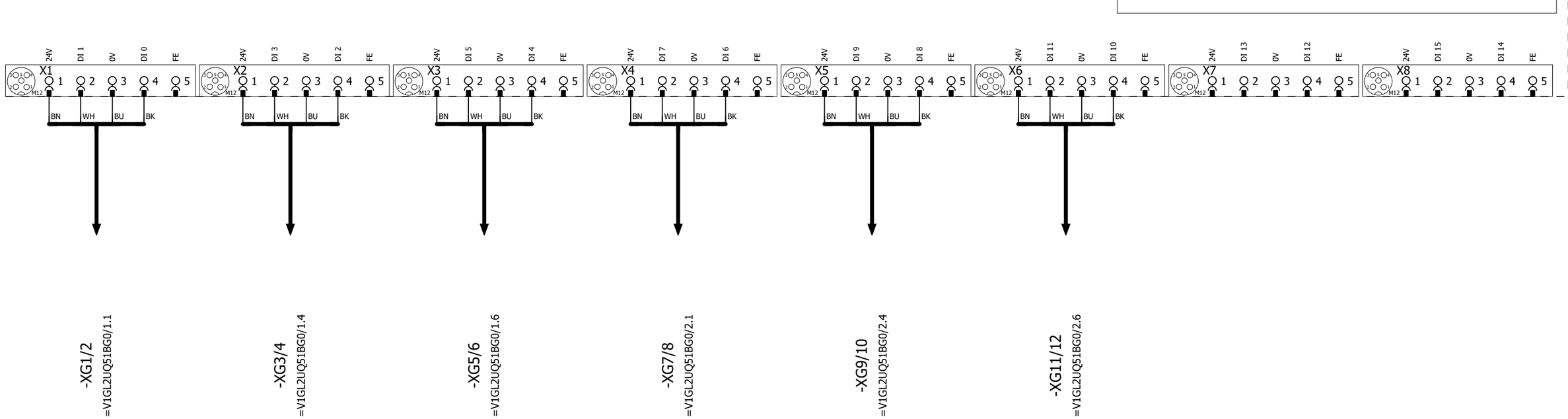

			Date	1/17/2023	Volvo Trucks North America		Valiant TMS	I/O MOD. DI16 (8 x M12) FOR VTSA-F	Drawing name: =2V09&EFS-EL	= V1GL2UQ51KF2
			Ed.	MKLEPADLO						+ V1GL2UQ51
			Appr		P6700 Bodyside LH - Robot Cell 2V09		Scale 1:1		Document type: EFS	Project nr: 22-16150
Modification	Date	Name	Original		Replacement of	Replaced by				Page 3 / 1533

-KF2 -KF2.11 -KF2.12 -KF2.13 -KF2.20 -KF2.21 -KF2.22 -KF2.23 -KF2.24 -KF2.25 -KF2.26

M1 M2 M3 M4

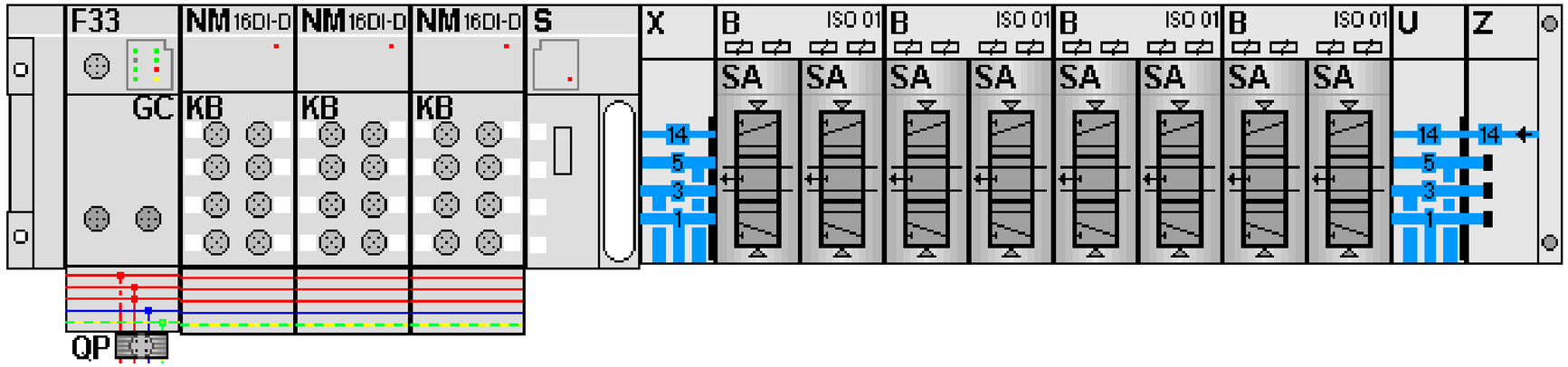

-KF2.21
=V1GL2UQ51UQ9+.GL2UQ51UQ9/1.3
=V1GL2UQ51UQ10+.GL2UQ51UQ10/1.3

FESTO

=V1GL2UQ51UQ9+.GL2UQ51UQ9/1.4	Q2175.0 DO 0 1.1	-QN9.1_Q	Shot Pin 9 (RST)
=V1GL2UQ51UQ9+.GL2UQ51UQ9/1.4	Q2175.1 DO 1 1.2	-QN9.2_Q	Shot Pin 9 (SET)
=V1GL2UQ51UQ10+.GL2UQ51UQ10/1.4	Q2175.2 DO 2 2.1	-QN10.1_Q	Clamps 10 (RST)
=V1GL2UQ51UQ10+.GL2UQ51UQ10/1.4	Q2175.3 DO 3 2.2	-QN10.2_Q	Clamps 10 (SET)

-KF2.22
=V1GL2UQ51UQ11+.GL2UQ51UQ11/1.3
=V1GL2UQ51UQ12+.GL2UQ51UQ12/1.3

FESTO

=V1GL2UQ51UQ11+.GL2UQ51UQ11/1.4	Q2175.4 DO 0 1.1	-QN11.1_Q	Clamp 11 (RST)
=V1GL2UQ51UQ11+.GL2UQ51UQ11/1.4	Q2175.5 DO 1 1.2	-QN11.2_Q	Clamp 11 (SET)
=V1GL2UQ51UQ12+.GL2UQ51UQ12/1.4	Q2175.6 DO 2 2.1	-QN12.1_Q	Clamp 12 (RST)
=V1GL2UQ51UQ12+.GL2UQ51UQ12/1.4	Q2175.7 DO 3 2.2	-QN12.2_Q	Clamp 12 (SET)

-KF2.23
=V1GL2UQ51UQ13+.GL2UQ51UQ13/1.3
=V1GL2UQ51UQ14+.GL2UQ51UQ14/1.3

FESTO

=V1GL2UQ51UQ13+.GL2UQ51UQ13/1.4	Q2176.0 DO 0 1.1	-QN13.1_Q	Clamp 13 (RST)
=V1GL2UQ51UQ13+.GL2UQ51UQ13/1.4	Q2176.1 DO 1 1.2	-QN13.2_Q	Clamp 13 (SET)
=V1GL2UQ51UQ14+.GL2UQ51UQ14/1.4	Q2176.2 DO 0 2.1	-QN14.1_Q	Clamp 14 (RST)
=V1GL2UQ51UQ14+.GL2UQ51UQ14/1.4	Q2176.3 DO 1 2.2	-QN14.2_Q	Clamp 14 (SET)

-KF2.24
=V1GL2UQ51UQ15+.GL2UQ51UQ15/1.3
=V1GL2UQ51UQ16+.GL2UQ51UQ16/1.3

FESTO

=V1GL2UQ51UQ15+.GL2UQ51UQ15/1.4	Q2176.4 DO 0 1.1	-QN15.1_Q	Clamp 15 (RST)
=V1GL2UQ51UQ15+.GL2UQ51UQ15/1.4	Q2176.5 DO 1 1.2	-QN15.2_Q	Clamp 15 (SET)
=V1GL2UQ51UQ16+.GL2UQ51UQ16/1.4	Q2176.6 DO 0 2.1	-QN16.1_Q	Clamp 16 (RST)
=V1GL2UQ51UQ16+.GL2UQ51UQ16/1.4	Q2176.7 DO 1 2.2	-QN16.2_Q	Clamp 16 (SET)

			Date	1/17/2023	Volvo Trucks North America		Valiant TMS	CONNECTING MOD. FOR FESTO DQ	Drawing name: =2V09&EFS-EL	= V1GL2UQ51KF2
			Ed.	MKLEPADLO						+ V1GL2UQ51
			Appr		P6700 Bodyside LH - Robot Cell 2V09				Document type: EFS	Project nr: 22-16150
Modification	Date	Name	Original		Replacement of	Replaced by	Scale 1:1			Page 4 / 1533

0	1	2	3	4	5	6	7	8	9

=V1GL2UQ51WC4+.GL1UQ52/1.5 / W5.1

-W5.1
RSM RKM 56-1M/S3059
1m

=V1GL2UQ51KF2/1.4 / KF2-P2

KF3-P2 / =V1GL2UQ51KF4/1.3

-WF4
PROFINET Cable
6XV1840-3AH10

-KF3

X20 M12, 7/8" 1 2 PE 4 5

0V_VAL / OUT | 0V_EL / SEN | FE | 24V_EL / SEN | 24V_VAL / OUT

ON OFF 1 2 1 2

M12 -TP1 M12 -TP2

FESTO
Bus node + Interlinking block
548755 + 550208

I2200.0	DI 0 X1:4	V1GL2UQ51UQ17.1-BGR	Clamps 17 (RESET)
I2200.1	DI 1 X1:2	V1GL2UQ51UQ17.1-BGS	Clamps 17 (SET)
I2200.2	DI 2 X2:4	V1GL2UQ51UQ17.2-BGR	Clamps 17 (RESET)
I2200.3	DI 3 X2:2	V1GL2UQ51UQ17.2-BGS	Clamps 17 (SET)
I2200.4	DI 4 X3:4	V1GL2UQ51UQ17.3-BGR	Clamps 17 (RESET)
I2200.5	DI 5 X3:2	V1GL2UQ51UQ17.3-BGS	Clamps 17 (SET)
I2200.6	DI 6 X4:4	V1GL2UQ51UQ17.4-BGR	Clamps 17 (RESET)
I2200.7	DI 7 X4:2	V1GL2UQ51UQ17.4-BGS	Clamps 17 (SET)
I2201.0	DI 8 X5:4	V1GL2UQ51UQ18.1-BGR	Clamps 18 (RESET)
I2201.1	DI 9 X5:2	V1GL2UQ51UQ18.1-BGS	Clamps 18 (SET)
I2201.2	DI 10 X6:4	V1GL2UQ51UQ18.2-BGR	Clamps 18 (RESET)
I2201.3	DI 11 X6:2	V1GL2UQ51UQ18.2-BGS	Clamps 18 (SET)
I2201.4	DI 12 X7:4	V1GL2UQ51UQ19.1-BGR	Clamps 19 (RESET)
I2201.5	DI 13 X7:2	V1GL2UQ51UQ19.1-BGS	Clamps 19 (SET)
I2201.6	DI 14 X8:4	V1GL2UQ51UQ19.2-BGR	Clamps 19 (RESET)
I2201.7	DI 15 X8:2	V1GL2UQ51UQ19.2-BGS	Clamps 19 (SET)

-KF3.11

FESTO
CPX-M-AB-8-M12X2-5POL
549335

X1 X2 X3 X4 X5 X6 X7 X8 M12

24V | DI 1 | 0V | DI 0 | FE
24V | DI 3 | 0V | DI 2 | FE
24V | DI 5 | 0V | DI 4 | FE
24V | DI 7 | 0V | DI 6 | FE
24V | DI 9 | 0V | DI 8 | FE
24V | DI 11 | 0V | DI 10 | FE
24V | DI 13 | 0V | DI 12 | FE
24V | DI 15 | 0V | DI 14 | FE

1 2 3 4 5

BN | WH | BU | BK

+V1GL2UQ51UQ17.1-W1
=V1GL2UQ51UQ17+.GL2UQ51UQ17/1.1

+V1GL2UQ51UQ17.2-W1
=V1GL2UQ51UQ17+.GL2UQ51UQ17/1.2

+V1GL2UQ51UQ17.3-W1
=V1GL2UQ51UQ17+.GL2UQ51UQ17/1.4

+V1GL2UQ51UQ17.4-W1
=V1GL2UQ51UQ17+.GL2UQ51UQ17/1.5

+V1GL2UQ51UQ18.1-W1
=V1GL2UQ51UQ18+.GL2UQ51UQ18/1.1

+V1GL2UQ51UQ18.2-W1
=V1GL2UQ51UQ18+.GL2UQ51UQ18/1.2

+V1GL2UQ51UQ19.1-W1
=V1GL2UQ51UQ19+.GL2UQ51UQ19/1.1

+V1GL2UQ51UQ19.2-W1
=V1GL2UQ51UQ19+.GL2UQ51UQ19/1.2

=V1GL2UQ51KF2/4

2

			Date	1/17/2023	Volvo Trucks North America	Valiant TMS	CONNECTING MOD. FOR VTSA MANIFOLD	Drawing name: =2V09&EFS-EL	= V1GL2UQ51KF3
			Ed.	MKLEPADLO					+ V1GL2UQ51
			Appr		P6700 Bodyside LH - Robot Cell 2V09			Document type: EFS	Project nr: 22-16150
Modification	Date	Name	Original		Replacement of / Replaced by	Scale 1:1			Page 1 / 1533

0	1	2	3	4	5	6	7	8	9

-KF3.12

FESTO

CPX-M-AB-8-M12X2-5POL

549335

I2202.0	DI 0 X1:4	V1GL2UQ51UQ20.1-BGR	Clamp 20 (RESET)
I2202.1	DI 1 X1:2	V1GL2UQ51UQ20.1-BGS	Clamp 20 (SET)
I2202.2	DI 2 X2:4	V1GL2UQ51UQ21.1-BGR	Clamp 21 (RESET)
I2202.3	DI 3 X2:2	V1GL2UQ51UQ21.1-BGS	Clamp 21 (SET)
I2202.4	DI 4 X3:4	V1GL2UQ51UQ22.1-BGR	Clamps 22 (RESET)
I2202.5	DI 5 X3:2	V1GL2UQ51UQ22.1-BGS	Clamps 22 (SET)
I2202.6	DI 6 X4:4	V1GL2UQ51UQ22.2-BGR	Clamps 22 (RESET)
I2202.7	DI 7 X4:2	V1GL2UQ51UQ22.2-BGS	Clamps 22 (SET)
I2203.0	DI 8 X5:4	V1GL2UQ51UQ22.3-BGR	Clamps 22 (RESET)
I2203.1	DI 9 X5:2	V1GL2UQ51UQ22.3-BGS	Clamps 22 (SET)
I2203.2	DI 10 X6:4	V1GL2UQ51UQ23.1-BGR	Clamp 23 (RESET)
I2203.3	DI 11 X6:2	V1GL2UQ51UQ23.1-BGS	Clamp 23 (SET)
I2203.4	DI 12 X7:4	V1GL2UQ51UQ24.1-BGR	Clamp 24 (RESET)
I2203.5	DI 13 X7:2	V1GL2UQ51UQ24.1-BGS	Clamp 24 (SET)
I2203.6	DI 14 X8:4	I2203.6	Spare
I2203.7	DI 15 X8:2	I2203.7	Spare

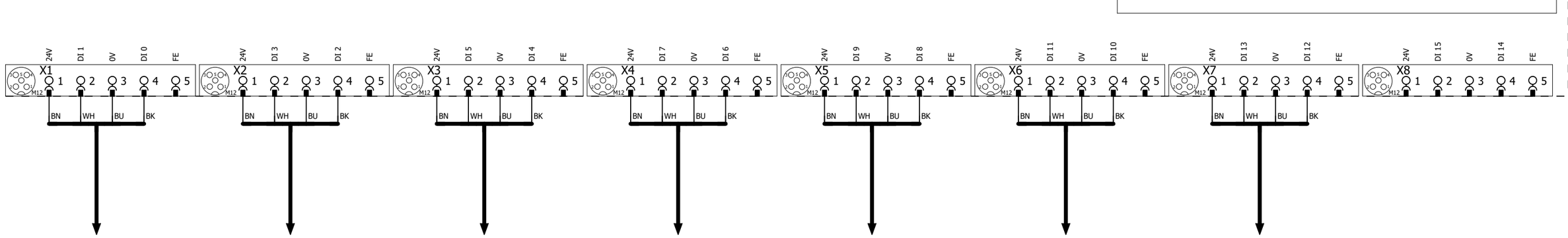

+V1GL2UQ51UQ20.1-W1
=V1GL2UQ51UQ20+.GL2UQ51UQ20/1.1

+V1GL2UQ51UQ21.1-W1
=V1GL2UQ51UQ21+.GL2UQ51UQ21/1.1

+V1GL2UQ51UQ22.1-W1
=V1GL2UQ51UQ22+.GL2UQ51UQ22/1.1

+V1GL2UQ51UQ22.2-W1
=V1GL2UQ51UQ22+.GL2UQ51UQ22/1.2

+V1GL2UQ51UQ22.3-W1
=V1GL2UQ51UQ22+.GL2UQ51UQ22/1.4

+V1GL2UQ51UQ23.1-W1
=V1GL2UQ51UQ23+.GL2UQ51UQ23/1.1

+V1GL2UQ51UQ24.1-W1
=V1GL2UQ51UQ24+.GL2UQ51UQ24/1.1

1 3

			Date	1/17/2023	Volvo Trucks North America	Valiant TMS	I/O MOD. DI16 (8 x M12) FOR VTSA-F	Drawing name: =2V09&EFS-EL	= V1GL2UQ51KF3
			Ed.	MKLEPADLO					+ V1GL2UQ51
			Appr		P6700 Bodyside LH - Robot Cell 2V09	Scale 1:1		Document type: EFS	Project nr: 22-16150
Modification	Date	Name	Original		Replacement of	Replaced by			Page 2 / 1533

0	1	2	3	4	5	6	7	8	9

-KF3.13

FESTO

CPX-M-AB-8-M12X2-5POL

549335

I2204.0	DI 0 X1:4	V1GL2UQ51-BG13	Sensor Side Inner Header Assembly/L230
I2204.1	DI 1 X1:2	V1GL2UQ51-BG14	Sensor Header Inner Rear/L290
I2204.2	DI 2 X2:4	V1GL2UQ51-BG15	Sensor Window Blind Mnt/L290
I2204.3	DI 3 X2:2	V1GL2UQ51-BG16	Sensor Window Blind Mnt/L290
I2204.4	DI 4 X3:4	V1GL2UQ51-BG17	Sensor Header Inner Mid/L320
I2204.5	DI 5 X3:2	I2204.5	Spare
I2204.6	DI 6 X4:4	V1GL2UQ51-BG18	Sensor Side Inner Header Assembly/L230
I2204.7	DI 7 X4:2	I2204.7	Spare
I2205.0	DI 8 X5:4	I2205.0	Spare
I2205.1	DI 9 X5:2	I2205.1	Spare
I2205.2	DI 10 X6:4	I2205.2	Spare
I2205.3	DI 11 X6:2	I2205.3	Spare
I2205.4	DI 12 X7:4	I2205.4	Spare
I2205.5	DI 13 X7:2	I2205.5	Spare
I2205.6	DI 14 X8:4	I2205.6	Spare
I2205.7	DI 15 X8:2	I2205.7	Spare

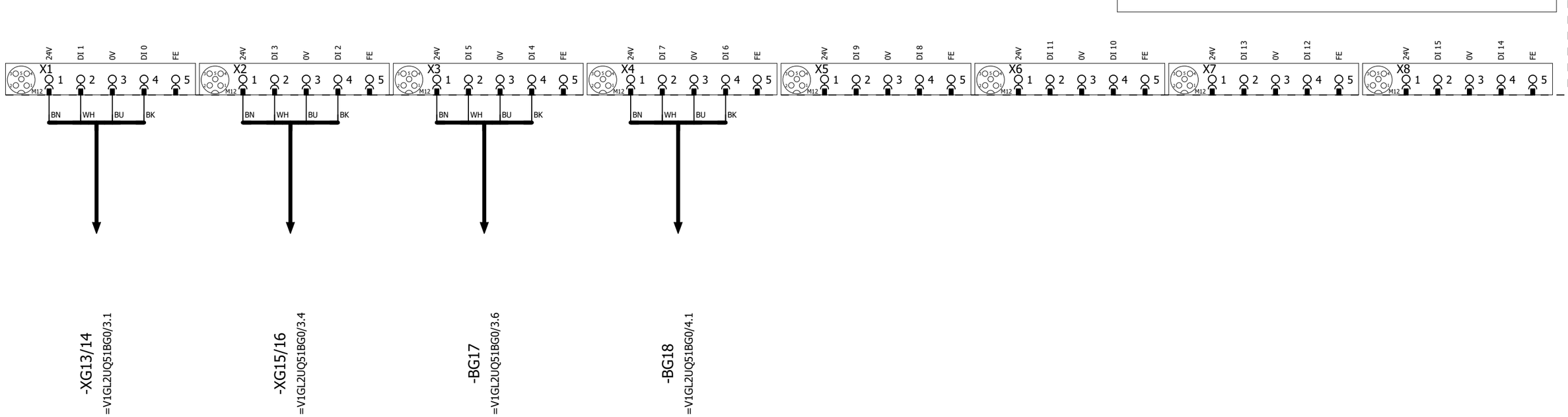

			Date	1/17/2023	Volvo Trucks North America	Valiant TMS	I/O MOD. DI16 (8 x M12) FOR VTSA-F	Drawing name: =2V09&EFS-EL	= V1GL2UQ51KF3
			Ed.	MKLEPADLO					+ V1GL2UQ51
			Appr		P6700 Bodyside LH - Robot Cell 2V09	Scale 1:1		Document type: EFS	Project nr: 22-16150
Modification	Date	Name	Original		Replacement of	Replaced by			Page 3 / 1533

-KF3 -KF3.11 -KF3.12 -KF3.13 -KF3.20 -KF3.21 -KF3.22 -KF3.23 -KF3.24 -KF3.25 -KF3.26

M1 M2 M3 M4

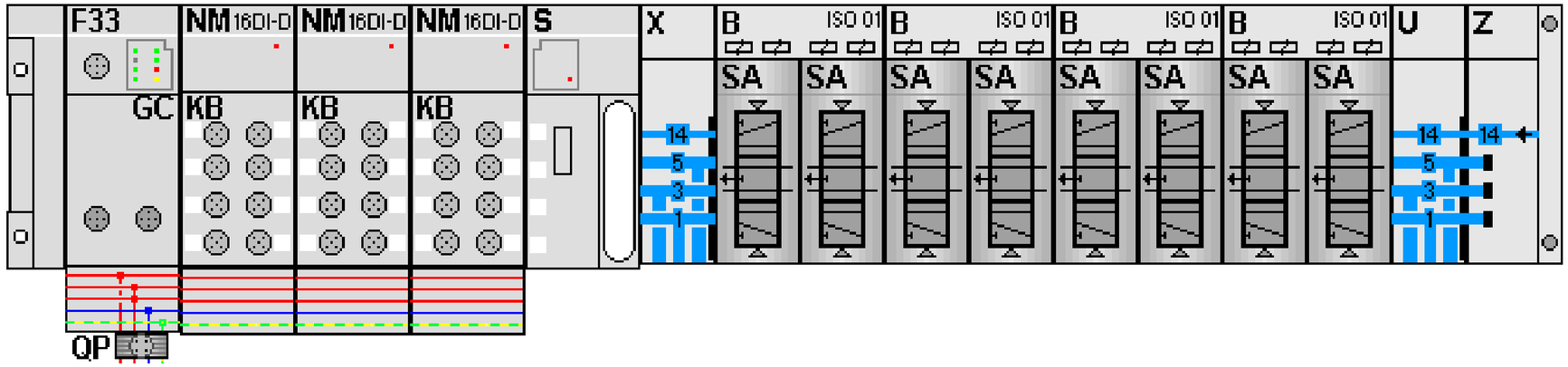

-KF3.21
=V1GL2UQ51UQ17+.GL2UQ51UQ17/1.3
=V1GL2UQ51UQ18+.GL2UQ51UQ18/1.3

FESTO

=V1GL2UQ51UQ17+.GL2UQ51UQ17/1.4	Q2200.0 DO 0 1.1	-QN17.1_Q	Clamps 17 (RST)
=V1GL2UQ51UQ17+.GL2UQ51UQ17/1.4	Q2200.1 DO 1 1.2	-QN17.2_Q	Clamps 17 (SET)
=V1GL2UQ51UQ18+.GL2UQ51UQ18/1.4	Q2200.2 DO 2 2.1	-QN18.1_Q	Clamps 18 (RST)
=V1GL2UQ51UQ18+.GL2UQ51UQ18/1.4	Q2200.3 DO 3 2.2	-QN18.2_Q	Clamps 18 (SET)

-KF3.22
=V1GL2UQ51UQ19+.GL2UQ51UQ19/1.3
=V1GL2UQ51UQ20+.GL2UQ51UQ20/1.3

FESTO

=V1GL2UQ51UQ19+.GL2UQ51UQ19/1.4	Q2200.4 DO 0 1.1	-QN19.1_Q	Clamps 19 (RST)
=V1GL2UQ51UQ19+.GL2UQ51UQ19/1.4	Q2200.5 DO 1 1.2	-QN19.2_Q	Clamps 19 (SET)
=V1GL2UQ51UQ20+.GL2UQ51UQ20/1.4	Q2200.6 DO 2 2.1	-QN20.1_Q	Clamp 20 (RST)
=V1GL2UQ51UQ20+.GL2UQ51UQ20/1.4	Q2200.7 DO 3 2.2	-QN20.2_Q	Clamp 20 (SET)

-KF3.23
=V1GL2UQ51UQ21+.GL2UQ51UQ21/1.3
=V1GL2UQ51UQ22+.GL2UQ51UQ22/1.3

FESTO

=V1GL2UQ51UQ21+.GL2UQ51UQ21/1.4	Q2201.0 DO 0 1.1	-QN21.1_Q	Clamp 21 (RST)
=V1GL2UQ51UQ21+.GL2UQ51UQ21/1.4	Q2201.1 DO 1 1.2	-QN21.2_Q	Clamp 21 (SET)
=V1GL2UQ51UQ22+.GL2UQ51UQ22/1.4	Q2201.2 DO 0 2.1	-QN22.1_Q	Clamps 22 (RST)
=V1GL2UQ51UQ22+.GL2UQ51UQ22/1.4	Q2201.3 DO 1 2.2	-QN22.2_Q	Clamps 22 (SET)

-KF3.24
=V1GL2UQ51UQ23+.GL2UQ51UQ23/1.3
=V1GL2UQ51UQ24+.GL2UQ51UQ24/1.3

FESTO

=V1GL2UQ51UQ23+.GL2UQ51UQ23/1.4	Q2201.4 DO 0 1.1	-QN23.1_Q	Clamp 23 (RST)
=V1GL2UQ51UQ23+.GL2UQ51UQ23/1.4	Q2201.5 DO 1 1.2	-QN23.2_Q	Clamp 23 (SET)
=V1GL2UQ51UQ24+.GL2UQ51UQ24/1.4	Q2201.6 DO 0 2.1	-QN24.1_Q	Clamp 24 (RST)
=V1GL2UQ51UQ24+.GL2UQ51UQ24/1.4	Q2201.7 DO 1 2.2	-QN24.2_Q	Clamp 24 (SET)

			Date	1/17/2023	Volvo Trucks North America		Valiant TMS	CONNECTING MOD. FOR FESTO DQ	Drawing name: =2V09&EFS-EL	= V1GL2UQ51KF3
			Ed.	MKLEPADLO						+ V1GL2UQ51
			Appr		P6700 Bodyside LH - Robot Cell 2V09		Scale 1:1		Document type: EFS	Project nr: 22-16150
Modification	Date	Name	Original		Replacement of	Replaced by				Page 4 / 1533

0	1	2	3	4	5	6	7	8	9

=V1GL2UQ51WC4+.GL1UQ52/1.6 / W5.2

-W5.2
RSM RKM 56-1M/S3059
1m

=V1GL2UQ51KF3/1.4 / KF3-P2

-WF5
PROFINET Cable
6XV1840-3AH10

-KF4

X20 M12, 7/8" 1 2 PE 4 5
0V_VAL / OUT
0V_EL / SEN
FE
24V_EL / SEN
24V_VAL / OUT

M12 -TP1
M12 -TP2

ON
OFF
1 2 1 2

FESTO
Bus node + Interlinking block
548755 + 550208

-KF4.11
FESTO
CPX-M-AB-8-M12X2-5POL
549335

I2225.0	DI 0 X1:4	V1GL2UQ51UQ25.1-BGR	Clamp 25 (RESET)
I2225.1	DI 1 X1:2	V1GL2UQ51UQ25.1-BGS	Clamp 25 (SET)
I2225.2	DI 2 X2:4	V1GL2UQ51UQ26.1-BGR	Clamp 26 (RESET)
I2225.3	DI 3 X2:2	V1GL2UQ51UQ26.1-BGS	Clamp 26 (SET)
I2225.4	DI 4 X3:4	V1GL2UQ51UQ27.1-BGR	Clamp 27 (RESET)
I2225.5	DI 5 X3:2	V1GL2UQ51UQ27.1-BGS	Clamp 27 (SET)
I2225.6	DI 6 X4:4	V1GL2UQ51UQ28.1-BGR	Clamp 28 (RESET)
I2225.7	DI 7 X4:2	V1GL2UQ51UQ28.1-BGS	Clamp 28 (SET)
I2226.0	DI 8 X5:4	V1GL2UQ51UQ29.1-BGR	Shot Pin 29 (RESET)
I2226.1	DI 9 X5:2	V1GL2UQ51UQ29.1-BGS	Shot Pin 29 (SET)
I2226.2	DI 10 X6:4	V1GL2UQ51UQ30.1-BGR	Clamp 30 (RESET)
I2226.3	DI 11 X6:2	V1GL2UQ51UQ30.1-BGS	Clamp 30 (SET)
I2226.4	DI 12 X7:4	V1GL2UQ51UQ31.1-BGR	Clamp 31 (RESET)
I2226.5	DI 13 X7:2	V1GL2UQ51UQ31.1-BGS	Clamp 31 (SET)
I2226.6	DI 14 X8:4	V1GL2UQ51UQ32.1-BGR	Shot Pin 32 (RESET)
I2226.7	DI 15 X8:2	V1GL2UQ51UQ32.1-BGS	Shot Pin 32 (SET)

X1 M12: 24V DI 1 0V DI 0 FE — 1 2 3 4 5 — BN WH BU BK
X2 M12: 24V DI 3 0V DI 2 FE — 1 2 3 4 5 — BN WH BU BK
X3 M12: 24V DI 5 0V DI 4 FE — 1 2 3 4 5 — BN WH BU BK
X4 M12: 24V DI 7 0V DI 6 FE — 1 2 3 4 5 — BN WH BU BK
X5 M12: 24V DI 9 0V DI 8 FE — 1 2 3 4 5 — BN WH BU BK
X6 M12: 24V DI 11 0V DI 10 FE — 1 2 3 4 5 — BN WH BU BK
X7 M12: 24V DI 13 0V DI 12 FE — 1 2 3 4 5 — BN WH BU BK
X8 M12: 24V DI 15 0V DI 14 FE — 1 2 3 4 5 — BN WH BU BK

+V1GL2UQ51UQ25.1-W1
=V1GL2UQ51UQ25+.GL2UQ51UQ25/1.1

+V1GL2UQ51UQ26.1-W1
=V1GL2UQ51UQ26+.GL2UQ51UQ26/1.1

+V1GL2UQ51UQ27.1-W1
=V1GL2UQ51UQ27+.GL2UQ51UQ27/1.1

+V1GL2UQ51UQ28.1-W1
=V1GL2UQ51UQ28+.GL2UQ51UQ28/1.1

+V1GL2UQ51UQ29.1-W1
=V1GL2UQ51UQ29+.GL2UQ51UQ29/1.1

+V1GL2UQ51UQ30.1-W1
=V1GL2UQ51UQ30+.GL2UQ51UQ30/1.1

+V1GL2UQ51UQ31.1-W1
=V1GL2UQ51UQ31+.GL2UQ51UQ31/1.1

+V1GL2UQ51UQ32.1-W1
=V1GL2UQ51UQ32+.GL2UQ51UQ32/1.1

=V1GL2UQ51KF3/4

			Date	1/17/2023	Volvo Trucks North America	Valiant TMS	CONNECTING MOD. FOR VTSA MANIFOLD	Drawing name: =2V09&EFS-EL	= V1GL2UQ51KF4
			Ed.	MKLEPADLO					+ V1GL2UQ51
			Appr		P6700 Bodyside LH - Robot Cell 2V09			Document type: EFS	Project nr: 22-16150
Modification	Date	Name	Original		Replacement of / Replaced by	Scale 1:1			Page 1 / 1533

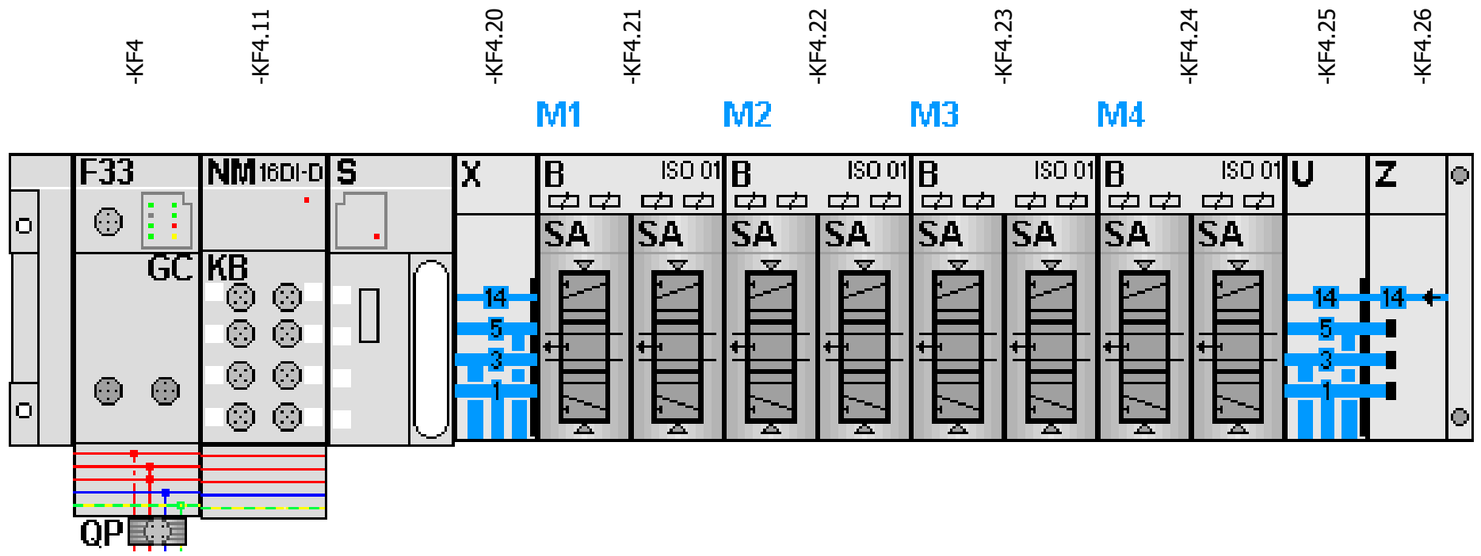

-KF4.21
=V1GL2UQ51UQ25+.GL2UQ51UQ25/1.3
=V1GL2UQ51UQ26+.GL2UQ51UQ26/1.3

FESTO

=V1GL2UQ51UQ25+.GL2UQ51UQ25/1.4	Q2225.0 DO 0 1.1	-QN25.1_Q	Clamp 25 (RST)
=V1GL2UQ51UQ25+.GL2UQ51UQ25/1.4	Q2225.1 DO 1 1.2	-QN25.2_Q	Clamp 25 (SET)
=V1GL2UQ51UQ26+.GL2UQ51UQ26/1.4	Q2225.2 DO 2 2.1	-QN26.1_Q	Clamp 26 (RST)
=V1GL2UQ51UQ26+.GL2UQ51UQ26/1.4	Q2225.3 DO 3 2.2	-QN26.2_Q	Clamp 26 (SET)

-KF4.22
=V1GL2UQ51UQ27+.GL2UQ51UQ27/1.3
=V1GL2UQ51UQ28+.GL2UQ51UQ28/1.3

FESTO

=V1GL2UQ51UQ27+.GL2UQ51UQ27/1.4	Q2225.4 DO 0 1.1	-QN27.1_Q	Clamp 27 (RST)
=V1GL2UQ51UQ27+.GL2UQ51UQ27/1.4	Q2225.5 DO 1 1.2	-QN27.2_Q	Clamp 27 (SET)
=V1GL2UQ51UQ28+.GL2UQ51UQ28/1.4	Q2225.6 DO 2 2.1	-QN28.1_Q	Clamp 28 (RST)
=V1GL2UQ51UQ28+.GL2UQ51UQ28/1.4	Q2225.7 DO 3 2.2	-QN28.2_Q	Clamp 28 (SET)

-KF4.23
=V1GL2UQ51UQ29+.GL2UQ51UQ29/1.3
=V1GL2UQ51UQ30+.GL2UQ51UQ30/1.3

FESTO

=V1GL2UQ51UQ29+.GL2UQ51UQ29/1.4	Q2256.0 DO 0 1.1	-QN29.1_Q	Shot Pin 29 (RST)
=V1GL2UQ51UQ29+.GL2UQ51UQ29/1.4	Q2256.1 DO 1 1.2	-QN29.2_Q	Shot Pin 29 (SET)
=V1GL2UQ51UQ30+.GL2UQ51UQ30/1.4	Q2256.2 DO 0 2.1	-QN30.1_Q	Clamp 30 (RST)
=V1GL2UQ51UQ30+.GL2UQ51UQ30/1.4	Q2256.3 DO 1 2.2	-QN30.2_Q	Clamp 30 (SET)

-KF4.24
=V1GL2UQ51UQ31+.GL2UQ51UQ31/1.3
=V1GL2UQ51UQ32+.GL2UQ51UQ32/1.3

FESTO

=V1GL2UQ51UQ31+.GL2UQ51UQ31/1.4	Q2256.4 DO 0 1.1	-QN31.1_Q	Dump 31 (RST)
=V1GL2UQ51UQ31+.GL2UQ51UQ31/1.4	Q2256.5 DO 1 1.2	-QN31.2_Q	Dump 31 (SET)
=V1GL2UQ51UQ32+.GL2UQ51UQ32/1.4	Q2256.6 DO 0 2.1	-QN32.1_Q	Shot Pin 32 (RST)
=V1GL2UQ51UQ32+.GL2UQ51UQ32/1.4	Q2256.7 DO 1 2.2	-QN32.2_Q	Shot Pin 32 (SET)

			Date	1/17/2023	Volvo Trucks North America	Valiant TMS	CONNECTING MOD. FOR FESTO DQ	Drawing name: =2V09&EFS-EL	= V1GL2UQ51KF4
			Ed.	MKLEPADLO					+ V1GL2UQ51
			Appr		P6700 Bodyside LH - Robot Cell 2V09	Scale 1:1		Document type: EFS	Project nr: 22-16150
Modification	Date	Name	Original		Replacement of	Replaced by			Page 2 / 1533

0	1	2	3	4	5	6	7	8	9

=V1GL2UQ51KF1
+V1GL2UQ51

-KF1.21
=V1GL2UQ51KF1+V1GL2UQ51/3.1

Slide 1 (RST)	Slide 1 (SET)
=V1GL2UQ51KF1	=V1GL2UQ51KF1
+V1GL2UQ51	+V1GL2UQ51
-QN1.1_Q	-QN1.2_Q
=V1GL2UQ51KF1	=V1GL2UQ51KF1
+V1GL2UQ51/3.3	+V1GL2UQ51/3.3
Q2150.0	Q2150.1
1.1 Pneumatic Valve	1.2 Pneumatic Valve

-QN1 .1 .2

=V1GL2UQ51KF1+V1GL2UQ51/1.1
+.GL2UQ51UQ1.1-W1

-W1
RKC 4.4T-4-RSC 4.4T/S3060
4m

BN BU BK WH

-XGR/S P1 1 3 4 2 VB2-FSM 4.4/2FKM 4/S3450 TURCK

J1 1 3 4 2 J2 1 3 4 2

BN BU BK WH BN BU BK WH

-W1.1
RKC 4.4T-0.5-RSC 4.4T/S3060
0.5m

-W1.2
RKC 4.4T-0.5-RSC 4.4T/S3060
0.5m

BN BU BK WH BN BU BK WH

-BGR
Sn = 10 mm
TURCK
1644905
pnp
1 3 A 4

-BGS
Sn = 10 mm
TURCK
1644905
pnp
1 3 A 4

Slide 1
=V1GL2UQ51UQ1.1
+.GL2UQ51UQ1.1
-UQ1.1

=V1GL2UQ51 -UQ1.1-BGR Slide 1	=V1GL2UQ51 -UQ1.1-BGS Slide 1

=V1GL2UQ51KF4+V1GL2UQ51/2

=V1GL2UQ51UQ2+.GL2UQ51UQ2/1

			Date	1/17/2023	Volvo Trucks North America	Valiant TMS	FESTO DQ CONNECTION QN1	Drawing name: =2V09&EFS-EL	= V1GL2UQ51UQ1
			Ed.	MKLEPADLO					+ V1GL2UQ51UQ1
			Appr		P6700 Bodyside LH - Robot Cell 2V09			Document type: EFS	Project nr: 22-16150
Modification	Date	Name	Original		Replacement of / Replaced by	Scale 1:1			Page 1 / 1533

0	1	2	3	4	5	6	7	8	9

=V1GL2UQ51KF1
+V1GL2UQ51

-KF1.21
=V1GL2UQ51KF1+V1GL2UQ51/3.1

Slide 2 (RST)
=V1GL2UQ51KF1
+V1GL2UQ51
-QN2.1_Q
=V1GL2UQ51KF1
+V1GL2UQ51/3.3
Q2150.2

Slide 2 (SET)
=V1GL2UQ51KF1
+V1GL2UQ51
-QN2.2_Q
=V1GL2UQ51KF1
+V1GL2UQ51/3.3
Q2150.3

2.1
Pneumatic Valve

2.2
Pneumatic Valve

-QN2 .1 .2

=V1GL2UQ51KF1+V1GL2UQ51/1.2
+.GL2UQ51UQ2.1-W1

-W1
RKC 4.4T-4-RSC 4.4T/S3060
4m

BN BU BK WH

-XGR/S
P1 1 3 4 2
VB2-FSM 4.4/2FKM 4/S3450
TURCK

J1 1 3 4 2
J2 1 3 4 2

BN BU BK WH

-W1.1
RKC 4.4T-0.5-RSC 4.4T/S3060
0.5m

-W1.2
RKC 4.4T-0.5-RSC 4.4T/S3060
0.5m

BN BU BK WH

1 3

-BGR
Sn = 10 mm
TURCK
1644905
pnp
A
4

-BGS
Sn = 10 mm
TURCK
1644905
pnp
A
4

Slide 2
=V1GL2UQ51UQ2.1
+.GL2UQ51UQ2.1
-UQ2.1

=V1GL2UQ51
-UQ2.1-BGR
Slide 2

=V1GL2UQ51
-UQ2.1-BGS
Slide 2

=V1GL2UQ51UQ1+.GL2UQ51UQ1/1

=V1GL2UQ51UQ3+.GL2UQ51UQ3/1

			Date	1/17/2023	Volvo Trucks North America	Valiant TMS	FESTO DQ CONNECTION QN2	Drawing name: =2V09&EFS-EL	= V1GL2UQ51UQ2
			Ed.	MKLEPADLO					+ V1GL2UQ51UQ2
			Appr		P6700 Bodyside LH - Robot Cell 2V09			Document type: EFS	Project nr: 22-16150
Modification	Date	Name	Original		Replacement of / Replaced by	Scale 1:1			Page 1 / 1533

0	1	2	3	4	5	6	7	8	9

=V1GL2UQ51KF1
+V1GL2UQ51

-KF1.22
=V1GL2UQ51KF1+V1GL2UQ51/3.1

Slide 3 (RST)
=V1GL2UQ51KF1
+V1GL2UQ51
-QN3.1_Q
=V1GL2UQ51KF1
+V1GL2UQ51/3.3
Q2150.4

Slide 3 (SET)
=V1GL2UQ51KF1
+V1GL2UQ51
-QN3.2_Q
=V1GL2UQ51KF1
+V1GL2UQ51/3.3
Q2150.5

1.1
Pneumatic Valve

1.2
Pneumatic Valve

-QN3 .1 .2

=V1GL2UQ51KF1+V1GL2UQ51/1.3
+.GL2UQ51UQ3.1-W1

-W1
RKC 4.4T-6-RSC 4.4T/S3060
6m

BN BU BK WH

-XGR/S
P1 1 3 4 2
VB2-FSM 4.4/2FKM 4/S3450
TURCK

J1 1 3 4 2
J2 1 3 4 2

BN BU BK WH

-W1.1
RKC 4.4T-0.5-RSC 4.4T/S3060
0.5m

-W1.2
RKC 4.4T-0.5-RSC 4.4T/S3060
0.5m

BN BU BK WH

-BGR
Sn = 10 mm
TURCK
1644905
pnp
1 3
A
4

-BGS
Sn = 10 mm
TURCK
1644905
pnp
1 3
A
4

Slide 3
=V1GL2UQ51UQ3.1
+.GL2UQ51UQ3.1
-UQ3.1

=V1GL2UQ51
-UQ3.1-BGR
Slide 3

=V1GL2UQ51
-UQ3.1-BGS
Slide 3

=V1GL2UQ51UQ2+.GL2UQ51UQ2/1

=V1GL2UQ51UQ4+.GL2UQ51UQ4/1

			Date	1/17/2023	Volvo Trucks North America	Valiant TMS	FESTO DQ CONNECTION QN3	Drawing name: =2V09&EFS-EL	= V1GL2UQ51UQ3
			Ed.	MKLEPADLO					+ V1GL2UQ51UQ3
			Appr		P6700 Bodyside LH - Robot Cell 2V09			Document type: EFS	Project nr: 22-16150
Modification	Date	Name	Original		Replacement of	Replaced by	Scale 1:1		Page 1 / 1533

0	1	2	3	4	5	6	7	8	9

=V1GL2UQ51KF1
+V1GL2UQ51

-KF1.22
=V1GL2UQ51KF1+V1GL2UQ51/3.1

Shot Pins 4 (RST)
=V1GL2UQ51KF1
+V1GL2UQ51
-QN4.1_Q
=V1GL2UQ51KF1
+V1GL2UQ51/3.3
Q2150.6

Shot Pins 4 (SET)
=V1GL2UQ51KF1
+V1GL2UQ51
-QN4.2_Q
=V1GL2UQ51KF1
+V1GL2UQ51/3.3
Q2150.7

2.1 Pneumatic Valve
2.2 Pneumatic Valve

-QN4 .1 .2

=V1GL2UQ51KF1+V1GL2UQ51/1.4
+V1GL2UQ51UQ4.1-W1

-W1 RKC 4.4T-3-RSC 4.4T/S3060 3m
BN BU BK WH

-XGR/S P1 1 3 4 2 VB2-FSM 4.4/2FKM 4/S3450 TURCK
J1 1 3 4 2 J2 1 3 4 2
BN BU BK WH

-W1.1 RKC 4.4T-0.5-RSC 4.4T/S3060 0.5m
-W1.2 RKC 4.4T-0.5-RSC 4.4T/S3060 0.5m
BN BU BK WH

-BGR Sn = 2 mm TURCK 4570890 pnp
-BGS Sn = 2 mm TURCK 4570890 pnp

Shot Pins 4
=V1GL2UQ51UQ4.1
+V1GL2UQ51UQ4.1
-UQ4.1

=V1GL2UQ51
-UQ4.1-BGR
Shot Pins 4

=V1GL2UQ51
-UQ4.1-BGS
Shot Pins 4

=V1GL2UQ51KF1+V1GL2UQ51/1.5
+V1GL2UQ51UQ4.2-W1

-W1 RKC 4.4T-3-RSC 4.4T/S3060 3m
BN BU BK WH

-BGS/R WELKER WWS001A
A2 2 A1 4

Shot Pins 4
=V1GL2UQ51UQ4.2
+V1GL2UQ51UQ4.2
-UQ4.2

=V1GL2UQ51
-UQ4.2-BGS/R
Shot Pins 4

=V1GL2UQ51KF1+V1GL2UQ51/1.6
+V1GL2UQ51UQ4.3-W1

-W1 RKC 4.4T-4-RSC 4.4T/S3060 4m
BN BU BK WH

-XGR/S P1 1 3 4 2 VB2-FSM 4.4/2FKM 4/S3450 TURCK
J1 1 3 4 2 J2 1 3 4 2
BN BU BK WH

-W1.1 RKC 4.4T-0.5-RSC 4.4T/S3060 0.5m
-W1.2 RKC 4.4T-0.5-RSC 4.4T/S3060 0.5m
BN BU BK WH

-BGR Sn = 2 mm TURCK 4570890 pnp
-BGS Sn = 2 mm TURCK 4570890 pnp

Shot Pins 4
=V1GL2UQ51UQ4.3
+V1GL2UQ51UQ4.3
-UQ4.3

=V1GL2UQ51
-UQ4.3-BGR
Shot Pins 4

=V1GL2UQ51
-UQ4.3-BGS
Shot Pins 4

=V1GL2UQ51UQ3+.GL2UQ51UQ3/1

=V1GL2UQ51UQ5+.GL2UQ51UQ5/1

			Date	1/17/2023	Volvo Trucks North America	Valiant TMS	FESTO DQ CONNECTION QN4	Drawing name: =2V09&EFS-EL	= V1GL2UQ51UQ4
			Ed.	MKLEPADLO					+ V1GL2UQ51UQ4
			Appr		P6700 Bodyside LH - Robot Cell 2V09			Document type: EFS	Project nr: 22-16150
Modification	Date	Name	Original		Replacement of	Replaced by	Scale 1:1		Page 1 / 1533

0	1	2	3	4	5	6	7	8	9

=V1GL2UQ51KF1
+V1GL2UQ51

-KF1.23
=V1GL2UQ51KF1+V1GL2UQ51/3.1

Shot Pins 5 (RST)
=V1GL2UQ51KF1
+V1GL2UQ51
-QN5.1_Q
=V1GL2UQ51KF1
+V1GL2UQ51/3.3
Q2151.0

Shot Pins 5 (SET)
=V1GL2UQ51KF1
+V1GL2UQ51
-QN5.2_Q
=V1GL2UQ51KF1
+V1GL2UQ51/3.3
Q2151.1

1.1 Pneumatic Valve

1.2 Pneumatic Valve

.1 -QN5 .2

=V1GL2UQ51KF1+V1GL2UQ51/1.8
+V1GL2UQ51UQ5.1-W1

=V1GL2UQ51KF1+V1GL2UQ51/1.9
+V1GL2UQ51UQ5.2-W1

=V1GL2UQ51KF1+V1GL2UQ51/2.1
+V1GL2UQ51UQ5.3-W1

-W1
RKC 4.4T-4-RSC 4.4T/S3060
4m

-W1
RKC 4.4T-4-RSC 4.4T/S3060
4m

-W1
RKC 4.4T-5-RSC 4.4T/S3060
5m

BN BU BK WH

-BGS/R
1 3
WELKER
WWS001A
A2 A1
2 4

Shot Pin 5

=V1GL2UQ51UQ5.1
+V1GL2UQ51UQ5.1
-UQ5.1

Shot Pins 5

=V1GL2UQ51UQ5.2
+V1GL2UQ51UQ5.2
-UQ5.2

Shot Pins 5

=V1GL2UQ51UQ5.3
+V1GL2UQ51UQ5.3
-UQ5.3

=V1GL2UQ51
-UQ5.1-BGS/R
Shot Pin 5

=V1GL2UQ51
-UQ5.2-BGS/R
Shot Pins 5

=V1GL2UQ51
-UQ5.3-BGS/R
Shot Pins 5

=V1GL2UQ51UQ4+.GL2UQ51UQ4/1

=V1GL2UQ51UQ6+.GL2UQ51UQ6/1

			Date	1/17/2023	Volvo Trucks North America	Valiant TMS	FESTO DQ CONNECTION QN5	Drawing name: =2V09&EFS-EL	= V1GL2UQ51UQ5
			Ed.	MKLEPADLO					+ V1GL2UQ51UQ5
			Appr		P6700 Bodyside LH - Robot Cell 2V09			Document type: EFS	Project nr: 22-16150
Modification	Date	Name	Original		Replacement of	Replaced by	Scale 1:1		Page 1 / 1533

0	1	2	3	4	5	6	7	8	9

=V1GL2UQ51KF1
+V1GL2UQ51

-KF1.23
=V1GL2UQ51KF1+V1GL2UQ51/3.1

Shot Pins 6 (RST)
=V1GL2UQ51KF1
+V1GL2UQ51
-QN6.1_Q
=V1GL2UQ51KF1
+V1GL2UQ51/3.3
Q2151.2

Shot Pins 6 (SET)
=V1GL2UQ51KF1
+V1GL2UQ51
-QN6.2_Q
=V1GL2UQ51KF1
+V1GL2UQ51/3.3
Q2151.3

2.1 Pneumatic Valve
2.2 Pneumatic Valve

-QN6 .1 .2

=V1GL2UQ51KF1+V1GL2UQ51/2.2
+V1GL2UQ51UQ6.1-W1

-W1 RKC 4.4T-5-RSC 4.4T/S3060 5m

-XGR/S P1 1 3 4 2 VB2-FSM 4.4/2FKM 4/S3450 TURCK

J1 1 3 4 2 J2 1 3 4 2

BN BU BK WH

-W1.1 RKC 4.4T-0.5-RSC 4.4T/S3060 0.5m
-W1.2 RKC 4.4T-0.5-RSC 4.4T/S3060 0.5m

-BGR Sn = 2 mm TURCK 4570890 pnp
-BGS Sn = 2 mm TURCK 4570890 pnp

Shot Pins 6
=V1GL2UQ51UQ6.1
+V1GL2UQ51UQ6.1
-UQ6.1

=V1GL2UQ51KF1+V1GL2UQ51/2.3
+V1GL2UQ51UQ6.2-W1

-W1 RKC 4.4T-4-RSC 4.4T/S3060 4m

-XGR/S P1 1 3 4 2 VB2-FSM 4.4/2FKM 4/S3450 TURCK

J1 1 3 4 2 J2 1 3 4 2

BN BU BK WH

-W1.1 RKC 4.4T-0.5-RSC 4.4T/S3060 0.5m
-W1.2 RKC 4.4T-0.5-RSC 4.4T/S3060 0.5m

-BGR Sn = 2 mm TURCK 4570890 pnp
-BGS Sn = 2 mm TURCK 4570890 pnp

Shot Pins 6
=V1GL2UQ51UQ6.2
+V1GL2UQ51UQ6.2
-UQ6.2

=V1GL2UQ51
-UQ6.1-BGR
Shot Pins 6

=V1GL2UQ51
-UQ6.1-BGS
Shot Pins 6

=V1GL2UQ51
-UQ6.2-BGR
Shot Pins 6

=V1GL2UQ51
-UQ6.2-BGS
Shot Pins 6

=V1GL2UQ51UQ5+.GL2UQ51UQ5/1

=V1GL2UQ51UQ7+.GL2UQ51UQ7/1

			Date	1/17/2023	Volvo Trucks North America	Valiant TMS	FESTO DQ CONNECTION QN6	Drawing name: =2V09&EFS-EL	= V1GL2UQ51UQ6
			Ed.	MKLEPADLO					+ V1GL2UQ51UQ6
			Appr		P6700 Bodyside LH - Robot Cell 2V09			Document type: EFS	Project nr: 22-16150
Modification	Date	Name	Original		Replacement of	Replaced by	Scale 1:1		Page 1 / 1533

0	1	2	3	4	5	6	7	8	9

=V1GL2UQ51KF1
+V1GL2UQ51

-KF1.24
=V1GL2UQ51KF1+V1GL2UQ51/3.1

Shot Pin 7 (RST)
=V1GL2UQ51KF1
+V1GL2UQ51
-QN7.1_Q
=V1GL2UQ51KF1
+V1GL2UQ51/3.3
Q2151.4

Shot Pin 7 (SET)
=V1GL2UQ51KF1
+V1GL2UQ51
-QN7.2_Q
=V1GL2UQ51KF1
+V1GL2UQ51/3.3
Q2151.5

1.1 Pneumatic Valve
1.2 Pneumatic Valve

-QN7 .1 .2

=V1GL2UQ51KF1+V1GL2UQ51/2.4
+V1GL2UQ51UQ7.1-W1

-W1
RKC 4.4T-6-RSC 4.4T/S3060
6m

BN BU BK WH

-XGR/S
P1 1 3 4 2
VB2-FSM 4.4/2FKM 4/S3450
TURCK

J1 1 3 4 2
J2 1 3 4 2

BN BU BK WH

-W1.1
RKC 4.4T-0.5-RSC 4.4T/S3060
0.5m

-W1.2
RKC 4.4T-0.5-RSC 4.4T/S3060
0.5m

BN BU BK WH

-BGR
Sn = 2 mm
TURCK
4570890
pnp
1 3 4

-BGS
Sn = 2 mm
TURCK
4570890
pnp
1 3 4

Shot Pin 7
=V1GL2UQ51UQ7.1
+V1GL2UQ51UQ7.1
-UQ7.1

=V1GL2UQ51
-UQ7.1-BGR
Shot Pin 7

=V1GL2UQ51
-UQ7.1-BGS
Shot Pin 7

=V1GL2UQ51UQ6+.GL2UQ51UQ6/1

=V1GL2UQ51UQ8+.GL2UQ51UQ8/1

			Date	1/17/2023	Volvo Trucks North America	Valiant TMS	FESTO DQ CONNECTION QN7	Drawing name: =2V09&EFS-EL	= V1GL2UQ51UQ7
			Ed.	MKLEPADLO					+ V1GL2UQ51UQ7
			Appr		P6700 Bodyside LH - Robot Cell 2V09			Document type: EFS	Project nr: 22-16150
Modification	Date	Name	Original		Replacement of	Replaced by	Scale 1:1		Page 1 / 1533

0	1	2	3	4	5	6	7	8	9

=V1GL2UQ51KF1
+V1GL2UQ51

-KF1.24
=V1GL2UQ51KF1+V1GL2UQ51/3.1

Shot Pins 8 (RST)
=V1GL2UQ51KF1
+V1GL2UQ51
-QN8.1_Q
=V1GL2UQ51KF1
+V1GL2UQ51/3.3
Q2151.6

Shot Pins 8 (SET)
=V1GL2UQ51KF1
+V1GL2UQ51
-QN8.2_Q
=V1GL2UQ51KF1
+V1GL2UQ51/3.3
Q2151.7

2.1 Pneumatic Valve

2.2 Pneumatic Valve

-QN8 .1 .2

=V1GL2UQ51KF1+V1GL2UQ51/2.5
+V1GL2UQ51UQ8.1-W1

-W1
RKC 4.4T-5-RSC 4.4T/S3060
5m

BN BU BK WH
1 3
-BGS/R
WELKER
WWS001A
A2 A1
2 4

Shot Pins 8

=V1GL2UQ51UQ8.1
+V1GL2UQ51UQ8.1
-UQ8.1

=V1GL2UQ51
-UQ8.1-BGS/R
Shot Pins 8

=V1GL2UQ51KF1+V1GL2UQ51/2.6
+V1GL2UQ51UQ8.2-W1

-W1
RKC 4.4T-6-RSC 4.4T/S3060
6m

BN BU BK WH
1 3
-BGS/R
WELKER
WWS001A
A2 A1
2 4

Shot Pins 8

=V1GL2UQ51UQ8.2
+V1GL2UQ51UQ8.2
-UQ8.2

=V1GL2UQ51
-UQ8.2-BGS/R
Shot Pins 8

=V1GL2UQ51KF1+V1GL2UQ51/2.8
+V1GL2UQ51UQ8.3-W1

-W1
RKC 4.4T-5-RSC 4.4T/S3060
5m

BN BU BK WH
1 3
-BGS/R
WELKER
WWS001A
A2 A1
2 4

Shot Pins 8

=V1GL2UQ51UQ8.3
+V1GL2UQ51UQ8.3
-UQ8.3

=V1GL2UQ51
-UQ8.3-BGS/R
Shot Pins 8

=V1GL2UQ51KF1+V1GL2UQ51/2.9
+V1GL2UQ51UQ8.4-W1

-W1
RKC 4.4T-2-RSC 4.4T/S3060
2m

BN BU BK WH
1 3
-BGS/R
WELKER
WWS001A
A2 A1
2 4

Shot Pins 8

=V1GL2UQ51UQ8.4
+V1GL2UQ51UQ8.4
-UQ8.4

=V1GL2UQ51
-UQ8.4-BGS/R
Shot Pins 8

=V1GL2UQ51UQ7+.GL2UQ51UQ7/1

=V1GL2UQ51UQ9+.GL2UQ51UQ9/1

			Date	1/17/2023	Volvo Trucks North America		Valiant TMS	FESTO DQ CONNECTION QN8	Drawing name: =2V09&EFS-EL
			Ed.	MKLEPADLO					= V1GL2UQ51UQ8
			Appr		P6700 Bodyside LH - Robot Cell 2V09				+ V1GL2UQ51UQ8
Modification	Date	Name	Original		Replacement of	Replaced by	Scale 1:1		Document type: EFS / Project nr: 22-16150 / Page 1 / 1533

0	1	2	3	4	5	6	7	8	9

=V1GL2UQ51KF2
+V1GL2UQ51

-KF2.21
=V1GL2UQ51KF2+V1GL2UQ51/4.1

Shot Pin 9 (RST)
=V1GL2UQ51KF2
+V1GL2UQ51
-QN9.1_Q
=V1GL2UQ51KF2
+V1GL2UQ51/4.3
Q2175.0

Shot Pin 9 (SET)
=V1GL2UQ51KF2
+V1GL2UQ51
-QN9.2_Q
=V1GL2UQ51KF2
+V1GL2UQ51/4.3
Q2175.1

1.1 Pneumatic Valve

1.2 Pneumatic Valve

-QN9 .1 .2

=V1GL2UQ51KF2+V1GL2UQ51/1.1
+V1GL2UQ51UQ9.1-W1

-W1
RKC 4.4T-7-RSC 4.4T/S3060
7 m

BN BU BK WH

-BGS/R
1 3
\+ -
WELKER
WWS001A
A2 A1
2 4

Shot Pin 9

=V1GL2UQ51UQ9.1
+V1GL2UQ51UQ9.1
-UQ9.1

=V1GL2UQ51
-UQ9.1-BGS/R
Shot Pin 9

=V1GL2UQ51UQ8+.GL2UQ51UQ8/1

=V1GL2UQ51UQ10+.GL2UQ51UQ10/1

			Date	1/17/2023	Volvo Trucks North America	Valiant TMS	FESTO DQ CONNECTION QN9	Drawing name: =2V09&EFS-EL	= V1GL2UQ51UQ9
			Ed.	MKLEPADLO					+ V1GL2UQ51UQ9
			Appr		P6700 Bodyside LH - Robot Cell 2V09			Document type: EFS	Project nr: 22-16150
Modification	Date	Name	Original		Replacement of	Replaced by	Scale 1:1		Page 1 / 1533

0	1	2	3	4	5	6	7	8	9

=V1GL2UQ51KF2
+V1GL2UQ51

-KF2.21
=V1GL2UQ51KF2+V1GL2UQ51/4.1

Clamps 10 (RST)
=V1GL2UQ51KF2
+V1GL2UQ51
-QN10.1_Q
=V1GL2UQ51KF2
+V1GL2UQ51/4.3
Q2175.2

Clamps 10 (SET)
=V1GL2UQ51KF2
+V1GL2UQ51
-QN10.2_Q
=V1GL2UQ51KF2
+V1GL2UQ51/4.3
Q2175.3

2.1 Pneumatic Valve

2.2 Pneumatic Valve

-QN10 .1 .2

=V1GL2UQ51KF2+V1GL2UQ51/1.2
+V1GL2UQ51UQ10.1-W1

=V1GL2UQ51KF2+V1GL2UQ51/1.3
+V1GL2UQ51UQ10.2-W1

=V1GL2UQ51KF2+V1GL2UQ51/1.4
+V1GL2UQ51UQ10.3-W1

=V1GL2UQ51KF2+V1GL2UQ51/1.5
+V1GL2UQ51UQ10.4-W1

=V1GL2UQ51KF2+V1GL2UQ51/1.6
+V1GL2UQ51UQ10.5-W1

=V1GL2UQ51KF2+V1GL2UQ51/1.8
+V1GL2UQ51UQ10.6-W1

-W1 RKC 4.4T-3-RSC 4.4T/S3060 3m

-W1 RKC 4.4T-4-RSC 4.4T/S3060 4m

-BGS/R TÜNKERS 1324638

-BGS/R TÜNKERS 1324644

BN BU BK WH

1 3 2 4 A2 A1

Clamps 10
=V1GL2UQ51UQ10.1
+V1GL2UQ51UQ10.1
-UQ10.1

Clamps 10
=V1GL2UQ51UQ10.2
+V1GL2UQ51UQ10.2
-UQ10.2

Clamps 10
=V1GL2UQ51UQ10.3
+V1GL2UQ51UQ10.3
-UQ10.3

Clamps 10
=V1GL2UQ51UQ10.4
+V1GL2UQ51UQ10.4
-UQ10.4

Clamps 10
=V1GL2UQ51UQ10.5
+V1GL2UQ51UQ10.5
-UQ10.5

Clamps 10
=V1GL2UQ51UQ10.6
+V1GL2UQ51UQ10.6
-UQ10.6

=V1GL2UQ51
-UQ10.1-BGS/R
Clamps 10

=V1GL2UQ51
-UQ10.2-BGS/R
Clamps 10

=V1GL2UQ51
-UQ10.3-BGS/R
Clamps 10

=V1GL2UQ51
-UQ10.4-BGS/R
Clamps 10

=V1GL2UQ51
-UQ10.5-BGS/R
Clamps 10

=V1GL2UQ51
-UQ10.6-BGS/R
Clamps 10

=V1GL2UQ51UQ9+.GL2UQ51UQ9/1

=V1GL2UQ51UQ11+.GL2UQ51UQ11/1

			Date	1/17/2023	Volvo Trucks North America	Valiant TMS	FESTO DQ CONNECTION QN10	Drawing name: =2V09&EFS-EL	= V1GL2UQ51UQ10
			Ed.	MKLEPADLO					+ V1GL2UQ51UQ10
			Appr		P6700 Bodyside LH - Robot Cell 2V09			Document type: EFS	Project nr: 22-16150
Modification	Date	Name	Original		Replacement of	Replaced by	Scale 1:1		Page 1 / 1533

0	1	2	3	4	5	6	7	8	9

=V1GL2UQ51KF2
+V1GL2UQ51

-KF2.22
=V1GL2UQ51KF2+V1GL2UQ51/4.1

Clamp 11 (RST)	Clamp 11 (SET)
=V1GL2UQ51KF2	=V1GL2UQ51KF2
+V1GL2UQ51	+V1GL2UQ51
-QN11.1_Q	-QN11.2_Q
=V1GL2UQ51KF2	=V1GL2UQ51KF2
+V1GL2UQ51/4.3	+V1GL2UQ51/4.3
Q2175.4	Q2175.5
1.1 Pneumatic Valve	1.2 Pneumatic Valve

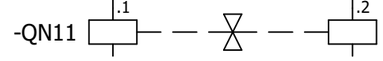

=V1GL2UQ51KF2+V1GL2UQ51/1.9
+V1GL2UQ51UQ11.1-W1

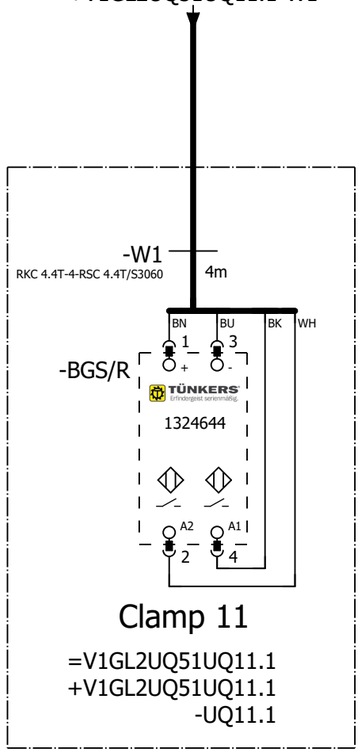

Clamp 11

=V1GL2UQ51UQ11.1
+V1GL2UQ51UQ11.1
-UQ11.1

=V1GL2UQ51
-UQ11.1-BGS/R
Clamp 11

=V1GL2UQ51UQ10+.GL2UQ51UQ10/1

=V1GL2UQ51UQ12+.GL2UQ51UQ12/1

			Date	1/17/2023	Volvo Trucks North America	Valiant TMS	FESTO DQ CONNECTION QN11	Drawing name: =2V09&EFS-EL	= V1GL2UQ51UQ11
			Ed.	MKLEPADLO					+ V1GL2UQ51UQ11
			Appr		P6700 Bodyside LH - Robot Cell 2V09			Document type: EFS	Project nr: 22-16150
Modification	Date	Name	Original		Replacement of	Replaced by	Scale 1:1		Page 1 / 1533

0	1	2	3	4	5	6	7	8	9

=V1GL2UQ51KF2
+V1GL2UQ51

-KF2.22
=V1GL2UQ51KF2+V1GL2UQ51/4.1

Clamp 12 (RST)
=V1GL2UQ51KF2
+V1GL2UQ51
-QN12.1_Q
=V1GL2UQ51KF2
+V1GL2UQ51/4.3
Q2175.6

Clamp 12 (SET)
=V1GL2UQ51KF2
+V1GL2UQ51
-QN12.2_Q
=V1GL2UQ51KF2
+V1GL2UQ51/4.3
Q2175.7

2.1
Pneumatic Valve

2.2
Pneumatic Valve

-QN12 .1 .2

=V1GL2UQ51KF2+V1GL2UQ51/2.1
+V1GL2UQ51UQ12.1-W1

-W1
RKC 4.4T-3-RSC 4.4T/S3060
3m

BN BU BK WH

-BGS/R
1 3
+ -
TÜNKERS
1324638
A2 A1
2 4

Clamp 12

=V1GL2UQ51UQ12.1
+V1GL2UQ51UQ12.1
-UQ12.1

=V1GL2UQ51
-UQ12.1-BGS/R
Clamp 12

=V1GL2UQ51UQ11+.GL2UQ51UQ11/1

=V1GL2UQ51UQ13+.GL2UQ51UQ13/1

			Date	1/17/2023	Volvo Trucks North America	Valiant TMS	FESTO DQ CONNECTION QN12	Drawing name: =2V09&EFS-EL	= V1GL2UQ51UQ12
			Ed.	MKLEPADLO					+ V1GL2UQ51UQ12
			Appr		P6700 Bodyside LH - Robot Cell 2V09			Document type: EFS	Project nr: 22-16150
Modification	Date	Name	Original		Replacement of	Replaced by	Scale 1:1		Page 1 / 1533

0	1	2	3	4	5	6	7	8	9

=V1GL2UQ51KF2
+V1GL2UQ51

-KF2.23
=V1GL2UQ51KF2+V1GL2UQ51/4.1

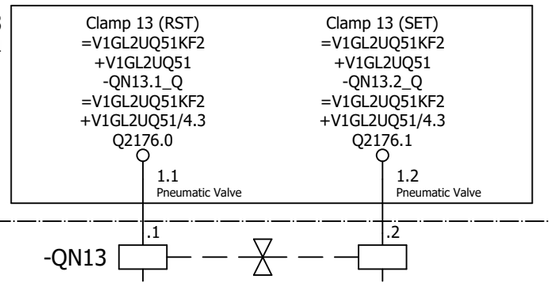

=V1GL2UQ51KF2+V1GL2UQ51/2.2
+V1GL2UQ51UQ13.1-W1

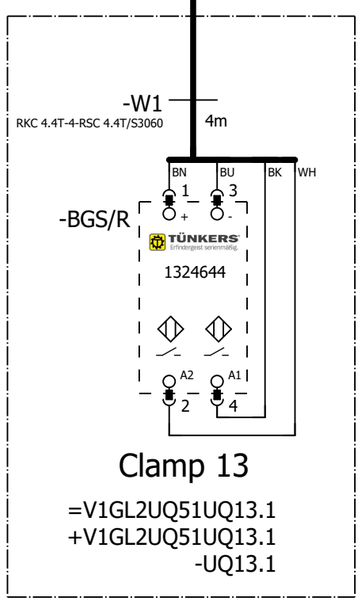

Clamp 13

=V1GL2UQ51UQ13.1
+V1GL2UQ51UQ13.1
-UQ13.1

=V1GL2UQ51
-UQ13.1-BGS/R
Clamp 13

=V1GL2UQ51UQ12+.GL2UQ51UQ12/1

=V1GL2UQ51UQ14+.GL2UQ51UQ14/1

			Date	1/17/2023	Volvo Trucks North America		Valiant TMS	FESTO DQ CONNECTION QN13	Drawing name: =2V09&EFS-EL	= V1GL2UQ51UQ13
			Ed.	MKLEPADLO						+ V1GL2UQ51UQ13
			Appr		P6700 Bodyside LH - Robot Cell 2V09				Document type: EFS	Project nr: 22-16150
Modification	Date	Name	Original		Replacement of	Replaced by	Scale 1:1			Page 1 / 1533

0	1	2	3	4	5	6	7	8	9

=V1GL2UQ51KF2
+V1GL2UQ51

-KF2.23
=V1GL2UQ51KF2+V1GL2UQ51/4.1

Clamp 14 (RST)
=V1GL2UQ51KF2
+V1GL2UQ51
-QN14.1_Q
=V1GL2UQ51KF2
+V1GL2UQ51/4.3
Q2176.2

Clamp 14 (SET)
=V1GL2UQ51KF2
+V1GL2UQ51
-QN14.2_Q
=V1GL2UQ51KF2
+V1GL2UQ51/4.3
Q2176.3

2.1
Pneumatic Valve

2.2
Pneumatic Valve

-QN14 .1 .2

=V1GL2UQ51KF2+V1GL2UQ51/2.3
+V1GL2UQ51UQ14.1-W1

-W1
RKC 4.4T-3-RSC 4.4T/S3060
3m

BN BU BK WH

-BGS/R
1 3
+ -
TÜNKERS
1324644
A2 A1
2 4

Clamp 14

=V1GL2UQ51UQ14.1
+V1GL2UQ51UQ14.1
-UQ14.1

=V1GL2UQ51
-UQ14.1-BGS/R
Clamp 14

=V1GL2UQ51UQ13+.GL2UQ51UQ13/1

=V1GL2UQ51UQ15+.GL2UQ51UQ15/1

			Date	1/17/2023	Volvo Trucks North America	Valiant TMS	FESTO DQ CONNECTION QN14	Drawing name: =2V09&EFS-EL	= V1GL2UQ51UQ14
			Ed.	MKLEPADLO					+ V1GL2UQ51UQ14
			Appr		P6700 Bodyside LH - Robot Cell 2V09			Document type: EFS	Project nr: 22-16150
Modification	Date	Name	Original		Replacement of	Replaced by	Scale 1:1		Page 1 / 1533

0	1	2	3	4	5	6	7	8	9

=V1GL2UQ51KF2
+V1GL2UQ51

-KF2.24
=V1GL2UQ51KF2+V1GL2UQ51/4.1

Clamp 15 (RST)	Clamp 15 (SET)
=V1GL1UQ51KF2	=V1GL1UQ51KF2
+V1GL1UQ51	+V1GL1UQ51
-QN15.1_Q	-QN15.2_Q
=V1GL2UQ51KF2	=V1GL2UQ51KF2
+V1GL2UQ51/4.3	+V1GL2UQ51/4.3
Q2176.4	Q2176.5
1.1 Pneumatic Valve	1.2 Pneumatic Valve

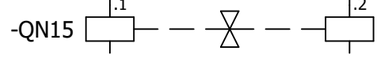

=V1GL2UQ51KF2+V1GL2UQ51/2.4
+V1GL2UQ51UQ15.1-W1

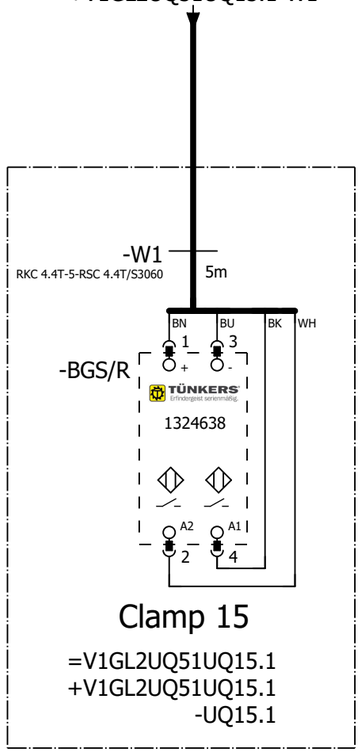

Clamp 15

=V1GL2UQ51UQ15.1
+V1GL2UQ51UQ15.1
-UQ15.1

=V1GL2UQ51 -UQ15.1-BGS/R Clamp 15

=V1GL2UQ51UQ14+.GL2UQ51UQ14/1

=V1GL2UQ51UQ16+.GL2UQ51UQ16/1

			Date	1/17/2023	Volvo Trucks North America	Valiant TMS	FESTO DQ CONNECTION QN15	Drawing name: =2V09&EFS-EL	= V1GL2UQ51UQ15
			Ed.	MKLEPADLO					+ V1GL2UQ51UQ15
			Appr		P6700 Bodyside LH - Robot Cell 2V09			Document type: EFS	Project nr: 22-16150
Modification	Date	Name	Original		Replacement of	Replaced by	Scale 1:1		Page 1 / 1533

0	1	2	3	4	5	6	7	8	9

=V1GL2UQ51KF2
+V1GL2UQ51

-KF2.24
=V1GL2UQ51KF2+V1GL2UQ51/4.1

Clamp 16 (RST)
=V1GL2UQ51KF2
+V1GL2UQ51
-QN16.1_Q
=V1GL2UQ51KF2
+V1GL2UQ51/4.3
Q2176.6

Clamp 16 (SET)
=V1GL2UQ51KF2
+V1GL2UQ51
-QN16.2_Q
=V1GL2UQ51KF2
+V1GL2UQ51/4.3
Q2176.7

2.1 Pneumatic Valve

2.2 Pneumatic Valve

-QN16 .1 .2

=V1GL2UQ51KF2+V1GL2UQ51/2.5
+V1GL2UQ51UQ16.1-W1

-W1
RKC 4.4T-4-RSC 4.4T/S3060
4m

BN BU BK WH

-BGS/R
1 3
+ -
TÜNKERS
13246644
A2 A1
2 4

Clamp 16

=V1GL2UQ51UQ16.1
+V1GL2UQ51UQ16.1
-UQ16.1

=V1GL2UQ51 -UQ16.1-BGS/R Clamp 16

=V1GL2UQ51UQ15+.GL2UQ51UQ15/1

=V1GL2UQ51UQ17+.GL2UQ51UQ17/1

			Date	1/17/2023	Volvo Trucks North America	Valiant TMS	FESTO DQ CONNECTION QN16	Drawing name: =2V09&EFS-EL	= V1GL2UQ51UQ16
			Ed.	MKLEPADLO					+ V1GL2UQ51UQ16
			Appr		P6700 Bodyside LH - Robot Cell 2V09			Document type: EFS	Project nr: 22-16150
Modification	Date	Name	Original		Replacement of	Replaced by	Scale 1:1		Page 1 / 1533

0	1	2	3	4	5	6	7	8	9

=V1GL2UQ51KF3
+V1GL2UQ51

-KF3.21
=V1GL2UQ51KF3+V1GL2UQ51/4.1

Clamps 17 (RST)
=V1GL2UQ51KF3
+V1GL2UQ51
-QN17.1_Q
=V1GL2UQ51KF3
+V1GL2UQ51/4.3
Q2200.0

Clamps 17 (SET)
=V1GL2UQ51KF3
+V1GL2UQ51
-QN17.2_Q
=V1GL2UQ51KF3
+V1GL2UQ51/4.3
Q2200.1

1.1 Pneumatic Valve

1.2 Pneumatic Valve

-QN17 .1 .2

=V1GL2UQ51KF3+V1GL2UQ51/1.1
+V1GL2UQ51UQ17.1-W1

=V1GL2UQ51KF3+V1GL2UQ51/1.2
+V1GL2UQ51UQ17.2-W1

=V1GL2UQ51KF3+V1GL2UQ51/1.3
+V1GL2UQ51UQ17.3-W1

=V1GL2UQ51KF3+V1GL2UQ51/1.4
+V1GL2UQ51UQ17.4-W1

-W1 RKC 4.4T-4-RSC 4.4T/S3060 4m

-W1 RKC 4.4T-5-RSC 4.4T/S3060 5m

-W1 RKC 4.4T-5-RSC 4.4T/S3060 5m

-W1 RKC 4.4T-5-RSC 4.4T/S3060 5m

-BGS/R
BN BU BK WH
1 3
+ -
TÜNKERS
1324638
A2 A1
2 4

Clamps 17
=V1GL2UQ51UQ17.1
+V1GL2UQ51UQ17.1
-UQ17.1

Clamps 17
=V1GL2UQ51UQ17.2
+V1GL2UQ51UQ17.2
-UQ17.2

Clamps 17
=V1GL2UQ51UQ17.3
+V1GL2UQ51UQ17.3
-UQ17.3

Clamps 17
=V1GL2UQ51UQ17.4
+V1GL2UQ51UQ17.4
-UQ17.4

=V1GL2UQ51
-UQ17.1-BGS/R
Clamps 17

=V1GL2UQ51
-UQ17.2-BGS/R
Clamps 17

=V1GL2UQ51
-UQ17.3-BGS/R
Clamps 17

=V1GL2UQ51
-UQ17.4-BGS/R
Clamps 17

=V1GL2UQ51UQ16+.GL2UQ51UQ16/1

=V1GL2UQ51UQ18+.GL2UQ51UQ18/1

			Date	1/17/2023	Volvo Trucks North America	Valiant TMS	FESTO DQ CONNECTION QN17	Drawing name: =2V09&EFS-EL	= V1GL2UQ51UQ17
			Ed.	MKLEPADLO					+ V1GL2UQ51UQ17
			Appr		P6700 Bodyside LH - Robot Cell 2V09			Document type: EFS	Project nr: 22-16150
Modification	Date	Name	Original		Replacement of	Replaced by	Scale 1:1		Page 1 / 1533

0	1	2	3	4	5	6	7	8	9

=V1GL2UQ51KF3
+V1GL2UQ51

-KF3.21
=V1GL2UQ51KF3+V1GL2UQ51/4.1

Clamps 18 (RST)	Clamps 18 (SET)
=V1GL2UQ51KF3	=V1GL2UQ51KF3
+V1GL2UQ51	+V1GL2UQ51
-QN18.1_Q	-QN18.2_Q
=V1GL2UQ51KF3	=V1GL2UQ51KF3
+V1GL2UQ51/4.3	+V1GL2UQ51/4.3
Q2200.2	Q2200.3
2.1 Pneumatic Valve	2.2 Pneumatic Valve

-QN18 .1 .2

=V1GL2UQ51KF3+V1GL2UQ51/1.5
+V1GL2UQ51UQ18.1-W1

-W1
RKC 4.4T-5-RSC 4.4T/S3060
5m

BN BU BK WH

-BGS/R
1 3
+ -
TÜNKERS
1324638
A2 A1
2 4

Clamps 18

=V1GL2UQ51UQ18.1
+V1GL2UQ51UQ18.1
-UQ18.1

=V1GL2UQ51
-UQ18.1-BGS/R
Clamps 18

=V1GL2UQ51KF3+V1GL2UQ51/1.6
+V1GL2UQ51UQ18.2-W1

-W1
RKC 4.4T-5-RSC 4.4T/S3060
5m

BN BU BK WH

-BGS/R
1 3
+ -
TÜNKERS
1324638
A2 A1
2 4

Clamps 18

=V1GL2UQ51UQ18.2
+V1GL2UQ51UQ18.2
-UQ18.2

=V1GL2UQ51
-UQ18.2-BGS/R
Clamps 18

=V1GL2UQ51UQ17+.GL2UQ51UQ17/1

=V1GL2UQ51UQ19+.GL2UQ51UQ19/1

			Date	1/17/2023	Volvo Trucks North America	Valiant TMS	FESTO DQ CONNECTION QN18	Drawing name: =2V09&EFS-EL	= V1GL2UQ51UQ18
			Ed.	MKLEPADLO					+ V1GL2UQ51UQ18
			Appr		P6700 Bodyside LH - Robot Cell 2V09			Document type: EFS	Project nr: 22-16150
Modification	Date	Name	Original		Replacement of / Replaced by	Scale 1:1			Page 1 / 1533

0	1	2	3	4	5	6	7	8	9

=V1GL2UQ51KF3
+V1GL2UQ51

-KF3.22
=V1GL2UQ51KF3+V1GL2UQ51/4.1

Clamps 19 (RST)	Clamps 19 (SET)
=V1GL2UQ51KF3	=V1GL2UQ51KF3
+V1GL2UQ51	+V1GL2UQ51
-QN19.1_Q	-QN19.2_Q
=V1GL2UQ51KF3	=V1GL2UQ51KF3
+V1GL2UQ51/4.3	+V1GL2UQ51/4.3
Q2200.4	Q2200.5
1.1 Pneumatic Valve	1.2 Pneumatic Valve

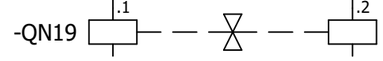

=V1GL2UQ51KF3+V1GL2UQ51/1.8
+V1GL2UQ51UQ19.1-W1

=V1GL2UQ51KF3+V1GL2UQ51/1.9
+V1GL2UQ51UQ19.2-W1

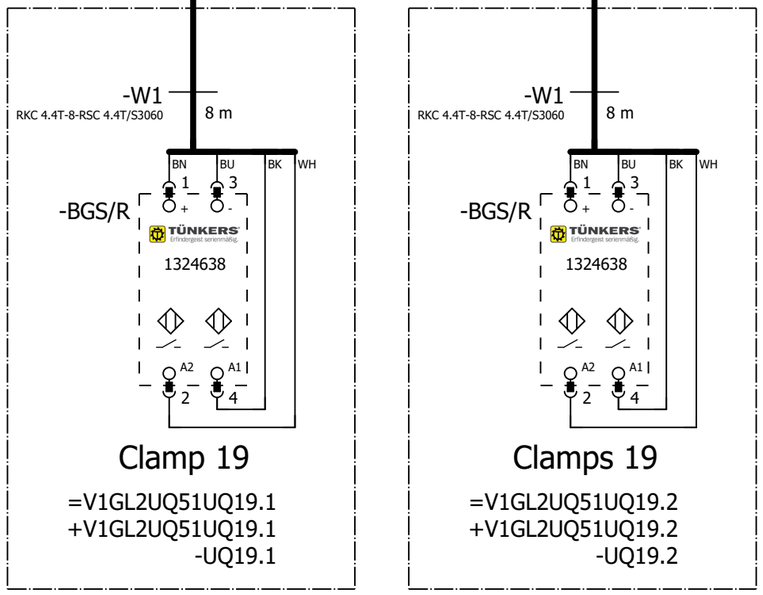

Clamp 19

=V1GL2UQ51UQ19.1
+V1GL2UQ51UQ19.1
-UQ19.1

Clamps 19

=V1GL2UQ51UQ19.2
+V1GL2UQ51UQ19.2
-UQ19.2

=V1GL2UQ51
-UQ19.1-BGS/R
Clamp 19

=V1GL2UQ51
-UQ19.2-BGS/R
Clamps 19

=V1GL2UQ51UQ18+.GL2UQ51UQ18/1

=V1GL2UQ51UQ20+.GL2UQ51UQ20/1

			Date	1/17/2023	Volvo Trucks North America		Valiant TMS	FESTO DQ CONNECTION QN19	Drawing name: =2V09&EFS-EL	= V1GL2UQ51UQ19
			Ed.	MKLEPADLO						+ V1GL2UQ51UQ19
			Appr		P6700 Bodyside LH - Robot Cell 2V09				Document type: EFS	Project nr: 22-16150
Modification	Date	Name	Original		Replacement of	Replaced by	Scale 1:1			Page 1 / 1533

0	1	2	3	4	5	6	7	8	9

=V1GL2UQ51KF3
+V1GL2UQ51

-KF3.22
=V1GL2UQ51KF3+V1GL2UQ51/4.1

Clamp 20 (RST)	Clamp 20 (SET)
=V1GL2UQ51KF3	=V1GL2UQ51KF3
+V1GL2UQ51	+V1GL2UQ51
-QN20.1_Q	-QN20.2_Q
=V1GL2UQ51KF3	=V1GL2UQ51KF3
+V1GL2UQ51/4.3	+V1GL2UQ51/4.3
Q2200.6	Q2200.7
2.1 Pneumatic Valve	2.2 Pneumatic Valve

-QN20 .1 .2

=V1GL2UQ51KF3+V1GL2UQ51/2.1
+V1GL2UQ51UQ20.1-W1

-W1
RKC 4.4T-5-RSC 4.4T/S3060
5m

BN BU BK WH

-BGS/R
1 3
+ -
TÜNKERS
1324644
A2 A1
2 4

Clamp 20

=V1GL2UQ51UQ20.1
+V1GL2UQ51UQ20.1
-UQ20.1

=V1GL2UQ51
-UQ20.1-BGS/R
Clamp 20

=V1GL2UQ51UQ19+.GL2UQ51UQ19/1

=V1GL2UQ51UQ21+.GL2UQ51UQ21/1

			Date	1/17/2023	Volvo Trucks North America	Valiant TMS	FESTO DQ CONNECTION QN20	Drawing name: =2V09&EFS-EL	= V1GL2UQ51UQ20
			Ed.	MKLEPADLO					+ V1GL2UQ51UQ20
			Appr		P6700 Bodyside LH - Robot Cell 2V09			Document type: EFS	Project nr: 22-16150
Modification	Date	Name	Original		Replacement of	Replaced by	Scale 1:1		Page 1 / 1533

0	1	2	3	4	5	6	7	8	9

=V1GL2UQ51KF3
+V1GL2UQ51

-KF3.23
=V1GL2UQ51KF3+V1GL2UQ51/4.1

Clamp 21 (RST)	Clamp 21 (SET)
=V1GL2UQ51KF3	=V1GL2UQ51KF3
+V1GL2UQ51	+V1GL2UQ51
-QN21.1_Q	-QN21.2_Q
=V1GL2UQ51KF3	=V1GL2UQ51KF3
+V1GL2UQ51/4.3	+V1GL2UQ51/4.3
Q2201.0	Q2201.1
1.1 Pneumatic Valve	1.2 Pneumatic Valve

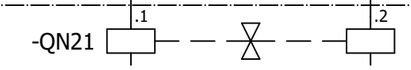

=V1GL2UQ51KF3+V1GL2UQ51/2.2
+V1GL2UQ51UQ21.1-W1

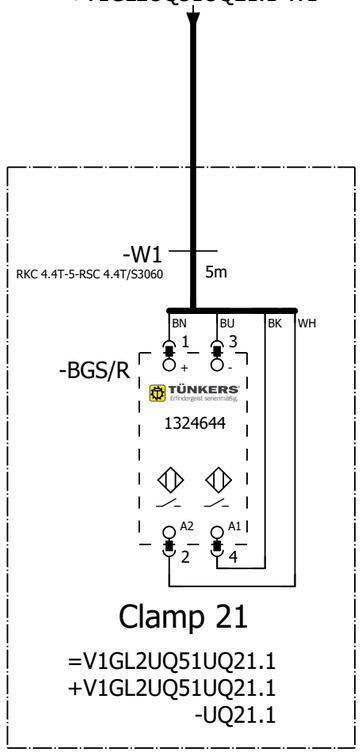

Clamp 21

=V1GL2UQ51UQ21.1
+V1GL2UQ51UQ21.1
-UQ21.1

=V1GL2UQ51
-UQ21.1-BGS/R
Clamp 21

=V1GL2UQ51UQ20+.GL2UQ51UQ20/1

=V1GL2UQ51UQ22+.GL2UQ51UQ22/1

			Date	1/17/2023	Volvo Trucks North America	Valiant TMS	FESTO DQ CONNECTION QN21	Drawing name: =2V09&EFS-EL	= V1GL2UQ51UQ21
			Ed.	MKLEPADLO					+ V1GL2UQ51UQ21
			Appr		P6700 Bodyside LH - Robot Cell 2V09			Document type: EFS	Project nr: 22-16150
Modification	Date	Name	Original		Replacement of	Replaced by	Scale 1:1		Page 1 / 1533

0	1	2	3	4	5	6	7	8	9

=V1GL2UQ51KF3
+V1GL2UQ51

-KF3.23
=V1GL2UQ51KF3+V1GL2UQ51/4.1

Clamps 22 (RST)
=V1GL2UQ51KF3
+V1GL2UQ51
-QN22.1_Q
=V1GL2UQ51KF3
+V1GL2UQ51/4.3
Q2201.2

Clamps 22 (SET)
=V1GL2UQ51KF3
+V1GL2UQ51
-QN22.2_Q
=V1GL2UQ51KF3
+V1GL2UQ51/4.3
Q2201.3

2.1 Pneumatic Valve

2.2 Pneumatic Valve

-QN22 .1 .2

=V1GL2UQ51KF3+V1GL2UQ51/2.3
+V1GL2UQ51UQ22.1-W1

=V1GL2UQ51KF3+V1GL2UQ51/2.4
+V1GL2UQ51UQ22.2-W1

=V1GL2UQ51KF3+V1GL2UQ51/2.5
+V1GL2UQ51UQ22.3-W1

-W1 6m
RKC 4.4T-6-RSC 4.4T/S3060
BN BU BK WH

-BGS/R
1 3
+ -
TÜNKERS
1324638
A2 A1
2 4

Clamps 22
=V1GL2UQ51UQ22.1
+V1GL2UQ51UQ22.1
-UQ22.1

Clamps 22
=V1GL2UQ51UQ22.2
+V1GL2UQ51UQ22.2
-UQ22.2

Clamps 22
=V1GL2UQ51UQ22.3
+V1GL2UQ51UQ22.3
-UQ22.3

=V1GL2UQ51
-UQ22.1-BGS/R
Clamps 22

=V1GL2UQ51
-UQ22.2-BGS/R
Clamps 22

=V1GL2UQ51
-UQ22.3-BGS/R
Clamps 22

=V1GL2UQ51UQ21+.GL2UQ51UQ21/1

=V1GL2UQ51UQ23+.GL2UQ51UQ23/1

			Date	1/17/2023	Volvo Trucks North America		Valiant TMS	FESTO DQ CONNECTION QN22	Drawing name: =2V09&EFS-EL	= V1GL2UQ51UQ22
			Ed.	MKLEPADLO						+ V1GL2UQ51UQ22
			Appr		P6700 Bodyside LH - Robot Cell 2V09				Document type: EFS	Project nr: 22-16150
Modification	Date	Name	Original		Replacement of	Replaced by	Scale 1:1			Page 1 / 1533

0	1	2	3	4	5	6	7	8	9

=V1GL2UQ51KF3
+V1GL2UQ51

-KF3.24
=V1GL2UQ51KF3+V1GL2UQ51/4.1

Clamp 23 (RST)	Clamp 23 (SET)
=V1GL2UQ51KF3	=V1GL2UQ51KF3
+V1GL2UQ51	+V1GL2UQ51
-QN23.1_Q	-QN23.2_Q
=V1GL2UQ51KF3	=V1GL2UQ51KF3
+V1GL2UQ51/4.3	+V1GL2UQ51/4.3
Q2201.4	Q2201.5
1.1 Pneumatic Valve	1.2 Pneumatic Valve

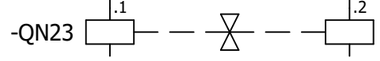

=V1GL2UQ51KF3+V1GL2UQ51/2.6
+V1GL2UQ51UQ23.1-W1

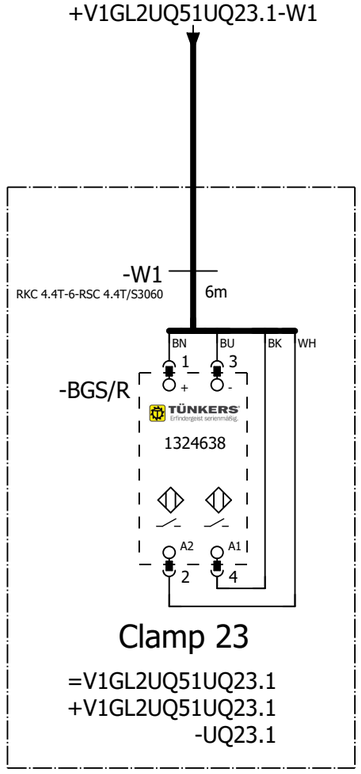

Clamp 23

=V1GL2UQ51UQ23.1
+V1GL2UQ51UQ23.1
-UQ23.1

=V1GL2UQ51 -UQ23.1-BGS/R Clamp 23

=V1GL2UQ51UQ22+.GL2UQ51UQ22/1

=V1GL2UQ51UQ24+.GL2UQ51UQ24/1

			Date	1/17/2023	Volvo Trucks North America	Valiant TMS	FESTO DQ CONNECTION QN23	Drawing name: =2V09&EFS-EL	= V1GL2UQ51UQ23
			Ed.	MKLEPADLO					+ V1GL2UQ51UQ23
			Appr		P6700 Bodyside LH - Robot Cell 2V09			Document type: EFS	Project nr: 22-16150
Modification	Date	Name	Original		Replacement of	Replaced by	Scale 1:1		Page 1 / 1533

0	1	2	3	4	5	6	7	8	9

=V1GL2UQ51KF3
+V1GL2UQ51

-KF3.24
=V1GL2UQ51KF3+V1GL2UQ51/4.1

Clamp 24 (RST)	Clamp 24 (SET)
=V1GL2UQ51KF3	=V1GL2UQ51KF3
+V1GL2UQ51	+V1GL2UQ51
-QN24.1_Q	-QN24.2_Q
=V1GL2UQ51KF3	=V1GL2UQ51KF3
+V1GL2UQ51/4.3	+V1GL2UQ51/4.3
Q2201.6	Q2201.7
2.1 Pneumatic Valve	2.2 Pneumatic Valve

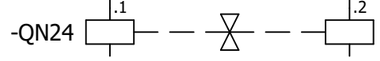

=V1GL2UQ51KF3+V1GL2UQ51/2.8
+V1GL2UQ51UQ24.1-W1

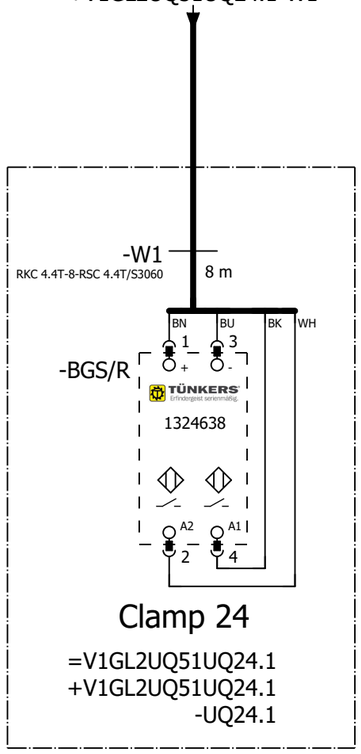

Clamp 24

=V1GL2UQ51UQ24.1
+V1GL2UQ51UQ24.1
-UQ24.1

=V1GL2UQ51
-UQ24.1-BGS/R
Clamp 24

=V1GL2UQ51UQ23+.GL2UQ51UQ23/1

=V1GL2UQ51UQ25+.GL2UQ51UQ25/1

			Date	1/17/2023	Volvo Trucks North America	Valiant TMS	FESTO DQ CONNECTION QN24	Drawing name: =2V09&EFS-EL	= V1GL2UQ51UQ24
			Ed.	MKLEPADLO					+ V1GL2UQ51UQ24
			Appr		P6700 Bodyside LH - Robot Cell 2V09			Document type: EFS	Project nr: 22-16150
Modification	Date	Name	Original		Replacement of	Replaced by	Scale 1:1		Page 1 / 1533

0	1	2	3	4	5	6	7	8	9

=V1GL2UQ51KF4
+V1GL2UQ51

-KF4.21
=V1GL2UQ51KF4+V1GL2UQ51/2.1

Clamp 25 (RST)	Clamp 25 (SET)
=V1GL2UQ51KF4	=V1GL2UQ51KF4
+V1GL2UQ51	+V1GL2UQ51
-QN25.1_Q	-QN25.2_Q
=V1GL2UQ51KF4	=V1GL2UQ51KF4
+V1GL2UQ51/2.3	+V1GL2UQ51/2.3
Q2225.0	Q2225.1
1.1 Pneumatic Valve	1.2 Pneumatic Valve

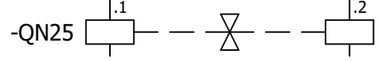

=V1GL2UQ51KF4+V1GL2UQ51/1.1
+V1GL2UQ51UQ25.1-W1

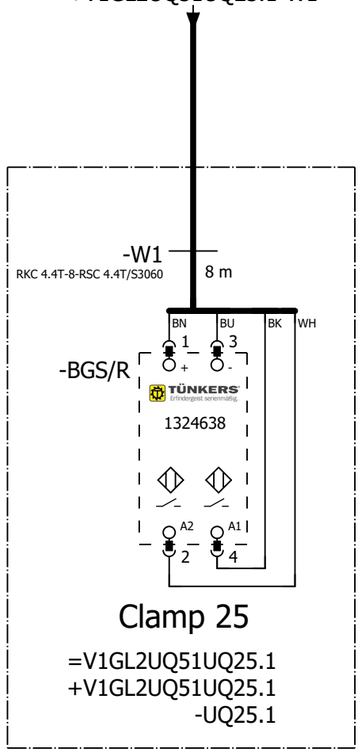

Clamp 25

=V1GL2UQ51UQ25.1
+V1GL2UQ51UQ25.1
-UQ25.1

=V1GL2UQ51 -UQ25.1-BGS/R Clamp 25

=V1GL2UQ51UQ24+.GL2UQ51UQ24/1

=V1GL2UQ51UQ26+.GL2UQ51UQ26/1

			Date	1/17/2023	Volvo Trucks North America	Valiant TMS	FESTO DQ CONNECTION QN25	Drawing name: =2V09&EFS-EL	= V1GL2UQ51UQ25
			Ed.	MKLEPADLO					+ V1GL2UQ51UQ25
			Appr		P6700 Bodyside LH - Robot Cell 2V09			Document type: EFS	Project nr: 22-16150
Modification	Date	Name	Original		Replacement of	Replaced by	Scale 1:1		Page 1 / 1533

0	1	2	3	4	5	6	7	8	9

=V1GL2UQ51KF4
+V1GL2UQ51

-KF4.21
=V1GL2UQ51KF4+V1GL2UQ51/2.1

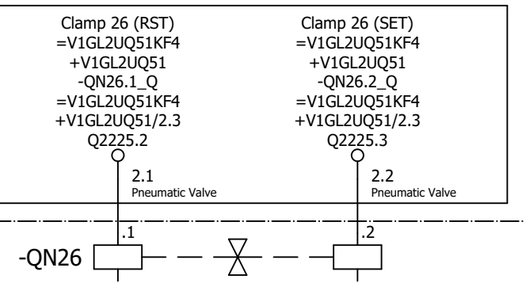

=V1GL2UQ51KF4+V1GL2UQ51/1.2
+V1GL2UQ51UQ26.1-W1

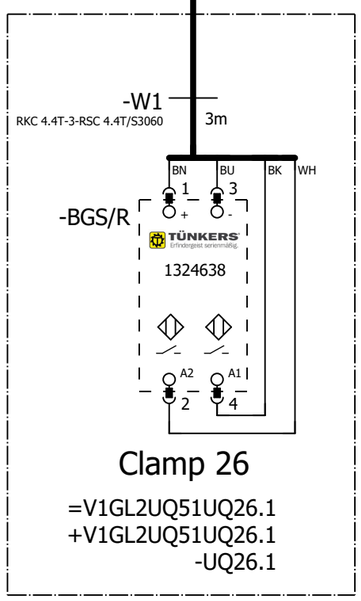

Clamp 26

=V1GL2UQ51UQ26.1
+V1GL2UQ51UQ26.1
-UQ26.1

=V1GL2UQ51 -UQ26.1-BGS/R Clamp 26

=V1GL2UQ51UQ25+.GL2UQ51UQ25/1

=V1GL2UQ51UQ27+.GL2UQ51UQ27/1

			Date	1/17/2023	Volvo Trucks North America		Valiant TMS	FESTO DQ CONNECTION QN26	Drawing name: =2V09&EFS-EL	= V1GL2UQ51UQ26
			Ed.	MKLEPADLO						+ V1GL2UQ51UQ26
			Appr		P6700 Bodyside LH - Robot Cell 2V09				Document type: EFS	Project nr: 22-16150
Modification	Date	Name	Original		Replacement of	Replaced by	Scale 1:1			Page 1 / 1533

0	1	2	3	4	5	6	7	8	9

=V1GL2UQ51KF4
+V1GL2UQ51

-KF4.22
=V1GL2UQ51KF4+V1GL2UQ51/2.1

Clamp 27 (RST)	Clamp 27 (SET)
=V1GL2UQ51KF4	=V1GL2UQ51KF4
+V1GL2UQ51	+V1GL2UQ51
-QN27.1_Q	-QN27.2_Q
=V1GL2UQ51KF4	=V1GL2UQ51KF4
+V1GL2UQ51/2.3	+V1GL2UQ51/2.3
Q2225.4	Q2225.5
1.1 Pneumatic Valve	1.2 Pneumatic Valve

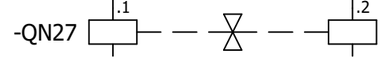

=V1GL2UQ51KF4+V1GL2UQ51/1.3
+V1GL2UQ51UQ27.1-W1

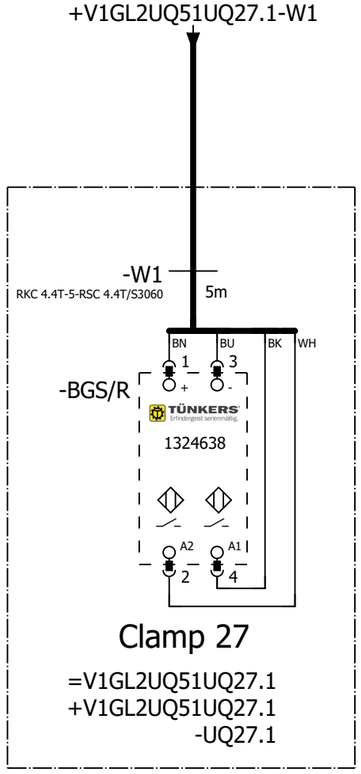

Clamp 27

=V1GL2UQ51UQ27.1
+V1GL2UQ51UQ27.1
-UQ27.1

=V1GL2UQ51 -UQ27.1-BGS/R Clamp 27

=V1GL2UQ51UQ26+.GL2UQ51UQ26/1

=V1GL2UQ51UQ28+.GL2UQ51UQ28/1

			Date	1/17/2023	Volvo Trucks North America	Valiant TMS	FESTO DQ CONNECTION QN27	Drawing name: =2V09&EFS-EL	= V1GL2UQ51UQ27
			Ed.	MKLEPADLO					+ V1GL2UQ51UQ27
			Appr		P6700 Bodyside LH - Robot Cell 2V09			Document type: EFS	Project nr: 22-16150
Modification	Date	Name	Original		Replacement of	Replaced by	Scale 1:1		Page 1 / 1533

0	1	2	3	4	5	6	7	8	9

=V1GL2UQ51KF4
+V1GL2UQ51

-KF4.22
=V1GL2UQ51KF4+V1GL2UQ51/2.1

Clamp 28 (RST)
=V1GL2UQ51KF4
+V1GL2UQ51
-QN28.1_Q
=V1GL2UQ51KF4
+V1GL2UQ51/2.3
Q2225.6

Clamp 28 (SET)
=V1GL2UQ51KF4
+V1GL2UQ51
-QN28.2_Q
=V1GL2UQ51KF4
+V1GL2UQ51/2.3
Q2225.7

2.1 Pneumatic Valve
2.2 Pneumatic Valve

-QN28 .1 .2

=V1GL2UQ51KF4+V1GL2UQ51/1.4
+V1GL2UQ51UQ28.1-W1

-W1
RKC 4.4T-5-RSC 4.4T/S3060
5m

BN BU BK WH

-BGS/R
1 3
+ -
TÜNKERS
1324638
A2 A1
2 4

Clamp 28
=V1GL2UQ51UQ28.1
+V1GL2UQ51UQ28.1
-UQ28.1

=V1GL2UQ51
-UQ28.1-BGS/R
Clamp 28

=V1GL2UQ51UQ27+.GL2UQ51UQ27/1

=V1GL2UQ51UQ29+.GL2UQ51UQ29/1

			Date	1/17/2023	Volvo Trucks North America		Valiant TMS	FESTO DQ CONNECTION QN28	Drawing name: =2V09&EFS-EL	= V1GL2UQ51UQ28
			Ed.	MKLEPADLO						+ V1GL2UQ51UQ28
			Appr		P6700 Bodyside LH - Robot Cell 2V09				Document type: EFS	Project nr: 22-16150
Modification	Date	Name	Original		Replacement of	Replaced by	Scale 1:1			Page 1 / 1533

0	1	2	3	4	5	6	7	8	9

=V1GL2UQ51KF4
+V1GL2UQ51

-KF4.23
=V1GL2UQ51KF4+V1GL2UQ51/2.1

Shot Pin 29 (RST)
=V1GL2UQ51KF4
+V1GL2UQ51
-QN19.1_Q
=V1GL2UQ51KF4
+V1GL2UQ51/2.3
Q2256.0

Shot Pin 29 (SET)
=V1GL2UQ51KF4
+V1GL2UQ51
-QN19.2_Q
=V1GL2UQ51KF4
+V1GL2UQ51/2.3
Q2256.1

1.1 Pneumatic Valve
1.2 Pneumatic Valve

-QN29 .1 .2

=V1GL2UQ51KF4+V1GL2UQ51/1.5
+V1GL2UQ51UQ29.1-W1

-W1
RKC 4.4T-6-RSC 4.4T/S3060
6m

BN BU BK WH

-XGR/S
P1 1 3 4 2
VB2-FSM 4.4/2FKM 4/S3450
TURCK
J1 1 3 4 2
J2 1 3 4 2

BN BU BK WH

-W1.1
RKC 4.4T-0.5-RSC 4.4T/S3060
0.5m

-W1.2
RKC 4.4T-0.5-RSC 4.4T/S3060
0.5m

BN BU BK WH

-BGR
Sn = 2 mm
TURCK
4570890
pnp
1 3 4

-BGS
Sn = 2 mm
TURCK
4570890
pnp
1 3 4

Shot Pin 29
=V1GL2UQ51UQ29.1
+V1GL2UQ51UQ29.1
-UQ29.1

=V1GL2UQ51
-UQ29.1-BGR
Shot Pin 29

=V1GL2UQ51
-UQ29.1-BGS
Shot Pin 29

=V1GL2UQ51UQ28+.GL2UQ51UQ28/1

=V1GL2UQ51UQ30+.GL2UQ51UQ30/1

			Date	1/17/2023	Volvo Trucks North America	Valiant TMS	FESTO DQ CONNECTION QN29	Drawing name: =2V09&EFS-EL	= V1GL2UQ51UQ29
			Ed.	MKLEPADLO					+ V1GL2UQ51UQ29
			Appr		P6700 Bodyside LH - Robot Cell 2V09			Document type: EFS	Project nr: 22-16150
Modification	Date	Name	Original		Replacement of	Replaced by	Scale 1:1		Page 1 / 1533

0	1	2	3	4	5	6	7	8	9

=V1GL2UQ51KF4
+V1GL2UQ51

-KF4.23
=V1GL2UQ51KF4+V1GL2UQ51/2.1

Clamp 30 (RST)	Clamp 30 (SET)
=V1GL2UQ51KF4	=V1GL2UQ51KF4
+V1GL2UQ51	+V1GL2UQ51
-QN20.1_Q	-QN20.2_Q
=V1GL2UQ51KF4	=V1GL2UQ51KF4
+V1GL2UQ51/2.3	+V1GL2UQ51/2.3
Q2256.2	Q2256.3
2.1 Pneumatic Valve	2.2 Pneumatic Valve

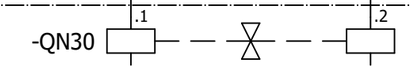

=V1GL2UQ51KF4+V1GL2UQ51/1.6
+V1GL2UQ51UQ30.1-W1

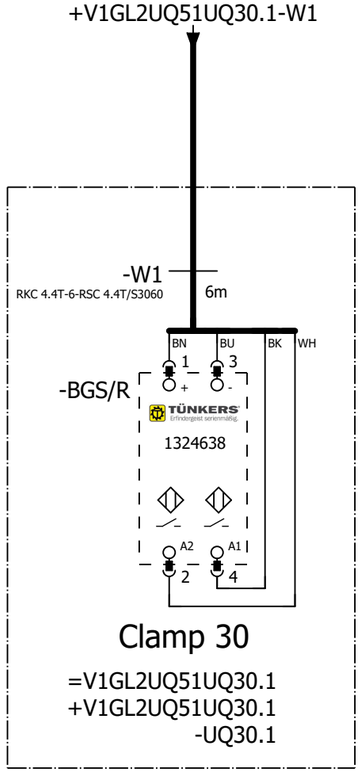

Clamp 30

=V1GL2UQ51UQ30.1
+V1GL2UQ51UQ30.1
-UQ30.1

=V1GL2UQ51 -UQ30.1-BGS/R Clamp 30

=V1GL2UQ51UQ29+.GL2UQ51UQ29/1

=V1GL2UQ51UQ31+.GL2UQ51UQ31/1

			Date	1/17/2023	Volvo Trucks North America	Valiant TMS	FESTO DQ CONNECTION QN30	Drawing name: =2V09&EFS-EL	= V1GL2UQ51UQ30
			Ed.	MKLEPADLO					+ V1GL2UQ51UQ30
			Appr		P6700 Bodyside LH - Robot Cell 2V09			Document type: EFS	Project nr: 22-16150
Modification	Date	Name	Original		Replacement of	Replaced by	Scale 1:1		Page 1 / 1533

0	1	2	3	4	5	6	7	8	9

=V1GL2UQ51KF4
+V1GL2UQ51

-KF4.24
=V1GL2UQ51KF4+V1GL2UQ51/2.1

Dump 31 (RST)	Dump 31 (SET)
=V1GL2UQ51KF4	=V1GL2UQ51KF4
+V1GL2UQ51	+V1GL2UQ51
-QN23.1_Q	-QN23.2_Q
=V1GL2UQ51KF4	=V1GL2UQ51KF4
+V1GL2UQ51/2.3	+V1GL2UQ51/2.3
Q2256.4	Q2256.5
1.1 Pneumatic Valve	1.2 Pneumatic Valve

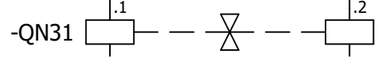

=V1GL2UQ51KF4+V1GL2UQ51/1.8
+V1GL2UQ51UQ31.1-W1

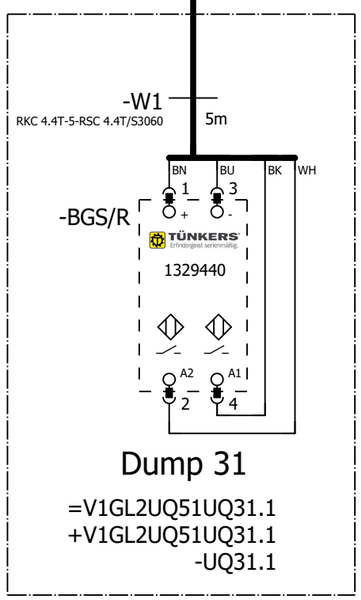

Dump 31

=V1GL2UQ51UQ31.1
+V1GL2UQ51UQ31.1
-UQ31.1

=V1GL2UQ51 -UQ31.1-BGS/R Dump 31

=V1GL2UQ51UQ30+.GL2UQ51UQ30/1

=V1GL2UQ51UQ32+.GL2UQ51UQ32/1

			Date	1/17/2023	Volvo Trucks North America		Valiant TMS	FESTO DQ CONNECTION QN31	Drawing name: =2V09&EFS-EL	= V1GL2UQ51UQ31
			Ed.	MKLEPADLO						+ V1GL2UQ51UQ31
			Appr		P6700 Bodyside LH - Robot Cell 2V09				Document type: EFS	Project nr: 22-16150
Modification	Date	Name	Original		Replacement of	Replaced by	Scale 1:1			Page 1 / 1533

0	1	2	3	4	5	6	7	8	9

=V1GL2UQ51KF4
+V1GL2UQ51

-KF4.24
=V1GL2UQ51KF4+V1GL2UQ51/2.1

Shot Pin 32 (RST)
=V1GL2UQ51KF4
+V1GL2UQ51
-QN32.1_Q
=V1GL2UQ51KF4
+V1GL2UQ51/2.3
Q2256.6

Shot Pin 32 (SET)
=V1GL2UQ51KF4
+V1GL2UQ51
-QN32.2_Q
=V1GL2UQ51KF4
+V1GL2UQ51/2.3
Q2256.7

2.1
Pneumatic Valve

2.2
Pneumatic Valve

-QN32 .1 .2

=V1GL2UQ51KF4+V1GL2UQ51/1.9
+V1GL2UQ51UQ32.1-W1

-W1
RKC 4.4T-4-RSC 4.4T/S3060
4m

BN BU BK WH

-BGS/R
1 3
2 4
A2 A1

WWS001A

Shot Pin 32

=V1GL2UQ51UQ32.1
+V1GL2UQ51UQ32.1
-UQ32.1

=V1GL2UQ51 -UQ32.1-BGS/R Shot Pin 32

=V1GL2UQ51UQ31+.GL2UQ51UQ31/1

=V1GL2UQ51WC4+.GL1UQ52/1

			Date	1/17/2023	Volvo Trucks North America	Valiant TMS	FESTO DQ CONNECTION QN32	Drawing name: =2V09&EFS-EL	= V1GL2UQ51UQ32
			Ed.	MKLEPADLO					+ V1GL2UQ51UQ32
			Appr		P6700 Bodyside LH - Robot Cell 2V09			Document type: EFS	Project nr: 22-16150
Modification	Date	Name	Original		Replacement of	Replaced by	Scale 1:1		Page 1 / 1533

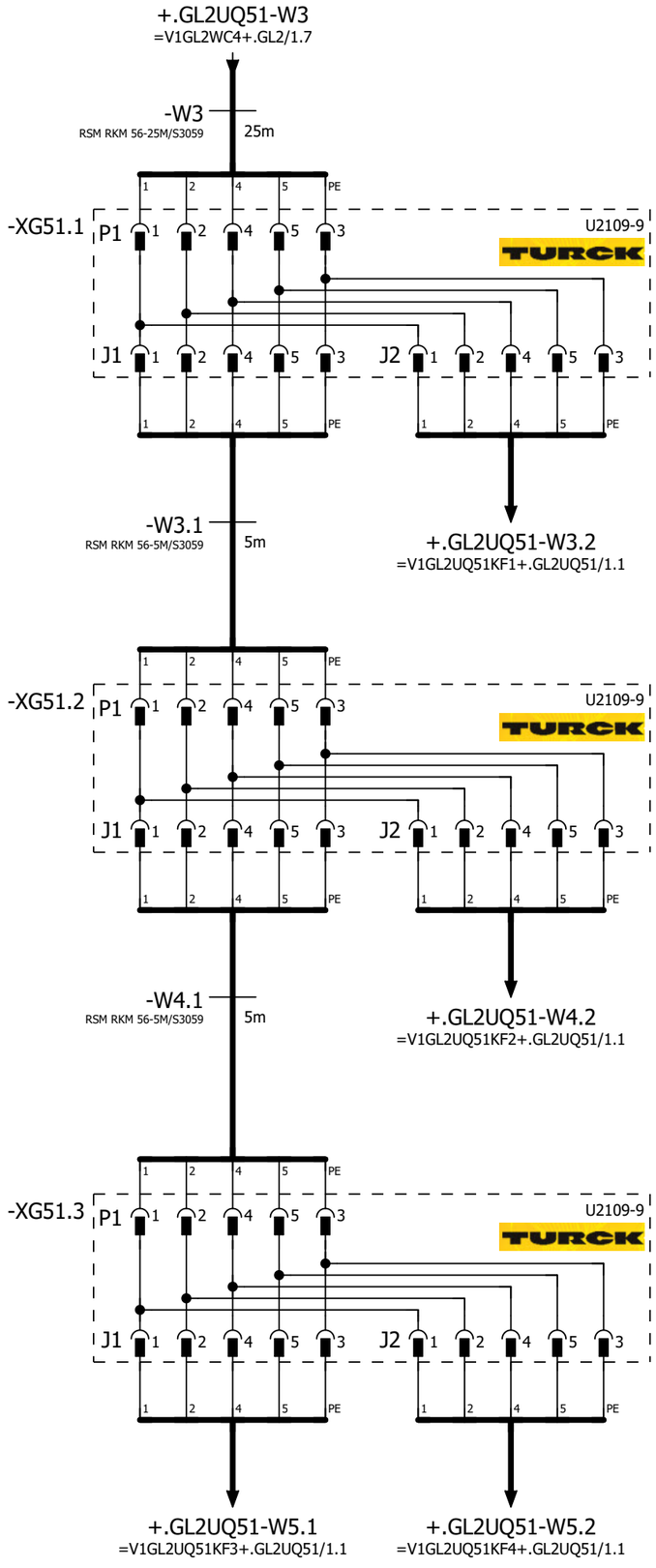

=V1GL2UQ51UQ32+.GL2UQ51UQ32/1

=V1GL2WC1+.GL2UC01/1

			Date	1/17/2023	Volvo Trucks North America	Valiant TMS	24VDC	Drawing name: =2V09&EFS-EL	= V1GL2UQ51WC4	
			Ed.	MKLEPADLO					+ V1GL1UQ52	
			Appr		P6700 Bodyside LH - Robot Cell 2V09	Scale 1:1		Document type: EFS	Project nr: 22-16150	Page 1
Modification	Date	Name	Original		Replacement of	Replaced by				1533

0	1	2	3	4	5	6	7	8	9

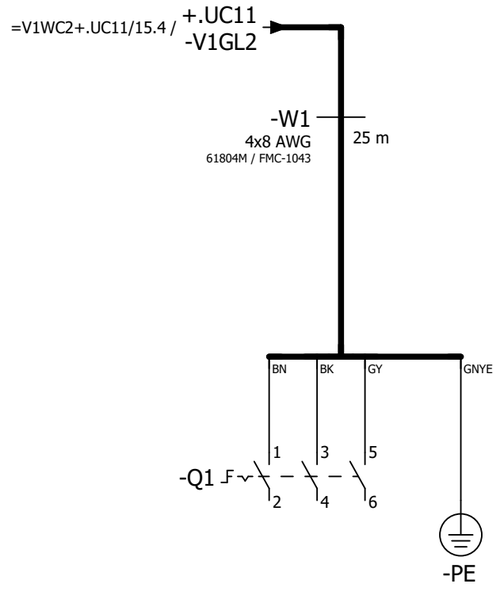

=V1GL2UQ51WC4+.GL1UQ52/1

=V1GL2WC4+V1GL2/1

			Date	1/17/2023	Volvo Trucks North America	Valiant TMS	Incoming power	Drawing name: =2V09&EFS-EL	= V1GL2WC1	
			Ed.	MKLEPADLO					+ V1GL2UC01	
			Appr		P6700 Bodyside LH - Robot Cell 2V09	Scale 1:1		Document type: EFS	Project nr: 22-16150	Page 1 / 1533
Modification	Date	Name	Original		Replacement of	Replaced by				

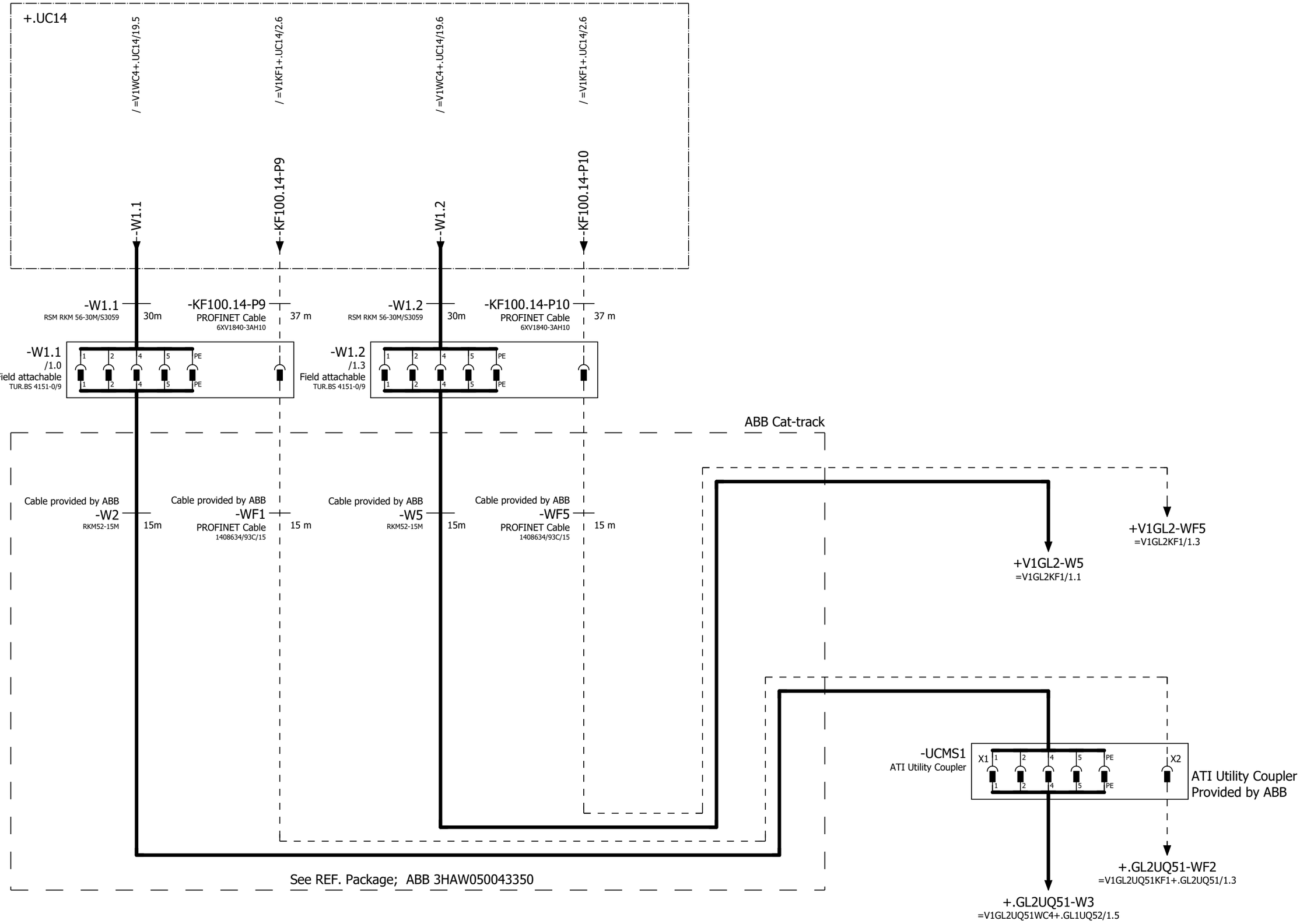

=V1GL2WC1+.GL2UC01/1

=V1GL17UQ51BG0+.GL17UQ51/1

			Date	1/17/2023	Volvo Trucks North America		Valiant TMS	24VDC	Drawing name: =2V09&EFS-EL	= V1GL2WC4
			Ed.	MKLEPADLO						+ V1GL2
			Appr		P6700 Bodyside LH - Robot Cell 2V09		Scale 1:1		Document type: EFS	Project nr: 22-16150
Modification	Date	Name	Original		Replacement of	Replaced by				Page 1 / 1533

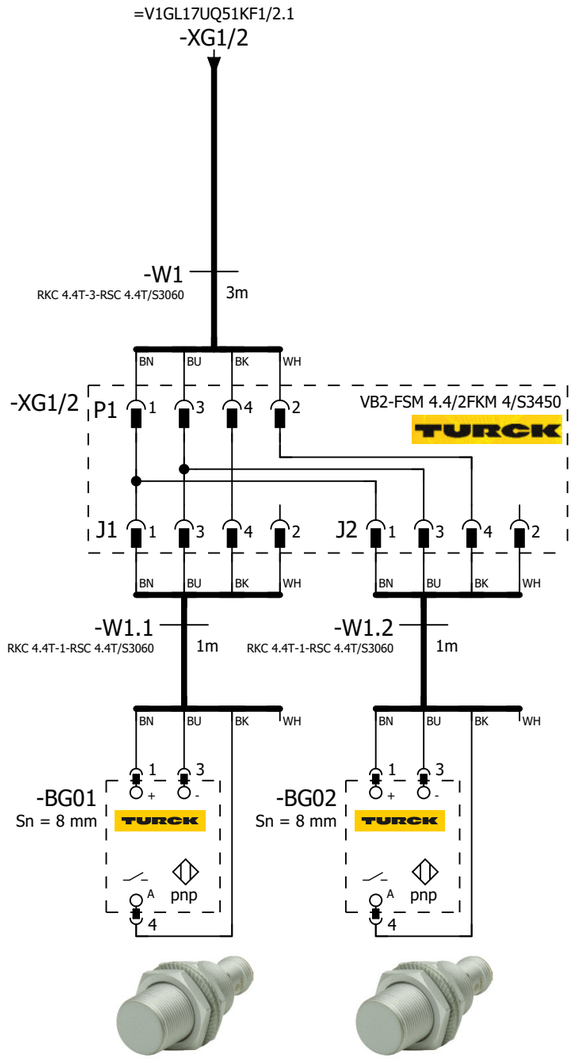

=V1GL17UQ51
-BG01
Pallet Present at
Load Sta #1

=V1GL17UQ51
-BG02
Pallet Present at
Accum Zone 1-2

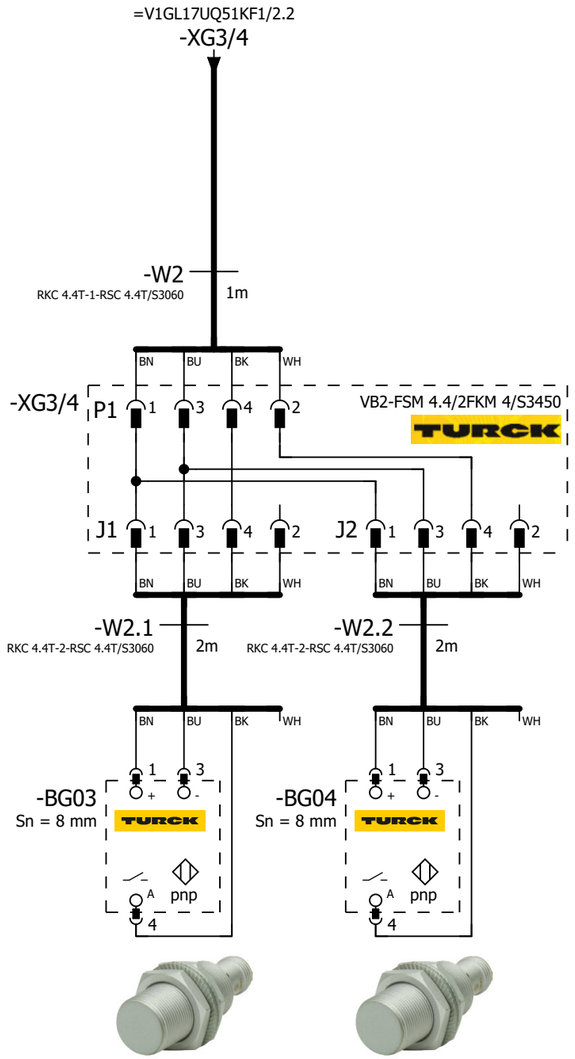

=V1GL17UQ51
-BG03
Pallet Present at
Mid-Stop Sta #2

=V1GL17UQ51
-BG04
Pallet Present at
Accum Zone 2-3

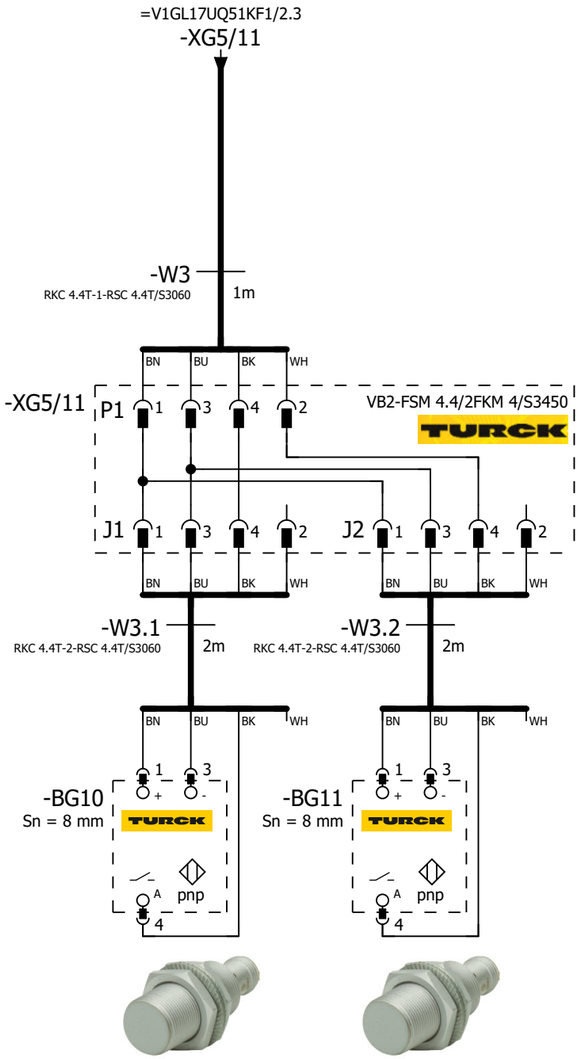

=V1GL17UQ51
-BG10
Pallet Present at
Pre-Load Sta #6

=V1GL17UQ51
-BG11
Good Pallet
Detected at Load

=V1GL2WC4+.GL2/1

=V1GL17UQ51KF1/1

			Date	1/17/2023	Volvo Trucks North America	Valiant TMS	SENSORS	Drawing name: =2V09&EFS-EL	= V1GL17UQ51BG0
			Ed.	MKLEPADLO					+ V1GL17UQ51
			Appr		P6700 Bodyside LH - Robot Cell 2V09	Scale 1:1		Document type: EFS	Project nr: 22-16150
Modification	Date	Name	Original		Replacement of	Replaced by			Page 1 / 1533

0	1	2	3	4	5	6	7	8	9

=V1WC4+.UC11/24.5 / W1

=V1KF1+.UC11/2.6 / +.UC11-KF100.11-P11

-W1
RSM RKM 56-40M/S3059
40m

-KF100.11-P11
PROFINET Cable
6XV1840-3AH10
40 m

-KF1

X20 M12, 7/8" 1 2 PE 4 5
0V_VAL / OUT | 0V_EL / SEN | FE | 24V_EL / SEN | 24V_VAL / OUT

M12 -TP1 M12 -TP2

ON
OFF
1 2 1 2

FESTO
Bus node + Interlinking block
548755 + 550208

I2600.0	DI 0 X1:4	V1GL17UQ51UQ1.1-BGR	Pallet Stop Station #1 Load (RESET)
I2600.1	DI 1 X1:2	V1GL17UQ51UQ1.1-BGS	Pallet Stop Station #1 Load (SET)
I2600.2	DI 2 X2:4	V1GL17UQ51UQ2.1-BGR	Pallet Stop Station #2 Mid-Stop (RESET)
I2600.3	DI 3 X2:2	V1GL17UQ51UQ2.1-BGS	Pallet Stop Station #2 Mid-Stop (SET)
I2600.4	DI 4 X3:4	V1GL17UQ51UQ6.1-BGR	Pallet Stop Station #6 Pre-Load (RESET)
I2600.5	DI 5 X3:2	V1GL17UQ51UQ6.1-BGS	Pallet Stop Station #6 Pre-Load (SET)
I2600.6	DI 6 X4:4	I2600.6	SPARE
I2600.7	DI 7 X4:2	I2600.7	SPARE
I2601.0	DI 8 X5:4	I2601.0	SPARE
I2601.1	DI 9 X5:2	I2601.1	SPARE
I2601.2	DI 10 X6:4	I2601.2	SPARE
I2601.3	DI 11 X6:2	I2601.3	SPARE
I2601.4	DI 12 X7:4	I2601.4	SPARE
I2601.5	DI 13 X7:2	I2601.5	SPARE
I2601.6	DI 14 X8:4	I2601.6	SPARE
I2601.7	DI 15 X8:2	I2601.7	SPARE

-KF1.11

FESTO
CPX-M-AB-8-M12X2-5POL
549335

X1 M12 1 2 3 4 5 — 24V | DI 1 | 0V | DI 0 | FE
X2 M12 1 2 3 4 5 — 24V | DI 3 | 0V | DI 2 | FE
X3 M12 1 2 3 4 5 — 24V | DI 5 | 0V | DI 4 | FE
X4 M12 1 2 3 4 5 — 24V | DI 7 | 0V | DI 6 | FE
X5 M12 1 2 3 4 5 — 24V | DI 9 | 0V | DI 8 | FE
X6 M12 1 2 3 4 5 — 24V | DI 11 | 0V | DI 10 | FE
X7 M12 1 2 3 4 5 — 24V | DI 13 | 0V | DI 12 | FE
X8 M12 1 2 3 4 5 — 24V | DI 15 | 0V | DI 14 | FE

BN WH BU BK

+.GL17UQ51UQ1.1-W1
=V1GL17UQ51UQ1+.GL17UQ51UQ1/1.1

+.GL17UQ51UQ2.1-W1
=V1GL17UQ51UQ2+.GL17UQ51UQ2/1.1

+.GL17UQ51UQ6.1-W1
=V1GL17UQ51UQ6+.GL17UQ51UQ6/1.1

=V1GL17UQ51BG0/1

2

			Date	1/17/2023	Volvo Trucks North America		Valiant TMS	CONNECTING MOD. FOR VTSA MANIFOLD	Drawing name: =2V09&EFS-EL	= V1GL17UQ51KF1	
			Ed.	MKLEPADLO						+ V1GL17UQ51	
			Appr		P6700 Bodyside LH - Robot Cell 2V09				Document type: EFS	Project nr: 22-16150	Page 1
Modification	Date	Name	Original		Replacement of	Replaced by	Scale 1:1				1533

I2602.0	DI 0 X1:4	V1GL17UQ51-BG01	Sensor Pallet Present at Load Sta #1
I2602.1	DI 1 X1:2	V1GL17UQ51-BG02	Sensor Pallet Present at Accum Zone 1-2
I2602.2	DI 2 X2:4	V1GL17UQ51-BG03	Sensor Pallet Present at Mid-Stop Sta #2
I2602.3	DI 3 X2:2	V1GL17UQ51-BG04	Sensor Pallet Present at Accum Zone 2-3
I2602.4	DI 4 X3:4	V1GL17UQ51-BG10	Sensor Pallet Present at Pre-Load Sta #6
I2602.5	DI 5 X3:2	V1GL17UQ51-BG11	Sensor Good Pallet Detected at Load
I2602.6	DI 6 X4:4	I2602.6	SPARE
I2602.7	DI 7 X4:2	I2602.7	SPARE
I2603.0	DI 8 X5:4	I2603.0	SPARE
I2603.1	DI 9 X5:2	I2603.1	SPARE
I2603.2	DI 10 X6:4	I2603.2	SPARE
I2603.3	DI 11 X6:2	I2603.3	SPARE
I2603.4	DI 12 X7:4	I2603.4	SPARE
I2603.5	DI 13 X7:2	I2603.5	SPARE
I2603.6	DI 14 X8:4	I2603.6	SPARE
I2603.7	DI 15 X8:2	I2603.7	SPARE

-KF1.12

FESTO

CPX-M-AB-8-M12X2-5POL

549335

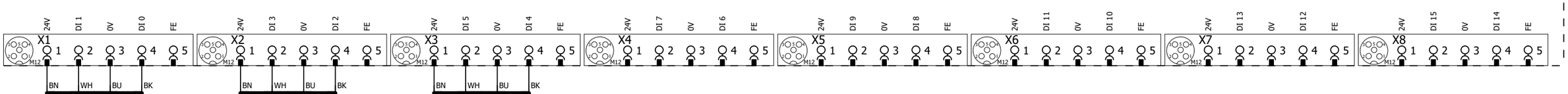

-XG1/2
=V1GL17UQ51BG0/1.1

-XG3/4
=V1GL17UQ51BG0/1.4

-XG5/11
=V1GL17UQ51BG0/1.6

1 3

			Date	1/17/2023	Volvo Trucks North America	Valiant TMS	I/O MOD. DI16 (8 x M12) FOR VTSA-F	Drawing name: =2V09&EFS-EL	= V1GL17UQ51KF1 + V1GL17UQ51
			Ed.	MKLEPADLO	P6700 Bodyside LH - Robot Cell 2V09				
			Appr					Document type: EFS	Project nr: 22-16150
Modification	Date	Name	Original		Replacement of / Replaced by	Scale 1:1			Page 2 / 1533

0	1	2	3	4	5	6	7	8	9

-KF1.13

FESTO

CPX-M-AB-8-M12X2-5POL

549335

I2604.0	DI 0 X1:4	I2604.0	SPARE
I2604.1	DI 1 X1:2	I2604.1	SPARE
I2604.2	DI 2 X2:4	I2604.2	SPARE
I2604.3	DI 3 X2:2	I2604.3	SPARE
I2604.4	DI 4 X3:4	I2604.4	SPARE
I2604.5	DI 5 X3:2	I2604.5	SPARE
I2604.6	DI 6 X4:4	I2604.6	SPARE
I2604.7	DI 7 X4:2	I2604.7	SPARE
I2605.0	DI 8 X5:4	I2605.0	SPARE
I2605.1	DI 9 X5:2	I2605.1	SPARE
I2605.2	DI 10 X6:4	I2605.2	SPARE
I2605.3	DI 11 X6:2	I2605.3	SPARE
I2605.4	DI 12 X7:4	I2605.4	SPARE
I2605.5	DI 13 X7:2	I2605.5	SPARE
I2605.6	DI 14 X8:4	I2605.6	SPARE
I2605.7	DI 15 X8:2	I2605.7	SPARE

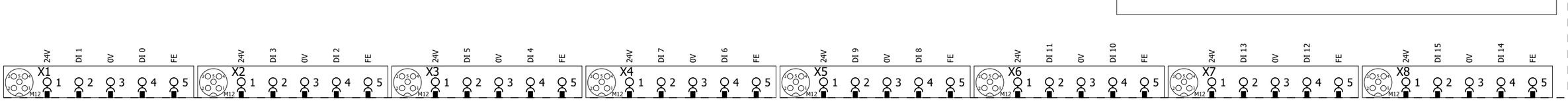

2 4

			Date	1/17/2023	Volvo Trucks North America	Valiant TMS	I/O MOD. DI16 (8 x M12) FOR VTSA-F	Drawing name: =2V09&EFS-EL	= V1GL17UQ51KF1
			Ed.	MKLEPADLO					+ V1GL17UQ51
			Appr		P6700 Bodyside LH - Robot Cell 2V09			Document type: EFS	Project nr: 22-16150
Modification	Date	Name	Original		Replacement of / Replaced by	Scale 1:1			Page 3 / 1533

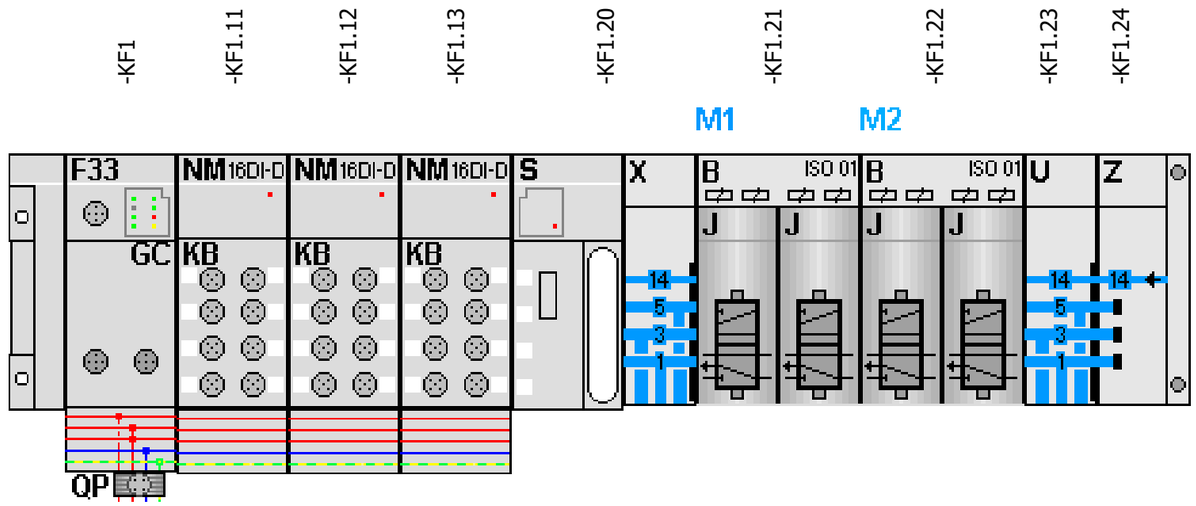

-KF1.21
=V1GL17UQ51UQ1+.GL17UQ51UQ1/1.3
=V1GL17UQ51UQ2+.GL17UQ51UQ2/1.3

FESTO

=V1GL17UQ51UQ1+.GL17UQ51UQ1/1.4	Q2600.0 DO 0 1.1	-QN1.1_Q	Pallet Stop Station #1 Load (RST)
=V1GL17UQ51UQ1+.GL17UQ51UQ1/1.4	Q2600.1 DO 1 1.2	-QN1.2_Q	Pallet Stop Station #1 Load (SET)
=V1GL17UQ51UQ2+.GL17UQ51UQ2/1.4	Q2600.2 DO 2 2.1	-QN2.1_Q	Pallet Stop Station #2 Mid-Stop (RST)
=V1GL17UQ51UQ2+.GL17UQ51UQ2/1.4	Q2600.3 DO 3 2.2	-QN2.2_Q	Pallet Stop Station #2 Mid-Stop (SET)

-KF1.22
=V1GL17UQ51UQ6+.GL17UQ51UQ6/1.3
=V1GL17UQ51UQx+.GL17UQ51UQx/1.3

FESTO

=V1GL17UQ51UQ6+.GL17UQ51UQ6/1.4	Q2600.4 DO 0 1.1	-QN3.1_Q	Pallet Stop Station #6 Pre-Load (RST)
=V1GL17UQ51UQ6+.GL17UQ51UQ6/1.4	Q2600.5 DO 1 1.2	-QN3.2_Q	Pallet Stop Station #6 Pre-Load (SET)
=V1GL17UQ51UQx+.GL17UQ51UQx/1.4	Q2600.6 DO 2 2.1	-QN4.1_Q	Spare (RST)
=V1GL17UQ51UQx+.GL17UQ51UQx/1.4	Q2600.7 DO 3 2.2	-QN4.2_Q	Spare (SET)

			Date	1/17/2023	Volvo Trucks North America	Valiant TMS	CONNECTING MOD. FOR FESTO DQ	Drawing name: =2V09&EFS-EL	= V1GL17UQ51KF1
			Ed.	MKLEPADLO					+ V1GL17UQ51
			Appr		P6700 Bodyside LH - Robot Cell 2V09			Document type: EFS	Project nr: 22-16150
Modification	Date	Name	Original		Replacement of / Replaced by	Scale 1:1			Page 4 / 1533

0	1	2	3	4	5	6	7	8	9

=V1GL17UQ51KF1
+.GL17UQ51

-KF1.21
=V1GL17UQ51KF1+V1GL17UQ51/4.1

Pallet Stop
Station #1 Load (RST)
=V1GL17UQ51KF1
+V1GL17UQ51
-QN1.1_Q
=V1GL17UQ51KF1
+V1GL17UQ51/4.3
Q2600.0

Pallet Stop
Station #1 Load (SET)
=V1GL17UQ51KF1
+V1GL17UQ51
-QN1.2_Q
=V1GL17UQ51KF1
+V1GL17UQ51/4.3
Q2600.1

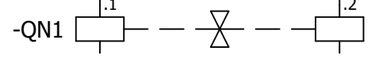

=V1GL17UQ51KF1+V1GL17UQ51/1.1
+.GL17UQ51UQ1.1-W1

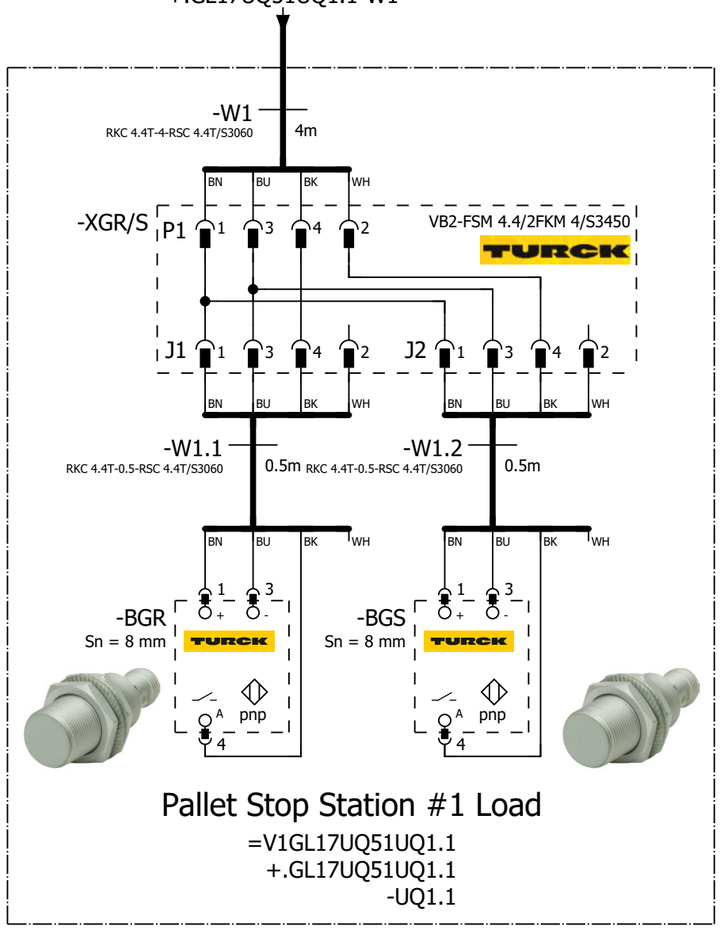

Pallet Stop Station #1 Load
=V1GL17UQ51UQ1.1
+.GL17UQ51UQ1.1
-UQ1.1

=V1GL17UQ51 -UQ1.1-BGR Pallet Stop Station #1 Load	=V1GL17UQ51 -UQ1.1-BGS Pallet Stop Station #1 Load

=V1GL17UQ51KF1+V1GL17UQ51/4

=V1GL17UQ51UQ2+.GL17UQ51UQ2/1

			Date	1/17/2023	Volvo Trucks North America	Valiant TMS	FESTO DQ CONNECTION QN1	Drawing name: =2V09&EFS-EL	= V1GL17UQ51UQ1
			Ed.	MKLEPADLO					+ V1GL17UQ51UQ1
			Appr		P6700 Bodyside LH - Robot Cell 2V09			Document type: EFS	Project nr: 22-16150
Modification	Date	Name	Original		Replacement of / Replaced by	Scale 1:1			Page 1 / 1533

0	1	2	3	4	5	6	7	8	9

=V1GL17UQ51KF1
+.GL17UQ51

-KF1.21
=V1GL17UQ51KF1+V1GL17UQ51/4.1

Pallet Stop
Station #2 Mid-Stop (RST)
=V1GL17UQ51KF1
+V1GL17UQ51
-QN2.1_Q
=V1GL17UQ51KF1
+V1GL17UQ51/4.3
Q2600.2

Pallet Stop
Station #2 Mid-Stop (SET)
=V1GL17UQ51KF1
+V1GL17UQ51
-QN2.2_Q
=V1GL17UQ51KF1
+V1GL17UQ51/4.3
Q2600.3

2.1
Pneumatic Valve

2.2
Pneumatic Valve

-QN2 .1 .2

=V1GL17UQ51KF1+V1GL17UQ51/1.2
+.GL17UQ51UQ2.1-W1

-W1
RKC 4.4T-4-RSC 4.4T/S3060
4m

BN BU BK WH

-XGR/S P1 1 3 4 2

VB2-FSM 4.4/2FKM 4/S3450
TURCK

J1 1 3 4 2
J2 1 3 4 2

BN BU BK WH

-W1.1
RKC 4.4T-0.5-RSC 4.4T/S3060
0.5m

-W1.2
RKC 4.4T-0.5-RSC 4.4T/S3060
0.5m

BN BU BK WH

-BGR
Sn = 8 mm
TURCK
1 3
+ -
A pnp
4

-BGS
Sn = 8 mm
TURCK
1 3
+ -
A pnp
4

Pallet Stop Station #2 Mid-Stop
=V1GL17UQ51UQ2.1
+.GL17UQ51UQ2.1
-UQ2.1

=V1GL17UQ51
-UQ2.1-BGR
Pallet Stop Station
#2 Mid-Stop

=V1GL17UQ51
-UQ2.1-BGS
Pallet Stop Station
#2 Mid-Stop

=V1GL17UQ51UQ1+.GL17UQ51UQ1/1

=V1GL17UQ51UQ6+.GL17UQ51UQ6/1

			Date	1/17/2023	Volvo Trucks North America	Valiant TMS	FESTO DQ CONNECTION QN2	Drawing name: =2V09&EFS-EL	= V1GL17UQ51UQ2
			Ed.	MKLEPADLO					+ V1GL17UQ51UQ2
			Appr		P6700 Bodyside LH - Robot Cell 2V09			Document type: EFS	Project nr: 22-16150
Modification	Date	Name	Original		Replacement of	Replaced by	Scale 1:1		Page 1 / 1533

0	1	2	3	4	5	6	7	8	9

=V1GL17UQ51KF1
+.GL17UQ51

-KF1.22
=V1GL17UQ51KF1+V1GL17UQ51/4.1

Pallet Stop Station #6 Pre-Load (RST)	Pallet Stop Station #6 Pre-Load (SET)
=V1GL17UQ51KF1	=V1GL17UQ51KF1
+V1GL17UQ51	+V1GL17UQ51
-QN3.1_Q	-QN3.2_Q
=V1GL17UQ51KF1	=V1GL17UQ51KF1
+V1GL17UQ51/4.3	+V1GL17UQ51/4.3
Q2600.4	Q2600.5
1.1 Pneumatic Valve	1.2 Pneumatic Valve

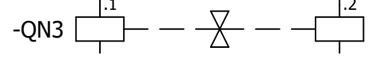

=V1GL17UQ51KF1+V1GL17UQ51/1.3
+.GL17UQ51UQ6.1-W1

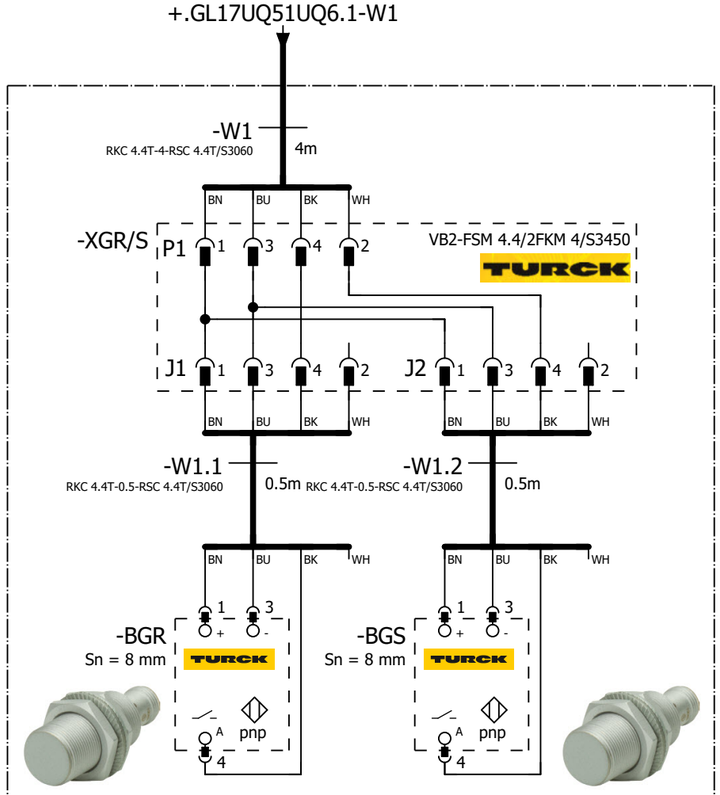

Pallet Stop Station #6 Pre-Load

=V1GL17UQ51UQ6.1
+.GL17UQ51UQ6.1
-UQ6.1

=V1GL17UQ51 -UQ6.1-BGR Pallet Stop Station #6 Pre-Load	=V1GL17UQ51 -UQ6.1-BGS Pallet Stop Station #6 Pre-Load

=V1GL17UQ51UQ2+.GL17UQ51UQ2/1

=V1GL17UQ51UQx+.GL17UQ51UQx/1

			Date	1/17/2023	Volvo Trucks North America	Valiant TMS	FESTO DQ CONNECTION QN3	Drawing name: =2V09&EFS-EL	= V1GL17UQ51UQ6
			Ed.	MKLEPADLO					+ V1GL17UQ51UQ6
			Appr		P6700 Bodyside LH - Robot Cell 2V09			Document type: EFS	Project nr: 22-16150
Modification	Date	Name	Original		Replacement of	Replaced by	Scale 1:1		Page 1 / 1533

0	1	2	3	4	5	6	7	8	9

=V1GL17UQ51KF1
+.GL17UQ51

-KF1.22
=V1GL17UQ51KF1+V1GL17UQ51/4.1

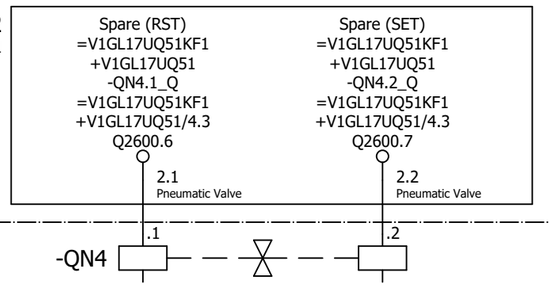

=V1GL17UQ51UQ6+.GL17UQ51UQ6/1

=V1KF1+.UC11/1

			Date	1/17/2023	Volvo Trucks North America	Valiant TMS	FESTO DQ CONNECTION QN4	Drawing name: =2V09&EFS-EL	= V1GL17UQ51UQx
			Ed.	MKLEPADLO					+ V1GL17UQ51UQx
			Appr		P6700 Bodyside LH - Robot Cell 2V09			Document type: EFS	Project nr: 22-16150
Modification	Date	Name	Original		Replacement of / Replaced by	Scale 1:1			Page 1 / 1533

SIEMENS
SCALANCE XC216
CONSO
FAULT
F1
F2
L1+
M1
M2
L2+
P1
P2
P3
P4
P5
P6
P7
P8
P9
P10
P11
P12
P13
P14
P15
P16

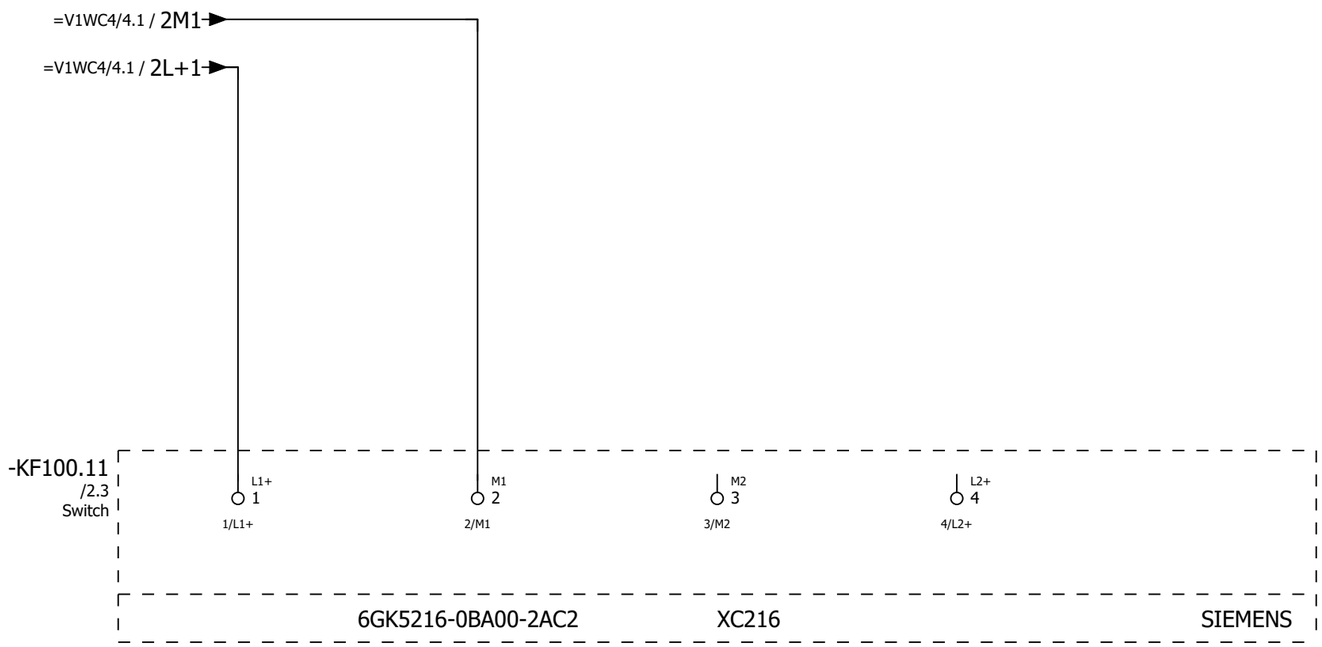
=V1WC4/4.1 / 2M1
=V1WC4/4.1 / 2L+1
-KF100.11
/2.3
Switch
L1+
1
1/L1+
M1
2
2/M1
M2
3
3/M2
L2+
4
4/L2+
6GK5216-0BA00-2AC2
XC216
SIEMENS

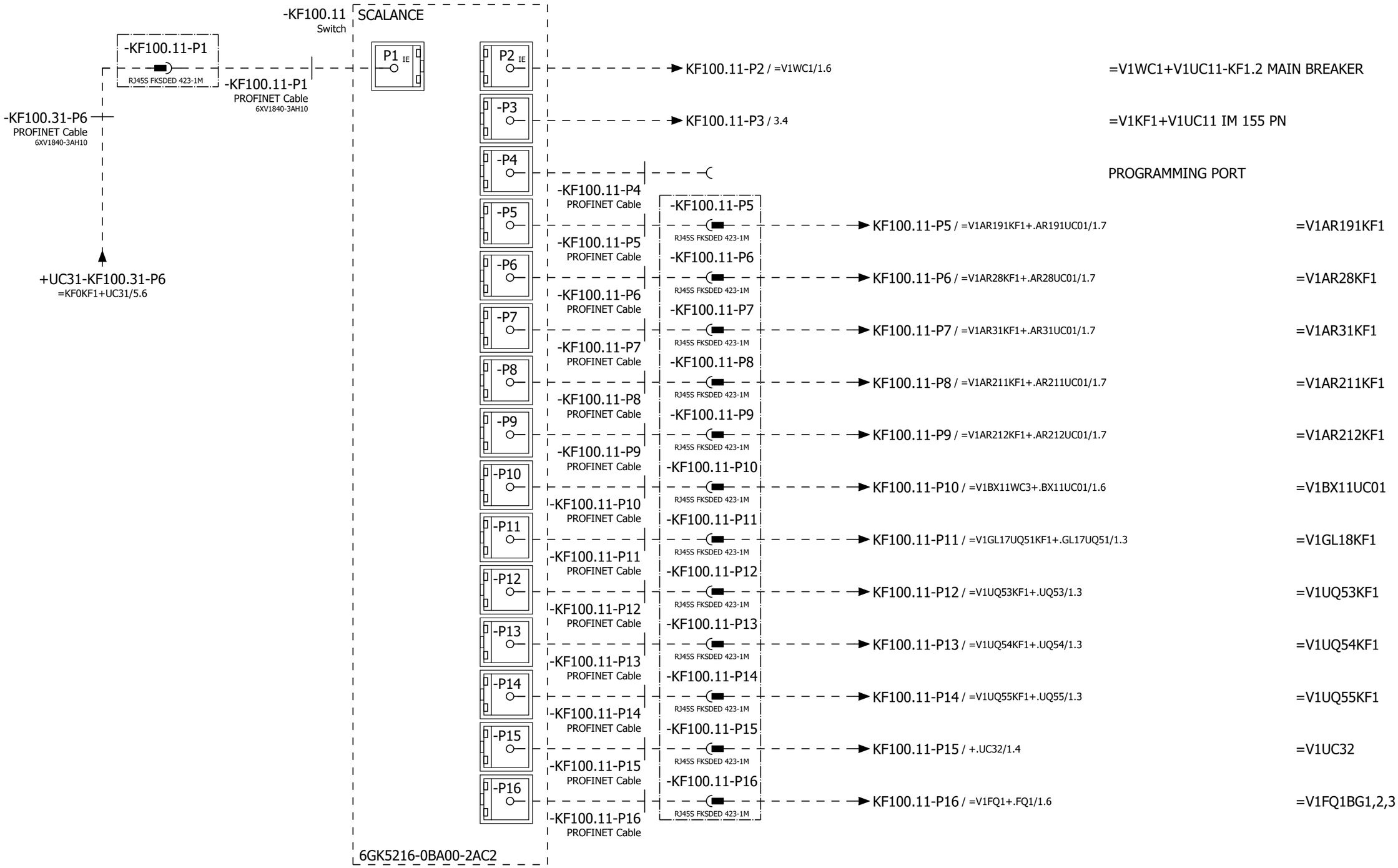

			Date	1/17/2023	Volvo Trucks North America		Valiant TMS	Network Overview	Drawing name: =2V09&EFS-EL	= V1KF1	
			Ed.	MKLEPADLO						+ V1UC11	
			Appr		P6700 Bodyside LH - Robot Cell 2V09				Document type: EFS	Project nr: 22-16150	Page 2
Modification	Date	Name	Original		Replacement of	Replaced by	Scale 1:1				1533

0	1	2	3	4	5	6	7	8	9

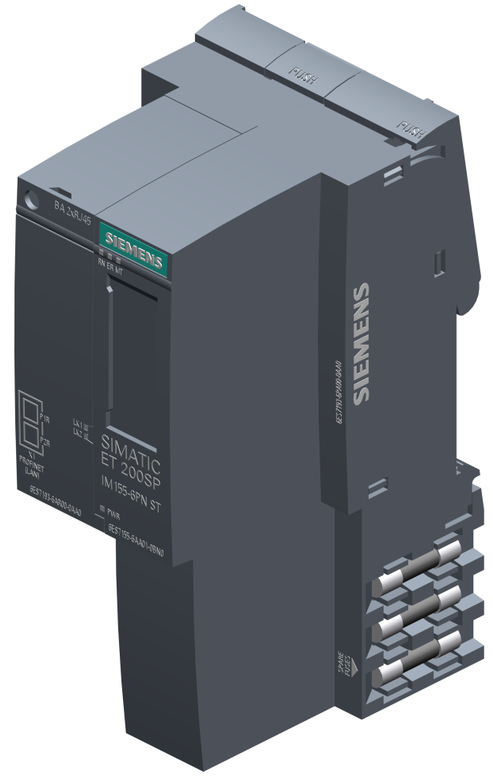

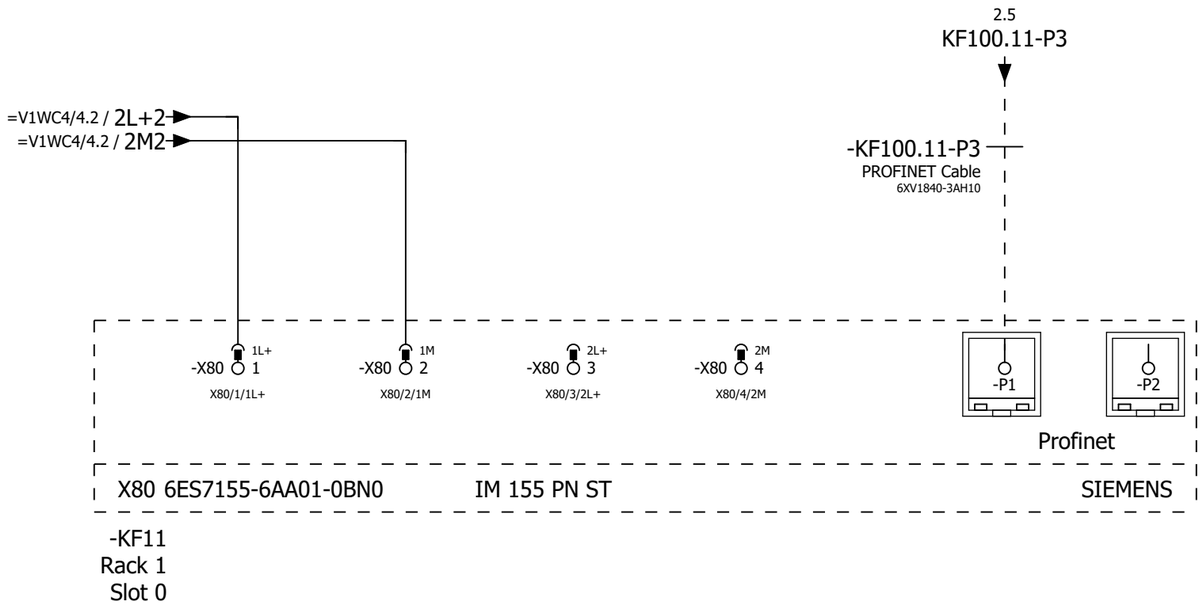

			Date	1/17/2023	Volvo Trucks North America	Valiant TMS	IM 155 PN	Drawing name: =2V09&EFS-EL	= V1KF1
			Ed.	MKLEPADLO					+ V1UC11
			Appr		P6700 Bodyside LH - Robot Cell 2V09			Document type: EFS	Project nr: 22-16150
Modification	Date	Name	Original		Replacement of	Replaced by	Scale 1:1		Page 3 / 1533

0	1	2	3	4	5	6	7	8	9

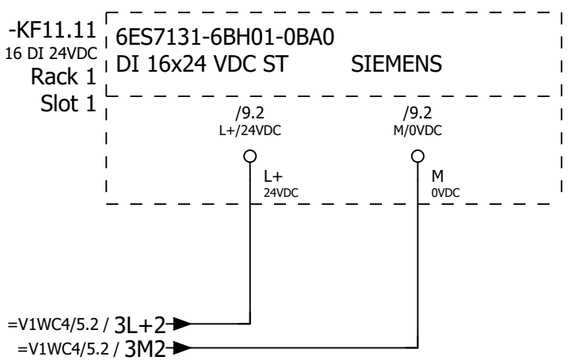

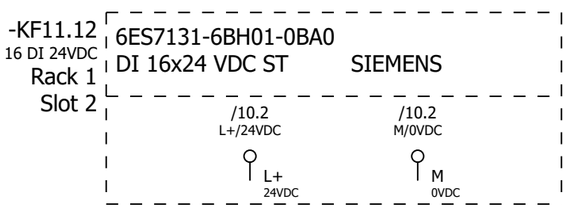

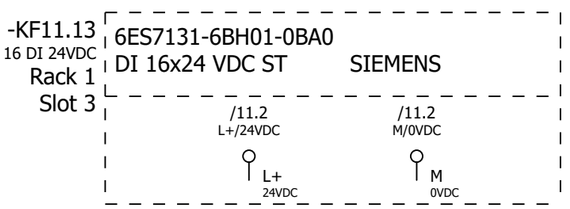

			Date	1/17/2023	Volvo Trucks North America	Valiant TMS	ET200S Wiring DI	Drawing name: =2V09&EFS-EL	= V1KF1
			Ed.	MKLEPADLO					+ V1UC11
			Appr		P6700 Bodyside LH - Robot Cell 2V09			Document type: EFS	Project nr: 22-16150
Modification	Date	Name	Original		Replacement of	Replaced by	Scale 1:1		Page 4 / 1533

0	1	2	3	4	5	6	7	8	9

-KF11.14
16 DI 24VDC
Rack 1
Slot 4

6ES7131-6BH01-0BA0
DI 16x24 VDC ST SIEMENS

/12.2 L+/24VDC	/12.2 M/0VDC
L+ 24VDC	M 0VDC

4 6

			Date	1/17/2023	Volvo Trucks North America	Valiant TMS	ET200S Wiring DI	Drawing name: =2V09&EFS-EL	= V1KF1
			Ed.	MKLEPADLO					+ V1UC11
			Appr		P6700 Bodyside LH - Robot Cell 2V09			Document type: EFS	Project nr: 22-16150	Page 5
Modification	Date	Name	Original		Replacement of	Replaced by	Scale 1:1			1533

0	1	2	3	4	5	6	7	8	9

-KF11.31
FDI 8 24VDC
Rack 1
Slot 5

6ES7136-6BA00-0CA0
F-DI 8x24VDC HF SIEMENS

/14.2 L+ 24VDC

/14.2 M 0VDC

-KF11.32
FDI 8 24VDC
Rack 1
Slot 6

6ES7136-6BA00-0CA0
F-DI 8x24VDC HF SIEMENS

/15.2 L+ 24VDC

/15.2 M 0VDC

5 7

			Date	1/17/2023	Volvo Trucks North America	Valiant TMS	ET200S Wiring F-DI	Drawing name: =2V09&EFS-EL	= V1KF1
			Ed.	MKLEPADLO					+ V1UC11
			Appr		P6700 Bodyside LH - Robot Cell 2V09	Scale 1:1		Document type: EFS	Project nr: 22-16150
Modification	Date	Name	Original		Replacement of	Replaced by			Page 6 / 1533

0	1	2	3	4	5	6	7	8	9

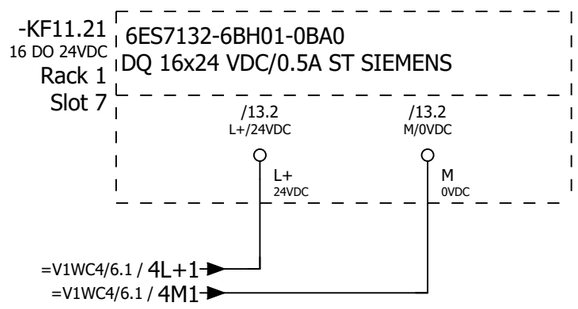

			Date	1/17/2023	Volvo Trucks North America	Valiant TMS	ET200S Wiring DQ	Drawing name: =2V09&EFS-EL	= V1KF1	
			Ed.	MKLEPADLO					+ V1UC11	
			Appr		P6700 Bodyside LH - Robot Cell 2V09	Scale 1:1		Document type: EFS	Project nr: 22-16150	Page 7
Modification	Date	Name	Original		Replacement of	Replaced by				1533

-KF11.41
=V1FQ1/1.0
=V1FQ1/2.0
=V1FQ1/3.0
=V1FQ1/4.0
/16.1
FDO 4 24VDC
Rack 1
Slot 8

6ES7136-6DB00-0CA0 + BU15-P16+A0+2B F-DQ 4X24VDC/2A PM HF SIEMENS

/16.2 L+ 24VDC

/16.2 M 0VDC

-KF11.42
/17.1
FDO 4 24VDC
Rack 1
Slot 9

6ES7136-6DB00-0CA0 + BU15-P16+A0+2B F-DQ 4X24VDC/2A PM HF SIEMENS

/17.2 L+ 24VDC

/17.2 M 0VDC

			Date	1/17/2023	Volvo Trucks North America	Valiant TMS	ET200S Wiring F-DQ	Drawing name: =2V09&EFS-EL	= V1KF1	
			Ed.	MKLEPADLO					+ V1UC11	
			Appr		P6700 Bodyside LH - Robot Cell 2V09			Document type: EFS	Project nr: 22-16150	Page 8
Modification	Date	Name	Original		Replacement of / Replaced by	Scale 1:1				1533

0	1	2	3	4	5	6	7	8	9

-KF11.11
/4.0

ET 200SP SIEMENS
DI 16x24 VDC ST

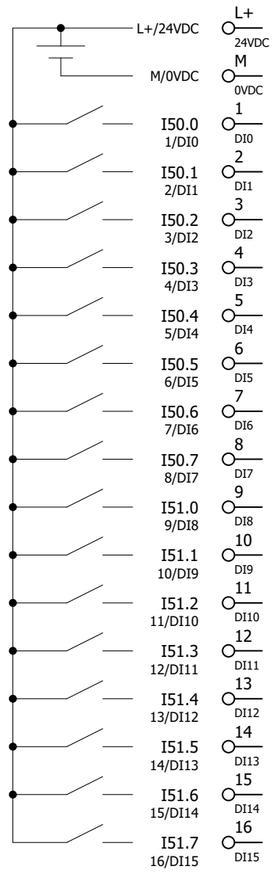

/4.1			
/4.2			
=V1WC2/41.2	I50.0	Spare	
=V1WC2/41.3	=V1UC11-FC1	Monitoring 480 VAC	
=V1WC4/1.4	=V1WC4+V1UC11-TA1_I	Monitoring 24VDC	
=V1WC4/11.4	=V1WC4+V1UC11-TA2_I	Monitoring 24VDC	
=V1WC4/1.0	=V1WC4+V1UC11-FC11_I	Monitoring 24VDC	
=V1WC4/11.0	=V1WC4+V1UC11-FC12_I	Monitoring 24VDC	
=V1WC2/41.7	I50.6	Spare	
=V1WC2/41.8	I50.7	Spare	
=V1WC2/41.2	I51.0	Spare	
=V1WC2/41.3	I51.1	Spare	
=V1WC2/41.4	I51.2	Spare	
=V1WC2/41.4	I51.3	Spare	
=V1WC2/41.5	I51.4	Spare	
=V1WC2/41.6	I51.5	Spare	
=V1WC2/41.7	I51.6	Spare	
=V1WC2/41.8	I51.7	Spare	

6ES7131-6BH01-0BA0

8 10

			Date	1/17/2023	Volvo Trucks North America	Valiant TMS	ET200S DI Overview KF11.11	Drawing name: =2V09&EFS-EL	= V1KF1
			Ed.	MKLEPADLO					+ V1UC11
			Appr		P6700 Bodyside LH - Robot Cell 2V09	Scale 1:1		Document type: EFS	Project nr: 22-16150
Modification	Date	Name	Original		Replacement of	Replaced by			Page 9 / 1533

0	1	2	3	4	5	6	7	8	9

-KF11.12
/4.3

ET 200SP SIEMENS
DI 16x24 VDC ST

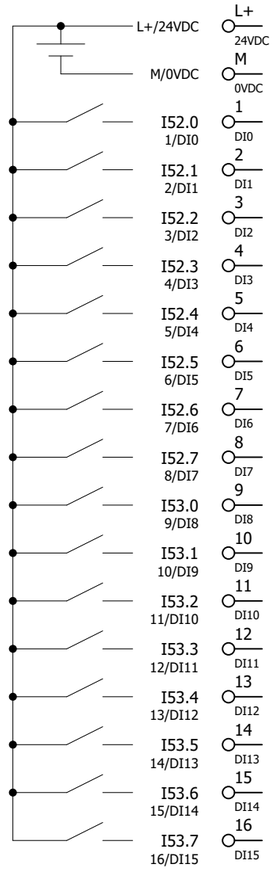

/4.3			
/4.4			
=V1WC2/42.2	=V1AR22-FC1	Monitoring 480 VAC	
=V1WC2/42.3	=V1AR21-FC1	Monitoring 480 VAC	
=V1WC2/42.4	=V1AR11-FC1	Monitoring 480 VAC	
=V1WC2/42.4	=V1AR31-FC1	Monitoring 480 VAC	
=V1WC2/42.5	=V1AR23-FC1	Monitoring 480 VAC	
=V1WC2/42.6	=V1AR24-FC1	Monitoring 480 VAC	
=V1WC2/42.7	=V1AR25-FC1	Monitoring 480 VAC	
=V1WC2/42.8	=V1AR26-FC1	Monitoring 480 VAC	
=V1WC2/42.2	=V1AR28-FC1	Monitoring 480 VAC	
=V1WC2/42.3	=V1AR29-FC1	Monitoring 480 VAC	
=V1WC2/42.4	=V1AR211-FC1	Monitoring 480 VAC	
=V1WC2/42.4	=V1AR81-FC1	Monitoring 480 VAC	
=V1WC2/42.5	=V1AR191-FC1	Monitoring 480 VAC	
=V1WC2/42.6	=V1AR212-FC1	Monitoring 480 VAC	
=V1WC2/42.7	=V1AR81XQ51-FC1	Monitoring 480 VAC	
=V1WC2/42.8	=V1AR81XQ52-FC1	Monitoring 480 VAC	

6ES7131-6BH01-0BA0

			Date	1/17/2023	Volvo Trucks North America	Valiant TMS	ET200S DI Overview KF11.12	Drawing name: =2V09&EFS-EL	= V1KF1
			Ed.	MKLEPADLO					+ V1UC11
			Appr		P6700 Bodyside LH - Robot Cell 2V09			Document type: EFS	Project nr: 22-16150
Modification	Date	Name	Original		Replacement of	Replaced by	Scale 1:1		Page 10 / 1533

0	1	2	3	4	5	6	7	8	9

-KF11.13
/4.5

ET 200SP SIEMENS
DI 16x24 VDC ST

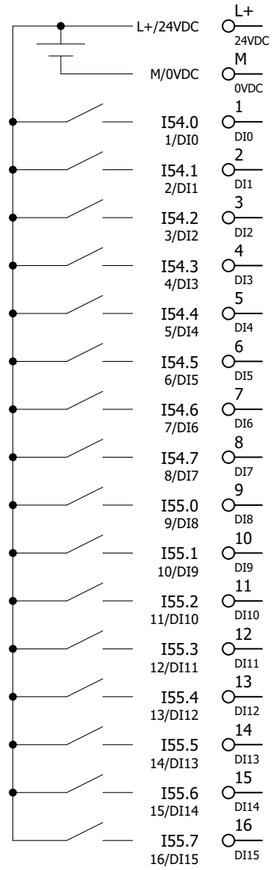

L+/24VDC	/4.6		
M/0VDC	/4.7		
I54.0 1/DI0	=V1WC2/43.2	=V1AR31XQ41-FC1	Monitoring 480 VAC
I54.1 2/DI1	=V1WC2/43.3	=V1GL2-FC1	Monitoring 480 VAC
I54.2 3/DI2	=V1WC2/43.4	I54.2	Spare
I54.3 4/DI3	=V1WC2/43.4	I54.3	Spare
I54.4 5/DI4	=V1WC2/43.5	I54.4	Spare
I54.5 6/DI5	=V1WC2/43.6	I54.5	Spare
I54.6 7/DI6	=V1WC2/43.7	I54.6	Spare
I54.7 8/DI7	=V1WC2/43.8	I54.7	Spare
I55.0 9/DI8	=V1WC3/4.2	=V1WC3+V1UC11-FC2	Monitoring 120 VAC
I55.1 10/DI9	=V1WC3/4.3	=V1WC3+V1UC11-FC3	Monitoring 120 VAC
I55.2 11/DI10	=V1WC3/4.4	=V1WC3+V1UC11-FC4	Monitoring 120 VAC
I55.3 12/DI11	=V1WC3/4.4	=V1WC3+V1UC11-FC6	Monitoring 120 VAC
I55.4 13/DI12	=V1WC3/4.5	=V1WC3+V1UC11-FC7	Monitoring 120 VAC
I55.5 14/DI13	=V1WC3/4.6	=V1WC3+V1UC11-FC8	Monitoring 120 VAC
I55.6 15/DI14	=V1WC3/4.7	=V1WC3+V1UC11-FC9	Monitoring 120 VAC
I55.7 16/DI15	=V1WC3/4.8	=V1WC3+V1UC11-FC10	Monitoring 120 VAC

6ES7131-6BH01-0BA0

10 12

			Date	1/17/2023	Volvo Trucks North America	Valiant TMS	ET200S DI Overview KF11.13	Drawing name: =2V09&EFS-EL	= V1KF1
			Ed.	MKLEPADLO					+ V1UC11
			Appr		P6700 Bodyside LH - Robot Cell 2V09	Scale 1:1		Document type: EFS	Project nr: 22-16150
Modification	Date	Name	Original		Replacement of	Replaced by			Page 11 / 1533

0	1	2	3	4	5	6	7	8	9

-KF11.14
/5.0

ET 200SP SIEMENS
DI 16x24 VDC ST

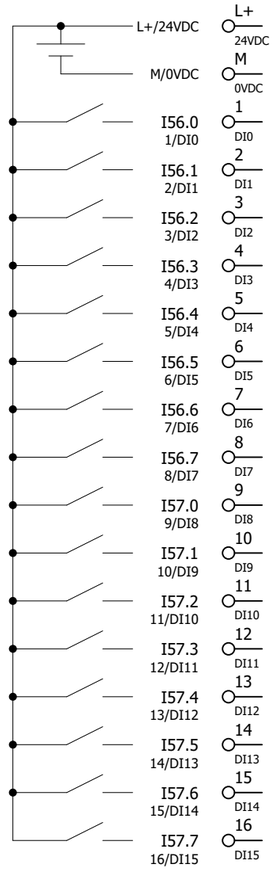

6ES7131-6BH01-0BA0

	/5.1		
	/5.2		
I56.0 1/DI0	=V1FQ1/1.8	-KF11.51RQ	Monitoring Safety contactors 11.1L+
I56.1 2/DI1	=V1FQ1/2.8	-KF11.52RQ	Monitoring Safety contactors 12.1L+
I56.2 3/DI2	=V1FQ1/3.8	-KF11.53RQ	Monitoring Safety contactors 13.1L+
I56.3 4/DI3	=V1FQ1/4.8	-KF11.54RQ	Monitoring Safety contactors 14.1L+
I56.4 5/DI4		I56.4	Spare
I56.5 6/DI5		I56.5	Spare
I56.6 7/DI6	=KH3+KH3/1.6	=KH3-BF1_I	Monitoring Main Water Filter Dirty
I56.7 8/DI7	=KH3+KH3/2.6	=KH3-BF2_I	Monitoring Main Water On
I57.0 9/DI8	=V1WC3/4.2	=V1WC3+V1UC11-FC11	Monitoring 120 VAC
I57.1 10/DI9	=KH0+KH0/1.6	=KH0-BP1_I	Monitoring Main AIR On
I57.2 11/DI10	=KH0+KH0/5.6	=KH0-BP5_I	Monitoring S040 Fixture AIR On
I57.3 12/DI11	=KH0+KH0/6.6	=KH0-BP6_I	Monitoring S050 Fixture AIR On
I57.4 13/DI12	=KH0+KH0/7.6	=KH0-BP7_I	Monitoring S055 Fixture AIR On
I57.5 14/DI13	=KH0+KH0/8.6	=KH0-BP8_I	Monitoring S060 Fixture AIR On
I57.6 15/DI14	=KH0+KH0/9.6	=KH0-BP9_I	Monitoring S080 Conveyor Load AIR On
I57.7 16/DI15		I57.7	Spare

			Date	1/17/2023	Volvo Trucks North America		Valiant TMS	ET200S DI Overview KF11.14	Drawing name: =2V09&EFS-EL	= V1KF1	
			Ed.	MKLEPADLO						+ V1UC11	
			Appr		P6700 Bodyside LH - Robot Cell 2V09		Scale 1:1		Document type: EFS	Project nr: 22-16150	Page 12 / 1533
Modification	Date	Name	Original		Replacement of	Replaced by					

0	1	2	3	4	5	6	7	8	9

-KF11.21
/7.1
16 DO 24VDC

ET 200SP SIEMENS
DQ 16x24 VDC/0,5A ST

L+/24VDC	L+ 24VDC	/7.1			
M/0VDC	M 0VDC	/7.2			
Q50.0 1/DQ0	1 DQ0		Q50.0	Spare	
Q50.1 2/DQ1	2 DQ1		Q50.1	Spare	
Q50.2 3/DQ2	3 DQ2		Q50.2	Spare	
Q50.3 4/DQ3	4 DQ3		Q50.3	Spare	
Q50.4 5/DQ4	5 DQ4		Q50.4	Spare	
Q50.5 6/DQ5	6 DQ5		Q50.5	Spare	
Q50.6 7/DQ6	7 DQ6		Q50.6	Spare	
Q50.7 8/DQ7	8 DQ7		Q50.7	Spare	
Q51.0 9/DQ8	9 DQ8		Q51.0	Spare	
Q51.1 10/DQ9	10 DQ9		Q51.1	Spare	
Q51.2 11/DQ10	11 DQ10		Q51.2	Spare	
Q51.3 12/DQ11	12 DQ11		Q51.3	Spare	
Q51.4 13/DQ12	13 DQ12		Q51.4	Spare	
Q51.5 14/DQ13	14 DQ13		Q51.5	Spare	
Q51.6 15/DQ14	15 DQ14		Q51.6	Spare	
Q51.7 16/DQ15	16 DQ15		Q51.7	Spare	

6ES7132-6BH01-0BA0

			Date	1/17/2023	Volvo Trucks North America	Valiant TMS	ET200S DQ Overview KF11.21	Drawing name: =2V09&EFS-EL	= V1KF1	
			Ed.	MKLEPADLO					+ V1UC11	
			Appr		P6700 Bodyside LH - Robot Cell 2V09			Document type: EFS	Project nr: 22-16150	Page 13
Modification	Date	Name	Original		Replacement of / Replaced by	Scale 1:1				1533

0	1	2	3	4	5	6	7	8	9

-KF11.31
/6.0

ET 200SP SIEMENS
F-DI 8x24VDC HF

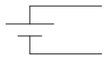

	L+ 24VDC	/6.1		
	M 0VDC	/6.2		
I5050.0	1 DI0		I5050.0	Spare
	9 VS0			
I5050.1	2 DI1		I5050.1	Spare
	10 VS1			
I5050.2	3 DI2		I5050.2	Spare
	11 VS2			
I5050.3	4 DI3		I5050.3	Spare
	12 VS3			
I5050.4	5 DI4		I5050.4	Spare
	13 VS4			
I5050.5	6 DI5		I5050.5	Spare
	14 VS5			
I5050.6	7 DI6		I5050.6	Spare
	15 VS6			
I5050.7	8 DI7		I5050.7	Spare
	16 VS7			

6ES7136-6BA00-0CA0

			Date	1/17/2023	Volvo Trucks North America	Valiant TMS	ET200S F-DI Overview KF11.31	Drawing name: =2V09&EFS-EL	= V1KF1
			Ed.	MKLEPADLO					+ V1UC11
			Appr		P6700 Bodyside LH - Robot Cell 2V09			Document type: EFS	Project nr: 22-16150
Modification	Date	Name	Original		Replacement of / Replaced by	Scale 1:1			Page 14 / 1533

0	1	2	3	4	5	6	7	8	9

-KF11.32
/6.3

ET 200SP SIEMENS
F-DI 8x24VDC HF

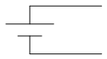

	L+ 24VDC	/6.3			
	M 0VDC	/6.4			
I5056.0	1 DI0		I5056.0	Spare	
	9 VS0				
I5056.1	2 DI1		I5056.1	Spare	
	10 VS1				
I5056.2	3 DI2		I5056.2	Spare	
	11 VS2				
I5056.3	4 DI3		I5056.3	Spare	
	12 VS3				
I5056.4	5 DI4		I5056.4	Spare	
	13 VS4				
I5056.5	6 DI5		I5056.5	Spare	
	14 VS5				
I5056.6	7 DI6		I5056.6	Spare	
	15 VS6				
I5056.7	8 DI7		I5056.7	Spare	
	16 VS7				

6ES7136-6BA00-0CA0

			Date	1/17/2023	Volvo Trucks North America	Valiant TMS	ET200S F-DI Overview KF11.32	Drawing name: =2V09&EFS-EL	= V1KF1	
			Ed.	MKLEPADLO					+ V1UC11	
			Appr		P6700 Bodyside LH - Robot Cell 2V09			Document type: EFS	Project nr: 22-16150	Page 15
Modification	Date	Name	Original		Replacement of / Replaced by	Scale 1:1				1533

0	1	2	3	4	5	6	7	8	9

-KF11.41
/8.0

ET 200SP SIEMENS
F-DQ 4X24VDC/2A PM HF

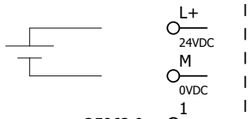

/8.1
/8.2

Q5062.0	1 DQ-P0	=V1FQ1/1.1	-KF11.51	Switched Power 1 11.1L+	
Q5062.0	5				
QX.0	9 DQ-M0	=V1FQ1/1.1			
QX.0	13				
Q5062.1	2 DQ-P1	=V1FQ1/2.1	-KF11.52	Switched Power 2 12.1L+	
Q5062.1	6				
QX.1	10 DQ-M1	=V1FQ1/2.1			
QX.1	14				
Q5062.2	3 DQ-P2	=V1FQ1/3.1	-KF11.53	Switched Power 3 13.1L+	
Q5062.2	7				
QX.2	11 DQ-M2	=V1FQ1/3.1			
QX.2	15				
Q5062.3	4 DQ-P3	=V1FQ1/4.1	-KF11.54	Switched Power 4 14.1L+	
Q5062.3	8				
QX.3	12 DQ-M3	=V1FQ1/4.1			
QX.3	16				

6ES7136-6DB00-0CA0 + BU15-P16+A0+2B

			Date	1/17/2023	Volvo Trucks North America	Valiant TMS	ET200S F-DQ Overview KF11.41	Drawing name: =2V09&EFS-EL	= V1KF1
			Ed.	MKLEPADLO					+ V1UC11
			Appr		P6700 Bodyside LH - Robot Cell 2V09	Scale 1:1		Document type: EFS	Project nr: 22-16150
Modification	Date	Name	Original		Replacement of	Replaced by			Page 16 / 1533

0	1	2	3	4	5	6	7	8	9

-KF11.42
/8.5

ET 200SP SIEMENS
F-DQ 4X24VDC/2A PM HF

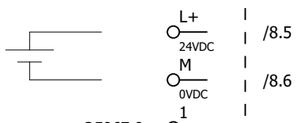

Q5067.0	Q5067.0	Spare
Q5067.1	Q5067.1	Spare
Q5067.2	Q5067.2	Spare
Q5067.3	Q5067.3	Spare

6ES7136-6DB00-0CA0 + BU15-P16+A0+2B

			Date	1/17/2023	Volvo Trucks North America	Valiant TMS	ET200S F-DQ Overview KF11.42	Drawing name: =2V09&EFS-EL	= V1KF1
			Ed.	MKLEPADLO					+ V1UC11
			Appr		P6700 Bodyside LH - Robot Cell 2V09			Document type: EFS	Project nr: 22-16150
Modification	Date	Name	Original		Replacement of / Replaced by	Scale 1:1			Page 17 / 1533

0	1	2	3	4	5	6	7	8	9

-KF11.51
=V1FQ1/1.2
=V1WC4/12.1

ET 200SP SIEMENS
F-RQ 1x24VDC/24..230VAC/5A

1 RQ01+	=V1WC4/12.2	11L+	
2 RQ01-	=V1WC4/12.2	11.1L+	
3 RQ02+	=V1WC4/12.3	11L+	
4 RQ02-	=V1WC4/12.4	11.1L+	
9 IN P	=V1FQ1/1.3	Switched Power 1 11.1L+P	
10 OUT P	=V1FQ1/1.4	Spare	
11 IN M	=V1FQ1/1.4	Switched Power 1 11.1L+M	
12 OUT M	=V1FQ1/1.5	Spare	
1A AUX			
2A AUX			
3A AUX			
4A AUX			

6ES7136-6RA00-0BF0 + BU20-P8+A4+0B

			Date	1/17/2023	Volvo Trucks North America	Valiant TMS	ET200S F-RQ Overview KF11.51	Drawing name: =2V09&EFS-EL	= V1KF1
			Ed.	MKLEPADLO					+ V1UC11
			Appr		P6700 Bodyside LH - Robot Cell 2V09			Document type: EFS	Project nr: 22-16150
Modification	Date	Name	Original		Replacement of / Replaced by	Scale 1:1			Page 18 / 1533

0	1	2	3	4	5	6	7	8	9

-KF11.52
=V1FQ1/2.2
=V1WC4/13.1

ET 200SP SIEMENS
F-RQ 1x24VDC/24..230VAC/5A

1 RQ01+	=V1WC4/13.2	12L+
2 RQ01-	=V1WC4/13.2	12.1L+
3 RQ02+	=V1WC4/13.3	12L+
4 RQ02-	=V1WC4/13.4	12.1L+
9 IN P	=V1FQ1/2.3	Switched Power 2 12.1L+P
10 OUT P	=V1FQ1/2.4	Spare
11 IN M	=V1FQ1/2.4	Switched Power 2 12.1L+M
12 OUT M	=V1FQ1/2.5	Spare

1A AUX
2A AUX
3A AUX
4A AUX

6ES7136-6RA00-0BF0 + BU20-P8+A4+0B

			Date	1/17/2023	Volvo Trucks North America	Valiant TMS	ET200S F-RQ Overview KF11.52	Drawing name: =2V09&EFS-EL	= V1KF1
			Ed.	MKLEPADLO					+ V1UC11
			Appr		P6700 Bodyside LH - Robot Cell 2V09	Scale 1:1		Document type: EFS	Project nr: 22-16150
Modification	Date	Name	Original		Replacement of	Replaced by			Page 19 / 1533

0	1	2	3	4	5	6	7	8	9

-KF11.53
=V1FQ1/3.2
=V1WC4/14.1

ET 200SP SIEMENS
F-RQ 1x24VDC/24..230VAC/5A

1 RQ01+	=V1WC4/14.2	13L+
2 RQ01-	=V1WC4/14.2	13.1L+
3 RQ02+	=V1WC4/14.3	13L+
4 RQ02-	=V1WC4/14.4	13.1L+
9 IN P	=V1FQ1/3.3	Switched Power 3 13.1L+P
10 OUT P	=V1FQ1/3.4	Spare
11 IN M	=V1FQ1/3.4	Switched Power 3 13.1L+M
12 OUT M	=V1FQ1/3.5	Spare

1A AUX
2A AUX
3A AUX
4A AUX

6ES7136-6RA00-0BF0 + BU20-P8+A4+0B

			Date	1/17/2023	Volvo Trucks North America	Valiant TMS	ET200S F-RQ Overview KF11.53	Drawing name: =2V09&EFS-EL	= V1KF1
			Ed.	MKLEPADLO					+ V1UC11
			Appr		P6700 Bodyside LH - Robot Cell 2V09			Document type: EFS	Project nr: 22-16150
Modification	Date	Name	Original		Replacement of / Replaced by	Scale 1:1			Page 20 / 1533

0	1	2	3	4	5	6	7	8	9

-KF11.54
=V1FQ1/4.2
=V1WC4/15.1

ET 200SP SIEMENS
F-RQ 1x24VDC/24..230VAC/5A

1 RQ01+	=V1WC4/15.2	14L+
2 RQ01-	=V1WC4/15.2	14.1L+
3 RQ02+	=V1WC4/15.3	14L+
4 RQ02-	=V1WC4/15.4	14.1L+
9 IN P	=V1FQ1/4.3	Switched Power 4 14.1L+P
10 OUT P	=V1FQ1/4.4	Spare
11 IN M	=V1FQ1/4.4	Switched Power 4 14.1L+M
12 OUT M	=V1FQ1/4.5	Spare

1A AUX
2A AUX
3A AUX
4A AUX

6ES7136-6RA00-0BF0 + BU20-P8+A4+0B

			Date	1/17/2023	Volvo Trucks North America	Valiant TMS	ET200S F-RQ Overview KF11.54	Drawing name: =2V09&EFS-EL	= V1KF1
			Ed.	MKLEPADLO					+ V1UC11
			Appr		P6700 Bodyside LH - Robot Cell 2V09	Scale 1:1		Document type: EFS	Project nr: 22-16150
Modification	Date	Name	Original		Replacement of	Replaced by			Page 21 / 1533

0	1	2	3	4	5	6	7	8	9

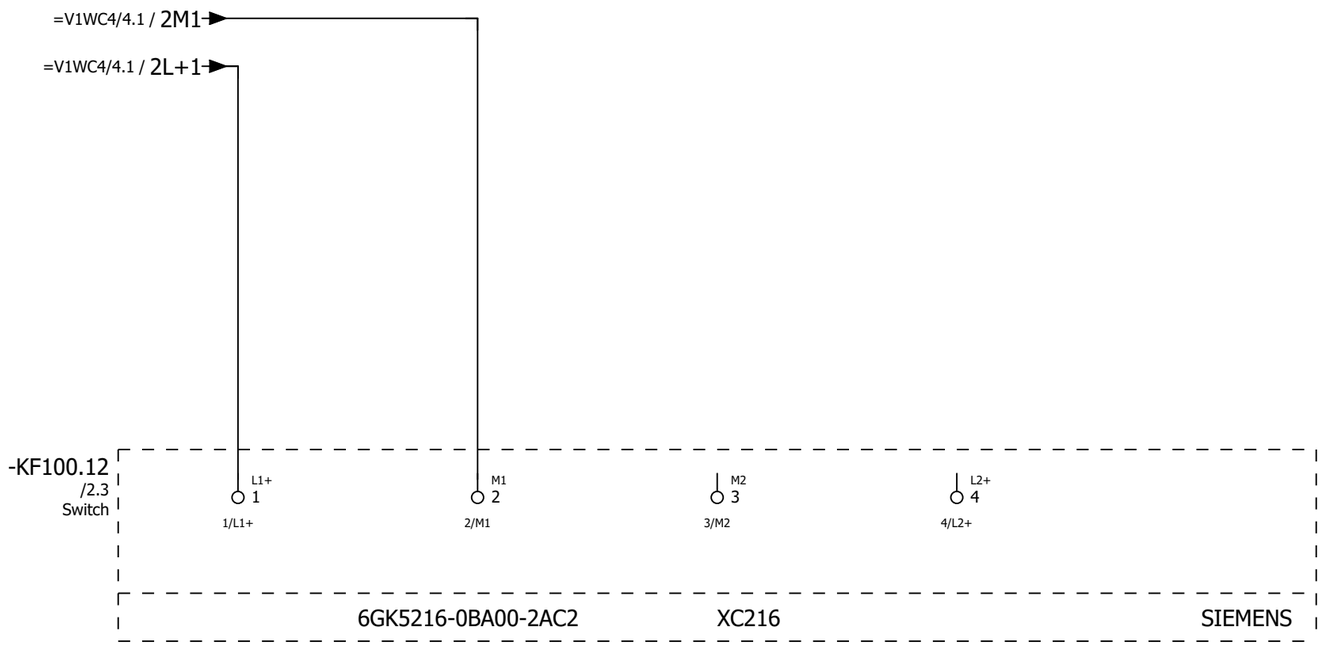

+.UC11/21

2

			Date	1/17/2023	Volvo Trucks North America	Valiant TMS	Switch, Scalance XC216	Drawing name: =2V09&EFS-EL	= V1KF1
			Ed.	MKLEPADLO					+ V1UC12
			Appr		P6700 Bodyside LH - Robot Cell 2V09			Document type: EFS	Project nr: 22-16150
Modification	Date	Name	Original		Replacement of / Replaced by	Scale 1:1			Page 1 / 1533

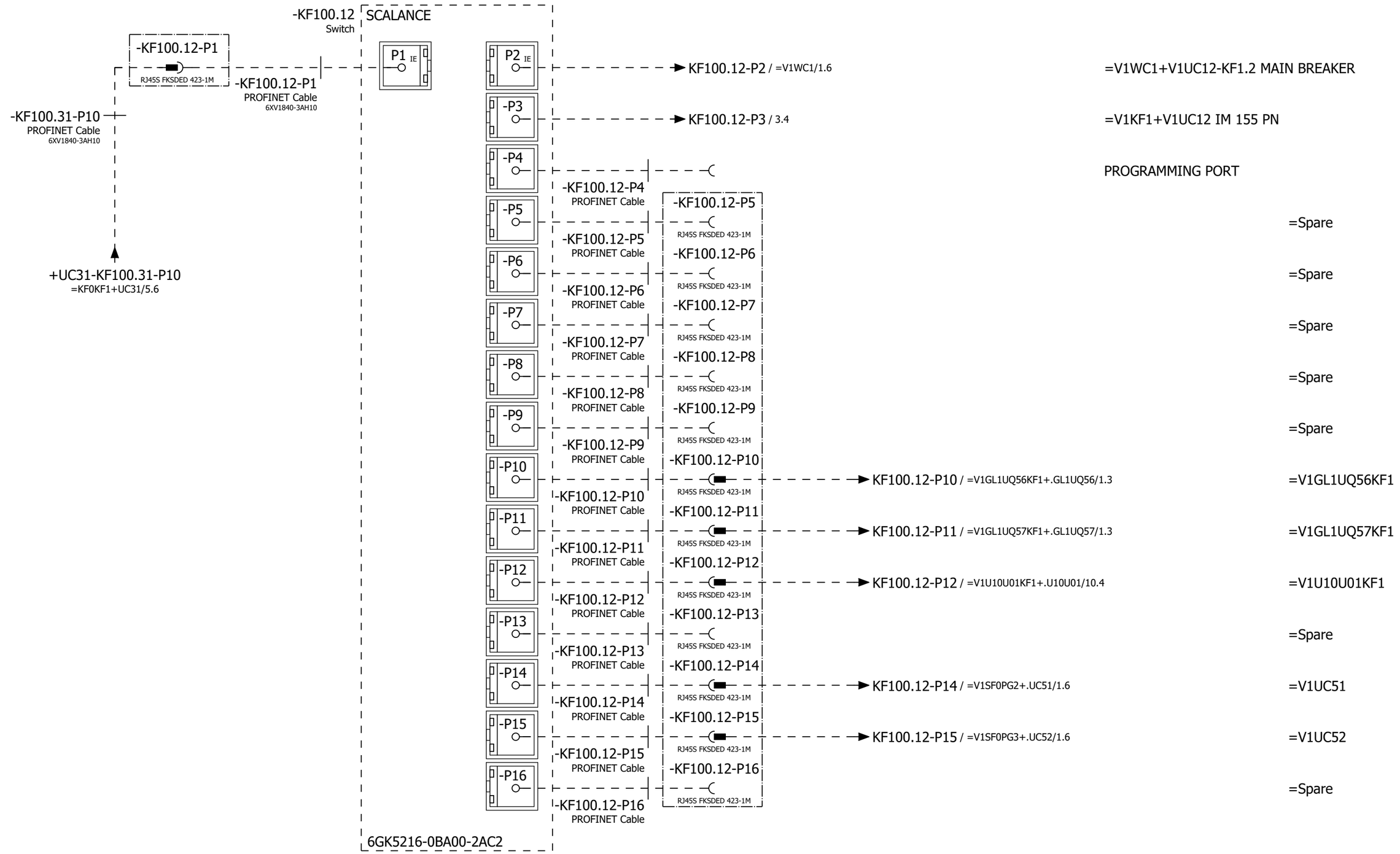

			Date	1/17/2023	Volvo Trucks North America		Valiant TMS	Network Overview	Drawing name: =2V09&EFS-EL	= V1KF1
			Ed.	MKLEPADLO						+ V1UC12
			Appr		P6700 Bodyside LH - Robot Cell 2V09				Document type: EFS	Project nr: 22-16150
Modification	Date	Name	Original		Replacement of	Replaced by	Scale 1:1			Page 2 / 1533

0	1	2	3	4	5	6	7	8	9

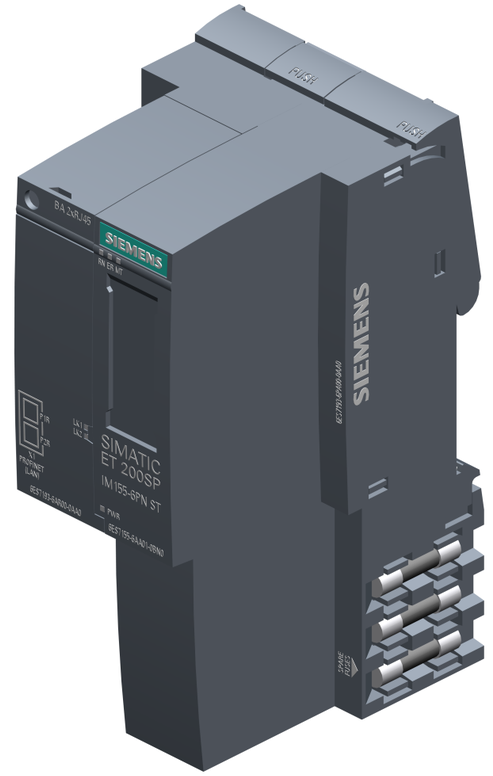

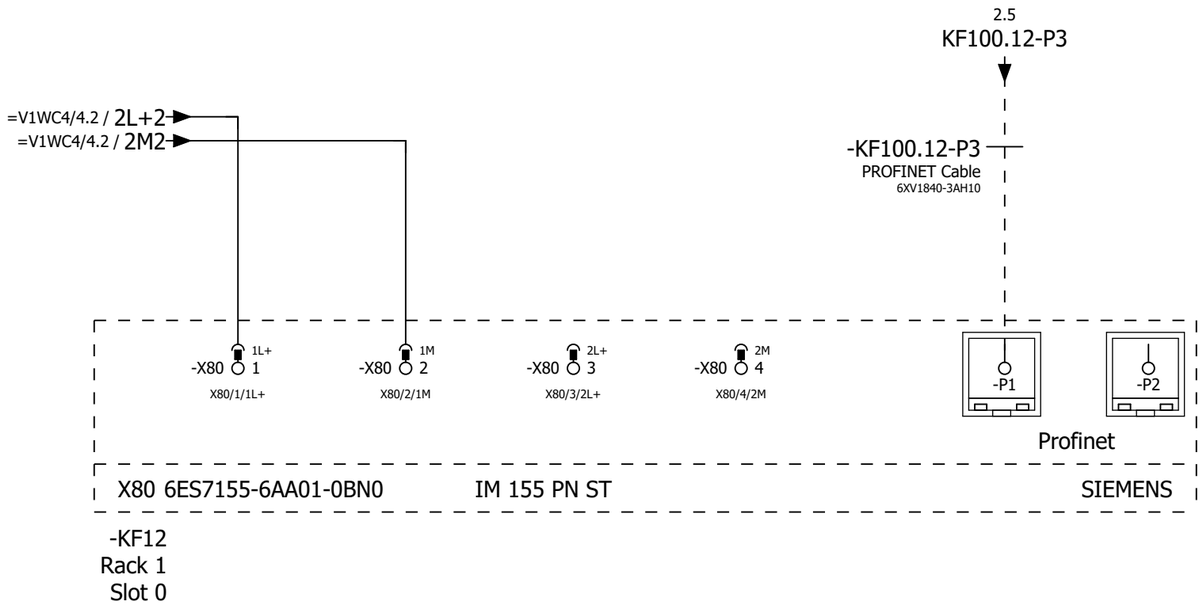

			Date	1/17/2023	Volvo Trucks North America	Valiant TMS	IM 155 PN	Drawing name: =2V09&EFS-EL	= V1KF1	
			Ed.	MKLEPADLO					+ V1UC12	
			Appr		P6700 Bodyside LH - Robot Cell 2V09			Document type: EFS	Project nr: 22-16150	Page 3
Modification	Date	Name	Original		Replacement of	Replaced by	Scale 1:1			1533

0	1	2	3	4	5	6	7	8	9

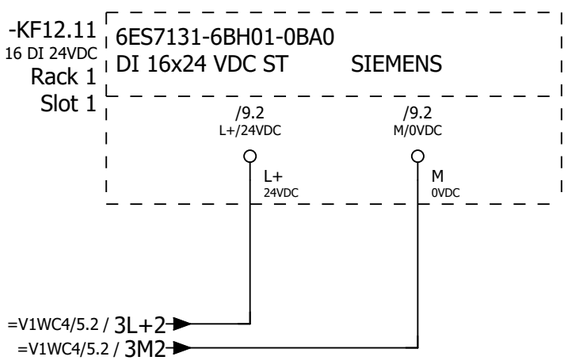

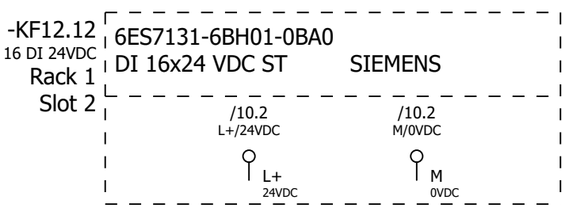

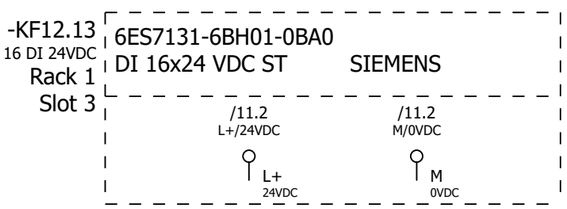

			Date	1/17/2023	Volvo Trucks North America	Valiant TMS	ET200S Wiring DI	Drawing name: =2V09&EFS-EL	= V1KF1
			Ed.	MKLEPADLO					+ V1UC12
			Appr		P6700 Bodyside LH - Robot Cell 2V09			Document type: EFS	Project nr: 22-16150
Modification	Date	Name	Original		Replacement of	Replaced by	Scale 1:1		Page 4 / 1533

0	1	2	3	4	5	6	7	8	9

-KF12.14
16 DI 24VDC
Rack 1
Slot 4

6ES7131-6BH01-0BA0
DI 16x24 VDC ST SIEMENS

/12.2 L+/24VDC	/12.2 M/0VDC
L+ 24VDC	M 0VDC

4 6

			Date	1/17/2023	Volvo Trucks North America	Valiant TMS	ET200S Wiring DI	Drawing name: =2V09&EFS-EL	= V1KF1
			Ed.	MKLEPADLO					+ V1UC12
			Appr		P6700 Bodyside LH - Robot Cell 2V09			Document type: EFS	Project nr: 22-16150
Modification	Date	Name	Original		Replacement of / Replaced by	Scale 1:1			Page 5 / 1533

0	1	2	3	4	5	6	7	8	9

-KF12.31
FDI 8 24VDC
Rack 1
Slot 5

6ES7136-6BA00-0CA0
F-DI 8x24VDC HF SIEMENS

/14.2 L+ 24VDC

/14.2 M 0VDC

-KF12.32
FDI 8 24VDC
Rack 1
Slot 6

6ES7136-6BA00-0CA0
F-DI 8x24VDC HF SIEMENS

/15.2 L+ 24VDC

/15.2 M 0VDC

5 7

			Date	1/17/2023	Volvo Trucks North America	Valiant TMS	ET200S Wiring F-DI	Drawing name: =2V09&EFS-EL	= V1KF1
			Ed.	MKLEPADLO					+ V1UC12
			Appr		P6700 Bodyside LH - Robot Cell 2V09			Document type: EFS	Project nr: 22-16150
Modification	Date	Name	Original		Replacement of / Replaced by	Scale 1:1			Page 6 / 1533

0	1	2	3	4	5	6	7	8	9

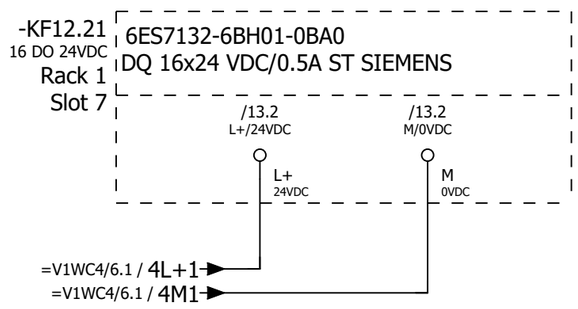

			Date	1/17/2023	Volvo Trucks North America	Valiant TMS	ET200S Wiring DQ	Drawing name: =2V09&EFS-EL	= V1KF1	
			Ed.	MKLEPADLO					+ V1UC12	
			Appr		P6700 Bodyside LH - Robot Cell 2V09			Document type: EFS	Project nr: 22-16150	Page 7
Modification	Date	Name	Original		Replacement of	Replaced by	Scale 1:1			1533

0	1	2	3	4	5	6	7	8	9

-KF12.41
=V1FQ1/1.0
=V1FQ1/2.0
=V1FQ1/3.0
=V1FQ1/4.0
/16.1
FDO 4 24VDC
Rack 1
Slot 8

6ES7136-6DB00-0CA0 + BU15-P16+A0+2B F-DQ 4X24VDC/2A PM HF SIEMENS

/16.2 L+ 24VDC

/16.2 M 0VDC

-KF12.42
/17.1
FDO 4 24VDC
Rack 1
Slot 9

6ES7136-6DB00-0CA0 + BU15-P16+A0+2B F-DQ 4X24VDC/2A PM HF SIEMENS

/17.2 L+ 24VDC

/17.2 M 0VDC

7

9

			Date	1/17/2023	Volvo Trucks North America	Valiant TMS	ET200S Wiring F-DQ	Drawing name: =2V09&EFS-EL	= V1KF1
			Ed.	MKLEPADLO					+ V1UC12
			Appr		P6700 Bodyside LH - Robot Cell 2V09	Scale 1:1		Document type: EFS	Project nr: 22-16150
Modification	Date	Name	Original		Replacement of	Replaced by			Page 8 / 1533

0	1	2	3	4	5	6	7	8	9

-KF12.11
/4.0

ET 200SP SIEMENS
DI 16x24 VDC ST

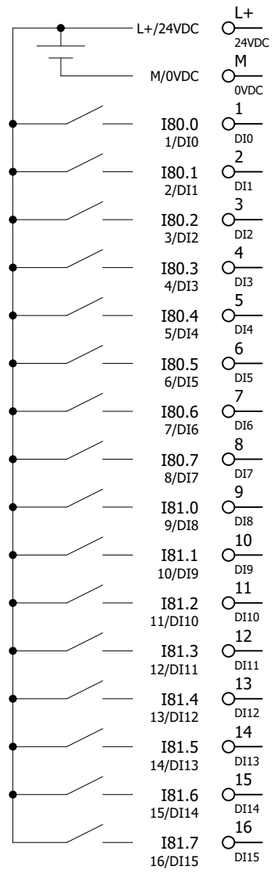

/4.1			
/4.2			
=V1WC2/41.2	I80.0	Spare	
=V1WC2/41.3	=V1UC12-FC1	Monitoring 480 VAC	
=V1WC4/1.4	=V1WC4+V1UC12-TA1_I	Monitoring 24VDC	
=V1WC4/11.4	=V1WC4+V1UC12-TA2_I	Monitoring 24VDC	
=V1WC4/1.0	=V1WC4+V1UC12-FC11_I	Monitoring 24VDC	
=V1WC4/11.0	=V1WC4+V1UC12-FC12_I	Monitoring 24VDC	
=V1WC2/41.7	I80.6	Spare	
=V1WC2/41.8	I80.7	Spare	
=V1WC2/41.2	I81.0	Spare	
=V1WC2/41.3	I81.1	Spare	
=V1WC2/41.4	I81.2	Spare	
=V1WC2/41.4	I81.3	Spare	
=V1WC2/41.5	I81.4	Spare	
=V1WC2/41.6	I81.5	Spare	
=V1WC2/41.7	I81.6	Spare	
=V1WC2/41.8	I81.7	Spare	

6ES7131-6BH01-0BA0

8 10

			Date	1/17/2023	Volvo Trucks North America		Valiant TMS	ET200S DI Overview KF12.11	Drawing name: =2V09&EFS-EL	= V1KF1
			Ed.	MKLEPADLO						+ V1UC12
			Appr		P6700 Bodyside LH - Robot Cell 2V09				Document type: EFS	Project nr: 22-16150
Modification	Date	Name	Original		Replacement of	Replaced by	Scale 1:1			Page 9 / 1533

0	1	2	3	4	5	6	7	8	9

-KF12.12
/4.3

ET 200SP SIEMENS
DI 16x24 VDC ST

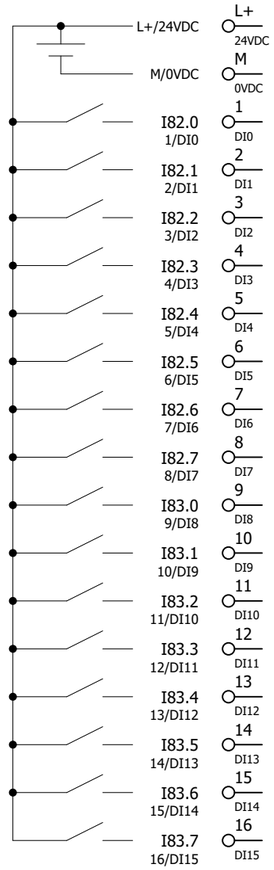

/4.3			
/4.4			
=V1WC2/42.2	=V1AR141-FC1	Monitoring 480 VAC	
=V1WC2/42.3	=V1AR12-FC1	Monitoring 480 VAC	
=V1WC2/42.4	=V1AR22-FC1	Monitoring 480 VAC	
=V1WC2/42.4	=V1AR24-FC1	Monitoring 480 VAC	
=V1WC2/42.5	=V1AR13-FC1	Monitoring 480 VAC	
=V1WC2/42.6	=V1AR14-FC1	Monitoring 480 VAC	
=V1WC2/42.7	=V1AR25-FC1	Monitoring 480 VAC	
=V1WC2/42.8	=V1AR27-FC1	Monitoring 480 VAC	
=V1WC2/42.2	=V1AR29-FC1	Monitoring 480 VAC	
=V1WC2/42.3	=V1AR212-FC1	Monitoring 480 VAC	
=V1WC2/42.4	=V1AR51-FC1	Monitoring 480 VAC	
=V1WC2/42.4	=V1AR51XQ21-FC1	Monitoring 480 VAC	
=V1WC2/42.5	=V1AR53-FC1	Monitoring 480 VAC	
=V1WC2/42.6	=V1AR53XQ21-FC1	Monitoring 480 VAC	
=V1WC2/42.7	=V1AR191-FC1	Monitoring 480 VAC	
=V1WC2/42.8	=V1AR192-FC1	Monitoring 480 VAC	

6ES7131-6BH01-0BA0

			Date	1/17/2023	Volvo Trucks North America		Valiant TMS	ET200S DI Overview KF12.12	Drawing name: =2V09&EFS-EL	= V1KF1
			Ed.	MKLEPADLO						+ V1UC12
			Appr		P6700 Bodyside LH - Robot Cell 2V09		Scale 1:1		Document type: EFS	Project nr: 22-16150
Modification	Date	Name	Original		Replacement of	Replaced by				Page 10 / 1533

0	1	2	3	4	5	6	7	8	9

-KF12.13
/4.5

ET 200SP SIEMENS
DI 16x24 VDC ST

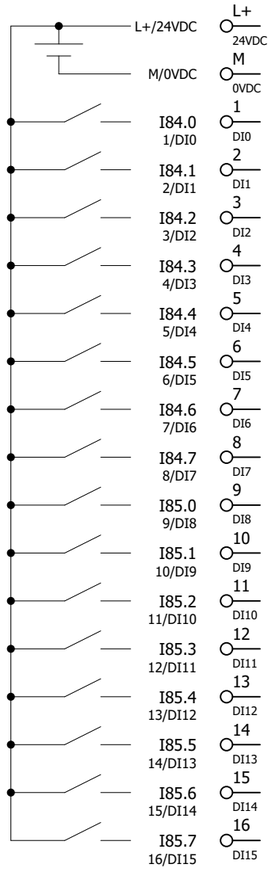

/4.6			
/4.7			
=V1WC2/43.2	I84.0	Spare	
=V1WC2/43.3	I84.1	Spare	
=V1WC2/43.4	I84.2	Spare	
=V1WC2/43.4	I84.3	Spare	
=V1WC2/43.5	I84.4	Spare	
=V1WC2/43.6	I84.5	Spare	
=V1WC2/43.7	I84.6	Spare	
=V1WC2/43.8	I84.7	Spare	
=V1WC3/4.2	=V1WC3+V1UC12-FC2	Monitoring 120 VAC	
=V1WC3/4.3	=V1WC3+V1UC12-FC3	Monitoring 120 VAC	
=V1WC3/4.4	=V1WC3+V1UC12-FC4	Monitoring 120 VAC	
=V1WC3/4.4	=V1WC3+V1UC12-FC6	Monitoring 120 VAC	
=V1WC3/4.5	=V1WC3+V1UC12-FC7	Monitoring 120 VAC	
=V1WC3/4.6	=V1WC3+V1UC12-FC8	Monitoring 120 VAC	
=V1WC3/4.7	=V1WC3+V1UC12-FC9	Monitoring 120 VAC	
=V1WC3/4.8	I85.7	Spare	

6ES7131-6BH01-0BA0

10 12

			Date	1/17/2023	Volvo Trucks North America		Valiant TMS	ET200S DI Overview KF12.13	Drawing name: =2V09&EFS-EL	= V1KF1
			Ed.	MKLEPADLO						+ V1UC12
			Appr		P6700 Bodyside LH - Robot Cell 2V09		Scale 1:1		Document type: EFS	Project nr: 22-16150	Page 11
Modification	Date	Name	Original		Replacement of	Replaced by					1533

0	1	2	3	4	5	6	7	8	9

-KF12.14
/5.0

ET 200SP SIEMENS
DI 16x24 VDC ST

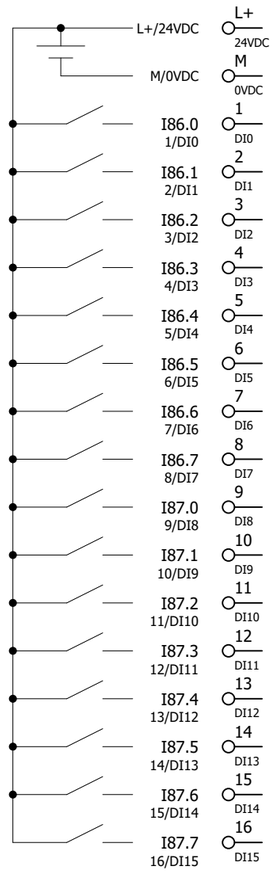

/5.1			
/5.2			
=V1FQ1/1.8	-KF12.51RQ	Monitoring Safety contactors 11.1L+	
=V1FQ1/2.8	-KF12.52RQ	Monitoring Safety contactors 12.1L+	
=V1FQ1/3.8	-KF12.53RQ	Monitoring Safety contactors 13.1L+	
=V1FQ1/4.8	-KF12.54RQ	Monitoring Safety contactors 14.1L+	
=V1SF0SF1+.UC71/1.1	=V1SF0SF1+V1UC71-SF1.1	S010 Operator Run Button 1	
=V1SF0SF2+.UC72/1.1	=V1SF0SF2+V1UC72-SF1.1	S010 Operator Run Button 2	
	I86.6	Spare	
	I86.7	Spare	
=KH0+KH0/2.6	=KH0-BP2_I	Monitoring S010 Shuttle AIR On	
	I87.1	Spare	
	I87.2	Spare	
	I87.3	Spare	
	I87.4	Spare	
	I87.5	Spare	
	I87.6	Spare	
	I87.7	Spare	

6ES7131-6BH01-0BA0

11 13

			Date	1/17/2023	Volvo Trucks North America	Valiant TMS	ET200S DI Overview KF12.14	Drawing name: =2V09&EFS-EL	= V1KF1
			Ed.	MKLEPADLO					+ V1UC12
			Appr		P6700 Bodyside LH - Robot Cell 2V09	Scale 1:1		Document type: EFS	Project nr: 22-16150
Modification	Date	Name	Original		Replacement of	Replaced by			Page 12 / 1533

0	1	2	3	4	5	6	7	8	9

-KF12.21
/7.1
16 DO 24VDC

ET 200SP SIEMENS
DQ 16x24 VDC/0.5A ST

L+/24VDC	L+ 24VDC	/7.1			
M/0VDC	M 0VDC	/7.2			
Q80.0 1/DQ0	1 DQ0	=V1PZ1PF1+.UC61/1.3	=V1PZ1PF1+UC61-PF1_1	S010 Indication column 1 Blue	
Q80.1 2/DQ1	2 DQ1	=V1PZ1PF1+.UC61/1.4	=V1PZ1PF1+UC61-PF1_2	S010 Indication column 1 Green	
Q80.2 3/DQ2	3 DQ2	=V1PZ1PF1+.UC61/1.4	=V1PZ1PF1+UC61-PF1_3	S010 Indication column 1 Yellow	
Q80.3 4/DQ3	4 DQ3	=V1PZ1PF1+.UC61/1.5	=V1PZ1PF1+UC61-PF1_4	S010 Indication column 1 Red	
Q80.4 5/DQ4	5 DQ4	=V1PZ1PF1+.UC61/1.6	=V1PZ1PF1+UC61-PF1_5	S010 Indication column 1 Siren	
Q80.5 6/DQ5	6 DQ5	=V1PZ1PF2+.UC62/1.3	=V1PZ1PF2+UC62-PF1_1	S010 Indication column 2 Blue	
Q80.6 7/DQ6	7 DQ6	=V1PZ1PF2+.UC62/1.4	=V1PZ1PF2+UC62-PF1_2	S010 Indication column 2 Green	
Q80.7 8/DQ7	8 DQ7	=V1PZ1PF2+.UC62/1.4	=V1PZ1PF2+UC62-PF1_3	S010 Indication column 2 Yellow	
Q81.0 9/DQ8	9 DQ8	=V1PZ1PF2+.UC62/1.5	=V1PZ1PF2+UC62-PF1_4	S010 Indication column 2 Red	
Q81.1 10/DQ9	10 DQ9	=V1PZ1PF2+.UC62/1.6	=V1PZ1PF2+UC62-PF1_5	S010 Indication column 2 Siren	
Q81.2 11/DQ10	11 DQ10		Q81.2	Spare	
Q81.3 12/DQ11	12 DQ11		Q81.3	Spare	
Q81.4 13/DQ12	13 DQ12		Q81.4	Spare	
Q81.5 14/DQ13	14 DQ13		Q81.5	Spare	
Q81.6 15/DQ14	15 DQ14		Q81.6	Spare	
Q81.7 16/DQ15	16 DQ15		Q81.7	Spare	

6ES7132-6BH01-0BA0

			Date	1/17/2023	Volvo Trucks North America	Valiant TMS	ET200S DQ Overview KF12.21	Drawing name: =2V09&EFS-EL	= V1KF1	
			Ed.	MKLEPADLO					+ V1UC12	
			Appr		P6700 Bodyside LH - Robot Cell 2V09			Document type: EFS	Project nr: 22-16150	Page 13
Modification	Date	Name	Original		Replacement of	Replaced by	Scale 1:1			1533

0	1	2	3	4	5	6	7	8	9

-KF12.31
/6.0

ET 200SP SIEMENS
F-DI 8x24VDC HF

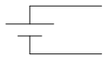

	L+ 24VDC	/6.1			
	M 0VDC	/6.2			
I5080.0	1 DI0	=V1FQ1+.FQ1/8.3	=V1FQ1-BR11.1	S010 Light Curtain 1&2 Ch1	
	9 VS0	=V1FQ1+.FQ1/8.3			
I5080.1	2 DI1	=V1FQ1+.FQ1/9.3	=V1FQ1-BR13.1	S010 Light Curtain 3&4 Ch1	
	10 VS1	=V1FQ1+.FQ1/9.3			
I5080.2	3 DI2	=V1FQ1+.FQ1/10.3	=V1FQ1-BR15.1	S010 Light Curtain 5 Ch1	
	11 VS2	=V1FQ1+.FQ1/10.3			
I5080.3	4 DI3		I5080.3	Spare	
	12 VS3				
I5080.4	5 DI4	=V1FQ1+.FQ1/8.4	=V1FQ1-BR11.2	S010 Light Curtain 1&2 Ch2	
	13 VS4	=V1FQ1+.FQ1/8.5			
I5080.5	6 DI5	=V1FQ1+.FQ1/9.4	=V1FQ1-BR13.2	S010 Light Curtain 3&4 Ch2	
	14 VS5	=V1FQ1+.FQ1/9.5			
I5080.6	7 DI6	=V1FQ1+.FQ1/10.4	=V1FQ1-BR15.2	S010 Light Curtain 5 Ch2	
	15 VS6	=V1FQ1+.FQ1/10.5			
I5080.7	8 DI7		I5080.7	Spare	
	16 VS7				

6ES7136-6BA00-0CA0

13 15

			Date	1/17/2023	Volvo Trucks North America	Valiant TMS	ET200S F-DI Overview KF12.31	Drawing name: =2V09&EFS-EL	= V1KF1
			Ed.	MKLEPADLO					+ V1UC12
			Appr		P6700 Bodyside LH - Robot Cell 2V09			Document type: EFS	Project nr: 22-16150
Modification	Date	Name	Original		Replacement of / Replaced by	Scale 1:1			Page 14 / 1533

-KF12.32
/6.3

ET 200SP SIEMENS
F-DI 8x24VDC HF

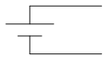

	L+ 24VDC	/6.3		
	M 0VDC	/6.4		
I5086.0	1 DI0	=V1SF0SF1+.UC71/1.5	=V1SF0SF1+V1UC71-SF1.4	S010 Operator Emergency Stop 1 Ch1
	9 VS0	=V1SF0SF1+.UC71/1.5		
I5086.1	2 DI1	=V1SF0SF2+.UC72/1.5	=V1SF0SF2+V1UC72-SF1.4	S010 Operator Emergency Stop 2 Ch1
	10 VS1	=V1SF0SF2+.UC72/1.5		
I5086.2	3 DI2	=V1U10FQ1+.U10/1.3	=V1U10FQ1-BG01	S010 Lift Assist Clear Ch1
	11 VS2	=V1U10FQ1+.U10/1.3		
I5086.3	4 DI3		I5086.3	Spare
	12 VS3			
I5086.4	5 DI4	=V1SF0SF1+.UC71/1.6	=V1SF0SF1+V1UC71-SF1.6	S010 Operator Emergency Stop 1 Ch2
	13 VS4	=V1SF0SF1+.UC71/1.6		
I5086.5	6 DI5	=V1SF0SF2+.UC72/1.6	=V1SF0SF2+V1UC72-SF1.6	S010 Operator Emergency Stop 2 Ch2
	14 VS5	=V1SF0SF2+.UC72/1.6		
I5086.6	7 DI6	=V1U10FQ1+.U10/1.4	=V1U10FQ1-BG01	S010 Lift Assist Clear Ch2
	15 VS6	=V1U10FQ1+.U10/1.5		
I5086.7	8 DI7		I5086.7	Spare
	16 VS7			

6ES7136-6BA00-0CA0

			Date	1/17/2023	Volvo Trucks North America	Valiant TMS	ET200S F-DI Overview KF12.32	Drawing name: =2V09&EFS-EL		= V1KF1	
			Ed.	MKLEPADLO						+ V1UC12	
			Appr		P6700 Bodyside LH - Robot Cell 2V09			Document type: EFS	Project nr: 22-16150	Page	15
Modification	Date	Name	Original		Replacement of / Replaced by	Scale 1:1					1533

0	1	2	3	4	5	6	7	8	9

-KF12.41
/8.0

ET 200SP SIEMENS
F-DQ 4X24VDC/2A PM HF

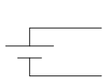

/8.1
/8.2

Q5092.0	1 DQ-P0	=V1FQ1/1.1	-KF12.51	Switched Power 1 11.1L+	
Q5092.0	5				
QX.0	9 DQ-M0				
QX.0	13				
Q5092.1	2 DQ-P1	=V1FQ1/2.1	-KF12.52	Switched Power 2 12.1L+	
Q5092.1	6				
QX.1	10 DQ-M1				
QX.1	14				
Q5092.2	3 DQ-P2	=V1FQ1/3.1	-KF12.53	Switched Power 3 13.1L+	
Q5092.2	7				
QX.2	11 DQ-M2				
QX.2	15				
Q5092.3	4 DQ-P3	=V1FQ1/4.1	-KF12.54	Switched Power 4 14.1L+	
Q5092.3	8				
QX.3	12 DQ-M3				
QX.3	16				

6ES7136-6DB00-0CA0 + BU15-P16+A0+2B

			Date	1/17/2023	Volvo Trucks North America	Valiant TMS	ET200S F-DQ Overview KF12.41	Drawing name: =2V09&EFS-EL	= V1KF1
			Ed.	MKLEPADLO					+ V1UC12
			Appr		P6700 Bodyside LH - Robot Cell 2V09			Document type: EFS	Project nr: 22-16150
Modification	Date	Name	Original		Replacement of / Replaced by	Scale 1:1			Page 16 / 1533

0	1	2	3	4	5	6	7	8	9

-KF12.42
/8.5

ET 200SP SIEMENS
F-DQ 4X24VDC/2A PM HF

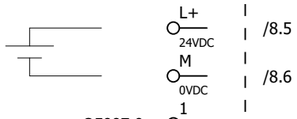

Q5097.0	Q5097.0	Spare
Q5097.1	Q5097.1	Spare
Q5097.2	Q5097.2	Spare
Q5097.3	Q5097.3	Spare

6ES7136-6DB00-0CA0 + BU15-P16+A0+2B

16 18

			Date	1/17/2023	Volvo Trucks North America	Valiant TMS	ET200S F-DQ Overview KF12.42	Drawing name: =2V09&EFS-EL	= V1KF1
			Ed.	MKLEPADLO					+ V1UC12
			Appr		P6700 Bodyside LH - Robot Cell 2V09			Document type: EFS	Project nr: 22-16150
Modification	Date	Name	Original		Replacement of / Replaced by	Scale 1:1			Page 17 / 1533

0	1	2	3	4	5	6	7	8	9

-KF12.51
=V1FQ1/1.2
=V1WC4/12.1

ET 200SP SIEMENS
F-RQ 1x24VDC/24..230VAC/5A

1 RQ01+	=V1WC4/12.2	11L+	
2 RQ01-	=V1WC4/12.2	11.1L+	
3 RQ02+	=V1WC4/12.3	11L+	
4 RQ02-	=V1WC4/12.4	11.1L+	
9 IN P	=V1FQ1/1.3	Switched Power 1 11.1L+P	
10 OUT P	=V1FQ1/1.4	SPARE	
11 IN M	=V1FQ1/1.4	Switched Power 1 11.1L+M	
12 OUT M	=V1FQ1/1.5	SPARE	
1A AUX			
2A AUX			
3A AUX			
4A AUX			

6ES7136-6RA00-0BF0 + BU20-P8+A4+0B

			Date	1/17/2023	Volvo Trucks North America	Valiant TMS	ET200S F-RQ Overview KF12.51	Drawing name: =2V09&EFS-EL	= V1KF1
			Ed.	MKLEPADLO					+ V1UC12
			Appr		P6700 Bodyside LH - Robot Cell 2V09			Document type: EFS	Project nr: 22-16150
Modification	Date	Name	Original		Replacement of / Replaced by	Scale 1:1			Page 18 / 1533

0	1	2	3	4	5	6	7	8	9

-KF12.52
=V1FQ1/2.2
=V1WC4/13.1

ET 200SP SIEMENS
F-RQ 1x24VDC/24..230VAC/5A

1 RQ01+	=V1WC4/13.2	12L+
2 RQ01-	=V1WC4/13.2	12.1L+
3 RQ02+	=V1WC4/13.3	12L+
4 RQ02-	=V1WC4/13.4	12.1L+
9 IN P	=V1FQ1/2.3	Switched Power 2 12.1L+P
10 OUT P	=V1FQ1/2.4	SPARE
11 IN M	=V1FQ1/2.4	Switched Power 2 12.1L+M
12 OUT M	=V1FQ1/2.5	SPARE

1A AUX
2A AUX
3A AUX
4A AUX

6ES7136-6RA00-0BF0 + BU20-P8+A4+0B

			Date	1/17/2023	Volvo Trucks North America	Valiant TMS	ET200S F-RQ Overview KF12.52	Drawing name: =2V09&EFS-EL	= V1KF1
			Ed.	MKLEPADLO					+ V1UC12
			Appr		P6700 Bodyside LH - Robot Cell 2V09			Document type: EFS	Project nr: 22-16150
Modification	Date	Name	Original		Replacement of / Replaced by	Scale 1:1			Page 19 / 1533

0	1	2	3	4	5	6	7	8	9

-KF12.53
=V1FQ1/3.2
=V1WC4/14.1

ET 200SP SIEMENS
F-RQ 1x24VDC/24..230VAC/5A

1 RQ01+	=V1WC4/14.2	13L+
2 RQ01-	=V1WC4/14.2	13.1L+
3 RQ02+	=V1WC4/14.3	13L+
4 RQ02-	=V1WC4/14.4	13.1L+
9 IN P	=V1FQ1/3.3	Switched Power 3 13.1L+P
10 OUT P	=V1FQ1/3.4	SPARE
11 IN M	=V1FQ1/3.4	Switched Power 3 13.1L+M
12 OUT M	=V1FQ1/3.5	SPARE

1A AUX
2A AUX
3A AUX
4A AUX

6ES7136-6RA00-0BF0 + BU20-P8+A4+0B

			Date	1/17/2023	Volvo Trucks North America	Valiant TMS	ET200S F-RQ Overview KF12.53	Drawing name: =2V09&EFS-EL	= V1KF1
			Ed.	MKLEPADLO					+ V1UC12
			Appr		P6700 Bodyside LH - Robot Cell 2V09			Document type: EFS	Project nr: 22-16150
Modification	Date	Name	Original		Replacement of / Replaced by	Scale 1:1			Page 20 / 1533

0	1	2	3	4	5	6	7	8	9

-KF12.54
=V1FQ1/4.2
=V1WC4/15.1

ET 200SP SIEMENS
F-RQ 1x24VDC/24..230VAC/5A

1 RQ01+	=V1WC4/15.2	14L+
2 RQ01-	=V1WC4/15.2	14.1L+
3 RQ02+	=V1WC4/15.3	14L+
4 RQ02-	=V1WC4/15.4	14.1L+
9 IN P	=V1FQ1/4.3	Switched Power 4 14.1L+P
10 OUT P	=V1FQ1/4.4	SPARE
11 IN M	=V1FQ1/4.4	Switched Power 4 14.1L+M
12 OUT M	=V1FQ1/4.5	SPARE

1A AUX
2A AUX
3A AUX
4A AUX

6ES7136-6RA00-0BF0 + BU20-P8+A4+0B

			Date	1/17/2023	Volvo Trucks North America	Valiant TMS	ET200S F-RQ Overview KF12.54	Drawing name: =2V09&EFS-EL	= V1KF1
			Ed.	MKLEPADLO					+ V1UC12
			Appr		P6700 Bodyside LH - Robot Cell 2V09	Scale 1:1		Document type: EFS	Project nr: 22-16150
Modification	Date	Name	Original		Replacement of / Replaced by				Page 21 / 1533

0	1	2	3	4	5	6	7	8	9

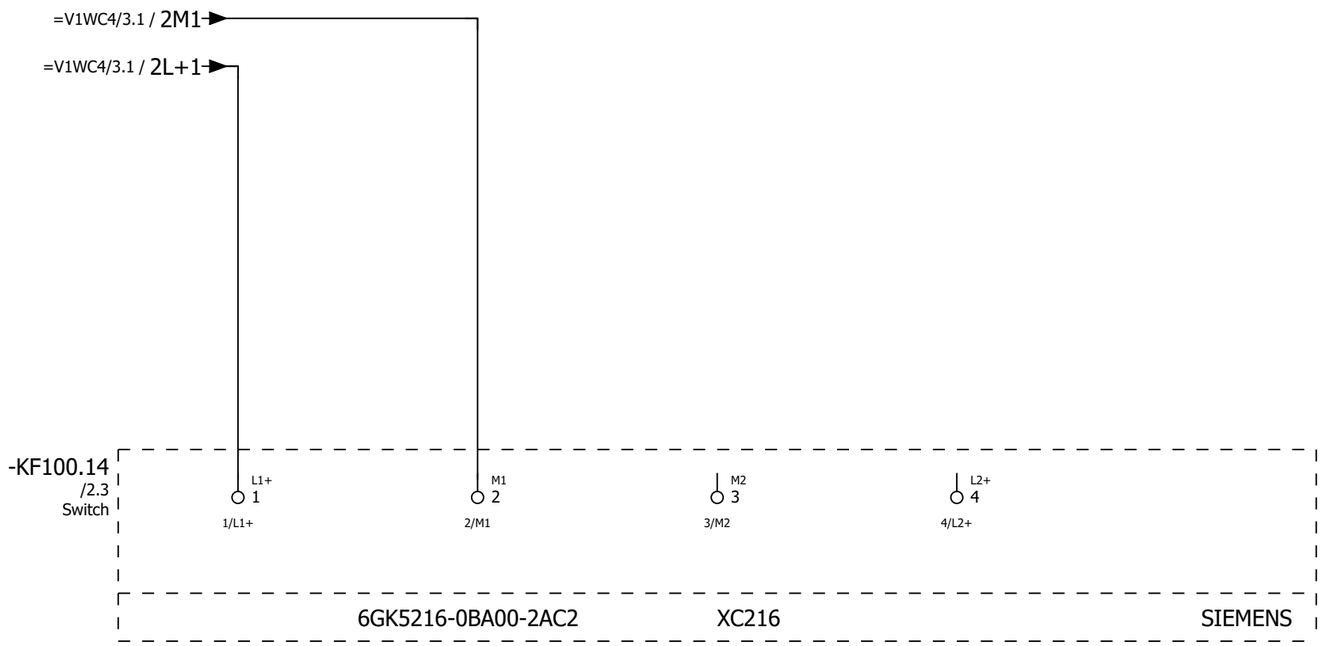

+.UC12/21

2

			Date	1/17/2023	Volvo Trucks North America	Valiant TMS	Switch, Scalance XC216	Drawing name: =2V09&EFS-EL	= V1KF1
			Ed.	MKLEPADLO					+ V1UC14
			Appr		P6700 Bodyside LH - Robot Cell 2V09			Document type: EFS	Project nr: 22-16150
Modification	Date	Name	Original		Replacement of / Replaced by	Scale 1:1			Page 1 / 1533

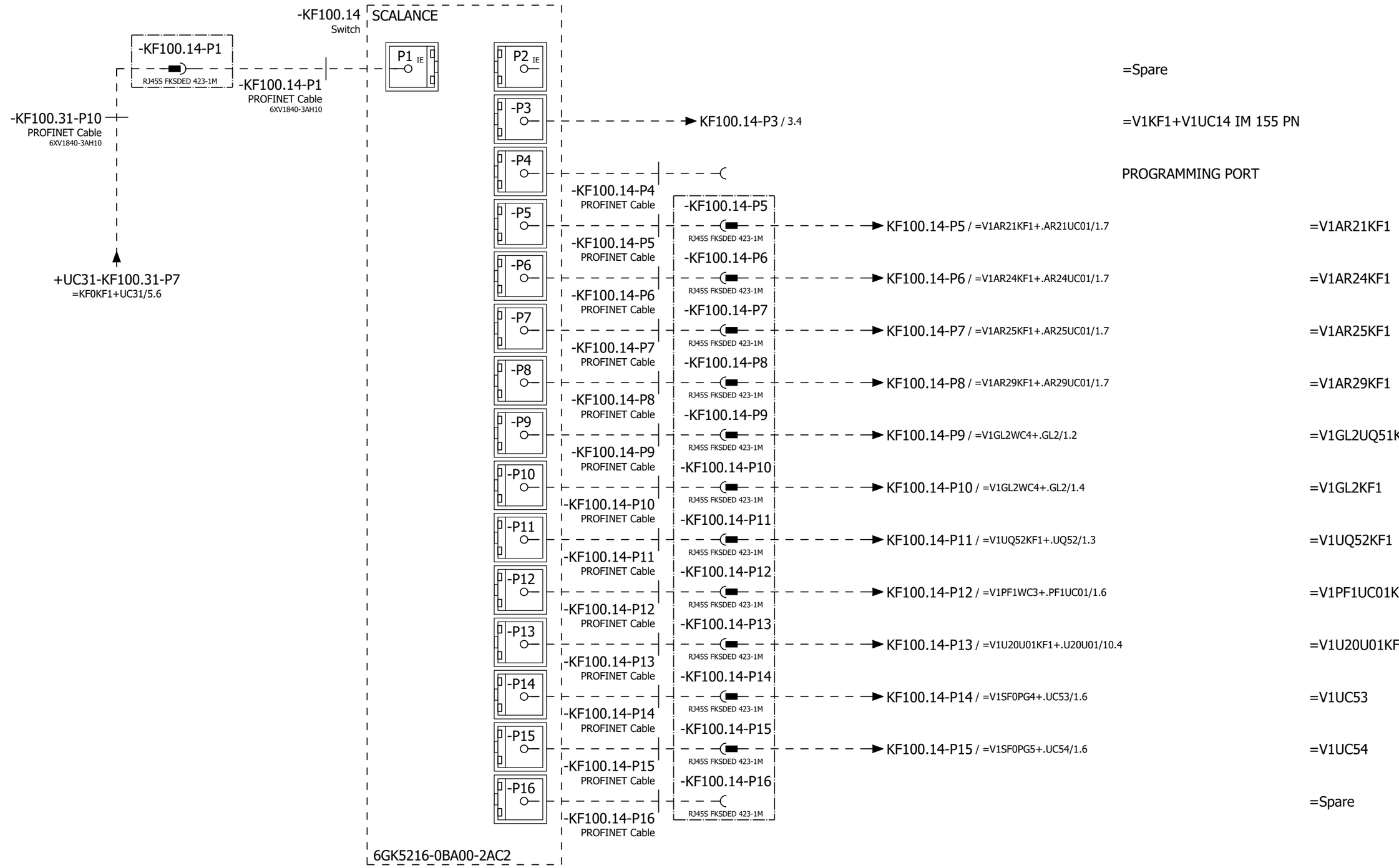

			Date	1/17/2023	Volvo Trucks North America		Valiant TMS	Network Overview	Drawing name: =2V09&EFS-EL	= V1KF1	
			Ed.	MKLEPADLO						+ V1UC14	
			Appr		P6700 Bodyside LH - Robot Cell 2V09				Document type: EFS	Project nr: 22-16150	Page 2
Modification	Date	Name	Original		Replacement of	Replaced by	Scale 1:1				1533

0	1	2	3	4	5	6	7	8	9

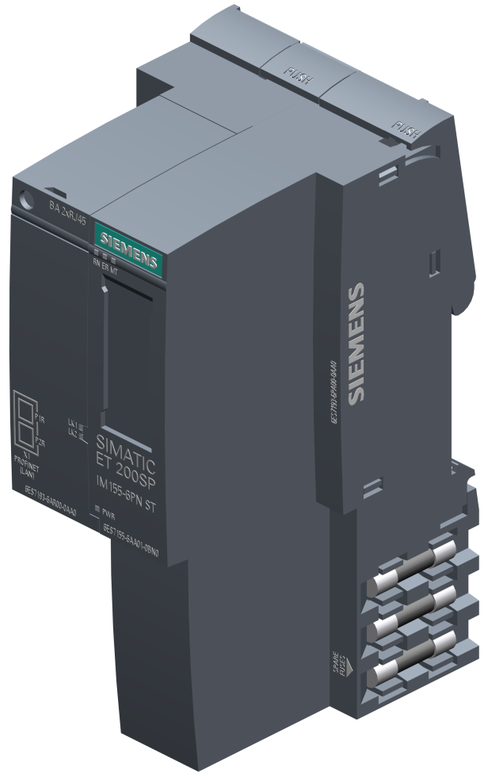

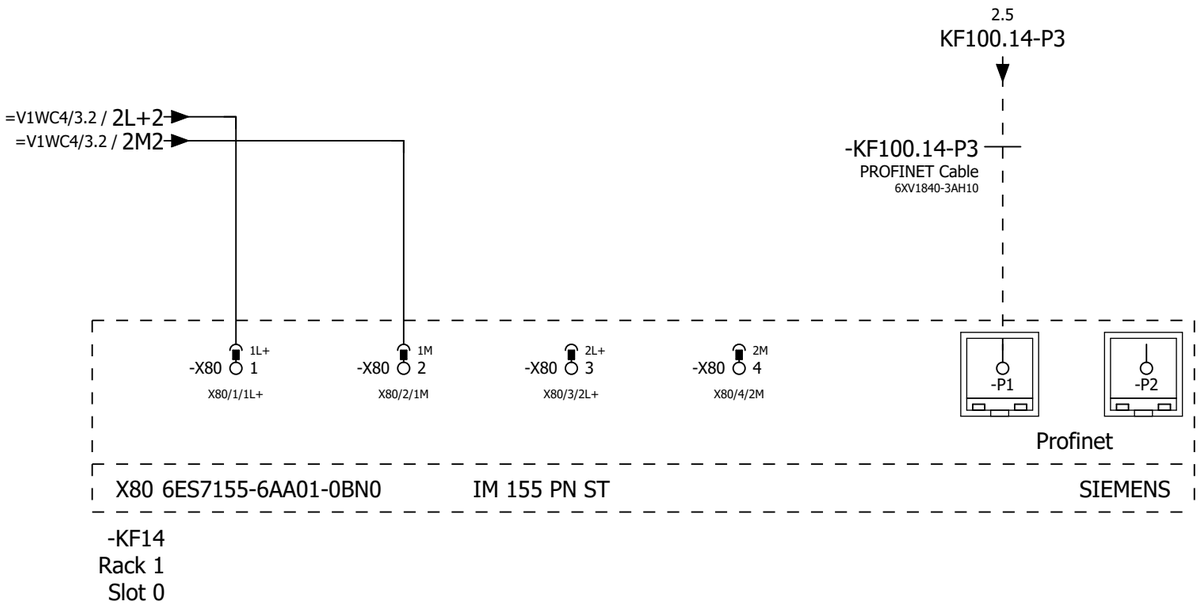

			Date	1/17/2023	Volvo Trucks North America	Valiant TMS	IM 155 PN	Drawing name: =2V09&EFS-EL	= V1KF1	
			Ed.	MKLEPADLO					+ V1UC14	
			Appr		P6700 Bodyside LH - Robot Cell 2V09			Document type: EFS	Project nr: 22-16150	Page 3
Modification	Date	Name	Original		Replacement of	Replaced by	Scale 1:1			1533

0	1	2	3	4	5	6	7	8	9

-KF14.11
16 DI 24VDC
Rack 1
Slot 1

6ES7131-6BH01-0BA0
DI 16x24 VDC ST SIEMENS

/8.2 L+/24VDC — L+ 24VDC
/8.2 M/0VDC — M 0VDC

=V1WC4/4.1 / 3L+1
=V1WC4/4.1 / 3M1

-KF14.12
16 DI 24VDC
Rack 1
Slot 2

6ES7131-6BH01-0BA0
DI 16x24 VDC ST SIEMENS

/9.2 L+/24VDC — L+ 24VDC
/9.2 M/0VDC — M 0VDC

			Date	1/17/2023	Volvo Trucks North America	Valiant TMS	ET200S Wiring DI	Drawing name: =2V09&EFS-EL	= V1KF1
			Ed.	MKLEPADLO					+ V1UC14
			Appr		P6700 Bodyside LH - Robot Cell 2V09			Document type: EFS	Project nr: 22-16150
Modification	Date	Name	Original		Replacement of	Replaced by	Scale 1:1		Page 4 / 1533

0	1	2	3	4	5	6	7	8	9

-KF14.31
FDI 8 24VDC
Rack 1
Slot 3

6ES7136-6BA00-0CA0
F-DI 8x24VDC HF SIEMENS

/11.2	/11.2
L+	M
24VDC	0VDC

-KF14.32
FDI 8 24VDC
Rack 1
Slot 4

6ES7136-6BA00-0CA0
F-DI 8x24VDC HF SIEMENS

/12.2	/12.2
L+	M
24VDC	0VDC

4 6

			Date	1/17/2023	Volvo Trucks North America	Valiant TMS	ET200S Wiring F-DI	Drawing name: =2V09&EFS-EL	= V1KF1	
			Ed.	MKLEPADLO					+ V1UC14	
			Appr		P6700 Bodyside LH - Robot Cell 2V09			Document type: EFS	Project nr: 22-16150	Page 5
Modification	Date	Name	Original		Replacement of / Replaced by	Scale 1:1				1533

0	1	2	3	4	5	6	7	8	9

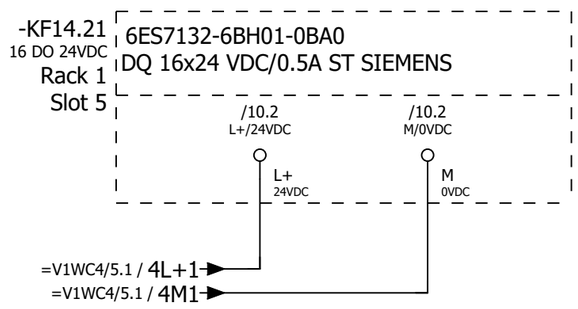

5 7

			Date	1/17/2023	Volvo Trucks North America	Valiant TMS	ET200S Wiring DQ	Drawing name: =2V09&EFS-EL	= V1KF1	
			Ed.	MKLEPADLO					+ V1UC14	
			Appr		P6700 Bodyside LH - Robot Cell 2V09			Document type: EFS	Project nr: 22-16150	Page 6
Modification	Date	Name	Original		Replacement of	Replaced by	Scale 1:1			1533

0	1	2	3	4	5	6	7	8	9

-KF14.41
=V1FQ1/1.0
=V1FQ1/2.0
=V1FQ1/3.0
=V1FQ1/4.0
/13.1
FDO 4 24VDC
Rack 1
Slot 6

6ES7136-6DB00-0CA0 + BU15-P16+A0+2B F-DQ 4X24VDC/2A PM HF SIEMENS

/13.2 L+ 24VDC

/13.2 M 0VDC

-KF14.42
/14.1
FDO 4 24VDC
Rack 1
Slot 7

6ES7136-6DB00-0CA0 + BU15-P16+A0+2B F-DQ 4X24VDC/2A PM HF SIEMENS

/14.2 L+ 24VDC

/14.2 M 0VDC

			Date	1/17/2023	Volvo Trucks North America	Valiant TMS	ET200S Wiring F-DQ	Drawing name: =2V09&EFS-EL	= V1KF1
			Ed.	MKLEPADLO					+ V1UC14
			Appr		P6700 Bodyside LH - Robot Cell 2V09			Document type: EFS	Project nr: 22-16150
Modification	Date	Name	Original		Replacement of / Replaced by	Scale 1:1			Page 7 / 1533

0	1	2	3	4	5	6	7	8	9

-KF14.11
/4.0

ET 200SP SIEMENS
DI 16x24 VDC ST

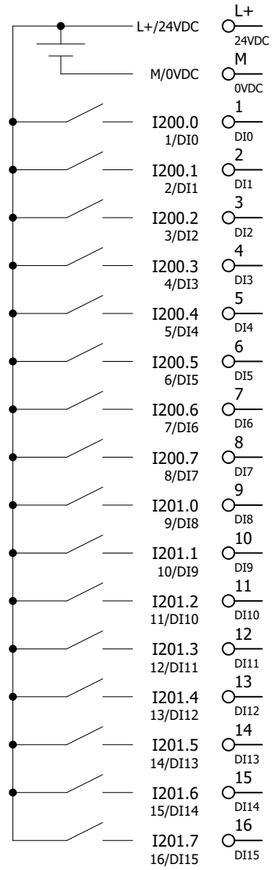

6ES7131-6BH01-0BA0

/4.1			
/4.2			
=V1WC3/2.2	=V1WC3+V1UC14-FC1	Monitoring 120 VAC	
=V1WC3/2.3	=V1WC3+V1UC14-FC2	Monitoring 120 VAC	
=V1WC4/1.4	=V1WC4+V1UC14-TA1_I	Monitoring 24VDC	
	I200.3	Spare	
=V1WC4/1.0	=V1WC4+V1UC14-FC11_I	Monitoring 24VDC	
=V1WC4/10.0	=V1WC4+V1UC14-FC12_I	Monitoring 24VDC	
	I200.6	Spare	
	I200.7	Spare	
	I201.0	Spare	
	I201.1	Spare	
	I201.2	Spare	
	I201.3	Spare	
	I201.4	Spare	
	I201.5	Spare	
	I201.6	Spare	
	I201.7	Spare	

7 9

			Date	1/17/2023	Volvo Trucks North America	Valiant TMS	ET200S DI Overview KF14.11	Drawing name: =2V09&EFS-EL	= V1KF1
			Ed.	MKLEPADLO					+ V1UC14
			Appr		P6700 Bodyside LH - Robot Cell 2V09			Document type: EFS	Project nr: 22-16150
Modification	Date	Name	Original		Replacement of	Replaced by	Scale 1:1		Page 8 / 1533

0	1	2	3	4	5	6	7	8	9

-KF14.12
/4.3

ET 200SP SIEMENS
DI 16x24 VDC ST

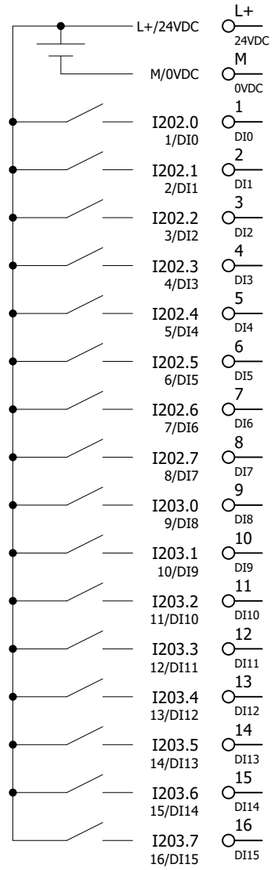

6ES7131-6BH01-0BA0

L+/24VDC	/4.3		
M/0VDC	/4.4		
I202.0 1/DI0	=V1FQ1/1.8	-KF14.51RQ	Monitoring Safety contactors 11.1L+
I202.1 2/DI1	=V1FQ1/2.8	-KF14.52RQ	Monitoring Safety contactors 12.1L+
I202.2 3/DI2	=V1FQ1/3.8	-KF14.53RQ	Monitoring Safety contactors 13.1L+
I202.3 4/DI3	=V1FQ1/4.8	-KF14.54RQ	Monitoring Safety contactors 14.1L+
I202.4 5/DI4	=V1SF0SF3+.UC73/1.1	=V1SF0SF3+V1UC73-SF1.1	S020 Operator Run Button 1
I202.5 6/DI5	=V1SF0SF4+.UC74/1.1	=V1SF0SF4+V1UC74-SF1.1	S020 Operator Run Button 2
I202.6 7/DI6		I202.6	Spare
I202.7 8/DI7		I202.7	Spare
I203.0 9/DI8	=KH0+KH0/3.6	=KH0-BP3_I	Monitoring S020 Shuttle AIR On
I203.1 10/DI9		I203.1	Spare
I203.2 11/DI10		I203.2	Spare
I203.3 12/DI11		I203.3	Spare
I203.4 13/DI12		I203.4	Spare
I203.5 14/DI13		I203.5	Spare
I203.6 15/DI14		I203.6	Spare
I203.7 16/DI15		I203.7	Spare

			Date	1/17/2023	Volvo Trucks North America		Valiant TMS	ET200S DI Overview KF14.12	Drawing name: =2V09&EFS-EL	= V1KF1	
			Ed.	MKLEPADLO						+ V1UC14	
			Appr		P6700 Bodyside LH - Robot Cell 2V09		Scale 1:1		Document type: EFS	Project nr: 22-16150	Page 9
Modification	Date	Name	Original		Replacement of	Replaced by					1533

0	1	2	3	4	5	6	7	8	9

-KF14.21
/6.1
16 DO 24VDC

ET 200SP SIEMENS
DQ 16x24 VDC/0.5A ST

L+/24VDC	L+ 24VDC	/6.1			
M/0VDC	M 0VDC	/6.2			
Q200.0 1/DQ0	1 DQ0	=V1PZ1PF3+.UC63/1.3	=V1PZ1PF3+UC63-PF1_1	S020 Indication column 1 Blue	
Q200.1 2/DQ1	2 DQ1	=V1PZ1PF3+.UC63/1.4	=V1PZ1PF3+UC63-PF1_2	S020 Indication column 1 Green	
Q200.2 3/DQ2	3 DQ2	=V1PZ1PF3+.UC63/1.4	=V1PZ1PF3+UC63-PF1_3	S020 Indication column 1 Yellow	
Q200.3 4/DQ3	4 DQ3	=V1PZ1PF3+.UC63/1.5	=V1PZ1PF3+UC63-PF1_4	S020 Indication column 1 Red	
Q200.4 5/DQ4	5 DQ4	=V1PZ1PF3+.UC63/1.6	=V1PZ1PF3+UC63-PF1_5	S020 Indication column 1 Siren	
Q200.5 6/DQ5	6 DQ5	=V1PZ1PF4+.UC64/1.3	=V1PZ1PF4+UC64-PF1_1	S020 Indication column 2 Blue	
Q200.6 7/DQ6	7 DQ6	=V1PZ1PF4+.UC64/1.4	=V1PZ1PF4+UC64-PF1_2	S020 Indication column 2 Green	
Q200.7 8/DQ7	8 DQ7	=V1PZ1PF4+.UC64/1.4	=V1PZ1PF4+UC64-PF1_3	S020 Indication column 2 Yellow	
Q201.0 9/DQ8	9 DQ8	=V1PZ1PF4+.UC64/1.5	=V1PZ1PF4+UC64-PF1_4	S020 Indication column 2 Red	
Q201.1 10/DQ9	10 DQ9	=V1PZ1PF4+.UC64/1.6	=V1PZ1PF4+UC64-PF1_5	S020 Indication column 2 Siren	
Q201.2 11/DQ10	11 DQ10		Q201.2	Spare	
Q201.3 12/DQ11	12 DQ11		Q201.3	Spare	
Q201.4 13/DQ12	13 DQ12		Q201.4	Spare	
Q201.5 14/DQ13	14 DQ13		Q201.5	Spare	
Q201.6 15/DQ14	15 DQ14		Q201.6	Spare	
Q201.7 16/DQ15	16 DQ15		Q201.7	Spare	

6ES7132-6BH01-0BA0

			Date	1/17/2023	Volvo Trucks North America	Valiant TMS	ET200S DQ Overview KF14.21	Drawing name: =2V09&EFS-EL	= V1KF1
			Ed.	MKLEPADLO					+ V1UC14
			Appr		P6700 Bodyside LH - Robot Cell 2V09			Document type: EFS	Project nr: 22-16150
Modification	Date	Name	Original		Replacement of / Replaced by	Scale 1:1			Page 10 / 1533

0	1	2	3	4	5	6	7	8	9

-KF14.31
/5.0

ET 200SP SIEMENS
F-DI 8x24VDC HF

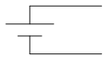

	L+ 24VDC	/5.1			
	M 0VDC	/5.2			
I5200.0	1 DI0	=V1FQ1+.FQ1/11.3	=V1FQ1-BR16.1	S020 Light Curtain 1&2 Ch1	
	9 VS0	=V1FQ1+.FQ1/11.3			
I5200.1	2 DI1	=V1FQ1+.FQ1/12.3	=V1FQ1-BR18.1	S020 Light Curtain 3&4 Ch1	
	10 VS1	=V1FQ1+.FQ1/12.3			
I5200.2	3 DI2	=V1FQ1+.FQ1/13.3	=V1FQ1-BR20.1	S020 Light Curtain 5 Ch1	
	11 VS2	=V1FQ1+.FQ1/13.3			
I5200.3	4 DI3		I5200.3	Spare	
	12 VS3				
I5200.4	5 DI4	=V1FQ1+.FQ1/11.4	=V1FQ1-BR16.2	S020 Light Curtain 1&2 Ch2	
	13 VS4	=V1FQ1+.FQ1/11.5			
I5200.5	6 DI5	=V1FQ1+.FQ1/12.4	=V1FQ1-BR18.2	S020 Light Curtain 3&4 Ch2	
	14 VS5	=V1FQ1+.FQ1/12.5			
I5200.6	7 DI6	=V1FQ1+.FQ1/13.4	=V1FQ1-BR20.2	S020 Light Curtain 5 Ch2	
	15 VS6	=V1FQ1+.FQ1/13.5			
I5200.7	8 DI7		I5200.7	Spare	
	16 VS7				

6ES7136-6BA00-0CA0

10 12

			Date	1/17/2023	Volvo Trucks North America	Valiant TMS	ET200S F-DI Overview KF14.31	Drawing name: =2V09&EFS-EL	= V1KF1
			Ed.	MKLEPADLO					+ V1UC14
			Appr		P6700 Bodyside LH - Robot Cell 2V09			Document type: EFS	Project nr: 22-16150
Modification	Date	Name	Original		Replacement of / Replaced by	Scale 1:1			Page 11 / 1533

0	1	2	3	4	5	6	7	8	9

-KF14.32
/5.3

ET 200SP SIEMENS
F-DI 8x24VDC HF

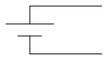

	L+ 24VDC	/5.3			
	M 0VDC	/5.4			
I5206.0	1 DI0	=V1SF0SF3+.UC73/1.5	=V1SF0SF3+V1UC73-SF1.4	S020 Operator Emergency Stop 1 Ch1	
	9 VS0	=V1SF0SF3+.UC73/1.5			
I5206.1	2 DI1	=V1SF0SF4+.UC74/1.5	=V1SF0SF4+V1UC74-SF1.4	S020 Operator Emergency Stop 2 Ch1	
	10 VS1	=V1SF0SF4+.UC74/1.5			
I5206.2	3 DI2		I5206.2	Spare	
	11 VS2				
I5206.3	4 DI3		I5206.3	Spare	
	12 VS3				
I5206.4	5 DI4	=V1SF0SF3+.UC73/1.6	=V1SF0SF3+V1UC73-SF1.6	S020 Operator Emergency Stop 1 Ch2	
	13 VS4	=V1SF0SF3+.UC73/1.6			
I5206.5	6 DI5	=V1SF0SF4+.UC74/1.6	=V1SF0SF4+V1UC74-SF1.6	S020 Operator Emergency Stop 2 Ch2	
	14 VS5	=V1SF0SF4+.UC74/1.6			
I5206.6	7 DI6		I5206.6	Spare	
	15 VS6				
I5206.7	8 DI7		I5206.7	Spare	
	16 VS7				

6ES7136-6BA00-0CA0

			Date	1/17/2023	Volvo Trucks North America	Valiant TMS	ET200S F-DI Overview KF14.32	Drawing name: =2V09&EFS-EL	= V1KF1	
			Ed.	MKLEPADLO					+ V1UC14	
			Appr		P6700 Bodyside LH - Robot Cell 2V09			Document type: EFS	Project nr: 22-16150	Page 12 / 1533
Modification	Date	Name	Original		Replacement of	Replaced by	Scale 1:1			

0	1	2	3	4	5	6	7	8	9

-KF14.41
/7.0

ET 200SP SIEMENS
F-DQ 4X24VDC/2A PM HF

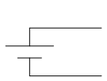

	L+ 24VDC		/7.1		
	M 0VDC		/7.2		
Q5212.0	1 DQ-P0		=V1FQ1/1.1	-KF14.51	Switched Power 1 11.1L+
Q5212.0	5				
QX.0	9 DQ-M0		=V1FQ1/1.1		
QX.0	13				
Q5212.1	2 DQ-P1		=V1FQ1/2.1	-KF14.52	Switched Power 2 12.1L+
Q5212.1	6				
QX.1	10 DQ-M1		=V1FQ1/2.1		
QX.1	14				
Q5212.2	3 DQ-P2		=V1FQ1/3.1	-KF14.53	Switched Power 3 13.1L+
Q5212.2	7				
QX.2	11 DQ-M2		=V1FQ1/3.1		
QX.2	15				
Q5212.3	4 DQ-P3		=V1FQ1/4.1	-KF14.54	Switched Power 4 14.1L+
Q5212.3	8				
QX.3	12 DQ-M3		=V1FQ1/4.1		
QX.3	16				

6ES7136-6DB00-0CA0 + BU15-P16+A0+2B

			Date	1/17/2023	Volvo Trucks North America	Valiant TMS	ET200S F-DQ Overview KF14.41	Drawing name: =2V09&EFS-EL	= V1KF1
			Ed.	MKLEPADLO					+ V1UC14
			Appr		P6700 Bodyside LH - Robot Cell 2V09	Scale 1:1		Document type: EFS	Project nr: 22-16150
Modification	Date	Name	Original		Replacement of	Replaced by			Page 13 / 1533

0	1	2	3	4	5	6	7	8	9

-KF14.42
/7.5

ET 200SP SIEMENS
F-DQ 4X24VDC/2A PM HF

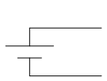

/7.5
/7.6

Q5217.0	1 DQ-P0		Q5217.0	Q5217.0	Spare
Q5217.0	5				
QX.0	9 DQ-M0				
QX.0	13				
Q5217.1	2 DQ-P1		Q5217.1	Q5217.1	Spare
Q5217.1	6				
QX.1	10 DQ-M1				
QX.1	14				
Q5217.2	3 DQ-P2		Q5217.2	Q5217.2	Spare
Q5217.2	7				
QX.2	11 DQ-M2				
QX.2	15				
Q5217.3	4 DQ-P3		Q5217.3	Q5217.3	Spare
Q5217.3	8				
QX.3	12 DQ-M3				
QX.3	16				

6ES7136-6DB00-0CA0 + BU15-P16+A0+2B

13 15

			Date	1/17/2023	Volvo Trucks North America	Valiant TMS	ET200S F-DQ Overview KF14.42	Drawing name: =2V09&EFS-EL	= V1KF1	
			Ed.	MKLEPADLO					+ V1UC14	
			Appr		P6700 Bodyside LH - Robot Cell 2V09			Document type: EFS	Project nr: 22-16150	Page 14
Modification	Date	Name	Original		Replacement of	Replaced by	Scale 1:1			1533

0	1	2	3	4	5	6	7	8	9

-KF14.51
=V1FQ1/1.2
=V1WC4/11.1

ET 200SP SIEMENS
F-RQ 1x24VDC/24..230VAC/5A

1 RQ01+	=V1WC4/11.2	11L+
2 RQ01-	=V1WC4/11.2	11.1L+
3 RQ02+	=V1WC4/11.3	11L+
4 RQ02-	=V1WC4/11.4	11.1L+
9 IN P	=V1FQ1/1.3	Switched Power 1 11.1L+P
10 OUT P	=V1FQ1/1.4	Spare
11 IN M	=V1FQ1/1.4	Switched Power 1 11.1L+M
12 OUT M	=V1FQ1/1.5	Spare

1A AUX
2A AUX
3A AUX
4A AUX

6ES7136-6RA00-0BF0 + BU20-P8+A4+0B

			Date	1/17/2023	Volvo Trucks North America	Valiant TMS	ET200S F-RQ Overview KF14.51	Drawing name: =2V09&EFS-EL	= V1KF1
			Ed.	MKLEPADLO					+ V1UC14
			Appr		P6700 Bodyside LH - Robot Cell 2V09			Document type: EFS	Project nr: 22-16150
Modification	Date	Name	Original		Replacement of / Replaced by	Scale 1:1			Page 15 / 1533

0	1	2	3	4	5	6	7	8	9

-KF14.52
=V1FQ1/2.2
=V1WC4/12.1

ET 200SP SIEMENS
F-RQ 1x24VDC/24..230VAC/5A

1 RQ01+	=V1WC4/12.2	12L+
2 RQ01-	=V1WC4/12.2	12.1L+
3 RQ02+	=V1WC4/12.3	12L+
4 RQ02-	=V1WC4/12.4	12.1L+
9 IN P	=V1FQ1/2.3	Switched Power 2 12.1L+P
10 OUT P	=V1FQ1/2.4	Spare
11 IN M	=V1FQ1/2.4	Switched Power 2 12.1L+M
12 OUT M	=V1FQ1/2.5	Spare

1A AUX
2A AUX
3A AUX
4A AUX

6ES7136-6RA00-0BF0 + BU20-P8+A4+0B

15 17

			Date	1/17/2023	Volvo Trucks North America	Valiant TMS	ET200S F-RQ Overview KF14.52	Drawing name: =2V09&EFS-EL	= V1KF1
			Ed.	MKLEPADLO					+ V1UC14
			Appr		P6700 Bodyside LH - Robot Cell 2V09			Document type: EFS	Project nr: 22-16150
Modification	Date	Name	Original		Replacement of / Replaced by	Scale 1:1			Page 16 / 1533

0	1	2	3	4	5	6	7	8	9

-KF14.53
=V1FQ1/3.2
=V1WC4/13.1

ET 200SP SIEMENS
F-RQ 1x24VDC/24..230VAC/5A

1 RQ01+	=V1WC4/13.2	13L+
2 RQ01-	=V1WC4/13.2	13.1L+
3 RQ02+	=V1WC4/13.3	13L+
4 RQ02-	=V1WC4/13.4	13.1L+
9 IN P	=V1FQ1/3.3	Switched Power 3 13.1L+P
10 OUT P	=V1FQ1/3.4	Spare
11 IN M	=V1FQ1/3.4	Switched Power 3 13.1L+M
12 OUT M	=V1FQ1/3.5	Spare

1A AUX
2A AUX
3A AUX
4A AUX

6ES7136-6RA00-0BF0 + BU20-P8+A4+0B

			Date	1/17/2023	Volvo Trucks North America	Valiant TMS	ET200S F-RQ Overview KF14.53	Drawing name: =2V09&EFS-EL	= V1KF1
			Ed.	MKLEPADLO					+ V1UC14
			Appr		P6700 Bodyside LH - Robot Cell 2V09			Document type: EFS	Project nr: 22-16150
Modification	Date	Name	Original		Replacement of / Replaced by	Scale 1:1			Page 17 / 1533

0	1	2	3	4	5	6	7	8	9

-KF14.54
=V1FQ1/4.2
=V1WC4/14.1

ET 200SP SIEMENS
F-RQ 1x24VDC/24..230VAC/5A

1 RQ01+	=V1WC4/14.2	14L+
2 RQ01-	=V1WC4/14.2	14.1L+
3 RQ02+	=V1WC4/14.3	14L+
4 RQ02-	=V1WC4/14.4	14.1L+
9 IN P	=V1FQ1/4.3	Switched Power 4 14.1L+P
10 OUT P	=V1FQ1/4.4	Spare
11 IN M	=V1FQ1/4.4	Switched Power 4 14.1L+M
12 OUT M	=V1FQ1/4.5	Spare

1A AUX
2A AUX
3A AUX
4A AUX

6ES7136-6RA00-0BF0 + BU20-P8+A4+0B

			Date	1/17/2023	Volvo Trucks North America	Valiant TMS	ET200S F-RQ Overview KF14.54	Drawing name: =2V09&EFS-EL	= V1KF1
			Ed.	MKLEPADLO					+ V1UC14
			Appr		P6700 Bodyside LH - Robot Cell 2V09			Document type: EFS	Project nr: 22-16150
Modification	Date	Name	Original		Replacement of / Replaced by	Scale 1:1			Page 18 / 1533

0	1	2	3	4	5	6	7	8	9

=V1WC4/3.1 / 2M1

=V1WC4/3.1 / 2L+1

-KF100.15
/2.3
Switch

L1+	M1	M2	L2+
1	2	3	4
1/L1+	2/M1	3/M2	4/L2+

6GK5216-0BA00-2AC2 XC216 SIEMENS

+.UC14/18

2

			Date	1/17/2023	Volvo Trucks North America	Valiant TMS	Switch, Scalance XC216	Drawing name: =2V09&EFS-EL	= V1KF1	
			Ed.	MKLEPADLO					+ V1UC15	
			Appr		P6700 Bodyside LH - Robot Cell 2V09			Document type: EFS	Project nr: 22-16150	Page 1
Modification	Date	Name	Original		Replacement of / Replaced by	Scale 1:1				1533

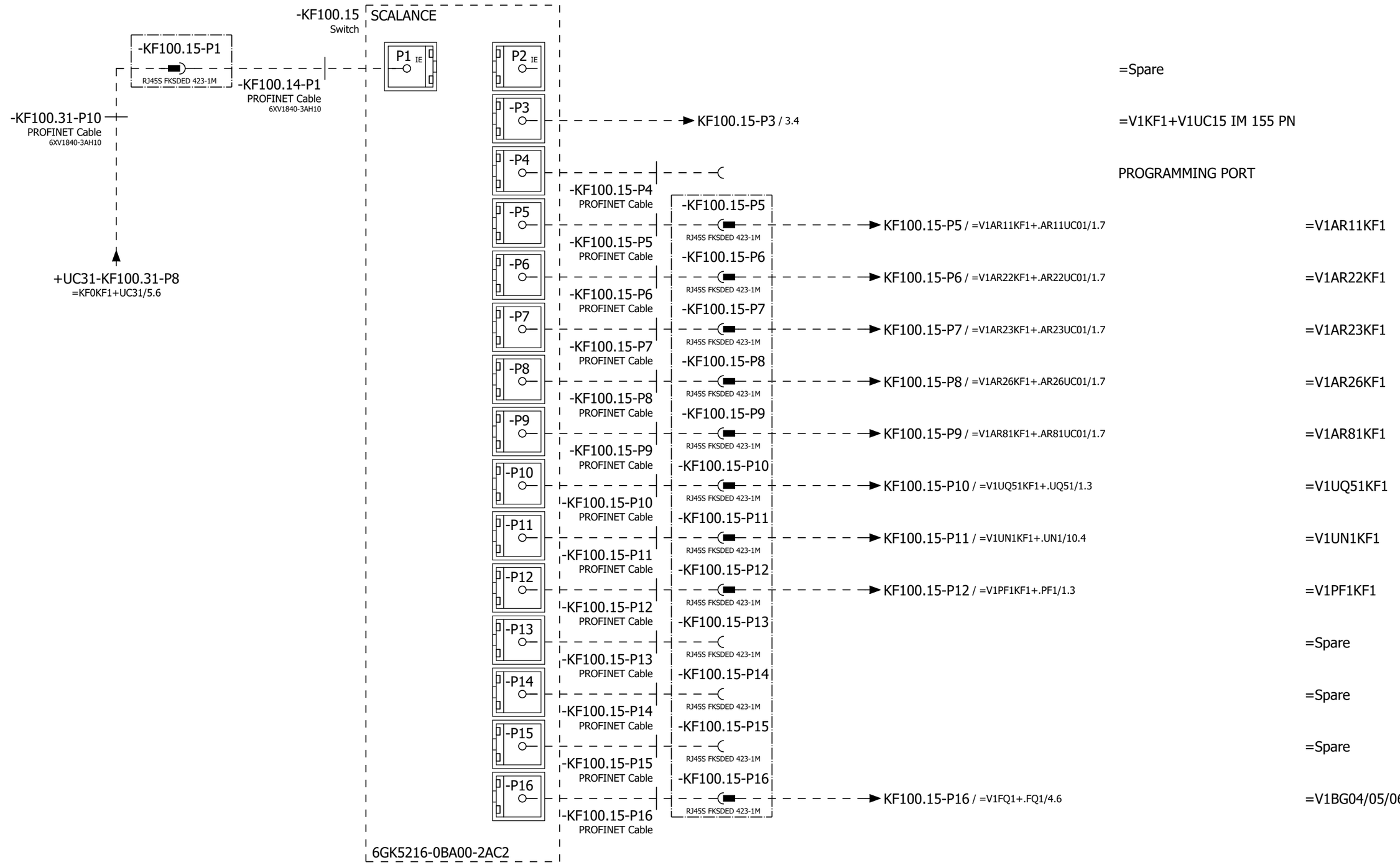

			Date	1/17/2023	Volvo Trucks North America	Valiant TMS	Network Overview	Drawing name: =2V09&EFS-EL	= V1KF1
			Ed.	MKLEPADLO					+ V1UC15
			Appr		P6700 Bodyside LH - Robot Cell 2V09			Document type: EFS	Project nr: 22-16150
Modification	Date	Name	Original		Replacement of / Replaced by	Scale 1:1			Page 2 / 1533

0	1	2	3	4	5	6	7	8	9

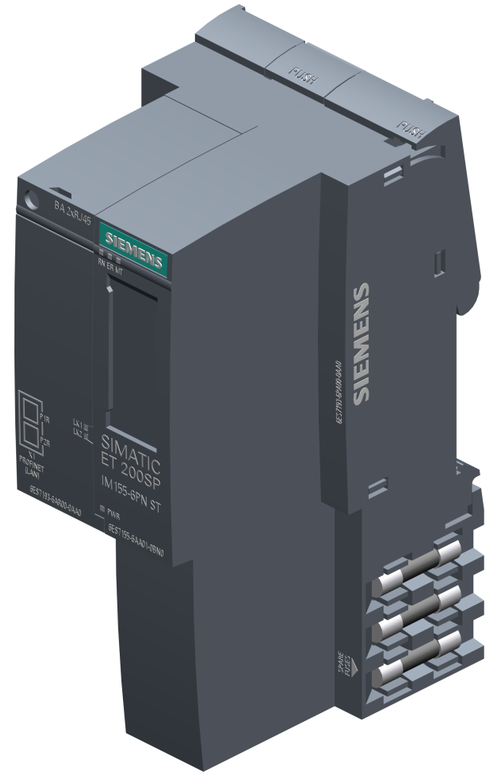

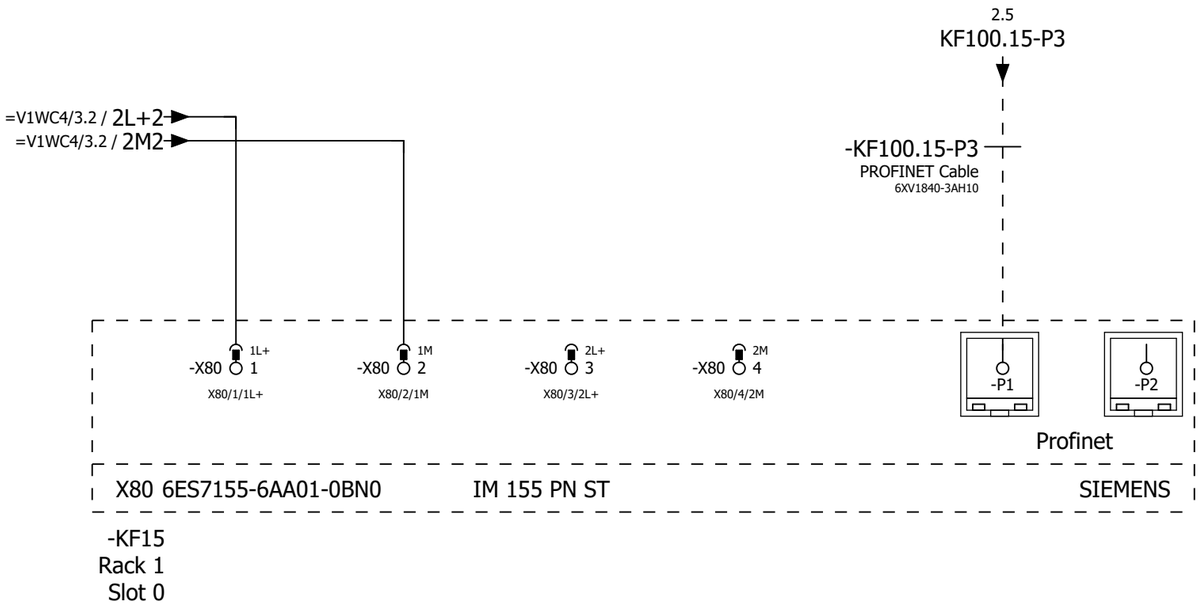

2

4

			Date	1/17/2023	Volvo Trucks North America	Valiant TMS	IM 155 PN	Drawing name: =2V09&EFS-EL	= V1KF1	
			Ed.	MKLEPADLO					+ V1UC15	
			Appr		P6700 Bodyside LH - Robot Cell 2V09			Document type: EFS	Project nr: 22-16150	Page 3
Modification	Date	Name	Original		Replacement of	Replaced by	Scale 1:1			1533

0	1	2	3	4	5	6	7	8	9

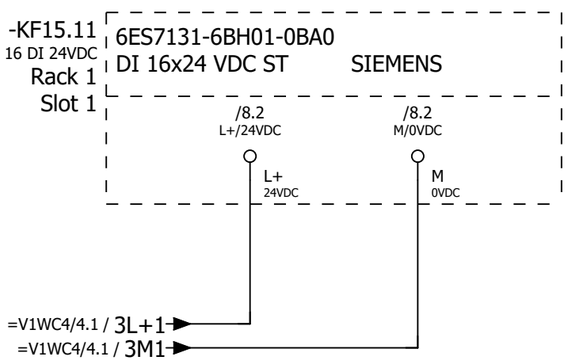

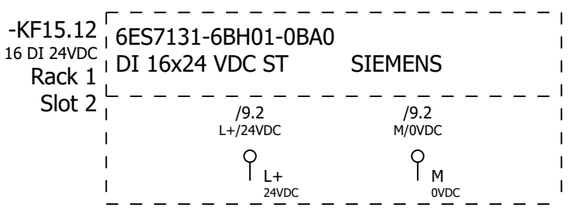

3 5

			Date	1/17/2023	Volvo Trucks North America	Valiant TMS	ET200S Wiring DI	Drawing name: =2V09&EFS-EL		= V1KF1
			Ed.	MKLEPADLO						+ V1UC15
			Appr		P6700 Bodyside LH - Robot Cell 2V09			Document type: EFS	Project nr: 22-16150	Page 4
Modification	Date	Name	Original		Replacement of	Replaced by	Scale 1:1			1533

0	1	2	3	4	5	6	7	8	9

-KF15.31
FDI 8 24VDC
Rack 1
Slot 3

6ES7136-6BA00-0CA0
F-DI 8x24VDC HF SIEMENS

/11.2 L+ 24VDC

/11.2 M 0VDC

-KF15.32
FDI 8 24VDC
Rack 1
Slot 4

6ES7136-6BA00-0CA0
F-DI 8x24VDC HF SIEMENS

/12.2 L+ 24VDC

/12.2 M 0VDC

4 6

			Date	1/17/2023	Volvo Trucks North America	Valiant TMS	ET200S Wiring F-DI	Drawing name: =2V09&EFS-EL	= V1KF1
			Ed.	MKLEPADLO					+ V1UC15
			Appr		P6700 Bodyside LH - Robot Cell 2V09	Scale 1:1		Document type: EFS	Project nr: 22-16150
Modification	Date	Name	Original		Replacement of	Replaced by			Page 5 / 1533

0	1	2	3	4	5	6	7	8	9

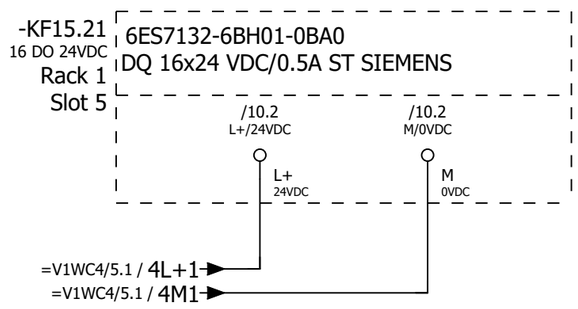

5 7

			Date	1/17/2023	Volvo Trucks North America		Valiant TMS	ET200S Wiring DQ	Drawing name: =2V09&EFS-EL		= V1KF1	
			Ed.	MKLEPADLO							+ V1UC15	
			Appr		P6700 Bodyside LH - Robot Cell 2V09		Scale 1:1		Document type: EFS	Project nr: 22-16150	Page	6
Modification	Date	Name	Original		Replacement of	Replaced by						1533

0	1	2	3	4	5	6	7	8	9

-KF15.41
=V1FQ1/1.0
=V1FQ1/2.0
=V1FQ1/3.0
=V1FQ1/4.0
/13.1
FDO 4 24VDC
Rack 1
Slot 6

6ES7136-6DB00-0CA0 + BU15-P16+A0+2B F-DQ 4X24VDC/2A PM HF SIEMENS

/13.2 L+ 24VDC

/13.2 M 0VDC

-KF15.42
/14.1
FDO 4 24VDC
Rack 1
Slot 7

6ES7136-6DB00-0CA0 + BU15-P16+A0+2B F-DQ 4X24VDC/2A PM HF SIEMENS

/14.2 L+ 24VDC

/14.2 M 0VDC

6

8

			Date	1/17/2023	Volvo Trucks North America	Valiant TMS	ET200S Wiring F-DQ	Drawing name: =2V09&EFS-EL	= V1KF1
			Ed.	MKLEPADLO					+ V1UC15
			Appr		P6700 Bodyside LH - Robot Cell 2V09	Scale 1:1		Document type: EFS	Project nr: 22-16150
Modification	Date	Name	Original		Replacement of	Replaced by			Page 7 / 1533

0	1	2	3	4	5	6	7	8	9

-KF15.11
/4.0

ET 200SP SIEMENS
DI 16x24 VDC ST

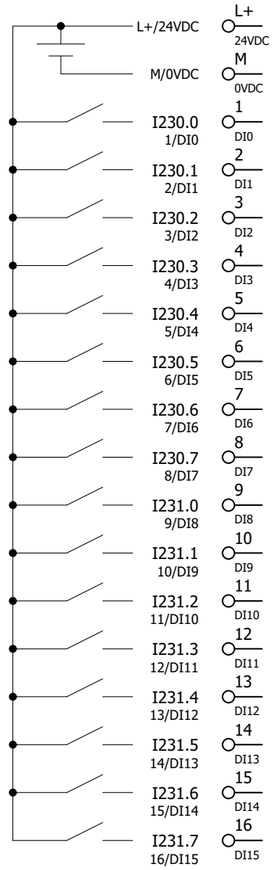

/4.1		
/4.2		
=V1WC3/2.2	=V1WC3+V1UC15-FC1	Monitoring 120 VAC
=V1WC3/2.3	=V1WC3+V1UC15-FC2	Monitoring 120 VAC
=V1WC4/1.4	=V1WC4+V1UC15-TA1_I	Monitoring 24VDC
	I230.3	Spare
=V1WC4/1.0	=V1WC4+V1UC15-FC11_I	Monitoring 24VDC
=V1WC4/10.0	=V1WC4+V1UC15-FC12_I	Monitoring 24VDC
	I230.6	Spare
	I230.7	Spare
	I231.0	Spare
	I231.1	Spare
	I231.2	Spare
	I231.3	Spare
	I231.4	Spare
	I231.5	Spare
	I231.6	Spare
	I231.7	Spare

6ES7131-6BH01-0BA0

7 9

			Date	1/17/2023	Volvo Trucks North America	Valiant TMS	ET200S DI Overview KF15.11	Drawing name: =2V09&EFS-EL	= V1KF1
			Ed.	MKLEPADLO					+ V1UC15
			Appr		P6700 Bodyside LH - Robot Cell 2V09			Document type: EFS	Project nr: 22-16150
Modification	Date	Name	Original		Replacement of	Replaced by	Scale 1:1		Page 8 / 1533

-KF15.12
/4.3

ET 200SP SIEMENS
DI 16x24 VDC ST

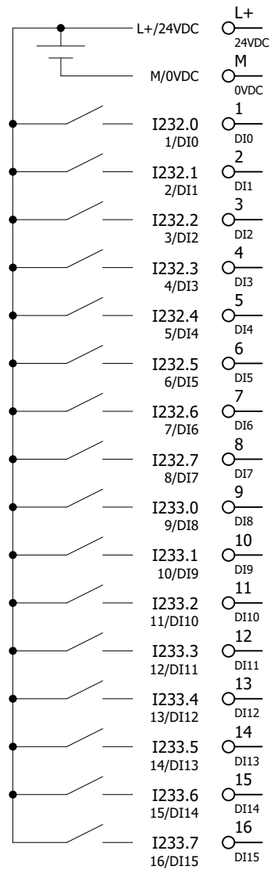

6ES7131-6BH01-0BA0

/4.3			
/4.4			
=V1FQ1/1.8	-KF15.51RQ	Monitoring Safety contactors 11.1L+	
=V1FQ1/2.8	-KF15.52RQ	Monitoring Safety contactors 12.1L+	
=V1FQ1/3.8	-KF15.53RQ	Monitoring Safety contactors 13.1L+	
=V1FQ1/4.8	-KF15.54RQ	Monitoring Safety contactors 14.1L+	
	I232.4	Spare	
	I232.5	Spare	
	I232.6	Spare	
	I232.7	Spare	
=KH0+KH0/4.6	=KH0-BP4_I	Monitoring S030 Fixture AIR On	
	I233.1	Spare	
	I233.2	Spare	
	I233.3	Spare	
	I233.4	Spare	
	I233.5	Spare	
	I233.6	Spare	
	I233.7	Spare	

			Date	1/17/2023	Volvo Trucks North America	Valiant TMS	ET200S DI Overview KF15.12	Drawing name: =2V09&EFS-EL	= V1KF1	
			Ed.	MKLEPADLO					+ V1UC15	
			Appr		P6700 Bodyside LH - Robot Cell 2V09			Document type: EFS	Project nr: 22-16150	Page 9
Modification	Date	Name	Original		Replacement of	Replaced by	Scale 1:1			1533

0	1	2	3	4	5	6	7	8	9

-KF15.21
/6.1
16 DO 24VDC

ET 200SP SIEMENS
DQ 16x24 VDC/0.5A ST

L+/24VDC	L+ 24VDC	/6.1			
M/0VDC	M 0VDC	/6.2			
Q230.0 1/DQ0	1 DQ0		Q230.0	Spare	
Q230.1 2/DQ1	2 DQ1		Q230.1	Spare	
Q230.2 3/DQ2	3 DQ2		Q230.2	Spare	
Q230.3 4/DQ3	4 DQ3		Q230.3	Spare	
Q230.4 5/DQ4	5 DQ4		Q230.4	Spare	
Q230.5 6/DQ5	6 DQ5		Q230.5	Spare	
Q230.6 7/DQ6	7 DQ6		Q230.6	Spare	
Q230.7 8/DQ7	8 DQ7		Q230.7	Spare	
Q231.0 9/DQ8	9 DQ8		Q231.0	Spare	
Q231.1 10/DQ9	10 DQ9		Q231.1	Spare	
Q231.2 11/DQ10	11 DQ10		Q231.2	Spare	
Q231.3 12/DQ11	12 DQ11		Q231.3	Spare	
Q231.4 13/DQ12	13 DQ12		Q231.4	Spare	
Q231.5 14/DQ13	14 DQ13		Q231.5	Spare	
Q231.6 15/DQ14	15 DQ14		Q231.6	Spare	
Q231.7 16/DQ15	16 DQ15		Q231.7	Spare	

6ES7132-6BH01-0BA0

			Date	1/17/2023	Volvo Trucks North America	Valiant TMS	ET200S DQ Overview KF15.21	Drawing name: =2V09&EFS-EL	= V1KF1	
			Ed.	MKLEPADLO					+ V1UC15	
			Appr		P6700 Bodyside LH - Robot Cell 2V09			Document type: EFS	Project nr: 22-16150	Page 10
Modification	Date	Name	Original		Replacement of / Replaced by	Scale 1:1				1533

0	1	2	3	4	5	6	7	8	9

-KF15.31
/5.0

ET 200SP SIEMENS
F-DI 8x24VDC HF

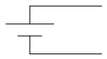

	L+ 24VDC	/5.1			
	M 0VDC	/5.2			
I5230.0	1 DI0	=V1UN1FQ1+.UN1/1.3	=V1UN1FQ1-BG01	S070 Lift Assist Clear Ch1	
	9 VS0	=V1UN1FQ1+.UN1/1.3			
I5230.1	2 DI1		I5230.1	Spare	
	10 VS1				
I5230.2	3 DI2		I5230.2	Spare	
	11 VS2				
I5230.3	4 DI3		I5230.3	Spare	
	12 VS3				
I5230.4	5 DI4	=V1UN1FQ1+.UN1/1.4	=V1UN1FQ1-BG01	S070 Lift Assist Clear Ch2	
	13 VS4	=V1UN1FQ1+.UN1/1.5			
I5230.5	6 DI5		I5230.5	Spare	
	14 VS5				
I5230.6	7 DI6		I5230.6	Spare	
	15 VS6				
I5230.7	8 DI7		I5230.7	Spare	
	16 VS7				

6ES7136-6BA00-0CA0

			Date	1/17/2023	Volvo Trucks North America	Valiant TMS	ET200S F-DI Overview KF15.31	Drawing name: =2V09&EFS-EL	= V1KF1	
			Ed.	MKLEPADLO					+ V1UC15	
			Appr		P6700 Bodyside LH - Robot Cell 2V09			Document type: EFS	Project nr: 22-16150	Page 11
Modification	Date	Name	Original		Replacement of	Replaced by	Scale 1:1			1533

0	1	2	3	4	5	6	7	8	9

-KF15.32
/5.3

ET 200SP SIEMENS
F-DI 8x24VDC HF

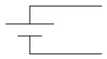

	L+ 24VDC	/5.3			
	M 0VDC	/5.4			
I5236.0	1 DI0		I5236.0	Spare	
	9 VS0				
I5236.1	2 DI1		I5236.1	Spare	
	10 VS1				
I5236.2	3 DI2		I5236.2	Spare	
	11 VS2				
I5236.3	4 DI3		I5236.3	Spare	
	12 VS3				
I5236.4	5 DI4		I5236.4	Spare	
	13 VS4				
I5236.5	6 DI5		I5236.5	Spare	
	14 VS5				
I5236.6	7 DI6		I5236.6	Spare	
	15 VS6				
I5236.7	8 DI7		I5236.7	Spare	
	16 VS7				

6ES7136-6BA00-0CA0

11 13

			Date	1/17/2023	Volvo Trucks North America	Valiant TMS	ET200S F-DI Overview KF15.32	Drawing name: =2V09&EFS-EL	= V1KF1
			Ed.	MKLEPADLO					+ V1UC15
			Appr		P6700 Bodyside LH - Robot Cell 2V09			Document type: EFS	Project nr: 22-16150
Modification	Date	Name	Original		Replacement of / Replaced by	Scale 1:1			Page 12 / 1533

0	1	2	3	4	5	6	7	8	9

-KF15.41
/7.0

ET 200SP SIEMENS
F-DQ 4X24VDC/2A PM HF

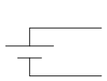

	L+ 24VDC	/7.1			
	M 0VDC	/7.2			
Q5242.0	1 DQ-P0	=V1FQ1/1.1	-KF15.51	Switched Power 1 11.1L+	
Q5242.0	5				
QX.0	9 DQ-M0	=V1FQ1/1.1			
QX.0	13				
Q5242.1	2 DQ-P1	=V1FQ1/2.1	-KF15.52	Switched Power 2 12.1L+	
Q5242.1	6				
QX.1	10 DQ-M1	=V1FQ1/2.1			
QX.1	14				
Q5242.2	3 DQ-P2	=V1FQ1/3.1	-KF15.53	Switched Power 3 13.1L+	
Q5242.2	7				
QX.2	11 DQ-M2	=V1FQ1/3.1			
QX.2	15				
Q5242.3	4 DQ-P3	=V1FQ1/4.1	-KF15.54	Switched Power 4 14.1L+	
Q5242.3	8				
QX.3	12 DQ-M3	=V1FQ1/4.1			
QX.3	16				

6ES7136-6DB00-0CA0 + BU15-P16+A0+2B

12 14

			Date	1/17/2023	Volvo Trucks North America	Valiant TMS	ET200S F-DQ Overview KF15.41	Drawing name: =2V09&EFS-EL	= V1KF1
			Ed.	MKLEPADLO					+ V1UC15
			Appr		P6700 Bodyside LH - Robot Cell 2V09	Scale 1:1		Document type: EFS	Project nr: 22-16150
Modification	Date	Name	Original		Replacement of	Replaced by			Page 13 / 1533

0	1	2	3	4	5	6	7	8	9

-KF15.42
/7.5

ET 200SP SIEMENS
F-DQ 4X24VDC/2A PM HF

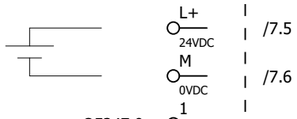

Q5247.0	Q5247.0	Spare
Q5247.1	Q5247.1	Spare
Q5247.2	Q5247.2	Spare
Q5247.3	Q5247.3	Spare

6ES7136-6DB00-0CA0 + BU15-P16+A0+2B

			Date	1/17/2023	Volvo Trucks North America	Valiant TMS	ET200S F-DQ Overview KF15.42	Drawing name: =2V09&EFS-EL	= V1KF1
			Ed.	MKLEPADLO					+ V1UC15
			Appr		P6700 Bodyside LH - Robot Cell 2V09			Document type: EFS	Project nr: 22-16150
Modification	Date	Name	Original		Replacement of / Replaced by	Scale 1:1			Page 14 / 1533

0	1	2	3	4	5	6	7	8	9

-KF15.51
=V1FQ1/1.2
=V1WC4/11.1

ET 200SP SIEMENS
F-RQ 1x24VDC/24..230VAC/5A

1 RQ01+	=V1WC4/11.2	11L+
2 RQ01-	=V1WC4/11.2	11.1L+
3 RQ02+	=V1WC4/11.3	11L+
4 RQ02-	=V1WC4/11.4	11.1L+
9 IN P	=V1FQ1/1.3	Switched Power 1 11.1L+P
10 OUT P	=V1FQ1/1.4	Spare
11 IN M	=V1FQ1/1.4	Switched Power 1 11.1L+M
12 OUT M	=V1FQ1/1.5	Spare

1A AUX
2A AUX
3A AUX
4A AUX

6ES7136-6RA00-0BF0 + BU20-P8+A4+0B

			Date	1/17/2023	Volvo Trucks North America	Valiant TMS	ET200S F-RQ Overview KF15.51	Drawing name: =2V09&EFS-EL	= V1KF1
			Ed.	MKLEPADLO					+ V1UC15
			Appr		P6700 Bodyside LH - Robot Cell 2V09			Document type: EFS	Project nr: 22-16150
Modification	Date	Name	Original		Replacement of / Replaced by	Scale 1:1			Page 15 / 1533

0	1	2	3	4	5	6	7	8	9

-KF15.52
=V1FQ1/2.2
=V1WC4/12.1

ET 200SP SIEMENS
F-RQ 1x24VDC/24..230VAC/5A

1 RQ01+	=V1WC4/12.2	12L+
2 RQ01-	=V1WC4/12.2	12.1L+
3 RQ02+	=V1WC4/12.3	12L+
4 RQ02-	=V1WC4/12.4	12.1L+
9 IN P	=V1FQ1/2.3	Switched Power 2 12.1L+P
10 OUT P	=V1FQ1/2.4	Spare
11 IN M	=V1FQ1/2.4	Switched Power 2 12.1L+M
12 OUT M	=V1FQ1/2.5	Spare

1A AUX
2A AUX
3A AUX
4A AUX

6ES7136-6RA00-0BF0 + BU20-P8+A4+0B

15 17

			Date	1/17/2023	Volvo Trucks North America		Valiant TMS	ET200S F-RQ Overview KF15.52	Drawing name: =2V09&EFS-EL	= V1KF1	
			Ed.	MKLEPADLO						+ V1UC15	
			Appr		P6700 Bodyside LH - Robot Cell 2V09		Scale 1:1		Document type: EFS	Project nr: 22-16150	Page 16 / 1533
Modification	Date	Name	Original		Replacement of	Replaced by					

0	1	2	3	4	5	6	7	8	9

-KF15.53
=V1FQ1/3.2
=V1WC4/13.1

ET 200SP SIEMENS
F-RQ 1x24VDC/24..230VAC/5A

1 RQ01+	=V1WC4/13.2	13L+
2 RQ01-	=V1WC4/13.2	13.1L+
3 RQ02+	=V1WC4/13.3	13L+
4 RQ02-	=V1WC4/13.4	13.1L+
9 IN P	=V1FQ1/3.3	Switched Power 3 13.1L+P
10 OUT P	=V1FQ1/3.4	Spare
11 IN M	=V1FQ1/3.4	Switched Power 3 13.1L+M
12 OUT M	=V1FQ1/3.5	Spare

1A AUX
2A AUX
3A AUX
4A AUX

6ES7136-6RA00-0BF0 + BU20-P8+A4+0B

			Date	1/17/2023	Volvo Trucks North America	Valiant TMS	ET200S F-RQ Overview KF15.53	Drawing name: =2V09&EFS-EL	= V1KF1
			Ed.	MKLEPADLO					+ V1UC15
			Appr		P6700 Bodyside LH - Robot Cell 2V09			Document type: EFS	Project nr: 22-16150
Modification	Date	Name	Original		Replacement of / Replaced by	Scale 1:1			Page 17 / 1533

0	1	2	3	4	5	6	7	8	9

-KF15.54
=V1FQ1/4.2
=V1WC4/14.1

ET 200SP SIEMENS
F-RQ 1x24VDC/24..230VAC/5A

1 RQ01+	=V1WC4/14.2	14L+
2 RQ01-	=V1WC4/14.2	14.1L+
3 RQ02+	=V1WC4/14.3	14L+
4 RQ02-	=V1WC4/14.4	14.1L+
9 IN P	=V1FQ1/4.3	Switched Power 4 14.1L+P
10 OUT P	=V1FQ1/4.4	Spare
11 IN M	=V1FQ1/4.4	Switched Power 4 14.1L+M
12 OUT M	=V1FQ1/4.5	Spare

1A AUX
2A AUX
3A AUX
4A AUX

6ES7136-6RA00-0BF0 + BU20-P8+A4+0B

			Date	1/17/2023	Volvo Trucks North America	Valiant TMS	ET200S F-RQ Overview KF15.54	Drawing name: =2V09&EFS-EL	= V1KF1
			Ed.	MKLEPADLO					+ V1UC15
			Appr		P6700 Bodyside LH - Robot Cell 2V09			Document type: EFS / Project nr: 22-16150	Page 18 / 1533
Modification	Date	Name	Original		Replacement of / Replaced by	Scale 1:1			

0	1	2	3	4	5	6	7	8	9

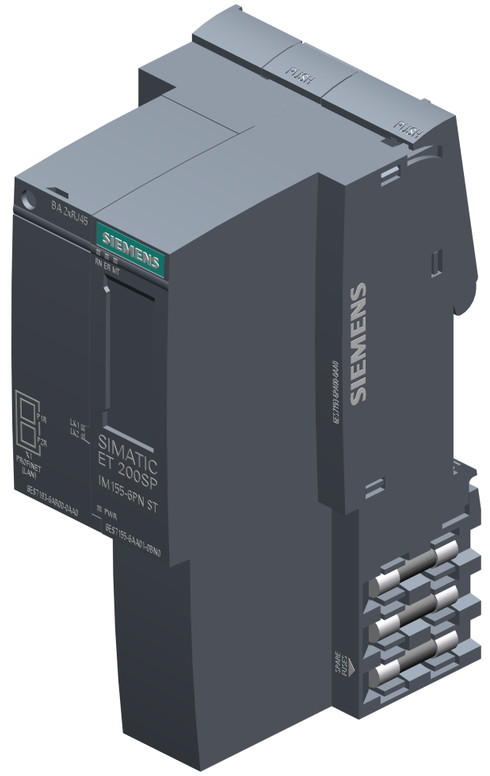

+.UC11/2.6
+.UC11-KF100.11-P15

-KF100.11-P15
PROFINET Cable
6XV1840-3AH10

UC32-PNET1

-PNET1
PROFINET Cable
6XV1840-3AH10

=V1SF0PG1/1.6
-KF32-P2

=V1WC4/2.1 / 1L+1_1
=V1WC4/2.1 / 1M1_1

-X80 1L+ 1 — X80/1/1L+
-X80 1M 2 — X80/2/1M
-X80 2L+ 3 — X80/3/2L+
-X80 2M 4 — X80/4/2M

-P1
-P2
Profinet

X80 6ES7155-6AA01-0BN0 IM 155 PN ST SIEMENS

-KF32
Rack 1
Slot 0

+.UC15/18

2

			Date	1/17/2023	Volvo Trucks North America		Valiant TMS	IM 155 PN	Drawing name: =2V09&EFS-EL	= V1KF1
			Ed.	MKLEPADLO						+ V1UC32
			Appr		P6700 Bodyside LH - Robot Cell 2V09				Document type: EFS	Project nr: 22-16150
Modification	Date	Name	Original		Replacement of	Replaced by	Scale 1:1			Page 1 / 1533

0	1	2	3	4	5	6	7	8	9

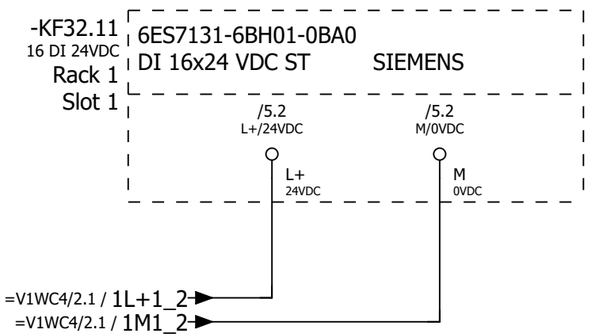

1 3

			Date	1/17/2023	Volvo Trucks North America	Valiant TMS	ET200S Wiring DI	Drawing name: =2V09&EFS-EL		= V1KF1	
			Ed.	MKLEPADLO						+ V1UC32	
			Appr		P6700 Bodyside LH - Robot Cell 2V09	Scale 1:1		Document type: EFS	Project nr: 22-16150	Page	2
Modification	Date	Name	Original		Replacement of	Replaced by					1533

0	1	2	3	4	5	6	7	8	9

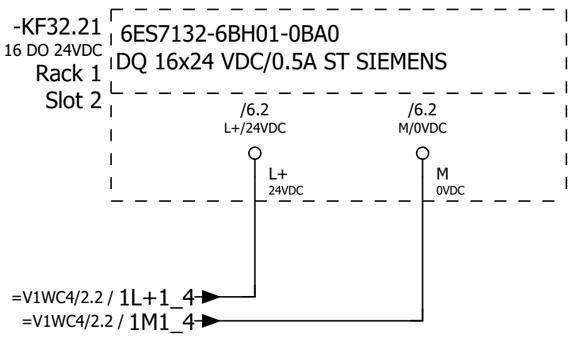

			Date	1/17/2023	Volvo Trucks North America	Valiant TMS	ET200S Wiring DO	Drawing name: =2V09&EFS-EL	= V1KF1	
			Ed.	MKLEPADLO					+ V1UC32	
			Appr		P6700 Bodyside LH - Robot Cell 2V09			Document type: EFS	Project nr: 22-16150	Page 3
Modification	Date	Name	Original		Replacement of	Replaced by	Scale 1:1			1533

0	1	2	3	4	5	6	7	8	9

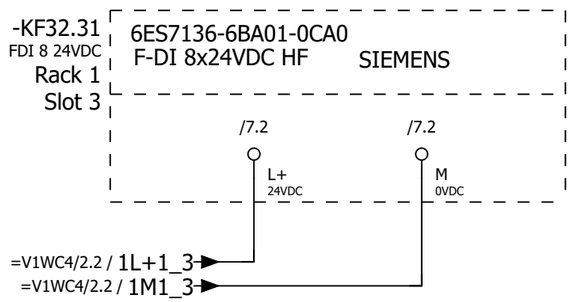

3 5

			Date	1/17/2023	Volvo Trucks North America		Valiant TMS	ET200S Wiring F-DI	Drawing name: =2V09&EFS-EL	= V1KF1	
			Ed.	MKLEPADLO						+ V1UC32	
			Appr		P6700 Bodyside LH - Robot Cell 2V09		Scale 1:1		Document type: EFS	Project nr: 22-16150	Page 4
Modification	Date	Name	Original		Replacement of	Replaced by					1533

-KF32.11

ET 200SP SIEMENS
DI 16x24 VDC ST

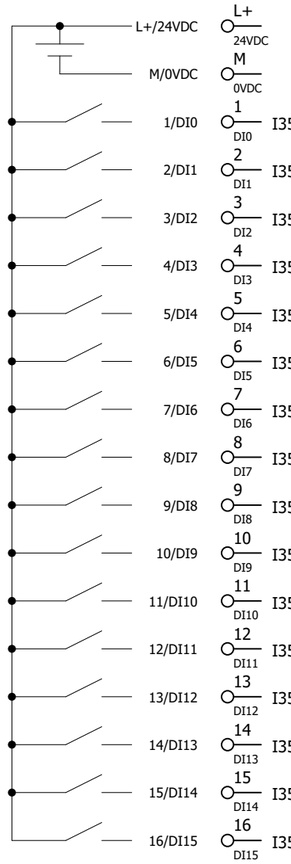

6ES7131-6BH01-0BA0

/2.1			
/2.2			
	I350.0	Spare	
	I350.1	Spare	
=V1SF0PG1/2.7	=V1SF0PG1+V1UC32-SF3_4	Start auto PB	
	I350.3	Spare	
=V1SF0PG1/2.5	=V1SF0PG1+V1UC32-SF1_4	Set PB	
=V1SF0PG1/2.2	=V1SF0PG1+V1UC32-SF2_4	Reset PB	
	I350.6	Spare	
	I350.7	Spare	
=V1WC4/3.2	=V1WC4+V1UC32-FC1	Monitoring 24 VDC	
=V1WC4/3.4	=V1WC4+V1UC32-FC2	Monitoring 24 VDC	
	I351.2	Spare	
	I351.3	Spare	
	I351.4	Spare	
	I351.5	Spare	
	I351.6	Spare	
	I351.7	Spare	

0	1	2	3	4	5	6	7	8	9

-KF32.21

ET 200SP SIEMENS
DQ 16x24 VDC/0.5A ST

L+/24VDC	L+ 24VDC		/3.1		
M/0VDC	M 0VDC		/3.2		
1/DQ0	1 DQ0	Q350.0		Q350.0	Spare
2/DQ1	2 DQ1	Q350.1	=V1SF0PG1/2.8	=V1SF0PG1+V1UC32-PF3_Q	Start auto LT
3/DQ2	3 DQ2	Q350.2		Q350.2	Spare
4/DQ3	4 DQ3	Q350.3		Q350.3	Spare
5/DQ4	5 DQ4	Q350.4		Q350.4	Spare
6/DQ5	6 DQ5	Q350.5		Q350.5	Spare
7/DQ6	7 DQ6	Q350.6		Q350.6	Spare
8/DQ7	8 DQ7	Q350.7		Q350.7	Spare
9/DQ8	9 DQ8	Q351.0		Q351.0	Spare
10/DQ9	10 DQ9	Q351.1		Q351.1	Spare
11/DQ10	11 DQ10	Q351.2		Q351.2	Spare
12/DQ11	12 DQ11	Q351.3		Q351.3	Spare
13/DQ12	13 DQ12	Q351.4		Q351.4	Spare
14/DQ13	14 DQ13	Q351.5		Q351.5	Spare
15/DQ14	15 DQ14	Q351.6		Q351.6	Spare
16/DQ15	16 DQ15	Q351.7		Q351.7	Spare

6ES7132-6BH01-0BA0

5 7

			Date	1/17/2023	Volvo Trucks North America		Valiant TMS	ET200S Cross-reference Output module	Drawing name: =2V09&EFS-EL	= V1KF1	
			Ed.	MKLEPADLO						+ V1UC32	
			Appr		P6700 Bodyside LH - Robot Cell 2V09		Scale 1:1		Document type: EFS	Project nr: 22-16150	Page 6
Modification	Date	Name	Original		Replacement of	Replaced by					1533

0	1	2	3	4	5	6	7	8	9

-KF32.31
/4.0

ET 200SP SIEMENS
F-DI 8x24VDC HF

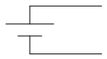

	L+ 24VDC	/4.1			
	M 0VDC	/4.2			
I5350.0	1 DI0	=FQ0V1SF1S01/1.3	=FQ0V1SF1S01+UC32-SF1.1	Emergency stop Ch1	
	9 VS0	=FQ0V1SF1S01/1.3			
I5350.1	2 DI1		I5350.1	Spare	
	10 VS1				
I5350.2	3 DI2		I5350.2	Spare	
	11 VS2				
I5350.3	4 DI3		I5350.3	Spare	
	12 VS3				
I5350.4	5 DI4	=FQ0V1SF1S01/1.4	=FQ0V1SF1S01+UC32-SF1.11	Emergency stop Ch2	
	13 VS4	=FQ0V1SF1S01/1.4			
I5350.5	6 DI5		I5350.5	Spare	
	14 VS5				
I5350.6	7 DI6		I5350.6	Spare	
	15 VS6				
I5350.7	8 DI7		I5350.7	Spare	
	16 VS7				

6ES7136-6BA01-0CA0

			Date	1/17/2023	Volvo Trucks North America	Valiant TMS	ET200S Cross-reference Safe input module	Drawing name: =2V09&EFS-EL	= V1KF1
			Ed.	MKLEPADLO					+ V1UC32
			Appr		P6700 Bodyside LH - Robot Cell 2V09			Document type: EFS	Project nr: 22-16150
Modification	Date	Name	Original		Replacement of / Replaced by	Scale 1:1			Page 7 / 1533

0	1	2	3	4	5	6	7	8	9

=V1WC4+.UC15/21.5 / W1

=V1KF1+.UC15/2.6 / +.UC15-KF100.15-P12

-W1
RSM RKM 56-30M/S3059
30m

-KF100.15-P12
PROFINET Cable
6XV1840-3AH10
30 m

-KF1

X20 M12, 7/8" 1 2 PE 4 5
0V_VAL / OUT
0V_EL / SEN
FE
24V_EL / SEN
24V_VAL / OUT

ON
OFF
1 2 1 2

M12 -TP1
M12 -TP2

FESTO
Bus node + Interlinking block
548755 + 550208

I2500.0	DI 0 X1:4	V1PF1UQ1.1-BGR	Clamp (RESET)
I2500.1	DI 1 X1:2	V1PF1UQ1.1-BGS	Clamp (SET)
I2500.2	DI 2 X2:4	I2500.2	Spare
I2500.3	DI 3 X2:2	I2500.3	Spare
I2500.4	DI 4 X3:4	I2500.4	Spare
I2500.5	DI 5 X3:2	I2500.5	Spare
I2500.6	DI 6 X4:4	I2500.6	Spare
I2500.7	DI 7 X4:2	I2500.7	Spare
I2501.0	DI 8 X5:4	I2501.0	Spare
I2501.1	DI 9 X5:2	I2501.1	Spare
I2501.2	DI 10 X6:4	I2501.2	Spare
I2501.3	DI 11 X6:2	I2501.3	Spare
I2501.4	DI 12 X7:4	I2501.4	Spare
I2501.5	DI 13 X7:2	I2501.5	Spare
I2501.6	DI 14 X8:4	I2501.6	Spare
I2501.7	DI 15 X8:2	I2501.7	Spare

-KF1.11

FESTO
CPX-M-AB-8-M12X2-5POL
549335

X1 M12 1 2 3 4 5 — 24V | DI 1 | 0V | DI 0 | FE
X2 M12 1 2 3 4 5 — 24V | DI 3 | 0V | DI 2 | FE
X3 M12 1 2 3 4 5 — 24V | DI 5 | 0V | DI 4 | FE
X4 M12 1 2 3 4 5 — 24V | DI 7 | 0V | DI 6 | FE
X5 M12 1 2 3 4 5 — 24V | DI 9 | 0V | DI 8 | FE
X6 M12 1 2 3 4 5 — 24V | DI 11 | 0V | DI 10 | FE
X7 M12 1 2 3 4 5 — 24V | DI 13 | 0V | DI 12 | FE
X8 M12 1 2 3 4 5 — 24V | DI 15 | 0V | DI 14 | FE

BN WH BU BK

+V1PF1UQ1.1-W1
=V1PF1UQ1+.PF1UQ1/1.1

=V1KF1+.UC32/7

2

			Date	1/17/2023	Volvo Trucks North America		Valiant TMS	CONNECTING MOD. FOR VTSA MANIFOLD	Drawing name: =2V09&EFS-EL	= V1PF1KF1
			Ed.	MKLEPADLO						+ V1PF1
			Appr		P6700 Bodyside LH - Robot Cell 2V09				Document type: EFS	Project nr: 22-16150
Modification	Date	Name	Original		Replacement of	Replaced by	Scale 1:1			Page 1 / 1533

-KF1 -KF1.11 -KF1.20 -KF1.21 -KF1.22 -KF1.23

M1

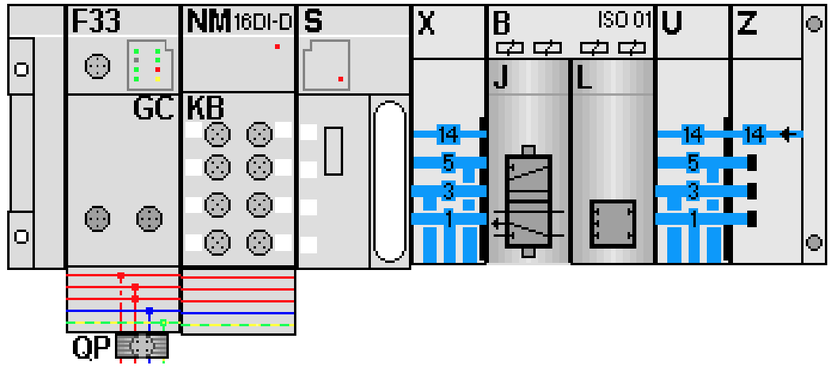

-KF1.21
=V1PF1UQ1+.PF1UQ1/1.3

FESTO

=V1PF1UQ1+.PF1UQ1/1.4	Q2500.0 DO 0 1.1	-QN1.1_Q	Clamp (RST)
=V1PF1UQ1+.PF1UQ1/1.4	Q2500.1 DO 1 1.2	-QN1.2_Q	Clamps (SET)
	Q2500.2 DO 2 2.1	-QN2.1_Q	Spare
	Q2500.3 DO 3 2.2	-QN2.2_Q	Spare

1

=V1PF1UQ1+.PF1UQ1/1

			Date	1/17/2023	Volvo Trucks North America	Valiant TMS	CONNECTING MOD. FOR FESTO DQ	Drawing name: =2V09&EFS-EL	= V1PF1KF1
			Ed.	MKLEPADLO					+ V1PF1
			Appr		P6700 Bodyside LH - Robot Cell 2V09	Scale 1:1		Document type: EFS	Project nr: 22-16150
Modification	Date	Name	Original		Replacement of	Replaced by			Page 2 / 1533

0	1	2	3	4	5	6	7	8	9

=V1PF1KF1
+.PF1

-KF1.21
=V1PF1KF1+V1PF1/2.1

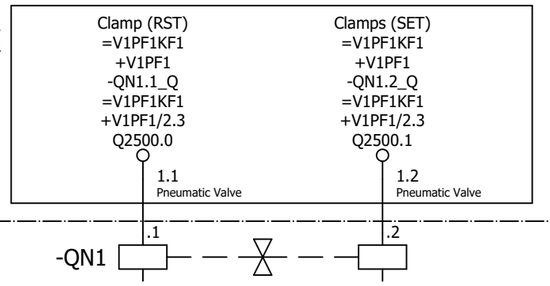

=V1PF1KF1+V1PF1/1.1
+.PF1UQ1.1-W1

-W1
RKC 4.4T-2-RSC 4.4T/S3060
2m

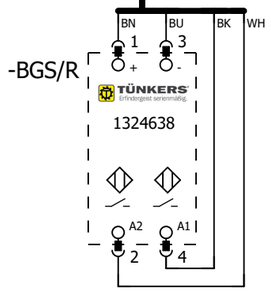

Clamps

=V1PF1UQ1.1
+.PF1UQ1.1
-UQ1.1

=V1PF1
-UQ1.1-BGS/R
Clamps

=V1PF1KF1+V1PF1/2

=V1PF1WC3+.PF1UC01/1

			Date	1/17/2023	Volvo Trucks North America	Valiant TMS	FESTO DQ CONNECTION QN1	Drawing name: =2V09&EFS-EL	= V1PF1UQ1
			Ed.	MKLEPADLO					+ V1PF1UQ1
			Appr		P6700 Bodyside LH - Robot Cell 2V09			Document type: EFS	Project nr: 22-16150
Modification	Date	Name	Original		Replacement of	Replaced by	Scale 1:1		Page 1 / 1533

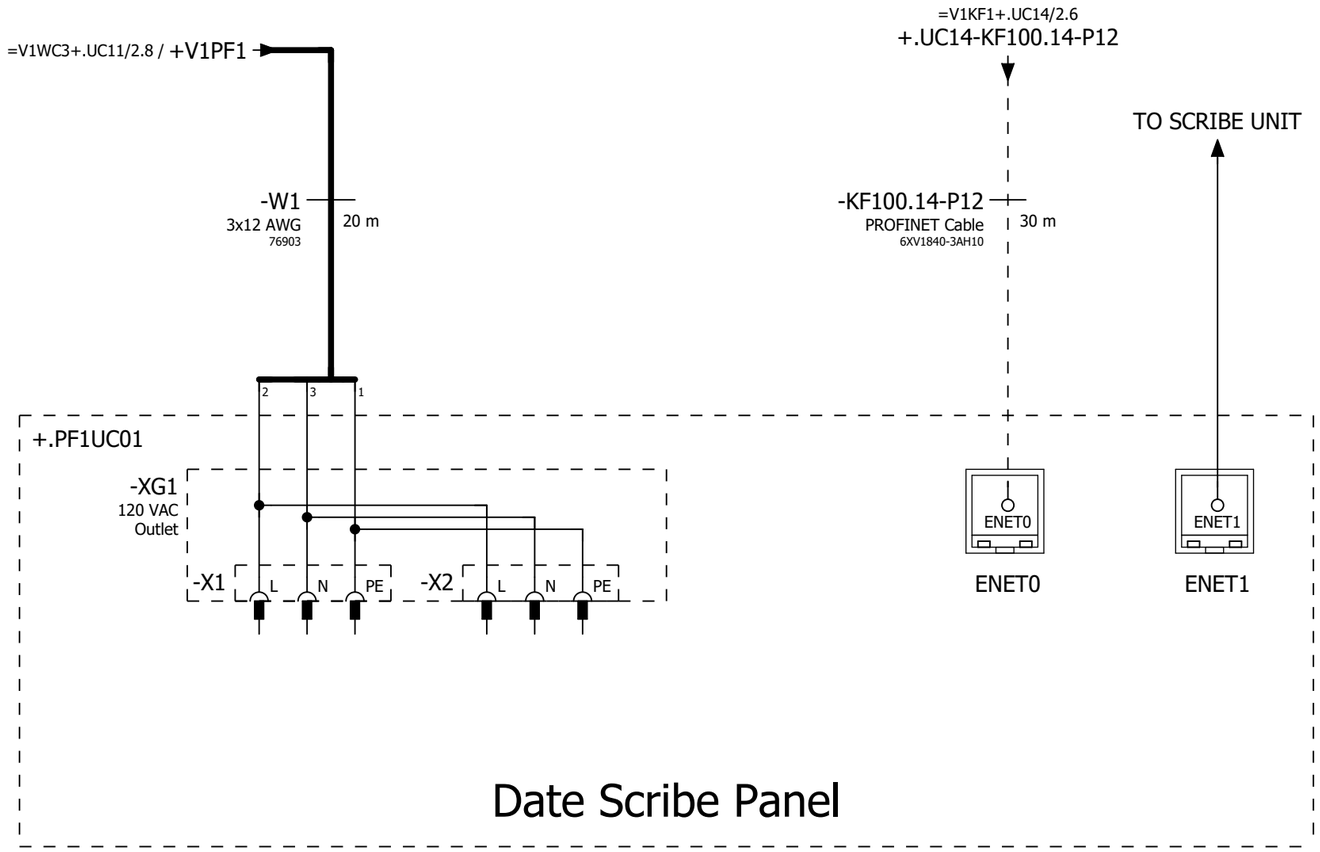

=V1PF1UQ1+.PF1UQ1/1

=V1PZ1PF1+.UC61/1

			Date	1/17/2023	Volvo Trucks North America	Valiant TMS	Incoming power & profinet	Drawing name: =2V09&EFS-EL	= V1PF1WC3	
			Ed.	MKLEPADLO					+ V1PF1UC01	
			Appr		P6700 Bodyside LH - Robot Cell 2V09			Document type: EFS	Project nr: 22-16150	Page 1
Modification	Date	Name	Original		Replacement of / Replaced by	Scale 1:1				1533

0	1	2	3	4	5	6	7	8	9

=V1KF1+V1UC12

S010 Indication column 1 Blue
=V1PZ1PF1+UC61-PF1_1
=V1KF1+.UC12/13.2

S010 Indication column 1 Yellow
=V1PZ1PF1+UC61-PF1_3
=V1KF1+.UC12/13.2

S010 Indication column 1 Siren
=V1PZ1PF1+UC61-PF1_5
=V1KF1+.UC12/13.2

S010 Indication column 1 Green
=V1PZ1PF1+UC61-PF1_2
=V1KF1+.UC12/13.2

S010 Indication column 1 Red
=V1PZ1PF1+UC61-PF1_4
=V1KF1+.UC12/13.2

=V1KF1
-KF12.21

DO ET200SP

Q80.0 DQ0 1
Q80.1 DQ1 2
Q80.2 DQ2 3
Q80.3 DQ3 4
Q80.4 DQ4 5

=V1WC4+.UC12/6.2 / 4M3

Q80.0 BU 16 AWG
Q80.1 BU 16 AWG
Q80.2 BU 16 AWG
Q80.3 BU 16 AWG
Q80.4 BU 16 AWG

-KF12.21 1 2 3 4 5

10 1 2 3 4 5 6 7 8 9

-W1
RSM RKM 106-25M/S3059
25m

WH OG BU WHBK RDBK GNBK OGBK RD GNYE BK

-XD1 10 1 2 3 4 5 6 7 8 9

BUOG BUOG BUOG BUOG BUOG BUOG BUOG BUOG GNYE BUOG

16 AWG

-XD11 10 1 2 3 4 5 6 7 8 9

-PE

-PF1
Indication column

0 1 2 3 4 5
Com C1 C2 C3 C4 C5

blue green yellow red Horn

SIEMENS

POWER IN / POWER OUT

Pin 1: Signal 1
Pin 2: Signal 2
Pin 3: Signal 3
Pin 4: Signal 4
Pin 5: Signal 5
Pin 6: Signal 6
Pin 7: Signal 7
Pin 8: FE
Pin 9: Signal 8
Pin 10: 0 V

Pin #	WIRE	COLOR
Pin 1	C1	BUOG
Pin 2	C2	BUOG
Pin 3	C3	BUOG
Pin 4	C4	BUOG
Pin 5	C5	BUOG
Pin 6	SPARE	BUOG
Pin 7	SPARE	BUOG
Pin 8	PE	GNYE
Pin 9	SPARE	BUOG
Pin 10	COM	BUOG

=V1PF1WC3+.PF1UC01/1

=V1PZ1PF2+.UC62/1

			Date	1/17/2023	Volvo Trucks North America	Valiant TMS	S010 Indication column 1	Drawing name: =2V09&EFS-EL / = V1PZ1PF1 / + V1UC61
			Ed.	MKLEPADLO				
			Appr		P6700 Bodyside LH - Robot Cell 2V09	Scale 1:1		Document type: EFS / Project nr: 22-16150 / Page 1 / 1533
Modification	Date	Name	Original		Replacement of / Replaced by			

0	1	2	3	4	5	6	7	8	9

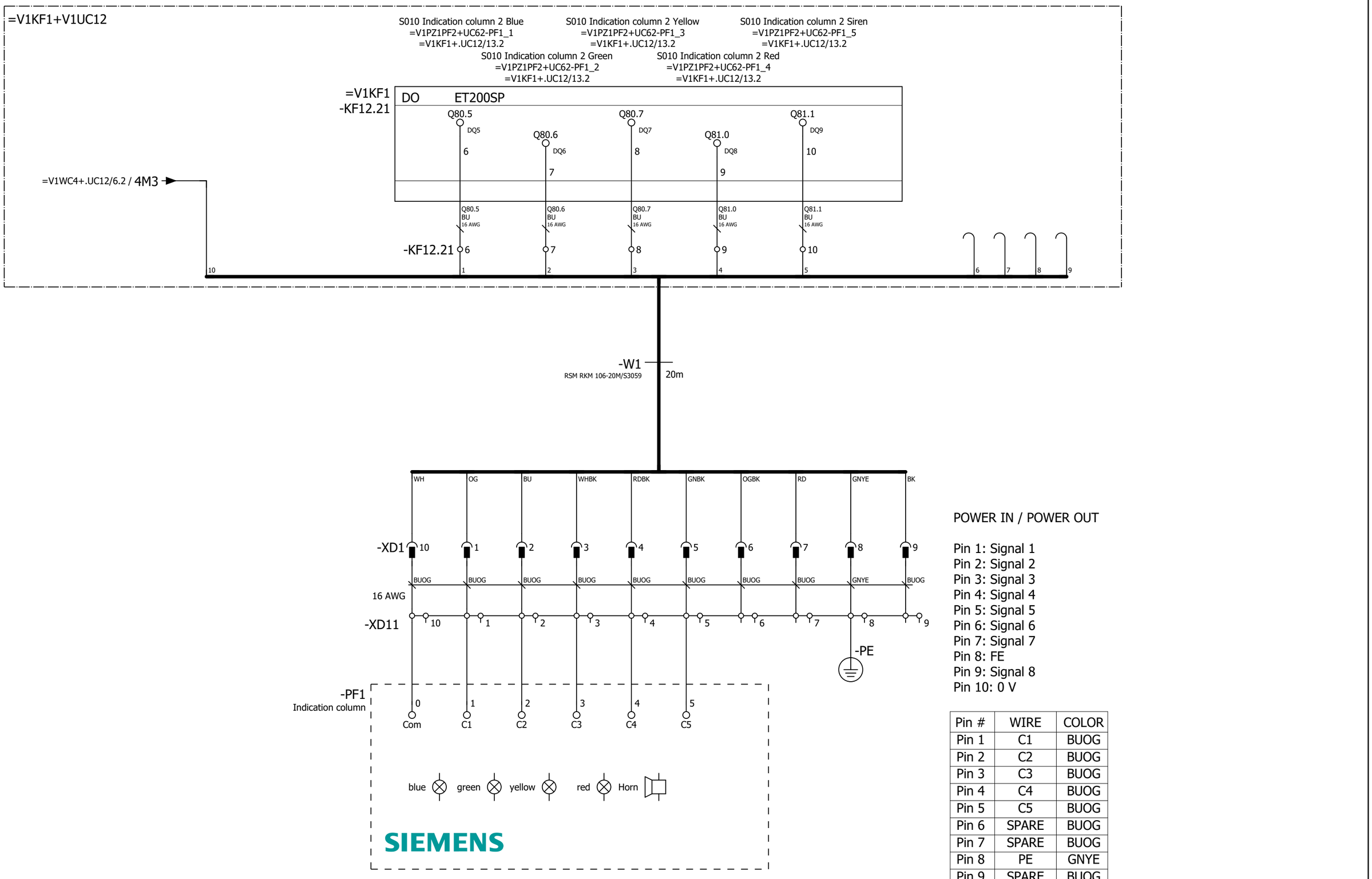

POWER IN / POWER OUT

Pin 1: Signal 1
Pin 2: Signal 2
Pin 3: Signal 3
Pin 4: Signal 4
Pin 5: Signal 5
Pin 6: Signal 6
Pin 7: Signal 7
Pin 8: FE
Pin 9: Signal 8
Pin 10: 0 V

Pin #	WIRE	COLOR
Pin 1	C1	BUOG
Pin 2	C2	BUOG
Pin 3	C3	BUOG
Pin 4	C4	BUOG
Pin 5	C5	BUOG
Pin 6	SPARE	BUOG
Pin 7	SPARE	BUOG
Pin 8	PE	GNYE
Pin 9	SPARE	BUOG
Pin 10	COM	BUOG

=V1PZ1PF1+.UC61/1

=V1PZ1PF3+.UC63/1

			Date	1/17/2023	Volvo Trucks North America	Valiant TMS	S010 Indication column 2	Drawing name: =2V09&EFS-EL / = V1PZ1PF2 / + V1UC62
			Ed.	MKLEPADLO				
			Appr		P6700 Bodyside LH - Robot Cell 2V09	Scale 1:1		Document type: EFS / Project nr: 22-16150 / Page 1 / 1533
Modification	Date	Name	Original		Replacement of / Replaced by			

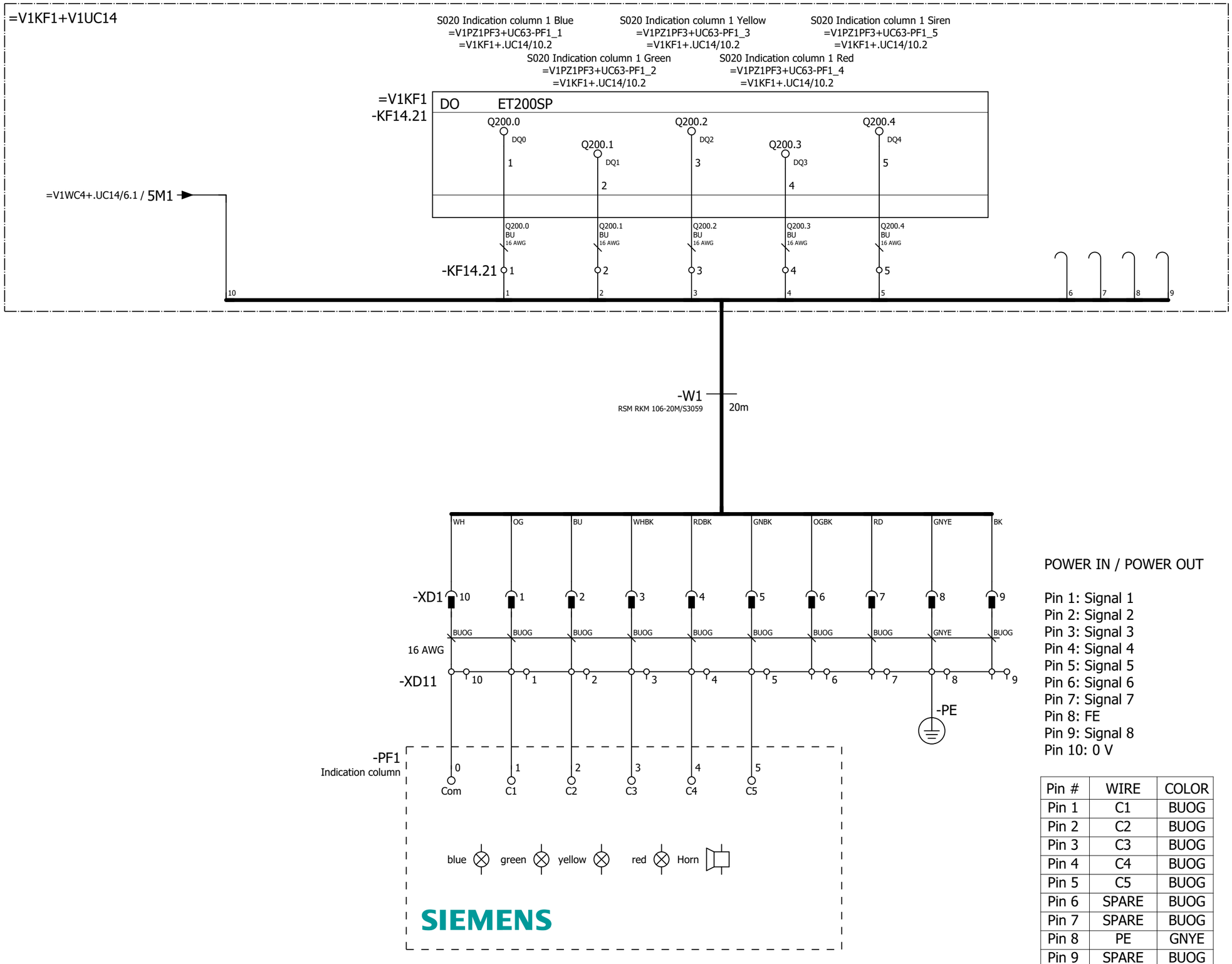

POWER IN / POWER OUT

Pin 1: Signal 1
Pin 2: Signal 2
Pin 3: Signal 3
Pin 4: Signal 4
Pin 5: Signal 5
Pin 6: Signal 6
Pin 7: Signal 7
Pin 8: FE
Pin 9: Signal 8
Pin 10: 0 V

Pin #	WIRE	COLOR
Pin 1	C1	BUOG
Pin 2	C2	BUOG
Pin 3	C3	BUOG
Pin 4	C4	BUOG
Pin 5	C5	BUOG
Pin 6	SPARE	BUOG
Pin 7	SPARE	BUOG
Pin 8	PE	GNYE
Pin 9	SPARE	BUOG
Pin 10	COM	BUOG

=V1PZ1PF2+.UC62/1

=V1PZ1PF4+.UC64/1

			Date	1/17/2023	Volvo Trucks North America	Valiant TMS	S020 Indication column 1	Drawing name: =2V09&EFS-EL	= V1PZ1PF3 + V1UC63
			Ed.	MKLEPADLO	P6700 Bodyside LH - Robot Cell 2V09				
			Appr					Document type: EFS	Project nr: 22-16150
Modification	Date	Name	Original		Replacement of / Replaced by	Scale 1:1			Page 1 / 1533

0	1	2	3	4	5	6	7	8	9

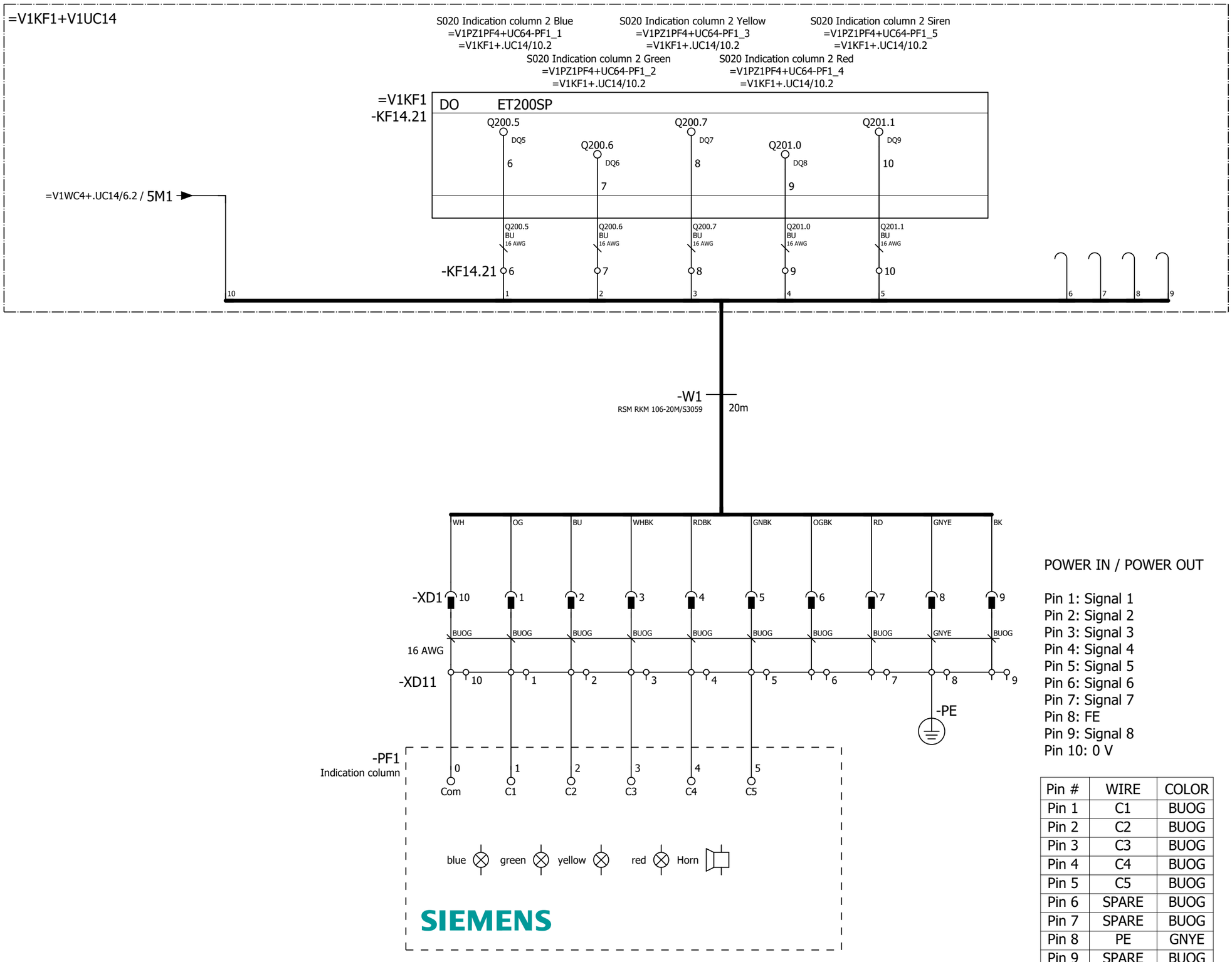

POWER IN / POWER OUT

Pin 1: Signal 1
Pin 2: Signal 2
Pin 3: Signal 3
Pin 4: Signal 4
Pin 5: Signal 5
Pin 6: Signal 6
Pin 7: Signal 7
Pin 8: FE
Pin 9: Signal 8
Pin 10: 0 V

Pin #	WIRE	COLOR
Pin 1	C1	BUOG
Pin 2	C2	BUOG
Pin 3	C3	BUOG
Pin 4	C4	BUOG
Pin 5	C5	BUOG
Pin 6	SPARE	BUOG
Pin 7	SPARE	BUOG
Pin 8	PE	GNYE
Pin 9	SPARE	BUOG
Pin 10	COM	BUOG

=V1PZ1PF3+.UC63/1

=V1SF0PG1+.UC32/1

			Date	1/17/2023	Volvo Trucks North America	Valiant TMS	S020 Indication column 2	Drawing name: =2V09&EFS-EL	= V1PZ1PF4
			Ed.	MKLEPADLO					+ V1UC64
			Appr		P6700 Bodyside LH - Robot Cell 2V09	Scale 1:1		Document type: EFS	Project nr: 22-16150	Page 1
Modification	Date	Name	Original		Replacement of	Replaced by				1533

0	1	2	3	4	5	6	7	8	9

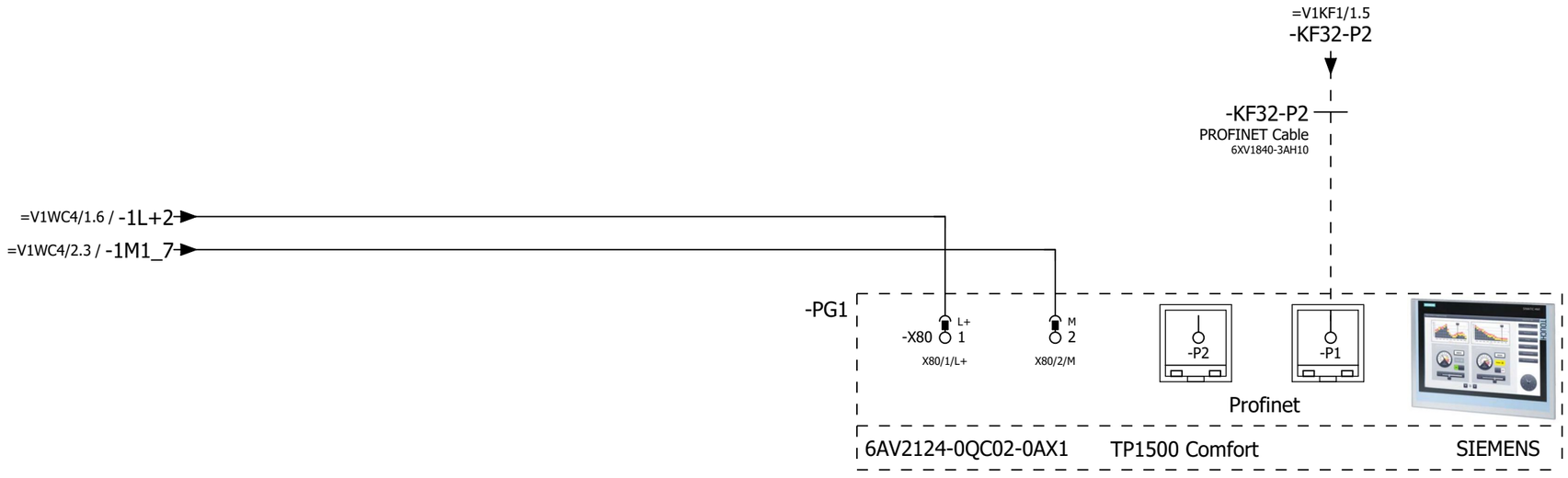

=V1PZ1PF4+.UC64/1

2

			Date	1/17/2023	Volvo Trucks North America	Valiant TMS	TP1500: SOP Display	Drawing name: =2V09&EFS-EL	= V1SF0PG1	
			Ed.	MKLEPADLO					+ V1UC32	
			Appr		P6700 Bodyside LH - Robot Cell 2V09	Scale 1:1		Document type: EFS	Project nr: 22-16150	Page 1 / 1533
Modification	Date	Name	Original		Replacement of	Replaced by				

Reset PB
=V1SF0PG1+V1UC32-SF2_4
=V1KF1/5.2

DI	ET200SP
I350.5 DI5	
6	

=V1KF1
-KF32.11
I350.5 BU 18 AWG

Set PB
=V1SF0PG1+V1UC32-SF1_4
=V1KF1/5.2

DI	ET200SP
I350.4 DI4	
5	

=V1KF1
-KF32.11
I350.4 BU 18 AWG

Start auto PB
=V1SF0PG1+V1UC32-SF3_4
=V1KF1/5.2

DI	ET200SP
I350.2 DI2	
3	

=V1KF1
-KF32.11
I350.2 BU 18 AWG

Start auto LT
=V1SF0PG1+V1UC32-PF3_Q
=V1KF1/6.2

DO	ET200SP
Q350.1 DQ1	
2	

=V1KF1
-KF32.21
Q350.1 BU 18 AWG

-SF2
&ELU/1.3
&ELU/1.3
CP1-10Y-20
Reset PB
4 E 3 1SFA619100R1023 14 13

-SF1
&ELU/1.2
&ELU/1.2
CP1-10G-20
Set PB
4 E 3 1SFA619100R1022 14 13

-SF3/PF3
&ELU/1.3
&ELU/1.3
CP1-11C-10
Start auto PBLT
4 E 3 1SFA619100R1118 x1 White x2

=V1WC4/2.3 / 1L+1_5
=V1WC4/2.3 / 1M1_5

1

=V1SF0PG2+.UC51/1

			Date	1/17/2023	Volvo Trucks North America	Valiant TMS	Operating box SOP	Drawing name: =2V09&EFS-EL	= V1SF0PG1	
			Ed.	MKLEPADLO					+ V1UC32	
			Appr		P6700 Bodyside LH - Robot Cell 2V09			Document type: EFS	Project nr: 22-16150	Page 2
Modification	Date	Name	Original		Replacement of / Replaced by	Scale 1:1				1533

0	1	2	3	4	5	6	7	8	9

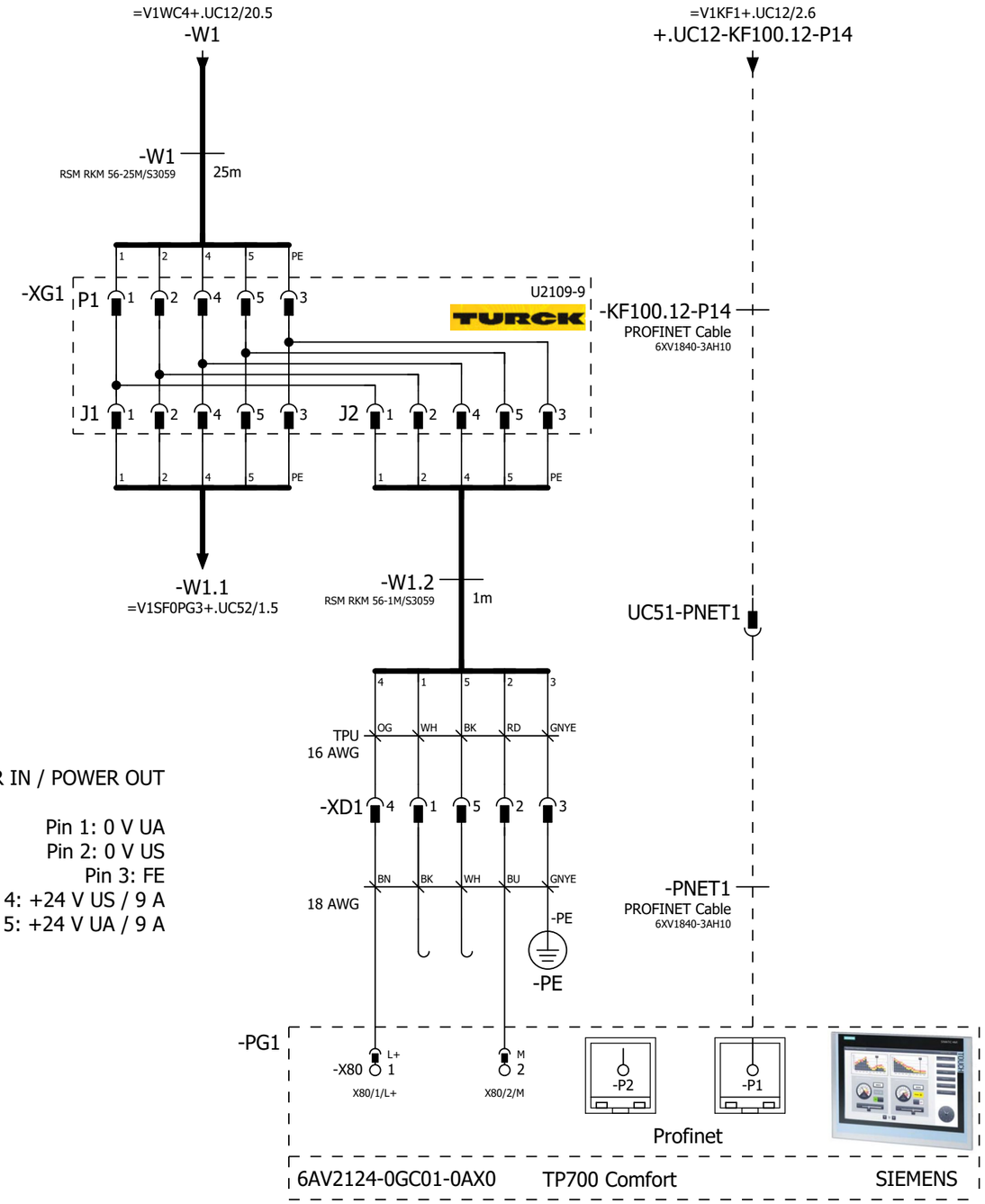

Pin #	WIRE	COLOR
Pin 1	N/C	BK
Pin 2	M	BU
Pin 3	PE	GNYE
Pin 4	L+	BN
Pin 5	N/C	WH

POWER IN / POWER OUT

Pin 1: 0 V UA
Pin 2: 0 V US
Pin 3: FE
Pin 4: +24 V US / 9 A
Pin 5: +24 V UA / 9 A

=V1SF0PG1+.UC32/2

=V1SF0PG3+.UC52/1

			Date	1/17/2023	Volvo Trucks North America	Valiant TMS	TP700: S010 Display 1	Drawing name: =2V09&EFS-EL	= V1SF0PG2
			Ed.	MKLEPADLO					+ V1UC51
			Appr		P6700 Bodyside LH - Robot Cell 2V09	Scale 1:1		Document type: EFS	Project nr: 22-16150
Modification	Date	Name	Original		Replacement of	Replaced by			Page 1 / 1533

0	1	2	3	4	5	6	7	8	9

Pin #	WIRE	COLOR
Pin 1	N/C	BK
Pin 2	M	BU
Pin 3	PE	GNYE
Pin 4	L+	BN
Pin 5	N/C	WH

POWER IN / POWER OUT

Pin 1: 0 V UA
Pin 2: 0 V US
Pin 3: FE
Pin 4: +24 V US / 9 A
Pin 5: +24 V UA / 9 A

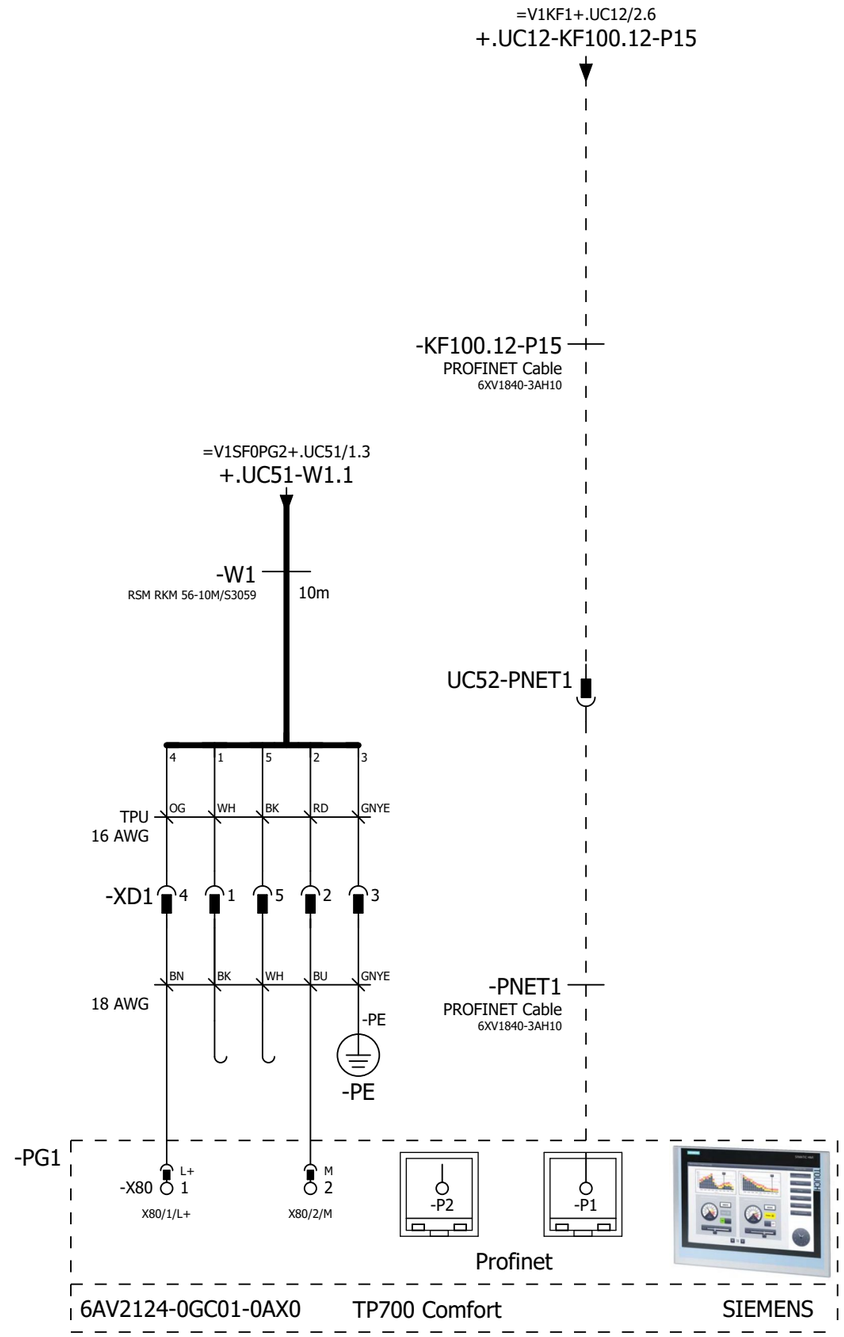

=V1SF0PG2+.UC51/1

=V1SF0PG4+.UC53/1

			Date	1/17/2023	Volvo Trucks North America	Valiant TMS	TP700: S010 Display 2	Drawing name: =2V09&EFS-EL	= V1SF0PG3
			Ed.	MKLEPADLO					+ V1UC52
			Appr		P6700 Bodyside LH - Robot Cell 2V09	Scale 1:1		Document type: EFS	Project nr: 22-16150
Modification	Date	Name	Original		Replacement of	Replaced by			Page 1 / 1533

0	1	2	3	4	5	6	7	8	9

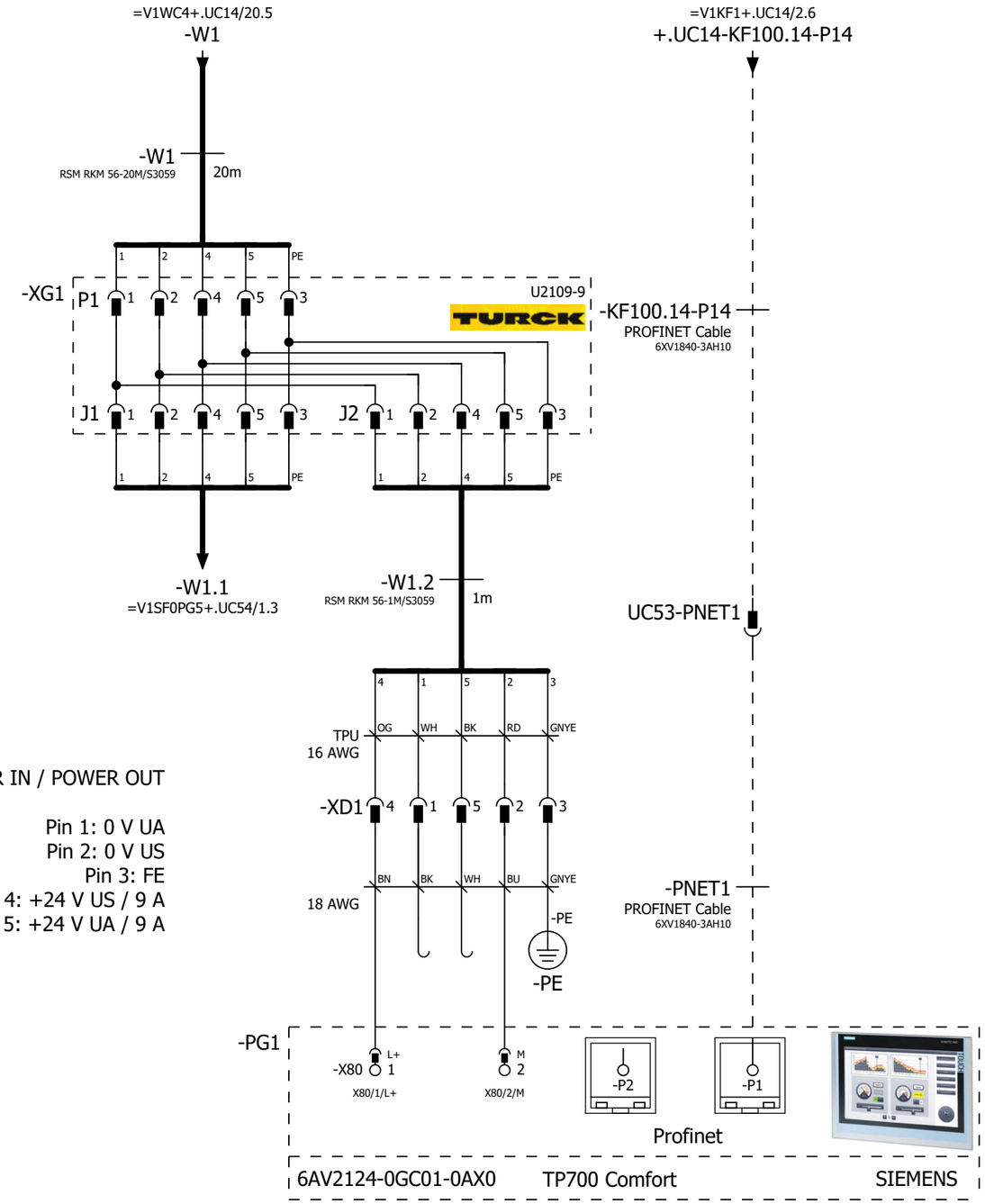

Pin #	WIRE	COLOR
Pin 1	N/C	BK
Pin 2	M	BU
Pin 3	PE	GNYE
Pin 4	L+	BN
Pin 5	N/C	WH

POWER IN / POWER OUT

Pin 1: 0 V UA
Pin 2: 0 V US
Pin 3: FE
Pin 4: +24 V US / 9 A
Pin 5: +24 V UA / 9 A

=V1SF0PG3+.UC52/1

=V1SF0PG5+.UC54/1

			Date	1/17/2023	Volvo Trucks North America	Valiant TMS	TP700: S020 Display 1	Drawing name: =2V09&EFS-EL	= V1SF0PG4
			Ed.	MKLEPADLO					+ V1UC53
			Appr		P6700 Bodyside LH - Robot Cell 2V09	Scale 1:1		Document type: EFS	Project nr: 22-16150
Modification	Date	Name	Original		Replacement of	Replaced by			Page 1 / 1533

0	1	2	3	4	5	6	7	8	9

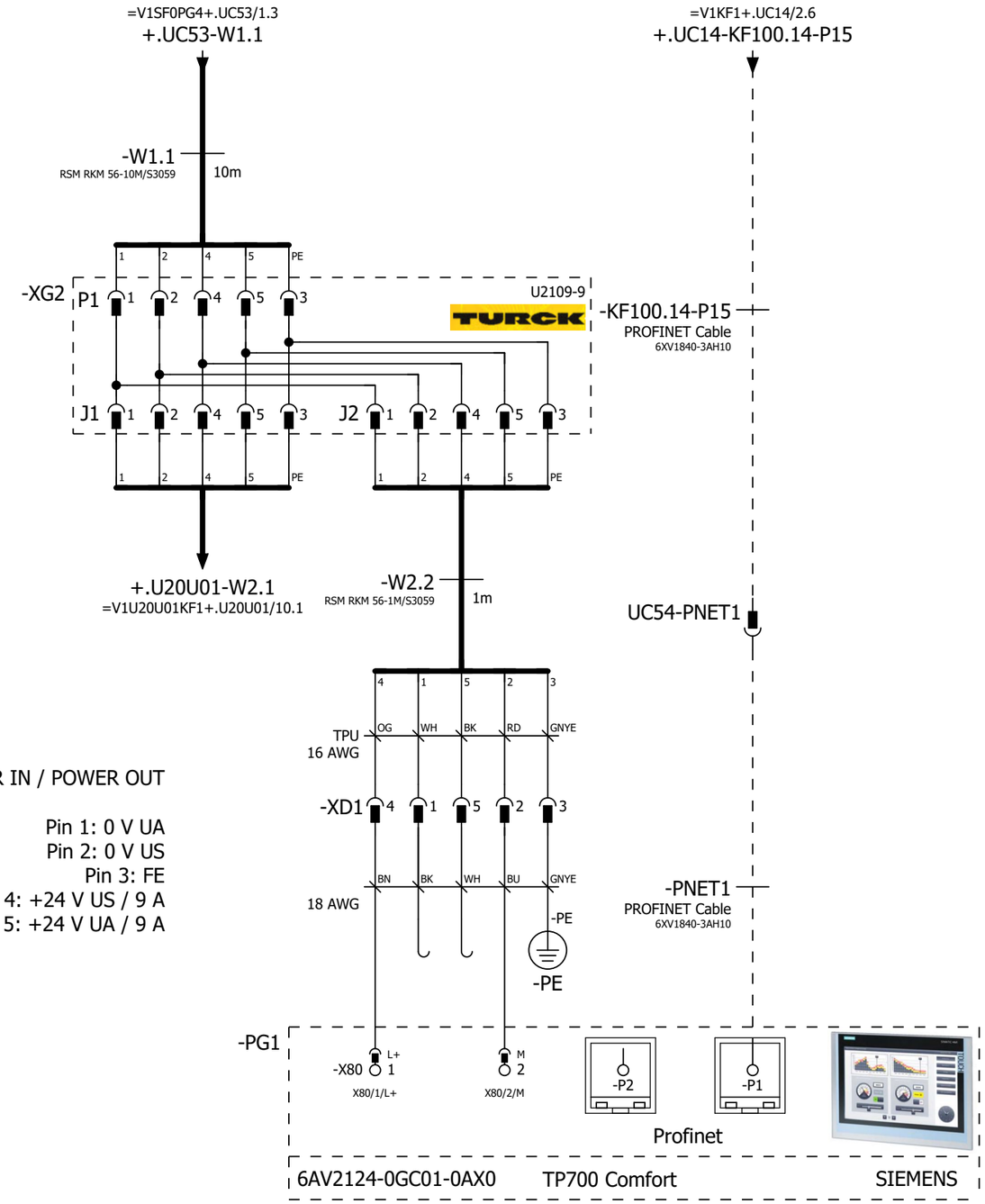

Pin #	WIRE	COLOR
Pin 1	N/C	BK
Pin 2	M	BU
Pin 3	PE	GNYE
Pin 4	L+	BN
Pin 5	N/C	WH

POWER IN / POWER OUT

Pin 1: 0 V UA
Pin 2: 0 V US
Pin 3: FE
Pin 4: +24 V US / 9 A
Pin 5: +24 V UA / 9 A

=V1SF0PG4+.UC53/1

=V1SF0SF1+.UC71/1

			Date	1/17/2023	Volvo Trucks North America	Valiant TMS	TP700: S020 Display 2	Drawing name: =2V09&EFS-EL	= V1SF0PG5
			Ed.	MKLEPADLO					+ V1UC54
			Appr		P6700 Bodyside LH - Robot Cell 2V09	Scale 1:1		Document type: EFS	Project nr: 22-16150
Modification	Date	Name	Original		Replacement of	Replaced by			Page 1 / 1533

0	1	2	3	4	5	6	7	8	9

=V1KF1+V1UC12

S010 Operator Run Button 1
=V1SF0SF1+V1UC71-SF1.1
=V1KF1+.UC12/12.2

S010 Operator Emergency Stop 1 Ch1
=V1SF0SF1+V1UC71-SF1.4
=V1KF1+.UC12/15.2

S010 Operator Emergency Stop 1 Ch2
=V1SF0SF1+V1UC71-SF1.6
=V1KF1+.UC12/15.2

DI ET200SP
I86.4 DI4
5

=V1KF1
-KF12.14

=V1KF1
-KF12.32

F-DI 8 24VDC PROFISAFE ET200SP
I5086.0 DI0 VS0 I5086.4 DI4 VS4
1 9 5 13

I86.4 BUOG 16 AWG
I5086.0 BUOG 16 AWG
VS0 BUOG 16 AWG
I5086.4 BUOG 16 AWG
VS4 BUOG 16 AWG

=V1WC4+.UC12/6.2 / 4L+2
=V1WC4+.UC12/6.2 / 4M2

-KF12.14 5
-KF12.32 1 9 5 13

I86.4 WH 16 AWG
4L+2 BN 16 AWG
I5086.0 YE 16 AWG
VS0 GY 16 AWG
I5086.4 PK 16 AWG
4M2 BU 16 AWG
VS4 RD 16 AWG

-XG1
=V1SF0SF2+.UC72/1.1

WH BN GN YE GY PK BU RD

-W1
WKC 8T-25-S1587
25m

WH BN GN YE GY PK BU RD

-SF1
SSA-EBM Series E-stop Box
M12
1 2 3 4 5 6 7 8

-SF1 E

-SF2

BANNER
SSA-EBM-12EB1Q8OTBB

=V1SF0PG5+.UC54/1

=V1SF0SF2+.UC72/1

			Date	1/17/2023	Volvo Trucks North America	Valiant TMS	S010 Operating box RB1	Drawing name: =2V09&EFS-EL / = V1SF0SF1 / + V1UC71
			Ed.	MKLEPADLO				
			Appr		P6700 Bodyside LH - Robot Cell 2V09	Scale 1:1		Document type: EFS / Project nr: 22-16150 / Page 1 / 1533
Modification	Date	Name	Original		Replacement of / Replaced by			

0	1	2	3	4	5	6	7	8	9

=V1KF1+V1UC12

S010 Operator Run Button 2
=V1SF0SF2+V1UC72-SF1.1
=V1KF1+.UC12/12.2

S010 Operator Emergency Stop 2 Ch1
=V1SF0SF2+V1UC72-SF1.4
=V1KF1+.UC12/15.2

S010 Operator Emergency Stop 2 Ch2
=V1SF0SF2+V1UC72-SF1.6
=V1KF1+.UC12/15.2

DI ET200SP
I86.5 DI5
6

=V1KF1
-KF12.14

=V1KF1
-KF12.32

F-DI 8 24VDC PROFISAFE ET200SP
I5086.1 DI1 VS1 I5086.5 DI5 VS5
2 10 6 14

I86.5 BUOG 16 AWG
I5086.1 BUOG 16 AWG
VS1 BUOG 16 AWG
I5086.5 BUOG 16 AWG
VS5 BUOG 16 AWG

=V1WC4+.UC12/6.2 / 4L+2
=V1WC4+.UC12/6.2 / 4M2

-KF12.14 6
-KF12.32 2 10 6 14

I86.5 WH 16 AWG
4L+2 BN 16 AWG
I5086.1 YE 16 AWG
VS1 GY 16 AWG
I5086.5 PK 16 AWG
4M2 BU 16 AWG
VS5 RD 16 AWG

-XG1
=V1SF0SF1+.UC71/1

WH BN GN YE GY PK BU RD

-W1
WKC 8T-20-S1587
20m

WH BN GN YE GY PK BU RD

-SF1
SSA-EBM Series E-stop Box
M12
1 2 3 4 5 6 7 8

-SF1 E

-SF2

BANNER
SSA-EBM-12EB1Q8OTBB

=V1SF0SF1+.UC71/1

=V1SF0SF3+.UC73/1

			Date	1/17/2023	Volvo Trucks North America	Valiant TMS	S010 Operating box RB2	Drawing name: =2V09&EFS-EL / = V1SF0SF2 / + V1UC72
			Ed.	MKLEPADLO				
			Appr		P6700 Bodyside LH - Robot Cell 2V09	Scale 1:1		Document type: EFS / Project nr: 22-16150 / Page 1 / 1533
Modification	Date	Name	Original		Replacement of / Replaced by			

0	1	2	3	4	5	6	7	8	9

=V1KF1+V1UC14

S020 Operator Run Button 1
=V1SF0SF3+V1UC73-SF1.1
=V1KF1+.UC14/9.2

S020 Operator Emergency Stop 1 Ch1
=V1SF0SF3+V1UC73-SF1.4
=V1KF1+.UC14/12.2

S020 Operator Emergency Stop 1 Ch2
=V1SF0SF3+V1UC73-SF1.6
=V1KF1+.UC14/12.2

DI ET200SP
I202.4 DI4
5

=V1KF1
-KF14.12

=V1KF1
-KF14.32

F-DI 8 24VDC PROFISAFE ET200SP
I5206.0 DI0 VS0 I5206.4 DI4 VS4
1 9 5 13

I202.4 BUOG 16 AWG
I5206.0 BUOG 16 AWG
VS0 BUOG 16 AWG
I5206.4 BUOG 16 AWG
VS4 BUOG 16 AWG

=V1WC4+.UC14/7.1 / 6L+1
=V1WC4+.UC14/7.1 / 6M1

-KF14.12 5
-KF14.32 1 9 5 13

I202.4 WH 16 AWG
6L+1 BN 16 AWG
I5206.0 YE 16 AWG
VS0 GY 16 AWG
I5206.4 PK 16 AWG
6M1 BU 16 AWG
VS4 RD 16 AWG

-XG1
=V1SF0SF4+.UC74/1.1

WH BN GN YE GY PK BU RD

-W1
WKC 8T-25-S1587
25m

WH BN GN YE GY PK BU RD

-SF1
SSA-EBM Series E-stop Box
M12
1 2 3 4 5 6 7 8

-SF1 E

-SF2

BANNER
SSA-EBM-12EB1Q8OTBB

=V1SF0SF2+.UC72/1

=V1SF0SF4+.UC74/1

			Date	1/17/2023	Volvo Trucks North America	Valiant TMS	S020 Operating box RB1	Drawing name: =2V09&EFS-EL / = V1SF0SF3 / + V1UC73
			Ed.	MKLEPADLO				
			Appr		P6700 Bodyside LH - Robot Cell 2V09	Scale 1:1		Document type: EFS / Project nr: 22-16150 / Page 1 / 1533
Modification	Date	Name	Original		Replacement of / Replaced by			

0	1	2	3	4	5	6	7	8	9

=V1KF1+V1UC14

S020 Operator Run Button 2
=V1SF0SF4+V1UC74-SF1.1
=V1KF1+.UC14/9.2

S020 Operator Emergency Stop 2 Ch1
=V1SF0SF4+V1UC74-SF1.4
=V1KF1+.UC14/12.2

S020 Operator Emergency Stop 2 Ch2
=V1SF0SF4+V1UC74-SF1.6
=V1KF1+.UC14/12.2

DI ET200SP
I202.5 DI5
6

=V1KF1
-KF14.12

=V1KF1
-KF14.32

F-DI 8 24VDC PROFISAFE ET200SP
I5206.1 DI1 VS1 I5206.5 DI5 VS5
2 10 6 14

I202.5 BUOG 16 AWG
I5206.1 BUOG 16 AWG
VS1 BUOG 16 AWG
I5206.5 BUOG 16 AWG
VS5 BUOG 16 AWG

=V1WC4+.UC14/7.2 / 6L+1
=V1WC4+.UC14/7.2 / 6M1

-KF14.12 6
-KF14.32 2 10 6 14

I202.5 WH 16 AWG
6L+1 BN 16 AWG
I5206.1 YE 16 AWG
VS1 GY 16 AWG
I5206.5 PK 16 AWG
6M1 BU 16 AWG
VS5 RD 16 AWG

-XG1
=V1SF0SF3+.UC73/1.1

WH BN GN YE GY PK BU RD

-W1
WKC 8T-20-S1587
20m

WH BN GN YE GY PK BU RD

-SF1
SSA-EBM Series E-stop Box
M12
1 2 3 4 5 6 7 8

-SF1 E

-SF2

BANNER
SSA-EBM-12EB1Q8OTBB

=V1SF0SF3+.UC73/1

=V1U10FQ1+.U10/1

			Date	1/17/2023	Volvo Trucks North America	Valiant TMS	S020 Operating box RB2	Drawing name: =2V09&EFS-EL / = V1SF0SF4 / + V1UC74
			Ed.	MKLEPADLO				
			Appr		P6700 Bodyside LH - Robot Cell 2V09	Scale 1:1		Document type: EFS / Project nr: 22-16150 / Page 1 / 1533
Modification	Date	Name	Original		Replacement of / Replaced by			

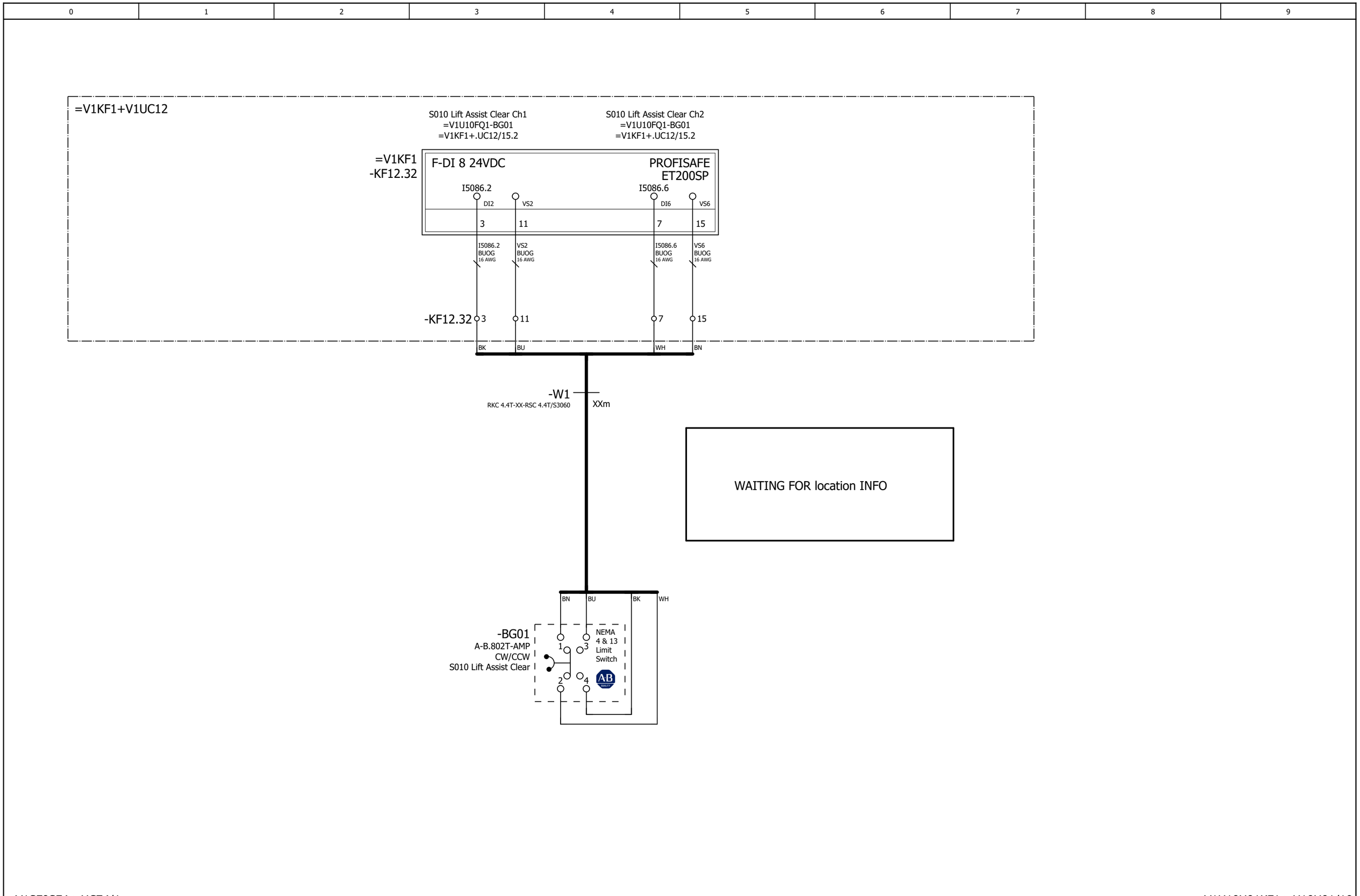

=V1SF0SF4+.UC74/1

=V1U10U01KF1+.U10U01/10

			Date	1/17/2023	Volvo Trucks North America	Valiant TMS	S010 Lift Assist Safety Switch	Drawing name: =2V09&EFS-EL	= V1U10FQ1 + V1U10
			Ed.	MKLEPADLO	P6700 Bodyside LH - Robot Cell 2V09				
			Appr					Document type: EFS	Project nr: 22-16150
Modification	Date	Name	Original		Replacement of / Replaced by	Scale 1:1			Page 1 / 1533

0	1	2	3	4	5	6	7	8	9

=V1WC4+.UC12/26.5
-W1

-W1
RSM RKM 56-25M/S3059
25m

4 3 1 2 PE

=V1KF1+.UC12/2.6
+.UC12-KF100.12-P12

-KF100.12-P12
PROFINET Cable
6XV1840-3AH10

-KF1.11
/10.0
24 VDC

POWER IN 7/8" 4 5 1 2 3
+24V US | +24V UA | 0V UA | 0V US | PE

POWER OUT 7/8" 4 5 1 2 3
+24V US | +24V UA | 0V UA | 0V US | PE

M12 P1 R
BUS IN

M12 P2 R
BUS OUT

MURR ELEKTRONIK stay connected
MVK-MPNIO DI8 DO8 FSU
55339

S010 Dome light	S010 Dome light	Spare	Spare	Spare	Spare	Spare	Spare	Spare	Spare

-KF1.11
/10.0
24 VDC

MURR ELEKTRONIK stay connected
MVK-MPNIO DI8 DO8 FSU

Input 1 Q4900.0	Input 2 Q4900.1	Input 3 Q4900.2	Not used Q4900.3	Q4900.4	Q4900.5	Q4900.6	Q4900.7	I4900.0	I4900.1	I4900.2	I4900.3	I4900.4	I4900.5	I4900.6	I4900.7				

X0: n.c. | DO | 0V UA | DO | FE — 1 4 3 2 5
X1: n.c. | DO | 0V UA | DO | FE — 1 4 3 2 5
X2: n.c. | DO | 0V UA | DO | FE — 1 4 3 2 5
X3: n.c. | DO | 0V UA | DO | FE — 1 4 3 2 5
X4: +24V US | DI | 0V US | DI/DIAG | FE — 1 4 3 2 5
X5: +24V US | DI | 0V US | DI/DIAG | FE — 1 4 3 2 5
X6: +24V US | DI | 0V US | DI/DIAG | FE — 1 4 3 2 5
X7: +24V US | DI | 0V US | DI/DIAG | FE — 1 4 3 2 5

55339

BN BK BU WH

+.U10U01PF1-W1.1
=V1U10U01PF1/2.4

BN BK BU WH

+.U10U01PF1-W1.2
=V1U10U01PF1/2.5

=V1U10FQ1+V1U10/1

=V1U10U01PF1/2

			Date	1/17/2023	Volvo Trucks North America	Valiant TMS	MURR MODULE 8 IN/ 8 OUT	Drawing name: =2V09&EFS-EL	= V1U10U01KF1
			Ed.	MKLEPADLO					+ V1U10U01
			Appr		P6700 Bodyside LH - Robot Cell 2V09	Scale 1:1		Document type: EFS	Project nr: 22-16150
Modification	Date	Name	Original		Replacement of	Replaced by			Page 10 / 1533

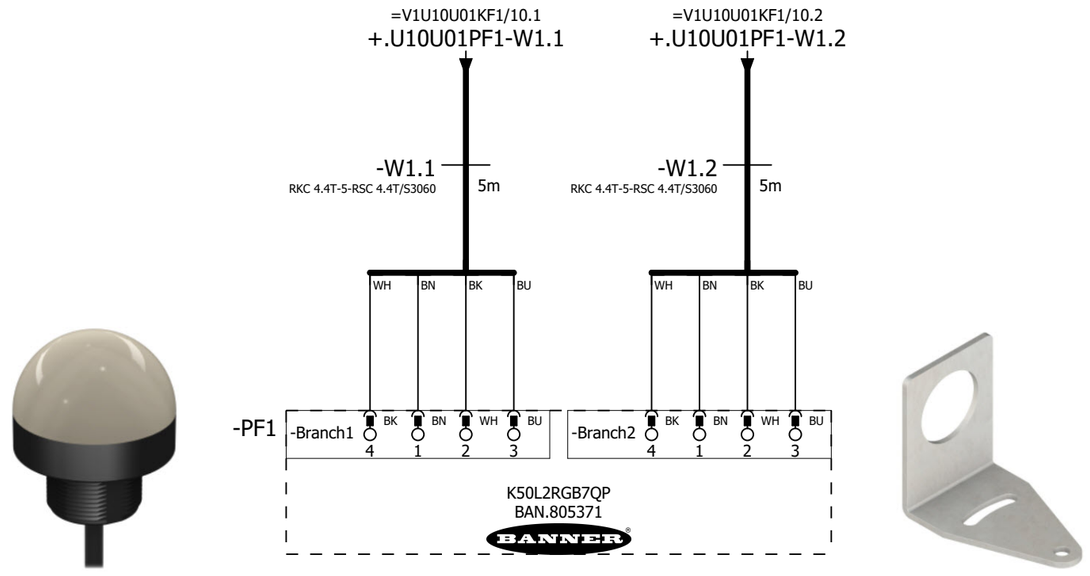

Table 1: Default Color Definition

	Red	Yellow	Green	Cyan	Blue	Magenta	White
Input 1	X	X				X	X
Input 2		X	X	X			X
Input 3				X	X	X	X

0	1	2	3	4	5	6	7	8	9

=V1SF0PG5+.UC54/1.3
-W2.1

-W2.1
RSM RKM 56-5M/S3059
5m

4 3 1 2 PE

=V1KF1+.UC14/2.6
+.UC14-KF100.14-P13

-KF100.14-P13
PROFINET Cable
6XV1840-3AH10

-KF1.11
/10.0
24 VDC

POWER IN 7/8" 4 5 1 2 3
+24V US | +24V UA | 0V UA | 0V US | PE

POWER OUT 7/8" 4 5 1 2 3
+24V US | +24V UA | 0V UA | 0V US | PE

M12 P1 R
BUS IN

M12 P2 R
BUS OUT

MURR ELEKTRONIK stay connected
MVK-MPNIO DI8 DO8 FSU
55339

S020 Dome light		S020 Dome light		Spare		Spare		Spare		Spare		Spare		Spare					
	S020 Dome light		S020 Dome light		Spare		Spare		Spare		Spare		Spare		Spare				
Input 1 Q4902.0	Input 2 Q4902.1	Input 3 Q4902.2	Not used Q4902.3	Q4902.4	Q4902.5	Q4902.6	Q4902.7	I4902.0	I4902.1	I4902.2	I4902.3	I4902.4	I4902.5	I4902.6	I4902.7				

-KF1.11
/10.0
24 VDC

MURR ELEKTRONIK stay connected
MVK-MPNIO DI8 DO8 FSU

X0	X1	X2	X3	X4	X5	X6	X7
n.c. 1	n.c. 1	n.c. 1	n.c. 1	+24V US 1	+24V US 1	+24V US 1	+24V US 1
DO 4	DO 4	DO 4	DO 4	DI 4	DI 4	DI 4	DI 4
0V UA 3	0V UA 3	0V UA 3	0V UA 3	0V US 3	0V US 3	0V US 3	0V US 3
DO 2	DO 2	DO 2	DO 2	DI/DIAG 2	DI/DIAG 2	DI/DIAG 2	DI/DIAG 2
FE 5	FE 5	FE 5	FE 5	FE 5	FE 5	FE 5	FE 5

55339

BN BK BU WH

BN BK BU WH

+.U20U01PF1-W1.1
=V1U20U01PF1/2.4

+.U20U01PF1-W1.2
=V1U20U01PF1/2.5

=V1U10U01PF1+.U10U01/2

=V1U20U01PF1/2

			Date	1/17/2023	Volvo Trucks North America	Valiant TMS	MURR MODULE 8 IN/ 8 OUT	Drawing name: =2V09&EFS-EL	= V1U20U01KF1
			Ed.	MKLEPADLO					+ V1U20U01
			Appr		P6700 Bodyside LH - Robot Cell 2V09	Scale 1:1		Document type: EFS	Project nr: 22-16150
Modification	Date	Name	Original		Replacement of	Replaced by			Page 10 / 1533

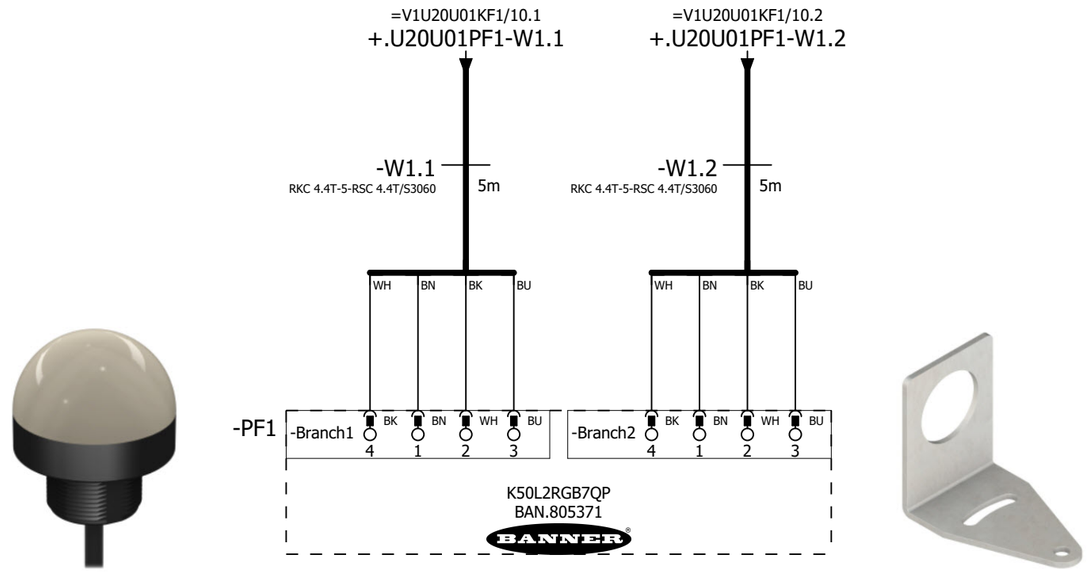

Table 1: Default Color Definition

	Red	Yellow	Green	Cyan	Blue	Magenta	White
Input 1	X	X				X	X
Input 2		X	X	X			X
Input 3				X	X	X	X

=V1UN1KF1/10.5
-XG1/2

-W1
RKC 4.4T-0.5-RSC 4.4T/S3060
0.5m

BN BU BK WH

-XG1/2 P1 1 3 4 2 VB2-FSM 4.4/2FKM 4/S3450 TURCK

J1 1 3 4 2 J2 1 3 4 2

BN BU BK WH

-W1.1
RKC 4.4T-2-RSC 4.4T/S3060
2m

-W1.2
RKC 4.4T-5-RSC 4.4T/S3060
5m

BN BU BK WH

-BG01
Sn = 600 mm
BANNER
73093
BK pnp
4

-BG02
Sn = 20 mm
TURCK
1627297
A pnp
4

=V1UN1
-BG01
Common Part
Present

=V1UN1
-BG02
Close Position Pull
Out Cart Switch

=V1UN1KF1/10.6
-BG03

-W2
RKC 4.4T-5-RSC 4.4T/S3060
5 m

BN BU BK WH

-BG03
Sn = 20 mm
TURCK
1627297
A pnp
4

=V1UN1
-BG03
Close Position Pull
Out Cart Switch

=V1UN1KF1/10.7
-BG04

-W3
RKC 4.4T-5-RSC 4.4T/S3060
5m

BN BU BK WH

-BG04
Sn = 5 mm
TURCK
1635291
A pnp
4

=V1UN1
-BG04
Pullout Cart Lock
Pin In Position

=V1U20U01PF1+.U20U01/2

=V1UN1FQ1/1

			Date	1/17/2023	Volvo Trucks North America	Valiant TMS	SENSORS	Drawing name: =2V09&EFS-EL	= V1UN1BG0
			Ed.	MKLEPADLO					+ V1UN1
			Appr		P6700 Bodyside LH - Robot Cell 2V09			Document type: EFS	Project nr: 22-16150
Modification	Date	Name	Original		Replacement of / Replaced by	Scale 1:1			Page 1 / 1533

0	1	2	3	4	5	6	7	8	9

=V1KF1+V1UC15

S070 Lift Assist Clear Ch1
=V1UN1FQ1-BG01
=V1KF1+.UC15/11.2

S070 Lift Assist Clear Ch2
=V1UN1FQ1-BG01
=V1KF1+.UC15/11.2

=V1KF1
-KF15.31

F-DI 8 24VDC

PROFISAFE
ET200SP

I5230.0 DI0 VS0 I5230.4 DI4 VS4

1 9 5 13

I5230.0 BUOG 16 AWG
VS0 BUOG 16 AWG
I5230.4 BUOG 16 AWG
VS4 BUOG 16 AWG

-KF15.31 1 9 5 13

BK BU WH BN

-W1
RKC 4.4T-XX-RSC 4.4T/S3060
XXm

WAITING FOR location INFO

BN BU BK WH

-BG01
A-B.802T-AMP
CW/CCW
S070 Lift Assist Clear

1 3 2 4

NEMA
4 & 13
Limit
Switch

=V1UN1BG0/1

=V1UN1KF1/10

			Date	1/17/2023	Volvo Trucks North America	Valiant TMS	S070 Lift Assist Safety Switch	Drawing name: =2V09&EFS-EL	= V1UN1FQ1
			Ed.	MKLEPADLO					+ V1UN1
			Appr		P6700 Bodyside LH - Robot Cell 2V09	Scale 1:1		Document type: EFS	Project nr: 22-16150
Modification	Date	Name	Original		Replacement of	Replaced by			Page 1 / 1533

0	1	2	3	4	5	6	7	8	9

=V1WC4+.UC15/20.5
-W1

-W1
RSM RKM 56-30M/S3059
30m

4 3 1 2 PE

=V1KF1+.UC15/2.6
+.UC15-KF100.15-P11

-KF100.15-P11
PROFINET Cable
6XV1840-3AH10
30 m

-KF1.11
/10.0
24 VDC

POWER IN 7/8" 4 5 1 2 3
+24V US | +24V UA | 0V UA | 0V US | PE

POWER OUT 7/8" 4 5 1 2 3
+24V US | +24V UA | 0V UA | 0V US | PE

M12 P1 R
BUS IN

M12 P2 R
BUS OUT

MURR ELEKTRONIK stay connected
MVK-MPNIO DI8 DO8 FSU
55339

	S070 Dome Light	S070 Dome Light	Spare	Spare	Close Positon Pull Out Cart Switch	Spare	Spare	Spare	
S070 Dome Light	S070 Dome Light	Spare	Spare	Common Part Present	Close Positon Pull Out Cart Switch	Pullout Cart Lock Pin In Position	Spare		

-KF1.11
/10.0
24 VDC

MURR ELEKTRONIK stay connected
MVK-MPNIO DI8 DO8 FSU

	Input 1	Input 2	Input 3	Not Used					V1UN1-BG02									
	Q4904.1	Q4904.0	Q4904.3	Q4904.2	Q4904.5	Q4904.4	Q4904.7	Q4904.6	V1UN1-BG01 I4905.1	I4905.0	V1UN1-BG03 I4905.3	I4905.2	V1UN1-BG04 I4905.5	I4905.4	I4905.7	I4905.6		

+24V US | DI | 0V US | DI | FE

X0 1 4 3 2 5 | X1 1 4 3 2 5 | X2 1 4 3 2 5 | X3 1 4 3 2 5 | X4 1 4 3 2 5 | X5 1 4 3 2 5 | X6 1 4 3 2 5 | X7 1 4 3 2 5

55339

BN | BK | BU | WH

+.U70U01PF1-W1.1
=V1UN1PF1/2.4

+.U70U01PF1-W1.2
=V1UN1PF1/2.5

-XG1/2
=V1UN1BG0/1.1

-BG03
=V1UN1BG0/1.4

-BG04
=V1UN1BG0/1.6

=V1UN1FQ1/1

=V1UN1PF1/2

			Date	1/17/2023	Volvo Trucks North America	Valiant TMS	MURR MODULE 8 IN/ 8 OUT	Drawing name: =2V09&EFS-EL	= V1UN1KF1
			Ed.	MKLEPADLO					+ V1UN1
			Appr		P6700 Bodyside LH - Robot Cell 2V09	Scale 1:1		Document type: EFS	Project nr: 22-16150
Modification	Date	Name	Original		Replacement of	Replaced by			Page 10 / 1533

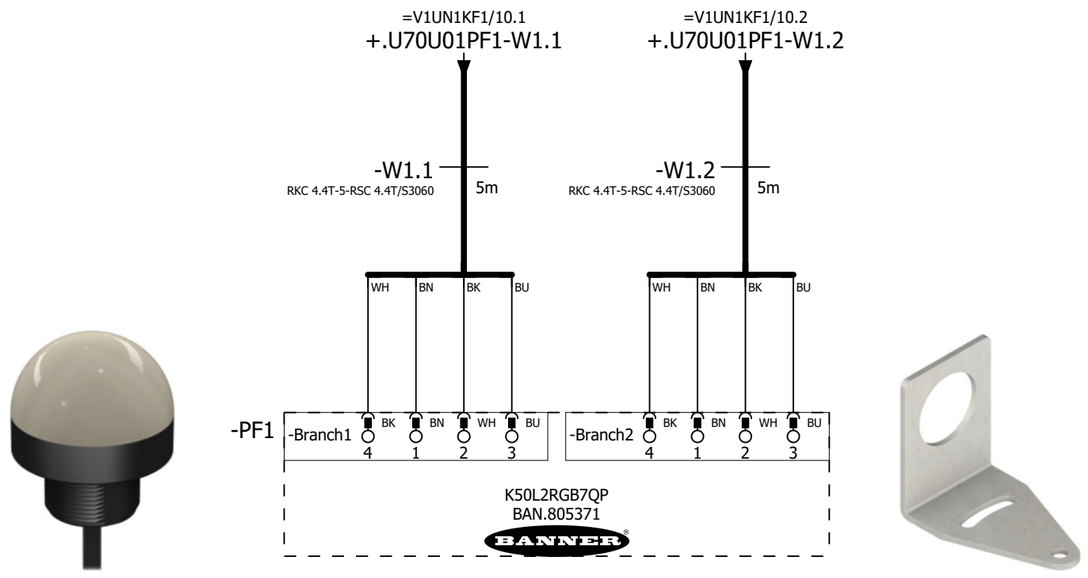

Table 1: Default Color Definition

	Red	Yellow	Green	Cyan	Blue	Magenta	White
Input 1	X	X				X	X
Input 2		X	X	X			X
Input 3				X	X	X	X

=V1UN1KF1/10

=V1UQ51BG0+.UQ51/1

			Date	1/17/2023	Volvo Trucks North America	Valiant TMS	Station Dome Light	Drawing name: =2V09&EFS-EL	= V1UN1PF1
			Ed.	MKLEPADLO					+ V1UN1
			Appr		P6700 Bodyside LH - Robot Cell 2V09	Scale 1:1		Document type: EFS	Project nr: 22-16150	Page 2
Modification	Date	Name	Original		Replacement of	Replaced by				1533

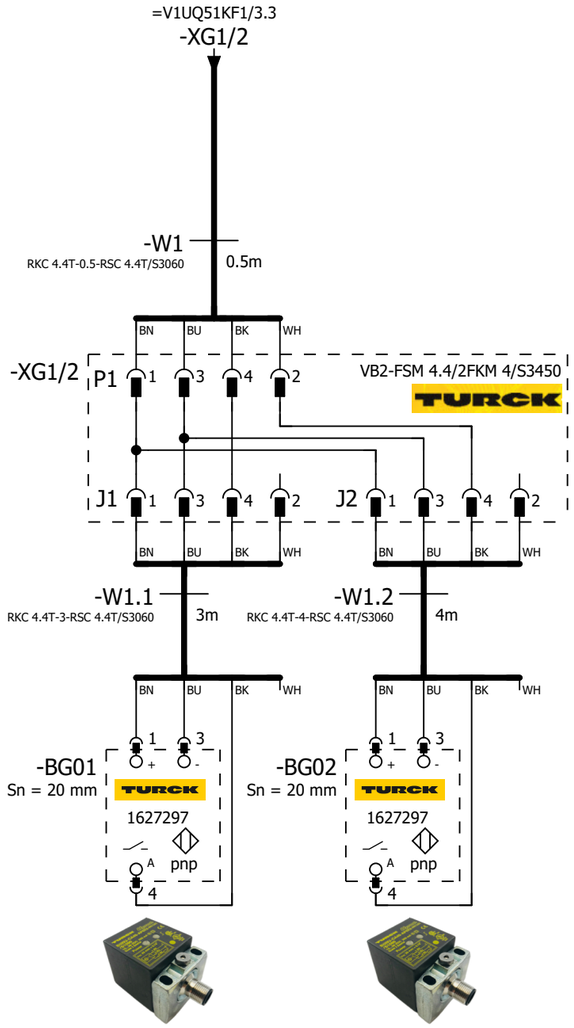

=V1UQ51 -BG01 Day Cab 78522975	=V1UQ51 -BG02 Day Cab 78522975

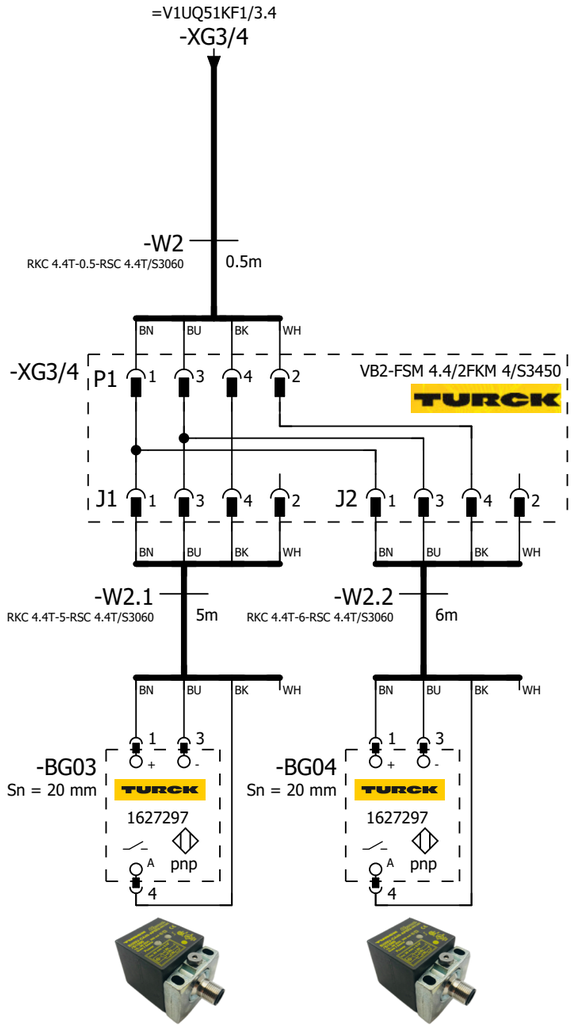

=V1UQ51 -BG03 Sleeper L230 78521360	=V1UQ51 -BG04 Sleeper L290 78522139

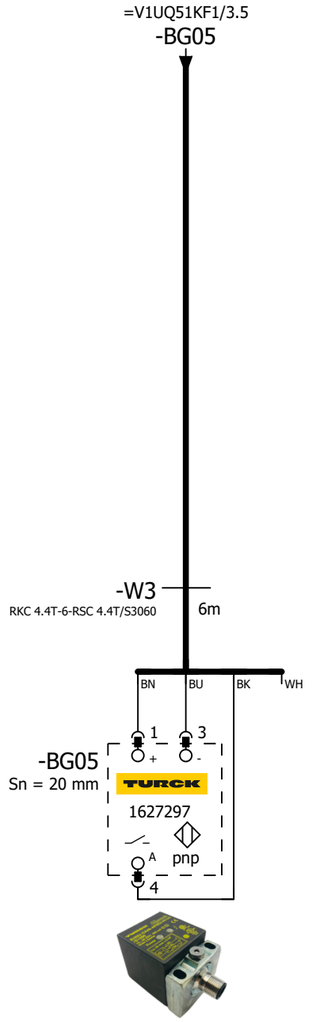

=V1UQ51 -BG05 Sleeper L320 78519674

=V1UN1PF1+.UN1/2

=V1UQ51KF1/1

			Date	1/17/2023	Volvo Trucks North America	Valiant TMS	SENSORS	Drawing name: =2V09&EFS-EL	= V1UQ51BG0
			Ed.	MKLEPADLO					+ V1UQ51
			Appr		P6700 Bodyside LH - Robot Cell 2V09			Document type: EFS	Project nr: 22-16150
Modification	Date	Name	Original		Replacement of	Replaced by	Scale 1:1		Page 1 / 1533

0	1	2	3	4	5	6	7	8	9

=V1WC4+.UC15/19.5 / W1

=V1KF1+.UC15/2.6 / +.UC15-KF100.15-P10

-W1
RSM RKM 56-25M/S3059
25m

-KF100.15-P10
PROFINET Cable
6XV1840-3AH10
25 m

-KF1

X20 M12, 7/8" 1 2 PE 4 5
0V_VAL / OUT
0V_EL / SEN
FE
24V_EL / SEN
24V_VAL / OUT

M12 -TP1
M12 -TP2

ON
OFF
1 2 1 2

FESTO
Bus node + Interlinking block
548755 + 550208

I2275.0	DI 0 X1:4	V1UQ51UQ1.1-BGR	Shot Pin 1 (RESET)
I2275.1	DI 1 X1:2	V1UQ51UQ1.1-BGS	Shot Pin 1 (SET)
I2275.2	DI 2 X2:4	V1UQ51UQ2.1-BGR	Shot Pin 2 (RESET)
I2275.3	DI 3 X2:2	V1UQ51UQ2.1-BGS	Shot Pin 2 (SET)
I2275.4	DI 4 X3:4	V1UQ51UQ3.1-BGR	Shot Pin 3 (RESET)
I2275.5	DI 5 X3:2	V1UQ51UQ3.1-BGS	Shot Pin 3 (SET)
I2275.6	DI 6 X4:4	V1UQ51UQ4.1-BGR	Clamps 4 (RESET)
I2275.7	DI 7 X4:2	V1UQ51UQ4.1-BGS	Clamps 4 (SET)
I2276.0	DI 8 X5:4	V1UQ51UQ4.2-BGR	Clamps 4 (RESET)
I2276.1	DI 9 X5:2	V1UQ51UQ4.2-BGS	Clamps 4 (SET)
I2276.2	DI 10 X6:4	V1UQ51UQ5.1-BGR	Clamps 5 (RESET)
I2276.3	DI 11 X6:2	V1UQ51UQ5.1-BGS	Clamps 5 (SET)
I2276.4	DI 12 X7:4	V1UQ51UQ5.2-BGR	Clamps 5 (RESET)
I2276.5	DI 13 X7:2	V1UQ51UQ5.2-BGS	Clamps 5 (SET)
I2276.6	DI 14 X8:4	V1UQ51UQ6.1-BGR	Clamp 6 (RESET)
I2276.7	DI 15 X8:2	V1UQ51UQ6.1-BGS	Clamp 6 (SET)

-KF1.11

FESTO
CPX-M-AB-8-M12X2-5POL
549335

X1 M12 1 2 3 4 5 — 24V DI 1 0V DI 0 FE — BN WH BU BK
X2 M12 1 2 3 4 5 — 24V DI 3 0V DI 2 FE — BN WH BU BK
X3 M12 1 2 3 4 5 — 24V DI 5 0V DI 4 FE — BN WH BU BK
X4 M12 1 2 3 4 5 — 24V DI 7 0V DI 6 FE — BN WH BU BK
X5 M12 1 2 3 4 5 — 24V DI 9 0V DI 8 FE — BN WH BU BK
X6 M12 1 2 3 4 5 — 24V DI 11 0V DI 10 FE — BN WH BU BK
X7 M12 1 2 3 4 5 — 24V DI 13 0V DI 12 FE — BN WH BU BK
X8 M12 1 2 3 4 5 — 24V DI 15 0V DI 14 FE — BN WH BU BK

+V1UQ51UQ1.1-W1
=V1UQ51UQ1+.UQ51UQ1/1.1

+V1UQ51UQ2.1-W1
=V1UQ51UQ2+.UQ51UQ2/1.1

+V1UQ51UQ3.1-W1
=V1UQ51UQ3+.UQ51UQ3/1.1

+V1UQ51UQ4.1-W1
=V1UQ51UQ4+.UQ51UQ4/1.1

+V1UQ51UQ4.2-W1
=V1UQ51UQ4+.UQ51UQ4/1.2

+V1UQ51UQ5.1-W1
=V1UQ51UQ5+.UQ51UQ5/1.1

+V1UQ51UQ5.2-W1
=V1UQ51UQ5+.UQ51UQ5/1.2

+V1UQ51UQ6.1-W1
=V1UQ51UQ6+.UQ51UQ6/1.1

=V1UQ51BG0/1

2

			Date	1/17/2023	Volvo Trucks North America	Valiant TMS	CONNECTING MOD. FOR VTSA MANIFOLD	Drawing name: =2V09&EFS-EL	= V1UQ51KF1
			Ed.	MKLEPADLO					+ V1UQ51
			Appr		P6700 Bodyside LH - Robot Cell 2V09	Scale 1:1		Document type: EFS	Project nr: 22-16150
Modification	Date	Name	Original		Replacement of	Replaced by			Page 1 / 1533

0	1	2	3	4	5	6	7	8	9

-KF1.12

FESTO

CPX-M-AB-8-M12X2-5POL

549335

I2277.0	DI 0 X1:4	V1UQ51UQ7.1-BGR	Clamps 7 (RESET)
I2277.1	DI 1 X1:2	V1UQ51UQ7.1-BGS	Clamps 7 (SET)
I2277.2	DI 2 X2:4	V1UQ51UQ7.2-BGR	Clamps 7 (RESET)
I2277.3	DI 3 X2:2	V1UQ51UQ7.2-BGS	Clamps 7 (SET)
I2277.4	DI 4 X3:4	V1UQ51UQ7.3-BGR	Clamps 7 (RESET)
I2277.5	DI 5 X3:2	V1UQ51UQ7.3-BGS	Clamps 7 (SET)
I2277.6	DI 6 X4:4	V1UQ51UQ7.4-BGR	Clamps 7 (RESET)
I2277.7	DI 7 X4:2	V1UQ51UQ7.4-BGS	Clamps 7 (SET)
I2278.0	DI 8 X5:4	V1UQ51UQ7.5-BGR	Clamps 7 (RESET)
I2278.1	DI 9 X5:2	V1UQ51UQ7.5-BGS	Clamps 7 (SET)
I2278.2	DI 10 X6:4	V1UQ51UQ8.1-BGR	Clamp 8 (RESET)
I2278.3	DI 11 X6:2	V1UQ51UQ8.1-BGS	Clamp 8 (SET)
I2278.4	DI 12 X7:4	V1UQ51UQ9.1-BGR	Clamps 9 (RESET)
I2278.5	DI 13 X7:2	V1UQ51UQ9.1-BGS	Clamps 9 (SET)
I2278.6	DI 14 X8:4	V1UQ51UQ9.2-BGR	Clamps 9 (RESET)
I2278.7	DI 15 X8:2	V1UQ51UQ9.2-BGS	Clamps 9 (SET)

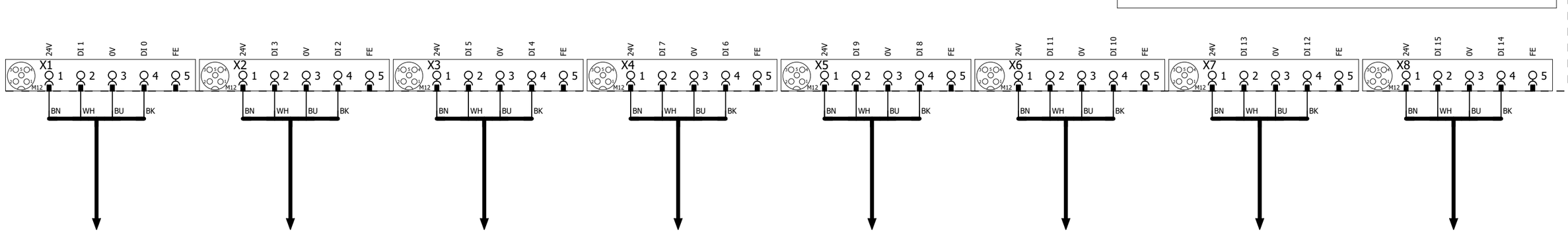

1

3

			Date	1/17/2023	Volvo Trucks North America	Valiant TMS	I/O MOD. DI16 (8 x M12) FOR VTSA-F	Drawing name: =2V09&EFS-EL	= V1UQ51KF1
			Ed.	MKLEPADLO					+ V1UQ51
			Appr		P6700 Bodyside LH - Robot Cell 2V09	Scale 1:1		Document type: EFS	Project nr: 22-16150
Modification	Date	Name	Original		Replacement of / Replaced by				Page 2 / 1533

0	1	2	3	4	5	6	7	8	9

I2279.0	DI 0 X1:4	V1UQ51UQ10.1-BGR	Clamps 10 (RESET)
I2279.1	DI 1 X1:2	V1UQ51UQ10.1-BGS	Clamps 10 (SET)
I2279.2	DI 2 X2:4	V1UQ51UQ10.2-BGR	Clamps 10 (RESET)
I2279.3	DI 3 X2:2	V1UQ51UQ10.2-BGS	Clamps 10 (SET)
I2279.4	DI 4 X3:4	V1UQ51-BG01	Sensor Day Cab 78522975
I2279.5	DI 5 X3:2	V1UQ51-BG02	Sensor Day Cab 78522975
I2279.6	DI 6 X4:4	V1UQ51-BG03	Sensor Sleeper L230 78521360
I2279.7	DI 7 X4:2	V1UQ51-BG04	Sensor Sleeper L290 78522139
I2280.0	DI 8 X5:4	V1UQ51-BG05	Sensor Sleeper L320 78519674
I2280.1	DI 9 X5:2	I2280.1	Spare
I2280.2	DI 10 X6:4	I2280.2	Spare
I2280.3	DI 11 X6:2	I2280.3	Spare
I2280.4	DI 12 X7:4	I2280.4	Spare
I2280.5	DI 13 X7:2	I2280.5	Spare
I2280.6	DI 14 X8:4	I2280.6	Spare
I2280.7	DI 15 X8:2	I2280.7	Spare

-KF1.13

FESTO

CPX-M-AB-8-M12X2-5POL

549335

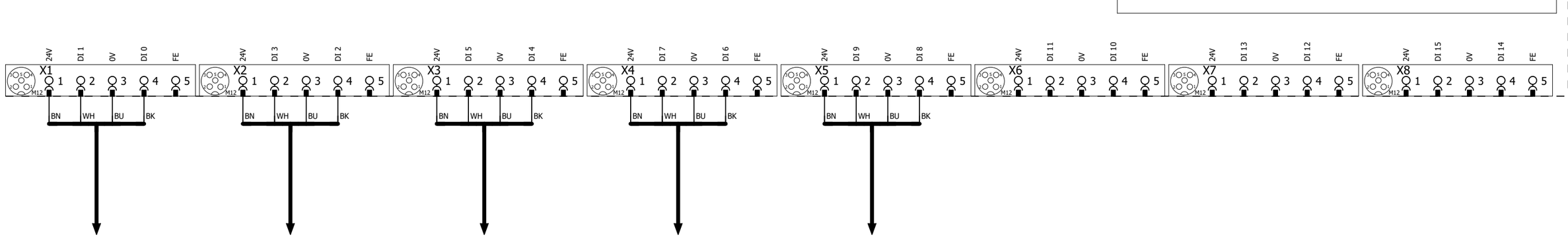

			Date	1/17/2023	Volvo Trucks North America	Valiant TMS	I/O MOD. DI16 (8 x M12) FOR VTSA-F	Drawing name: =2V09&EFS-EL	= V1UQ51KF1
			Ed.	MKLEPADLO					+ V1UQ51
			Appr		P6700 Bodyside LH - Robot Cell 2V09			Document type: EFS	Project nr: 22-16150
Modification	Date	Name	Original		Replacement of / Replaced by	Scale 1:1			Page 3 / 1533

-KF1 -KF1.11 -KF1.12 -KF1.13 -KF1.20 -KF1.21 -KF1.22 -KF1.23 -KF1.24 -KF1.25 -KF1.26 -KF1.27

M1 M2 M3 M4 M5

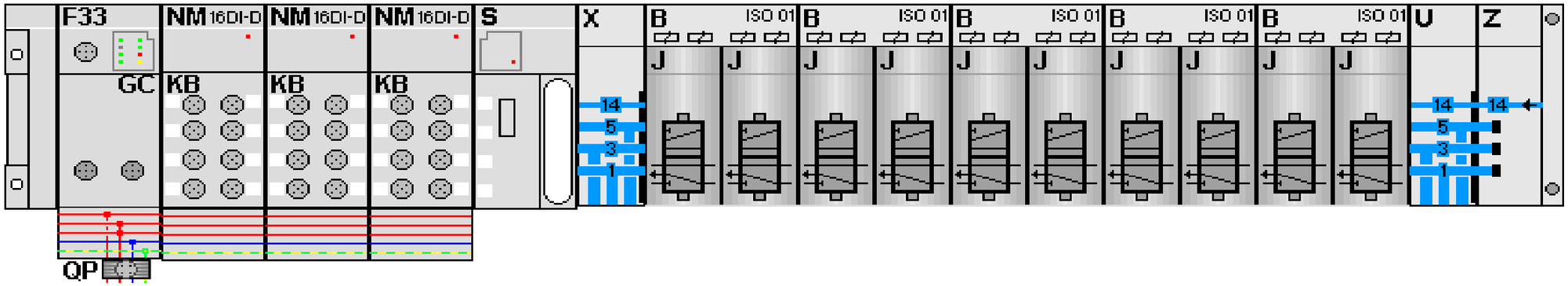

-KF1.21
=V1UQ51UQ1+.UQ51UQ1/1.3
=V1UQ51UQ2+.UQ51UQ2/1.3

FESTO

=V1UQ51UQ1+.UQ51UQ1/1.4	Q2275.0 DO 0 1.1	-QN1.1_Q	Shot Pin 1 (RST)
=V1UQ51UQ1+.UQ51UQ1/1.4	Q2275.1 DO 1 1.2	-QN1.2_Q	Shot Pin 1 (SET)
=V1UQ51UQ2+.UQ51UQ2/1.4	Q2275.2 DO 2 2.1	-QN2.1_Q	Shot Pin 2 (RST)
=V1UQ51UQ2+.UQ51UQ2/1.4	Q2275.3 DO 3 2.2	-QN2.2_Q	Shot Pin 2 (SET)

-KF1.22
=V1UQ51UQ3+.UQ51UQ3/1.3
=V1UQ51UQ4+.UQ51UQ4/1.3

FESTO

=V1UQ51UQ3+.UQ51UQ3/1.4	Q2275.4 DO 0 1.1	-QN3.1_Q	Shot Pin 3 (RST)
=V1UQ51UQ3+.UQ51UQ3/1.4	Q2275.5 DO 1 1.2	-QN3.2_Q	Shot Pin 3 (SET)
=V1UQ51UQ4+.UQ51UQ4/1.4	Q2275.6 DO 2 2.1	-QN4.1_Q	Clamps 4 (RST)
=V1UQ51UQ4+.UQ51UQ4/1.4	Q2275.7 DO 3 2.2	-QN4.2_Q	Clamps 4 (SET)

-KF1.23
=V1UQ51UQ5+.UQ51UQ5/1.3
=V1UQ51UQ6+.UQ51UQ6/1.3

FESTO

=V1UQ51UQ5+.UQ51UQ5/1.4	Q2276.0 DO 0 1.1	-QN5.1_Q	Clamps 5 (RST)
=V1UQ51UQ5+.UQ51UQ5/1.4	Q2276.1 DO 1 1.2	-QN5.2_Q	Clamps 5 (SET)
=V1UQ51UQ6+.UQ51UQ6/1.4	Q2276.2 DO 2 2.1	-QN6.1_Q	Clamp 6 (RST)
=V1UQ51UQ6+.UQ51UQ6/1.4	Q2276.3 DO 3 2.2	-QN6.2_Q	Clamp 6 (SET)

-KF1.24
=V1UQ51UQ7+.UQ51UQ7/1.3
=V1UQ51UQ8+.UQ51UQ8/1.3

FESTO

=V1UQ51UQ7+.UQ51UQ7/1.4	Q2276.4 DO 0 1.1	-QN7.1_Q	Clamp 7 (RST)
=V1UQ51UQ7+.UQ51UQ7/1.4	Q2276.5 DO 1 1.2	-QN7.2_Q	Clamps 7 (SET)
=V1UQ51UQ8+.UQ51UQ8/1.4	Q2276.6 DO 2 2.1	-QN8.1_Q	Clamp 8 (RST)
=V1UQ51UQ8+.UQ51UQ8/1.4	Q2276.7 DO 3 2.2	-QN8.2_Q	Clamp 8 (SET)

-KF1.25
=V1UQ51UQ9+.UQ51UQ9/1.3
=V1UQ51UQ10+.UQ51UQ10/1.3

FESTO

=V1UQ51UQ9+.UQ51UQ9/1.4	Q2277.0 DO 0 1.1	-QN9.1_Q	Clamps 9 (RST)
=V1UQ51UQ9+.UQ51UQ9/1.4	Q2277.1 DO 1 1.2	-QN9.2_Q	Clamps 9 (SET)
=V1UQ51UQ10+.UQ51UQ10/1.4	Q2277.2 DO 2 2.1	-QN10.1_Q	Clamps 10 (RST)
=V1UQ51UQ10+.UQ51UQ10/1.4	Q2277.3 DO 3 2.2	-QN10.2_Q	Clamps 10 (SET)

			Date	1/17/2023	Volvo Trucks North America	Valiant TMS	CONNECTING MOD. FOR FESTO DQ	Drawing name: =2V09&EFS-EL	= V1UQ51KF1	
			Ed.	MKLEPADLO					+ V1UQ51	
			Appr		P6700 Bodyside LH - Robot Cell 2V09	Scale 1:1		Document type: EFS	Project nr: 22-16150	Page 4
Modification	Date	Name	Original		Replacement of	Replaced by				1533

0	1	2	3	4	5	6	7	8	9

=V1UQ51KF1
+.UQ51

-KF1.21
=V1UQ51KF1+V1UQ51/4.1

Shot Pin 1 (RST)
=V1UQ51KF1
+V1UQ51
-QN1.1_Q
=V1UQ51KF1
+V1UQ51/4.3
Q2275.0

Shot Pin 1 (SET)
=V1UQ51KF1
+V1UQ51
-QN1.2_Q
=V1UQ51KF1
+V1UQ51/4.3
Q2275.1

1.1
Pneumatic Valve

1.2
Pneumatic Valve

-QN1
.1
.2

=V1UQ51KF1+V1UQ51/1.1
+.UQ51UQ1.1-W1

-W1
RKC 4.4T-2-RSC 4.4T/S3060
2m

BN BU BK WH

-BGS/R
1 3
\+ -
WELKER
WWS001A
A2 A1
2 4

Shot Pin 1

=V1UQ51UQ1.1
+.UQ51UQ1.1
-UQ1.1

=V1UQ51
-UQ1.1-BGS/R
Shot Pin 1

=V1UQ51KF1+V1UQ51/4

=V1UQ51UQ2+.UQ51UQ2/1

			Date	1/17/2023	Volvo Trucks North America	Valiant TMS	FESTO DQ CONNECTION QN1	Drawing name: =2V09&EFS-EL	= V1UQ51UQ1
			Ed.	MKLEPADLO					+ V1UQ51UQ1
			Appr		P6700 Bodyside LH - Robot Cell 2V09			Document type: EFS	Project nr: 22-16150
Modification	Date	Name	Original		Replacement of	Replaced by	Scale 1:1		Page 1 / 1533

0	1	2	3	4	5	6	7	8	9

=V1UQ51KF1
+.UQ51

-KF1.21
=V1UQ51KF1+V1UQ51/4.1

Shot Pin 2 (RST)
=V1UQ51KF1
+V1UQ51
-QN2.1_Q
=V1UQ51KF1
+V1UQ51/4.3
Q2275.2

Shot Pin 2 (SET)
=V1UQ51KF1
+V1UQ51
-QN2.2_Q
=V1UQ51KF1
+V1UQ51/4.3
Q2275.3

2.1
Pneumatic Valve

2.2
Pneumatic Valve

-QN2 .1 .2

=V1UQ51KF1+V1UQ51/1.2
+.UQ51UQ2.1-W1

-W1
RKC 4.4T-3-RSC 4.4T/S3060
3m

BN BU BK WH

-BGS/R
1 3
+ -

WELKER
WWS001A

A2 A1
2 4

Shot Pin 2

=V1UQ51UQ2.1
+.UQ51UQ2.1
-UQ2.1

=V1UQ51
-UQ2.1-BGS/R
Shot Pin 2

=V1UQ51UQ1+.UQ51UQ1/1

=V1UQ51UQ3+.UQ51UQ3/1

			Date	1/17/2023	Volvo Trucks North America	Valiant TMS	FESTO DQ CONNECTION QN2	Drawing name: =2V09&EFS-EL	= V1UQ51UQ2
			Ed.	MKLEPADLO					+ V1UQ51UQ2
			Appr		P6700 Bodyside LH - Robot Cell 2V09			Document type: EFS	Project nr: 22-16150
Modification	Date	Name	Original		Replacement of	Replaced by	Scale 1:1		Page 1 / 1533

0	1	2	3	4	5	6	7	8	9

=V1UQ51KF1
+V1UQ51

-KF1.22
=V1UQ51KF1+V1UQ51/4.1

Shot Pin 3 (RST)	Shot Pin 3 (SET)
=V1UQ51KF1	=V1UQ51KF1
+V1UQ51	+V1UQ51
-QN3.1_Q	-QN3.2_Q
=V1UQ51KF1	=V1UQ51KF1
+V1UQ51/4.3	+V1UQ51/4.3
Q2275.4	Q2275.5
1.1 Pneumatic Valve	1.2 Pneumatic Valve

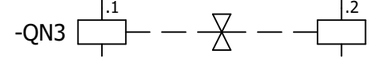

=V1UQ51KF1+V1UQ51/1.3
+V1UQ51UQ3.1-W1

-W1
RKC 4.4T-5-RSC 4.4T/S3060
5m

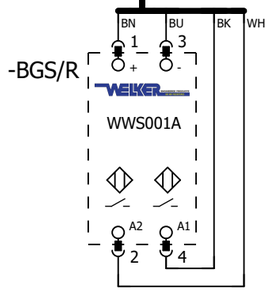

Shot Pin 3

=V1UQ51UQ3.1
+.UQ51UQ3.1
-UQ3.1

=V1UQ51 -UQ3.1-BGS/R Shot Pin 3

=V1UQ51UQ2+.UQ51UQ2/1

=V1UQ51UQ4+.UQ51UQ4/1

			Date	1/17/2023	Volvo Trucks North America	Valiant TMS	FESTO DQ CONNECTION QN3	Drawing name: =2V09&EFS-EL	= V1UQ51UQ3
			Ed.	MKLEPADLO					+ V1UQ51UQ3
			Appr		P6700 Bodyside LH - Robot Cell 2V09			Document type: EFS	Project nr: 22-16150
Modification	Date	Name	Original		Replacement of	Replaced by	Scale 1:1		Page 1 / 1533

0	1	2	3	4	5	6	7	8	9

=V1UQ51KF1
+V1UQ51

-KF1.22
=V1UQ51KF1+V1UQ51/4.1

Clamps 4 (RST)
=V1UQ51KF1
+V1UQ51
-QN4.1_Q
=V1UQ51KF1
+V1UQ51/4.3
Q2275.6

Clamps 4 (SET)
=V1UQ51KF1
+V1UQ51
-QN4.2_Q
=V1UQ51KF1
+V1UQ51/4.3
Q2275.7

2.1 Pneumatic Valve

2.2 Pneumatic Valve

-QN4 .1 .2

=V1UQ51KF1+V1UQ51/1.4
+V1UQ51UQ4.1-W1

-W1
RKC 4.4T-6-RSC 4.4T/S3060
6m

BN BU BK WH

-BGS/R
1 3
+ -
TÜNKERS
1324638
A2 A1
2 4

Clamps 4

=V1UQ51UQ4.1
+.UQ51UQ4.1
-UQ4.1

=V1UQ51
-UQ4.1-BGS/R
Clamps 4

=V1UQ51KF1+V1UQ51/1.5
+V1UQ51UQ4.2-W1

-W1
RKC 4.4T-5-RSC 4.4T/S3060
5m

BN BU BK WH

-BGS/R
1 3
+ -
TÜNKERS
1324638
A2 A1
2 4

Clamps 4

=V1UQ51UQ4.2
+.UQ51UQ4.2
-UQ4.2

=V1UQ51
-UQ4.2-BGS/R
Clamps 4

=V1UQ51UQ3+.UQ51UQ3/1

=V1UQ51UQ5+.UQ51UQ5/1

			Date	1/17/2023	Volvo Trucks North America	Valiant TMS	FESTO DQ CONNECTION QN4	Drawing name: =2V09&EFS-EL	= V1UQ51UQ4
			Ed.	MKLEPADLO					+ V1UQ51UQ4
			Appr		P6700 Bodyside LH - Robot Cell 2V09	Scale 1:1		Document type: EFS	Project nr: 22-16150
Modification	Date	Name	Original		Replacement of	Replaced by			Page 1 / 1533

0	1	2	3	4	5	6	7	8	9

=V1UQ51KF1
+V1UQ51

-KF1.23
=V1UQ51KF1+V1UQ51/4.1

Clamps 5 (RST)	Clamps 5 (SET)
=V1UQ51KF1	=V1UQ51KF1
+V1UQ51	+V1UQ51
-QN5.1_Q	-QN5.2_Q
=V1UQ51KF1	=V1UQ51KF1
+V1UQ51/4.3	+V1UQ51/4.3
Q2276.0	Q2276.1
1.1 Pneumatic Valve	1.2 Pneumatic Valve

-QN5 .1 .2

=V1UQ51KF1+V1UQ51/1.6
+V1UQ51UQ5.1-W1

-W1
RKC 4.4T-7-RSC 4.4T/S3060
7 m

BN BU BK WH
1 3
-BGS/R
TÜNKERS
1324638
A2 A1
2 4

Clamps 5
=V1UQ51UQ5.1
+.UQ51UQ5.1
-UQ5.1

=V1UQ51
-UQ5.1-BGS/R
Clamps 5

=V1UQ51KF1+V1UQ51/1.8
+V1UQ51UQ5.2-W1

-W1
RKC 4.4T-6-RSC 4.4T/S3060
6m

BN BU BK WH
1 3
-BGS/R
TÜNKERS
1324638
A2 A1
2 4

Clamps 5
=V1UQ51UQ5.2
+.UQ51UQ5.2
-UQ5.2

=V1UQ51
-UQ5.2-BGS/R
Clamps 5

=V1UQ51UQ4+.UQ51UQ4/1

=V1UQ51UQ6+.UQ51UQ6/1

			Date	1/17/2023	Volvo Trucks North America	Valiant TMS	FESTO DQ CONNECTION QN5	Drawing name: =2V09&EFS-EL	= V1UQ51UQ5
			Ed.	MKLEPADLO					+ V1UQ51UQ5
			Appr		P6700 Bodyside LH - Robot Cell 2V09			Document type: EFS	Project nr: 22-16150
Modification	Date	Name	Original		Replacement of	Replaced by	Scale 1:1		Page 1 / 1533

0	1	2	3	4	5	6	7	8	9

=V1UQ51KF1
+V1UQ51

-KF1.23
=V1UQ51KF1+V1UQ51/4.1

Clamp 6 (RST)	Clamp 6 (SET)
=V1UQ51KF1	=V1UQ51KF1
+V1UQ51	+V1UQ51
-QN6.1_Q	-QN6.2_Q
=V1UQ51KF1	=V1UQ51KF1
+V1UQ51/4.3	+V1UQ51/4.3
Q2276.2	Q2276.3
2.1 Pneumatic Valve	2.2 Pneumatic Valve

-QN6 .1 .2

=V1UQ51KF1+V1UQ51/1.9
+V1UQ51UQ6.1-W1

-W1
RKC 4.4T-4-RSC 4.4T/S3060
4m

BN BU BK WH

-BGS/R
1 3
+ -
TÜNKERS
1324638
A2 A1
2 4

Clamp 6

=V1UQ51UQ6.1
+.UQ51UQ6.1
-UQ6.1

=V1UQ51
-UQ6.1-BGS/R
Clamp 6

=V1UQ51UQ5+.UQ51UQ5/1

=V1UQ51UQ7+.UQ51UQ7/1

			Date	1/17/2023	Volvo Trucks North America		Valiant TMS	FESTO DQ CONNECTION QN6	Drawing name: =2V09&EFS-EL	= V1UQ51UQ6
			Ed.	MKLEPADLO						+ V1UQ51UQ6
			Appr		P6700 Bodyside LH - Robot Cell 2V09				Document type: EFS	Project nr: 22-16150
Modification	Date	Name	Original		Replacement of	Replaced by	Scale 1:1			Page 1 / 1533

0	1	2	3	4	5	6	7	8	9

=V1UQ51KF1
+V1UQ51

-KF1.24
=V1UQ51KF1+V1UQ51/4.1

Clamp 7 (RST)
=V1UQ51KF1
+V1UQ51
-QN7.1_Q
=V1UQ51KF1
+V1UQ51/4.3
Q2276.4

Clamps 7 (SET)
=V1UQ51KF1
+V1UQ51
-QN7.2_Q
=V1UQ51KF1
+V1UQ51/4.3
Q2276.5

1.1 Pneumatic Valve

1.2 Pneumatic Valve

-QN7 .1 .2

=V1UQ51KF1+V1UQ51/2.1
+V1UQ51UQ7.1-W1

-W1 3m
RKC 4.4T-3-RSC 4.4T/S3060

-BGS/R
BN BU BK WH
1 3
TÜNKERS
1324638
A2 A1
2 4

Clamps 7
=V1UQ51UQ7.1
+.UQ51UQ7.1
-UQ7.1

=V1UQ51
-UQ7.1-BGS/R
Clamps 7

=V1UQ51KF1+V1UQ51/2.2
+V1UQ51UQ7.2-W1

-W1 3m
RKC 4.4T-3-RSC 4.4T/S3060

-BGS/R
BN BU BK WH
1 3
TÜNKERS
1324638
A2 A1
2 4

Clamps 7
=V1UQ51UQ7.2
+.UQ51UQ7.2
-UQ7.2

=V1UQ51
-UQ7.2-BGS/R
Clamps 7

=V1UQ51KF1+V1UQ51/2.3
+V1UQ51UQ7.3-W1

-W1 2m
RKC 4.4T-2-RSC 4.4T/S3060

-BGS/R
BN BU BK WH
1 3
TÜNKERS
1324638
A2 A1
2 4

Clamps 7
=V1UQ51UQ7.3
+.UQ51UQ7.3
-UQ7.3

=V1UQ51
-UQ7.3-BGS/R
Clamps 7

=V1UQ51KF1+V1UQ51/2.4
+V1UQ51UQ7.4-W1

-W1 1m
RKC 4.4T-1-RSC 4.4T/S3060

-BGS/R
BN BU BK WH
1 3
TÜNKERS
1324638
A2 A1
2 4

Clamps 7
=V1UQ51UQ7.4
+.UQ51UQ7.4
-UQ7.4

=V1UQ51
-UQ7.4-BGS/R
Clamps 7

=V1UQ51KF1+V1UQ51/2.5
+V1UQ51UQ7.5-W1

-W1 2m
RKC 4.4T-2-RSC 4.4T/S3060

-BGS/R
BN BU BK WH
1 3
TÜNKERS
1324638
A2 A1
2 4

Clamps 7
=V1UQ51UQ7.5
+.UQ51UQ7.5
-UQ7.5

=V1UQ51
-UQ7.5-BGS/R
Clamps 7

=V1UQ51UQ6+.UQ51UQ6/1

=V1UQ51UQ8+.UQ51UQ8/1

			Date	1/17/2023	Volvo Trucks North America	Valiant TMS	FESTO DQ CONNECTION QN7	Drawing name: =2V09&EFS-EL	= V1UQ51UQ7
			Ed.	MKLEPADLO					+ V1UQ51UQ7
			Appr		P6700 Bodyside LH - Robot Cell 2V09			Document type: EFS	Project nr: 22-16150
Modification	Date	Name	Original		Replacement of	Replaced by	Scale 1:1		Page 1 / 1533

0	1	2	3	4	5	6	7	8	9

=V1UQ51KF1
+V1UQ51

-KF1.24
=V1UQ51KF1+V1UQ51/4.1

Clamp 8 (RST)	Clamp 8 (SET)
=V1UQ51KF1	=V1UQ51KF1
+V1UQ51	+V1UQ51
-QN8.1_Q	-QN8.2_Q
=V1UQ51KF1	=V1UQ51KF1
+V1UQ51/4.3	+V1UQ51/4.3
Q2276.6	Q2276.7
2.1 Pneumatic Valve	2.2 Pneumatic Valve

-QN8 .1 .2

=V1UQ51KF1+V1UQ51/2.6
+V1UQ51UQ8.1-W1

-W1
RKC 4.4T-3-RSC 4.4T/S3060
3m

BN BU BK WH

-BGS/R
1 3
+ -
TÜNKERS
1324638
A2 A1
2 4

Clamp 8

=V1UQ51UQ8.1
+.UQ51UQ8.1
-UQ8.1

=V1UQ51 -UQ8.1-BGS/R Clamp 8

=V1UQ51UQ7+.UQ51UQ7/1

=V1UQ51UQ9+.UQ51UQ9/1

			Date	1/17/2023	Volvo Trucks North America	Valiant TMS	FESTO DQ CONNECTION QN8	Drawing name: =2V09&EFS-EL	= V1UQ51UQ8
			Ed.	MKLEPADLO					+ V1UQ51UQ8
			Appr		P6700 Bodyside LH - Robot Cell 2V09			Document type: EFS	Project nr: 22-16150
Modification	Date	Name	Original		Replacement of	Replaced by	Scale 1:1		Page 1 / 1533

0	1	2	3	4	5	6	7	8	9

=V1UQ51KF1
+V1UQ51

-KF1.25
=V1UQ51KF1+V1UQ51/4.1

Clamps 9 (RST)
=V1UQ51KF1
+V1UQ51
-QN9.1_Q
=V1UQ51KF1
+V1UQ51/4.3
Q2277.0

Clamps 9 (SET)
=V1UQ51KF1
+V1UQ51
-QN9.2_Q
=V1UQ51KF1
+V1UQ51/4.3
Q2277.1

1.1 Pneumatic Valve

1.2 Pneumatic Valve

-QN9 .1 .2

=V1UQ51KF1+V1UQ51/2.8
+V1UQ51UQ9.1-W1

-W1
RKC 4.4T-6-RSC 4.4T/S3060
6m

BN BU BK WH
1 3
-BGS/R
TÜNKERS
1324638
A2 A1
2 4

Clamps 9
=V1UQ51UQ9.1
+.UQ51UQ9.1
-UQ9.1

=V1UQ51
-UQ9.1-BGS/R
Clamps 9

=V1UQ51KF1+V1UQ51/2.9
+V1UQ51UQ9.2-W1

-W1
RKC 4.4T-5-RSC 4.4T/S3060
5m

BN BU BK WH
1 3
-BGS/R
TÜNKERS
1324638
A2 A1
2 4

Clamps 9
=V1UQ51UQ9.2
+.UQ51UQ9.2
-UQ9.2

=V1UQ51
-UQ9.2-BGS/R
Clamps 9

=V1UQ51UQ8+.UQ51UQ8/1

=V1UQ51UQ10+.UQ51UQ10/1

			Date	1/17/2023	Volvo Trucks North America		Valiant TMS	FESTO DQ CONNECTION QN9	Drawing name: =2V09&EFS-EL	= V1UQ51UQ9
			Ed.	MKLEPADLO						+ V1UQ51UQ9
			Appr		P6700 Bodyside LH - Robot Cell 2V09				Document type: EFS	Project nr: 22-16150
Modification	Date	Name	Original		Replacement of	Replaced by	Scale 1:1			Page 1 / 1533

0	1	2	3	4	5	6	7	8	9

=V1UQ51KF1
+V1UQ51

-KF1.25
=V1UQ51KF1+V1UQ51/4.1

Clamps 10 (RST)	Clamps 10 (SET)
=V1UQ51KF1	=V1UQ51KF1
+V1UQ51	+V1UQ51
-QN10.1_Q	-QN10.2_Q
=V1UQ51KF1	=V1UQ51KF1
+V1UQ51/4.3	+V1UQ51/4.3
Q2277.2	Q2277.3
2.1 Pneumatic Valve	2.2 Pneumatic Valve

-QN10 .1 .2

=V1UQ51KF1+V1UQ51/3.1
+V1UQ51UQ10.1-W1

-W1
RKC 4.4T-5-RSC 4.4T/S3060
5m

BN BU BK WH
1 3
-BGS/R
TÜNKERS
1324638
A2 A1
2 4

Clamps 10
=V1UQ51UQ10.1
+.UQ51UQ10.1
-UQ10.1

=V1UQ51
-UQ10.1-BGS/R
Clamps 10

=V1UQ51KF1+V1UQ51/3.2
+V1UQ51UQ10.2-W1

-W1
RKC 4.4T-4-RSC 4.4T/S3060
4m

BN BU BK WH
1 3
-BGS/R
TÜNKERS
1324638
A2 A1
2 4

Clamps 10
=V1UQ51UQ10.2
+.UQ51UQ10.2
-UQ10.2

=V1UQ51
-UQ10.2-BGS/R
Clamps 10

=V1UQ51UQ9+.UQ51UQ9/1

=V1UQ52BG0+.UQ52/1

			Date	1/17/2023	Volvo Trucks North America	Valiant TMS	FESTO DQ CONNECTION QN10	Drawing name: =2V09&EFS-EL	= V1UQ51UQ10
			Ed.	MKLEPADLO					+ V1UQ51UQ10
			Appr		P6700 Bodyside LH - Robot Cell 2V09			Document type: EFS	Project nr: 22-16150
Modification	Date	Name	Original		Replacement of	Replaced by	Scale 1:1		Page 1 / 1533

0	1	2	3	4	5	6	7	8	9

=V1UQ52
-BG01
Common
Part Present

=V1UQ52
-BG02
Common
Part Present

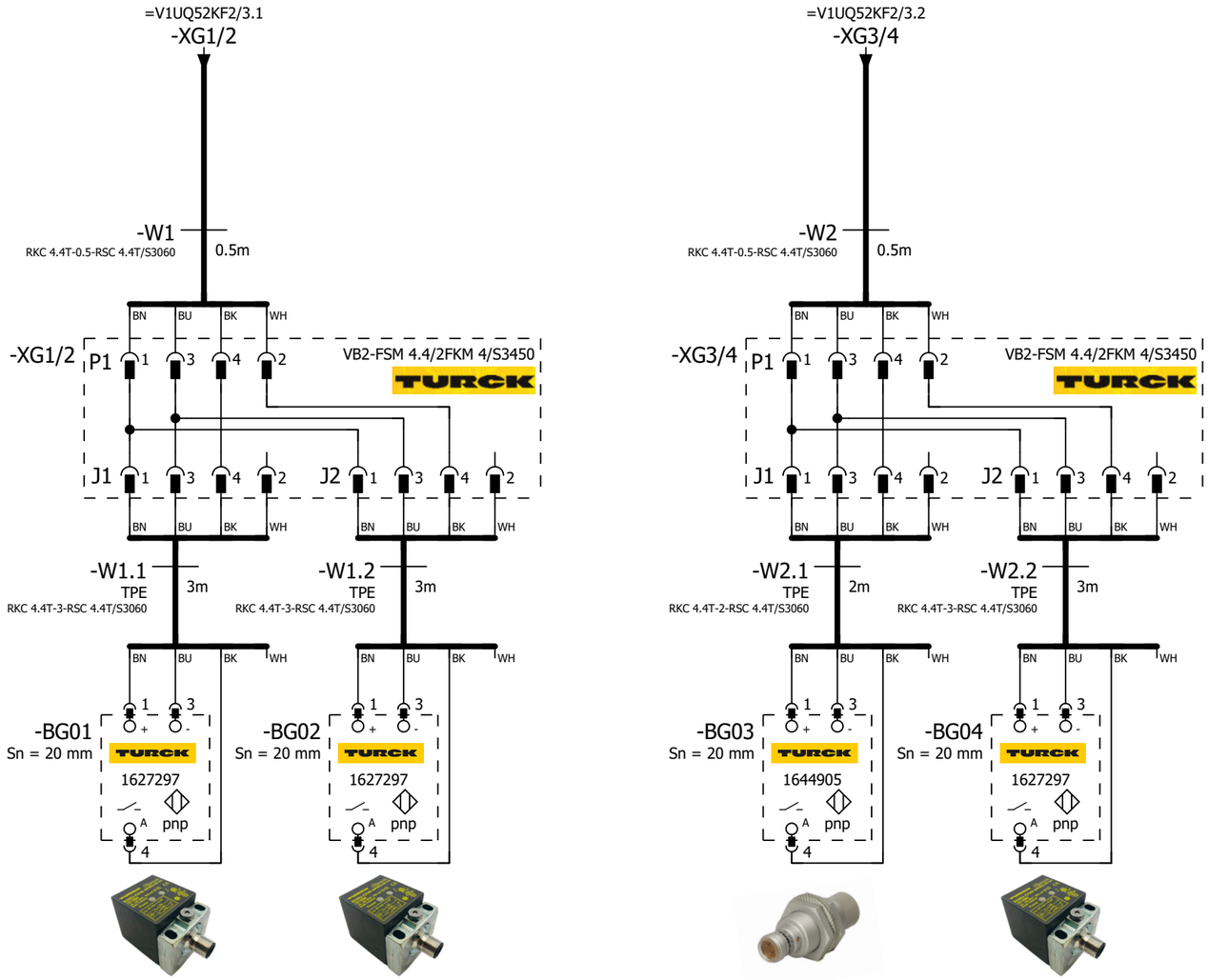

=V1UQ52
-BG03
Day Cab
78522975

=V1UQ52
-BG04
Day Cab
78522974

=V1UQ52
-BG05
Sleeper L230
78521360

=V1UQ52
-BG06
Sleeper L230
78521359

=V1UQ51UQ10+.UQ51UQ10/1

2

			Date	1/17/2023	Volvo Trucks North America	Valiant TMS	SENSORS	Drawing name: =2V09&EFS-EL	= V1UQ52BG0
			Ed.	MKLEPADLO					+ V1UQ52
			Appr		P6700 Bodyside LH - Robot Cell 2V09	Scale 1:1		Document type: EFS	Project nr: 22-16150
Modification	Date	Name	Original		Replacement of	Replaced by			Page 1 / 1533

0	1	2	3	4	5	6	7	8	9

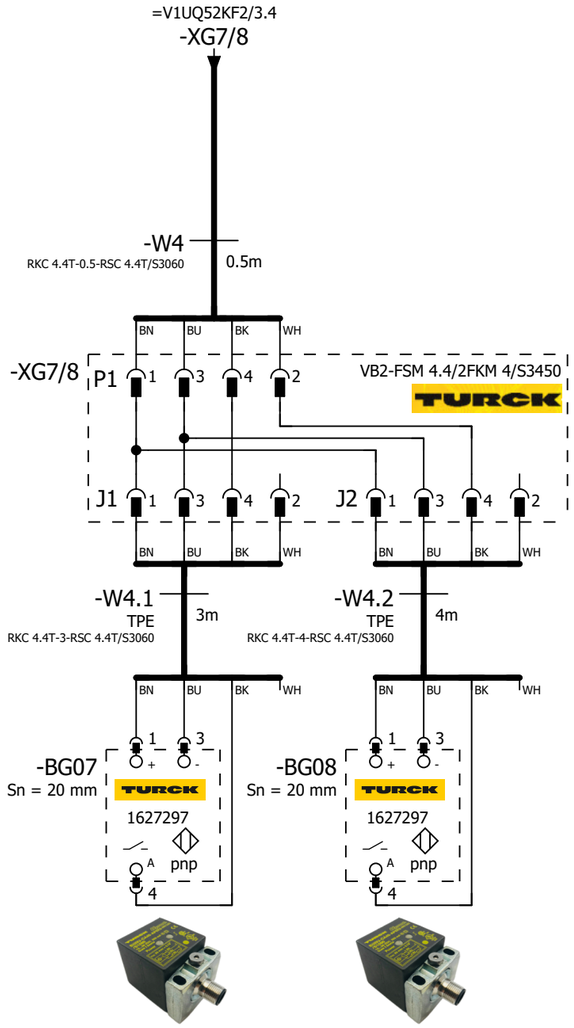

=V1UQ52
-BG07
Sleeper L290
78522139

=V1UQ52
-BG08
Sleeper L290
78522140

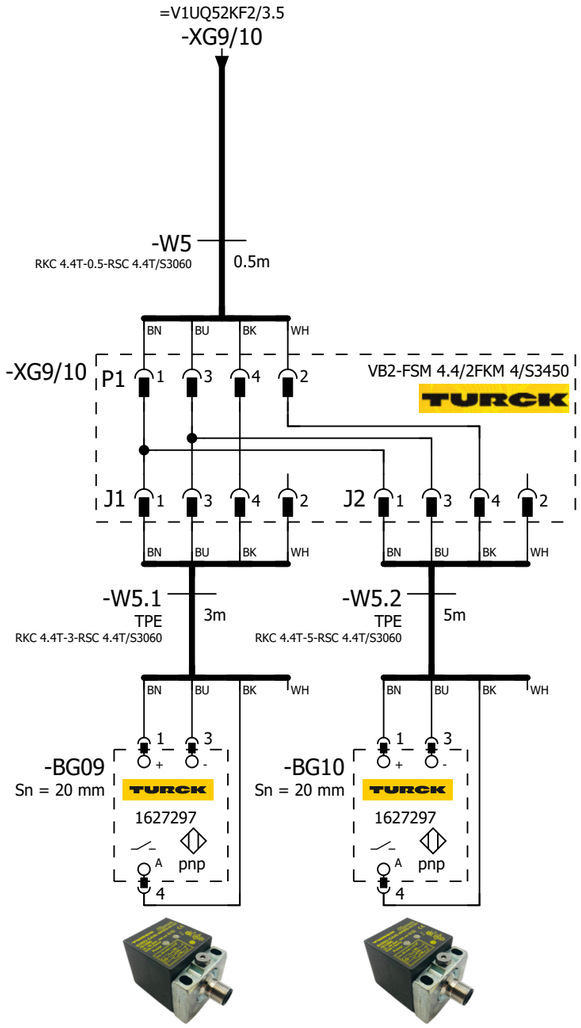

=V1UQ52
-BG09
Sleeper L320
78519674

=V1UQ52
-BG10
Sleeper L320
78519675

1

=V1UQ52KF1/1

			Date	1/17/2023	Volvo Trucks North America	Valiant TMS	SENSORS	Drawing name: =2V09&EFS-EL	= V1UQ52BG0
			Ed.	MKLEPADLO					+ V1UQ52
			Appr		P6700 Bodyside LH - Robot Cell 2V09			Document type: EFS	Project nr: 22-16150
Modification	Date	Name	Original		Replacement of / Replaced by	Scale 1:1			Page 2 / 1533

0	1	2	3	4	5	6	7	8	9

=V1UQ52WC4/1.6 / W1.2

-W1.2
RSM RKM 56-1M/S3059
1m

=V1KF1+.UC14/2.6 / +.UC14-KF100.14-P11

-KF100.14-P11
PROFINET Cable
6XV1840-3AH10

KF1-P2 / =V1UQ52KF2/1.3

-KF1

X20 M12, 7/8" 1 2 PE 4 5
0V_VAL / OUT
0V_EL / SEN
FE
24V_EL / SEN
24V_VAL / OUT

ON OFF 1 2 1 2

M12 -TP1
M12 -TP2

FESTO
Bus node + Interlinking block
548755 + 550208

-KF1.11

FESTO
CPX-M-AB-8-M12X2-5POL
549335

I2300.0	DI 0 X1:2	V1UQ52UQ1.1-BGR Shot Pin 1 (RESET)
I2300.1	DI 1 X1:4	V1UQ52UQ1.1-BGS Shot Pin 1 (SET)
I2300.2	DI 2 X2:2	V1UQ52UQ2.1-BGR Shot Pins 2 (RESET)
I2300.3	DI 3 X2:4	V1UQ52UQ2.1-BGS Shot Pins 2 (SET)
I2300.4	DI 4 X3:2	V1UQ52UQ2.2-BGR Shot Pins 2 (RESET)
I2300.5	DI 5 X3:4	V1UQ52UQ2.2-BGS Shot Pins 2 (SET)
I2300.6	DI 6 X4:2	V1UQ52UQ2.3-BGR Shot Pins 2 (RESET)
I2300.7	DI 7 X4:4	V1UQ52UQ2.3-BGS Shot Pins 2 (SET)
I2301.0	DI 8 X5:2	V1UQ52UQ3.1-BGR Shot Pin 3 (RESET)
I2301.1	DI 9 X5:4	V1UQ52UQ3.1-BGS Shot Pin 3 (SET)
I2301.2	DI 10 X6:2	V1UQ52UQ4.1-BGR Shot Pin 4 (RESET)
I2301.3	DI 11 X6:4	V1UQ52UQ4.1-BGS Shot Pin 4 (SET)
I2301.4	DI 12 X7:2	V1UQ52UQ5.1-BGR Shot Pin 5 (RESET)
I2301.5	DI 13 X7:4	V1UQ52UQ5.1-BGS Shot Pin 5 (SET)
I2301.6	DI 14 X8:2	V1UQ52UQ6.1-BGR Shot Pin 6 (RESET)
I2301.7	DI 15 X8:4	V1UQ52UQ6.1-BGS Shot Pin 6 (SET)

X1 M12 1 2 3 4 5 — 24V DI 1 0V DI 0 FE — BN WH BU BK
X2 M12 1 2 3 4 5 — 24V DI 3 0V DI 2 FE — BN WH BU BK
X3 M12 1 2 3 4 5 — 24V DI 5 0V DI 4 FE — BN WH BU BK
X4 M12 1 2 3 4 5 — 24V DI 7 0V DI 6 FE — BN WH BU BK
X5 M12 1 2 3 4 5 — 24V DI 9 0V DI 8 FE — BN WH BU BK
X6 M12 1 2 3 4 5 — 24V DI 11 0V DI 10 FE — BN WH BU BK
X7 M12 1 2 3 4 5 — 24V DI 13 0V DI 12 FE — BN WH BU BK
X8 M12 1 2 3 4 5 — 24V DI 15 0V DI 14 FE — BN WH BU BK

+V1UQ52UQ1.1-W1
=V1UQ52UQ1+.UQ52UQ1/1.1

+V1UQ52UQ2.1-W1
=V1UQ52UQ2+.UQ52UQ2/1.1

+V1UQ52UQ2.2-W1
=V1UQ52UQ2+.UQ52UQ2/1.4

+V1UQ52UQ2.3-W1
=V1UQ52UQ2+.UQ52UQ2/1.5

+V1UQ52UQ3.1-W1
=V1UQ52UQ3+.UQ52UQ3/1.1

+V1UQ52UQ4.1-W1
=V1UQ52UQ4+.UQ52UQ4/1.1

+V1UQ52UQ5.1-W1
=V1UQ52UQ5+.UQ52UQ5/1.1

+V1UQ52UQ6.1-W1
=V1UQ52UQ6+.UQ52UQ6/1.1

			Date	1/17/2023	Volvo Trucks North America	Valiant TMS	CONNECTING MOD. FOR VTSA MANIFOLD	Drawing name: =2V09&EFS-EL	= V1UQ52KF1
			Ed.	MKLEPADLO					+ V1UQ52
			Appr		P6700 Bodyside LH - Robot Cell 2V09	Scale 1:1		Document type: EFS	Project nr: 22-16150
Modification	Date	Name	Original		Replacement of / Replaced by				Page 1 / 1533

0	1	2	3	4	5	6	7	8	9

-KF1.12

FESTO

CPX-M-AB-8-M12X2-5POL

549335

I2302.0	DI 0 X1:4	V1UQ52UQ7.1-BGR	Shot Pin 7 (RESET)
I2302.1	DI 1 X1:2	V1UQ52UQ7.1-BGS	Shot Pin 7 (SET)
I2302.2	DI 2 X2:4	V1UQ52UQ8.1-BGR	Shot Pins 8 (RESET)
I2302.3	DI 3 X2:2	V1UQ52UQ8.1-BGS	Shot Pins 8 (SET)
I2302.4	DI 4 X3:4	V1UQ52UQ8.2-BGR	Shot Pins 8 (RESET)
I2302.5	DI 5 X3:2	V1UQ52UQ8.2-BGS	Shot Pins 8 (SET)
I2302.6	DI 6 X4:4	V1UQ52UQ9.1-BGR	Shot Pin 9 (RESET)
I2302.7	DI 7 X4:2	V1UQ52UQ9.1-BGS	Shot Pin 9 (SET)
I2303.0	DI 8 X5:4	V1UQ52UQ10.1-BGR	Clamps 10 (RESET)
I2303.1	DI 9 X5:2	V1UQ52UQ10.1-BGS	Clamps 10 (SET)
I2303.2	DI 10 X6:4	V1UQ52UQ10.2-BGR	Clamps 10 (RESET)
I2303.3	DI 11 X6:2	V1UQ52UQ10.2-BGS	Clamps 10 (SET)
I2303.4	DI 12 X7:4	V1UQ52UQ10.3-BGR	Clamps 10 (RESET)
I2303.5	DI 13 X7:2	V1UQ52UQ10.3-BGS	Clamps 10 (SET)
I2303.6	DI 14 X8:4	V1UQ52UQ10.4-BGR	Clamps 10 (RESET)
I2303.7	DI 15 X8:2	V1UQ52UQ10.4-BGS	Clamps 10 (SET)

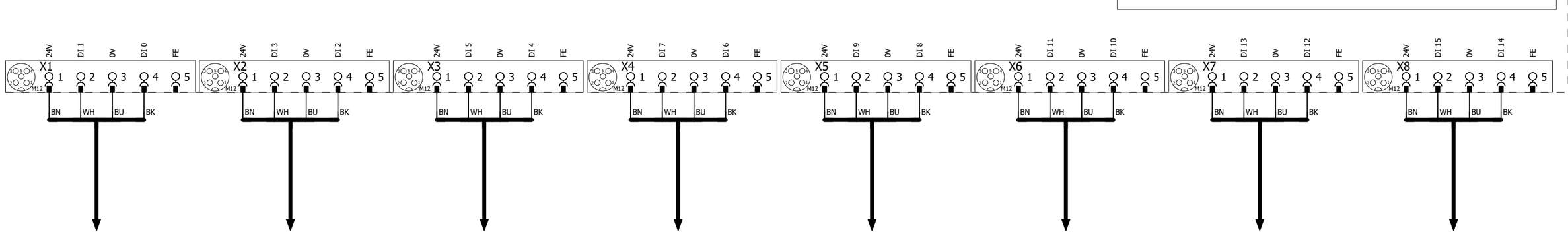

1

3

			Date	1/17/2023	Volvo Trucks North America	Valiant TMS	I/O MOD. DI16 (8 x M12) FOR VTSA-F	Drawing name: =2V09&EFS-EL	= V1UQ52KF1
			Ed.	MKLEPADLO					+ V1UQ52
			Appr		P6700 Bodyside LH - Robot Cell 2V09			Document type: EFS	Project nr: 22-16150
Modification	Date	Name	Original		Replacement of / Replaced by	Scale 1:1			Page 2 / 1533

0	1	2	3	4	5	6	7	8	9

-KF1.13

FESTO

CPX-M-AB-8-M12X2-5POL

549335

I2304.0 DI 0 X1:4	V1UQ52UQ10.5-BGR	Clamps 10 (RESET)
I2304.1 DI 1 X1:2	V1UQ52UQ10.5-BGS	Clamps 10 (SET)
I2304.2 DI 2 X2:4	V1UQ52UQ10.6-BGR	Clamps 10 (RESET)
I2304.3 DI 3 X2:2	V1UQ52UQ10.6-BGS	Clamps 10 (SET)
I2304.4 DI 4 X3:4	I2304.4	Spare
I2304.5 DI 5 X3:2	I2304.5	Spare
I2304.6 DI 6 X4:4	I2304.6	Spare
I2304.7 DI 7 X4:2	I2304.7	Spare
I2305.0 DI 8 X5:4	I2305.0	Spare
I2305.1 DI 9 X5:2	I2305.1	Spare
I2305.2 DI 10 X6:4	I2305.2	Spare
I2305.3 DI 11 X6:2	I2305.3	Spare
I2305.4 DI 12 X7:4	I2305.4	Spare
I2305.5 DI 13 X7:2	I2305.5	Spare
I2305.6 DI 14 X8:4	I2305.6	Spare
I2305.7 DI 15 X8:2	I2305.7	Spare

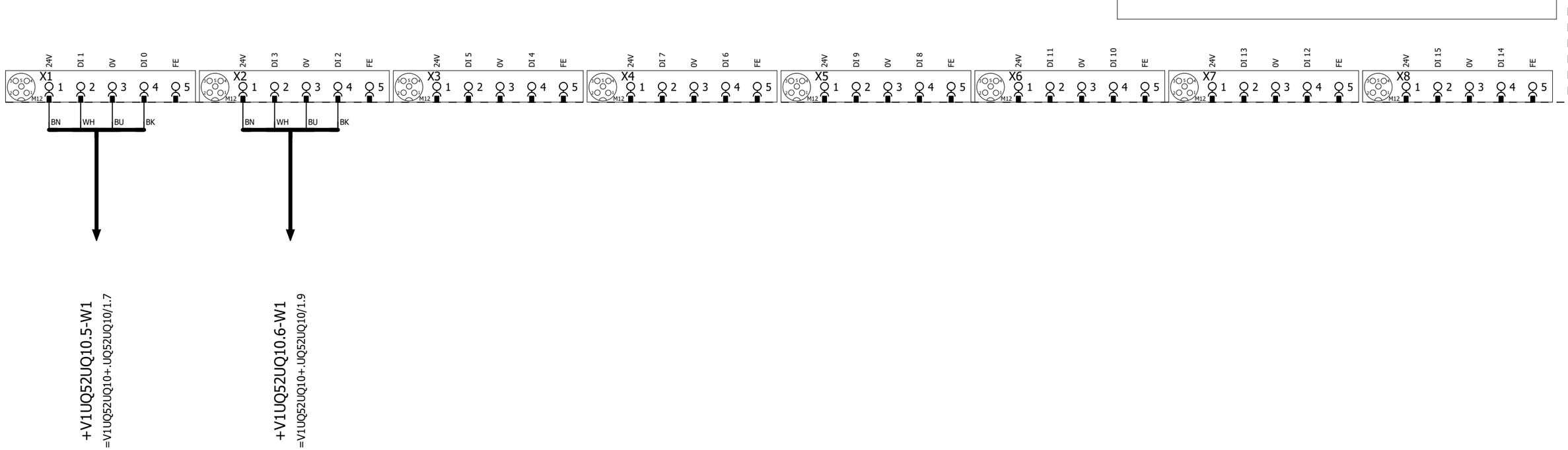

2 4

			Date	1/17/2023	Volvo Trucks North America		Valiant TMS	I/O MOD. DI16 (8 x M12) FOR VTSA-F	Drawing name: =2V09&EFS-EL	= V1UQ52KF1
			Ed.	MKLEPADLO						+ V1UQ52
			Appr		P6700 Bodyside LH - Robot Cell 2V09		Scale 1:1		Document type: EFS	Project nr: 22-16150
Modification	Date	Name	Original		Replacement of	Replaced by				Page 3 / 1533

-KF1 -KF1.11 -KF1.12 -KF1.13 -KF1.20 -KF1.21 -KF1.22 -KF1.23 -KF1.24 -KF1.25 -KF1.26 -KF1.27

M1 M2 M3 M4 M5

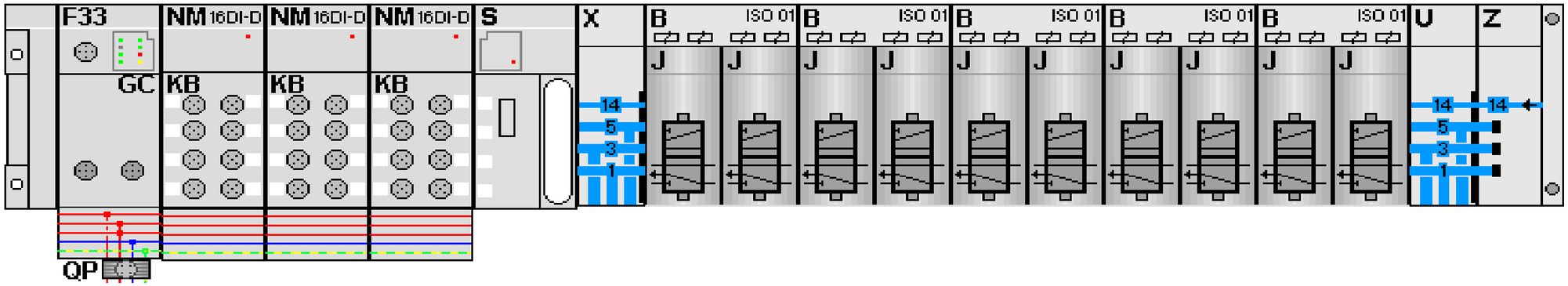

-KF1.21
=V1UQ52UQ1+.UQ52UQ1/1.3
=V1UQ52UQ2+.UQ52UQ2/1.3

FESTO

=V1UQ52UQ1+.UQ52UQ1/1.4	Q2300.0 DO 0 1.1	-QN1.1_Q	Shot Pin 1 (RST)
=V1UQ52UQ1+.UQ52UQ1/1.4	Q2300.1 DO 1 1.2	-QN1.2_Q	Shot Pin 1 (SET)
=V1UQ52UQ2+.UQ52UQ2/1.4	Q2300.2 DO 2 2.1	-QN2.1_Q	Shot Pins 2 (RST)
=V1UQ52UQ2+.UQ52UQ2/1.4	Q2300.3 DO 3 2.2	-QN2.2_Q	Shot Pins 2 (SET)

-KF1.22
=V1UQ52UQ3+.UQ52UQ3/1.3
=V1UQ52UQ4+.UQ52UQ4/1.3

FESTO

=V1UQ52UQ3+.UQ52UQ3/1.4	Q2300.4 DO 0 1.1	-QN3.1_Q	Shot Pin 3 (RST)
=V1UQ52UQ3+.UQ52UQ3/1.4	Q2300.5 DO 1 1.2	-QN3.2_Q	Shot Pin 3 (SET)
=V1UQ52UQ4+.UQ52UQ4/1.4	Q2300.6 DO 2 2.1	-QN4.1_Q	Shot Pin 4 (RST)
=V1UQ52UQ4+.UQ52UQ4/1.4	Q2300.7 DO 3 2.2	-QN4.2_Q	Shot Pin 4 (SET)

-KF1.23
=V1UQ52UQ5+.UQ52UQ5/1.3
=V1UQ52UQ6+.UQ52UQ6/1.3

FESTO

=V1UQ52UQ5+.UQ52UQ5/1.4	Q2301.0 DO 0 1.1	-QN5.1_Q	Shot Pin 5 (RST)
=V1UQ52UQ5+.UQ52UQ5/1.4	Q2301.1 DO 1 1.2	-QN5.2_Q	Shot Pin 5 (SET)
=V1UQ52UQ6+.UQ52UQ6/1.4	Q2301.2 DO 2 2.1	-QN6.1_Q	Shot Pin 6 (RST)
=V1UQ52UQ6+.UQ52UQ6/1.4	Q2301.3 DO 3 2.2	-QN6.2_Q	Shot Pin 6 (SET)

-KF1.24
=V1UQ52UQ7+.UQ52UQ7/1.3
=V1UQ52UQ8+.UQ52UQ8/1.3

FESTO

=V1UQ52UQ7+.UQ52UQ7/1.4	Q2301.4 DO 0 1.1	-QN7.1_Q	Shot Pin 7 (RST)
=V1UQ52UQ7+.UQ52UQ7/1.4	Q2301.5 DO 1 1.2	-QN7.2_Q	Shot Pin 7 (SET)
=V1UQ52UQ8+.UQ52UQ8/1.4	Q2301.6 DO 2 2.1	-QN8.1_Q	Shot Pins 8 (RST)
=V1UQ52UQ8+.UQ52UQ8/1.4	Q2301.7 DO 3 2.2	-QN8.2_Q	Shot Pins 8 (SET)

-KF1.25
=V1UQ52UQ9+.UQ52UQ9/1.3
=V1UQ52UQ10+.UQ52UQ10/1.3

FESTO

=V1UQ52UQ9+.UQ52UQ9/1.4	Q2302.0 DO 0 1.1	-QN9.1_Q	Shot Pin 9 (RST)
=V1UQ52UQ9+.UQ52UQ9/1.4	Q2302.1 DO 1 1.2	-QN9.2_Q	Shot Pin 9 (SET)
=V1UQ52UQ10+.UQ52UQ10/1.4	Q2302.2 DO 2 2.1	-QN10.1_Q	Clamps 10 (RST)
=V1UQ52UQ10+.UQ52UQ10/1.4	Q2302.3 DO 3 2.2	-QN10.2_Q	Clamps 10 (SET)

			Date	1/17/2023	Volvo Trucks North America	Valiant TMS	CONNECTING MOD. FOR FESTO DQ	Drawing name: =2V09&EFS-EL	= V1UQ52KF1
			Ed.	MKLEPADLO					+ V1UQ52
			Appr		P6700 Bodyside LH - Robot Cell 2V09	Scale 1:1		Document type: EFS	Project nr: 22-16150
Modification	Date	Name	Original		Replacement of	Replaced by			Page 4 / 1533

0	1	2	3	4	5	6	7	8	9

=V1UQ52WC4/1.5 / W2.1

-W2.1
RSM RKM 56-1M/S3059
1m

=V1UQ52KF1/1.4 / KF1-P2

KF2-P2 / =V1UQ52KF3/1.3

-WF1
PROFINET Cable
6XV1840-3AH10

-KF2

X20 M12, 7/8" 1 2 PE 4 5

0V_VAL / OUT | 0V_EL / SEN | FE | 24V_EL / SEN | 24V_VAL / OUT

ON OFF 1 2 1 2

-TP1 -TP2

FESTO
Bus node + Interlinking block
548755 + 550208

I2325.0	DI 0 X1:4	V1UQ52UQ11.1-BGR	Clamps 11 (RESET)
I2325.1	DI 1 X1:2	V1UQ52UQ11.1-BGS	Clamps 11 (SET)
I2325.2	DI 2 X2:4	V1UQ52UQ11.2-BGR	Clamps 11 (RESET)
I2325.3	DI 3 X2:2	V1UQ52UQ11.2-BGS	Clamps 11 (SET)
I2325.4	DI 4 X3:4	V1UQ52UQ11.3-BGR	Clamps 11 (RESET)
I2325.5	DI 5 X3:2	V1UQ52UQ11.3-BGS	Clamps 11 (SET)
I2325.6	DI 6 X4:4	V1UQ52UQ12.1-BGR	Clamps 12 (RESET)
I2325.7	DI 7 X4:2	V1UQ52UQ12.1-BGS	Clamps 12 (SET)
I2326.0	DI 8 X5:4	V1UQ52UQ12.2-BGR	Clamps 12 (RESET)
I2326.1	DI 9 X5:2	V1UQ52UQ12.2-BGS	Clamps 12 (SET)
I2326.2	DI 10 X6:4	V1UQ52UQ13.1-BGR	Clamp 13 (RESET)
I2326.3	DI 11 X6:2	V1UQ52UQ13.1-BGS	Clamp 13 (SET)
I2326.4	DI 12 X7:4	V1UQ52UQ14.1-BGR	Clamps 14 (RESET)
I2326.5	DI 13 X7:2	V1UQ52UQ14.1-BGS	Clamps 14 (SET)
I2326.6	DI 14 X8:4	V1UQ52UQ14.2-BGR	Clamps 14 (RESET)
I2326.7	DI 15 X8:2	V1UQ52UQ14.2-BGS	Clamps 14 (SET)

-KF2.11

FESTO
CPX-M-AB-8-M12X2-5POL
549335

X1 X2 X3 X4 X5 X6 X7 X8 M12

1 24V | 2 DI 1 / DI 3 / DI 5 / DI 7 / DI 9 / DI 11 / DI 13 / DI 15 | 3 0V | 4 DI 0 / DI 2 / DI 4 / DI 6 / DI 8 / DI 10 / DI 12 / DI 14 | 5 FE

BN WH BU BK

+V1UQ52UQ11.1-W1
=V1UQ52UQ11+.UQ52UQ11/1.1

+V1UQ52UQ11.2-W1
=V1UQ52UQ11+.UQ52UQ11/1.2

+V1UQ52UQ11.3-W1
=V1UQ52UQ11+.UQ52UQ11/1.4

+V1UQ52UQ12.1-W1
=V1UQ52UQ12+.UQ52UQ12/1.1

+V1UQ52UQ12.2-W1
=V1UQ52UQ12+.UQ52UQ12/1.2

+V1UQ52UQ13.1-W1
=V1UQ52UQ13+.UQ52UQ13/1.1

+V1UQ52UQ14.1-W1
=V1UQ52UQ14+.UQ52UQ14/1.1

+V1UQ52UQ14.2-W1
=V1UQ52UQ14+.UQ52UQ14/1.2

=V1UQ52KF1/4

			Date	1/17/2023	Volvo Trucks North America	Valiant TMS	CONNECTING MOD. FOR VTSA MANIFOLD	Drawing name: =2V09&EFS-EL	= V1UQ52KF2
			Ed.	MKLEPADLO					+ V1UQ52
			Appr		P6700 Bodyside LH - Robot Cell 2V09	Scale 1:1		Document type: EFS	Project nr: 22-16150
Modification	Date	Name	Original		Replacement of	Replaced by			Page 1 / 1533

0	1	2	3	4	5	6	7	8	9

-KF2.12

FESTO

CPX-M-AB-8-M12X2-5POL

549335

I2327.0	DI 0 X1:4	V1UQ52UQ14.3-BGR	Clamps 14 (RESET)
I2327.1	DI 1 X1:2	V1UQ52UQ14.3-BGS	Clamps 14 (SET)
I2327.2	DI 2 X2:4	V1UQ52UQ15.1-BGR	Clamp 15 (RESET)
I2327.3	DI 3 X2:2	V1UQ52UQ15.1-BGS	Clamp 15 (SET)
I2327.4	DI 4 X3:4	V1UQ52UQ16.1-BGR	Clamp 16 (RESET)
I2327.5	DI 5 X3:2	V1UQ52UQ16.1-BGS	Clamp 16 (SET)
I2327.6	DI 6 X4:4	V1UQ52UQ17.1-BGR	Clamp 17 (RESET)
I2327.7	DI 7 X4:2	V1UQ52UQ17.1-BGS	Clamp 17 (SET)
I2328.0	DI 8 X5:4	V1UQ52UQ18.1-BGR	Clamp 18 (RESET)
I2328.1	DI 9 X5:2	V1UQ52UQ18.1-BGS	Clamp 18 (SET)
I2328.2	DI 10 X6:4	V1UQ52UQ19.1-BGR	Clamp 19 (RESET)
I2328.3	DI 11 X6:2	V1UQ52UQ19.1-BGS	Clamp 19 (SET)
I2328.4	DI 12 X7:4	V1UQ52UQ20.1-BGR	Clamp 20 (RESET)
I2328.5	DI 13 X7:2	V1UQ52UQ20.1-BGS	Clamp 20 (SET)
I2328.6	DI 14 X8:4	I2328.6	Spare
I2328.7	DI 15 X8:2	I2328.7	Spare

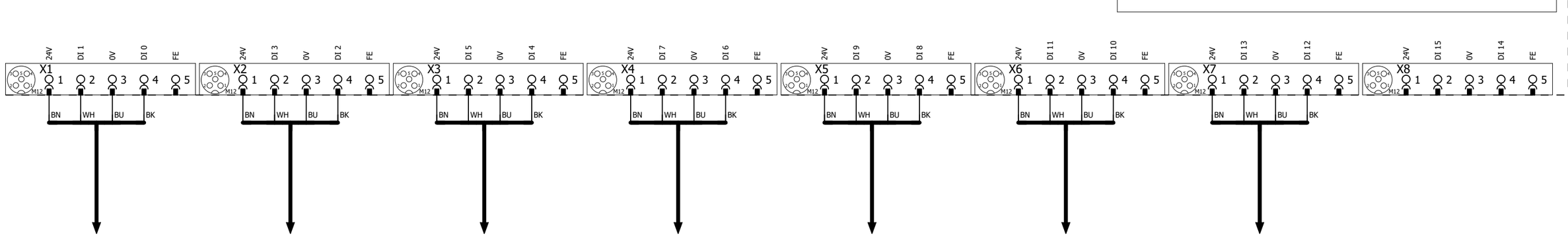

1

3

			Date	1/17/2023	Volvo Trucks North America	Valiant TMS	I/O MOD. DI16 (8 x M12) FOR VTSA-F	Drawing name: =2V09&EFS-EL	= V1UQ52KF2
			Ed.	MKLEPADLO					+ V1UQ52
			Appr		P6700 Bodyside LH - Robot Cell 2V09			Document type: EFS	Project nr: 22-16150
Modification	Date	Name	Original		Replacement of / Replaced by	Scale 1:1			Page 2 / 1533

I2329.0	DI 0 X1:4	V1UQ52-BG01	Sensor Common Part Present
I2329.1	DI 1 X1:2	V1UQ52-BG02	Sensor Common Part Present
I2329.2	DI 2 X2:4	V1UQ52-BG03	Sensor Day Cab 78522975
I2329.3	DI 3 X2:2	V1UQ52-BG04	Sensor Day Cab 78522974
I2329.4	DI 4 X3:4	V1UQ52-BG05	Sensor Sleeper L230 78521360
I2329.5	DI 5 X3:2	V1UQ52-BG06	Sensor Sleeper L230 78521359
I2329.6	DI 6 X4:4	V1UQ52-BG07	Sensor Sleeper L290 78522139
I2329.7	DI 7 X4:2	V1UQ52-BG08	Sensor Sleeper L290 78522140
I2330.0	DI 8 X5:4	V1UQ52-BG09	Sensor Sleeper L320 78519674
I2330.1	DI 9 X5:2	V1UQ52-BG10	Sensor Sleeper L320 78519675
I2330.2	DI 10 X6:4	I2330.2	Spare
I2330.3	DI 11 X6:2	I2330.3	Spare
I2330.4	DI 12 X7:4	I2330.4	Spare
I2330.5	DI 13 X7:2	I2330.5	Spare
I2330.6	DI 14 X8:4	I2330.6	Spare
I2330.7	DI 15 X8:2	I2330.7	Spare

-KF2.13

FESTO

CPX-M-AB-8-M12X2-5POL

549335

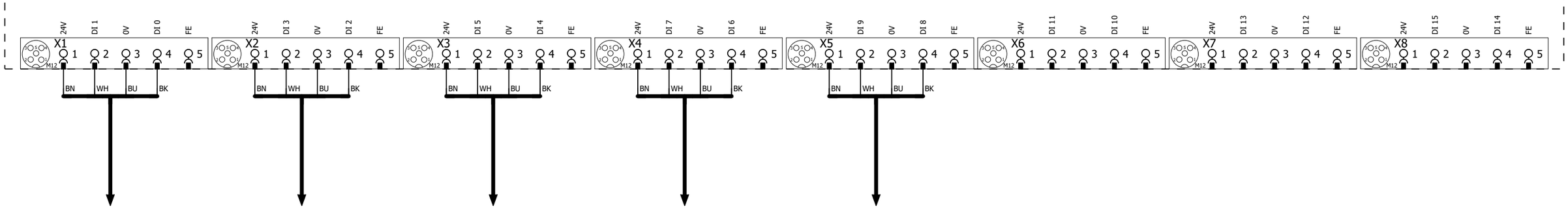

2 4

			Date	1/17/2023	Volvo Trucks North America	Valiant TMS	I/O MOD. DI16 (8 x M12) FOR VTSA-F	Drawing name: =2V09&EFS-EL	= V1UQ52KF2 + V1UQ52
			Ed.	MKLEPADLO	P6700 Bodyside LH - Robot Cell 2V09				
			Appr					Document type: EFS	Project nr: 22-16150
Modification	Date	Name	Original		Replacement of / Replaced by	Scale 1:1			Page 3 / 1533

-KF2 -KF2.11 -KF2.12 -KF2.13 -KF2.20 -KF2.21 -KF2.22 -KF2.23 -KF2.24 -KF2.25 -KF2.26 -KF2.27

M1 M2 M3 M4 M5

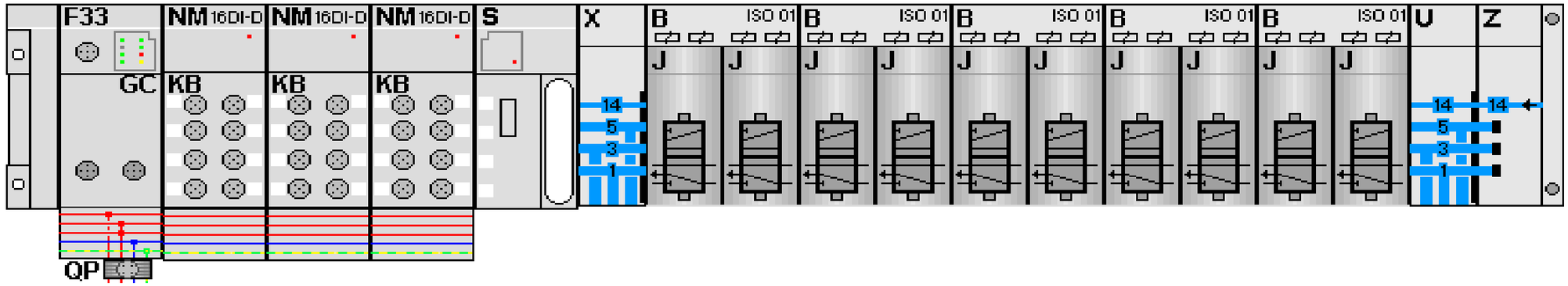

-KF2.21
=V1UQ52UQ11+.UQ52UQ11/1.3
=V1UQ52UQ12+.UQ52UQ12/1.3

FESTO

=V1UQ52UQ11+.UQ52UQ11/1.4	Q2325.0 DO 0 1.1	-QN11.1_Q	Clamps 11 (RST)
=V1UQ52UQ11+.UQ52UQ11/1.4	Q2325.1 DO 1 1.2	-QN11.2_Q	Clamps 11 (SET)
=V1UQ52UQ12+.UQ52UQ12/1.4	Q2325.2 DO 2 2.1	-QN12.1_Q	Clamps 12 (RST)
=V1UQ52UQ12+.UQ52UQ12/1.4	Q2325.3 DO 3 2.2	-QN12.2_Q	Clamps 12 (SET)

-KF2.22
=V1UQ52UQ13+.UQ52UQ13/1.3
=V1UQ52UQ14+.UQ52UQ14/1.3

FESTO

=V1UQ52UQ13+.UQ52UQ13/1.4	Q2325.4 DO 0 1.1	-QN13.1_Q	Clamp 13 (RST)
=V1UQ52UQ13+.UQ52UQ13/1.4	Q2325.5 DO 1 1.2	-QN13.2_Q	Clamp 13 (SET)
=V1UQ52UQ14+.UQ52UQ14/1.4	Q2325.6 DO 2 2.1	-QN14.1_Q	Clamps 14 (RST)
=V1UQ52UQ14+.UQ52UQ14/1.4	Q2325.7 DO 3 2.2	-QN14.2_Q	Clamps 14 (SET)

-KF2.23
=V1UQ52UQ15+.UQ52UQ15/1.3
=V1UQ52UQ16+.UQ52UQ16/1.3

FESTO

=V1UQ52UQ15+.UQ52UQ15/1.4	Q2326.0 DO 0 1.1	-QN15.1_Q	Clamp 15 (RST)
=V1UQ52UQ15+.UQ52UQ15/1.4	Q2326.1 DO 1 1.2	-QN15.2_Q	Clamp 15 (SET)
=V1UQ52UQ16+.UQ52UQ16/1.4	Q2326.2 DO 2 2.1	-QN16.1_Q	Clamp 16 (RST)
=V1UQ52UQ16+.UQ52UQ16/1.4	Q2326.3 DO 3 2.2	-QN16.2_Q	Clamp 16 (SET)

-KF2.24
=V1UQ52UQ17+.UQ52UQ17/1.3
=V1UQ52UQ18+.UQ52UQ18/1.3

FESTO

=V1UQ52UQ17+.UQ52UQ17/1.4	Q2326.4 DO 0 1.1	-QN17.1_Q	Clamp 17 (RST)
=V1UQ52UQ17+.UQ52UQ17/1.4	Q2326.5 DO 1 1.2	-QN17.2_Q	Clamp 17 (SET)
=V1UQ52UQ18+.UQ52UQ18/1.4	Q2326.6 DO 2 2.1	-QN18.1_Q	Clamp 18 (RST)
=V1UQ52UQ18+.UQ52UQ18/1.4	Q2326.7 DO 3 2.2	-QN18.2_Q	Clamp 18 (SET)

-KF2.25
=V1UQ52UQ19+.UQ52UQ19/1.3
=V1UQ52UQ20+.UQ52UQ20/1.3

FESTO

=V1UQ52UQ19+.UQ52UQ19/1.4	Q2327.0 DO 0 1.1	-QN19.1_Q	Clamp 19 (RST)
=V1UQ52UQ19+.UQ52UQ19/1.4	Q2327.1 DO 1 1.2	-QN19.2_Q	Clamp 19 (SET)
=V1UQ52UQ20+.UQ52UQ20/1.4	Q2327.2 DO 2 2.1	-QN20.1_Q	Clamp 20 (RST)
=V1UQ52UQ20+.UQ52UQ20/1.4	Q2327.3 DO 3 2.2	-QN20.2_Q	Clamp 20 (SET)

			Date	1/17/2023	Volvo Trucks North America	Valiant TMS	CONNECTING MOD. FOR FESTO DQ	Drawing name: =2V09&EFS-EL	= V1UQ52KF2	
			Ed.	MKLEPADLO					+ V1UQ52	
			Appr		P6700 Bodyside LH - Robot Cell 2V09	Scale 1:1		Document type: EFS	Project nr: 22-16150	Page 4 / 1533
Modification	Date	Name	Original		Replacement of	Replaced by				

0	1	2	3	4	5	6	7	8	9

=V1UQ52WC4/1.6 / W2.2

-W2.2
RSM RKM 56-3M/S3059
3m

=V1UQ52KF2/1.4 / KF2-P2

KF3-P2 / =V1UQ52KF4/1.3

-WF2
PROFINET Cable
6XV1840-3AH10

-KF3

X20 M12, 7/8" 1 2 PE 4 5
0V_VAL / OUT
0V_EL / SEN
FE
24V_EL / SEN
24V_VAL / OUT

ON
OFF
1 2 1 2

M12 -TP1

M12 -TP2

FESTO
Bus node + Interlinking block
548755 + 550208

-KF3.11

FESTO
CPX-M-AB-8-M12X2-5POL
549335

I2350.0 DI 0 X1:4	V1UQ52UQ21.1-BGR	Clamp 21 (RESET)
I2350.1 DI 1 X1:2	V1UQ52UQ21.1-BGS	Clamp 21 (SET)
I2350.2 DI 2 X2:4	V1UQ52UQ22.1-BGR	Clamp 22 (RESET)
I2350.3 DI 3 X2:2	V1UQ52UQ22.1-BGS	Clamp 22 (SET)
I2350.4 DI 4 X3:4	V1UQ52UQ23.1-BGR	Shot Pin 23 (RESET)
I2350.5 DI 5 X3:2	V1UQ52UQ23.1-BGS	Shot Pin 23 (SET)
I2350.6 DI 6 X4:4	V1UQ52UQ24.1-BGR	Clamp 24 (RESET)
I2350.7 DI 7 X4:2	V1UQ52UQ24.1-BGS	Clamp 24 (SET)
I2351.0 DI 8 X5:4	V1UQ52UQ25.1-BGR	Slide 25 (RESET)
I2351.1 DI 9 X5:2	V1UQ52UQ25.1-BGS	Slide 25 (SET)
I2351.2 DI 10 X6:4	V1UQ52UQ26.1-BGR	Shot Pin 26 (RESET)
I2351.3 DI 11 X6:2	V1UQ52UQ26.1-BGS	Shot Pin 26 (SET)
I2351.4 DI 12 X7:4	V1UQ52UQ27.1-BGR	Clamp 27 (RESET)
I2351.5 DI 13 X7:2	V1UQ52UQ27.1-BGS	Clamp 27 (SET)
I2351.6 DI 14 X8:4	V1UQ52UQ28.1-BGR	Clamp 28 (RESET)
I2351.7 DI 15 X8:2	V1UQ52UQ28.1-BGS	Clamp 28 (SET)

X1 M12 24V DI 1 0V DI 0 FE 1 2 3 4 5 — BN WH BU BK
X2 M12 24V DI 3 0V DI 2 FE 1 2 3 4 5 — BN WH BU BK
X3 M12 24V DI 5 0V DI 4 FE 1 2 3 4 5 — BN WH BU BK
X4 M12 24V DI 7 0V DI 6 FE 1 2 3 4 5 — BN WH BU BK
X5 M12 24V DI 9 0V DI 8 FE 1 2 3 4 5 — BN WH BU BK
X6 M12 24V DI 11 0V DI 10 FE 1 2 3 4 5 — BN WH BU BK
X7 M12 24V DI 13 0V DI 12 FE 1 2 3 4 5 — BN WH BU BK
X8 M12 24V DI 15 0V DI 14 FE 1 2 3 4 5 — BN WH BU BK

+V1UQ52UQ21.1-W1
=V1UQ52UQ21+.UQ52UQ21/1.1

+V1UQ52UQ22.1-W1
=V1UQ52UQ22+.UQ52UQ22/1.1

+V1UQ52UQ23.1-W1
=V1UQ52UQ23+.UQ52UQ23/1.1

+V1UQ52UQ24.1-W1
=V1UQ52UQ24+.UQ52UQ24/1.1

+V1UQ52UQ25.1-W1
=V1UQ52UQ25+.UQ52UQ25/1.1

+V1UQ52UQ26.1-W1
=V1UQ52UQ26+.UQ52UQ26/1.1

+V1UQ52UQ27.1-W1
=V1UQ52UQ27+.UQ52UQ27/1.1

+V1UQ52UQ28.1-W1
=V1UQ52UQ28+.UQ52UQ28/1.1

=V1UQ52KF2/4

2

			Date	1/17/2023	Volvo Trucks North America	Valiant TMS	CONNECTING MOD. FOR VTSA MANIFOLD	Drawing name: =2V09&EFS-EL	= V1UQ52KF3
			Ed.	MKLEPADLO					+ V1UQ52
			Appr		P6700 Bodyside LH - Robot Cell 2V09	Scale 1:1		Document type: EFS	Project nr: 22-16150
Modification	Date	Name	Original		Replacement of	Replaced by			Page 1 / 1533

0	1	2	3	4	5	6	7	8	9

-KF3.12

FESTO

CPX-M-AB-8-M12X2-5POL

549335

I2352.0 DI 0 X1:4	V1UQ52UQ29.1-BGR	Clamp 29 (RESET)
I2352.1 DI 1 X1:2	V1UQ52UQ29.1-BGS	Clamp 29 (SET)
I2352.2 DI 2 X2:4	V1UQ52UQ30.1-BGR	Clamp 30 (RESET)
I2352.3 DI 3 X2:2	V1UQ52UQ30.1-BGS	Clamp 30 (SET)
I2352.4 DI 4 X3:4	I2352.4	Spare
I2352.5 DI 5 X3:2	I2352.5	Spare
I2352.6 DI 6 X4:4	I2352.6	Spare
I2352.7 DI 7 X4:2	I2352.7	Spare
I2353.0 DI 8 X5:4	I2353.0	Spare
I2353.1 DI 9 X5:2	I2353.1	Spare
I2353.2 DI 10 X6:4	I2353.2	Spare
I2353.3 DI 11 X6:2	I2353.3	Spare
I2353.4 DI 12 X7:4	I2353.4	Spare
I2353.5 DI 13 X7:2	I2353.5	Spare
I2353.6 DI 14 X8:4	I2353.6	Spare
I2353.7 DI 15 X8:2	I2353.7	Spare

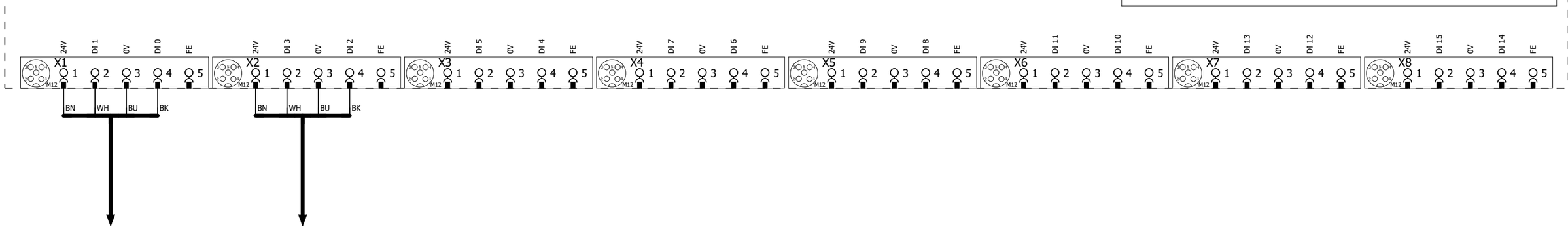

+V1UQ52UQ29.1-W1
=V1UQ52UQ29+.UQ52UQ29/1.1

+V1UQ52UQ30.1-W1
=V1UQ52UQ30+.UQ52UQ30/1.1

1 3

			Date	1/17/2023	Volvo Trucks North America	Valiant TMS	I/O MOD. DI16 (8 x M12) FOR VTSA-F	Drawing name: =2V09&EFS-EL	= V1UQ52KF3
			Ed.	MKLEPADLO					+ V1UQ52
			Appr		P6700 Bodyside LH - Robot Cell 2V09	Scale 1:1		Document type: EFS	Project nr: 22-16150
Modification	Date	Name	Original		Replacement of / Replaced by				Page 2 / 1533

0	1	2	3	4	5	6	7	8	9

-KF3.13

FESTO

CPX-M-AB-8-M12X2-5POL
549335

I2354.0	DI 0 X1:4	I2354.0	Spare
I2354.1	DI 1 X1:2	I2354.1	Spare
I2354.2	DI 2 X2:4	I2354.2	Spare
I2354.3	DI 3 X2:2	I2354.3	Spare
I2354.4	DI 4 X3:4	I2354.4	Spare
I2354.5	DI 5 X3:2	I2354.5	Spare
I2354.6	DI 6 X4:4	I2354.6	Spare
I2354.7	DI 7 X4:2	I2354.7	Spare
I2355.0	DI 8 X5:4	I2355.0	Spare
I2355.1	DI 9 X5:2	I2355.1	Spare
I2355.2	DI 10 X6:4	I2355.2	Spare
I2355.3	DI 11 X6:2	I2355.3	Spare
I2355.4	DI 12 X7:4	I2355.4	Spare
I2355.5	DI 13 X7:2	I2355.5	Spare
I2355.6	DI 14 X8:4	I2355.6	Spare
I2355.7	DI 15 X8:2	I2355.7	Spare

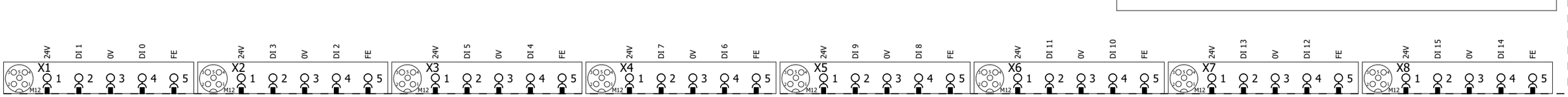

2 4

			Date	1/17/2023	Volvo Trucks North America	Valiant TMS	I/O MOD. DI16 (8 x M12) FOR VTSA-F	Drawing name: =2V09&EFS-EL	= V1UQ52KF3	
			Ed.	MKLEPADLO					+ V1UQ52	
			Appr		P6700 Bodyside LH - Robot Cell 2V09			Document type: EFS	Project nr: 22-16150	Page 3
Modification	Date	Name	Original		Replacement of / Replaced by	Scale 1:1				1533

-KF3 -KF3.11 -KF3.12 -KF3.13 -KF3.20 -KF3.21 -KF3.22 -KF3.23 -KF3.24 -KF3.25 -KF3.26 -KF3.27

M1 M2 M3 M4 M5

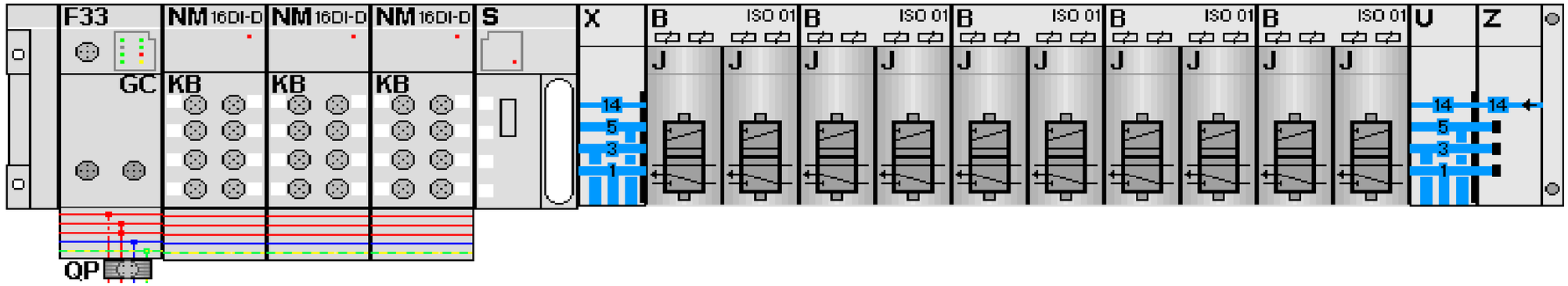

-KF3.21
=V1UQ52UQ21+.UQ52UQ21/1.3
=V1UQ52UQ22+.UQ52UQ22/1.3

FESTO

=V1UQ52UQ21+.UQ52UQ21/1.4	Q2350.0 DO 0 1.1	-QN21.1_Q	Clamp 21 (RST)
=V1UQ52UQ21+.UQ52UQ21/1.4	Q2350.1 DO 1 1.2	-QN21.2_Q	Clamp 21 (SET)
=V1UQ52UQ22+.UQ52UQ22/1.4	Q2350.2 DO 2 2.1	-QN22.1_Q	Clamp 22 (RST)
=V1UQ52UQ22+.UQ52UQ22/1.4	Q2350.3 DO 3 2.2	-QN22.2_Q	Clamp 22 (SET)

-KF3.22
=V1UQ52UQ23+.UQ52UQ23/1.3
=V1UQ52UQ24+.UQ52UQ24/1.3

FESTO

=V1UQ52UQ23+.UQ52UQ23/1.4	Q2350.4 DO 0 1.1	-QN23.1_Q	Shot Pin 23 (RST)
=V1UQ52UQ23+.UQ52UQ23/1.4	Q2350.5 DO 1 1.2	-QN23.2_Q	Shot Pin 23 (SET)
=V1UQ52UQ24+.UQ52UQ24/1.4	Q2350.6 DO 2 2.1	-QN24.1_Q	Clamp 24 (RST)
=V1UQ52UQ24+.UQ52UQ24/1.4	Q2350.7 DO 3 2.2	-QN24.2_Q	Clamp 24 (SET)

-KF3.23
=V1UQ52UQ25+.UQ52UQ25/1.3
=V1UQ52UQ26+.UQ52UQ26/1.3

FESTO

=V1UQ52UQ25+.UQ52UQ25/1.4	Q2351.0 DO 0 1.1	-QN25.1_Q	Slide 25 (RST)
=V1UQ52UQ25+.UQ52UQ25/1.4	Q2351.1 DO 1 1.2	-QN25.2_Q	Slide 25 (SET)
=V1UQ52UQ26+.UQ52UQ26/1.4	Q2351.2 DO 2 2.1	-QN26.1_Q	Shot Pin 26 (RST)
=V1UQ52UQ26+.UQ52UQ26/1.4	Q2351.3 DO 3 2.2	-QN26.2_Q	Shot Pin 26 (SET)

-KF3.24
=V1UQ52UQ27+.UQ52UQ27/1.3
=V1UQ52UQ28+.UQ52UQ28/1.3

FESTO

=V1UQ52UQ27+.UQ52UQ27/1.4	Q2351.4 DO 0 1.1	-QN27.1_Q	Clamp 27 (RST)
=V1UQ52UQ27+.UQ52UQ27/1.4	Q2351.5 DO 1 1.2	-QN27.2_Q	Clamp 27 (SET)
=V1UQ52UQ28+.UQ52UQ28/1.4	Q2351.6 DO 2 2.1	-QN28.1_Q	Clamp 28 (RST)
=V1UQ52UQ28+.UQ52UQ28/1.4	Q2351.7 DO 3 2.2	-QN28.2_Q	Clamp 28 (SET)

-KF3.25
=V1UQ52UQ29+.UQ52UQ29/1.3
=V1UQ52UQ30+.UQ52UQ30/1.3

FESTO

=V1UQ52UQ29+.UQ52UQ29/1.4	Q2352.0 DO 0 1.1	-QN29.1_Q	Clamp 29 (RST)
=V1UQ52UQ29+.UQ52UQ29/1.4	Q2352.1 DO 1 1.2	-QN29.2_Q	Clamp 29 (SET)
=V1UQ52UQ30+.UQ52UQ30/1.4	Q2352.2 DO 2 2.1	-QN30.1_Q	Clamp 30 (RST)
=V1UQ52UQ30+.UQ52UQ30/1.4	Q2352.3 DO 3 2.2	-QN30.2_Q	Clamp 30 (SET)

			Date	1/17/2023	Volvo Trucks North America	Valiant TMS	CONNECTING MOD. FOR FESTO DQ	Drawing name: =2V09&EFS-EL	= V1UQ52KF3
			Ed.	MKLEPADLO					+ V1UQ52
			Appr		P6700 Bodyside LH - Robot Cell 2V09	Scale 1:1		Document type: EFS	Project nr: 22-16150
Modification	Date	Name	Original		Replacement of	Replaced by			Page 4 / 1533

0	1	2	3	4	5	6	7	8	9

=V1UQ52WC4/2.5 / W3.1

-W3.1
RSM RKM 56-1M/S3059
1m

=V1UQ52KF3/1.4 / KF3-P2

KF4-P2 / =V1UQ52KF5/1.3

-WF3
PROFINET Cable
6XV1840-3AH10

-KF4

X20 M12, 7/8" 1 2 PE 4 5
0V_VAL / OUT
0V_EL / SEN
FE
24V_EL / SEN
24V_VAL / OUT

ON OFF 1 2 1 2

M12 -TP1

M12 -TP2

FESTO
Bus node + Interlinking block
548755 + 550208

I2375.0	DI 0 X1:4	V1UQ52UQ31.1-BGR	Clamp 31 (RESET)
I2375.1	DI 1 X1:2	V1UQ52UQ31.1-BGS	Clamp 31 (SET)
I2375.2	DI 2 X2:4	V1UQ52UQ32.1-BGR	Clamp 32 (RESET)
I2375.3	DI 3 X2:2	V1UQ52UQ32.1-BGS	Clamp 32 (SET)
I2375.4	DI 4 X3:4	V1UQ52UQ33.1-BGR	Clamp 33 (RESET)
I2375.5	DI 5 X3:2	V1UQ52UQ33.1-BGS	Clamp 33 (SET)
I2375.6	DI 6 X4:4	V1UQ52UQ34.1-BGR	Clamp 34 (RESET)
I2375.7	DI 7 X4:2	V1UQ52UQ34.1-BGS	Clamp 34 (SET)
I2376.0	DI 8 X5:4	V1UQ52UQ35.1-BGR	Shot Pin 35 (RESET)
I2376.1	DI 9 X5:2	V1UQ52UQ35.1-BGS	Shot Pin 35 (SET)
I2376.2	DI 10 X6:4	V1UQ52UQ36.1-BGR	Clamp 36 (RESET)
I2376.3	DI 11 X6:2	V1UQ52UQ36.1-BGS	Clamp 36 (SET)
I2376.4	DI 12 X7:4	V1UQ52UQ37.1-BGR	Clamp 37 (RESET)
I2376.5	DI 13 X7:2	V1UQ52UQ37.1-BGS	Clamp 37 (SET)
I2376.6	DI 14 X8:4	V1UQ52UQ38.1-BGR	Clamp 38 (RESET)
I2376.7	DI 15 X8:2	V1UQ52UQ38.1-BGS	Clamp 38 (SET)

-KF4.11

FESTO
CPX-M-AB-8-M12X2-5POL
549335

X1 X2 X3 X4 X5 X6 X7 X8
M12
1 2 3 4 5
24V DI 1 0V DI 0 FE
24V DI 3 0V DI 2 FE
24V DI 5 0V DI 4 FE
24V DI 7 0V DI 6 FE
24V DI 9 0V DI 8 FE
24V DI 11 0V DI 10 FE
24V DI 13 0V DI 12 FE
24V DI 15 0V DI 14 FE
BN WH BU BK

+V1UQ52UQ31.1-W1
=V1UQ52UQ31+.UQ52UQ31/1.1

+V1UQ52UQ32.1-W1
=V1UQ52UQ32+.UQ52UQ32/1.1

+V1UQ52UQ33.1-W1
=V1UQ52UQ33+.UQ52UQ33/1.1

+V1UQ52UQ34.1-W1
=V1UQ52UQ34+.UQ52UQ34/1.1

+V1UQ52UQ35.1-W1
=V1UQ52UQ35+.UQ52UQ35/1.1

+V1UQ52UQ36.1-W1
=V1UQ52UQ36+.UQ52UQ36/1.1

+V1UQ52UQ37.1-W1
=V1UQ52UQ37+.UQ52UQ37/1.1

+V1UQ52UQ38.1-W1
=V1UQ52UQ38+.UQ52UQ38/1.1

=V1UQ52KF3/4

2

			Date	1/17/2023	Volvo Trucks North America	Valiant TMS	CONNECTING MOD. FOR VTSA MANIFOLD	Drawing name: =2V09&EFS-EL	= V1UQ52KF4
			Ed.	MKLEPADLO					+ V1UQ52
			Appr		P6700 Bodyside LH - Robot Cell 2V09			Document type: EFS	Project nr: 22-16150
Modification	Date	Name	Original		Replacement of / Replaced by	Scale 1:1			Page 1 / 1533

I2377.0	DI 0 X1:4	V1UQ52UQ39.1-BGR	Shot Pin 39 (RESET)
I2377.1	DI 1 X1:2	V1UQ52UQ39.1-BGS	Shot Pin 39 (SET)
I2377.2	DI 2 X2:4	V1UQ52UQ40.1-BGR	Clamp 40 (RESET)
I2377.3	DI 3 X2:2	V1UQ52UQ40.1-BGS	Clamp 40 (SET)
I2377.4	DI 4 X3:4	I2377.4	Spare
I2377.5	DI 5 X3:2	I2377.5	Spare
I2377.6	DI 6 X4:4	I2377.6	Spare
I2377.7	DI 7 X4:2	I2377.7	Spare
I2378.0	DI 8 X5:4	I2378.0	Spare
I2378.1	DI 9 X5:2	I2378.1	Spare
I2378.2	DI 10 X6:4	I2378.2	Spare
I2378.3	DI 11 X6:2	I2378.3	Spare
I2378.4	DI 12 X7:4	I2378.4	Spare
I2378.5	DI 13 X7:2	I2378.5	Spare
I2378.6	DI 14 X8:4	I2378.6	Spare
I2378.7	DI 15 X8:2	I2378.7	Spare

-KF4.12

FESTO

CPX-M-AB-8-M12X2-5POL

549335

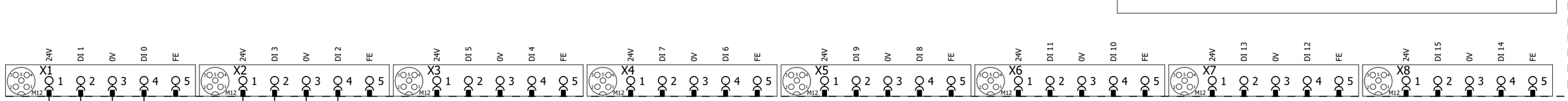

+V1UQ52UQ39.1-W1

=V1UQ52UQ39+.UQ52UQ39/1.1

+V1UQ52UQ40.1-W1

=V1UQ52UQ40+.UQ52UQ40/1.1

1

3

			Date	1/17/2023	Volvo Trucks North America	Valiant TMS	I/O MOD. DI16 (8 x M12) FOR VTSA-F	Drawing name: =2V09&EFS-EL	= V1UQ52KF4	
			Ed.	MKLEPADLO					+ V1UQ52	
			Appr		P6700 Bodyside LH - Robot Cell 2V09			Document type: EFS	Project nr: 22-16150	Page 2
Modification	Date	Name	Original		Replacement of	Replaced by	Scale 1:1			1533

0	1	2	3	4	5	6	7	8	9

-KF4.13

FESTO

CPX-M-AB-8-M12X2-5POL

549335

I2379.0	DI 0 X1:4	I2379.0	Spare
I2379.1	DI 1 X1:2	I2379.1	Spare
I2379.2	DI 2 X2:4	I2379.2	Spare
I2379.3	DI 3 X2:2	I2379.3	Spare
I2379.4	DI 4 X3:4	I2379.4	Spare
I2379.5	DI 5 X3:2	I2379.5	Spare
I2379.6	DI 6 X4:4	I2379.6	Spare
I2379.7	DI 7 X4:2	I2379.7	Spare
I2380.0	DI 8 X5:4	I2380.0	Spare
I2380.1	DI 9 X5:2	I2380.1	Spare
I2380.2	DI 10 X6:4	I2380.2	Spare
I2380.3	DI 11 X6:2	I2380.3	Spare
I2380.4	DI 12 X7:4	I2380.4	Spare
I2380.5	DI 13 X7:2	I2380.5	Spare
I2380.6	DI 14 X8:4	I2380.6	Spare
I2380.7	DI 15 X8:2	I2380.7	Spare

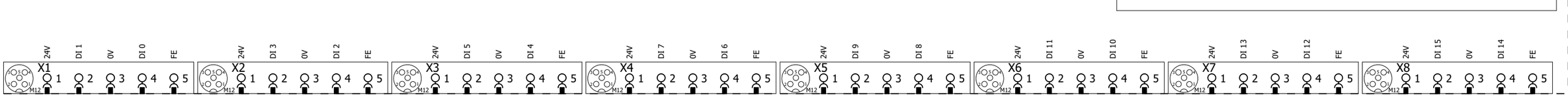

2 4

			Date	1/17/2023	Volvo Trucks North America	Valiant TMS	I/O MOD. DI16 (8 x M12) FOR VTSA-F	Drawing name: =2V09&EFS-EL	= V1UQ52KF4
			Ed.	MKLEPADLO					+ V1UQ52
			Appr		P6700 Bodyside LH - Robot Cell 2V09			Document type: EFS	Project nr: 22-16150
Modification	Date	Name	Original		Replacement of / Replaced by	Scale 1:1			Page 3 / 1533

-KF4 -KF4.11 -KF4.12 -KF4.13 -KF4.20 -KF4.21 -KF4.22 -KF4.23 -KF4.24 -KF4.25 -KF4.26 -KF4.27

M1 M2 M3 M4 M5

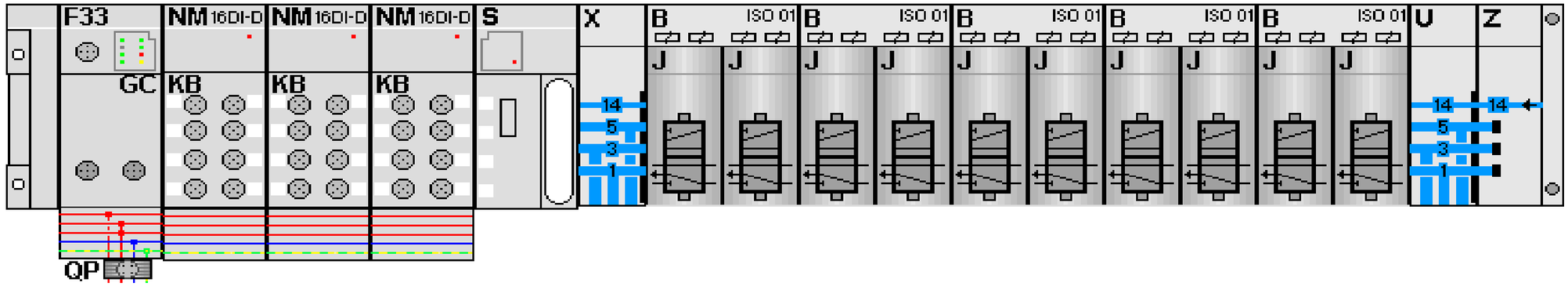

-KF4.21
=V1UQ52UQ31+.UQ52UQ31/1.3
=V1UQ52UQ32+.UQ52UQ32/1.3

FESTO

=V1UQ52UQ31+.UQ52UQ31/1.4	Q2375.0 DO 0 1.1	-QN31.1_Q	Clamp 31 (RST)
=V1UQ52UQ31+.UQ52UQ31/1.4	Q2375.1 DO 1 1.2	-QN31.2_Q	Clamp 31 (SET)
=V1UQ52UQ32+.UQ52UQ32/1.4	Q2375.2 DO 2 2.1	-QN32.1_Q	Clamp 32 (RST)
=V1UQ52UQ32+.UQ52UQ32/1.4	Q2375.3 DO 3 2.2	-QN32.2_Q	Clamp 32 (SET)

-KF4.22
=V1UQ52UQ33+.UQ52UQ33/1.3
=V1UQ52UQ34+.UQ52UQ34/1.3

FESTO

=V1UQ52UQ33+.UQ52UQ33/1.4	Q2375.4 DO 0 1.1	-QN33.1_Q	Clamp 33 (RST)
=V1UQ52UQ33+.UQ52UQ33/1.4	Q2375.5 DO 1 1.2	-QN33.2_Q	Clamp 33 (SET)
=V1UQ52UQ34+.UQ52UQ34/1.4	Q2375.6 DO 2 2.1	-QN34.1_Q	Clamp 34 (RST)
=V1UQ52UQ34+.UQ52UQ34/1.4	Q2375.7 DO 3 2.2	-QN34.2_Q	Clamp 34 (SET)

-KF4.23
=V1UQ52UQ35+.UQ52UQ35/1.3
=V1UQ52UQ36+.UQ52UQ36/1.3

FESTO

=V1UQ52UQ35+.UQ52UQ35/1.4	Q2376.0 DO 0 1.1	-QN35.1_Q	Shot Pin 35 (RST)
=V1UQ52UQ35+.UQ52UQ35/1.4	Q2376.1 DO 1 1.2	-QN35.2_Q	Shot Pin 35 (SET)
=V1UQ52UQ36+.UQ52UQ36/1.4	Q2376.2 DO 2 2.1	-QN36.1_Q	Clamp 36 (RST)
=V1UQ52UQ36+.UQ52UQ36/1.4	Q2376.3 DO 3 2.2	-QN36.2_Q	Clamp 36 (SET)

-KF4.24
=V1UQ52UQ37+.UQ52UQ37/1.3
=V1UQ52UQ38+.UQ52UQ38/1.3

FESTO

=V1UQ52UQ37+.UQ52UQ37/1.4	Q2376.4 DO 0 1.1	-QN37.1_Q	Clamp 37 (RST)
=V1UQ52UQ37+.UQ52UQ37/1.4	Q2376.5 DO 1 1.2	-QN37.2_Q	Clamp 37 (SET)
=V1UQ52UQ38+.UQ52UQ38/1.4	Q2376.6 DO 2 2.1	-QN38.1_Q	Clamp 38 (RST)
=V1UQ52UQ38+.UQ52UQ38/1.4	Q2376.7 DO 3 2.2	-QN38.2_Q	Clamp 38 (SET)

-KF4.25
=V1UQ52UQ39+.UQ52UQ39/1.3
=V1UQ52UQ40+.UQ52UQ40/1.3

FESTO

=V1UQ52UQ39+.UQ52UQ39/1.4	Q2377.0 DO 0 1.1	-QN39.1_Q	Shot Pin 39 (RST)
=V1UQ52UQ39+.UQ52UQ39/1.4	Q2377.1 DO 1 1.2	-QN39.2_Q	Shot Pin 39 (SET)
=V1UQ52UQ40+.UQ52UQ40/1.4	Q2377.2 DO 2 2.1	-QN40.1_Q	Clamp 40 (RST)
=V1UQ52UQ40+.UQ52UQ40/1.4	Q2377.3 DO 3 2.2	-QN40.2_Q	Clamp 40 (SET)

			Date	1/17/2023	Volvo Trucks North America	Valiant TMS	CONNECTING MOD. FOR FESTO DQ	Drawing name: =2V09&EFS-EL	= V1UQ52KF4
			Ed.	MKLEPADLO					+ V1UQ52
			Appr		P6700 Bodyside LH - Robot Cell 2V09	Scale 1:1		Document type: EFS	Project nr: 22-16150
Modification	Date	Name	Original		Replacement of	Replaced by			Page 4 / 1533

0	1	2	3	4	5	6	7	8	9

=V1UQ52WC4/2.6 / W3.2

-W3.2
RSM RKM 56-2M/S3059
2m

=V1UQ52KF4/1.4 / KF4-P2

-WF4
PROFINET Cable
6XV1840-3AH10

-KF5

X20 M12, 7/8" 1 2 PE 4 5
0V_VAL / OUT
0V_EL / SEN
FE
24V_EL / SEN
24V_VAL / OUT

M12 -TP1
M12 -TP2

ON
OFF
1 2 1 2

FESTO
Bus node + Interlinking block
548755 + 550208

I2400.0	DI 0 X1:4	V1UQ52UQ41.1-BGR	Clamp 41 (RESET)
I2400.1	DI 1 X1:2	V1UQ52UQ41.1-BGS	Clamp 41 (SET)
I2400.2	DI 2 X2:4	V1UQ52UQ42.1-BGR	Clamps 42 (RESET)
I2400.3	DI 3 X2:2	V1UQ52UQ42.1-BGS	Clamps 42 (SET)
I2400.4	DI 4 X3:4	V1UQ52UQ42.2-BGR	Clamps 42 (RESET)
I2400.5	DI 5 X3:2	V1UQ52UQ42.2-BGS	Clamps 42 (SET)
I2400.6	DI 6 X4:4	V1UQ52UQ43.1-BGR	Clamp 43 (RESET)
I2400.7	DI 7 X4:2	V1UQ52UQ43.1-BGS	Clamp 43 (SET)
I2401.0	DI 8 X5:4	V1UQ52UQ44.1-BGR	Shot Pins 44 (RESET)
I2401.1	DI 9 X5:2	V1UQ52UQ44.1-BGS	Shot Pins 44 (SET)
I2401.2	DI 10 X6:4	V1UQ52UQ44.2-BGR	Shot Pins 44 (RESET)
I2401.3	DI 11 X6:2	V1UQ52UQ44.2-BGS	Shot Pins 44 (SET)
I2401.4	DI 12 X7:4	V1UQ52UQ45.1-BGR	Clamp 45 (RESET)
I2401.5	DI 13 X7:2	V1UQ52UQ45.1-BGS	Clamp 45 (SET)
I2401.6	DI 14 X8:4	V1UQ52UQ46.1-BGR	Clamp 46 (RESET)
I2401.7	DI 15 X8:2	V1UQ52UQ46.1-BGS	Clamp 46 (SET)

-KF5.11

FESTO
CPX-M-AB-8-M12X2-5POL
549335

X1 M12 1 2 3 4 5 — 24V DI 1 0V DI 0 FE — BN WH BU BK
X2 M12 1 2 3 4 5 — 24V DI 3 0V DI 2 FE — BN WH BU BK
X3 M12 1 2 3 4 5 — 24V DI 5 0V DI 4 FE — BN WH BU BK
X4 M12 1 2 3 4 5 — 24V DI 7 0V DI 6 FE — BN WH BU BK
X5 M12 1 2 3 4 5 — 24V DI 9 0V DI 8 FE — BN WH BU BK
X6 M12 1 2 3 4 5 — 24V DI 11 0V DI 10 FE — BN WH BU BK
X7 M12 1 2 3 4 5 — 24V DI 13 0V DI 12 FE — BN WH BU BK
X8 M12 1 2 3 4 5 — 24V DI 15 0V DI 14 FE — BN WH BU BK

+V1UQ52UQ41.1-W1
=V1UQ52UQ41+.UQ52UQ41/1.1

+V1UQ52UQ42.1-W1
=V1UQ52UQ42+.UQ52UQ42/1.1

+V1UQ52UQ42.2-W1
=V1UQ52UQ42+.UQ52UQ42/1.2

+V1UQ52UQ43.1-W1
=V1UQ52UQ43+.UQ52UQ43/1.1

+V1UQ52UQ44.1-W1
=V1UQ52UQ44+.UQ52UQ44/1.1

+V1UQ52UQ44.2-W1
=V1UQ52UQ44+.UQ52UQ44/1.2

+V1UQ52UQ45.1-W1
=V1UQ52UQ45+.UQ52UQ45/1.1

+V1UQ52UQ46.1-W1
=V1UQ52UQ46+.UQ52UQ46/1.1

=V1UQ52KF4/4

			Date	1/17/2023	Volvo Trucks North America	Valiant TMS	CONNECTING MOD. FOR VTSA MANIFOLD	Drawing name: =2V09&EFS-EL	= V1UQ52KF5
			Ed.	MKLEPADLO					+ V1UQ52
			Appr		P6700 Bodyside LH - Robot Cell 2V09	Scale 1:1		Document type: EFS	Project nr: 22-16150
Modification	Date	Name	Original		Replacement of / Replaced by				Page 1 / 1533

0	1	2	3	4	5	6	7	8	9

-KF5.12

FESTO

CPX-M-AB-8-M12X2-5POL

549335

I2402.0	DI 0 X1:4	I2402.0	Spare
I2402.1	DI 1 X1:2	I2402.1	Spare
I2402.2	DI 2 X2:4	I2402.2	Spare
I2402.3	DI 3 X2:2	I2402.3	Spare
I2402.4	DI 4 X3:4	I2402.4	Spare
I2402.5	DI 5 X3:2	I2402.5	Spare
I2402.6	DI 6 X4:4	I2402.6	Spare
I2402.7	DI 7 X4:2	I2402.7	Spare
I2403.0	DI 8 X5:4	I2403.0	Spare
I2403.1	DI 9 X5:2	I2403.1	Spare
I2403.2	DI 10 X6:4	I2403.2	Spare
I2403.3	DI 11 X6:2	I2403.3	Spare
I2403.4	DI 12 X7:4	I2403.4	Spare
I2403.5	DI 13 X7:2	I2403.5	Spare
I2403.6	DI 14 X8:4	I2403.6	Spare
I2403.7	DI 15 X8:2	I2403.7	Spare

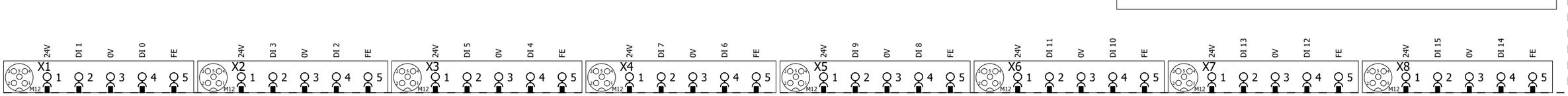

1

3

			Date	1/17/2023	Volvo Trucks North America	Valiant TMS	I/O MOD. DI16 (8 x M12) FOR VTSA-F	Drawing name: =2V09&EFS-EL	= V1UQ52KF5
			Ed.	MKLEPADLO					+ V1UQ52
			Appr		P6700 Bodyside LH - Robot Cell 2V09			Document type: EFS	Project nr: 22-16150
Modification	Date	Name	Original		Replacement of / Replaced by	Scale 1:1			Page 2 / 1533

-KF5 -KF5.11 -KF5.12 -KF5.20 -KF5.21 -KF5.22 -KF5.23 -KF5.24 -KF5.25 -KF5.26

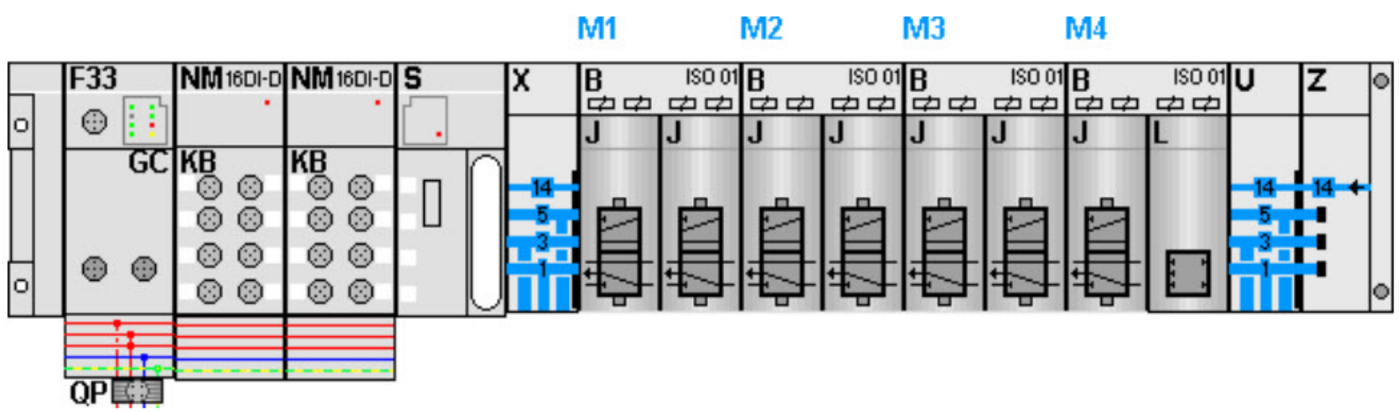

-KF5.21
=V1UQ52UQ41+.UQ52UQ41/1.3
=V1UQ52UQ42+.UQ52UQ42/1.3

FESTO

=V1UQ52UQ41+.UQ52UQ41/1.4	Q2400.0 DO 0 1.1	-QN41.1_Q	Clamp 41 (RST)
=V1UQ52UQ41+.UQ52UQ41/1.4	Q2400.1 DO 1 1.2	-QN41.2_Q	Clamp 41 (SET)
=V1UQ52UQ42+.UQ52UQ42/1.4	Q2400.2 DO 2 2.1	-QN42.1_Q	Clamps 42 (RST)
=V1UQ52UQ42+.UQ52UQ42/1.4	Q2400.3 DO 3 2.2	-QN42.2_Q	Clamps 42 (SET)

-KF5.22
=V1UQ52UQ43+.UQ52UQ43/1.3
=V1UQ52UQ44+.UQ52UQ44/1.3

FESTO

=V1UQ52UQ43+.UQ52UQ43/1.4	Q2400.4 DO 0 1.1	-QN43.1_Q	Clamp 43 (RST)
=V1UQ52UQ43+.UQ52UQ43/1.4	Q2400.5 DO 1 1.2	-QN43.2_Q	Clamp 43 (SET)
=V1UQ52UQ44+.UQ52UQ44/1.4	Q2400.6 DO 2 2.1	-QN44.1_Q	Shot Pins 44 (RST)
=V1UQ52UQ44+.UQ52UQ44/1.4	Q2400.7 DO 3 2.2	-QN44.2_Q	Shot Pins 44 (SET)

-KF5.23
=V1UQ52UQ45+.UQ52UQ45/1.3
=V1UQ52UQ46+.UQ52UQ46/1.3

FESTO

=V1UQ52UQ45+.UQ52UQ45/1.4	Q2401.0 DO 0 1.1	-QN45.1_Q	Clamp 45 (RST)
=V1UQ52UQ45+.UQ52UQ45/1.4	Q2401.1 DO 1 1.2	-QN45.2_Q	Clamp 45 (SET)
=V1UQ52UQ46+.UQ52UQ46/1.4	Q2401.2 DO 2 2.1	-QN46.1_Q	Clamp 46 (RST)
=V1UQ52UQ46+.UQ52UQ46/1.4	Q2401.3 DO 3 2.2	-QN46.2_Q	Clamp 46 (SET)

			Date	1/17/2023	Volvo Trucks North America	Valiant TMS	CONNECTING MOD. FOR FESTO DQ	Drawing name: =2V09&EFS-EL	= V1UQ52KF5	
			Ed.	MKLEPADLO					+ V1UQ52	
			Appr		P6700 Bodyside LH - Robot Cell 2V09	Scale 1:1		Document type: EFS	Project nr: 22-16150	Page 3 / 1533
Modification	Date	Name	Original		Replacement of	Replaced by				

0	1	2	3	4	5	6	7	8	9

=V1UQ52KF1
+V1UQ52

-KF1.21
=V1UQ52KF1+V1UQ52/4.1

Shot Pin 1 (RST)	Shot Pin 1 (SET)
=V1UQ52KF1	=V1UQ52KF1
+V1UQ52	+V1UQ52
-QN1.1_Q	-QN1.2_Q
=V1UQ52KF1	=V1UQ52KF1
+V1UQ52/4.3	+V1UQ52/4.3
Q2300.0	Q2300.1

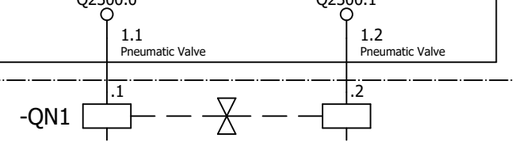

=V1UQ52KF1+V1UQ52/1.1
+V1UQ52UQ1.1-W1

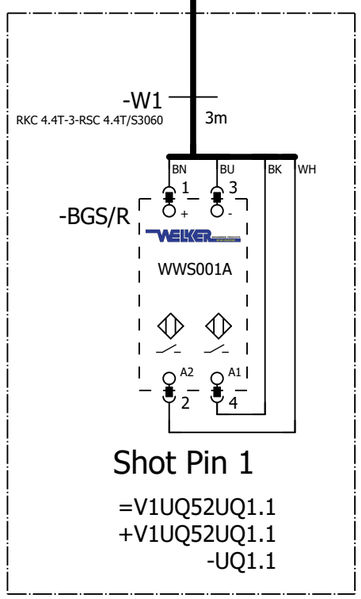

Shot Pin 1

=V1UQ52UQ1.1
+V1UQ52UQ1.1
-UQ1.1

=V1UQ52
-UQ1.1-BGS/R
Shot Pin 1

=V1UQ52KF5+V1UQ52/3

=V1UQ52UQ2+.UQ52UQ2/1

			Date	1/17/2023	Volvo Trucks North America	Valiant TMS	FESTO DQ CONNECTION QN1	Drawing name: =2V09&EFS-EL	= V1UQ52UQ1
			Ed.	MKLEPADLO					+ V1UQ52UQ1
			Appr		P6700 Bodyside LH - Robot Cell 2V09			Document type: EFS	Project nr: 22-16150
Modification	Date	Name	Original		Replacement of	Replaced by	Scale 1:1		Page 1 / 1533

0	1	2	3	4	5	6	7	8	9

=V1UQ52KF1
+V1UQ52

-KF1.21
=V1UQ52KF1+V1UQ52/4.1

Shot Pins 2 (RST)
=V1UQ52KF1
+V1UQ52
-QN2.1_Q
=V1UQ52KF1
+V1UQ52/4.3
Q2300.2

Shot Pins 2 (SET)
=V1UQ52KF1
+V1UQ52
-QN2.2_Q
=V1UQ52KF1
+V1UQ52/4.3
Q2300.3

2.1 Pneumatic Valve

2.2 Pneumatic Valve

-QN2 .1 .2

=V1UQ52KF1+V1UQ52/1.2
+V1UQ52UQ2.1-W1

-W1 RKC 4.4T-2-RSC 4.4T/S3060 2m

BN BU BK WH

-XG2 P1 1 3 4 2 VB2-FSM 4.4/2FKM 4/S3450 TURCK

J1 1 3 4 2 J2 1 3 4 2

BN BU BK WH

-W1.1 RKC 4.4T-0.5-RSC 4.4T/S3060 0.5m

-W1.2 RKC 4.4T-0.5-RSC 4.4T/S3060 0.5m

-BGR Sn = 2 mm TURCK 4570890 pnp

-BGS Sn = 2 mm TURCK 4570890 pnp

Shot Pins 2
=V1UQ52UQ2.1
+V1UQ52UQ2.1
-UQ2.1

=V1UQ52
-UQ2.1-BGR
Shot Pins 2

=V1UQ52
-UQ2.1-BGS
Shot Pins 2

=V1UQ52KF1+V1UQ52/1.3
+V1UQ52UQ2.2-W1

-W1 RKC 4.4T-2-RSC 4.4T/S3060 2m

-BGS/R WELKER WWS001A

Shot Pins 2
=V1UQ52UQ2.2
+V1UQ52UQ2.2
-UQ2.2

=V1UQ52
-UQ2.2-BGS/R
Shot Pins 2

=V1UQ52KF1+V1UQ52/1.4
+V1UQ52UQ2.3-W1

-W1 RKC 4.4T-2-RSC 4.4T/S3060 2m

-BGS/R WELKER WWS001A

Shot Pins 2
=V1UQ52UQ2.3
+V1UQ52UQ2.3
-UQ2.3

=V1UQ52
-UQ2.3-BGS/R
Shot Pins 2

=V1UQ52UQ1+.UQ52UQ1/1

=V1UQ52UQ3+.UQ52UQ3/1

			Date	1/17/2023	Volvo Trucks North America	Valiant TMS	FESTO DQ CONNECTION QN2	Drawing name: =2V09&EFS-EL	= V1UQ52UQ2
			Ed.	MKLEPADLO					+ V1UQ52UQ2
			Appr		P6700 Bodyside LH - Robot Cell 2V09	Scale 1:1		Document type: EFS	Project nr: 22-16150
Modification	Date	Name	Original		Replacement of	Replaced by			Page 1 / 1533

0	1	2	3	4	5	6	7	8	9

=V1UQ52KF1
+V1UQ52

-KF1.22
=V1UQ52KF1+V1UQ52/4.1

Shot Pin 3 (RST)
=V1UQ52KF1
+V1UQ52
-QN3.1_Q
=V1UQ52KF1
+V1UQ52/4.3
Q2300.4

Shot Pin 3 (SET)
=V1UQ52KF1
+V1UQ52
-QN3.2_Q
=V1UQ52KF1
+V1UQ52/4.3
Q2300.5

1.1
Pneumatic Valve

1.2
Pneumatic Valve

.1

.2

-QN3

=V1UQ52KF1+V1UQ52/1.5
+V1UQ52UQ3.1-W1

-W1
RKC 4.4T-3-RSC 4.4T/S3060
3m

BN BU BK WH

1 3

+ -

-BGS/R

WWS001A

A2 A1

2 4

Shot Pin 3

=V1UQ52UQ3.1
+V1UQ52UQ3.1
-UQ3.1

=V1UQ52
-UQ3.1-BGS/R
Shot Pin 3

=V1UQ52UQ2+.UQ52UQ2/1

=V1UQ52UQ4+.UQ52UQ4/1

			Date	1/17/2023	Volvo Trucks North America	Valiant TMS	FESTO DQ CONNECTION QN3	Drawing name: =2V09&EFS-EL	= V1UQ52UQ3
			Ed.	MKLEPADLO					+ V1UQ52UQ3
			Appr		P6700 Bodyside LH - Robot Cell 2V09			Document type: EFS	Project nr: 22-16150
Modification	Date	Name	Original		Replacement of	Replaced by	Scale 1:1		Page 1 / 1533

0	1	2	3	4	5	6	7	8	9

=V1UQ52KF1
+V1UQ52

-KF1.22
=V1UQ52KF1+V1UQ52/4.1

Shot Pin 4 (RST)	Shot Pin 4 (SET)
=V1UQ52KF1	=V1UQ52KF1
+V1UQ52	+V1UQ52
-QN4.1_Q	-QN4.2_Q
=V1UQ52KF1	=V1UQ52KF1
+V1UQ52/4.3	+V1UQ52/4.3
Q2300.6	Q2300.7
2.1 Pneumatic Valve	2.2 Pneumatic Valve

-QN4 .1 .2

=V1UQ52KF1+V1UQ52/1.6
+V1UQ52UQ4.1-W1

-W1
RKC 4.4T-4-RSC 4.4T/S3060
4m
BN BU BK WH

-XG4 P1 1 3 4 2 VB2-FSM 4.4/2FKM 4/S3450 TURCK
J1 1 3 4 2
J2 1 3 4 2
BN BU BK WH

-W1.1
RKC 4.4T-0.5-RSC 4.4T/S3060
0.5m
-W1.2
RKC 4.4T-0.5-RSC 4.4T/S3060
0.5m
BN BU BK WH

-BGR
Sn = 2 mm
TURCK
4570890
pnp
1 3 A 4

-BGS
Sn = 2 mm
TURCK
4570890
pnp
1 3 A 4

Shot Pin 4
=V1UQ52UQ4.1
+V1UQ52UQ4.1
-UQ4.1

=V1UQ52
-UQ4.1-BGR
Shot Pin 4

=V1UQ52
-UQ4.1-BGS
Shot Pin 4

=V1UQ52UQ3+.UQ52UQ3/1

=V1UQ52UQ5+.UQ52UQ5/1

			Date	1/17/2023	Volvo Trucks North America	Valiant TMS	FESTO DQ CONNECTION QN4	Drawing name: =2V09&EFS-EL	= V1UQ52UQ4
			Ed.	MKLEPADLO					+ V1UQ52UQ4
			Appr		P6700 Bodyside LH - Robot Cell 2V09			Document type: EFS	Project nr: 22-16150
Modification	Date	Name	Original		Replacement of	Replaced by	Scale 1:1		Page 1 / 1533

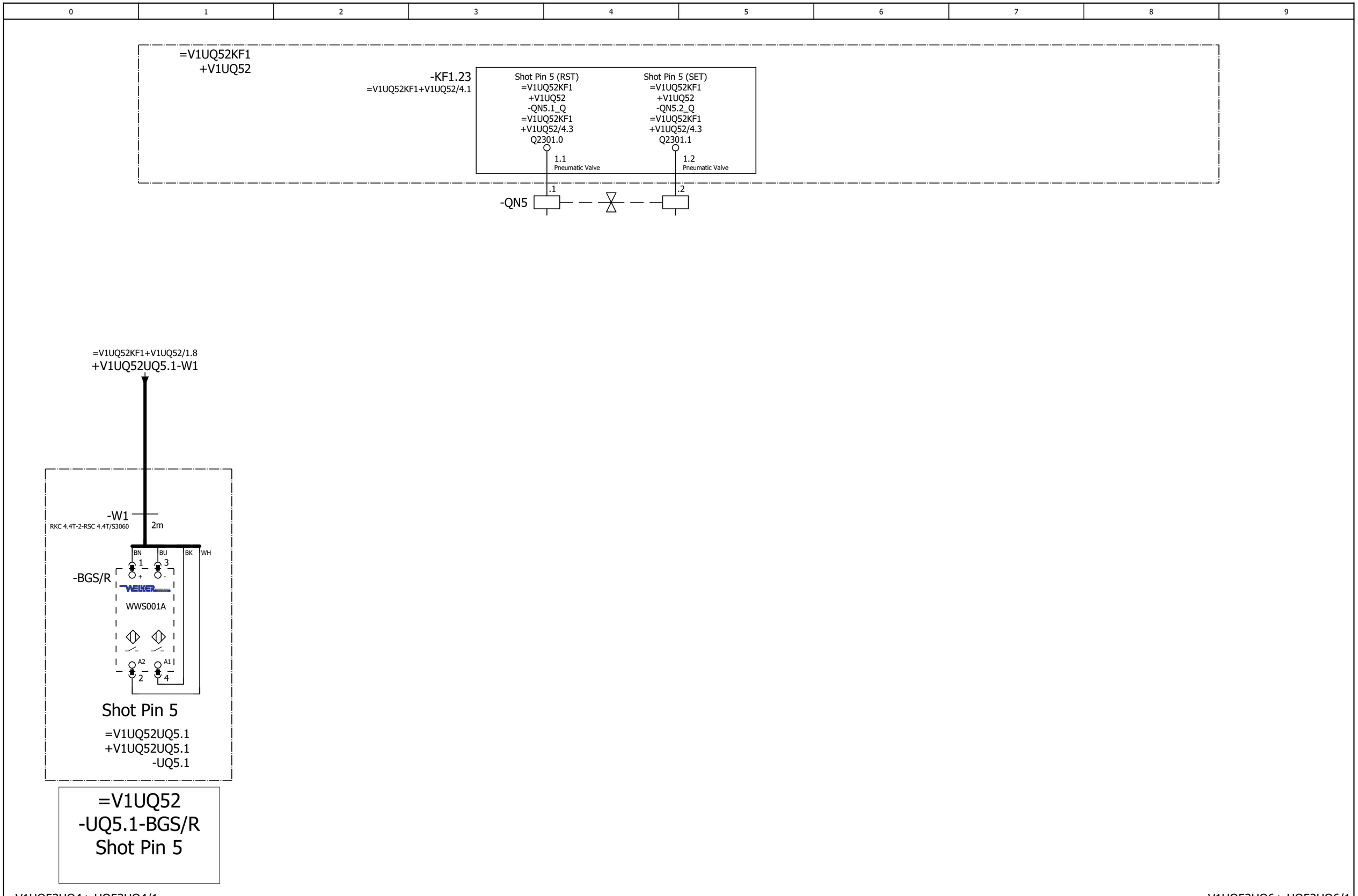

=V1UQ52UQ4+.UQ52UQ4/1

=V1UQ52UQ6+.UQ52UQ6/1

			Date	1/17/2023	Volvo Trucks North America	Valiant TMS	FESTO DQ CONNECTION QN5	Drawing name: =2V09&EFS-EL	= V1UQ52UQ5 + V1UQ52UQ5
			Ed.	MKLEPADLO	P6700 Bodyside LH - Robot Cell 2V09			Document type: EFS	Project nr: 22-16150
			Appr						Page 1
Modification	Date	Name	Original		Replacement of / Replaced by	Scale 1:1			1533

0	1	2	3	4	5	6	7	8	9

=V1UQ52KF1
+V1UQ52

-KF1.23
=V1UQ52KF1+V1UQ52/4.1

Shot Pin 6 (RST)
=V1UQ52KF1
+V1UQ52
-QN6.1_Q
=V1UQ52KF1
+V1UQ52/4.3
Q2301.2

Shot Pin 6 (SET)
=V1UQ52KF1
+V1UQ52
-QN6.2_Q
=V1UQ52KF1
+V1UQ52/4.3
Q2301.3

2.1
Pneumatic Valve

2.2
Pneumatic Valve

-QN6 .1 .2

=V1UQ52KF1+V1UQ52/1.9
+V1UQ52UQ6.1-W1

-W1
RKC 4.4T-1-RSC 4.4T/S3060
1m

BN BU BK WH

-BGS/R
1 3
+ -
WELKER
WWS001A
A2 A1
2 4

Shot Pin 6

=V1UQ52UQ6.1
+V1UQ52UQ6.1
-UQ6.1

=V1UQ52
-UQ6.1-BGS/R
Shot Pin 6

=V1UQ52UQ5+.UQ52UQ5/1

=V1UQ52UQ7+.UQ52UQ7/1

			Date	1/17/2023	Volvo Trucks North America		Valiant TMS	FESTO DQ CONNECTION QN6	Drawing name: =2V09&EFS-EL	= V1UQ52UQ6
			Ed.	MKLEPADLO						+ V1UQ52UQ6
			Appr		P6700 Bodyside LH - Robot Cell 2V09				Document type: EFS	Project nr: 22-16150
Modification	Date	Name	Original		Replacement of	Replaced by	Scale 1:1			Page 1 / 1533

0	1	2	3	4	5	6	7	8	9

=V1UQ52KF1
+V1UQ52

-KF1.24
=V1UQ52KF1+V1UQ52/4.1

Shot Pin 7 (RST)	Shot Pin 7 (SET)
=V1UQ52KF1	=V1UQ52KF1
+V1UQ52	+V1UQ52
-QN7.1_Q	-QN7.2_Q
=V1UQ52KF1	=V1UQ52KF1
+V1UQ52/4.3	+V1UQ52/4.3
Q2301.4	Q2301.5
1.1 Pneumatic Valve	1.2 Pneumatic Valve

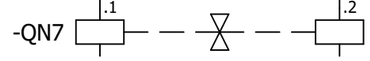

=V1UQ52KF1+V1UQ52/2.1
+V1UQ52UQ7.1-W1

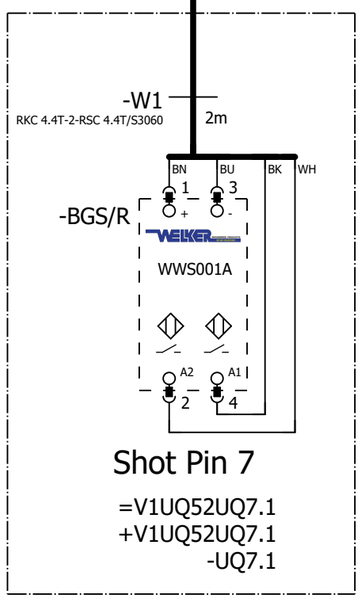

Shot Pin 7

=V1UQ52UQ7.1
+V1UQ52UQ7.1
-UQ7.1

=V1UQ52
-UQ7.1-BGS/R
Shot Pin 7

=V1UQ52UQ6+.UQ52UQ6/1

=V1UQ52UQ8+.UQ52UQ8/1

			Date	1/17/2023	Volvo Trucks North America	Valiant TMS	FESTO DQ CONNECTION QN7	Drawing name: =2V09&EFS-EL	= V1UQ52UQ7
			Ed.	MKLEPADLO					+ V1UQ52UQ7
			Appr		P6700 Bodyside LH - Robot Cell 2V09			Document type: EFS	Project nr: 22-16150
Modification	Date	Name	Original		Replacement of	Replaced by	Scale 1:1		Page 1 / 1533

0	1	2	3	4	5	6	7	8	9

=V1UQ52KF1
+V1UQ52

-KF1.24
=V1UQ52KF1+V1UQ52/4.1

Shot Pins 8 (RST)
=V1UQ52KF1
+V1UQ52
-QN8.1_Q
=V1UQ52KF1
+V1UQ52/4.3
Q2301.6

Shot Pins 8 (SET)
=V1UQ52KF1
+V1UQ52
-QN8.2_Q
=V1UQ52KF1
+V1UQ52/4.3
Q2301.7

2.1
Pneumatic Valve

2.2
Pneumatic Valve

-QN8 .1 .2

=V1UQ52KF1+V1UQ52/2.2
+V1UQ52UQ8.1-W1

-W1
RKC 4.4T-1-RSC 4.4T/S3060
1m

BN BU BK WH
1 3
+ -
-BGS/R
WELKER
WWS001A
A2 A1
2 4

Shot Pins 8

=V1UQ52UQ8.1
+V1UQ52UQ8.1
-UQ8.1

=V1UQ52
-UQ8.1-BGS/R
Shot Pins 8

=V1UQ52KF1+V1UQ52/2.3
+V1UQ52UQ8.2-W1

-W1
RKC 4.4T-3-RSC 4.4T/S3060
3m

BN BU BK WH
1 3
+ -
-BGS/R
WELKER
WWS001A
A2 A1
2 4

Shot Pins 8

=V1UQ52UQ8.2
+V1UQ52UQ8.2
-UQ8.2

=V1UQ52
-UQ8.2-BGS/R
Shot Pins 8

=V1UQ52UQ7+.UQ52UQ7/1

=V1UQ52UQ9+.UQ52UQ9/1

			Date	1/17/2023	Volvo Trucks North America	Valiant TMS	FESTO DQ CONNECTION QN8	Drawing name: =2V09&EFS-EL	= V1UQ52UQ8
			Ed.	MKLEPADLO					+ V1UQ52UQ8
			Appr		P6700 Bodyside LH - Robot Cell 2V09			Document type: EFS	Project nr: 22-16150
Modification	Date	Name	Original		Replacement of	Replaced by	Scale 1:1		Page 1 / 1533

0	1	2	3	4	5	6	7	8	9

=V1UQ52KF1
+V1UQ52

-KF1.25
=V1UQ52KF1+V1UQ52/4.1

Shot Pin 9 (RST)
=V1UQ52KF1
+V1UQ52
-QN9.1_Q
=V1UQ52KF1
+V1UQ52/4.3
Q2302.0

Shot Pin 9 (SET)
=V1UQ52KF1
+V1UQ52
-QN9.2_Q
=V1UQ52KF1
+V1UQ52/4.3
Q2302.1

1.1
Pneumatic Valve

1.2
Pneumatic Valve

.1

.2

-QN9

=V1UQ52KF1+V1UQ52/2.4
+V1UQ52UQ9.1-W1

-W1
RKC 4.4T-2-RSC 4.4T/S3060
2m

BN BU BK WH

1 3

-BGS/R

WWS001A

A2 A1

2 4

Shot Pin 9

=V1UQ52UQ9.1
+V1UQ52UQ9.1
-UQ9.1

=V1UQ52
-UQ9.1-BGS/R
Shot Pin 9

=V1UQ52UQ8+.UQ52UQ8/1

=V1UQ52UQ10+.UQ52UQ10/1

			Date	1/17/2023	Volvo Trucks North America		Valiant TMS	FESTO DQ CONNECTION QN9	Drawing name: =2V09&EFS-EL	= V1UQ52UQ9
			Ed.	MKLEPADLO						+ V1UQ52UQ9
			Appr		P6700 Bodyside LH - Robot Cell 2V09				Document type: EFS	Project nr: 22-16150
Modification	Date	Name	Original		Replacement of	Replaced by	Scale 1:1			Page 1 / 1533

0	1	2	3	4	5	6	7	8	9

=V1UQ52KF1
+V1UQ52

-KF1.25
=V1UQ52KF1+V1UQ52/4.1

Clamps 10 (RST)	Clamps 10 (SET)
=V1UQ52KF1	=V1UQ52KF1
+V1UQ52	+V1UQ52
-QN10.1_Q	-QN10.2_Q
=V1UQ52KF1	=V1UQ52KF1
+V1UQ52/4.3	+V1UQ52/4.3
Q2302.2	Q2302.3
2.1 Pneumatic Valve	2.2 Pneumatic Valve

-QN10 .1 .2

=V1UQ52KF1+V1UQ52/2.5
+V1UQ52UQ10.1-W1

-W1
RKC 4.4T-2-RSC 4.4T/S3060
2m

-BGS/R
BN BU BK WH
1 3
TÜNKERS
1324638
A2 A1
2 4

Clamps 10
=V1UQ52UQ10.1
+V1UQ52UQ10.1
-UQ10.1

=V1UQ52
-UQ10.1-BGS/R
Clamps 10

=V1UQ52KF1+V1UQ52/2.6
+V1UQ52UQ10.2-W1

-W1
RKC 4.4T-2-RSC 4.4T/S3060
2m

-BGS/R
BN BU BK WH
1 3
TÜNKERS
1324638
A2 A1
2 4

Clamps 10
=V1UQ52UQ10.2
+V1UQ52UQ10.2
-UQ10.2

=V1UQ52
-UQ10.2-BGS/R
Clamps 10

=V1UQ52KF1+V1UQ52/2.8
+V1UQ52UQ10.3-W1

-W1
RKC 4.4T-2-RSC 4.4T/S3060
2m

-BGS/R
BN BU BK WH
1 3
TÜNKERS
1324638
A2 A1
2 4

Clamps 10
=V1UQ52UQ10.3
+V1UQ52UQ10.3
-UQ10.3

=V1UQ52
-UQ10.3-BGS/R
Clamps 10

=V1UQ52KF1+V1UQ52/2.9
+V1UQ52UQ10.4-W1

-W1
RKC 4.4T-1-RSC 4.4T/S3060
1m

-BGS/R
BN BU BK WH
1 3
TÜNKERS
1324638
A2 A1
2 4

Clamps 10
=V1UQ52UQ10.4
+V1UQ52UQ10.4
-UQ10.4

=V1UQ52
-UQ10.4-BGS/R
Clamps 10

=V1UQ52KF1+V1UQ52/3.1
+V1UQ52UQ10.5-W1

-W1
RKC 4.4T-2-RSC 4.4T/S3060
2m

-BGS/R
BN BU BK WH
1 3
TÜNKERS
1324638
A2 A1
2 4

Clamps 10
=V1UQ52UQ10.5
+V1UQ52UQ10.5
-UQ10.5

=V1UQ52
-UQ10.5-BGS/R
Clamps 10

=V1UQ52KF1+V1UQ52/3.2
+V1UQ52UQ10.6-W1

-W1
RKC 4.4T-2-RSC 4.4T/S3060
2m

-BGS/R
BN BU BK WH
1 3
TÜNKERS
1324638
A2 A1
2 4

Clamps 10
=V1UQ52UQ10.6
+V1UQ52UQ10.6
-UQ10.6

=V1UQ52
-UQ10.6-BGS/R
Clamps 10

=V1UQ52UQ9+.UQ52UQ9/1

=V1UQ52UQ11+.UQ52UQ11/1

			Date	1/17/2023	Volvo Trucks North America	Valiant TMS	FESTO DQ CONNECTION QN10	Drawing name: =2V09&EFS-EL	= V1UQ52UQ10
			Ed.	MKLEPADLO					+ V1UQ52UQ10
			Appr		P6700 Bodyside LH - Robot Cell 2V09			Document type: EFS	Project nr: 22-16150
Modification	Date	Name	Original		Replacement of	Replaced by	Scale 1:1		Page 1 / 1533

0	1	2	3	4	5	6	7	8	9

=V1UQ52KF2
+V1UQ52

-KF2.21
=V1UQ52KF2+V1UQ52/4.1

Clamps 11 (RST)	Clamps 11 (SET)
=V1UQ52KF2	=V1UQ52KF2
+V1UQ52	+V1UQ52
-QN11.1_Q	-QN11.2_Q
=V1UQ52KF2	=V1UQ52KF2
+V1UQ52/4.3	+V1UQ52/4.3
Q2325.0	Q2325.1
1.1 Pneumatic Valve	1.2 Pneumatic Valve

-QN11 .1 .2

=V1UQ52KF2+V1UQ52/1.1
+V1UQ52UQ11.1-W1

-W1
RKC 4.4T-3-RSC 4.4T/S3060
3m

-BGS/R
BN 1 + BU 3 - BK WH
TÜNKERS Erfindergeist serienmäßig.
1324638
A2 2 A1 4

Clamps 11
=V1UQ52UQ11.1
+V1UQ52UQ11.1
-UQ11.1

=V1UQ52
-UQ11.1-BGS/R
Clamps 11

=V1UQ52KF2+V1UQ52/1.2
+V1UQ52UQ11.2-W1

-W1
RKC 4.4T-2-RSC 4.4T/S3060
2m

-BGS/R
BN 1 + BU 3 - BK WH
TÜNKERS Erfindergeist serienmäßig.
1324644
A2 2 A1 4

Clamps 11
=V1UQ52UQ11.2
+V1UQ52UQ11.2
-UQ11.2

=V1UQ52
-UQ11.2-BGS/R
Clamps 11

=V1UQ52KF2+V1UQ52/1.3
+V1UQ52UQ11.3-W1

-W1
RKC 4.4T-3-RSC 4.4T/S3060
3m

-BGS/R
BN 1 + BU 3 - BK WH
TÜNKERS Erfindergeist serienmäßig.
1324644
A2 2 A1 4

Clamps 11
=V1UQ52UQ11.3
+V1UQ52UQ11.3
-UQ11.3

=V1UQ52
-UQ11.3-BGS/R
Clamps 11

=V1UQ52UQ10+.UQ52UQ10/1

=V1UQ52UQ12+.UQ52UQ12/1

			Date	1/17/2023	Volvo Trucks North America		Valiant TMS	FESTO DQ CONNECTION QN11	Drawing name: =2V09&EFS-EL	= V1UQ52UQ11
			Ed.	MKLEPADLO						+ V1UQ52UQ11
			Appr		P6700 Bodyside LH - Robot Cell 2V09				Document type: EFS	Project nr: 22-16150
Modification	Date	Name	Original		Replacement of	Replaced by	Scale 1:1			Page 1 / 1533

0	1	2	3	4	5	6	7	8	9

=V1UQ52KF2
+V1UQ52

-KF2.21
=V1UQ52KF2+V1UQ52/4.1

Clamps 12 (RST)
=V1UQ52KF2
+V1UQ52
-QN12.1_Q
=V1UQ52KF2
+V1UQ52/4.3
Q2325.2

Clamps 12 (SET)
=V1UQ52KF2
+V1UQ52
-QN12.2_Q
=V1UQ52KF2
+V1UQ52/4.3
Q2325.3

2.1 Pneumatic Valve

2.2 Pneumatic Valve

-QN12 .1 .2

=V1UQ52KF2+V1UQ52/1.4
+V1UQ52UQ12.1-W1

-W1
RKC 4.4T-2-RSC 4.4T/S3060
2m

BN BU BK WH

-BGS/R
1 3
+ -
TÜNKERS
1324638
A2 A1
2 4

Clamps 12
=V1UQ52UQ12.1
+V1UQ52UQ12.1
-UQ12.1

=V1UQ52
-UQ12.1-BGS/R
Clamps 12

=V1UQ52KF2+V1UQ52/1.5
+V1UQ52UQ12.2-W1

-W1
RKC 4.4T-5-RSC 4.4T/S3060
5m

BN BU BK WH

-BGS/R
1 3
+ -
TÜNKERS
1324638
A2 A1
2 4

Clamps 12
=V1UQ52UQ12.2
+V1UQ52UQ12.2
-UQ12.2

=V1UQ52
-UQ12.2-BGS/R
Clamps 12

=V1UQ52UQ11+.UQ52UQ11/1

=V1UQ52UQ13+.UQ52UQ13/1

			Date	1/17/2023	Volvo Trucks North America	Valiant TMS	FESTO DQ CONNECTION QN12	Drawing name: =2V09&EFS-EL	= V1UQ52UQ12
			Ed.	MKLEPADLO					+ V1UQ52UQ12
			Appr		P6700 Bodyside LH - Robot Cell 2V09			Document type: EFS	Project nr: 22-16150
Modification	Date	Name	Original		Replacement of	Replaced by	Scale 1:1		Page 1 / 1533

0	1	2	3	4	5	6	7	8	9

=V1UQ52KF2
+V1UQ52

-KF2.22
=V1UQ52KF2+V1UQ52/4.1

Clamp 13 (RST)
=V1UQ52KF2
+V1UQ52
-QN13.1_Q
=V1UQ52KF2
+V1UQ52/4.3
Q2325.4

Clamp 13 (SET)
=V1UQ52KF2
+V1UQ52
-QN13.2_Q
=V1UQ52KF2
+V1UQ52/4.3
Q2325.5

1.1
Pneumatic Valve

1.2
Pneumatic Valve

-QN13 .1 .2

=V1UQ52KF2+V1UQ52/1.6
+V1UQ52UQ13.1-W1

-W1
RKC 4.4T-2-RSC 4.4T/S3060
2m

BN BU BK WH

-BGS/R
1 3
+ -
TÜNKERS
1324638
A2 A1
2 4

Clamp 13

=V1UQ52UQ13.1
+V1UQ52UQ13.1
-UQ13.1

=V1UQ52
-UQ13.1-BGS/R
Clamp 13

=V1UQ52UQ12+.UQ52UQ12/1

=V1UQ52UQ14+.UQ52UQ14/1

			Date	1/17/2023	Volvo Trucks North America		Valiant TMS	FESTO DQ CONNECTION QN13	Drawing name: =2V09&EFS-EL	= V1UQ52UQ13
			Ed.	MKLEPADLO						+ V1UQ52UQ13
			Appr		P6700 Bodyside LH - Robot Cell 2V09				Document type: EFS	Project nr: 22-16150
Modification	Date	Name	Original		Replacement of	Replaced by	Scale 1:1			Page 1 / 1533

0	1	2	3	4	5	6	7	8	9

=V1UQ52KF2
+V1UQ52

-KF2.22
=V1UQ52KF2+V1UQ52/4.1

Clamps 14 (RST)
=V1UQ52KF2
+V1UQ52
-QN14.1_Q
=V1UQ52KF2
+V1UQ52/4.3
Q2325.6

Clamps 14 (SET)
=V1UQ52KF2
+V1UQ52
-QN14.2_Q
=V1UQ52KF2
+V1UQ52/4.3
Q2325.7

2.1 Pneumatic Valve

2.2 Pneumatic Valve

-QN14 .1 .2

=V1UQ52KF2+V1UQ52/1.8
+V1UQ52UQ14.1-W1

=V1UQ52KF2+V1UQ52/1.9
+V1UQ52UQ14.2-W1

=V1UQ52KF2+V1UQ52/2.1
+V1UQ52UQ14.3-W1

-W1 5m
RKC 4.4T-5-RSC 4.4T/S3060

-W1 3m
RKC 4.4T-3-RSC 4.4T/S3060

-W1 3m
RKC 4.4T-3-RSC 4.4T/S3060

-BGS/R
BN BU BK WH
1 3
+ -
TÜNKERS
1324638
A2 A1
2 4

-BGS/R
BN BU BK WH
1 3
+ -
TÜNKERS
1324638
A2 A1
2 4

-BGS/R
BN BU BK WH
1 3
+ -
TÜNKERS
1324638
A2 A1
2 4

Clamps 14
=V1UQ52UQ14.1
+V1UQ52UQ14.1
-UQ14.1

Clamps 14
=V1UQ52UQ14.2
+V1UQ52UQ14.2
-UQ14.2

Clamps 14
=V1UQ52UQ14.3
+V1UQ52UQ14.3
-UQ14.3

=V1UQ52
-UQ14.1-BGS/R
Clamps 14

=V1UQ52
-UQ14.2-BGS/R
Clamps 14

=V1UQ52
-UQ14.3-BGS/R
Clamps 14

=V1UQ52UQ13+.UQ52UQ13/1

=V1UQ52UQ15+.UQ52UQ15/1

			Date	1/17/2023	Volvo Trucks North America	Valiant TMS	FESTO DQ CONNECTION QN14	Drawing name: =2V09&EFS-EL	= V1UQ52UQ14
			Ed.	MKLEPADLO					+ V1UQ52UQ14
			Appr		P6700 Bodyside LH - Robot Cell 2V09			Document type: EFS	Project nr: 22-16150
Modification	Date	Name	Original		Replacement of	Replaced by	Scale 1:1		Page 1 / 1533

0	1	2	3	4	5	6	7	8	9

=V1UQ52KF2
+V1UQ52

-KF2.23
=V1UQ52KF2+V1UQ52/4.1

Clamp 15 (RST)	Clamp 15 (SET)
=V1UQ52KF2	=V1UQ52KF2
+V1UQ52	+V1UQ52
-QN15.1_Q	-QN15.2_Q
=V1UQ52KF2	=V1UQ52KF2
+V1UQ52/4.3	+V1UQ52/4.3
Q2326.0	Q2326.1
1.1 Pneumatic Valve	1.2 Pneumatic Valve

-QN15 .1 .2

=V1UQ52KF2+V1UQ52/2.2
+V1UQ52UQ15.1-W1

-W1
RKC 4.4T-2-RSC 4.4T/S3060
2m

BN BU BK WH

-BGS/R
1 3
+ -
TÜNKERS
1324638
A2 A1
2 4

Clamp 15

=V1UQ52UQ15.1
+V1UQ52UQ15.1
-UQ15.1

=V1UQ52
-UQ15.1-BGS/R
Clamp 15

=V1UQ52UQ14+.UQ52UQ14/1

=V1UQ52UQ16+.UQ52UQ16/1

			Date	1/17/2023	Volvo Trucks North America		Valiant TMS	FESTO DQ CONNECTION QN15	Drawing name: =2V09&EFS-EL	= V1UQ52UQ15
			Ed.	MKLEPADLO						+ V1UQ52UQ15
			Appr		P6700 Bodyside LH - Robot Cell 2V09				Document type: EFS	Project nr: 22-16150
Modification	Date	Name	Original		Replacement of	Replaced by	Scale 1:1			Page 1 / 1533

0	1	2	3	4	5	6	7	8	9

=V1UQ52KF2
+V1UQ52

-KF2.23
=V1UQ52KF2+V1UQ52/4.1

Clamp 16 (RST)
=V1UQ52KF2
+V1UQ52
-QN16.1_Q
=V1UQ52KF2
+V1UQ52/4.3
Q2326.2

Clamp 16 (SET)
=V1UQ52KF2
+V1UQ52
-QN16.2_Q
=V1UQ52KF2
+V1UQ52/4.3
Q2326.3

2.1
Pneumatic Valve

2.2
Pneumatic Valve

.1

.2

-QN16

=V1UQ52KF2+V1UQ52/2.3
+V1UQ52UQ16.1-W1

-W1
RKC 4.4T-2-RSC 4.4T/S3060
2m

BN
BU
BK
WH

1
3

-BGS/R

TÜNKERS
Erfindergeist serienmäßig

1324638

A2
A1
2
4

Clamp 16

=V1UQ52UQ16.1
+V1UQ52UQ16.1
-UQ16.1

=V1UQ52
-UQ16.1-BGS/R
Clamp 16

=V1UQ52UQ15+.UQ52UQ15/1

=V1UQ52UQ17+.UQ52UQ17/1

			Date	1/17/2023	Volvo Trucks North America		Valiant TMS	FESTO DQ CONNECTION QN16	Drawing name: =2V09&EFS-EL	= V1UQ52UQ16
			Ed.	MKLEPADLO						+ V1UQ52UQ16
			Appr		P6700 Bodyside LH - Robot Cell 2V09				Document type: EFS	Project nr: 22-16150
Modification	Date	Name	Original		Replacement of	Replaced by	Scale 1:1			Page 1 / 1533

0	1	2	3	4	5	6	7	8	9

=V1UQ52KF2
+V1UQ52

-KF2.24
=V1UQ52KF2+V1UQ52/4.1

Clamp 17 (RST)
=V1UQ52KF2
+V1UQ52
-QN17.1_Q
=V1UQ52KF2
+V1UQ52/4.3
Q2326.4

Clamp 17 (SET)
=V1UQ52KF2
+V1UQ52
-QN17.2_Q
=V1UQ52KF2
+V1UQ52/4.3
Q2326.5

1.1
Pneumatic Valve

1.2
Pneumatic Valve

.1

.2

-QN17

=V1UQ52KF2+V1UQ52/2.4
+V1UQ52UQ17.1-W1

-W1
RKC 4.4T-3-RSC 4.4T/S3060
3m

BN BU BK WH

1 3

-BGS/R

TÜNKERS
Erfindergeist serienmäßig

1324638

A2 A1

2 4

Clamp 17

=V1UQ52UQ17.1
+V1UQ52UQ17.1
-UQ17.1

=V1UQ52
-UQ17.1-BGS/R
Clamp 17

=V1UQ52UQ16+.UQ52UQ16/1

=V1UQ52UQ18+.UQ52UQ18/1

			Date	1/17/2023	Volvo Trucks North America	Valiant TMS	FESTO DQ CONNECTION QN17	Drawing name: =2V09&EFS-EL	= V1UQ52UQ17
			Ed.	MKLEPADLO					+ V1UQ52UQ17
			Appr		P6700 Bodyside LH - Robot Cell 2V09			Document type: EFS	Project nr: 22-16150
Modification	Date	Name	Original		Replacement of	Replaced by	Scale 1:1		Page 1 / 1533

0	1	2	3	4	5	6	7	8	9

=V1UQ52KF2
+V1UQ52

-KF2.24
=V1UQ52KF2+V1UQ52/4.1

Clamp 18 (RST)	Clamp 18 (SET)
=V1UQ52KF2	=V1UQ52KF2
+V1UQ52	+V1UQ52
-QN18.1_Q	-QN18.2_Q
=V1UQ52KF2	=V1UQ52KF2
+V1UQ52/4.3	+V1UQ52/4.3
Q2326.6	Q2326.7
2.1 Pneumatic Valve	2.2 Pneumatic Valve

-QN18 .1 .2

=V1UQ52KF2+V1UQ52/2.5
+V1UQ52UQ18.1-W1

-W1
RKC 4.4T-2-RSC 4.4T/S3060
2m

BN BU BK WH

-BGS/R
1 3
+ -
TÜNKERS
1324638
A2 A1
2 4

Clamp 18

=V1UQ52UQ18.1
+V1UQ52UQ18.1
-UQ8.1

=V1UQ52 -UQ18.1-BGS/R Clamp 18

=V1UQ52UQ17+.UQ52UQ17/1

=V1UQ52UQ19+.UQ52UQ19/1

			Date	1/17/2023	Volvo Trucks North America		Valiant TMS	FESTO DQ CONNECTION QN18	Drawing name: =2V09&EFS-EL	= V1UQ52UQ18
			Ed.	MKLEPADLO						+ V1UQ52UQ18
			Appr		P6700 Bodyside LH - Robot Cell 2V09				Document type: EFS	Project nr: 22-16150
Modification	Date	Name	Original		Replacement of	Replaced by	Scale 1:1			Page 1 / 1533

0	1	2	3	4	5	6	7	8	9

=V1UQ52KF2
+V1UQ52

-KF2.25
=V1UQ52KF2+V1UQ52/4.1

Clamp 19 (RST)	Clamp 19 (SET)
=V1UQ52KF2	=V1UQ52KF2
+V1UQ52	+V1UQ52
-QN19.1_Q	-QN19.2_Q
=V1UQ52KF2	=V1UQ52KF2
+V1UQ52/4.3	+V1UQ52/4.3
Q2327.0	Q2327.1
1.1 Pneumatic Valve	1.2 Pneumatic Valve

-QN19 .1 .2

=V1UQ52KF2+V1UQ52/2.6
+V1UQ52UQ19.1-W1

-W1
RKC 4.4T-2-RSC 4.4T/S3060
2m

BN BU BK WH

-BGS/R
1 3
+ -
TÜNKERS
1324638
A2 A1
2 4

Clamp 19

=V1UQ52UQ19.1
+V1UQ52UQ19.1
-UQ9.1

=V1UQ52
-UQ19.1-BGS/R
Clamp 19

=V1UQ52UQ18+.UQ52UQ18/1

=V1UQ52UQ20+.UQ52UQ20/1

			Date	1/17/2023	Volvo Trucks North America	Valiant TMS	FESTO DQ CONNECTION QN19	Drawing name: =2V09&EFS-EL	= V1UQ52UQ19
			Ed.	MKLEPADLO					+ V1UQ52UQ19
			Appr		P6700 Bodyside LH - Robot Cell 2V09			Document type: EFS	Project nr: 22-16150
Modification	Date	Name	Original		Replacement of / Replaced by	Scale 1:1			Page 1 / 1533

0	1	2	3	4	5	6	7	8	9

=V1UQ52KF2
+V1UQ52

-KF2.25
=V1UQ52KF2+V1UQ52/4.1

Clamp 20 (RST)	Clamp 20 (SET)
=V1UQ52KF2	=V1UQ52KF2
+V1UQ52	+V1UQ52
-QN20.1_Q	-QN20.2_Q
=V1UQ52KF2	=V1UQ52KF2
+V1UQ52/4.3	+V1UQ52/4.3
Q2327.2	Q2327.3
2.1 Pneumatic Valve	2.2 Pneumatic Valve

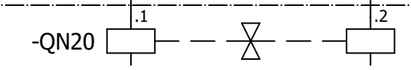

=V1UQ52KF2+V1UQ52/2.8
+V1UQ52UQ20.1-W1

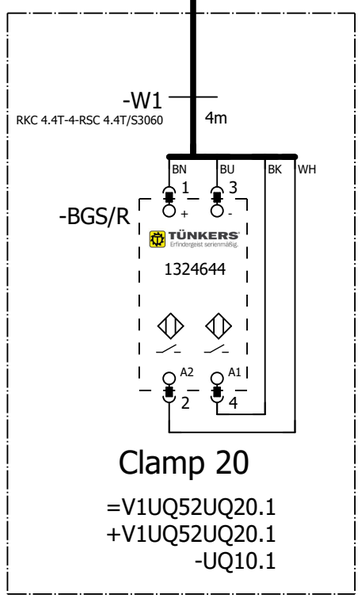

Clamp 20

=V1UQ52UQ20.1
+V1UQ52UQ20.1
-UQ10.1

=V1UQ52 -UQ20.1-BGS/R Clamp 20

=V1UQ52UQ19+.UQ52UQ19/1

=V1UQ52UQ21+.UQ52UQ21/1

			Date	1/17/2023	Volvo Trucks North America	Valiant TMS	FESTO DQ CONNECTION QN20	Drawing name: =2V09&EFS-EL	= V1UQ52UQ20
			Ed.	MKLEPADLO					+ V1UQ52UQ20
			Appr		P6700 Bodyside LH - Robot Cell 2V09			Document type: EFS	Project nr: 22-16150
Modification	Date	Name	Original		Replacement of	Replaced by	Scale 1:1		Page 1 / 1533

0	1	2	3	4	5	6	7	8	9

=V1UQ52KF3
+V1UQ52

-KF3.21
=V1UQ52KF3+V1UQ52/4.1

Clamp 21 (RST)	Clamp 21 (SET)
=V1UQ52KF3	=V1UQ52KF3
+V1UQ52	+V1UQ52
-QN21.1_Q	-QN21.2_Q
=V1UQ52KF3	=V1UQ52KF3
+V1UQ52/4.3	+V1UQ52/4.3
Q2350.0	Q2350.1
1.1 Pneumatic Valve	1.2 Pneumatic Valve

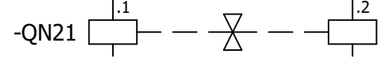

=V1UQ52KF3+V1UQ52/1.1
+V1UQ52UQ21.1-W1

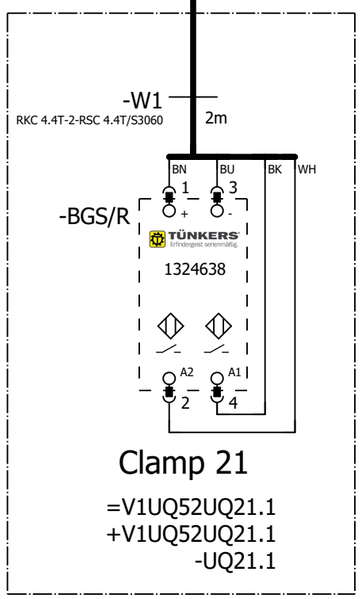

Clamp 21

=V1UQ52UQ21.1
+V1UQ52UQ21.1
-UQ21.1

=V1UQ52
-UQ21.1-BGS/R
Clamp 21

=V1UQ52UQ20+.UQ52UQ20/1

=V1UQ52UQ22+.UQ52UQ22/1

			Date	1/17/2023	Volvo Trucks North America		Valiant TMS	FESTO DQ CONNECTION QN21	Drawing name: =2V09&EFS-EL	= V1UQ52UQ21
			Ed.	MKLEPADLO						+ V1UQ52UQ21
			Appr		P6700 Bodyside LH - Robot Cell 2V09				Document type: EFS	Project nr: 22-16150
Modification	Date	Name	Original		Replacement of	Replaced by	Scale 1:1			Page 1 / 1533

0	1	2	3	4	5	6	7	8	9

=V1UQ52KF3
+V1UQ52

-KF3.21
=V1UQ52KF3+V1UQ52/4.1

Clamp 22 (RST)
=V1UQ52KF3
+V1UQ52
-QN22.1_Q
=V1UQ52KF3
+V1UQ52/4.3
Q2350.2

Clamp 22 (SET)
=V1UQ52KF3
+V1UQ52
-QN22.2_Q
=V1UQ52KF3
+V1UQ52/4.3
Q2350.3

2.1
Pneumatic Valve

2.2
Pneumatic Valve

-QN22 .1 .2

=V1UQ52KF3+V1UQ52/1.2
+V1UQ52UQ22.1-W1

-W1
RKC 4.4T-2-RSC 4.4T/S3060
2m

BN BU BK WH

-BGS/R
1 3
+ -
TÜNKERS
1324638
A2 A1
2 4

Clamp 22

=V1UQ52UQ22.1
+V1UQ52UQ22.1
-UQ22.1

=V1UQ52
-UQ22.1-BGS/R
Clamp 22

=V1UQ52UQ21+.UQ52UQ21/1

=V1UQ52UQ23+.UQ52UQ23/1

			Date	1/17/2023	Volvo Trucks North America		Valiant TMS	FESTO DQ CONNECTION QN22	Drawing name: =2V09&EFS-EL	= V1UQ52UQ22
			Ed.	MKLEPADLO						+ V1UQ52UQ22
			Appr		P6700 Bodyside LH - Robot Cell 2V09				Document type: EFS	Project nr: 22-16150
Modification	Date	Name	Original		Replacement of	Replaced by	Scale 1:1			Page 1 / 1533

0	1	2	3	4	5	6	7	8	9

=V1UQ52KF3
+V1UQ52

-KF3.22
=V1UQ52KF3+V1UQ52/4.1

Shot Pin 23 (RST)	Shot Pin 23 (SET)
=V1UQ52KF3	=V1UQ52KF3
+V1UQ52	+V1UQ52
-QN23.1_Q	-QN23.2_Q
=V1UQ52KF3	=V1UQ52KF3
+V1UQ52/4.3	+V1UQ52/4.3
Q2350.4	Q2350.5
1.1 Pneumatic Valve	1.2 Pneumatic Valve

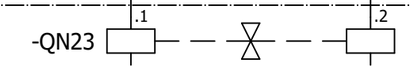

=V1UQ52KF3+V1UQ52/1.3
+V1UQ52UQ23.1-W1

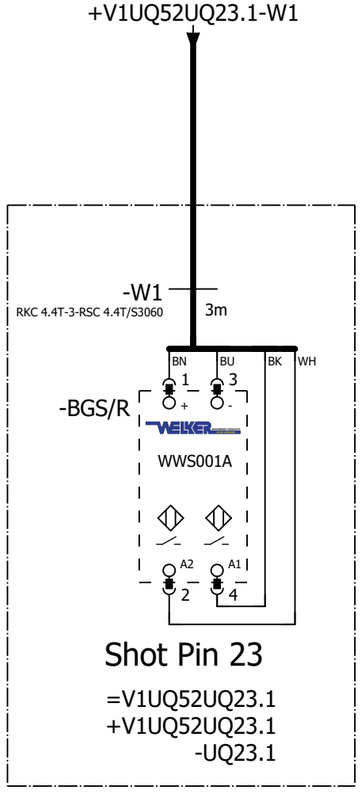

Shot Pin 23

=V1UQ52UQ23.1
+V1UQ52UQ23.1
-UQ23.1

=V1UQ52 -UQ23.1-BGS/R Shot Pin 23

=V1UQ52UQ22+.UQ52UQ22/1

=V1UQ52UQ24+.UQ52UQ24/1

			Date	1/17/2023	Volvo Trucks North America	Valiant TMS	FESTO DQ CONNECTION QN23	Drawing name: =2V09&EFS-EL	= V1UQ52UQ23
			Ed.	MKLEPADLO					+ V1UQ52UQ23
			Appr		P6700 Bodyside LH - Robot Cell 2V09			Document type: EFS	Project nr: 22-16150
Modification	Date	Name	Original		Replacement of	Replaced by	Scale 1:1		Page 1 / 1533

0	1	2	3	4	5	6	7	8	9

=V1UQ52KF3
+V1UQ52

-KF3.22
=V1UQ52KF3+V1UQ52/4.1

Clamp 24 (RST)	Clamp 24 (SET)
=V1UQ52KF3	=V1UQ52KF3
+V1UQ52	+V1UQ52
-QN24.1_Q	-QN24.2_Q
=V1UQ52KF3	=V1UQ52KF3
+V1UQ52/4.3	+V1UQ52/4.3
Q2350.6	Q2350.7
2.1 Pneumatic Valve	2.2 Pneumatic Valve

-QN24 .1 .2

=V1UQ52KF3+V1UQ52/1.4
+V1UQ52UQ24.1-W1

-W1
RKC 4.4T-4-RSC 4.4T/S3060
4m

BN BU BK WH

-BGS/R
1 3
+ -
TÜNKERS
1324638
A2 A1
2 4

Clamp 24

=V1UQ52UQ24.1
+V1UQ52UQ24.1
-UQ24.1

=V1UQ52
-UQ24.1-BGS/R
Clamp 24

=V1UQ52UQ23+.UQ52UQ23/1

=V1UQ52UQ25+.UQ52UQ25/1

			Date	1/17/2023	Volvo Trucks North America	Valiant TMS	FESTO DQ CONNECTION QN24	Drawing name: =2V09&EFS-EL	= V1UQ52UQ24
			Ed.	MKLEPADLO					+ V1UQ52UQ24
			Appr		P6700 Bodyside LH - Robot Cell 2V09			Document type: EFS	Project nr: 22-16150
Modification	Date	Name	Original		Replacement of	Replaced by	Scale 1:1		Page 1 / 1533

0	1	2	3	4	5	6	7	8	9

=V1UQ52KF3
+V1UQ52

-KF3.23
=V1UQ52KF3+V1UQ52/4.1

Slide 25 (RST)
=V1UQ52KF3
+V1UQ52
-QN25.1_Q
=V1UQ52KF3
+V1UQ52/4.3
Q2351.0

Slide 25 (SET)
=V1UQ52KF3
+V1UQ52
-QN25.2_Q
=V1UQ52KF3
+V1UQ52/4.3
Q2351.1

1.1 Pneumatic Valve

1.2 Pneumatic Valve

-QN25 .1 .2

=V1UQ52KF3+V1UQ52/1.5
+.UQ52UQ25.1-W1

-W1
RKC 4.4T-4-RSC 4.4T/S3060
4m

BN BU BK WH

-XGR/S P1 1 3 4 2

VB2-FSM 4.4/2FKM 4/S3450

J1 1 3 4 2 J2 1 3 4 2

BN BU BK WH

-W1.1
RKC 4.4T-0.5-RSC 4.4T/S3060
0.5m

-W1.2
RKC 4.4T-0.5-RSC 4.4T/S3060
0.5m

BN BU BK WH

-BGR
Sn = 10 mm
1644905
pnp
1 3 A 4

-BGS
Sn = 10 mm
1644905
pnp
1 3 A 4

Slide 25
=V1UQ52UQ25.1
+.UQ52UQ25.1
-UQ25.1

=V1UQ52
-UQ25.1-BGR
Slide 25

=V1UQ52
-UQ25.1-BGS
Slide 25

=V1UQ52UQ24+.UQ52UQ24/1

=V1UQ52UQ26+.UQ52UQ26/1

			Date	1/17/2023	Volvo Trucks North America	Valiant TMS	FESTO DQ CONNECTION QN25	Drawing name: =2V09&EFS-EL	= V1UQ52UQ25
			Ed.	MKLEPADLO					+ V1UQ52UQ25
			Appr		P6700 Bodyside LH - Robot Cell 2V09	Scale 1:1		Document type: EFS	Project nr: 22-16150
Modification	Date	Name	Original		Replacement of	Replaced by			Page 1 / 1533

0	1	2	3	4	5	6	7	8	9

=V1UQ52KF3
+V1UQ52

-KF3.23
=V1UQ52KF3+V1UQ52/4.1

Shot Pin 26 (RST)	Shot Pin 26 (SET)
=V1UQ52KF3	=V1UQ51KF1
+V1UQ52	+V1UQ51
-QN26.1_Q	-QN26.2_Q
=V1UQ52KF3	=V1UQ52KF3
+V1UQ52/4.3	+V1UQ52/4.3
Q2351.2	Q2351.3
2.1 Pneumatic Valve	2.2 Pneumatic Valve

-QN26 .1 .2

=V1UQ52KF3+V1UQ52/1.6
+V1UQ52UQ26.1-W1

-W1
RKC 4.4T-3-RSC 4.4T/S3060
3m

BN BU BK WH

-BGS/R
1 (+) 3 (-)
WELKER
WWS001A
A2 2
A1 4

Shot Pin 26

=V1UQ52UQ26.1
+V1UQ52UQ26.1
-UQ26.1

=V1UQ52 -UQ26.1-BGS/R Shot Pin 26

=V1UQ52UQ25+.UQ52UQ25/1

=V1UQ52UQ27+.UQ52UQ27/1

			Date	1/17/2023	Volvo Trucks North America		Valiant TMS	FESTO DQ CONNECTION QN26	Drawing name: =2V09&EFS-EL	= V1UQ52UQ26
			Ed.	MKLEPADLO						+ V1UQ52UQ26
			Appr		P6700 Bodyside LH - Robot Cell 2V09				Document type: EFS	Project nr: 22-16150
Modification	Date	Name	Original		Replacement of	Replaced by	Scale 1:1			Page 1 / 1533

0	1	2	3	4	5	6	7	8	9

=V1UQ52KF3
+V1UQ52

-KF3.24
=V1UQ52KF3+V1UQ52/4.1

Clamp 27 (RST)
=V1UQ52KF3
+V1UQ52
-QN27.1_Q
=V1UQ52KF3
+V1UQ52/4.3
Q2351.4

Clamp 27 (SET)
=V1UQ52KF3
+V1UQ52
-QN27.2_Q
=V1UQ52KF3
+V1UQ52/4.3
Q2351.5

1.1
Pneumatic Valve

1.2
Pneumatic Valve

-QN27 .1 .2

=V1UQ52KF3+V1UQ52/1.8
+V1UQ52UQ27.1-W1

-W1
RKC 4.4T-2-RSC 4.4T/S3060
2m

BN BU BK WH

-BGS/R
1 3
+ -
TÜNKERS
1324638
A2 A1
2 4

Clamp 27

=V1UQ52UQ27.1
+V1UQ52UQ27.1
-UQ27.1

=V1UQ52
-UQ27.1-BGS/R
Clamp 27

=V1UQ52UQ26+.UQ52UQ26/1

=V1UQ52UQ28+.UQ52UQ28/1

			Date	1/17/2023	Volvo Trucks North America		Valiant TMS	FESTO DQ CONNECTION QN27	Drawing name: =2V09&EFS-EL	= V1UQ52UQ27
			Ed.	MKLEPADLO						+ V1UQ52UQ27
			Appr		P6700 Bodyside LH - Robot Cell 2V09				Document type: EFS	Project nr: 22-16150
Modification	Date	Name	Original		Replacement of	Replaced by	Scale 1:1			Page 1 / 1533

0	1	2	3	4	5	6	7	8	9

=V1UQ52KF3
+V1UQ52

-KF3.24
=V1UQ52KF3+V1UQ52/4.1

Clamp 28 (RST)	Clamp 28 (SET)
=V1UQ52KF3	=V1UQ52KF3
+V1UQ52	+V1UQ52
-QN28.1_Q	-QN28.2_Q
=V1UQ52KF3	=V1UQ52KF3
+V1UQ52/4.3	+V1UQ52/4.3
Q2351.6	Q2351.7
2.1 Pneumatic Valve	2.2 Pneumatic Valve

-QN28 .1 .2

=V1UQ52KF3+V1UQ52/1.9
+V1UQ52UQ28.1-W1

-W1
RKC 4.4T-2-RSC 4.4T/S3060
2m

BN BU BK WH

-BGS/R
1 3
+ -
TÜNKERS
1324638
A2 A1
2 4

Clamp 28

=V1UQ52UQ28.1
+V1UQ52UQ28.1
-UQ28.1

=V1UQ52
-UQ28.1-BGS/R
Clamp 28

=V1UQ52UQ27+.UQ52UQ27/1

=V1UQ52UQ29+.UQ52UQ29/1

			Date	1/17/2023	Volvo Trucks North America		Valiant TMS	FESTO DQ CONNECTION QN28	Drawing name: =2V09&EFS-EL	= V1UQ52UQ28
			Ed.	MKLEPADLO						+ V1UQ52UQ28
			Appr		P6700 Bodyside LH - Robot Cell 2V09				Document type: EFS	Project nr: 22-16150
Modification	Date	Name	Original		Replacement of	Replaced by	Scale 1:1			Page 1 / 1533

0	1	2	3	4	5	6	7	8	9

=V1UQ52KF3
+V1UQ52

-KF3.25
=V1UQ52KF3+V1UQ52/4.1

Clamp 29 (RST)	Clamp 29 (SET)
=V1UQ52KF3	=V1UQ52KF3
+V1UQ52	+V1UQ52
-QN29.1_Q	-QN29.2_Q
=V1UQ52KF3	=V1UQ52KF3
+V1UQ52/4.3	+V1UQ52/4.3
Q2352.0	Q2352.1
1.1 Pneumatic Valve	1.2 Pneumatic Valve

-QN29 .1 .2

=V1UQ52KF3+V1UQ52/2.1
+V1UQ52UQ29.1-W1

-W1
RKC 4.4T-3-RSC 4.4T/S3060
3m

BN BU BK WH

-BGS/R
1 3
+ -
TÜNKERS
1324638
A2 A1
2 4

Clamp 29

=V1UQ52UQ29.1
+V1UQ52UQ29.1
-UQ29.1

=V1UQ52
-UQ29.1-BGS/R
Clamp 29

=V1UQ52UQ28+.UQ52UQ28/1

=V1UQ52UQ30+.UQ52UQ30/1

			Date	1/17/2023	Volvo Trucks North America		Valiant TMS	FESTO DQ CONNECTION QN29	Drawing name: =2V09&EFS-EL	= V1UQ52UQ29
			Ed.	MKLEPADLO						+ V1UQ52UQ29
			Appr		P6700 Bodyside LH - Robot Cell 2V09				Document type: EFS	Project nr: 22-16150
Modification	Date	Name	Original		Replacement of	Replaced by	Scale 1:1			Page 1 / 1533

0	1	2	3	4	5	6	7	8	9

=V1UQ52KF3
+V1UQ52

-KF3.25
=V1UQ52KF3+V1UQ52/4.1

Clamp 30 (RST)
=V1UQ52KF3
+V1UQ52
-QN30.1_Q
=V1UQ52KF3
+V1UQ52/4.3
Q2352.2

Clamp 30 (SET)
=V1UQ52KF3
+V1UQ52
-QN30.2_Q
=V1UQ52KF3
+V1UQ52/4.3
Q2352.3

2.1
Pneumatic Valve

2.2
Pneumatic Valve

.1

.2

-QN30

=V1UQ52KF3+V1UQ52/2.2
+V1UQ52UQ30.1-W1

-W1
RKC 4.4T-2-RSC 4.4T/S3060
2m

BN BU BK WH

1 3

-BGS/R

TÜNKERS
Erfindergeist serienmäßig

1324638

A2 A1

2 4

Clamp 30

=V1UQ52UQ30.1
+V1UQ52UQ30.1
-UQ30.1

=V1UQ52
-UQ30.1-BGS/R
Clamp 30

=V1UQ52UQ29+.UQ52UQ29/1

=V1UQ52UQ31+.UQ52UQ31/1

			Date	1/17/2023	Volvo Trucks North America	Valiant TMS	FESTO DQ CONNECTION QN30	Drawing name: =2V09&EFS-EL	= V1UQ52UQ30
			Ed.	MKLEPADLO					+ V1UQ52UQ30
			Appr		P6700 Bodyside LH - Robot Cell 2V09			Document type: EFS	Project nr: 22-16150
Modification	Date	Name	Original		Replacement of	Replaced by	Scale 1:1		Page 1 / 1533

0	1	2	3	4	5	6	7	8	9

=V1UQ52KF4
+V1UQ52

-KF4.21
=V1UQ52KF4+V1UQ52/4.1

Clamp 31 (RST)
=V1UQ52KF4
+V1UQ52
-QN31.1_Q
=V1UQ52KF4
+V1UQ52/4.3
Q2375.0

Clamp 31 (SET)
=V1UQ52KF4
+V1UQ52
-QN31.2_Q
=V1UQ52KF4
+V1UQ52/4.3
Q2375.1

1.1
Pneumatic Valve

1.2
Pneumatic Valve

-QN31 .1 .2

=V1UQ52KF4+V1UQ52/1.1
+V1UQ52UQ31.1-W1

-W1
RKC 4.4T-4-RSC 4.4T/S3060
4m

BN BU BK WH

-BGS/R
1 3
+ -
TÜNKERS
1324638
A2 A1
2 4

Clamp 31

=V1UQ52UQ31.1
+V1UQ52UQ31.1
-UQ31.1

=V1UQ52
-UQ31.1-BGS/R
Clamp 31

=V1UQ52UQ30+.UQ52UQ30/1

=V1UQ52UQ32+.UQ52UQ32/1

			Date	1/17/2023	Volvo Trucks North America		Valiant TMS	FESTO DQ CONNECTION QN31	Drawing name: =2V09&EFS-EL	= V1UQ52UQ31
			Ed.	MKLEPADLO						+ V1UQ52UQ31
			Appr		P6700 Bodyside LH - Robot Cell 2V09				Document type: EFS	Project nr: 22-16150
Modification	Date	Name	Original		Replacement of	Replaced by	Scale 1:1			Page 1 / 1533

0	1	2	3	4	5	6	7	8	9

=V1UQ52KF4
+V1UQ52

-KF4.21
=V1UQ52KF4+V1UQ52/4.1

Clamp 32 (RST)
=V1UQ52KF4
+V1UQ52
-QN32.1_Q
=V1UQ52KF4
+V1UQ52/4.3
Q2375.2

Clamp 32 (SET)
=V1UQ52KF4
+V1UQ52
-QN32.2_Q
=V1UQ52KF4
+V1UQ52/4.3
Q2375.3

2.1
Pneumatic Valve

2.2
Pneumatic Valve

.1

.2

-QN32

=V1UQ52KF4+V1UQ52/1.2
+V1UQ52UQ32.1-W1

-W1
RKC 4.4T-4-RSC 4.4T/S3060
4m

BN BU BK WH

1 3

-BGS/R

+ -

TÜNKERS
Erfindergeist serienmäßig

1324638

A2 A1

2 4

Clamp 32

=V1UQ52UQ32.1
+V1UQ52UQ32.1
-UQ32.1

=V1UQ52
-UQ32.1-BGS/R
Clamp 32

=V1UQ52UQ31+.UQ52UQ31/1

=V1UQ52UQ33+.UQ52UQ33/1

			Date	1/17/2023	Volvo Trucks North America	Valiant TMS	FESTO DQ CONNECTION QN32	Drawing name: =2V09&EFS-EL	= V1UQ52UQ32
			Ed.	MKLEPADLO					+ V1UQ52UQ32
			Appr		P6700 Bodyside LH - Robot Cell 2V09			Document type: EFS	Project nr: 22-16150
Modification	Date	Name	Original		Replacement of	Replaced by	Scale 1:1		Page 1 / 1533

0	1	2	3	4	5	6	7	8	9

=V1UQ52KF4
+V1UQ52

-KF4.22
=V1UQ52KF4+V1UQ52/4.1

Clamp 33 (RST)
=V1UQ52KF4
+V1UQ52
-QN33.1_Q
=V1UQ52KF4
+V1UQ52/4.3
Q2375.4

Clamp 33 (SET)
=V1UQ52KF4
+V1UQ52
-QN33.2_Q
=V1UQ52KF4
+V1UQ52/4.3
Q2375.5

1.1
Pneumatic Valve

1.2
Pneumatic Valve

.1

.2

-QN33

=V1UQ52KF4+V1UQ52/1.3
+V1UQ52UQ33.1-W1

-W1
RKC 4.4T-1-RSC 4.4T/S3060
1m

BN BU BK WH

-BGS/R

1 3

+ -

TÜNKERS
Erfindergeist serienmäßig

1324638

A2 A1

2 4

Clamp 33

=V1UQ52UQ33.1
+V1UQ52UQ33.1
-UQ33.1

=V1UQ52
-UQ33.1-BGS/R
Clamp 33

=V1UQ52UQ32+.UQ52UQ32/1

=V1UQ52UQ34+.UQ52UQ34/1

			Date	1/17/2023	Volvo Trucks North America	Valiant TMS	FESTO DQ CONNECTION QN34	Drawing name: =2V09&EFS-EL	= V1UQ52UQ33
			Ed.	MKLEPADLO					+ V1UQ52UQ33
			Appr		P6700 Bodyside LH - Robot Cell 2V09			Document type: EFS	Project nr: 22-16150
Modification	Date	Name	Original		Replacement of	Replaced by	Scale 1:1		Page 1 / 1533

0	1	2	3	4	5	6	7	8	9

=V1UQ52KF4
+V1UQ52

-KF4.22
=V1UQ52KF4+V1UQ52/4.1

Clamp 34 (RST)
=V1UQ52KF4
+V1UQ52
-QN34.1_Q
=V1UQ52KF4
+V1UQ52/4.3
Q2375.6

Clamp 34 (SET)
=V1UQ52KF4
+V1UQ52
-QN34.2_Q
=V1UQ52KF4
+V1UQ52/4.3
Q2375.7

2.1 Pneumatic Valve

2.2 Pneumatic Valve

-QN34 .1 .2

=V1UQ52KF4+V1UQ52/1.4
+V1UQ52UQ34.1-W1

-W1
RKC 4.4T-3-RSC 4.4T/S3060
3m

BN BU BK WH

-BGS/R
1 3
+ -
TÜNKERS
1324638
A2 A1
2 4

Clamp 34

=V1UQ52UQ34.1
+V1UQ52UQ34.1
-UQ34.1

=V1UQ52
-UQ34.1-BGS/R
Clamp 34

=V1UQ52UQ33+.UQ52UQ33/1

=V1UQ52UQ35+.UQ52UQ35/1

			Date	1/17/2023	Volvo Trucks North America		Valiant TMS	FESTO DQ CONNECTION QN34	Drawing name: =2V09&EFS-EL	= V1UQ52UQ34
			Ed.	MKLEPADLO						+ V1UQ52UQ34
			Appr		P6700 Bodyside LH - Robot Cell 2V09				Document type: EFS	Project nr: 22-16150
Modification	Date	Name	Original		Replacement of	Replaced by	Scale 1:1			Page 1 / 1533

0	1	2	3	4	5	6	7	8	9

=V1UQ52KF4
+V1UQ52

-KF4.23
=V1UQ52KF4+V1UQ52/4.1

Shot Pin 35 (RST)
=V1UQ52KF4
+V1UQ52
-QN35.1_Q
=V1UQ52KF4
+V1UQ52/4.3
Q2376.0

Shot Pin 35 (SET)
=V1UQ52KF4
+V1UQ52
-QN35.2_Q
=V1UQ52KF4
+V1UQ52/4.3
Q2376.1

1.1
Pneumatic Valve

1.2
Pneumatic Valve

-QN35 .1 .2

=V1UQ52KF4+V1UQ52/1.5
+V1UQ52UQ35.1-W1

-W1
RKC 4.4T-1-RSC 4.4T/S3060
1m

BN BU BK WH

-BGS/R
1 3
\+ -
WELKER
WWS001A
A2 A1
2 4

Shot Pin 35
=V1UQ52UQ35.1
+V1UQ52UQ35.1
-UQ35.1

=V1UQ52
-UQ35.1-BGS/R
Shot Pin 35

=V1UQ52UQ34+.UQ52UQ34/1

=V1UQ52UQ36+.UQ52UQ36/1

			Date	1/17/2023	Volvo Trucks North America	Valiant TMS	FESTO DQ CONNECTION QN35	Drawing name: =2V09&EFS-EL	= V1UQ52UQ35
			Ed.	MKLEPADLO					+ V1UQ52UQ35
			Appr		P6700 Bodyside LH - Robot Cell 2V09			Document type: EFS	Project nr: 22-16150
Modification	Date	Name	Original		Replacement of	Replaced by	Scale 1:1		Page 1 / 1533

0	1	2	3	4	5	6	7	8	9

=V1UQ52KF4
+V1UQ52

-KF4.23
=V1UQ52KF4+V1UQ52/4.1

Clamp 36 (RST)	Clamp 36 (SET)
=V1UQ52KF4	=V1UQ52KF4
+V1UQ52	+V1UQ52
-QN36.1_Q	-QN36.2_Q
=V1UQ52KF4	=V1UQ52KF4
+V1UQ52/4.3	+V1UQ52/4.3
Q2376.2	Q2376.3
2.1 Pneumatic Valve	2.2 Pneumatic Valve

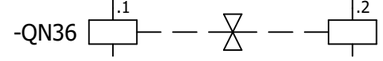

=V1UQ52KF4+V1UQ52/1.6
+V1UQ52UQ36.1-W1

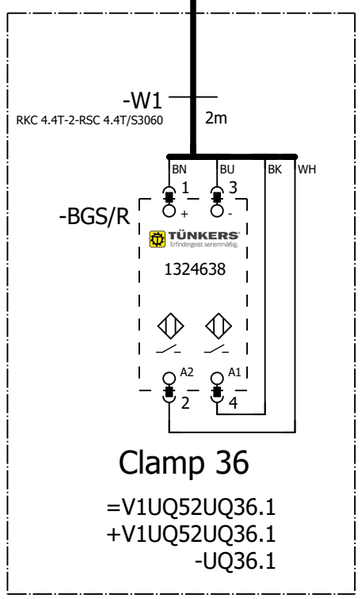

Clamp 36

=V1UQ52UQ36.1
+V1UQ52UQ36.1
-UQ36.1

=V1UQ52 -UQ36.1-BGS/R Clamp 36

=V1UQ52UQ35+.UQ52UQ35/1

=V1UQ52UQ37+.UQ52UQ37/1

			Date	1/17/2023	Volvo Trucks North America		Valiant TMS	FESTO DQ CONNECTION QN36	Drawing name: =2V09&EFS-EL	= V1UQ52UQ36
			Ed.	MKLEPADLO						+ V1UQ52UQ36
			Appr		P6700 Bodyside LH - Robot Cell 2V09				Document type: EFS	Project nr: 22-16150
Modification	Date	Name	Original		Replacement of	Replaced by	Scale 1:1			Page 1 / 1533

0	1	2	3	4	5	6	7	8	9

=V1UQ52KF4
+V1UQ52

-KF4.24
=V1UQ52KF4+V1UQ52/4.1

Clamp 37 (RST)
=V1UQ52KF4
+V1UQ52
-QN37.1_Q
=V1UQ52KF4
+V1UQ52/4.3
Q2376.4

Clamp 37 (SET)
=V1UQ52KF4
+V1UQ52
-QN37.2_Q
=V1UQ52KF4
+V1UQ52/4.3
Q2376.5

1.1
Pneumatic Valve

1.2
Pneumatic Valve

.1

.2

-QN37

=V1UQ52KF4+V1UQ52/1.8
+V1UQ52UQ37.1-W1

-W1
RKC 4.4T-3-RSC 4.4T/S3060
3m

BN BU BK WH

1 3

-BGS/R

TÜNKERS
Erfindergeist serienmäßig

1324638

A2 A1

2 4

Clamp 37

=V1UQ52UQ37.1
+V1UQ52UQ37.1
-UQ37.1

=V1UQ52
-UQ37.1-BGS/R
Clamp 37

=V1UQ52UQ36+.UQ52UQ36/1

=V1UQ52UQ38+.UQ52UQ38/1

			Date	1/17/2023	Volvo Trucks North America	Valiant TMS	FESTO DQ CONNECTION QN37	Drawing name: =2V09&EFS-EL	= V1UQ52UQ37
			Ed.	MKLEPADLO					+ V1UQ52UQ37
			Appr		P6700 Bodyside LH - Robot Cell 2V09			Document type: EFS	Project nr: 22-16150
Modification	Date	Name	Original		Replacement of	Replaced by	Scale 1:1		Page 1 / 1533

0	1	2	3	4	5	6	7	8	9

=V1UQ52KF4
+V1UQ52

-KF4.24
=V1UQ52KF4+V1UQ52/4.1

Clamp 38 (RST)
=V1UQ52KF4
+V1UQ52
-QN38.1_Q
=V1UQ52KF4
+V1UQ52/4.3
Q2376.6

Clamp 38 (SET)
=V1UQ52KF4
+V1UQ52
-QN38.2_Q
=V1UQ52KF4
+V1UQ52/4.3
Q2376.7

2.1
Pneumatic Valve

2.2
Pneumatic Valve

-QN38 .1 .2

=V1UQ52KF4+V1UQ52/1.9
+V1UQ52UQ38.1-W1

-W1
RKC 4.4T-4-RSC 4.4T/S3060
4m

BN BU BK WH

-BGS/R
1 3
+ -
TÜNKERS
1324644
A2 A1
2 4

Clamp 38

=V1UQ52UQ38.1
+V1UQ52UQ38.1
-UQ38.1

=V1UQ52
-UQ38.1-BGS/R
Clamp 38

=V1UQ52UQ37+.UQ52UQ37/1

=V1UQ52UQ39+.UQ52UQ39/1

			Date	1/17/2023	Volvo Trucks North America		Valiant TMS	FESTO DQ CONNECTION QN38	Drawing name: =2V09&EFS-EL	= V1UQ52UQ38
			Ed.	MKLEPADLO						+ V1UQ52UQ38
			Appr		P6700 Bodyside LH - Robot Cell 2V09				Document type: EFS	Project nr: 22-16150
Modification	Date	Name	Original		Replacement of	Replaced by	Scale 1:1			Page 1 / 1533

0	1	2	3	4	5	6	7	8	9

=V1UQ52KF4
+V1UQ52

-KF4.25
=V1UQ52KF4+V1UQ52/4.1

Shot Pin 39 (RST)	Shot Pin 39 (SET)
=V1UQ52KF4	=V1UQ52KF4
+V1UQ52	+V1UQ52
-QN39.1_Q	-QN39.2_Q
=V1UQ52KF4	=V1UQ52KF4
+V1UQ52/4.3	+V1UQ52/4.3
Q2377.0	Q2377.1
1.1 Pneumatic Valve	1.2 Pneumatic Valve

-QN39 .1 .2

=V1UQ52KF4+V1UQ52/2.1
+V1UQ52UQ39.1-W1

-W1
RKC 4.4T-1-RSC 4.4T/S3060
1m

-BGS/R
BN 1 + BU 3 - BK WH
WELKER
WWS001A
A2 2 A1 4

Shot Pin 39

=V1UQ52UQ39.1
+V1UQ52UQ39.1
-UQ39.1

=V1UQ52
-UQ39.1-BGS/R
Shot Pin 39

=V1UQ52UQ38+.UQ52UQ38/1

=V1UQ52UQ40+.UQ52UQ40/1

			Date	1/17/2023	Volvo Trucks North America	Valiant TMS	FESTO DQ CONNECTION QN39	Drawing name: =2V09&EFS-EL	= V1UQ52UQ39
			Ed.	MKLEPADLO					+ V1UQ52UQ39
			Appr		P6700 Bodyside LH - Robot Cell 2V09			Document type: EFS	Project nr: 22-16150
Modification	Date	Name	Original		Replacement of	Replaced by	Scale 1:1		Page 1 / 1533

0	1	2	3	4	5	6	7	8	9

=V1UQ52KF4
+V1UQ52

-KF4.25
=V1UQ52KF4+V1UQ52/4.1

Clamp 40 (RST)
=V1UQ52KF4
+V1UQ52
-QN40.1_Q
=V1UQ52KF4
+V1UQ52/4.3
Q2377.2

Clamp 40 (SET)
=V1UQ52KF4
+V1UQ52
-QN40.2_Q
=V1UQ52KF4
+V1UQ52/4.3
Q2377.3

2.1
Pneumatic Valve

2.2
Pneumatic Valve

-QN40 .1 .2

=V1UQ52KF4+V1UQ52/2.2
+V1UQ52UQ40.1-W1

-W1
RKC 4.4T-4-RSC 4.4T/S3060
4m

BN BU BK WH

-BGS/R
1 3
+ -
TÜNKERS
1324644
A2 A1
2 4

Clamp 40

=V1UQ52UQ40.1
+V1UQ52UQ40.1
-UQ40.1

=V1UQ52
-UQ40.1-BGS/R
Clamp 40

=V1UQ52UQ39+.UQ52UQ39/1

=V1UQ52UQ41+.UQ52UQ41/1

			Date	1/17/2023	Volvo Trucks North America		Valiant TMS	FESTO DQ CONNECTION QN40	Drawing name: =2V09&EFS-EL	= V1UQ52UQ40
			Ed.	MKLEPADLO						+ V1UQ52UQ40
			Appr		P6700 Bodyside LH - Robot Cell 2V09				Document type: EFS	Project nr: 22-16150
Modification	Date	Name	Original		Replacement of	Replaced by	Scale 1:1			Page 1 / 1533

0	1	2	3	4	5	6	7	8	9

=V1UQ52KF5
+V1UQ52

-KF5.21
=V1UQ52KF5+V1UQ52/3.1

Clamp 41 (RST)	Clamp 41 (SET)
=V1UQ52KF5	=V1UQ52KF5
+V1UQ52	+V1UQ52
-QN41.1_Q	-QN41.2_Q
=V1UQ52KF5	=V1UQ52KF5
+V1UQ52/3.3	+V1UQ52/3.3
Q2400.0	Q2400.1
1.1 Pneumatic Valve	1.2 Pneumatic Valve

-QN41 .1 .2

=V1UQ52KF5+V1UQ52/1.1
+V1UQ52UQ41.1-W1

-W1
RKC 4.4T-3-RSC 4.4T/S3060
3m

BN BU BK WH

-BGS/R
1 3
+ -
TÜNKERS
1324644
A2 A1
2 4

Clamp 41

=V1UQ52UQ41.1
+V1UQ52UQ41.1
-UQ41.1

=V1UQ52
-UQ41.1-BGS/R
Clamp 41

=V1UQ52UQ40+.UQ52UQ40/1

=V1UQ52UQ42+.UQ52UQ42/1

			Date	1/17/2023	Volvo Trucks North America	Valiant TMS	FESTO DQ CONNECTION QN41	Drawing name: =2V09&EFS-EL	= V1UQ52UQ41
			Ed.	MKLEPADLO					+ V1UQ52UQ41
			Appr		P6700 Bodyside LH - Robot Cell 2V09			Document type: EFS	Project nr: 22-16150
Modification	Date	Name	Original		Replacement of	Replaced by	Scale 1:1		Page 1 / 1533

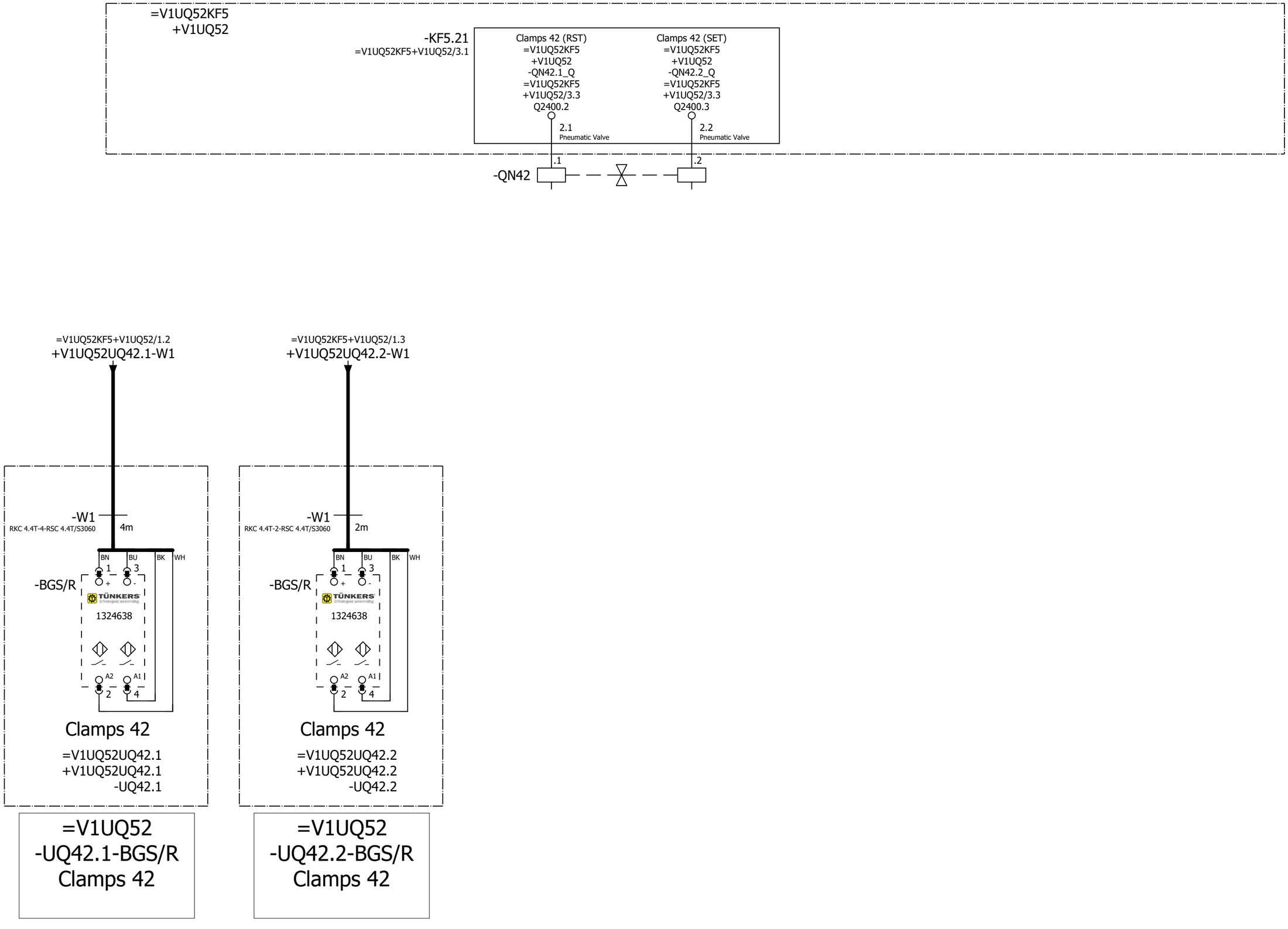

=V1UQ52UQ41+.UQ52UQ41/1

=V1UQ52UQ43+.UQ52UQ43/1

			Date	1/17/2023	Volvo Trucks North America	Valiant TMS	FESTO DQ CONNECTION QN42	Drawing name: =2V09&EFS-EL	= V1UQ52UQ42 + V1UQ52UQ42
			Ed.	MKLEPADLO	P6700 Bodyside LH - Robot Cell 2V09			Document type: EFS	Project nr: 22-16150
			Appr						Page 1
Modification	Date	Name	Original		Replacement of / Replaced by	Scale 1:1			1533

0	1	2	3	4	5	6	7	8	9

=V1UQ52KF5
+V1UQ52

-KF5.22
=V1UQ52KF5+V1UQ52/3.1

Clamp 43 (RST)	Clamp 43 (SET)
=V1UQ52KF5	=V1UQ52KF5
+V1UQ52	+V1UQ52
-QN43.1_Q	-QN43.2_Q
=V1UQ52KF5	=V1UQ52KF5
+V1UQ52/3.3	+V1UQ52/3.3
Q2400.4	Q2400.5
1.1 Pneumatic Valve	1.2 Pneumatic Valve

-QN43 .1 .2

=V1UQ52KF5+V1UQ52/1.4
+V1UQ52UQ43.1-W1

-W1
RKC 4.4T-2-RSC 4.4T/S3060
2m

BN BU BK WH

-BGS/R
1 3
+ -
TÜNKERS
1324638
A2 A1
2 4

Clamp 43
=V1UQ52UQ43.1
+V1UQ52UQ43.1
-UQ43.1

=V1UQ52
-UQ43.1-BGS/R
Clamp 43

=V1UQ52UQ42+.UQ52UQ42/1

=V1UQ52UQ44+.UQ52UQ44/1

			Date	1/17/2023	Volvo Trucks North America	Valiant TMS	FESTO DQ CONNECTION QN43	Drawing name: =2V09&EFS-EL	= V1UQ52UQ43
			Ed.	MKLEPADLO					+ V1UQ52UQ43
			Appr		P6700 Bodyside LH - Robot Cell 2V09			Document type: EFS	Project nr: 22-16150
Modification	Date	Name	Original		Replacement of	Replaced by	Scale 1:1		Page 1 / 1533

0	1	2	3	4	5	6	7	8	9

=V1UQ52KF5
+V1UQ52

-KF5.22
=V1UQ52KF5+V1UQ52/3.1

Shot Pins 44 (RST)
=V1UQ52KF5
+V1UQ52
-QN44.1_Q
=V1UQ52KF5
+V1UQ52/3.3
Q2400.6

Shot Pins 44 (SET)
=V1UQ52KF5
+V1UQ52
-QN44.2_Q
=V1UQ52KF5
+V1UQ52/3.3
Q2400.7

2.1
Pneumatic Valve

2.2
Pneumatic Valve

-QN44 .1 .2

=V1UQ52KF5+V1UQ52/1.5
+V1UQ52UQ44.1-W1

-W1
RKC 4.4T-3-RSC 4.4T/S3060
3m

BN BU BK WH

-BGS/R
1 3
+ -
WELKER
WWS001A
A2 A1
2 4

Shot Pins 44
=V1UQ52UQ44.1
+V1UQ52UQ44.1
-UQ44.1

=V1UQ52
-UQ44.1-BGS/R
Shot Pins 44

=V1UQ52KF5+V1UQ52/1.6
+V1UQ52UQ44.2-W1

-W1
RKC 4.4T-3-RSC 4.4T/S3060
3m

BN BU BK WH

-BGS/R
1 3
+ -
WELKER
WWS001A
A2 A1
2 4

Shot Pins 44
=V1UQ52UQ44.2
+V1UQ52UQ44.2
-UQ44.2

=V1UQ52
-UQ44.2-BGS/R
Shot Pins 44

=V1UQ52UQ43+.UQ52UQ43/1

=V1UQ52UQ45+.UQ52UQ45/1

			Date	1/17/2023	Volvo Trucks North America		Valiant TMS	FESTO DQ CONNECTION QN44	Drawing name: =2V09&EFS-EL	= V1UQ52UQ44
			Ed.	MKLEPADLO						+ V1UQ52UQ44
			Appr		P6700 Bodyside LH - Robot Cell 2V09				Document type: EFS	Project nr: 22-16150
Modification	Date	Name	Original		Replacement of	Replaced by	Scale 1:1			Page 1 / 1533

0	1	2	3	4	5	6	7	8	9

=V1UQ52KF5
+V1UQ52

-KF5.23
=V1UQ52KF5+V1UQ52/3.1

Clamp 45 (RST)	Clamp 45 (SET)
=V1UQ52KF5	=V1UQ52KF5
+V1UQ52	+V1UQ52
-QN45.1_Q	-QN45.2_Q
=V1UQ52KF5	=V1UQ52KF5
+V1UQ52/3.3	+V1UQ52/3.3
Q2401.0	Q2401.1
1.1 Pneumatic Valve	1.2 Pneumatic Valve

-QN45 .1 .2

=V1UQ52KF5+V1UQ52/1.8
+V1UQ52UQ45.1-W1

-W1
RKC 4.4T-2-RSC 4.4T/S3060
2m

BN BU BK WH

-BGS/R
1 3
+ -
TÜNKERS
1324638
A2 A1
2 4

Clamp 45

=V1UQ52UQ45.1
+V1UQ52UQ45.1
-UQ45.1

=V1UQ52
-UQ45.1-BGS/R
Clamp 45

=V1UQ52UQ44+.UQ52UQ44/1

=V1UQ52UQ46+.UQ52UQ46/1

			Date	1/17/2023	Volvo Trucks North America	Valiant TMS	FESTO DQ CONNECTION QN45	Drawing name: =2V09&EFS-EL	= V1UQ52UQ45
			Ed.	MKLEPADLO					+ V1UQ52UQ45
			Appr		P6700 Bodyside LH - Robot Cell 2V09			Document type: EFS	Project nr: 22-16150
Modification	Date	Name	Original		Replacement of	Replaced by	Scale 1:1		Page 1 / 1533

0	1	2	3	4	5	6	7	8	9

=V1UQ52KF5
+V1UQ52

-KF5.23
=V1UQ52KF5+V1UQ52/3.1

Clamp 46 (RST)	Clamp 46 (SET)
=V1UQ52KF5	=V1UQ52KF5
+V1UQ52	+V1UQ52
-QN46.1_Q	-QN46.2_Q
=V1UQ52KF5	=V1UQ52KF5
+V1UQ52/3.3	+V1UQ52/3.3
Q2401.2	Q2401.3
2.1 Pneumatic Valve	2.2 Pneumatic Valve

-QN46 .1 .2

=V1UQ52KF5+V1UQ52/1.9
+V1UQ52UQ46.1-W1

-W1
RKC 4.4T-3-RSC 4.4T/S3060
3m

-BGS/R
BN 1 +
BU 3 -
BK
WH
TÜNKERS
1324644
A2 2
A1 4

Clamp 46
=V1UQ52UQ46.1
+V1UQ52UQ46.1
-UQ46.1

=V1UQ52
-UQ46.1-BGS/R
Clamp 46

=V1UQ52UQ45+.UQ52UQ45/1

=V1UQ52WC4+V1UQ52/1

			Date	1/17/2023	Volvo Trucks North America	Valiant TMS	FESTO DQ CONNECTION QN46	Drawing name: =2V09&EFS-EL	= V1UQ52UQ46
			Ed.	MKLEPADLO					+ V1UQ52UQ46
			Appr		P6700 Bodyside LH - Robot Cell 2V09			Document type: EFS	Project nr: 22-16150
Modification	Date	Name	Original		Replacement of	Replaced by	Scale 1:1		Page 1 / 1533

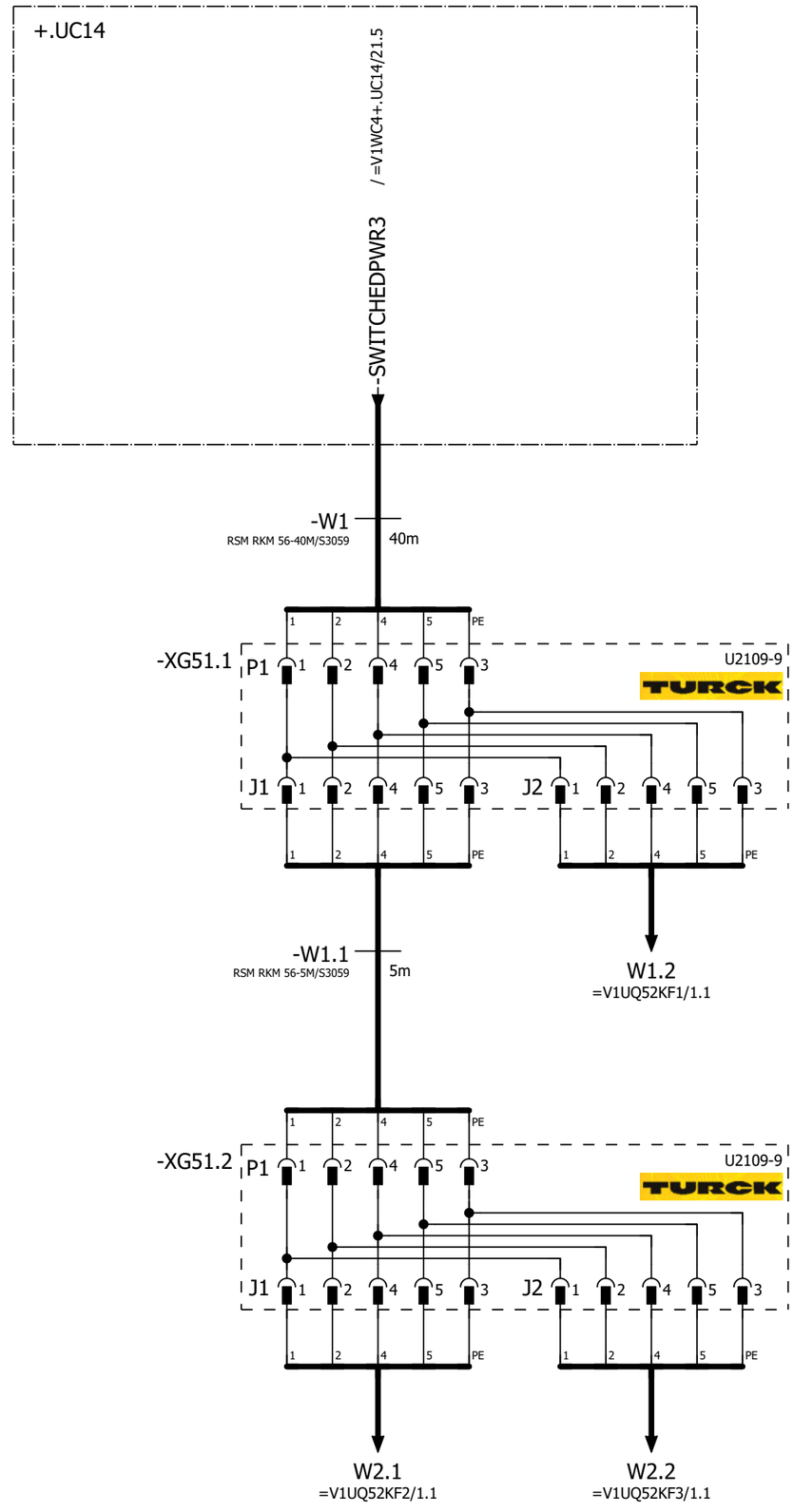

=V1UQ52UQ46+.UQ52UQ46/1

2

			Date	1/17/2023	Volvo Trucks North America	Valiant TMS	24VDC	Drawing name: =2V09&EFS-EL	= V1UQ52WC4 + V1UQ52
			Ed.	MKLEPADLO	P6700 Bodyside LH - Robot Cell 2V09				
			Appr					Document type: EFS	Project nr: 22-16150
Modification	Date	Name	Original		Replacement of / Replaced by	Scale 1:1			Page 1 / 1533

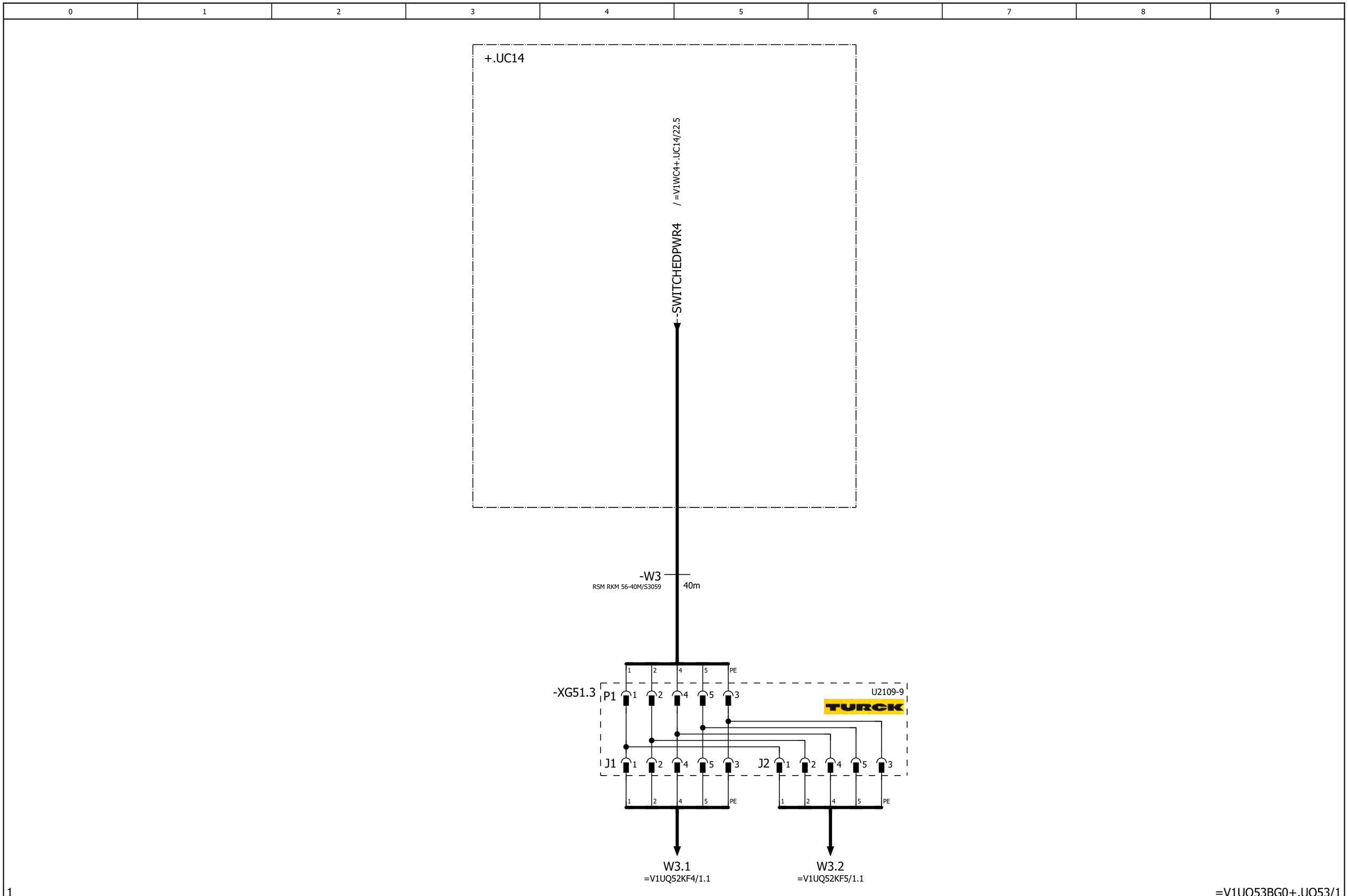

1

=V1UQ53BG0+.UQ53/1

			Date	1/17/2023	Volvo Trucks North America	Valiant TMS	24VDC	Drawing name: =2V09&EFS-EL	= V1UQ52WC4 + V1UQ52
			Ed.	MKLEPADLO	P6700 Bodyside LH - Robot Cell 2V09				
			Appr					Document type: EFS	Project nr: 22-16150
Modification	Date	Name	Original		Replacement of / Replaced by	Scale 1:1			Page 2 / 1533

0	1	2	3	4	5	6	7	8	9

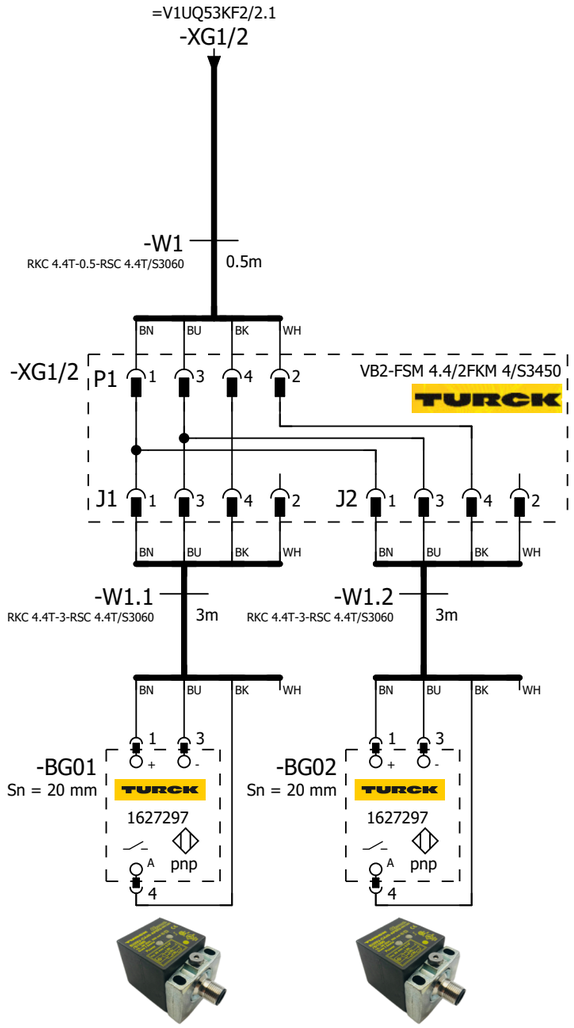

=V1UQ53
-BG01
Common
Part Present

=V1UQ53
-BG02
Day Cab
Part Present

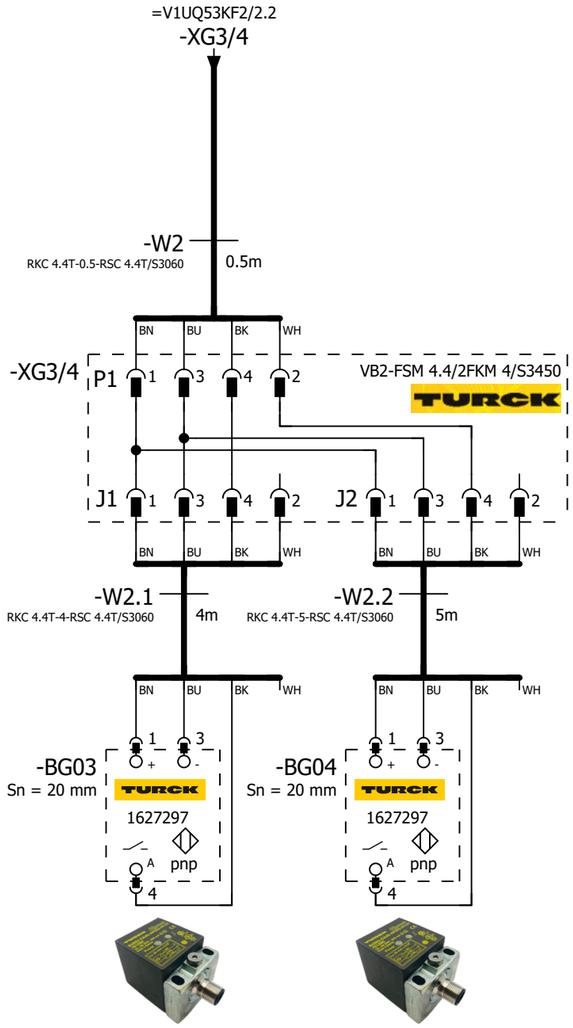

=V1UQ53
-BG03
Sleeper L230
Part Present

=V1UQ53
-BG04
Sleeper L290
Part Present

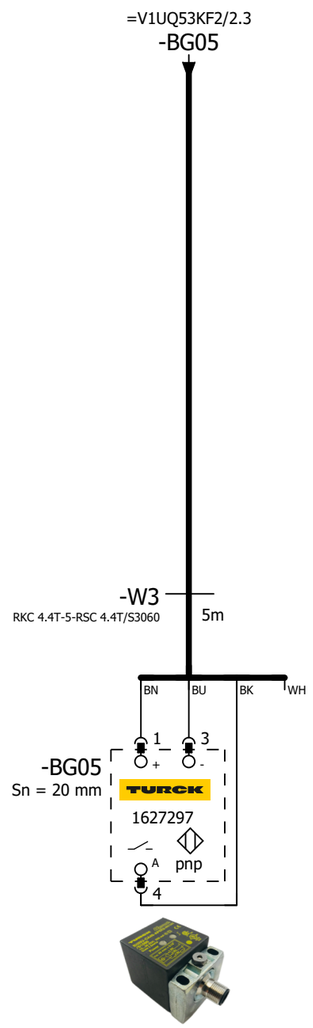

=V1UQ53
-BG05
Sleeper L320
Part Present

=V1UQ52WC4+.UQ52/2

=V1UQ53KF1/1

			Date	1/17/2023	Volvo Trucks North America		Valiant TMS	SENSORS	Drawing name: =2V09&EFS-EL	= V1UQ53BG0
			Ed.	MKLEPADLO						+ V1UQ53
			Appr		P6700 Bodyside LH - Robot Cell 2V09		Scale 1:1		Document type: EFS	Project nr: 22-16150
Modification	Date	Name	Original		Replacement of	Replaced by				Page 1 / 1533

0	1	2	3	4	5	6	7	8	9

=V1UQ53WC4/1.5 / W1.1

-W1.1
RSM RKM 56-1M/S3059
1m

=V1KF1+.UC11/2.6 / +.UC11-KF100.11-P12

-KF100.11-P12
PROFINET Cable
6XV1840-3AH10

KF1-P2 / =V1UQ53KF2/1.3

-KF1

X20 M12, 7/8" 1 2 PE 4 5

0V_VAL / OUT | 0V_EL / SEN | FE | 24V_EL / SEN | 24V_VAL / OUT

ON OFF 1 2 1 2

M12 -TP1 M12 -TP2

FESTO
Bus node + Interlinking block
548755 + 550208

I2450.0 DI 0 X1:4	V1UQ53UQ1.1-BGR	Shot Pin 1 (RESET)
I2450.1 DI 1 X1:2	V1UQ53UQ1.1-BGS	Shot Pin 1 (SET)
I2450.2 DI 2 X2:4	V1UQ53UQ2.1-BGR	Shot Pin 2 (RESET)
I2450.3 DI 3 X2:2	V1UQ53UQ2.1-BGS	Shot Pin 2 (SET)
I2450.4 DI 4 X3:4	V1UQ53UQ3.1-BGR	Clamps 3 (RESET)
I2450.5 DI 5 X3:2	V1UQ53UQ3.1-BGS	Clamps 3 (SET)
I2450.6 DI 6 X4:4	V1UQ53UQ3.2-BGR	Clamps 3 (RESET)
I2450.7 DI 7 X4:2	V1UQ53UQ3.2-BGS	Clamps 3 (SET)
I2451.0 DI 8 X5:4	V1UQ53UQ3.3-BGR	Clamps 3 (RESET)
I2451.1 DI 9 X5:2	V1UQ53UQ3.3-BGS	Clamps 3 (SET)
I2451.2 DI 10 X6:4	V1UQ53UQ3.4-BGR	Clamps 3 (RESET)
I2451.3 DI 11 X6:2	V1UQ53UQ3.4-BGS	Clamps 3 (SET)
I2451.4 DI 12 X7:4	V1UQ53UQ3.5-BGR	Clamps 3 (RESET)
I2451.5 DI 13 X7:2	V1UQ53UQ3.5-BGS	Clamps 3 (SET)
I2451.6 DI 14 X8:4	V1UQ53UQ4.1-BGR	Clamps 4 (RESET)
I2451.7 DI 15 X8:2	V1UQ53UQ4.1-BGS	Clamps 4 (SET)

-KF1.11

FESTO
CPX-M-AB-8-M12X2-5POL
549335

X1 X2 X3 X4 X5 X6 X7 X8 M12

24V | DI 1 | 0V | DI 0 | FE
24V | DI 3 | 0V | DI 2 | FE
24V | DI 5 | 0V | DI 4 | FE
24V | DI 7 | 0V | DI 6 | FE
24V | DI 9 | 0V | DI 8 | FE
24V | DI 11 | 0V | DI 10 | FE
24V | DI 13 | 0V | DI 12 | FE
24V | DI 15 | 0V | DI 14 | FE

1 2 3 4 5

BN | WH | BU | BK

+V1UQ53UQ1.1-W1
=V1UQ53UQ1+.UQ53UQ1/1.1

+V1UQ53UQ2.1-W1
=V1UQ53UQ2+.UQ53UQ2/1.1

+V1UQ53UQ3.1-W1
=V1UQ53UQ3+.UQ53UQ3/1.1

+V1UQ53UQ3.2-W1
=V1UQ53UQ3+.UQ53UQ3/1.2

+V1UQ53UQ3.3-W1
=V1UQ53UQ3+.UQ53UQ3/1.4

+V1UQ53UQ3.4-W1
=V1UQ53UQ3+.UQ53UQ3/1.5

+V1UQ53UQ3.5-W1
=V1UQ53UQ3+.UQ53UQ3/1.7

+V1UQ53UQ4.1-W1
=V1UQ53UQ4+.UQ53UQ4/1.1

=V1UQ53BG0/1

2

			Date	1/17/2023	Volvo Trucks North America	Valiant TMS	CONNECTING MOD. FOR VTSA MANIFOLD	Drawing name: =2V09&EFS-EL	= V1UQ53KF1
			Ed.	MKLEPADLO					+ V1UQ53
			Appr		P6700 Bodyside LH - Robot Cell 2V09	Scale 1:1		Document type: EFS	Project nr: 22-16150
Modification	Date	Name	Original		Replacement of	Replaced by			Page 1 / 1533

0	1	2	3	4	5	6	7	8	9

-KF1.12

FESTO

CPX-M-AB-8-M12X2-5POL

549335

I2452.0	DI 0 X1:4	V1UQ53UQ4.2-BGR	Clamps 4 (RESET)
I2452.1	DI 1 X1:2	V1UQ53UQ4.2-BGS	Clamps 4 (SET)
I2452.2	DI 2 X2:4	V1UQ53UQ4.3-BGR	Clamps 4 (RESET)
I2452.3	DI 3 X2:2	V1UQ53UQ4.3-BGS	Clamps 4 (SET)
I2452.4	DI 4 X3:4	V1UQ53UQ5.1-BGR	Clamps 5 (RESET)
I2452.5	DI 5 X3:2	V1UQ53UQ5.1-BGS	Clamps 5 (SET)
I2452.6	DI 6 X4:4	V1UQ53UQ5.2-BGR	Clamps 5 (RESET)
I2452.7	DI 7 X4:2	V1UQ53UQ5.2-BGS	Clamps 5 (SET)
I2453.0	DI 8 X5:4	V1UQ53UQ5.3-BGR	Clamps 5 (RESET)
I2453.1	DI 9 X5:2	V1UQ53UQ5.3-BGS	Clamps 5 (SET)
I2453.2	DI 10 X6:4	V1UQ53UQ6.1-BGR	Clamp 6 (RESET)
I2453.3	DI 11 X6:2	V1UQ53UQ6.1-BGS	Clamp 6 (SET)
I2453.4	DI 12 X7:4	V1UQ53UQ7.1-BGR	Clamp 7 (RESET)
I2453.5	DI 13 X7:2	V1UQ53UQ7.1-BGS	Clamp 7 (SET)
I2453.6	DI 14 X8:4	V1UQ53UQ8.1-BGR	Clamps 8 (RESET)
I2453.7	DI 15 X8:2	V1UQ53UQ8.1-BGS	Clamps 8 (SET)

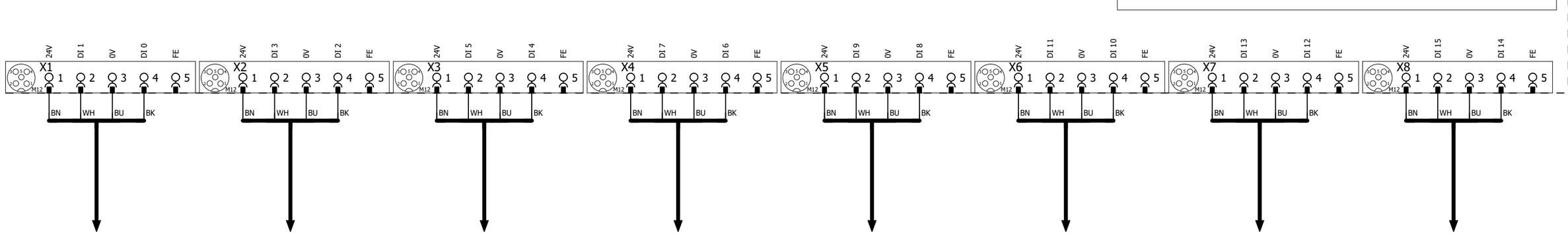

1 3

			Date	1/17/2023	Volvo Trucks North America	Valiant TMS	I/O MOD. DI16 (8 x M12) FOR VTSA-F	Drawing name: =2V09&EFS-EL	= V1UQ53KF1
			Ed.	MKLEPADLO					+ V1UQ53
			Appr		P6700 Bodyside LH - Robot Cell 2V09	Scale 1:1		Document type: EFS	Project nr: 22-16150
Modification	Date	Name	Original		Replacement of / Replaced by				Page 2 / 1533

0	1	2	3	4	5	6	7	8	9

-KF1.13

FESTO

CPX-M-AB-8-M12X2-5POL

549335

I2454.0	DI 0 X1:4	V1UQ53UQ8.2-BGR	Clamps 8 (RESET)
I2454.1	DI 1 X1:2	V1UQ53UQ8.2-BGS	Clamps 8 (SET)
I2454.2	DI 2 X2:4	V1UQ53UQ9.1-BGR	Clamp 9 (RESET)
I2454.3	DI 3 X2:2	V1UQ53UQ9.1-BGS	Clamp 9 (SET)
I2454.4	DI 4 X3:4	V1UQ53UQ10.1-BGR	Clamps 10 (RESET)
I2454.5	DI 5 X3:2	V1UQ53UQ10.1-BGS	Clamps 10 (SET)
I2454.6	DI 6 X4:4	V1UQ53UQ10.2-BGR	Clamps 10 (RESET)
I2454.7	DI 7 X4:2	V1UQ53UQ10.2-BGS	Clamps 10 (SET)
I2455.0	DI 8 X5:4	I2455.0	Spare
I2455.1	DI 9 X5:2	I2455.1	Spare
I2455.2	DI 10 X6:4	I2455.2	Spare
I2455.3	DI 11 X6:2	I2455.3	Spare
I2455.4	DI 12 X7:4	I2455.4	Spare
I2455.5	DI 13 X7:2	I2455.5	Spare
I2455.6	DI 14 X8:4	I2455.6	Spare
I2455.7	DI 15 X8:2	I2455.7	Spare

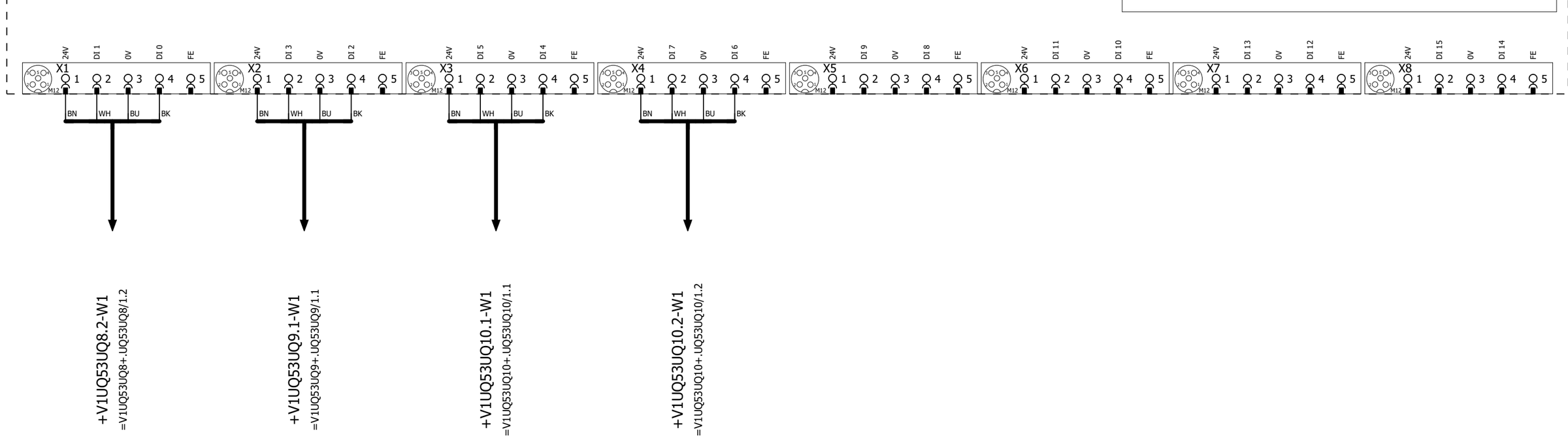

			Date	1/17/2023	Volvo Trucks North America	Valiant TMS	I/O MOD. DI16 (8 x M12) FOR VTSA-F	Drawing name: =2V09&EFS-EL	= V1UQ53KF1
			Ed.	MKLEPADLO					+ V1UQ53
			Appr		P6700 Bodyside LH - Robot Cell 2V09			Document type: EFS	Project nr: 22-16150
Modification	Date	Name	Original		Replacement of	Replaced by	Scale 1:1		Page 3 / 1533

-KF1 -KF1.11 -KF1.12 -KF1.13 -KF1.20 -KF1.21 -KF1.22 -KF1.23 -KF1.24 -KF1.25 -KF1.26 -KF1.27

M1 M2 M3 M4 M5

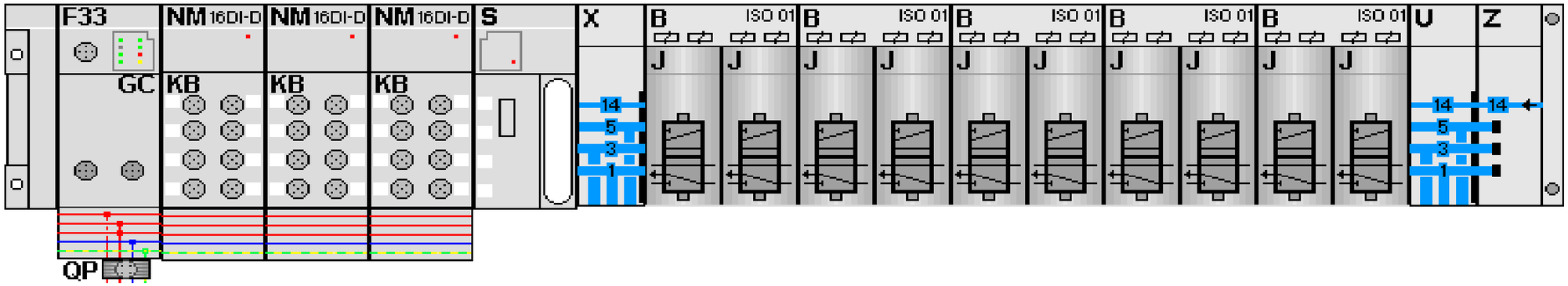

-KF1.21
=V1UQ53UQ1+.UQ53UQ1/1.3
=V1UQ53UQ2+.UQ53UQ2/1.3

FESTO

=V1UQ53UQ1+.UQ53UQ1/1.4	Q2450.0 DO 0 1.1	-QN1.1_Q	Shot Pin 1 (RST)
=V1UQ53UQ1+.UQ53UQ1/1.4	Q2450.1 DO 1 1.2	-QN1.2_Q	Shot Pin 1 (SET)
=V1UQ53UQ2+.UQ53UQ2/1.4	Q2450.2 DO 2 2.1	-QN2.1_Q	Shot Pin 2 (RST)
=V1UQ53UQ2+.UQ53UQ2/1.4	Q2450.3 DO 3 2.2	-QN2.2_Q	Shot Pin 2 (SET)

-KF1.22
=V1UQ53UQ3+.UQ53UQ3/1.3
=V1UQ53UQ4+.UQ53UQ4/1.3

FESTO

=V1UQ53UQ3+.UQ53UQ3/1.4	Q2450.4 DO 0 1.1	-QN3.1_Q	Clamps 3 (RST)
=V1UQ53UQ3+.UQ53UQ3/1.4	Q2450.5 DO 1 1.2	-QN3.2_Q	Clamps 3 (SET)
=V1UQ53UQ4+.UQ53UQ4/1.4	Q2450.6 DO 2 2.1	-QN4.1_Q	Clamps 4 (RST)
=V1UQ53UQ4+.UQ53UQ4/1.4	Q2450.7 DO 3 2.2	-QN4.2_Q	Clamps 4 (SET)

-KF1.23
=V1UQ53UQ5+.UQ53UQ5/1.3
=V1UQ53UQ6+.UQ53UQ6/1.3

FESTO

=V1UQ53UQ5+.UQ53UQ5/1.4	Q2451.0 DO 0 1.1	-QN5.1_Q	Clamps 5 (RST)
=V1UQ53UQ5+.UQ53UQ5/1.4	Q2451.1 DO 1 1.2	-QN5.2_Q	Clamps 5 (SET)
=V1UQ53UQ6+.UQ53UQ6/1.4	Q2451.2 DO 2 2.1	-QN6.1_Q	Clamp 6 (RST)
=V1UQ53UQ6+.UQ53UQ6/1.4	Q2451.3 DO 3 2.2	-QN6.2_Q	Clamp 6 (SET)

-KF1.24
=V1UQ53UQ7+.UQ53UQ7/1.3
=V1UQ53UQ8+.UQ53UQ8/1.3

FESTO

=V1UQ53UQ7+.UQ53UQ7/1.4	Q2451.4 DO 0 1.1	-QN7.1_Q	Clamp 7 (RST)
=V1UQ53UQ7+.UQ53UQ7/1.4	Q2451.5 DO 1 1.2	-QN7.2_Q	Clamp 7 (SET)
=V1UQ53UQ8+.UQ53UQ8/1.4	Q2451.6 DO 2 2.1	-QN8.1_Q	Clamps 8 (RST)
=V1UQ53UQ8+.UQ53UQ8/1.4	Q2451.7 DO 3 2.2	-QN8.2_Q	Clamps 8 (SET)

-KF1.25
=V1UQ53UQ9+.UQ53UQ9/1.3
=V1UQ53UQ10+.UQ53UQ10/1.3

FESTO

=V1UQ53UQ9+.UQ53UQ9/1.4	Q2452.0 DO 0 1.1	-QN9.1_Q	Clamp 9 (RST)
=V1UQ53UQ9+.UQ53UQ9/1.4	Q2452.1 DO 1 1.2	-QN9.2_Q	Clamp 9 (SET)
=V1UQ53UQ10+.UQ53UQ10/1.4	Q2452.2 DO 2 2.1	-QN10.1_Q	Clamps 10 (RST)
=V1UQ53UQ10+.UQ53UQ10/1.4	Q2452.3 DO 3 2.2	-QN10.2_Q	Clamps 10 (SET)

			Date	1/17/2023	Volvo Trucks North America	Valiant TMS	CONNECTING MOD. FOR FESTO DQ	Drawing name: =2V09&EFS-EL	= V1UQ53KF1
			Ed.	MKLEPADLO					+ V1UQ53
			Appr		P6700 Bodyside LH - Robot Cell 2V09	Scale 1:1		Document type: EFS	Project nr: 22-16150
Modification	Date	Name	Original		Replacement of	Replaced by			Page 4 / 1533

0	1	2	3	4	5	6	7	8	9

=V1UQ53WC4/1.6 / W1.2

-W1.2
RSM RKM 56-5M/S3059
5m

=V1UQ53KF1/1.4 / KF1-P2

-WF1
PROFINET Cable
6XV1840-3AH10

-KF2

X20 M12, 7/8" 1 2 PE 4 5
0V_VAL / OUT
0V_EL / SEN
FE
24V_EL / SEN
24V_VAL / OUT

M12 -TP1
M12 -TP2

ON
OFF
1 2 1 2

FESTO
Bus node + Interlinking block
548755 + 550208

-KF2.11

FESTO
CPX-M-AB-8-M12X2-5POL
549335

I2475.0	DI 0 X1:4	V1UQ53UQ11.1-BGR	Clamps 11 (RESET)
I2475.1	DI 1 X1:2	V1UQ53UQ11.1-BGS	Clamps 11 (SET)
I2475.2	DI 2 X2:4	V1UQ53UQ11.2-BGR	Clamps 11 (RESET)
I2475.3	DI 3 X2:2	V1UQ53UQ11.2-BGS	Clamps 11 (SET)
I2475.4	DI 4 X3:4	V1UQ53UQ12.1-BGR	Clamp 12 (RESET)
I2475.5	DI 5 X3:2	V1UQ53UQ12.1-BGS	Clamp 12 (SET)
I2475.6	DI 6 X4:4	V1UQ53UQ13.1-BGR	Clamp 13 (RESET)
I2475.7	DI 7 X4:2	V1UQ53UQ13.1-BGS	Clamp 13 (SET)
I2476.0	DI 8 X5:4	V1UQ53UQ14.1-BGR	Shot Pin 14 (RESET)
I2476.1	DI 9 X5:2	V1UQ53UQ14.1-BGS	Shot Pin 14 (SET)
I2476.2	DI 10 X6:4	V1UQ53UQ15.1-BGR	Shot Pin 15 (RESET)
I2476.3	DI 11 X6:2	V1UQ53UQ15.1-BGS	Shot Pin 15 (SET)
I2476.4	DI 12 X7:4	V1UQ53UQ16.1-BGR	Shot Pin 16 (RESET)
I2476.5	DI 13 X7:2	V1UQ53UQ16.1-BGS	Shot Pin 16 (SET)
I2476.6	DI 14 X8:4	V1UQ53UQ17.1-BGR	Shot Pin 17 (RESET)
I2476.7	DI 15 X8:2	V1UQ53UQ17.1-BGS	Shot Pin 17 (SET)

X1 M12 1 2 3 4 5 — 24V | DI 1 | 0V | DI 0 | FE — BN | WH | BU | BK
X2 M12 1 2 3 4 5 — 24V | DI 3 | 0V | DI 2 | FE — BN | WH | BU | BK
X3 M12 1 2 3 4 5 — 24V | DI 5 | 0V | DI 4 | FE — BN | WH | BU | BK
X4 M12 1 2 3 4 5 — 24V | DI 7 | 0V | DI 6 | FE — BN | WH | BU | BK
X5 M12 1 2 3 4 5 — 24V | DI 9 | 0V | DI 8 | FE — BN | WH | BU | BK
X6 M12 1 2 3 4 5 — 24V | DI 11 | 0V | DI 10 | FE — BN | WH | BU | BK
X7 M12 1 2 3 4 5 — 24V | DI 13 | 0V | DI 12 | FE — BN | WH | BU | BK
X8 M12 1 2 3 4 5 — 24V | DI 15 | 0V | DI 14 | FE — BN | WH | BU | BK

+V1UQ53UQ11.1-W1
=V1UQ53UQ11+.UQ53UQ11/1.1

+V1UQ53UQ11.2-W1
=V1UQ53UQ11+.UQ53UQ11/1.2

+V1UQ53UQ12.1-W1
=V1UQ53UQ12+.UQ53UQ12/1.1

+V1UQ53UQ13.1-W1
=V1UQ53UQ13+.UQ53UQ13/1.1

+V1UQ53UQ14.1-W1
=V1UQ53UQ14+.UQ53UQ14/1.1

+V1UQ53UQ15.1-W1
=V1UQ53UQ15+.UQ53UQ15/1.1

+V1UQ53UQ16.1-W1
=V1UQ53UQ16+.UQ53UQ16/1.1

+V1UQ53UQ17.1-W1
=V1UQ53UQ17+.UQ53UQ17/1.1

=V1UQ53KF1/4

			Date	1/17/2023	Volvo Trucks North America	Valiant TMS	CONNECTING MOD. FOR VTSA MANIFOLD	Drawing name: =2V09&EFS-EL	= V1UQ53KF2
			Ed.	MKLEPADLO					+ V1UQ53
			Appr		P6700 Bodyside LH - Robot Cell 2V09	Scale 1:1		Document type: EFS	Project nr: 22-16150
Modification	Date	Name	Original		Replacement of / Replaced by				Page 1 / 1533

I2477.0	DI 0 X1:4	V1UQ53-BG01	Sensor Common Part Present
I2477.1	DI 1 X1:2	V1UQ53-BG02	Sensor Day Cab 78522975
I2477.2	DI 2 X2:4	V1UQ53-BG03	Sensor Sleeper L230 78521360
I2477.3	DI 3 X2:2	V1UQ53-BG04	Sensor Sleeper L290 78522139
I2477.4	DI 4 X3:4	V1UQ53-BG05	Sensor Sleeper L320 78519674
I2477.5	DI 5 X3:2	I2477.5	Spare
I2477.6	DI 6 X4:4	I2477.6	Spare
I2477.7	DI 7 X4:2	I2477.7	Spare
I2478.0	DI 8 X5:4	I2478.0	Spare
I2478.1	DI 9 X5:2	I2478.1	Spare
I2478.2	DI 10 X6:4	I2478.2	Spare
I2478.3	DI 11 X6:2	I2478.3	Spare
I2478.4	DI 12 X7:4	I2478.4	Spare
I2478.5	DI 13 X7:2	I2478.5	Spare
I2478.6	DI 14 X8:4	I2478.6	Spare
I2478.7	DI 15 X8:2	I2478.7	Spare

-KF2.12

FESTO

CPX-M-AB-8-M12X2-5POL

549335

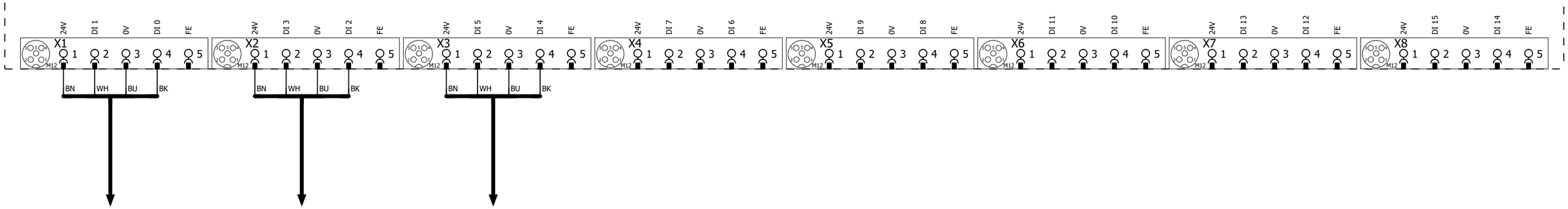

1 3

			Date	1/17/2023	Volvo Trucks North America	Valiant TMS	I/O MOD. DI16 (8 x M12) FOR VTSA-F	Drawing name: =2V09&EFS-EL	= V1UQ53KF2 + V1UQ53
			Ed.	MKLEPADLO	P6700 Bodyside LH - Robot Cell 2V09				
			Appr					Document type: EFS	Project nr: 22-16150
Modification	Date	Name	Original		Replacement of / Replaced by	Scale 1:1			Page 2 / 1533

-KF2 -KF2.11 -KF2.12 -KF2.20 -KF2.21 -KF2.22 -KF2.23 -KF2.24 -KF2.25 -KF2.26

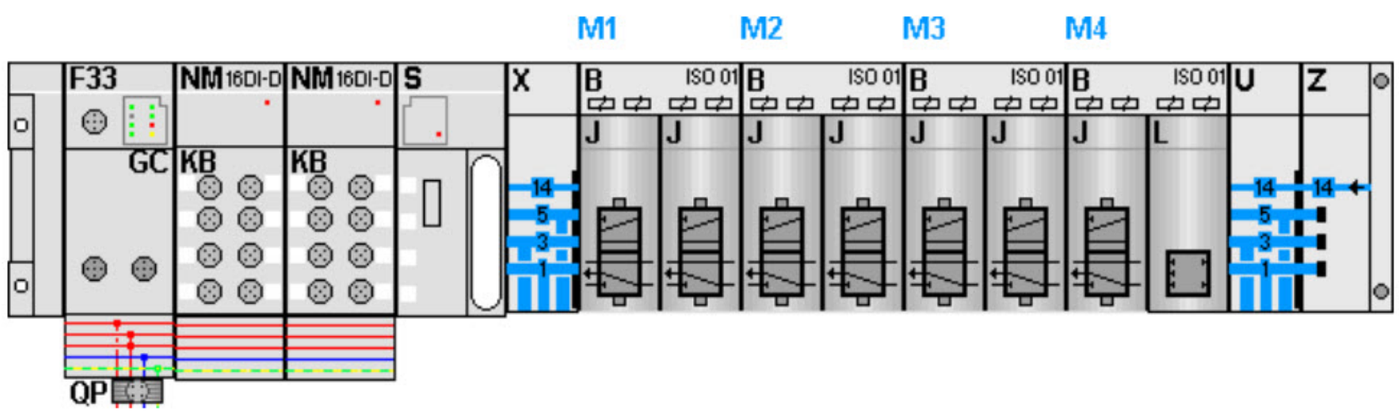

-KF2.21
=V1UQ53UQ11+.UQ53UQ11/1.3
=V1UQ53UQ12+.UQ53UQ12/1.3

FESTO

=V1UQ53UQ11+.UQ53UQ11/1.4	Q2475.0 DO 0 1.1	-QN11.1_Q	Clamps 11 (RST)
=V1UQ53UQ11+.UQ53UQ11/1.4	Q2475.1 DO 1 1.2	-QN11.2_Q	Clamps 11 (SET)
=V1UQ53UQ12+.UQ53UQ12/1.4	Q2475.2 DO 2 2.1	-QN12.1_Q	Clamp 12 (RST)
=V1UQ53UQ12+.UQ53UQ12/1.4	Q2475.3 DO 3 2.2	-QN12.2_Q	Clamp 12 (SET)

-KF2.22
=V1UQ53UQ13+.UQ53UQ13/1.3
=V1UQ53UQ14+.UQ53UQ14/1.3

FESTO

=V1UQ53UQ13+.UQ53UQ13/1.4	Q2475.4 DO 0 1.1	-QN13.1_Q	Clamp 13 (RST)
=V1UQ53UQ13+.UQ53UQ13/1.4	Q2475.5 DO 1 1.2	-QN13.2_Q	Clamp 13 (SET)
=V1UQ53UQ14+.UQ53UQ14/1.4	Q2475.6 DO 2 2.1	-QN14.1_Q	Shot Pin 14 (RST)
=V1UQ53UQ14+.UQ53UQ14/1.4	Q2475.7 DO 3 2.2	-QN14.2_Q	Shot Pin 14 (SET)

-KF2.23
=V1UQ53UQ15+.UQ53UQ15/1.3
=V1UQ53UQ16+.UQ53UQ16/1.3

FESTO

=V1UQ53UQ15+.UQ53UQ15/1.4	Q2476.0 DO 0 1.1	-QN15.1_Q	Shot Pin 15 (RST)
=V1UQ53UQ15+.UQ53UQ15/1.4	Q2476.1 DO 1 1.2	-QN15.2_Q	Shot Pin 15 (SET)
=V1UQ53UQ16+.UQ53UQ16/1.4	Q2476.2 DO 2 2.1	-QN16.1_Q	Shot Pin 16 (RST)
=V1UQ53UQ16+.UQ53UQ16/1.4	Q2476.3 DO 3 2.2	-QN16.2_Q	Shot Pin 16 (SET)

-KF2.24
=V1UQ53UQ17+.UQ53UQ17/1.3

FESTO

=V1UQ53UQ17+.UQ53UQ17/1.4	Q2476.4 DO 0 1.1	-QN17.1_Q	Shot Pin 17 (RST)
=V1UQ53UQ17+.UQ53UQ17/1.4	Q2476.5 DO 1 1.2	-QN17.2_Q	Shot Pin 17 (SET)
	Q2476.6 DO 2 2.1	-QN18.1_Q	Spare
	Q2476.7 DO 3 2.2	-QN18.2_Q	Spare

			Date	1/17/2023	Volvo Trucks North America	Valiant TMS	CONNECTING MOD. FOR FESTO DQ	Drawing name: =2V09&EFS-EL	= V1UQ53KF2	
			Ed.	MKLEPADLO					+ V1UQ53	
			Appr		P6700 Bodyside LH - Robot Cell 2V09	Scale 1:1		Document type: EFS	Project nr: 22-16150	Page 3 / 1533
Modification	Date	Name	Original		Replacement of	Replaced by				

0	1	2	3	4	5	6	7	8	9

=V1UQ53KF1
+V1UQ53

-KF1.21
=V1UQ53KF1+V1UQ53/4.1

Shot Pin 1 (RST)	Shot Pin 1 (SET)
=V1UQ53KF1	=V1UQ53KF1
+V1UQ53	+V1UQ53
-QN1.1_Q	-QN1.2_Q
=V1UQ53KF1	=V1UQ53KF1
+V1UQ53/4.3	+V1UQ53/4.3
Q2450.0	Q2450.1
1.1 Pneumatic Valve	1.2 Pneumatic Valve

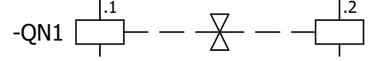

=V1UQ53KF1+V1UQ53/1.1
+V1UQ53UQ1.1-W1

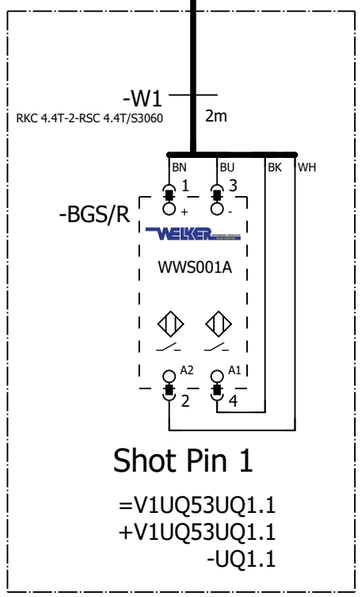

Shot Pin 1

=V1UQ53UQ1.1
+V1UQ53UQ1.1
-UQ1.1

=V1UQ53
-UQ1.1-BGS/R
Shot Pin 1

=V1UQ53KF2+V1UQ53/3

=V1UQ53UQ2+.UQ53UQ2/1

			Date	1/17/2023	Volvo Trucks North America	Valiant TMS	FESTO DQ CONNECTION QN1	Drawing name: =2V09&EFS-EL	= V1UQ53UQ1
			Ed.	MKLEPADLO					+ V1UQ53UQ1
			Appr		P6700 Bodyside LH - Robot Cell 2V09			Document type: EFS	Project nr: 22-16150
Modification	Date	Name	Original		Replacement of	Replaced by	Scale 1:1		Page 1 / 1533

0	1	2	3	4	5	6	7	8	9

=V1UQ53KF1
+V1UQ53

-KF1.21
=V1UQ53KF1+V1UQ53/4.1

Shot Pin 2 (RST)
=V1UQ53KF1
+V1UQ53
-QN2.1_Q
=V1UQ53KF1
+V1UQ53/4.3
Q2450.2

Shot Pin 2 (SET)
=V1UQ53KF1
+V1UQ53
-QN2.2_Q
=V1UQ53KF1
+V1UQ53/4.3
Q2450.3

2.1
Pneumatic Valve

2.2
Pneumatic Valve

-QN2 .1 .2

=V1UQ53KF1+V1UQ53/1.2
+V1UQ53UQ2.1-W1

-W1
RKC 4.4T-3-RSC 4.4T/S3060
3m

BN BU BK WH

-BGS/R
1 3
+ -
WELKER
WWS001A
A2 A1
2 4

Shot Pin 2

=V1UQ53UQ2.1
+V1UQ53UQ2.1
-UQ2.1

=V1UQ53
-UQ2.1-BGS/R
Shot Pin 2

=V1UQ53UQ1+.UQ53UQ1/1

=V1UQ53UQ3+.UQ53UQ3/1

			Date	1/17/2023	Volvo Trucks North America	Valiant TMS	FESTO DQ CONNECTION QN2	Drawing name: =2V09&EFS-EL	= V1UQ53UQ2
			Ed.	MKLEPADLO					+ V1UQ53UQ2
			Appr		P6700 Bodyside LH - Robot Cell 2V09			Document type: EFS	Project nr: 22-16150
Modification	Date	Name	Original		Replacement of	Replaced by	Scale 1:1		Page 1 / 1533

0	1	2	3	4	5	6	7	8	9

=V1UQ53KF1
+V1UQ53

-KF1.22
=V1UQ53KF1+V1UQ53/4.1

Clamps 3 (RST)	Clamps 3 (SET)
=V1UQ53KF1	=V1UQ53KF1
+V1UQ53	+V1UQ53
-QN3.1_Q	-QN3.2_Q
=V1UQ53KF1	=V1UQ53KF1
+V1UQ53/4.3	+V1UQ53/4.3
Q2450.4	Q2450.5
1.1 Pneumatic Valve	1.2 Pneumatic Valve
.1	.2

-QN3

=V1UQ53KF1+V1UQ53/1.3
+V1UQ53UQ3.1-W1

=V1UQ53KF1+V1UQ53/1.4
+V1UQ53UQ3.2-W1

=V1UQ53KF1+V1UQ53/1.5
+V1UQ53UQ3.3-W1

=V1UQ53KF1+V1UQ53/1.6
+V1UQ53UQ3.4-W1

=V1UQ53KF1+V1UQ53/1.8
+V1UQ53UQ3.5-W1

-W1
RKC 4.4T-2-RSC 4.4T/S3060
2m

-W1
RKC 4.4T-2-RSC 4.4T/S3060
2m

-W1
RKC 4.4T-3-RSC 4.4T/S3060
3m

-W1
RKC 4.4T-4-RSC 4.4T/S3060
4m

-W1
RKC 4.4T-2-RSC 4.4T/S3060
2m

BN BU BK WH

-BGS/R
TÜNKERS
1324638

A2 A1
2 4

Clamps 3
=V1UQ53UQ3.1
+V1UQ53UQ3.1
-UQ3.1

Clamps 3
=V1UQ53UQ3.2
+V1UQ53UQ3.2
-UQ3.2

Clamps 3
=V1UQ53UQ3.3
+V1UQ53UQ3.3
-UQ3.3

Clamps 3
=V1UQ53UQ3.4
+V1UQ53UQ3.4
-UQ3.4

Clamps 3
=V1UQ53UQ3.5
+V1UQ53UQ3.5
-UQ3.5

=V1UQ53
-UQ3.1-BGS/R
Clamps 3

=V1UQ53
-UQ3.2-BGS/R
Clamps 3

=V1UQ53
-UQ3.3-BGS/R
Clamps 3

=V1UQ53
-UQ3.4-BGS/R
Clamps 3

=V1UQ53
-UQ3.5-BGS/R
Clamps 3

=V1UQ53UQ2+.UQ53UQ2/1

=V1UQ53UQ4+.UQ53UQ4/1

			Date	1/17/2023	Volvo Trucks North America	Valiant TMS	FESTO DQ CONNECTION QN3	Drawing name: =2V09&EFS-EL	= V1UQ53UQ3
			Ed.	MKLEPADLO					+ V1UQ53UQ3
			Appr		P6700 Bodyside LH - Robot Cell 2V09			Document type: EFS	Project nr: 22-16150
Modification	Date	Name	Original		Replacement of	Replaced by	Scale 1:1		Page 1 / 1533

0	1	2	3	4	5	6	7	8	9

=V1UQ53KF1
+V1UQ53

-KF1.22
=V1UQ53KF1+V1UQ53/4.1

Clamps 4 (RST)
=V1UQ53KF1
+V1UQ53
-QN4.1_Q
=V1UQ53KF1
+V1UQ53/4.3
Q2450.6

Clamps 4 (SET)
=V1UQ53KF1
+V1UQ53
-QN4.2_Q
=V1UQ53KF1
+V1UQ53/4.3
Q2450.7

2.1 Pneumatic Valve

2.2 Pneumatic Valve

-QN4 .1 .2

=V1UQ53KF1+V1UQ53/1.9
+V1UQ53UQ4.1-W1

=V1UQ53KF1+V1UQ53/2.1
+V1UQ53UQ4.2-W1

=V1UQ53KF1+V1UQ53/2.2
+V1UQ53UQ4.3-W1

-W1 4m
RKC 4.4T-4-RSC 4.4T/S3060

-W1 4m
RKC 4.4T-4-RSC 4.4T/S3060

-W1 2m
RKC 4.4T-2-RSC 4.4T/S3060

-BGS/R
BN BU BK WH
1 3
+ -
TÜNKERS
1324638
A2 A1
2 4

-BGS/R
BN BU BK WH
1 3
+ -
TÜNKERS
1324638
A2 A1
2 4

-BGS/R
BN BU BK WH
1 3
+ -
TÜNKERS
1324638
A2 A1
2 4

Clamps 4
=V1UQ53UQ4.1
+V1UQ53UQ4.1
-UQ4.1

Clamps 4
=V1UQ53UQ4.2
+V1UQ53UQ4.2
-UQ4.2

Clamps 4
=V1UQ53UQ4.3
+V1UQ53UQ4.3
-UQ4.3

=V1UQ53
-UQ4.1-BGS/R
Clamps 4

=V1UQ53
-UQ4.2-BGS/R
Clamps 4

=V1UQ53
-UQ4.3-BGS/R
Clamps 4

=V1UQ53UQ3+.UQ53UQ3/1

=V1UQ53UQ5+.UQ53UQ5/1

			Date	1/17/2023	Volvo Trucks North America		Valiant TMS	FESTO DQ CONNECTION QN4	Drawing name: =2V09&EFS-EL	= V1UQ53UQ4
			Ed.	MKLEPADLO						+ V1UQ53UQ4
			Appr		P6700 Bodyside LH - Robot Cell 2V09				Document type: EFS	Project nr: 22-16150
Modification	Date	Name	Original		Replacement of	Replaced by	Scale 1:1			Page 1 / 1533

0	1	2	3	4	5	6	7	8	9

=V1UQ53KF1
+V1UQ53

-KF1.23
=V1UQ53KF1+V1UQ53/4.1

Clamps 5 (RST)
=V1UQ53KF1
+V1UQ53
-QN5.1_Q
=V1UQ53KF1
+V1UQ53/4.3
Q2451.0

Clamps 5 (SET)
=V1UQ53KF1
+V1UQ53
-QN5.2_Q
=V1UQ53KF1
+V1UQ53/4.3
Q2451.1

1.1 Pneumatic Valve

1.2 Pneumatic Valve

-QN5 .1 .2

=V1UQ53KF1+V1UQ53/2.3
+V1UQ53UQ5.1-W1

-W1 4m
RKC 4.4T-4-RSC 4.4T/S3060

BN BU BK WH
1 3
-BGS/R
TÜNKERS
1324638
A2 A1
2 4

Clamps 5
=V1UQ53UQ5.1
+V1UQ53UQ5.1
-UQ5.1

=V1UQ53
-UQ5.1-BGS/R
Clamps 5

=V1UQ53KF1+V1UQ53/2.4
+V1UQ53UQ5.2-W1

-W1 3m
RKC 4.4T-3-RSC 4.4T/S3060

BN BU BK WH
1 3
-BGS/R
TÜNKERS
1324638
A2 A1
2 4

Clamps 5
=V1UQ53UQ5.2
+V1UQ53UQ5.2
-UQ5.2

=V1UQ53
-UQ5.2-BGS/R
Clamps 5

=V1UQ53KF1+V1UQ53/2.5
+V1UQ53UQ5.3-W1

-W1 2m
RKC 4.4T-2-RSC 4.4T/S3060

BN BU BK WH
1 3
-BGS/R
TÜNKERS
1324638
A2 A1
2 4

Clamps 5
=V1UQ53UQ5.3
+V1UQ53UQ5.3
-UQ5.3

=V1UQ53
-UQ5.3-BGS/R
Clamps 5

			Date	1/17/2023	Volvo Trucks North America	Valiant TMS	FESTO DQ CONNECTION QN5	Drawing name: =2V09&EFS-EL	= V1UQ53UQ5
			Ed.	MKLEPADLO					+ V1UQ53UQ5
			Appr		P6700 Bodyside LH - Robot Cell 2V09			Document type: EFS	Project nr: 22-16150
Modification	Date	Name	Original		Replacement of	Replaced by	Scale 1:1		Page 1 / 1533

0	1	2	3	4	5	6	7	8	9

=V1UQ53KF1
+V1UQ53

-KF1.23
=V1UQ53KF1+V1UQ53/4.1

Clamp 6 (RST)	Clamp 6 (SET)
=V1UQ53KF1	=V1UQ53KF1
+V1UQ53	+V1UQ53
-QN6.1_Q	-QN6.2_Q
=V1UQ53KF1	=V1UQ53KF1
+V1UQ53/4.3	+V1UQ53/4.3
Q2451.2	Q2451.3
2.1 Pneumatic Valve	2.2 Pneumatic Valve

-QN6 .1 .2

=V1UQ53KF1+V1UQ53/2.6
+V1UQ53UQ6.1-W1

-W1
RKC 4.4T-5-RSC 4.4T/S3060
5m

BN BU BK WH

-BGS/R
1 3
+ -
TÜNKERS
1324638
A2 A1
2 4

Clamp 6

=V1UQ53UQ6.1
+V1UQ53UQ6.1
-UQ6.1

=V1UQ53
-UQ6.1-BGS/R
Clamp 6

=V1UQ53UQ5+.UQ53UQ5/1

=V1UQ53UQ7+.UQ53UQ7/1

			Date	1/17/2023	Volvo Trucks North America	Valiant TMS	FESTO DQ CONNECTION QN6	Drawing name: =2V09&EFS-EL	= V1UQ53UQ6
			Ed.	MKLEPADLO					+ V1UQ53UQ6
			Appr		P6700 Bodyside LH - Robot Cell 2V09			Document type: EFS	Project nr: 22-16150
Modification	Date	Name	Original		Replacement of	Replaced by	Scale 1:1		Page 1 / 1533

0	1	2	3	4	5	6	7	8	9

=V1UQ53KF1
+V1UQ53

-KF1.24
=V1UQ53KF1+V1UQ53/4.1

Clamp 7 (RST)	Clamp 7 (SET)
=V1UQ53KF1	=V1UQ53KF1
+V1UQ53	+V1UQ53
-QN7.1_Q	-QN7.2_Q
=V1UQ53KF1	=V1UQ53KF1
+V1UQ53/4.3	+V1UQ53/4.3
Q2451.4	Q2451.5
1.1 Pneumatic Valve	1.2 Pneumatic Valve

-QN7 .1 .2

=V1UQ53KF1+V1UQ53/2.8
+V1UQ53UQ7.1-W1

-W1
RKC 4.4T-6-RSC 4.4T/S3060
6m

BN BU BK WH

-BGS/R
1 3
+ -
TÜNKERS
1324638
A2 A1
2 4

Clamp 7

=V1UQ53UQ7.1
+V1UQ53UQ7.1
-UQ7.1

=V1UQ53
-UQ7.1-BGS/R
Clamp 7

=V1UQ53UQ6+.UQ53UQ6/1

=V1UQ53UQ8+.UQ53UQ8/1

			Date	1/17/2023	Volvo Trucks North America	Valiant TMS	FESTO DQ CONNECTION QN7	Drawing name: =2V09&EFS-EL	= V1UQ53UQ7
			Ed.	MKLEPADLO					+ V1UQ53UQ7
			Appr		P6700 Bodyside LH - Robot Cell 2V09			Document type: EFS	Project nr: 22-16150
Modification	Date	Name	Original		Replacement of	Replaced by	Scale 1:1		Page 1 / 1533

0	1	2	3	4	5	6	7	8	9

=V1UQ53KF1
+V1UQ53

-KF1.24
=V1UQ53KF1+V1UQ53/4.1

Clamps 8 (RST)
=V1UQ53KF1
+V1UQ53
-QN8.1_Q
=V1UQ53KF1
+V1UQ53/4.3
Q2451.6

Clamps 8 (SET)
=V1UQ53KF1
+V1UQ53
-QN8.2_Q
=V1UQ53KF1
+V1UQ53/4.3
Q2451.7

2.1 Pneumatic Valve

2.2 Pneumatic Valve

-QN8 .1 .2

=V1UQ53KF1+V1UQ53/2.9
+V1UQ53UQ8.1-W1

=V1UQ53KF1+V1UQ53/3.1
+V1UQ53UQ8.2-W1

-W1
RKC 4.4T-4-RSC 4.4T/S3060
4m

-W1
RKC 4.4T-6-RSC 4.4T/S3060
6m

-BGS/R

BN BU BK WH
1 3
+ -
TÜNKERS
1324638
A2 A1
2 4

Clamps 8
=V1UQ53UQ8.1
+V1UQ53UQ8.1
-UQ8.1

Clamps 8
=V1UQ53UQ8.2
+V1UQ53UQ8.2
-UQ8.2

=V1UQ53
-UQ8.1-BGS/R
Clamps 8

=V1UQ53
-UQ8.2-BGS/R
Clamps 8

=V1UQ53UQ7+.UQ53UQ7/1

=V1UQ53UQ9+.UQ53UQ9/1

			Date	1/17/2023	Volvo Trucks North America	Valiant TMS	FESTO DQ CONNECTION QN8	Drawing name: =2V09&EFS-EL	= V1UQ53UQ8
			Ed.	MKLEPADLO					+ V1UQ53UQ8
			Appr		P6700 Bodyside LH - Robot Cell 2V09			Document type: EFS	Project nr: 22-16150
Modification	Date	Name	Original		Replacement of	Replaced by	Scale 1:1		Page 1 / 1533

0	1	2	3	4	5	6	7	8	9

=V1UQ53KF1
+V1UQ53

-KF1.25
=V1UQ53KF1+V1UQ53/4.1

Clamp 9 (RST)	Clamp 9 (SET)
=V1UQ53KF1	=V1UQ53KF1
+V1UQ53	+V1UQ53
-QN9.1_Q	-QN9.2_Q
=V1UQ53KF1	=V1UQ53KF1
+V1UQ53/4.3	+V1UQ53/4.3
Q2452.0	Q2452.1
1.1 Pneumatic Valve	1.2 Pneumatic Valve

-QN9 .1 .2

=V1UQ53KF1+V1UQ53/3.2
+V1UQ53UQ9.1-W1

-W1
RKC 4.4T-6-RSC 4.4T/S3060
6m

BN BU BK WH

-BGS/R
1 3
+ -
TÜNKERS
1324638
A2 A1
2 4

Clamp 9

=V1UQ53UQ9.1
+V1UQ53UQ9.1
-UQ9.1

=V1UQ53
-UQ9.1-BGS/R
Clamp 9

=V1UQ53UQ8+.UQ53UQ8/1

=V1UQ53UQ10+.UQ53UQ10/1

			Date	1/17/2023	Volvo Trucks North America	Valiant TMS	FESTO DQ CONNECTION QN9	Drawing name: =2V09&EFS-EL	= V1UQ53UQ9
			Ed.	MKLEPADLO					+ V1UQ53UQ9
			Appr		P6700 Bodyside LH - Robot Cell 2V09			Document type: EFS	Project nr: 22-16150
Modification	Date	Name	Original		Replacement of	Replaced by	Scale 1:1		Page 1 / 1533

0	1	2	3	4	5	6	7	8	9

=V1UQ53KF1
+V1UQ53

-KF1.25
=V1UQ53KF1+V1UQ53/4.1

Clamps 10 (RST)
=V1UQ53KF1
+V1UQ53
-QN10.1_Q
=V1UQ53KF1
+V1UQ53/4.3
Q2452.2

Clamps 10 (SET)
=V1UQ53KF1
+V1UQ53
-QN10.2_Q
=V1UQ53KF1
+V1UQ53/4.3
Q2452.3

2.1 Pneumatic Valve

2.2 Pneumatic Valve

-QN10 .1 .2

=V1UQ53KF1+V1UQ53/3.3
+V1UQ53UQ10.1-W1

-W1
RKC 4.4T-5-RSC 4.4T/S3060
5m

-BGS/R
BN BU BK WH
1 3
+ -
TÜNKERS
1324638
A2 A1
2 4

Clamps 10
=V1UQ53UQ10.1
+V1UQ53UQ10.1
-UQ10.1

=V1UQ53
-UQ10.1-BGS/R
Clamps 10

=V1UQ53KF1+V1UQ53/3.4
+V1UQ53UQ10.2-W1

-W1
RKC 4.4T-6-RSC 4.4T/S3060
6 m

-BGS/R
BN BU BK WH
1 3
+ -
TÜNKERS
1324638
A2 A1
2 4

Clamps 10
=V1UQ53UQ10.2
+V1UQ53UQ10.2
-UQ10.2

=V1UQ53
-UQ10.2-BGS/R
Clamps 10

=V1UQ53UQ9+.UQ53UQ9/1

=V1UQ53UQ11+.UQ53UQ11/1

			Date	1/17/2023	Volvo Trucks North America	Valiant TMS	FESTO DQ CONNECTION QN10	Drawing name: =2V09&EFS-EL	= V1UQ53UQ10
			Ed.	MKLEPADLO					+ V1UQ53UQ10
			Appr		P6700 Bodyside LH - Robot Cell 2V09			Document type: EFS	Project nr: 22-16150
Modification	Date	Name	Original		Replacement of	Replaced by	Scale 1:1		Page 1 / 1533

0	1	2	3	4	5	6	7	8	9

=V1UQ53KF2
+V1UQ53

-KF2.21
=V1UQ53KF2+V1UQ53/3.1

Clamps 11 (RST)	Clamps 11 (SET)
=V1UQ53KF2	=V1UQ53KF2
+V1UQ53	+V1UQ53
-QN10.1_Q	-QN10.2_Q
=V1UQ53KF2	=V1UQ53KF2
+V1UQ53/3.3	+V1UQ53/3.3
Q2475.0	Q2475.1
1.1 Pneumatic Valve	1.2 Pneumatic Valve

-QN11 .1 .2

=V1UQ53KF2+V1UQ53/1.1
+V1UQ53UQ11.1-W1

=V1UQ53KF2+V1UQ53/1.2
+V1UQ53UQ11.2-W1

-W1
RKC 4.4T-5-RSC 4.4T/S3060
5m

-W1
RKC 4.4T-XX-RSC 4.4T/S3060
7 m

-BGS/R
BN BU BK WH
1 3
+ -
TÜNKERS
1324638
A2 A1
2 4

Clamps 11
=V1UQ53UQ11.1
+V1UQ53UQ11.1
-UQ11.1

Clamps 11
=V1UQ53UQ11.2
+V1UQ53UQ11.2
-UQ11.2

=V1UQ53
-UQ11.1-BGS/R
Clamps 11

=V1UQ53
-UQ11.2-BGS/R
Clamps 11

=V1UQ53UQ10+.UQ53UQ10/1

=V1UQ53UQ12+.UQ53UQ12/1

			Date	1/17/2023	Volvo Trucks North America		Valiant TMS	FESTO DQ CONNECTION QN11	Drawing name: =2V09&EFS-EL	= V1UQ53UQ11
			Ed.	MKLEPADLO						+ V1UQ53UQ11
			Appr		P6700 Bodyside LH - Robot Cell 2V09				Document type: EFS	Project nr: 22-16150
Modification	Date	Name	Original		Replacement of	Replaced by	Scale 1:1			Page 1 / 1533

0	1	2	3	4	5	6	7	8	9

=V1UQ53KF2
+V1UQ53

-KF2.21
=V1UQ53KF2+V1UQ53/3.1

Clamp 12 (RST)	Clamp 12 (SET)
=V1UQ53KF2	=V1UQ53KF2
+V1UQ53	+V1UQ53
-QN12.1_Q	-QN12.2_Q
=V1UQ53KF2	=V1UQ53KF2
+V1UQ53/3.3	+V1UQ53/3.3
Q2475.2	Q2475.3
2.1 Pneumatic Valve	2.2 Pneumatic Valve

-QN12 .1 .2

=V1UQ53KF2+V1UQ53/1.3
+V1UQ53UQ12.1-W1

-W1
RKC 4.4T-4-RSC 4.4T/S3060
4m

BN BU BK WH

-BGS/R
1 3
+ -
TÜNKERS
1324638
A2 A1
2 4

Clamp 12

=V1UQ53UQ12.1
+V1UQ53UQ12.1
-UQ12.1

=V1UQ53
-UQ12.1-BGS/R
Clamp 12

=V1UQ53UQ11+.UQ53UQ11/1

=V1UQ53UQ13+.UQ53UQ13/1

			Date	1/17/2023	Volvo Trucks North America	Valiant TMS	FESTO DQ CONNECTION QN12	Drawing name: =2V09&EFS-EL	= V1UQ53UQ12
			Ed.	MKLEPADLO					+ V1UQ53UQ12
			Appr		P6700 Bodyside LH - Robot Cell 2V09			Document type: EFS	Project nr: 22-16150
Modification	Date	Name	Original		Replacement of	Replaced by	Scale 1:1		Page 1 / 1533

0	1	2	3	4	5	6	7	8	9

=V1UQ53KF2
+V1UQ53

-KF2.22
=V1UQ53KF2+V1UQ53/3.1

Clamp 13 (RST)	Clamp 13 (SET)
=V1UQ53KF2	=V1UQ53KF2
+V1UQ53	+V1UQ53
-QN13.1_Q	-QN13.2_Q
=V1UQ53KF2	=V1UQ53KF2
+V1UQ53/3.3	+V1UQ53/3.3
Q2475.4	Q2475.5
1.1 Pneumatic Valve	1.2 Pneumatic Valve

-QN13 .1 .2

=V1UQ53KF2+V1UQ53/1.4
+V1UQ53UQ13.1-W1

-W1
RKC 4.4T-4-RSC 4.4T/S3060
4m

BN BU BK WH

-BGS/R
1 3
+ -
TÜNKERS
1324638
A2 A1
2 4

Clamp 13

=V1UQ53UQ13.1
+V1UQ53UQ13.1
-UQ13.1

=V1UQ53
-UQ13.1-BGS/R
Clamp 13

=V1UQ53UQ12+.UQ53UQ12/1

=V1UQ53UQ14+.UQ53UQ14/1

			Date	1/17/2023	Volvo Trucks North America	Valiant TMS	FESTO DQ CONNECTION QN13	Drawing name: =2V09&EFS-EL	= V1UQ53UQ13
			Ed.	MKLEPADLO					+ V1UQ53UQ13
			Appr		P6700 Bodyside LH - Robot Cell 2V09			Document type: EFS	Project nr: 22-16150
Modification	Date	Name	Original		Replacement of	Replaced by	Scale 1:1		Page 1 / 1533

0	1	2	3	4	5	6	7	8	9

=V1UQ53KF2
+V1UQ53

-KF2.22
=V1UQ53KF2+V1UQ53/3.1

Shot Pin 14 (RST)	Shot Pin 14 (SET)
=V1UQ53KF2	=V1UQ53KF2
+V1UQ53	+V1UQ53
-QN14.1_Q	-QN14.2_Q
=V1UQ53KF2	=V1UQ53KF2
+V1UQ53/3.3	+V1UQ53/3.3
Q2475.6	Q2475.7
2.1 Pneumatic Valve	2.2 Pneumatic Valve

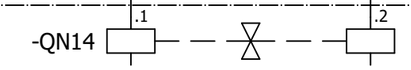

=V1UQ53KF2+V1UQ53/1.5
+V1UQ53UQ14.1-W1

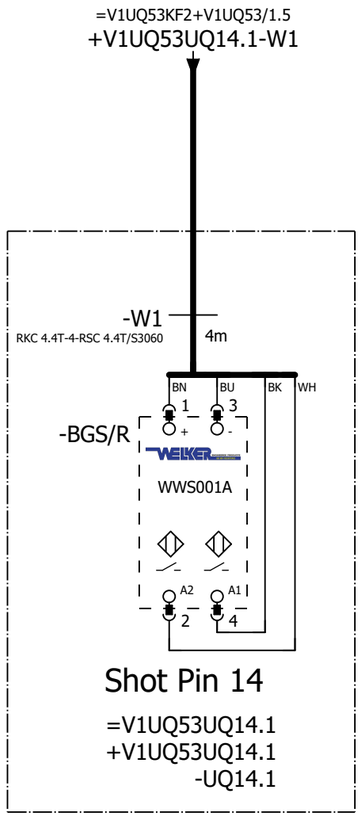

Shot Pin 14

=V1UQ53UQ14.1
+V1UQ53UQ14.1
-UQ14.1

=V1UQ53 -UQ14.1-BGS/R Shot Pin 14

=V1UQ53UQ13+.UQ53UQ13/1

=V1UQ53UQ15+.UQ53UQ15/1

			Date	1/17/2023	Volvo Trucks North America	Valiant TMS	FESTO DQ CONNECTION QN14	Drawing name: =2V09&EFS-EL	= V1UQ53UQ14
			Ed.	MKLEPADLO					+ V1UQ53UQ14
			Appr		P6700 Bodyside LH - Robot Cell 2V09			Document type: EFS	Project nr: 22-16150
Modification	Date	Name	Original		Replacement of	Replaced by	Scale 1:1		Page 1 / 1533

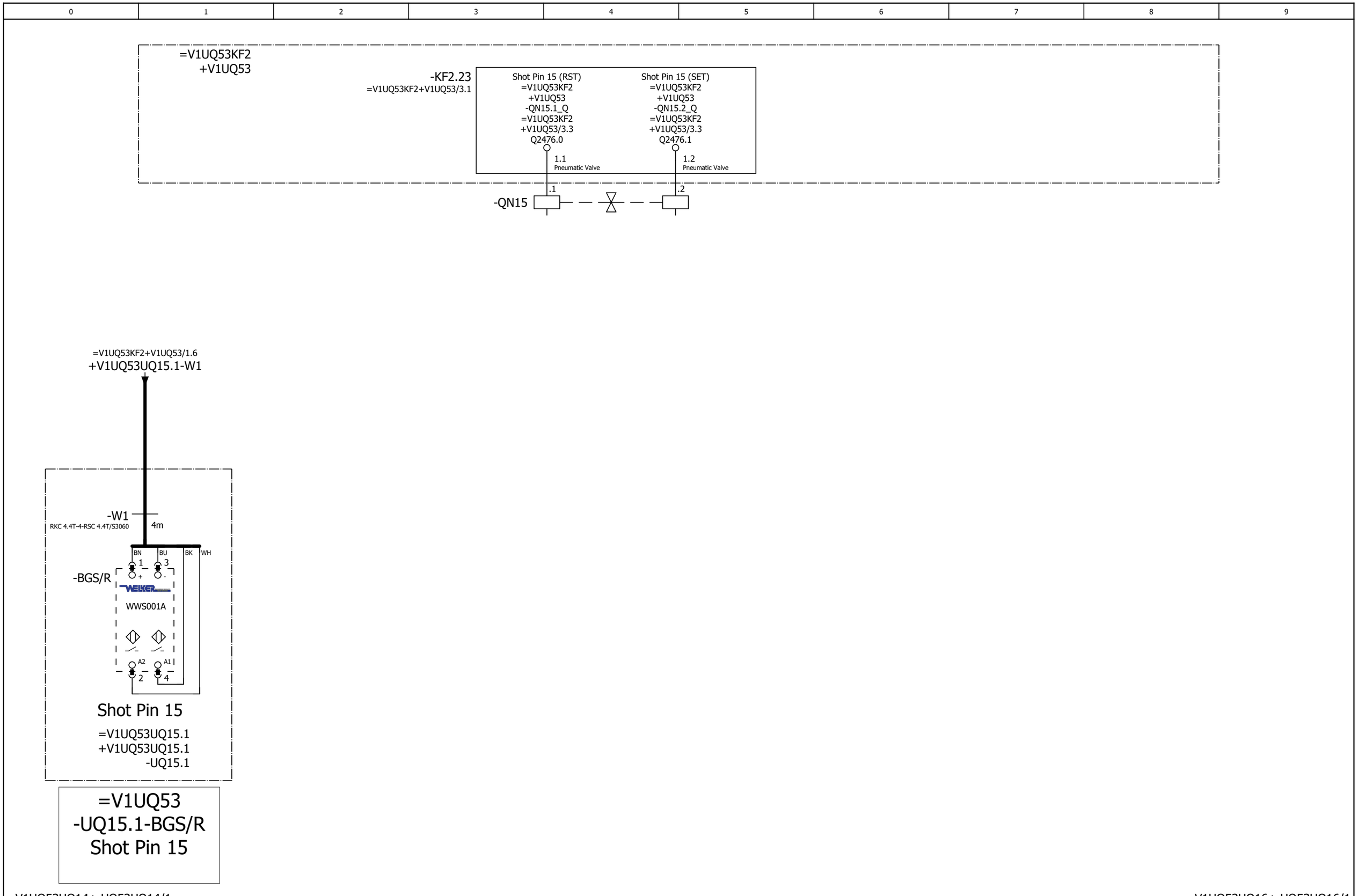

=V1UQ53UQ14+.UQ53UQ14/1

=V1UQ53UQ16+.UQ53UQ16/1

			Date	1/17/2023	Volvo Trucks North America	Valiant TMS	FESTO DQ CONNECTION QN15	Drawing name: =2V09&EFS-EL	= V1UQ53UQ15
			Ed.	MKLEPADLO					+ V1UQ53UQ15
			Appr		P6700 Bodyside LH - Robot Cell 2V09			Document type: EFS	Project nr: 22-16150
Modification	Date	Name	Original		Replacement of / Replaced by	Scale 1:1			Page 1 / 1533

0	1	2	3	4	5	6	7	8	9

=V1UQ53KF2
+V1UQ53

-KF2.23
=V1UQ53KF2+V1UQ53/3.1

Shot Pin 16 (RST)	Shot Pin 16 (SET)
=V1UQ53KF2	=V1UQ53KF2
+V1UQ53	+V1UQ53
-QN16.1_Q	-QN16.2_Q
=V1UQ53KF2	=V1UQ53KF2
+V1UQ53/3.3	+V1UQ53/3.3
Q2476.2	Q2476.3
2.1 Pneumatic Valve	2.2 Pneumatic Valve

-QN16 .1 .2

=V1UQ53KF2+V1UQ53/1.8
+V1UQ53UQ16.1-W1

-W1
RKC 4.4T-5-RSC 4.4T/S3060
5m

BN BU BK WH

-BGS/R
1 (+) 3 (-)
WWS001A
A2 2 A1 4

Shot Pin 16

=V1UQ53UQ16.1
+V1UQ53UQ16.1
-UQ16.1

=V1UQ53 -UQ16.1-BGS/R Shot Pin 16

=V1UQ53UQ15+.UQ53UQ15/1

=V1UQ53UQ17+.UQ53UQ17/1

			Date	1/17/2023	Volvo Trucks North America	Valiant TMS	FESTO DQ CONNECTION QN16	Drawing name: =2V09&EFS-EL	= V1UQ53UQ16
			Ed.	MKLEPADLO					+ V1UQ53UQ16
			Appr		P6700 Bodyside LH - Robot Cell 2V09			Document type: EFS	Project nr: 22-16150
Modification	Date	Name	Original		Replacement of	Replaced by	Scale 1:1		Page 1 / 1533

0	1	2	3	4	5	6	7	8	9

=V1UQ53KF2
+V1UQ53

-KF2.24
=V1UQ53KF2+V1UQ53/3.1

Shot Pin 17 (RST)	Shot Pin 17 (SET)
=V1UQ53KF2	=V1UQ53KF2
+V1UQ53	+V1UQ53
-QN17.1_Q	-QN17.2_Q
=V1UQ53KF2	=V1UQ53KF2
+V1UQ53/3.3	+V1UQ53/3.3
Q2476.4	Q2476.5
1.1 Pneumatic Valve	1.2 Pneumatic Valve

-QN17 .1 .2

=V1UQ53KF2+V1UQ53/1.9
+V1UQ53UQ17.1-W1

-W1
RKC 4.4T-4-RSC 4.4T/S3060
4m

BN BU BK WH

-BGS/R
1 (+) 3 (-)
WWS001A
A2 2 A1 4

Shot Pin 17

=V1UQ53UQ17.1
+V1UQ53UQ17.1
-UQ17.1

=V1UQ53 -UQ17.1-BGS/R Shot Pin 17

=V1UQ53UQ16+.UQ53UQ16/1

=V1UQ53WC4+V1UQ53/1

			Date	1/17/2023	Volvo Trucks North America	Valiant TMS	FESTO DQ CONNECTION QN17	Drawing name: =2V09&EFS-EL	= V1UQ53UQ17
			Ed.	MKLEPADLO					+ V1UQ53UQ17
			Appr		P6700 Bodyside LH - Robot Cell 2V09			Document type: EFS	Project nr: 22-16150
Modification	Date	Name	Original		Replacement of	Replaced by	Scale 1:1		Page 1 / 1533

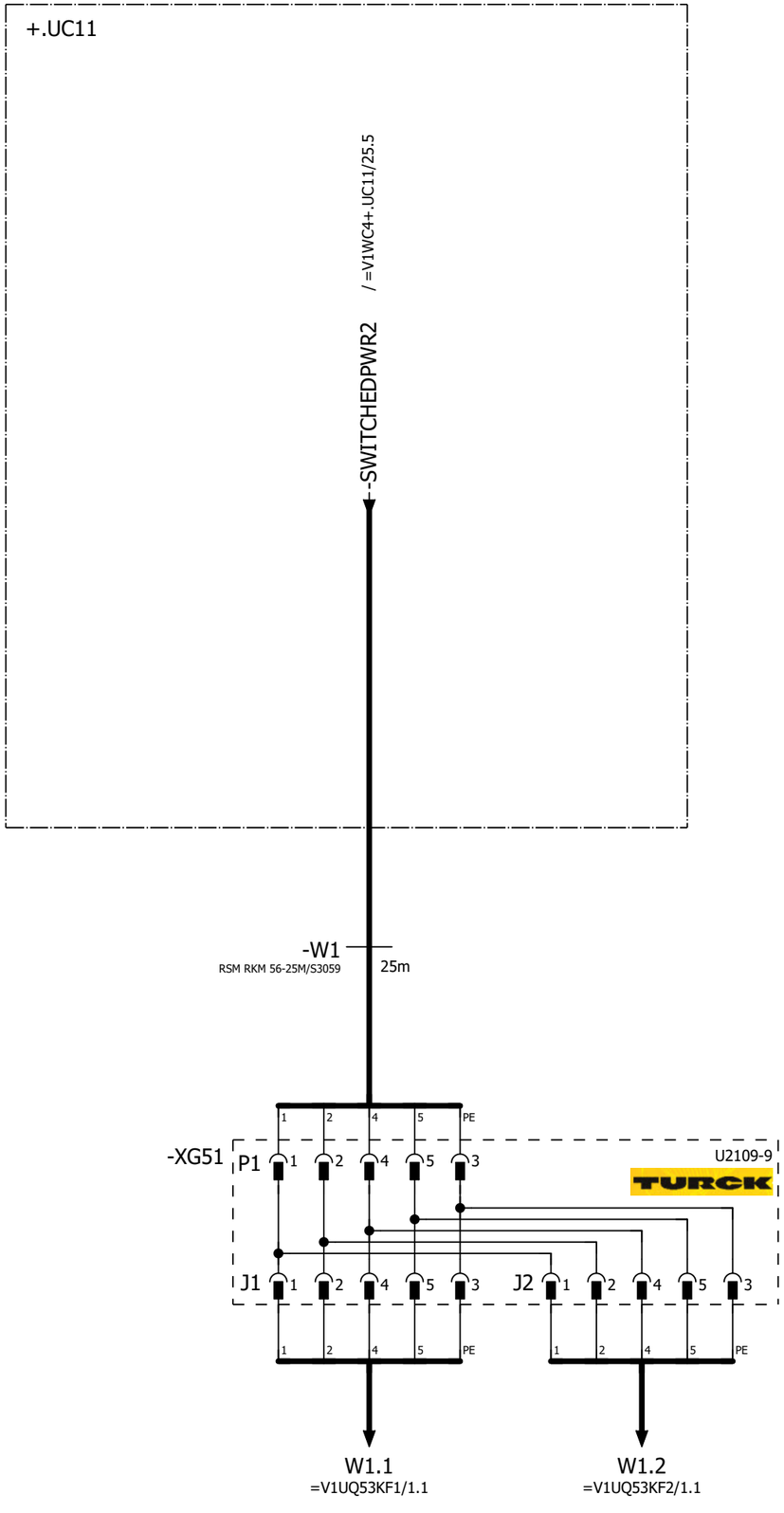

=V1UQ53UQ17+.UQ53UQ17/1

=V1UQ54BG0+.UQ54/1

			Date	1/17/2023	Volvo Trucks North America	Valiant TMS	24VDC	Drawing name: =2V09&EFS-EL	= V1UQ53WC4 + V1UQ53
			Ed.	MKLEPADLO	P6700 Bodyside LH - Robot Cell 2V09				
			Appr					Document type: EFS	Project nr: 22-16150
Modification	Date	Name	Original		Replacement of / Replaced by	Scale 1:1			Page 1 / 1533

0	1	2	3	4	5	6	7	8	9

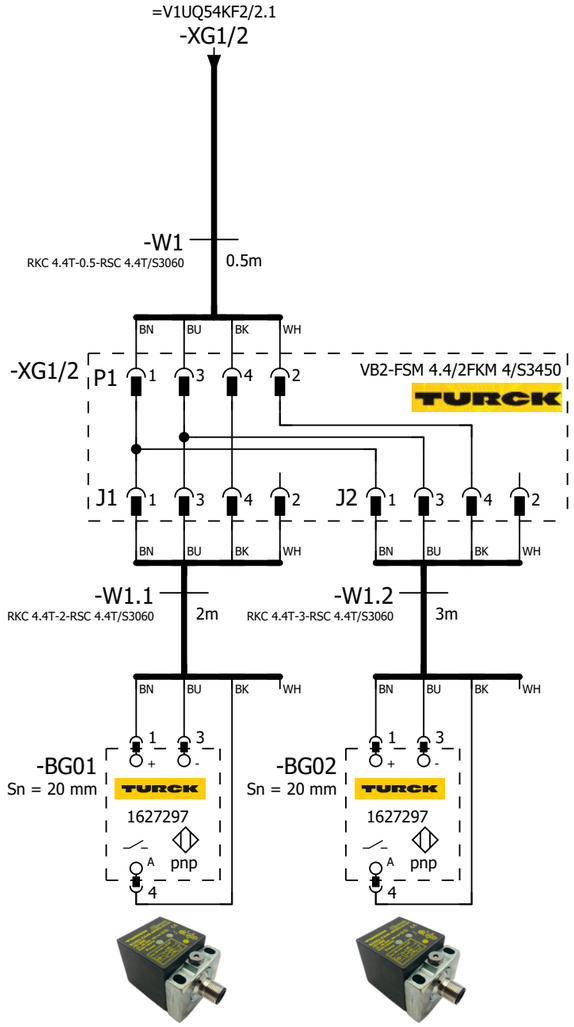

=V1UQ54
-BG01
Common
Part Present

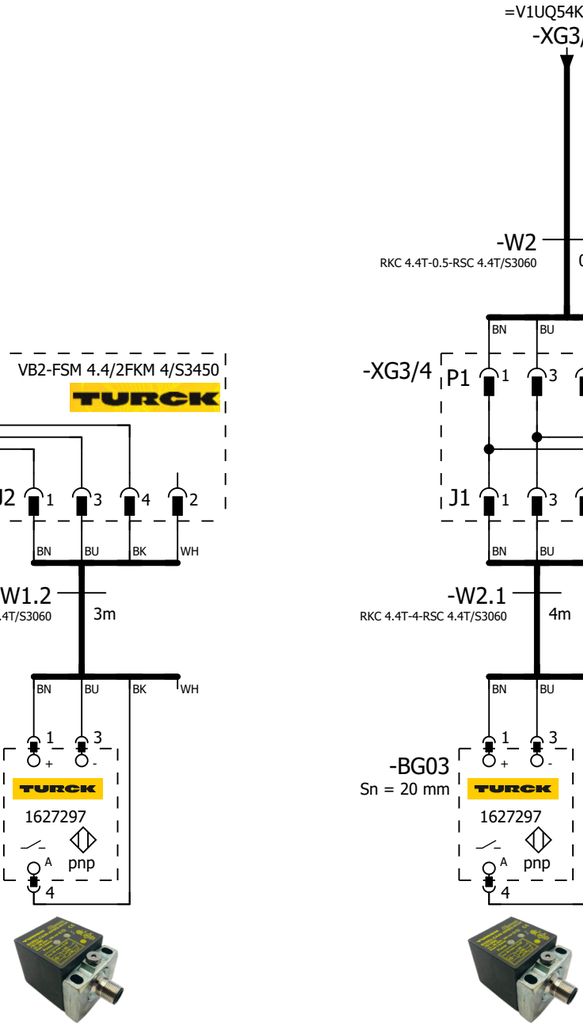

=V1UQ54
-BG02
Day Cab
Part Present

=V1UQ54
-BG03
Sleeper L230
Part Present

=V1UQ54
-BG04
Sleeper L290
Part Present

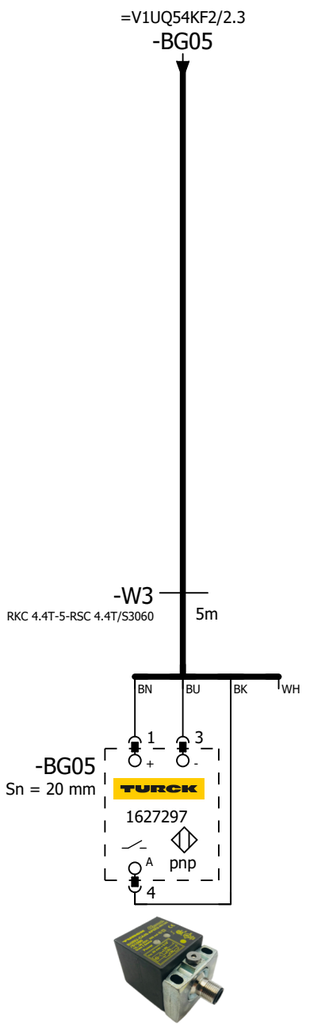

=V1UQ54
-BG05
Sleeper L320
Part Present

=V1UQ53WC4+.UQ53/1

=V1UQ54KF1/1

			Date	1/17/2023	Volvo Trucks North America		Valiant TMS	SENSORS	Drawing name: =2V09&EFS-EL	= V1UQ54BG0
			Ed.	MKLEPADLO						+ V1UQ54
			Appr		P6700 Bodyside LH - Robot Cell 2V09		Scale 1:1		Document type: EFS	Project nr: 22-16150
Modification	Date	Name	Original		Replacement of	Replaced by				Page 1 / 1533

0	1	2	3	4	5	6	7	8	9

=V1UQ54WC4/1.5 / W1.1

-W1.1
RSM RKM 56-1M/S3059
1m

=V1KF1+.UC11/2.6 / +.UC11-KF100.11-P13

-KF100.11-P13
PROFINET Cable
6XV1840-3AH10

KF1-P2 / =V1UQ54KF2/1.3

-KF1

X20 M12, 7/8" 1 2 PE 4 5
0V_VAL / OUT
0V_EL / SEN
FE
24V_EL / SEN
24V_VAL / OUT

ON OFF 1 2 1 2

-TP1 M12
-TP2 M12

FESTO
Bus node + Interlinking block
548755 + 550208

-KF1.11

FESTO
CPX-M-AB-8-M12X2-5POL
549335

I2525.0	DI 0 X1:4	V1UQ54UQ1.1-BGR	Shot Pin 1 (RESET)
I2525.1	DI 1 X1:2	V1UQ54UQ1.1-BGS	Shot Pin 1 (SET)
I2525.2	DI 2 X2:4	V1UQ54UQ2.1-BGR	Shot Pin 2 (RESET)
I2525.3	DI 3 X2:2	V1UQ54UQ2.1-BGS	Shot Pin 2 (SET)
I2525.4	DI 4 X3:4	V1UQ54UQ3.1-BGR	Clamps 3 (RESET)
I2525.5	DI 5 X3:2	V1UQ54UQ3.1-BGS	Clamps 3 (SET)
I2525.6	DI 6 X4:4	V1UQ54UQ3.2-BGR	Clamps 3 (RESET)
I2525.7	DI 7 X4:2	V1UQ54UQ3.2-BGS	Clamps 3 (SET)
I2526.0	DI 8 X5:4	V1UQ54UQ3.3-BGR	Clamps 3 (RESET)
I2526.1	DI 9 X5:2	V1UQ54UQ3.3-BGS	Clamps 3 (SET)
I2526.2	DI 10 X6:4	V1UQ54UQ4.1-BGR	Clamps 4 (RESET)
I2526.3	DI 11 X6:2	V1UQ54UQ4.1-BGS	Clamps 4 (SET)
I2526.4	DI 12 X7:4	V1UQ54UQ4.2-BGR	Clamps 4 (RESET)
I2526.5	DI 13 X7:2	V1UQ54UQ4.2-BGS	Clamps 4 (SET)
I2526.6	DI 14 X8:4	V1UQ54UQ4.3-BGR	Clamps 4 (RESET)
I2526.7	DI 15 X8:2	V1UQ54UQ4.3-BGS	Clamps 4 (SET)

X1 M12 1 2 3 4 5 — 24V DI 1 0V DI 0 FE — BN WH BU BK
X2 M12 1 2 3 4 5 — 24V DI 3 0V DI 2 FE — BN WH BU BK
X3 M12 1 2 3 4 5 — 24V DI 5 0V DI 4 FE — BN WH BU BK
X4 M12 1 2 3 4 5 — 24V DI 7 0V DI 6 FE — BN WH BU BK
X5 M12 1 2 3 4 5 — 24V DI 9 0V DI 8 FE — BN WH BU BK
X6 M12 1 2 3 4 5 — 24V DI 11 0V DI 10 FE — BN WH BU BK
X7 M12 1 2 3 4 5 — 24V DI 13 0V DI 12 FE — BN WH BU BK
X8 M12 1 2 3 4 5 — 24V DI 15 0V DI 14 FE — BN WH BU BK

+V1UQ54UQ1.1-W1
=V1UQ54UQ1+.UQ54UQ1/1.1

+V1UQ54UQ2.1-W1
=V1UQ54UQ2+.UQ54UQ2/1.1

+V1UQ54UQ3.1-W1
=V1UQ54UQ3+.UQ54UQ3/1.1

+V1UQ54UQ3.2-W1
=V1UQ54UQ3+.UQ54UQ3/1.2

+V1UQ54UQ3.3-W1
=V1UQ54UQ3+.UQ54UQ3/1.4

+V1UQ54UQ4.1-W1
=V1UQ54UQ4+.UQ54UQ4/1.1

+V1UQ54UQ4.2-W1
=V1UQ54UQ4+.UQ54UQ4/1.2

+V1UQ54UQ4.3-W1
=V1UQ54UQ4+.UQ54UQ4/1.4

=V1UQ54BG0/1

			Date	1/17/2023	Volvo Trucks North America	Valiant TMS	CONNECTING MOD. FOR VTSA MANIFOLD	Drawing name: =2V09&EFS-EL	= V1UQ54KF1
			Ed.	MKLEPADLO					+ V1UQ54
			Appr		P6700 Bodyside LH - Robot Cell 2V09	Scale 1:1		Document type: EFS	Project nr: 22-16150
Modification	Date	Name	Original		Replacement of	Replaced by			Page 1 / 1533

0	1	2	3	4	5	6	7	8	9

-KF1.12

FESTO

CPX-M-AB-8-M12X2-5POL

549335

I2527.0	DI 0 X1:4	V1UQ54UQ5.1-BGR	Clamps 5 (RESET)
I2527.1	DI 1 X1:2	V1UQ54UQ5.1-BGS	Clamps 5 (SET)
I2527.2	DI 2 X2:4	V1UQ54UQ5.2-BGR	Clamps 5 (RESET)
I2527.3	DI 3 X2:2	V1UQ54UQ5.2-BGS	Clamps 5 (SET)
I2527.4	DI 4 X3:4	V1UQ54UQ5.3-BGR	Clamps 5 (RESET)
I2527.5	DI 5 X3:2	V1UQ54UQ5.3-BGS	Clamps 5 (SET)
I2527.6	DI 6 X4:4	V1UQ54UQ5.4-BGR	Clamps 5 (RESET)
I2527.7	DI 7 X4:2	V1UQ54UQ5.4-BGS	Clamps 5 (SET)
I2528.0	DI 8 X5:4	V1UQ54UQ6.1-BGR	Clamps 6 (RESET)
I2528.1	DI 9 X5:2	V1UQ54UQ6.1-BGS	Clamps 6 (SET)
I2528.2	DI 10 X6:4	V1UQ54UQ6.2-BGR	Clamps 6 (RESET)
I2528.3	DI 11 X6:2	V1UQ54UQ6.2-BGS	Clamps 6 (SET)
I2528.4	DI 12 X7:4	V1UQ54UQ7.1-BGR	Clamp 7 (RESET)
I2528.5	DI 13 X7:2	V1UQ54UQ7.1-BGS	Clamp 7 (SET)
I2528.6	DI 14 X8:4	V1UQ54UQ8.1-BGR	Clamps 8 (RESET)
I2528.7	DI 15 X8:2	V1UQ54UQ8.1-BGS	Clamps 8 (SET)

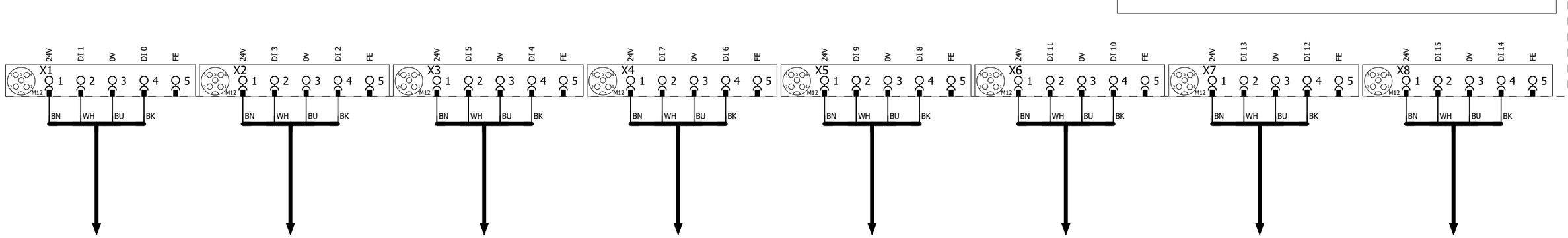

1 3

			Date	1/17/2023	Volvo Trucks North America	Valiant TMS	I/O MOD. DI16 (8 x M12) FOR VTSA-F	Drawing name: =2V09&EFS-EL	= V1UQ54KF1
			Ed.	MKLEPADLO					+ V1UQ54
			Appr		P6700 Bodyside LH - Robot Cell 2V09			Document type: EFS	Project nr: 22-16150
Modification	Date	Name	Original		Replacement of / Replaced by	Scale 1:1			Page 2 / 1533

0	1	2	3	4	5	6	7	8	9

-KF1.13

FESTO

CPX-M-AB-8-M12X2-5POL

549335

I2529.0 DI 0 X1:4	V1UQ54UQ8.2-BGR	Clamps 8 (RESET)
I2529.1 DI 1 X1:2	V1UQ54UQ8.2-BGS	Clamps 8 (SET)
I2529.2 DI 2 X2:4	V1UQ54UQ9.1-BGR	Clamp 9 (RESET)
I2529.3 DI 3 X2:2	V1UQ54UQ9.1-BGS	Clamp 9 (SET)
I2529.4 DI 4 X3:4	V1UQ54UQ10.1-BGR	Clamps 10 (RESET)
I2529.5 DI 5 X3:2	V1UQ54UQ10.1-BGS	Clamps 10 (SET)
I2529.6 DI 6 X4:4	V1UQ54UQ10.2-BGR	Clamps 10 (RESET)
I2529.7 DI 7 X4:2	V1UQ54UQ10.2-BGS	Clamps 10 (SET)
I2530.0 DI 8 X5:4	I2530.0	Spare
I2530.1 DI 9 X5:2	I2530.1	Spare
I2530.2 DI 10 X6:4	I2530.2	Spare
I2530.3 DI 11 X6:2	I2530.3	Spare
I2530.4 DI 12 X7:4	I2530.4	Spare
I2530.5 DI 13 X7:2	I2530.5	Spare
I2530.6 DI 14 X8:4	I2530.6	Spare
I2530.7 DI 15 X8:2	I2530.7	Spare

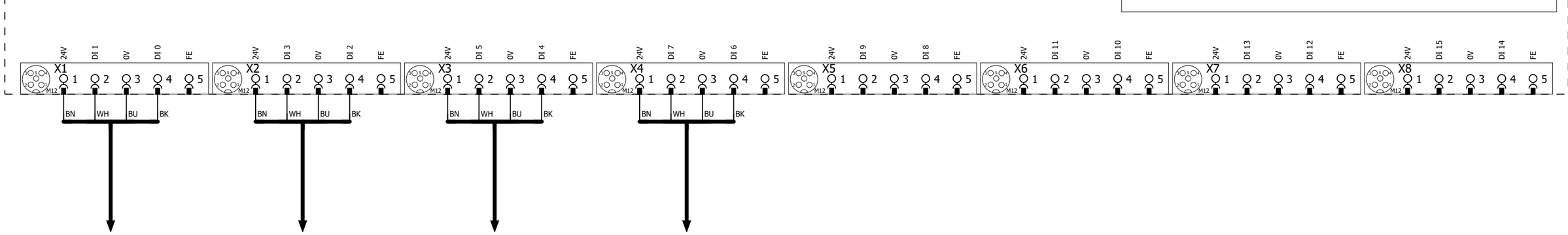

2 4

			Date	1/17/2023	Volvo Trucks North America	Valiant TMS	I/O MOD. DI16 (8 x M12) FOR VTSA-F	Drawing name: =2V09&EFS-EL	= V1UQ54KF1
			Ed.	MKLEPADLO					+ V1UQ54
			Appr		P6700 Bodyside LH - Robot Cell 2V09			Document type: EFS	Project nr: 22-16150
Modification	Date	Name	Original		Replacement of / Replaced by	Scale 1:1			Page 3 / 1533

-KF1 -KF1.11 -KF1.12 -KF1.13 -KF1.20 -KF1.21 -KF1.22 -KF1.23 -KF1.24 -KF1.25 -KF1.26 -KF1.27

M1 M2 M3 M4 M5

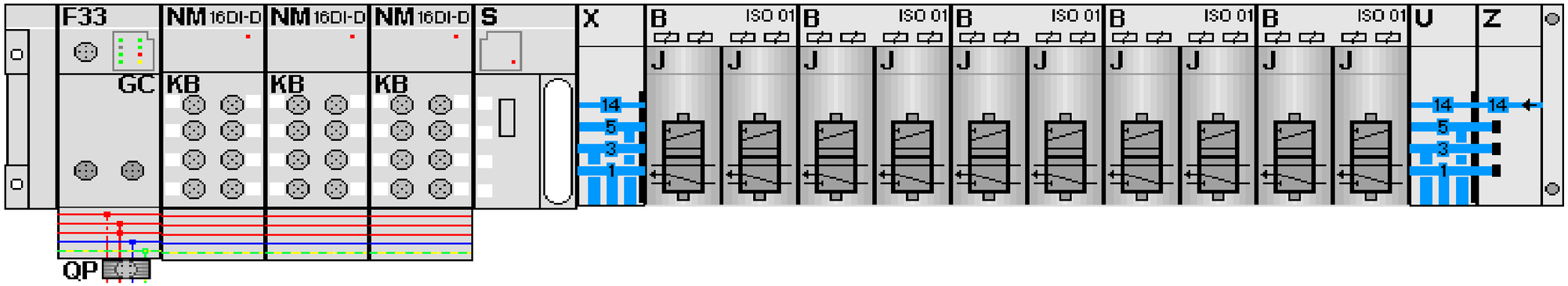

-KF1.21
=V1UQ54UQ1+.UQ54UQ1/1.3
=V1UQ54UQ2+.UQ54UQ2/1.3

FESTO

=V1UQ54UQ1+.UQ54UQ1/1.4	Q2525.0 DO 0 1.1	-QN1.1_Q	Shot Pin 1 (RST)
=V1UQ54UQ1+.UQ54UQ1/1.4	Q2525.1 DO 1 1.2	-QN1.2_Q	Shot Pin 1 (SET)
=V1UQ54UQ2+.UQ54UQ2/1.4	Q2525.2 DO 2 2.1	-QN2.1_Q	Shot Pin 2 (RST)
=V1UQ54UQ2+.UQ54UQ2/1.4	Q2525.3 DO 3 2.2	-QN2.2_Q	Shot Pin 2 (SET)

-KF1.22
=V1UQ54UQ3+.UQ54UQ3/1.3
=V1UQ54UQ4+.UQ54UQ4/1.3

FESTO

=V1UQ54UQ3+.UQ54UQ3/1.4	Q2525.4 DO 0 1.1	-QN3.1_Q	Clamps 3 (RST)
=V1UQ54UQ3+.UQ54UQ3/1.4	Q2525.5 DO 1 1.2	-QN3.2_Q	Clamps 3 (SET)
=V1UQ54UQ4+.UQ54UQ4/1.4	Q2525.6 DO 2 2.1	-QN4.1_Q	Clamps 4 (RST)
=V1UQ54UQ4+.UQ54UQ4/1.4	Q2525.7 DO 3 2.2	-QN4.2_Q	Clamps 4 (SET)

-KF1.23
=V1UQ54UQ5+.UQ54UQ5/1.3
=V1UQ54UQ6+.UQ54UQ6/1.3

FESTO

=V1UQ54UQ5+.UQ54UQ5/1.4	Q2526.0 DO 0 1.1	-QN5.1_Q	Clamps 5 (RST)
=V1UQ54UQ5+.UQ54UQ5/1.4	Q2526.1 DO 1 1.2	-QN5.2_Q	Clamps 5 (SET)
=V1UQ54UQ6+.UQ54UQ6/1.4	Q2526.2 DO 2 2.1	-QN6.1_Q	Clamps 6 (RST)
=V1UQ54UQ6+.UQ54UQ6/1.4	Q2526.3 DO 3 2.2	-QN6.2_Q	Clamps 6 (SET)

-KF1.24
=V1UQ54UQ7+.UQ54UQ7/1.3
=V1UQ54UQ8+.UQ54UQ8/1.3

FESTO

=V1UQ54UQ7+.UQ54UQ7/1.4	Q2526.4 DO 0 1.1	-QN7.1_Q	Clamp 7 (RST)
=V1UQ54UQ7+.UQ54UQ7/1.4	Q2526.5 DO 1 1.2	-QN7.2_Q	Clamp 7 (SET)
=V1UQ54UQ8+.UQ54UQ8/1.4	Q2526.6 DO 2 2.1	-QN8.1_Q	Clamps 8 (RST)
=V1UQ54UQ8+.UQ54UQ8/1.4	Q2526.7 DO 3 2.2	-QN8.2_Q	Clamps 8 (SET)

-KF1.25
=V1UQ54UQ9+.UQ54UQ9/1.3
=V1UQ54UQ10+.UQ54UQ10/1.3

FESTO

=V1UQ54UQ9+.UQ54UQ9/1.4	Q2527.0 DO 0 1.1	-QN9.1_Q	Clamp 9 (RST)
=V1UQ54UQ9+.UQ54UQ9/1.4	Q2527.1 DO 1 1.2	-QN9.2_Q	Clamp 9 (SET)
=V1UQ54UQ10+.UQ54UQ10/1.4	Q2527.2 DO 2 2.1	-QN10.1_Q	Clamps 10 (RST)
=V1UQ54UQ10+.UQ54UQ10/1.4	Q2527.3 DO 3 2.2	-QN10.2_Q	Clamps 10 (SET)

			Date	1/17/2023	Volvo Trucks North America	Valiant TMS	CONNECTING MOD. FOR FESTO DQ	Drawing name: =2V09&EFS-EL	= V1UQ54KF1
			Ed.	MKLEPADLO					+ V1UQ54
			Appr		P6700 Bodyside LH - Robot Cell 2V09	Scale 1:1		Document type: EFS	Project nr: 22-16150
Modification	Date	Name	Original		Replacement of	Replaced by			Page 4 / 1533

0	1	2	3	4	5	6	7	8	9

=V1UQ54WC4/1.6 / W1.2

-W1.2
RSM RKM 56-5M/S3059
5m

=V1UQ54KF1/1.4 / KF1-P2

-WF1
PROFINET Cable
6XV1840-3AH10

-KF2

X20 M12, 7/8" 1 2 PE 4 5
0V_VAL / OUT | 0V_EL / SEN | FE | 24V_EL / SEN | 24V_VAL / OUT

M12 -TP1 M12 -TP2

ON / OFF 1 2 1 2

FESTO
Bus node + Interlinking block
548755 + 550208

I2575.0	DI 0 X1:4	V1UQ54UQ11.1-BGR	Shot Pin 11 (RESET)
I2575.1	DI 1 X1:2	V1UQ54UQ11.1-BGS	Shot Pin 11 (SET)
I2575.2	DI 2 X2:4	V1UQ54UQ12.1-BGR	Shot Pin 12 (RESET)
I2575.3	DI 3 X2:2	V1UQ54UQ12.1-BGS	Shot Pin 12 (SET)
I2575.4	DI 4 X3:4	V1UQ54UQ13.1-BGR	Shot Pin 13 (RESET)
I2575.5	DI 5 X3:2	V1UQ54UQ13.1-BGS	Shot Pin 13 (SET)
I2575.6	DI 6 X4:4	V1UQ54UQ14.1-BGR	Shot Pin 14 (RESET)
I2575.7	DI 7 X4:2	V1UQ54UQ14.1-BGS	Shot Pin 14 (SET)
I2576.0	DI 8 X5:4	I2576.0	Spare
I2576.1	DI 9 X5:2	I2576.1	Spare
I2576.2	DI 10 X6:4	I2576.2	Spare
I2576.3	DI 11 X6:2	I2576.3	Spare
I2576.4	DI 12 X7:4	I2576.4	Spare
I2576.5	DI 13 X7:2	I2576.5	Spare
I2576.6	DI 14 X8:4	I2576.6	Spare
I2576.7	DI 15 X8:2	I2576.7	Spare

-KF2.11

FESTO
CPX-M-AB-8-M12X2-5POL
549335

X1 M12 1 2 3 4 5 — 24V | DI 1 | 0V | DI 0 | FE
X2 M12 1 2 3 4 5 — 24V | DI 3 | 0V | DI 2 | FE
X3 M12 1 2 3 4 5 — 24V | DI 5 | 0V | DI 4 | FE
X4 M12 1 2 3 4 5 — 24V | DI 7 | 0V | DI 6 | FE
X5 M12 1 2 3 4 5 — 24V | DI 9 | 0V | DI 8 | FE
X6 M12 1 2 3 4 5 — 24V | DI 11 | 0V | DI 10 | FE
X7 M12 1 2 3 4 5 — 24V | DI 13 | 0V | DI 12 | FE
X8 M12 1 2 3 4 5 — 24V | DI 15 | 0V | DI 14 | FE

BN WH BU BK

+V1UQ54UQ11.1-W1
=V1UQ54UQ11+.UQ54UQ11/1.1

+V1UQ54UQ12.1-W1
=V1UQ54UQ12+.UQ54UQ12/1.1

+V1UQ54UQ13.1-W1
=V1UQ54UQ13+.UQ54UQ13/1.1

+V1UQ54UQ14.1-W1
=V1UQ54UQ14+.UQ54UQ14/1.1

=V1UQ54KF1/4

			Date	1/17/2023	Volvo Trucks North America	Valiant TMS	CONNECTING MOD. FOR VTSA MANIFOLD	Drawing name: =2V09&EFS-EL	= V1UQ54KF2
			Ed.	MKLEPADLO					+ V1UQ54
			Appr		P6700 Bodyside LH - Robot Cell 2V09	Scale 1:1		Document type: EFS	Project nr: 22-16150
Modification	Date	Name	Original		Replacement of	Replaced by			Page 1 / 1533

I2577.0	DI 0 X1:4	V1UQ54-BG01	Sensor Common Part Present
I2577.1	DI 1 X1:2	V1UQ54-BG02	Sensor Day Cab Part Present
I2577.2	DI 2 X2:4	V1UQ54-BG03	Sensor Sleeper L230 Part Present
I2577.3	DI 3 X2:2	V1UQ54-BG04	Sensor Sleeper L290 Part Present
I2577.4	DI 4 X3:4	V1UQ54-BG05	Sensor Sleeper L320 Part Present
I2577.5	DI 5 X3:2	I2577.5	Spare
I2577.6	DI 6 X4:4	I2577.6	Spare
I2577.7	DI 7 X4:2	I2577.7	Spare
I2578.0	DI 8 X5:4	I2578.0	Spare
I2578.1	DI 9 X5:2	I2578.1	Spare
I2578.2	DI 10 X6:4	I2578.2	Spare
I2578.3	DI 11 X6:2	I2578.3	Spare
I2578.4	DI 12 X7:4	I2578.4	Spare
I2578.5	DI 13 X7:2	I2578.5	Spare
I2578.6	DI 14 X8:4	I2578.6	Spare
I2578.7	DI 15 X8:2	I2578.7	Spare

-KF2.12

FESTO

CPX-M-AB-8-M12X2-5POL

549335

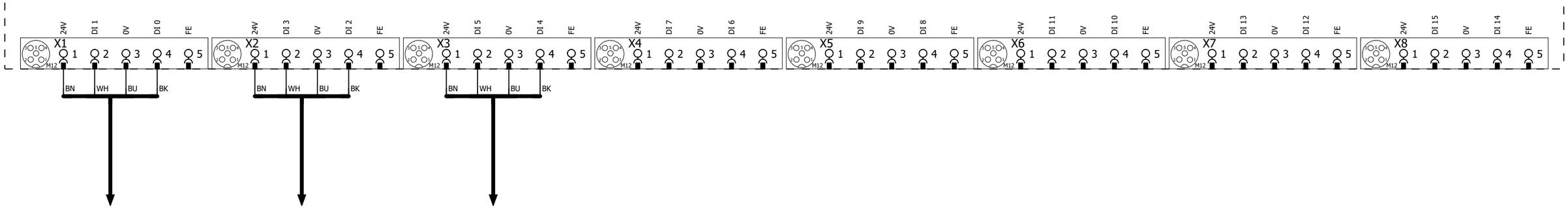

1 3

			Date	1/17/2023	Volvo Trucks North America	Valiant TMS	I/O MOD. DI16 (8 x M12) FOR VTSA-F	Drawing name: =2V09&EFS-EL	= V1UQ54KF2 + V1UQ54
			Ed.	MKLEPADLO	P6700 Bodyside LH - Robot Cell 2V09				
			Appr					Document type: EFS	Project nr: 22-16150
Modification	Date	Name	Original		Replacement of / Replaced by	Scale 1:1			Page 2 / 1533

0	1	2	3	4	5	6	7	8	9

-KF2 -KF2.11 -KF2.12 -KF2.20 -KF2.21 -KF2.22 -KF2.23 -KF2.24

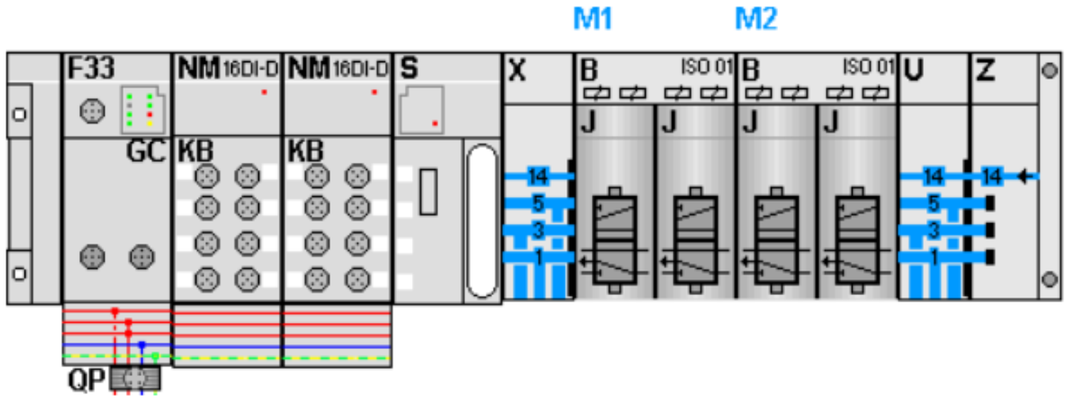

-KF2.21
=V1UQ54UQ11+.UQ54UQ11/1.3
=V1UQ54UQ12+.UQ54UQ12/1.3

FESTO

=V1UQ54UQ11+.UQ54UQ11/1.4	Q2575.0	DO 0 1.1	-QN11.1_Q	Shot Pin 11 (RST)
=V1UQ54UQ11+.UQ54UQ11/1.4	Q2575.1	DO 1 1.2	-QN11.2_Q	Shot Pin 11 (SET)
=V1UQ54UQ12+.UQ54UQ12/1.4	Q2575.2	DO 2 2.1	-QN12.1_Q	Shot Pin 12 (RST)
=V1UQ54UQ12+.UQ54UQ12/1.4	Q2575.3	DO 3 2.2	-QN12.2_Q	Shot Pin 12 (SET)

-KF2.22
=V1UQ54UQ13+.UQ54UQ13/1.3
=V1UQ54UQ14+.UQ54UQ14/1.3

FESTO

=V1UQ54UQ13+.UQ54UQ13/1.4	Q2575.4	DO 0 1.1	-QN13.1_Q	Shot Pin 13 (RST)
=V1UQ54UQ13+.UQ54UQ13/1.4	Q2575.5	DO 1 1.2	-QN13.2_Q	Shot Pin 13 (SET)
=V1UQ54UQ14+.UQ54UQ14/1.4	Q2575.6	DO 2 2.1	-QN14.1_Q	Shot Pin 14 (RST)
=V1UQ54UQ14+.UQ54UQ14/1.4	Q2575.7	DO 3 2.2	-QN14.2_Q	Shot Pin 14 (SET)

			Date	1/17/2023	Volvo Trucks North America	Valiant TMS	CONNECTING MOD. FOR FESTO DQ	Drawing name: =2V09&EFS-EL	= V1UQ54KF2	
			Ed.	MKLEPADLO					+ V1UQ54	
			Appr		P6700 Bodyside LH - Robot Cell 2V09			Document type: EFS	Project nr: 22-16150	Page 3
Modification	Date	Name	Original		Replacement of / Replaced by	Scale 1:1				1533

0	1	2	3	4	5	6	7	8	9

=V1UQ54KF1
+V1UQ54

-KF1.21
=V1UQ54KF1+V1UQ54/4.1

Shot Pin 1 (RST)
=V1UQ54KF1
+V1UQ54
-QN1.1_Q
=V1UQ54KF1
+V1UQ54/4.3
Q2525.0

Shot Pin 1 (SET)
=V1UQ54KF1
+V1UQ54
-QN1.2_Q
=V1UQ54KF1
+V1UQ54/4.3
Q2525.1

1.1
Pneumatic Valve

1.2
Pneumatic Valve

.1

.2

-QN1

=V1UQ54KF1+V1UQ54/1.1
+V1UQ54UQ1.1-W1

-W1
RKC 4.4T-2-RSC 4.4T/S3060
2m

BN BU BK WH

1 3

-BGS/R

WWS001A

A2 A1

2 4

Shot Pin 1

=V1UQ54UQ1.1
+V1UQ54UQ1.1
-UQ1.1

=V1UQ54
-UQ1.1-BGS/R
Shot Pin 1

=V1UQ54KF2+V1UQ54/3

=V1UQ54UQ2+.UQ54UQ2/1

			Date	1/17/2023	Volvo Trucks North America	Valiant TMS	FESTO DQ CONNECTION QN1	Drawing name: =2V09&EFS-EL	= V1UQ54UQ1
			Ed.	MKLEPADLO					+ V1UQ54UQ1
			Appr		P6700 Bodyside LH - Robot Cell 2V09			Document type: EFS	Project nr: 22-16150
Modification	Date	Name	Original		Replacement of	Replaced by	Scale 1:1		Page 1 / 1533

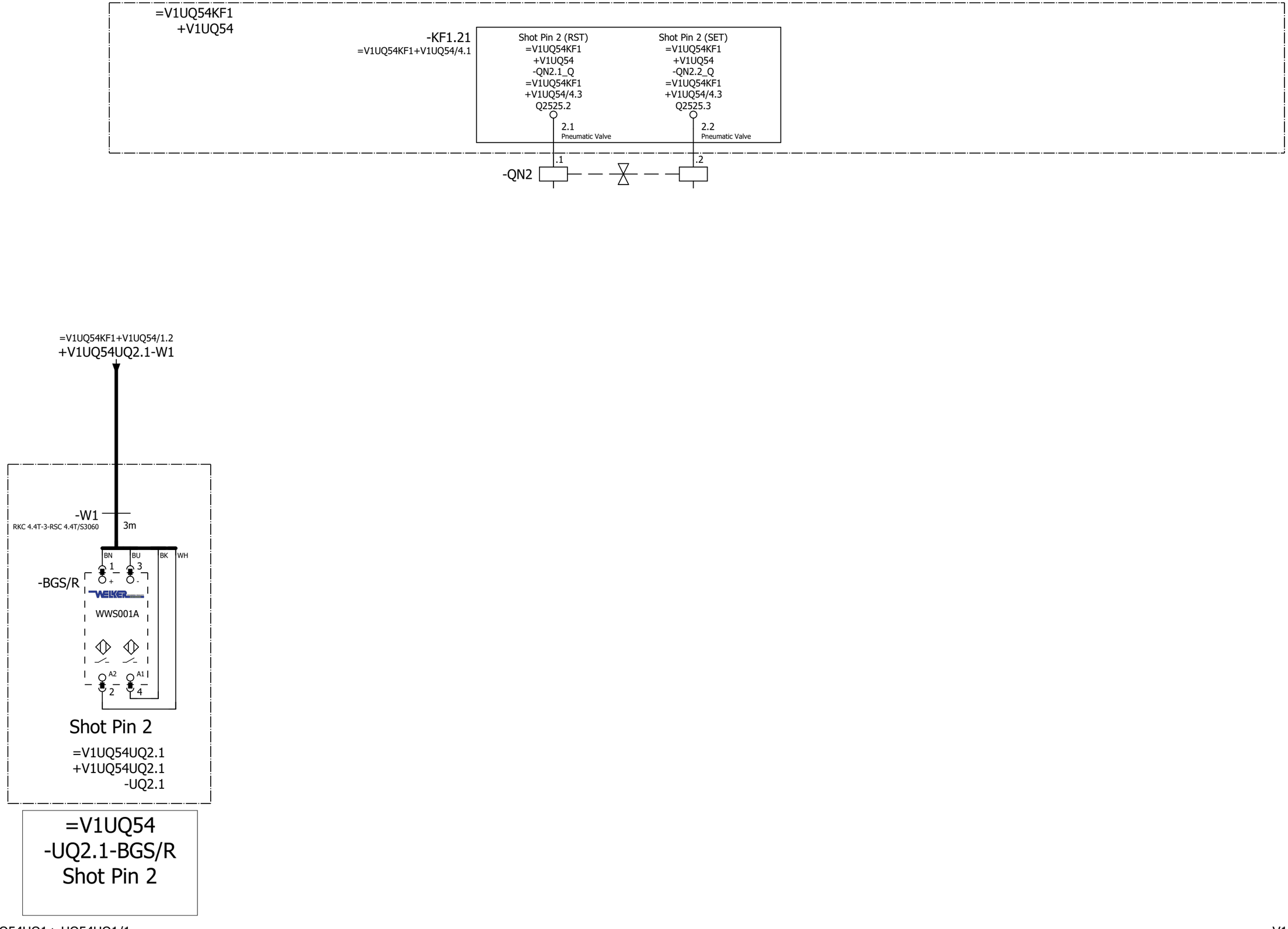

=V1UQ54UQ1+.UQ54UQ1/1

=V1UQ54UQ3+.UQ54UQ3/1

			Date	1/17/2023	Volvo Trucks North America	Valiant TMS	FESTO DQ CONNECTION QN2	Drawing name: =2V09&EFS-EL	= V1UQ54UQ2 + V1UQ54UQ2
			Ed.	MKLEPADLO	P6700 Bodyside LH - Robot Cell 2V09			Document type: EFS	Project nr: 22-16150
			Appr						Page 1
Modification	Date	Name	Original		Replacement of / Replaced by	Scale 1:1			1533

0	1	2	3	4	5	6	7	8	9

=V1UQ54KF1
+V1UQ54

-KF1.22
=V1UQ54KF1+V1UQ54/4.1

Clamps 3 (RST)
=V1UQ54KF1
+V1UQ54
-QN3.1_Q
=V1UQ54KF1
+V1UQ54/4.3
Q2525.4

Clamps 3 (SET)
=V1UQ54KF1
+V1UQ54
-QN3.2_Q
=V1UQ54KF1
+V1UQ54/4.3
Q2525.5

1.1 Pneumatic Valve

1.2 Pneumatic Valve

-QN3 .1 .2

=V1UQ54KF1+V1UQ54/1.3
+V1UQ54UQ3.1-W1

=V1UQ54KF1+V1UQ54/1.4
+V1UQ54UQ3.2-W1

=V1UQ54KF1+V1UQ54/1.5
+V1UQ54UQ3.3-W1

-W1 2m
RKC 4.4T-2-RSC 4.4T/S3060

-W1 2m
RKC 4.4T-2-RSC 4.4T/S3060

-W1 3m
RKC 4.4T-3-RSC 4.4T/S3060

-BGS/R
BN BU BK WH
1 3
+ -
TÜNKERS
1324638
A2 A1
2 4

-BGS/R
BN BU BK WH
1 3
+ -
TÜNKERS
1324638
A2 A1
2 4

-BGS/R
BN BU BK WH
1 3
+ -
TÜNKERS
1324638
A2 A1
2 4

Clamps 3
=V1UQ54UQ3.1
+V1UQ54UQ3.1
-UQ3.1

Clamps 3
=V1UQ54UQ3.2
+V1UQ54UQ3.2
-UQ3.2

Clamps 3
=V1UQ54UQ3.3
+V1UQ54UQ3.3
-UQ3.3

=V1UQ54
-UQ3.1-BGS/R
Clamps 3

=V1UQ54
-UQ3.2-BGS/R
Clamps 3

=V1UQ54
-UQ3.3-BGS/R
Clamps 3

=V1UQ54UQ2+.UQ54UQ2/1

=V1UQ54UQ4+.UQ54UQ4/1

			Date	1/17/2023	Volvo Trucks North America	Valiant TMS	FESTO DQ CONNECTION QN3	Drawing name: =2V09&EFS-EL	= V1UQ54UQ3
			Ed.	MKLEPADLO					+ V1UQ54UQ3
			Appr		P6700 Bodyside LH - Robot Cell 2V09			Document type: EFS	Project nr: 22-16150
Modification	Date	Name	Original		Replacement of	Replaced by	Scale 1:1		Page 1 / 1533

0	1	2	3	4	5	6	7	8	9

=V1UQ54KF1
+V1UQ54

-KF1.22
=V1UQ54KF1+V1UQ54/4.1

Clamps 4 (RST)
=V1UQ54KF1
+V1UQ54
-QN4.1_Q
=V1UQ54KF1
+V1UQ54/4.3
Q2525.6

Clamps 4 (SET)
=V1UQ54KF1
+V1UQ54
-QN4.2_Q
=V1UQ54KF1
+V1UQ54/4.3
Q2525.7

2.1 Pneumatic Valve

2.2 Pneumatic Valve

-QN4 .1 .2

=V1UQ54KF1+V1UQ54/1.6
+V1UQ54UQ4.1-W1

=V1UQ54KF1+V1UQ54/1.8
+V1UQ54UQ4.2-W1

=V1UQ54KF1+V1UQ54/1.9
+V1UQ54UQ4.3-W1

-W1 3m
RKC 4.4T-3-RSC 4.4T/S3060

-W1 4m
RKC 4.4T-4-RSC 4.4T/S3060

-W1 2m
RKC 4.4T-2-RSC 4.4T/S3060

-BGS/R

BN BU BK WH
1 3
+ -
TÜNKERS
1324638
A2 A1
2 4

Clamps 4
=V1UQ54UQ4.1
+V1UQ54UQ4.1
-UQ4.1

Clamps 4
=V1UQ54UQ4.2
+V1UQ54UQ4.2
-UQ4.2

Clamps 4
=V1UQ54UQ4.3
+V1UQ54UQ4.3
-UQ4.3

=V1UQ54
-UQ4.1-BGS/R
Clamps 4

=V1UQ54
-UQ4.2-BGS/R
Clamps 4

=V1UQ54
-UQ4.3-BGS/R
Clamps 4

=V1UQ54UQ3+.UQ54UQ3/1

=V1UQ54UQ5+.UQ54UQ5/1

			Date	1/17/2023	Volvo Trucks North America	Valiant TMS	FESTO DQ CONNECTION QN4	Drawing name: =2V09&EFS-EL	= V1UQ54UQ4
			Ed.	MKLEPADLO					+ V1UQ54UQ4
			Appr		P6700 Bodyside LH - Robot Cell 2V09			Document type: EFS	Project nr: 22-16150
Modification	Date	Name	Original		Replacement of	Replaced by	Scale 1:1		Page 1 / 1533

0	1	2	3	4	5	6	7	8	9

=V1UQ54KF1
+V1UQ54

-KF1.23
=V1UQ54KF1+V1UQ54/4.1

Clamps 5 (RST)	Clamps 5 (SET)
=V1UQ54KF1	=V1UQ54KF1
+V1UQ54	+V1UQ54
-QN5.1_Q	-QN5.2_Q
=V1UQ54KF1	=V1UQ54KF1
+V1UQ54/4.3	+V1UQ54/4.3
Q2526.0	Q2526.1
1.1 Pneumatic Valve	1.2 Pneumatic Valve

-QN5 .1 .2

=V1UQ54KF1+V1UQ54/2.1
+V1UQ54UQ5.1-W1

-W1
RKC 4.4T-4-RSC 4.4T/S3060
4 m

-BGS/R
BN 1 +
BU 3 -
BK
WH
TÜNKERS
1324638
A2 2
A1 4

Clamps 5
=V1UQ54UQ5.1
+V1UQ54UQ5.1
-UQ5.1

=V1UQ54
-UQ5.1-BGS/R
Clamps 5

=V1UQ54KF1+V1UQ54/2.2
+V1UQ54UQ5.2-W1

-W1
RKC 4.4T-4-RSC 4.4T/S3060
4m

-BGS/R
BN 1 +
BU 3 -
BK
WH
TÜNKERS
1324638
A2 2
A1 4

Clamps 5
=V1UQ54UQ5.2
+V1UQ54UQ5.2
-UQ5.2

=V1UQ54
-UQ5.2-BGS/R
Clamps 5

=V1UQ54KF1+V1UQ54/2.3
+V1UQ54UQ5.3-W1

-W1
RKC 4.4T-2-RSC 4.4T/S3060
2m

-BGS/R
BN 1 +
BU 3 -
BK
WH
TÜNKERS
1324638
A2 2
A1 4

Clamps 5
=V1UQ54UQ5.3
+V1UQ54UQ5.3
-UQ5.3

=V1UQ54
-UQ5.3-BGS/R
Clamps 5

=V1UQ54KF1+V1UQ54/2.4
+V1UQ54UQ5.4-W1

-W1
RKC 4.4T-5-RSC 4.4T/S3060
5m

-BGS/R
BN 1 +
BU 3 -
BK
WH
TÜNKERS
1324638
A2 2
A1 4

Clamps 5
=V1UQ54UQ5.4
+.UQ54UQ5.4
-UQ5.4

=V1UQ54
-UQ5.4-BGS/R
Clamps 5

=V1UQ54UQ4+.UQ54UQ4/1

=V1UQ54UQ6+.UQ54UQ6/1

			Date	1/17/2023	Volvo Trucks North America	Valiant TMS	FESTO DQ CONNECTION QN5	Drawing name: =2V09&EFS-EL	= V1UQ54UQ5
			Ed.	MKLEPADLO					+ V1UQ54UQ5
			Appr		P6700 Bodyside LH - Robot Cell 2V09			Document type: EFS	Project nr: 22-16150
Modification	Date	Name	Original		Replacement of	Replaced by	Scale 1:1		Page 1 / 1533

0	1	2	3	4	5	6	7	8	9

=V1UQ54KF1
+V1UQ54

-KF1.23
=V1UQ54KF1+V1UQ54/4.1

Clamps 6 (RST)	Clamps 6 (SET)
=V1UQ54KF1	=V1UQ54KF1
+V1UQ54	+V1UQ54
-QN6.1_Q	-QN6.2_Q
=V1UQ54KF1	=V1UQ54KF1
+V1UQ54/4.3	+V1UQ54/4.3
Q2526.2	Q2526.3
2.1 Pneumatic Valve	2.2 Pneumatic Valve

-QN6 .1 .2

=V1UQ54KF1+V1UQ54/2.5
+V1UQ54UQ6.1-W1

-W1
RKC 4.4T-5-RSC 4.4T/S3060
5m

-BGS/R
BN BU BK WH
1 3
+ -
TÜNKERS
1324638
A2 A1
2 4

Clamps 6
=V1UQ54UQ6.1
+V1UQ54UQ6.1
-UQ6.1

=V1UQ54
-UQ6.1-BGS/R
Clamps 6

=V1UQ54KF1+V1UQ54/2.6
+V1UQ54UQ6.2-W1

-W1
RKC 4.4T-7-RSC 4.4T/S3060
7m

-BGS/R
BN BU BK WH
1 3
+ -
TÜNKERS
1324638
A2 A1
2 4

Clamps 6
=V1UQ54UQ6.2
+V1UQ54UQ6.2
-UQ6.2

=V1UQ54
-UQ6.2-BGS/R
Clamps 6

=V1UQ54UQ5+.UQ54UQ5/1

=V1UQ54UQ7+.UQ54UQ7/1

			Date	1/17/2023	Volvo Trucks North America	Valiant TMS	FESTO DQ CONNECTION QN6	Drawing name: =2V09&EFS-EL	= V1UQ54UQ6
			Ed.	MKLEPADLO					+ V1UQ54UQ6
			Appr		P6700 Bodyside LH - Robot Cell 2V09			Document type: EFS	Project nr: 22-16150
Modification	Date	Name	Original		Replacement of	Replaced by	Scale 1:1		Page 1 / 1533

0	1	2	3	4	5	6	7	8	9

=V1UQ54KF1
+V1UQ54

-KF1.24
=V1UQ54KF1+V1UQ54/4.1

Clamp 7 (RST)	Clamp 7 (SET)
=V1UQ54KF1	=V1UQ54KF1
+V1UQ54	+V1UQ54
-QN7.1_Q	-QN7.2_Q
=V1UQ54KF1	=V1UQ54KF1
+V1UQ54/4.3	+V1UQ54/4.3
Q2526.4	Q2526.5
1.1 Pneumatic Valve	1.2 Pneumatic Valve

-QN7 .1 .2

=V1UQ54KF1+V1UQ54/2.8
+V1UQ54UQ7.1-W1

-W1
RKC 4.4T-4-RSC 4.4T/S3060
4m

BN BU BK WH

-BGS/R
1 3
+ -
TÜNKERS
1324638
A2 A1
2 4

Clamp 7

=V1UQ54UQ7.1
+V1UQ54UQ7.1
-UQ7.1

=V1UQ54 -UQ7.1-BGS/R Clamp 7

=V1UQ54UQ6+.UQ54UQ6/1

=V1UQ54UQ8+.UQ54UQ8/1

			Date	1/17/2023	Volvo Trucks North America	Valiant TMS	FESTO DQ CONNECTION QN7	Drawing name: =2V09&EFS-EL	= V1UQ54UQ7
			Ed.	MKLEPADLO					+ V1UQ54UQ7
			Appr		P6700 Bodyside LH - Robot Cell 2V09			Document type: EFS	Project nr: 22-16150
Modification	Date	Name	Original		Replacement of	Replaced by	Scale 1:1		Page 1 / 1533

0	1	2	3	4	5	6	7	8	9

=V1UQ54KF1
+V1UQ54

-KF1.24
=V1UQ54KF1+V1UQ54/4.1

Clamps 8 (RST)	Clamps 8 (SET)
=V1UQ54KF1	=V1UQ54KF1
+V1UQ54	+V1UQ54
-QN8.1_Q	-QN8.2_Q
=V1UQ54KF1	=V1UQ54KF1
+V1UQ54/4.3	+V1UQ54/4.3
Q2526.6	Q2526.7
2.1 Pneumatic Valve	2.2 Pneumatic Valve

-QN8 .1 .2

=V1UQ54KF1+V1UQ54/2.9
+V1UQ54UQ8.1-W1

-W1
RKC 4.4T-4-RSC 4.4T/S3060
4m

BN BU BK WH
1 3
+ -
-BGS/R
TÜNKERS
1324638
A2 A1
2 4

Clamps 8
=V1UQ54UQ8.1
+V1UQ54UQ8.1
-UQ8.1

=V1UQ54
-UQ8.1-BGS/R
Clamps 8

=V1UQ54KF1+V1UQ54/3.1
+V1UQ54UQ8.2-W1

-W1
RKC 4.4T-6-RSC 4.4T/S3060
6m

BN BU BK WH
1 3
+ -
-BGS/R
TÜNKERS
1324638
A2 A1
2 4

Clamps 8
=V1UQ54UQ8.2
+V1UQ54UQ8.2
-UQ8.2

=V1UQ54
-UQ8.2-BGS/R
Clamps 8

=V1UQ54UQ7+.UQ54UQ7/1

=V1UQ54UQ9+.UQ54UQ9/1

			Date	1/17/2023	Volvo Trucks North America	Valiant TMS	FESTO DQ CONNECTION QN8	Drawing name: =2V09&EFS-EL	= V1UQ54UQ8
			Ed.	MKLEPADLO					+ V1UQ54UQ8
			Appr		P6700 Bodyside LH - Robot Cell 2V09			Document type: EFS	Project nr: 22-16150
Modification	Date	Name	Original		Replacement of	Replaced by	Scale 1:1		Page 1 / 1533

0	1	2	3	4	5	6	7	8	9

=V1UQ54KF1
+V1UQ54

-KF1.25
=V1UQ54KF1+V1UQ54/4.1

Clamp 9 (RST)	Clamp 9 (SET)
=V1UQ54KF1	=V1UQ54KF1
+V1UQ54	+V1UQ54
-QN9.1_Q	-QN9.2_Q
=V1UQ54KF1	=V1UQ54KF1
+V1UQ54/4.3	+V1UQ54/4.3
Q2527.0	Q2527.1
1.1 Pneumatic Valve	1.2 Pneumatic Valve

-QN9 .1 .2

=V1UQ54KF1+V1UQ54/3.2
+V1UQ54UQ9.1-W1

-W1
RKC 4.4T-6-RSC 4.4T/S3060
6m

BN BU BK WH

-BGS/R
1 3
+ -
TÜNKERS
1324638
A2 A1
2 4

Clamps 9

=V1UQ54UQ9.1
+V1UQ54UQ9.1
-UQ9.1

=V1UQ54
-UQ9.1-BGS/R
Clamps 9

=V1UQ54UQ8+.UQ54UQ8/1

=V1UQ54UQ10+.UQ54UQ10/1

			Date	1/17/2023	Volvo Trucks North America	Valiant TMS	FESTO DQ CONNECTION QN9	Drawing name: =2V09&EFS-EL	= V1UQ54UQ9
			Ed.	MKLEPADLO					+ V1UQ54UQ9
			Appr		P6700 Bodyside LH - Robot Cell 2V09			Document type: EFS	Project nr: 22-16150
Modification	Date	Name	Original		Replacement of	Replaced by	Scale 1:1		Page 1 / 1533

0	1	2	3	4	5	6	7	8	9

=V1UQ54KF1
+V1UQ54

-KF1.25
=V1UQ54KF1+V1UQ54/4.1

Clamps 10 (RST)	Clamps 10 (SET)
=V1UQ54KF1	=V1UQ54KF1
+V1UQ54	+V1UQ54
-QN10.1_Q	-QN10.2_Q
=V1UQ54KF1	=V1UQ54KF1
+V1UQ54/4.3	+V1UQ54/4.3
Q2527.2	Q2527.3
2.1 Pneumatic Valve	2.2 Pneumatic Valve

-QN10 .1 .2

=V1UQ54KF1+V1UQ54/3.3
+V1UQ54UQ10.1-W1

-W1
RKC 4.4T-5-RSC 4.4T/S3060
5m

BN BU BK WH
1 3
-BGS/R
TÜNKERS
1324638
A2 A1
2 4

Clamps 10
=V1UQ54UQ10.1
+V1UQ54UQ10.1
-UQ10.1

=V1UQ54
-UQ10.1-BGS/R
Clamps 10

=V1UQ54KF1+V1UQ54/3.4
+V1UQ54UQ10.2-W1

-W1
RKC 4.4T-6-RSC 4.4T/S3060
6m

BN BU BK WH
1 3
-BGS/R
TÜNKERS
1324638
A2 A1
2 4

Clamps 10
=V1UQ54UQ10.2
+V1UQ54UQ10.2
-UQ10.2

=V1UQ54
-UQ10.2-BGS/R
Clamps 10

=V1UQ54UQ9+.UQ54UQ9/1

=V1UQ54UQ11+.UQ54UQ11/1

			Date	1/17/2023	Volvo Trucks North America	Valiant TMS	FESTO DQ CONNECTION QN10	Drawing name: =2V09&EFS-EL	= V1UQ54UQ10
			Ed.	MKLEPADLO					+ V1UQ54UQ10
			Appr		P6700 Bodyside LH - Robot Cell 2V09			Document type: EFS	Project nr: 22-16150
Modification	Date	Name	Original		Replacement of	Replaced by	Scale 1:1		Page 1 / 1533

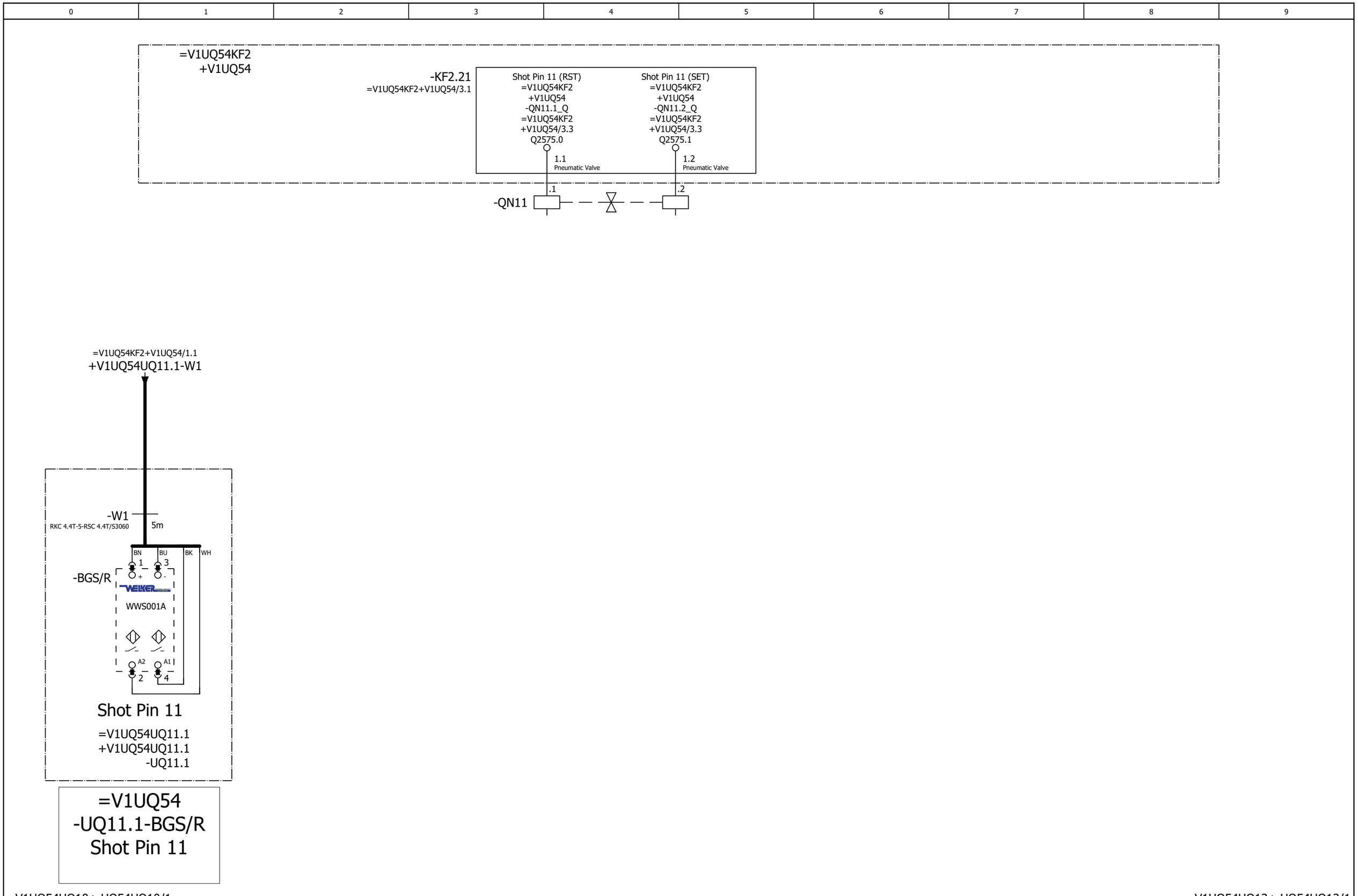

=V1UQ54UQ10+.UQ54UQ10/1

=V1UQ54UQ12+.UQ54UQ12/1

			Date	1/17/2023	Volvo Trucks North America	Valiant TMS	FESTO DQ CONNECTION QN11	Drawing name: =2V09&EFS-EL	= V1UQ54UQ11
			Ed.	MKLEPADLO					+ V1UQ54UQ11
			Appr		P6700 Bodyside LH - Robot Cell 2V09			Document type: EFS	Project nr: 22-16150
Modification	Date	Name	Original		Replacement of / Replaced by	Scale 1:1			Page 1 / 1533

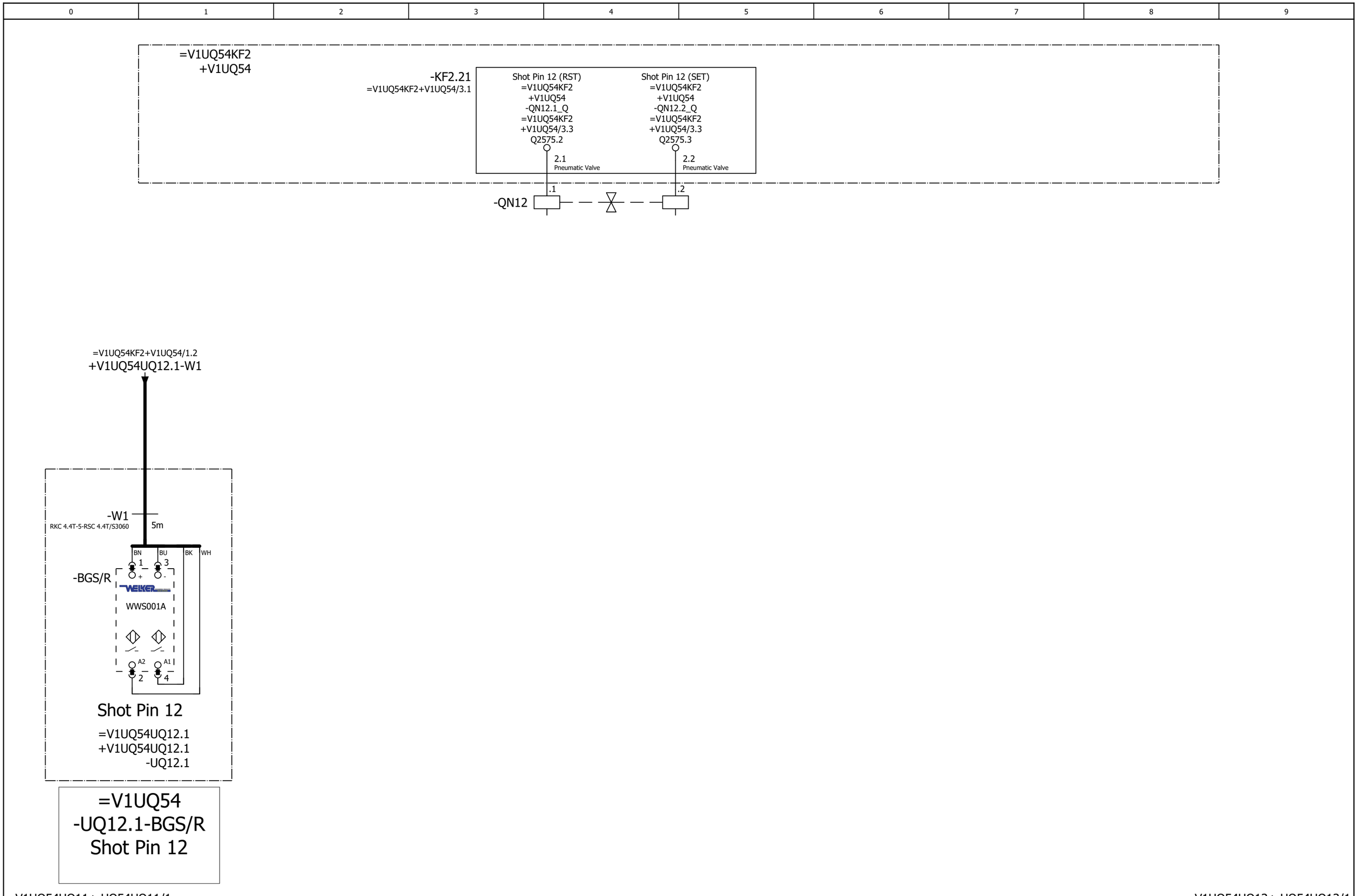

=V1UQ54UQ11+.UQ54UQ11/1

=V1UQ54UQ13+.UQ54UQ13/1

			Date	1/17/2023	Volvo Trucks North America	Valiant TMS	FESTO DQ CONNECTION QN12	Drawing name: =2V09&EFS-EL	= V1UQ54UQ12
			Ed.	MKLEPADLO					+ V1UQ54UQ12
			Appr		P6700 Bodyside LH - Robot Cell 2V09			Document type: EFS	Project nr: 22-16150
Modification	Date	Name	Original		Replacement of / Replaced by	Scale 1:1			Page 1 / 1533

0	1	2	3	4	5	6	7	8	9

=V1UQ54KF2
+V1UQ54

-KF2.22
=V1UQ54KF2+V1UQ54/3.1

Shot Pin 13 (RST)	Shot Pin 13 (SET)
=V1UQ54KF2	=V1UQ54KF2
+V1UQ54	+V1UQ54
-QN13.1_Q	-QN13.2_Q
=V1UQ54KF2	=V1UQ54KF2
+V1UQ54/3.3	+V1UQ54/3.3
Q2575.4	Q2575.5
1.1 Pneumatic Valve	1.2 Pneumatic Valve

-QN13 .1 .2

=V1UQ54KF2+V1UQ54/1.3
+V1UQ54UQ13.1-W1

-W1
RKC 4.4T-6-RSC 4.4T/S3060
6m

BN BU BK WH

-BGS/R
1 (+) 3 (-)
WELKER
WWS001A
A2 2
A1 4

Shot Pin 13

=V1UQ54UQ13.1
+V1UQ54UQ13.1
-UQ13.1

=V1UQ54 -UQ13.1-BGS/R Shot Pin 13

=V1UQ54UQ12+.UQ54UQ12/1

=V1UQ54UQ14+.UQ54UQ14/1

			Date	1/17/2023	Volvo Trucks North America	Valiant TMS	FESTO DQ CONNECTION QN13	Drawing name: =2V09&EFS-EL	= V1UQ54UQ13
			Ed.	MKLEPADLO					+ V1UQ54UQ13
			Appr		P6700 Bodyside LH - Robot Cell 2V09			Document type: EFS	Project nr: 22-16150
Modification	Date	Name	Original		Replacement of	Replaced by	Scale 1:1		Page 1 / 1533

0	1	2	3	4	5	6	7	8	9

=V1UQ54KF2
+V1UQ54

-KF2.22
=V1UQ54KF2+V1UQ54/3.1

Shot Pin 14 (RST)	Shot Pin 14 (SET)
=V1UQ54KF2	=V1UQ54KF2
+V1UQ54	+V1UQ54
-QN14.1_Q	-QN14.2_Q
=V1UQ54KF2	=V1UQ54KF2
+V1UQ54/3.3	+V1UQ54/3.3
Q2575.6	Q2575.7
2.1 Pneumatic Valve	2.2 Pneumatic Valve

-QN14 .1 .2

=V1UQ54KF2+V1UQ54/1.4
+V1UQ54UQ14.1-W1

-W1
RKC 4.4T-5-RSC 4.4T/S3060
5m

BN BU BK WH

-BGS/R
1 3
\+ -
WELKER
WWS001A
A2 A1
2 4

Shot Pin 14

=V1UQ54UQ14.1
+V1UQ54UQ14.1
-UQ14.1

=V1UQ54 -UQ14.1-BGS/R Shot Pin 14

=V1UQ54UQ13+.UQ54UQ13/1

=V1UQ54WC4+V1UQ54/1

			Date	1/17/2023	Volvo Trucks North America	Valiant TMS	FESTO DQ CONNECTION QN14	Drawing name: =2V09&EFS-EL	= V1UQ54UQ14
			Ed.	MKLEPADLO					+ V1UQ54UQ14
			Appr		P6700 Bodyside LH - Robot Cell 2V09			Document type: EFS	Project nr: 22-16150
Modification	Date	Name	Original		Replacement of	Replaced by	Scale 1:1		Page 1 / 1533

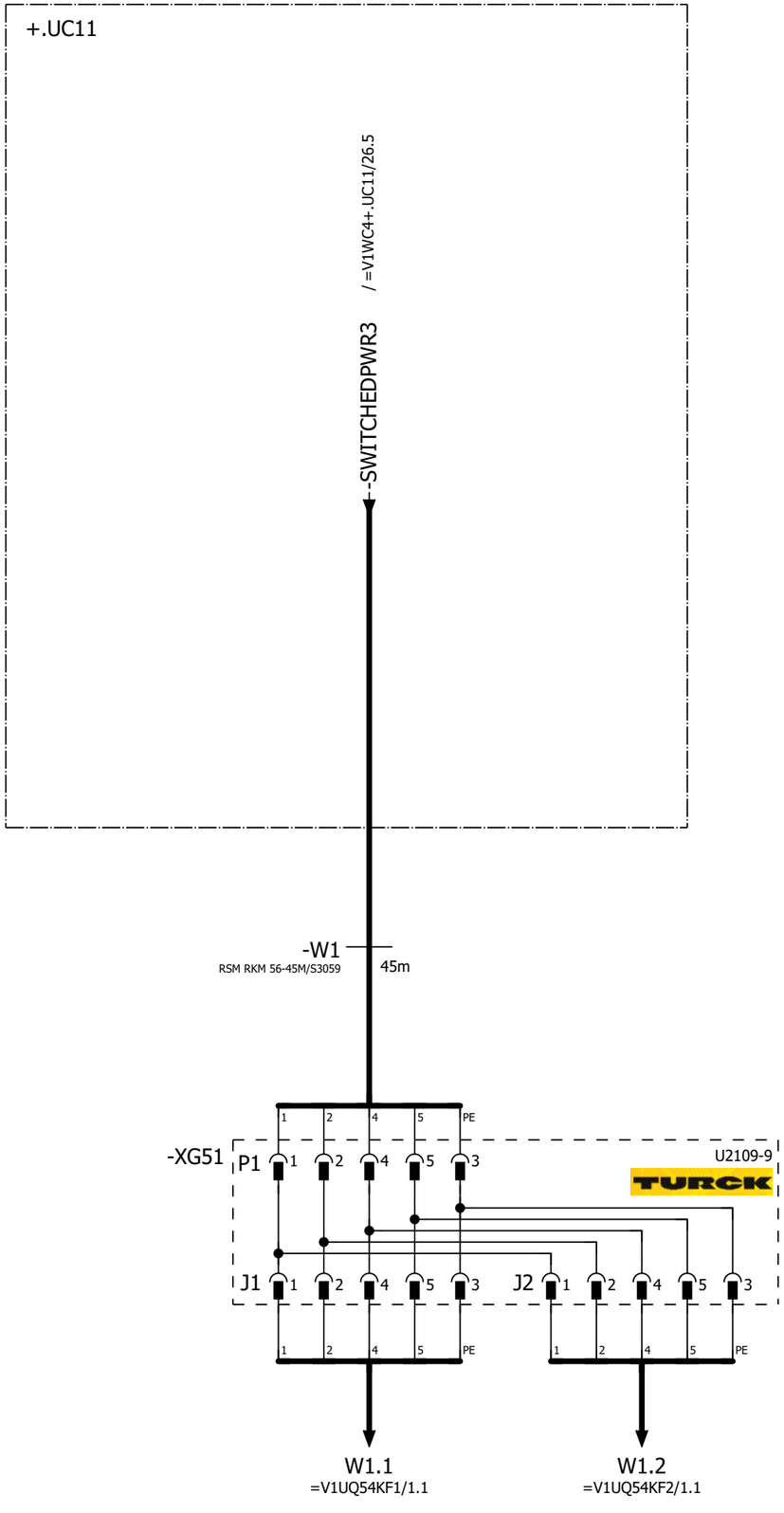

=V1UQ54UQ14+.UQ54UQ14/1

=V1UQ55BG0+.UQ55/1

			Date	1/17/2023	Volvo Trucks North America	Valiant TMS	24VDC	Drawing name: =2V09&EFS-EL	= V1UQ54WC4 + V1UQ54
			Ed.	MKLEPADLO	P6700 Bodyside LH - Robot Cell 2V09				
			Appr					Document type: EFS	Project nr: 22-16150
Modification	Date	Name	Original		Replacement of / Replaced by	Scale 1:1			Page 1 / 1533

0	1	2	3	4	5	6	7	8	9

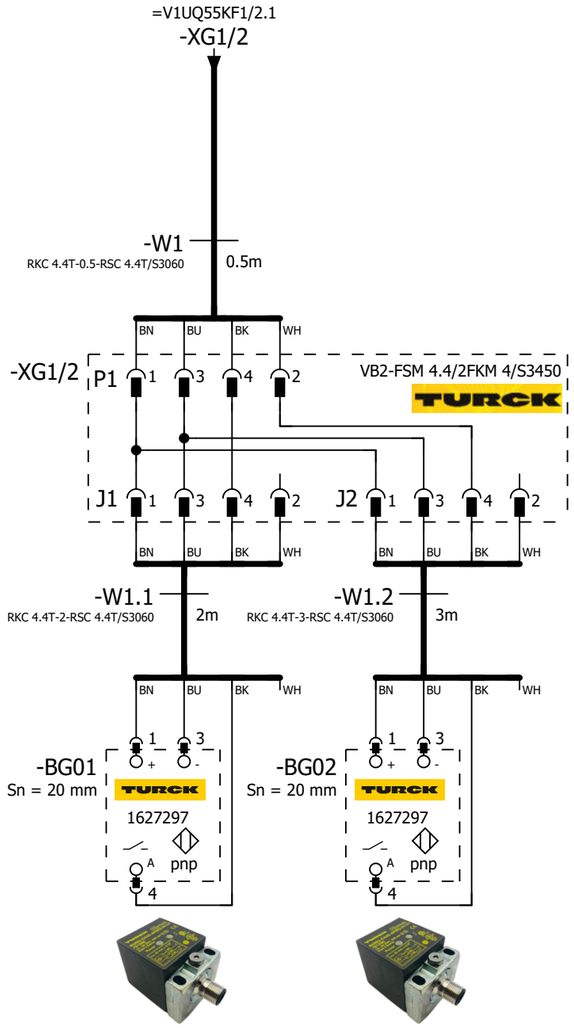

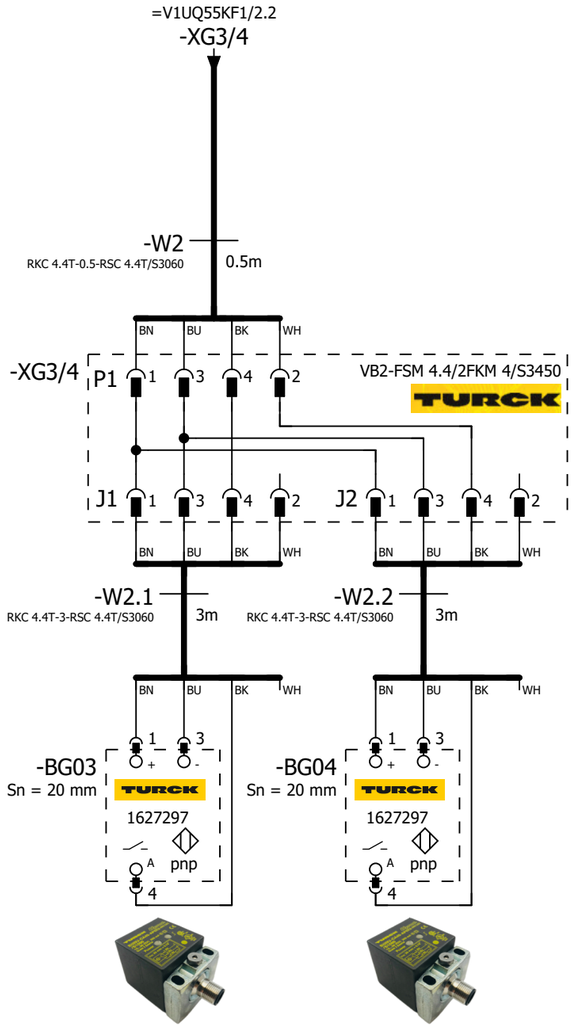

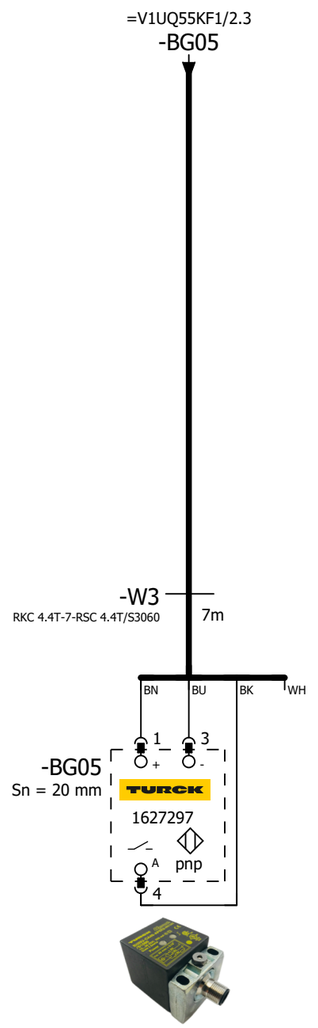

=V1UQ55 -BG01 Common Part Present	=V1UQ55 -BG02 Day Cab Part Present	=V1UQ55 -BG03 Sleeper L230 Part Present	=V1UQ55 -BG04 Sleeper L290 Part Present	=V1UQ55 -BG05 Sleeper L320 Part Present

=V1UQ54WC4+.UQ54/1

=V1UQ55KF1/1

			Date	1/17/2023	Volvo Trucks North America	Valiant TMS	SENSORS	Drawing name: =2V09&EFS-EL	= V1UQ55BG0
			Ed.	MKLEPADLO					+ V1UQ55
			Appr		P6700 Bodyside LH - Robot Cell 2V09			Document type: EFS	Project nr: 22-16150
Modification	Date	Name	Original		Replacement of	Replaced by	Scale 1:1		Page 1 / 1533

0	1	2	3	4	5	6	7	8	9

=V1WC4+.UC11/27.5 / W1

=V1KF1+.UC11/2.6 / +.UC11-KF100.11-P14

-W1
RSM RKM 56-30M/S3059
30m

-KF100.11-P14
PROFINET Cable
6XV1840-3AH10

-KF1

X20 M12, 7/8" 1 2 PE 4 5
0V_VAL / OUT
0V_EL / SEN
FE
24V_EL / SEN
24V_VAL / OUT

M12 -TP1
M12 -TP2

ON
OFF
1 2 1 2

FESTO
Bus node + Interlinking block
548755 + 550208

-KF1.11

FESTO
CPX-M-AB-8-M12X2-5POL
549335

I2425.0	DI 0 X1:4	V1UQ55UQ1.1-BGR	Shot Pin 1 (RESET)
I2425.1	DI 1 X1:2	V1UQ55UQ1.1-BGS	Shot Pin 1 (SET)
I2425.2	DI 2 X2:4	V1UQ55UQ2.1-BGR	Shot Pin 2 (RESET)
I2425.3	DI 3 X2:2	V1UQ55UQ2.1-BGS	Shot Pin 2 (SET)
I2425.4	DI 4 X3:4	V1UQ55UQ3.1-BGR	Shot Pin 3 (RESET)
I2425.5	DI 5 X3:2	V1UQ55UQ3.1-BGS	Shot Pin 3 (SET)
I2425.6	DI 6 X4:4	V1UQ55UQ4.1-BGR	Clamps 4 (RESET)
I2425.7	DI 7 X4:2	V1UQ55UQ4.1-BGS	Clamps 4 (SET)
I2426.0	DI 8 X5:4	V1UQ55UQ4.2-BGR	Clamps 4 (RESET)
I2426.1	DI 9 X5:2	V1UQ55UQ4.2-BGS	Clamps 4 (SET)
I2426.2	DI 10 X6:4	I2426.2	Spare
I2426.3	DI 11 X6:2	I2426.3	Spare
I2426.4	DI 12 X7:4	I2426.4	Spare
I2426.5	DI 13 X7:2	I2426.5	Spare
I2426.6	DI 14 X8:4	I2426.6	Spare
I2426.7	DI 15 X8:2	I2426.7	Spare

X1 M12 1 2 3 4 5 — 24V | DI 1 | 0V | DI 0 | FE — BN | WH | BU | BK
X2 M12 1 2 3 4 5 — 24V | DI 3 | 0V | DI 2 | FE — BN | WH | BU | BK
X3 M12 1 2 3 4 5 — 24V | DI 5 | 0V | DI 4 | FE — BN | WH | BU | BK
X4 M12 1 2 3 4 5 — 24V | DI 7 | 0V | DI 6 | FE — BN | WH | BU | BK
X5 M12 1 2 3 4 5 — 24V | DI 9 | 0V | DI 8 | FE — BN | WH | BU | BK
X6 M12 1 2 3 4 5 — 24V | DI 11 | 0V | DI 10 | FE
X7 M12 1 2 3 4 5 — 24V | DI 13 | 0V | DI 12 | FE
X8 M12 1 2 3 4 5 — 24V | DI 15 | 0V | DI 14 | FE

+V1UQ55UQ1.1-W1
=V1UQ55UQ1+.UQ55UQ1/1.1

+V1UQ55UQ2.1-W1
=V1UQ55UQ2+.UQ55UQ2/1.1

+V1UQ55UQ3.1-W1
=V1UQ55UQ3+.UQ55UQ3/1.1

+V1UQ55UQ4.1-W1
=V1UQ55UQ4+.UQ55UQ4/1.1

+V1UQ55UQ4.2-W1
=V1UQ55UQ4+.UQ55UQ4/1.2

=V1UQ55BG0/1

			Date	1/17/2023	Volvo Trucks North America	Valiant TMS	CONNECTING MOD. FOR VTSA MANIFOLD	Drawing name: =2V09&EFS-EL	= V1UQ55KF1
			Ed.	MKLEPADLO					+ V1UQ55
			Appr		P6700 Bodyside LH - Robot Cell 2V09			Document type: EFS	Project nr: 22-16150
Modification	Date	Name	Original		Replacement of	Replaced by	Scale 1:1		Page 1 / 1533

I2427.0	DI 0 X1:4 V1UQ55-BG01	Sensor Common Part Present
I2427.1	DI 1 X1:2 V1UQ55-BG02	Sensor Day Cab Part Present
I2427.2	DI 2 X2:4 V1UQ55-BG03	Sensor Sleeper L230 Part Present
I2427.3	DI 3 X2:2 V1UQ55-BG04	Sensor Sleeper L290 Part Present
I2427.4	DI 4 X3:4 V1UQ55-BG05	Sensor Sleeper L320 Part Present
I2427.5	DI 5 X3:2 I2427.5	Spare
I2427.6	DI 6 X4:4 I2427.6	Spare
I2427.7	DI 7 X4:2 I2427.7	Spare
I2428.0	DI 8 X5:4 I2428.0	Spare
I2428.1	DI 9 X5:2 I2428.1	Spare
I2428.2	DI 10 X6:4 I2428.2	Spare
I2428.3	DI 11 X6:2 I2428.3	Spare
I2428.4	DI 12 X7:4 I2428.4	Spare
I2428.5	DI 13 X7:2 I2428.5	Spare
I2428.6	DI 14 X8:4 I2428.6	Spare
I2428.7	DI 15 X8:2 I2428.7	Spare

-KF1.12

FESTO
CPX-M-AB-8-M12X2-5POL
549335

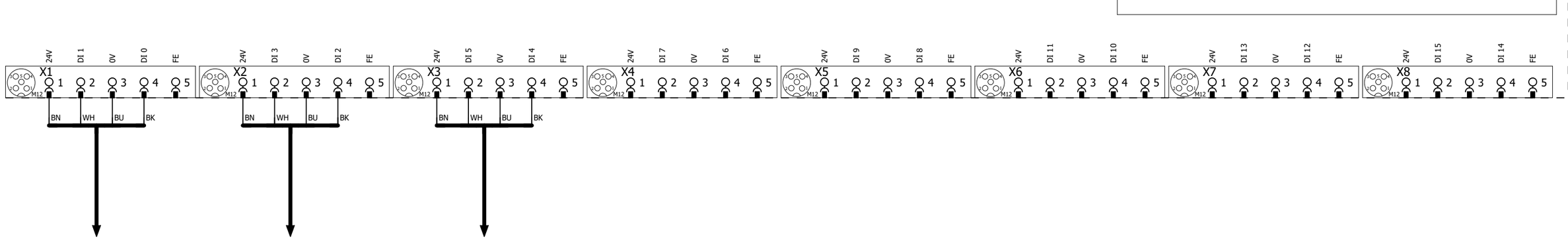

			Date	1/17/2023	Volvo Trucks North America	Valiant TMS	I/O MOD. DI16 (8 x M12) FOR VTSA-F	Drawing name: =2V09&EFS-EL	= V1UQ55KF1	
			Ed.	MKLEPADLO					+ V1UQ55	
			Appr		P6700 Bodyside LH - Robot Cell 2V09	Scale 1:1		Document type: EFS	Project nr: 22-16150	Page 2
Modification	Date	Name	Original		Replacement of / Replaced by					1533

0	1	2	3	4	5	6	7	8	9

-KF1 -KF1.11 -KF1.12 -KF1.20 -KF1.21 -KF1.22 -KF1.23 -KF1.24

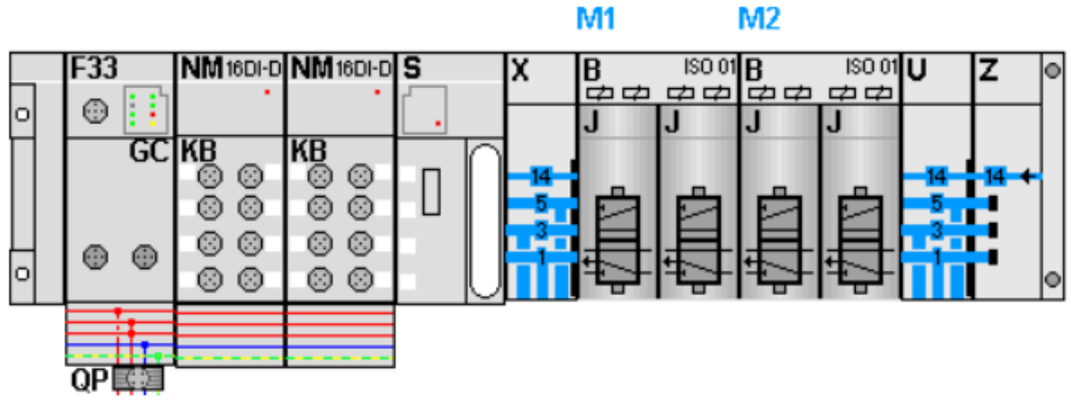

-KF1.21
=V1UQ55UQ1+.UQ55UQ1/1.3
=V1UQ55UQ2+.UQ55UQ2/1.3

FESTO

=V1UQ55UQ1+.UQ55UQ1/1.4	Q2425.0 DO 0 1.1	-QN1.1_Q	Shot Pin 1 (RST)
=V1UQ55UQ1+.UQ55UQ1/1.4	Q2425.1 DO 1 1.2	-QN1.2_Q	Shot Pin 1 (SET)
=V1UQ55UQ2+.UQ55UQ2/1.4	Q2425.2 DO 2 2.1	-QN2.1_Q	Shot Pin 2 (RST)
=V1UQ55UQ2+.UQ55UQ2/1.4	Q2425.3 DO 3 2.2	-QN2.2_Q	Shot Pin 2 (SET)

-KF1.22
=V1UQ55UQ3+.UQ55UQ3/1.3
=V1UQ55UQ4+.UQ55UQ4/1.3

FESTO

=V1UQ55UQ3+.UQ55UQ3/1.4	Q2425.4 DO 0 1.1	-QN3.1_Q	Shot Pin 3 (RST)
=V1UQ55UQ3+.UQ55UQ3/1.4	Q2425.5 DO 1 1.2	-QN3.2_Q	Shot Pin 3 (SET)
=V1UQ55UQ4+.UQ55UQ4/1.4	Q2425.6 DO 2 2.1	-QN4.1_Q	Clamps 4 (RST)
=V1UQ55UQ4+.UQ55UQ4/1.4	Q2425.7 DO 3 2.2	-QN4.2_Q	Clamps 4 (SET)

			Date	1/17/2023	Volvo Trucks North America	Valiant TMS	CONNECTING MOD. FOR FESTO DQ	Drawing name: =2V09&EFS-EL	= V1UQ55KF1	
			Ed.	MKLEPADLO					+ V1UQ55	
			Appr		P6700 Bodyside LH - Robot Cell 2V09			Document type: EFS	Project nr: 22-16150	Page 3
Modification	Date	Name	Original		Replacement of / Replaced by	Scale 1:1				1533

0	1	2	3	4	5	6	7	8	9

=V1UQ55KF1
+V1UQ55

-KF1.21
=V1UQ55KF1+V1UQ55/3.1

Shot Pin 1 (RST)
=V1UQ55KF1
+V1UQ55
-QN1.1_Q
=V1UQ55KF1
+V1UQ55/3.3
Q2425.0

Shot Pin 1 (SET)
=V1UQ55KF1
+V1UQ55
-QN1.2_Q
=V1UQ55KF1
+V1UQ55/3.3
Q2425.1

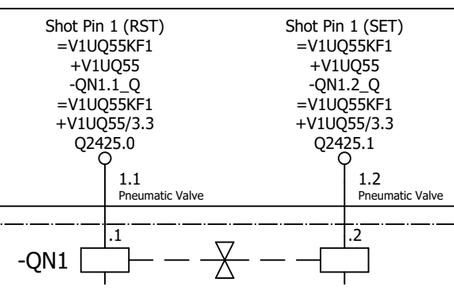

=V1UQ55KF1+V1UQ55/1.1
+V1UQ55UQ1.1-W1

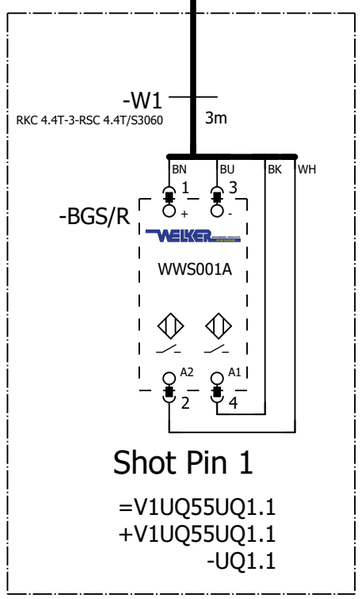

Shot Pin 1

=V1UQ55UQ1.1
+V1UQ55UQ1.1
-UQ1.1

=V1UQ55
-UQ1.1-BGS/R
Shot Pin 1

=V1UQ55KF1+V1UQ55/3

=V1UQ55UQ2+.UQ55UQ2/1

			Date	1/17/2023	Volvo Trucks North America	Valiant TMS	FESTO DQ CONNECTION QN1	Drawing name: =2V09&EFS-EL	= V1UQ55UQ1
			Ed.	MKLEPADLO					+ V1UQ55UQ1
			Appr		P6700 Bodyside LH - Robot Cell 2V09			Document type: EFS	Project nr: 22-16150
Modification	Date	Name	Original		Replacement of	Replaced by	Scale 1:1		Page 1 / 1533

0	1	2	3	4	5	6	7	8	9

=V1UQ55KF1
+V1UQ55

-KF1.21
=V1UQ55KF1+V1UQ55/3.1

Shot Pin 2 (RST)
=V1UQ55KF1
+V1UQ55
-QN2.1_Q
=V1UQ55KF1
+V1UQ55/3.3
Q2425.2

Shot Pin 2 (SET)
=V1UQ55KF1
+V1UQ55
-QN2.2_Q
=V1UQ55KF1
+V1UQ55/3.3
Q2425.3

2.1
Pneumatic Valve

2.2
Pneumatic Valve

.1

.2

-QN2

=V1UQ55KF1+V1UQ55/1.2
+V1UQ55UQ2.1-W1

-W1
RKC 4.4T-2-RSC 4.4T/S3060
2m

BN BU BK WH

1 3

-BGS/R

WWS001A

A2 A1

2 4

Shot Pin 2

=V1UQ55UQ2.1
+V1UQ55UQ2.1
-UQ2.1

=V1UQ55
-UQ2.1-BGS/R
Shot Pin 2

=V1UQ55UQ1+.UQ55UQ1/1

=V1UQ55UQ3+.UQ55UQ3/1

			Date	1/17/2023	Volvo Trucks North America	Valiant TMS	FESTO DQ CONNECTION QN2	Drawing name: =2V09&EFS-EL	= V1UQ55UQ2
			Ed.	MKLEPADLO					+ V1UQ55UQ2
			Appr		P6700 Bodyside LH - Robot Cell 2V09			Document type: EFS	Project nr: 22-16150
Modification	Date	Name	Original		Replacement of	Replaced by	Scale 1:1		Page 1 / 1533

0	1	2	3	4	5	6	7	8	9

=V1UQ55KF1
+V1UQ55

-KF1.22
=V1UQ55KF1+V1UQ55/3.1

Shot Pin 3 (RST)	Shot Pin 3 (SET)
=V1UQ54KF1	=V1UQ54KF1
+V1UQ54	+V1UQ54
-QN3.1_Q	-QN3.2_Q
=V1UQ55KF1	=V1UQ55KF1
+V1UQ55/3.3	+V1UQ55/3.3
Q2425.4	Q2425.5
1.1 Pneumatic Valve	1.2 Pneumatic Valve

-QN3 .1 .2

=V1UQ55KF1+V1UQ55/1.3
+V1UQ55UQ3.1-W1

-W1
RKC 4.4T-2-RSC 4.4T/S3060
2m

BN BU BK WH

-BGS/R
1 (+) 3 (-)
WWS001A
A2 2 A1 4

Shot Pin 3

=V1UQ55UQ3.1
+V1UQ55UQ3.1
-UQ3.1

=V1UQ55
-UQ3.1-BGS/R
Shot Pin 3

=V1UQ55UQ2+.UQ55UQ2/1

=V1UQ55UQ4+.UQ55UQ4/1

			Date	1/17/2023	Volvo Trucks North America	Valiant TMS	FESTO DQ CONNECTION QN3	Drawing name: =2V09&EFS-EL	= V1UQ55UQ3
			Ed.	MKLEPADLO					+ V1UQ55UQ3
			Appr		P6700 Bodyside LH - Robot Cell 2V09			Document type: EFS	Project nr: 22-16150
Modification	Date	Name	Original		Replacement of	Replaced by	Scale 1:1		Page 1 / 1533

0	1	2	3	4	5	6	7	8	9

=V1UQ55KF1
+V1UQ55

-KF1.22
=V1UQ55KF1+V1UQ55/3.1

Clamps 4 (RST)
=V1UQ55KF1
+V1UQ55
-QN4.1_Q
=V1UQ55KF1
+V1UQ55/3.3
Q2425.6

Clamps 4 (SET)
=V1UQ55KF1
+V1UQ55
-QN4.2_Q
=V1UQ55KF1
+V1UQ55/3.3
Q2425.7

2.1 Pneumatic Valve

2.2 Pneumatic Valve

-QN4 .1 .2

=V1UQ55KF1+V1UQ55/1.4
+V1UQ55UQ4.1-W1

=V1UQ55KF1+V1UQ55/1.5
+V1UQ55UQ4.2-W1

-W1
RKC 4.4T-2-RSC 4.4T/S3060
2m

-W1
RKC 4.4T-4-RSC 4.4T/S3060
4m

BN BU BK WH

-BGS/R

1 3 + -

TÜNKERS
Erfindergeist serienmäßig.

1324638

A2 A1 2 4

Clamps 4

=V1UQ55UQ4.1
+V1UQ55UQ4.1
-UQ4.1

Clamps 4

=V1UQ55UQ4.2
+V1UQ55UQ4.2
-UQ4.2

=V1UQ55
-UQ4.1-BGS/R
Clamps 4

=V1UQ55
-UQ4.2-BGS/R
Clamps 4

=V1UQ55UQ3+.UQ55UQ3/1

=V1WC1+.UC11/1

			Date	1/17/2023	Volvo Trucks North America	Valiant TMS	FESTO DQ CONNECTION QN4	Drawing name: =2V09&EFS-EL	= V1UQ55UQ4
			Ed.	MKLEPADLO					+ V1UQ55UQ4
			Appr		P6700 Bodyside LH - Robot Cell 2V09			Document type: EFS	Project nr: 22-16150
Modification	Date	Name	Original		Replacement of	Replaced by	Scale 1:1		Page 1 / 1533

0	1	2	3	4	5	6	7	8	9

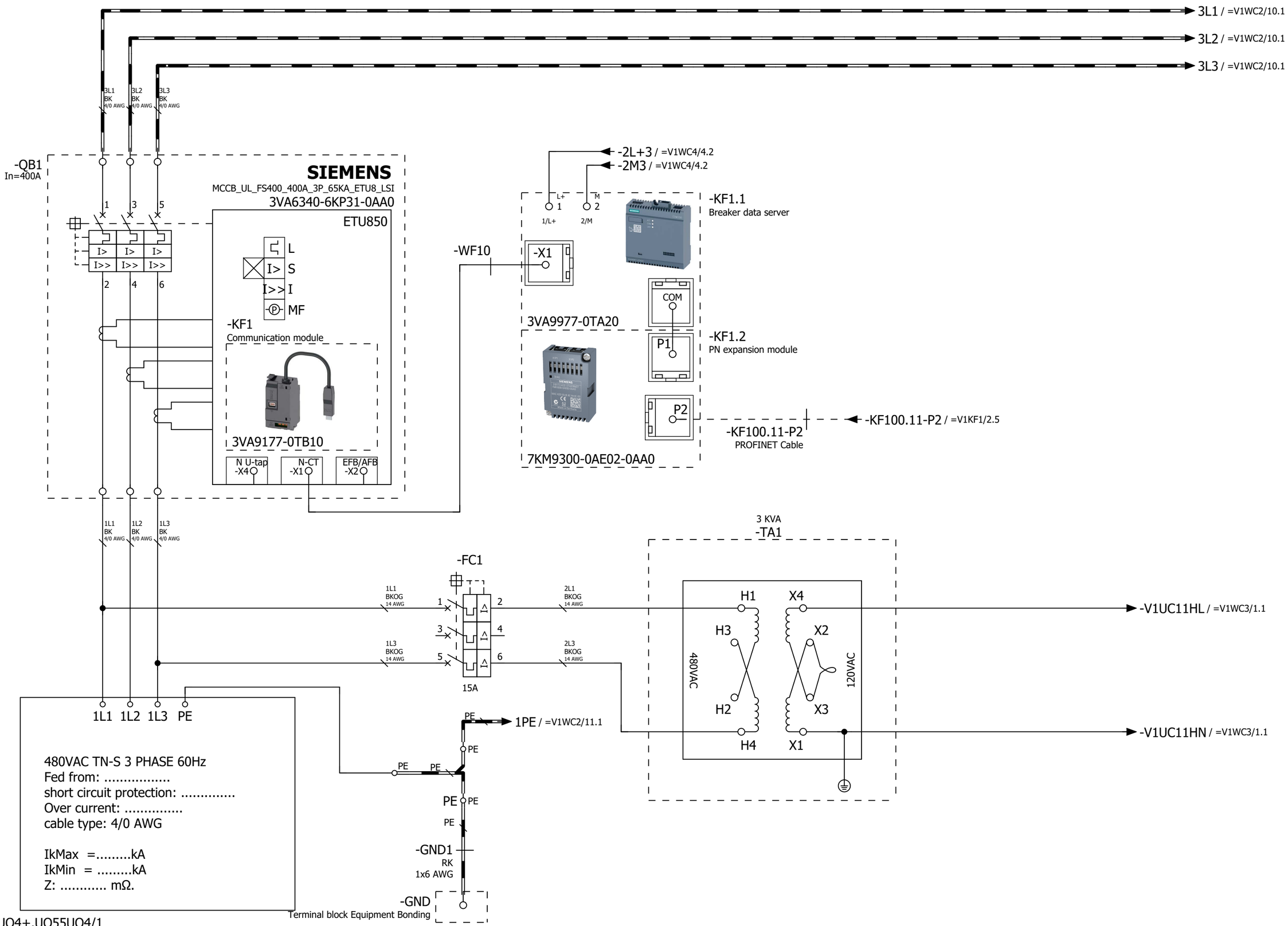

=V1UQ55UQ4+.UQ55UQ4/1

+.UC12/1

			Date	1/17/2023	Volvo Trucks North America	Valiant TMS	Incoming power supply 480 VAC	Drawing name: =2V09&EFS-EL	= V1WC1
			Ed.	MKLEPADLO					+ V1UC11
			Appr		P6700 Bodyside LH - Robot Cell 2V09			Document type: EFS	Project nr: 22-16150
Modification	Date	Name	Original		Replacement of	Replaced by	Scale 1:1		Page 1 / 1533

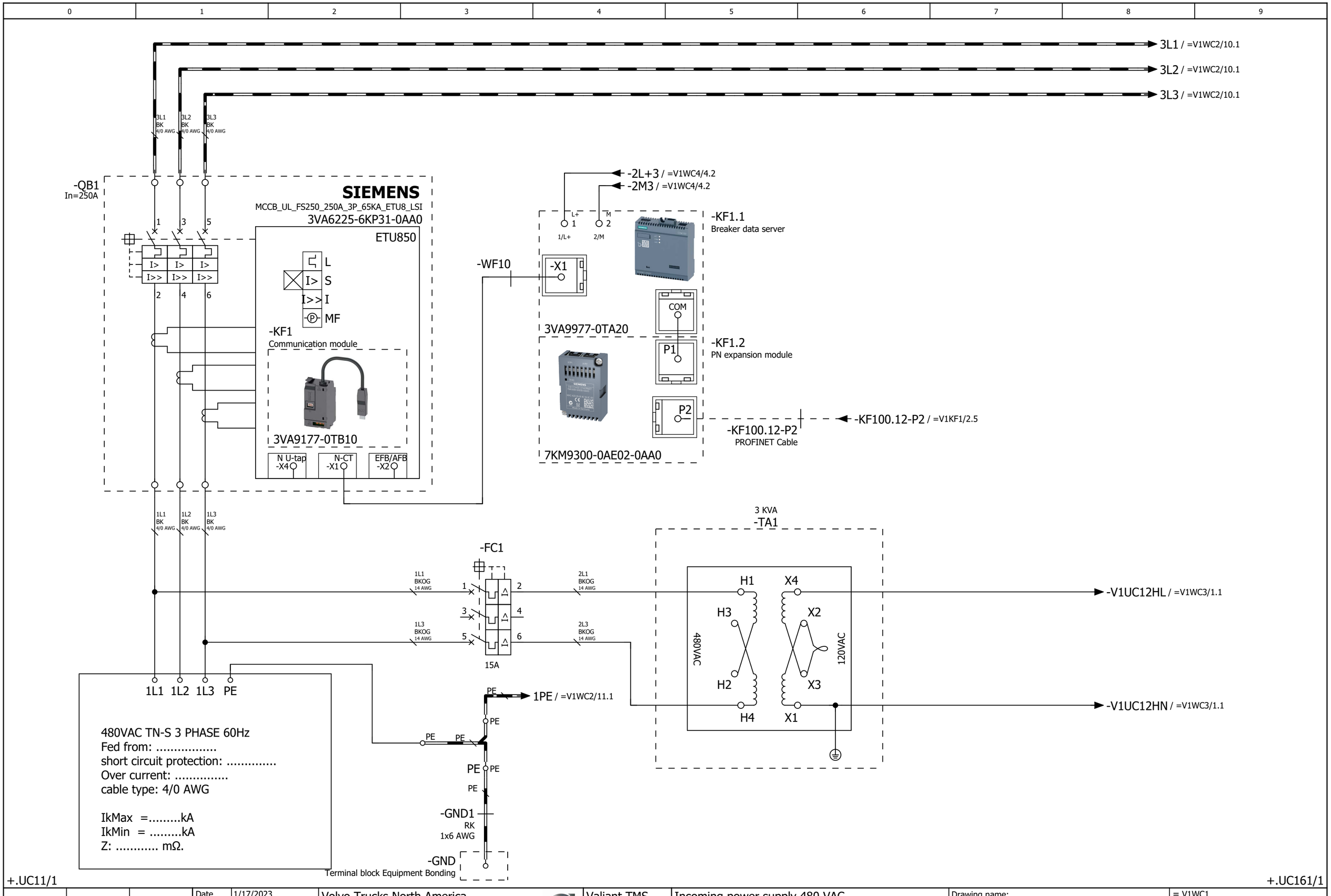

			Date	1/17/2023	Volvo Trucks North America	Valiant TMS	Incoming power supply 480 VAC	Drawing name: =2V09&EFS-EL	= V1WC1 + V1UC12
			Ed.	MKLEPADLO	P6700 Bodyside LH - Robot Cell 2V09			Document type: EFS	Project nr: 22-16150
			Appr						Page 1
Modification	Date	Name	Original		Replacement of / Replaced by	Scale 1:1			1533

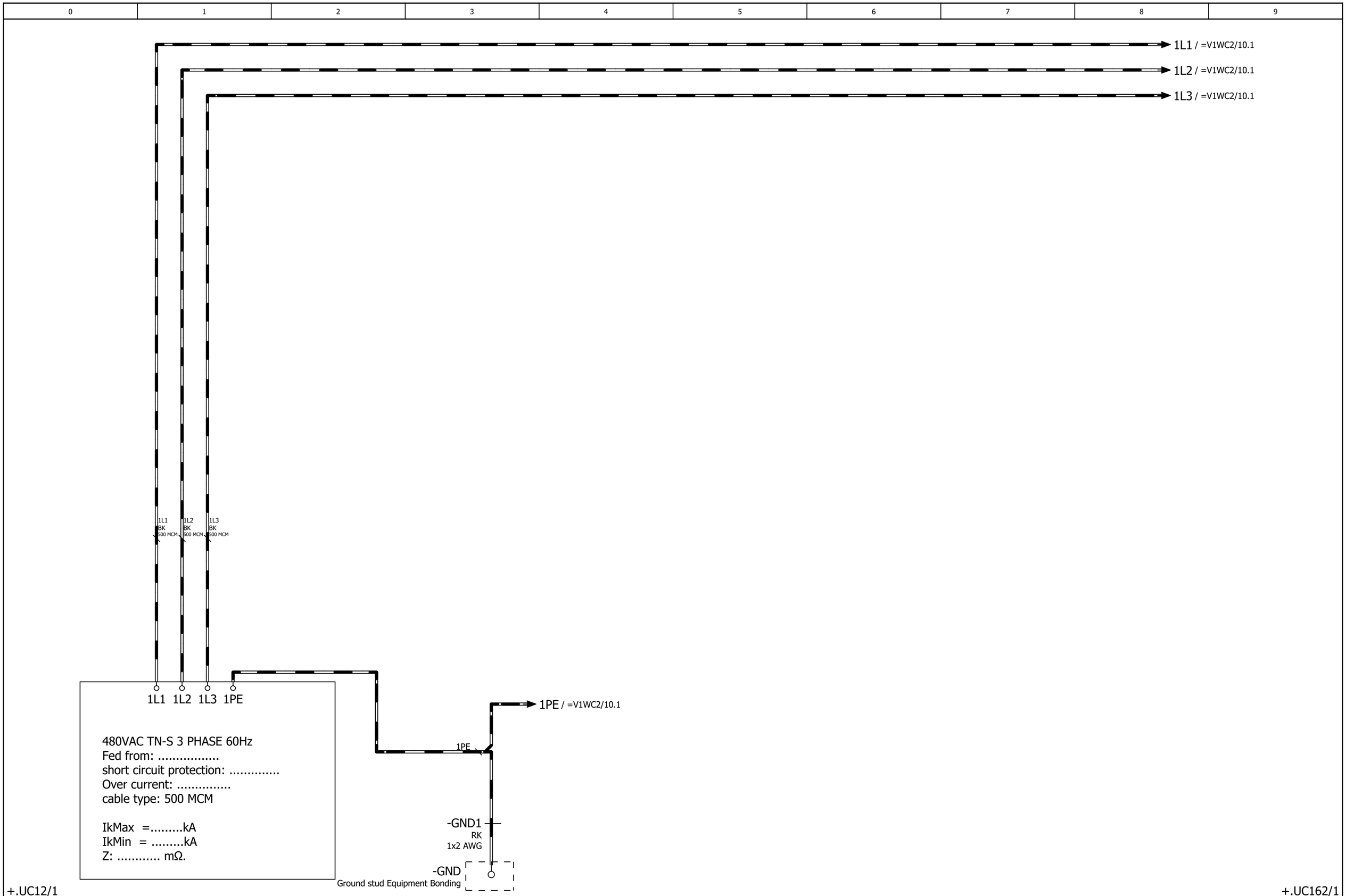

			Date	1/17/2023	Volvo Trucks North America	Valiant TMS	Incoming weld power supply 480 VAC	Drawing name: =2V09&EFS-EL	= V1WC1	
			Ed.	MKLEPADLO					+ V1UC161	
			Appr		P6700 Bodyside LH - Robot Cell 2V09			Document type: EFS	Project nr: 22-16150	Page 1
Modification	Date	Name	Original		Replacement of	Replaced by	Scale 1:1			1533

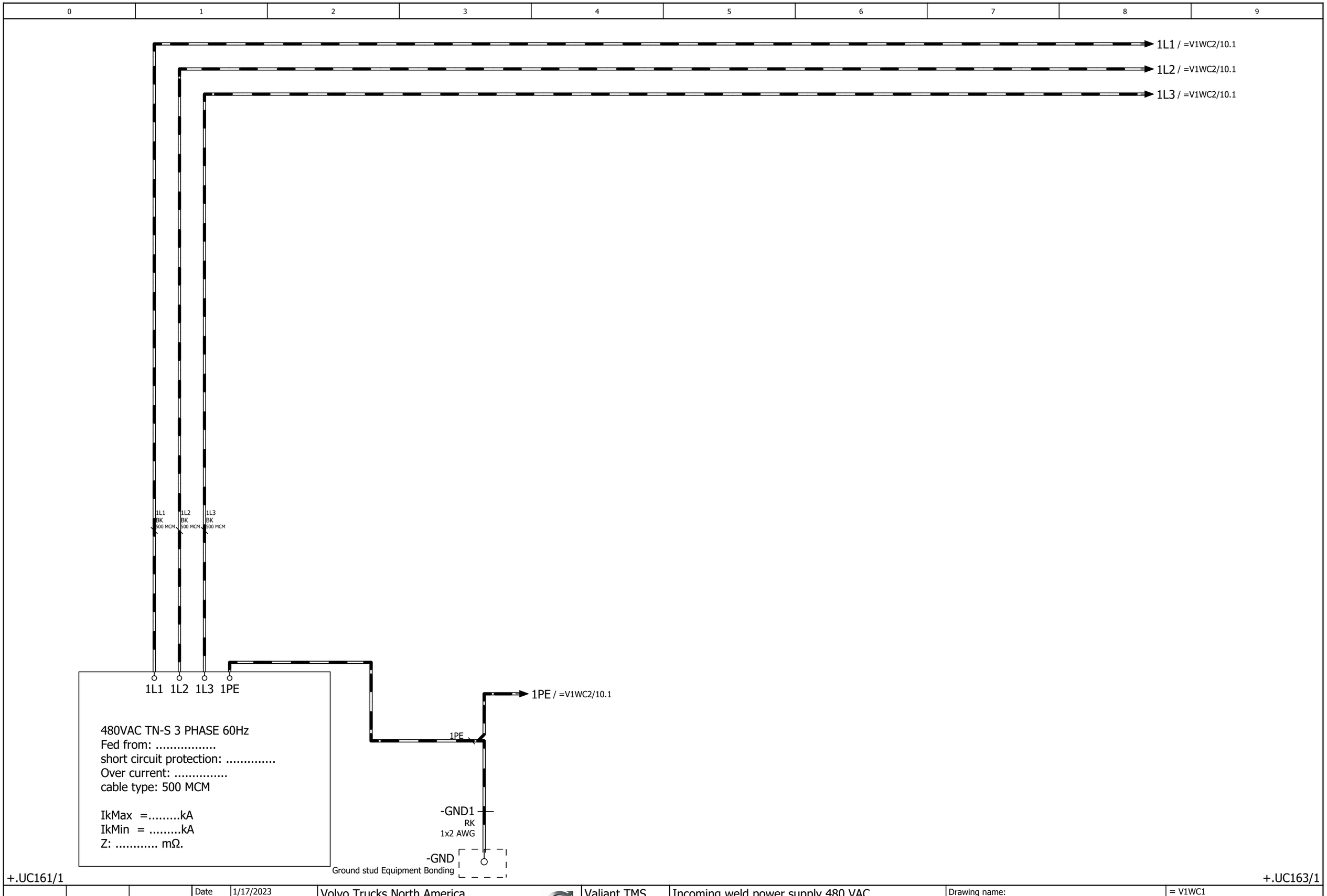

			Date	1/17/2023	Volvo Trucks North America	Valiant TMS	Incoming weld power supply 480 VAC	Drawing name: =2V09&EFS-EL	= V1WC1 + V1UC162	
			Ed.	MKLEPADLO	P6700 Bodyside LH - Robot Cell 2V09					
			Appr					Document type: EFS	Project nr: 22-16150	Page 1
Modification	Date	Name	Original		Replacement of / Replaced by	Scale 1:1				1533

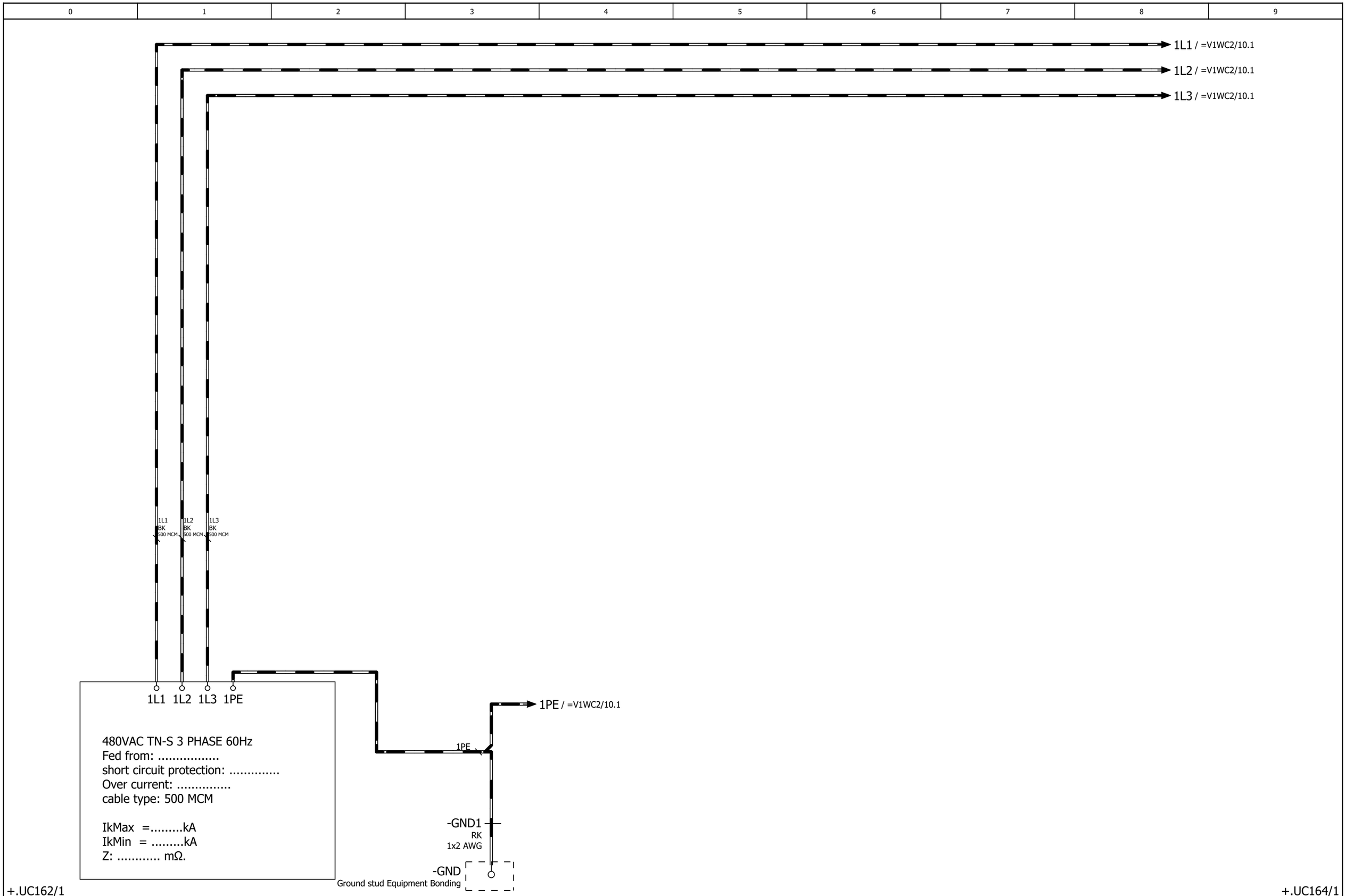

			Date	1/17/2023	Volvo Trucks North America	Valiant TMS	Incoming weld power supply 480 VAC	Drawing name: =2V09&EFS-EL	= V1WC1	
			Ed.	MKLEPADLO					+ V1UC163	
			Appr		P6700 Bodyside LH - Robot Cell 2V09	Scale 1:1		Document type: EFS	Project nr: 22-16150	Page 1
Modification	Date	Name	Original		Replacement of	Replaced by				1533

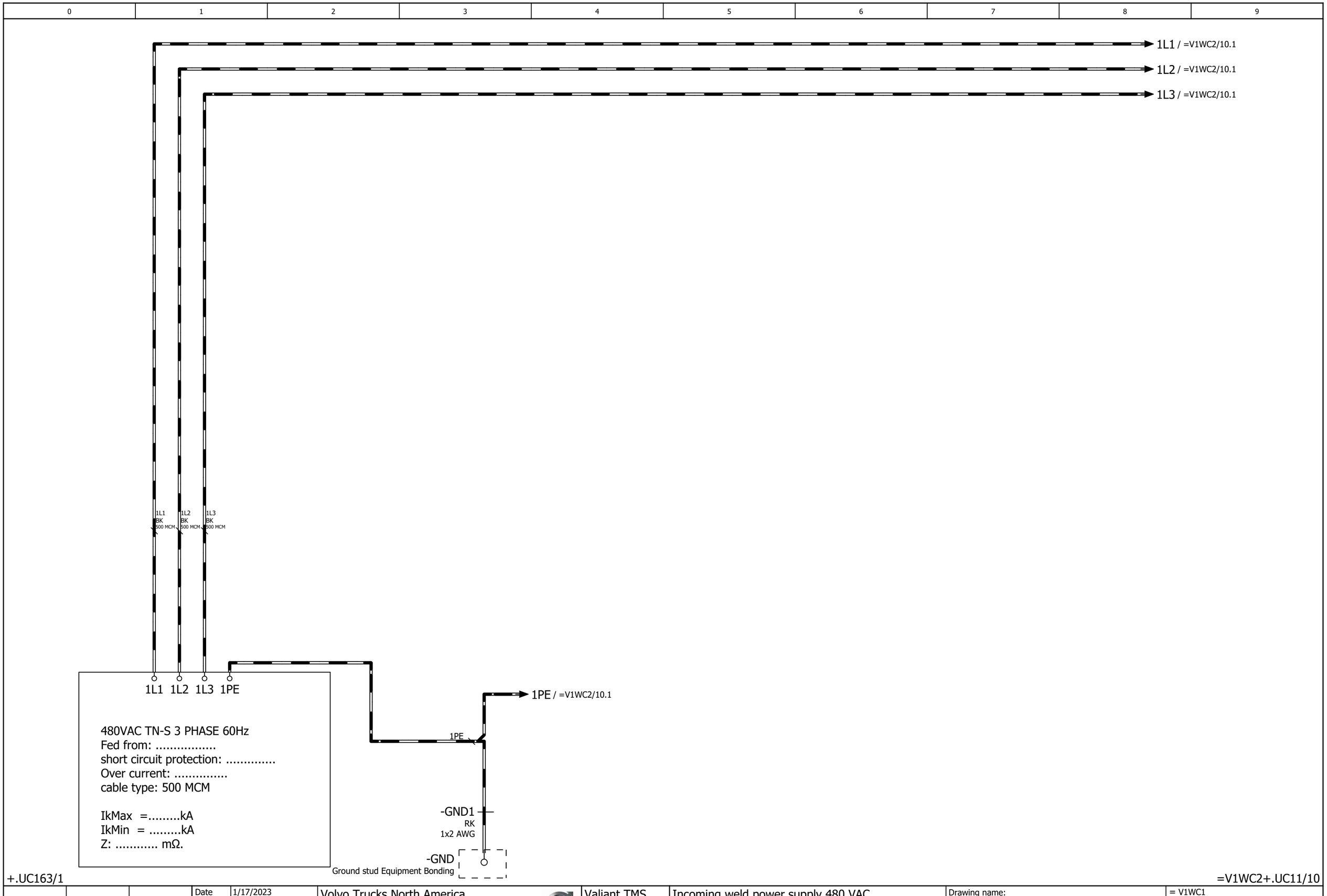

			Date	1/17/2023	Volvo Trucks North America	Valiant TMS	Incoming weld power supply 480 VAC	Drawing name: =2V09&EFS-EL	= V1WC1 + V1UC164
			Ed.	MKLEPADLO	P6700 Bodyside LH - Robot Cell 2V09				
			Appr					Document type: EFS	Project nr: 22-16150
Modification	Date	Name	Original		Replacement of / Replaced by	Scale 1:1			Page 1 / 1533

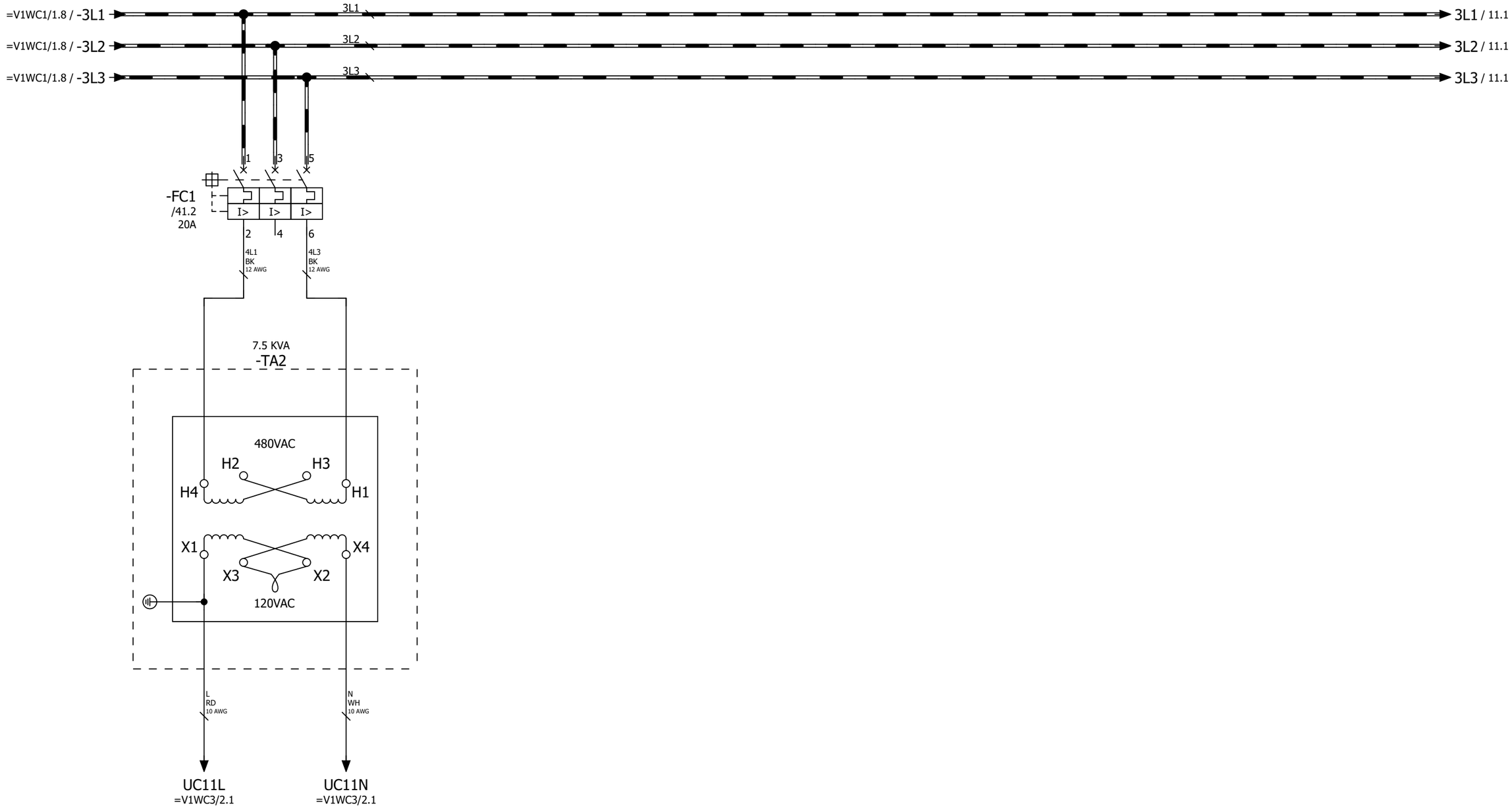

Power
Distribution
=V1UC11

=V1WC1+.UC164/1

11

			Date	1/17/2023	Volvo Trucks North America	Valiant TMS	Power distribution 480 VAC	Drawing name: =2V09&EFS-EL	= V1WC2	
			Ed.	MKLEPADLO					+ V1UC11	
			Appr		P6700 Bodyside LH - Robot Cell 2V09			Document type: EFS	Project nr: 22-16150	Page 10
Modification	Date	Name	Original		Replacement of / Replaced by	Scale 1:1				1533

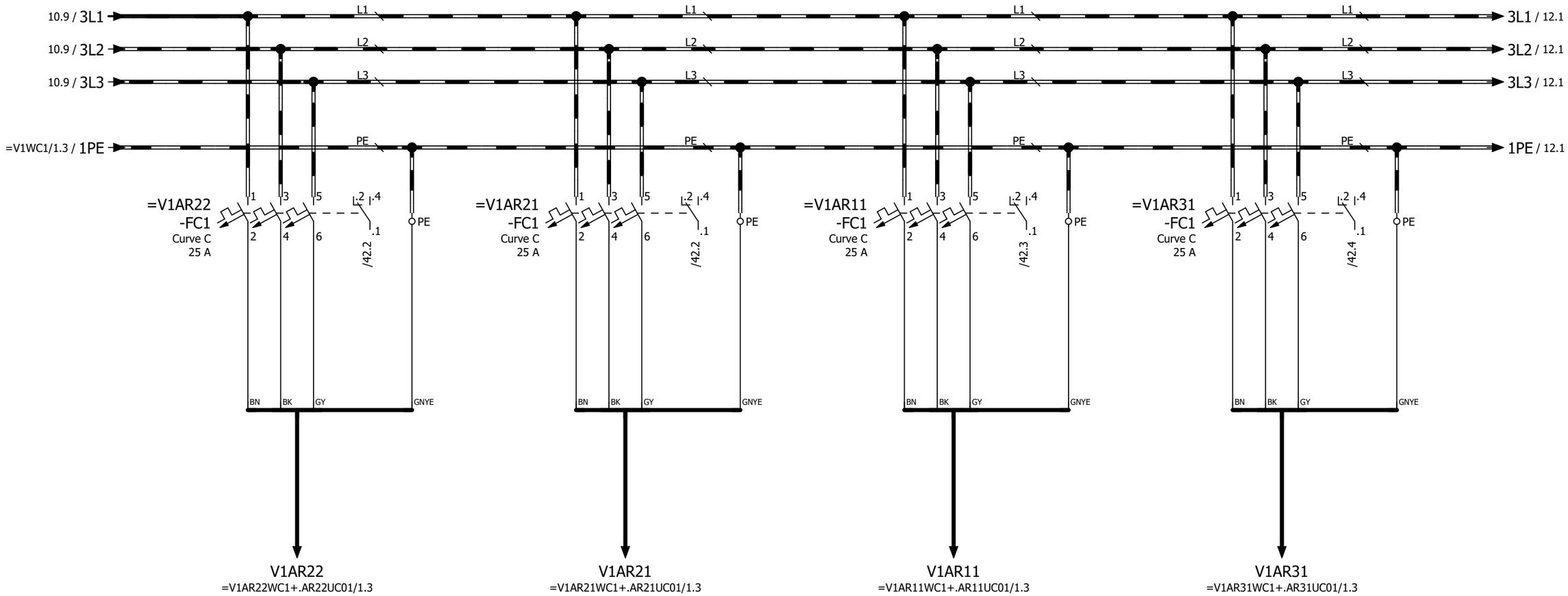

Power Distribution =V1AR22

Power Distribution =V1AR21

Power Distribution =V1AR11

Power Distribution =V1AR31

			Date	1/17/2023	Volvo Trucks North America	Valiant TMS	Power distribution 480 VAC	Drawing name: =2V09&EFS-EL	= V1WC2
			Ed.	MKLEPADLO					+ V1UC11
			Appr		P6700 Bodyside LH - Robot Cell 2V09			Document type: EFS	Project nr: 22-16150
Modification	Date	Name	Original		Replacement of / Replaced by	Scale 1:1			Page 11 / 1533

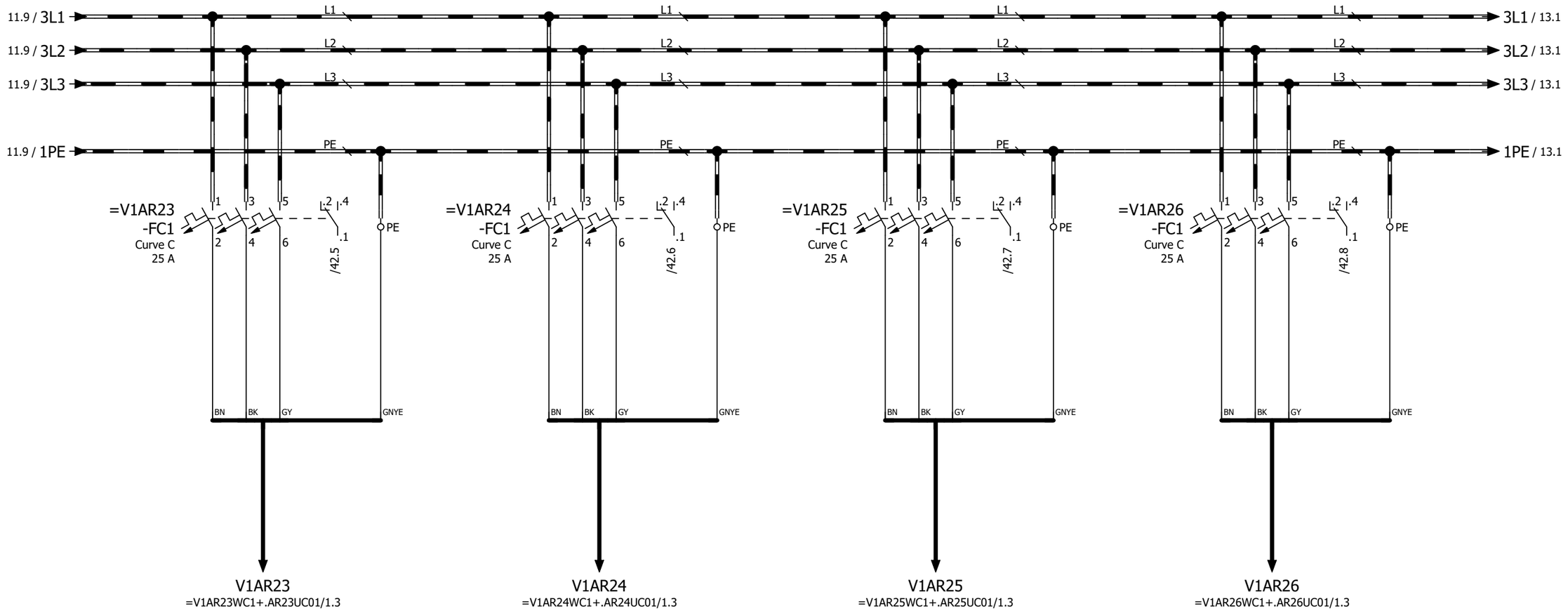

Power Distribution =V1AR23

Power Distribution =V1AR24

Power Distribution =V1AR25

Power Distribution =V1AR26

			Date	1/17/2023	Volvo Trucks North America	Valiant TMS	Power distribution 480 VAC	Drawing name: =2V09&EFS-EL	= V1WC2	
			Ed.	MKLEPADLO					+ V1UC11	
			Appr		P6700 Bodyside LH - Robot Cell 2V09	Scale 1:1		Document type: EFS	Project nr: 22-16150	Page 12 / 1533
Modification	Date	Name	Original		Replacement of / Replaced by					

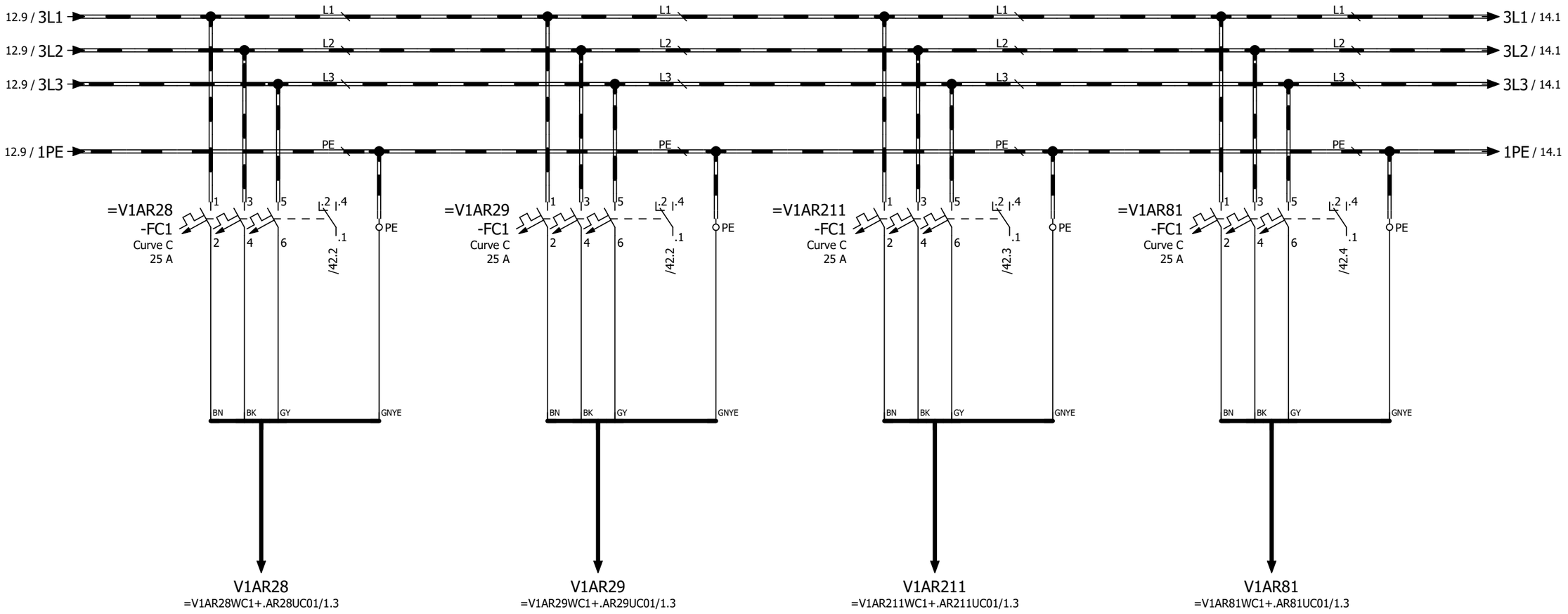

Power Distribution =V1AR28

Power Distribution =V1AR29

Power Distribution =V1AR211

Power Distribution =V1AR81

			Date	1/17/2023	Volvo Trucks North America	Valiant TMS	Power distribution 480 VAC	Drawing name: =2V09&EFS-EL	= V1WC2
			Ed.	MKLEPADLO					+ V1UC11
			Appr		P6700 Bodyside LH - Robot Cell 2V09			Document type: EFS	Project nr: 22-16150
Modification	Date	Name	Original		Replacement of / Replaced by	Scale 1:1			Page 13 / 1533

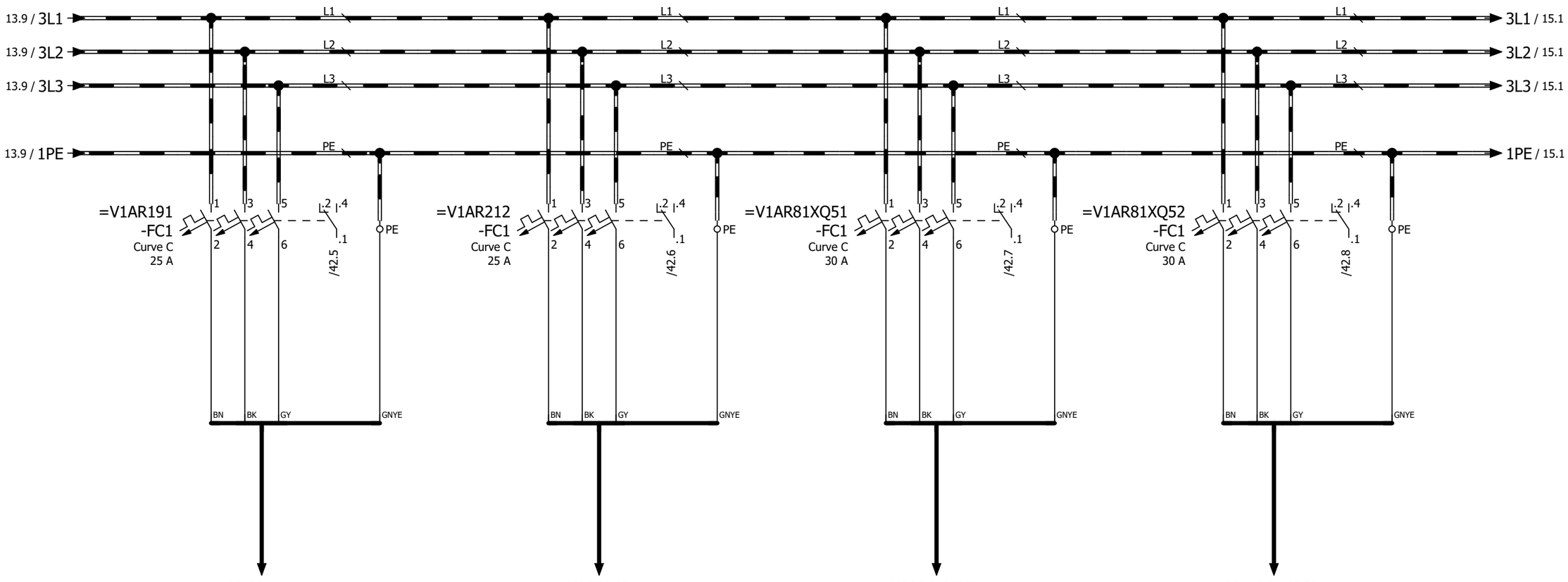

Power Distribution =V1AR191

Power Distribution =V1AR212

Power Distribution =V1AR81XQ51

Power Distribution =V1AR81XQ52

			Date	1/17/2023	Volvo Trucks North America	Valiant TMS	Power distribution 480 VAC	Drawing name: =2V09&EFS-EL	= V1WC2	
			Ed.	MKLEPADLO					+ V1UC11	
			Appr		P6700 Bodyside LH - Robot Cell 2V09	Scale 1:1		Document type: EFS	Project nr: 22-16150	Page 14 / 1533
Modification	Date	Name	Original		Replacement of / Replaced by					

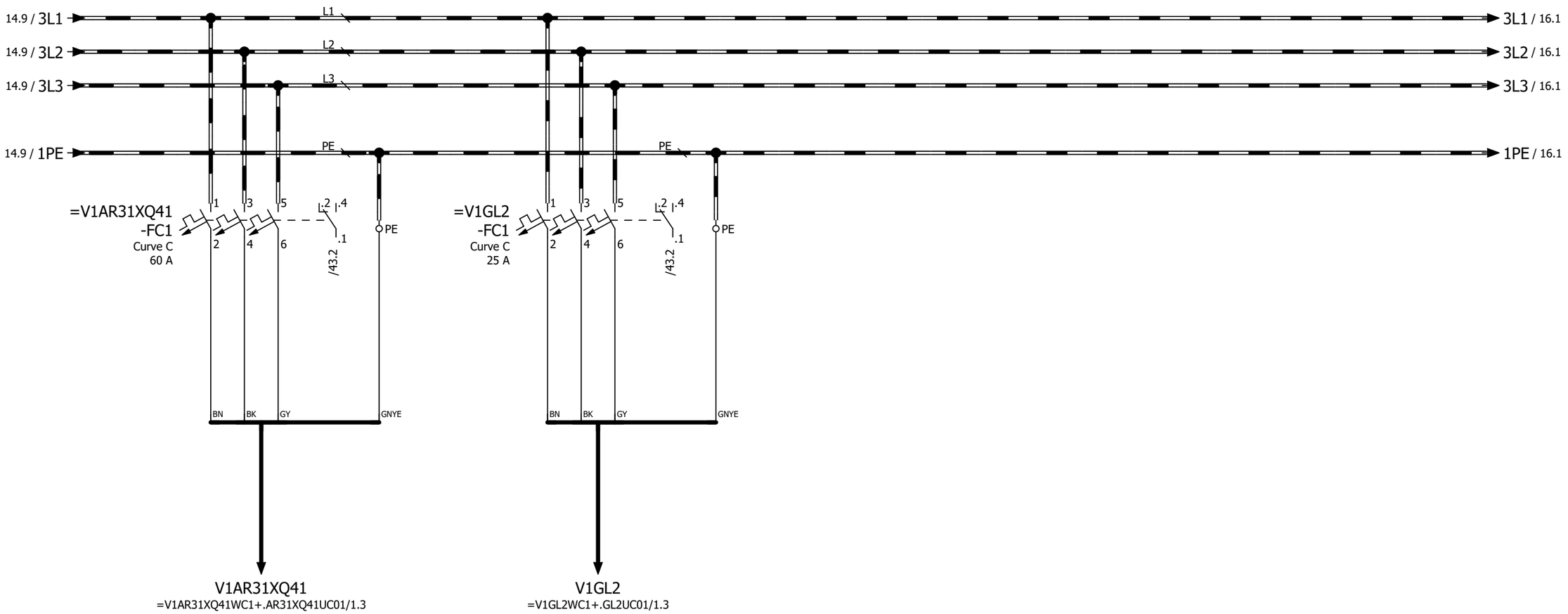

Power Distribution =V1AR31XQ41

Power Distribution =V1GL2

			Date	1/17/2023	Volvo Trucks North America	Valiant TMS	Power distribution 480 VAC	Drawing name: =2V09&EFS-EL	= V1WC2	
			Ed.	MKLEPADLO					+ V1UC11	
			Appr		P6700 Bodyside LH - Robot Cell 2V09			Document type: EFS	Project nr: 22-16150	Page 15
Modification	Date	Name	Original		Replacement of / Replaced by	Scale 1:1				1533

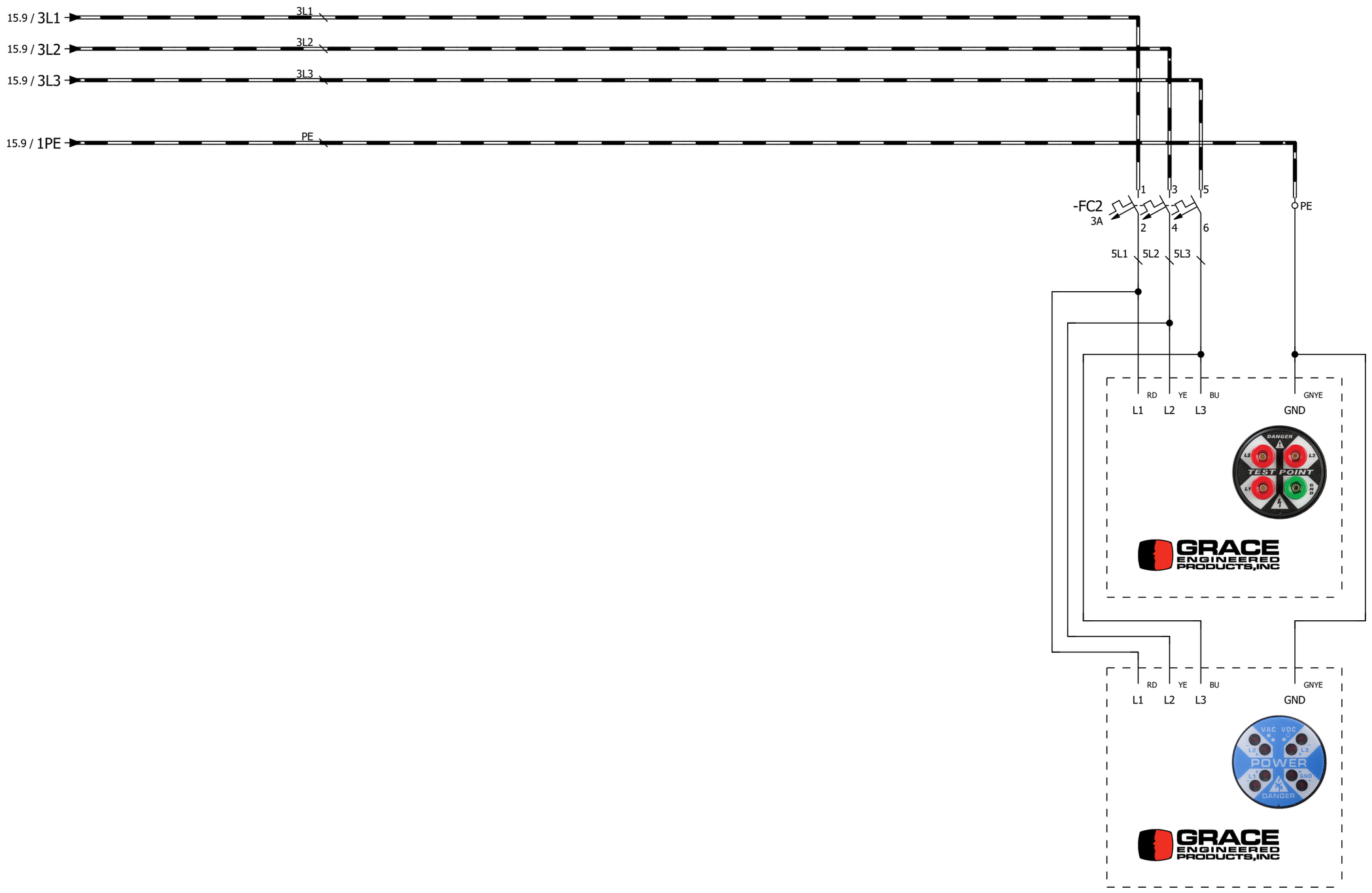

Voltage Test Port /
Indicator Light

			Date	1/17/2023	Volvo Trucks North America		Valiant TMS	Power distribution 480 VAC	Drawing name: =2V09&EFS-EL	= V1WC2
			Ed.	MKLEPADLO						+ V1UC11
			Appr		P6700 Bodyside LH - Robot Cell 2V09				Document type: EFS	Project nr: 22-16150
Modification	Date	Name	Original		Replacement of	Replaced by	Scale 1:1			Page 16 / 1533

=V1KF1

-KF11.11

Monitoring 480 VAC SPARE =V1KF1/9.2	Monitoring 480 VAC =V1UC11-FC1 =V1KF1/9.2			Monitoring 480 VAC SPARE =V1KF1/9.2	Monitoring 480 VAC SPARE =V1KF1/9.2
DI ET200SP	DI ET200SP	=V1WC4/1.0 TA1	=V1WC4/11.0 TA2	=V1WC4/1.1 FC11	=V1WC4/11.1 FC12	DI ET200SP	DI ET200SP
I50.0 DI0	I50.1 DI1					I50.6 DI6	I50.7 DI7
1	2					7	8

I50.1 BUOG 16 AWG

=V1WC2 -FC1 /10.1 .2 .4 .1

3L+1 BUOG 16 AWG

-XD3 1 2 3 4 5

=V1WC4/5.1 / 3L+1

=V1KF1

-KF11.11

Monitoring 480 VAC SPARE =V1KF1/9.2	Monitoring 480 VAC SPARE =V1KF1/9.2	Monitoring 480 VAC SPARE =V1KF1/9.2	Monitoring 480 VAC SPARE =V1KF1/9.2	Monitoring 480 VAC SPARE =V1KF1/9.2	Monitoring 480 VAC SPARE =V1KF1/9.2	Monitoring 480 VAC SPARE =V1KF1/9.2	Monitoring 480 VAC SPARE =V1KF1/9.2
DI ET200SP	DI ET200SP	DI ET200SP	DI ET200SP	DI ET200SP	DI ET200SP	DI ET200SP	DI ET200SP
I51.0 DI8	I51.1 DI9	I51.2 DI10	I51.3 DI11	I51.4 DI12	I51.5 DI13	I51.6 DI14	I51.7 DI15
9	10	11	12	13	14	15	16

			Date	1/17/2023	Volvo Trucks North America	Valiant TMS	Power distribution 480 VAC monitoring	Drawing name: =2V09&EFS-EL	= V1WC2
			Ed.	MKLEPADLO					+ V1UC11
			Appr		P6700 Bodyside LH - Robot Cell 2V09			Document type: EFS	Project nr: 22-16150	Page 41
Modification	Date	Name	Original		Replacement of / Replaced by	Scale 1:1				1533

=V1KF1

	Monitoring 480 VAC =V1AR22-FC1 =V1KF1/10.2	Monitoring 480 VAC =V1AR21-FC1 =V1KF1/10.2	Monitoring 480 VAC =V1AR11-FC1 =V1KF1/10.2	Monitoring 480 VAC =V1AR31-FC1 =V1KF1/10.2	Monitoring 480 VAC =V1AR23-FC1 =V1KF1/10.2	Monitoring 480 VAC =V1AR24-FC1 =V1KF1/10.2	Monitoring 480 VAC =V1AR25-FC1 =V1KF1/10.2	Monitoring 480 VAC =V1AR26-FC1 =V1KF1/10.2
-KF11.12	DI ET200SP	DI ET200SP	DI ET200SP	DI ET200SP	DI ET200SP	DI ET200SP	DI ET200SP	DI ET200SP
	I52.0 DI0	I52.1 DI1	I52.2 DI2	I52.3 DI3	I52.4 DI4	I52.5 DI5	I52.6 DI6	I52.7 DI7
	1	2	3	4	5	6	7	8
	I52.0 BUOG 16 AWG	I52.1 BUOG 16 AWG	I52.2 BUOG 16 AWG	I52.3 BUOG 16 AWG	I52.4 BUOG 16 AWG	I52.5 BUOG 16 AWG	I52.6 BUOG 16 AWG	I52.7 BUOG 16 AWG
-KF11.12	1	2	3	4	5	6	7	8
	I52.0 BUOG 16 AWG	I52.1 BUOG 16 AWG	I52.2 BUOG 16 AWG	I52.3 BUOG 16 AWG	I52.4 BUOG 16 AWG	I52.5 BUOG 16 AWG	I52.6 BUOG 16 AWG	I52.7 BUOG 16 AWG
	.2 .4	.2 .4	.2 .4	.2 .4	.2 .4	.2 .4	.2 .4	.2 .4
	=V1AR22 -FC1 /11.1	=V1AR21 -FC1 /11.3	=V1AR11 -FC1 /11.5	=V1AR31 -FC1 /11.7	=V1AR23 -FC1 /12.1	=V1AR24 -FC1 /12.3	=V1AR25 -FC1 /12.5	=V1AR26 -FC1 /12.7
	.1	.1	.1	.1	.1	.1	.1	.1
	3L+3 BUOG 16 AWG	3L+3 BUOG 16 AWG	3L+3 BUOG 16 AWG	3L+3 BUOG 16 AWG	3L+3 BUOG 16 AWG	3L+3 BUOG 16 AWG	3L+3 BUOG 16 AWG	3L+3 BUOG 16 AWG
-XD1	1	2	3	4	5	6	7	8

=V1WC4/5.2 / 3L+3

=V1KF1

	Monitoring 480 VAC =V1AR28-FC1 =V1KF1/10.2	Monitoring 480 VAC =V1AR29-FC1 =V1KF1/10.2	Monitoring 480 VAC =V1AR211-FC1 =V1KF1/10.2	Monitoring 480 VAC =V1AR81-FC1 =V1KF1/10.2	Monitoring 480 VAC =V1AR191-FC1 =V1KF1/10.2	Monitoring 480 VAC =V1AR212-FC1 =V1KF1/10.2	Monitoring 480 VAC =V1AR81XQ51-FC1 =V1KF1/10.2	Monitoring 480 VAC =V1AR81XQ52-FC1 =V1KF1/10.2
-KF11.12	DI ET200SP	DI ET200SP	DI ET200SP	DI ET200SP	DI ET200SP	DI ET200SP	DI ET200SP	DI ET200SP
	I53.0 DI8	I53.1 DI9	I53.2 DI10	I53.3 DI11	I53.4 DI12	I53.5 DI13	I53.6 DI14	I53.7 DI15
	9	10	11	12	13	14	15	16
	I53.0 BUOG 16 AWG	I53.1 BUOG 16 AWG	I53.2 BUOG 16 AWG	I53.3 BUOG 16 AWG	I53.4 BUOG 16 AWG	I53.5 BUOG 16 AWG	I53.6 BUOG 16 AWG	I53.7 BUOG 16 AWG
-KF11.12	9	10	11	12	13	14	15	16
	I53.0 BUOG 16 AWG	I53.1 BUOG 16 AWG	I53.2 BUOG 16 AWG	I53.3 BUOG 16 AWG	I53.4 BUOG 16 AWG	I53.5 BUOG 16 AWG	I53.6 BUOG 16 AWG	I53.7 BUOG 16 AWG
	.2 .4	.2 .4	.2 .4	.2 .4	.2 .4	.2 .4	.2 .4	.2 .4
	=V1AR28 -FC1 /13.1	=V1AR29 -FC1 /13.3	=V1AR211 -FC1 /13.5	=V1AR81 -FC1 /13.7	=V1AR191 -FC1 /14.1	=V1AR212 -FC1 /14.3	=V1AR81XQ51 -FC1 /14.5	=V1AR81XQ52 -FC1 /14.7
	.1	.1	.1	.1	.1	.1	.1	.1
	3L+3 BUOG 16 AWG	3L+3 BUOG 16 AWG	3L+3 BUOG 16 AWG	3L+3 BUOG 16 AWG	3L+3 BUOG 16 AWG	3L+3 BUOG 16 AWG	3L+3 BUOG 16 AWG	3L+3 BUOG 16 AWG
-XD1	9	10	11	12	13	14	15	16

			Date	1/17/2023	Volvo Trucks North America	Valiant TMS	Power distribution 480 VAC monitoring	Drawing name: =2V09&EFS-EL	= V1WC2
			Ed.	MKLEPADLO					+ V1UC11
			Appr		P6700 Bodyside LH - Robot Cell 2V09			Document type: EFS	Project nr: 22-16150
Modification	Date	Name	Original		Replacement of / Replaced by	Scale 1:1			Page 42 / 1533

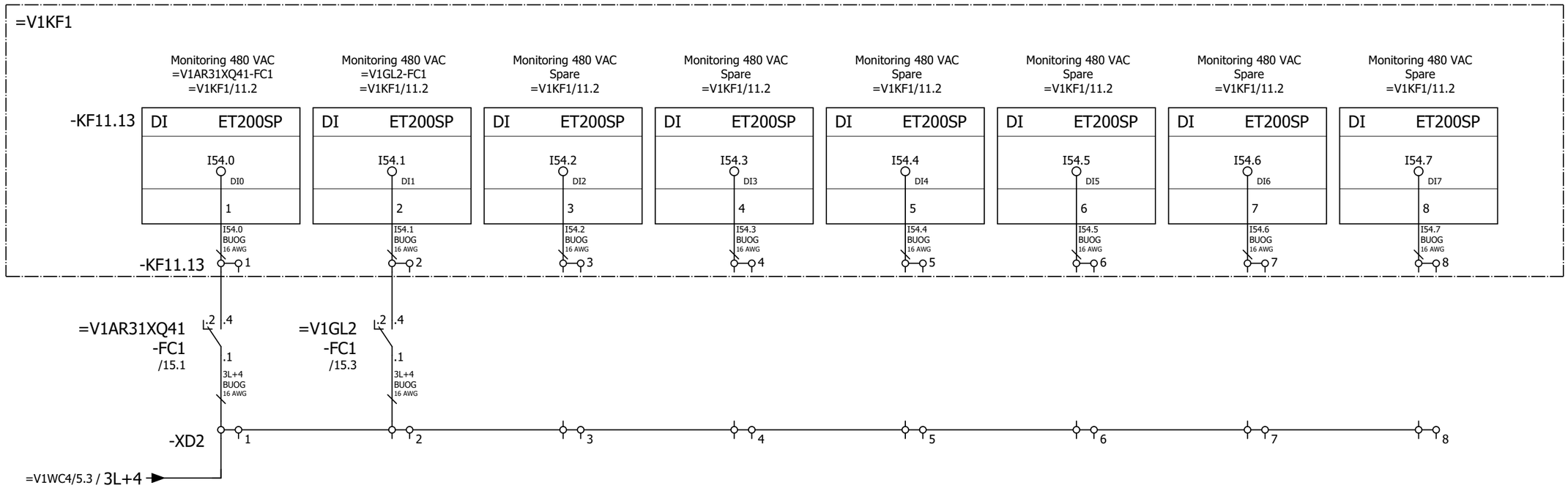

			Date	1/17/2023	Volvo Trucks North America	Valiant TMS	Power distribution 480 VAC monitoring	Drawing name: =2V09&EFS-EL	= V1WC2	
			Ed.	MKLEPADLO					+ V1UC11	
			Appr		P6700 Bodyside LH - Robot Cell 2V09			Document type: EFS	Project nr: 22-16150	Page 43
Modification	Date	Name	Original		Replacement of / Replaced by	Scale 1:1				1533

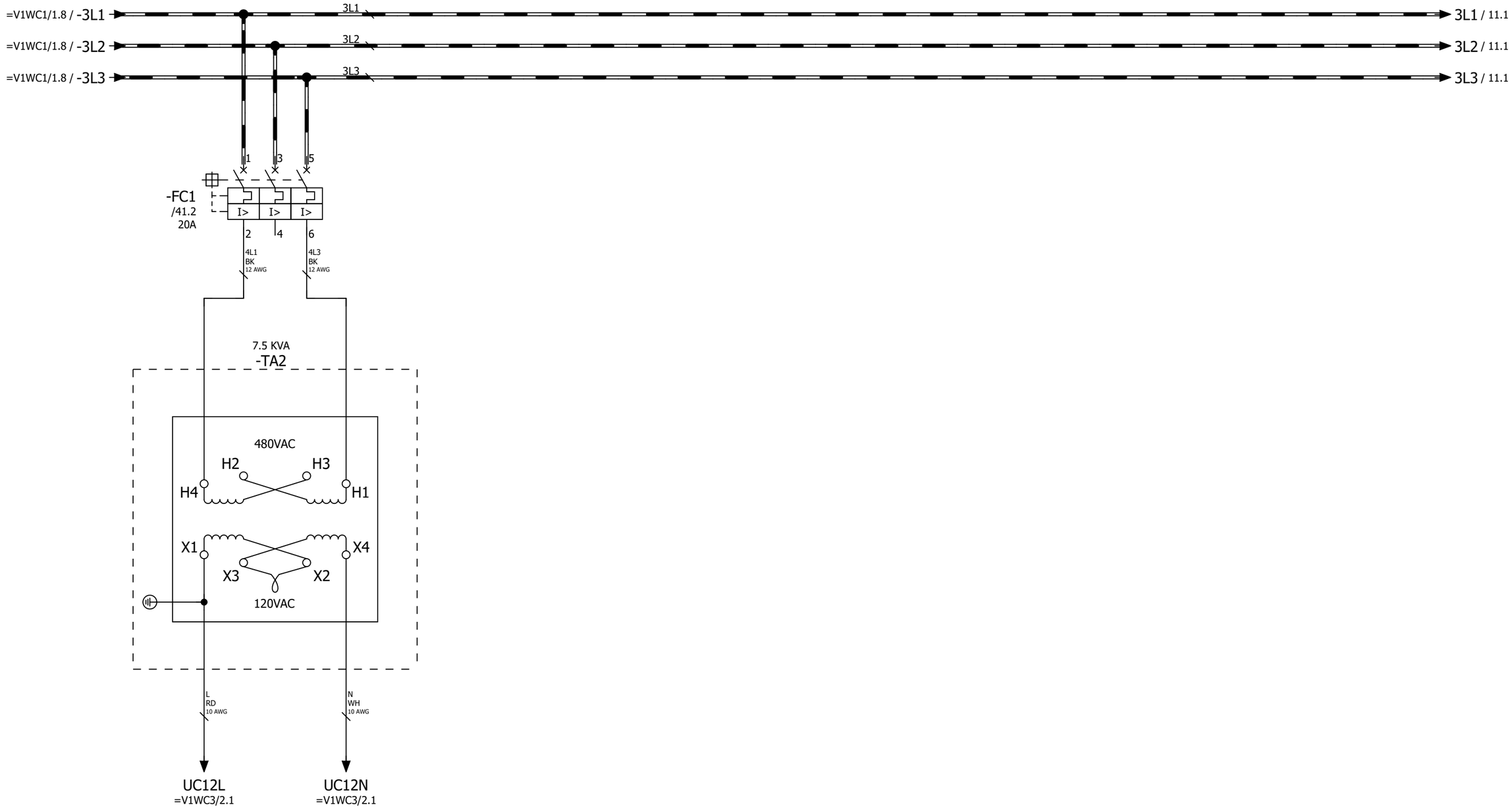

Power
Distribution
=V1UC12

+.UC11/43

11

			Date	1/17/2023	Volvo Trucks North America		Valiant TMS	Power distribution 480 VAC	Drawing name: =2V09&EFS-EL	= V1WC2
			Ed.	MKLEPADLO						+ V1UC12
			Appr		P6700 Bodyside LH - Robot Cell 2V09				Document type: EFS	Project nr: 22-16150
Modification	Date	Name	Original		Replacement of	Replaced by	Scale 1:1			Page 10 / 1533

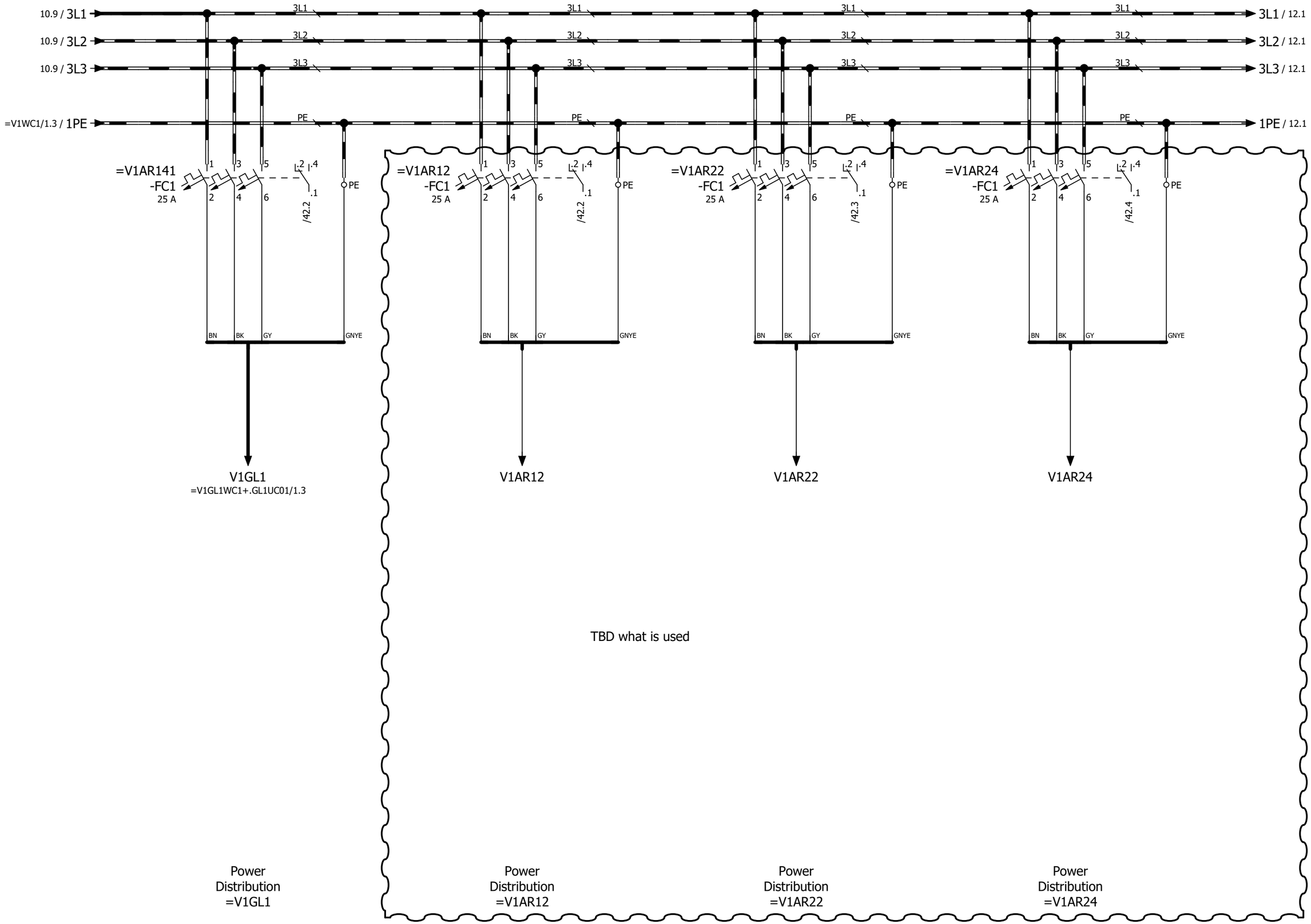

			Date	1/17/2023	Volvo Trucks North America	Valiant TMS	Power distribution 480 VAC	Drawing name: =2V09&EFS-EL	= V1WC2	
			Ed.	MKLEPADLO					+ V1UC12	
			Appr		P6700 Bodyside LH - Robot Cell 2V09	Scale 1:1		Document type: EFS	Project nr: 22-16150	Page 11 / 1533
Modification	Date	Name	Original		Replacement of	Replaced by				

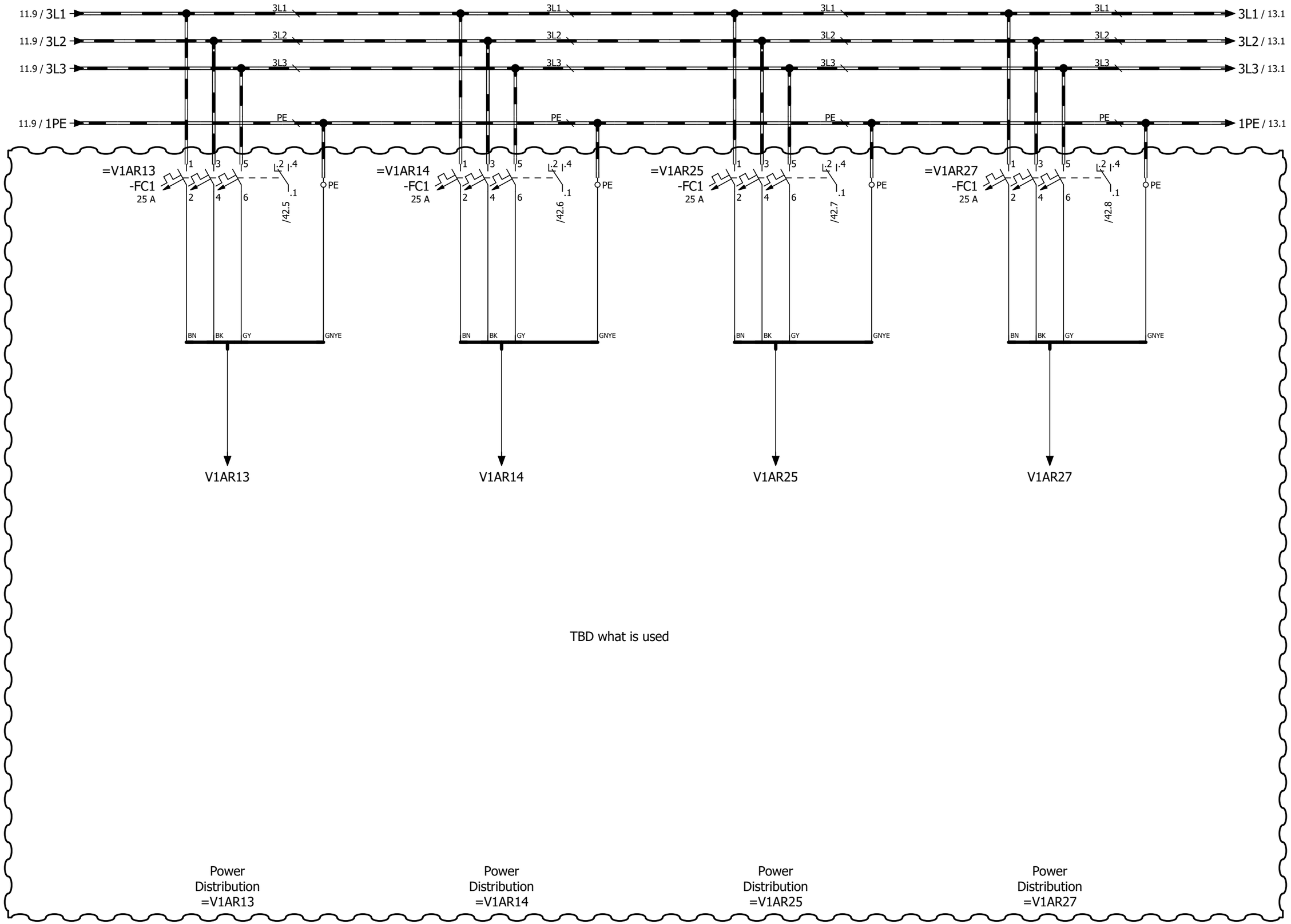

			Date	1/17/2023	Volvo Trucks North America	Valiant TMS	Power distribution 480 VAC	Drawing name: =2V09&EFS-EL		= V1WC2	
			Ed.	MKLEPADLO						+ V1UC12	
			Appr		P6700 Bodyside LH - Robot Cell 2V09	Scale 1:1		Document type: EFS	Project nr: 22-16150	Page	12
Modification	Date	Name	Original		Replacement of	Replaced by					1533

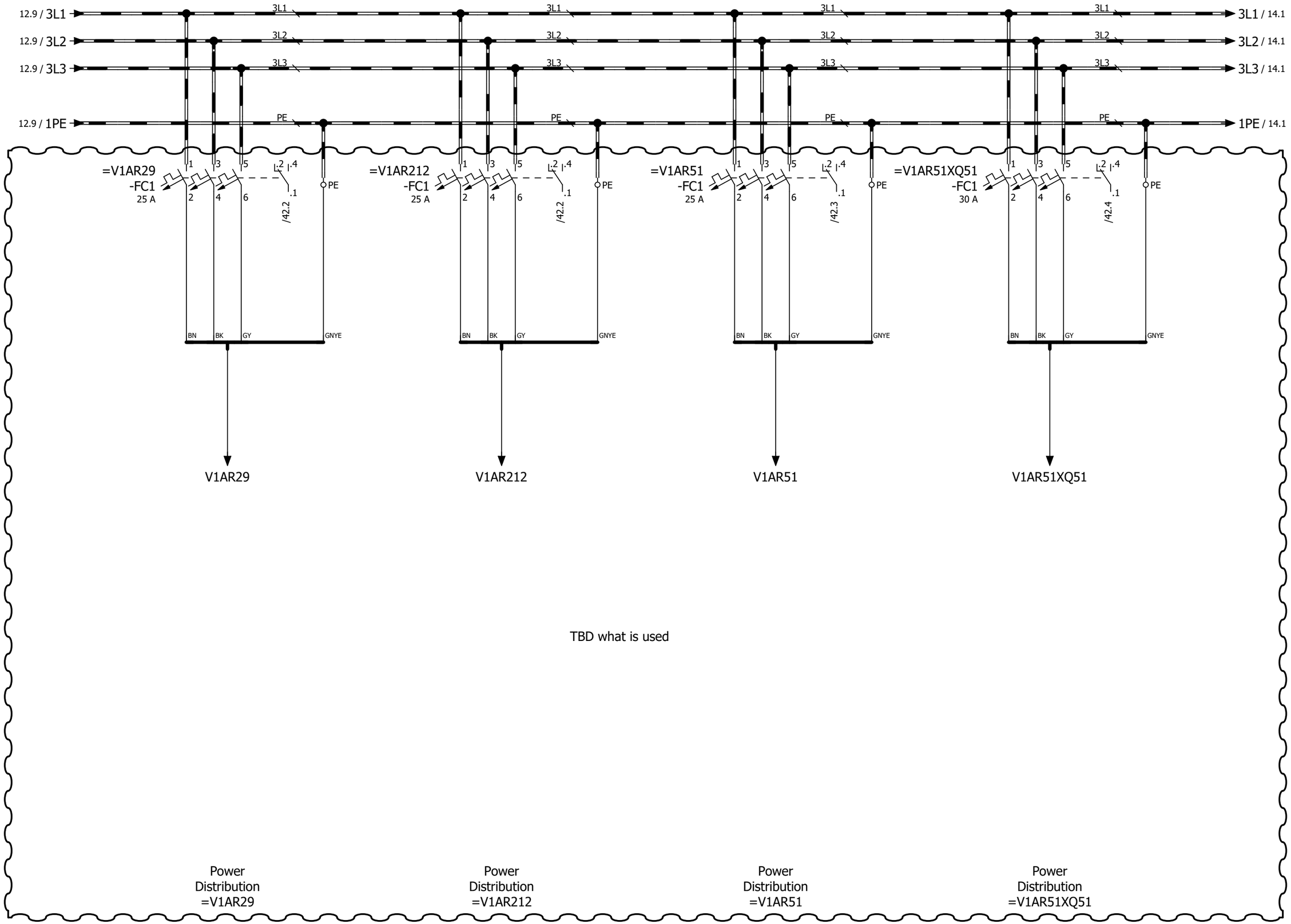

			Date	1/17/2023	Volvo Trucks North America	Valiant TMS	Power distribution 480 VAC	Drawing name: =2V09&EFS-EL		= V1WC2	
			Ed.	MKLEPADLO						+ V1UC12	
			Appr		P6700 Bodyside LH - Robot Cell 2V09	Scale 1:1		Document type: EFS	Project nr: 22-16150	Page	13
Modification	Date	Name	Original		Replacement of	Replaced by					1533

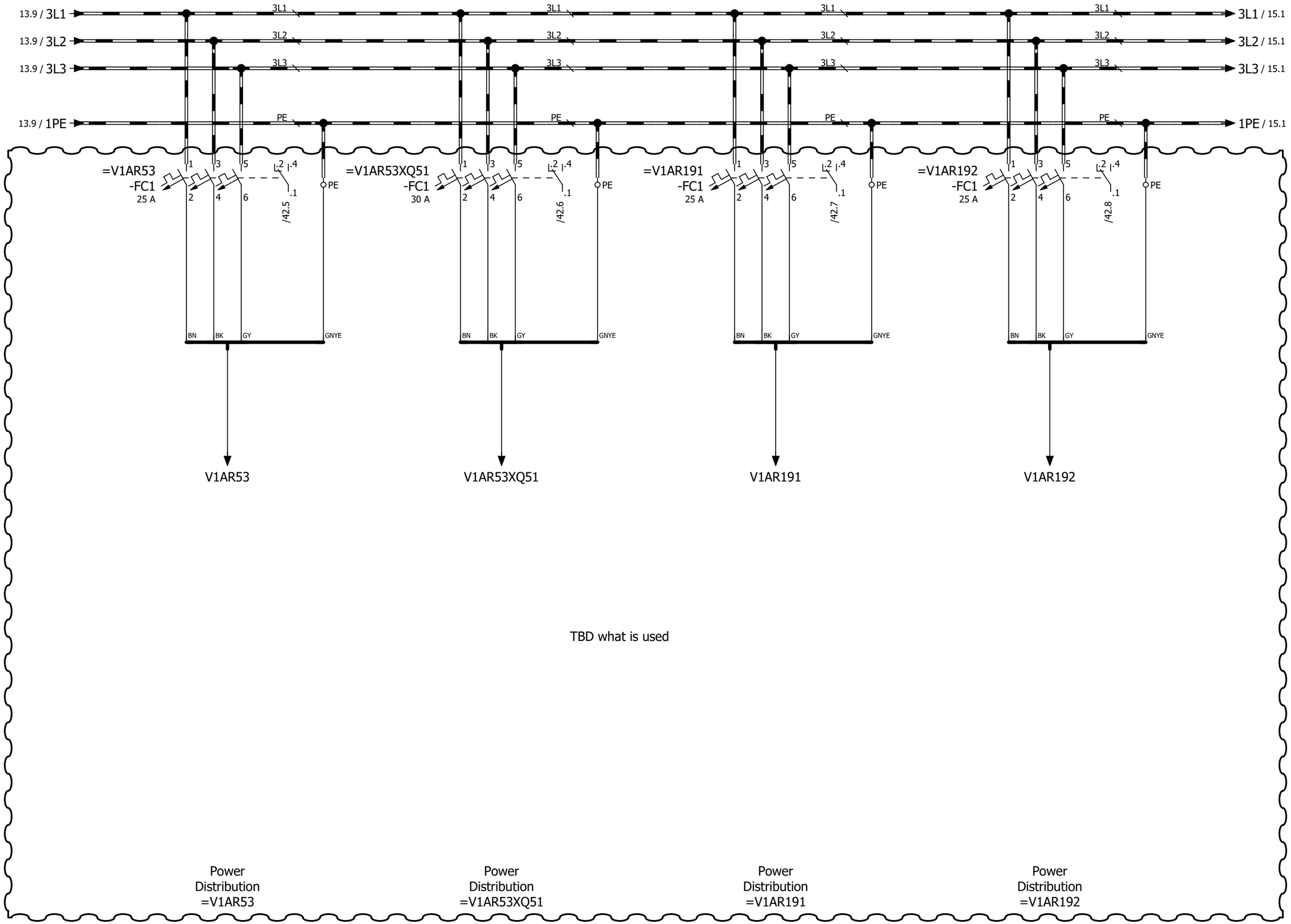

			Date	1/17/2023	Volvo Trucks North America	Valiant TMS	Power distribution 480 VAC	Drawing name: =2V09&EFS-EL		= V1WC2	
			Ed.	MKLEPADLO						+ V1UC12	
			Appr		P6700 Bodyside LH - Robot Cell 2V09	Scale 1:1		Document type: EFS	Project nr: 22-16150	Page	14
Modification	Date	Name	Original		Replacement of	Replaced by					1533

0	1	2	3	4	5	6	7	8	9

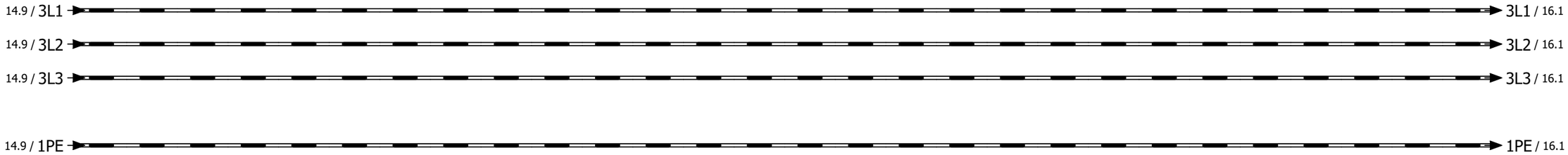

14 16

			Date	1/17/2023	Volvo Trucks North America	Valiant TMS	Power distribution 480 VAC	Drawing name: =2V09&EFS-EL		= V1WC2	
			Ed.	MKLEPADLO						+ V1UC12	
			Appr		P6700 Bodyside LH - Robot Cell 2V09			Document type: EFS	Project nr: 22-16150	Page	15
Modification	Date	Name	Original		Replacement of / Replaced by	Scale 1:1					1533

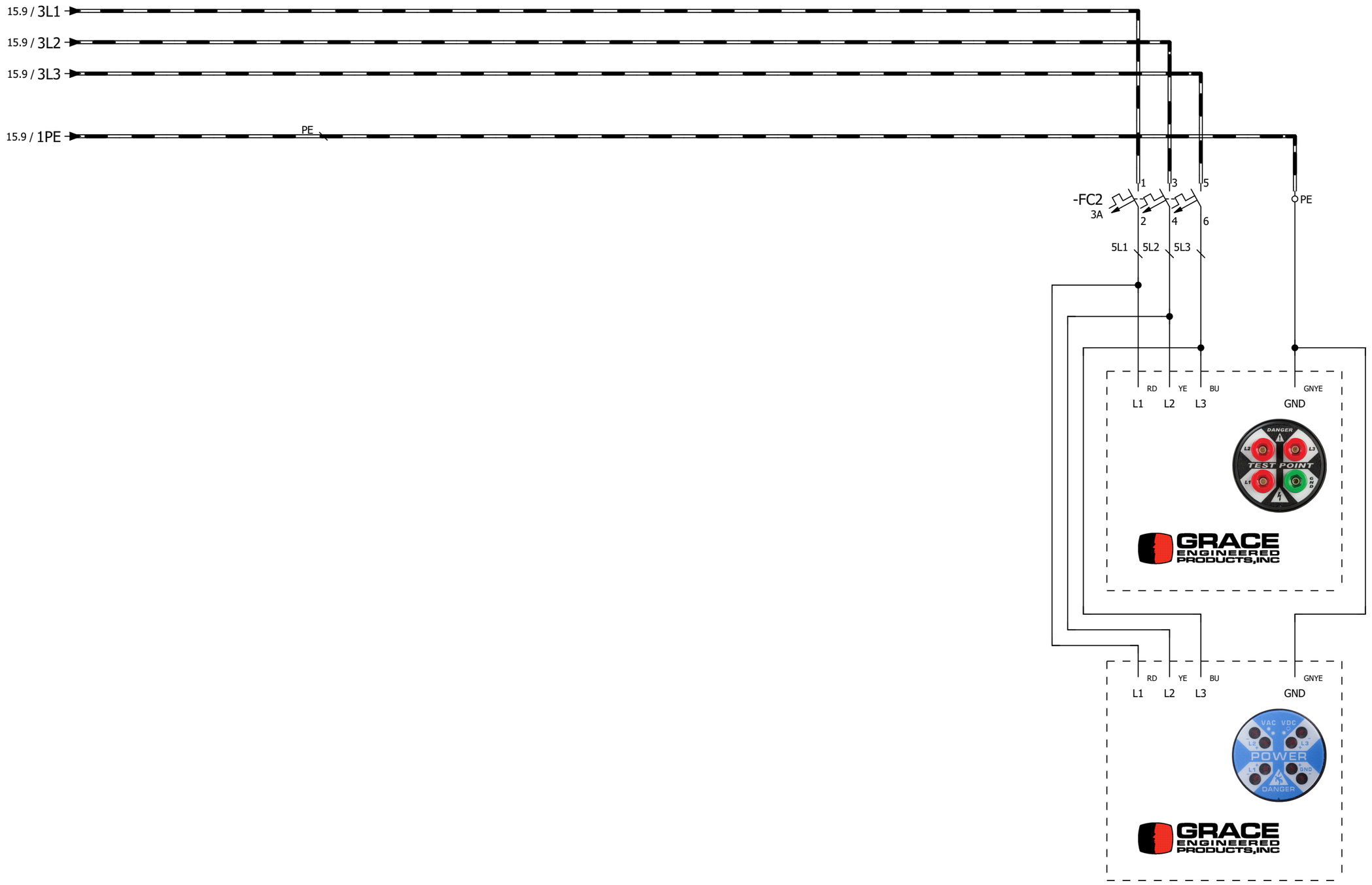

Voltage Test Port /
Indicator Light

			Date	1/17/2023	Volvo Trucks North America	Valiant TMS	Power distribution 480 VAC	Drawing name: =2V09&EFS-EL	= V1WC2	
			Ed.	MKLEPADLO					+ V1UC12	
			Appr		P6700 Bodyside LH - Robot Cell 2V09			Document type: EFS	Project nr: 22-16150	Page 16
Modification	Date	Name	Original		Replacement of / Replaced by	Scale 1:1				1533

=V1KF1

-KF12.11

Monitoring 480 VAC SPARE =V1KF1/9.2	Monitoring 480 VAC =V1UC12-FC1 =V1KF1/9.2			Monitoring 480 VAC SPARE =V1KF1/9.2	Monitoring 480 VAC SPARE =V1KF1/9.2
DI ET200SP	DI ET200SP	=V1WC4/1.0 TA1	=V1WC4/11.0 TA2	=V1WC4/1.1 FC11	=V1WC4/11.1 FC12	DI ET200SP	DI ET200SP
I80.0 DI0	I80.1 DI1					I80.6 DI6	I80.7 DI7
1	2					7	8

I80.1 BUOG 16 AWG

=V1WC2 -FC1 /10.1 .2 .4 .1

3L+1 BUOG 16 AWG

-XD3 1 2 3 4 5

=V1WC4/5.1 / 3L+1

=V1KF1

-KF12.11

Monitoring 480 VAC SPARE =V1KF1/9.2	Monitoring 480 VAC SPARE =V1KF1/9.2	Monitoring 480 VAC SPARE =V1KF1/9.2	Monitoring 480 VAC SPARE =V1KF1/9.2	Monitoring 480 VAC SPARE =V1KF1/9.2	Monitoring 480 VAC SPARE =V1KF1/9.2	Monitoring 480 VAC SPARE =V1KF1/9.2	Monitoring 480 VAC SPARE =V1KF1/9.2
DI ET200SP	DI ET200SP	DI ET200SP	DI ET200SP	DI ET200SP	DI ET200SP	DI ET200SP	DI ET200SP
I81.0 DI8	I81.1 DI9	I81.2 DI10	I81.3 DI11	I81.4 DI12	I81.5 DI13	I81.6 DI14	I81.7 DI15
9	10	11	12	13	14	15	16

			Date	1/17/2023	Volvo Trucks North America	Valiant TMS	Power distribution 480 VAC monitoring	Drawing name: =2V09&EFS-EL	= V1WC2
			Ed.	MKLEPADLO					+ V1UC12
			Appr		P6700 Bodyside LH - Robot Cell 2V09			Document type: EFS	Project nr: 22-16150	Page 41
Modification	Date	Name	Original		Replacement of / Replaced by	Scale 1:1				1533

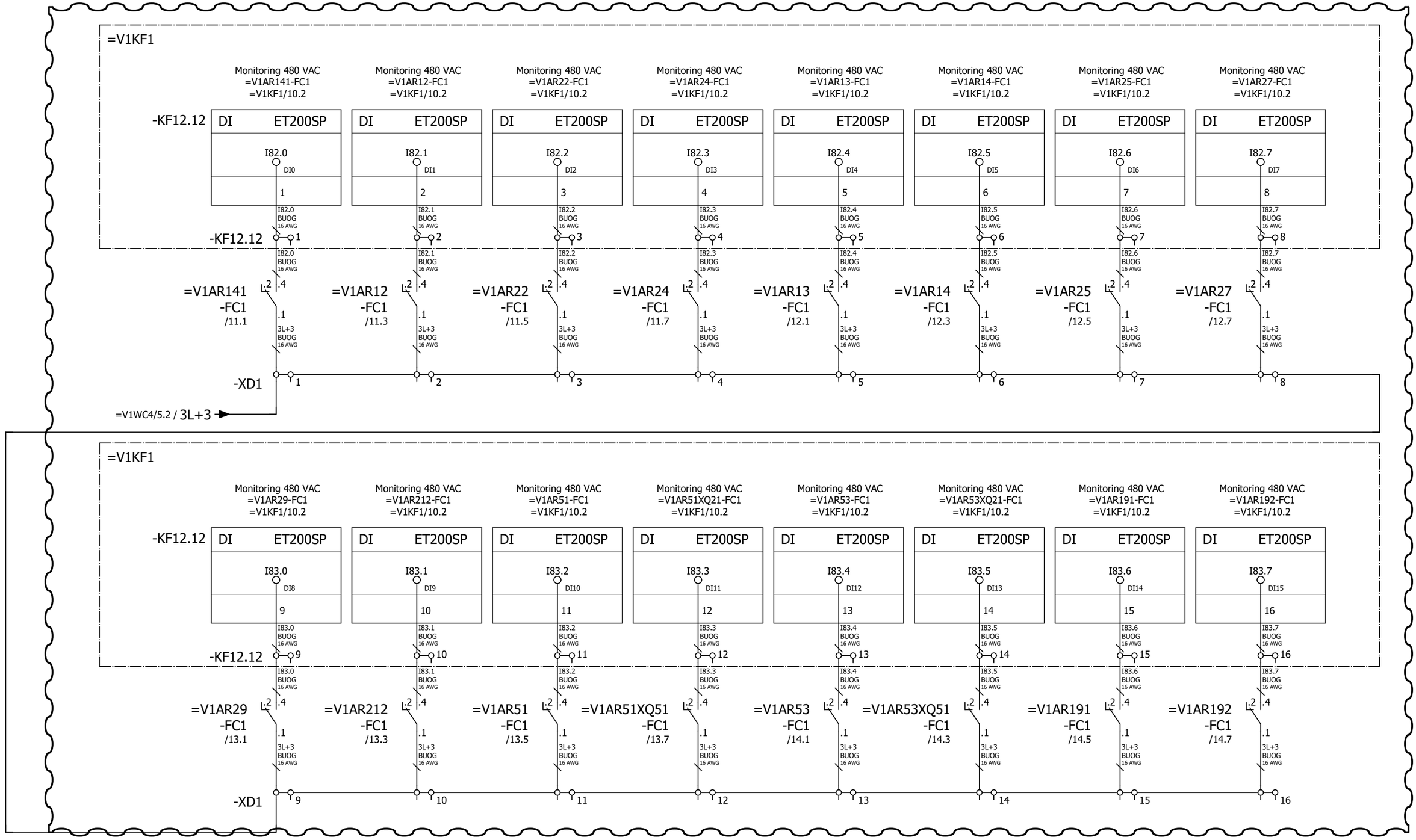

TBD what is used

			Date	1/17/2023	Volvo Trucks North America	Valiant TMS	Power distribution 480 VAC monitoring	Drawing name: =2V09&EFS-EL	= V1WC2	
			Ed.	MKLEPADLO					+ V1UC12	
			Appr		P6700 Bodyside LH - Robot Cell 2V09			Document type: EFS	Project nr: 22-16150	Page 42
Modification	Date	Name	Original		Replacement of / Replaced by	Scale 1:1				1533

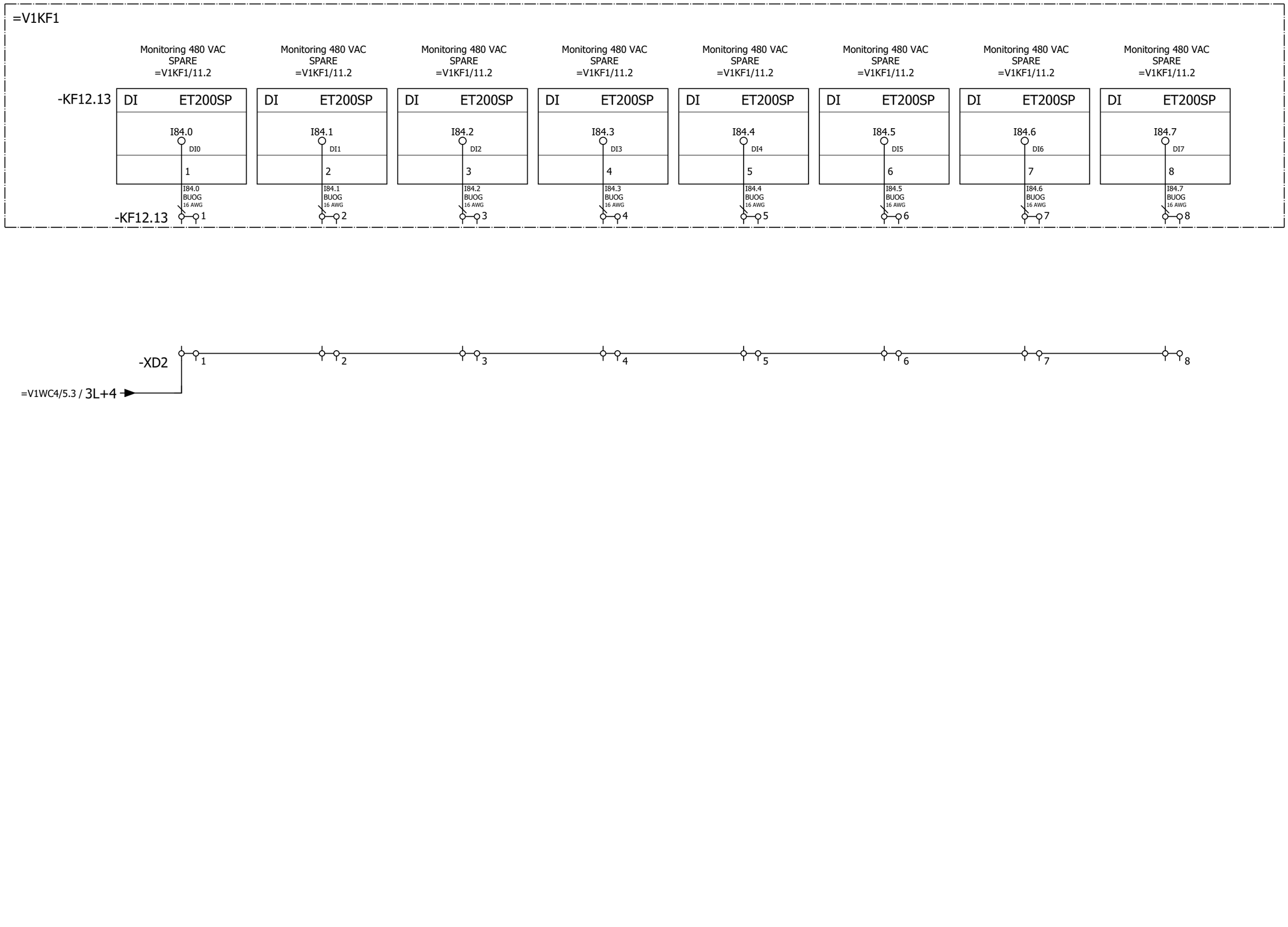

			Date	1/17/2023	Volvo Trucks North America	Valiant TMS	Power distribution 480 VAC monitoring	Drawing name: =2V09&EFS-EL	= V1WC2	
			Ed.	MKLEPADLO					+ V1UC12	
			Appr		P6700 Bodyside LH - Robot Cell 2V09			Document type: EFS	Project nr: 22-16150	Page 43
Modification	Date	Name	Original		Replacement of / Replaced by	Scale 1:1				1533

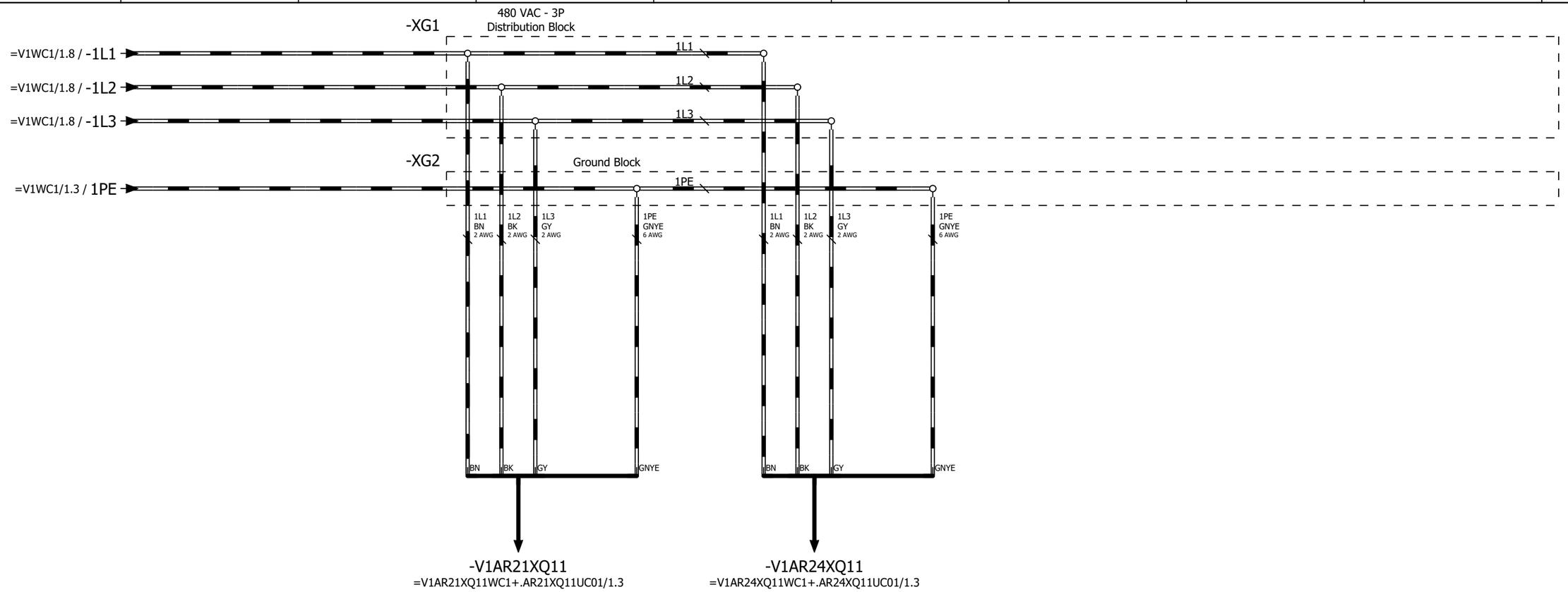

Weld Power Distribution 480 VAC AR21 (Weld Timer) (S010R01)

Weld Power Distribution 480 VAC AR24 (Weld Timer) (S020R01)

+.UC12/43

+.UC162/10

			Date	1/17/2023	Volvo Trucks North America	Valiant TMS	Weld power distribution 480 VAC	Drawing name: =2V09&EFS-EL	= V1WC2	
			Ed.	MKLEPADLO					+ V1UC161	
			Appr		P6700 Bodyside LH - Robot Cell 2V09			Document type: EFS	Project nr: 22-16150	Page 10
Modification	Date	Name	Original		Replacement of / Replaced by	Scale 1:1				1533

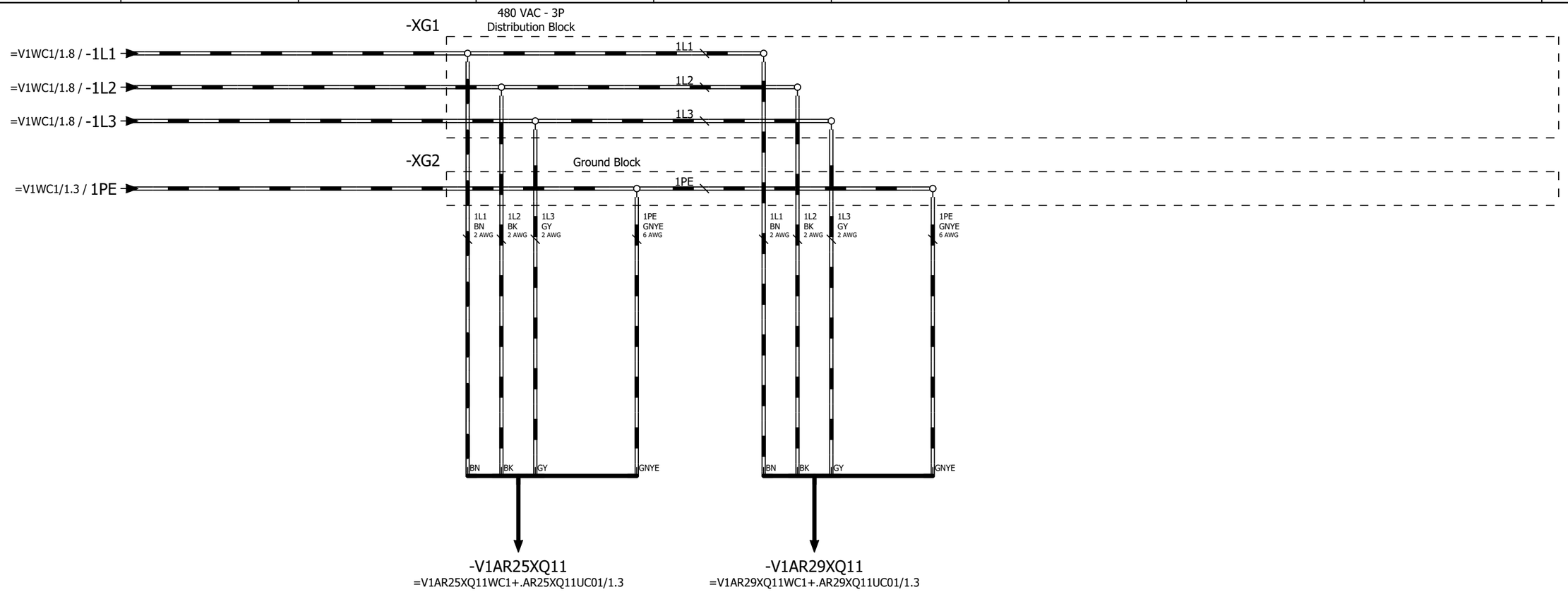

Weld Power Distribution 480 VAC AR25 (Weld Timer) (S020R03)

Weld Power Distribution 480 VAC AR29 (Weld Timer) (S040R03)

+.UC161/10

+.UC163/10

			Date	1/17/2023	Volvo Trucks North America		Valiant TMS	Weld power distribution 480 VAC	Drawing name: =2V09&EFS-EL	= V1WC2	
			Ed.	MKLEPADLO						+ V1UC162	
			Appr		P6700 Bodyside LH - Robot Cell 2V09				Document type: EFS	Project nr: 22-16150	Page 10
Modification	Date	Name	Original		Replacement of	Replaced by	Scale 1:1				1533

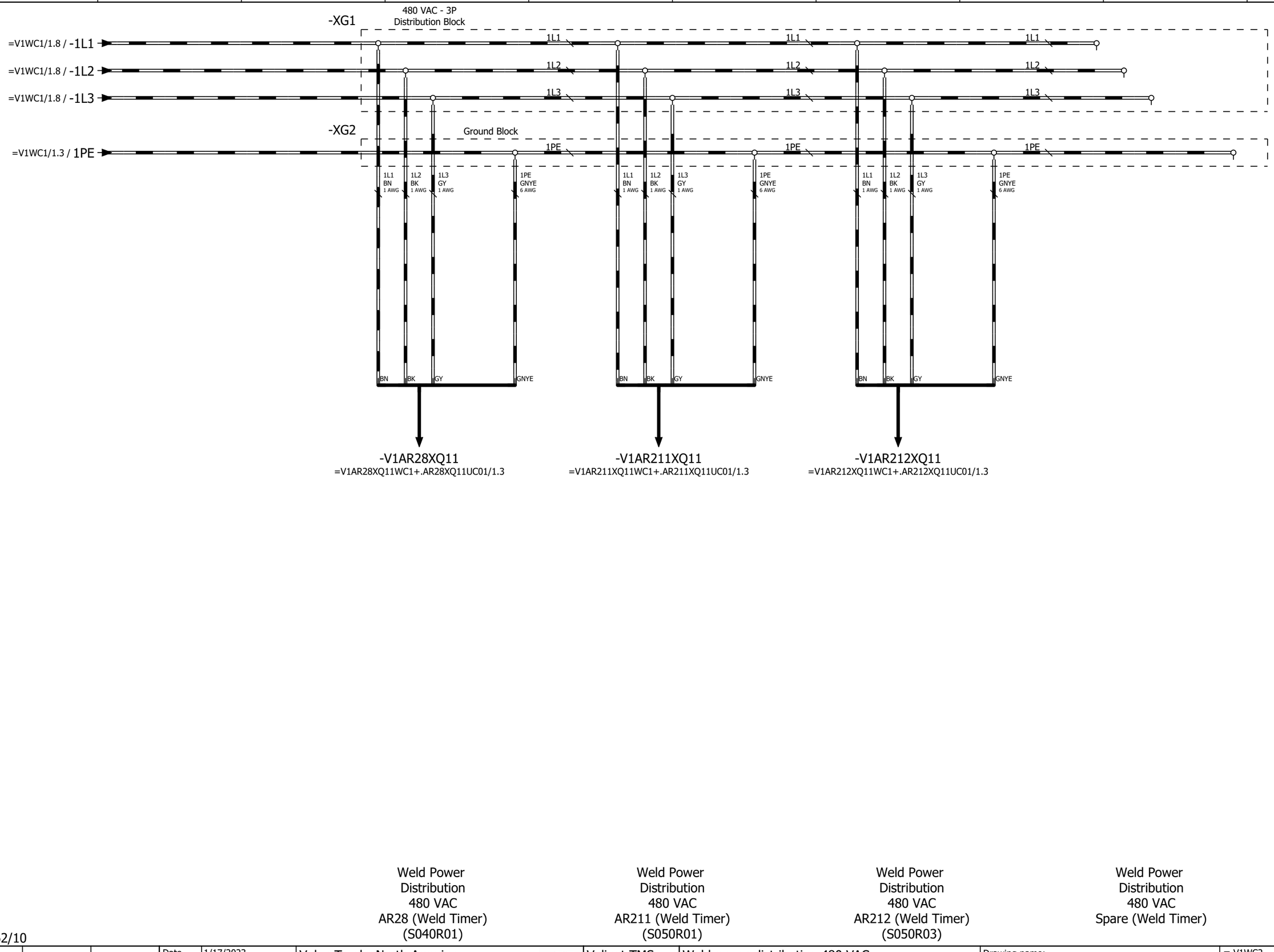

Weld Power Distribution 480 VAC AR28 (Weld Timer) (S040R01)

Weld Power Distribution 480 VAC AR211 (Weld Timer) (S050R01)

Weld Power Distribution 480 VAC AR212 (Weld Timer) (S050R03)

Weld Power Distribution 480 VAC Spare (Weld Timer)

+.UC162/10

+.UC164/10

			Date	1/17/2023	Volvo Trucks North America	Valiant TMS	Weld power distribution 480 VAC	Drawing name: =2V09&EFS-EL	= V1WC2		
			Ed.	MKLEPADLO					+ V1UC163		
			Appr		P6700 Bodyside LH - Robot Cell 2V09			Document type: EFS	Project nr: 22-16150	Page	10
Modification	Date	Name	Original		Replacement of / Replaced by	Scale 1:1					1533

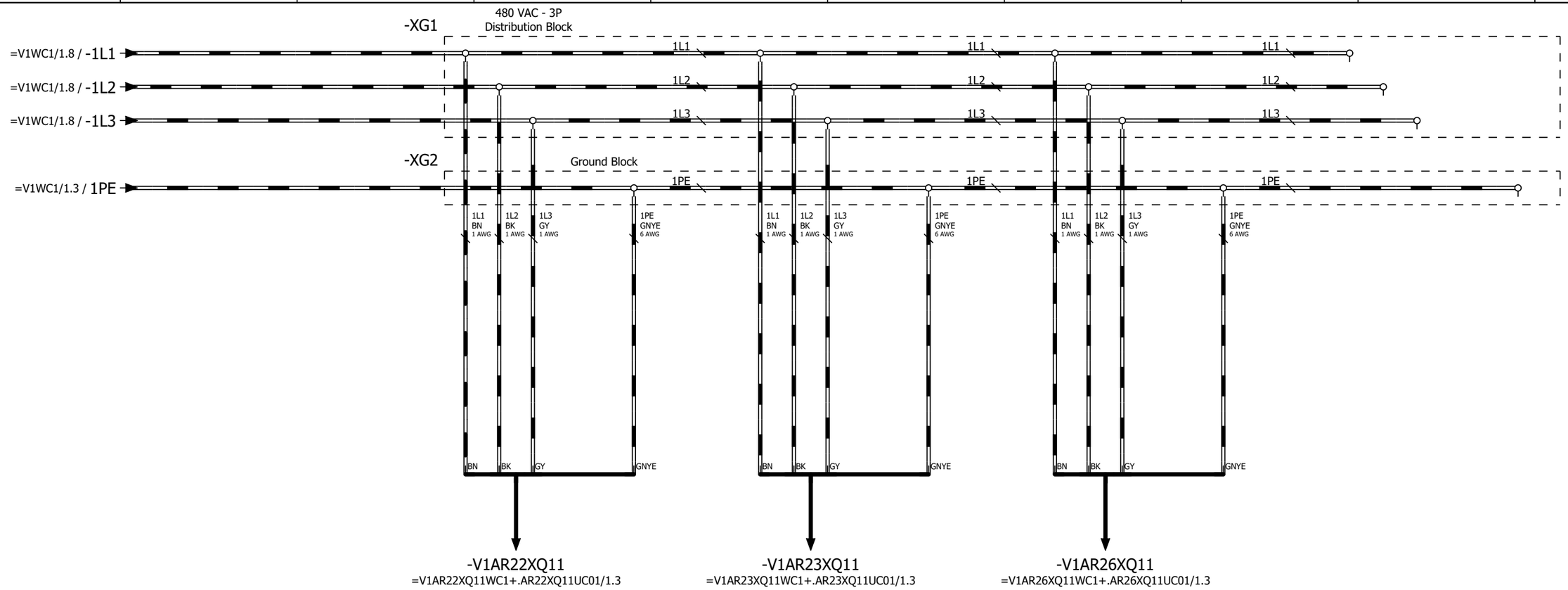

Weld Power Distribution 480 VAC AR22 (Weld Timer) (S010R02)

Weld Power Distribution 480 VAC AR23 (Weld Timer) (S010R04)

Weld Power Distribution 480 VAC AR26 (Weld Timer) (S030R04)

Weld Power Distribution 480 VAC Spare (Weld Timer)

+.UC163/10

=V1WC3+.UC11/1

			Date	1/17/2023	Volvo Trucks North America	Valiant TMS	Weld power distribution 480 VAC	Drawing name: =2V09&EFS-EL	= V1WC2	
			Ed.	MKLEPADLO					+ V1UC164	
			Appr		P6700 Bodyside LH - Robot Cell 2V09	Scale 1:1		Document type: EFS	Project nr: 22-16150	Page 10 / 1533
Modification	Date	Name	Original		Replacement of / Replaced by					

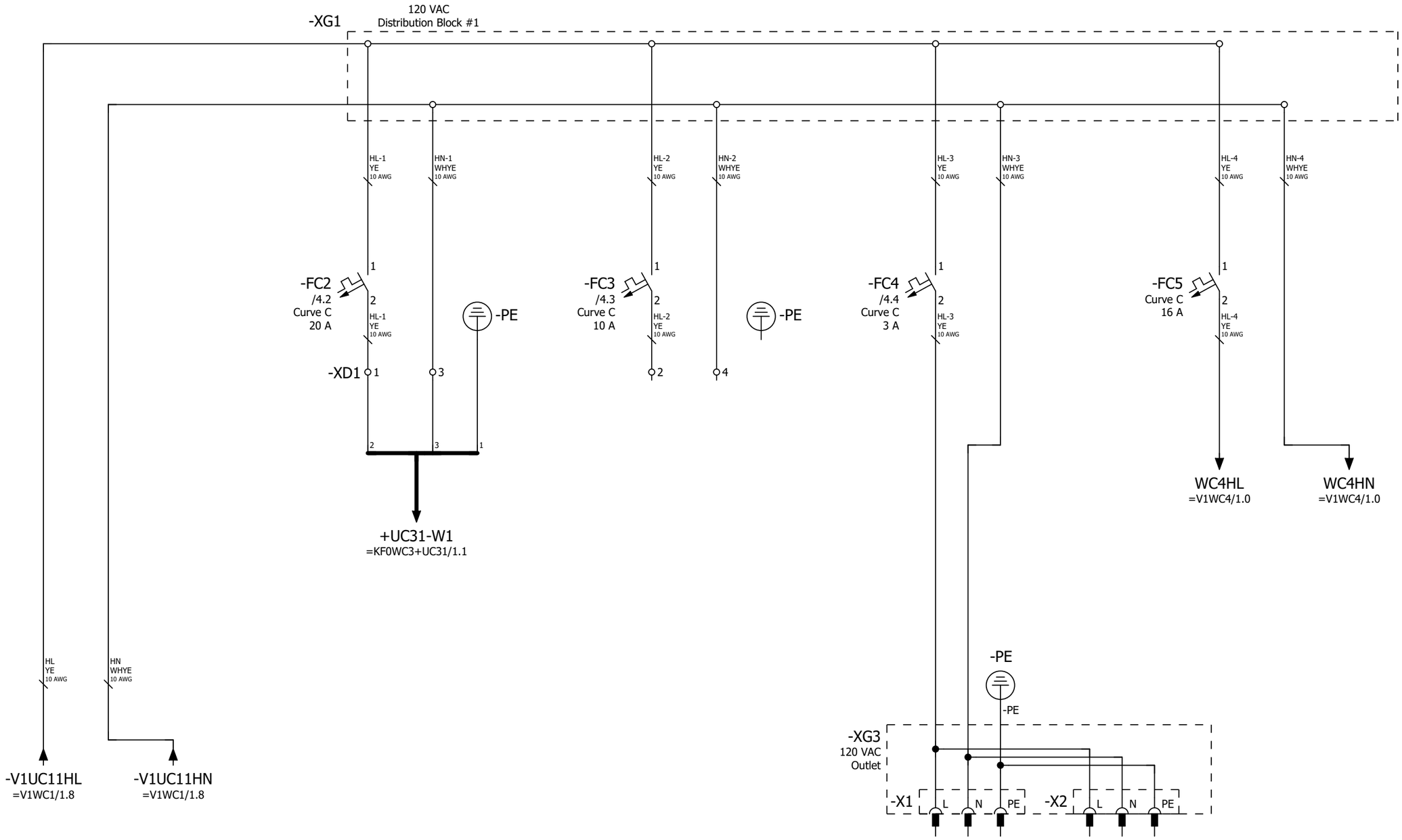

Power Distribution 120 VAC UC31 (MOP)

Power Distribution 120 VAC (SPARE)

Power Distribution 120 VAC Programming Port

Power Distribution 120 VAC To 24VDC Power Supply

=V1WC2+.UC164/10

2

			Date	1/17/2023	Volvo Trucks North America	Valiant TMS	Power Distribution 120 VAC (Above Disconnect)	Drawing name: =2V09&EFS-EL	= V1WC3
			Ed.	MKLEPADLO					+ V1UC11
			Appr		P6700 Bodyside LH - Robot Cell 2V09	Scale 1:1		Document type: EFS	Project nr: 22-16150
Modification	Date	Name	Original		Replacement of / Replaced by				Page 1 / 1533

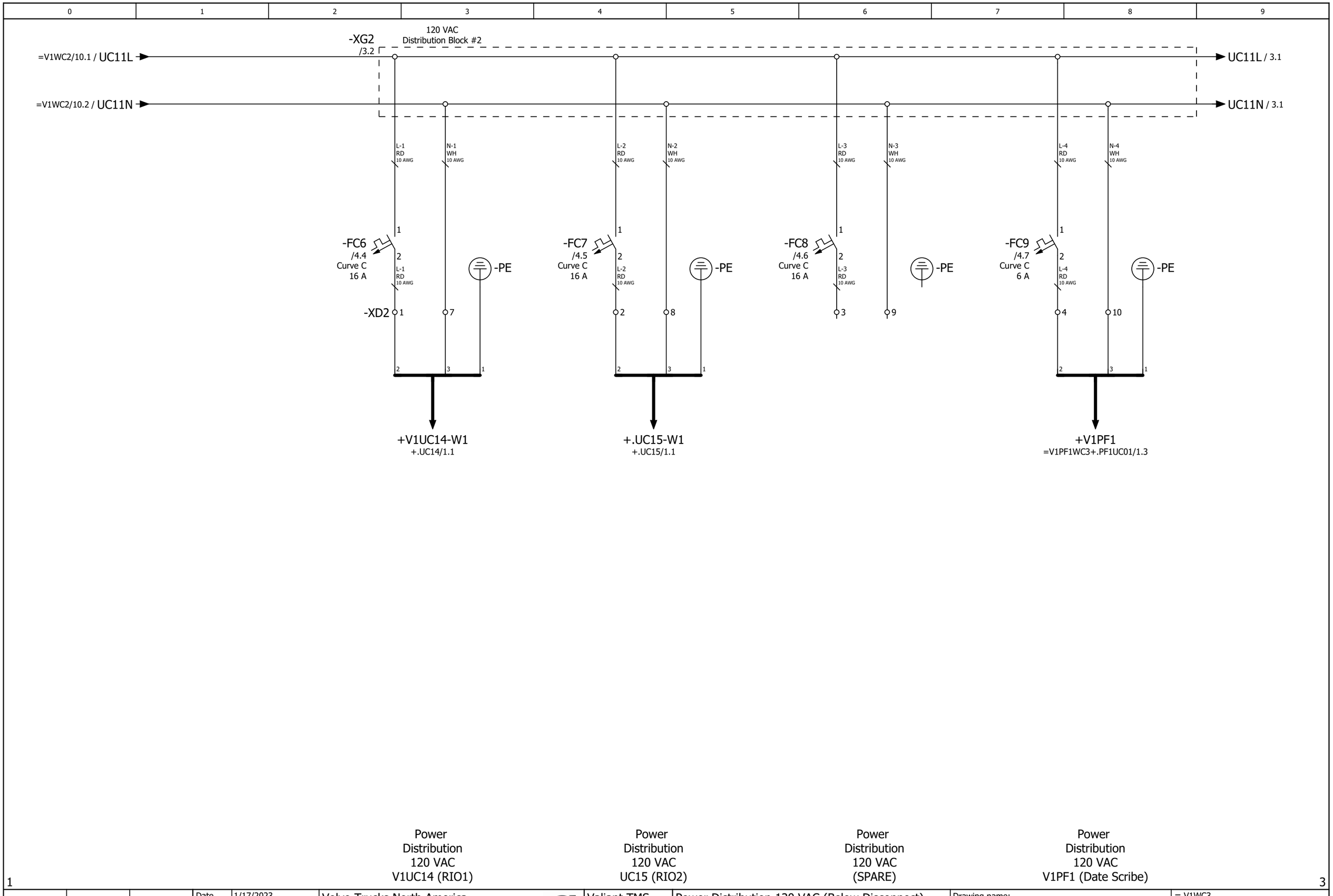

			Date	1/17/2023	Volvo Trucks North America	Valiant TMS	Power Distribution 120 VAC (Below Disconnect)	Drawing name: =2V09&EFS-EL	= V1WC3
			Ed.	MKLEPADLO					+ V1UC11
			Appr		P6700 Bodyside LH - Robot Cell 2V09			Document type: EFS	Project nr: 22-16150
Modification	Date	Name	Original		Replacement of / Replaced by	Scale 1:1			Page 2 / 1533

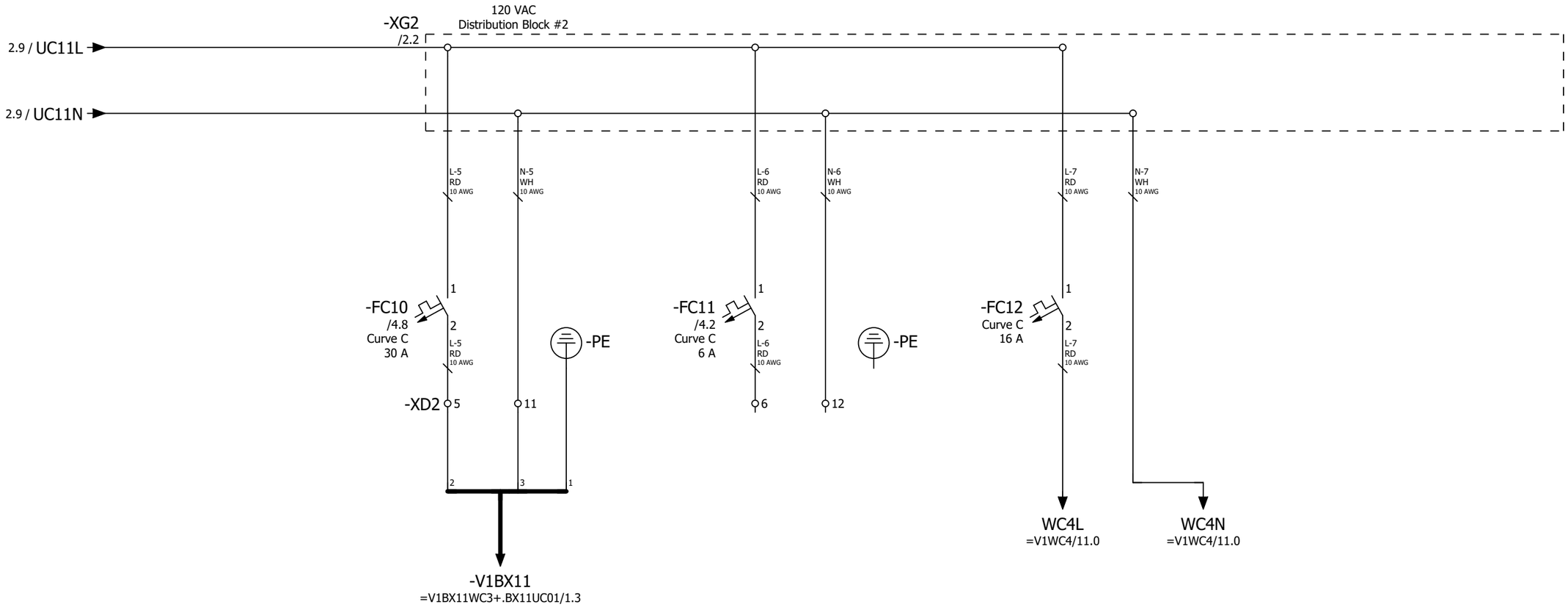

Power Distribution 120 VAC BX11 (AR191 Vision System)

Power Distribution 120 VAC (SPARE)

Power Distribution 120 VAC To 24VDC Power Supply

			Date	1/17/2023	Volvo Trucks North America		Valiant TMS	Power Distribution 120 VAC (Below Disconnect)	Drawing name: =2V09&EFS-EL	= V1WC3	
			Ed.	MKLEPADLO						+ V1UC11	
			Appr		P6700 Bodyside LH - Robot Cell 2V09				Document type: EFS	Project nr: 22-16150	Page 3
Modification	Date	Name	Original		Replacement of	Replaced by	Scale 1:1				1533

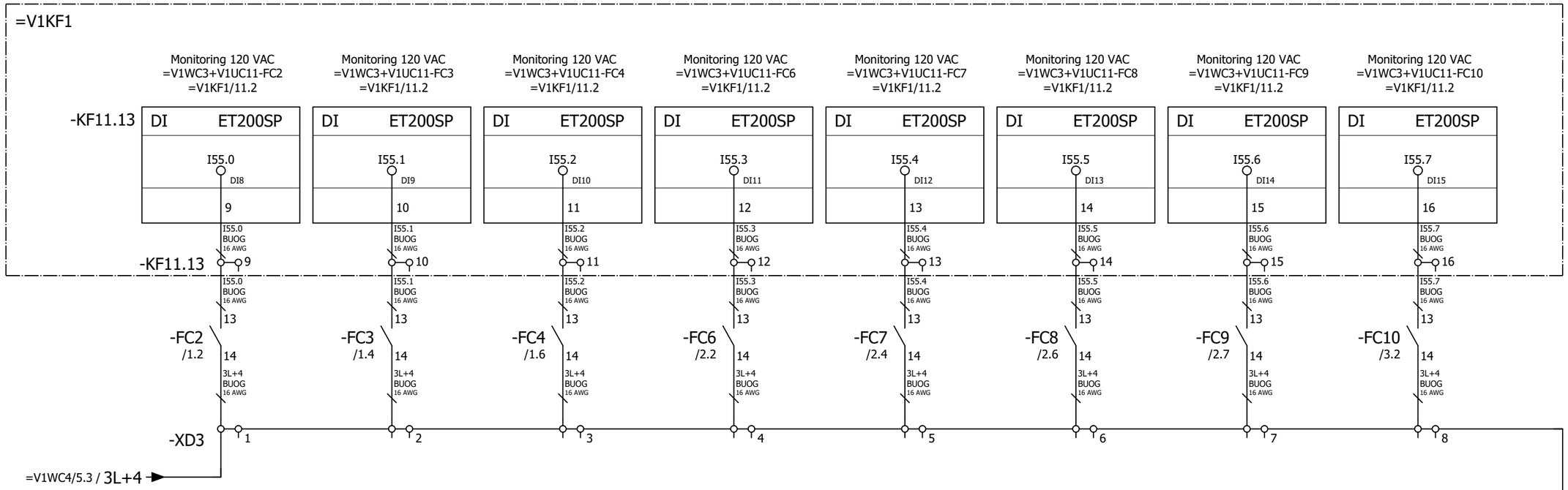

			Date	1/17/2023	Volvo Trucks North America	Valiant TMS	Power distribution 120 VAC monitoring (Above Disconnect)	Drawing name: =2V09&EFS-EL	= V1WC3
			Ed.	MKLEPADLO					+ V1UC11
			Appr		P6700 Bodyside LH - Robot Cell 2V09	Scale 1:1		Document type: EFS	Project nr: 22-16150
Modification	Date	Name	Original		Replacement of / Replaced by				Page 4 / 1533

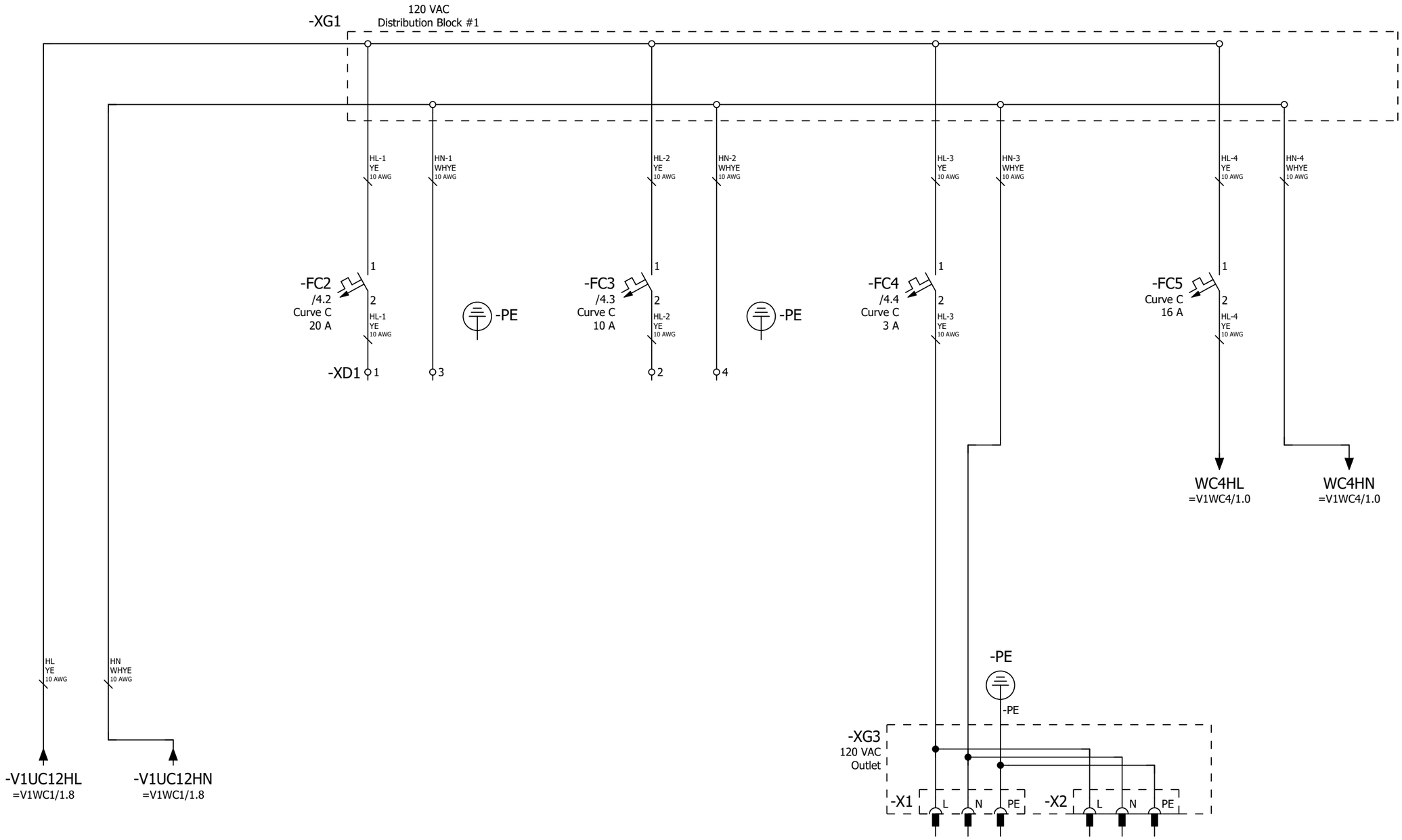

Power Distribution 120 VAC (SPARE)

Power Distribution 120 VAC (SPARE)

Power Distribution 120 VAC Programming Port

Power Distribution 120 VAC To 24VDC Power Supply

+.UC11/4

2

			Date	1/17/2023	Volvo Trucks North America	Valiant TMS	Power Distribution 120 VAC (Above Disconnect)	Drawing name: =2V09&EFS-EL	= V1WC3
			Ed.	MKLEPADLO					+ V1UC12
			Appr		P6700 Bodyside LH - Robot Cell 2V09	Scale 1:1		Document type: EFS	Project nr: 22-16150
Modification	Date	Name	Original		Replacement of / Replaced by				Page 1 / 1533

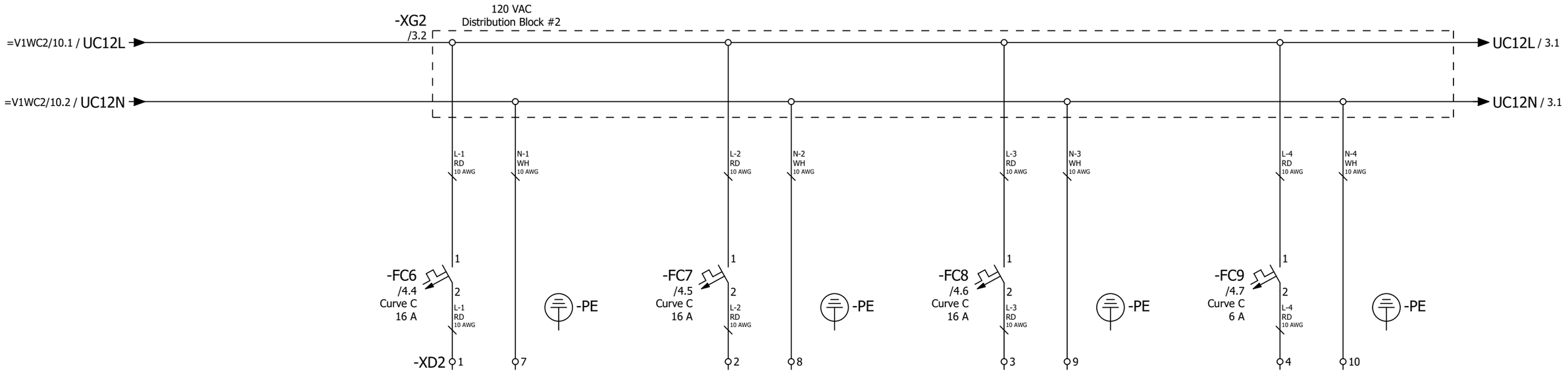

1	Power Distribution 120 VAC (SPARE)	Power Distribution 120 VAC (SPARE)	Power Distribution 120 VAC (SPARE)	Power Distribution 120 VAC (SPARE)	3

			Date	1/17/2023	Volvo Trucks North America	Valiant TMS	Power Distribution 120 VAC (Below Disconnect)	Drawing name: =2V09&EFS-EL	= V1WC3		
			Ed.	MKLEPADLO					+ V1UC12		
			Appr		P6700 Bodyside LH - Robot Cell 2V09			Document type: EFS	Project nr: 22-16150	Page	2
Modification	Date	Name	Original		Replacement of	Replaced by	Scale 1:1				1533

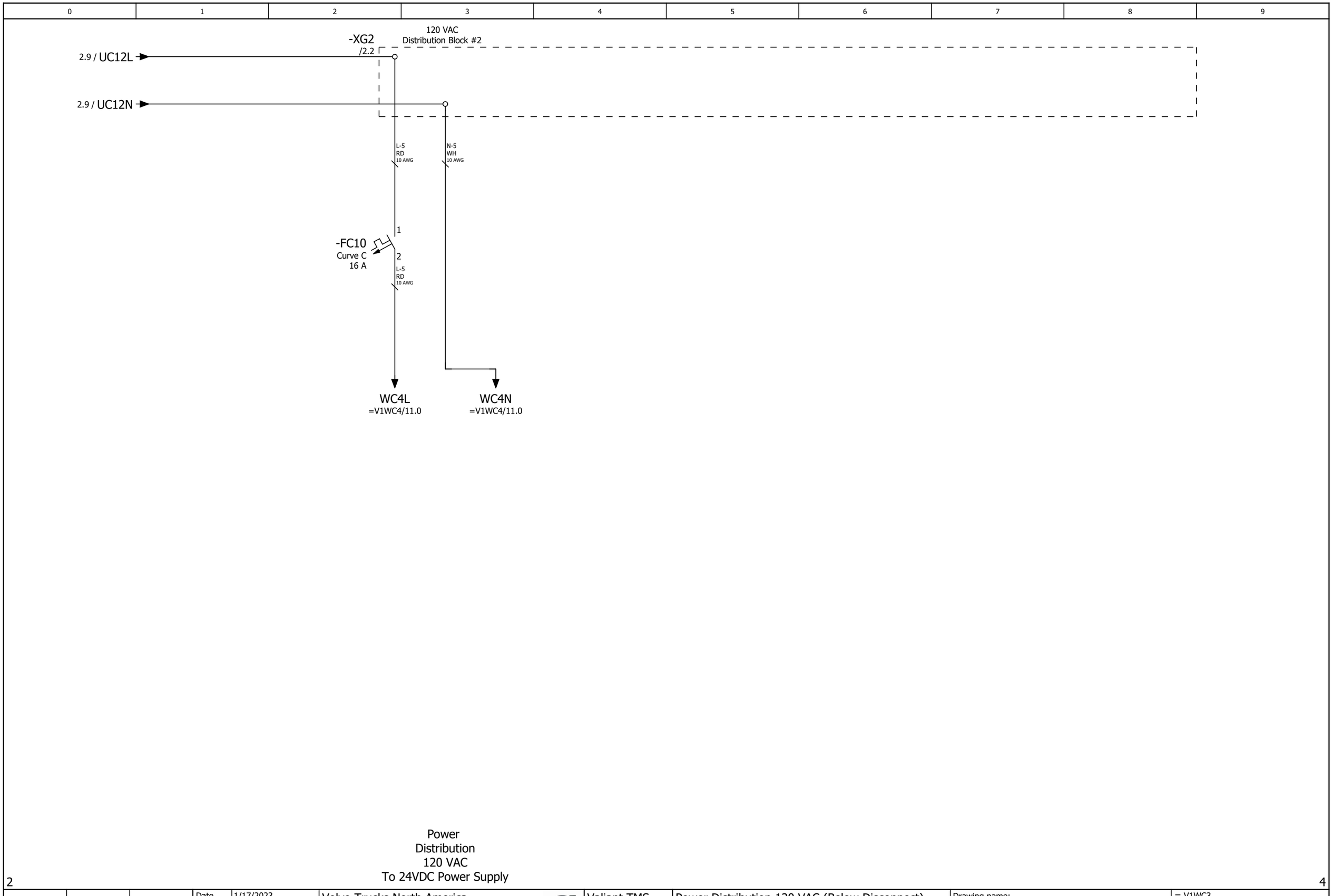

			Date	1/17/2023	Volvo Trucks North America	Valiant TMS	Power Distribution 120 VAC (Below Disconnect)	Drawing name: =2V09&EFS-EL	= V1WC3	
			Ed.	MKLEPADLO					+ V1UC12	
			Appr		P6700 Bodyside LH - Robot Cell 2V09			Document type: EFS	Project nr: 22-16150	Page 3
Modification	Date	Name	Original		Replacement of / Replaced by	Scale 1:1				1533

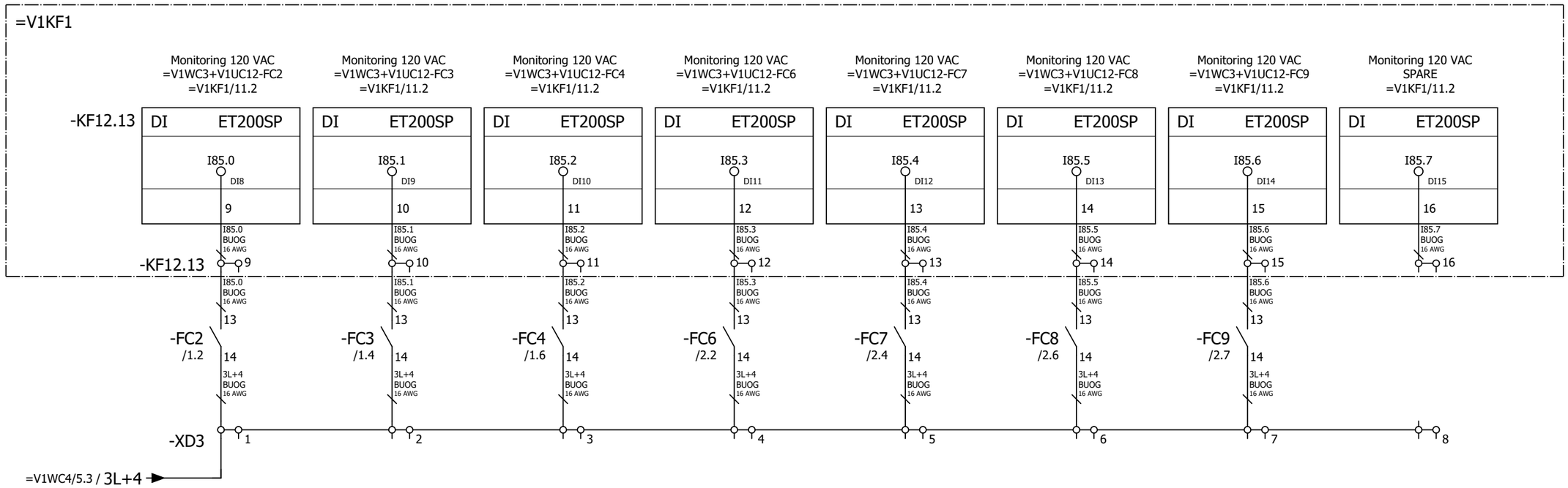

			Date	1/17/2023	Volvo Trucks North America	Valiant TMS	Power distribution 120 VAC monitoring (Above Disconnect)	Drawing name: =2V09&EFS-EL	= V1WC3	
			Ed.	MKLEPADLO					+ V1UC12	
			Appr		P6700 Bodyside LH - Robot Cell 2V09			Document type: EFS	Project nr: 22-16150	Page 4
Modification	Date	Name	Original		Replacement of / Replaced by	Scale 1:1				1533

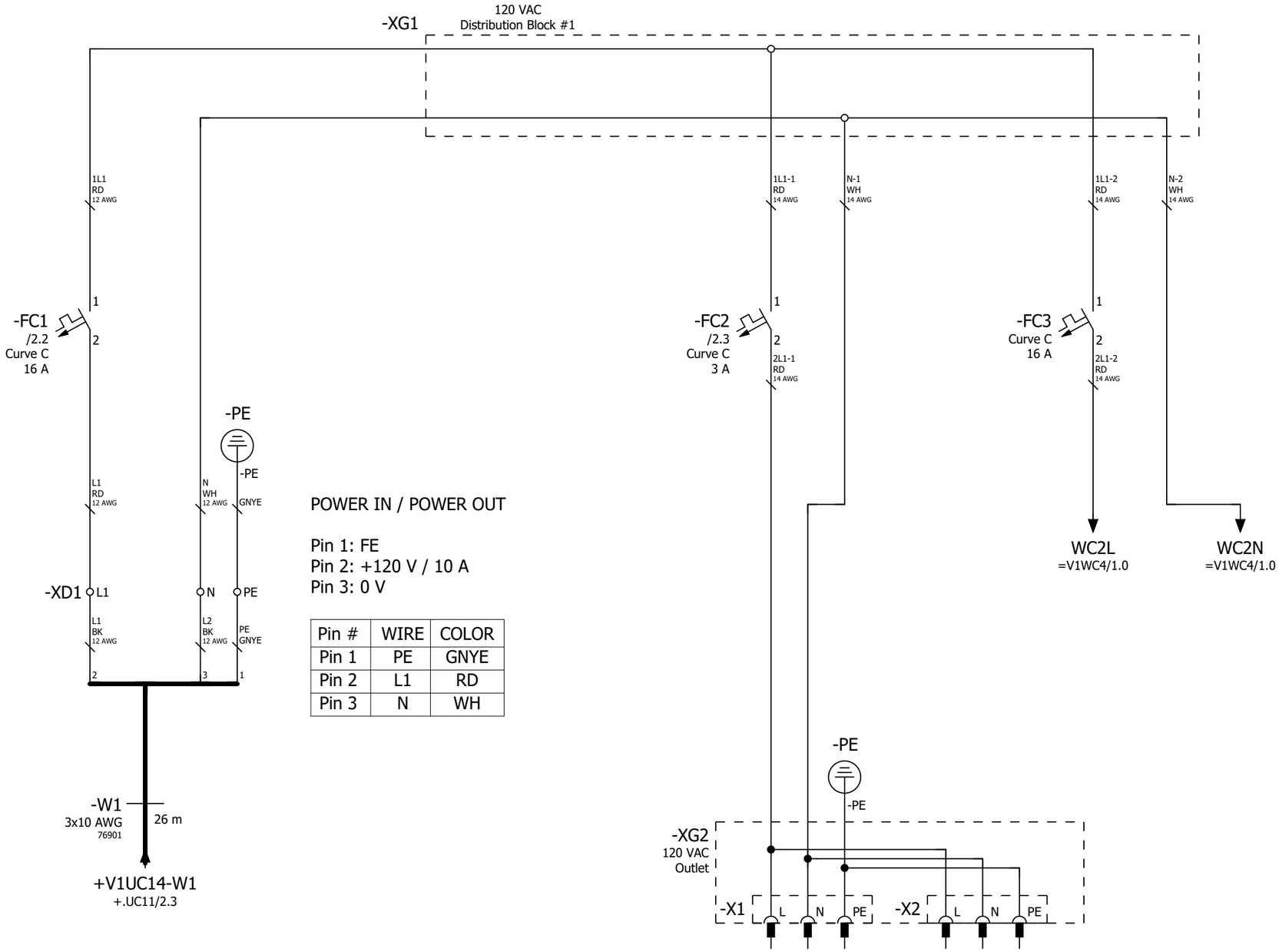

Pin #	WIRE	COLOR
Pin 1	PE	GNYE
Pin 2	L1	RD
Pin 3	N	WH

Power
Distribution
120 VAC
Programming Port

Power
Distribution
120 VAC
To 24VDC Power Supply

+.UC12/4

2

			Date	1/17/2023	Volvo Trucks North America		Valiant TMS	Power distribution 120 VAC	Drawing name: =2V09&EFS-EL	= V1WC3
			Ed.	MKLEPADLO						+ V1UC14
			Appr		P6700 Bodyside LH - Robot Cell 2V09				Document type: EFS	Project nr: 22-16150
Modification	Date	Name	Original		Replacement of	Replaced by	Scale 1:1			Page 1 / 1533

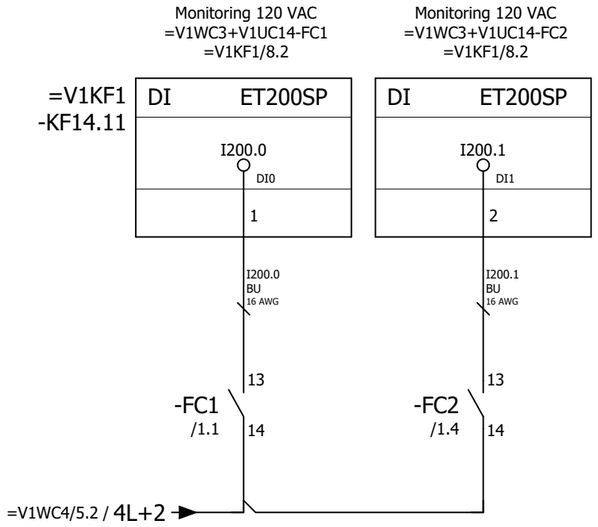

			Date	1/17/2023	Volvo Trucks North America	Valiant TMS	Monitoring 120VAC	Drawing name: =2V09&EFS-EL		= V1WC3	
			Ed.	MKLEPADLO						+ V1UC14	
			Appr		P6700 Bodyside LH - Robot Cell 2V09			Document type: EFS	Project nr: 22-16150	Page	2
Modification	Date	Name	Original		Replacement of / Replaced by	Scale 1:1					1533

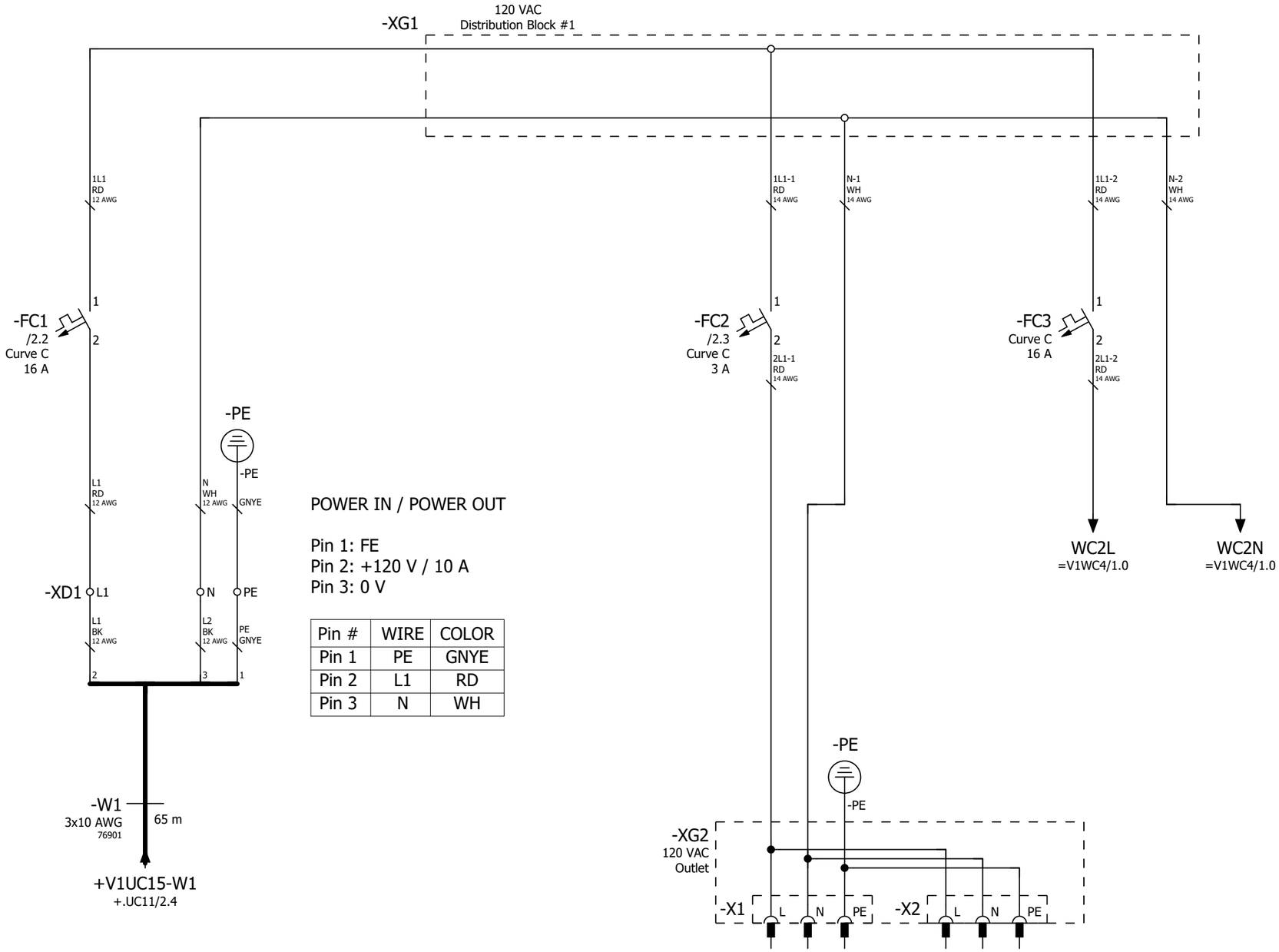

Pin #	WIRE	COLOR
Pin 1	PE	GNYE
Pin 2	L1	RD
Pin 3	N	WH

Power
Distribution
120 VAC
Programming Port

Power
Distribution
120 VAC
To 24VDC Power Supply

+.UC14/2

2

			Date	1/17/2023	Volvo Trucks North America		Valiant TMS	Power distribution 120 VAC	Drawing name: =2V09&EFS-EL	= V1WC3
			Ed.	MKLEPADLO						+ V1UC15
			Appr		P6700 Bodyside LH - Robot Cell 2V09				Document type: EFS	Project nr: 22-16150
Modification	Date	Name	Original		Replacement of	Replaced by	Scale 1:1			Page 1 / 1533

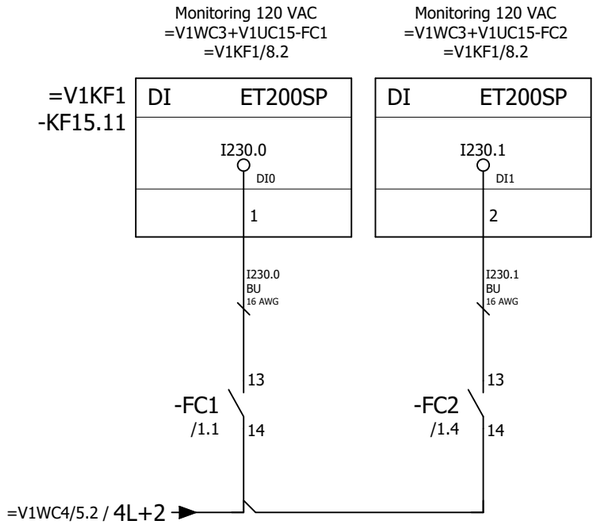

1

=V1WC4+.UC11/1

			Date	1/17/2023	Volvo Trucks North America	Valiant TMS	Monitoring 120VAC	Drawing name: =2V09&EFS-EL	= V1WC3	
			Ed.	MKLEPADLO					+ V1UC15	
			Appr		P6700 Bodyside LH - Robot Cell 2V09			Document type: EFS	Project nr: 22-16150	Page 2
Modification	Date	Name	Original		Replacement of / Replaced by	Scale 1:1				1533

0	1	2	3	4	5	6	7	8	9

=V1WC3/1.7 / WC4HL

=V1WC3/1.8 / WC4HN

-PE

-TA1
IN: AC 120-230 V,
DC 110-240 V
OUT: DC 24 V/20 A

L1/+ N/L2/- PE

SIEMENS
SITOP PSU6200 1ph 24 V/20 A
6EP3336-7SB00-3AX0

ADJUST
24 ... 28V
DEFAULT VALUE
24V

COM HV PO

>20 V CLOSED

+1 +2 -1 -2 -3 13 14

Monitoring 24VDC
=V1WC4+V1UC11-TA1_I
=V1KF1/9.2

DI ET200SP
I50.2
DI2
3

=V1KF1
-KF11.11

TA1 BUOG 16 AWG
M1 WHOG 12 AWG
-PE
3L+1 BUOG 16 AWG
I50.2 BUOG 16 AWG

=V1WC2/41.4 / TA1

M1
2.1

-XD5 1

-FC11
In: DC 24V
Out: 8 x DC 24V/10A

SIEMENS
SITOP SEL1200 8 x 10A
6EP4438-7FB00-3DX0

COM TD2 TD1

24V1 INPUT 24V2

E--- RESET

CONTROL LOGIC

13 14 NF RST 0V1 0V2

OUTPUT

1 2 3 4 5 6 7 8

Monitoring 24VDC
=V1WC4+V1UC11-FC11_I
=V1KF1/9.2

DI ET200SP
I50.4
DI4
5

=V1KF1
-KF11.11

3L+1 BUOG 16 AWG
I50.4 BUOG 16 AWG

=V1WC2/41.5 / FC11

2.1 / 1M1

1L+ BUOG 16 AWG
2L+ BUOG 16 AWG
3L+ BUOG 16 AWG
4L+ BUOG 16 AWG
5L+ RD 16 AWG
6L+ RD 16 AWG
7L+ RD 16 AWG
8L+ RD 16 AWG

3.1 / -1L+
4.1 / -2L+
5.1 / -3L+
6.1 / -4L+
20.5 / -5L+
21.5 / -6L+
22.5 / -7L+
23.5 / -8L+

=V1WC3+.UC15/2

2

			Date	1/17/2023	Volvo Trucks North America		Valiant TMS	Power distribution 24VDC (Above Disconnect)	Drawing name: =2V09&EFS-EL	= V1WC4
			Ed.	MKLEPADLO						+ V1UC11
			Appr		P6700 Bodyside LH - Robot Cell 2V09		Scale 1:1		Document type: EFS	Project nr: 22-16150	Page 1
Modification	Date	Name	Original		Replacement of	Replaced by					1533

0	1	2	3	4	5	6	7	8	9

0VDC
Selectivity Module FC11

1.1 / M1

M1 / 3.1

-XD10

1

1M1
WHOG
12 AWG

1.2 / 1M1

1

3

			Date	1/17/2023	Volvo Trucks North America	Valiant TMS	Power distribution 24VDC HL+	Drawing name: =2V09&EFS-EL	= V1WC4	
			Ed.	MKLEPADLO					+ V1UC11	
			Appr		P6700 Bodyside LH - Robot Cell 2V09			Document type: EFS	Project nr: 22-16150	Page 2
Modification	Date	Name	Original		Replacement of	Replaced by	Scale 1:1			1533

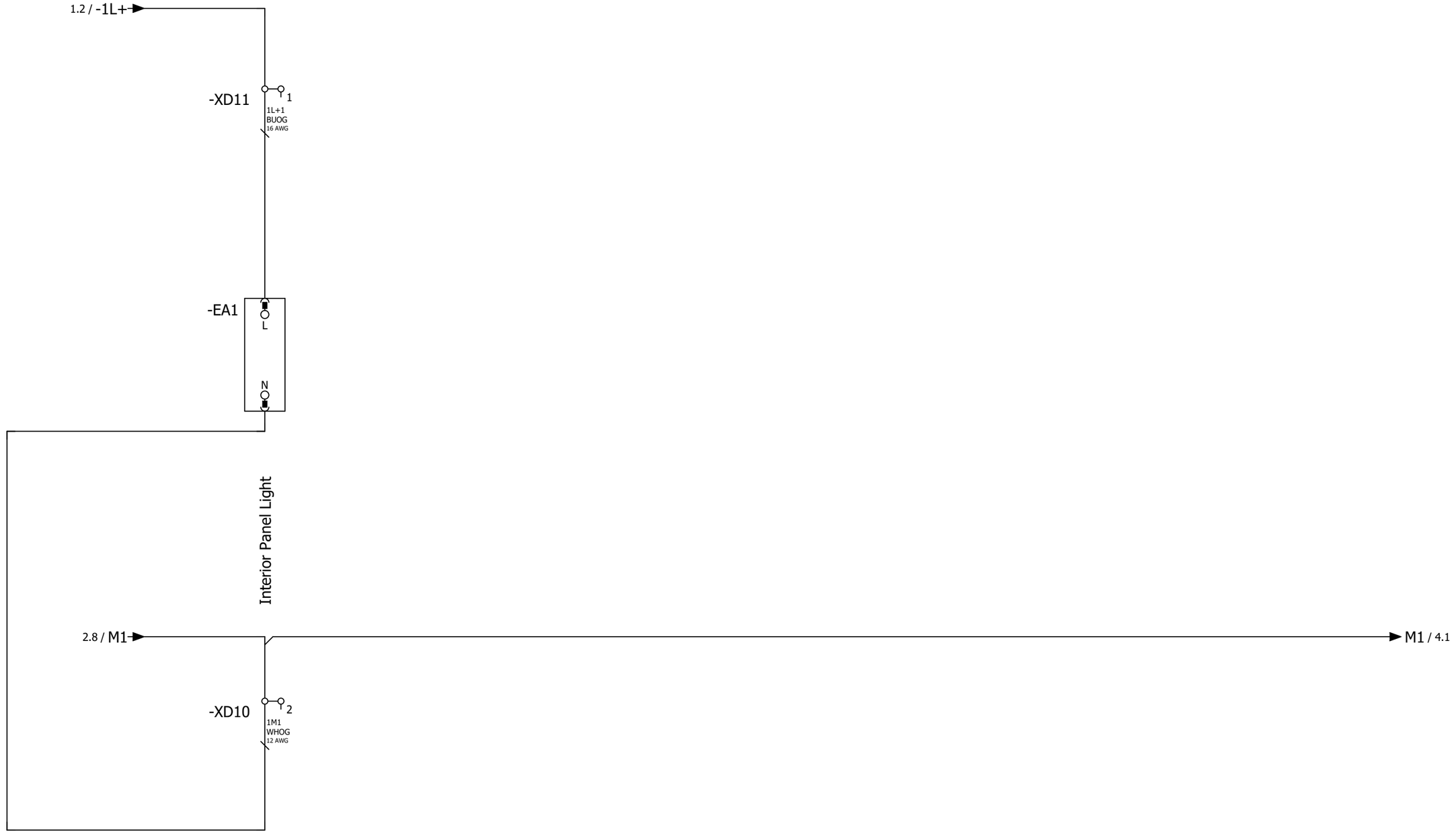

			Date	1/17/2023	Volvo Trucks North America	Valiant TMS	Power distribution 24VDC 1L+	Drawing name: =2V09&EFS-EL	= V1WC4	
			Ed.	MKLEPADLO					+ V1UC11	
			Appr		P6700 Bodyside LH - Robot Cell 2V09			Document type: EFS	Project nr: 22-16150	Page 3
Modification	Date	Name	Original		Replacement of	Replaced by	Scale 1:1			1533

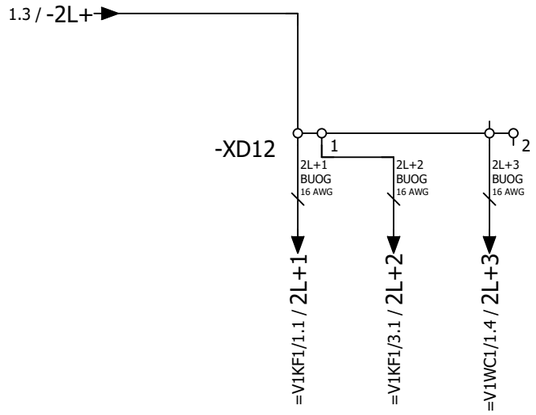

XC216 Profinet Switch

IM155 PN

Main Circuit Breaker

3 5

			Date	1/17/2023	Volvo Trucks North America		Valiant TMS	Power distribution 24VDC 2L+	Drawing name: =2V09&EFS-EL	= V1WC4
			Ed.	MKLEPADLO						+ V1UC11
			Appr		P6700 Bodyside LH - Robot Cell 2V09				Document type: EFS	Project nr: 22-16150
Modification	Date	Name	Original		Replacement of	Replaced by	Scale 1:1			Page 4 / 1533

1.4 / -3L+

-XD13

Power feedback signals
Distribution Modules

=V1WC2/41.1 / 3L+1 — 3L+1 BUOG 16 AWG — 1

Power Input Cards (DI+FDI)

=V1KF1/4.1 / 3L+2 — 3L+2 BUOG 16 AWG — 2

Power feedback signals
Circuit Breakers

=V1WC2/42.1 / 3L+3 — 3L+3 BUOG 16 AWG — 3

Power feedback signals
Circuit Breakers

=V1WC2/43.1 / 3L+4
=V1WC3/4.1 / 3L+4 — 3L+4 BUOG 16 AWG — 4

Power Main Water On Monitoring,
Power Water Filter Dirty Monitoring

=KH3+KH3/1.4 / 3L+5
=KH3+KH3/2.4 / 3L+5 — 3L+5 BN 16 AWG — 5

Power Air Monitoring,
S040 Geo, S055 Pass Table

=KH0+KH0/5.4 / 3L+6
=KH0+KH0/7.4 / 3L+6 — 3L+6 BN 16 AWG — 6

Power Main Air Monitoring,
S050 Fixture

=KH0+KH0/1.4 / 3L+7
=KH0+KH0/6.4 / 3L+7 — 3L+7 BN 16 AWG — 7

Power Air Monitoring,
S060 Fixture, S080 Conveyor

=KH0+KH0/8.4 / 3L+8
=KH0+KH0/9.4 / 3L+8 — 3L+8 BN 16 AWG — 8

4.8 / M1

-XD10

=V1KF1/4.1 / 3M2 — 3M2 WHOG 16 AWG — 5

=KH3+KH3/1.4 / 3M5
=KH3+KH3/2.4 / 3M5 — 3M5 BU 16 AWG — 6

=KH0+KH0/5.4 / 3M6
=KH0+KH0/7.4 / 3M6 — 3M6 BU 16 AWG — 7

=KH0+KH0/1.4 / 3M7
=KH0+KH0/6.4 / 3M7 — 3M7 BU 16 AWG — 8

=KH0+KH0/8.4 / 3M8
=KH0+KH0/9.4 / 3M8 — 3M8 BU 16 AWG — 9

M1 / 6.1

4

Modification	Date	Name	Original	Date	1/17/2023
				Ed.	MKLEPADLO
				Appr	
				Replacement of	Replaced by

Volvo Trucks North America

P6700 Bodyside LH - Robot Cell 2V09

Valiant TMS

Scale 1:1

Power distribution 24VDC 3L+

6

Drawing name:	= V1WC4
=2V09&EFS-EL	+ V1UC11
Document type: EFS	Project nr: 22-16150
	Page 5 / 1533

			Date	1/17/2023	Volvo Trucks North America	Valiant TMS	Power distribution 24VDC 4L+	Drawing name: =2V09&EFS-EL	= V1WC4	
			Ed.	MKLEPADLO					+ V1UC11	
			Appr		P6700 Bodyside LH - Robot Cell 2V09	Scale 1:1		Document type: EFS	Project nr: 22-16150	Page 6 / 1533
Modification	Date	Name	Original		Replacement of / Replaced by					

6 8

			Date	1/17/2023	Volvo Trucks North America	Valiant TMS	Power distribution 24VDC 5L+	Drawing name: =2V09&EFS-EL		= V1WC4	
			Ed.	MKLEPADLO						+ V1UC11	
			Appr		P6700 Bodyside LH - Robot Cell 2V09			Document type: EFS	Project nr: 22-16150	Page	7
Modification	Date	Name	Original		Replacement of	Replaced by	Scale 1:1				1533

			Date	1/17/2023	Volvo Trucks North America	Valiant TMS	Power distribution 24VDC 6L+	Drawing name: =2V09&EFS-EL		= V1WC4	
			Ed.	MKLEPADLO						+ V1UC11	
			Appr		P6700 Bodyside LH - Robot Cell 2V09			Document type: EFS	Project nr: 22-16150	Page	8
Modification	Date	Name	Original		Replacement of	Replaced by	Scale 1:1				1533

0	1	2	3	4	5	6	7	8	9

8 10

			Date	1/17/2023	Volvo Trucks North America	Valiant TMS	Power distribution 24VDC 7L+	Drawing name: =2V09&EFS-EL		= V1WC4	
			Ed.	MKLEPADLO						+ V1UC11	
			Appr		P6700 Bodyside LH - Robot Cell 2V09			Document type: EFS	Project nr: 22-16150	Page	9
Modification	Date	Name	Original		Replacement of	Replaced by	Scale 1:1				1533

0	1	2	3	4	5	6	7	8	9

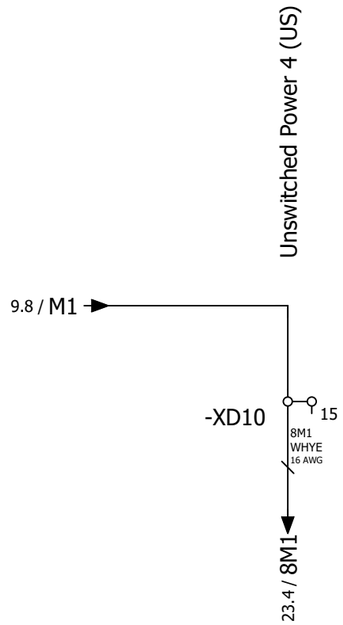

9

11

			Date	1/17/2023	Volvo Trucks North America		Valiant TMS	Power distribution 24VDC 8L+	Drawing name: =2V09&EFS-EL		= V1WC4	
			Ed.	MKLEPADLO							+ V1UC11	
			Appr		P6700 Bodyside LH - Robot Cell 2V09				Document type: EFS	Project nr: 22-16150	Page	10
Modification	Date	Name	Original		Replacement of	Replaced by	Scale 1:1					1533

0	1	2	3	4	5	6	7	8	9

=V1WC3/3.6 / WC4L

=V1WC3/3.7 / WC4N

-PE

-TA2
IN: AC 120-230 V,
DC 110-240 V
OUT: DC 24 V/20 A

L1/+ N/L2/- PE

SIEMENS
SITOP PSU6200 1ph 24 V/20 A
6EP3336-7SB00-3AX0

ADJUST
24 ... 28V
DEFAULT VALUE
24V

COM HV PO

>20 V CLOSED

+1 +2 -1 -2 -3 13 14

Monitoring 24VDC
=V1WC4+V1UC11-TA2_I
=V1KF1/9.2

DI ET200SP
I50.3
DI3
4

=V1KF1
-KF11.11

TA2 BU 16 AWG
M2 WH 12 AWG
-PE
3L+1 BUOG 16 AWG
I50.3 BUOG 16 AWG

=V1WC2/41.4 / TA2

M2
12.1

-XD6 1

-FC12
In: DC 24V
Out: 8 x DC 24V/10A

SIEMENS
SITOP SEL1200 8 x 10A
6EP4438-7FB00-3DX0

COM TD2 TD1

24V1 INPUT 24V2

E--- RESET

CONTROL LOGIC

13 14 NF RST 0V1 0V2

OUTPUT

1 2 3 4 5 6 7 8

Monitoring 24VDC
=V1WC4+V1UC11-FC12_I
=V1KF1/9.2

DI ET200SP
I50.5
DI5
6

=V1KF1
-KF11.11

3L+1 BUOG 16 AWG
I50.5 BUOG 16 AWG
=V1WC2/41.6 / FC12

19.8 / M2

11L+ BU 16 AWG
12L+ BU 16 AWG
13L+ BU 16 AWG
14L+ BU 16 AWG
15L+ RD 16 AWG
16L+ RD 16 AWG
17L+ RD 16 AWG
18L+ RD 16 AWG

12.1 / -11L+
13.1 / -12L+
14.1 / -13L+
15.1 / -14L+
24.5 / -15L+
25.5 / -16L+
26.5 / -17L+
27.5 / -18L+

10 12

			Date	1/17/2023	Volvo Trucks North America	Valiant TMS	Power distribution 24VDC (Below Disconnect)	Drawing name: =2V09&EFS-EL	= V1WC4
			Ed.	MKLEPADLO					+ V1UC11
			Appr		P6700 Bodyside LH - Robot Cell 2V09			Document type: EFS	Project nr: 22-16150
Modification	Date	Name	Original		Replacement of	Replaced by	Scale 1:1		Page 11 / 1533

0	1	2	3	4	5	6	7	8	9

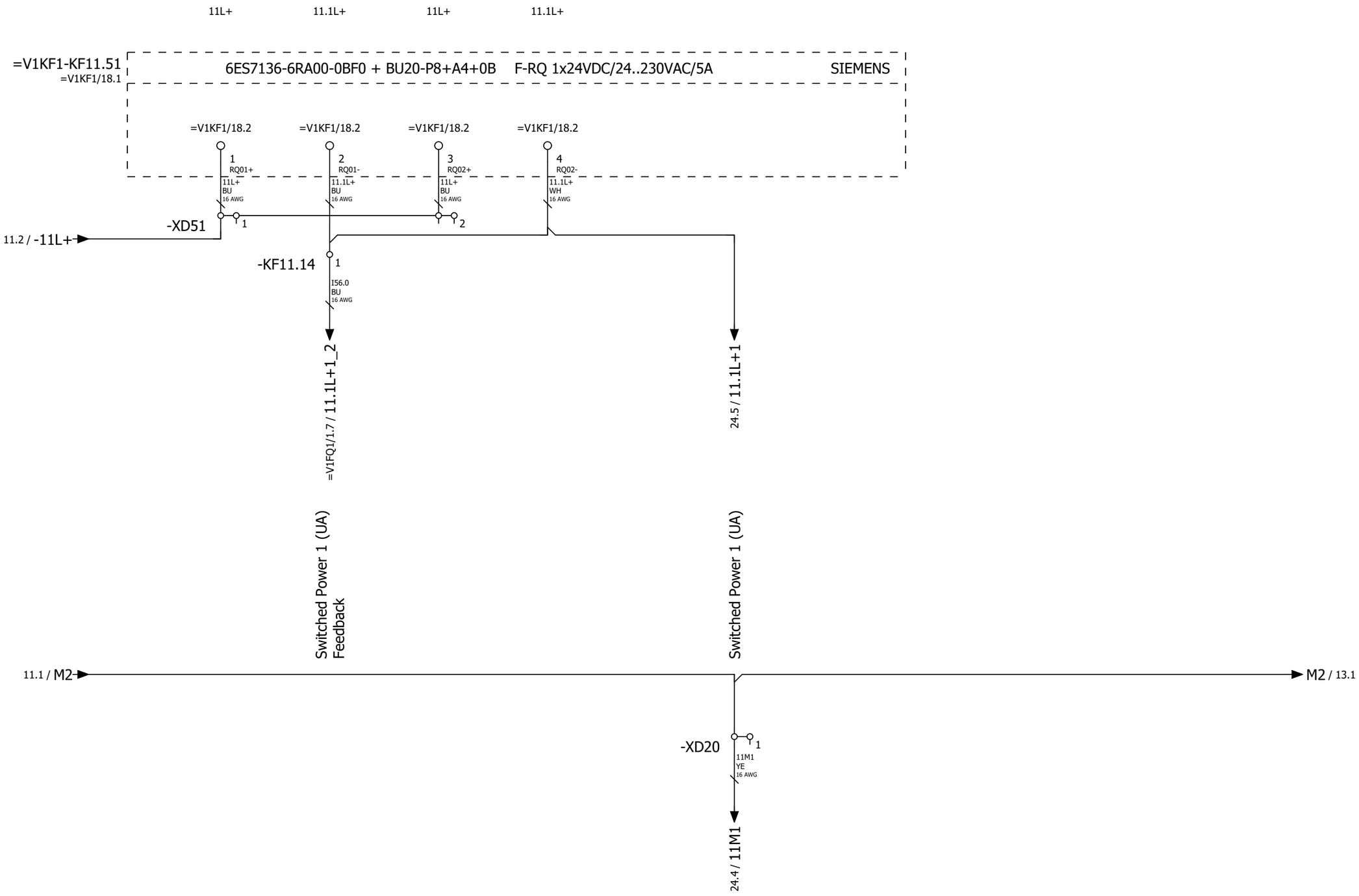

11

13

			Date	1/17/2023	Volvo Trucks North America	Valiant TMS	Power distribution 24VDC 11L+	Drawing name: =2V09&EFS-EL		= V1WC4	
			Ed.	MKLEPADLO						+ V1UC11	
			Appr		P6700 Bodyside LH - Robot Cell 2V09	Scale 1:1		Document type: EFS	Project nr: 22-16150	Page	12
Modification	Date	Name	Original		Replacement of	Replaced by					1533

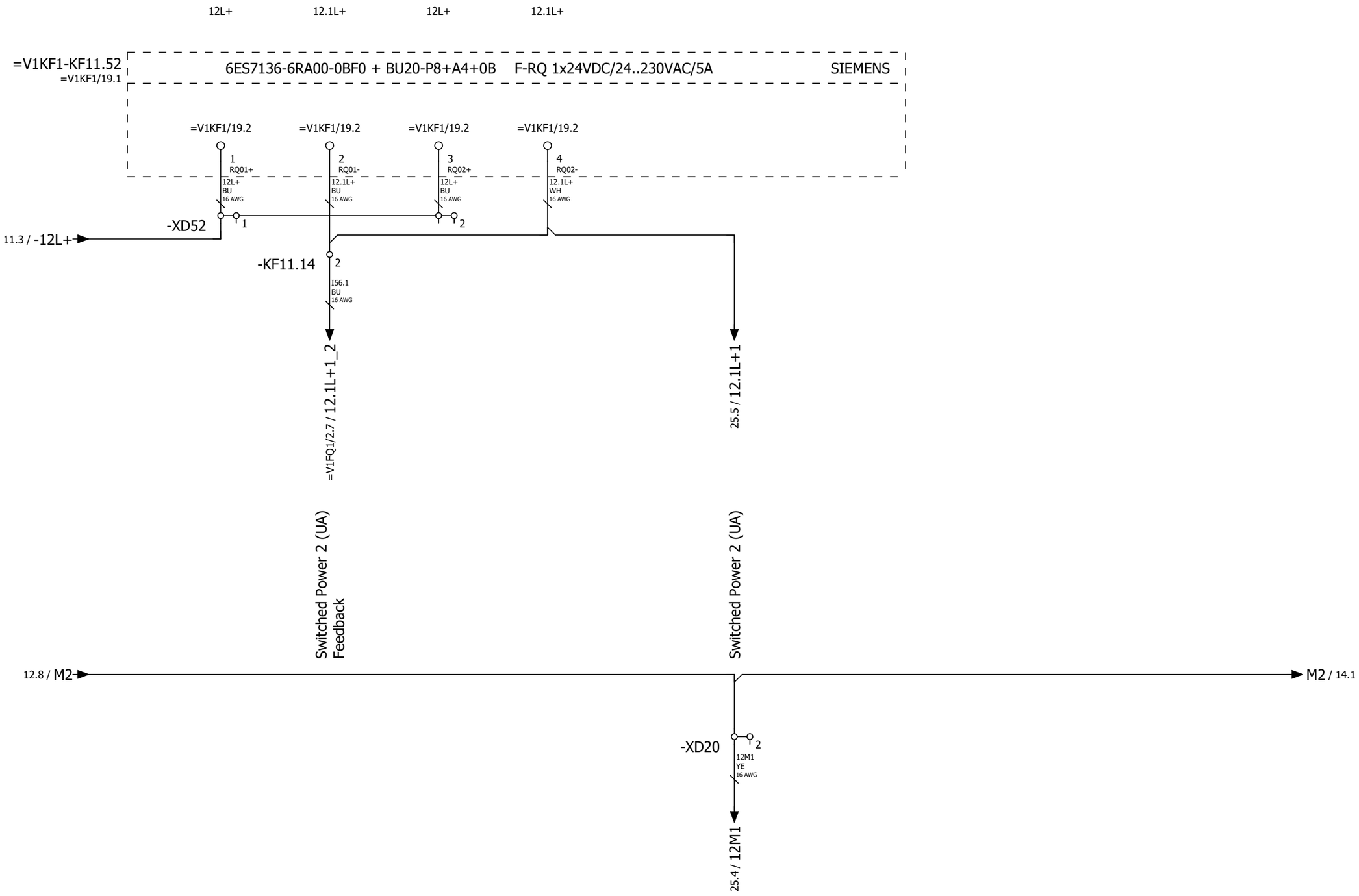

12

14

			Date	1/17/2023	Volvo Trucks North America		Valiant TMS	Power distribution 24VDC 12L+	Drawing name: =2V09&EFS-EL	= V1WC4	
			Ed.	MKLEPADLO						+ V1UC11	
			Appr		P6700 Bodyside LH - Robot Cell 2V09		Scale 1:1		Document type: EFS	Project nr: 22-16150	Page 13 / 1533
Modification	Date	Name	Original		Replacement of	Replaced by					

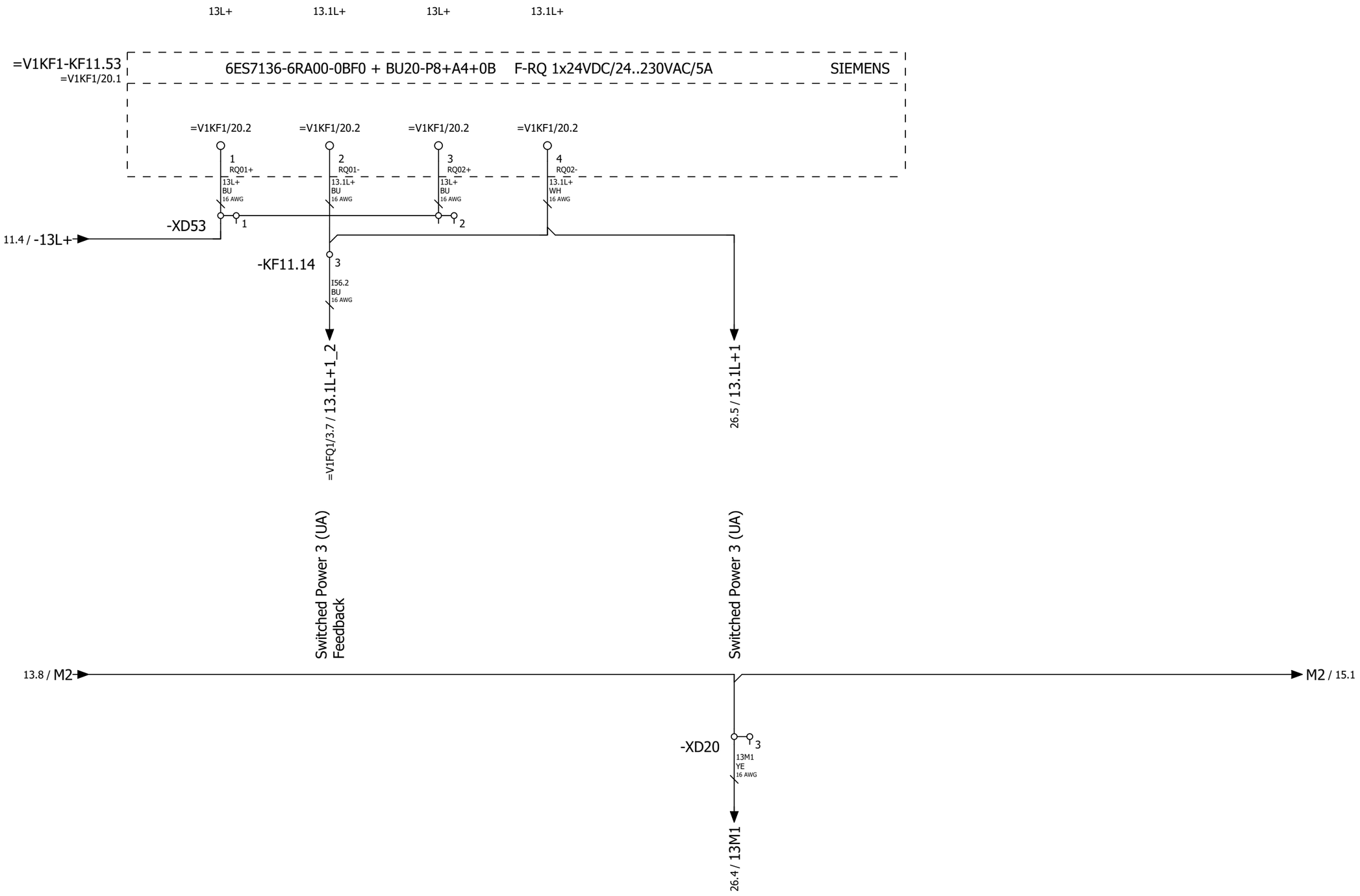

13

15

			Date	1/17/2023	Volvo Trucks North America		Valiant TMS	Power distribution 24VDC 13L+	Drawing name: =2V09&EFS-EL	= V1WC4	
			Ed.	MKLEPADLO						+ V1UC11	
			Appr		P6700 Bodyside LH - Robot Cell 2V09		Scale 1:1		Document type: EFS	Project nr: 22-16150	Page 14
Modification	Date	Name	Original		Replacement of	Replaced by					1533

0	1	2	3	4	5	6	7	8	9

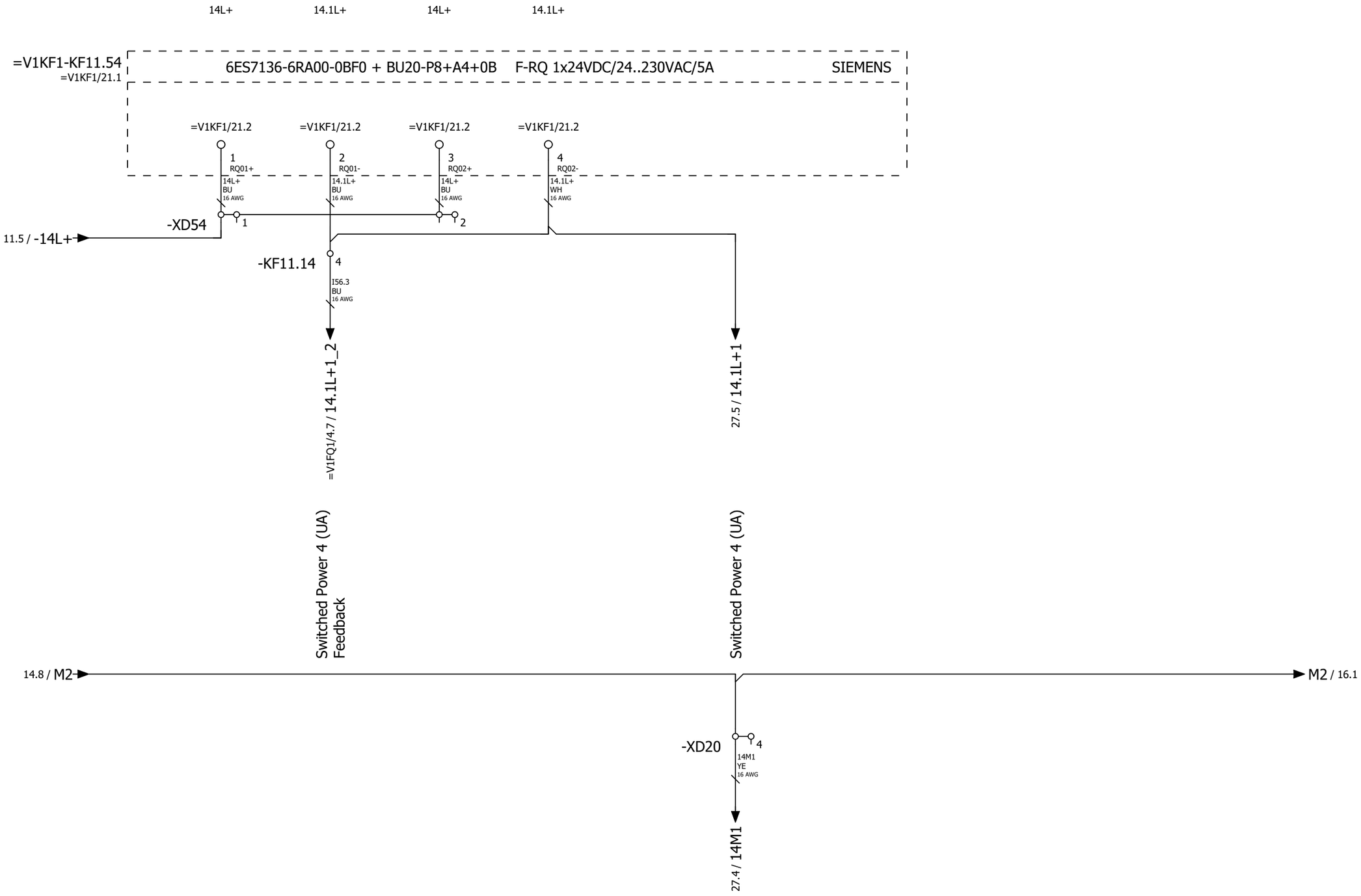

14

16

			Date	1/17/2023	Volvo Trucks North America	Valiant TMS	Power distribution 24VDC 14L+	Drawing name: =2V09&EFS-EL	= V1WC4
			Ed.	MKLEPADLO					+ V1UC11
			Appr		P6700 Bodyside LH - Robot Cell 2V09	Scale 1:1		Document type: EFS	Project nr: 22-16150
Modification	Date	Name	Original		Replacement of	Replaced by			Page 15 / 1533

0	1	2	3	4	5	6	7	8	9

15

17

			Date	1/17/2023	Volvo Trucks North America	Valiant TMS	Power distribution 24VDC 15L+	Drawing name: =2V09&EFS-EL		= V1WC4	
			Ed.	MKLEPADLO						+ V1UC11	
			Appr		P6700 Bodyside LH - Robot Cell 2V09			Document type: EFS	Project nr: 22-16150	Page	16
Modification	Date	Name	Original		Replacement of	Replaced by	Scale 1:1				1533

Switched Power 2 (US)

16.8 / M2

M2 / 18.1

-XD20

6

16M1
WHYE
16 AWG

25.4 / 16M1

16

18

			Date	1/17/2023	Volvo Trucks North America	Valiant TMS	Power distribution 24VDC 16L+	Drawing name: =2V09&EFS-EL	= V1WC4	
			Ed.	MKLEPADLO					+ V1UC11	
			Appr		P6700 Bodyside LH - Robot Cell 2V09			Document type: EFS	Project nr: 22-16150	Page 17
Modification	Date	Name	Original		Replacement of / Replaced by	Scale 1:1				1533

17

19

			Date	1/17/2023	Volvo Trucks North America	Valiant TMS	Power distribution 24VDC 17L+	Drawing name: =2V09&EFS-EL	= V1WC4	
			Ed.	MKLEPADLO					+ V1UC11	
			Appr		P6700 Bodyside LH - Robot Cell 2V09			Document type: EFS	Project nr: 22-16150	Page 18
Modification	Date	Name	Original		Replacement of / Replaced by	Scale 1:1				1533

18

20

			Date	1/17/2023	Volvo Trucks North America	Valiant TMS	Power distribution 24VDC 18L+	Drawing name: =2V09&EFS-EL	= V1WC4 + V1UC11
			Ed.	MKLEPADLO	P6700 Bodyside LH - Robot Cell 2V09				
			Appr					Document type: EFS	Project nr: 22-16150
Modification	Date	Name	Original		Replacement of / Replaced by	Scale 1:1			Page 19 / 1533

+.UC11

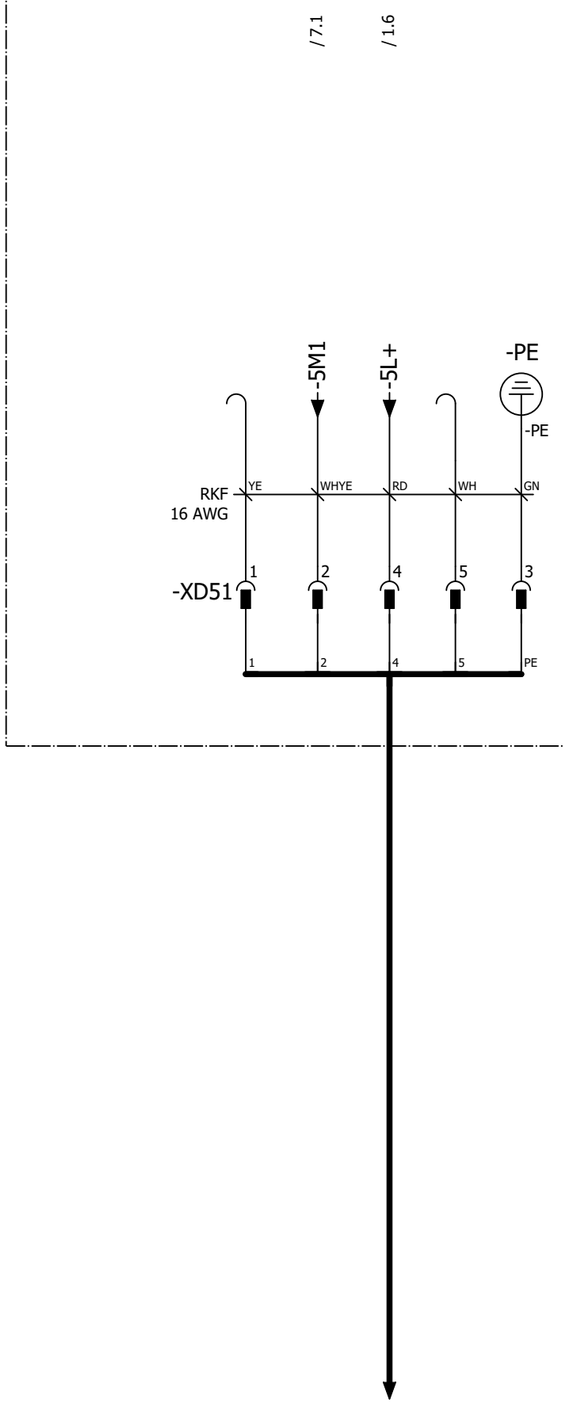

POWER IN / POWER OUT

Pin 1: 0 V UA
Pin 2: 0 V US
Pin 3: FE
Pin 4: +24 V US / 9 A
Pin 5: +24 V UA / 9 A

Pin #	WIRE	COLOR
Pin 1	N/C	YE
Pin 2	5M1	WHYE
Pin 3	GND	GN
Pin 4	5L+	RD
Pin 5	N/C	WH

			Date	1/17/2023	Volvo Trucks North America	Valiant TMS	24VDC Unswitched Power 1	Drawing name: =2V09&EFS-EL	= V1WC4
			Ed.	MKLEPADLO					+ V1UC11
			Appr		P6700 Bodyside LH - Robot Cell 2V09			Document type: EFS	Project nr: 22-16150
Modification	Date	Name	Original		Replacement of / Replaced by	Scale 1:1			Page 20 / 1533

0	1	2	3	4	5	6	7	8	9

+.UC11

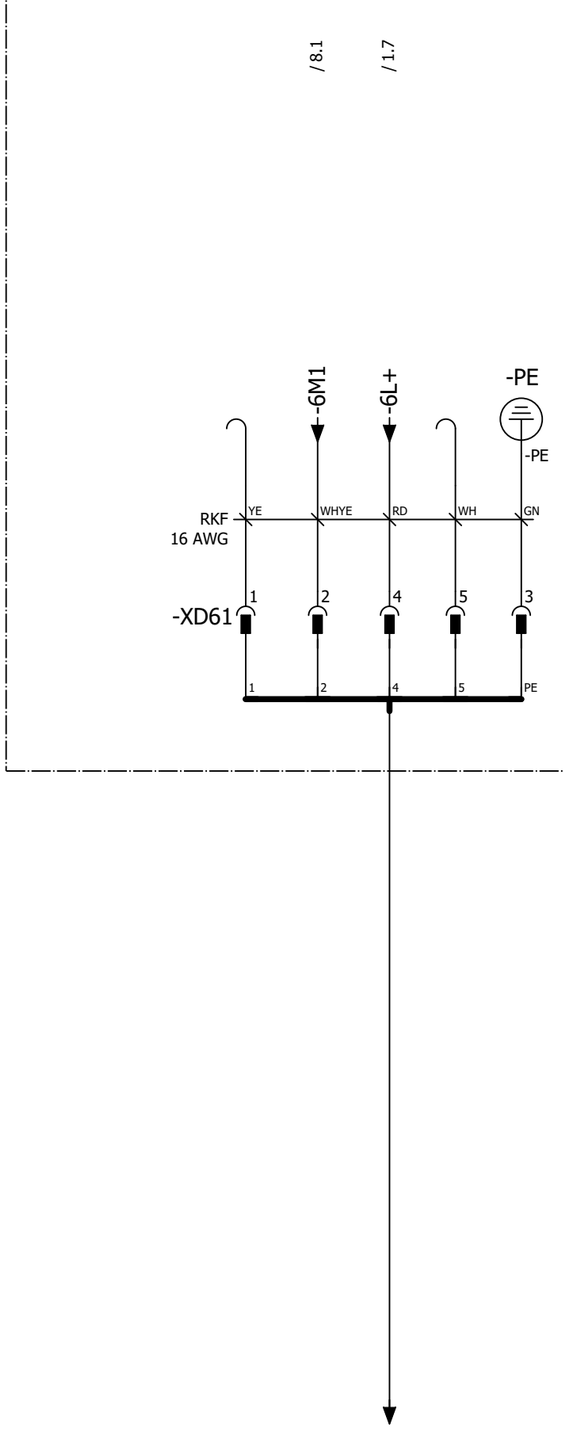

POWER IN / POWER OUT

Pin 1: 0 V UA
Pin 2: 0 V US
Pin 3: FE
Pin 4: +24 V US / 9 A
Pin 5: +24 V UA / 9 A

Pin #	WIRE	COLOR
Pin 1	N/C	YE
Pin 2	6M1	WHYE
Pin 3	GND	GN
Pin 4	6L+	RD
Pin 5	N/C	WH

			Date	1/17/2023	Volvo Trucks North America	Valiant TMS	24VDC Unswitched Power 2	Drawing name: =2V09&EFS-EL	= V1WC4
			Ed.	MKLEPADLO					+ V1UC11
			Appr		P6700 Bodyside LH - Robot Cell 2V09	Scale 1:1		Document type: EFS	Project nr: 22-16150
Modification	Date	Name	Original		Replacement of	Replaced by			Page 21 / 1533

0	1	2	3	4	5	6	7	8	9

+.UC11

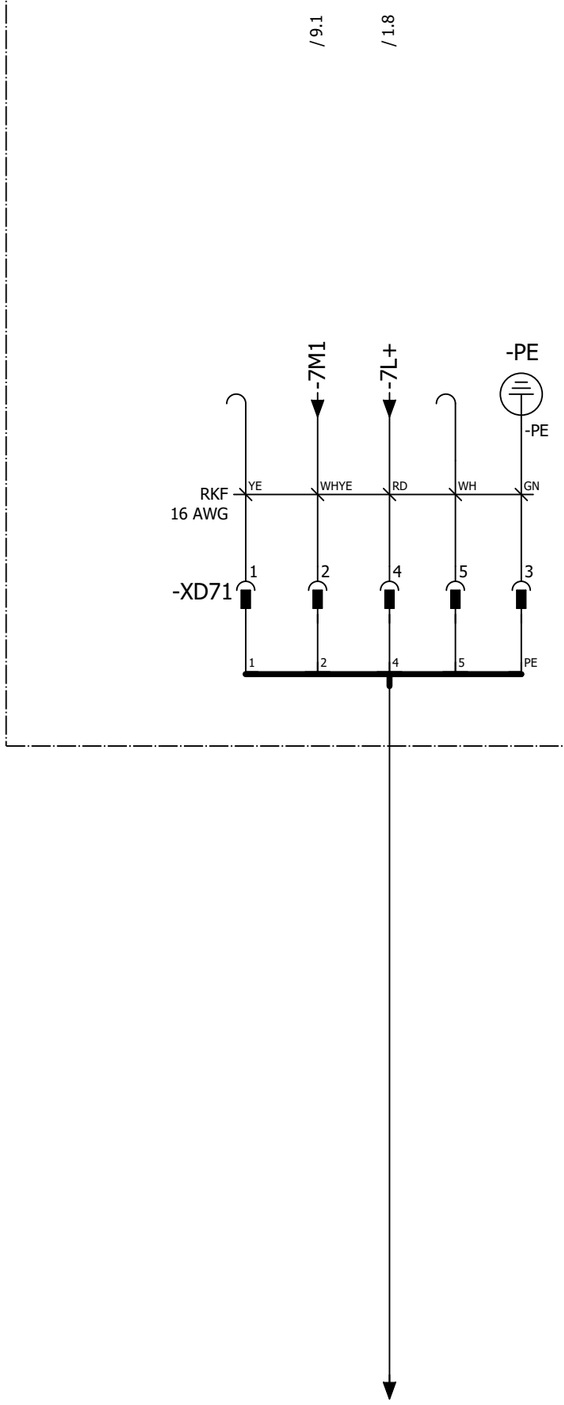

POWER IN / POWER OUT

Pin 1: 0 V UA
Pin 2: 0 V US
Pin 3: FE
Pin 4: +24 V US / 9 A
Pin 5: +24 V UA / 9 A

Pin #	WIRE	COLOR
Pin 1	N/C	YE
Pin 2	7M1	WHYE
Pin 3	GND	GN
Pin 4	7L+	RD
Pin 5	N/C	WH

			Date	1/17/2023	Volvo Trucks North America	Valiant TMS	24VDC Unswitched Power 3	Drawing name: =2V09&EFS-EL	= V1WC4
			Ed.	MKLEPADLO					+ V1UC11
			Appr		P6700 Bodyside LH - Robot Cell 2V09	Scale 1:1		Document type: EFS	Project nr: 22-16150
Modification	Date	Name	Original		Replacement of	Replaced by			Page 22 / 1533

0	1	2	3	4	5	6	7	8	9

+.UC11

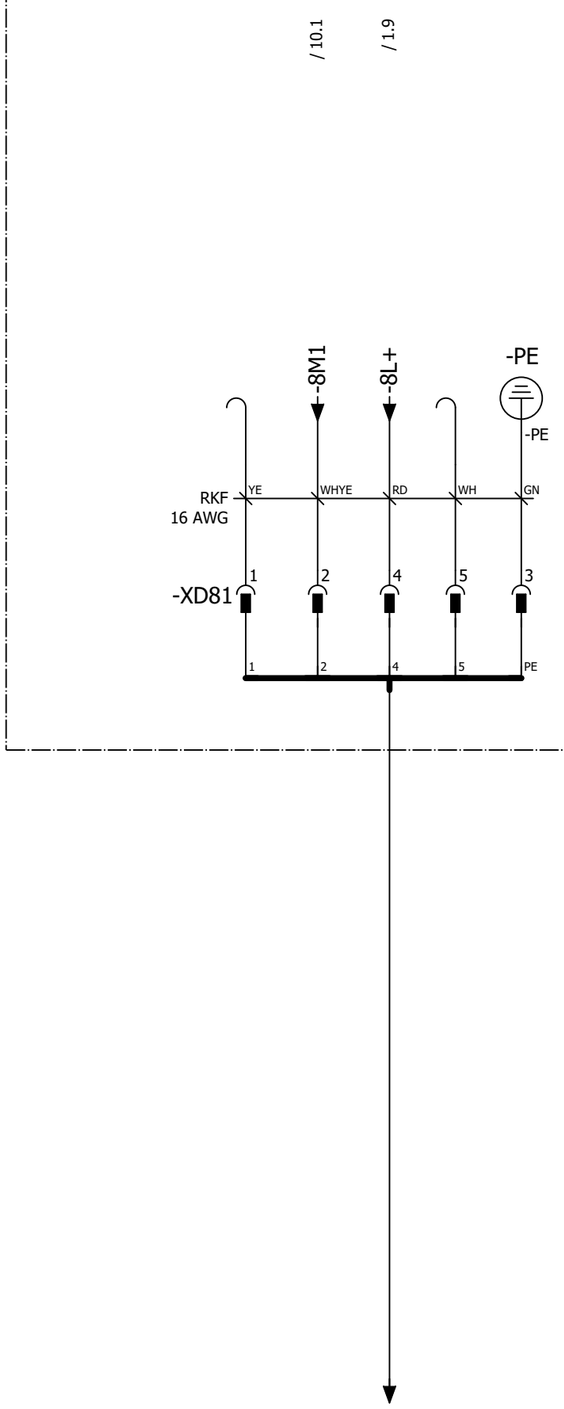

POWER IN / POWER OUT

Pin 1: 0 V UA
Pin 2: 0 V US
Pin 3: FE
Pin 4: +24 V US / 9 A
Pin 5: +24 V UA / 9 A

Pin #	WIRE	COLOR
Pin 1	N/C	YE
Pin 2	8M1	WHYE
Pin 3	GND	GN
Pin 4	8L+	RD
Pin 5	N/C	WH

			Date	1/17/2023	Volvo Trucks North America	Valiant TMS	24VDC Unswitched Power 4	Drawing name: =2V09&EFS-EL	= V1WC4
			Ed.	MKLEPADLO					+ V1UC11
			Appr		P6700 Bodyside LH - Robot Cell 2V09	Scale 1:1		Document type: EFS	Project nr: 22-16150
Modification	Date	Name	Original		Replacement of	Replaced by			Page 23 / 1533

+.UC11

/ 12.5 / 16.1 / 11.6 / 12.5

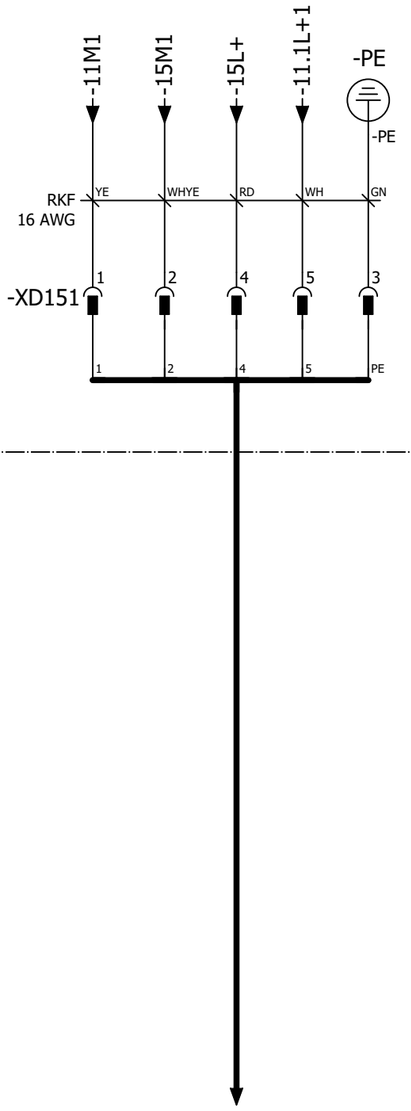

+.GL17UQ51-W1
=V1GL17UQ51KF1+.GL17UQ51/1.1

POWER IN / POWER OUT

Pin 1: 0 V UA
Pin 2: 0 V US
Pin 3: FE
Pin 4: +24 V US / 9 A
Pin 5: +24 V UA / 9 A

Pin #	WIRE	COLOR
Pin 1	11M2	YE
Pin 2	15M2	WHYE
Pin 3	GND	GN
Pin 4	15L+	RD
Pin 5	11.1L+	WH

			Date	1/17/2023	Volvo Trucks North America	Valiant TMS	24VDC Switched Power 1	Drawing name: =2V09&EFS-EL	= V1WC4
			Ed.	MKLEPADLO					+ V1UC11
			Appr		P6700 Bodyside LH - Robot Cell 2V09	Scale 1:1		Document type: EFS	Project nr: 22-16150
Modification	Date	Name	Original		Replacement of	Replaced by			Page 24 / 1533

0	1	2	3	4	5	6	7	8	9

+.UC11

/ 13.5 / 17.1 / 11.7 / 13.5

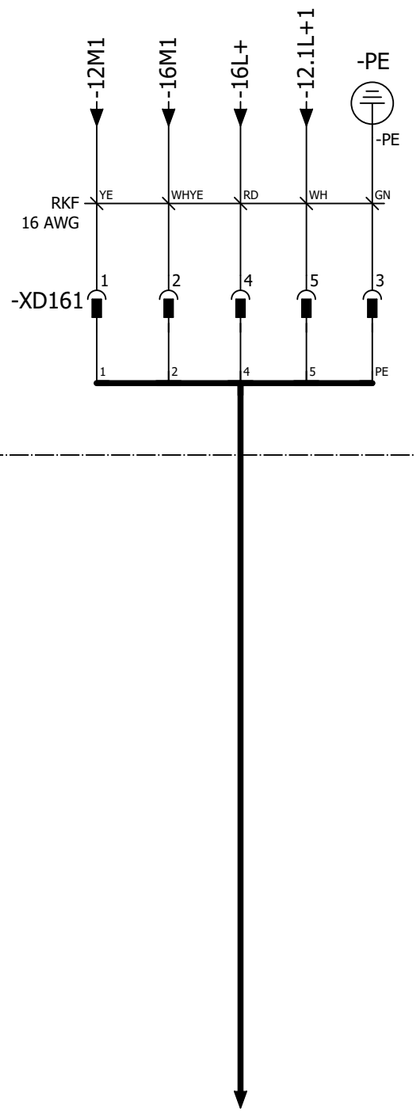

-SWITCHEDPWR2
=V1UQ53WC4+.UQ53/1.5

POWER IN / POWER OUT

Pin 1: 0 V UA
Pin 2: 0 V US
Pin 3: FE
Pin 4: +24 V US / 9 A
Pin 5: +24 V UA / 9 A

Pin #	WIRE	COLOR
Pin 1	12M2	YE
Pin 2	16M2	WHYE
Pin 3	GND	GN
Pin 4	16L+	RD
Pin 5	12.1L+	WH

			Date	1/17/2023	Volvo Trucks North America	Valiant TMS	24VDC Switched Power 2	Drawing name: =2V09&EFS-EL	= V1WC4
			Ed.	MKLEPADLO					+ V1UC11
			Appr		P6700 Bodyside LH - Robot Cell 2V09	Scale 1:1		Document type: EFS	Project nr: 22-16150
Modification	Date	Name	Original		Replacement of	Replaced by			Page 25 / 1533

+.UC11

/ 14.5 / 18.1 / 11.8 / 14.5

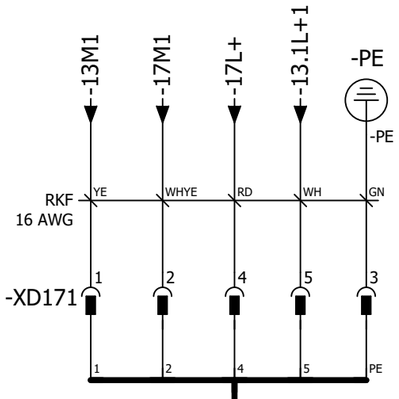

POWER IN / POWER OUT

Pin 1: 0 V UA
Pin 2: 0 V US
Pin 3: FE
Pin 4: +24 V US / 9 A
Pin 5: +24 V UA / 9 A

Pin #	WIRE	COLOR
Pin 1	13M2	YE
Pin 2	17M2	WHYE
Pin 3	GND	GN
Pin 4	17L+	RD
Pin 5	13.1L+	WH

-SWITCHEDPWR3
=V1UQ54WC4+.UQ54/1.5

25

27

			Date	1/17/2023	Volvo Trucks North America	Valiant TMS	24VDC Switched Power 3	Drawing name: =2V09&EFS-EL	= V1WC4	
			Ed.	MKLEPADLO					+ V1UC11	
			Appr		P6700 Bodyside LH - Robot Cell 2V09	Scale 1:1		Document type: EFS	Project nr: 22-16150	Page 26 / 1533
Modification	Date	Name	Original		Replacement of	Replaced by				

0	1	2	3	4	5	6	7	8	9

+.UC11

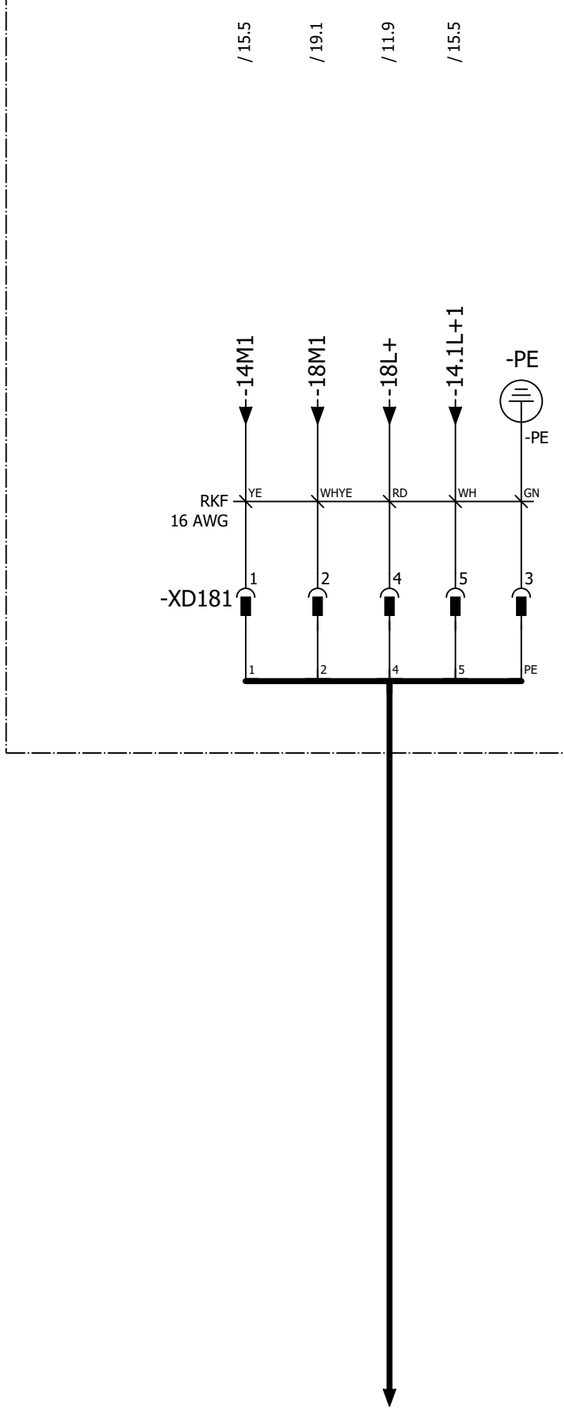

POWER IN / POWER OUT

Pin 1: 0 V UA
Pin 2: 0 V US
Pin 3: FE
Pin 4: +24 V US / 9 A
Pin 5: +24 V UA / 9 A

Pin #	WIRE	COLOR
Pin 1	14M2	YE
Pin 2	18M2	WHYE
Pin 3	GND	GN
Pin 4	15L+	RD
Pin 5	14.1L+	WH

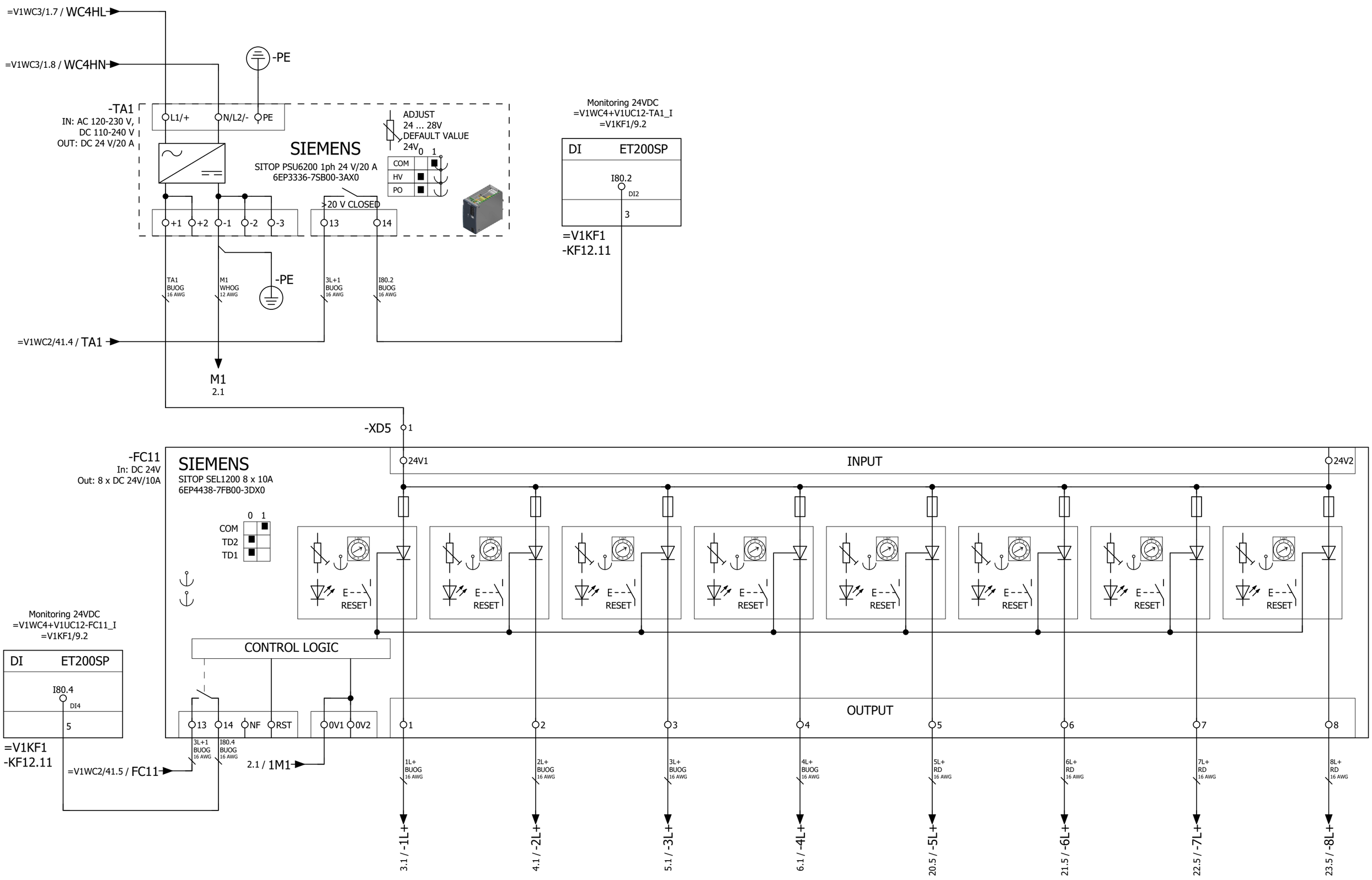

			Date	1/17/2023	Volvo Trucks North America	Valiant TMS	Power distribution 24VDC (Above Disconnect)	Drawing name: =2V09&EFS-EL	= V1WC4 + V1UC12
			Ed.	MKLEPADLO	P6700 Bodyside LH - Robot Cell 2V09			Document type: EFS	Project nr: 22-16150
			Appr						Page 1
Modification	Date	Name	Original		Replacement of / Replaced by	Scale 1:1			1533

0VDC
Selectivity Module FC11

1.1 / M1

M1 / 3.1

-XD10

1

1M1
WHOG
12 AWG

1.2 / 1M1

1 3

			Date	1/17/2023	Volvo Trucks North America	Valiant TMS	Power distribution 24VDC HL+	Drawing name: =2V09&EFS-EL	= V1WC4
			Ed.	MKLEPADLO					+ V1UC12
			Appr		P6700 Bodyside LH - Robot Cell 2V09			Document type: EFS	Project nr: 22-16150
Modification	Date	Name	Original		Replacement of / Replaced by	Scale 1:1			Page 2 / 1533

0	1	2	3	4	5	6	7	8	9

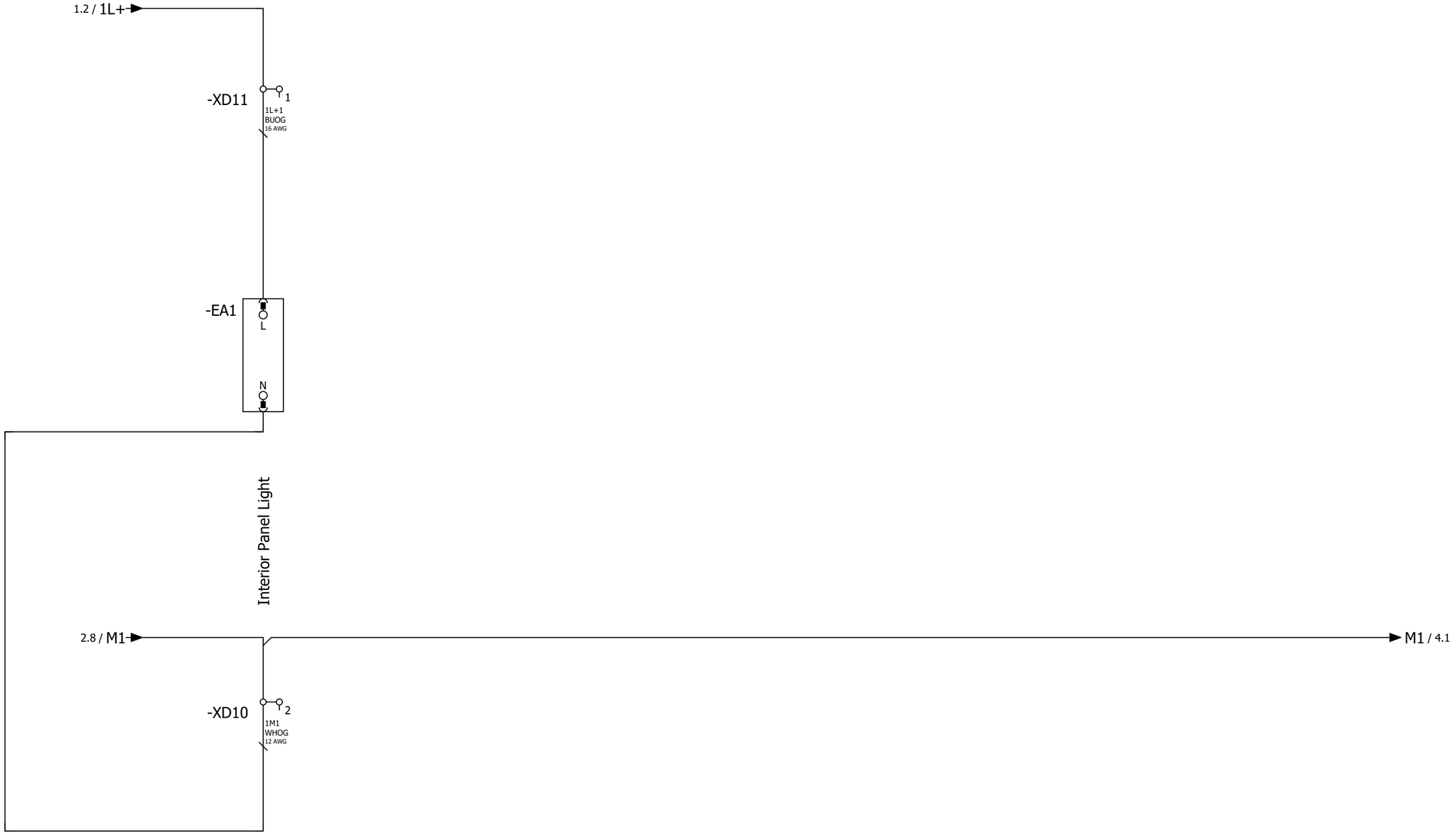

			Date	1/17/2023	Volvo Trucks North America		Valiant TMS	Power distribution 24VDC 1L+	Drawing name: =2V09&EFS-EL	= V1WC4	
			Ed.	MKLEPADLO						+ V1UC12	
			Appr		P6700 Bodyside LH - Robot Cell 2V09				Document type: EFS	Project nr: 22-16150	Page 3
Modification	Date	Name	Original		Replacement of	Replaced by	Scale 1:1				1533

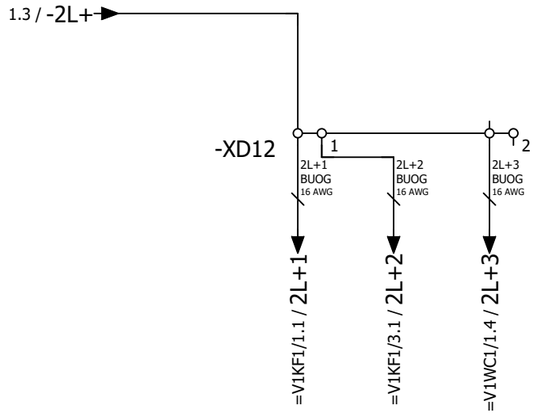

XC216 Profinet Switch

IM155 PN

Main Circuit Breaker

			Date	1/17/2023	Volvo Trucks North America		Valiant TMS	Power distribution 24VDC 2L+	Drawing name: =2V09&EFS-EL	= V1WC4	
			Ed.	MKLEPADLO						+ V1UC12	
			Appr		P6700 Bodyside LH - Robot Cell 2V09		Scale 1:1		Document type: EFS	Project nr: 22-16150	Page 4
Modification	Date	Name	Original		Replacement of	Replaced by					1533

0	1	2	3	4	5	6	7	8	9

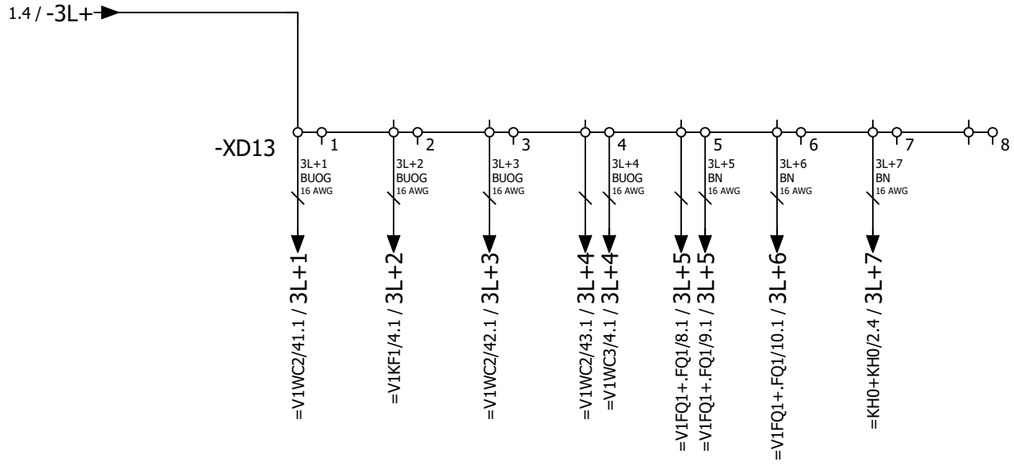

Power feedback signals Distribution Modules

Power Input Cards (DI+FDI)

Power feedback signals Circuit Breakers

Power feedback signals Circuit Breakers

Power Light Screens 1&2, 3&4, S010

Power Light Screen 5, S010

Power Air Monitoring, S010

Spare

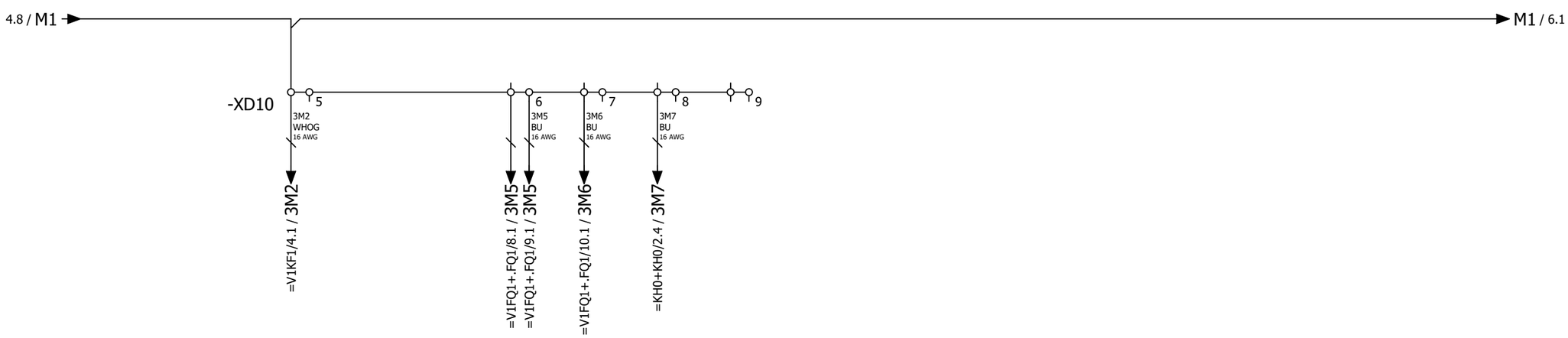

			Date	1/17/2023	Volvo Trucks North America	Valiant TMS	Power distribution 24VDC 3L+	Drawing name: =2V09&EFS-EL	= V1WC4
			Ed.	MKLEPADLO					+ V1UC12
			Appr		P6700 Bodyside LH - Robot Cell 2V09	Scale 1:1		Document type: EFS	Project nr: 22-16150
Modification	Date	Name	Original		Replacement of	Replaced by			Page 5 / 1533

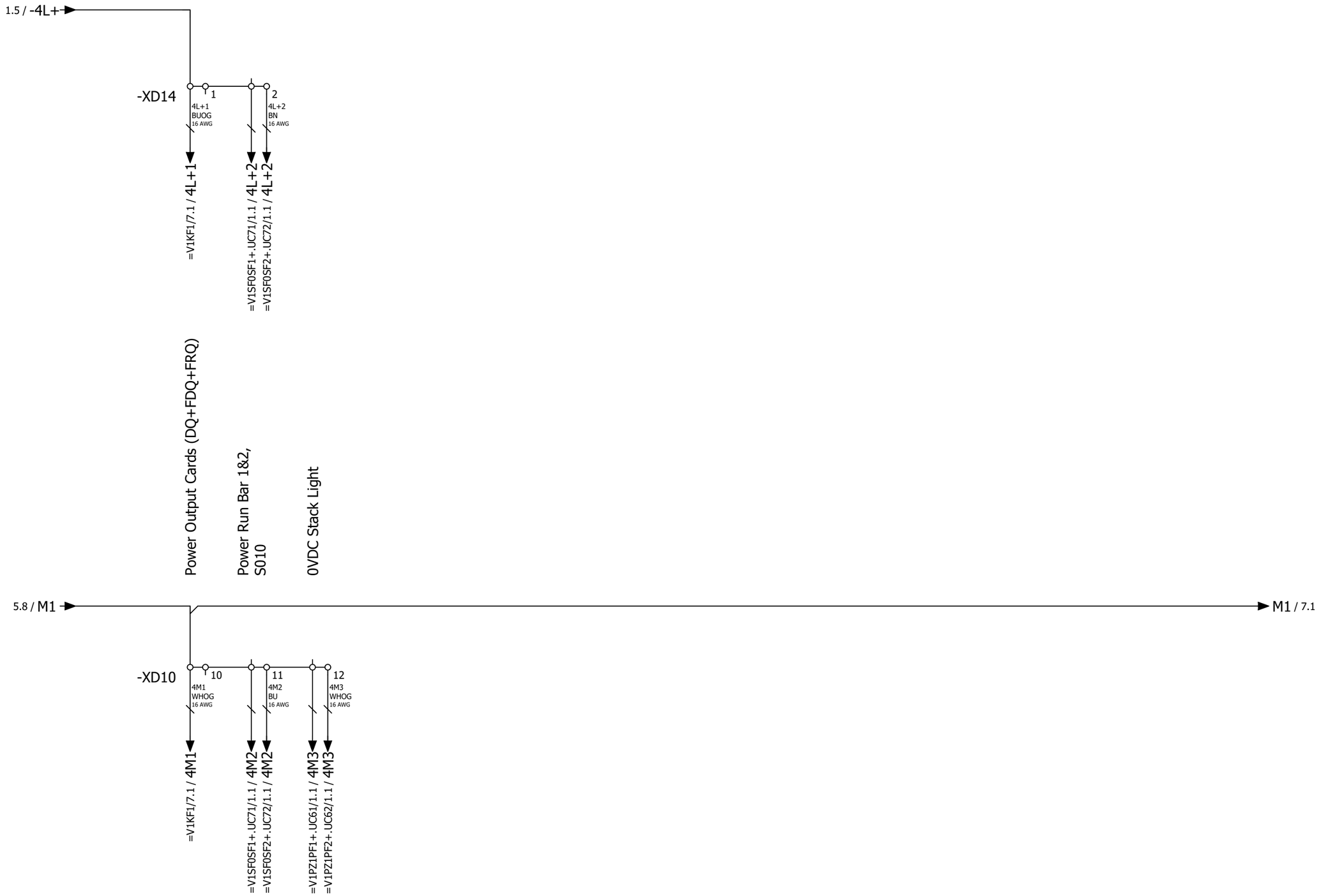

5 7

			Date	1/17/2023	Volvo Trucks North America		Valiant TMS	Power distribution 24VDC 4L+	Drawing name: =2V09&EFS-EL	= V1WC4	
			Ed.	MKLEPADLO						+ V1UC12	
			Appr		P6700 Bodyside LH - Robot Cell 2V09		Scale 1:1		Document type: EFS	Project nr: 22-16150	Page 6 / 1533
Modification	Date	Name	Original		Replacement of	Replaced by					

6 8

			Date	1/17/2023	Volvo Trucks North America	Valiant TMS	Power distribution 24VDC 5L+	Drawing name: =2V09&EFS-EL		= V1WC4	
			Ed.	MKLEPADLO						+ V1UC12	
			Appr		P6700 Bodyside LH - Robot Cell 2V09			Document type: EFS	Project nr: 22-16150	Page	7
Modification	Date	Name	Original		Replacement of	Replaced by	Scale 1:1				1533

			Date	1/17/2023	Volvo Trucks North America	Valiant TMS	Power distribution 24VDC 6L+	Drawing name: =2V09&EFS-EL		= V1WC4	
			Ed.	MKLEPADLO						+ V1UC12	
			Appr		P6700 Bodyside LH - Robot Cell 2V09			Document type: EFS	Project nr: 22-16150	Page	8
Modification	Date	Name	Original		Replacement of	Replaced by	Scale 1:1				1533

0	1	2	3	4	5	6	7	8	9

8

10

			Date	1/17/2023	Volvo Trucks North America	Valiant TMS	Power distribution 24VDC 7L+	Drawing name: =2V09&EFS-EL		= V1WC4	
			Ed.	MKLEPADLO						+ V1UC12	
			Appr		P6700 Bodyside LH - Robot Cell 2V09			Document type: EFS	Project nr: 22-16150	Page	9
Modification	Date	Name	Original		Replacement of	Replaced by	Scale 1:1				1533

0	1	2	3	4	5	6	7	8	9

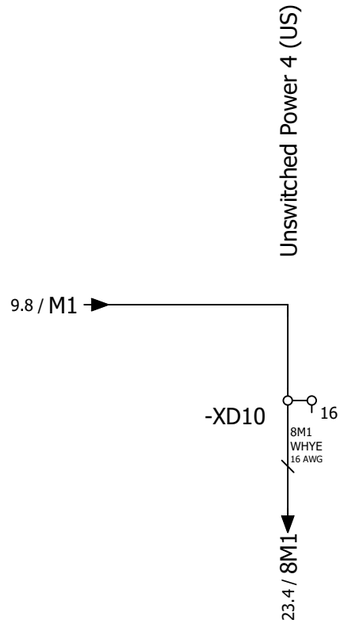

9

11

			Date	1/17/2023	Volvo Trucks North America		Valiant TMS	Power distribution 24VDC 8L+	Drawing name: =2V09&EFS-EL		= V1WC4	
			Ed.	MKLEPADLO							+ V1UC12	
			Appr		P6700 Bodyside LH - Robot Cell 2V09				Document type: EFS	Project nr: 22-16150	Page	10
Modification	Date	Name	Original		Replacement of	Replaced by	Scale 1:1					1533

0	1	2	3	4	5	6	7	8	9

=V1WC3/3.2 / WC4L

=V1WC3/3.3 / WC4N

-PE

-TA2
IN: AC 120-230 V,
DC 110-240 V
OUT: DC 24 V/20 A

L1/+ N/L2/- PE

SIEMENS
SITOP PSU6200 1ph 24 V/20 A
6EP3336-7SB00-3AX0

ADJUST
24 ... 28V
DEFAULT VALUE
24V

0 1
COM
HV
PO

>20 V CLOSED

+1 +2 -1 -2 -3 13 14

Monitoring 24VDC
=V1WC4+V1UC12-TA2_I
=V1KF1/9.2

DI ET200SP
I80.3
DI3
4

=V1KF1
-KF12.11

TA2
BU
16 AWG

M2
WHBU
12 AWG

-PE

3L+1
BUOG
16 AWG

I80.3
BUOG
16 AWG

=V1WC2/41.4 / TA2

M2
12.1

-XD6 1

-FC12
In: DC 24V
Out: 8 x DC 24V/10A

SIEMENS
SITOP SEL1200 8 x 10A
6EP4438-7FB00-3DX0

0 1
COM
TD2
TD1

24V1

INPUT

24V2

E---
RESET

CONTROL LOGIC

OUTPUT

13 14 NF RST 0V1 0V2

1 2 3 4 5 6 7 8

Monitoring 24VDC
=V1WC4+V1UC12-FC12_I
=V1KF1/9.2

DI ET200SP
I80.5
DI5
6

=V1KF1
-KF12.11

3L+1
BUOG
16 AWG

I80.5
BUOG
16 AWG

=V1WC2/41.6 / FC12

19.8 / M2

11L+
BU
16 AWG

12L+
BU
16 AWG

13L+
BU
16 AWG

14L+
BU
16 AWG

15L+
RD
16 AWG

16L+
RD
16 AWG

17L+
RD
16 AWG

18L+
RD
16 AWG

12.1 / -11L+

13.1 / -12L+

14.1 / -13L+

15.1 / -14L+

24.5 / -15L+

25.5 / -16L+

26.5 / -17L+

27.5 / -18L+

10

12

			Date	1/17/2023	Volvo Trucks North America	Valiant TMS	Power distribution 24VDC (Below Disconnect)	Drawing name: =2V09&EFS-EL	= V1WC4
			Ed.	MKLEPADLO					+ V1UC12
			Appr		P6700 Bodyside LH - Robot Cell 2V09			Document type: EFS	Project nr: 22-16150
Modification	Date	Name	Original		Replacement of	Replaced by	Scale 1:1		Page 11 / 1533

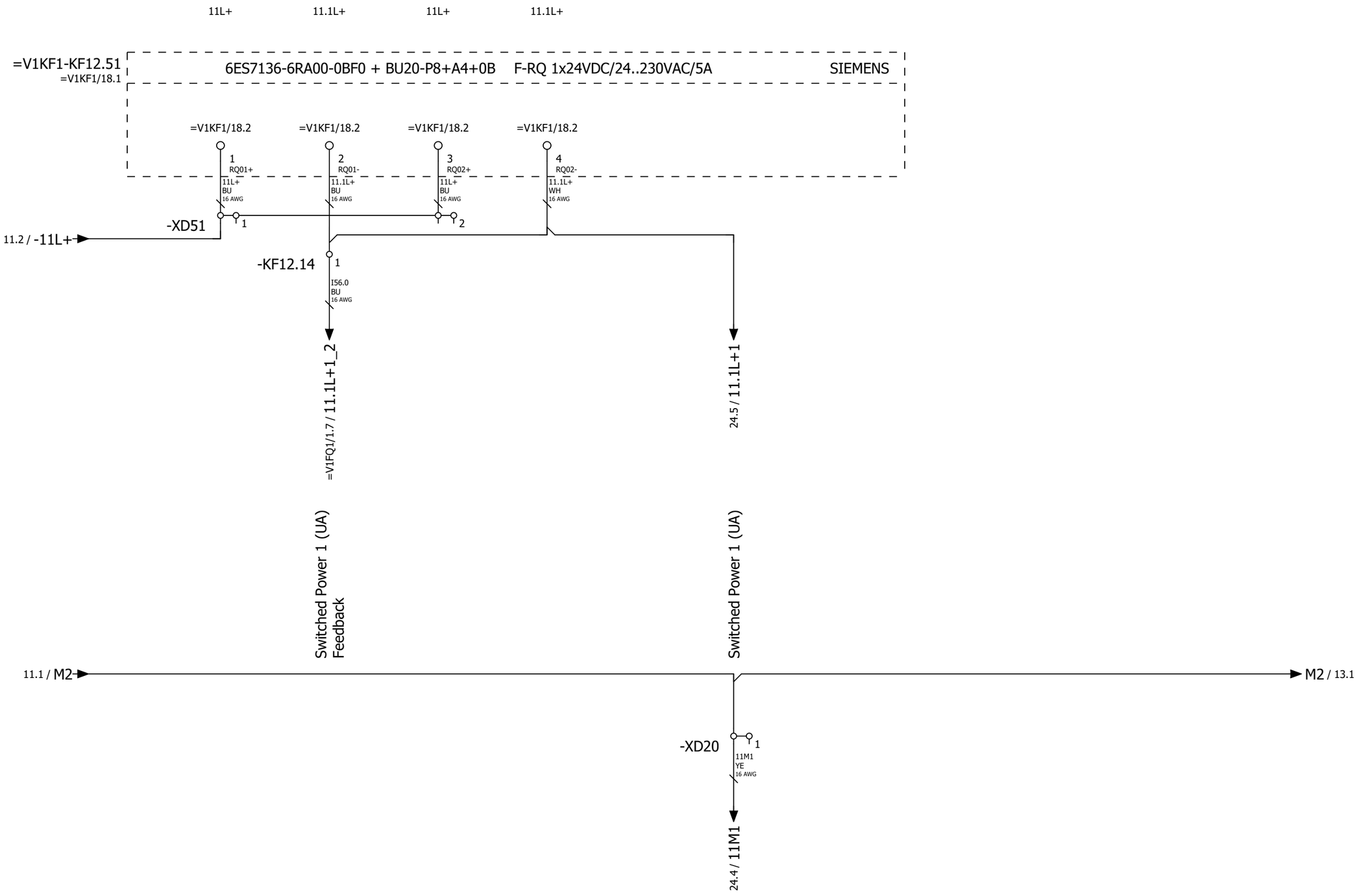

11

13

			Date	1/17/2023	Volvo Trucks North America	Valiant TMS	Power distribution 24VDC 11L+	Drawing name: =2V09&EFS-EL		= V1WC4	
			Ed.	MKLEPADLO						+ V1UC12	
			Appr		P6700 Bodyside LH - Robot Cell 2V09	Scale 1:1		Document type: EFS	Project nr: 22-16150	Page	12
Modification	Date	Name	Original		Replacement of	Replaced by					1533

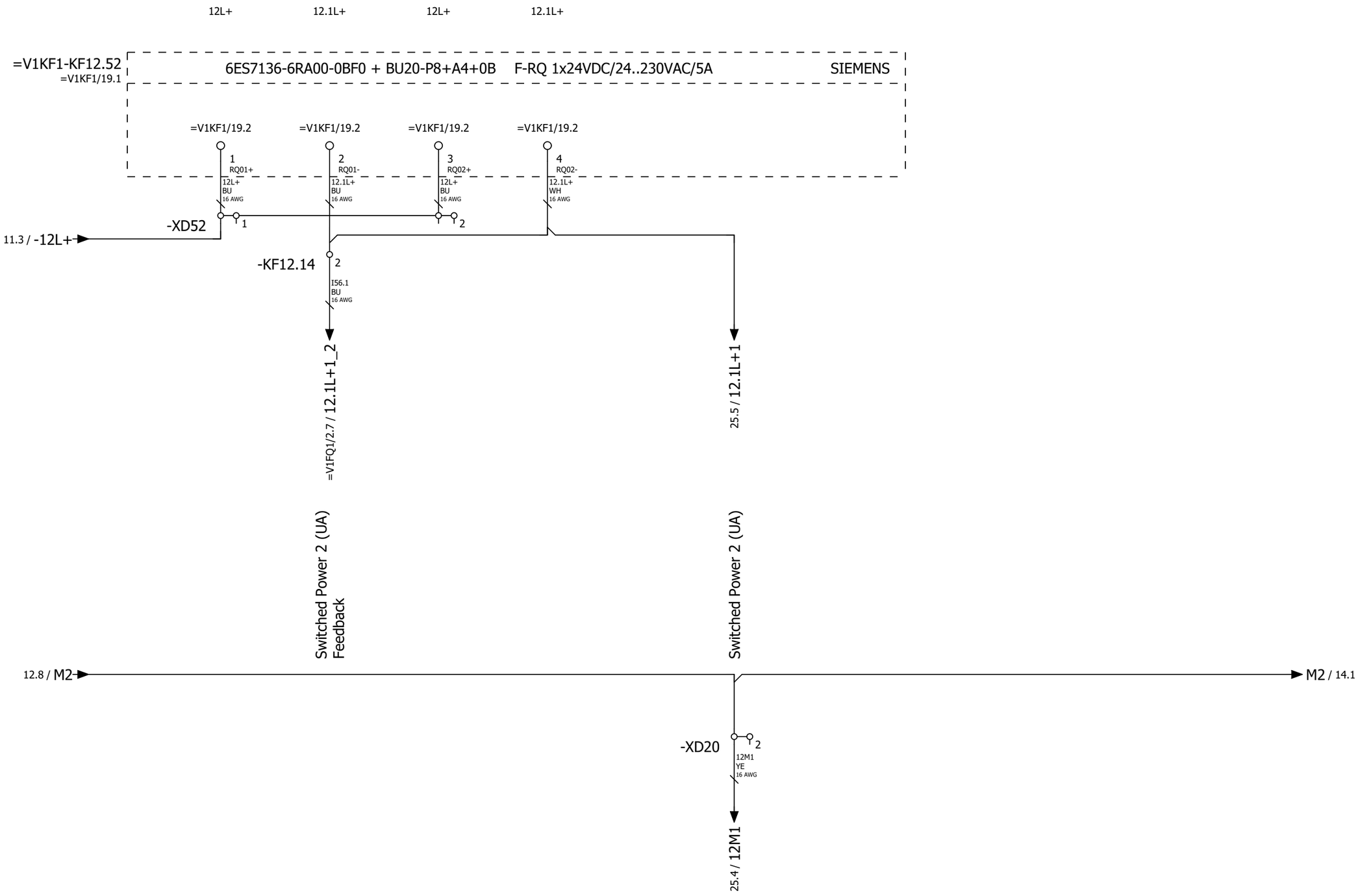

12

14

			Date	1/17/2023	Volvo Trucks North America		Valiant TMS	Power distribution 24VDC 12L+	Drawing name: =2V09&EFS-EL	= V1WC4	
			Ed.	MKLEPADLO						+ V1UC12	
			Appr		P6700 Bodyside LH - Robot Cell 2V09		Scale 1:1		Document type: EFS	Project nr: 22-16150	Page 13 / 1533
Modification	Date	Name	Original		Replacement of	Replaced by					

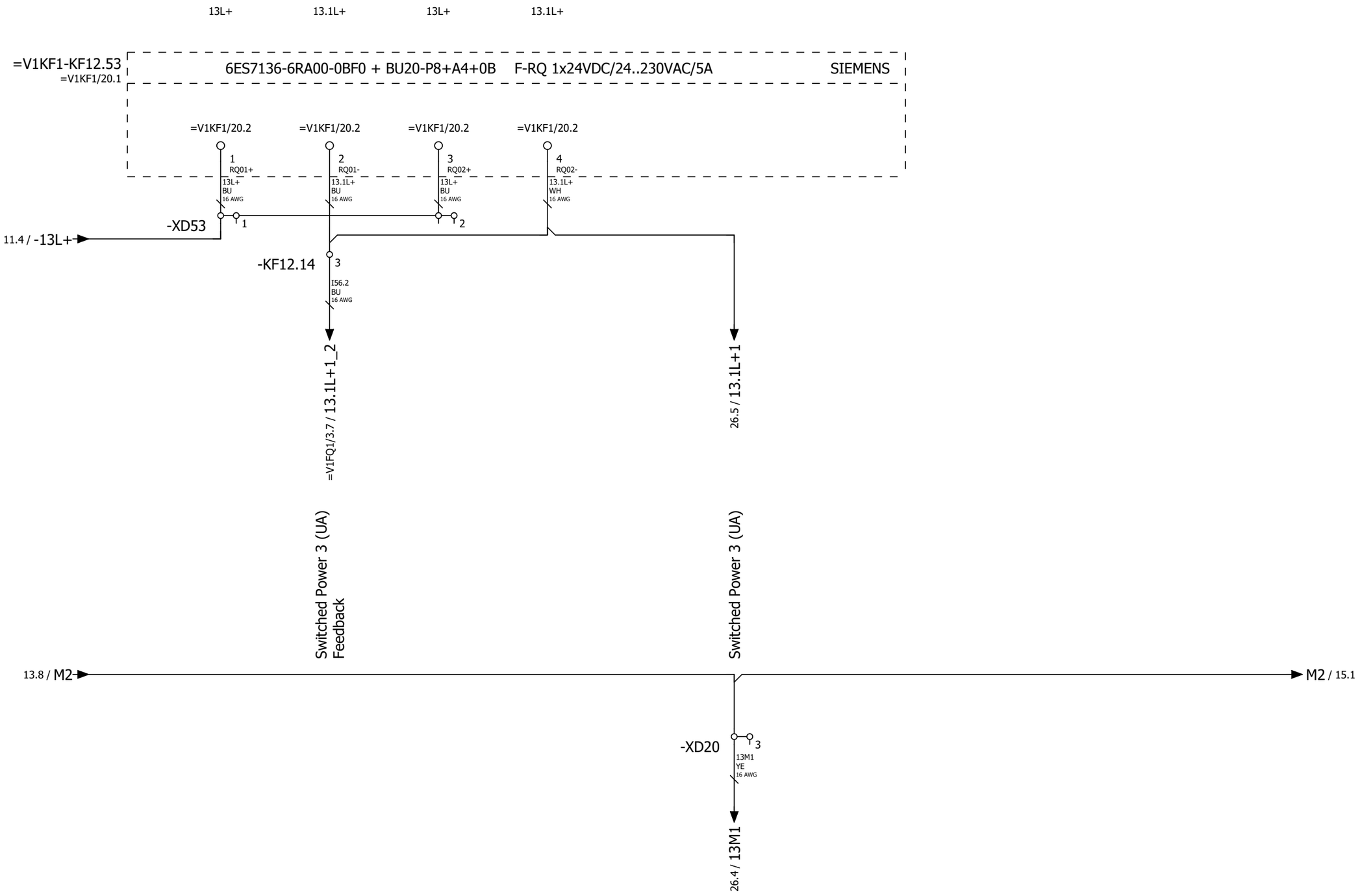

			Date	1/17/2023	Volvo Trucks North America		Valiant TMS	Power distribution 24VDC 13L+	Drawing name: =2V09&EFS-EL	= V1WC4
			Ed.	MKLEPADLO						+ V1UC12
			Appr		P6700 Bodyside LH - Robot Cell 2V09				Document type: EFS	Project nr: 22-16150
Modification	Date	Name	Original		Replacement of	Replaced by	Scale 1:1			Page 14 / 1533

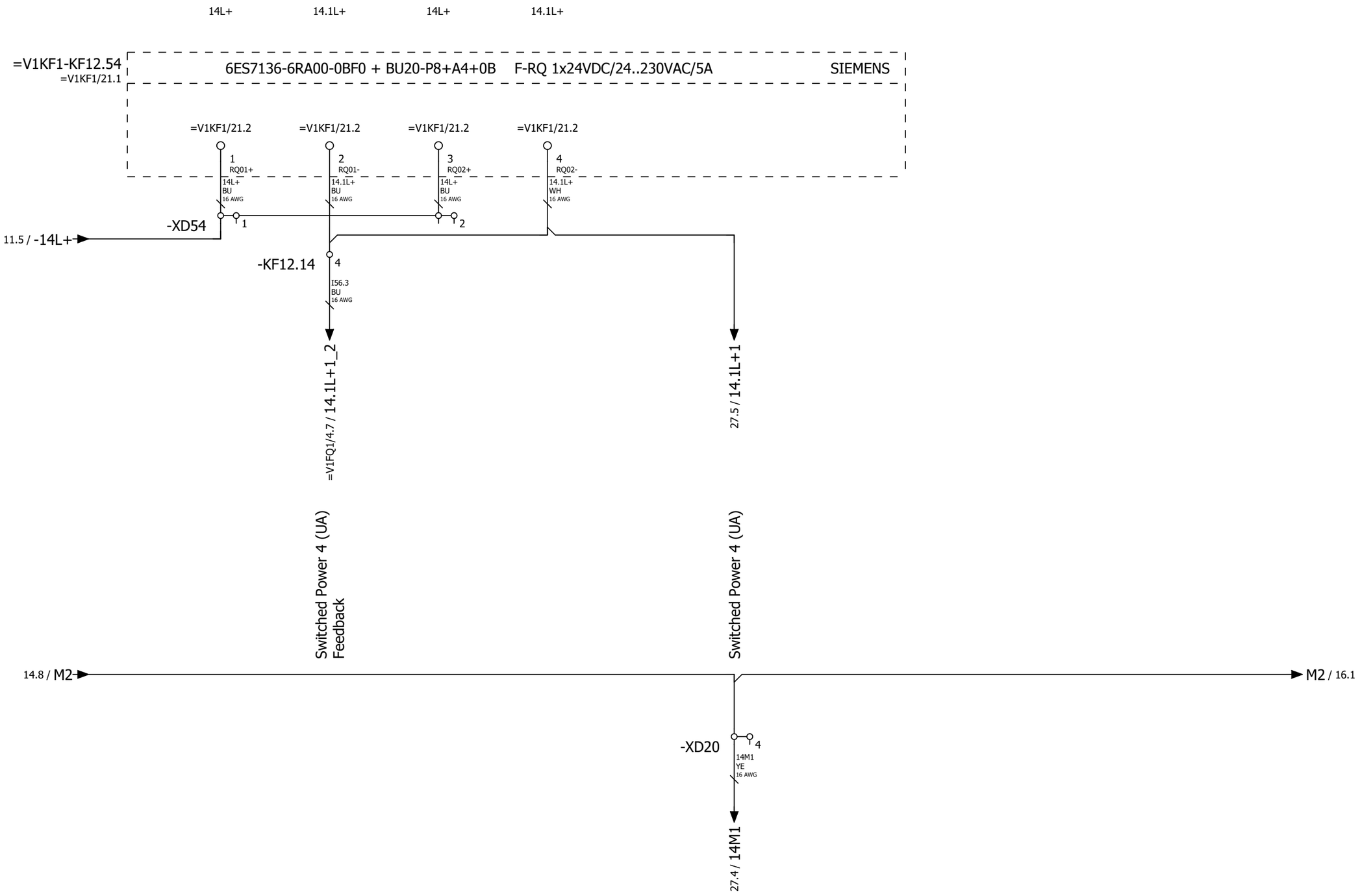

			Date	1/17/2023	Volvo Trucks North America		Valiant TMS	Power distribution 24VDC 14L+	Drawing name: =2V09&EFS-EL	= V1WC4	
			Ed.	MKLEPADLO						+ V1UC12	
			Appr		P6700 Bodyside LH - Robot Cell 2V09				Document type: EFS	Project nr: 22-16150	Page 15
Modification	Date	Name	Original		Replacement of	Replaced by	Scale 1:1				1533

15

17

			Date	1/17/2023	Volvo Trucks North America	Valiant TMS	Power distribution 24VDC 15L+	Drawing name: =2V09&EFS-EL	= V1WC4	
			Ed.	MKLEPADLO					+ V1UC12	
			Appr		P6700 Bodyside LH - Robot Cell 2V09			Document type: EFS	Project nr: 22-16150	Page 16
Modification	Date	Name	Original		Replacement of / Replaced by	Scale 1:1				1533

0	1	2	3	4	5	6	7	8	9

16

18

			Date	1/17/2023	Volvo Trucks North America		Valiant TMS	Power distribution 24VDC 16L+	Drawing name: =2V09&EFS-EL		= V1WC4
			Ed.	MKLEPADLO							+ V1UC12
			Appr		P6700 Bodyside LH - Robot Cell 2V09				Document type: EFS	Project nr: 22-16150	Page 17
Modification	Date	Name	Original		Replacement of	Replaced by	Scale 1:1				1533

Switched Power 3 (US)

17.8 / M2

M2 / 19.1

-XD20

7

17M1
WHYE
16 AWG

26.4 / 17M1

17

19

			Date	1/17/2023	Volvo Trucks North America	Valiant TMS	Power distribution 24VDC 17L+	Drawing name: =2V09&EFS-EL	= V1WC4	
			Ed.	MKLEPADLO					+ V1UC12	
			Appr		P6700 Bodyside LH - Robot Cell 2V09			Document type: EFS	Project nr: 22-16150	Page 18
Modification	Date	Name	Original		Replacement of / Replaced by	Scale 1:1				1533

0	1	2	3	4	5	6	7	8	9

18

20

			Date	1/17/2023	Volvo Trucks North America	Valiant TMS	Power distribution 24VDC 18L+	Drawing name: =2V09&EFS-EL	= V1WC4	
			Ed.	MKLEPADLO					+ V1UC12	
			Appr		P6700 Bodyside LH - Robot Cell 2V09			Document type: EFS	Project nr: 22-16150	Page 19
Modification	Date	Name	Original		Replacement of	Replaced by	Scale 1:1			1533

0	1	2	3	4	5	6	7	8	9

+.UC12

/ 7.1

/ 1.6

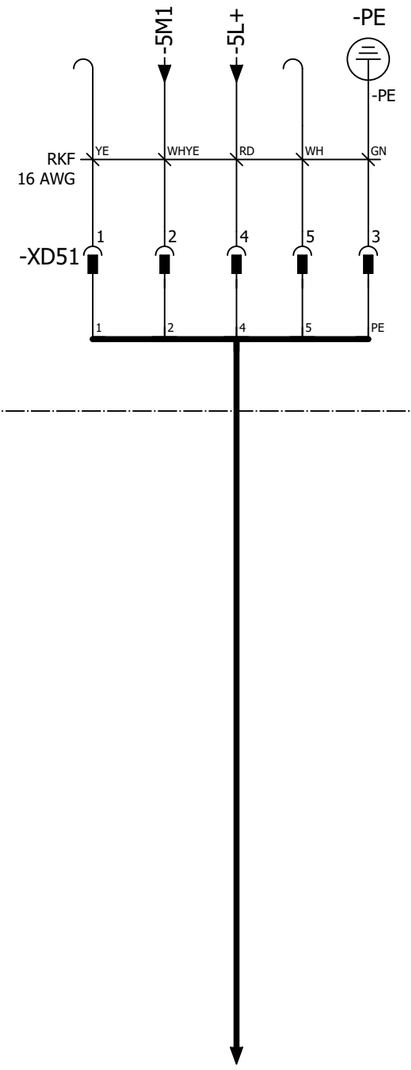

POWER IN / POWER OUT

Pin 1: 0 V UA
Pin 2: 0 V US
Pin 3: FE
Pin 4: +24 V US / 9 A
Pin 5: +24 V UA / 9 A

Pin #	WIRE	COLOR
Pin 1	N/C	YE
Pin 2	-5M1	WHYE
Pin 3	GND	GN
Pin 4	-5L+	RD
Pin 5	N/C	WH

19

21

			Date	1/17/2023	Volvo Trucks North America	Valiant TMS	24VDC Unswitched Power 1	Drawing name: =2V09&EFS-EL	= V1WC4
			Ed.	MKLEPADLO					+ V1UC12
			Appr		P6700 Bodyside LH - Robot Cell 2V09	Scale 1:1		Document type: EFS	Project nr: 22-16150
Modification	Date	Name	Original		Replacement of / Replaced by				Page 20 / 1533

0	1	2	3	4	5	6	7	8	9

+.UC12

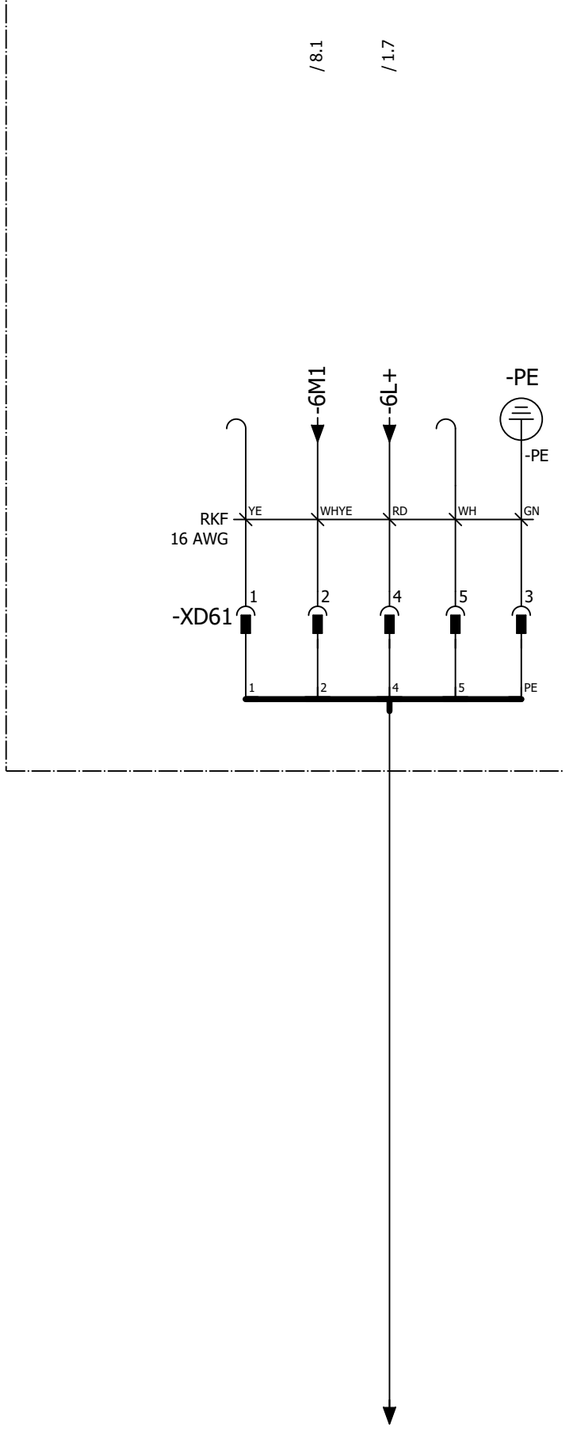

POWER IN / POWER OUT

Pin 1: 0 V UA
Pin 2: 0 V US
Pin 3: FE
Pin 4: +24 V US / 9 A
Pin 5: +24 V UA / 9 A

Pin #	WIRE	COLOR
Pin 1	N/C	YE
Pin 2	-6M1	WHYE
Pin 3	GND	GN
Pin 4	-6L+	RD
Pin 5	N/C	WH

			Date	1/17/2023	Volvo Trucks North America	Valiant TMS	24VDC Unswitched Power 2	Drawing name: =2V09&EFS-EL	= V1WC4
			Ed.	MKLEPADLO					+ V1UC12
			Appr		P6700 Bodyside LH - Robot Cell 2V09	Scale 1:1		Document type: EFS	Project nr: 22-16150
Modification	Date	Name	Original		Replacement of / Replaced by				Page 21 / 1533

0	1	2	3	4	5	6	7	8	9

+.UC12

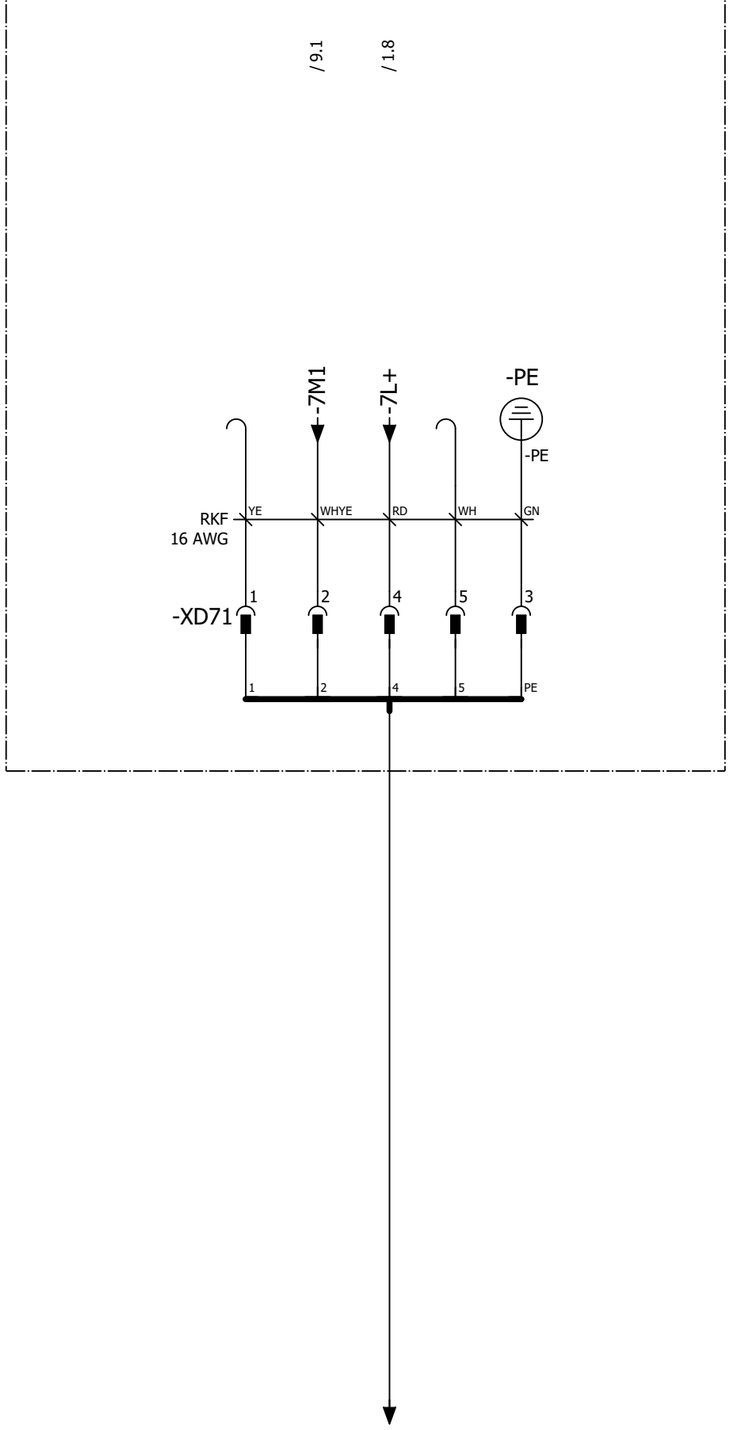

POWER IN / POWER OUT

Pin 1: 0 V UA
Pin 2: 0 V US
Pin 3: FE
Pin 4: +24 V US / 9 A
Pin 5: +24 V UA / 9 A

Pin #	WIRE	COLOR
Pin 1	N/C	YE
Pin 2	-7M1	WHYE
Pin 3	GND	GN
Pin 4	-7L+	RD
Pin 5	N/C	WH

			Date	1/17/2023	Volvo Trucks North America	Valiant TMS	24VDC Unswitched Power 3	Drawing name: =2V09&EFS-EL	= V1WC4
			Ed.	MKLEPADLO					+ V1UC12
			Appr		P6700 Bodyside LH - Robot Cell 2V09	Scale 1:1		Document type: EFS	Project nr: 22-16150
Modification	Date	Name	Original		Replacement of / Replaced by				Page 22 / 1533

0	1	2	3	4	5	6	7	8	9

+.UC12

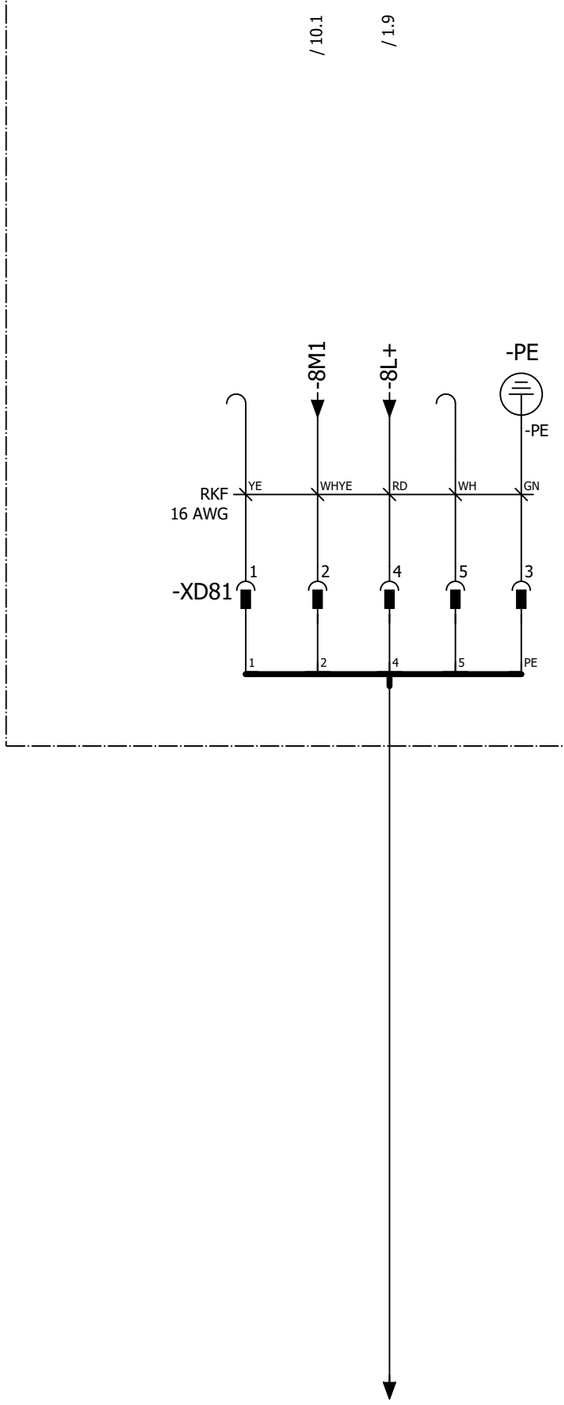

POWER IN / POWER OUT

Pin 1: 0 V UA
Pin 2: 0 V US
Pin 3: FE
Pin 4: +24 V US / 9 A
Pin 5: +24 V UA / 9 A

Pin #	WIRE	COLOR
Pin 1	N/C	YE
Pin 2	-8M1	WHYE
Pin 3	GND	GN
Pin 4	-8L+	RD
Pin 5	N/C	WH

			Date	1/17/2023	Volvo Trucks North America	Valiant TMS	24VDC Unswitched Power 4	Drawing name: =2V09&EFS-EL	= V1WC4
			Ed.	MKLEPADLO					+ V1UC12
			Appr		P6700 Bodyside LH - Robot Cell 2V09	Scale 1:1		Document type: EFS	Project nr: 22-16150
Modification	Date	Name	Original		Replacement of / Replaced by				Page 23 / 1533

0	1	2	3	4	5	6	7	8	9

+.UC12

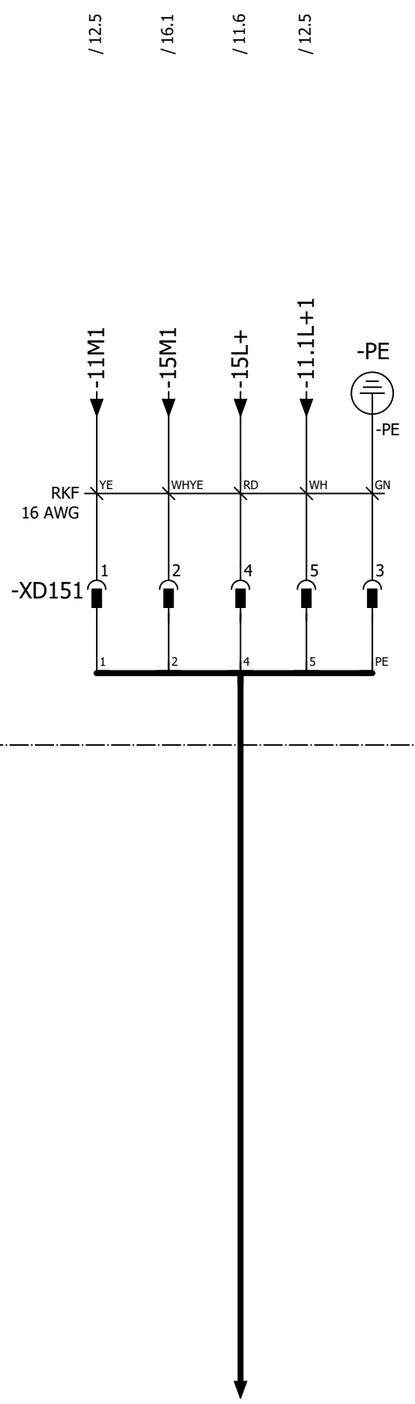

POWER IN / POWER OUT

Pin 1: 0 V UA
Pin 2: 0 V US
Pin 3: FE
Pin 4: +24 V US / 9 A
Pin 5: +24 V UA / 9 A

Pin #	WIRE	COLOR
Pin 1	-11M1	YE
Pin 2	-15M1	WHYE
Pin 3	GND	GN
Pin 4	-15L+	RD
Pin 5	-11.1L+1	WH

			Date	1/17/2023	Volvo Trucks North America	Valiant TMS	24VDC Switched Power 1	Drawing name: =2V09&EFS-EL	= V1WC4
			Ed.	MKLEPADLO					+ V1UC12
			Appr		P6700 Bodyside LH - Robot Cell 2V09	Scale 1:1		Document type: EFS	Project nr: 22-16150
Modification	Date	Name	Original		Replacement of	Replaced by			Page 24 / 1533

+.UC12

/ 13.5 / 17.1 / 11.7 / 13.5

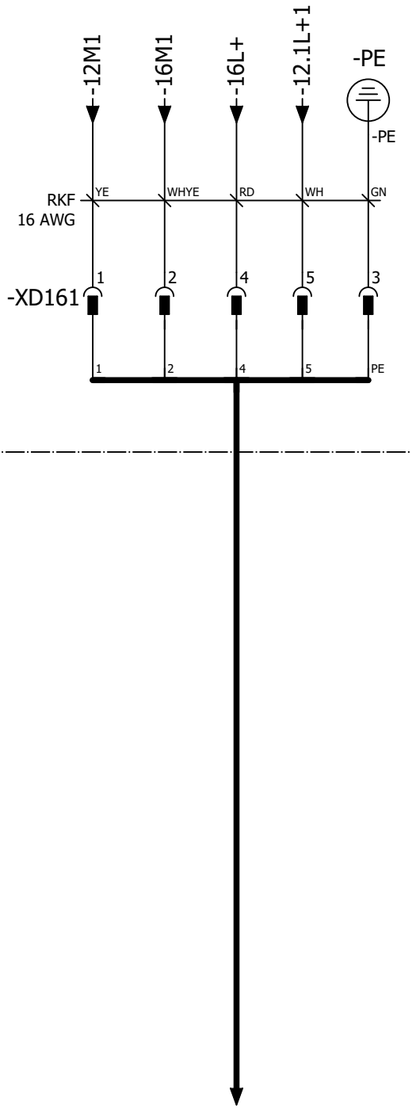

POWER IN / POWER OUT

Pin 1: 0 V UA
Pin 2: 0 V US
Pin 3: FE
Pin 4: +24 V US / 9 A
Pin 5: +24 V UA / 9 A

Pin #	WIRE	COLOR
Pin 1	-12M1	YE
Pin 2	-16M1	WHYE
Pin 3	GND	GN
Pin 4	-16L+	RD
Pin 5	-12.1L+1	WH

+.GL1UQ57-W1
=V1GL1UQ57KF1+.GL1UQ57/1.1

			Date	1/17/2023	Volvo Trucks North America	Valiant TMS	24VDC Switched Power 2	Drawing name: =2V09&EFS-EL	= V1WC4
			Ed.	MKLEPADLO					+ V1UC12
			Appr		P6700 Bodyside LH - Robot Cell 2V09	Scale 1:1		Document type: EFS	Project nr: 22-16150
Modification	Date	Name	Original		Replacement of	Replaced by			Page 25 / 1533

+.UC12

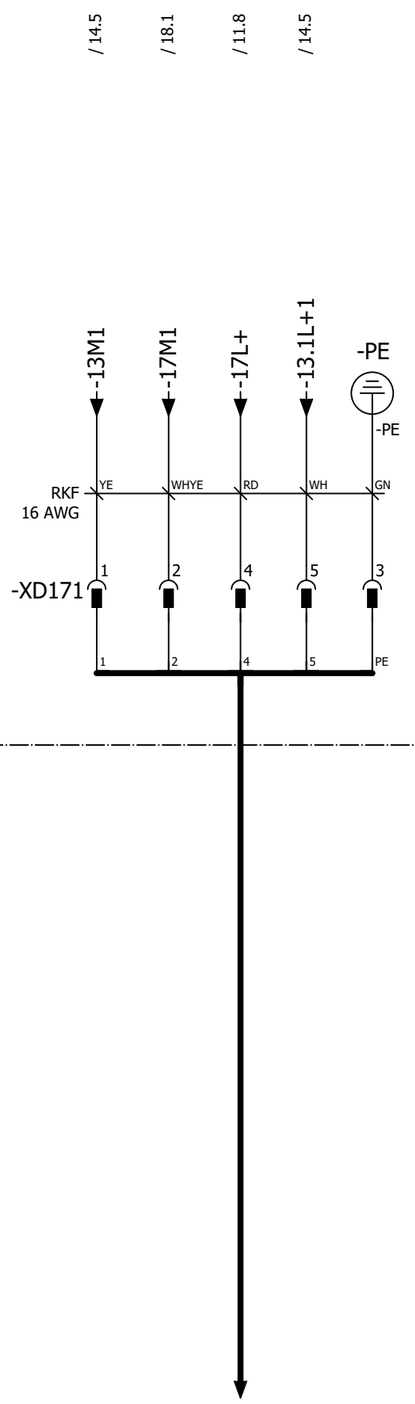

POWER IN / POWER OUT

Pin 1: 0 V UA
Pin 2: 0 V US
Pin 3: FE
Pin 4: +24 V US / 9 A
Pin 5: +24 V UA / 9 A

Pin #	WIRE	COLOR
Pin 1	-13M1	YE
Pin 2	-17M1	WHYE
Pin 3	GND	GN
Pin 4	-17L+	RD
Pin 5	-13.1L+1	WH

			Date	1/17/2023	Volvo Trucks North America	Valiant TMS	24VDC Switched Power 3	Drawing name: =2V09&EFS-EL	= V1WC4	
			Ed.	MKLEPADLO					+ V1UC12	
			Appr		P6700 Bodyside LH - Robot Cell 2V09	Scale 1:1		Document type: EFS	Project nr: 22-16150	Page 26 / 1533
Modification	Date	Name	Original		Replacement of	Replaced by				

0	1	2	3	4	5	6	7	8	9

+.UC12

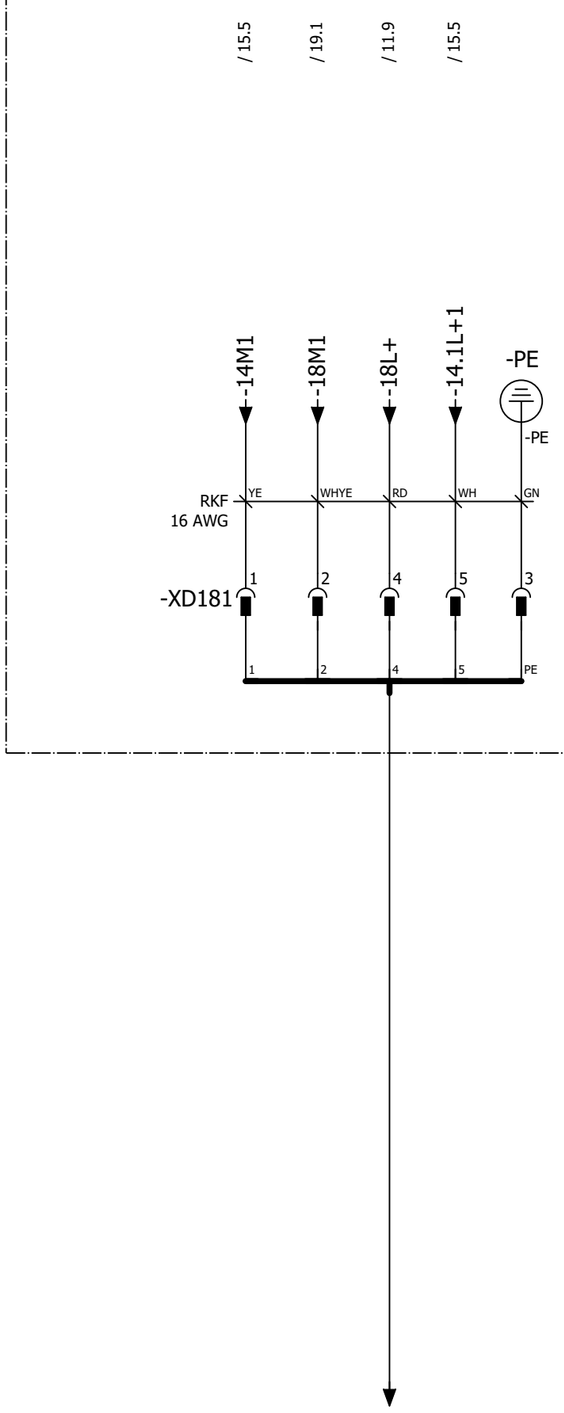

POWER IN / POWER OUT

Pin 1: 0 V UA
Pin 2: 0 V US
Pin 3: FE
Pin 4: +24 V US / 9 A
Pin 5: +24 V UA / 9 A

Pin #	WIRE	COLOR
Pin 1	-14M1	YE
Pin 2	-18M1	WHYE
Pin 3	GND	GN
Pin 4	-18L+	RD
Pin 5	-14.1L+1	WH

			Date	1/17/2023	Volvo Trucks North America	Valiant TMS	24VDC Switched Power 4	Drawing name: =2V09&EFS-EL	= V1WC4	
			Ed.	MKLEPADLO					+ V1UC12	
			Appr		P6700 Bodyside LH - Robot Cell 2V09			Document type: EFS	Project nr: 22-16150	Page 27
Modification	Date	Name	Original		Replacement of	Replaced by	Scale 1:1			1533

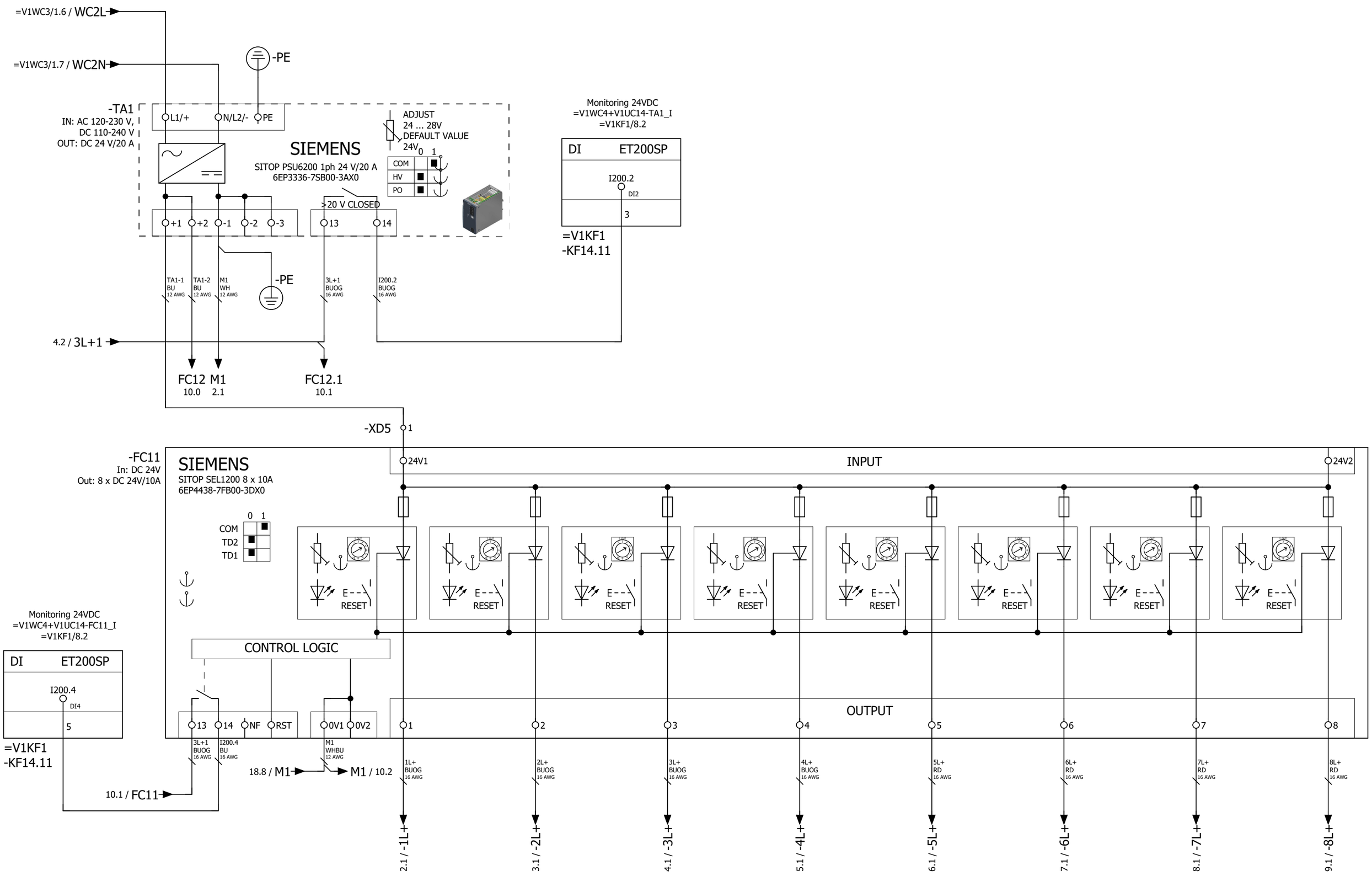

+.UC12/27

2

			Date	1/17/2023	Volvo Trucks North America	Valiant TMS	Power distribution 24VDC for Inputs	Drawing name: =2V09&EFS-EL	= V1WC4
			Ed.	MKLEPADLO					+ V1UC14
			Appr		P6700 Bodyside LH - Robot Cell 2V09			Document type: EFS	Project nr: 22-16150
Modification	Date	Name	Original		Replacement of	Replaced by	Scale 1:1		Page 1 / 1533

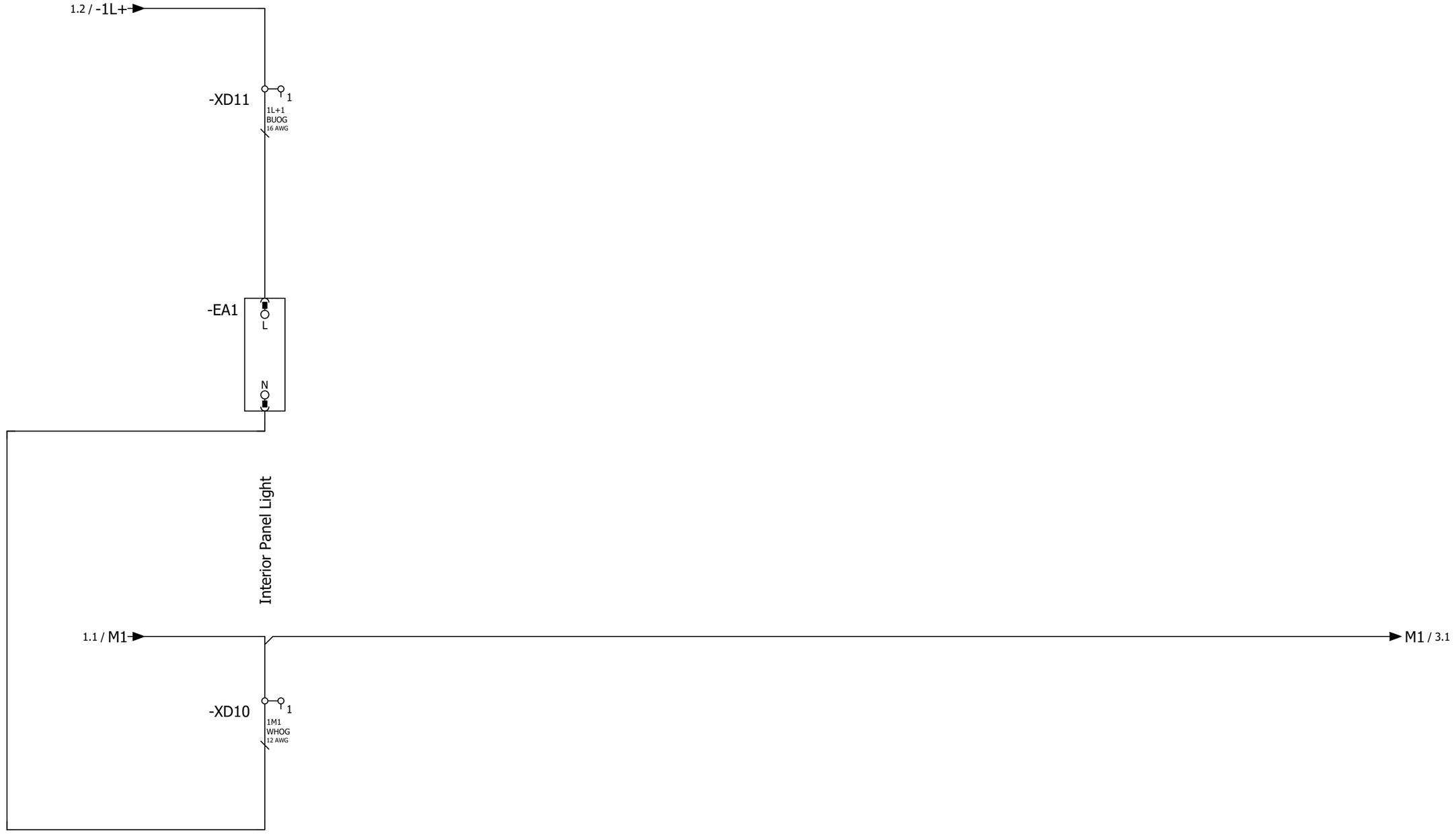

1 3

			Date	1/17/2023	Volvo Trucks North America	Valiant TMS	Power distribution 24VDC 1L+	Drawing name: =2V09&EFS-EL	= V1WC4	
			Ed.	MKLEPADLO					+ V1UC14	
			Appr		P6700 Bodyside LH - Robot Cell 2V09	Scale 1:1		Document type: EFS	Project nr: 22-16150	Page 2 / 1533
Modification	Date	Name	Original		Replacement of / Replaced by					

			Date	1/17/2023	Volvo Trucks North America	Valiant TMS	Power distribution 24VDC 2L+	Drawing name: =2V09&EFS-EL		= V1WC4	
			Ed.	MKLEPADLO						+ V1UC14	
			Appr		P6700 Bodyside LH - Robot Cell 2V09	Scale 1:1		Document type: EFS	Project nr: 22-16150	Page	3
Modification	Date	Name	Original		Replacement of	Replaced by					1533

0	1	2	3	4	5	6	7	8	9

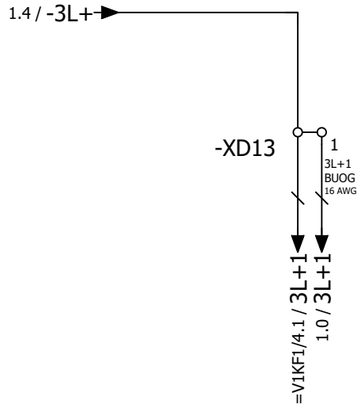

Power Input Cards (DI+FDI)

3 5

			Date	1/17/2023	Volvo Trucks North America		Valiant TMS	Power distribution 24VDC 3L+	Drawing name: =2V09&EFS-EL		= V1WC4
			Ed.	MKLEPADLO							+ V1UC14
			Appr		P6700 Bodyside LH - Robot Cell 2V09				Document type: EFS	Project nr: 22-16150	Page 4
Modification	Date	Name	Original		Replacement of	Replaced by	Scale 1:1				1533

0	1	2	3	4	5	6	7	8	9

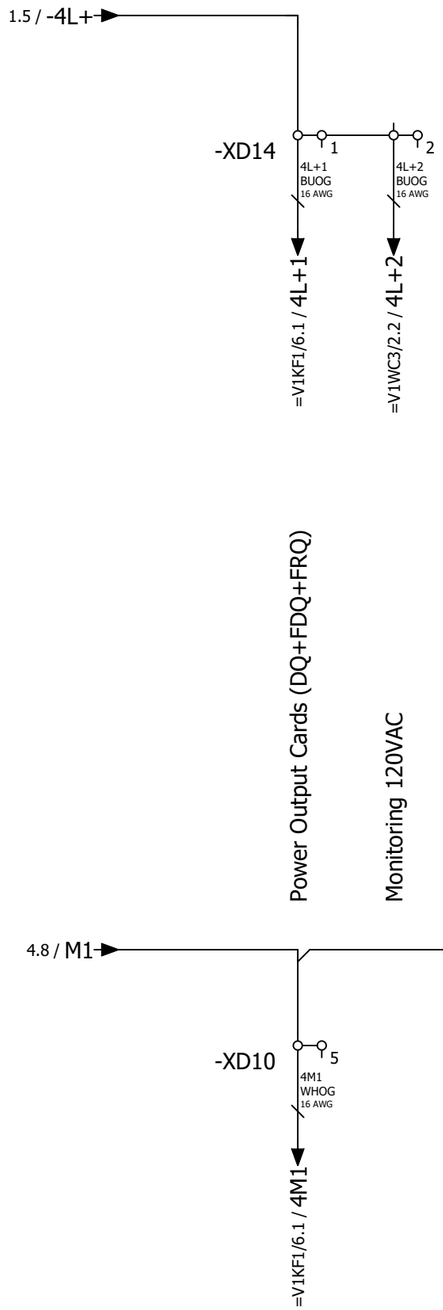

4 6

			Date	1/17/2023	Volvo Trucks North America	Valiant TMS	Power distribution 24VDC 4L+	Drawing name: =2V09&EFS-EL	= V1WC4	
			Ed.	MKLEPADLO					+ V1UC14	
			Appr		P6700 Bodyside LH - Robot Cell 2V09			Document type: EFS	Project nr: 22-16150	Page 5
Modification	Date	Name	Original		Replacement of	Replaced by	Scale 1:1			1533

1.6 / -5L+

-XD15 1 2

5L+2
BN
16 AWG

=V1FQ1+.FQ1/11.1 / 5L+2

0VDC Stack Light

Power Light Screens 1&2,
S020

5.8 / M1

M1 / 7.1

-XD10 6 7

5M1
WHBU
16 AWG

5M2
BU
16 AWG

=V1PZ1PF3+.UC63/1.1 / 5M1

=V1PZ1PF4+.UC64/1.1 / 5M1

=V1FQ1+.FQ1/11.1 / 5M2

5 7

			Date	1/17/2023	Volvo Trucks North America	Valiant TMS	Power distribution 24VDC 5L+	Drawing name: =2V09&EFS-EL	= V1WC4	
			Ed.	MKLEPADLO					+ V1UC14	
			Appr		P6700 Bodyside LH - Robot Cell 2V09			Document type: EFS	Project nr: 22-16150	Page 6
Modification	Date	Name	Original		Replacement of / Replaced by	Scale 1:1				1533

0	1	2	3	4	5	6	7	8	9

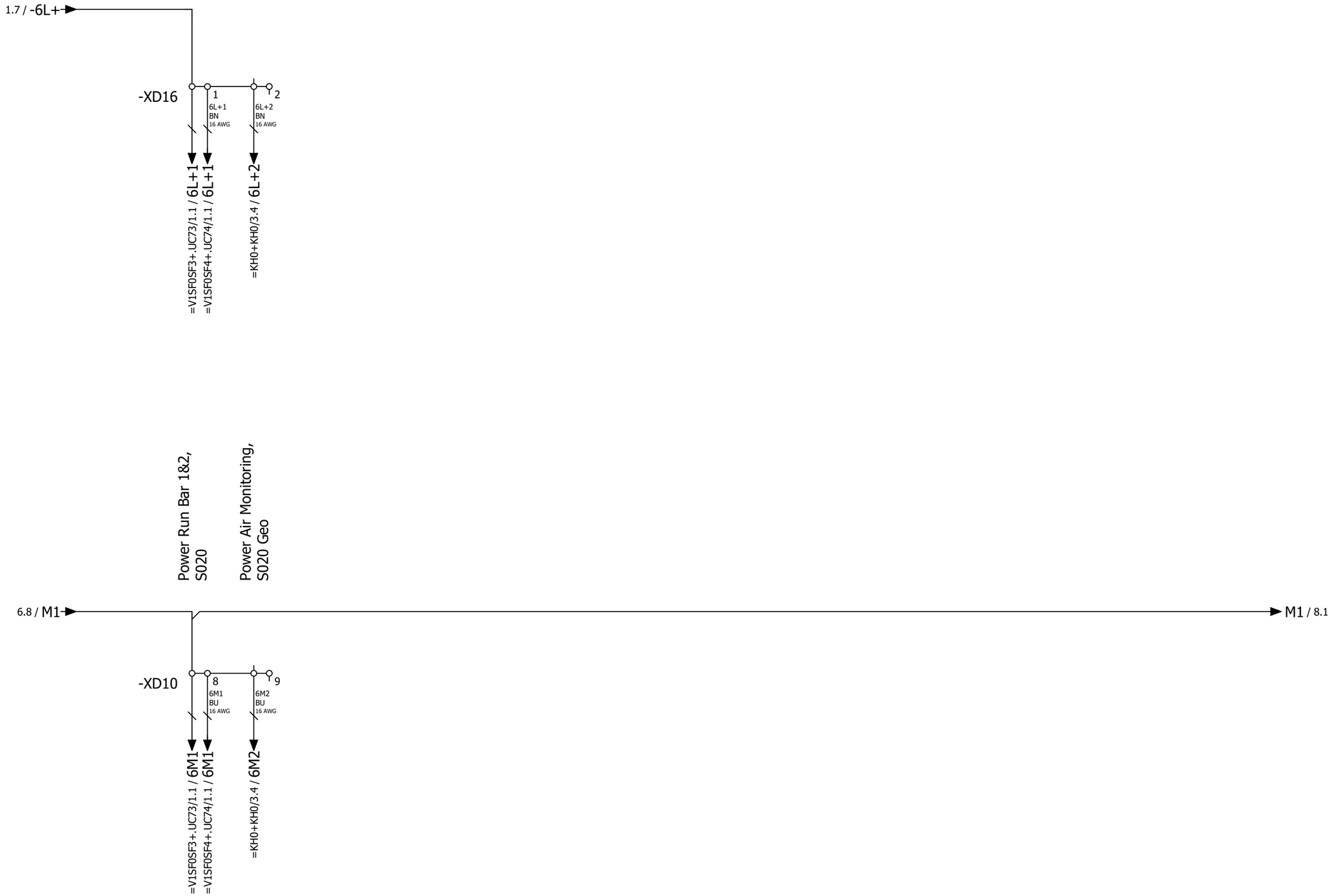

6 8

			Date	1/17/2023	Volvo Trucks North America	Valiant TMS	Power distribution 24VDC 6L+	Drawing name: =2V09&EFS-EL	= V1WC4	
			Ed.	MKLEPADLO					+ V1UC14	
			Appr		P6700 Bodyside LH - Robot Cell 2V09			Document type: EFS	Project nr: 22-16150	Page 7
Modification	Date	Name	Original		Replacement of / Replaced by	Scale 1:1				1533

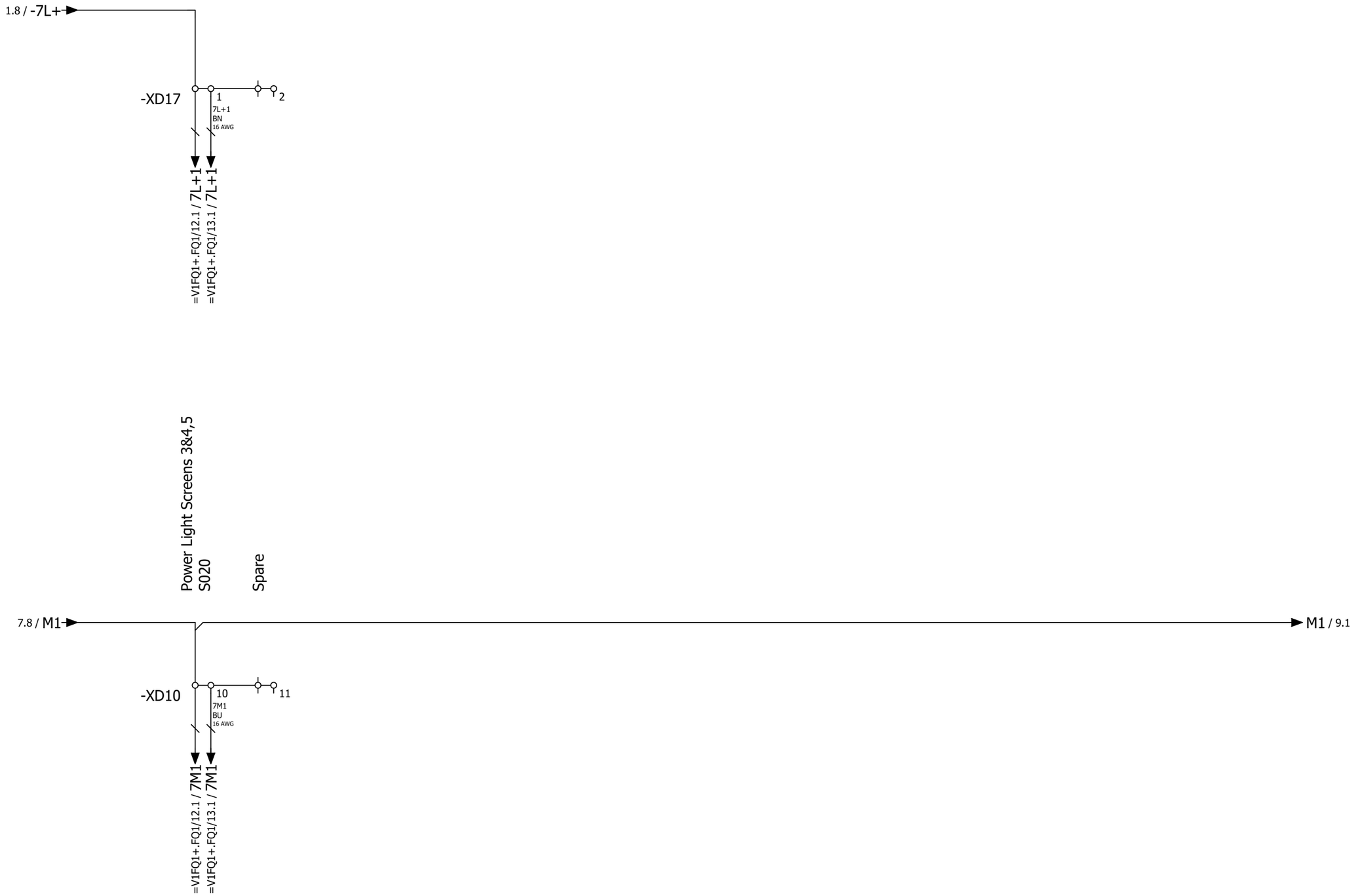

			Date	1/17/2023	Volvo Trucks North America		Valiant TMS	Power distribution 24VDC 7L+	Drawing name: =2V09&EFS-EL	= V1WC4	
			Ed.	MKLEPADLO						+ V1UC14	
			Appr		P6700 Bodyside LH - Robot Cell 2V09		Scale 1:1		Document type: EFS	Project nr: 22-16150	Page 8 / 1533
Modification	Date	Name	Original		Replacement of	Replaced by					

0	1	2	3	4	5	6	7	8	9

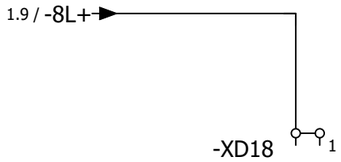

8

10

			Date	1/17/2023	Volvo Trucks North America		Valiant TMS	Power distribution 24VDC 8L+	Drawing name: =2V09&EFS-EL	= V1WC4	
			Ed.	MKLEPADLO						+ V1UC14	
			Appr		P6700 Bodyside LH - Robot Cell 2V09				Document type: EFS	Project nr: 22-16150	Page 9
Modification	Date	Name	Original		Replacement of	Replaced by	Scale 1:1				1533

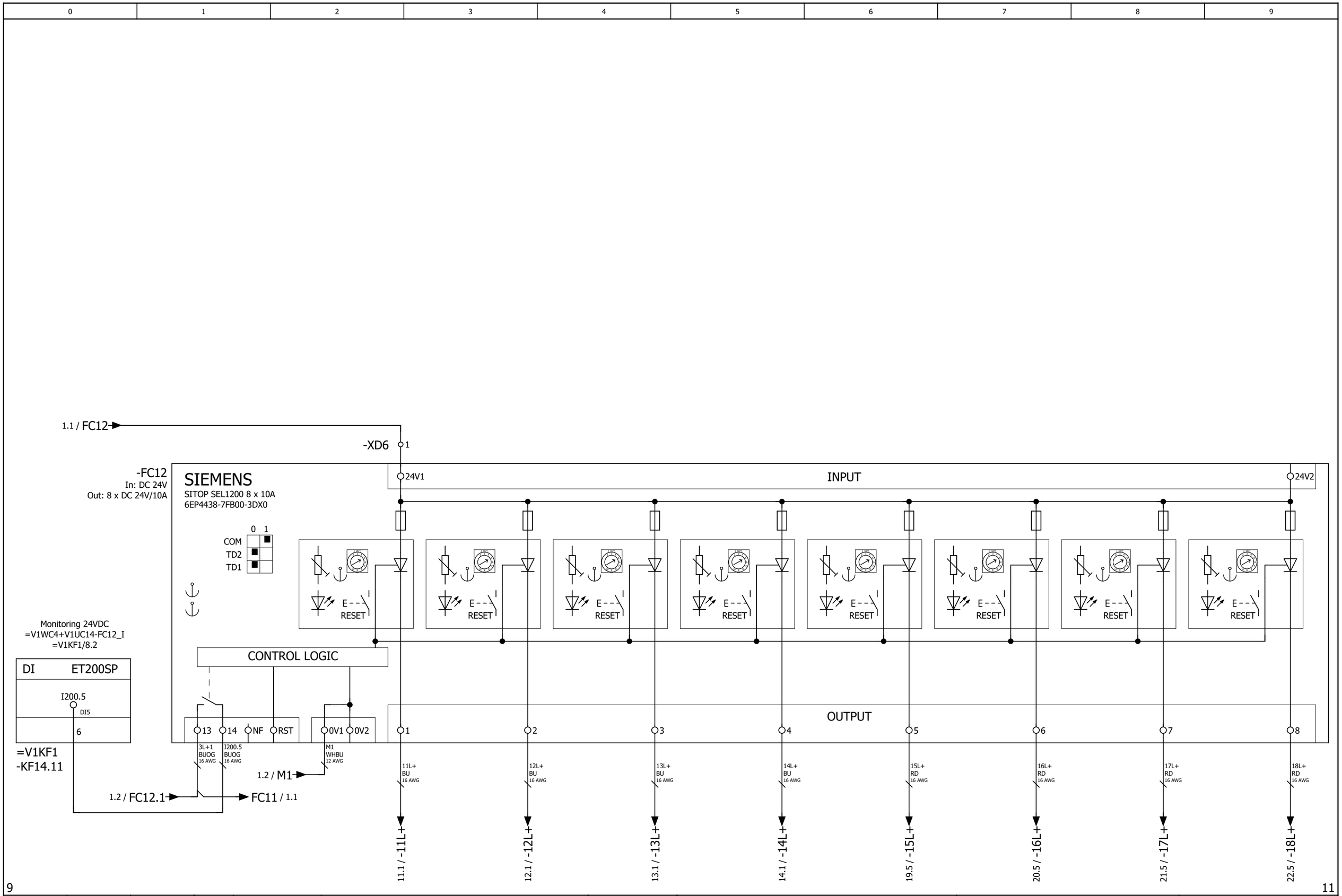

			Date	1/17/2023	Volvo Trucks North America	Valiant TMS	Power distribution 24VDC (Below Disconnect)	Drawing name: =2V09&EFS-EL	= V1WC4 + V1UC14	
			Ed.	MKLEPADLO	P6700 Bodyside LH - Robot Cell 2V09			Document type: EFS	Project nr: 22-16150	Page 10
			Appr							1533
Modification	Date	Name	Original		Replacement of / Replaced by	Scale 1:1				

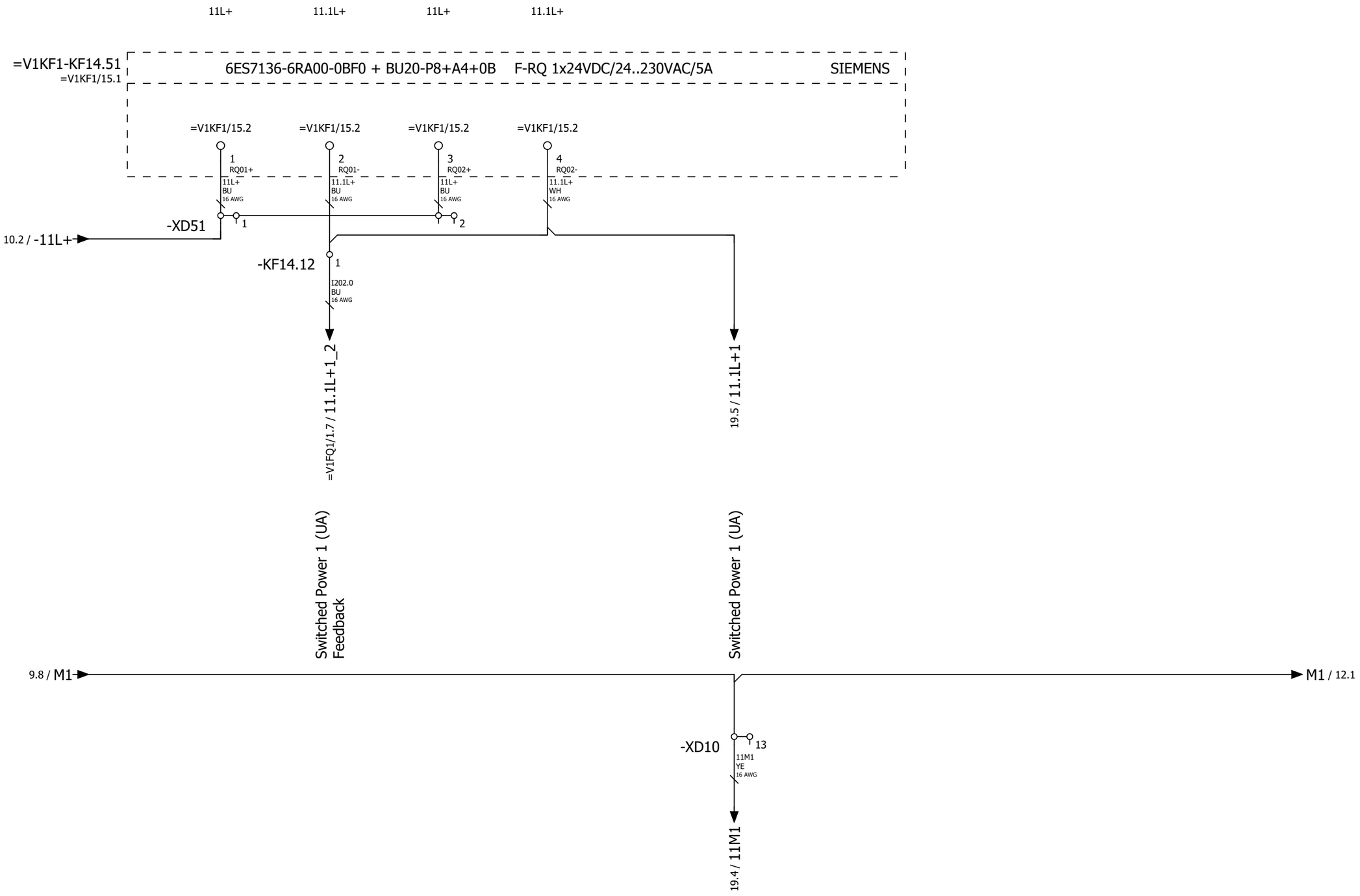

10 12

			Date	1/17/2023	Volvo Trucks North America		Valiant TMS	Power distribution 24VDC 11L+	Drawing name: =2V09&EFS-EL	= V1WC4	
			Ed.	MKLEPADLO						+ V1UC14	
			Appr		P6700 Bodyside LH - Robot Cell 2V09		Scale 1:1		Document type: EFS	Project nr: 22-16150	Page 11 / 1533
Modification	Date	Name	Original		Replacement of	Replaced by					

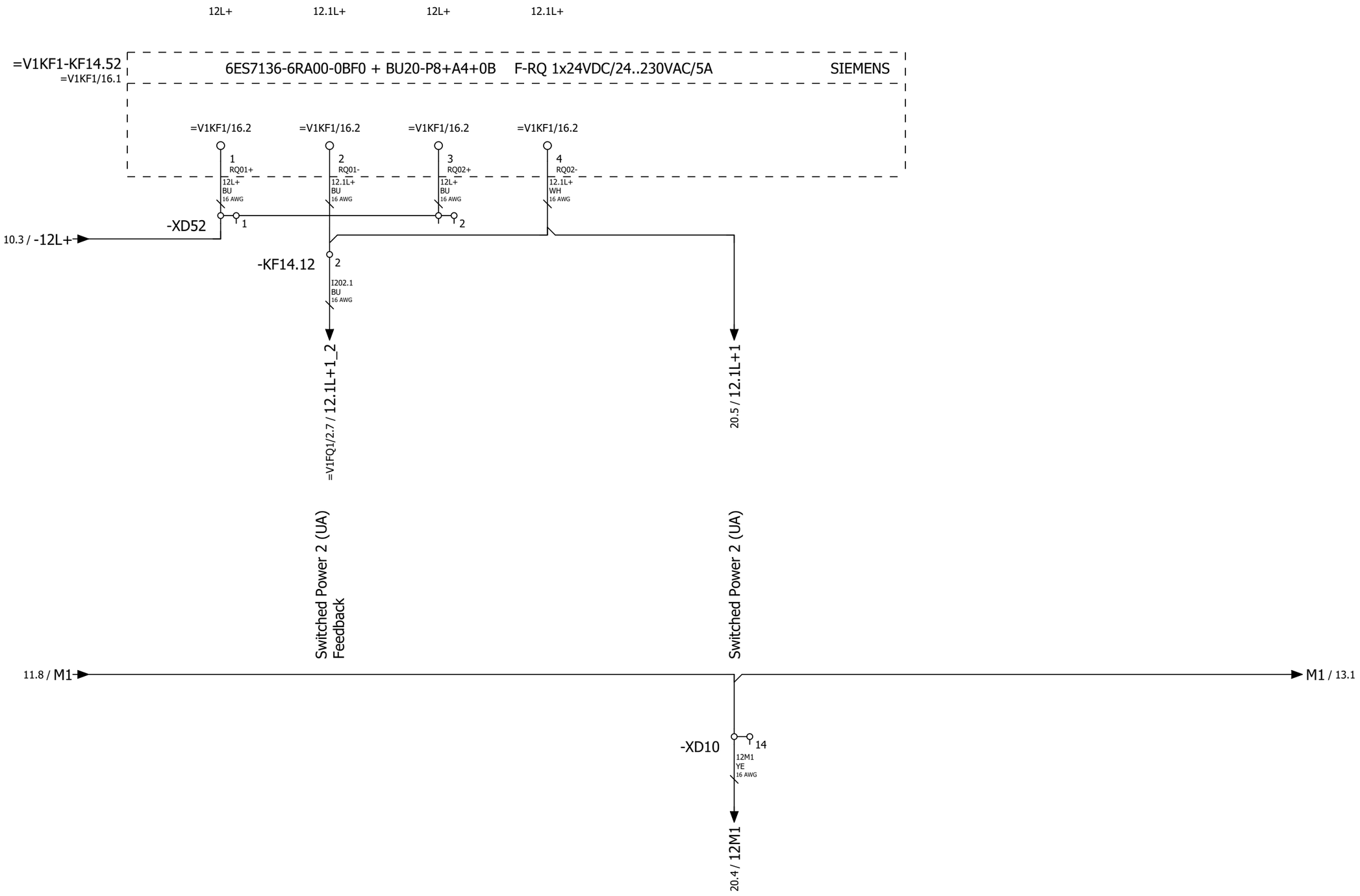

11

13

			Date	1/17/2023	Volvo Trucks North America		Valiant TMS	Power distribution 24VDC 12L+	Drawing name: =2V09&EFS-EL	= V1WC4	
			Ed.	MKLEPADLO						+ V1UC14	
			Appr		P6700 Bodyside LH - Robot Cell 2V09		Scale 1:1		Document type: EFS	Project nr: 22-16150	Page 12 / 1533
Modification	Date	Name	Original		Replacement of	Replaced by					

0	1	2	3	4	5	6	7	8	9

13L+ 13.1L+ 13L+ 13.1L+

=V1KF1-KF14.53
=V1KF1/17.1

6ES7136-6RA00-0BF0 + BU20-P8+A4+0B F-RQ 1x24VDC/24..230VAC/5A SIEMENS

=V1KF1/17.2 =V1KF1/17.2 =V1KF1/17.2 =V1KF1/17.2

1 RQ01+ 13L+ BU 16 AWG
2 RQ01- 13.1L+ BU 16 AWG
3 RQ02+ 13L+ BU 16 AWG
4 RQ02- 13.1L+ WH 16 AWG

10.4 / -13L+ → -XD53 1 2

-KF14.12 3
I202.2 BU 16 AWG

=V1FQ1/3.7 / 13.1L+1_2

Switched Power 3 (UA) Feedback

21.5 / 13.1L+1

Switched Power 3 (UA)

12.8 / M1 → M1 / 14.1

-XD10 15
13M1 YE 16 AWG

21.4 / 13M1

12 14

			Date	1/17/2023	Volvo Trucks North America		Valiant TMS	Power distribution 24VDC 13L+	Drawing name: =2V09&EFS-EL		= V1WC4	
			Ed.	MKLEPADLO							+ V1UC14	
			Appr		P6700 Bodyside LH - Robot Cell 2V09		Scale 1:1		Document type: EFS	Project nr: 22-16150	Page	13
Modification	Date	Name	Original		Replacement of	Replaced by						1533

0	1	2	3	4	5	6	7	8	9

14L+ 14.1L+ 14L+ 14.1L+

=V1KF1-KF14.54
=V1KF1/18.1

6ES7136-6RA00-0BF0 + BU20-P8+A4+0B F-RQ 1x24VDC/24..230VAC/5A SIEMENS

=V1KF1/18.2 =V1KF1/18.2 =V1KF1/18.2 =V1KF1/18.2

1 RQ01+ 14L+ BU 16 AWG
2 RQ01- 14.1L+ BU 16 AWG
3 RQ02+ 14L+ BU 16 AWG
4 RQ02- 14.1L+ WH 16 AWG

-XD54 1 2

10.5 / -14L+

-KF14.12 4

I202.3 BU 16 AWG

=V1FQ1/4.7 / 14.1L+1_2

Switched Power 4 (UA) Feedback

22.5 / 14.1L+1

Switched Power 4 (UA)

13.8 / M1

M1 / 15.1

-XD10 16

14M1 YE 16 AWG

22.4 / 14M1

13

15

			Date	1/17/2023	Volvo Trucks North America	Valiant TMS	Power distribution 24VDC 14L+	Drawing name: =2V09&EFS-EL		= V1WC4	
			Ed.	MKLEPADLO						+ V1UC14	
			Appr		P6700 Bodyside LH - Robot Cell 2V09	Scale 1:1		Document type: EFS	Project nr: 22-16150	Page	14
Modification	Date	Name	Original		Replacement of	Replaced by					1533

14

16

			Date	1/17/2023	Volvo Trucks North America	Valiant TMS	Power distribution 24VDC 15L+	Drawing name: =2V09&EFS-EL	= V1WC4	
			Ed.	MKLEPADLO					+ V1UC14	
			Appr		P6700 Bodyside LH - Robot Cell 2V09			Document type: EFS	Project nr: 22-16150	Page 15
Modification	Date	Name	Original		Replacement of	Replaced by	Scale 1:1			1533

15

17

			Date	1/17/2023	Volvo Trucks North America	Valiant TMS	Power distribution 24VDC 16L+	Drawing name: =2V09&EFS-EL	= V1WC4	
			Ed.	MKLEPADLO					+ V1UC14	
			Appr		P6700 Bodyside LH - Robot Cell 2V09			Document type: EFS	Project nr: 22-16150	Page 16
Modification	Date	Name	Original		Replacement of / Replaced by	Scale 1:1				1533

Switched Power 3 (US)

16.8 / M1

M1 / 18.1

-XD10

19

17M1
WHYE
16 AWG

21.4 / 17M1

16

18

			Date	1/17/2023	Volvo Trucks North America	Valiant TMS	Power distribution 24VDC 17L+	Drawing name: =2V09&EFS-EL		= V1WC4
			Ed.	MKLEPADLO						+ V1UC14
			Appr		P6700 Bodyside LH - Robot Cell 2V09			Document type: EFS	Project nr: 22-16150	Page 17
Modification	Date	Name	Original		Replacement of / Replaced by	Scale 1:1				1533

0	1	2	3	4	5	6	7	8	9

			Date	1/17/2023	Volvo Trucks North America	Valiant TMS	Power distribution 24VDC 18L+	Drawing name: =2V09&EFS-EL	= V1WC4	
			Ed.	MKLEPADLO					+ V1UC14	
			Appr		P6700 Bodyside LH - Robot Cell 2V09			Document type: EFS	Project nr: 22-16150	Page 18
Modification	Date	Name	Original		Replacement of	Replaced by	Scale 1:1			1533

+.UC14

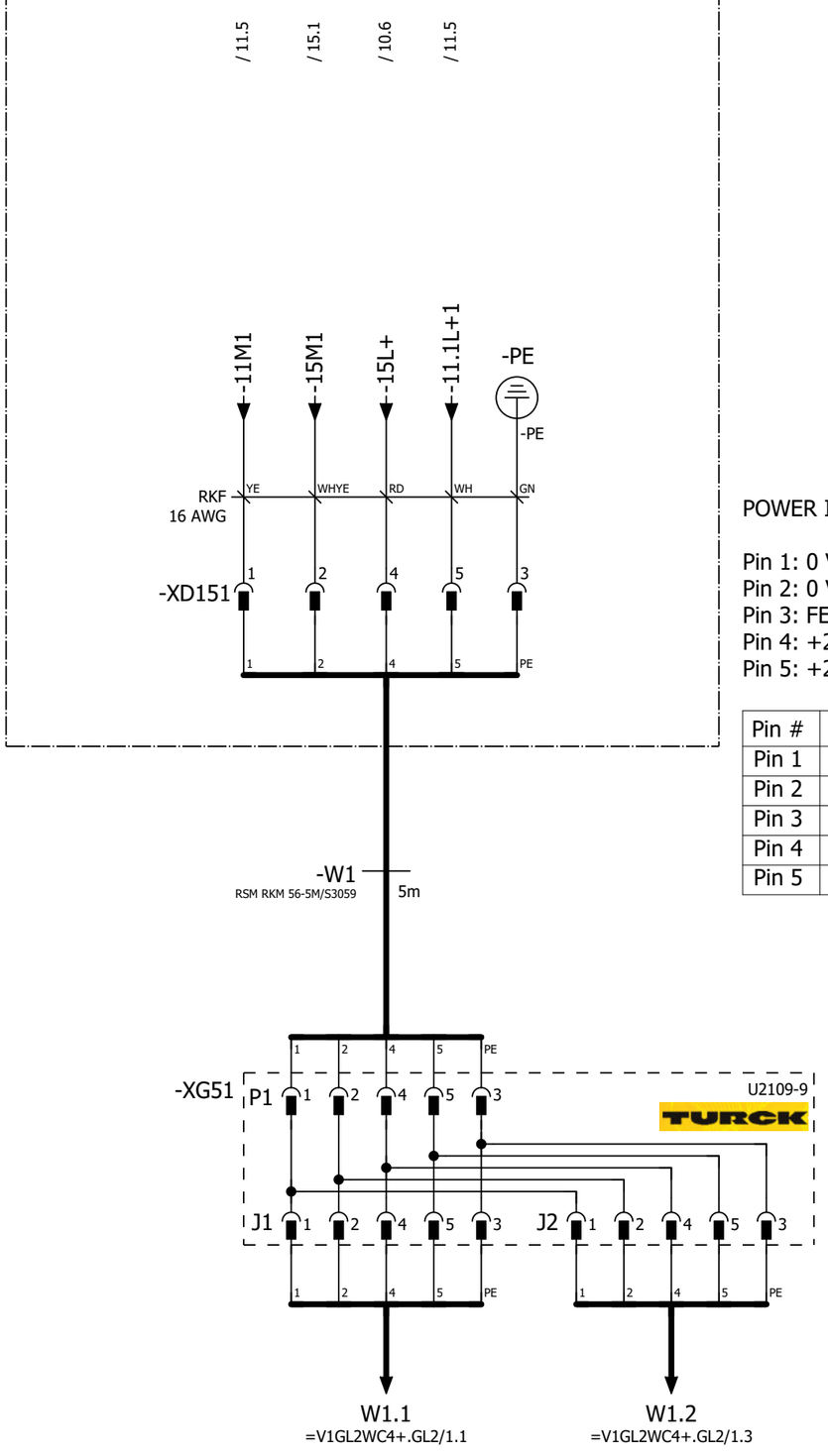

POWER IN / POWER OUT

Pin 1: 0 V UA
Pin 2: 0 V US
Pin 3: FE
Pin 4: +24 V US / 9 A
Pin 5: +24 V UA / 9 A

Pin #	WIRE	COLOR
Pin 1	-11M1	YE
Pin 2	-15M1	WHYE
Pin 3	GND	GN
Pin 4	-15L+	RD
Pin 5	-11.1L+1	WH

			Date	1/17/2023	Volvo Trucks North America	Valiant TMS	24VDC Switched Power 1	Drawing name: =2V09&EFS-EL	= V1WC4
			Ed.	MKLEPADLO					+ V1UC14
			Appr		P6700 Bodyside LH - Robot Cell 2V09	Scale 1:1		Document type: EFS	Project nr: 22-16150
Modification	Date	Name	Original		Replacement of	Replaced by			Page 19 / 1533

0	1	2	3	4	5	6	7	8	9

+.UC14

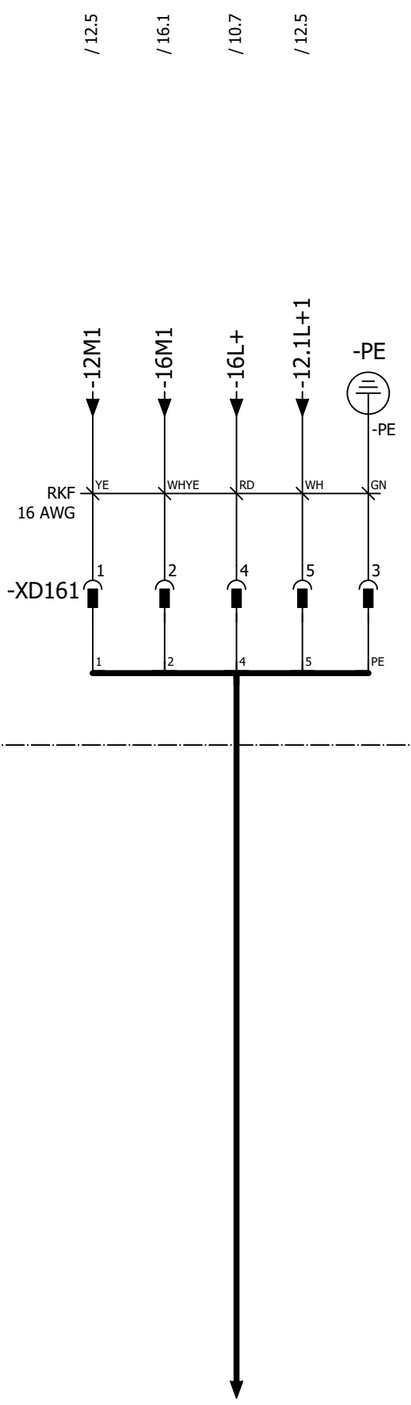

POWER IN / POWER OUT

Pin 1: 0 V UA
Pin 2: 0 V US
Pin 3: FE
Pin 4: +24 V US / 9 A
Pin 5: +24 V UA / 9 A

Pin #	WIRE	COLOR
Pin 1	-12M1	YE
Pin 2	-16M1	WHYE
Pin 3	GND	GN
Pin 4	-16L+	RD
Pin 5	-12.1L+1	WH

			Date	1/17/2023	Volvo Trucks North America	Valiant TMS	24VDC Switched Power 2	Drawing name: =2V09&EFS-EL	= V1WC4
			Ed.	MKLEPADLO					+ V1UC14
			Appr		P6700 Bodyside LH - Robot Cell 2V09	Scale 1:1		Document type: EFS	Project nr: 22-16150
Modification	Date	Name	Original		Replacement of / Replaced by				Page 20 / 1533

0	1	2	3	4	5	6	7	8	9

+.UC14

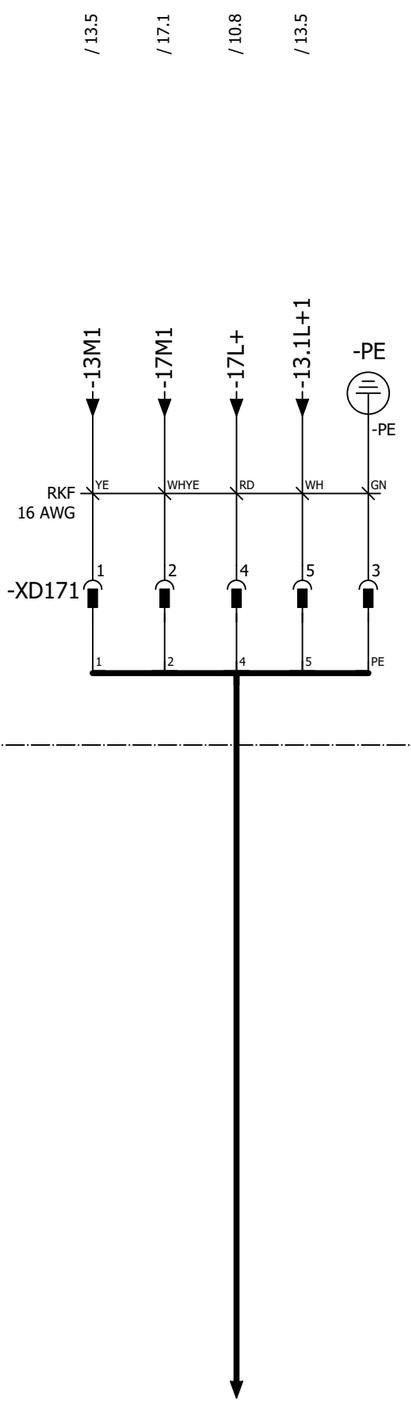

POWER IN / POWER OUT

Pin 1: 0 V UA
Pin 2: 0 V US
Pin 3: FE
Pin 4: +24 V US / 9 A
Pin 5: +24 V UA / 9 A

Pin #	WIRE	COLOR
Pin 1	-13M1	YE
Pin 2	-17M1	WHYE
Pin 3	GND	GN
Pin 4	-17L+	RD
Pin 5	-13.1L+1	WH

			Date	1/17/2023	Volvo Trucks North America	Valiant TMS	24VDC Switched Power 3	Drawing name: =2V09&EFS-EL	= V1WC4
			Ed.	MKLEPADLO					+ V1UC14
			Appr		P6700 Bodyside LH - Robot Cell 2V09	Scale 1:1		Document type: EFS	Project nr: 22-16150
Modification	Date	Name	Original		Replacement of	Replaced by			Page 21 / 1533

0	1	2	3	4	5	6	7	8	9

+.UC14

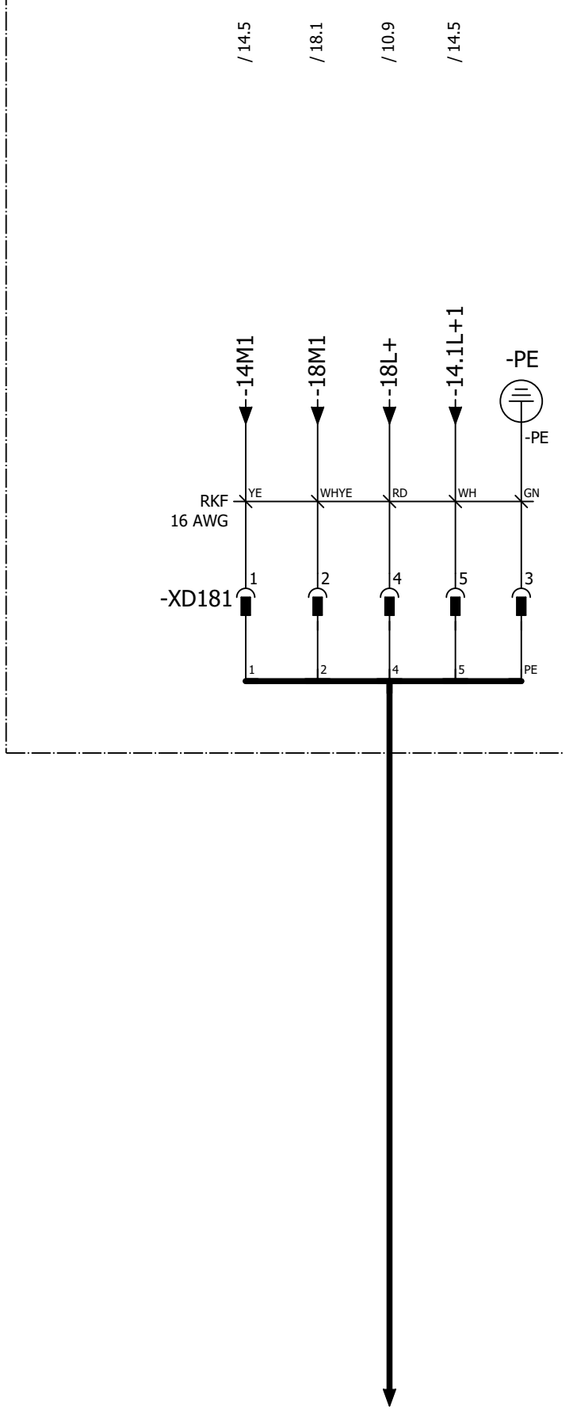

POWER IN / POWER OUT

Pin 1: 0 V UA
Pin 2: 0 V US
Pin 3: FE
Pin 4: +24 V US / 9 A
Pin 5: +24 V UA / 9 A

Pin #	WIRE	COLOR
Pin 1	-14M1	YE
Pin 2	-18M1	WHYE
Pin 3	GND	GN
Pin 4	-18L+	RD
Pin 5	-14.1L+1	WH

0	1	2	3	4	5	6	7	8	9

=V1WC3/1.6 / WC2L

=V1WC3/1.7 / WC2N

-PE

-TA1
IN: AC 120-230 V,
DC 110-240 V
OUT: DC 24 V/20 A

L1/+ N/L2/- PE

SIEMENS
SITOP PSU6200 1ph 24 V/20 A
6EP3336-7SB00-3AX0

ADJUST
24 ... 28V
DEFAULT VALUE
24V

0 1
COM
HV
PO

>20 V CLOSED

+1 +2 -1 -2 -3 13 14

Monitoring 24VDC
=V1WC4+V1UC15-TA1_I
=V1KF1/8.2

DI ET200SP
I230.2
DI2
3

=V1KF1
-KF15.11

TA1-1 BU 12 AWG
TA1-2 BU 12 AWG
M1 WH 12 AWG
-PE
3L+1 BUOG 16 AWG
I200.2 BUOG 16 AWG

4.2 / 3L+1

FC12 M1
10.0 2.1

FC12.1
10.1

-XD5 1

-FC11
In: DC 24V
Out: 8 x DC 24V/10A

SIEMENS
SITOP SEL1200 8 x 10A
6EP4438-7FB00-3DX0

0 1
COM
TD2
TD1

24V1 INPUT 24V2

E--- RESET

CONTROL LOGIC

13 14 NF RST 0V1 0V2

1 2 3 4 5 6 7 8

OUTPUT

Monitoring 24VDC
=V1WC4+V1UC15-FC11_I
=V1KF1/8.2

DI ET200SP
I230.4
DI4
5

=V1KF1
-KF15.11

3L+1 BUOG 16 AWG
I200.4 BU 16 AWG
M1 WHBU 12 AWG

10.1 / FC11

18.8 / M1 → M1 / 10.2

1L+ BUOG 16 AWG
2L+ BUOG 16 AWG
3L+ BUOG 16 AWG
4L+ BUOG 16 AWG
5L+ RD 16 AWG
6L+ RD 16 AWG
7L+ RD 16 AWG
8L+ RD 16 AWG

2.1 / -1L+
3.1 / -2L+
4.1 / -3L+
5.1 / -4L+
6.1 / -5L+
7.1 / -6L+
8.1 / -7L+
9.1 / -8L+

+.UC14/22

2

			Date	1/17/2023	Volvo Trucks North America	Valiant TMS	Power distribution 24VDC for Inputs	Drawing name: =2V09&EFS-EL	= V1WC4
			Ed.	MKLEPADLO					+ V1UC15
			Appr		P6700 Bodyside LH - Robot Cell 2V09			Document type: EFS	Project nr: 22-16150
Modification	Date	Name	Original		Replacement of	Replaced by	Scale 1:1		Page 1 / 1533

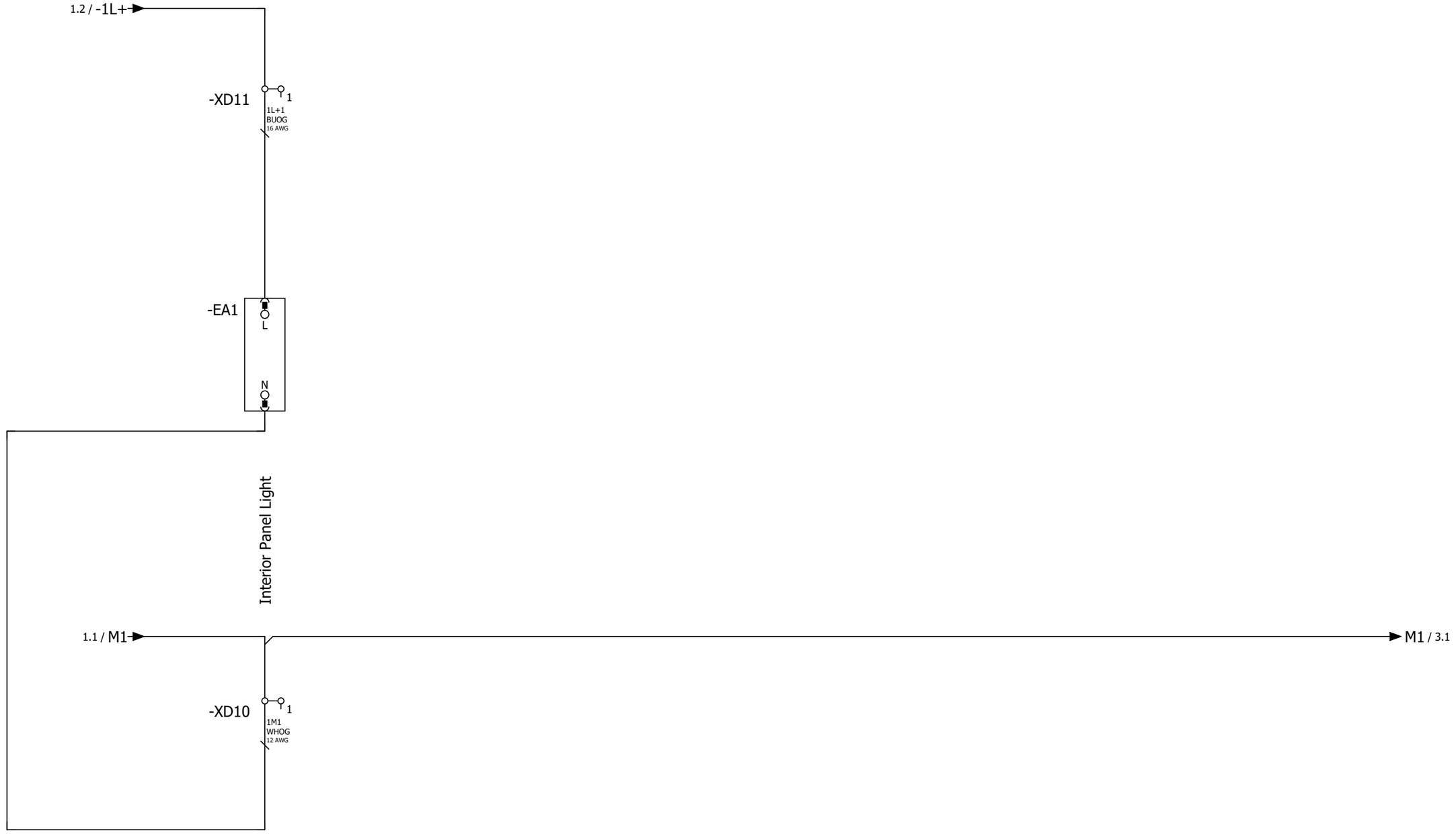

1 3

			Date	1/17/2023	Volvo Trucks North America	Valiant TMS	Power distribution 24VDC 1L+	Drawing name: =2V09&EFS-EL	= V1WC4	
			Ed.	MKLEPADLO					+ V1UC15	
			Appr		P6700 Bodyside LH - Robot Cell 2V09			Document type: EFS	Project nr: 22-16150	Page 2
Modification	Date	Name	Original		Replacement of	Replaced by	Scale 1:1			1533

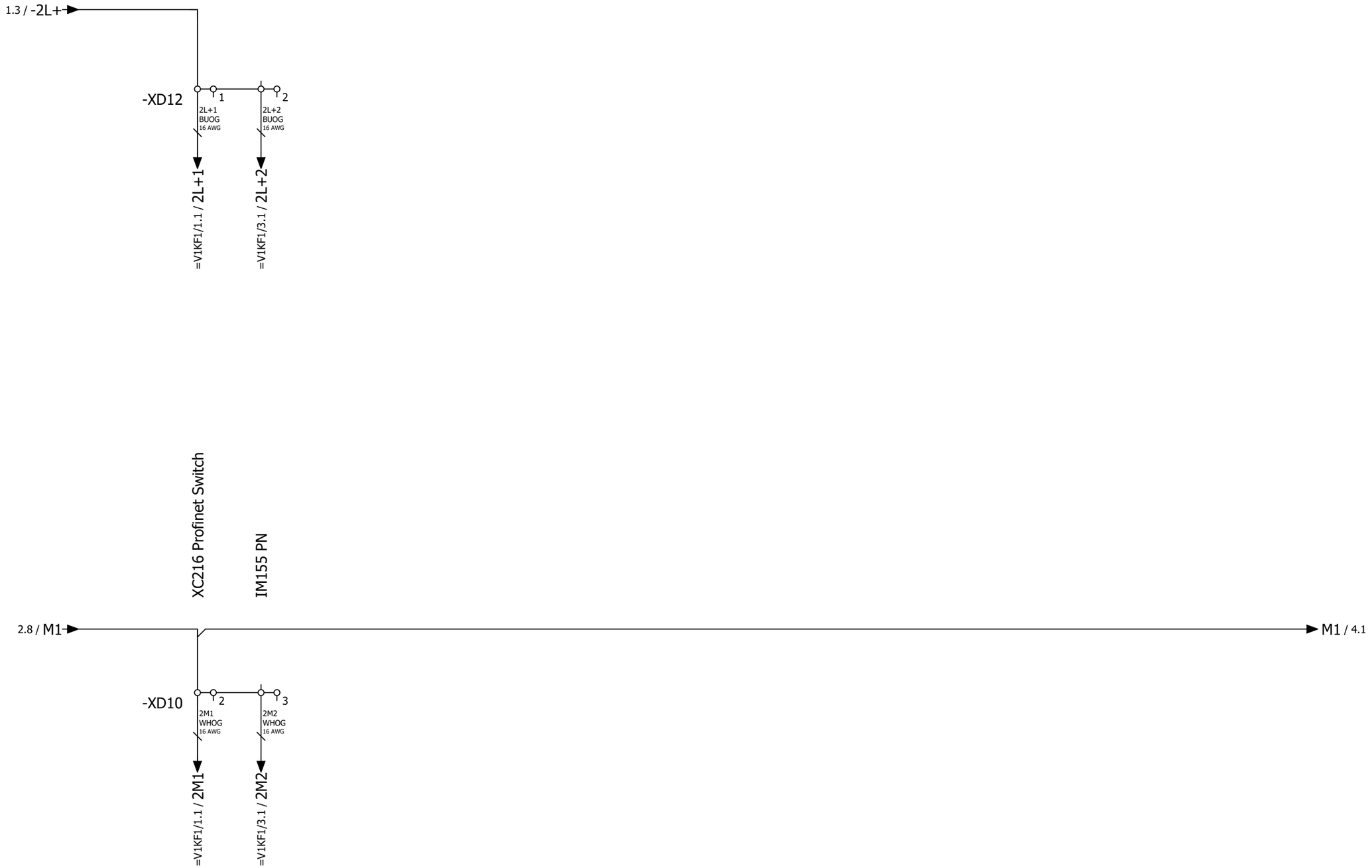

			Date	1/17/2023	Volvo Trucks North America		Valiant TMS	Power distribution 24VDC 2L+	Drawing name: =2V09&EFS-EL	= V1WC4	
			Ed.	MKLEPADLO						+ V1UC15	
			Appr		P6700 Bodyside LH - Robot Cell 2V09		Scale 1:1		Document type: EFS	Project nr: 22-16150	Page 3
Modification	Date	Name	Original		Replacement of	Replaced by					1533

0	1	2	3	4	5	6	7	8	9

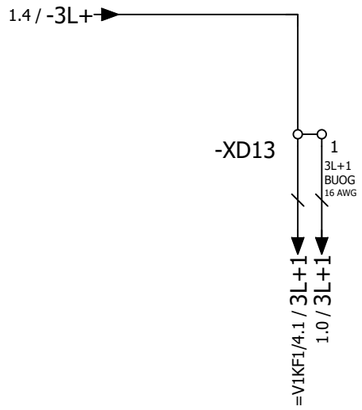

Power Input Cards (DI+FDI)

3 5

			Date	1/17/2023	Volvo Trucks North America	Valiant TMS	Power distribution 24VDC 3L+	Drawing name: =2V09&EFS-EL		= V1WC4	
			Ed.	MKLEPADLO						+ V1UC15	
			Appr		P6700 Bodyside LH - Robot Cell 2V09			Document type: EFS	Project nr: 22-16150	Page	4
Modification	Date	Name	Original		Replacement of	Replaced by	Scale 1:1				1533

4 6

			Date	1/17/2023	Volvo Trucks North America	Valiant TMS	Power distribution 24VDC 4L+	Drawing name: =2V09&EFS-EL	= V1WC4	
			Ed.	MKLEPADLO					+ V1UC15	
			Appr		P6700 Bodyside LH - Robot Cell 2V09			Document type: EFS	Project nr: 22-16150	Page 5
Modification	Date	Name	Original		Replacement of	Replaced by	Scale 1:1			1533

0	1	2	3	4	5	6	7	8	9

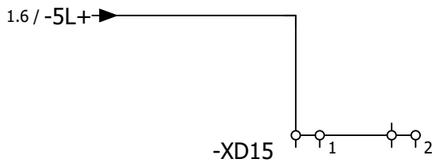

5 7

			Date	1/17/2023	Volvo Trucks North America		Valiant TMS	Power distribution 24VDC 5L+	Drawing name: =2V09&EFS-EL	= V1WC4	
			Ed.	MKLEPADLO						+ V1UC15	
			Appr		P6700 Bodyside LH - Robot Cell 2V09				Document type: EFS	Project nr: 22-16150	Page 6
Modification	Date	Name	Original		Replacement of	Replaced by	Scale 1:1				1533

0	1	2	3	4	5	6	7	8	9

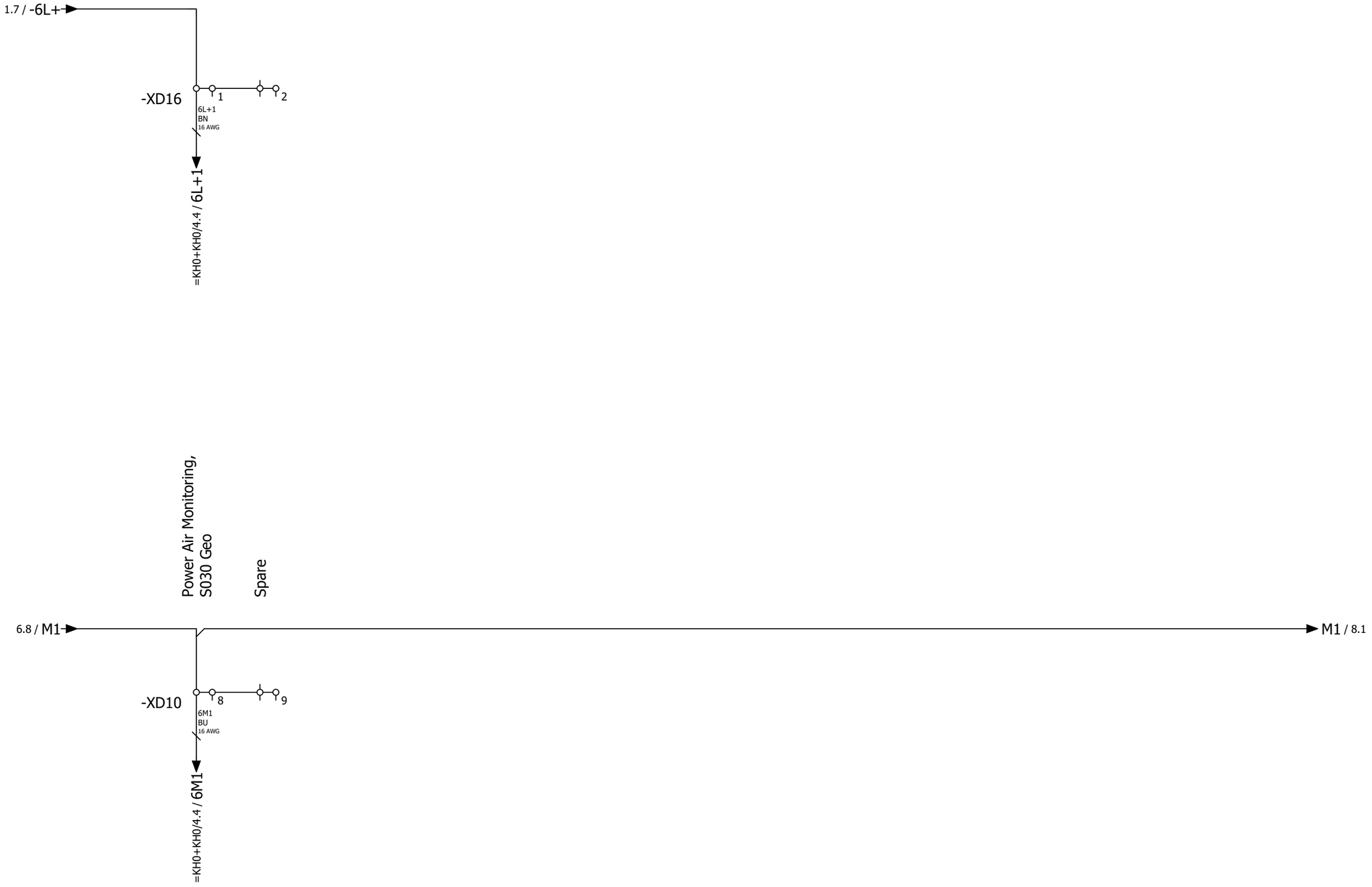

6 8

			Date	1/17/2023	Volvo Trucks North America	Valiant TMS	Power distribution 24VDC 6L+	Drawing name: =2V09&EFS-EL	= V1WC4	
			Ed.	MKLEPADLO					+ V1UC15	
			Appr		P6700 Bodyside LH - Robot Cell 2V09			Document type: EFS	Project nr: 22-16150	Page 7
Modification	Date	Name	Original		Replacement of	Replaced by	Scale 1:1			1533

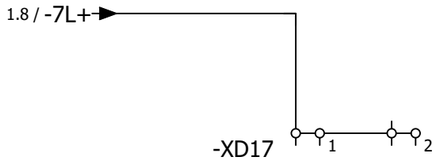

			Date	1/17/2023	Volvo Trucks North America	Valiant TMS	Power distribution 24VDC 7L+	Drawing name: =2V09&EFS-EL	= V1WC4	
			Ed.	MKLEPADLO					+ V1UC15	
			Appr		P6700 Bodyside LH - Robot Cell 2V09	Scale 1:1		Document type: EFS	Project nr: 22-16150	Page 8 / 1533
Modification	Date	Name	Original		Replacement of / Replaced by					

0	1	2	3	4	5	6	7	8	9

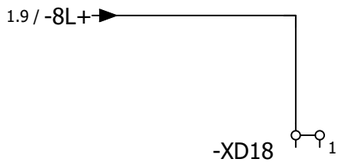

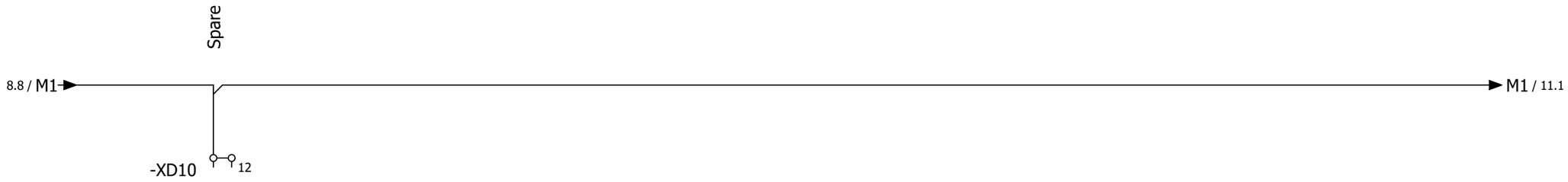

8

10

			Date	1/17/2023	Volvo Trucks North America		Valiant TMS	Power distribution 24VDC 8L+	Drawing name: =2V09&EFS-EL	= V1WC4	
			Ed.	MKLEPADLO						+ V1UC15	
			Appr		P6700 Bodyside LH - Robot Cell 2V09				Document type: EFS	Project nr: 22-16150	Page 9
Modification	Date	Name	Original		Replacement of	Replaced by	Scale 1:1				1533

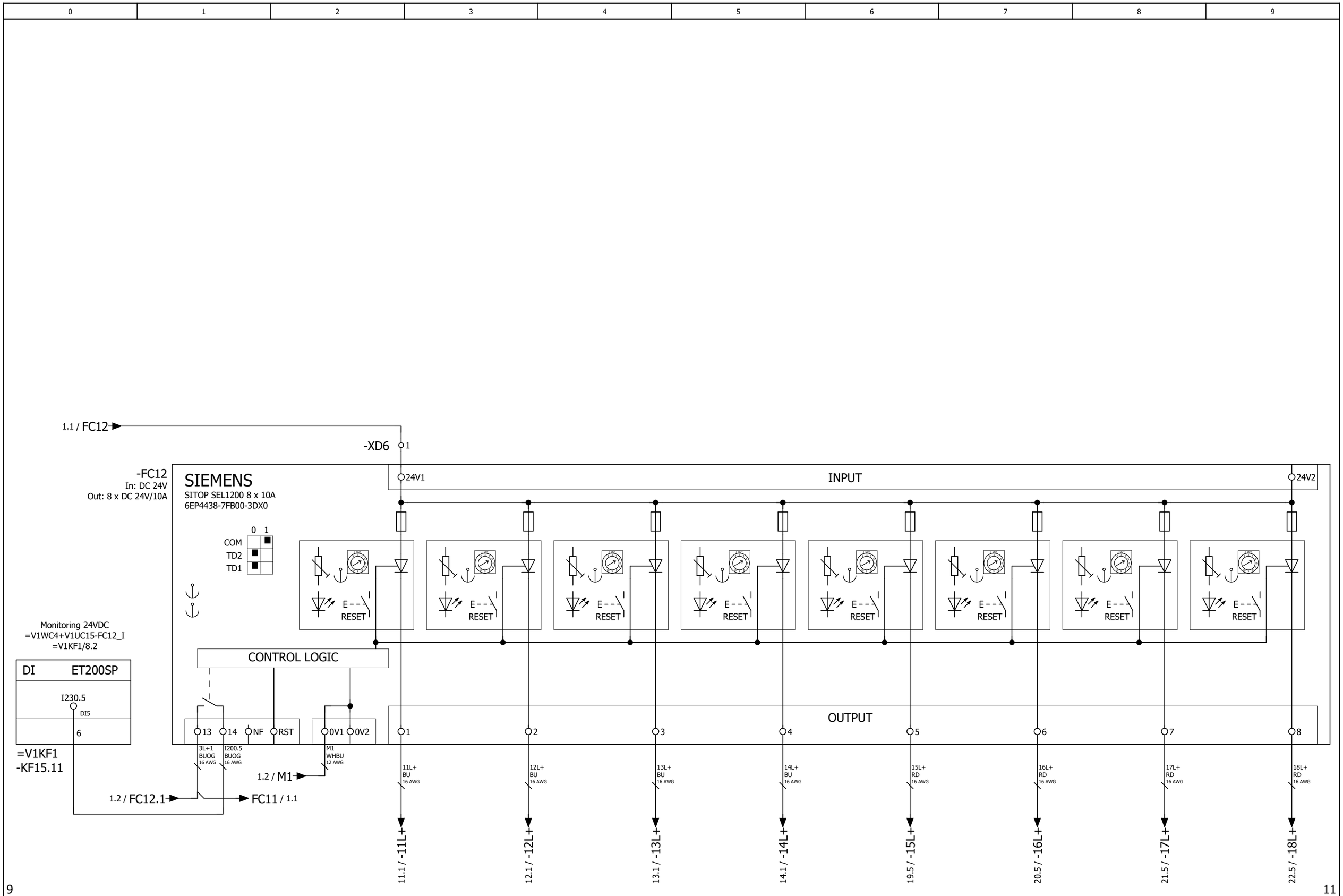

			Date	1/17/2023	Volvo Trucks North America	Valiant TMS	Power distribution 24VDC (Below Disconnect)	Drawing name: =2V09&EFS-EL	= V1WC4 + V1UC15	
			Ed.	MKLEPADLO	P6700 Bodyside LH - Robot Cell 2V09			Document type: EFS	Project nr: 22-16150	Page 10
			Appr							1533
Modification	Date	Name	Original		Replacement of / Replaced by	Scale 1:1				

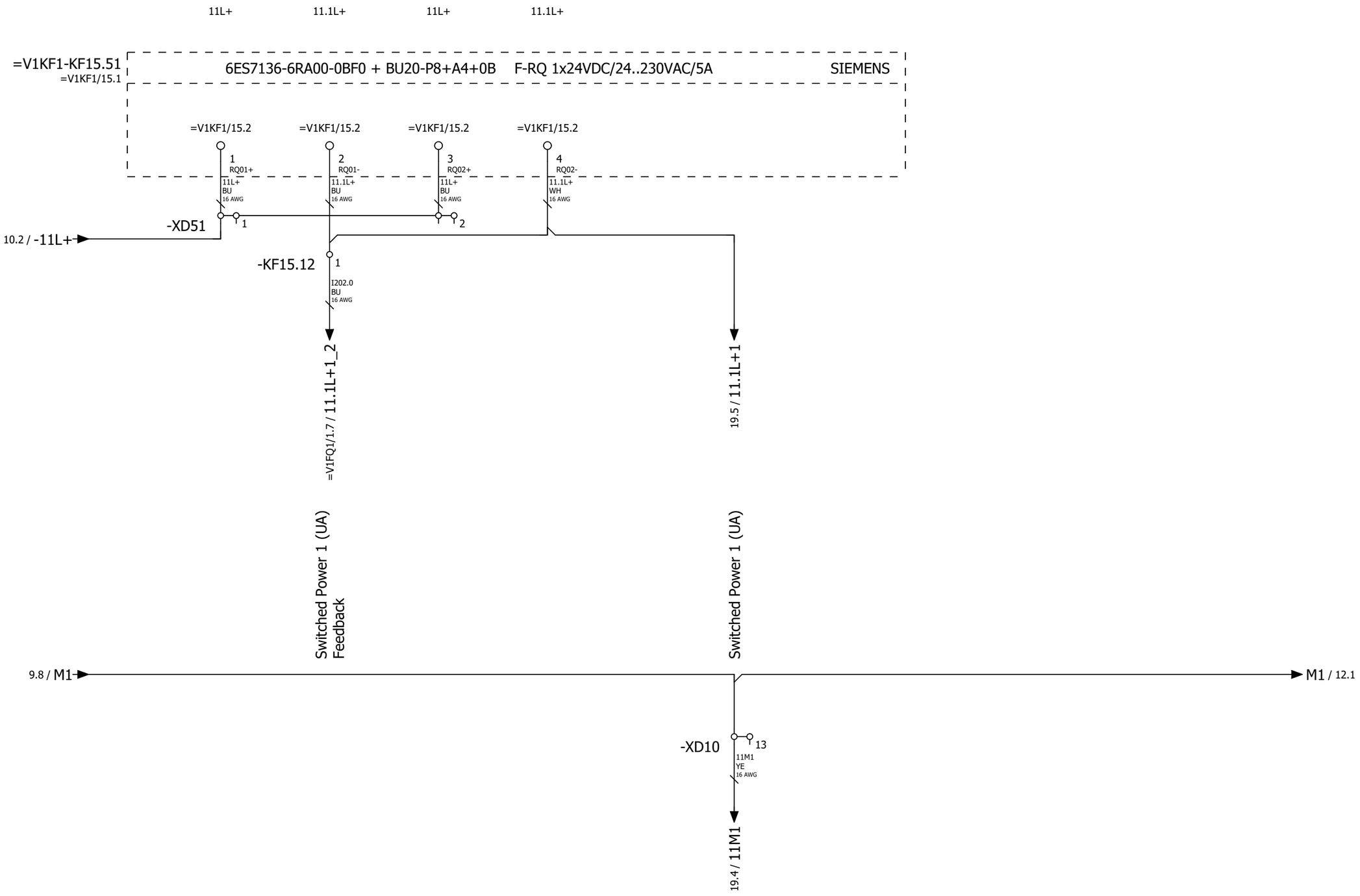

			Date	1/17/2023	Volvo Trucks North America		Valiant TMS	Power distribution 24VDC 11L+	Drawing name: =2V09&EFS-EL	= V1WC4
			Ed.	MKLEPADLO						+ V1UC15
			Appr		P6700 Bodyside LH - Robot Cell 2V09		Scale 1:1		Document type: EFS	Project nr: 22-16150
Modification	Date	Name	Original		Replacement of	Replaced by				Page 11 / 1533

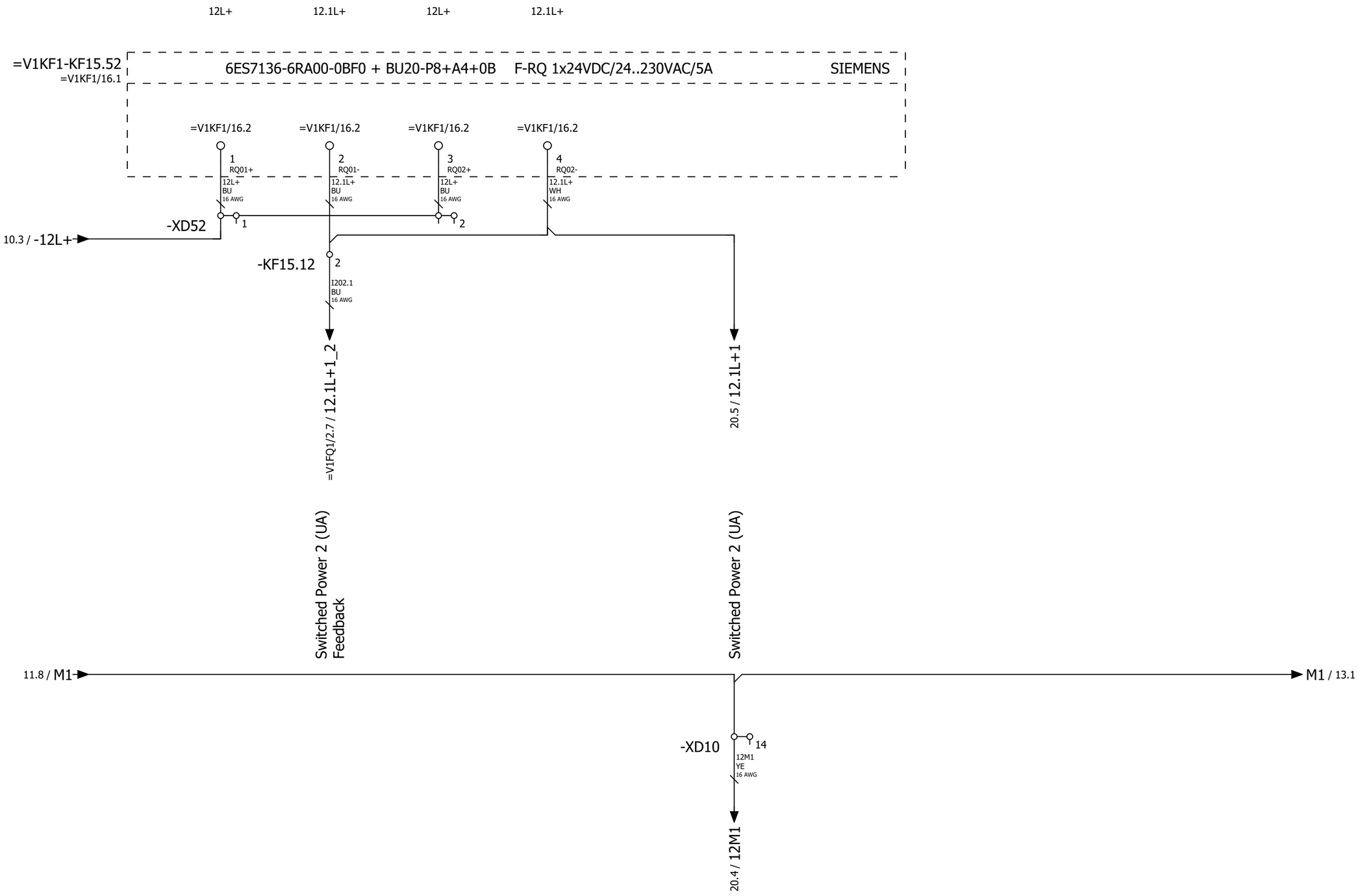

			Date	1/17/2023	Volvo Trucks North America		Valiant TMS	Power distribution 24VDC 12L+	Drawing name: =2V09&EFS-EL	= V1WC4	
			Ed.	MKLEPADLO						+ V1UC15	
			Appr		P6700 Bodyside LH - Robot Cell 2V09		Scale 1:1		Document type: EFS	Project nr: 22-16150	Page 12 / 1533
Modification	Date	Name	Original		Replacement of	Replaced by					

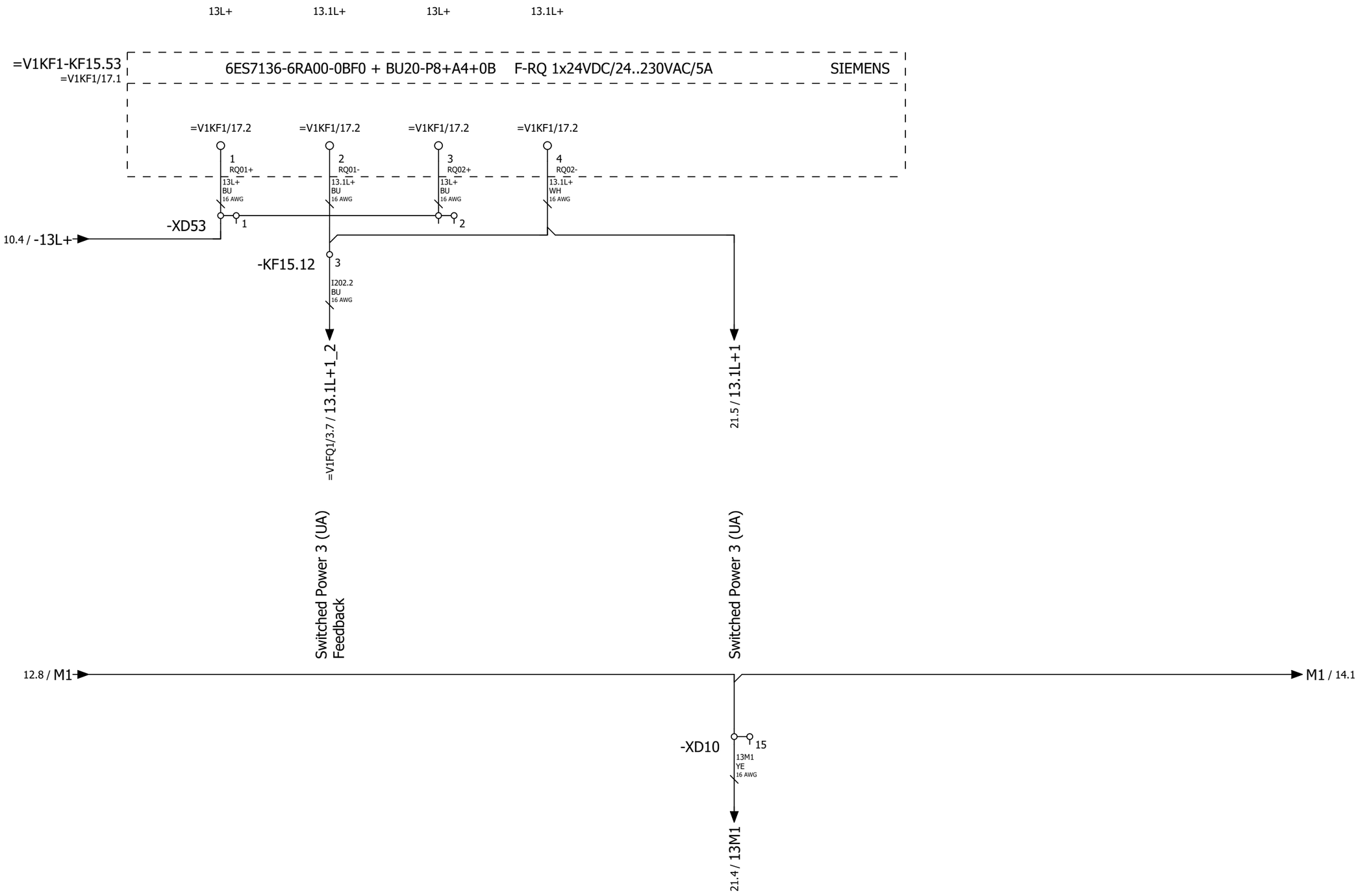

12

14

			Date	1/17/2023	Volvo Trucks North America		Valiant TMS	Power distribution 24VDC 13L+	Drawing name: =2V09&EFS-EL	= V1WC4	
			Ed.	MKLEPADLO						+ V1UC15	
			Appr		P6700 Bodyside LH - Robot Cell 2V09				Document type: EFS	Project nr: 22-16150	Page 13
Modification	Date	Name	Original		Replacement of	Replaced by	Scale 1:1				1533

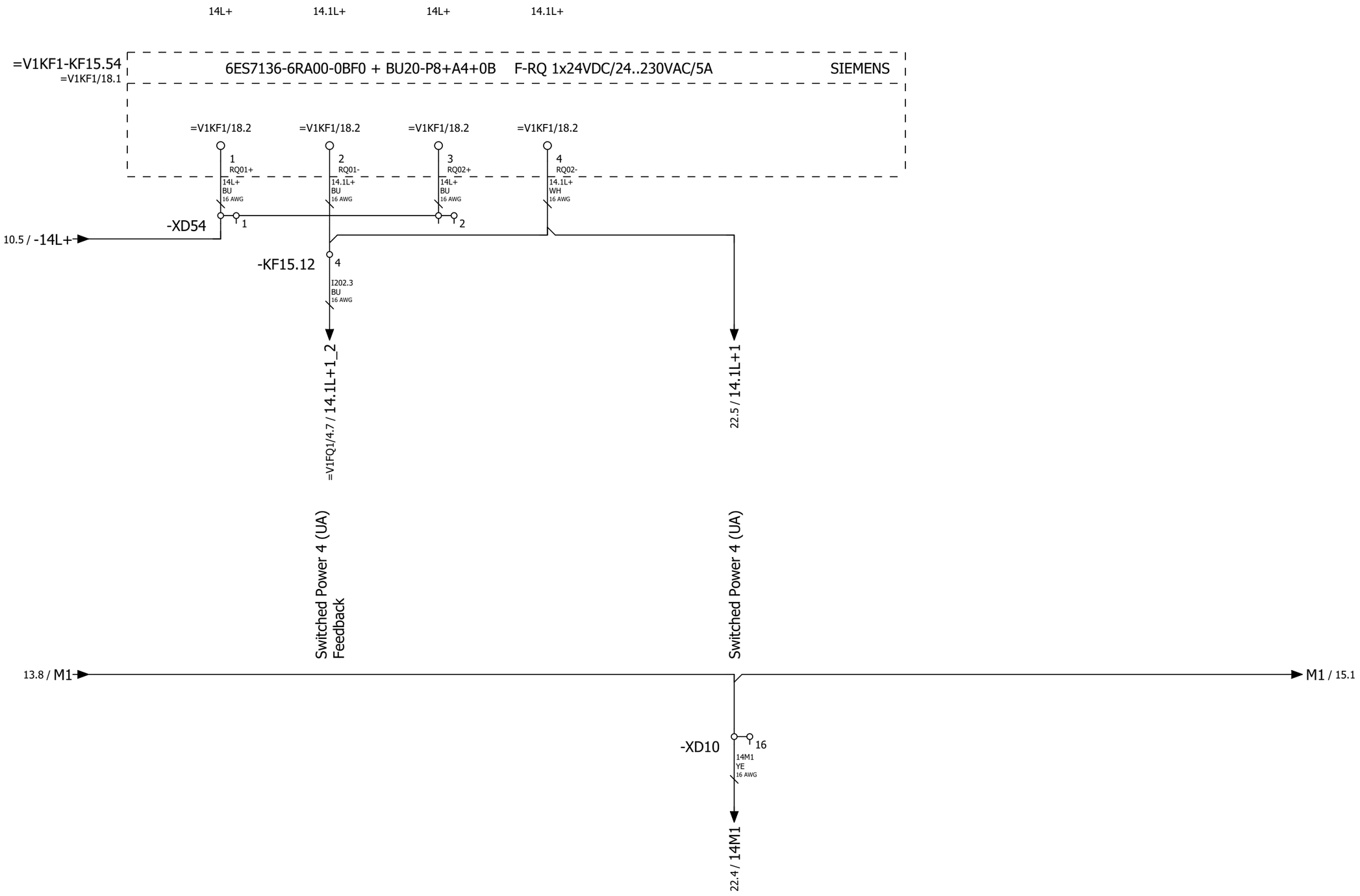

			Date	1/17/2023	Volvo Trucks North America	Valiant TMS	Power distribution 24VDC 14L+	Drawing name: =2V09&EFS-EL	= V1WC4	
			Ed.	MKLEPADLO					+ V1UC15	
			Appr		P6700 Bodyside LH - Robot Cell 2V09	Scale 1:1		Document type: EFS	Project nr: 22-16150	Page 14
Modification	Date	Name	Original		Replacement of	Replaced by				1533

14

16

			Date	1/17/2023	Volvo Trucks North America	Valiant TMS	Power distribution 24VDC 15L+	Drawing name: =2V09&EFS-EL	= V1WC4	
			Ed.	MKLEPADLO					+ V1UC15	
			Appr		P6700 Bodyside LH - Robot Cell 2V09			Document type: EFS	Project nr: 22-16150	Page 15
Modification	Date	Name	Original		Replacement of	Replaced by	Scale 1:1			1533

Switched Power 2 (US)

15.8 / M1

M1 / 17.1

-XD10

18

16M1
WHYE
16 AWG

20.4 / 16M1

15

17

			Date	1/17/2023	Volvo Trucks North America	Valiant TMS	Power distribution 24VDC 16L+	Drawing name: =2V09&EFS-EL	= V1WC4	
			Ed.	MKLEPADLO					+ V1UC15	
			Appr		P6700 Bodyside LH - Robot Cell 2V09			Document type: EFS	Project nr: 22-16150	Page 16
Modification	Date	Name	Original		Replacement of / Replaced by	Scale 1:1				1533

0	1	2	3	4	5	6	7	8	9

Switched Power 3 (US)

16.8 / M1

M1 / 18.1

-XD10

19

17M1
WHYE
16 AWG

21.4 / 17M1

16

18

			Date	1/17/2023	Volvo Trucks North America		Valiant TMS	Power distribution 24VDC 17L+	Drawing name: =2V09&EFS-EL		= V1WC4
			Ed.	MKLEPADLO							+ V1UC15
			Appr		P6700 Bodyside LH - Robot Cell 2V09				Document type: EFS	Project nr: 22-16150	Page 17
Modification	Date	Name	Original		Replacement of	Replaced by	Scale 1:1				1533

0	1	2	3	4	5	6	7	8	9

17

19

			Date	1/17/2023	Volvo Trucks North America	Valiant TMS	Power distribution 24VDC 18L+	Drawing name: =2V09&EFS-EL		= V1WC4	
			Ed.	MKLEPADLO						+ V1UC15	
			Appr		P6700 Bodyside LH - Robot Cell 2V09			Document type: EFS	Project nr: 22-16150	Page	18
Modification	Date	Name	Original		Replacement of	Replaced by	Scale 1:1				1533

+.UC15

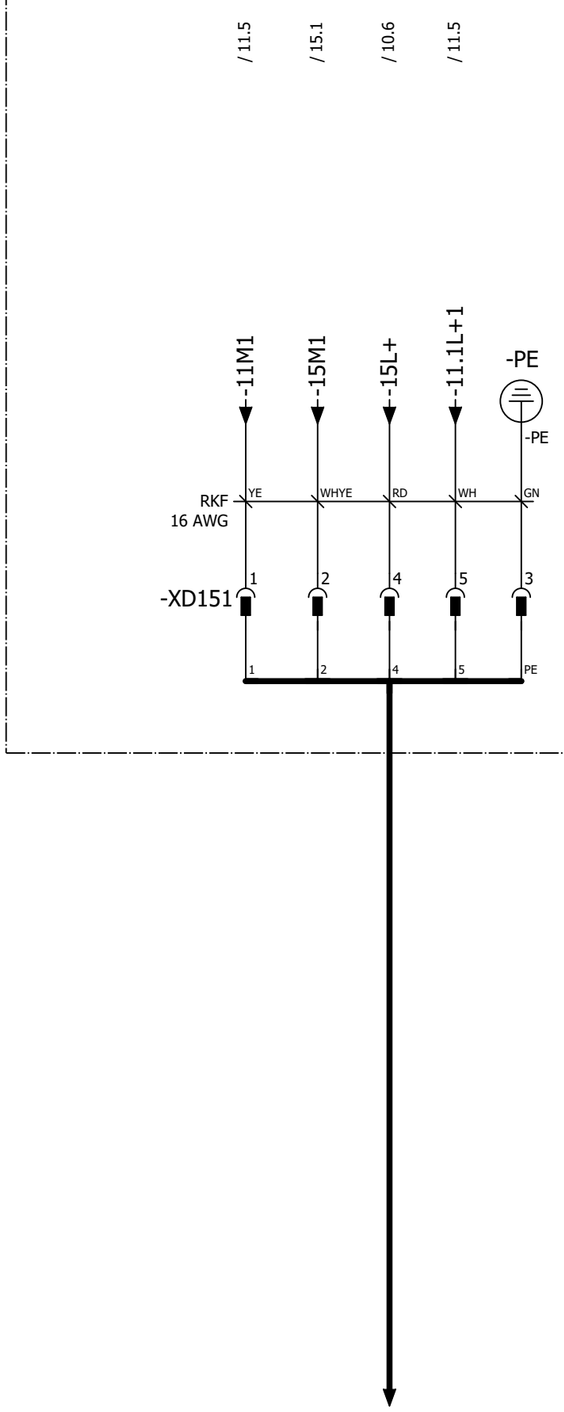

POWER IN / POWER OUT

Pin 1: 0 V UA
Pin 2: 0 V US
Pin 3: FE
Pin 4: +24 V US / 9 A
Pin 5: +24 V UA / 9 A

Pin #	WIRE	COLOR
Pin 1	-11M1	YE
Pin 2	-15M1	WHYE
Pin 3	GND	GN
Pin 4	-15L+	RD
Pin 5	-11.1L+1	WH

			Date	1/17/2023	Volvo Trucks North America	Valiant TMS	24VDC Switched Power 1	Drawing name: =2V09&EFS-EL	= V1WC4
			Ed.	MKLEPADLO					+ V1UC15
			Appr		P6700 Bodyside LH - Robot Cell 2V09	Scale 1:1		Document type: EFS	Project nr: 22-16150
Modification	Date	Name	Original		Replacement of	Replaced by			Page 19 / 1533

0	1	2	3	4	5	6	7	8	9

+.UC15

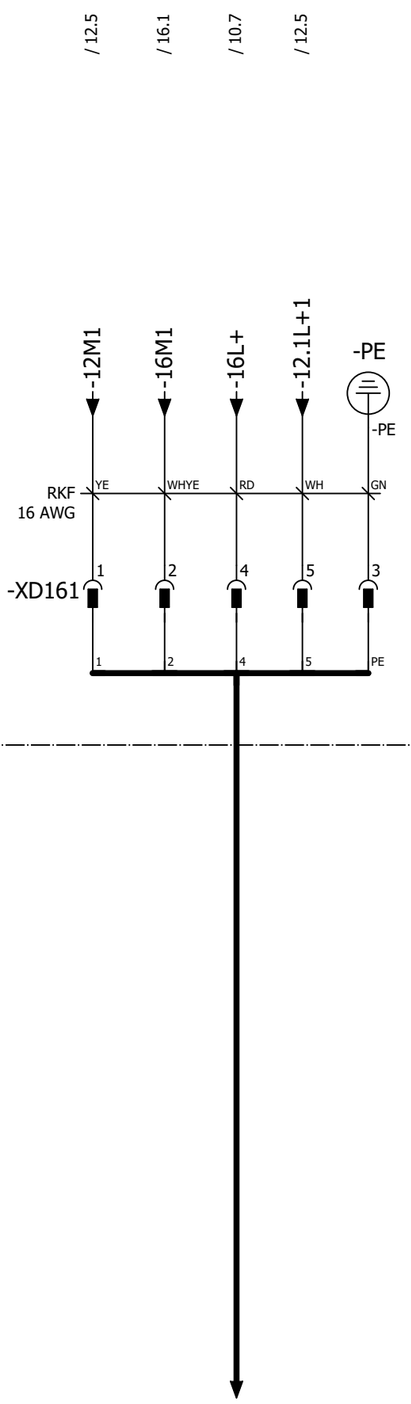

POWER IN / POWER OUT

Pin 1: 0 V UA
Pin 2: 0 V US
Pin 3: FE
Pin 4: +24 V US / 9 A
Pin 5: +24 V UA / 9 A

Pin #	WIRE	COLOR
Pin 1	-12M1	YE
Pin 2	-16M1	WHYE
Pin 3	GND	GN
Pin 4	-16L+	RD
Pin 5	-12.1L+1	WH

19

21

			Date	1/17/2023	Volvo Trucks North America	Valiant TMS	24VDC Switched Power 2	Drawing name: =2V09&EFS-EL	= V1WC4
			Ed.	MKLEPADLO					+ V1UC15
			Appr		P6700 Bodyside LH - Robot Cell 2V09	Scale 1:1		Document type: EFS	Project nr: 22-16150
Modification	Date	Name	Original		Replacement of	Replaced by			Page 20 / 1533

+.UC15

/ 13.5 / 17.1 / 10.8 / 13.5

-13M1 -17M1 -17L+ -13.1L+1 -PE

-PE

RKF
16 AWG

YE WHYE RD WH GN

-XD171

1 2 4 5 3

1 2 4 5 PE

+.PF1-W1
=V1PF1KF1+.PF1/1.1

POWER IN / POWER OUT

Pin 1: 0 V UA
Pin 2: 0 V US
Pin 3: FE
Pin 4: +24 V US / 9 A
Pin 5: +24 V UA / 9 A

Pin #	WIRE	COLOR
Pin 1	-13M1	YE
Pin 2	-17M1	WHYE
Pin 3	GND	GN
Pin 4	-17L+	RD
Pin 5	-13.1L+1	WH

			Date	1/17/2023	Volvo Trucks North America	Valiant TMS	24VDC Switched Power 3	Drawing name: =2V09&EFS-EL	= V1WC4
			Ed.	MKLEPADLO					+ V1UC15
			Appr		P6700 Bodyside LH - Robot Cell 2V09	Scale 1:1		Document type: EFS	Project nr: 22-16150
Modification	Date	Name	Original		Replacement of	Replaced by			Page 21 / 1533

+.UC15

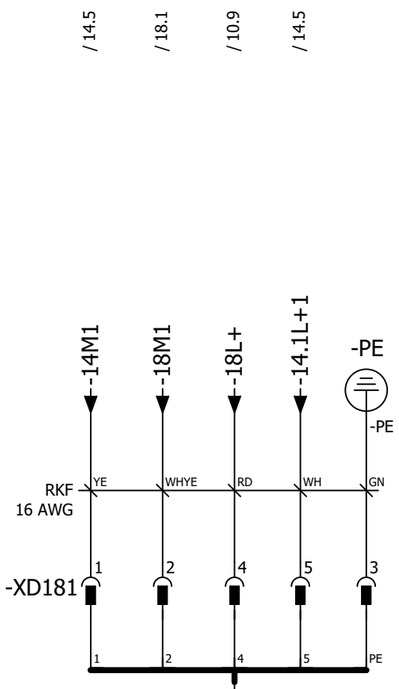

POWER IN / POWER OUT

Pin 1: 0 V UA
Pin 2: 0 V US
Pin 3: FE
Pin 4: +24 V US / 9 A
Pin 5: +24 V UA / 9 A

Pin #	WIRE	COLOR
Pin 1	-14M1	YE
Pin 2	-18M1	WHYE
Pin 3	GND	GN
Pin 4	-18L+	RD
Pin 5	-14.1L+1	WH

+.FQ1-BG4
=V1FQ1+.FQ1/4.3

21

+.UC32/1

			Date	1/17/2023	Volvo Trucks North America	Valiant TMS	24VDC Switched Power 4	Drawing name: =2V09&EFS-EL	= V1WC4
			Ed.	MKLEPADLO					+ V1UC15
			Appr		P6700 Bodyside LH - Robot Cell 2V09	Scale 1:1		Document type: EFS	Project nr: 22-16150
Modification	Date	Name	Original		Replacement of	Replaced by			Page 22 / 1533

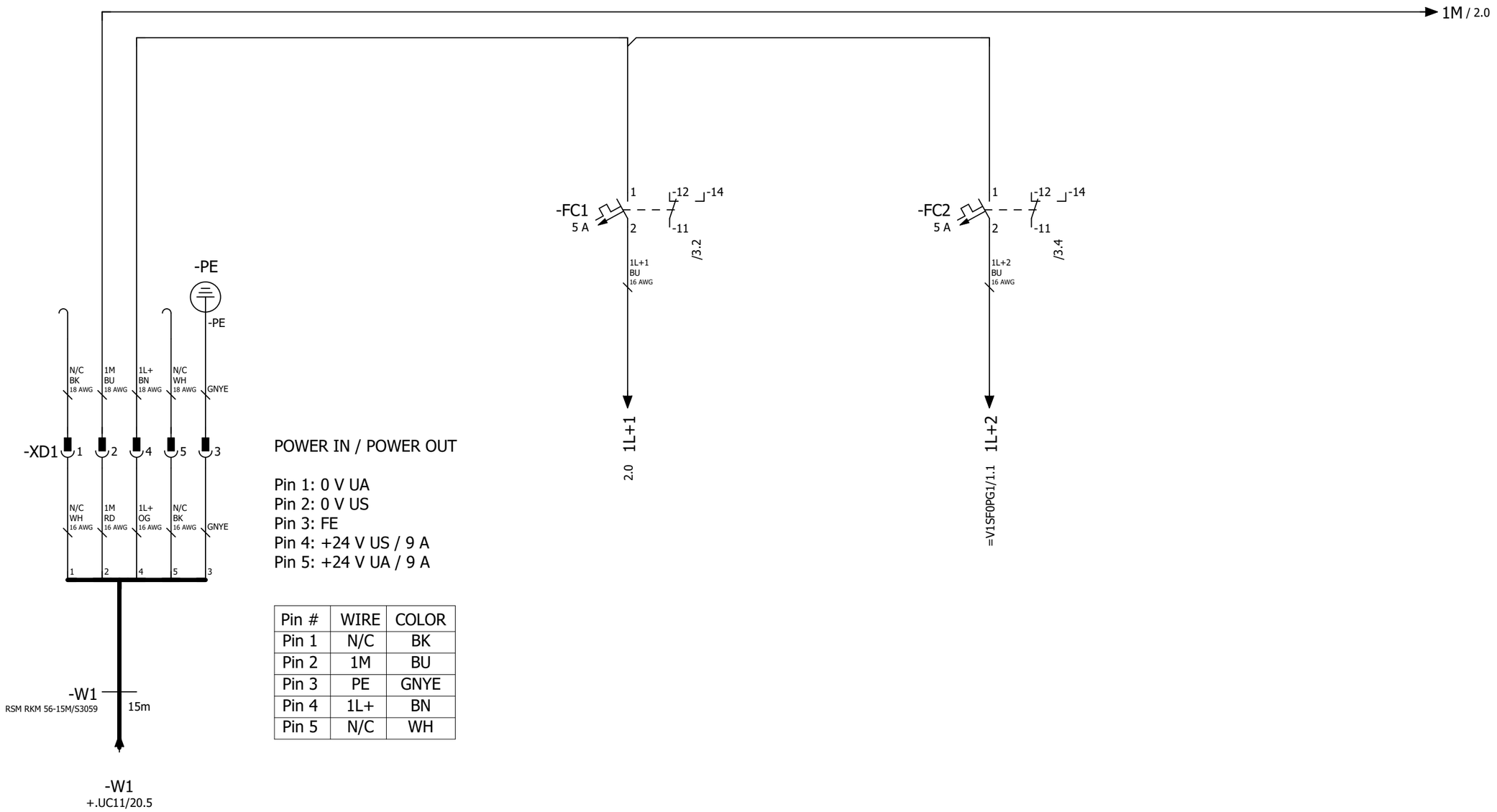

POWER IN / POWER OUT

Pin 1: 0 V UA
Pin 2: 0 V US
Pin 3: FE
Pin 4: +24 V US / 9 A
Pin 5: +24 V UA / 9 A

Pin #	WIRE	COLOR
Pin 1	N/C	BK
Pin 2	1M	BU
Pin 3	PE	GNYE
Pin 4	1L+	BN
Pin 5	N/C	WH

Power Distribution 24 VDC Display

Power Distribution 24 VDC ET200

+.UC15/22

2

			Date	1/17/2023	Volvo Trucks North America	Valiant TMS	Incomming power supply 24 VDC	Drawing name: =2V09&EFS-EL	= V1WC4
			Ed.	MKLEPADLO					+ V1UC32
			Appr		P6700 Bodyside LH - Robot Cell 2V09	Scale 1:1		Document type: EFS	Project nr: 22-16150
Modification	Date	Name	Original		Replacement of	Replaced by			Page 1 / 1533

			Date	1/17/2023	Volvo Trucks North America		Valiant TMS	Power distribution 24VDC 1L+	Drawing name: =2V09&EFS-EL	= V1WC4
			Ed.	MKLEPADLO						+ V1UC32
			Appr		P6700 Bodyside LH - Robot Cell 2V09		Scale 1:1		Document type: EFS	Project nr: 22-16150
Modification	Date	Name	Original		Replacement of	Replaced by				Page 2 / 1533

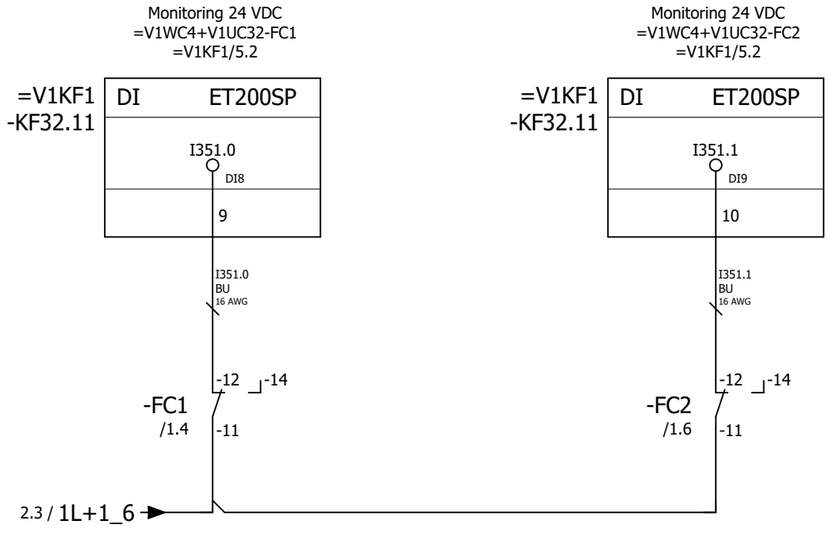

2

&ELU=KF0+UC31/1

			Date	1/17/2023	Volvo Trucks North America	Valiant TMS	Monitoring 24VDC	Drawing name: =2V09&EFS-EL	= V1WC4	
			Ed.	MKLEPADLO					+ V1UC32	
			Appr		P6700 Bodyside LH - Robot Cell 2V09			Document type: EFS	Project nr: 22-16150	Page 3
Modification	Date	Name	Original		Replacement of / Replaced by	Scale 1:1				1533

0	1	2	3	4	5	6	7	8	9

-UC31

&EFS=V1WC4+V1UC32/3

2

			Date	1/17/2023	Volvo Trucks North America	Valiant TMS	Layout	Drawing name: =2V09&EFS-EL	= KF0
			Ed.	MKLEPADLO					+ UC31
			Appr		P6700 Bodyside LH - Robot Cell 2V09			Document type: ELU	Project nr: 22-16150
Modification	Date	Name	Original		Replacement of / Replaced by	Scale 1:1			Page 1 / 1533

0	1	2	3	4	5	6	7	8	9

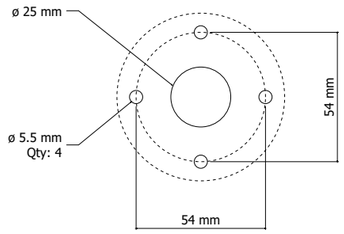

DETAIL 'B'
ABB Stack light
K70 series

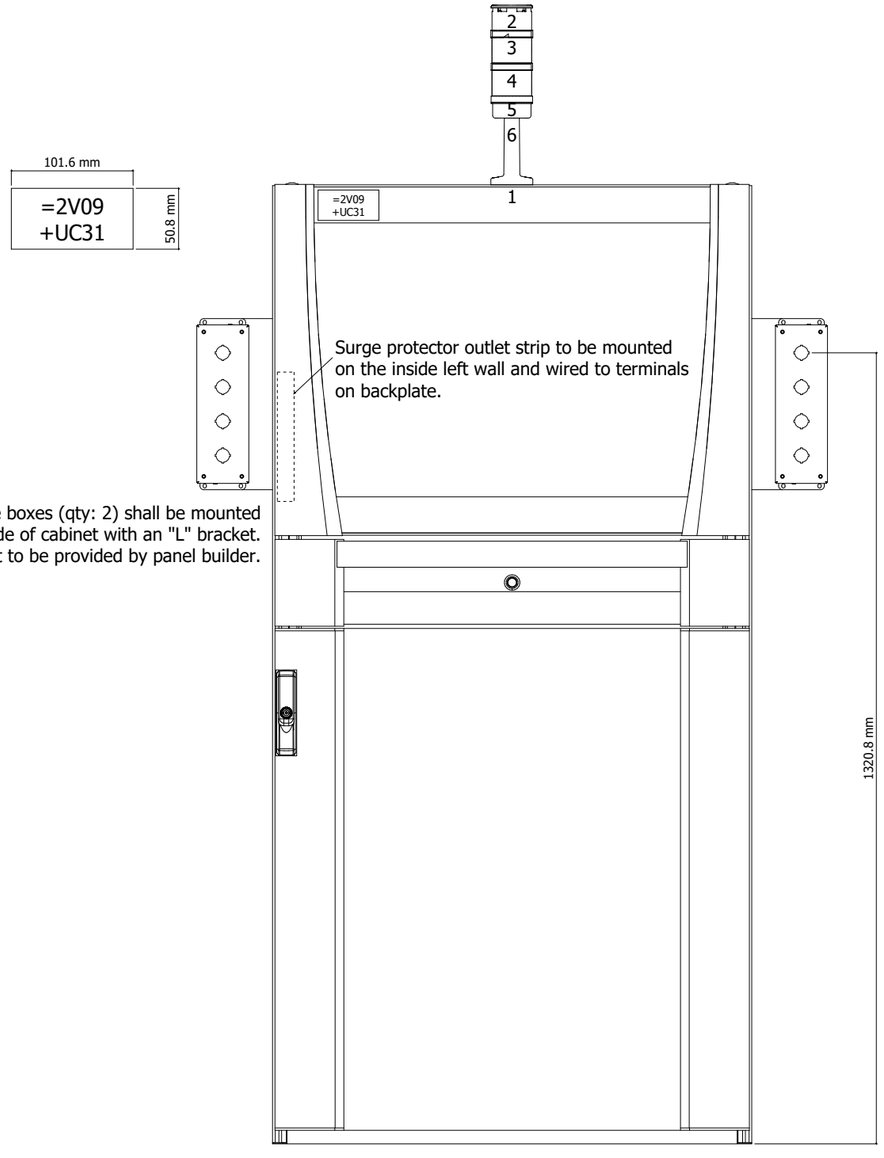

Enclosure boxes (qty: 2) shall be mounted
to the side of cabinet with an "L" bracket.
* Mounting bracket to be provided by panel builder.

Enclosure panel shall be finished in RAL 7035 Light Grey paint.

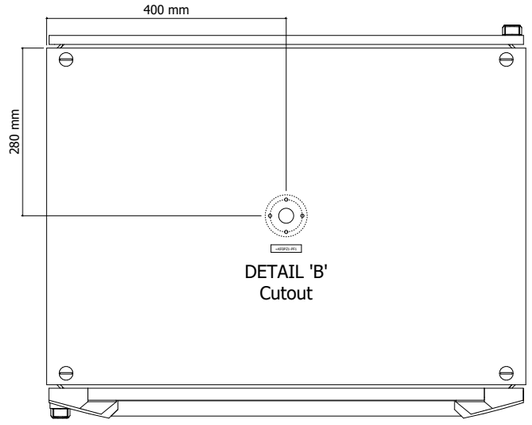

DETAIL 'B'
Cutout

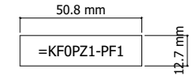

Top View
of Enclosure

1 3

			Date	1/17/2023	Volvo Trucks North America	Valiant TMS	Layout UC31 External View	Drawing name: =2V09&EFS-EL	= KF0
			Ed.	MKLEPADLO					+ UC31
			Appr		P6700 Bodyside LH - Robot Cell 2V09	Scale 1:10		Document type: ELU	Project nr: 22-16150
Modification	Date	Name	Original		Replacement of	Replaced by			Page 2 / 1533

0	1	2	3	4	5	6	7	8	9

UC91

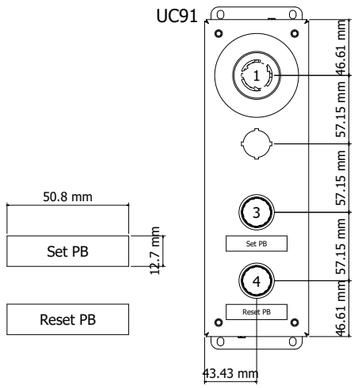

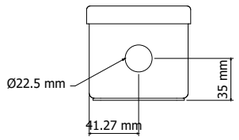

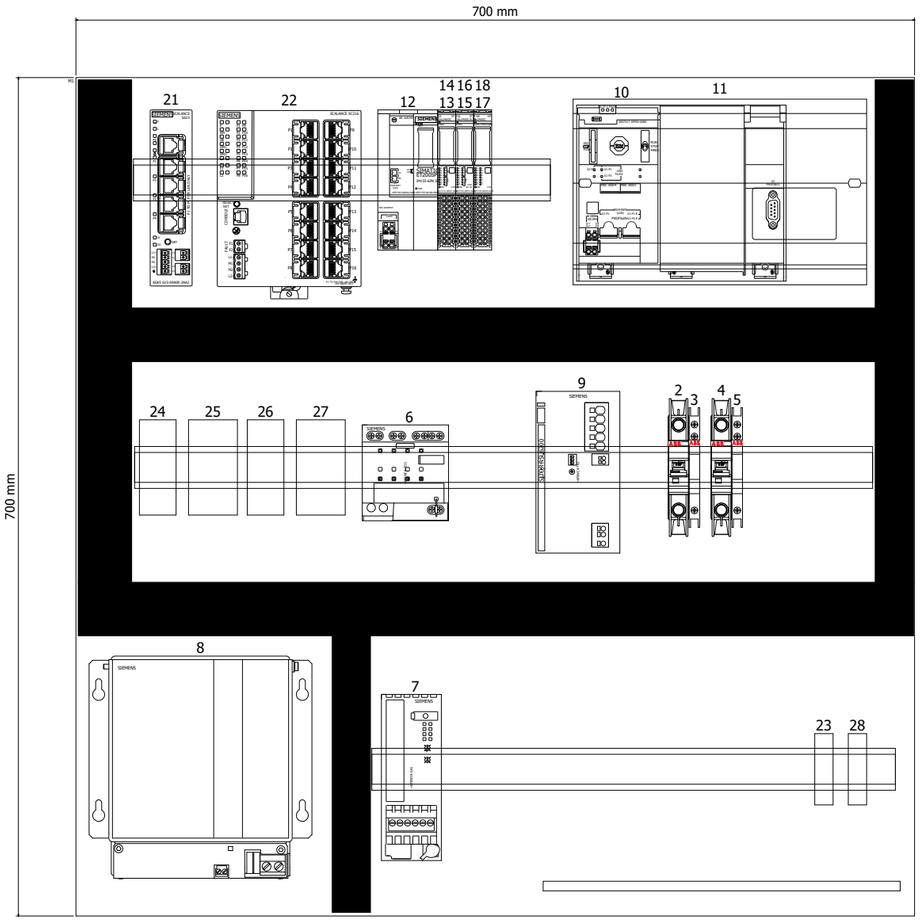

UC92

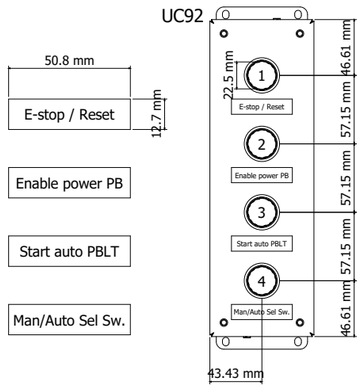

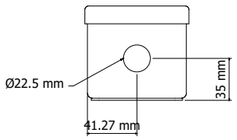

DETAIL 'B'
M12 Profinet Receptacle
Qty: 11

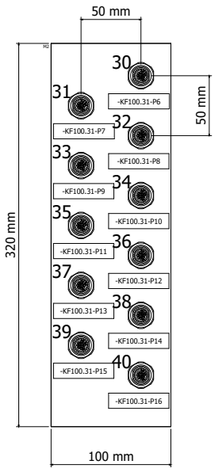

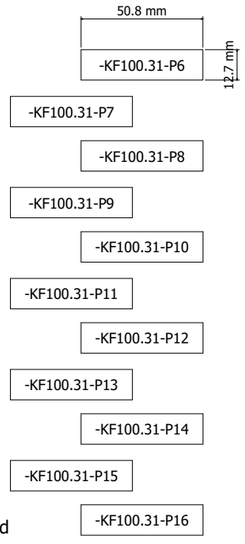

Profinet receptacle plate. Shall be mounted
to left side of subplate with a bracket.
* Mounting bracket to be provided by panel builder.

2

=V1PZ1PF1+V1UC61/1

			Date	1/17/2023	Volvo Trucks North America		Valiant TMS	Layout UC31 Internal View	Drawing name: =2V09&EFS-EL	= KF0
			Ed.	MKLEPADLO						+ UC31
			Appr		P6700 Bodyside LH - Robot Cell 2V09		Scale 1:5		Document type: ELU	Project nr: 22-16150
Modification	Date	Name	Original		Replacement of	Replaced by				Page 3 / 1533

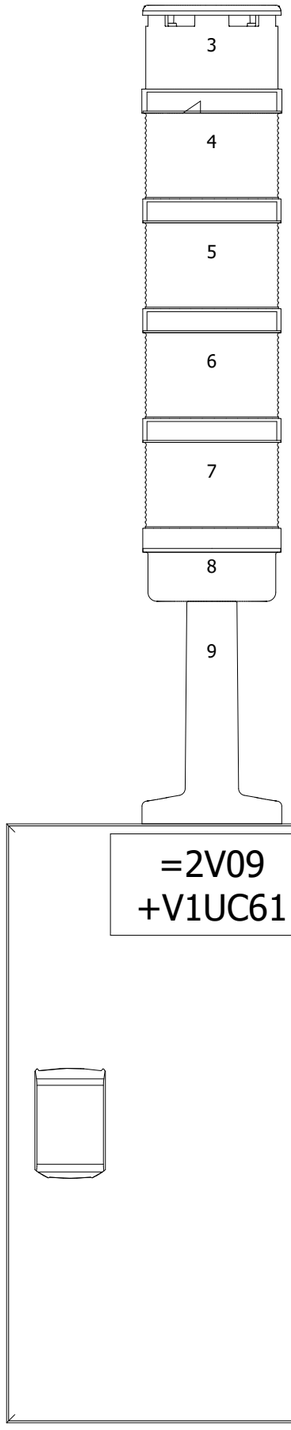

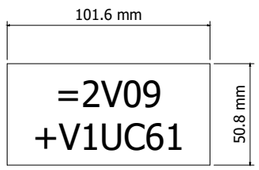

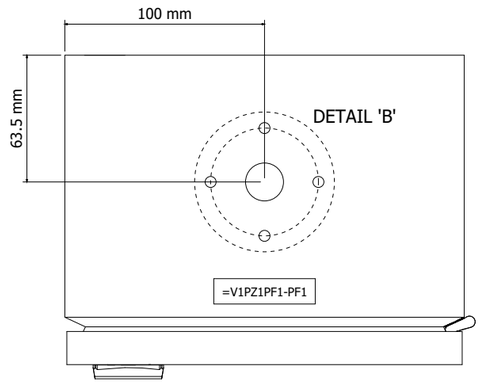

Top View
of Enclosure

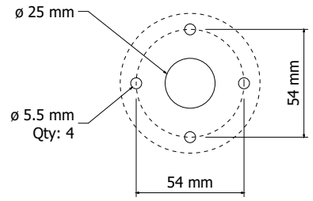

DETAIL 'B'
ABB Stack light
K70 series

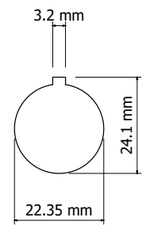

DETAIL 'A'
1-1/8" Receptacle

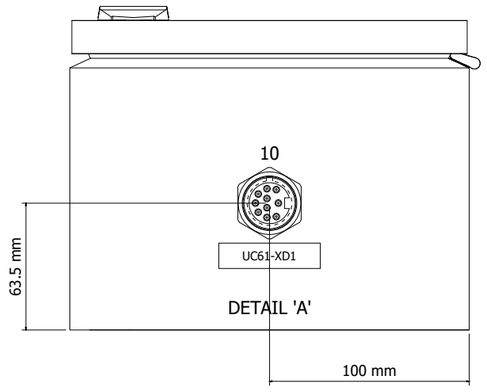

Buttom View
of Enclosure

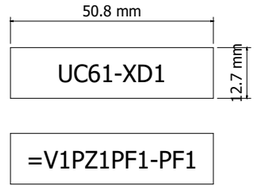

=KF0+UC31/3

2

			Date	1/17/2023	Volvo Trucks North America	Valiant TMS	Layout UC61 SL External View	Drawing name: =2V09&EFS-EL	= V1PZ1PF1
			Ed.	MKLEPADLO					+ V1UC61
			Appr		P6700 Bodyside LH - Robot Cell 2V09			Document type: ELU	Project nr: 22-16150
Modification	Date	Name	Original		Replacement of	Replaced by	Scale 1:3		Page 1 / 1533

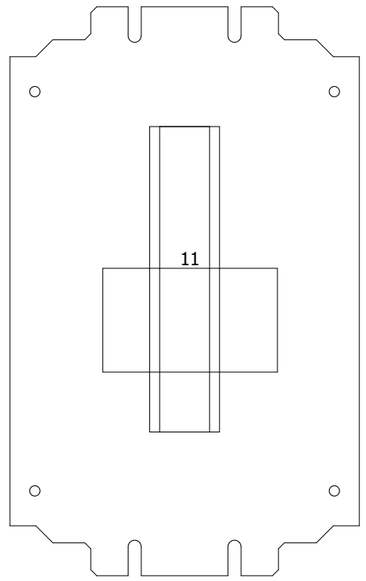

1

=V1PZ1PF2+.UC62/1

			Date	1/17/2023	Volvo Trucks North America	Valiant TMS	Layout UC61 SL Internal View	Drawing name: =2V09&EFS-EL	= V1PZ1PF1	
			Ed.	MKLEPADLO					+ V1UC61	
			Appr		P6700 Bodyside LH - Robot Cell 2V09			Document type: ELU	Project nr: 22-16150	Page 2
Modification	Date	Name	Original		Replacement of	Replaced by	Scale 1:3			1533

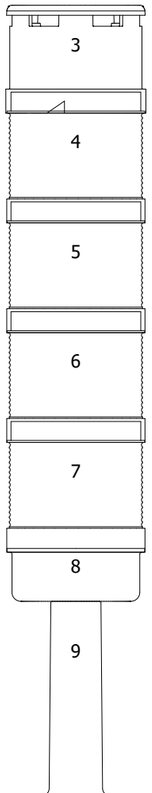

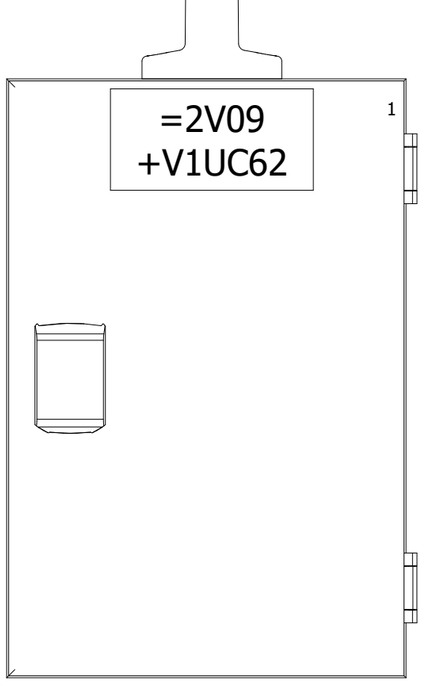

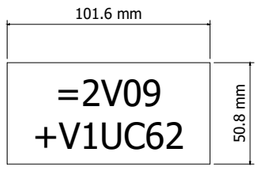

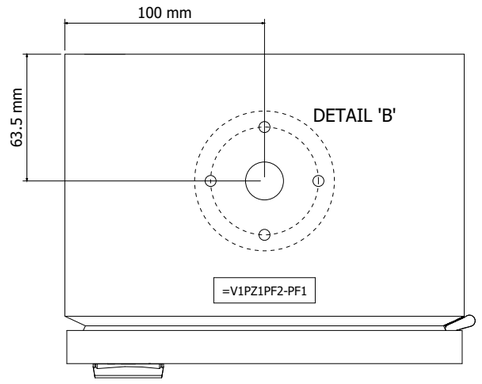

Top View
of Enclosure

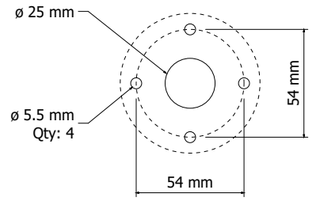

DETAIL 'B'
ABB Stack light
K70 series

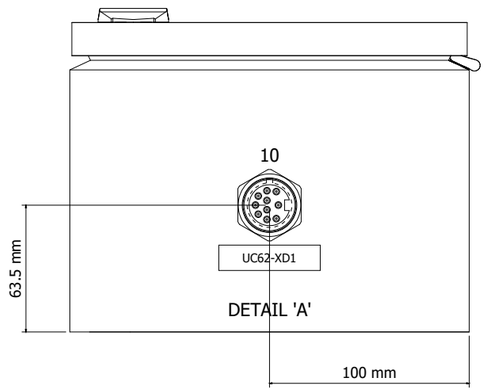

Buttom View
of Enclosure

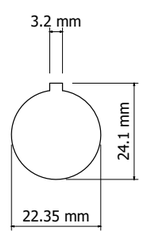

DETAIL 'A'
1-1/8" Receptacle

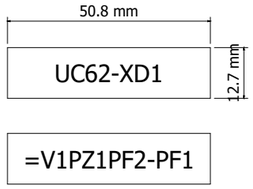

=V1PZ1PF1+.UC61/2

2

			Date	1/17/2023	Volvo Trucks North America		Valiant TMS	Layout UC62 SL External View	Drawing name: =2V09&EFS-EL	= V1PZ1PF2
			Ed.	MKLEPADLO						+ V1UC62
			Appr		P6700 Bodyside LH - Robot Cell 2V09				Document type: ELU	Project nr: 22-16150
Modification	Date	Name	Original		Replacement of	Replaced by	Scale 1:3			Page 1 / 1533

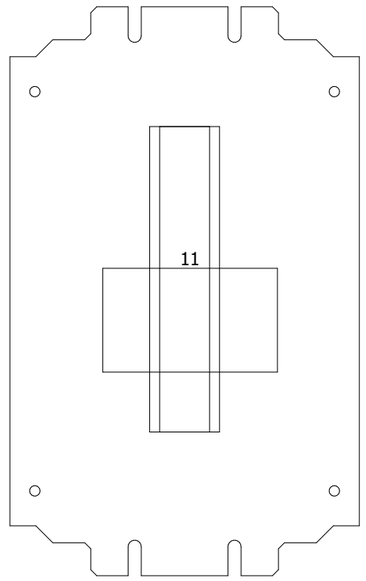

1

=V1PZ1PF3+.UC63/1

			Date	1/17/2023	Volvo Trucks North America	Valiant TMS	Layout UC62 SL Internal View	Drawing name: =2V09&EFS-EL	= V1PZ1PF2	
			Ed.	MKLEPADLO					+ V1UC62	
			Appr		P6700 Bodyside LH - Robot Cell 2V09			Document type: ELU	Project nr: 22-16150	Page 2
Modification	Date	Name	Original		Replacement of	Replaced by	Scale 1:3			1533

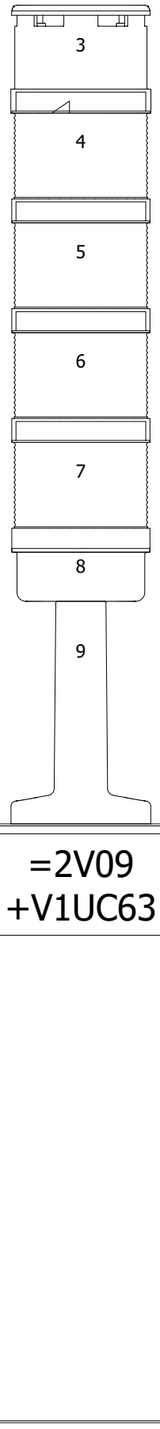

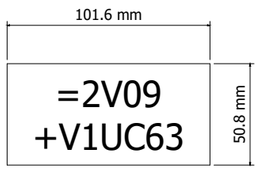

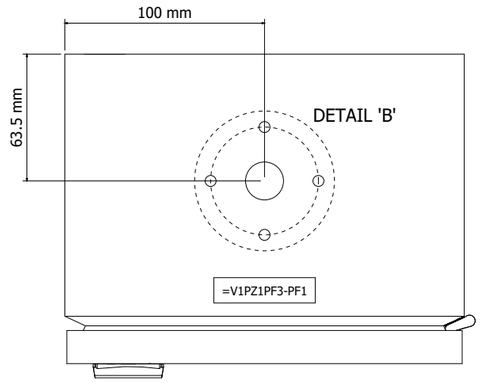

Top View
of Enclosure

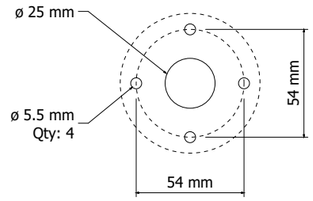

DETAIL 'B'
ABB Stack light
K70 series

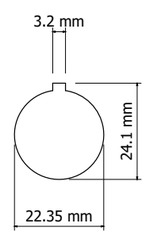

DETAIL 'A'
1-1/8" Receptacle

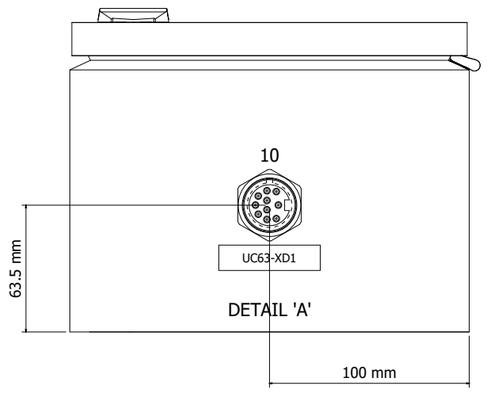

Buttom View
of Enclosure

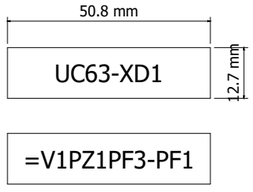

=V1PZ1PF2+.UC62/2

			Date	1/17/2023	Volvo Trucks North America	Valiant TMS	Layout UC63 SL External View	Drawing name: =2V09&EFS-EL	= V1PZ1PF3
			Ed.	MKLEPADLO					+ V1UC63
			Appr		P6700 Bodyside LH - Robot Cell 2V09			Document type: ELU	Project nr: 22-16150
Modification	Date	Name	Original		Replacement of	Replaced by	Scale 1:3		Page 1 / 1533

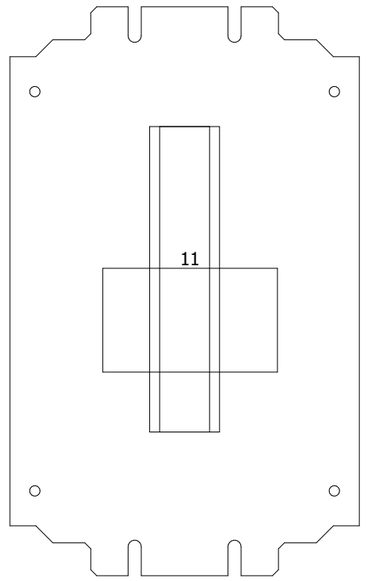

1

=V1PZ1PF4+.UC64/1

			Date	1/17/2023	Volvo Trucks North America	Valiant TMS	Layout UC63 SL Internal View	Drawing name: =2V09&EFS-EL	= V1PZ1PF3	
			Ed.	MKLEPADLO					+ V1UC63	
			Appr		P6700 Bodyside LH - Robot Cell 2V09			Document type: ELU	Project nr: 22-16150	Page 2
Modification	Date	Name	Original		Replacement of	Replaced by	Scale 1:3			1533

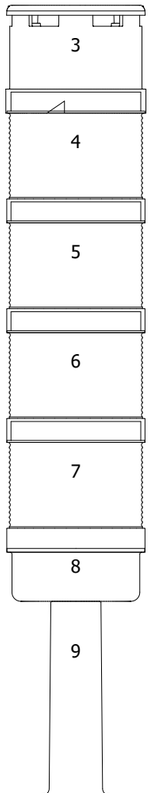

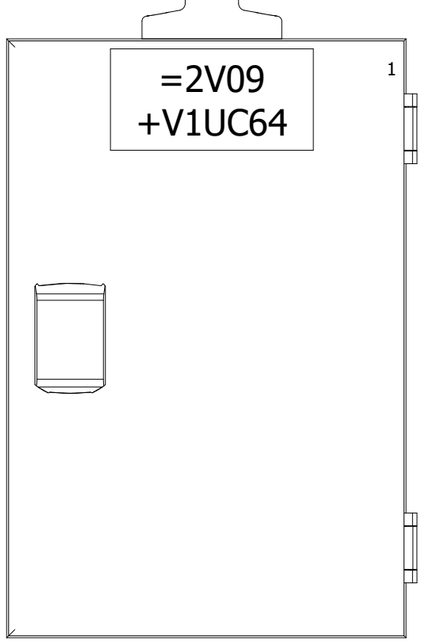

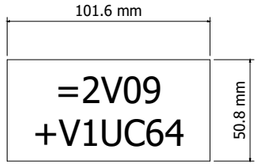

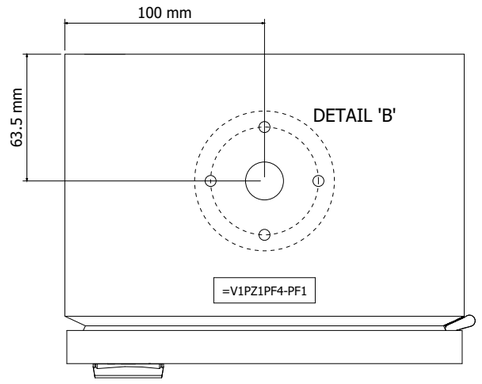

Top View
of Enclosure

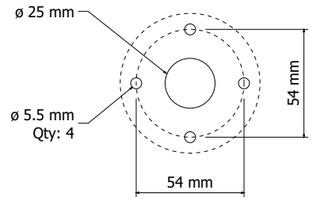

DETAIL 'B'
ABB Stack light
K70 series

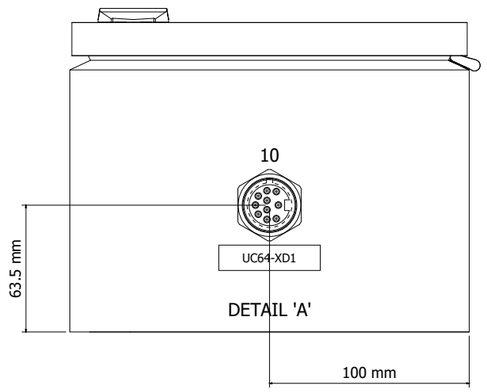

Buttom View
of Enclosure

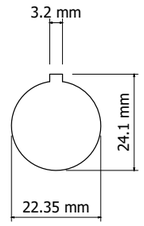

DETAIL 'A'
1-1/8" Receptacle

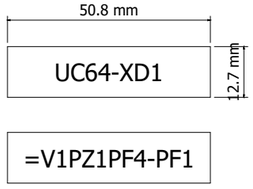

=V1PZ1PF3+.UC63/2

2

			Date	1/17/2023	Volvo Trucks North America	Valiant TMS	Layout UC64 SL External View	Drawing name: =2V09&EFS-EL	= V1PZ1PF4	
			Ed.	MKLEPADLO					+ V1UC64	
			Appr		P6700 Bodyside LH - Robot Cell 2V09			Document type: ELU	Project nr: 22-16150	Page 1
Modification	Date	Name	Original		Replacement of	Replaced by	Scale 1:3			1533

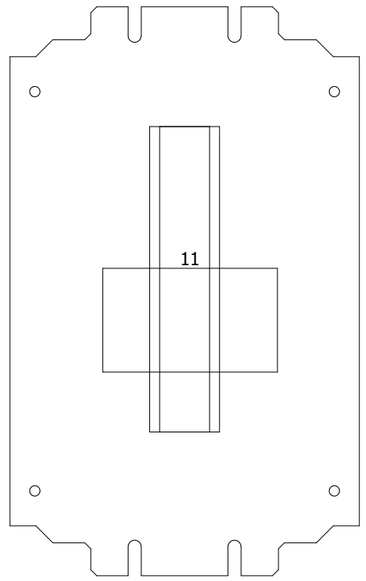

1

=V1SF0PG1+.UC32/1

			Date	1/17/2023	Volvo Trucks North America	Valiant TMS	Layout UC64 SL Internal View	Drawing name: =2V09&EFS-EL	= V1PZ1PF4	
			Ed.	MKLEPADLO					+ V1UC64	
			Appr		P6700 Bodyside LH - Robot Cell 2V09			Document type: ELU	Project nr: 22-16150	Page 2
Modification	Date	Name	Original		Replacement of	Replaced by	Scale 1:3			1533

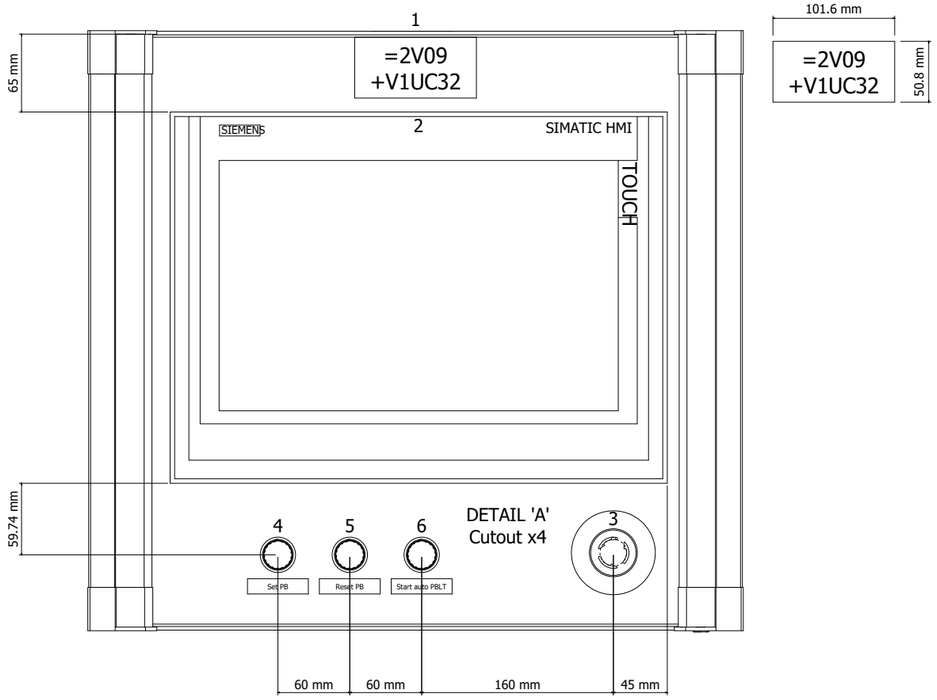

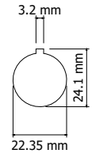

DETAIL 'A'
7/8" Receptacle,
Pushbutton and E-stop

DETAIL 'B'
M12 Profinet Receptacle

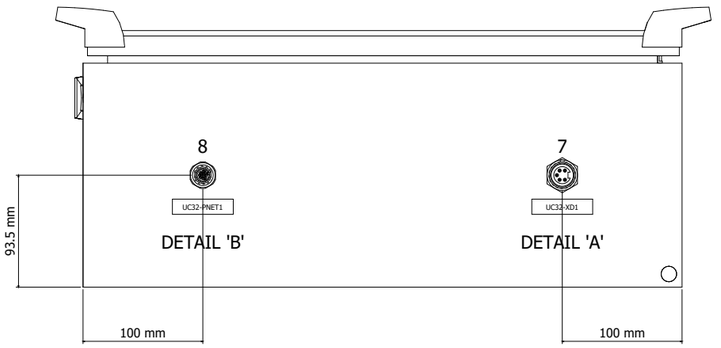

Buttom View
of Enclosure

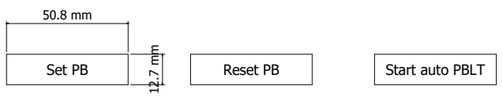

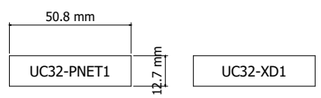

Enclosure panel shall be finished in RAL 7035 Light Grey paint.

=V1PZ1PF4+.UC64/2

2

			Date	1/17/2023	Volvo Trucks North America		Valiant TMS	Layout UC32 SOP External View	Drawing name: =2V09&EFS-EL	= V1SF0PG1
			Ed.	MKLEPADLO						+ V1UC32
			Appr		P6700 Bodyside LH - Robot Cell 2V09		Scale 1:5		Document type: ELU	Project nr: 22-16150
Modification	Date	Name	Original		Replacement of	Replaced by				Page 1 / 1533

0	1	2	3	4	5	6	7	8	9

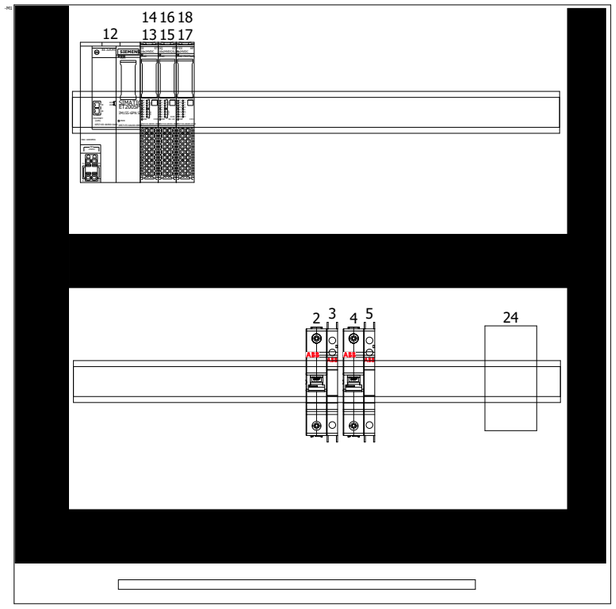

1

=V1SF0PG2+.UC51/1

			Date	1/17/2023	Volvo Trucks North America	Valiant TMS	Layout UC32 SOP Internal View	Drawing name: =2V09&EFS-EL	= V1SF0PG1	
			Ed.	MKLEPADLO					+ V1UC32	
			Appr		P6700 Bodyside LH - Robot Cell 2V09			Document type: ELU	Project nr: 22-16150	Page 2
Modification	Date	Name	Original		Replacement of	Replaced by	Scale 1:5			1533

0	1	2	3	4	5	6	7	8	9

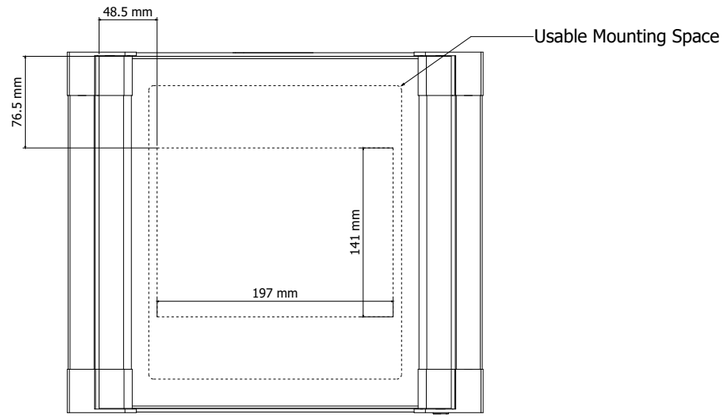

(Cutout measured from edge of removable mounting plate)

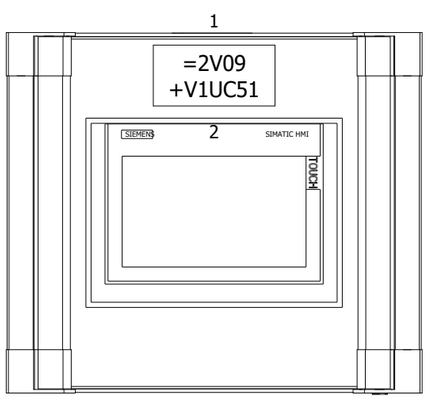

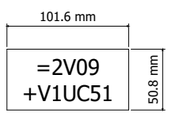

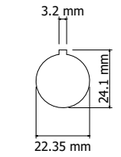

DETAIL 'A'
7/8" Receptacle

DETAIL 'B'
M12 Profinet Receptacle

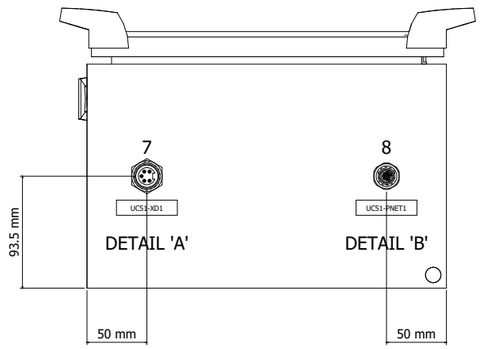

Buttom View
of Enclosure

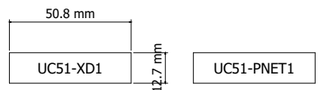

Enclosure panel shall be finished in RAL 7035 Light Grey paint.

=V1SF0PG1+.UC32/2

=V1SF0PG3+.UC52/1

			Date	1/17/2023	Volvo Trucks North America		Valiant TMS	Layout UC51 OD External View	Drawing name: =2V09&EFS-EL	= V1SF0PG2
			Ed.	MKLEPADLO						+ V1UC51
			Appr		P6700 Bodyside LH - Robot Cell 2V09		Scale 1:5		Document type: ELU	Project nr: 22-16150
Modification	Date	Name	Original		Replacement of	Replaced by				Page 1 / 1533

0	1	2	3	4	5	6	7	8	9

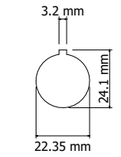

DETAIL 'A'
7/8" Receptacle

DETAIL 'B'
M12 Profinet Receptacle

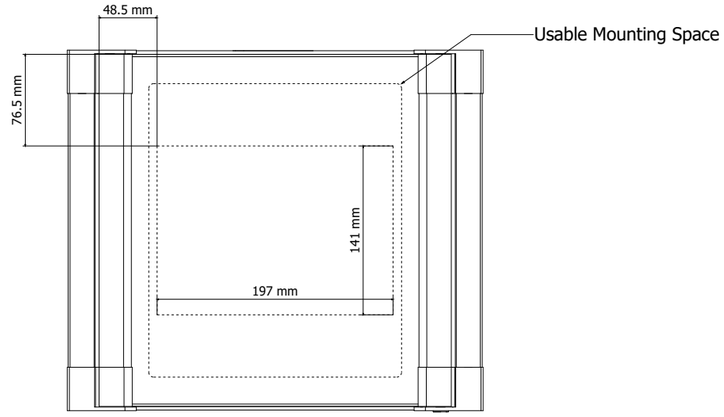

(Cutout measured from edge of removable mounting plate)

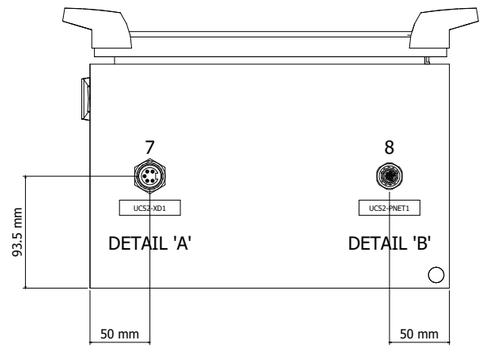

Buttom View
of Enclosure

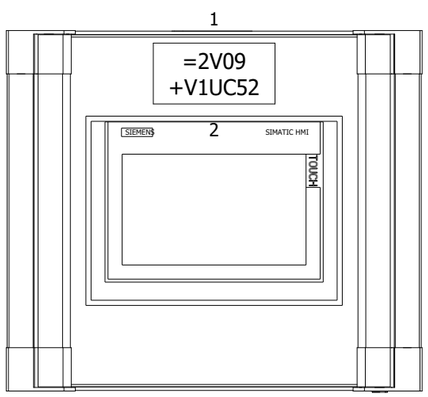

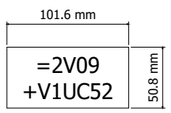

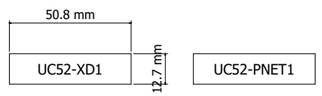

Enclosure panel shall be finished in RAL 7035 Light Grey paint.

=V1SF0PG2+.UC51/1

=V1SF0PG4+.UC53/1

			Date	1/17/2023	Volvo Trucks North America	Valiant TMS	Layout UC52 OD External View	Drawing name: =2V09&EFS-EL	= V1SF0PG3
			Ed.	MKLEPADLO					+ V1UC52
			Appr		P6700 Bodyside LH - Robot Cell 2V09	Scale 1:5		Document type: ELU	Project nr: 22-16150
Modification	Date	Name	Original		Replacement of	Replaced by			Page 1 / 1533

0	1	2	3	4	5	6	7	8	9

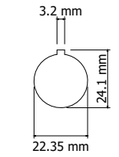

DETAIL 'A'
7/8" Receptacle

DETAIL 'B'
M12 Profinet Receptacle

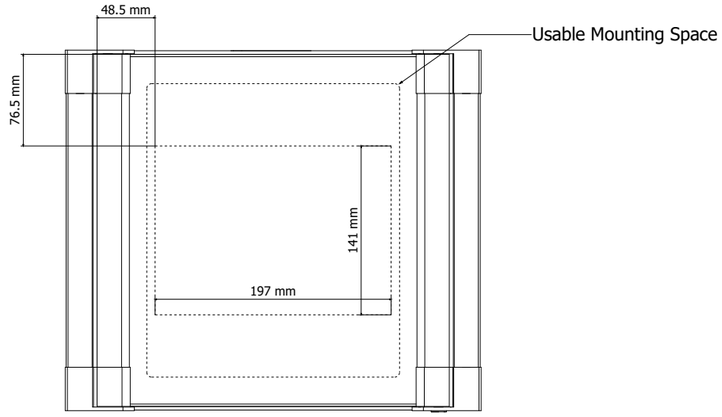

(Cutout measured from edge of removable mounting plate)

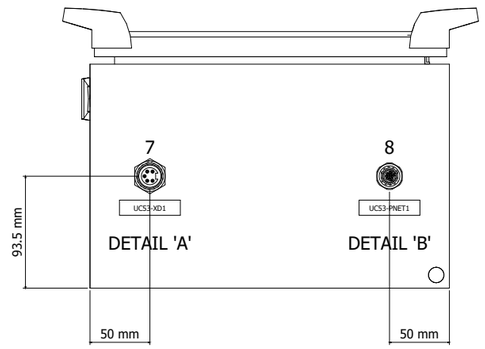

Buttom View
of Enclosure

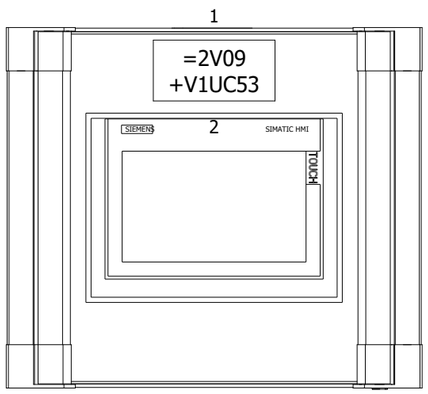

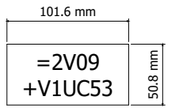

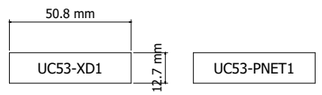

Enclosure panel shall be finished in RAL 7035 Light Grey paint.

=V1SF0PG3+.UC52/1

=V1SF0PG5+.UC54/1

			Date	1/17/2023	Volvo Trucks North America	Valiant TMS	Layout UC53 OD External View	Drawing name: =2V09&EFS-EL	= V1SF0PG4
			Ed.	MKLEPADLO					+ V1UC53
			Appr		P6700 Bodyside LH - Robot Cell 2V09	Scale 1:5		Document type: ELU	Project nr: 22-16150
Modification	Date	Name	Original		Replacement of	Replaced by			Page 1 / 1533

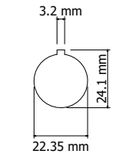

DETAIL 'A'
7/8" Receptacle

DETAIL 'B'
M12 Profinet Receptacle

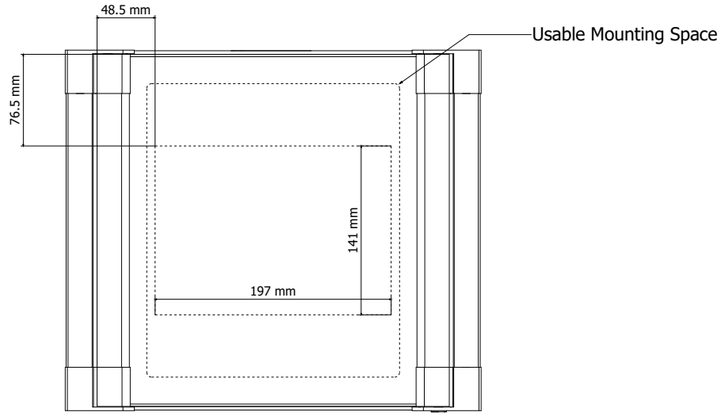

(Cutout measured from edge of removable mounting plate)

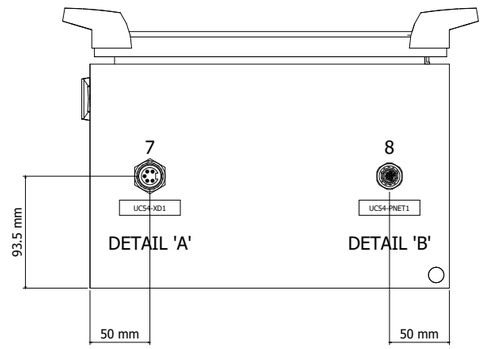

Buttom View
of Enclosure

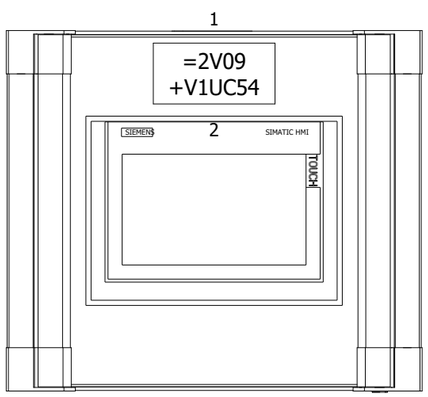

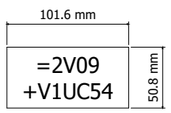

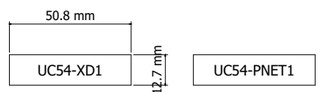

Enclosure panel shall be finished in RAL 7035 Light Grey paint.

=V1SF0PG4+.UC53/1

=V1SF0SF1+.UC71/1

			Date	1/17/2023	Volvo Trucks North America	Valiant TMS	Layout UC54 OD External View	Drawing name: =2V09&EFS-EL	= V1SF0PG5	
			Ed.	MKLEPADLO					+ V1UC54	
			Appr		P6700 Bodyside LH - Robot Cell 2V09	Scale 1:5		Document type: ELU	Project nr: 22-16150	Page 1
Modification	Date	Name	Original		Replacement of	Replaced by				1533

0	1	2	3	4	5	6	7	8	9

50.8 mm

+V1UC71UC01

12.7 mm

Operator Run

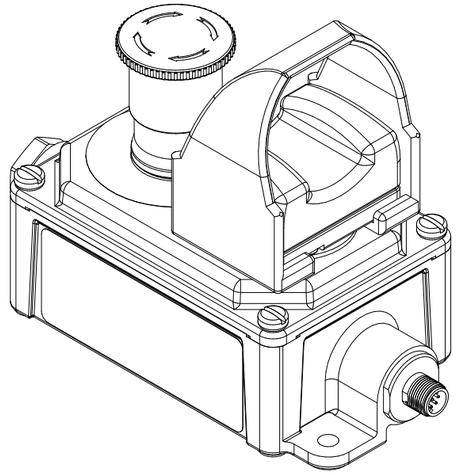

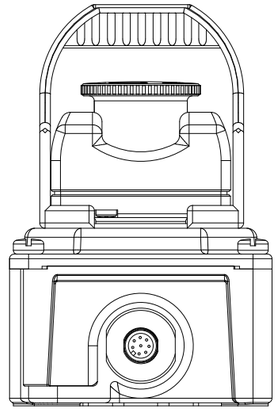

148.1 mm

55.9 mm

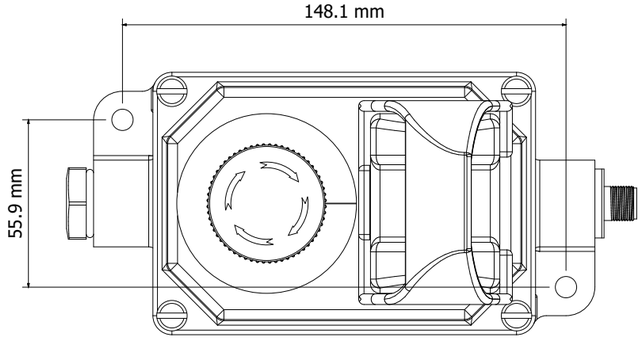

=V1SF0PG5+.UC54/1

=V1SF0SF2+.UC72/1

			Date	1/17/2023	Volvo Trucks North America	Valiant TMS	LAYOUT UC71 RB EXTERNAL VIEW	Drawing name: =2V09&EFS-EL	= V1SF0SF1
			Ed.	MKLEPADLO					+ V1UC71
			Appr		P6700 Bodyside LH - Robot Cell 2V09	Scale 1:2		Document type: ELU	Project nr: 22-16150
Modification	Date	Name	Original		Replacement of	Replaced by			Page 1 / 1533

0	1	2	3	4	5	6	7	8	9

50.8 mm

+V1UC72UC01

12.7 mm

Operator Run

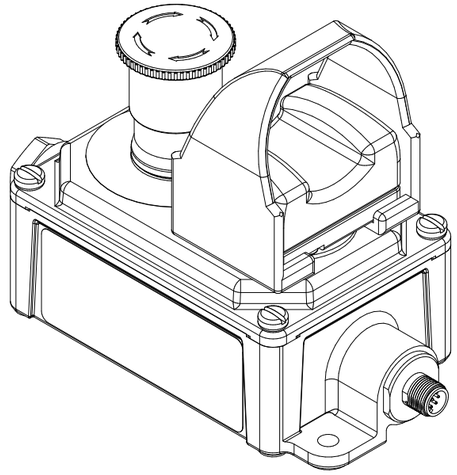

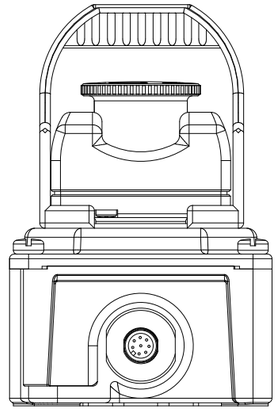

148.1 mm

55.9 mm

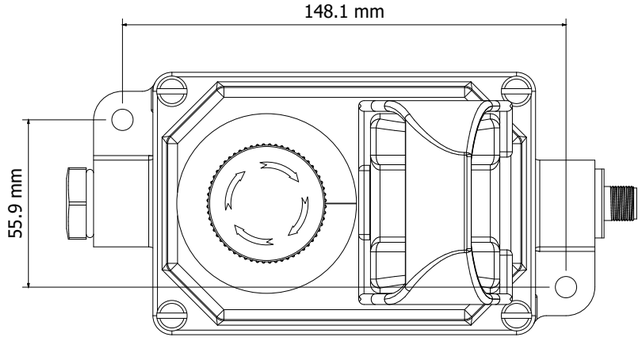

=V1SF0SF1+.UC71/1

=V1SF0SF3+.UC73/1

			Date	1/17/2023	Volvo Trucks North America	Valiant TMS	LAYOUT UC72 RB EXTERNAL VIEW	Drawing name: =2V09&EFS-EL	= V1SF0SF2	
			Ed.	MKLEPADLO					+ V1UC72	
			Appr		P6700 Bodyside LH - Robot Cell 2V09	Scale 1:2		Document type: ELU	Project nr: 22-16150	Page 1
Modification	Date	Name	Original		Replacement of	Replaced by				1533

0	1	2	3	4	5	6	7	8	9

50.8 mm

+V1UC73UC01

12.7 mm

Operator Run

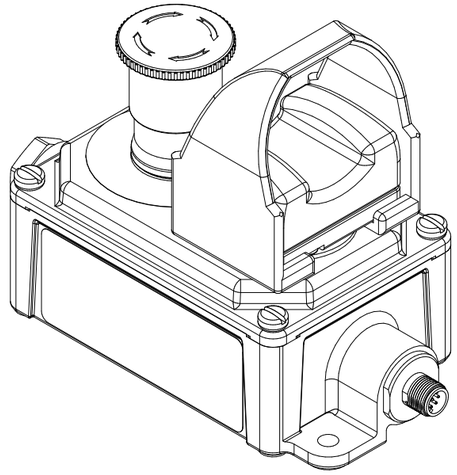

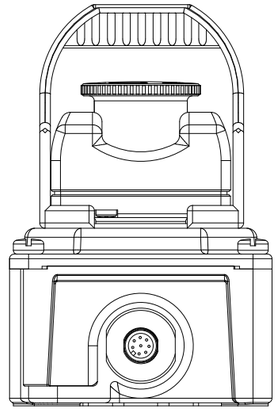

148.1 mm

55.9 mm

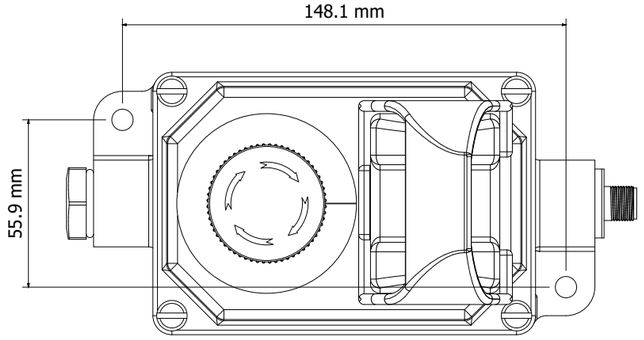

=V1SF0SF2+.UC72/1

=V1SF0SF4+.UC74/1

			Date	1/17/2023	Volvo Trucks North America	Valiant TMS	LAYOUT UC73 RB EXTERNAL VIEW	Drawing name: =2V09&EFS-EL	= V1SF0SF3	
			Ed.	MKLEPADLO					+ V1UC73	
			Appr		P6700 Bodyside LH - Robot Cell 2V09	Scale 1:2		Document type: ELU	Project nr: 22-16150	Page 1
Modification	Date	Name	Original		Replacement of	Replaced by				1533

0	1	2	3	4	5	6	7	8	9

50.8 mm

+V1UC74UC01

12.7 mm

Operator Run

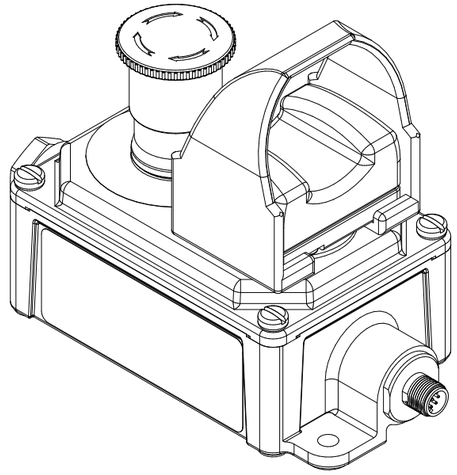

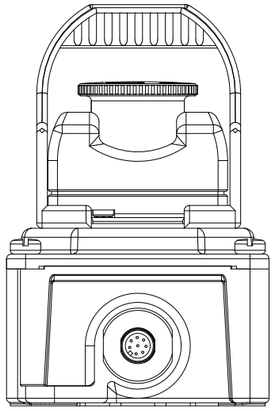

148.1 mm

55.9 mm

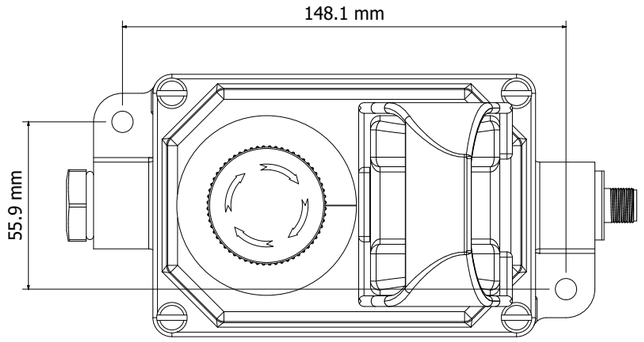

=V1SF0SF3+.UC73/1

=V1UC11+.UC11/1

			Date	1/17/2023	Volvo Trucks North America	Valiant TMS	LAYOUT UC74 RB EXTERNAL VIEW	Drawing name: =2V09&EFS-EL	= V1SF0SF4
			Ed.	MKLEPADLO					+ V1UC74
			Appr		P6700 Bodyside LH - Robot Cell 2V09	Scale 1:2		Document type: ELU	Project nr: 22-16150
Modification	Date	Name	Original		Replacement of	Replaced by			Page 1 / 1533

0	1	2	3	4	5	6	7	8	9

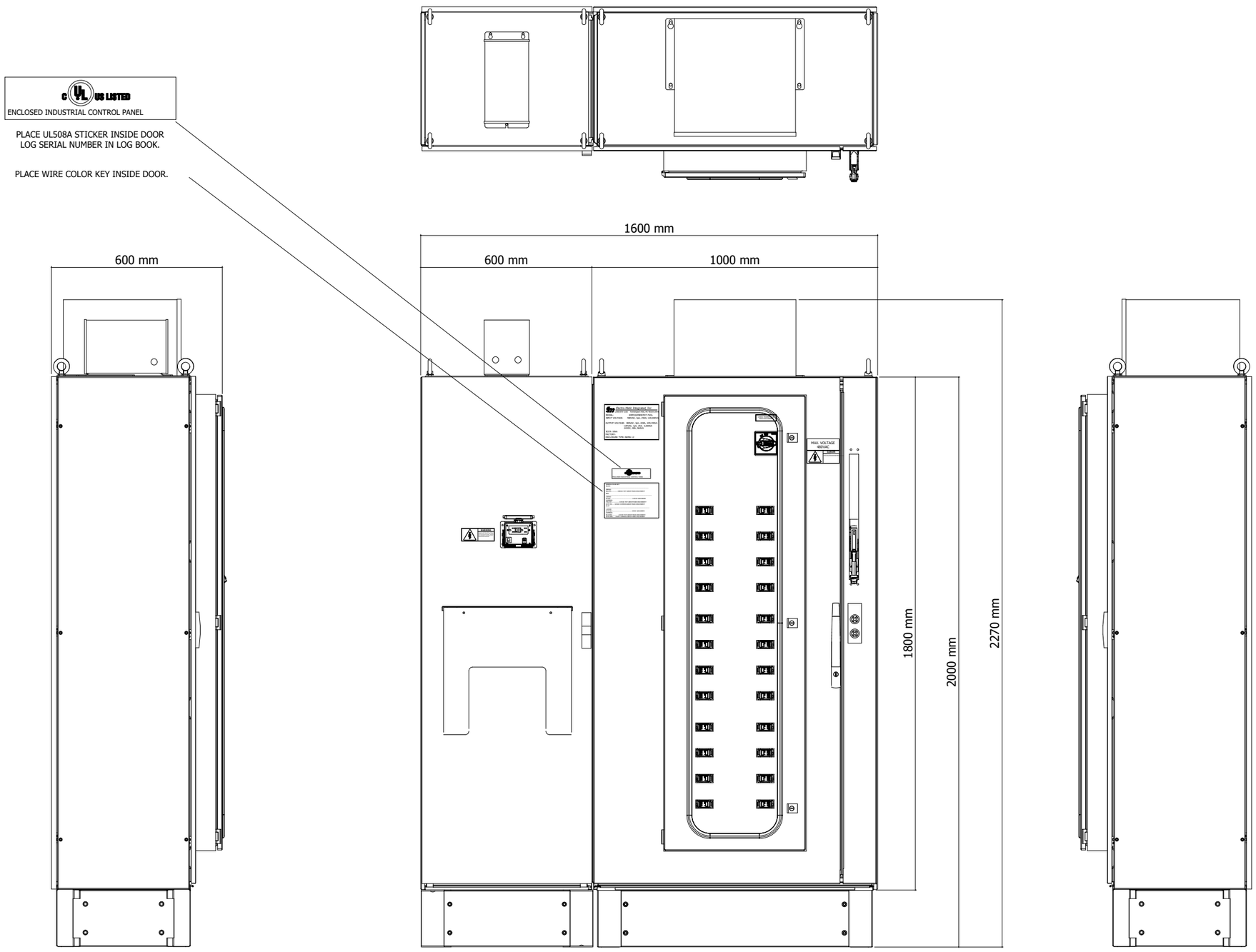

=V1SF0SF4+.UC74/1

2

			Date	1/17/2023	Volvo Trucks North America		Valiant TMS	Layout UC11 PDP External View	Drawing name: =2V09&EFS-EL	= V1UC11
			Ed.	MKLEPADLO						+ V1UC11
			Appr		P6700 Bodyside LH - Robot Cell 2V09				Document type: ELU	Project nr: 22-16150
Modification	Date	Name	Original		Replacement of	Replaced by	Scale 1:15			Page 1 / 1533

0	1	2	3	4	5	6	7	8	9

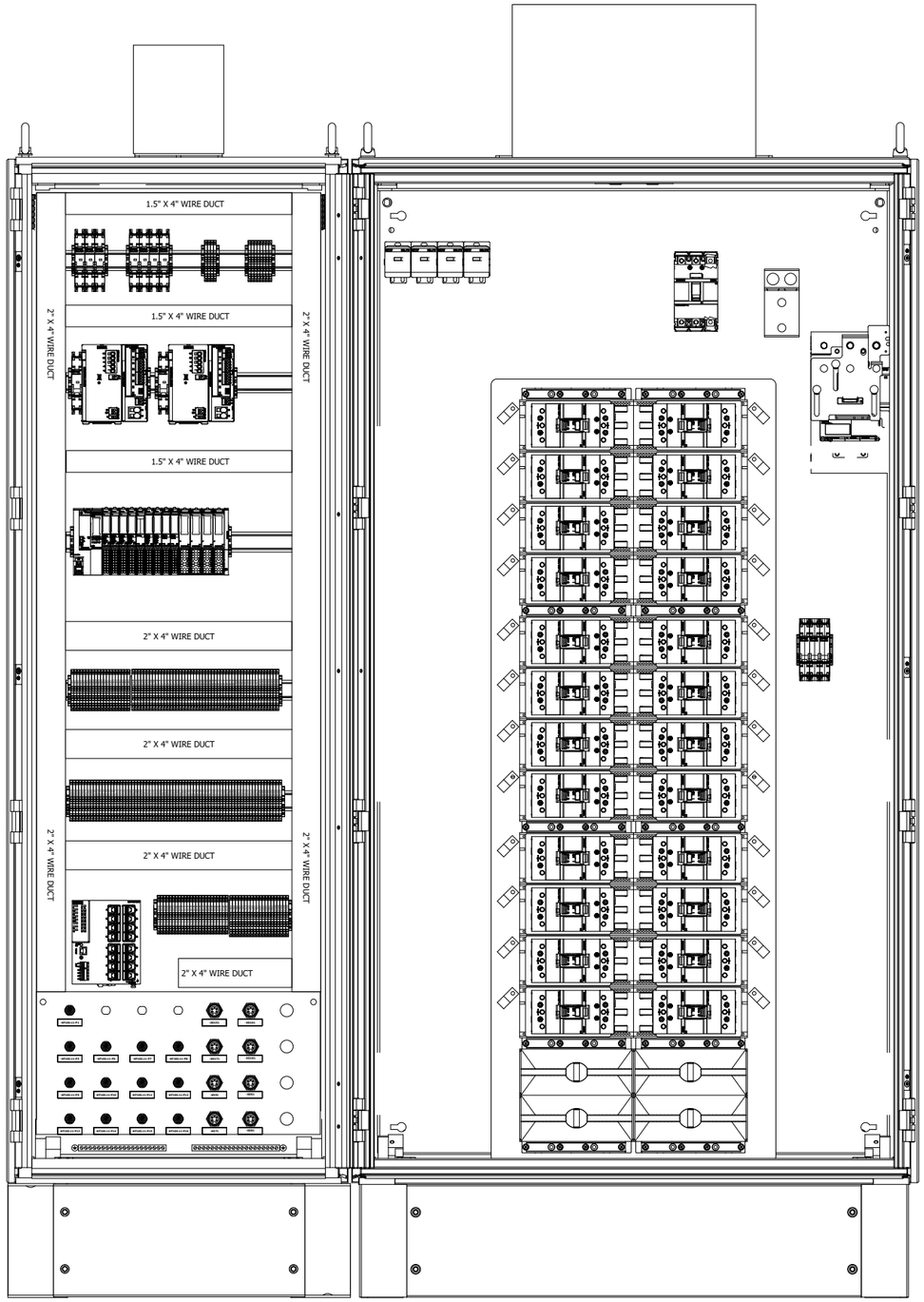

1

=V1UC12+.UC12/1

			Date	1/17/2023	Volvo Trucks North America	Valiant TMS	Layout UC11 PDP Internal View	Drawing name: =2V09&EFS-EL		= V1UC11	
			Ed.	MKLEPADLO						+ V1UC11	
1	2020-11-06	MINO	Appr		P6700 Bodyside LH - Robot Cell 2V09	Scale 1:10		Document type: ELU	Project nr: 22-16150	Page	2
Modification	Date	Name	Original		Replacement of	Replaced by					1533

0	1	2	3	4	5	6	7	8	9

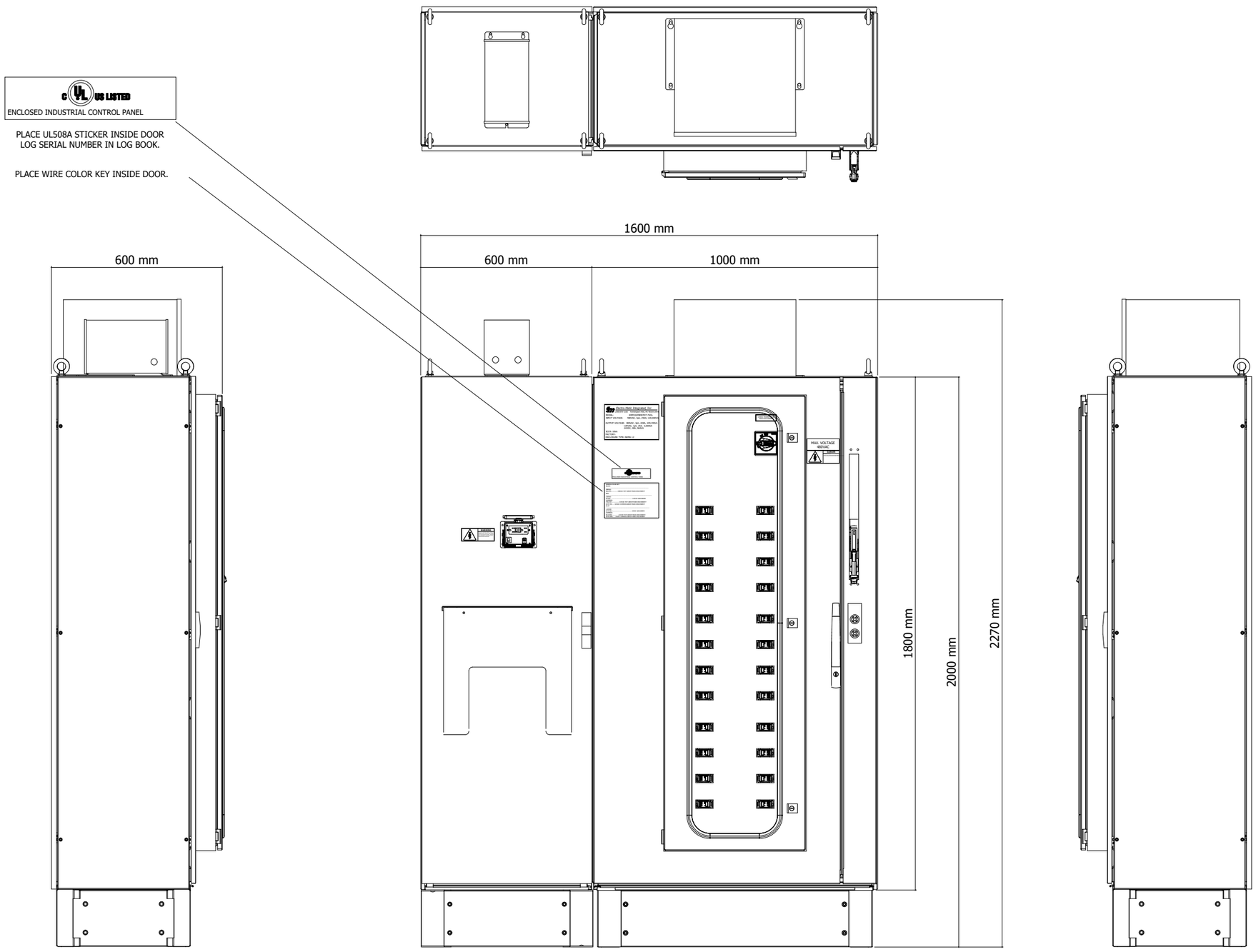

=V1UC11+.UC11/2

2

			Date	1/17/2023	Volvo Trucks North America		Valiant TMS	Layout UC12 PDP External View	Drawing name: =2V09&EFS-EL	= V1UC12
			Ed.	MKLEPADLO						+ V1UC12
			Appr		P6700 Bodyside LH - Robot Cell 2V09				Document type: ELU	Project nr: 22-16150
Modification	Date	Name	Original		Replacement of	Replaced by	Scale 1:15			Page 1 / 1533

0	1	2	3	4	5	6	7	8	9

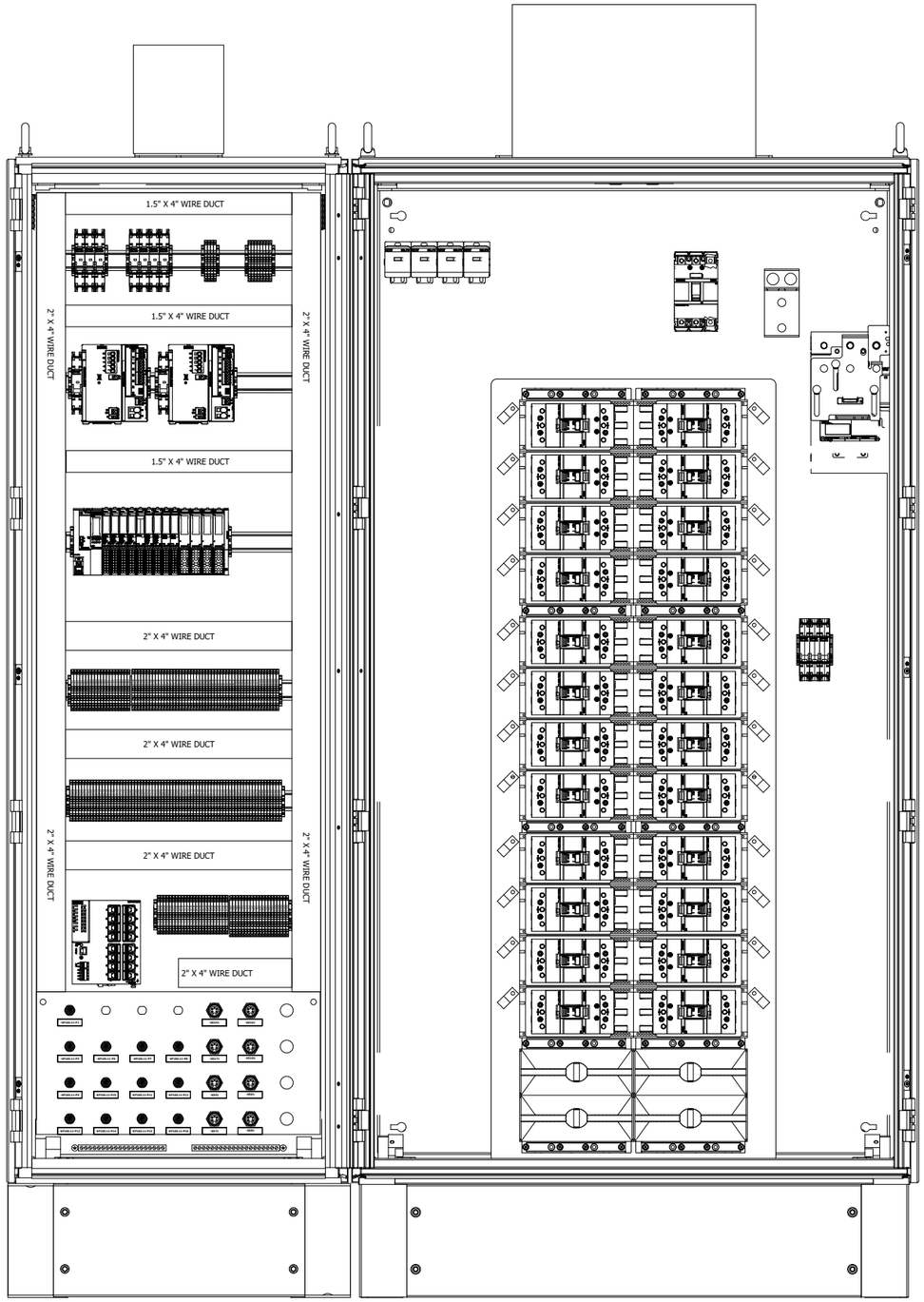

1

=V1UC14+.UC14/1

			Date	1/17/2023	Volvo Trucks North America	Valiant TMS	Layout UC12 PDP Internal View	Drawing name: =2V09&EFS-EL		= V1UC12	
			Ed.	MKLEPADLO						+ V1UC12	
1	2020-11-06	MINO	Appr		P6700 Bodyside LH - Robot Cell 2V09	Scale 1:10		Document type: ELU	Project nr: 22-16150	Page	2
Modification	Date	Name	Original		Replacement of	Replaced by					1533

0	1	2	3	4	5	6	7	8	9

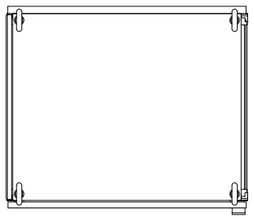

c UL us LISTED
ENCLOSED INDUSTRIAL CONTROL PANEL

PLACE UL508A STICKER INSIDE DOOR
LOG SERIAL NUMBER IN LOG BOOK.

PLACE WIRE COLOR KEY INSIDE DOOR.

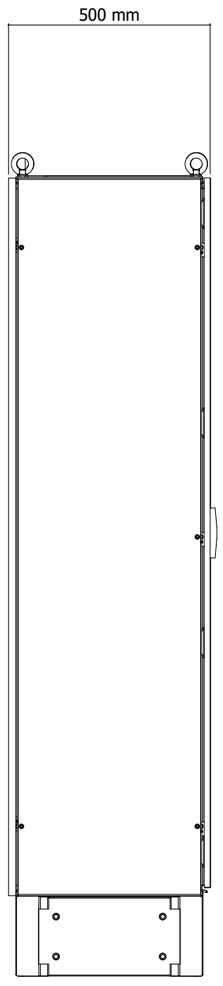

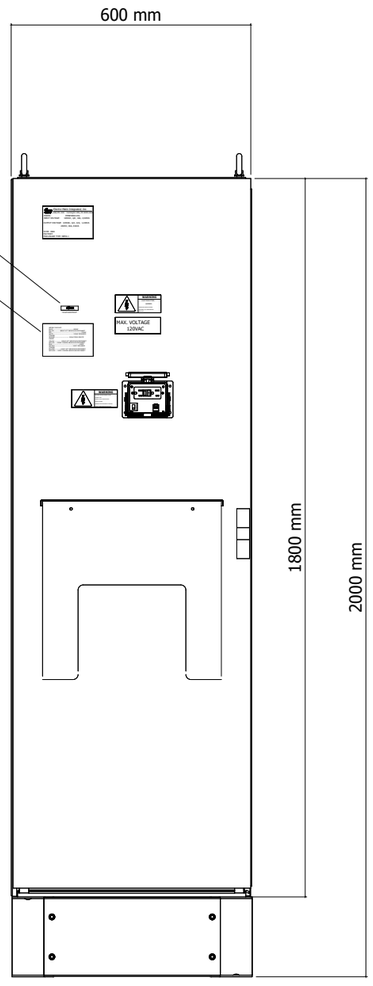

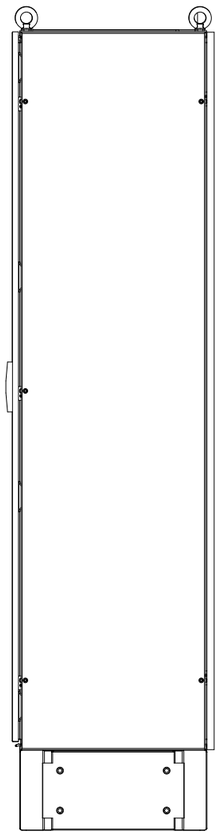

=V1UC12+.UC12/2

2

			Date	1/17/2023	Volvo Trucks North America	Valiant TMS	Layout UC14 RIO External View	Drawing name: =2V09&EFS-EL	= V1UC14
			Ed.	MKLEPADLO					+ V1UC14
			Appr		P6700 Bodyside LH - Robot Cell 2V09			Document type: ELU	Project nr: 22-16150
Modification	Date	Name	Original		Replacement of / Replaced by	Scale 1:15			Page 1 / 1533

0	1	2	3	4	5	6	7	8	9

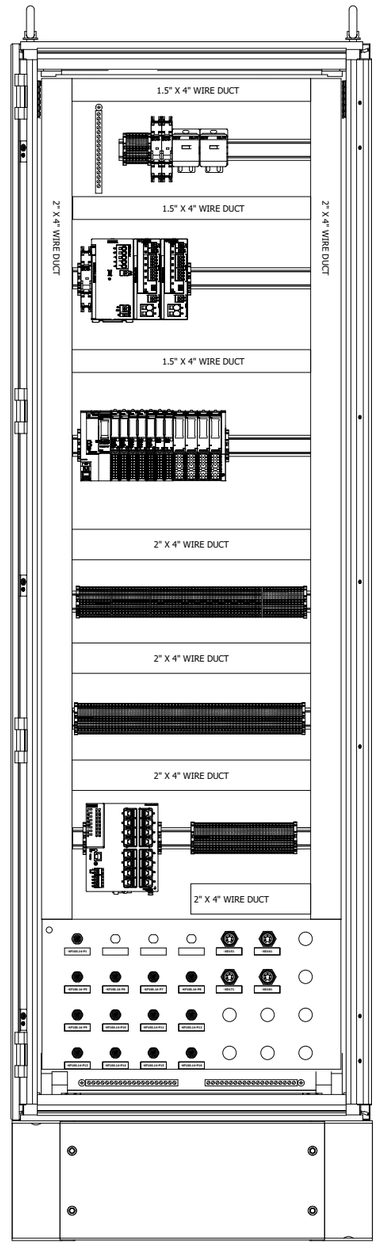

1

=V1UC15+.UC15/1

			Date	1/17/2023	Volvo Trucks North America	Valiant TMS	Layout UC14 RIO Internal Controls View	Drawing name: =2V09&EFS-EL	= V1UC14
			Ed.	MKLEPADLO					+ V1UC14
			Appr		P6700 Bodyside LH - Robot Cell 2V09	Scale 1:10		Document type: ELU	Project nr: 22-16150
Modification	Date	Name	Original		Replacement of	Replaced by			Page 2 / 1533

0	1	2	3	4	5	6	7	8	9

PLACE UL508A STICKER INSIDE DOOR
LOG SERIAL NUMBER IN LOG BOOK.

PLACE WIRE COLOR KEY INSIDE DOOR.

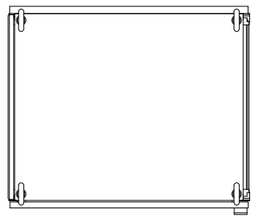

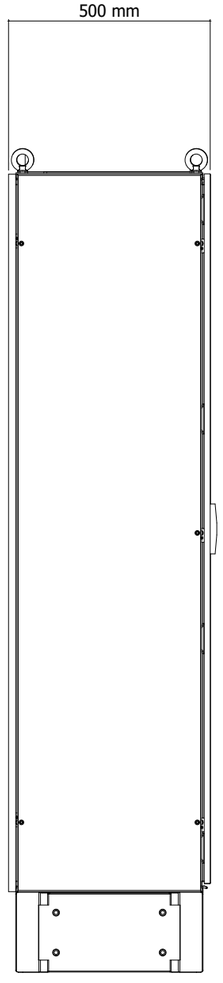

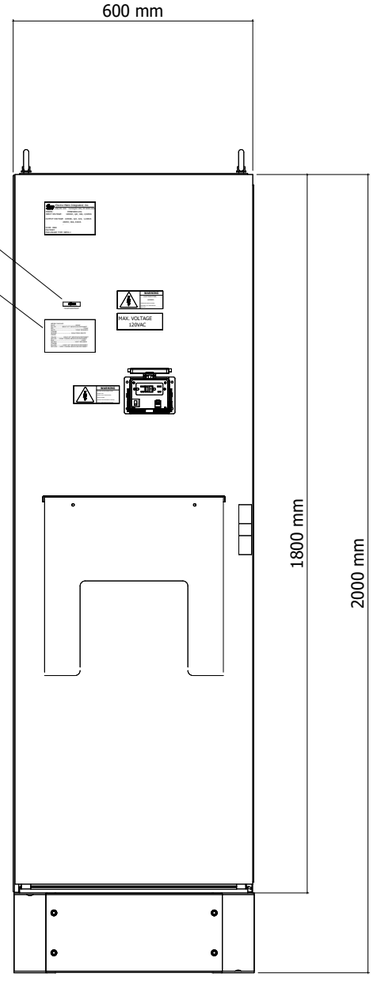

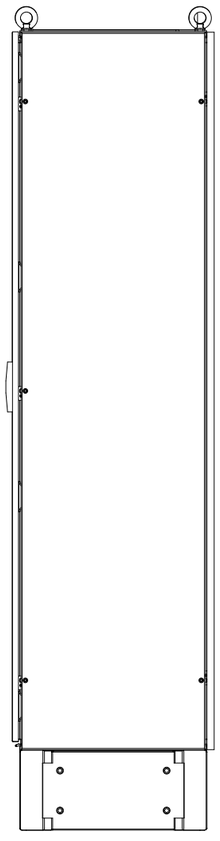

=V1UC14+.UC14/2

2

			Date	1/17/2023	Volvo Trucks North America	Valiant TMS	Layout UC15 RIO External View	Drawing name: =2V09&EFS-EL	= V1UC15
			Ed.	MKLEPADLO					+ V1UC15
			Appr		P6700 Bodyside LH - Robot Cell 2V09			Document type: ELU	Project nr: 22-16150
Modification	Date	Name	Original		Replacement of / Replaced by	Scale 1:15			Page 1 / 1533

0	1	2	3	4	5	6	7	8	9

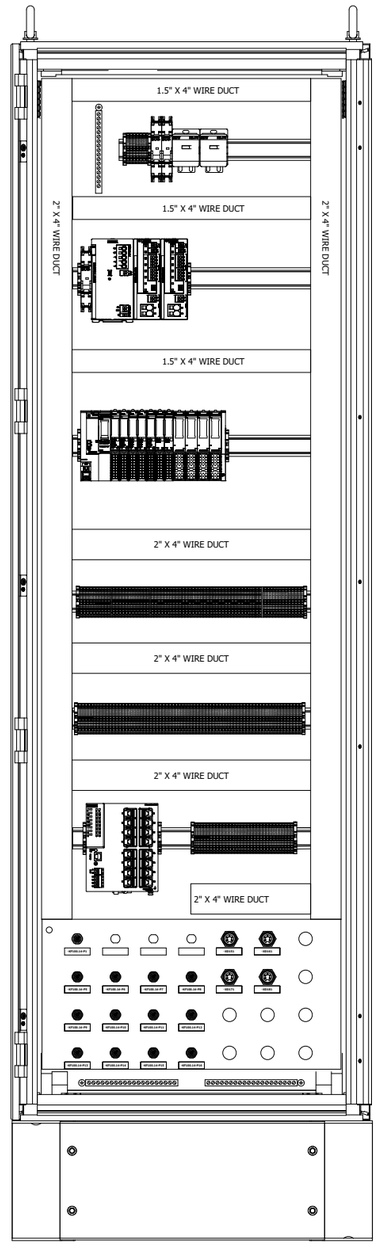

1

&EMC+/1

			Date	1/17/2023	Volvo Trucks North America	Valiant TMS	Layout UC15 RIO Internal Controls View	Drawing name: =2V09&EFS-EL	= V1UC15
			Ed.	MKLEPADLO					+ V1UC15
			Appr		P6700 Bodyside LH - Robot Cell 2V09	Scale 1:10		Document type: ELU	Project nr: 22-16150
Modification	Date	Name	Original		Replacement of	Replaced by			Page 2 / 1533

Cable overview

F10_001_Cable

Cable name	Source (from)	Target (to)	cable type	all conductors	Conductors used	Cross-section [mm]	Length [m]	remark
=V1SF0SF1-W1	=V1KF1+V1UC12-KF12.14	=V1SF0SF1+V1UC71-SF1	CBL	8	8	24	25	
	=V1WC4+V1UC12-XD14							
	=V1KF1+V1UC12-KF12.32							
	=V1WC4+V1UC12-XD10							
=V1SF0SF3-W1	=V1KF1+V1UC14-KF14.12	=V1SF0SF3+V1UC73-SF1	CBL	8	8	24	25	
	=V1WC4+V1UC14-XD16							
	=V1KF1+V1UC14-KF14.32							
	=V1WC4+V1UC14-XD10							
=KH0-W1			NEBS-L1G4-K-5-LE4	4	0	26	5	
=KF0KF1-KF1.31-P2	=KF0KF1+UC31-KF1.31-X1	=KF0KF1+UC31-KF31	PROFINET Cable	4	0	22		
=KF0KF1-KF100-P1	=KF0KF1+UC31-KF100.31	=KF0KF1+UC31-KF99.31	PROFINET Cable	4	1	22		
=KF0KF1-KF100.31-P2	=KF0KF1+UC31-KF1.31-X2	=KF0KF1+UC31-KF100.31	PROFINET Cable	4	0	22		
=KF0KF1-KF100.31-P3	=KF0KF1+UC31-KF1.31-X1	=KF0KF1+UC31-KF100.31	PROFINET Cable	4	0	22		
=KF0KF1-KF100.31-P4	=KF0KF1+UC31-KF100.31	=KF0KF1+UC31-PC1	PROFINET Cable	4	0	22		
=KF0KF1-KF100.31-P5	=KF0KF1+UC31-KF100.31	=KF0KF1+UC31-PC1	PROFINET Cable	4	0	22		
=KF0KF1-KF100.31-P6	=KF0KF1+UC31-KF100.31-P6	=KF0KF1+UC31-KF100.31	PROFINET Cable	4	1	22		
=KF0KF1-KF100.31-P7	=KF0KF1+UC31-KF100.31-P7	=KF0KF1+UC31-KF100.31	PROFINET Cable	4	1	22		
=KF0KF1-KF100.31-P8	=KF0KF1+UC31-KF100.31-P8	=KF0KF1+UC31-KF100.31	PROFINET Cable	4	1	22		
=KF0KF1-KF100.31-P9	=KF0KF1+UC31-KF100.31-P9	=KF0KF1+UC31-XG2	PROFINET Cable	4	1	22		
		=KF0KF1+UC31-KF100.31						
=KF0KF1-KF100.31-P10	=KF0KF1+UC31-KF100.31-P10	=KF0KF1+UC31-KF100.31	PROFINET Cable	4	1	22		
=KF0KF1-KF100.31-P11	=KF0KF1+UC31-KF100.31-P11	=KF0KF1+UC31-KF100.31	PROFINET Cable	4	1	22		
=KF0KF1-KF100.31-P12	=KF0KF1+UC31-KF100.31-P12	=KF0KF1+UC31-KF100.31	PROFINET Cable	4	1	22		
=KF0KF1-KF100.31-P13	=KF0KF1+UC31-KF100.31-P13	=KF0KF1+UC31-KF100.31	PROFINET Cable	4	1	22		
=KF0KF1-KF100.31-P14	=KF0KF1+UC31-KF100.31-P14	=KF0KF1+UC31-KF100.31	PROFINET Cable	4	1	22		
=KF0KF1-KF100.31-P15	=KF0KF1+UC31-KF100.31-P15	=KF0KF1+UC31-KF100.31	PROFINET Cable	4	1	22		
=KF0KF1-KF100.31-P16	=KF0KF1+UC31-KF100.31-P16	=KF0KF1+UC31-KF100.31	PROFINET Cable	4	1	22		
=KF0KF1-WF1	=KF0KF1+UC31-KF99.31	=KF0KF1+UC31-xx	PROFINET Cable	4	0	22		
=V1AR11KF1-KF100.15-P5	=V1AR11KF1+V1AR11UC01-XPN-X2	=V1KF1+V1UC15-KF100.15-P5	PROFINET Cable	4	1	22		
=V1AR11UQ41KF1-WF1	=V1AR11UQ41KF1+V1AR11UQ41-KF1-TP1	=V1AR11UQ41KF1+V1AR11UQ41-R3.CP/CS	PROFINET Cable	4	1	22		
	=V1AR11UQ41KF1+V1AR11UQ41-KF1-TP2	=V1AR11UQ41KF1+V1AR11UQ41-KF1.14						
=V1AR21KF1-KF100.14-P5	=V1AR21KF1+V1AR21UC01-XPN-X2	=V1KF1+V1UC14-KF100.14-P5	PROFINET Cable	4	1	22		
=V1AR22KF1-KF100.15-P6	=V1AR22KF1+V1AR22UC01-XPN-X2	=V1KF1+V1UC15-KF100.15-P6	PROFINET Cable	4	1	22		
=V1AR23KF1-KF100.15-P7	=V1AR23KF1+V1AR23UC01-XPN-X2	=V1KF1+V1UC15-KF100.15-P7	PROFINET Cable	4	1	22		
=V1AR24KF1-KF100.14-P6	=V1AR24KF1+V1AR24UC01-XPN-X2	=V1KF1+V1UC14-KF100.14-P6	PROFINET Cable	4	1	22		
=V1AR25KF1-KF100.14-P7	=V1AR25KF1+V1AR25UC01-XPN-X2	=V1KF1+V1UC14-KF100.14-P7	PROFINET Cable	4	1	22		
=V1AR26KF1-KF100.15-P8	=V1AR26KF1+V1AR26UC01-XPN-X2	=V1KF1+V1UC15-KF100.15-P8	PROFINET Cable	4	1	22		
=V1AR28KF1-KF100.11-P6	=V1AR28KF1+V1AR28UC01-XPN-X2	=V1KF1+V1UC11-KF100.11-P6	PROFINET Cable	4	1	22		
=V1AR29KF1-KF100.14-P8	=V1AR29KF1+V1AR29UC01-XPN-X2	=V1KF1+V1UC14-KF100.14-P8	PROFINET Cable	4	1	22		
=V1AR31KF1-KF100.11-P7	=V1AR31KF1+V1AR31UC01-XPN-X2	=V1KF1+V1UC11-KF100.11-P7	PROFINET Cable	4	1	22		
=V1AR31UQ41KF1-WF1	=V1AR31UQ41KF1+V1AR31UQ41-KF1-TP1	=V1AR31UQ41KF1+V1AR31UQ41-R3.CP/CS	PROFINET Cable	4	1	22		
=V1AR31XQ41KF1-KF1			PROFINET Cable	4	0	22		
=V1AR81KF1-KF100.15-P9	=V1AR81KF1+V1AR81UC01-XPN-X2	=V1KF1+V1UC15-KF100.15-P9	PROFINET Cable	4	1	22		
=V1AR81UQ41KF1-WF1	=V1AR81UQ41KF1+V1AR81UQ41-KF1-TP1	=V1AR81UQ41KF1+V1AR81UQ41-R3.CP/CS	PROFINET Cable	4	1	22		

&ELU=V1UC15+V1UC15/2

			Date	1/17/2023	Volvo Trucks North America	Valiant TMS	Cable overview	Drawing name: =2V09&EFS-EL	=
			Ed.	MKLEPADLO					+
			Appr		P6700 Bodyside LH - Robot Cell 2V09			Document type: EMC	Project nr: 22-16150
Modification	Date	Name	Original		Replacement of	Replaced by	Scale 1:1		Page 1 / 1533

Cable overview

F10_001_Cable

Cable name	Source (from)	Target (to)	cable type	all conductors	Conductors used	Cross-section [mm]	Length [m]	remark
=V1AR191KF1-KF100.11-P5	=V1AR191KF1+V1AR191UC01-XPN-X2	=V1KF1+V1UC11-KF100.11-P5	PROFINET Cable	4	1	22		
=V1AR211KF1-KF100.11-P8	=V1AR211KF1+V1AR211UC01-XPN-X2	=V1KF1+V1UC11-KF100.11-P8	PROFINET Cable	4	1	22		
=V1AR212KF1-KF100.11-P9	=V1AR212KF1+V1AR212UC01-XPN-X2	=V1KF1+V1UC11-KF100.11-P9	PROFINET Cable	4	1	22		
=V1BX11WC3-KF100.11-P10	=V1KF1+V1UC11-KF100.11-P10	=V1BX11WC3+V1BX11UC01-KFS1	PROFINET Cable	4	1	22		
=V1FQ1-KF100.11-P16	=V1FQ1+V1FQ1BG1-BG1-X4	=V1FQ1+V1FQ1BG2-BG2-X3	PROFINET Cable	4	0	22		
	=V1FQ1+V1FQ1BG2-BG2-X4	=V1FQ1+V1FQ1BG3-BG3-X3						
=V1FQ1-KF100.15-P16	=V1FQ1+V1FQ1BG4-BG4-X4	=V1FQ1+V1FQ1BG5-BG5-X3	PROFINET Cable	4	0	22		
	=V1FQ1+V1FQ1BG5-BG5-X4	=V1FQ1+V1FQ1BG6-BG6-X3						
=V1GL1UQ51KF1-WF1			PROFINET Cable	4	0	22		
=V1GL1UQ51KF2-WF2	=V1GL1UQ51KF1+V1GL1UQ51-KF1-TP2	=V1GL1UQ51KF2+V1GL1UQ51-KF2-TP1	PROFINET Cable	4	1	22		
=V1GL1UQ51KF3-WF3	=V1GL1UQ51KF2+V1GL1UQ51-KF2-TP2	=V1GL1UQ51KF3+V1GL1UQ51-KF3-TP1	PROFINET Cable	4	1	22		
=V1GL1UQ52KF1-WF1			PROFINET Cable	4	0	22		
=V1GL1UQ52KF2-WF2	=V1GL1UQ52KF1+V1GL1UQ52-KF1-TP2	=V1GL1UQ52KF2+V1GL1UQ52-KF2-TP1	PROFINET Cable	4	1	22		
=V1GL1UQ52KF3-WF3	=V1GL1UQ52KF2+V1GL1UQ52-KF2-TP2	=V1GL1UQ52KF3+V1GL1UQ52-KF3-TP1	PROFINET Cable	4	1	22		
=V1GL1UQ53KF1-WF1			PROFINET Cable	4	0	22		
=V1GL1UQ53KF2-WF2	=V1GL1UQ53KF1+V1GL1UQ53-KF1-TP2	=V1GL1UQ53KF2+V1GL1UQ53-KF2-TP1	PROFINET Cable	4	1	22		
=V1GL1UQ53KF3-WF3	=V1GL1UQ53KF2+V1GL1UQ53-KF2-TP2	=V1GL1UQ53KF3+V1GL1UQ53-KF3-TP1	PROFINET Cable	4	1	22		
=V1GL1UQ54KF1-WF1			PROFINET Cable	4	0	22		
=V1GL1UQ54KF2-WF2	=V1GL1UQ54KF1+V1GL1UQ54-KF1-TP2	=V1GL1UQ54KF2+V1GL1UQ54-KF2-TP1	PROFINET Cable	4	1	22		
=V1GL1UQ54KF3-WF3	=V1GL1UQ54KF2+V1GL1UQ54-KF2-TP2	=V1GL1UQ54KF3+V1GL1UQ54-KF3-TP1	PROFINET Cable	4	1	22		
=V1GL1UQ56KF1-KF100.12-P10	=V1KF1+V1UC12-KF100.12-P10	=V1GL1UQ56KF1+V1GL1UQ56-KF1-TP1	PROFINET Cable	4	1	22		
=V1GL1UQ57KF1-KF100.12-P11	=V1KF1+V1UC12-KF100.12-P11	=V1GL1UQ57KF1+V1GL1UQ57-KF1-TP1	PROFINET Cable	4	1	22		
=V1GL2UQ51KF1-WF2	=V1GL2WC4+V1GL2-UCMS1	=V1GL2UQ51KF1+V1GL2UQ51-KF1-TP1	PROFINET Cable	4	1	22		
=V1GL2UQ51KF2-WF3	=V1GL2UQ51KF1+V1GL2UQ51-KF1-TP2	=V1GL2UQ51KF2+V1GL2UQ51-KF2-TP1	PROFINET Cable	4	1	22		
=V1GL2UQ51KF3-WF4	=V1GL2UQ51KF2+V1GL2UQ51-KF2-TP2	=V1GL2UQ51KF3+V1GL2UQ51-KF3-TP1	PROFINET Cable	4	1	22		
=V1GL2UQ51KF4-WF5	=V1GL2UQ51KF3+V1GL2UQ51-KF3-TP2	=V1GL2UQ51KF4+V1GL2UQ51-KF4-TP1	PROFINET Cable	4	1	22		
=V1GL2WC4-KF100.14-P9	=V1GL2WC4+V1GL2-W1.1	=V1KF1+V1UC14-KF100.14-P9	PROFINET Cable	4	0	22	37	
=V1GL2WC4-KF100.14-P10	=V1GL2WC4+V1GL2-W1.2	=V1KF1+V1UC14-KF100.14-P10	PROFINET Cable	4	0	22	37	
=V1GL2WC4-WF1	=V1GL2WC4+V1GL2-UCMS1	=V1GL2WC4+V1GL2-W1.1	PROFINET Cable	4	0	22	15	
=V1GL2WC4-WF5	=V1GL2WC4+V1GL2-W1.2	=V1GL2KF1+V1GL2-KF1-X1	PROFINET Cable	4	0	22	15	
=V1GL17UQ51KF1-KF100.11-P11	=V1KF1+V1UC11-KF100.11-P11	=V1GL17UQ51KF1+V1GL17UQ51-KF1-TP1	PROFINET Cable	4	1	22	40	
=V1KF1-KF100.11-P1	=V1KF1+V1UC11-KF100.11-P1	=V1KF1+V1UC11-KF100.11	PROFINET Cable	4	1	22		
=V1KF1-KF100.11-P4	=V1KF1+V1UC11-KF100.11-P4	=V1KF1+V1UC11-KF100.11	PROFINET Cable	4	1	22		
=V1KF1-KF100.11-P5	=V1KF1+V1UC11-KF100.11-P5	=V1KF1+V1UC11-KF100.11	PROFINET Cable	4	1	22		
=V1KF1-KF100.11-P6	=V1KF1+V1UC11-KF100.11-P6	=V1KF1+V1UC11-KF100.11	PROFINET Cable	4	1	22		
=V1KF1-KF100.11-P7	=V1KF1+V1UC11-KF100.11-P7	=V1KF1+V1UC11-KF100.11	PROFINET Cable	4	1	22		
=V1KF1-KF100.11-P8	=V1KF1+V1UC11-KF100.11-P8	=V1KF1+V1UC11-KF100.11	PROFINET Cable	4	1	22		
=V1KF1-KF100.11-P9	=V1KF1+V1UC11-KF100.11-P9	=V1KF1+V1UC11-KF100.11	PROFINET Cable	4	1	22		
=V1KF1-KF100.11-P10	=V1KF1+V1UC11-KF100.11-P10	=V1KF1+V1UC11-KF100.11	PROFINET Cable	4	1	22		
=V1KF1-KF100.11-P11	=V1KF1+V1UC11-KF100.11-P11	=V1KF1+V1UC11-KF100.11	PROFINET Cable	4	1	22		
=V1KF1-KF100.11-P12	=V1KF1+V1UC11-KF100.11-P12	=V1KF1+V1UC11-KF100.11	PROFINET Cable	4	1	22		
=V1KF1-KF100.11-P13	=V1KF1+V1UC11-KF100.11-P13	=V1KF1+V1UC11-KF100.11	PROFINET Cable	4	1	22		
=V1KF1-KF100.11-P14	=V1KF1+V1UC11-KF100.11-P14	=V1KF1+V1UC11-KF100.11	PROFINET Cable	4	1	22		
=V1KF1-KF100.11-P15	=V1KF1+V1UC11-KF100.11-P15	=V1KF1+V1UC11-KF100.11	PROFINET Cable	4	1	22		
=V1KF1-KF100.11-P16	=V1KF1+V1UC11-KF100.11-P16	=V1FQ1+V1FQ1BG1-BG1-X3	PROFINET Cable	4	1	22		
		=V1KF1+V1UC11-KF100.11						

Cable overview

F10_001_Cable

Cable name	Source (from)	Target (to)	cable type	all conductors	Conductors used	Cross-section [mm]	Length [m]	remark
=V1KF1-KF100.11-P3	=V1KF1+V1UC11-KF100.11	=V1KF1+V1UC11-KF11	PROFINET Cable	4	0	22		
=V1KF1-KF100.31-P6	=KF0KF1+UC31-KF100.31-P6	=V1KF1+V1UC11-KF100.11-P1	PROFINET Cable	4	0	22		
=V1KF1-KF100.12-P1	=V1KF1+V1UC12-KF100.12-P1	=V1KF1+V1UC12-KF100.12	PROFINET Cable	4	1	22		
=V1KF1-KF100.12-P4	=V1KF1+V1UC12-KF100.12-P4	=V1KF1+V1UC12-KF100.12	PROFINET Cable	4	1	22		
=V1KF1-KF100.12-P5	=V1KF1+V1UC12-KF100.12-P5	=V1KF1+V1UC12-KF100.12	PROFINET Cable	4	1	22		
=V1KF1-KF100.12-P6	=V1KF1+V1UC12-KF100.12-P6	=V1KF1+V1UC12-KF100.12	PROFINET Cable	4	1	22		
=V1KF1-KF100.12-P7	=V1KF1+V1UC12-KF100.12-P7	=V1KF1+V1UC12-KF100.12	PROFINET Cable	4	1	22		
=V1KF1-KF100.12-P8	=V1KF1+V1UC12-KF100.12-P8	=V1KF1+V1UC12-KF100.12	PROFINET Cable	4	1	22		
=V1KF1-KF100.12-P9	=V1KF1+V1UC12-KF100.12-P9	=V1KF1+V1UC12-KF100.12	PROFINET Cable	4	1	22		
=V1KF1-KF100.12-P10	=V1KF1+V1UC12-KF100.12-P10	=V1KF1+V1UC12-KF100.12	PROFINET Cable	4	1	22		
=V1KF1-KF100.12-P11	=V1KF1+V1UC12-KF100.12-P11	=V1KF1+V1UC12-KF100.12	PROFINET Cable	4	1	22		
=V1KF1-KF100.12-P12	=V1KF1+V1UC12-KF100.12-P12	=V1KF1+V1UC12-KF100.12	PROFINET Cable	4	1	22		
=V1KF1-KF100.12-P13	=V1KF1+V1UC12-KF100.12-P13	=V1KF1+V1UC12-KF100.12	PROFINET Cable	4	1	22		
=V1KF1-KF100.12-P14	=V1KF1+V1UC12-KF100.12-P14	=V1KF1+V1UC12-KF100.12	PROFINET Cable	4	1	22		
=V1KF1-KF100.12-P15	=V1KF1+V1UC12-KF100.12-P15	=V1KF1+V1UC12-KF100.12	PROFINET Cable	4	1	22		
=V1KF1-KF100.12-P16	=V1KF1+V1UC12-KF100.12-P16	=V1KF1+V1UC12-KF100.12	PROFINET Cable	4	1	22		
=V1KF1-KF100.12-P3	=V1KF1+V1UC12-KF100.12	=V1KF1+V1UC12-KF12	PROFINET Cable	4	0	22		
=V1KF1-KF100.31-P10	=KF0KF1+UC31-KF100.31-P10	=V1KF1+V1UC12-KF100.12-P1	PROFINET Cable	4	0	22		
=V1KF1-KF100.14-P1	=V1KF1+V1UC14-KF100.14-P1	=V1KF1+V1UC14-KF100.14	PROFINET Cable	4	1	22		
=V1KF1-KF100.14-P3	=V1KF1+V1UC14-KF100.14	=V1KF1+V1UC14-KF14	PROFINET Cable	4	0	22		
=V1KF1-KF100.14-P4	=V1KF1+V1UC14-KF100.14-P4	=V1KF1+V1UC14-KF100.14	PROFINET Cable	4	1	22		
=V1KF1-KF100.14-P5	=V1KF1+V1UC14-KF100.14-P5	=V1KF1+V1UC14-KF100.14	PROFINET Cable	4	1	22		
=V1KF1-KF100.14-P6	=V1KF1+V1UC14-KF100.14-P6	=V1KF1+V1UC14-KF100.14	PROFINET Cable	4	1	22		
=V1KF1-KF100.14-P7	=V1KF1+V1UC14-KF100.14-P7	=V1KF1+V1UC14-KF100.14	PROFINET Cable	4	1	22		
=V1KF1-KF100.14-P8	=V1KF1+V1UC14-KF100.14-P8	=V1KF1+V1UC14-KF100.14	PROFINET Cable	4	1	22		
=V1KF1-KF100.14-P9	=V1KF1+V1UC14-KF100.14-P9	=V1KF1+V1UC14-KF100.14	PROFINET Cable	4	1	22		
=V1KF1-KF100.14-P10	=V1KF1+V1UC14-KF100.14-P10	=V1KF1+V1UC14-KF100.14	PROFINET Cable	4	1	22		
=V1KF1-KF100.14-P11	=V1KF1+V1UC14-KF100.14-P11	=V1KF1+V1UC14-KF100.14	PROFINET Cable	4	1	22		
=V1KF1-KF100.14-P12	=V1KF1+V1UC14-KF100.14-P12	=V1KF1+V1UC14-KF100.14	PROFINET Cable	4	1	22		
=V1KF1-KF100.14-P13	=V1KF1+V1UC14-KF100.14-P13	=V1KF1+V1UC14-KF100.14	PROFINET Cable	4	1	22		
=V1KF1-KF100.14-P14	=V1KF1+V1UC14-KF100.14-P14	=V1KF1+V1UC14-KF100.14	PROFINET Cable	4	1	22		
=V1KF1-KF100.14-P15	=V1KF1+V1UC14-KF100.14-P15	=V1KF1+V1UC14-KF100.14	PROFINET Cable	4	1	22		
=V1KF1-KF100.14-P16	=V1KF1+V1UC14-KF100.14-P16	=V1KF1+V1UC14-KF100.14	PROFINET Cable	4	1	22		
=V1KF1-KF100.31-P10	=KF0KF1+UC31-KF100.31-P7	=V1KF1+V1UC14-KF100.14-P1	PROFINET Cable	4	0	22		
=V1KF1-KF100.14-P1	=V1KF1+V1UC15-KF100.15-P1	=V1KF1+V1UC15-KF100.15	PROFINET Cable	4	1	22		
=V1KF1-KF100.15-P3	=V1KF1+V1UC15-KF100.15	=V1KF1+V1UC15-KF15	PROFINET Cable	4	0	22		
=V1KF1-KF100.15-P4	=V1KF1+V1UC15-KF100.14-P4	=V1KF1+V1UC15-KF100.15	PROFINET Cable	4	1	22		
=V1KF1-KF100.15-P5	=V1KF1+V1UC15-KF100.15-P5	=V1KF1+V1UC15-KF100.15	PROFINET Cable	4	1	22		
=V1KF1-KF100.15-P6	=V1KF1+V1UC15-KF100.15-P6	=V1KF1+V1UC15-KF100.15	PROFINET Cable	4	1	22		
=V1KF1-KF100.15-P7	=V1KF1+V1UC15-KF100.15-P7	=V1KF1+V1UC15-KF100.15	PROFINET Cable	4	1	22		
=V1KF1-KF100.15-P8	=V1KF1+V1UC15-KF100.15-P8	=V1KF1+V1UC15-KF100.15	PROFINET Cable	4	1	22		
=V1KF1-KF100.15-P9	=V1KF1+V1UC15-KF100.15-P9	=V1KF1+V1UC15-KF100.15	PROFINET Cable	4	1	22		
=V1KF1-KF100.15-P10	=V1KF1+V1UC15-KF100.15-P10	=V1KF1+V1UC15-KF100.15	PROFINET Cable	4	1	22		
=V1KF1-KF100.15-P11	=V1KF1+V1UC15-KF100.15-P11	=V1KF1+V1UC15-KF100.15	PROFINET Cable	4	1	22		
=V1KF1-KF100.15-P12	=V1KF1+V1UC15-KF100.15-P12	=V1KF1+V1UC15-KF100.15	PROFINET Cable	4	1	22		
=V1KF1-KF100.15-P13	=V1KF1+V1UC15-KF100.15-P13	=V1KF1+V1UC15-KF100.15	PROFINET Cable	4	1	22		

			Date	1/17/2023	Volvo Trucks North America	Valiant TMS	Cable overview	Drawing name: =2V09&EFS-EL	=
			Ed.	MKLEPADLO					+
			Appr		P6700 Bodyside LH - Robot Cell 2V09			Document type: EMC	Project nr: 22-16150
Modification	Date	Name	Original		Replacement of	Replaced by	Scale 1:1		Page 3 / 1533

Cable overview

F10_001_Cable

Cable name	Source (from)	Target (to)	cable type	all conductors	Conductors used	Cross-section [mm]	Length [m]	remark
=V1KF1-KF100.15-P14	=V1KF1+V1UC15-KF100.15-P14	=V1KF1+V1UC15-KF100.15	PROFINET Cable	4	1	22		
=V1KF1-KF100.15-P15	=V1KF1+V1UC15-KF100.15-P15	=V1KF1+V1UC15-KF100.15	PROFINET Cable	4	1	22		
=V1KF1-KF100.15-P16	=V1KF1+V1UC15-KF100.15-P16	=V1FQ1+V1FQ1BG4-BG4-X3	PROFINET Cable	4	1	22		
		=V1KF1+V1UC15-KF100.15						
=V1KF1-KF100.31-P10	=KF0KF1+UC31-KF100.31-P8	=V1KF1+V1UC15-KF100.15-P1	PROFINET Cable	4	0	22		
=V1KF1-KF100.11-P15	=V1KF1+V1UC11-KF100.11-P15	=V1KF1+V1UC32-PNET1	PROFINET Cable	4	1	22		
=V1KF1-PNET1	=V1KF1+V1UC32-PNET1	=V1KF1+V1UC32-KF32	PROFINET Cable	4	0	22		
=V1PF1KF1-KF100.15-P12	=V1KF1+V1UC15-KF100.15-P12	=V1PF1KF1+V1PF1-KF1-TP1	PROFINET Cable	4	1	22	30	
=V1PF1WC3-KF100.14-P12	=V1KF1+V1UC14-KF100.14-P12	=V1PF1WC3+V1PF1UC01-ENET0	PROFINET Cable	4	1	22	30	
=V1SF0PG1-KF32-P2	=V1KF1+V1UC32-KF32	=V1SF0PG1+V1UC32-PG1	PROFINET Cable	4	0	22		
=V1SF0PG2-KF100.12-P14	=V1KF1+V1UC12-KF100.12-P14	=V1SF0PG2+V1UC51-PNET1	PROFINET Cable	4	0	22		
=V1SF0PG2-PNET1	=V1SF0PG2+V1UC51-PNET1	=V1SF0PG2+V1UC51-PG1	PROFINET Cable	4	0	22		
=V1SF0PG3-KF100.12-P15	=V1KF1+V1UC12-KF100.12-P15	=V1SF0PG3+V1UC52-PNET1	PROFINET Cable	4	0	22		
=V1SF0PG3-PNET1	=V1SF0PG3+V1UC52-PNET1	=V1SF0PG3+V1UC52-PG1	PROFINET Cable	4	0	22		
=V1SF0PG4-KF100.14-P14	=V1KF1+V1UC14-KF100.14-P14	=V1SF0PG4+V1UC53-PNET1	PROFINET Cable	4	0	22		
=V1SF0PG4-PNET1	=V1SF0PG4+V1UC53-PNET1	=V1SF0PG4+V1UC53-PG1	PROFINET Cable	4	0	22		
=V1SF0PG5-KF100.14-P15	=V1KF1+V1UC14-KF100.14-P15	=V1SF0PG5+V1UC54-PNET1	PROFINET Cable	4	0	22		
=V1SF0PG5-PNET1	=V1SF0PG5+V1UC54-PNET1	=V1SF0PG5+V1UC54-PG1	PROFINET Cable	4	0	22		
=V1U10U01KF1-KF100.12-P12	=V1KF1+V1UC12-KF100.12-P12	=V1U10U01KF1+V1U10U01-KF1.11	PROFINET Cable	4	0	22		
=V1U20U01KF1-KF100.14-P13	=V1KF1+V1UC14-KF100.14-P13	=V1U20U01KF1+V1U20U01-KF1.11	PROFINET Cable	4	0	22		
=V1UN1KF1-KF100.15-P11	=V1KF1+V1UC15-KF100.15-P11	=V1UN1KF1+V1UN1-KF1.11	PROFINET Cable	4	0	22	30	
=V1UQ51KF1-KF100.15-P10	=V1KF1+V1UC15-KF100.15-P10	=V1UQ51KF1+V1UQ51-KF1-TP1	PROFINET Cable	4	1	22	25	
=V1UQ52KF1-KF100.14-P11	=V1KF1+V1UC14-KF100.14-P11	=V1UQ52KF1+V1UQ52-KF1-TP1	PROFINET Cable	4	1	22		
=V1UQ52KF2-WF1	=V1UQ52KF1+V1UQ52-KF1-TP2	=V1UQ52KF2+V1UQ52-KF2-TP1	PROFINET Cable	4	1	22		
=V1UQ52KF3-WF2	=V1UQ52KF2+V1UQ52-KF2-TP2	=V1UQ52KF3+V1UQ52-KF3-TP1	PROFINET Cable	4	1	22		
=V1UQ52KF4-WF3	=V1UQ52KF3+V1UQ52-KF3-TP2	=V1UQ52KF4+V1UQ52-KF4-TP1	PROFINET Cable	4	1	22		
=V1UQ52KF5-WF4	=V1UQ52KF4+V1UQ52-KF4-TP2	=V1UQ52KF5+V1UQ52-KF5-TP1	PROFINET Cable	4	1	22		
=V1UQ53KF1-KF100.11-P12	=V1KF1+V1UC11-KF100.11-P12	=V1UQ53KF1+V1UQ53-KF1-TP1	PROFINET Cable	4	1	22		
=V1UQ53KF2-WF1	=V1UQ53KF1+V1UQ53-KF1-TP2	=V1UQ53KF2+V1UQ53-KF2-TP1	PROFINET Cable	4	1	22		
=V1UQ54KF1-KF100.11-P13	=V1KF1+V1UC11-KF100.11-P13	=V1UQ54KF1+V1UQ54-KF1-TP1	PROFINET Cable	4	1	22		
=V1UQ54KF2-WF1	=V1UQ54KF1+V1UQ54-KF1-TP2	=V1UQ54KF2+V1UQ54-KF2-TP1	PROFINET Cable	4	1	22		
=V1UQ55KF1-KF100.11-P14	=V1KF1+V1UC11-KF100.11-P14	=V1UQ55KF1+V1UQ55-KF1-TP1	PROFINET Cable	4	1	22		
=V1WC1-KF100.11-P2	=V1KF1+V1UC11-KF100.11	=V1WC1+V1UC11-KF1.2	PROFINET Cable	4	1	22		
=V1WC1-KF100.12-P2	=V1KF1+V1UC12-KF100.12	=V1WC1+V1UC12-KF1.2	PROFINET Cable	4	1	22		
=V1WC1-GND1	=WC1+V1UC161-WC1	=V1WC1+V1UC161-GND	RK	1	0	2		
=V1WC1-GND1	=WC1+V1UC162-WC1	=V1WC1+V1UC162-GND	RK	1	0	2		
=V1WC1-GND1	=WC1+V1UC163-WC1	=V1WC1+V1UC163-GND	RK	1	0	2		
=V1WC1-GND1	=WC1+V1UC164-WC1	=V1WC1+V1UC164-GND	RK	1	0	2		
=V1WC1-GND1	=V1WC1+V1UC11-PE	=V1WC1+V1UC11-GND	RK	1	0	6		
=V1WC1-GND1	=V1WC1+V1UC12-GND	=V1WC1+V1UC12-PE	RK	1	1	6		
=V1AR21XQ11WC1-W1	=V1AR21XQ11WC1+V1AR21XQ11UC01-XG1	=V1WC2+V1UC161-XG1	TC-ER	4	4	1	7.62	Max.
		=V1WC2+V1UC161-XG2						
=V1AR22XQ11WC1-W1	=V1AR22XQ11WC1+V1AR22XQ11UC01-XG1	=V1WC2+V1UC164-XG1	TC-ER	4	4	1	7.62	Max.
		=V1WC2+V1UC164-XG2						
=V1AR23XQ11WC1-W1	=V1AR23XQ11WC1+V1AR23XQ11UC01-XG1	=V1WC2+V1UC164-XG1	TC-ER	4	4	1	7.62	Max.
		=V1WC2+V1UC164-XG2						

			Date	1/17/2023	Volvo Trucks North America	Valiant TMS	Cable overview	Drawing name: =2V09&EFS-EL	=
			Ed.	MKLEPADLO					+
			Appr		P6700 Bodyside LH - Robot Cell 2V09			Document type: EMC	Project nr: 22-16150
Modification	Date	Name	Original		Replacement of	Replaced by	Scale 1:1		Page 4 / 1533

Cable overview

F10_001_Cable

Cable name	Source (from)	Target (to)	cable type	all conductors	Conductors used	Cross-section [mm]	Length [m]	remark
=V1AR24XQ11WC1-W1	=V1AR24XQ11WC1+V1AR24XQ11UC01-XG1	=V1WC2+V1UC161-XG1	TC-ER	4	4	1	7.62	Max.
		=V1WC2+V1UC161-XG2						
=V1AR25XQ11WC1-W1	=V1AR25XQ11WC1+V1AR25XQ11UC01-XG1	=V1WC2+V1UC162-XG1	TC-ER	4	4	1	7.62	Max.
		=V1WC2+V1UC162-XG2						
=V1AR26XQ11WC1-W1	=V1AR26XQ11WC1+V1AR26XQ11UC01-XG1	=V1WC2+V1UC164-XG1	TC-ER	4	4	1	7.62	Max.
		=V1WC2+V1UC164-XG2						
=V1AR28XQ11WC1-W1	=V1AR28XQ11WC1+V1AR28XQ11UC01-XG1	=V1WC2+V1UC163-XG1	TC-ER	4	4	1	7.62	Max.
		=V1WC2+V1UC163-XG2						
=V1AR29XQ11WC1-W1	=V1AR29XQ11WC1+V1AR29XQ11UC01-XG1	=V1WC2+V1UC162-XG1	TC-ER	4	4	1	7.62	Max.
		=V1WC2+V1UC162-XG2						
=V1AR211XQ11WC1-W1	=V1AR211XQ11WC1+V1AR211XQ11UC01-XG1	=V1WC2+V1UC163-XG1	TC-ER	4	4	1	7.62	Max.
		=V1WC2+V1UC163-XG2						
=V1AR212XQ11WC1-W1	=V1AR212XQ11WC1+V1AR212XQ11UC01-XG1	=V1WC2+V1UC163-XG1	TC-ER	4	4	1	7.62	Max.
		=V1WC2+V1UC163-XG2						
=V1AR31XQ41WC1-W1		=V1AR31XQ41WC1+V1AR31XQ41UC01-XD0	TC-ER	4	4	4	15	
	=V1AR31XQ41+V1UC11-FC1							
=V1AR81XQ51WC1-W1	=V1AR81XQ51WC1+V1AR81XQ51UC01-XG1	=V1AR81XQ51+V1UC11-FC1	TC-ER	4	4	8	60	
=V1AR81XQ52WC1-W1	=V1AR81XQ52WC1+V1AR81XQ52UC01-XG1	=V1AR81XQ52+V1UC11-FC1	TC-ER	4	4	8	60	
=V1BX11WC3-W1	=V1WC3+V1UC11-XD2	=V1BX11WC3+V1BX11UC01-Q1	TC-ER	3	3	8	40	
	=V1BX11WC3+V1BX11UC01-PE	=V1WC3+V1UC11-PE						
=V1GL1WC1-W1		=V1GL1WC1+V1GL1UC01-PE	TC-ER	4	4	8	5	
	=V1AR141+V1UC12-FC1	=V1GL1WC1+V1GL1UC01-Q1						
=V1GL2WC1-W1		=V1GL2WC1+V1GL2UC01-PE	TC-ER	4	4	8	25	
	=V1GL2+V1UC11-FC1	=V1GL2WC1+V1GL2UC01-Q1						
=KF0WC3-W1	=KF0WC3+UC31-XD1	=V1WC3+V1UC11-XD1	TC-ER	3	3	10	61	
		=V1WC3+V1UC11-PE						
=V1AR11WC1-W1		=V1AR11WC1+V1AR11UC01-PE	TC-ER	4	4	10	60	Power Robot
	=V1AR11+V1UC11-FC1	=V1AR11WC1+V1AR11UC01-Q1						
=V1AR21WC1-W1		=V1AR21WC1+V1AR21UC01-PE	TC-ER	4	4	10	15	
	=V1AR21+V1UC11-FC1	=V1AR21WC1+V1AR21UC01-Q1						
=V1AR22WC1-W1		=V1AR22WC1+V1AR22UC01-PE	TC-ER	4	4	10	55	
	=V1AR22+V1UC11-FC1	=V1AR22WC1+V1AR22UC01-Q1						
=V1AR23WC1-W1		=V1AR23WC1+V1AR23UC01-PE	TC-ER	4	4	10	56	
	=V1AR23+V1UC11-FC1	=V1AR23WC1+V1AR23UC01-Q1						
=V1AR24WC1-W1		=V1AR24WC1+V1AR24UC01-PE	TC-ER	4	4	10	20	
	=V1AR24+V1UC11-FC1	=V1AR24WC1+V1AR24UC01-Q1						
=V1AR25WC1-W1		=V1AR25WC1+V1AR25UC01-PE	TC-ER	4	4	10	20	
	=V1AR25+V1UC11-FC1	=V1AR25WC1+V1AR25UC01-Q1						
=V1AR26WC1-W1		=V1AR26WC1+V1AR26UC01-PE	TC-ER	4	4	10	60	
	=V1AR26+V1UC11-FC1	=V1AR26WC1+V1AR26UC01-Q1						
=V1AR28WC1-W1		=V1AR28WC1+V1AR28UC01-PE	TC-ER	4	4	10	13	
	=V1AR28+V1UC11-FC1	=V1AR28WC1+V1AR28UC01-Q1						
=V1AR29WC1-W1		=V1AR29WC1+V1AR29UC01-PE	TC-ER	4	4	10	15	
	=V1AR29+V1UC11-FC1	=V1AR29WC1+V1AR29UC01-Q1						

			Date	1/17/2023	Volvo Trucks North America	Valiant TMS	Cable overview	Drawing name: =2V09&EFS-EL	=
			Ed.	MKLEPADLO					+
			Appr		P6700 Bodyside LH - Robot Cell 2V09			Document type: EMC	Project nr: 22-16150
Modification	Date	Name	Original		Replacement of	Replaced by	Scale 1:1		Page 5 / 1533

Cable overview

F10_001_Cable

Cable name	Source (from)	Target (to)	cable type	all conductors	Conductors used	Cross-section [mm]	Length [m]	remark
=V1AR31WC1-W1		=V1AR31WC1+V1AR31UC01-PE	TC-ER	4	4	10	15	Power Robot
	=V1AR31+V1UC11-FC1	=V1AR31WC1+V1AR31UC01-Q1						
=V1AR81WC1-W1		=V1AR81WC1+V1AR81UC01-PE	TC-ER	4	4	10	60	
	=V1AR81+V1UC11-FC1	=V1AR81WC1+V1AR81UC01-Q1						
=V1AR191WC1-W1		=V1AR191WC1+V1AR191UC01-PE	TC-ER	4	4	10	37	
	=V1AR191+V1UC11-FC1	=V1AR191WC1+V1AR191UC01-Q1						
=V1AR211WC1-W1		=V1AR211WC1+V1AR211UC01-PE	TC-ER	4	4	10	16	
	=V1AR211+V1UC11-FC1	=V1AR211WC1+V1AR211UC01-Q1						
=V1AR212WC1-W1		=V1AR212WC1+V1AR212UC01-PE	TC-ER	4	4	10	15	
	=V1AR212+V1UC11-FC1	=V1AR212WC1+V1AR212UC01-Q1						
=V1WC3-W1	=V1WC3+V1UC11-XD2	=V1WC3+V1UC14-XD1	TC-ER	3	3	10	26	
	=V1WC3+V1UC11-PE							
=V1WC3-W1	=V1WC3+V1UC11-XD2	=V1WC3+V1UC15-XD1	TC-ER	3	3	10	65	
	=V1WC3+V1UC11-PE							
=KH0-W2	=V1KF1+V1UC12-KF12.14	=KH0+KH0-BP2	TPE	4	4	18	20	Air supply
	=V1WC4+V1UC12-XD10							
	=V1WC4+V1UC12-XD13							
=KH0-W3	=V1KF1+V1UC14-KF14.12	=KH0+KH0-BP3	TPE	4	4	18	10	Air supply
	=V1WC4+V1UC14-XD10							
	=V1WC4+V1UC14-XD16							
=KH0-W4	=V1KF1+V1UC15-KF15.12	=KH0+KH0-BP4	TPE	4	4	18	10	Air supply
	=V1WC4+V1UC15-XD10							
	=V1WC4+V1UC15-XD16							
=KH0-W5	=V1KF1+V1UC11-KF11.14	=KH0+KH0-BP5	TPE	4	4	18	15	Air supply
	=V1WC4+V1UC11-XD10							
	=V1WC4+V1UC11-XD13							
=KH0-W6	=V1KF1+V1UC11-KF11.14	=KH0+KH0-BP6	TPE	4	4	18	20	Air supply
	=V1WC4+V1UC11-XD10							
	=V1WC4+V1UC11-XD13							
=KH0-W7	=V1KF1+V1UC11-KF11.14	=KH0+KH0-BP7	TPE	4	4	18	40	Air supply
	=V1WC4+V1UC11-XD10							
	=V1WC4+V1UC11-XD13							
=KH0-W8	=V1KF1+V1UC11-KF11.14	=KH0+KH0-BP8	TPE	4	4	18	30	Air supply
	=V1WC4+V1UC11-XD10							
	=V1WC4+V1UC11-XD13							
=KH0-W9	=V1KF1+V1UC11-KF11.14	=KH0+KH0-BP9	TPE	4	4	18	35	Air supply
	=V1WC4+V1UC11-XD10							
	=V1WC4+V1UC11-XD13							

			Date	1/17/2023	Volvo Trucks North America	Valiant TMS	Cable overview	Drawing name: =2V09&EFS-EL	=
			Ed.	MKLEPADLO					+
			Appr		P6700 Bodyside LH - Robot Cell 2V09			Document type: EMC	Project nr: 22-16150
Modification	Date	Name	Original		Replacement of	Replaced by	Scale 1:1		Page 6 / 1533

Cable overview

F10_001_Cable

Cable name	Source (from)	Target (to)	cable type	all conductors	Conductors used	Cross-section [mm]	Length [m]	remark
=KH3-W1	=V1KF1+V1UC11-KF11.14	=KH3+KH3-BF1	TPE	4	4	18	20	Air supply
	=V1WC4+V1UC11-XD10							
	=V1WC4+V1UC11-XD13							
=KH3-W2	=V1KF1+V1UC11-KF11.14	=KH3+KH3-BF2	TPE	4	4	18	20	Air supply
	=V1WC4+V1UC11-XD10							
	=V1WC4+V1UC11-XD13							
=V1AR11UQ41BG0-W1	=V1AR11UQ41BG0+V1AR11UQ41-XG1/2	=V1AR11UQ41KF1+V1AR11UQ41-KF1.14	TPE	4	4	18	0.5	
=V1AR11UQ41BG0-W1.1	=V1AR11UQ41BG0+V1AR11UQ41-BG01	=V1AR11UQ41BG0+V1AR11UQ41-XG1/2	TPE	4	3	18	4	
=V1AR11UQ41BG0-W1.2	=V1AR11UQ41BG0+V1AR11UQ41-BG02	=V1AR11UQ41BG0+V1AR11UQ41-XG1/2	TPE	4	3	18	2	
=V1AR11UQ41BG0-W2	=V1AR11UQ41BG0+V1AR11UQ41-XG3/4	=V1AR11UQ41KF1+V1AR11UQ41-KF1.14	TPE	4	4	18	0.5	
=V1AR11UQ41BG0-W2.1	=V1AR11UQ41BG0+V1AR11UQ41-BG03	=V1AR11UQ41BG0+V1AR11UQ41-XG3/4	TPE	4	3	18	2	
=V1AR11UQ41BG0-W2.2	=V1AR11UQ41BG0+V1AR11UQ41-BG04	=V1AR11UQ41BG0+V1AR11UQ41-XG3/4	TPE	4	3	18	2	
=V1AR11UQ41BG0-W3	=V1AR11UQ41BG0+V1AR11UQ41-XG5/6	=V1AR11UQ41KF1+V1AR11UQ41-KF1.14	TPE	4	4	18	0.5	
=V1AR11UQ41BG0-W3.1	=V1AR11UQ41BG0+V1AR11UQ41-BG05	=V1AR11UQ41BG0+V1AR11UQ41-XG5/6	TPE	4	3	18	2	
=V1AR11UQ41BG0-W3.2	=V1AR11UQ41BG0+V1AR11UQ41-BG06	=V1AR11UQ41BG0+V1AR11UQ41-XG5/6	TPE	4	3	18	5	
=V1AR11UQ41BG0-W4	=V1AR11UQ41BG0+V1AR11UQ41-XG7/8	=V1AR11UQ41KF1+V1AR11UQ41-KF1.14	TPE	4	4	18	0.5	
=V1AR11UQ41BG0-W4.1	=V1AR11UQ41BG0+V1AR11UQ41-BG07	=V1AR11UQ41BG0+V1AR11UQ41-XG7/8	TPE	4	3	18	4	
=V1AR11UQ41BG0-W4.2	=V1AR11UQ41BG0+V1AR11UQ41-BG08	=V1AR11UQ41BG0+V1AR11UQ41-XG7/8	TPE	4	3	18	2	
=V1AR11UQ41BG0-W5	=V1AR11UQ41BG0+V1AR11UQ41-XG9/10	=V1AR11UQ41KF1+V1AR11UQ41-KF1.14	TPE	4	4	18	0.5	
=V1AR11UQ41BG0-W5.1	=V1AR11UQ41BG0+V1AR11UQ41-BG09	=V1AR11UQ41BG0+V1AR11UQ41-XG9/10	TPE	4	3	18	2	
=V1AR11UQ41BG0-W5.2	=V1AR11UQ41BG0+V1AR11UQ41-BG10	=V1AR11UQ41BG0+V1AR11UQ41-XG9/10	TPE	4	3	18	3	
=V1AR11UQ41UQ1.1-W1	=V1AR11UQ41KF1+V1AR11UQ41-KF1.11-X1	=V1AR11UQ41UQ1.1+V1AR11UQ41UQ1.1-BGS/R	TPE	4	4	18	4	
=V1AR11UQ41UQ1.2-W1	=V1AR11UQ41KF1+V1AR11UQ41-KF1.11-X2	=V1AR11UQ41UQ1.2+V1AR11UQ41UQ1.2-BGS/R	TPE	4	4	18	2	
=V1AR11UQ41UQ1.3-W1	=V1AR11UQ41KF1+V1AR11UQ41-KF1.11-X3	=V1AR11UQ41UQ1.3+V1AR11UQ41UQ1.3-BGS/R	TPE	4	4	18	2	
=V1AR11UQ41UQ1.4-W1	=V1AR11UQ41KF1+V1AR11UQ41-KF1.11-X4	=V1AR11UQ41UQ1.4+V1AR11UQ41UQ1.4-BGS/R	TPE	4	4	18	2	
=V1AR11UQ41UQ2.1-W1	=V1AR11UQ41KF1+V1AR11UQ41-KF1.11-X5	=V1AR11UQ41UQ2.1+V1AR11UQ41UQ2.1-BGS/R	TPE	4	4	18	4	
=V1AR11UQ41UQ2.2-W1	=V1AR11UQ41KF1+V1AR11UQ41-KF1.11-X6	=V1AR11UQ41UQ2.2+V1AR11UQ41UQ2.2-BGS/R	TPE	4	4	18	4	
=V1AR11UQ41UQ2.3-W1	=V1AR11UQ41KF1+V1AR11UQ41-KF1.11-X7	=V1AR11UQ41UQ2.3+V1AR11UQ41UQ2.3-BGS/R	TPE	4	4	18	4	
=V1AR11UQ41UQ3.1-W1	=V1AR11UQ41KF1+V1AR11UQ41-KF1.11-X8	=V1AR11UQ41UQ3.1+V1AR11UQ41UQ3.1-BGS/R	TPE	4	4	18	2	
=V1AR11UQ41UQ3.2-W1	=V1AR11UQ41KF1+V1AR11UQ41-KF1.12-X1	=V1AR11UQ41UQ3.2+V1AR11UQ41UQ3.2-BGS/R	TPE	4	4	18	1	
=V1AR11UQ41UQ4.1-W1	=V1AR11UQ41KF1+V1AR11UQ41-KF1.12-X2	=V1AR11UQ41UQ4.1+V1AR11UQ41UQ4.1-BGS/R	TPE	4	4	18	5	
=V1AR11UQ41UQ4.2-W1	=V1AR11UQ41KF1+V1AR11UQ41-KF1.12-X3	=V1AR11UQ41UQ4.2+V1AR11UQ41UQ4.2-BGS/R	TPE	4	4	18	4	
=V1AR11UQ41UQ4.3-W1	=V1AR11UQ41KF1+V1AR11UQ41-KF1.12-X4	=V1AR11UQ41UQ4.3+V1AR11UQ41UQ4.3-BGS/R	TPE	4	4	18	3	
=V1AR11UQ41UQ5.1-W1	=V1AR11UQ41KF1+V1AR11UQ41-KF1.12-X5	=V1AR11UQ41UQ5.1+V1AR11UQ41UQ5.1-BGS/R	TPE	4	4	18	2	
=V1AR11UQ41UQ5.2-W1	=V1AR11UQ41KF1+V1AR11UQ41-KF1.12-X6	=V1AR11UQ41UQ5.2+V1AR11UQ41UQ5.2-BGS/R	TPE	4	4	18	2	
=V1AR11UQ41UQ5.3-W1	=V1AR11UQ41KF1+V1AR11UQ41-KF1.12-X7	=V1AR11UQ41UQ5.3+V1AR11UQ41UQ5.3-BGS/R	TPE	4	4	18	2	
=V1AR11UQ41UQ6.1-W1	=V1AR11UQ41KF1+V1AR11UQ41-KF1.12-X8	=V1AR11UQ41UQ6.1+V1AR11UQ41UQ6.1-BGS/R	TPE	4	4	18	2	
=V1AR11UQ41UQ7.1-W1	=V1AR11UQ41KF1+V1AR11UQ41-KF1.13-X1	=V1AR11UQ41UQ7.1+V1AR11UQ41UQ7.1-BGS/R	TPE	4	4	18	3	
=V1AR11UQ41UQ7.2-W1	=V1AR11UQ41KF1+V1AR11UQ41-KF1.13-X2	=V1AR11UQ41UQ7.2+V1AR11UQ41UQ7.2-BGS/R	TPE	4	4	18	1	
=V1AR11UQ41UQ8.1-W1	=V1AR11UQ41KF1+V1AR11UQ41-KF1.13-X3	=V1AR11UQ41UQ8.1+V1AR11UQ41UQ8.1-BGS/R	TPE	4	4	18	3	
=V1AR11UQ41UQ9.1-W1	=V1AR11UQ41KF1+V1AR11UQ41-KF1.13-X4	=V1AR11UQ41UQ9.1+V1AR11UQ41UQ9.1-BGS/R	TPE	4	4	18	2	
=V1AR11UQ41UQ9.2-W1	=V1AR11UQ41KF1+V1AR11UQ41-KF1.13-X5	=V1AR11UQ41UQ9.2+V1AR11UQ41UQ9.2-BGS/R	TPE	4	4	18	2	
=V1AR31UQ41BG0-W1	=V1AR31UQ41BG0+V1AR31UQ41-XG1/2	=V1AR31UQ41KF1+V1AR31UQ41-KF1.13-X1	TPE	4	4	18	0.5	
=V1AR31UQ41BG0-W1.1	=V1AR31UQ41BG0+V1AR31UQ41-BG01	=V1AR31UQ41BG0+V1AR31UQ41-XG1/2	TPE	4	3	18	2	

			Date	1/17/2023	Volvo Trucks North America	Valiant TMS	Cable overview	Drawing name: =2V09&EFS-EL / = / +
			Ed.	MKLEPADLO				
			Appr		P6700 Bodyside LH - Robot Cell 2V09			Document type: EMC / Project nr: 22-16150 / Page 7 / 1533
Modification	Date	Name	Original		Replacement of / Replaced by	Scale 1:1		

Cable overview

F10_001_Cable

Cable name	Source (from)	Target (to)	cable type	all conductors	Conductors used	Cross-section [mm]	Length [m]	remark
=V1AR31UQ41BG0-W1.2	=V1AR31UQ41BG0+V1AR31UQ41-BG02	=V1AR31UQ41BG0+V1AR31UQ41-XG1/2	TPE	4	3	18	3	
=V1AR31UQ41BG0-W2	=V1AR31UQ41BG0+V1AR31UQ41-XG3/4	=V1AR31UQ41KF1+V1AR31UQ41-KF1.13-X2	TPE	4	4	18	0.5	
=V1AR31UQ41BG0-W2.1	=V1AR31UQ41BG0+V1AR31UQ41-BG03	=V1AR31UQ41BG0+V1AR31UQ41-XG3/4	TPE	4	3	18	3	
=V1AR31UQ41BG0-W2.2	=V1AR31UQ41BG0+V1AR31UQ41-BG04	=V1AR31UQ41BG0+V1AR31UQ41-XG3/4	TPE	4	3	18	3	
=V1AR31UQ41BG0-W3	=V1AR31UQ41BG0+V1AR31UQ41-BG05	=V1AR31UQ41KF1+V1AR31UQ41-KF1.13-X3	TPE	4	3	18	3	
=V1AR31UQ41UQ1.1-W1	=V1AR31UQ41KF1+V1AR31UQ41-KF1.11-X1	=V1AR31UQ41UQ1.1+V1AR31UQ41UQ1.1-BGS/R	TPE	4	4	18	3	
=V1AR31UQ41UQ2.1-W1	=V1AR31UQ41KF1+V1AR31UQ41-KF1.11-X2	=V1AR31UQ41UQ2.1+V1AR31UQ41UQ2.1-BGS/R	TPE	4	4	18	3	
=V1AR31UQ41UQ2.2-W1	=V1AR31UQ41KF1+V1AR31UQ41-KF1.11-X3	=V1AR31UQ41UQ2.2+V1AR31UQ41UQ2.2-BGS/R	TPE	4	4	18	3	
=V1AR31UQ41UQ3.1-W1	=V1AR31UQ41KF1+V1AR31UQ41-KF1.11-X4	=V1AR31UQ41UQ3.1+V1AR31UQ41UQ3.1-BGS/R	TPE	4	4	18	3	
=V1AR31UQ41UQ4.1-W1	=V1AR31UQ41KF1+V1AR31UQ41-KF1.11-X5	=V1AR31UQ41UQ4.1+V1AR31UQ41UQ4.1-BGS/R	TPE	4	4	18	2	
=V1AR31UQ41UQ5.1-W1	=V1AR31UQ41KF1+V1AR31UQ41-KF1.11-X6	=V1AR31UQ41UQ5.1+V1AR31UQ41UQ5.1-BGS/R	TPE	4	4	18	3	
=V1AR31UQ41UQ6.1-W1	=V1AR31UQ41KF1+V1AR31UQ41-KF1.11-X7	=V1AR31UQ41UQ6.1+V1AR31UQ41UQ6.1-BGS/R	TPE	4	4	18	2	
=V1AR31UQ41UQ7.1-W1	=V1AR31UQ41KF1+V1AR31UQ41-KF1.11-X8	=V1AR31UQ41UQ7.1+V1AR31UQ41UQ7.1-BGS/R	TPE	4	4	18	2	
=V1AR31UQ41UQ7.2-W1	=V1AR31UQ41KF1+V1AR31UQ41-KF1.12-X1	=V1AR31UQ41UQ7.2+V1AR31UQ41UQ7.2-BGS/R	TPE	4	4	18	3	
=V1AR31UQ41UQ8.1-W1	=V1AR31UQ41KF1+V1AR31UQ41-KF1.12-X2	=V1AR31UQ41UQ8.1+V1AR31UQ41UQ8.1-BGS/R	TPE	4	4	18	3	
=V1AR31UQ41UQ8.2-W1	=V1AR31UQ41KF1+V1AR31UQ41-KF1.12-X3	=V1AR31UQ41UQ8.2+V1AR31UQ41UQ8.2-BGS/R	TPE	4	4	18	3	
=V1AR31UQ41UQ9.1-W1	=V1AR31UQ41KF1+V1AR31UQ41-KF1.12-X4	=V1AR31UQ41UQ9.1+V1AR31UQ41UQ9.1-BGS/R	TPE	4	4	18	4	
=V1AR31UQ41UQ9.2-W1	=V1AR31UQ41KF1+V1AR31UQ41-KF1.12-X5	=V1AR31UQ41UQ9.2+V1AR31UQ41UQ9.2-BGS/R	TPE	4	4	18	4	
=V1AR31XQ41UQ1.1-W1	=V1AR31XQ41KF1+V1AR31XQ41-KF1.11-X1	=V1AR31XQ41UQ1.1+V1AR31XQ41UQ1.1-XG1/2	TPE	4	4	18	0.5	
=V1AR31XQ41UQ1.1-W1.1	=V1AR31XQ41UQ1.1+V1AR31XQ41UQ1.1-BGR	=V1AR31XQ41UQ1.1+V1AR31XQ41UQ1.1-XG1/2	TPE	4	3	18	0.5	
=V1AR31XQ41UQ1.1-W1.2	=V1AR31XQ41UQ1.1+V1AR31XQ41UQ1.1-BGS	=V1AR31XQ41UQ1.1+V1AR31XQ41UQ1.1-XG1/2	TPE	4	3	18	0.5	
=V1AR81UQ41BG0-W1	=V1AR81UQ41BG0+V1AR81UQ41-XG1/2	=V1AR81UQ41KF1+V1AR81UQ41-KF1.13-X1	TPE	4	4	18	0.5	
=V1AR81UQ41BG0-W1.1	=V1AR81UQ41BG0+V1AR81UQ41-BG01	=V1AR81UQ41BG0+V1AR81UQ41-XG1/2	TPE	4	3	18	5	
=V1AR81UQ41BG0-W1.2	=V1AR81UQ41BG0+V1AR81UQ41-BG02	=V1AR81UQ41BG0+V1AR81UQ41-XG1/2	TPE	4	3	18	3	
=V1AR81UQ41BG0-W2	=V1AR81UQ41BG0+V1AR81UQ41-XG3/4	=V1AR81UQ41KF1+V1AR81UQ41-KF1.13-X2	TPE	4	4	18	0.5	
=V1AR81UQ41BG0-W2.1	=V1AR81UQ41BG0+V1AR81UQ41-BG03	=V1AR81UQ41BG0+V1AR81UQ41-XG3/4	TPE	4	3	18	2	
=V1AR81UQ41BG0-W2.2	=V1AR81UQ41BG0+V1AR81UQ41-BG04	=V1AR81UQ41BG0+V1AR81UQ41-XG3/4	TPE	4	3	18	1	
=V1AR81UQ41BG0-W3	=V1AR81UQ41BG0+V1AR81UQ41-BG05	=V1AR81UQ41KF1+V1AR81UQ41-KF1.13-X3	TPE	4	3	18	1	
=V1AR81UQ41UQ1.1-W1	=V1AR81UQ41KF1+V1AR81UQ41-KF1.11-X1	=V1AR81UQ41UQ1.1+V1AR81UQ41UQ1.1-BGS/R	TPE	4	4	18	5	
=V1AR81UQ41UQ2.1-W1	=V1AR81UQ41KF1+V1AR81UQ41-KF1.11-X2	=V1AR81UQ41UQ2.1+V1AR81UQ41UQ2.1-BGS/R	TPE	4	4	18	3	
=V1AR81UQ41UQ3.1-W1	=V1AR81UQ41KF1+V1AR81UQ41-KF1.11-X3	=V1AR81UQ41UQ3.1+V1AR81UQ41UQ3.1-BGS/R	TPE	4	4	18	2	
=V1AR81UQ41UQ4.1-W1	=V1AR81UQ41KF1+V1AR81UQ41-KF1.11-X4	=V1AR81UQ41UQ4.1+V1AR81UQ41UQ4.1-BGS/R	TPE	4	4	18	2	
=V1AR81UQ41UQ5.1-W1	=V1AR81UQ41KF1+V1AR81UQ41-KF1.11-X5	=V1AR81UQ41UQ5.1+V1AR81UQ41UQ5.1-BGS/R	TPE	4	4	18	2	
=V1AR81UQ41UQ6.1-W1	=V1AR81UQ41KF1+V1AR81UQ41-KF1.11-X6	=V1AR81UQ41UQ6.1+V1AR81UQ41UQ6.1-BGS/R	TPE	4	4	18	4	
=V1AR81UQ41UQ6.2-W1	=V1AR81UQ41KF1+V1AR81UQ41-KF1.11-X7	=V1AR81UQ41UQ6.2+V1AR81UQ41UQ6.2-BGS/R	TPE	4	4	18	4	
=V1AR81UQ41UQ6.3-W1	=V1AR81UQ41KF1+V1AR81UQ41-KF1.11-X8	=V1AR81UQ41UQ6.3+V1AR81UQ41UQ6.3-BGS/R	TPE	4	4	18	4	
=V1AR81UQ41UQ6.4-W1	=V1AR81UQ41KF1+V1AR81UQ41-KF1.12-X1	=V1AR81UQ41UQ6.4+V1AR81UQ41UQ6.4-BGS/R	TPE	4	4	18	5	
=V1AR81UQ41UQ7.1-W1	=V1AR81UQ41KF1+V1AR81UQ41-KF1.12-X2	=V1AR81UQ41UQ7.1+V1AR81UQ41UQ7.1-BGS/R	TPE	4	4	18	2	
=V1AR81UQ41UQ7.2-W1	=V1AR81UQ41KF1+V1AR81UQ41-KF1.12-X3	=V1AR81UQ41UQ7.2+V1AR81UQ41UQ7.2-BGS/R	TPE	4	4	18	2	
=V1AR81UQ41UQ8.1-W1	=V1AR81UQ41KF1+V1AR81UQ41-KF1.12-X4	=V1AR81UQ41UQ8.1+V1AR81UQ41UQ8.1-BGS/R	TPE	4	4	18	2	
=V1AR81UQ41UQ8.2-W1	=V1AR81UQ41KF1+V1AR81UQ41-KF1.12-X5	=V1AR81UQ41UQ8.2+V1AR81UQ41UQ8.2-BGS/R	TPE	4	4	18	2	
=V1AR81UQ41UQ9.1-W1	=V1AR81UQ41KF1+V1AR81UQ41-KF1.12-X6	=V1AR81UQ41UQ9.1+V1AR81UQ41UQ9.1-BGS/R	TPE	4	4	18	2	
=V1AR81UQ41UQ9.2-W1	=V1AR81UQ41KF1+V1AR81UQ41-KF1.12-X7	=V1AR81UQ41UQ9.2+V1AR81UQ41UQ9.2-BGS/R	TPE	4	4	18	2	
=V1FQ1-W11R	=V1KF1+V1UC12-KF12.31	=V1FQ1+V1FQ1-BR11-R	TPE	4	4	18	25	
	=V1WC4+V1UC12-XD10							
	=V1WC4+V1UC12-XD13							

			Date	1/17/2023	Volvo Trucks North America	Valiant TMS	Cable overview	Drawing name: =2V09&EFS-EL	=
			Ed.	MKLEPADLO					+
			Appr		P6700 Bodyside LH - Robot Cell 2V09			Document type: EMC	Project nr: 22-16150
Modification	Date	Name	Original		Replacement of / Replaced by	Scale 1:1			Page 8 / 1533

Cable overview

F10_001_Cable

Cable name	Source (from)	Target (to)	cable type	all conductors	Conductors used	Cross-section [mm]	Length [m]	remark
=V1FQ1-W11T	=V1WC4+V1UC12-XD10	=V1FQ1+V1FQ1-BR11-T	TPE	4	4	18	30	
	=V1WC4+V1UC12-XD13							
=V1FQ1-W13R	=V1KF1+V1UC12-KF12.31	=V1FQ1+V1FQ1-BR13-R	TPE	4	4	18	20	
	=V1WC4+V1UC12-XD10							
	=V1WC4+V1UC12-XD13							
=V1FQ1-W13T	=V1WC4+V1UC12-XD10	=V1FQ1+V1FQ1-BR13-T	TPE	4	4	18	25	
	=V1WC4+V1UC12-XD13							
=V1FQ1-W15R	=V1KF1+V1UC12-KF12.31	=V1FQ1+V1FQ1-BR15-R	TPE	4	4	18	20	
	=V1WC4+V1UC12-XD10							
	=V1WC4+V1UC12-XD13							
=V1FQ1-W15T	=V1WC4+V1UC12-XD10	=V1FQ1+V1FQ1-BR15-T	TPE	4	4	18	20	
	=V1WC4+V1UC12-XD13							
=V1FQ1-W16R	=V1KF1+V1UC14-KF14.31	=V1FQ1+V1FQ1-BR16-R	TPE	4	4	18	20	
	=V1WC4+V1UC14-XD10							
	=V1WC4+V1UC14-XD15							
=V1FQ1-W16T	=V1WC4+V1UC14-XD10	=V1FQ1+V1FQ1-BR16-T	TPE	4	4	18	25	
	=V1WC4+V1UC14-XD15							
=V1FQ1-W18R	=V1KF1+V1UC14-KF14.31	=V1FQ1+V1FQ1-BR18-R	TPE	4	4	18	25	
	=V1WC4+V1UC14-XD10							
	=V1WC4+V1UC14-XD17							
=V1FQ1-W18T	=V1WC4+V1UC14-XD10	=V1FQ1+V1FQ1-BR18-T	TPE	4	4	18	30	
	=V1WC4+V1UC14-XD17							
=V1FQ1-W20R	=V1KF1+V1UC14-KF14.31	=V1FQ1+V1FQ1-BR20-R	TPE	4	4	18	15	
	=V1WC4+V1UC14-XD10							
	=V1WC4+V1UC14-XD17							
=V1FQ1-W20T	=V1WC4+V1UC14-XD10	=V1FQ1+V1FQ1-BR20-T	TPE	4	4	18	20	
	=V1WC4+V1UC14-XD17							
=V1GL1UQ51BG0-W1	=V1GL1UQ51BG0+V1GL1UQ51-XG1/2	=V1GL1UQ51KF1+V1GL1UQ51-KF1.13-X1	TPE	4	4	18	0.5	
=V1GL1UQ51BG0-W1.1	=V1GL1UQ51BG0+V1GL1UQ51-BG01	=V1GL1UQ51BG0+V1GL1UQ51-XG1/2	TPE	4	3	18	5	
=V1GL1UQ51BG0-W1.2	=V1GL1UQ51BG0+V1GL1UQ51-BG02	=V1GL1UQ51BG0+V1GL1UQ51-XG1/2	TPE	4	3	18	5	
=V1GL1UQ51BG0-W2	=V1GL1UQ51BG0+V1GL1UQ51-XG3/4	=V1GL1UQ51KF1+V1GL1UQ51-KF1.13-X2	TPE	4	4	18	0.5	
=V1GL1UQ51BG0-W2.1	=V1GL1UQ51BG0+V1GL1UQ51-BG03	=V1GL1UQ51BG0+V1GL1UQ51-XG3/4	TPE	4	3	18	2	
=V1GL1UQ51BG0-W2.2	=V1GL1UQ51BG0+V1GL1UQ51-BG04	=V1GL1UQ51BG0+V1GL1UQ51-XG3/4	TPE	4	3	18	4	
=V1GL1UQ51BG0-W3	=V1GL1UQ51BG0+V1GL1UQ51-XG5/6	=V1GL1UQ51KF1+V1GL1UQ51-KF1.13-X3	TPE	4	4	18	0.5	
=V1GL1UQ51BG0-W3.1	=V1GL1UQ51BG0+V1GL1UQ51-BG05	=V1GL1UQ51BG0+V1GL1UQ51-XG5/6	TPE	4	3	18	4	
=V1GL1UQ51BG0-W3.2	=V1GL1UQ51BG0+V1GL1UQ51-BG06	=V1GL1UQ51BG0+V1GL1UQ51-XG5/6	TPE	4	3	18	6	
=V1GL1UQ51BG0-W4	=V1GL1UQ51BG0+V1GL1UQ51-XG7/8	=V1GL1UQ51KF1+V1GL1UQ51-KF1.13-X4	TPE	4	4	18	0.5	
=V1GL1UQ51BG0-W4.1	=V1GL1UQ51BG0+V1GL1UQ51-BG07	=V1GL1UQ51BG0+V1GL1UQ51-XG7/8	TPE	4	3	18	5	
=V1GL1UQ51BG0-W4.2	=V1GL1UQ51BG0+V1GL1UQ51-BG08	=V1GL1UQ51BG0+V1GL1UQ51-XG7/8	TPE	4	3	18	5	
=V1GL1UQ51BG0-W5	=V1GL1UQ51BG0+V1GL1UQ51-XG9/10	=V1GL1UQ51KF1+V1GL1UQ51-KF1.13-X5	TPE	4	4	18	0.5	

			Date	1/17/2023	Volvo Trucks North America	Valiant TMS	Cable overview	Drawing name: =2V09&EFS-EL	=
			Ed.	MKLEPADLO					+
			Appr		P6700 Bodyside LH - Robot Cell 2V09			Document type: EMC	Project nr: 22-16150
Modification	Date	Name	Original		Replacement of	Replaced by	Scale 1:1		Page 9 / 1533

Cable overview

F10_001_Cable

Cable name	Source (from)	Target (to)	cable type	all conductors	Conductors used	Cross-section [mm]	Length [m]	remark
=V1GL1UQ51BG0-W5.1	=V1GL1UQ51BG0+V1GL1UQ51-BG09	=V1GL1UQ51BG0+V1GL1UQ51-XG9/10	TPE	4	3	18	5	
=V1GL1UQ51BG0-W5.2	=V1GL1UQ51BG0+V1GL1UQ51-BG10	=V1GL1UQ51BG0+V1GL1UQ51-XG9/10	TPE	4	3	18	5	
=V1GL1UQ51BG0-W6	=V1GL1UQ51BG0+V1GL1UQ51-XG11/12	=V1GL1UQ51KF1+V1GL1UQ51-KF1.13-X6	TPE	4	4	18	0.5	
=V1GL1UQ51BG0-W6.1	=V1GL1UQ51BG0+V1GL1UQ51-BG11	=V1GL1UQ51BG0+V1GL1UQ51-XG11/12	TPE	4	3	18	5	
=V1GL1UQ51BG0-W6.2	=V1GL1UQ51BG0+V1GL1UQ51-BG12	=V1GL1UQ51BG0+V1GL1UQ51-XG11/12	TPE	4	3	18	5	
=V1GL1UQ51BG0-W7	=V1GL1UQ51BG0+V1GL1UQ51-XG13/14	=V1GL1UQ51KF2+V1GL1UQ51-KF2.14-X1	TPE	4	4	18	0.5	
=V1GL1UQ51BG0-W7.1	=V1GL1UQ51BG0+V1GL1UQ51-BG13	=V1GL1UQ51BG0+V1GL1UQ51-XG13/14	TPE	4	3	18	5	
=V1GL1UQ51BG0-W7.2	=V1GL1UQ51BG0+V1GL1UQ51-BG14	=V1GL1UQ51BG0+V1GL1UQ51-XG13/14	TPE	4	3	18	5	
=V1GL1UQ51BG0-W8	=V1GL1UQ51BG0+V1GL1UQ51-XG15/16	=V1GL1UQ51KF2+V1GL1UQ51-KF2.14-X2	TPE	4	4	18	0.5	
=V1GL1UQ51BG0-W8.1	=V1GL1UQ51BG0+V1GL1UQ51-BG15	=V1GL1UQ51BG0+V1GL1UQ51-XG15/16	TPE	4	3	18	5	
=V1GL1UQ51BG0-W8.2	=V1GL1UQ51BG0+V1GL1UQ51-BG16	=V1GL1UQ51BG0+V1GL1UQ51-XG15/16	TPE	4	3	18	5	
=V1GL1UQ51BG0-W9	=V1GL1UQ51BG0+V1GL1UQ51-XG17/18	=V1GL1UQ51KF2+V1GL1UQ51-KF2.14-X3	TPE	4	4	18	0.5	
=V1GL1UQ51BG0-W9.1	=V1GL1UQ51BG0+V1GL1UQ51-BG17	=V1GL1UQ51BG0+V1GL1UQ51-XG17/18	TPE	4	3	18	5	
=V1GL1UQ51BG0-W9.2	=V1GL1UQ51BG0+V1GL1UQ51-BG18	=V1GL1UQ51BG0+V1GL1UQ51-XG17/18	TPE	4	3	18	5	
=V1GL1UQ51BG0-W10	=V1GL1UQ51BG0+V1GL1UQ51-XG19/20	=V1GL1UQ51KF2+V1GL1UQ51-KF2.14-X4	TPE	4	4	18	0.5	
=V1GL1UQ51BG0-W10.1	=V1GL1UQ51BG0+V1GL1UQ51-BG19	=V1GL1UQ51BG0+V1GL1UQ51-XG19/20	TPE	4	3	18	8	
=V1GL1UQ51BG0-W10.2	=V1GL1UQ51BG0+V1GL1UQ51-BG20	=V1GL1UQ51BG0+V1GL1UQ51-XG19/20	TPE	4	3	18	6	
=V1GL1UQ51BG0-W11	=V1GL1UQ51BG0+V1GL1UQ51-XG21/22	=V1GL1UQ51KF2+V1GL1UQ51-KF2.14-X5	TPE	4	4	18	0.5	
=V1GL1UQ51BG0-W11.1	=V1GL1UQ51BG0+V1GL1UQ51-BG21	=V1GL1UQ51BG0+V1GL1UQ51-XG21/22	TPE	4	3	18	6	
=V1GL1UQ51BG0-W11.2	=V1GL1UQ51BG0+V1GL1UQ51-BG22	=V1GL1UQ51BG0+V1GL1UQ51-XG21/22	TPE	4	3	18	8	
=V1GL1UQ51BG0-W12	=V1GL1UQ51BG0+V1GL1UQ51-XG23/24	=V1GL1UQ51KF2+V1GL1UQ51-KF2.14-X6	TPE	4	4	18	3	
=V1GL1UQ51BG0-W12.1	=V1GL1UQ51BG0+V1GL1UQ51-BG23	=V1GL1UQ51BG0+V1GL1UQ51-XG23/24	TPE	4	3	18	1	
=V1GL1UQ51BG0-W12.2	=V1GL1UQ51BG0+V1GL1UQ51-BG24	=V1GL1UQ51BG0+V1GL1UQ51-XG23/24	TPE	4	3	18	1	
=V1GL1UQ51UQ1.1-W1	=V1GL1UQ51KF1+V1GL1UQ51-KF1.11-X1	=V1GL1UQ51UQ1.1+V1GL1UQ51UQ1.1-BGS/R	TPE	4	4	18	3	
=V1GL1UQ51UQ1.2-W1	=V1GL1UQ51KF1+V1GL1UQ51-KF1.11-X2	=V1GL1UQ51UQ1.2+V1GL1UQ51UQ1.2-BGS/R	TPE	4	4	18	2	
=V1GL1UQ51UQ1.3-W1	=V1GL1UQ51KF1+V1GL1UQ51-KF1.11-X3	=V1GL1UQ51UQ1.3+V1GL1UQ51UQ1.3-BGS/R	TPE	4	4	18	4	
=V1GL1UQ51UQ2.1-W1	=V1GL1UQ51KF1+V1GL1UQ51-KF1.11-X4	=V1GL1UQ51UQ2.1+V1GL1UQ51UQ2.1-BGS/R	TPE	4	4	18	4	
=V1GL1UQ51UQ3.1-W1	=V1GL1UQ51KF1+V1GL1UQ51-KF1.11-X5	=V1GL1UQ51UQ3.1+V1GL1UQ51UQ3.1-BGS/R	TPE	4	4	18	5	
=V1GL1UQ51UQ3.2-W1	=V1GL1UQ51KF1+V1GL1UQ51-KF1.11-X6	=V1GL1UQ51UQ3.2+V1GL1UQ51UQ3.2-BGS/R	TPE	4	4	18	5	
=V1GL1UQ51UQ4.1-W1	=V1GL1UQ51KF1+V1GL1UQ51-KF1.11-X7	=V1GL1UQ51UQ4.1+V1GL1UQ51UQ4.1-BGS/R	TPE	4	4	18	4	
=V1GL1UQ51UQ4.2-W1	=V1GL1UQ51KF1+V1GL1UQ51-KF1.11-X8	=V1GL1UQ51UQ4.2+V1GL1UQ51UQ4.2-BGS/R	TPE	4	4	18	4	
=V1GL1UQ51UQ5.1-W1	=V1GL1UQ51KF1+V1GL1UQ51-KF1.12-X1	=V1GL1UQ51UQ5.1+V1GL1UQ51UQ5.1-BGS/R	TPE	4	4	18	4	
=V1GL1UQ51UQ6.1-W1	=V1GL1UQ51KF1+V1GL1UQ51-KF1.12-X2	=V1GL1UQ51UQ6.1+V1GL1UQ51UQ6.1-BGS/R	TPE	4	4	18	4	
=V1GL1UQ51UQ7.1-W1	=V1GL1UQ51KF1+V1GL1UQ51-KF1.12-X3	=V1GL1UQ51UQ7.1+V1GL1UQ51UQ7.1-XGR/S	TPE	4	4	18	4	
=V1GL1UQ51UQ7.1-W1.1	=V1GL1UQ51UQ7.1+V1GL1UQ51UQ7.1-BGR	=V1GL1UQ51UQ7.1+V1GL1UQ51UQ7.1-XGR/S	TPE	4	3	18	0.5	
=V1GL1UQ51UQ7.1-W1.2	=V1GL1UQ51UQ7.1+V1GL1UQ51UQ7.1-BGS	=V1GL1UQ51UQ7.1+V1GL1UQ51UQ7.1-XGR/S	TPE	4	3	18	0.5	
=V1GL1UQ51UQ8.1-W1	=V1GL1UQ51KF1+V1GL1UQ51-KF1.12-X4	=V1GL1UQ51UQ8.1+V1GL1UQ51UQ8.1-BGS/R	TPE	4	4	18	5	
=V1GL1UQ51UQ8.2-W1	=V1GL1UQ51KF1+V1GL1UQ51-KF1.12-X5	=V1GL1UQ51UQ8.2+V1GL1UQ51UQ8.2-BGS/R	TPE	4	4	18	5	
=V1GL1UQ51UQ8.3-W1	=V1GL1UQ51KF1+V1GL1UQ51-KF1.12-X6	=V1GL1UQ51UQ8.3+V1GL1UQ51UQ8.3-BGS/R	TPE	4	4	18	5	
=V1GL1UQ51UQ9.1-W1	=V1GL1UQ51KF1+V1GL1UQ51-KF1.12-X7	=V1GL1UQ51UQ9.1+V1GL1UQ51UQ9.1-BGS/R	TPE	4	4	18	6	
=V1GL1UQ51UQ10.1-W1	=V1GL1UQ51KF1+V1GL1UQ51-KF1.12-X8	=V1GL1UQ51UQ10.1+V1GL1UQ51UQ10.1-BGS/R	TPE	4	4	18	6	
=V1GL1UQ51UQ11.1-W1	=V1GL1UQ51KF2+V1GL1UQ51-KF2.11-X1	=V1GL1UQ51UQ11.1+V1GL1UQ51UQ11.1-BGS/R	TPE	4	4	18	4	
=V1GL1UQ51UQ11.2-W1	=V1GL1UQ51KF2+V1GL1UQ51-KF2.11-X2	=V1GL1UQ51UQ11.2+V1GL1UQ51UQ11.2-BGS/R	TPE	4	4	18	4	
=V1GL1UQ51UQ11.3-W1	=V1GL1UQ51KF2+V1GL1UQ51-KF2.11-X3	=V1GL1UQ51UQ11.3+V1GL1UQ51UQ11.3-BGS/R	TPE	4	4	18	4	
=V1GL1UQ51UQ11.4-W1	=V1GL1UQ51KF2+V1GL1UQ51-KF2.11-X4	=V1GL1UQ51UQ11.4+V1GL1UQ51UQ11.4-BGS/R	TPE	4	4	18	5	
=V1GL1UQ51UQ11.5-W1	=V1GL1UQ51KF2+V1GL1UQ51-KF2.11-X5	=V1GL1UQ51UQ11.5+V1GL1UQ51UQ11.5-BGS/R	TPE	4	4	18	3	

			Date	1/17/2023	Volvo Trucks North America	Valiant TMS	Cable overview	Drawing name: =2V09&EFS-EL	=
			Ed.	MKLEPADLO					+
			Appr		P6700 Bodyside LH - Robot Cell 2V09			Document type: EMC	Project nr: 22-16150
Modification	Date	Name	Original		Replacement of	Replaced by	Scale 1:1		Page 10 / 1533

Cable overview

F10_001_Cable

Cable name	Source (from)	Target (to)	cable type	all conductors	Conductors used	Cross-section [mm]	Length [m]	remark
=V1GL1UQ51UQ11.6-W1	=V1GL1UQ51KF2+V1GL1UQ51-KF2.11-X6	=V1GL1UQ51UQ11.6+V1GL1UQ51UQ11.6-BGS/R	TPE	4	4	18	3	
=V1GL1UQ51UQ12.1-W1	=V1GL1UQ51KF2+V1GL1UQ51-KF2.11-X7	=V1GL1UQ51UQ12.1+V1GL1UQ51UQ12.1-BGS/R	TPE	4	4	18	5	
=V1GL1UQ51UQ12.2-W1	=V1GL1UQ51KF2+V1GL1UQ51-KF2.11-X8	=V1GL1UQ51UQ12.2+V1GL1UQ51UQ12.2-BGS/R	TPE	4	4	18	4	
=V1GL1UQ51UQ12.3-W1	=V1GL1UQ51KF2+V1GL1UQ51-KF2.12-X1	=V1GL1UQ51UQ12.3+V1GL1UQ51UQ12.3-BGS/R	TPE	4	4	18	5	
=V1GL1UQ51UQ12.4-W1	=V1GL1UQ51KF2+V1GL1UQ51-KF2.12-X2	=V1GL1UQ51UQ12.4+V1GL1UQ51UQ12.4-BGS/R	TPE	4	4	18	2	
=V1GL1UQ51UQ13.1-W1	=V1GL1UQ51KF2+V1GL1UQ51-KF2.12-X3	=V1GL1UQ51UQ13.1+V1GL1UQ51UQ13.1-BGS/R	TPE	4	4	18	5	
=V1GL1UQ51UQ13.2-W1	=V1GL1UQ51KF2+V1GL1UQ51-KF2.12-X4	=V1GL1UQ51UQ13.2+V1GL1UQ51UQ13.2-BGS/R	TPE	4	4	18	4	
=V1GL1UQ51UQ14.1-W1	=V1GL1UQ51KF2+V1GL1UQ51-KF2.12-X5	=V1GL1UQ51UQ14.1+V1GL1UQ51UQ14.1-BGS/R	TPE	4	4	18	5	
=V1GL1UQ51UQ14.2-W1	=V1GL1UQ51KF2+V1GL1UQ51-KF2.12-X6	=V1GL1UQ51UQ14.2+V1GL1UQ51UQ14.2-BGS/R	TPE	4	4	18	6	
=V1GL1UQ51UQ14.3-W1	=V1GL1UQ51KF2+V1GL1UQ51-KF2.12-X7	=V1GL1UQ51UQ14.3+V1GL1UQ51UQ14.3-BGS/R	TPE	4	4	18	1	
=V1GL1UQ51UQ14.4-W1	=V1GL1UQ51KF2+V1GL1UQ51-KF2.12-X8	=V1GL1UQ51UQ14.4+V1GL1UQ51UQ14.4-BGS/R	TPE	4	4	18	5	
=V1GL1UQ51UQ15.1-W1	=V1GL1UQ51KF2+V1GL1UQ51-KF2.13-X1	=V1GL1UQ51UQ15.1+V1GL1UQ51UQ15.1-BGS/R	TPE	4	4	18	4	
=V1GL1UQ51UQ16.1-W1	=V1GL1UQ51KF2+V1GL1UQ51-KF2.13-X2	=V1GL1UQ51UQ16.1+V1GL1UQ51UQ16.1-BGS/R	TPE	4	4	18	4	
=V1GL1UQ51UQ17.1-W1	=V1GL1UQ51KF2+V1GL1UQ51-KF2.13-X3	=V1GL1UQ51UQ17.1+V1GL1UQ51UQ17.1-BGS/R	TPE	4	4	18	4	
=V1GL1UQ51UQ18.1-W1	=V1GL1UQ51KF2+V1GL1UQ51-KF2.13-X4	=V1GL1UQ51UQ18.1+V1GL1UQ51UQ18.1-BGS/R	TPE	4	4	18	6	
=V1GL1UQ51UQ19.1-W1	=V1GL1UQ51KF2+V1GL1UQ51-KF2.13-X5	=V1GL1UQ51UQ19.1+V1GL1UQ51UQ19.1-BGS/R	TPE	4	4	18	6	
=V1GL1UQ51UQ20.1-W1	=V1GL1UQ51KF2+V1GL1UQ51-KF2.13-X6	=V1GL1UQ51UQ20.1+V1GL1UQ51UQ20.1-BGS/R	TPE	4	4	18	6	
=V1GL1UQ51UQ21.1-W1	=V1GL1UQ51KF3+V1GL1UQ51-KF3.11-X1	=V1GL1UQ51UQ21.1+V1GL1UQ51UQ21.1-BGS/R	TPE	4	4	18	5	
=V1GL1UQ51UQ22.1-W1	=V1GL1UQ51KF3+V1GL1UQ51-KF3.11-X2	=V1GL1UQ51UQ22.1+V1GL1UQ51UQ22.1-BGS/R	TPE	4	4	18	5	
=V1GL1UQ51UQ23.1-W1	=V1GL1UQ51KF3+V1GL1UQ51-KF3.11-X3	=V1GL1UQ51UQ23.1+V1GL1UQ51UQ23.1-BGS/R	TPE	4	4	18	5	
=V1GL1UQ51UQ24.1-W1	=V1GL1UQ51KF3+V1GL1UQ51-KF3.11-X4	=V1GL1UQ51UQ24.1+V1GL1UQ51UQ24.1-BGS/R	TPE	4	4	18	4	
=V1GL1UQ51UQ25.1-W1	=V1GL1UQ51KF3+V1GL1UQ51-KF3.11-X5	=V1GL1UQ51UQ25.1+V1GL1UQ51UQ25.1-BGS/R	TPE	4	4	18	3	
=V1GL1UQ51UQ25.2-W1	=V1GL1UQ51KF3+V1GL1UQ51-KF3.11-X6	=V1GL1UQ51UQ25.2+V1GL1UQ51UQ25.2-BGS/R	TPE	4	4	18	3	
=V1GL1UQ52BG0-W1	=V1GL1UQ52BG0+V1GL1UQ52-XG1/2	=V1GL1UQ52KF1+V1GL1UQ52-KF1.14-X1	TPE	4	4	18	0.5	
=V1GL1UQ52BG0-W1.1	=V1GL1UQ52BG0+V1GL1UQ52-BG01	=V1GL1UQ52BG0+V1GL1UQ52-XG1/2	TPE	4	3	18	2	
=V1GL1UQ52BG0-W1.2	=V1GL1UQ52BG0+V1GL1UQ52-BG02	=V1GL1UQ52BG0+V1GL1UQ52-XG1/2	TPE	4	3	18	4	
=V1GL1UQ52BG0-W2	=V1GL1UQ52BG0+V1GL1UQ52-XG3/4	=V1GL1UQ52KF1+V1GL1UQ52-KF1.14-X2	TPE	4	4	18	0.5	
=V1GL1UQ52BG0-W2.1	=V1GL1UQ52BG0+V1GL1UQ52-BG03	=V1GL1UQ52BG0+V1GL1UQ52-XG3/4	TPE	4	3	18	4	
=V1GL1UQ52BG0-W2.2	=V1GL1UQ52BG0+V1GL1UQ52-BG04	=V1GL1UQ52BG0+V1GL1UQ52-XG3/4	TPE	4	3	18	5	
=V1GL1UQ52BG0-W3	=V1GL1UQ52BG0+V1GL1UQ52-XG5/6	=V1GL1UQ52KF1+V1GL1UQ52-KF1.14-X3	TPE	4	4	18	0.5	
=V1GL1UQ52BG0-W3.1	=V1GL1UQ52BG0+V1GL1UQ52-BG05	=V1GL1UQ52BG0+V1GL1UQ52-XG5/6	TPE	4	3	18	5	
=V1GL1UQ52BG0-W3.2	=V1GL1UQ52BG0+V1GL1UQ52-BG06	=V1GL1UQ52BG0+V1GL1UQ52-XG5/6	TPE	4	3	18	6	
=V1GL1UQ52BG0-W4	=V1GL1UQ52BG0+V1GL1UQ52-XG7/8	=V1GL1UQ52KF1+V1GL1UQ52-KF1.14-X4	TPE	4	4	18	0.5	
=V1GL1UQ52BG0-W4.1	=V1GL1UQ52BG0+V1GL1UQ52-BG07	=V1GL1UQ52BG0+V1GL1UQ52-XG7/8	TPE	4	3	18	6	
=V1GL1UQ52BG0-W4.2	=V1GL1UQ52BG0+V1GL1UQ52-BG08	=V1GL1UQ52BG0+V1GL1UQ52-XG7/8	TPE	4	3	18	6	
=V1GL1UQ52BG0-W5	=V1GL1UQ52BG0+V1GL1UQ52-XG9/10	=V1GL1UQ52KF1+V1GL1UQ52-KF1.14-X5	TPE	4	4	18	0.5	
=V1GL1UQ52BG0-W5.1	=V1GL1UQ52BG0+V1GL1UQ52-BG09	=V1GL1UQ52BG0+V1GL1UQ52-XG9/10	TPE	4	3	18	5	
=V1GL1UQ52BG0-W5.2	=V1GL1UQ52BG0+V1GL1UQ52-BG10	=V1GL1UQ52BG0+V1GL1UQ52-XG9/10	TPE	4	3	18	5	
=V1GL1UQ52BG0-W6	=V1GL1UQ52BG0+V1GL1UQ52-XG11/12	=V1GL1UQ52KF1+V1GL1UQ52-KF1.14-X6	TPE	4	4	18	0.5	
=V1GL1UQ52BG0-W6.1	=V1GL1UQ52BG0+V1GL1UQ52-BG11	=V1GL1UQ52BG0+V1GL1UQ52-XG11/12	TPE	4	3	18	4	
=V1GL1UQ52BG0-W6.2	=V1GL1UQ52BG0+V1GL1UQ52-BG12	=V1GL1UQ52BG0+V1GL1UQ52-XG11/12	TPE	4	3	18	4	
=V1GL1UQ52BG0-W7	=V1GL1UQ52BG0+V1GL1UQ52-XG13/14	=V1GL1UQ52KF1+V1GL1UQ52-KF1.14-X7	TPE	4	4	18	0.5	
=V1GL1UQ52BG0-W7.1	=V1GL1UQ52BG0+V1GL1UQ52-BG13	=V1GL1UQ52BG0+V1GL1UQ52-XG13/14	TPE	4	3	18	5	
=V1GL1UQ52BG0-W7.2	=V1GL1UQ52BG0+V1GL1UQ52-BG14	=V1GL1UQ52BG0+V1GL1UQ52-XG13/14	TPE	4	3	18	5	
=V1GL1UQ52BG0-W8	=V1GL1UQ52BG0+V1GL1UQ52-XG15/16	=V1GL1UQ52KF1+V1GL1UQ52-KF1.14-X8	TPE	4	4	18	0.5	
=V1GL1UQ52BG0-W8.1	=V1GL1UQ52BG0+V1GL1UQ52-BG15	=V1GL1UQ52BG0+V1GL1UQ52-XG15/16	TPE	4	3	18	5	

			Date	1/17/2023	Volvo Trucks North America	Valiant TMS	Cable overview	Drawing name: =2V09&EFS-EL	=
			Ed.	MKLEPADLO					+
			Appr		P6700 Bodyside LH - Robot Cell 2V09			Document type: EMC	Project nr: 22-16150
Modification	Date	Name	Original		Replacement of	Replaced by	Scale 1:1		Page 11 / 1533

Cable overview

F10_001_Cable

Cable name	Source (from)	Target (to)	cable type	all conductors	Conductors used	Cross-section [mm]	Length [m]	remark
=V1GL1UQ52BG0-W8.2	=V1GL1UQ52BG0+V1GL1UQ52-BG16	=V1GL1UQ52BG0+V1GL1UQ52-XG15/16	TPE	4	3	18	6	
=V1GL1UQ52BG0-W9	=V1GL1UQ52BG0+V1GL1UQ52-XG17/18	=V1GL1UQ52KF3+V1GL1UQ52-KF3.11-X5	TPE	4	4	18	0.5	
=V1GL1UQ52BG0-W9.1	=V1GL1UQ52BG0+V1GL1UQ52-BG17	=V1GL1UQ52BG0+V1GL1UQ52-XG17/18	TPE	4	3	18	6	
=V1GL1UQ52BG0-W9.2	=V1GL1UQ52BG0+V1GL1UQ52-BG18	=V1GL1UQ52BG0+V1GL1UQ52-XG17/18	TPE	4	3	18	6	
=V1GL1UQ52BG0-W10	=V1GL1UQ52BG0+V1GL1UQ52-XG19/20	=V1GL1UQ52KF3+V1GL1UQ52-KF3.11-X6	TPE	4	4	18	0.5	
=V1GL1UQ52BG0-W10.1	=V1GL1UQ52BG0+V1GL1UQ52-BG19	=V1GL1UQ52BG0+V1GL1UQ52-XG19/20	TPE	4	3	18	5	
=V1GL1UQ52BG0-W10.2	=V1GL1UQ52BG0+V1GL1UQ52-BG20	=V1GL1UQ52BG0+V1GL1UQ52-XG19/20	TPE	4	3	18	4	
=V1GL1UQ52BG0-W11	=V1GL1UQ52BG0+V1GL1UQ52-XG21/22	=V1GL1UQ52KF3+V1GL1UQ52-KF3.11-X7	TPE	4	4	18	0.5	
=V1GL1UQ52BG0-W11.1	=V1GL1UQ52BG0+V1GL1UQ52-BG21	=V1GL1UQ52BG0+V1GL1UQ52-XG21/22	TPE	4	3	18	5	
=V1GL1UQ52BG0-W11.2	=V1GL1UQ52BG0+V1GL1UQ52-BG22	=V1GL1UQ52BG0+V1GL1UQ52-XG21/22	TPE	4	3	18	5	
=V1GL1UQ52BG0-W12	=V1GL1UQ52BG0+V1GL1UQ52-XG23/24	=V1GL1UQ52KF3+V1GL1UQ52-KF3.11-X8	TPE	4	4	18	0.5	
=V1GL1UQ52BG0-W12.1	=V1GL1UQ52BG0+V1GL1UQ52-BG23	=V1GL1UQ52BG0+V1GL1UQ52-XG23/24	TPE	4	3	18	4	
=V1GL1UQ52BG0-W12.2	=V1GL1UQ52BG0+V1GL1UQ52-BG24	=V1GL1UQ52BG0+V1GL1UQ52-XG23/24	TPE	4	3	18	4	
=V1GL1UQ52BG0-W13	=V1GL1UQ52BG0+V1GL1UQ52-XG25/26	=V1GL1UQ52KF2+V1GL1UQ52-KF2.14-X6	TPE	4	4	18	0.5	
=V1GL1UQ52BG0-W13.1	=V1GL1UQ52BG0+V1GL1UQ52-BG25	=V1GL1UQ52BG0+V1GL1UQ52-XG25/26	TPE	4	3	18	6	
=V1GL1UQ52BG0-W13.2	=V1GL1UQ52BG0+V1GL1UQ52-BG26	=V1GL1UQ52BG0+V1GL1UQ52-XG25/26	TPE	4	3	18	4	
=V1GL1UQ52BG0-W14	=V1GL1UQ52BG0+V1GL1UQ52-XG27/28	=V1GL1UQ52KF2+V1GL1UQ52-KF2.14-X7	TPE	4	4	18	0.5	
=V1GL1UQ52BG0-W14.1	=V1GL1UQ52BG0+V1GL1UQ52-BG27	=V1GL1UQ52BG0+V1GL1UQ52-XG27/28	TPE	4	3	18	5	
=V1GL1UQ52BG0-W14.2	=V1GL1UQ52BG0+V1GL1UQ52-BG28	=V1GL1UQ52BG0+V1GL1UQ52-XG27/28	TPE	4	3	18	4	
=V1GL1UQ52BG0-W15	=V1GL1UQ52BG0+V1GL1UQ52-XG29/30	=V1GL1UQ52KF2+V1GL1UQ52-KF2.14-X8	TPE	4	4	18	0.5	
=V1GL1UQ52BG0-W15.1	=V1GL1UQ52BG0+V1GL1UQ52-BG29	=V1GL1UQ52BG0+V1GL1UQ52-XG29/30	TPE	4	3	18	4	
=V1GL1UQ52BG0-W15.2	=V1GL1UQ52BG0+V1GL1UQ52-BG30	=V1GL1UQ52BG0+V1GL1UQ52-XG29/30	TPE	4	3	18	6	
=V1GL1UQ52UQ1.1-W1	=V1GL1UQ52KF1+V1GL1UQ52-KF1.11-X1	=V1GL1UQ52UQ1.1+V1GL1UQ52UQ1.1-BGS/R	TPE	4	4	18	3	
=V1GL1UQ52UQ1.2-W1	=V1GL1UQ52KF1+V1GL1UQ52-KF1.11-X2	=V1GL1UQ52UQ1.2+V1GL1UQ52UQ1.2-BGS/R	TPE	4	4	18	2	
=V1GL1UQ52UQ1.3-W1	=V1GL1UQ52KF1+V1GL1UQ52-KF1.11-X3	=V1GL1UQ52UQ1.3+V1GL1UQ52UQ1.3-BGS/R	TPE	4	4	18	5	
=V1GL1UQ52UQ1.4-W1	=V1GL1UQ52KF1+V1GL1UQ52-KF1.11-X4	=V1GL1UQ52UQ1.4+V1GL1UQ52UQ1.4-BGS/R	TPE	4	4	18	6	
=V1GL1UQ52UQ1.5-W1	=V1GL1UQ52KF1+V1GL1UQ52-KF1.11-X5	=V1GL1UQ52UQ1.5+V1GL1UQ52UQ1.5-BGS/R	TPE	4	4	18	6	
=V1GL1UQ52UQ1.6-W1	=V1GL1UQ52KF1+V1GL1UQ52-KF1.11-X6	=V1GL1UQ52UQ1.6+V1GL1UQ52UQ1.6-BGS/R	TPE	4	4	18	4	
=V1GL1UQ52UQ2.1-W1	=V1GL1UQ52KF1+V1GL1UQ52-KF1.11-X7	=V1GL1UQ52UQ2.1+V1GL1UQ52UQ2.1-BGS/R	TPE	4	4	18	4	
=V1GL1UQ52UQ3.1-W1	=V1GL1UQ52KF1+V1GL1UQ52-KF1.11-X8	=V1GL1UQ52UQ3.1+V1GL1UQ52UQ3.1-BGS/R	TPE	4	4	18	4	
=V1GL1UQ52UQ3.2-W1	=V1GL1UQ52KF1+V1GL1UQ52-KF1.12-X1	=V1GL1UQ52UQ3.2+V1GL1UQ52UQ3.2-BGS/R	TPE	4	4	18	5	
=V1GL1UQ52UQ3.3-W1	=V1GL1UQ52KF1+V1GL1UQ52-KF1.12-X2	=V1GL1UQ52UQ3.3+V1GL1UQ52UQ3.3-BGS/R	TPE	4	4	18	5	
=V1GL1UQ52UQ3.4-W1	=V1GL1UQ52KF1+V1GL1UQ52-KF1.12-X3	=V1GL1UQ52UQ3.4+V1GL1UQ52UQ3.4-BGS/R	TPE	4	4	18	5	
=V1GL1UQ52UQ3.5-W1	=V1GL1UQ52KF1+V1GL1UQ52-KF1.12-X4	=V1GL1UQ52UQ3.5+V1GL1UQ52UQ3.5-BGS/R	TPE	4	4	18	4	
=V1GL1UQ52UQ4.1-W1	=V1GL1UQ52KF1+V1GL1UQ52-KF1.12-X5	=V1GL1UQ52UQ4.1+V1GL1UQ52UQ4.1-BGS/R	TPE	4	4	18	4	
=V1GL1UQ52UQ4.2-W1	=V1GL1UQ52KF1+V1GL1UQ52-KF1.12-X6	=V1GL1UQ52UQ4.2+V1GL1UQ52UQ4.2-BGS/R	TPE	4	4	18	5	
=V1GL1UQ52UQ5.1-W1	=V1GL1UQ52KF1+V1GL1UQ52-KF1.12-X7	=V1GL1UQ52UQ5.1+V1GL1UQ52UQ5.1-BGS/R	TPE	4	4	18	4	
=V1GL1UQ52UQ5.2-W1	=V1GL1UQ52KF1+V1GL1UQ52-KF1.12-X8	=V1GL1UQ52UQ5.2+V1GL1UQ52UQ5.2-BGS/R	TPE	4	4	18	5	
=V1GL1UQ52UQ6.1-W1	=V1GL1UQ52KF1+V1GL1UQ52-KF1.13-X1	=V1GL1UQ52UQ6.1+V1GL1UQ52UQ6.1-BGS/R	TPE	4	4	18	6	
=V1GL1UQ52UQ7.1-W1	=V1GL1UQ52KF1+V1GL1UQ52-KF1.13-X2	=V1GL1UQ52UQ7.1+V1GL1UQ52UQ7.1-BGS/R	TPE	4	4	18	4	
=V1GL1UQ52UQ8.1-W1	=V1GL1UQ52KF1+V1GL1UQ52-KF1.13-X3	=V1GL1UQ52UQ8.1+V1GL1UQ52UQ8.1-XGR/S	TPE	4	4	18	4	
=V1GL1UQ52UQ8.1-W1.1	=V1GL1UQ52UQ8.1+V1GL1UQ52UQ8.1-BGR	=V1GL1UQ52UQ8.1+V1GL1UQ52UQ8.1-XGR/S	TPE	4	3	18	0.5	
=V1GL1UQ52UQ8.1-W1.2	=V1GL1UQ52UQ8.1+V1GL1UQ52UQ8.1-BGS	=V1GL1UQ52UQ8.1+V1GL1UQ52UQ8.1-XGR/S	TPE	4	3	18	0.5	
=V1GL1UQ52UQ9.1-W1	=V1GL1UQ52KF1+V1GL1UQ52-KF1.13-X4	=V1GL1UQ52UQ9.1+V1GL1UQ52UQ9.1-BGS/R	TPE	4	4	18	5	
=V1GL1UQ52UQ9.2-W1	=V1GL1UQ52KF1+V1GL1UQ52-KF1.13-X5	=V1GL1UQ52UQ9.2+V1GL1UQ52UQ9.2-BGS/R	TPE	4	4	18	4	
=V1GL1UQ52UQ10.1-W1	=V1GL1UQ52KF2+V1GL1UQ52-KF2.11-X1	=V1GL1UQ52UQ10.1+V1GL1UQ52UQ10.1-BGS/R	TPE	4	4	18	3	

			Date	1/17/2023	Volvo Trucks North America	Valiant TMS	Cable overview	Drawing name: =2V09&EFS-EL	=
			Ed.	MKLEPADLO					+
			Appr		P6700 Bodyside LH - Robot Cell 2V09			Document type: EMC	Project nr: 22-16150
Modification	Date	Name	Original		Replacement of	Replaced by	Scale 1:1		Page 12 / 1533

Cable overview

F10_001_Cable

Cable name	Source (from)	Target (to)	cable type	all conductors	Conductors used	Cross-section [mm]	Length [m]	remark
=V1GL1UQ52UQ10.2-W1	=V1GL1UQ52KF2+V1GL1UQ52-KF2.11-X2	=V1GL1UQ52UQ10.2+V1GL1UQ52UQ10.2-BGS/R	TPE	4	4	18	3	
=V1GL1UQ52UQ10.3-W1	=V1GL1UQ52KF2+V1GL1UQ52-KF2.11-X3	=V1GL1UQ52UQ10.3+V1GL1UQ52UQ10.3-BGS/R	TPE	4	4	18	3	
=V1GL1UQ52UQ10.4-W1	=V1GL1UQ52KF2+V1GL1UQ52-KF2.11-X4	=V1GL1UQ52UQ10.4+V1GL1UQ52UQ10.4-BGS/R	TPE	4	4	18	3	
=V1GL1UQ52UQ10.5-W1	=V1GL1UQ52KF2+V1GL1UQ52-KF2.11-X5	=V1GL1UQ52UQ10.5+V1GL1UQ52UQ10.5-BGS/R	TPE	4	4	18	2	
=V1GL1UQ52UQ10.6-W1	=V1GL1UQ52KF2+V1GL1UQ52-KF2.11-X6	=V1GL1UQ52UQ10.6+V1GL1UQ52UQ10.6-BGS/R	TPE	4	4	18	3	
=V1GL1UQ52UQ11.1-W1	=V1GL1UQ52KF2+V1GL1UQ52-KF2.11-X7	=V1GL1UQ52UQ11.1+V1GL1UQ52UQ11.1-BGS/R	TPE	4	4	18	3	
=V1GL1UQ52UQ11.2-W1	=V1GL1UQ52KF2+V1GL1UQ52-KF2.11-X8	=V1GL1UQ52UQ11.2+V1GL1UQ52UQ11.2-BGS/R	TPE	4	4	18	4	
=V1GL1UQ52UQ11.3-W1	=V1GL1UQ52KF2+V1GL1UQ52-KF2.12-X1	=V1GL1UQ52UQ11.3+V1GL1UQ52UQ11.3-BGS/R	TPE	4	4	18	5	
=V1GL1UQ52UQ11.4-W1	=V1GL1UQ52KF2+V1GL1UQ52-KF2.12-X2	=V1GL1UQ52UQ11.4+V1GL1UQ52UQ11.4-BGS/R	TPE	4	4	18	6	
=V1GL1UQ52UQ11.5-W1	=V1GL1UQ52KF2+V1GL1UQ52-KF2.12-X3	=V1GL1UQ52UQ11.5+V1GL1UQ52UQ11.5-BGS/R	TPE	4	4	18	7	
=V1GL1UQ52UQ12.1-W1	=V1GL1UQ52KF2+V1GL1UQ52-KF2.12-X4	=V1GL1UQ52UQ12.1+V1GL1UQ52UQ12.1-BGS/R	TPE	4	4	18	5	
=V1GL1UQ52UQ12.2-W1	=V1GL1UQ52KF2+V1GL1UQ52-KF2.12-X5	=V1GL1UQ52UQ12.2+V1GL1UQ52UQ12.2-BGS/R	TPE	4	4	18	3	
=V1GL1UQ52UQ12.3-W1	=V1GL1UQ52KF2+V1GL1UQ52-KF2.12-X6	=V1GL1UQ52UQ12.3+V1GL1UQ52UQ12.3-BGS/R	TPE	4	4	18	6	
=V1GL1UQ52UQ12.4-W1	=V1GL1UQ52KF2+V1GL1UQ52-KF2.12-X7	=V1GL1UQ52UQ12.4+V1GL1UQ52UQ12.4-BGS/R	TPE	4	4	18	5	
=V1GL1UQ52UQ12.5-W1	=V1GL1UQ52KF2+V1GL1UQ52-KF2.12-X8	=V1GL1UQ52UQ12.5+V1GL1UQ52UQ12.5-BGS/R	TPE	4	4	18	3	
=V1GL1UQ52UQ12.6-W1	=V1GL1UQ52KF2+V1GL1UQ52-KF2.13-X1	=V1GL1UQ52UQ12.6+V1GL1UQ52UQ12.6-BGS/R	TPE	4	4	18	3	
=V1GL1UQ52UQ13.1-W1	=V1GL1UQ52KF2+V1GL1UQ52-KF2.13-X2	=V1GL1UQ52UQ13.1+V1GL1UQ52UQ13.1-BGS/R	TPE	4	4	18	4	
=V1GL1UQ52UQ14.1-W1	=V1GL1UQ52KF2+V1GL1UQ52-KF2.13-X3	=V1GL1UQ52UQ14.1+V1GL1UQ52UQ14.1-BGS/R	TPE	4	4	18	4	
=V1GL1UQ52UQ15.1-W1	=V1GL1UQ52KF2+V1GL1UQ52-KF2.13-X4	=V1GL1UQ52UQ15.1+V1GL1UQ52UQ15.1-BGS/R	TPE	4	4	18	5	
=V1GL1UQ52UQ16.1-W1	=V1GL1UQ52KF2+V1GL1UQ52-KF2.13-X5	=V1GL1UQ52UQ16.1+V1GL1UQ52UQ16.1-BGS/R	TPE	4	4	18	4	
=V1GL1UQ52UQ16.2-W1	=V1GL1UQ52KF2+V1GL1UQ52-KF2.13-X6	=V1GL1UQ52UQ16.2+V1GL1UQ52UQ16.2-BGS/R	TPE	4	4	18	4	
=V1GL1UQ52UQ16.3-W1	=V1GL1UQ52KF2+V1GL1UQ52-KF2.13-X7	=V1GL1UQ52UQ16.3+V1GL1UQ52UQ16.3-BGS/R	TPE	4	4	18	5	
=V1GL1UQ52UQ17.1-W1	=V1GL1UQ52KF2+V1GL1UQ52-KF2.13-X8	=V1GL1UQ52UQ17.1+V1GL1UQ52UQ17.1-BGS/R	TPE	4	4	18	3	
=V1GL1UQ52UQ18.1-W1	=V1GL1UQ52KF2+V1GL1UQ52-KF2.14-X1	=V1GL1UQ52UQ18.1+V1GL1UQ52UQ18.1-BGS/R	TPE	4	4	18	4	
=V1GL1UQ52UQ18.2-W1	=V1GL1UQ52KF2+V1GL1UQ52-KF2.14-X2	=V1GL1UQ52UQ18.2+V1GL1UQ52UQ18.2-BGS/R	TPE	4	4	18	5	
=V1GL1UQ52UQ19.1-W1	=V1GL1UQ52KF2+V1GL1UQ52-KF2.14-X3	=V1GL1UQ52UQ19.1+V1GL1UQ52UQ19.1-BGS/R	TPE	4	4	18	4	
=V1GL1UQ52UQ19.2-W1	=V1GL1UQ52KF2+V1GL1UQ52-KF2.14-X4	=V1GL1UQ52UQ19.2+V1GL1UQ52UQ19.2-BGS/R	TPE	4	4	18	3	
=V1GL1UQ52UQ20.1-W1	=V1GL1UQ52KF3+V1GL1UQ52-KF3.11-X1	=V1GL1UQ52UQ20.1+V1GL1UQ52UQ20.1-BGS/R	TPE	4	4	18	5	
=V1GL1UQ52UQ21.1-W1	=V1GL1UQ52KF3+V1GL1UQ52-KF3.11-X2	=V1GL1UQ52UQ21.1+V1GL1UQ52UQ21.1-BGS/R	TPE	4	4	18	4	
=V1GL1UQ52UQ22.1-W1			TPE	4	0	18	4	
=V1GL1UQ52UQ23.1-W1			TPE	4	0	18	4	
=V1GL1UQ53BG0-W1	=V1GL1UQ53BG0+V1GL1UQ53-XG1/2	=V1GL1UQ53KF1+V1GL1UQ53-KF1.13-X1	TPE	4	4	18	0.5	
=V1GL1UQ53BG0-W1.1	=V1GL1UQ53BG0+V1GL1UQ53-BG01	=V1GL1UQ53BG0+V1GL1UQ53-XG1/2	TPE	4	3	18	5	
=V1GL1UQ53BG0-W1.2	=V1GL1UQ53BG0+V1GL1UQ53-BG02	=V1GL1UQ53BG0+V1GL1UQ53-XG1/2	TPE	4	3	18	5	
=V1GL1UQ53BG0-W2	=V1GL1UQ53BG0+V1GL1UQ53-XG3/4	=V1GL1UQ53KF1+V1GL1UQ53-KF1.13-X2	TPE	4	4	18	0.5	
=V1GL1UQ53BG0-W2.1	=V1GL1UQ53BG0+V1GL1UQ53-BG03	=V1GL1UQ53BG0+V1GL1UQ53-XG3/4	TPE	4	3	18	2	
=V1GL1UQ53BG0-W2.2	=V1GL1UQ53BG0+V1GL1UQ53-BG04	=V1GL1UQ53BG0+V1GL1UQ53-XG3/4	TPE	4	3	18	4	
=V1GL1UQ53BG0-W3	=V1GL1UQ53BG0+V1GL1UQ53-XG5/6	=V1GL1UQ53KF1+V1GL1UQ53-KF1.13-X3	TPE	4	4	18	0.5	
=V1GL1UQ53BG0-W3.1	=V1GL1UQ53BG0+V1GL1UQ53-BG05	=V1GL1UQ53BG0+V1GL1UQ53-XG5/6	TPE	4	3	18	4	
=V1GL1UQ53BG0-W3.2	=V1GL1UQ53BG0+V1GL1UQ53-BG06	=V1GL1UQ53BG0+V1GL1UQ53-XG5/6	TPE	4	3	18	6	
=V1GL1UQ53BG0-W4	=V1GL1UQ53BG0+V1GL1UQ53-XG7/8	=V1GL1UQ53KF1+V1GL1UQ53-KF1.13-X4	TPE	4	4	18	0.5	
=V1GL1UQ53BG0-W4.1	=V1GL1UQ53BG0+V1GL1UQ53-BG07	=V1GL1UQ53BG0+V1GL1UQ53-XG7/8	TPE	4	3	18	5	
=V1GL1UQ53BG0-W4.2	=V1GL1UQ53BG0+V1GL1UQ53-BG08	=V1GL1UQ53BG0+V1GL1UQ53-XG7/8	TPE	4	3	18	5	
=V1GL1UQ53BG0-W5	=V1GL1UQ53BG0+V1GL1UQ53-XG9/10	=V1GL1UQ53KF1+V1GL1UQ53-KF1.13-X5	TPE	4	4	18	0.5	
=V1GL1UQ53BG0-W5.1	=V1GL1UQ53BG0+V1GL1UQ53-BG09	=V1GL1UQ53BG0+V1GL1UQ53-XG9/10	TPE	4	3	18	5	
=V1GL1UQ53BG0-W5.2	=V1GL1UQ53BG0+V1GL1UQ53-BG10	=V1GL1UQ53BG0+V1GL1UQ53-XG9/10	TPE	4	3	18	5	

			Date	1/17/2023	Volvo Trucks North America	Valiant TMS	Cable overview	Drawing name: =2V09&EFS-EL	=
			Ed.	MKLEPADLO					+
			Appr		P6700 Bodyside LH - Robot Cell 2V09			Document type: EMC	Project nr: 22-16150
Modification	Date	Name	Original		Replacement of	Replaced by	Scale 1:1		Page 13 / 1533

Cable overview

F10_001_Cable

Cable name	Source (from)	Target (to)	cable type	all conductors	Conductors used	Cross-section [mm]	Length [m]	remark
=V1GL1UQ53BG0-W6	=V1GL1UQ53BG0+V1GL1UQ53-XG11/12	=V1GL1UQ53KF1+V1GL1UQ53-KF1.13-X6	TPE	4	4	18	0.5	
=V1GL1UQ53BG0-W6.1	=V1GL1UQ53BG0+V1GL1UQ53-BG11	=V1GL1UQ53BG0+V1GL1UQ53-XG11/12	TPE	4	3	18	5	
=V1GL1UQ53BG0-W6.2	=V1GL1UQ53BG0+V1GL1UQ53-BG12	=V1GL1UQ53BG0+V1GL1UQ53-XG11/12	TPE	4	3	18	5	
=V1GL1UQ53BG0-W7	=V1GL1UQ53BG0+V1GL1UQ53-XG13/14	=V1GL1UQ53KF2+V1GL1UQ53-KF2.14-X1	TPE	4	4	18	0.5	
=V1GL1UQ53BG0-W7.1	=V1GL1UQ53BG0+V1GL1UQ53-BG13	=V1GL1UQ53BG0+V1GL1UQ53-XG13/14	TPE	4	3	18	5	
=V1GL1UQ53BG0-W7.2	=V1GL1UQ53BG0+V1GL1UQ53-BG14	=V1GL1UQ53BG0+V1GL1UQ53-XG13/14	TPE	4	3	18	5	
=V1GL1UQ53BG0-W8	=V1GL1UQ53BG0+V1GL1UQ53-XG15/16	=V1GL1UQ53KF2+V1GL1UQ53-KF2.14-X2	TPE	4	4	18	0.5	
=V1GL1UQ53BG0-W8.1	=V1GL1UQ53BG0+V1GL1UQ53-BG15	=V1GL1UQ53BG0+V1GL1UQ53-XG15/16	TPE	4	3	18	5	
=V1GL1UQ53BG0-W8.2	=V1GL1UQ53BG0+V1GL1UQ53-BG16	=V1GL1UQ53BG0+V1GL1UQ53-XG15/16	TPE	4	3	18	5	
=V1GL1UQ53BG0-W9	=V1GL1UQ53BG0+V1GL1UQ53-XG17/18	=V1GL1UQ53KF2+V1GL1UQ53-KF2.14-X3	TPE	4	4	18	0.5	
=V1GL1UQ53BG0-W9.1	=V1GL1UQ53BG0+V1GL1UQ53-BG17	=V1GL1UQ53BG0+V1GL1UQ53-XG17/18	TPE	4	3	18	5	
=V1GL1UQ53BG0-W9.2	=V1GL1UQ53BG0+V1GL1UQ53-BG18	=V1GL1UQ53BG0+V1GL1UQ53-XG17/18	TPE	4	3	18	5	
=V1GL1UQ53BG0-W10	=V1GL1UQ53BG0+V1GL1UQ53-XG19/20	=V1GL1UQ53KF2+V1GL1UQ53-KF2.14-X4	TPE	4	4	18	0.5	
=V1GL1UQ53BG0-W10.1	=V1GL1UQ53BG0+V1GL1UQ53-BG19	=V1GL1UQ53BG0+V1GL1UQ53-XG19/20	TPE	4	3	18	8	
=V1GL1UQ53BG0-W10.2	=V1GL1UQ53BG0+V1GL1UQ53-BG20	=V1GL1UQ53BG0+V1GL1UQ53-XG19/20	TPE	4	3	18	6	
=V1GL1UQ53BG0-W11	=V1GL1UQ53BG0+V1GL1UQ53-XG21/22	=V1GL1UQ53KF2+V1GL1UQ53-KF2.14-X5	TPE	4	4	18	0.5	
=V1GL1UQ53BG0-W11.1	=V1GL1UQ53BG0+V1GL1UQ53-BG21	=V1GL1UQ53BG0+V1GL1UQ53-XG21/22	TPE	4	3	18	6	
=V1GL1UQ53BG0-W11.2	=V1GL1UQ53BG0+V1GL1UQ53-BG22	=V1GL1UQ53BG0+V1GL1UQ53-XG21/22	TPE	4	3	18	8	
=V1GL1UQ53BG0-W12	=V1GL1UQ53BG0+V1GL1UQ53-XG23/24	=V1GL1UQ53KF2+V1GL1UQ53-KF2.14-X6	TPE	4	4	18	3	
=V1GL1UQ53BG0-W12.1	=V1GL1UQ53BG0+V1GL1UQ53-BG23	=V1GL1UQ53BG0+V1GL1UQ53-XG23/24	TPE	4	3	18	1	
=V1GL1UQ53BG0-W12.2	=V1GL1UQ53BG0+V1GL1UQ53-BG24	=V1GL1UQ53BG0+V1GL1UQ53-XG23/24	TPE	4	3	18	1	
=V1GL1UQ53UQ1.1-W1	=V1GL1UQ53KF1+V1GL1UQ53-KF1.11-X1	=V1GL1UQ53UQ1.1+V1GL1UQ53UQ1.1-BGS/R	TPE	4	4	18	3	
=V1GL1UQ53UQ1.2-W1	=V1GL1UQ53KF1+V1GL1UQ53-KF1.11-X2	=V1GL1UQ53UQ1.2+V1GL1UQ53UQ1.2-BGS/R	TPE	4	4	18	2	
=V1GL1UQ53UQ1.3-W1	=V1GL1UQ53KF1+V1GL1UQ53-KF1.11-X3	=V1GL1UQ53UQ1.3+V1GL1UQ53UQ1.3-BGS/R	TPE	4	4	18	4	
=V1GL1UQ53UQ2.1-W1	=V1GL1UQ53KF1+V1GL1UQ53-KF1.11-X4	=V1GL1UQ53UQ2.1+V1GL1UQ53UQ2.1-BGS/R	TPE	4	4	18	4	
=V1GL1UQ53UQ3.1-W1	=V1GL1UQ53KF1+V1GL1UQ53-KF1.11-X5	=V1GL1UQ53UQ3.1+V1GL1UQ53UQ3.1-BGS/R	TPE	4	4	18	5	
=V1GL1UQ53UQ3.2-W1	=V1GL1UQ53KF1+V1GL1UQ53-KF1.11-X6	=V1GL1UQ53UQ3.2+V1GL1UQ53UQ3.2-BGS/R	TPE	4	4	18	5	
=V1GL1UQ53UQ4.1-W1	=V1GL1UQ53KF1+V1GL1UQ53-KF1.11-X7	=V1GL1UQ53UQ4.1+V1GL1UQ53UQ4.1-BGS/R	TPE	4	4	18	4	
=V1GL1UQ53UQ4.2-W1	=V1GL1UQ53KF1+V1GL1UQ53-KF1.11-X8	=V1GL1UQ53UQ4.2+V1GL1UQ53UQ4.2-BGS/R	TPE	4	4	18	4	
=V1GL1UQ53UQ5.1-W1	=V1GL1UQ53KF1+V1GL1UQ53-KF1.12-X1	=V1GL1UQ53UQ5.1+V1GL1UQ53UQ5.1-BGS/R	TPE	4	4	18	4	
=V1GL1UQ53UQ6.1-W1	=V1GL1UQ53KF1+V1GL1UQ53-KF1.12-X2	=V1GL1UQ53UQ6.1+V1GL1UQ53UQ6.1-BGS/R	TPE	4	4	18	4	
=V1GL1UQ53UQ7.1-W1	=V1GL1UQ53KF1+V1GL1UQ53-KF1.12-X3	=V1GL1UQ53UQ7.1+V1GL1UQ53UQ7.1-XGR/S	TPE	4	4	18	4	
=V1GL1UQ53UQ7.1-W1.1	=V1GL1UQ53UQ7.1+V1GL1UQ53UQ7.1-BGR	=V1GL1UQ53UQ7.1+V1GL1UQ53UQ7.1-XGR/S	TPE	4	3	18	0.5	
=V1GL1UQ53UQ7.1-W1.2	=V1GL1UQ53UQ7.1+V1GL1UQ53UQ7.1-BGS	=V1GL1UQ53UQ7.1+V1GL1UQ53UQ7.1-XGR/S	TPE	4	3	18	0.5	
=V1GL1UQ53UQ8.1-W1	=V1GL1UQ53KF1+V1GL1UQ53-KF1.12-X4	=V1GL1UQ53UQ8.1+V1GL1UQ53UQ8.1-BGS/R	TPE	4	4	18	5	
=V1GL1UQ53UQ8.2-W1	=V1GL1UQ53KF1+V1GL1UQ53-KF1.12-X5	=V1GL1UQ53UQ8.2+V1GL1UQ53UQ8.2-BGS/R	TPE	4	4	18	5	
=V1GL1UQ53UQ8.3-W1	=V1GL1UQ53KF1+V1GL1UQ53-KF1.12-X6	=V1GL1UQ53UQ8.3+V1GL1UQ53UQ8.3-BGS/R	TPE	4	4	18	5	
=V1GL1UQ53UQ9.1-W1	=V1GL1UQ53KF1+V1GL1UQ53-KF1.12-X7	=V1GL1UQ53UQ9.1+V1GL1UQ53UQ9.1-BGS/R	TPE	4	4	18	6	
=V1GL1UQ53UQ10.1-W1	=V1GL1UQ53KF1+V1GL1UQ53-KF1.12-X8	=V1GL1UQ53UQ10.1+V1GL1UQ53UQ10.1-BGS/R	TPE	4	4	18	6	
=V1GL1UQ53UQ11.1-W1	=V1GL1UQ53KF2+V1GL1UQ53-KF2.11-X1	=V1GL1UQ53UQ11.1+V1GL1UQ53UQ11.1-BGS/R	TPE	4	4	18	4	
=V1GL1UQ53UQ11.2-W1	=V1GL1UQ53KF2+V1GL1UQ53-KF2.11-X2	=V1GL1UQ53UQ11.2+V1GL1UQ53UQ11.2-BGS/R	TPE	4	4	18	4	
=V1GL1UQ53UQ11.3-W1	=V1GL1UQ53KF2+V1GL1UQ53-KF2.11-X3	=V1GL1UQ53UQ11.3+V1GL1UQ53UQ11.3-BGS/R	TPE	4	4	18	4	
=V1GL1UQ53UQ11.4-W1	=V1GL1UQ53KF2+V1GL1UQ53-KF2.11-X4	=V1GL1UQ53UQ11.4+V1GL1UQ53UQ11.4-BGS/R	TPE	4	4	18	5	
=V1GL1UQ53UQ11.5-W1	=V1GL1UQ53KF2+V1GL1UQ53-KF2.11-X5	=V1GL1UQ53UQ11.5+V1GL1UQ53UQ11.5-BGS/R	TPE	4	4	18	3	
=V1GL1UQ53UQ11.6-W1	=V1GL1UQ53KF2+V1GL1UQ53-KF2.11-X6	=V1GL1UQ53UQ11.6+V1GL1UQ53UQ11.6-BGS/R	TPE	4	4	18	3	
=V1GL1UQ53UQ12.1-W1	=V1GL1UQ53KF2+V1GL1UQ53-KF2.11-X7	=V1GL1UQ53UQ12.1+V1GL1UQ53UQ12.1-BGS/R	TPE	4	4	18	5	

			Date	1/17/2023	Volvo Trucks North America	Valiant TMS	Cable overview	Drawing name: =2V09&EFS-EL	=
			Ed.	MKLEPADLO					+
			Appr		P6700 Bodyside LH - Robot Cell 2V09			Document type: EMC	Project nr: 22-16150
Modification	Date	Name	Original		Replacement of	Replaced by	Scale 1:1		Page 14 / 1533

Cable overview

F10_001_Cable

Cable name	Source (from)	Target (to)	cable type	all conductors	Conductors used	Cross-section [mm]	Length [m]	remark
=V1GL1UQ53UQ12.2-W1	=V1GL1UQ53KF2+V1GL1UQ53-KF2.11-X8	=V1GL1UQ53UQ12.2+V1GL1UQ53UQ12.2-BGS/R	TPE	4	4	18	4	
=V1GL1UQ53UQ12.3-W1	=V1GL1UQ53KF2+V1GL1UQ53-KF2.12-X1	=V1GL1UQ53UQ12.3+V1GL1UQ53UQ12.3-BGS/R	TPE	4	4	18	5	
=V1GL1UQ53UQ12.4-W1	=V1GL1UQ53KF2+V1GL1UQ53-KF2.12-X2	=V1GL1UQ53UQ12.4+V1GL1UQ53UQ12.4-BGS/R	TPE	4	4	18	2	
=V1GL1UQ53UQ13.1-W1	=V1GL1UQ53KF2+V1GL1UQ53-KF2.12-X3	=V1GL1UQ53UQ13.1+V1GL1UQ53UQ13.1-BGS/R	TPE	4	4	18	5	
=V1GL1UQ53UQ13.2-W1	=V1GL1UQ53KF2+V1GL1UQ53-KF2.12-X4	=V1GL1UQ53UQ13.2+V1GL1UQ53UQ13.2-BGS/R	TPE	4	4	18	4	
=V1GL1UQ53UQ14.1-W1	=V1GL1UQ53KF2+V1GL1UQ53-KF2.12-X5	=V1GL1UQ53UQ14.1+V1GL1UQ53UQ14.1-BGS/R	TPE	4	4	18	5	
=V1GL1UQ53UQ14.2-W1	=V1GL1UQ53KF2+V1GL1UQ53-KF2.12-X6	=V1GL1UQ53UQ14.2+V1GL1UQ53UQ14.2-BGS/R	TPE	4	4	18	6	
=V1GL1UQ53UQ14.3-W1	=V1GL1UQ53KF2+V1GL1UQ53-KF2.12-X7	=V1GL1UQ53UQ14.3+V1GL1UQ53UQ14.3-BGS/R	TPE	4	4	18	1	
=V1GL1UQ53UQ14.4-W1	=V1GL1UQ53KF2+V1GL1UQ53-KF2.12-X8	=V1GL1UQ53UQ14.4+V1GL1UQ53UQ14.4-BGS/R	TPE	4	4	18	5	
=V1GL1UQ53UQ15.1-W1	=V1GL1UQ53KF2+V1GL1UQ53-KF2.13-X1	=V1GL1UQ53UQ15.1+V1GL1UQ53UQ15.1-BGS/R	TPE	4	4	18	4	
=V1GL1UQ53UQ16.1-W1	=V1GL1UQ53KF2+V1GL1UQ53-KF2.13-X2	=V1GL1UQ53UQ16.1+V1GL1UQ53UQ16.1-BGS/R	TPE	4	4	18	4	
=V1GL1UQ53UQ17.1-W1	=V1GL1UQ53KF2+V1GL1UQ53-KF2.13-X3	=V1GL1UQ53UQ17.1+V1GL1UQ53UQ17.1-BGS/R	TPE	4	4	18	4	
=V1GL1UQ53UQ18.1-W1	=V1GL1UQ53KF2+V1GL1UQ53-KF2.13-X4	=V1GL1UQ53UQ18.1+V1GL1UQ53UQ18.1-BGS/R	TPE	4	4	18	6	
=V1GL1UQ53UQ19.1-W1	=V1GL1UQ53KF2+V1GL1UQ53-KF2.13-X5	=V1GL1UQ53UQ19.1+V1GL1UQ53UQ19.1-BGS/R	TPE	4	4	18	6	
=V1GL1UQ53UQ20.1-W1	=V1GL1UQ53KF2+V1GL1UQ53-KF2.13-X6	=V1GL1UQ53UQ20.1+V1GL1UQ53UQ20.1-BGS/R	TPE	4	4	18	6	
=V1GL1UQ53UQ21.1-W1	=V1GL1UQ53KF3+V1GL1UQ53-KF3.11-X1	=V1GL1UQ53UQ21.1+V1GL1UQ53UQ21.1-BGS/R	TPE	4	4	18	5	
=V1GL1UQ53UQ22.1-W1	=V1GL1UQ53KF3+V1GL1UQ53-KF3.11-X2	=V1GL1UQ53UQ22.1+V1GL1UQ53UQ22.1-BGS/R	TPE	4	4	18	5	
=V1GL1UQ53UQ23.1-W1	=V1GL1UQ53KF3+V1GL1UQ53-KF3.11-X3	=V1GL1UQ53UQ23.1+V1GL1UQ53UQ23.1-BGS/R	TPE	4	4	18	5	
=V1GL1UQ53UQ24.1-W1	=V1GL1UQ53KF3+V1GL1UQ53-KF3.11-X4	=V1GL1UQ53UQ24.1+V1GL1UQ53UQ24.1-BGS/R	TPE	4	4	18	4	
=V1GL1UQ53UQ25.1-W1	=V1GL1UQ53KF3+V1GL1UQ53-KF3.11-X5	=V1GL1UQ53UQ25.1+V1GL1UQ53UQ25.1-BGS/R	TPE	4	4	18	3	
=V1GL1UQ53UQ25.2-W1	=V1GL1UQ53KF3+V1GL1UQ53-KF3.11-X6	=V1GL1UQ53UQ25.2+V1GL1UQ53UQ25.2-BGS/R	TPE	4	4	18	3	
=V1GL1UQ54BG0-W1	=V1GL1UQ54BG0+V1GL1UQ54-XG1/2	=V1GL1UQ54KF1+V1GL1UQ54-KF1.14-X1	TPE	4	4	18	0.5	
=V1GL1UQ54BG0-W1.1	=V1GL1UQ54BG0+V1GL1UQ54-BG01	=V1GL1UQ54BG0+V1GL1UQ54-XG1/2	TPE	4	3	18	2	
=V1GL1UQ54BG0-W1.2	=V1GL1UQ54BG0+V1GL1UQ54-BG02	=V1GL1UQ54BG0+V1GL1UQ54-XG1/2	TPE	4	3	18	4	
=V1GL1UQ54BG0-W2	=V1GL1UQ54BG0+V1GL1UQ54-XG3/4	=V1GL1UQ54KF1+V1GL1UQ54-KF1.14-X2	TPE	4	4	18	0.5	
=V1GL1UQ54BG0-W2.1	=V1GL1UQ54BG0+V1GL1UQ54-BG03	=V1GL1UQ54BG0+V1GL1UQ54-XG3/4	TPE	4	3	18	4	
=V1GL1UQ54BG0-W2.2	=V1GL1UQ54BG0+V1GL1UQ54-BG04	=V1GL1UQ54BG0+V1GL1UQ54-XG3/4	TPE	4	3	18	5	
=V1GL1UQ54BG0-W3	=V1GL1UQ54BG0+V1GL1UQ54-XG5/6	=V1GL1UQ54KF1+V1GL1UQ54-KF1.14-X3	TPE	4	4	18	0.5	
=V1GL1UQ54BG0-W3.1	=V1GL1UQ54BG0+V1GL1UQ54-BG05	=V1GL1UQ54BG0+V1GL1UQ54-XG5/6	TPE	4	3	18	5	
=V1GL1UQ54BG0-W3.2	=V1GL1UQ54BG0+V1GL1UQ54-BG06	=V1GL1UQ54BG0+V1GL1UQ54-XG5/6	TPE	4	3	18	6	
=V1GL1UQ54BG0-W4	=V1GL1UQ54BG0+V1GL1UQ54-XG7/8	=V1GL1UQ54KF1+V1GL1UQ54-KF1.14-X4	TPE	4	4	18	0.5	
=V1GL1UQ54BG0-W4.1	=V1GL1UQ54BG0+V1GL1UQ54-BG07	=V1GL1UQ54BG0+V1GL1UQ54-XG7/8	TPE	4	3	18	6	
=V1GL1UQ54BG0-W4.2	=V1GL1UQ54BG0+V1GL1UQ54-BG08	=V1GL1UQ54BG0+V1GL1UQ54-XG7/8	TPE	4	3	18	6	
=V1GL1UQ54BG0-W5	=V1GL1UQ54BG0+V1GL1UQ54-XG9/10	=V1GL1UQ54KF1+V1GL1UQ54-KF1.14-X5	TPE	4	4	18	0.5	
=V1GL1UQ54BG0-W5.1	=V1GL1UQ54BG0+V1GL1UQ54-BG09	=V1GL1UQ54BG0+V1GL1UQ54-XG9/10	TPE	4	3	18	5	
=V1GL1UQ54BG0-W5.2	=V1GL1UQ54BG0+V1GL1UQ54-BG10	=V1GL1UQ54BG0+V1GL1UQ54-XG9/10	TPE	4	3	18	5	
=V1GL1UQ54BG0-W6	=V1GL1UQ54BG0+V1GL1UQ54-XG11/12	=V1GL1UQ54KF1+V1GL1UQ54-KF1.14-X6	TPE	4	4	18	0.5	
=V1GL1UQ54BG0-W6.1	=V1GL1UQ54BG0+V1GL1UQ54-BG11	=V1GL1UQ54BG0+V1GL1UQ54-XG11/12	TPE	4	3	18	4	
=V1GL1UQ54BG0-W6.2	=V1GL1UQ54BG0+V1GL1UQ54-BG12	=V1GL1UQ54BG0+V1GL1UQ54-XG11/12	TPE	4	3	18	4	
=V1GL1UQ54BG0-W7	=V1GL1UQ54BG0+V1GL1UQ54-XG13/14	=V1GL1UQ54KF1+V1GL1UQ54-KF1.14-X7	TPE	4	4	18	0.5	
=V1GL1UQ54BG0-W7.1	=V1GL1UQ54BG0+V1GL1UQ54-BG13	=V1GL1UQ54BG0+V1GL1UQ54-XG13/14	TPE	4	3	18	5	
=V1GL1UQ54BG0-W7.2	=V1GL1UQ54BG0+V1GL1UQ54-BG14	=V1GL1UQ54BG0+V1GL1UQ54-XG13/14	TPE	4	3	18	5	
=V1GL1UQ54BG0-W8	=V1GL1UQ54BG0+V1GL1UQ54-XG15/16	=V1GL1UQ54KF1+V1GL1UQ54-KF1.14-X8	TPE	4	4	18	0.5	
=V1GL1UQ54BG0-W8.1	=V1GL1UQ54BG0+V1GL1UQ54-BG15	=V1GL1UQ54BG0+V1GL1UQ54-XG15/16	TPE	4	3	18	5	
=V1GL1UQ54BG0-W8.2	=V1GL1UQ54BG0+V1GL1UQ54-BG16	=V1GL1UQ54BG0+V1GL1UQ54-XG15/16	TPE	4	3	18	6	
=V1GL1UQ54BG0-W9	=V1GL1UQ54BG0+V1GL1UQ54-XG17/18	=V1GL1UQ54KF3+V1GL1UQ54-KF3.11-X5	TPE	4	4	18	0.5	

			Date	1/17/2023	Volvo Trucks North America	Valiant TMS	Cable overview	Drawing name: =2V09&EFS-EL	=
			Ed.	MKLEPADLO					+
			Appr		P6700 Bodyside LH - Robot Cell 2V09			Document type: EMC	Project nr: 22-16150
Modification	Date	Name	Original		Replacement of	Replaced by	Scale 1:1		Page 15 / 1533

Cable overview

F10_001_Cable

Cable name	Source (from)	Target (to)	cable type	all conductors	Conductors used	Cross-section [mm]	Length [m]	remark
=V1GL1UQ54BG0-W9.1	=V1GL1UQ54BG0+V1GL1UQ54-BG17	=V1GL1UQ54BG0+V1GL1UQ54-XG17/18	TPE	4	3	18	6	
=V1GL1UQ54BG0-W9.2	=V1GL1UQ54BG0+V1GL1UQ54-BG18	=V1GL1UQ54BG0+V1GL1UQ54-XG17/18	TPE	4	3	18	6	
=V1GL1UQ54BG0-W10	=V1GL1UQ54BG0+V1GL1UQ54-XG19/20	=V1GL1UQ54KF3+V1GL1UQ54-KF3.11-X6	TPE	4	4	18	0.5	
=V1GL1UQ54BG0-W10.1	=V1GL1UQ54BG0+V1GL1UQ54-BG19	=V1GL1UQ54BG0+V1GL1UQ54-XG19/20	TPE	4	3	18	5	
=V1GL1UQ54BG0-W10.2	=V1GL1UQ54BG0+V1GL1UQ54-BG20	=V1GL1UQ54BG0+V1GL1UQ54-XG19/20	TPE	4	3	18	4	
=V1GL1UQ54BG0-W11	=V1GL1UQ54BG0+V1GL1UQ54-XG21/22	=V1GL1UQ54KF3+V1GL1UQ54-KF3.11-X7	TPE	4	4	18	0.5	
=V1GL1UQ54BG0-W11.1	=V1GL1UQ54BG0+V1GL1UQ54-BG21	=V1GL1UQ54BG0+V1GL1UQ54-XG21/22	TPE	4	3	18	5	
=V1GL1UQ54BG0-W11.2	=V1GL1UQ54BG0+V1GL1UQ54-BG22	=V1GL1UQ54BG0+V1GL1UQ54-XG21/22	TPE	4	3	18	5	
=V1GL1UQ54BG0-W12	=V1GL1UQ54BG0+V1GL1UQ54-XG23/24	=V1GL1UQ54KF3+V1GL1UQ54-KF3.11-X8	TPE	4	4	18	0.5	
=V1GL1UQ54BG0-W12.1	=V1GL1UQ54BG0+V1GL1UQ54-BG23	=V1GL1UQ54BG0+V1GL1UQ54-XG23/24	TPE	4	3	18	4	
=V1GL1UQ54BG0-W12.2	=V1GL1UQ54BG0+V1GL1UQ54-BG24	=V1GL1UQ54BG0+V1GL1UQ54-XG23/24	TPE	4	3	18	4	
=V1GL1UQ54BG0-W13	=V1GL1UQ54BG0+V1GL1UQ54-XG25/26	=V1GL1UQ54KF2+V1GL1UQ54-KF2.14-X6	TPE	4	4	18	0.5	
=V1GL1UQ54BG0-W13.1	=V1GL1UQ54BG0+V1GL1UQ54-BG25	=V1GL1UQ54BG0+V1GL1UQ54-XG25/26	TPE	4	3	18	6	
=V1GL1UQ54BG0-W13.2	=V1GL1UQ54BG0+V1GL1UQ54-BG26	=V1GL1UQ54BG0+V1GL1UQ54-XG25/26	TPE	4	3	18	4	
=V1GL1UQ54BG0-W14	=V1GL1UQ54BG0+V1GL1UQ54-XG27/28	=V1GL1UQ54KF2+V1GL1UQ54-KF2.14-X7	TPE	4	4	18	0.5	
=V1GL1UQ54BG0-W14.1	=V1GL1UQ54BG0+V1GL1UQ54-BG27	=V1GL1UQ54BG0+V1GL1UQ54-XG27/28	TPE	4	3	18	5	
=V1GL1UQ54BG0-W14.2	=V1GL1UQ54BG0+V1GL1UQ54-BG28	=V1GL1UQ54BG0+V1GL1UQ54-XG27/28	TPE	4	3	18	4	
=V1GL1UQ54BG0-W15	=V1GL1UQ54BG0+V1GL1UQ54-XG29/30	=V1GL1UQ54KF2+V1GL1UQ54-KF2.14-X8	TPE	4	4	18	0.5	
=V1GL1UQ54BG0-W15.1	=V1GL1UQ54BG0+V1GL1UQ54-BG29	=V1GL1UQ54BG0+V1GL1UQ54-XG29/30	TPE	4	3	18	4	
=V1GL1UQ54BG0-W15.2	=V1GL1UQ54BG0+V1GL1UQ54-BG30	=V1GL1UQ54BG0+V1GL1UQ54-XG29/30	TPE	4	3	18	6	
=V1GL1UQ54UQ1.1-W1	=V1GL1UQ54KF1+V1GL1UQ54-KF1.11-X1	=V1GL1UQ54UQ1.1+V1GL1UQ54UQ1.1-BGS/R	TPE	4	4	18	3	
=V1GL1UQ54UQ1.2-W1	=V1GL1UQ54KF1+V1GL1UQ54-KF1.11-X2	=V1GL1UQ54UQ1.2+V1GL1UQ54UQ1.2-BGS/R	TPE	4	4	18	2	
=V1GL1UQ54UQ1.3-W1	=V1GL1UQ54KF1+V1GL1UQ54-KF1.11-X3	=V1GL1UQ54UQ1.3+V1GL1UQ54UQ1.3-BGS/R	TPE	4	4	18	5	
=V1GL1UQ54UQ1.4-W1	=V1GL1UQ54KF1+V1GL1UQ54-KF1.11-X4	=V1GL1UQ54UQ1.4+V1GL1UQ54UQ1.4-BGS/R	TPE	4	4	18	6	
=V1GL1UQ54UQ1.5-W1	=V1GL1UQ54KF1+V1GL1UQ54-KF1.11-X5	=V1GL1UQ54UQ1.5+V1GL1UQ54UQ1.5-BGS/R	TPE	4	4	18	6	
=V1GL1UQ54UQ1.6-W1	=V1GL1UQ54KF1+V1GL1UQ54-KF1.11-X6	=V1GL1UQ54UQ1.6+V1GL1UQ54UQ1.6-BGS/R	TPE	4	4	18	4	
=V1GL1UQ54UQ2.1-W1	=V1GL1UQ54KF1+V1GL1UQ54-KF1.11-X7	=V1GL1UQ54UQ2.1+V1GL1UQ54UQ2.1-BGS/R	TPE	4	4	18	4	
=V1GL1UQ54UQ3.1-W1	=V1GL1UQ54KF1+V1GL1UQ54-KF1.11-X8	=V1GL1UQ54UQ3.1+V1GL1UQ54UQ3.1-BGS/R	TPE	4	4	18	4	
=V1GL1UQ54UQ3.2-W1	=V1GL1UQ54KF1+V1GL1UQ54-KF1.12-X1	=V1GL1UQ54UQ3.2+V1GL1UQ54UQ3.2-BGS/R	TPE	4	4	18	5	
=V1GL1UQ54UQ3.3-W1	=V1GL1UQ54KF1+V1GL1UQ54-KF1.12-X2	=V1GL1UQ54UQ3.3+V1GL1UQ54UQ3.3-BGS/R	TPE	4	4	18	5	
=V1GL1UQ54UQ3.4-W1	=V1GL1UQ54KF1+V1GL1UQ54-KF1.12-X3	=V1GL1UQ54UQ3.4+V1GL1UQ54UQ3.4-BGS/R	TPE	4	4	18	5	
=V1GL1UQ54UQ3.5-W1	=V1GL1UQ54KF1+V1GL1UQ54-KF1.12-X4	=V1GL1UQ54UQ3.5+V1GL1UQ54UQ3.5-BGS/R	TPE	4	4	18	4	
=V1GL1UQ54UQ4.1-W1	=V1GL1UQ54KF1+V1GL1UQ54-KF1.12-X5	=V1GL1UQ54UQ4.1+V1GL1UQ54UQ4.1-BGS/R	TPE	4	4	18	4	
=V1GL1UQ54UQ4.2-W1	=V1GL1UQ54KF1+V1GL1UQ54-KF1.12-X6	=V1GL1UQ54UQ4.2+V1GL1UQ54UQ4.2-BGS/R	TPE	4	4	18	5	
=V1GL1UQ54UQ5.1-W1	=V1GL1UQ54KF1+V1GL1UQ54-KF1.12-X7	=V1GL1UQ54UQ5.1+V1GL1UQ54UQ5.1-BGS/R	TPE	4	4	18	4	
=V1GL1UQ54UQ5.2-W1	=V1GL1UQ54KF1+V1GL1UQ54-KF1.12-X8	=V1GL1UQ54UQ5.2+V1GL1UQ54UQ5.2-BGS/R	TPE	4	4	18	5	
=V1GL1UQ54UQ6.1-W1	=V1GL1UQ54KF1+V1GL1UQ54-KF1.13-X1	=V1GL1UQ54UQ6.1+V1GL1UQ54UQ6.1-BGS/R	TPE	4	4	18	6	
=V1GL1UQ54UQ7.1-W1	=V1GL1UQ54KF1+V1GL1UQ54-KF1.13-X2	=V1GL1UQ54UQ7.1+V1GL1UQ54UQ7.1-BGS/R	TPE	4	4	18	4	
=V1GL1UQ54UQ8.1-W1	=V1GL1UQ54KF1+V1GL1UQ54-KF1.13-X3	=V1GL1UQ54UQ8.1+V1GL1UQ54UQ8.1-XGR/S	TPE	4	4	18	4	
=V1GL1UQ54UQ8.1-W1.1	=V1GL1UQ54UQ8.1+V1GL1UQ54UQ8.1-BGR	=V1GL1UQ54UQ8.1+V1GL1UQ54UQ8.1-XGR/S	TPE	4	3	18	0.5	
=V1GL1UQ54UQ8.1-W1.2	=V1GL1UQ54UQ8.1+V1GL1UQ54UQ8.1-BGS	=V1GL1UQ54UQ8.1+V1GL1UQ54UQ8.1-XGR/S	TPE	4	3	18	0.5	
=V1GL1UQ54UQ9.1-W1	=V1GL1UQ54KF1+V1GL1UQ54-KF1.13-X4	=V1GL1UQ54UQ9.1+V1GL1UQ54UQ9.1-BGS/R	TPE	4	4	18	5	
=V1GL1UQ54UQ9.2-W1	=V1GL1UQ54KF1+V1GL1UQ54-KF1.13-X5	=V1GL1UQ54UQ9.2+V1GL1UQ54UQ9.2-BGS/R	TPE	4	4	18	4	
=V1GL1UQ54UQ10.1-W1	=V1GL1UQ54KF2+V1GL1UQ54-KF2.11-X1	=V1GL1UQ54UQ10.1+V1GL1UQ54UQ10.1-BGS/R	TPE	4	4	18	3	
=V1GL1UQ54UQ10.2-W1	=V1GL1UQ54KF2+V1GL1UQ54-KF2.11-X2	=V1GL1UQ54UQ10.2+V1GL1UQ54UQ10.2-BGS/R	TPE	4	4	18	3	
=V1GL1UQ54UQ10.3-W1	=V1GL1UQ54KF2+V1GL1UQ54-KF2.11-X3	=V1GL1UQ54UQ10.3+V1GL1UQ54UQ10.3-BGS/R	TPE	4	4	18	3	

			Date	1/17/2023	Volvo Trucks North America	Valiant TMS	Cable overview	Drawing name: =2V09&EFS-EL	=
			Ed.	MKLEPADLO					+
			Appr		P6700 Bodyside LH - Robot Cell 2V09			Document type: EMC	Project nr: 22-16150
Modification	Date	Name	Original		Replacement of	Replaced by	Scale 1:1		Page 16 / 1533

Cable overview

F10_001_Cable

Cable name	Source (from)	Target (to)	cable type	all conductors	Conductors used	Cross-section [mm]	Length [m]	remark
=V1GL1UQ54UQ10.4-W1	=V1GL1UQ54KF2+V1GL1UQ54-KF2.11-X4	=V1GL1UQ54UQ10.4+V1GL1UQ54UQ10.4-BGS/R	TPE	4	4	18	3	
=V1GL1UQ54UQ10.5-W1	=V1GL1UQ54KF2+V1GL1UQ54-KF2.11-X5	=V1GL1UQ54UQ10.5+V1GL1UQ54UQ10.5-BGS/R	TPE	4	4	18	2	
=V1GL1UQ54UQ10.6-W1	=V1GL1UQ54KF2+V1GL1UQ54-KF2.11-X6	=V1GL1UQ54UQ10.6+V1GL1UQ54UQ10.6-BGS/R	TPE	4	4	18	3	
=V1GL1UQ54UQ11.1-W1	=V1GL1UQ54KF2+V1GL1UQ54-KF2.11-X7	=V1GL1UQ54UQ11.1+V1GL1UQ54UQ11.1-BGS/R	TPE	4	4	18	3	
=V1GL1UQ54UQ11.2-W1	=V1GL1UQ54KF2+V1GL1UQ54-KF2.11-X8	=V1GL1UQ54UQ11.2+V1GL1UQ54UQ11.2-BGS/R	TPE	4	4	18	4	
=V1GL1UQ54UQ11.3-W1	=V1GL1UQ54KF2+V1GL1UQ54-KF2.12-X1	=V1GL1UQ54UQ11.3+V1GL1UQ54UQ11.3-BGS/R	TPE	4	4	18	5	
=V1GL1UQ54UQ11.4-W1	=V1GL1UQ54KF2+V1GL1UQ54-KF2.12-X2	=V1GL1UQ54UQ11.4+V1GL1UQ54UQ11.4-BGS/R	TPE	4	4	18	6	
=V1GL1UQ54UQ11.5-W1	=V1GL1UQ54KF2+V1GL1UQ54-KF2.12-X3	=V1GL1UQ54UQ11.5+V1GL1UQ54UQ11.5-BGS/R	TPE	4	4	18	7	
=V1GL1UQ54UQ12.1-W1	=V1GL1UQ54KF2+V1GL1UQ54-KF2.12-X4	=V1GL1UQ54UQ12.1+V1GL1UQ54UQ12.1-BGS/R	TPE	4	4	18	5	
=V1GL1UQ54UQ12.2-W1	=V1GL1UQ54KF2+V1GL1UQ54-KF2.12-X5	=V1GL1UQ54UQ12.2+V1GL1UQ54UQ12.2-BGS/R	TPE	4	4	18	3	
=V1GL1UQ54UQ12.3-W1	=V1GL1UQ54KF2+V1GL1UQ54-KF2.12-X6	=V1GL1UQ54UQ12.3+V1GL1UQ54UQ12.3-BGS/R	TPE	4	4	18	6	
=V1GL1UQ54UQ12.4-W1	=V1GL1UQ54KF2+V1GL1UQ54-KF2.12-X7	=V1GL1UQ54UQ12.4+V1GL1UQ54UQ12.4-BGS/R	TPE	4	4	18	5	
=V1GL1UQ54UQ12.5-W1	=V1GL1UQ54KF2+V1GL1UQ54-KF2.12-X8	=V1GL1UQ54UQ12.5+V1GL1UQ54UQ12.5-BGS/R	TPE	4	4	18	3	
=V1GL1UQ54UQ12.6-W1	=V1GL1UQ54KF2+V1GL1UQ54-KF2.13-X1	=V1GL1UQ54UQ12.6+V1GL1UQ54UQ12.6-BGS/R	TPE	4	4	18	3	
=V1GL1UQ54UQ13.1-W1	=V1GL1UQ54KF2+V1GL1UQ54-KF2.13-X2	=V1GL1UQ54UQ13.1+V1GL1UQ54UQ13.1-BGS/R	TPE	4	4	18	4	
=V1GL1UQ54UQ14.1-W1	=V1GL1UQ54KF2+V1GL1UQ54-KF2.13-X3	=V1GL1UQ54UQ14.1+V1GL1UQ54UQ14.1-BGS/R	TPE	4	4	18	4	
=V1GL1UQ54UQ15.1-W1	=V1GL1UQ54KF2+V1GL1UQ54-KF2.13-X4	=V1GL1UQ54UQ15.1+V1GL1UQ54UQ15.1-BGS/R	TPE	4	4	18	5	
=V1GL1UQ54UQ16.1-W1	=V1GL1UQ54KF2+V1GL1UQ54-KF2.13-X5	=V1GL1UQ54UQ16.1+V1GL1UQ54UQ16.1-BGS/R	TPE	4	4	18	4	
=V1GL1UQ54UQ16.2-W1	=V1GL1UQ54KF2+V1GL1UQ54-KF2.13-X6	=V1GL1UQ54UQ16.2+V1GL1UQ54UQ16.2-BGS/R	TPE	4	4	18	4	
=V1GL1UQ54UQ16.3-W1	=V1GL1UQ54KF2+V1GL1UQ54-KF2.13-X7	=V1GL1UQ54UQ16.3+V1GL1UQ54UQ16.3-BGS/R	TPE	4	4	18	5	
=V1GL1UQ54UQ17.1-W1	=V1GL1UQ54KF2+V1GL1UQ54-KF2.13-X8	=V1GL1UQ54UQ17.1+V1GL1UQ54UQ17.1-BGS/R	TPE	4	4	18	3	
=V1GL1UQ54UQ18.1-W1	=V1GL1UQ54KF2+V1GL1UQ54-KF2.14-X1	=V1GL1UQ54UQ18.1+V1GL1UQ54UQ18.1-BGS/R	TPE	4	4	18	4	
=V1GL1UQ54UQ18.2-W1	=V1GL1UQ54KF2+V1GL1UQ54-KF2.14-X2	=V1GL1UQ54UQ18.2+V1GL1UQ54UQ18.2-BGS/R	TPE	4	4	18	5	
=V1GL1UQ54UQ19.1-W1	=V1GL1UQ54KF2+V1GL1UQ54-KF2.14-X3	=V1GL1UQ54UQ19.1+V1GL1UQ54UQ19.1-BGS/R	TPE	4	4	18	4	
=V1GL1UQ54UQ19.2-W1	=V1GL1UQ54KF2+V1GL1UQ54-KF2.14-X4	=V1GL1UQ54UQ19.2+V1GL1UQ54UQ19.2-BGS/R	TPE	4	4	18	3	
=V1GL1UQ54UQ20.1-W1	=V1GL1UQ54KF3+V1GL1UQ54-KF3.11-X1	=V1GL1UQ54UQ20.1+V1GL1UQ54UQ20.1-BGS/R	TPE	4	4	18	5	
=V1GL1UQ54UQ21.1-W1	=V1GL1UQ54KF3+V1GL1UQ54-KF3.11-X2	=V1GL1UQ54UQ21.1+V1GL1UQ54UQ21.1-BGS/R	TPE	4	4	18	4	
=V1GL1UQ54UQ22.1-W1			TPE	4	0	18	4	
=V1GL1UQ54UQ23.1-W1			TPE	4	0	18	4	
=V1GL1UQ56UQ1.1-W1	=V1GL1UQ56KF1+V1GL1UQ56-KF1.11-X1	=V1GL1UQ56UQ1.1+V1GL1UQ56UQ1.1-XGR/S	TPE	4	4	18	5	
=V1GL1UQ56UQ1.1-W1.1	=V1GL1UQ56UQ1.1+V1GL1UQ56UQ1.1-BGR	=V1GL1UQ56UQ1.1+V1GL1UQ56UQ1.1-XGR/S	TPE	4	3	18	0.5	
=V1GL1UQ56UQ1.1-W1.2	=V1GL1UQ56UQ1.1+V1GL1UQ56UQ1.1-BGS	=V1GL1UQ56UQ1.1+V1GL1UQ56UQ1.1-XGR/S	TPE	4	3	18	0.5	
=V1GL1UQ57UQ1.1-W1	=V1GL1UQ57KF1+V1GL1UQ57-KF1.11-X1	=V1GL1UQ57UQ1.1+V1GL1UQ57UQ1.1-XGR/S	TPE	4	4	18	5	
=V1GL1UQ57UQ1.1-W1.1	=V1GL1UQ57UQ1.1+V1GL1UQ57UQ1.1-BGR	=V1GL1UQ57UQ1.1+V1GL1UQ57UQ1.1-XGR/S	TPE	4	3	18	0.5	
=V1GL1UQ57UQ1.1-W1.2	=V1GL1UQ57UQ1.1+V1GL1UQ57UQ1.1-BGS	=V1GL1UQ57UQ1.1+V1GL1UQ57UQ1.1-XGR/S	TPE	4	3	18	0.5	
=V1GL2UQ51BG0-W1	=V1GL2UQ51BG0+V1GL2UQ51-XG1/2	=V1GL2UQ51KF2+V1GL2UQ51-KF2.13-X1	TPE	4	4	18	0.5	
=V1GL2UQ51BG0-W1.1	=V1GL2UQ51BG0+V1GL2UQ51-BG01	=V1GL2UQ51BG0+V1GL2UQ51-XG1/2	TPE	4	3	18	3	
=V1GL2UQ51BG0-W1.2	=V1GL2UQ51BG0+V1GL2UQ51-BG02	=V1GL2UQ51BG0+V1GL2UQ51-XG1/2	TPE	4	3	18	3	
=V1GL2UQ51BG0-W2	=V1GL2UQ51BG0+V1GL2UQ51-XG3/4	=V1GL2UQ51KF2+V1GL2UQ51-KF2.13-X2	TPE	4	4	18	0.5	
=V1GL2UQ51BG0-W2.1	=V1GL2UQ51BG0+V1GL2UQ51-BG03	=V1GL2UQ51BG0+V1GL2UQ51-XG3/4	TPE	4	3	18	4	
=V1GL2UQ51BG0-W2.2	=V1GL2UQ51BG0+V1GL2UQ51-BG04	=V1GL2UQ51BG0+V1GL2UQ51-XG3/4	TPE	4	3	18	2	
=V1GL2UQ51BG0-W3	=V1GL2UQ51BG0+V1GL2UQ51-XG5/6	=V1GL2UQ51KF2+V1GL2UQ51-KF2.13-X3	TPE	4	4	18	0.5	
=V1GL2UQ51BG0-W3.1	=V1GL2UQ51BG0+V1GL2UQ51-BG05	=V1GL2UQ51BG0+V1GL2UQ51-XG5/6	TPE	4	3	18	3	
=V1GL2UQ51BG0-W3.2	=V1GL2UQ51BG0+V1GL2UQ51-BG06	=V1GL2UQ51BG0+V1GL2UQ51-XG5/6	TPE	4	3	18	4	
=V1GL2UQ51BG0-W4	=V1GL2UQ51BG0+V1GL2UQ51-XG7/8	=V1GL2UQ51KF2+V1GL2UQ51-KF2.13-X4	TPE	4	4	18	0.5	
=V1GL2UQ51BG0-W4.1	=V1GL2UQ51BG0+V1GL2UQ51-BG07	=V1GL2UQ51BG0+V1GL2UQ51-XG7/8	TPE	4	3	18	4	

			Date	1/17/2023	Volvo Trucks North America	Valiant TMS	Cable overview	Drawing name: =2V09&EFS-EL	=
			Ed.	MKLEPADLO					+
			Appr		P6700 Bodyside LH - Robot Cell 2V09			Document type: EMC	Project nr: 22-16150
Modification	Date	Name	Original		Replacement of	Replaced by	Scale 1:1		Page 17 / 1533

Cable overview

F10_001_Cable

Cable name	Source (from)	Target (to)	cable type	all conductors	Conductors used	Cross-section [mm]	Length [m]	remark
=V1GL2UQ51BG0-W4.2	=V1GL2UQ51BG0+V1GL2UQ51-BG08	=V1GL2UQ51BG0+V1GL2UQ51-XG7/8	TPE	4	3	18	4	
=V1GL2UQ51BG0-W5	=V1GL2UQ51BG0+V1GL2UQ51-XG9/10	=V1GL2UQ51KF2+V1GL2UQ51-KF2.13-X5	TPE	4	4	18	0.5	
=V1GL2UQ51BG0-W5.1	=V1GL2UQ51BG0+V1GL2UQ51-BG09	=V1GL2UQ51BG0+V1GL2UQ51-XG9/10	TPE	4	3	18	5	
=V1GL2UQ51BG0-W5.2	=V1GL2UQ51BG0+V1GL2UQ51-BG10	=V1GL2UQ51BG0+V1GL2UQ51-XG9/10	TPE	4	3	18	5	
=V1GL2UQ51BG0-W6	=V1GL2UQ51BG0+V1GL2UQ51-XG11/12	=V1GL2UQ51KF2+V1GL2UQ51-KF2.13-X6	TPE	4	4	18	0.5	
=V1GL2UQ51BG0-W6.1	=V1GL2UQ51BG0+V1GL2UQ51-BG11	=V1GL2UQ51BG0+V1GL2UQ51-XG11/12	TPE	4	3	18	5	
=V1GL2UQ51BG0-W6.2	=V1GL2UQ51BG0+V1GL2UQ51-BG12	=V1GL2UQ51BG0+V1GL2UQ51-XG11/12	TPE	4	3	18	5	
=V1GL2UQ51BG0-W7	=V1GL2UQ51BG0+V1GL2UQ51-XG13/14	=V1GL2UQ51KF3+V1GL2UQ51-KF3.13-X1	TPE	4	4	18	0.5	
=V1GL2UQ51BG0-W7.1	=V1GL2UQ51BG0+V1GL2UQ51-BG13	=V1GL2UQ51BG0+V1GL2UQ51-XG13/14	TPE	4	3	18	6	
=V1GL2UQ51BG0-W7.2	=V1GL2UQ51BG0+V1GL2UQ51-BG14	=V1GL2UQ51BG0+V1GL2UQ51-XG13/14	TPE	4	3	18	5	
=V1GL2UQ51BG0-W8	=V1GL2UQ51BG0+V1GL2UQ51-XG15/16	=V1GL2UQ51KF3+V1GL2UQ51-KF3.13-X2	TPE	4	4	18	0.5	
=V1GL2UQ51BG0-W8.1	=V1GL2UQ51BG0+V1GL2UQ51-BG15	=V1GL2UQ51BG0+V1GL2UQ51-XG15/16	TPE	4	3	18	6	
=V1GL2UQ51BG0-W8.2	=V1GL2UQ51BG0+V1GL2UQ51-BG16	=V1GL2UQ51BG0+V1GL2UQ51-XG15/16	TPE	4	3	18	6	
=V1GL2UQ51BG0-W9	=V1GL2UQ51BG0+V1GL2UQ51-BG17	=V1GL2UQ51KF3+V1GL2UQ51-KF3.13-X3	TPE	4	3	18	8	
=V1GL2UQ51BG0-W10	=V1GL2UQ51BG0+V1GL2UQ51-BG18	=V1GL2UQ51KF3+V1GL2UQ51-KF3.13-X4	TPE	4	3	18	8	
=V1GL2UQ51UQ1.1-W1	=V1GL2UQ51KF1+V1GL2UQ51-KF1.11-X1	=V1GL2UQ51UQ1.1+V1GL2UQ51UQ1.1-XGR/S	TPE	4	4	18	4	
=V1GL2UQ51UQ1.1-W1.1	=V1GL2UQ51UQ1.1+V1GL2UQ51UQ1.1-BGR	=V1GL2UQ51UQ1.1+V1GL2UQ51UQ1.1-XGR/S	TPE	4	3	18	0.5	
=V1GL2UQ51UQ1.1-W1.2	=V1GL2UQ51UQ1.1+V1GL2UQ51UQ1.1-BGS	=V1GL2UQ51UQ1.1+V1GL2UQ51UQ1.1-XGR/S	TPE	4	3	18	0.5	
=V1GL2UQ51UQ2.1-W1	=V1GL2UQ51KF1+V1GL2UQ51-KF1.11-X2	=V1GL2UQ51UQ2.1+V1GL2UQ51UQ2.1-XGR/S	TPE	4	4	18	4	
=V1GL2UQ51UQ2.1-W1.1	=V1GL2UQ51UQ2.1+V1GL2UQ51UQ2.1-BGR	=V1GL2UQ51UQ2.1+V1GL2UQ51UQ2.1-XGR/S	TPE	4	3	18	0.5	
=V1GL2UQ51UQ2.1-W1.2	=V1GL2UQ51UQ2.1+V1GL2UQ51UQ2.1-BGS	=V1GL2UQ51UQ2.1+V1GL2UQ51UQ2.1-XGR/S	TPE	4	3	18	0.5	
=V1GL2UQ51UQ3.1-W1	=V1GL2UQ51KF1+V1GL2UQ51-KF1.11-X3	=V1GL2UQ51UQ3.1+V1GL2UQ51UQ3.1-XGR/S	TPE	4	4	18	6	
=V1GL2UQ51UQ3.1-W1.1	=V1GL2UQ51UQ3.1+V1GL2UQ51UQ3.1-BGR	=V1GL2UQ51UQ3.1+V1GL2UQ51UQ3.1-XGR/S	TPE	4	3	18	0.5	
=V1GL2UQ51UQ3.1-W1.2	=V1GL2UQ51UQ3.1+V1GL2UQ51UQ3.1-BGS	=V1GL2UQ51UQ3.1+V1GL2UQ51UQ3.1-XGR/S	TPE	4	3	18	0.5	
=V1GL2UQ51UQ4.1-W1	=V1GL2UQ51KF1+V1GL2UQ51-KF1.11-X4	=V1GL2UQ51UQ4.1+V1GL2UQ51UQ4.1-XGR/S	TPE	4	4	18	3	
=V1GL2UQ51UQ4.1-W1.1	=V1GL2UQ51UQ4.1+V1GL2UQ51UQ4.1-BGR	=V1GL2UQ51UQ4.1+V1GL2UQ51UQ4.1-XGR/S	TPE	4	3	18	0.5	
=V1GL2UQ51UQ4.1-W1.2	=V1GL2UQ51UQ4.1+V1GL2UQ51UQ4.1-BGS	=V1GL2UQ51UQ4.1+V1GL2UQ51UQ4.1-XGR/S	TPE	4	3	18	0.5	
=V1GL2UQ51UQ4.2-W1	=V1GL2UQ51KF1+V1GL2UQ51-KF1.11-X5	=V1GL2UQ51UQ4.2+V1GL2UQ51UQ4.2-BGS/R	TPE	4	4	18	3	
=V1GL2UQ51UQ4.3-W1	=V1GL2UQ51KF1+V1GL2UQ51-KF1.11-X6	=V1GL2UQ51UQ4.3+V1GL2UQ51UQ4.3-XGR/S	TPE	4	4	18	4	
=V1GL2UQ51UQ4.3-W1.1	=V1GL2UQ51UQ4.3+V1GL2UQ51UQ4.3-BGR	=V1GL2UQ51UQ4.3+V1GL2UQ51UQ4.3-XGR/S	TPE	4	3	18	0.5	
=V1GL2UQ51UQ4.3-W1.2	=V1GL2UQ51UQ4.3+V1GL2UQ51UQ4.3-BGS	=V1GL2UQ51UQ4.3+V1GL2UQ51UQ4.3-XGR/S	TPE	4	3	18	0.5	
=V1GL2UQ51UQ5.1-W1	=V1GL2UQ51KF1+V1GL2UQ51-KF1.11-X7	=V1GL2UQ51UQ5.1+V1GL2UQ51UQ5.1-BGS/R	TPE	4	4	18	4	
=V1GL2UQ51UQ5.2-W1	=V1GL2UQ51KF1+V1GL2UQ51-KF1.11-X8	=V1GL2UQ51UQ5.2+V1GL2UQ51UQ5.2-BGS/R	TPE	4	4	18	4	
=V1GL2UQ51UQ5.3-W1	=V1GL2UQ51KF1+V1GL2UQ51-KF1.12-X1	=V1GL2UQ51UQ5.3+V1GL2UQ51UQ5.3-BGS/R	TPE	4	4	18	5	
=V1GL2UQ51UQ6.1-W1	=V1GL2UQ51KF1+V1GL2UQ51-KF1.12-X2	=V1GL2UQ51UQ6.1+V1GL2UQ51UQ6.1-XGR/S	TPE	4	4	18	5	
=V1GL2UQ51UQ6.1-W1.1	=V1GL2UQ51UQ6.1+V1GL2UQ51UQ6.1-BGR	=V1GL2UQ51UQ6.1+V1GL2UQ51UQ6.1-XGR/S	TPE	4	3	18	0.5	
=V1GL2UQ51UQ6.1-W1.2	=V1GL2UQ51UQ6.1+V1GL2UQ51UQ6.1-BGS	=V1GL2UQ51UQ6.1+V1GL2UQ51UQ6.1-XGR/S	TPE	4	3	18	0.5	
=V1GL2UQ51UQ6.2-W1	=V1GL2UQ51KF1+V1GL2UQ51-KF1.12-X3	=V1GL2UQ51UQ6.2+V1GL2UQ51UQ6.2-XGR/S	TPE	4	4	18	4	
=V1GL2UQ51UQ6.2-W1.1	=V1GL2UQ51UQ6.2+V1GL2UQ51UQ6.2-BGR	=V1GL2UQ51UQ6.2+V1GL2UQ51UQ6.2-XGR/S	TPE	4	3	18	0.5	
=V1GL2UQ51UQ6.2-W1.2	=V1GL2UQ51UQ6.2+V1GL2UQ51UQ6.2-BGS	=V1GL2UQ51UQ6.2+V1GL2UQ51UQ6.2-XGR/S	TPE	4	3	18	0.5	
=V1GL2UQ51UQ7.1-W1	=V1GL2UQ51KF1+V1GL2UQ51-KF1.12-X4	=V1GL2UQ51UQ7.1+V1GL2UQ51UQ7.1-XGR/S	TPE	4	4	18	6	
=V1GL2UQ51UQ7.1-W1.1	=V1GL2UQ51UQ7.1+V1GL2UQ51UQ7.1-BGR	=V1GL2UQ51UQ7.1+V1GL2UQ51UQ7.1-XGR/S	TPE	4	3	18	0.5	
=V1GL2UQ51UQ7.1-W1.2	=V1GL2UQ51UQ7.1+V1GL2UQ51UQ7.1-BGS	=V1GL2UQ51UQ7.1+V1GL2UQ51UQ7.1-XGR/S	TPE	4	3	18	0.5	
=V1GL2UQ51UQ8.1-W1	=V1GL2UQ51KF1+V1GL2UQ51-KF1.12-X5	=V1GL2UQ51UQ8.1+V1GL2UQ51UQ8.1-BGS/R	TPE	4	4	18	5	
=V1GL2UQ51UQ8.2-W1	=V1GL2UQ51KF1+V1GL2UQ51-KF1.12-X6	=V1GL2UQ51UQ8.2+V1GL2UQ51UQ8.2-BGS/R	TPE	4	4	18	6	
=V1GL2UQ51UQ8.3-W1	=V1GL2UQ51KF1+V1GL2UQ51-KF1.12-X7	=V1GL2UQ51UQ8.3+V1GL2UQ51UQ8.3-BGS/R	TPE	4	4	18	5	

			Date	1/17/2023	Volvo Trucks North America	Valiant TMS	Cable overview	Drawing name: =2V09&EFS-EL	=
			Ed.	MKLEPADLO					+
			Appr		P6700 Bodyside LH - Robot Cell 2V09			Document type: EMC	Project nr: 22-16150
Modification	Date	Name	Original		Replacement of	Replaced by	Scale 1:1		Page 18 / 1533

Cable overview

F10_001_Cable

Cable name	Source (from)	Target (to)	cable type	all conductors	Conductors used	Cross-section [mm]	Length [m]	remark
=V1GL2UQ51UQ8.4-W1	=V1GL2UQ51KF1+V1GL2UQ51-KF1.12-X8	=V1GL2UQ51UQ8.4+V1GL2UQ51UQ8.4-BGS/R	TPE	4	4	18	2	
=V1GL2UQ51UQ9.1-W1	=V1GL2UQ51KF2+V1GL2UQ51-KF2.11-X1	=V1GL2UQ51UQ9.1+V1GL2UQ51UQ9.1-BGS/R	TPE	4	4	18	7	
=V1GL2UQ51UQ10.1-W1	=V1GL2UQ51KF2+V1GL2UQ51-KF2.11-X2	=V1GL2UQ51UQ10.1+V1GL2UQ51UQ10.1-BGS/R	TPE	4	4	18	3	
=V1GL2UQ51UQ10.2-W1	=V1GL2UQ51KF2+V1GL2UQ51-KF2.11-X3	=V1GL2UQ51UQ10.2+V1GL2UQ51UQ10.2-BGS/R	TPE	4	4	18	3	
=V1GL2UQ51UQ10.3-W1	=V1GL2UQ51KF2+V1GL2UQ51-KF2.11-X4	=V1GL2UQ51UQ10.3+V1GL2UQ51UQ10.3-BGS/R	TPE	4	4	18	3	
=V1GL2UQ51UQ10.4-W1	=V1GL2UQ51KF2+V1GL2UQ51-KF2.11-X5	=V1GL2UQ51UQ10.4+V1GL2UQ51UQ10.4-BGS/R	TPE	4	4	18	4	
=V1GL2UQ51UQ10.5-W1	=V1GL2UQ51KF2+V1GL2UQ51-KF2.11-X6	=V1GL2UQ51UQ10.5+V1GL2UQ51UQ10.5-BGS/R	TPE	4	4	18	3	
=V1GL2UQ51UQ10.6-W1	=V1GL2UQ51KF2+V1GL2UQ51-KF2.11-X7	=V1GL2UQ51UQ10.6+V1GL2UQ51UQ10.6-BGS/R	TPE	4	4	18	3	
=V1GL2UQ51UQ11.1-W1	=V1GL2UQ51KF2+V1GL2UQ51-KF2.11-X8	=V1GL2UQ51UQ11.1+V1GL2UQ51UQ11.1-BGS/R	TPE	4	4	18	4	
=V1GL2UQ51UQ12.1-W1	=V1GL2UQ51KF2+V1GL2UQ51-KF2.12-X1	=V1GL2UQ51UQ12.1+V1GL2UQ51UQ12.1-BGS/R	TPE	4	4	18	3	
=V1GL2UQ51UQ13.1-W1	=V1GL2UQ51KF2+V1GL2UQ51-KF2.12-X2	=V1GL2UQ51UQ13.1+V1GL2UQ51UQ13.1-BGS/R	TPE	4	4	18	4	
=V1GL2UQ51UQ14.1-W1	=V1GL2UQ51KF2+V1GL2UQ51-KF2.12-X3	=V1GL2UQ51UQ14.1+V1GL2UQ51UQ14.1-BGS/R	TPE	4	4	18	3	
=V1GL2UQ51UQ15.1-W1	=V1GL2UQ51KF2+V1GL2UQ51-KF2.12-X4	=V1GL2UQ51UQ15.1+V1GL2UQ51UQ15.1-BGS/R	TPE	4	4	18	5	
=V1GL2UQ51UQ16.1-W1	=V1GL2UQ51KF2+V1GL2UQ51-KF2.12-X5	=V1GL2UQ51UQ16.1+V1GL2UQ51UQ16.1-BGS/R	TPE	4	4	18	4	
=V1GL2UQ51UQ17.1-W1	=V1GL2UQ51KF3+V1GL2UQ51-KF3.11-X1	=V1GL2UQ51UQ17.1+V1GL2UQ51UQ17.1-BGS/R	TPE	4	4	18	4	
=V1GL2UQ51UQ17.2-W1	=V1GL2UQ51KF3+V1GL2UQ51-KF3.11-X2	=V1GL2UQ51UQ17.2+V1GL2UQ51UQ17.2-BGS/R	TPE	4	4	18	5	
=V1GL2UQ51UQ17.3-W1	=V1GL2UQ51KF3+V1GL2UQ51-KF3.11-X3	=V1GL2UQ51UQ17.3+V1GL2UQ51UQ17.3-BGS/R	TPE	4	4	18	5	
=V1GL2UQ51UQ17.4-W1	=V1GL2UQ51KF3+V1GL2UQ51-KF3.11-X4	=V1GL2UQ51UQ17.4+V1GL2UQ51UQ17.4-BGS/R	TPE	4	4	18	5	
=V1GL2UQ51UQ18.1-W1	=V1GL2UQ51KF3+V1GL2UQ51-KF3.11-X5	=V1GL2UQ51UQ18.1+V1GL2UQ51UQ18.1-BGS/R	TPE	4	4	18	5	
=V1GL2UQ51UQ18.2-W1	=V1GL2UQ51KF3+V1GL2UQ51-KF3.11-X6	=V1GL2UQ51UQ18.2+V1GL2UQ51UQ18.2-BGS/R	TPE	4	4	18	5	
=V1GL2UQ51UQ19.1-W1	=V1GL2UQ51KF3+V1GL2UQ51-KF3.11-X7	=V1GL2UQ51UQ19.1+V1GL2UQ51UQ19.1-BGS/R	TPE	4	4	18	8	
=V1GL2UQ51UQ19.2-W1	=V1GL2UQ51KF3+V1GL2UQ51-KF3.11-X8	=V1GL2UQ51UQ19.2+V1GL2UQ51UQ19.2-BGS/R	TPE	4	4	18	8	
=V1GL2UQ51UQ20.1-W1	=V1GL2UQ51KF3+V1GL2UQ51-KF3.12-X1	=V1GL2UQ51UQ20.1+V1GL2UQ51UQ20.1-BGS/R	TPE	4	4	18	5	
=V1GL2UQ51UQ21.1-W1	=V1GL2UQ51KF3+V1GL2UQ51-KF3.12-X2	=V1GL2UQ51UQ21.1+V1GL2UQ51UQ21.1-BGS/R	TPE	4	4	18	5	
=V1GL2UQ51UQ22.1-W1	=V1GL2UQ51KF3+V1GL2UQ51-KF3.12-X3	=V1GL2UQ51UQ22.1+V1GL2UQ51UQ22.1-BGS/R	TPE	4	4	18	6	
=V1GL2UQ51UQ22.2-W1	=V1GL2UQ51KF3+V1GL2UQ51-KF3.12-X4	=V1GL2UQ51UQ22.2+V1GL2UQ51UQ22.2-BGS/R	TPE	4	4	18	6	
=V1GL2UQ51UQ22.3-W1	=V1GL2UQ51KF3+V1GL2UQ51-KF3.12-X5	=V1GL2UQ51UQ22.3+V1GL2UQ51UQ22.3-BGS/R	TPE	4	4	18	6	
=V1GL2UQ51UQ23.1-W1	=V1GL2UQ51KF3+V1GL2UQ51-KF3.12-X6	=V1GL2UQ51UQ23.1+V1GL2UQ51UQ23.1-BGS/R	TPE	4	4	18	6	
=V1GL2UQ51UQ24.1-W1	=V1GL2UQ51KF3+V1GL2UQ51-KF3.12-X7	=V1GL2UQ51UQ24.1+V1GL2UQ51UQ24.1-BGS/R	TPE	4	4	18	8	
=V1GL2UQ51UQ25.1-W1	=V1GL2UQ51KF4+V1GL2UQ51-KF4.11-X1	=V1GL2UQ51UQ25.1+V1GL2UQ51UQ25.1-BGS/R	TPE	4	4	18	8	
=V1GL2UQ51UQ26.1-W1	=V1GL2UQ51KF4+V1GL2UQ51-KF4.11-X2	=V1GL2UQ51UQ26.1+V1GL2UQ51UQ26.1-BGS/R	TPE	4	4	18	3	
=V1GL2UQ51UQ27.1-W1	=V1GL2UQ51KF4+V1GL2UQ51-KF4.11-X3	=V1GL2UQ51UQ27.1+V1GL2UQ51UQ27.1-BGS/R	TPE	4	4	18	5	
=V1GL2UQ51UQ28.1-W1	=V1GL2UQ51KF4+V1GL2UQ51-KF4.11-X4	=V1GL2UQ51UQ28.1+V1GL2UQ51UQ28.1-BGS/R	TPE	4	4	18	5	
=V1GL2UQ51UQ29.1-W1	=V1GL2UQ51KF4+V1GL2UQ51-KF4.11-X5	=V1GL2UQ51UQ29.1+V1GL2UQ51UQ29.1-XGR/S	TPE	4	4	18	6	
=V1GL2UQ51UQ29.1-W1.1	=V1GL2UQ51UQ29.1+V1GL2UQ51UQ29.1-BGR	=V1GL2UQ51UQ29.1+V1GL2UQ51UQ29.1-XGR/S	TPE	4	3	18	0.5	
=V1GL2UQ51UQ29.1-W1.2	=V1GL2UQ51UQ29.1+V1GL2UQ51UQ29.1-BGS	=V1GL2UQ51UQ29.1+V1GL2UQ51UQ29.1-XGR/S	TPE	4	3	18	0.5	
=V1GL2UQ51UQ30.1-W1	=V1GL2UQ51KF4+V1GL2UQ51-KF4.11-X6	=V1GL2UQ51UQ30.1+V1GL2UQ51UQ30.1-BGS/R	TPE	4	4	18	6	
=V1GL2UQ51UQ31.1-W1	=V1GL2UQ51KF4+V1GL2UQ51-KF4.11-X7	=V1GL2UQ51UQ31.1+V1GL2UQ51UQ31.1-BGS/R	TPE	4	4	18	5	
=V1GL2UQ51UQ32.1-W1	=V1GL2UQ51KF4+V1GL2UQ51-KF4.11-X8	=V1GL2UQ51UQ32.1+V1GL2UQ51UQ32.1-BGS/R	TPE	4	4	18	4	
=V1GL17UQ51BG0-W1	=V1GL17UQ51BG0+V1GL17UQ51-XG1/2	=V1GL17UQ51KF1+V1GL17UQ51-KF1.12-X1	TPE	4	4	18	3	
=V1GL17UQ51BG0-W1.1	=V1GL17UQ51BG0+V1GL17UQ51-BG01	=V1GL17UQ51BG0+V1GL17UQ51-XG1/2	TPE	4	3	18	1	
=V1GL17UQ51BG0-W1.2	=V1GL17UQ51BG0+V1GL17UQ51-BG02	=V1GL17UQ51BG0+V1GL17UQ51-XG1/2	TPE	4	3	18	1	
=V1GL17UQ51BG0-W2	=V1GL17UQ51BG0+V1GL17UQ51-XG3/4	=V1GL17UQ51KF1+V1GL17UQ51-KF1.12-X2	TPE	4	4	18	1	
=V1GL17UQ51BG0-W2.1	=V1GL17UQ51BG0+V1GL17UQ51-BG03	=V1GL17UQ51BG0+V1GL17UQ51-XG3/4	TPE	4	3	18	2	
=V1GL17UQ51BG0-W2.2	=V1GL17UQ51BG0+V1GL17UQ51-BG04	=V1GL17UQ51BG0+V1GL17UQ51-XG3/4	TPE	4	3	18	2	
=V1GL17UQ51BG0-W3	=V1GL17UQ51BG0+V1GL17UQ51-XG5/11	=V1GL17UQ51KF1+V1GL17UQ51-KF1.12-X3	TPE	4	4	18	1	

			Date	1/17/2023	Volvo Trucks North America	Valiant TMS	Cable overview	Drawing name: =2V09&EFS-EL	=
			Ed.	MKLEPADLO					+
			Appr		P6700 Bodyside LH - Robot Cell 2V09			Document type: EMC	Project nr: 22-16150
Modification	Date	Name	Original		Replacement of	Replaced by	Scale 1:1		Page 19 / 1533

Cable overview

F10_001_Cable

Cable name	Source (from)	Target (to)	cable type	all conductors	Conductors used	Cross-section [mm]	Length [m]	remark
=V1GL17UQ51BG0-W3.1	=V1GL17UQ51BG0+V1GL17UQ51-BG10	=V1GL17UQ51BG0+V1GL17UQ51-XG5/11	TPE	4	3	18	2	
=V1GL17UQ51BG0-W3.2	=V1GL17UQ51BG0+V1GL17UQ51-BG11	=V1GL17UQ51BG0+V1GL17UQ51-XG5/11	TPE	4	3	18	2	
=V1GL17UQ51UQ1.1-W1	=V1GL17UQ51KF1+V1GL17UQ51-KF1.11-X1	=V1GL17UQ51UQ1.1+V1GL17UQ51UQ1.1-XGR/S	TPE	4	4	18	4	
=V1GL17UQ51UQ1.1-W1.1	=V1GL17UQ51UQ1.1+V1GL17UQ51UQ1.1-BGR	=V1GL17UQ51UQ1.1+V1GL17UQ51UQ1.1-XGR/S	TPE	4	3	18	0.5	
=V1GL17UQ51UQ1.1-W1.2	=V1GL17UQ51UQ1.1+V1GL17UQ51UQ1.1-BGS	=V1GL17UQ51UQ1.1+V1GL17UQ51UQ1.1-XGR/S	TPE	4	3	18	0.5	
=V1GL17UQ51UQ2.1-W1	=V1GL17UQ51KF1+V1GL17UQ51-KF1.11-X2	=V1GL17UQ51UQ2.1+V1GL17UQ51UQ2.1-XGR/S	TPE	4	4	18	4	
=V1GL17UQ51UQ2.1-W1.1	=V1GL17UQ51UQ2.1+V1GL17UQ51UQ2.1-BGR	=V1GL17UQ51UQ2.1+V1GL17UQ51UQ2.1-XGR/S	TPE	4	3	18	0.5	
=V1GL17UQ51UQ2.1-W1.2	=V1GL17UQ51UQ2.1+V1GL17UQ51UQ2.1-BGS	=V1GL17UQ51UQ2.1+V1GL17UQ51UQ2.1-XGR/S	TPE	4	3	18	0.5	
=V1GL17UQ51UQ6.1-W1	=V1GL17UQ51KF1+V1GL17UQ51-KF1.11-X3	=V1GL17UQ51UQ6.1+V1GL17UQ51UQ6.1-XGR/S	TPE	4	4	18	4	
=V1GL17UQ51UQ6.1-W1.1	=V1GL17UQ51UQ6.1+V1GL17UQ51UQ6.1-BGR	=V1GL17UQ51UQ6.1+V1GL17UQ51UQ6.1-XGR/S	TPE	4	3	18	0.5	
=V1GL17UQ51UQ6.1-W1.2	=V1GL17UQ51UQ6.1+V1GL17UQ51UQ6.1-BGS	=V1GL17UQ51UQ6.1+V1GL17UQ51UQ6.1-XGR/S	TPE	4	3	18	0.5	
=V1PF1UQ1.1-W1	=V1PF1KF1+V1PF1-KF1.11-X1	=V1PF1UQ1.1+V1PF1UQ1.1-BGS/R	TPE	4	4	18	2	
=V1U10FQ1-W1	=V1KF1+V1UC12-KF12.32	=V1U10FQ1+V1U10-BG01	TPE	4	4	18	20	
=V1U10U01PF1-W1.1	=V1U10U01KF1+V1U10U01-KF1.11	=V1U10U01PF1+V1U10U01-PF1-Branch1	TPE	4	4	18	5	
=V1U10U01PF1-W1.2	=V1U10U01KF1+V1U10U01-KF1.11	=V1U10U01PF1+V1U10U01-PF1-Branch2	TPE	4	4	18	5	
=V1U20U01PF1-W1.1	=V1U20U01KF1+V1U20U01-KF1.11	=V1U20U01PF1+V1U20U01-PF1-Branch1	TPE	4	4	18	5	
=V1U20U01PF1-W1.2	=V1U20U01KF1+V1U20U01-KF1.11	=V1U20U01PF1+V1U20U01-PF1-Branch2	TPE	4	4	18	5	
=V1UN1BG0-W1	=V1UN1BG0+V1UN1-XG1/2	=V1UN1KF1+V1UN1-KF1.11	TPE	4	4	18	0.5	
=V1UN1BG0-W1.1	=V1UN1BG0+V1UN1-BG01	=V1UN1BG0+V1UN1-XG1/2	TPE	4	3	18	2	
=V1UN1BG0-W1.2	=V1UN1BG0+V1UN1-BG02	=V1UN1BG0+V1UN1-XG1/2	TPE	4	3	18	5	
=V1UN1BG0-W2	=V1UN1BG0+V1UN1-BG03	=V1UN1KF1+V1UN1-KF1.11	TPE	4	3	18	5	
=V1UN1BG0-W3	=V1UN1BG0+V1UN1-BG04	=V1UN1KF1+V1UN1-KF1.11	TPE	4	3	18	5	
=V1UN1FQ1-W1	=V1KF1+V1UC15-KF15.31	=V1UN1FQ1+V1UN1-BG01	TPE	4	4	18	20	
=V1UN1PF1-W1.1	=V1UN1KF1+V1UN1-KF1.11	=V1UN1PF1+V1UN1-PF1-Branch1	TPE	4	4	18	5	
=V1UN1PF1-W1.2	=V1UN1KF1+V1UN1-KF1.11	=V1UN1PF1+V1UN1-PF1-Branch2	TPE	4	4	18	5	
=V1UQ51BG0-W1	=V1UQ51BG0+V1UQ51-XG1/2	=V1UQ51KF1+V1UQ51-KF1.13-X3	TPE	4	4	18	0.5	
=V1UQ51BG0-W1.1	=V1UQ51BG0+V1UQ51-BG01	=V1UQ51BG0+V1UQ51-XG1/2	TPE	4	3	18	3	
=V1UQ51BG0-W1.2	=V1UQ51BG0+V1UQ51-BG02	=V1UQ51BG0+V1UQ51-XG1/2	TPE	4	3	18	4	
=V1UQ51BG0-W2	=V1UQ51BG0+V1UQ51-XG3/4	=V1UQ51KF1+V1UQ51-KF1.13-X4	TPE	4	4	18	0.5	
=V1UQ51BG0-W2.1	=V1UQ51BG0+V1UQ51-BG03	=V1UQ51BG0+V1UQ51-XG3/4	TPE	4	3	18	5	
=V1UQ51BG0-W2.2	=V1UQ51BG0+V1UQ51-BG04	=V1UQ51BG0+V1UQ51-XG3/4	TPE	4	3	18	6	
=V1UQ51BG0-W3	=V1UQ51BG0+V1UQ51-BG05	=V1UQ51KF1+V1UQ51-KF1.13-X5	TPE	4	3	18	6	
=V1UQ51UQ1.1-W1	=V1UQ51KF1+V1UQ51-KF1.11-X1	=V1UQ51UQ1.1+V1UQ51UQ1.1-BGS/R	TPE	4	4	18	2	
=V1UQ51UQ2.1-W1	=V1UQ51KF1+V1UQ51-KF1.11-X2	=V1UQ51UQ2.1+V1UQ51UQ2.1-BGS/R	TPE	4	4	18	3	
=V1UQ51UQ3.1-W1	=V1UQ51KF1+V1UQ51-KF1.11-X3	=V1UQ51UQ3.1+V1UQ51UQ3.1-BGS/R	TPE	4	4	18	5	
=V1UQ51UQ4.1-W1	=V1UQ51KF1+V1UQ51-KF1.11-X4	=V1UQ51UQ4.1+V1UQ51UQ4.1-BGS/R	TPE	4	4	18	6	
=V1UQ51UQ4.2-W1	=V1UQ51KF1+V1UQ51-KF1.11-X5	=V1UQ51UQ4.2+V1UQ51UQ4.2-BGS/R	TPE	4	4	18	5	
=V1UQ51UQ5.1-W1	=V1UQ51KF1+V1UQ51-KF1.11-X6	=V1UQ51UQ5.1+V1UQ51UQ5.1-BGS/R	TPE	4	4	18	7	
=V1UQ51UQ5.2-W1	=V1UQ51KF1+V1UQ51-KF1.11-X7	=V1UQ51UQ5.2+V1UQ51UQ5.2-BGS/R	TPE	4	4	18	6	
=V1UQ51UQ6.1-W1	=V1UQ51KF1+V1UQ51-KF1.11-X8	=V1UQ51UQ6.1+V1UQ51UQ6.1-BGS/R	TPE	4	4	18	4	
=V1UQ51UQ7.1-W1	=V1UQ51KF1+V1UQ51-KF1.12-X1	=V1UQ51UQ7.1+V1UQ51UQ7.1-BGS/R	TPE	4	4	18	3	
=V1UQ51UQ7.2-W1	=V1UQ51KF1+V1UQ51-KF1.12-X2	=V1UQ51UQ7.2+V1UQ51UQ7.2-BGS/R	TPE	4	4	18	3	
=V1UQ51UQ7.3-W1	=V1UQ51KF1+V1UQ51-KF1.12-X3	=V1UQ51UQ7.3+V1UQ51UQ7.3-BGS/R	TPE	4	4	18	2	
=V1UQ51UQ7.4-W1	=V1UQ51KF1+V1UQ51-KF1.12-X4	=V1UQ51UQ7.4+V1UQ51UQ7.4-BGS/R	TPE	4	4	18	1	
=V1UQ51UQ7.5-W1	=V1UQ51KF1+V1UQ51-KF1.12-X5	=V1UQ51UQ7.5+V1UQ51UQ7.5-BGS/R	TPE	4	4	18	2	
=V1UQ51UQ8.1-W1	=V1UQ51KF1+V1UQ51-KF1.12-X6	=V1UQ51UQ8.1+V1UQ51UQ8.1-BGS/R	TPE	4	4	18	3	

			Date	1/17/2023	Volvo Trucks North America	Valiant TMS	Cable overview	Drawing name: =2V09&EFS-EL	=
			Ed.	MKLEPADLO					+
			Appr		P6700 Bodyside LH - Robot Cell 2V09			Document type: EMC	Project nr: 22-16150
Modification	Date	Name	Original		Replacement of	Replaced by	Scale 1:1		Page 20 / 1533

Cable overview

F10_001_Cable

Cable name	Source (from)	Target (to)	cable type	all conductors	Conductors used	Cross-section [mm]	Length [m]	remark
=V1UQ51UQ9.1-W1	=V1UQ51KF1+V1UQ51-KF1.12-X7	=V1UQ51UQ9.1+V1UQ51UQ9.1-BGS/R	TPE	4	4	18	6	
=V1UQ51UQ9.2-W1	=V1UQ51KF1+V1UQ51-KF1.12-X8	=V1UQ51UQ9.2+V1UQ51UQ9.2-BGS/R	TPE	4	4	18	5	
=V1UQ51UQ10.1-W1	=V1UQ51KF1+V1UQ51-KF1.13-X1	=V1UQ51UQ10.1+V1UQ51UQ10.1-BGS/R	TPE	4	4	18	5	
=V1UQ51UQ10.2-W1	=V1UQ51KF1+V1UQ51-KF1.13-X2	=V1UQ51UQ10.2+V1UQ51UQ10.2-BGS/R	TPE	4	4	18	4	
=V1UQ52BG0-W1	=V1UQ52BG0+V1UQ52-XG1/2	=V1UQ52KF2+V1UQ52-KF2.13-X1	TPE	4	4	18	0.5	
=V1UQ52BG0-W1.1	=V1UQ52BG0+V1UQ52-BG01	=V1UQ52BG0+V1UQ52-XG1/2	TPE	4	3	18	3	
=V1UQ52BG0-W1.2	=V1UQ52BG0+V1UQ52-BG02	=V1UQ52BG0+V1UQ52-XG1/2	TPE	4	3	18	3	
=V1UQ52BG0-W2	=V1UQ52BG0+V1UQ52-XG3/4	=V1UQ52KF2+V1UQ52-KF2.13-X2	TPE	4	4	18	0.5	
=V1UQ52BG0-W2.1	=V1UQ52BG0+V1UQ52-BG03	=V1UQ52BG0+V1UQ52-XG3/4	TPE	4	3	18	2	
=V1UQ52BG0-W2.2	=V1UQ52BG0+V1UQ52-BG04	=V1UQ52BG0+V1UQ52-XG3/4	TPE	4	3	18	3	
=V1UQ52BG0-W3	=V1UQ52BG0+V1UQ52-XG5/6	=V1UQ52KF2+V1UQ52-KF2.13-X3	TPE	4	4	18	0.5	
=V1UQ52BG0-W3.1	=V1UQ52BG0+V1UQ52-BG05	=V1UQ52BG0+V1UQ52-XG5/6	TPE	4	3	18	2	
=V1UQ52BG0-W3.2	=V1UQ52BG0+V1UQ52-BG06	=V1UQ52BG0+V1UQ52-XG5/6	TPE	4	3	18	3	
=V1UQ52BG0-W4	=V1UQ52BG0+V1UQ52-XG7/8	=V1UQ52KF2+V1UQ52-KF2.13-X4	TPE	4	4	18	0.5	
=V1UQ52BG0-W4.1	=V1UQ52BG0+V1UQ52-BG07	=V1UQ52BG0+V1UQ52-XG7/8	TPE	4	3	18	3	
=V1UQ52BG0-W4.2	=V1UQ52BG0+V1UQ52-BG08	=V1UQ52BG0+V1UQ52-XG7/8	TPE	4	3	18	4	
=V1UQ52BG0-W5	=V1UQ52BG0+V1UQ52-XG9/10	=V1UQ52KF2+V1UQ52-KF2.13-X5	TPE	4	4	18	0.5	
=V1UQ52BG0-W5.1	=V1UQ52BG0+V1UQ52-BG09	=V1UQ52BG0+V1UQ52-XG9/10	TPE	4	3	18	3	
=V1UQ52BG0-W5.2	=V1UQ52BG0+V1UQ52-BG10	=V1UQ52BG0+V1UQ52-XG9/10	TPE	4	3	18	5	
=V1UQ52UQ1.1-W1	=V1UQ52KF1+V1UQ52-KF1.11-X1	=V1UQ52UQ1.1+V1UQ52UQ1.1-BGS/R	TPE	4	4	18	3	
=V1UQ52UQ2.1-W1	=V1UQ52KF1+V1UQ52-KF1.11-X2	=V1UQ52UQ2.1+V1UQ52UQ2.1-XG2	TPE	4	4	18	2	
=V1UQ52UQ2.1-W1.1	=V1UQ52UQ2.1+V1UQ52UQ2.1-BGR	=V1UQ52UQ2.1+V1UQ52UQ2.1-XG2	TPE	4	3	18	0.5	
=V1UQ52UQ2.1-W1.2	=V1UQ52UQ2.1+V1UQ52UQ2.1-BGS	=V1UQ52UQ2.1+V1UQ52UQ2.1-XG2	TPE	4	3	18	0.5	
=V1UQ52UQ2.2-W1	=V1UQ52KF1+V1UQ52-KF1.11-X3	=V1UQ52UQ2.2+V1UQ52UQ2.2-BGS/R	TPE	4	4	18	2	
=V1UQ52UQ2.3-W1	=V1UQ52KF1+V1UQ52-KF1.11-X4	=V1UQ52UQ2.3+V1UQ52UQ2.3-BGS/R	TPE	4	4	18	2	
=V1UQ52UQ3.1-W1	=V1UQ52KF1+V1UQ52-KF1.11-X5	=V1UQ52UQ3.1+V1UQ52UQ3.1-BGS/R	TPE	4	4	18	3	
=V1UQ52UQ4.1-W1	=V1UQ52KF1+V1UQ52-KF1.11-X6	=V1UQ52UQ4.1+V1UQ52UQ4.1-XG4	TPE	4	4	18	4	
=V1UQ52UQ4.1-W1.1	=V1UQ52UQ4.1+V1UQ52UQ4.1-BGR	=V1UQ52UQ4.1+V1UQ52UQ4.1-XG4	TPE	4	3	18	0.5	
=V1UQ52UQ4.1-W1.2	=V1UQ52UQ4.1+V1UQ52UQ4.1-BGS	=V1UQ52UQ4.1+V1UQ52UQ4.1-XG4	TPE	4	3	18	0.5	
=V1UQ52UQ5.1-W1	=V1UQ52KF1+V1UQ52-KF1.11-X7	=V1UQ52UQ5.1+V1UQ52UQ5.1-BGS/R	TPE	4	4	18	2	
=V1UQ52UQ6.1-W1	=V1UQ52KF1+V1UQ52-KF1.11-X8	=V1UQ52UQ6.1+V1UQ52UQ6.1-BGS/R	TPE	4	4	18	1	
=V1UQ52UQ7.1-W1	=V1UQ52KF1+V1UQ52-KF1.12-X1	=V1UQ52UQ7.1+V1UQ52UQ7.1-BGS/R	TPE	4	4	18	2	
=V1UQ52UQ8.1-W1	=V1UQ52KF1+V1UQ52-KF1.12-X2	=V1UQ52UQ8.1+V1UQ52UQ8.1-BGS/R	TPE	4	4	18	1	
=V1UQ52UQ8.2-W1	=V1UQ52KF1+V1UQ52-KF1.12-X3	=V1UQ52UQ8.2+V1UQ52UQ8.2-BGS/R	TPE	4	4	18	3	
=V1UQ52UQ9.1-W1	=V1UQ52KF1+V1UQ52-KF1.12-X4	=V1UQ52UQ9.1+V1UQ52UQ9.1-BGS/R	TPE	4	4	18	2	
=V1UQ52UQ10.1-W1	=V1UQ52KF1+V1UQ52-KF1.12-X5	=V1UQ52UQ10.1+V1UQ52UQ10.1-BGS/R	TPE	4	4	18	2	
=V1UQ52UQ10.2-W1	=V1UQ52KF1+V1UQ52-KF1.12-X6	=V1UQ52UQ10.2+V1UQ52UQ10.2-BGS/R	TPE	4	4	18	2	
=V1UQ52UQ10.3-W1	=V1UQ52KF1+V1UQ52-KF1.12-X7	=V1UQ52UQ10.3+V1UQ52UQ10.3-BGS/R	TPE	4	4	18	2	
=V1UQ52UQ10.4-W1	=V1UQ52KF1+V1UQ52-KF1.12-X8	=V1UQ52UQ10.4+V1UQ52UQ10.4-BGS/R	TPE	4	4	18	1	
=V1UQ52UQ10.5-W1	=V1UQ52KF1+V1UQ52-KF1.13-X1	=V1UQ52UQ10.5+V1UQ52UQ10.5-BGS/R	TPE	4	4	18	2	
=V1UQ52UQ10.6-W1	=V1UQ52KF1+V1UQ52-KF1.13-X2	=V1UQ52UQ10.6+V1UQ52UQ10.6-BGS/R	TPE	4	4	18	2	
=V1UQ52UQ11.1-W1	=V1UQ52KF2+V1UQ52-KF2.11-X1	=V1UQ52UQ11.1+V1UQ52UQ11.1-BGS/R	TPE	4	4	18	3	
=V1UQ52UQ11.2-W1	=V1UQ52KF2+V1UQ52-KF2.11-X2	=V1UQ52UQ11.2+V1UQ52UQ11.2-BGS/R	TPE	4	4	18	2	
=V1UQ52UQ11.3-W1	=V1UQ52KF2+V1UQ52-KF2.11-X3	=V1UQ52UQ11.3+V1UQ52UQ11.3-BGS/R	TPE	4	4	18	3	
=V1UQ52UQ12.1-W1	=V1UQ52KF2+V1UQ52-KF2.11-X4	=V1UQ52UQ12.1+V1UQ52UQ12.1-BGS/R	TPE	4	4	18	2	
=V1UQ52UQ12.2-W1	=V1UQ52KF2+V1UQ52-KF2.11-X5	=V1UQ52UQ12.2+V1UQ52UQ12.2-BGS/R	TPE	4	4	18	5	

			Date	1/17/2023	Volvo Trucks North America	Valiant TMS	Cable overview	Drawing name: =2V09&EFS-EL	=
			Ed.	MKLEPADLO					+
			Appr		P6700 Bodyside LH - Robot Cell 2V09			Document type: EMC	Project nr: 22-16150
Modification	Date	Name	Original		Replacement of	Replaced by	Scale 1:1		Page 21 / 1533

Cable overview

F10_001_Cable

Cable name	Source (from)	Target (to)	cable type	all conductors	Conductors used	Cross-section [mm]	Length [m]	remark
=V1UQ52UQ13.1-W1	=V1UQ52KF2+V1UQ52-KF2.11-X6	=V1UQ52UQ13.1+V1UQ52UQ13.1-BGS/R	TPE	4	4	18	2	
=V1UQ52UQ14.1-W1	=V1UQ52KF2+V1UQ52-KF2.11-X7	=V1UQ52UQ14.1+V1UQ52UQ14.1-BGS/R	TPE	4	4	18	5	
=V1UQ52UQ14.2-W1	=V1UQ52KF2+V1UQ52-KF2.11-X8	=V1UQ52UQ14.2+V1UQ52UQ14.2-BGS/R	TPE	4	4	18	3	
=V1UQ52UQ14.3-W1	=V1UQ52KF2+V1UQ52-KF2.12-X1	=V1UQ52UQ14.3+V1UQ52UQ14.3-BGS/R	TPE	4	4	18	3	
=V1UQ52UQ15.1-W1	=V1UQ52KF2+V1UQ52-KF2.12-X2	=V1UQ52UQ15.1+V1UQ52UQ15.1-BGS/R	TPE	4	4	18	2	
=V1UQ52UQ16.1-W1	=V1UQ52KF2+V1UQ52-KF2.12-X3	=V1UQ52UQ16.1+V1UQ52UQ16.1-BGS/R	TPE	4	4	18	2	
=V1UQ52UQ17.1-W1	=V1UQ52KF2+V1UQ52-KF2.12-X4	=V1UQ52UQ17.1+V1UQ52UQ17.1-BGS/R	TPE	4	4	18	3	
=V1UQ52UQ18.1-W1	=V1UQ52KF2+V1UQ52-KF2.12-X5	=V1UQ52UQ18.1+V1UQ52UQ18.1-BGS/R	TPE	4	4	18	2	
=V1UQ52UQ19.1-W1	=V1UQ52KF2+V1UQ52-KF2.12-X6	=V1UQ52UQ19.1+V1UQ52UQ19.1-BGS/R	TPE	4	4	18	2	
=V1UQ52UQ20.1-W1	=V1UQ52KF2+V1UQ52-KF2.12-X7	=V1UQ52UQ20.1+V1UQ52UQ20.1-BGS/R	TPE	4	4	18	4	
=V1UQ52UQ21.1-W1	=V1UQ52KF3+V1UQ52-KF3.11-X1	=V1UQ52UQ21.1+V1UQ52UQ21.1-BGS/R	TPE	4	4	18	2	
=V1UQ52UQ22.1-W1	=V1UQ52KF3+V1UQ52-KF3.11-X2	=V1UQ52UQ22.1+V1UQ52UQ22.1-BGS/R	TPE	4	4	18	2	
=V1UQ52UQ23.1-W1	=V1UQ52KF3+V1UQ52-KF3.11-X3	=V1UQ52UQ23.1+V1UQ52UQ23.1-BGS/R	TPE	4	4	18	3	
=V1UQ52UQ24.1-W1	=V1UQ52KF3+V1UQ52-KF3.11-X4	=V1UQ52UQ24.1+V1UQ52UQ24.1-BGS/R	TPE	4	4	18	4	
=V1UQ52UQ25.1-W1	=V1UQ52KF3+V1UQ52-KF3.11-X5	=V1UQ52UQ25.1+V1UQ52UQ25.1-XGR/S	TPE	4	4	18	4	
=V1UQ52UQ25.1-W1.1	=V1UQ52UQ25.1+V1UQ52UQ25.1-BGR	=V1UQ52UQ25.1+V1UQ52UQ25.1-XGR/S	TPE	4	3	18	0.5	
=V1UQ52UQ25.1-W1.2	=V1UQ52UQ25.1+V1UQ52UQ25.1-BGS	=V1UQ52UQ25.1+V1UQ52UQ25.1-XGR/S	TPE	4	3	18	0.5	
=V1UQ52UQ26.1-W1	=V1UQ52KF3+V1UQ52-KF3.11-X6	=V1UQ52UQ26.1+V1UQ52UQ26.1-BGS/R	TPE	4	4	18	3	
=V1UQ52UQ27.1-W1	=V1UQ52KF3+V1UQ52-KF3.11-X7	=V1UQ52UQ27.1+V1UQ52UQ27.1-BGS/R	TPE	4	4	18	2	
=V1UQ52UQ28.1-W1	=V1UQ52KF3+V1UQ52-KF3.11-X8	=V1UQ52UQ28.1+V1UQ52UQ28.1-BGS/R	TPE	4	4	18	2	
=V1UQ52UQ29.1-W1	=V1UQ52KF3+V1UQ52-KF3.12-X1	=V1UQ52UQ29.1+V1UQ52UQ29.1-BGS/R	TPE	4	4	18	3	
=V1UQ52UQ30.1-W1	=V1UQ52KF3+V1UQ52-KF3.12-X2	=V1UQ52UQ30.1+V1UQ52UQ30.1-BGS/R	TPE	4	4	18	2	
=V1UQ52UQ31.1-W1	=V1UQ52KF4+V1UQ52-KF4.11-X1	=V1UQ52UQ31.1+V1UQ52UQ31.1-BGS/R	TPE	4	4	18	4	
=V1UQ52UQ32.1-W1	=V1UQ52KF4+V1UQ52-KF4.11-X2	=V1UQ52UQ32.1+V1UQ52UQ32.1-BGS/R	TPE	4	4	18	4	
=V1UQ52UQ33.1-W1	=V1UQ52KF4+V1UQ52-KF4.11-X3	=V1UQ52UQ33.1+V1UQ52UQ33.1-BGS/R	TPE	4	4	18	1	
=V1UQ52UQ34.1-W1	=V1UQ52KF4+V1UQ52-KF4.11-X4	=V1UQ52UQ34.1+V1UQ52UQ34.1-BGS/R	TPE	4	4	18	3	
=V1UQ52UQ35.1-W1	=V1UQ52KF4+V1UQ52-KF4.11-X5	=V1UQ52UQ35.1+V1UQ52UQ35.1-BGS/R	TPE	4	4	18	1	
=V1UQ52UQ36.1-W1	=V1UQ52KF4+V1UQ52-KF4.11-X6	=V1UQ52UQ36.1+V1UQ52UQ36.1-BGS/R	TPE	4	4	18	2	
=V1UQ52UQ37.1-W1	=V1UQ52KF4+V1UQ52-KF4.11-X7	=V1UQ52UQ37.1+V1UQ52UQ37.1-BGS/R	TPE	4	4	18	3	
=V1UQ52UQ38.1-W1	=V1UQ52KF4+V1UQ52-KF4.11-X8	=V1UQ52UQ38.1+V1UQ52UQ38.1-BGS/R	TPE	4	4	18	4	
=V1UQ52UQ39.1-W1	=V1UQ52KF4+V1UQ52-KF4.12-X1	=V1UQ52UQ39.1+V1UQ52UQ39.1-BGS/R	TPE	4	4	18	1	
=V1UQ52UQ40.1-W1	=V1UQ52KF4+V1UQ52-KF4.12-X2	=V1UQ52UQ40.1+V1UQ52UQ40.1-BGS/R	TPE	4	4	18	4	
=V1UQ52UQ41.1-W1	=V1UQ52KF5+V1UQ52-KF5.11-X1	=V1UQ52UQ41.1+V1UQ52UQ41.1-BGS/R	TPE	4	4	18	3	
=V1UQ52UQ42.1-W1	=V1UQ52KF5+V1UQ52-KF5.11-X2	=V1UQ52UQ42.1+V1UQ52UQ42.1-BGS/R	TPE	4	4	18	4	
=V1UQ52UQ42.2-W1	=V1UQ52KF5+V1UQ52-KF5.11-X3	=V1UQ52UQ42.2+V1UQ52UQ42.2-BGS/R	TPE	4	4	18	2	
=V1UQ52UQ43.1-W1	=V1UQ52KF5+V1UQ52-KF5.11-X4	=V1UQ52UQ43.1+V1UQ52UQ43.1-BGS/R	TPE	4	4	18	2	
=V1UQ52UQ44.1-W1	=V1UQ52KF5+V1UQ52-KF5.11-X5	=V1UQ52UQ44.1+V1UQ52UQ44.1-BGS/R	TPE	4	4	18	3	
=V1UQ52UQ44.2-W1	=V1UQ52KF5+V1UQ52-KF5.11-X6	=V1UQ52UQ44.2+V1UQ52UQ44.2-BGS/R	TPE	4	4	18	3	
=V1UQ52UQ45.1-W1	=V1UQ52KF5+V1UQ52-KF5.11-X7	=V1UQ52UQ45.1+V1UQ52UQ45.1-BGS/R	TPE	4	4	18	2	
=V1UQ52UQ46.1-W1	=V1UQ52KF5+V1UQ52-KF5.11-X8	=V1UQ52UQ46.1+V1UQ52UQ46.1-BGS/R	TPE	4	4	18	3	
=V1UQ53BG0-W1	=V1UQ53BG0+V1UQ53-XG1/2	=V1UQ53KF2+V1UQ53-KF2.12-X1	TPE	4	4	18	0.5	
=V1UQ53BG0-W1.1	=V1UQ53BG0+V1UQ53-BG01	=V1UQ53BG0+V1UQ53-XG1/2	TPE	4	3	18	3	
=V1UQ53BG0-W1.2	=V1UQ53BG0+V1UQ53-BG02	=V1UQ53BG0+V1UQ53-XG1/2	TPE	4	3	18	3	
=V1UQ53BG0-W2	=V1UQ53BG0+V1UQ53-XG3/4	=V1UQ53KF2+V1UQ53-KF2.12-X2	TPE	4	4	18	0.5	
=V1UQ53BG0-W2.1	=V1UQ53BG0+V1UQ53-BG03	=V1UQ53BG0+V1UQ53-XG3/4	TPE	4	3	18	4	
=V1UQ53BG0-W2.2	=V1UQ53BG0+V1UQ53-BG04	=V1UQ53BG0+V1UQ53-XG3/4	TPE	4	3	18	5	

			Date	1/17/2023	Volvo Trucks North America	Valiant TMS	Cable overview	Drawing name: =2V09&EFS-EL =
			Ed.	MKLEPADLO				+
			Appr		P6700 Bodyside LH - Robot Cell 2V09			Document type: EMC / Project nr: 22-16150 / Page 22 / 1533
Modification	Date	Name	Original		Replacement of / Replaced by	Scale 1:1		

Cable overview

F10_001_Cable

Cable name	Source (from)	Target (to)	cable type	all conductors	Conductors used	Cross-section [mm]	Length [m]	remark
=V1UQ53BG0-W3	=V1UQ53BG0+V1UQ53-BG05	=V1UQ53KF2+V1UQ53-KF2.12-X3	TPE	4	3	18	5	
=V1UQ53UQ1.1-W1	=V1UQ53KF1+V1UQ53-KF1.11-X1	=V1UQ53UQ1.1+V1UQ53UQ1.1-BGS/R	TPE	4	4	18	2	
=V1UQ53UQ2.1-W1	=V1UQ53KF1+V1UQ53-KF1.11-X2	=V1UQ53UQ2.1+V1UQ53UQ2.1-BGS/R	TPE	4	4	18	3	
=V1UQ53UQ3.1-W1	=V1UQ53KF1+V1UQ53-KF1.11-X3	=V1UQ53UQ3.1+V1UQ53UQ3.1-BGS/R	TPE	4	4	18	2	
=V1UQ53UQ3.2-W1	=V1UQ53KF1+V1UQ53-KF1.11-X4	=V1UQ53UQ3.2+V1UQ53UQ3.2-BGS/R	TPE	4	4	18	2	
=V1UQ53UQ3.3-W1	=V1UQ53KF1+V1UQ53-KF1.11-X5	=V1UQ53UQ3.3+V1UQ53UQ3.3-BGS/R	TPE	4	4	18	3	
=V1UQ53UQ3.4-W1	=V1UQ53KF1+V1UQ53-KF1.11-X6	=V1UQ53UQ3.4+V1UQ53UQ3.4-BGS/R	TPE	4	4	18	4	
=V1UQ53UQ3.5-W1	=V1UQ53KF1+V1UQ53-KF1.11-X7	=V1UQ53UQ3.5+V1UQ53UQ3.5-BGS/R	TPE	4	4	18	2	
=V1UQ53UQ4.1-W1	=V1UQ53KF1+V1UQ53-KF1.11-X8	=V1UQ53UQ4.1+V1UQ53UQ4.1-BGS/R	TPE	4	4	18	4	
=V1UQ53UQ4.2-W1	=V1UQ53KF1+V1UQ53-KF1.12-X1	=V1UQ53UQ4.2+V1UQ53UQ4.2-BGS/R	TPE	4	4	18	4	
=V1UQ53UQ4.3-W1	=V1UQ53KF1+V1UQ53-KF1.12-X2	=V1UQ53UQ4.3+V1UQ53UQ4.3-BGS/R	TPE	4	4	18	2	
=V1UQ53UQ5.1-W1	=V1UQ53KF1+V1UQ53-KF1.12-X3	=V1UQ53UQ5.1+V1UQ53UQ5.1-BGS/R	TPE	4	4	18	4	
=V1UQ53UQ5.2-W1	=V1UQ53KF1+V1UQ53-KF1.12-X4	=V1UQ53UQ5.2+V1UQ53UQ5.2-BGS/R	TPE	4	4	18	3	
=V1UQ53UQ5.3-W1	=V1UQ53KF1+V1UQ53-KF1.12-X5	=V1UQ53UQ5.3+V1UQ53UQ5.3-BGS/R	TPE	4	4	18	2	
=V1UQ53UQ6.1-W1	=V1UQ53KF1+V1UQ53-KF1.12-X6	=V1UQ53UQ6.1+V1UQ53UQ6.1-BGS/R	TPE	4	4	18	5	
=V1UQ53UQ7.1-W1	=V1UQ53KF1+V1UQ53-KF1.12-X7	=V1UQ53UQ7.1+V1UQ53UQ7.1-BGS/R	TPE	4	4	18	6	
=V1UQ53UQ8.1-W1	=V1UQ53KF1+V1UQ53-KF1.12-X8	=V1UQ53UQ8.1+V1UQ53UQ8.1-BGS/R	TPE	4	4	18	4	
=V1UQ53UQ8.2-W1	=V1UQ53KF1+V1UQ53-KF1.13-X1	=V1UQ53UQ8.2+V1UQ53UQ8.2-BGS/R	TPE	4	4	18	6	
=V1UQ53UQ9.1-W1	=V1UQ53KF1+V1UQ53-KF1.13-X2	=V1UQ53UQ9.1+V1UQ53UQ9.1-BGS/R	TPE	4	4	18	6	
=V1UQ53UQ10.1-W1	=V1UQ53KF1+V1UQ53-KF1.13-X3	=V1UQ53UQ10.1+V1UQ53UQ10.1-BGS/R	TPE	4	4	18	5	
=V1UQ53UQ10.2-W1	=V1UQ53KF1+V1UQ53-KF1.13-X4	=V1UQ53UQ10.2+V1UQ53UQ10.2-BGS/R	TPE	4	4	18	6	
=V1UQ53UQ11.1-W1	=V1UQ53KF2+V1UQ53-KF2.11-X1	=V1UQ53UQ11.1+V1UQ53UQ11.1-BGS/R	TPE	4	4	18	5	
=V1UQ53UQ11.2-W1	=V1UQ53KF2+V1UQ53-KF2.11-X2	=V1UQ53UQ11.2+V1UQ53UQ11.2-BGS/R	TPE	4	4	18	7	
=V1UQ53UQ12.1-W1	=V1UQ53KF2+V1UQ53-KF2.11-X3	=V1UQ53UQ12.1+V1UQ53UQ12.1-BGS/R	TPE	4	4	18	4	
=V1UQ53UQ13.1-W1	=V1UQ53KF2+V1UQ53-KF2.11-X4	=V1UQ53UQ13.1+V1UQ53UQ13.1-BGS/R	TPE	4	4	18	4	
=V1UQ53UQ14.1-W1	=V1UQ53KF2+V1UQ53-KF2.11-X5	=V1UQ53UQ14.1+V1UQ53UQ14.1-BGS/R	TPE	4	4	18	4	
=V1UQ53UQ15.1-W1	=V1UQ53KF2+V1UQ53-KF2.11-X6	=V1UQ53UQ15.1+V1UQ53UQ15.1-BGS/R	TPE	4	4	18	4	
=V1UQ53UQ16.1-W1	=V1UQ53KF2+V1UQ53-KF2.11-X7	=V1UQ53UQ16.1+V1UQ53UQ16.1-BGS/R	TPE	4	4	18	5	
=V1UQ53UQ17.1-W1	=V1UQ53KF2+V1UQ53-KF2.11-X8	=V1UQ53UQ17.1+V1UQ53UQ17.1-BGS/R	TPE	4	4	18	4	
=V1UQ54BG0-W1	=V1UQ54BG0+V1UQ54-XG1/2	=V1UQ54KF2+V1UQ54-KF2.12-X1	TPE	4	4	18	0.5	
=V1UQ54BG0-W1.1	=V1UQ54BG0+V1UQ54-BG01	=V1UQ54BG0+V1UQ54-XG1/2	TPE	4	3	18	2	
=V1UQ54BG0-W1.2	=V1UQ54BG0+V1UQ54-BG02	=V1UQ54BG0+V1UQ54-XG1/2	TPE	4	3	18	3	
=V1UQ54BG0-W2	=V1UQ54BG0+V1UQ54-XG3/4	=V1UQ54KF2+V1UQ54-KF2.12-X2	TPE	4	4	18	0.5	
=V1UQ54BG0-W2.1	=V1UQ54BG0+V1UQ54-BG03	=V1UQ54BG0+V1UQ54-XG3/4	TPE	4	3	18	4	
=V1UQ54BG0-W2.2	=V1UQ54BG0+V1UQ54-BG04	=V1UQ54BG0+V1UQ54-XG3/4	TPE	4	3	18	5	
=V1UQ54BG0-W3	=V1UQ54BG0+V1UQ54-BG05	=V1UQ54KF2+V1UQ54-KF2.12-X3	TPE	4	3	18	5	
=V1UQ54UQ1.1-W1	=V1UQ54KF1+V1UQ54-KF1.11-X1	=V1UQ54UQ1.1+V1UQ54UQ1.1-BGS/R	TPE	4	4	18	2	
=V1UQ54UQ2.1-W1	=V1UQ54KF1+V1UQ54-KF1.11-X2	=V1UQ54UQ2.1+V1UQ54UQ2.1-BGS/R	TPE	4	4	18	3	
=V1UQ54UQ3.1-W1	=V1UQ54KF1+V1UQ54-KF1.11-X3	=V1UQ54UQ3.1+V1UQ54UQ3.1-BGS/R	TPE	4	4	18	2	
=V1UQ54UQ3.2-W1	=V1UQ54KF1+V1UQ54-KF1.11-X4	=V1UQ54UQ3.2+V1UQ54UQ3.2-BGS/R	TPE	4	4	18	2	
=V1UQ54UQ3.3-W1	=V1UQ54KF1+V1UQ54-KF1.11-X5	=V1UQ54UQ3.3+V1UQ54UQ3.3-BGS/R	TPE	4	4	18	3	
=V1UQ54UQ4.1-W1	=V1UQ54KF1+V1UQ54-KF1.11-X6	=V1UQ54UQ4.1+V1UQ54UQ4.1-BGS/R	TPE	4	4	18	3	
=V1UQ54UQ4.2-W1	=V1UQ54KF1+V1UQ54-KF1.11-X7	=V1UQ54UQ4.2+V1UQ54UQ4.2-BGS/R	TPE	4	4	18	4	
=V1UQ54UQ4.3-W1	=V1UQ54KF1+V1UQ54-KF1.11-X8	=V1UQ54UQ4.3+V1UQ54UQ4.3-BGS/R	TPE	4	4	18	2	
=V1UQ54UQ5.1-W1	=V1UQ54KF1+V1UQ54-KF1.12-X1	=V1UQ54UQ5.1+V1UQ54UQ5.1-BGS/R	TPE	4	4	18	4	
=V1UQ54UQ5.2-W1	=V1UQ54KF1+V1UQ54-KF1.12-X2	=V1UQ54UQ5.2+V1UQ54UQ5.2-BGS/R	TPE	4	4	18	4	

			Date	1/17/2023	Volvo Trucks North America	Valiant TMS	Cable overview	Drawing name: =2V09&EFS-EL	=
			Ed.	MKLEPADLO					+
			Appr		P6700 Bodyside LH - Robot Cell 2V09			Document type: EMC	Project nr: 22-16150
Modification	Date	Name	Original		Replacement of	Replaced by	Scale 1:1		Page 23 / 1533

Cable overview

F10_001_Cable

Cable name	Source (from)	Target (to)	cable type	all conductors	Conductors used	Cross-section [mm]	Length [m]	remark
=V1UQ54UQ5.3-W1	=V1UQ54KF1+V1UQ54-KF1.12-X3	=V1UQ54UQ5.3+V1UQ54UQ5.3-BGS/R	TPE	4	4	18	2	
=V1UQ54UQ5.4-W1	=V1UQ54KF1+V1UQ54-KF1.12-X4	=V1UQ54UQ5.4+V1UQ54UQ5.4-BGS/R	TPE	4	4	18	5	
=V1UQ54UQ6.1-W1	=V1UQ54KF1+V1UQ54-KF1.12-X5	=V1UQ54UQ6.1+V1UQ54UQ6.1-BGS/R	TPE	4	4	18	5	
=V1UQ54UQ6.2-W1	=V1UQ54KF1+V1UQ54-KF1.12-X6	=V1UQ54UQ6.2+V1UQ54UQ6.2-BGS/R	TPE	4	4	18	1	
=V1UQ54UQ7.1-W1	=V1UQ54KF1+V1UQ54-KF1.12-X7	=V1UQ54UQ7.1+V1UQ54UQ7.1-BGS/R	TPE	4	4	18	4	
=V1UQ54UQ8.1-W1	=V1UQ54KF1+V1UQ54-KF1.12-X8	=V1UQ54UQ8.1+V1UQ54UQ8.1-BGS/R	TPE	4	4	18	4	
=V1UQ54UQ8.2-W1	=V1UQ54KF1+V1UQ54-KF1.13-X1	=V1UQ54UQ8.2+V1UQ54UQ8.2-BGS/R	TPE	4	4	18	6	
=V1UQ54UQ9.1-W1	=V1UQ54KF1+V1UQ54-KF1.13-X2	=V1UQ54UQ9.1+V1UQ54UQ9.1-BGS/R	TPE	4	4	18	6	
=V1UQ54UQ10.1-W1	=V1UQ54KF1+V1UQ54-KF1.13-X3	=V1UQ54UQ10.1+V1UQ54UQ10.1-BGS/R	TPE	4	4	18	5	
=V1UQ54UQ10.2-W1	=V1UQ54KF1+V1UQ54-KF1.13-X4	=V1UQ54UQ10.2+V1UQ54UQ10.2-BGS/R	TPE	4	4	18	6	
=V1UQ54UQ11.1-W1	=V1UQ54KF2+V1UQ54-KF2.11-X1	=V1UQ54UQ11.1+V1UQ54UQ11.1-BGS/R	TPE	4	4	18	5	
=V1UQ54UQ12.1-W1	=V1UQ54KF2+V1UQ54-KF2.11-X2	=V1UQ54UQ12.1+V1UQ54UQ12.1-BGS/R	TPE	4	4	18	5	
=V1UQ54UQ13.1-W1	=V1UQ54KF2+V1UQ54-KF2.11-X3	=V1UQ54UQ13.1+V1UQ54UQ13.1-BGS/R	TPE	4	4	18	6	
=V1UQ54UQ14.1-W1	=V1UQ54KF2+V1UQ54-KF2.11-X4	=V1UQ54UQ14.1+V1UQ54UQ14.1-BGS/R	TPE	4	4	18	5	
=V1UQ55BG0-W1	=V1UQ55BG0+V1UQ55-XG1/2	=V1UQ55KF1+V1UQ55-KF1.12-X1	TPE	4	4	18	0.5	
=V1UQ55BG0-W1.1	=V1UQ55BG0+V1UQ55-BG01	=V1UQ55BG0+V1UQ55-XG1/2	TPE	4	3	18	2	
=V1UQ55BG0-W1.2	=V1UQ55BG0+V1UQ55-BG02	=V1UQ55BG0+V1UQ55-XG1/2	TPE	4	3	18	3	
=V1UQ55BG0-W2	=V1UQ55BG0+V1UQ55-XG3/4	=V1UQ55KF1+V1UQ55-KF1.12-X2	TPE	4	4	18	0.5	
=V1UQ55BG0-W2.1	=V1UQ55BG0+V1UQ55-BG03	=V1UQ55BG0+V1UQ55-XG3/4	TPE	4	3	18	3	
=V1UQ55BG0-W2.2	=V1UQ55BG0+V1UQ55-BG04	=V1UQ55BG0+V1UQ55-XG3/4	TPE	4	3	18	3	
=V1UQ55BG0-W3	=V1UQ55BG0+V1UQ55-BG05	=V1UQ55KF1+V1UQ55-KF1.12-X3	TPE	4	3	18	1	
=V1UQ55UQ1.1-W1	=V1UQ55KF1+V1UQ55-KF1.11-X1	=V1UQ55UQ1.1+V1UQ55UQ1.1-BGS/R	TPE	4	4	18	3	
=V1UQ55UQ2.1-W1	=V1UQ55KF1+V1UQ55-KF1.11-X2	=V1UQ55UQ2.1+V1UQ55UQ2.1-BGS/R	TPE	4	4	18	2	
=V1UQ55UQ3.1-W1	=V1UQ55KF1+V1UQ55-KF1.11-X3	=V1UQ55UQ3.1+V1UQ55UQ3.1-BGS/R	TPE	4	4	18	2	
=V1UQ55UQ4.1-W1	=V1UQ55KF1+V1UQ55-KF1.11-X4	=V1UQ55UQ4.1+V1UQ55UQ4.1-BGS/R	TPE	4	4	18	2	
=V1UQ55UQ4.2-W1	=V1UQ55KF1+V1UQ55-KF1.11-X5	=V1UQ55UQ4.2+V1UQ55UQ4.2-BGS/R	TPE	4	4	18	4	
=V1FQ1-W12R	=V1FQ1+V1FQ1-BR11-R	=V1FQ1+V1FQ1-BR12-R	TPE	8	8	22	0.61	
=V1FQ1-W12T	=V1FQ1+V1FQ1-BR11-T	=V1FQ1+V1FQ1-BR12-T	TPE	8	8	22	0.61	
=V1FQ1-W14R	=V1FQ1+V1FQ1-BR13-R	=V1FQ1+V1FQ1-BR14-R	TPE	8	8	22	0.61	
=V1FQ1-W14T	=V1FQ1+V1FQ1-BR13-T	=V1FQ1+V1FQ1-BR14-T	TPE	8	8	22	0.61	
=V1FQ1-W17R	=V1FQ1+V1FQ1-BR16-R	=V1FQ1+V1FQ1-BR17-R	TPE	8	8	22	0.61	
=V1FQ1-W17T	=V1FQ1+V1FQ1-BR16-T	=V1FQ1+V1FQ1-BR17-T	TPE	8	8	22	0.61	
=V1FQ1-W19R	=V1FQ1+V1FQ1-BR18-R	=V1FQ1+V1FQ1-BR19-R	TPE	8	8	22	0.61	
=V1FQ1-W19T	=V1FQ1+V1FQ1-BR18-T	=V1FQ1+V1FQ1-BR19-T	TPE	8	8	22	0.61	
=V1PF1WC3-W1	=V1PF1WC3+V1PF1UC01-XG1-X1	=V1WC3+V1UC11-XD2	TPU	3	3	12	20	
		=V1WC3+V1UC11-PE						
=V1AR11UQ41KF1-W1	=V1AR11UQ41KF1+V1AR11UQ41-R3.CP/CS	=V1AR11UQ41KF1+V1AR11UQ41-XG1	TPU	5	4	16	2	
=V1AR11UQ41KF1-W1.1	=V1AR11UQ41KF1+V1AR11UQ41-KF1-X20	=V1AR11UQ41KF1+V1AR11UQ41-XG1	TPU	5	4	16	1	
=V1AR11UQ41KF1-W1.2	=V1AR11UQ41KF1+V1AR11UQ41-KF1.14	=V1AR11UQ41KF1+V1AR11UQ41-XG1	TPU	5	4	16	2	
=V1AR31UQ41KF1-W1	=V1AR31UQ41KF1+V1AR31UQ41-KF1-X20	=V1AR31UQ41KF1+V1AR31UQ41-R3.CP/CS	TPU	5	5	16	1	
=V1AR31XQ41KF1-W1			TPU	5	0	16	2	
=V1AR81UQ41KF1-W1	=V1AR81UQ41KF1+V1AR81UQ41-KF1-X20	=V1AR81UQ41KF1+V1AR81UQ41-R3.CP/CS	TPU	5	5	16	1	
=V1FQ1-W1			TPU	5	0	16	15	
=V1FQ1-W2	=V1FQ1+V1FQ1BG1-BG1-X2	=V1FQ1+V1FQ1BG2-BG2-X1	TPU	5	5	16	25	
=V1FQ1-W3	=V1FQ1+V1FQ1BG2-BG2-X2	=V1FQ1+V1FQ1BG3-BG3-X1	TPU	5	5	16	25	
=V1FQ1-W4			TPU	5	0	16	20	

			Date	1/17/2023	Volvo Trucks North America	Valiant TMS	Cable overview	Drawing name: =2V09&EFS-EL	=
			Ed.	MKLEPADLO					+
			Appr		P6700 Bodyside LH - Robot Cell 2V09			Document type: EMC	Project nr: 22-16150
Modification	Date	Name	Original		Replacement of	Replaced by	Scale 1:1		Page 24 / 1533

Cable overview

F10_001_Cable

Cable name	Source (from)	Target (to)	cable type	all conductors	Conductors used	Cross-section [mm]	Length [m]	remark
=V1FQ1-W5	=V1FQ1+V1FQ1BG4-BG4-X2	=V1FQ1+V1FQ1BG5-BG5-X1	TPU	5	5	16	20	
=V1FQ1-W6	=V1FQ1+V1FQ1BG5-BG5-X2	=V1FQ1+V1FQ1BG6-BG6-X1	TPU	5	5	16	20	
=V1GL1UQ51KF1-W1.1	=V1GL1UQ51KF1+V1GL1UQ51-KF1-X20	=V1GL1UQ51WC4+V1GL1UQ51-XG51.1	TPU	5	5	16	2	
=V1GL1UQ51KF2-W2.1	=V1GL1UQ51KF2+V1GL1UQ51-KF2-X20	=V1GL1UQ51WC4+V1GL1UQ51-XG51.2	TPU	5	5	16	2	
=V1GL1UQ51KF3-W3.1	=V1GL1UQ51KF3+V1GL1UQ51-KF3-X20	=V1GL1UQ51WC4+V1GL1UQ51-XG51.2	TPU	5	5	16	5	
=V1GL1UQ51WC4-W1			TPU	5	0	16	2	
=V1GL1UQ51WC4-W1.1	=V1GL1UQ51WC4+V1GL1UQ51-XG51.1	=V1GL1UQ51WC4+V1GL1UQ51-XG51.2	TPU	5	5	16	5	
=V1GL1UQ52KF1-W1.1	=V1GL1UQ52KF1+V1GL1UQ52-KF1-X20	=V1GL1UQ52WC4+V1GL1UQ52-XG51.1	TPU	5	5	16	2	
=V1GL1UQ52KF2-W2.1	=V1GL1UQ52KF2+V1GL1UQ52-KF2-X20	=V1GL1UQ52WC4+V1GL1UQ52-XG51.2	TPU	5	5	16	5	
=V1GL1UQ52KF3-W3.1	=V1GL1UQ52KF3+V1GL1UQ52-KF3-X20	=V1GL1UQ52WC4+V1GL1UQ52-XG51.2	TPU	5	5	16	2	
=V1GL1UQ52WC4-W1			TPU	5	0	16	2	
=V1GL1UQ52WC4-W1.1	=V1GL1UQ52WC4+V1GL1UQ52-XG51.1	=V1GL1UQ52WC4+V1GL1UQ52-XG51.2	TPU	5	5	16	5	
=V1GL1UQ53KF1-W1.1	=V1GL1UQ53KF1+V1GL1UQ53-KF1-X20	=V1GL1UQ53WC4+V1GL1UQ53-XG51.1	TPU	5	5	16	2	
=V1GL1UQ53KF2-W2.1	=V1GL1UQ53KF2+V1GL1UQ53-KF2-X20	=V1GL1UQ53WC4+V1GL1UQ53-XG51.2	TPU	5	5	16	5	
=V1GL1UQ53KF3-W3.1	=V1GL1UQ53KF3+V1GL1UQ53-KF3-X20	=V1GL1UQ53WC4+V1GL1UQ53-XG51.2	TPU	5	5	16	2	
=V1GL1UQ53WC4-W1			TPU	5	0	16	2	
=V1GL1UQ53WC4-W1.1	=V1GL1UQ53WC4+V1GL1UQ53-XG51.1	=V1GL1UQ53WC4+V1GL1UQ53-XG51.2	TPU	5	5	16	5	
=V1GL1UQ54KF1-W1.1	=V1GL1UQ54KF1+V1GL1UQ54-KF1-X20	=V1GL1UQ54WC4+V1GL1UQ54-XG51.1	TPU	5	5	16	2	
=V1GL1UQ54KF2-W2.1	=V1GL1UQ54KF2+V1GL1UQ54-KF2-X20	=V1GL1UQ54WC4+V1GL1UQ54-XG51.2	TPU	5	5	16	5	
=V1GL1UQ54KF3-W3.1	=V1GL1UQ54KF3+V1GL1UQ54-KF3-X20	=V1GL1UQ54WC4+V1GL1UQ54-XG51.2	TPU	5	5	16	5	
=V1GL1UQ54WC4-W1			TPU	5	0	16	2	
=V1GL1UQ54WC4-W1.1	=V1GL1UQ54WC4+V1GL1UQ54-XG51.1	=V1GL1UQ54WC4+V1GL1UQ54-XG51.2	TPU	5	5	16	5	
=V1GL1UQ56KF1-W1	=V1WC4+V1UC12-XD151	=V1GL1UQ56KF1+V1GL1UQ56-KF1-X20	TPU	5	5	16	25	
=V1GL1UQ57KF1-W1	=V1WC4+V1UC12-XD161	=V1GL1UQ57KF1+V1GL1UQ57-KF1-X20	TPU	5	5	16	25	
=V1GL2UQ51KF1-W3.2	=V1GL2UQ51KF1+V1GL2UQ51-KF1-X20	=V1GL2UQ51WC4+V1GL1UQ52-XG51.1	TPU	5	5	16	1	
=V1GL2UQ51KF2-W4.2	=V1GL2UQ51KF2+V1GL2UQ51-KF2-X20	=V1GL2UQ51WC4+V1GL1UQ52-XG51.2	TPU	5	5	16	1	
=V1GL2UQ51KF3-W5.1	=V1GL2UQ51KF3+V1GL2UQ51-KF3-X20	=V1GL2UQ51WC4+V1GL1UQ52-XG51.3	TPU	5	5	16	1	
=V1GL2UQ51KF4-W5.2	=V1GL2UQ51KF4+V1GL2UQ51-KF4-X20	=V1GL2UQ51WC4+V1GL1UQ52-XG51.3	TPU	5	5	16	1	
=V1GL2UQ51WC4-W3	=V1GL2WC4+V1GL2-UCMS1	=V1GL2UQ51WC4+V1GL1UQ52-XG51.1	TPU	5	5	16	25	
=V1GL2UQ51WC4-W3.1	=V1GL2UQ51WC4+V1GL1UQ52-XG51.1	=V1GL2UQ51WC4+V1GL1UQ52-XG51.2	TPU	5	5	16	5	
=V1GL2UQ51WC4-W4.1	=V1GL2UQ51WC4+V1GL1UQ52-XG51.2	=V1GL2UQ51WC4+V1GL1UQ52-XG51.3	TPU	5	5	16	5	
=V1GL2WC4-W1.1	=V1GL2WC4+V1GL2-W1.1	=V1WC4+V1UC14-XG51	TPU	5	5	16	30	
=V1GL2WC4-W1.2	=V1GL2WC4+V1GL2-W1.2	=V1WC4+V1UC14-XG51	TPU	5	5	16	30	
=V1GL2WC4-W2	=V1GL2WC4+V1GL2-UCMS1	=V1GL2WC4+V1GL2-W1.1	TPU	5	5	16	15	
=V1GL2WC4-W5	=V1GL2WC4+V1GL2-W1.2	=V1GL2KF1+V1GL2-KF1-I1	TPU	5	5	16	15	
=V1GL17UQ51KF1-W1	=V1WC4+V1UC11-XD151	=V1GL17UQ51KF1+V1GL17UQ51-KF1-X20	TPU	5	5	16	40	
=V1PF1KF1-W1	=V1WC4+V1UC15-XD171	=V1PF1KF1+V1PF1-KF1-X20	TPU	5	5	16	30	
=V1PZ1PF1-W1			TPU	5	0	16	8	
=V1PZ1PF2-W1			TPU	5	0	16	8	
=V1PZ1PF3-W1			TPU	5	0	16	8	
=V1PZ1PF4-W1			TPU	5	0	16	8	
=V1SF0PG2-W1	=V1WC4+V1UC12-XD51	=V1SF0PG2+V1UC51-XG1	TPU	5	5	16	25	
=V1SF0PG2-W1.2	=V1SF0PG2+V1UC51-XD1	=V1SF0PG2+V1UC51-XG1	TPU	5	4	16	1	
=V1SF0PG3-W1	=V1SF0PG3+V1UC52-XD1	=V1SF0PG2+V1UC51-XG1	TPU	5	4	16	10	
=V1SF0PG4-W1	=V1WC4+V1UC14-XD161	=V1SF0PG4+V1UC53-XG1	TPU	5	5	16	20	
=V1SF0PG4-W1.2	=V1SF0PG4+V1UC53-XD1	=V1SF0PG4+V1UC53-XG1	TPU	5	4	16	1	

			Date	1/17/2023	Volvo Trucks North America	Valiant TMS	Cable overview	Drawing name: =2V09&EFS-EL	=
			Ed.	MKLEPADLO					+
			Appr		P6700 Bodyside LH - Robot Cell 2V09			Document type: EMC	Project nr: 22-16150
Modification	Date	Name	Original		Replacement of	Replaced by	Scale 1:1		Page 25 / 1533

Cable overview

F10_001_Cable

Cable name	Source (from)	Target (to)	cable type	all conductors	Conductors used	Cross-section [mm]	Length [m]	remark
=V1SF0PG5-W1.1	=V1SF0PG4+V1UC53-XG1	=V1SF0PG5+V1UC54-XG2	TPU	5	5	16	10	
=V1SF0PG5-W2.2	=V1SF0PG5+V1UC54-XD1	=V1SF0PG5+V1UC54-XG2	TPU	5	4	16	1	
=V1U10U01KF1-W1	=V1WC4+V1UC12-XD171	=V1U10U01KF1+V1U10U01-KF1.11	TPU	5	4	16	25	
=V1U20U01KF1-W2.1	=V1SF0PG5+V1UC54-XG2	=V1U20U01KF1+V1U20U01-KF1.11	TPU	5	4	16	5	
=V1UN1KF1-W1	=V1WC4+V1UC15-XD161	=V1UN1KF1+V1UN1-KF1.11	TPU	5	4	16	30	
=V1UQ51KF1-W1	=V1WC4+V1UC15-XD151	=V1UQ51KF1+V1UQ51-KF1-X20	TPU	5	5	16	25	
=V1UQ52KF1-W1.2	=V1UQ52KF1+V1UQ52-KF1-X20	=V1UQ52WC4+V1UQ52-XG51.1	TPU	5	5	16	1	
=V1UQ52KF2-W2.1	=V1UQ52KF2+V1UQ52-KF2-X20	=V1UQ52WC4+V1UQ52-XG51.2	TPU	5	5	16	1	
=V1UQ52KF3-W2.2	=V1UQ52KF3+V1UQ52-KF3-X20	=V1UQ52WC4+V1UQ52-XG51.2	TPU	5	5	16	3	
=V1UQ52KF4-W3.1	=V1UQ52KF4+V1UQ52-KF4-X20	=V1UQ52WC4+V1UQ52-XG51.3	TPU	5	5	16	1	
=V1UQ52KF5-W3.2	=V1UQ52KF5+V1UQ52-KF5-X20	=V1UQ52WC4+V1UQ52-XG51.3	TPU	5	5	16	2	
=V1UQ52WC4-W1	=V1WC4+V1UC14-XD171	=V1UQ52WC4+V1UQ52-XG51.1	TPU	5	5	16	40	
=V1UQ52WC4-W1.1	=V1UQ52WC4+V1UQ52-XG51.1	=V1UQ52WC4+V1UQ52-XG51.2	TPU	5	5	16	5	
=V1UQ52WC4-W3	=V1WC4+V1UC14-XD181	=V1UQ52WC4+V1UQ52-XG51.3	TPU	5	5	16	40	
=V1UQ53KF1-W1.1	=V1UQ53KF1+V1UQ53-KF1-X20	=V1UQ53WC4+V1UQ53-XG51	TPU	5	5	16	1	
=V1UQ53KF2-W1.2	=V1UQ53KF2+V1UQ53-KF2-X20	=V1UQ53WC4+V1UQ53-XG51	TPU	5	5	16	5	
=V1UQ53WC4-W1	=V1WC4+V1UC11-XD161	=V1UQ53WC4+V1UQ53-XG51	TPU	5	5	16	25	
=V1UQ54KF1-W1.1	=V1UQ54KF1+V1UQ54-KF1-X20	=V1UQ54WC4+V1UQ54-XG51	TPU	5	5	16	1	
=V1UQ54KF2-W1.2	=V1UQ54KF2+V1UQ54-KF2-X20	=V1UQ54WC4+V1UQ54-XG51	TPU	5	5	16	5	
=V1UQ54WC4-W1	=V1WC4+V1UC11-XD171	=V1UQ54WC4+V1UQ54-XG51	TPU	5	5	16	20	
=V1UQ55KF1-W1	=V1WC4+V1UC11-XD181	=V1UQ55KF1+V1UQ55-KF1-X20	TPU	5	5	16	30	
=V1WC4-W1	=V1WC4+V1UC14-XD151	=V1WC4+V1UC14-XG51	TPU	5	5	16	5	
=V1WC4-W1	=V1WC4+V1UC11-XD51	=V1WC4+V1UC32-XD1	TPU	5	4	16	15	
=V1SF0SF2-W1	=V1KF1+V1UC12-KF12.14	=V1SF0SF2+V1UC72-SF1	TPU	8	8	24	20	
	=V1WC4+V1UC12-XD14							
	=V1KF1+V1UC12-KF12.32							
	=V1WC4+V1UC12-XD10							
=V1SF0SF4-W1	=V1KF1+V1UC14-KF14.12	=V1SF0SF4+V1UC74-SF1	TPU	8	8	24	20	
	=V1WC4+V1UC14-XD16							
	=V1KF1+V1UC14-KF14.32							
	=V1WC4+V1UC14-XD10							

			Date	1/17/2023	Volvo Trucks North America	Valiant TMS	Cable overview	Drawing name: =2V09&EFS-EL	=
			Ed.	MKLEPADLO					+
			Appr		P6700 Bodyside LH - Robot Cell 2V09			Document type: EMC	Project nr: 22-16150
Modification	Date	Name	Original		Replacement of	Replaced by	Scale 1:1		Page 26 / 1533

Parts list

F01_001

Device tag	Quantity	Designation	Type number	Supplier	Part number
	9	Mounting rail EN 50 022 (35x7,5)	TS 35_7,5		TS 35_7,5

&EMC/26

+KH0/1

			Date	1/17/2023	Volvo Trucks North America	Valiant TMS	Parts list : TS 35_7,5 - TS 35_7,5	Drawing name: =2V09&EFS-EL	=
			Ed.	MKLEPADLO					+
			Appr		P6700 Bodyside LH - Robot Cell 2V09			Document type: EPB	Project nr: 22-16150
Modification	Date	Name	Original		Replacement of / Replaced by	Scale 1:1			Page 1 / 1533

Parts list

F01_001

Device tag	Quantity	Designation	Type number	Supplier	Part number
=KH0-W1-XD2	1				TUR.BS 8251-0/PG9

+/1

+UC31/1

			Date	1/17/2023	Volvo Trucks North America	Valiant TMS	Parts list : TUR.BS 8251-0/PG9 - TUR.BS 8251-0/PG9	Drawing name: =2V09&EFS-EL	=
			Ed.	MKLEPADLO					+ KH0
			Appr		P6700 Bodyside LH - Robot Cell 2V09	Scale 1:1		Document type: EPB	Project nr: 22-16150	Page 1 / 1533
Modification	Date	Name	Original		Replacement of	Replaced by			

Parts list

F01_001

Device tag	Quantity	Designation	Type number	Supplier	Part number
=KF0-M1	1	Ground bar kit, 5 positions.	ECGB5	SIE	US2.ECGB5
=KF0-M1	1	Wiring Duct Covers, PVC	C1.5LG6	PAN	PAN.C1.5LG6
=KF0-M1	1	Wiring Duct Covers, PVC	C1LG6	PAN	PAN.C1LG6
=KF0-M1	1	Wide Slotted Wiring Duct, PVC	G1.5X4LG6	PAN	PAN.G1.5X4LG6
=KF0-M1	1	Wide Slotted Wiring Duct, PVC	G1X4LG6	PAN	PAN.G1X4LG6
=KF0-M1	1	STAND.SECTIONAL RAIL 35MM, LENGTH 483MM	6ES5710-8MA11	Siemens AG	SIE.6ES5710-8MA11
=KF0-UC31	1	PC PC enclosure system, WHD: 800x1600x600 mm, Sheet steel	PC.5386050	RIT	RIT.5386050
=KF0-UC31	1	VX Partial mounting plate, for VX: 700x700 mm	VX.8617580	RIT	RIT.8617580
=KF0-UC31	1	Base/plinth corner piece with base/plinth trim panels, front and rear,	VX.8640003		RIT.8640003
=KF0-UC31	1	Base/plinth trim panels, side, sheet steel, optimised design, 100 mm	VX.8640033		RIT.8640033
=KF0-UC91	1	Pushbutton Enclosure, Type 12, 4PB, 22.5mm holes, 10.00Hx3.25Wx2.75D, Gray, Steel	E4PBG	HOFFMAN	HOF.E4PBG
=KF0-UC91	1	Hol-Sealers Hole Seal, 1.22" diameter, Gray, Steel	ASPBG	HOFFMAN	ASPBG
=KF0-UC92	1	Pushbutton Enclosure, Type 12, 4PB, 22.5mm holes, 10.00Hx3.25Wx2.75D, Gray, Steel	E4PBG	HOFFMAN	HOF.E4PBG
=KF0-UC92	1	LEGEND PLATET KTC15-1005	KTC15-1005		ABB.1SFA616915R1005
=KF0-UC92	1	Hol-Sealers Hole Seal, 1.22" diameter, Gray, Steel	ASPBG	HOFFMAN	ASPBG
=KF0KF1-KF1.31	1	CPU 1517F-3 PN/DP, 3MB PROG., 8MB DATA	6ES7517-3FP00-0AB0	SIE	SIE.6ES7517-3FP00-0AB0
=KF0KF1-KF1.31	1	SIMATIC S7 MEMORY CARD, 2 GB	6ES7954-8LP03-0AA0	SIE	SIE.6ES7954-8LP03-0AA0
=KF0KF1-KF1.31	1	MOUNTING RAIL 245MM (9.6")	6ES7590-1AC40-0AA0	SIE	SIE.6ES7590-1AC40-0AA0
=KF0KF1-KF31	1				SIE.6ES7155-6AA01-0BN0_subassembly
=KF0KF1-KF31	1	ET200SP, SERVERMODULE	6ES7193-6PA00-0AA0		SIE.6ES7193-6PA00-0AA0
=KF0KF1-KF31.11	1	ET 200SP, DI 16x 24V DC ST, PU 1	6ES7131-6BH01-0BA0	SIE	SIE.6ES7131-6BH01-0BA0
=KF0KF1-KF31.11	1	BASEUNIT TYPE A0, BU15-P16+A0+2D	6ES7193-6BP00-0DA0	SIE	SIE.6ES7193-6BP00-0DA0
=KF0KF1-KF31.21	1	ET 200SP, DQ 16x 24V DC/0,5A ST, PU 1	6ES7132-6BH01-0BA0	SIE	SIE.6ES7132-6BH01-0BA0
=KF0KF1-KF31.21	1	BASEUNIT TYPE A0, BU15-P16+A0+2D	6ES7193-6BP00-0DA0	SIE	SIE.6ES7193-6BP00-0DA0
=KF0KF1-KF31.31	1	ET 200SP, El-Mod., F-DI 8x24VDC HF	6ES7136-6BA01-0CA0	SIE	SIE.6ES7136-6BA01-0CA0
=KF0KF1-KF31.31	1	BASEUNIT TYPE A0, BU15-P16+A0+2D	6ES7193-6BP00-0DA0	SIE	SIE.6ES7193-6BP00-0DA0
=KF0KF1-KF99.31	1	SCALANCE S615	6GK5615-0AA00-2AA2	SIE	SIE.6GK5615-0AA00-2AA2
=KF0KF1-KF100.31	1	SCALANCE XC216	6GK5216-0BA00-2AC2	SIE	SIE.6GK5216-0BA00-2AC2
=KF0KF1-KF100.31-P6	1	Profinet cable - RJ45 plug to M12 Female receptacle; 1m long	RJ45S FKSDED 423-1M	TURCK	TUR.RJ45S FKSDED 423-1M
=KF0KF1-KF100.31-P7	1	Profinet cable - RJ45 plug to M12 Female receptacle; 1m long	RJ45S FKSDED 423-1M	TURCK	TUR.RJ45S FKSDED 423-1M
=KF0KF1-KF100.31-P8	1	Profinet cable - RJ45 plug to M12 Female receptacle; 1m long	RJ45S FKSDED 423-1M	TURCK	TUR.RJ45S FKSDED 423-1M
=KF0KF1-KF100.31-P9	1	Profinet cable - RJ45 plug to M12 Female receptacle; 1m long	RJ45S FKSDED 423-1M	TURCK	TUR.RJ45S FKSDED 423-1M
=KF0KF1-KF100.31-P10	1	Profinet cable - RJ45 plug to M12 Female receptacle; 1m long	RJ45S FKSDED 423-1M	TURCK	TUR.RJ45S FKSDED 423-1M
=KF0KF1-KF100.31-P11	1	Profinet cable - RJ45 plug to M12 Female receptacle; 1m long	RJ45S FKSDED 423-1M	TURCK	TUR.RJ45S FKSDED 423-1M
=KF0KF1-KF100.31-P12	1	Profinet cable - RJ45 plug to M12 Female receptacle; 1m long	RJ45S FKSDED 423-1M	TURCK	TUR.RJ45S FKSDED 423-1M
=KF0KF1-KF100.31-P13	1	Profinet cable - RJ45 plug to M12 Female receptacle; 1m long	RJ45S FKSDED 423-1M	TURCK	TUR.RJ45S FKSDED 423-1M
=KF0KF1-KF100.31-P14	1	Profinet cable - RJ45 plug to M12 Female receptacle; 1m long	RJ45S FKSDED 423-1M	TURCK	TUR.RJ45S FKSDED 423-1M
=KF0KF1-KF100.31-P15	1	Profinet cable - RJ45 plug to M12 Female receptacle; 1m long	RJ45S FKSDED 423-1M	TURCK	TUR.RJ45S FKSDED 423-1M
=KF0KF1-KF100.31-P16	1	Profinet cable - RJ45 plug to M12 Female receptacle; 1m long	RJ45S FKSDED 423-1M	TURCK	TUR.RJ45S FKSDED 423-1M
=KF0KF1-XG1	1				4000-73000-0180000
=KF0KF1-XG2	1				4000-73000-0180000
=KF0PZ1-PF1	1	Signaling column connection element for pipe mounting incl. end cover and seal	8WD4408-0AA	SIE	SIE.8WD4408-0AA
=KF0PZ1-PF1	1	Tube with foot, tube length 100 mm, accessory for signaling columns 8WD44, D=70 mm	8WD4308-0DA	SIEMENS	SIE.8WD4308-0DA
=KF0PZ1-PF1	1	Signaling column multifunctional siren element different sounds can be set 24 V	8WD4420-0EA2		SIE.8WD4420-0EA2
=KF0PZ1-PF1	1	Signaling column continuous light element LED red, 24 V AC/DC	8WD4420-5AB	SIE	SIE.8WD4420-5AB
=KF0PZ1-PF1	1	Signaling column continuous light element LED green, 24 V AC/DC	8WD4420-5AC	SIE	SIE.8WD4420-5AC
=KF0WC3-FC1	1	Miniature Circuit Breaker - SU200 M - 1P - C - 10 A	SU201M-C10	ABB	ABB.2CDS271337R0104
=KF0WC3-FC1	1	S2C-H6RU - Auxiliary Contact	S2C-H6RU	ABB	ABB.2CDS200914R0001
=KF0WC3-FC2	1	Miniature Circuit Breaker - SU200 M - 1P - C - 10 A	SU201M-C10	ABB	ABB.2CDS271337R0104
=KF0WC3-FC2	1	S2C-H6RU - Auxiliary Contact	S2C-H6RU	ABB	ABB.2CDS200914R0001
=KF0WC4-FC11	1	4x3-10A	6EP1961-2BA41	SIE	SIE.6EP1961-2BA41
=KF0WC4-GA1	1	SITOP UPS1600	6EP4134-3AB00-2AY0		SIE.6EP4134-3AB00-2AY0
=KF0WC4-GB1	1	SITOP UPS1100	6EP4134-0GB00-0AY0	SIE	SIE.6EP4134-0GB00-0AY0
=KF0WC4-TA1	1	SITOP PSU6200 1ph 24 V/20 A	6EP3336-7SB00-3AX0		SIE.6EP3336-7SB00-3AX0

+KH0/1

+.UC91/1

			Date	1/17/2023	Volvo Trucks North America	Valiant TMS	Parts list : US2.ECGB5 - SIE.6EP3336-7SB00-3AX0	Drawing name: =2V09&EFS-EL	= + UC31
			Ed.	MKLEPADLO					
			Appr		P6700 Bodyside LH - Robot Cell 2V09	Scale 1:1		Document type: EPB	Project nr: 22-16150
Modification	Date	Name	Original		Replacement of	Replaced by			Page 1 / 1533

Parts list

F01_001

Device tag	Quantity	Designation	Type number	Supplier	Part number
=KF0FQ0-SF1	1	EMERGENCY STOP CE4T-10R-02	CE4T-10R-02	ABB	ABB.1SFA619550R1051
=KF0FQ0-SF1	1	LEGEND PLATET KTC15-1005	KTC15-1005		ABB.1SFA616915R1005
=KF0SF1-SF5	1	PUSHBUTTON CP1-10G-20	CP1-10G-20	ABB	ABB.1SFA619100R1022
=KF0SF1-SF6	1	PUSHBUTTON CP1-10Y-20	CP1-10Y-20	ABB	ABB.1SFA619100R1023

			Date	1/17/2023	Volvo Trucks North America		Valiant TMS	Parts list : ABB.1SFA619550R1051 - ABB.1SFA619100R1023	Drawing name: =2V09&EFS-EL	=	
			Ed.	MKLEPADLO						+ UC31UC91	
			Appr		P6700 Bodyside LH - Robot Cell 2V09		Scale 1:1		Document type: EPB	Project nr: 22-16150	Page 1 / 1533
Modification	Date	Name	Original		Replacement of	Replaced by					

Parts list

F01_001

Device tag	Quantity	Designation	Type number	Supplier	Part number
=KF0SF1-SF1/PF1	1	PUSHBUTTON CP1-11R-10 24V AC/DC	CP1-11R-10	ABB	ABB.1SFA619100R1111
=KF0SF1-SF2	1	PUSHBUTTON CP1-10B-20	CP1-10B-20	ABB	ABB.1SFA619100R1026
=KF0SF1-SF3/PF3	1	PUSHBUTTON CP1-11C-10	CP1-11C-10	ABB	ABB.1SFA619100R1118
=KF0SF1-SF4	1	SELECTOR SWITCH C2SS1-10B-10	C2SS1-10B-10	ABB	ABB.1SFA619200R1016

+.UC91/1

+UC32/1

			Date	1/17/2023	Volvo Trucks North America	Valiant TMS	Parts list : ABB.1SFA619100R1111 - ABB.1SFA619200R1016	Drawing name: =2V09&EFS-EL	=	
			Ed.	MKLEPADLO					+ UC31UC92	
			Appr		P6700 Bodyside LH - Robot Cell 2V09			Document type: EPB	Project nr: 22-16150	Page 1
Modification	Date	Name	Original		Replacement of	Replaced by	Scale 1:1			1533

Parts list

F01_001

Device tag	Quantity	Designation	Type number	Supplier	Part number
=FQ0V1SF1S01-SF1	1	EMERGENCY STOP CE4T-10R-02	CE4T-10R-02	ABB	ABB.1SFA619550R1051
=FQ0V1SF1S01-SF1	1	LEGEND PLATET KTC15-1005	KTC15-1005		ABB.1SFA616915R1005

+UC31UC92/1

+V1AR11UQ41/1

			Date	1/17/2023	Volvo Trucks North America	Valiant TMS	Parts list : ABB.1SFA619550R1051 - ABB.1SFA616915R1005	Drawing name: =2V09&EFS-EL	= + UC32
			Ed.	MKLEPADLO					
			Appr		P6700 Bodyside LH - Robot Cell 2V09	Scale 1:1		Document type: EPB	Project nr: 22-16150
Modification	Date	Name	Original		Replacement of	Replaced by			Page 1 / 1533

Parts list

F01_001

Device tag	Quantity	Designation	Type number	Supplier	Part number
=V1AR11UQ41BG0-BG01	1	Inductive sensor	NI50U-CK40-AP6X2-H1141/S1590 W/BS4_A	Turck	TUR.1625891
=V1AR11UQ41BG0-BG02	1	Inductive sensor	NI50U-CK40-AP6X2-H1141/S1590 W/BS4_A	Turck	TUR.1625891
=V1AR11UQ41BG0-BG03	1	Inductive sensor	NI50U-CK40-AP6X2-H1141/S1590 W/BS4_A	Turck	TUR.1625891
=V1AR11UQ41BG0-BG04	1	Inductive sensor	NI50U-CK40-AP6X2-H1141/S1590 W/BS4_A	Turck	TUR.1625891
=V1AR11UQ41BG0-BG05	1	Inductive sensor	NI50U-CK40-AP6X2-H1141/S1590 W/BS4_A	Turck	TUR.1625891
=V1AR11UQ41BG0-BG06	1	Inductive sensor	NI50U-CK40-AP6X2-H1141/S1590 W/BS4_A	Turck	TUR.1625891
=V1AR11UQ41BG0-BG07	1	Inductive sensor	NI50U-CK40-AP6X2-H1141/S1590 W/BS4_A	Turck	TUR.1625891
=V1AR11UQ41BG0-BG08	1	Inductive sensor	NI50U-CK40-AP6X2-H1141/S1590 W/BS4_A	Turck	TUR.1625891
=V1AR11UQ41BG0-BG09	1	Inductive sensor	NI50U-CK40-AP6X2-H1141/S1590 W/BS4_A	Turck	TUR.1625891
=V1AR11UQ41BG0-BG10	1	Inductive sensor	NI50U-CK40-AP6X2-H1141/S1590 W/BS4_A	Turck	TUR.1625891
=V1AR11UQ41BG0-XG1/2	1	Y splitter	U2-30676	TURCK	TUR.VB2-FSM 4.4/2FKM 4/S3450
=V1AR11UQ41BG0-XG3/4	1	Y splitter	U2-30676	TURCK	TUR.VB2-FSM 4.4/2FKM 4/S3450
=V1AR11UQ41BG0-XG5/6	1	Y splitter	U2-30676	TURCK	TUR.VB2-FSM 4.4/2FKM 4/S3450
=V1AR11UQ41BG0-XG7/8	1	Y splitter	U2-30676	TURCK	TUR.VB2-FSM 4.4/2FKM 4/S3450
=V1AR11UQ41BG0-XG9/10	1	Y splitter	U2-30676	TURCK	TUR.VB2-FSM 4.4/2FKM 4/S3450
=V1AR11UQ41KF1-KF1	0	Bus node	CPX-FB33	FES	FES.548755
=V1AR11UQ41KF1-KF1	0	Interlinking block	CPX-M-GE-EV-S-7/8-5POL	FES	FES.550208
=V1AR11UQ41KF1-KF1.11	0	Manifold block	CPX-M-AB-8-M12X2-5POL	FES	FES.549335
=V1AR11UQ41KF1-KF1.12	0	Manifold block	CPX-M-AB-8-M12X2-5POL	FES	FES.549335
=V1AR11UQ41KF1-KF1.13	0	Manifold block	CPX-M-AB-8-M12X2-5POL	FES	FES.549335
=V1AR11UQ41KF1-KF1.14	1	MVK-MPNIO DIO16 IRT 7/8" 5pin	MVK-MPNIO DI16	MURR	MURR.55530
=V1AR11UQ41KF1-XG1	1	TEE, 5-PIN MINI, STANDARD KEYWAY	RSM-2RKM 50	TURCK	TUR.RSM-2RKM 50

+UC32/1

+.AR11UQ41UQ1.1/1

			Date	1/17/2023	Volvo Trucks North America	Valiant TMS	Parts list : TUR.1625891 - TUR.RSM-2RKM 50	Drawing name: =2V09&EFS-EL	= + V1AR11UQ41
			Ed.	MKLEPADLO					
			Appr		P6700 Bodyside LH - Robot Cell 2V09			Document type: EPB	Project nr: 22-16150
Modification	Date	Name	Original		Replacement of / Replaced by	Scale 1:1			Page 1 / 1533

Parts list

F01_001

Device tag	Quantity	Designation	Type number	Supplier	Part number
=V1AR11UQ41UQ1.1-BGS/R	1	Inductive sensor Monitoring Kit for Power Clamps	WWS001A	WELKER	WELKER.WWS001A

+V1AR11UQ41/1

+.AR11UQ41UQ1.2/1

			Date	1/17/2023	Volvo Trucks North America	Valiant TMS	Parts list : WELKER.WWS001A - WELKER.WWS001A	Drawing name: =2V09&EFS-EL	= + V1AR11UQ41UQ1.1
			Ed.	MKLEPADLO					
			Appr		P6700 Bodyside LH - Robot Cell 2V09	Scale 1:1		Document type: EPB	Project nr: 22-16150
Modification	Date	Name	Original		Replacement of	Replaced by			Page 1 / 1533

Parts list

F01_001

Device tag	Quantity	Designation	Type number	Supplier	Part number
=V1AR11UQ41UQ1.2-BGS/R	1	Inductive sensor Monitoring Kit for Power Clamps	WWS001A	WELKER	WELKER.WWS001A

+.AR11UQ41UQ1.1/1

+.AR11UQ41UQ1.3/1

			Date	1/17/2023	Volvo Trucks North America	Valiant TMS	Parts list : WELKER.WWS001A - WELKER.WWS001A	Drawing name: =2V09&EFS-EL	=	
			Ed.	MKLEPADLO					+ V1AR11UQ41UQ1.2	
			Appr		P6700 Bodyside LH - Robot Cell 2V09	Scale 1:1		Document type: EPB	Project nr: 22-16150	Page 1 / 1533
Modification	Date	Name	Original		Replacement of	Replaced by				

Parts list

F01_001

Device tag	Quantity	Designation	Type number	Supplier	Part number
=V1AR11UQ41UQ1.3-BGS/R	1	Inductive sensor Monitoring Kit for Power Clamps	WWS001A	WELKER	WELKER.WWS001A

+.AR11UQ41UQ1.2/1

+.AR11UQ41UQ1.4/1

			Date	1/17/2023	Volvo Trucks North America	Valiant TMS	Parts list : WELKER.WWS001A - WELKER.WWS001A	Drawing name: =2V09&EFS-EL	=	
			Ed.	MKLEPADLO					+ V1AR11UQ41UQ1.3	
			Appr		P6700 Bodyside LH - Robot Cell 2V09	Scale 1:1		Document type: EPB	Project nr: 22-16150	Page 1 / 1533
Modification	Date	Name	Original		Replacement of	Replaced by				

Parts list

F01_001

Device tag	Quantity	Designation	Type number	Supplier	Part number
=V1AR11UQ41UQ1.4-BGS/R	1	Inductive sensor Monitoring Kit for Power Clamps	WWS001A	WELKER	WELKER.WWS001A

+.AR11UQ41UQ1.3/1

+.AR11UQ41UQ2.1/1

			Date	1/17/2023	Volvo Trucks North America	Valiant TMS	Parts list : WELKER.WWS001A - WELKER.WWS001A	Drawing name: =2V09&EFS-EL	= + V1AR11UQ41UQ1.4
			Ed.	MKLEPADLO					
			Appr		P6700 Bodyside LH - Robot Cell 2V09	Scale 1:1		Document type: EPB	Project nr: 22-16150
Modification	Date	Name	Original		Replacement of	Replaced by			Page 1 / 1533

Parts list

F01_001

Device tag	Quantity	Designation	Type number	Supplier	Part number
=V1AR11UQ41UQ2.1-BGS/R	1	Inductive sensor Monitoring Kit for Vario Clamps	1324633	TUNKERS	TUN.1324633

+.AR11UQ41UQ1.4/1

+.AR11UQ41UQ2.2/1

			Date	1/17/2023	Volvo Trucks North America	Valiant TMS	Parts list : TUN.1324633 - TUN.1324633	Drawing name: =2V09&EFS-EL	= + V1AR11UQ41UQ2.1
			Ed.	MKLEPADLO					
			Appr		P6700 Bodyside LH - Robot Cell 2V09	Scale 1:1		Document type: EPB	Project nr: 22-16150
Modification	Date	Name	Original		Replacement of	Replaced by			Page 1 / 1533

Parts list

F01_001

Device tag	Quantity	Designation	Type number	Supplier	Part number
=V1AR11UQ41UQ2.2-BGS/R	1	Inductive sensor Monitoring Kit for Vario Clamps	1324633	TUNKERS	TUN.1324633

+.AR11UQ41UQ2.1/1

+.AR11UQ41UQ2.3/1

			Date	1/17/2023	Volvo Trucks North America	Valiant TMS	Parts list : TUN.1324633 - TUN.1324633	Drawing name: =2V09&EFS-EL	= + V1AR11UQ41UQ2.2
			Ed.	MKLEPADLO					
			Appr		P6700 Bodyside LH - Robot Cell 2V09	Scale 1:1		Document type: EPB / Project nr: 22-16150	Page 1 / 1533
Modification	Date	Name	Original		Replacement of / Replaced by				

Parts list

F01_001

Device tag	Quantity	Designation	Type number	Supplier	Part number
=V1AR11UQ41UQ2.3-BGS/R	1	Inductive sensor Monitoring Kit for Vario Clamps	1324633	TUNKERS	TUN.1324633

			Date	1/17/2023	Volvo Trucks North America	Valiant TMS	Parts list : TUN.1324633 - TUN.1324633	Drawing name: =2V09&EFS-EL	= + V1AR11UQ41UQ2.3
			Ed.	MKLEPADLO					
			Appr		P6700 Bodyside LH - Robot Cell 2V09	Scale 1:1		Document type: EPB / Project nr: 22-16150	Page 1 / 1533
Modification	Date	Name	Original		Replacement of / Replaced by				

Parts list

F01_001

Device tag	Quantity	Designation	Type number	Supplier	Part number
=V1AR11UQ41UQ3.1-BGS/R	1	Inductive sensor Monitoring Kit for Vario Clamps	1324633	TUNKERS	TUN.1324633

+.AR11UQ41UQ2.3/1

+.AR11UQ41UQ3.2/1

			Date	1/17/2023	Volvo Trucks North America	Valiant TMS	Parts list : TUN.1324633 - TUN.1324633	Drawing name: =2V09&EFS-EL	= + V1AR11UQ41UQ3.1
			Ed.	MKLEPADLO					
			Appr		P6700 Bodyside LH - Robot Cell 2V09	Scale 1:1		Document type: EPB	Project nr: 22-16150
Modification	Date	Name	Original		Replacement of	Replaced by			Page 1 / 1533

Parts list

F01_001

Device tag	Quantity	Designation	Type number	Supplier	Part number
=V1AR11UQ41UQ3.2-BGS/R	1	Inductive sensor Monitoring Kit for Vario Clamps	1324633	TUNKERS	TUN.1324633

+.AR11UQ41UQ3.1/1

+.AR11UQ41UQ4.1/1

			Date	1/17/2023	Volvo Trucks North America	Valiant TMS	Parts list : TUN.1324633 - TUN.1324633	Drawing name: =2V09&EFS-EL	= + V1AR11UQ41UQ3.2
			Ed.	MKLEPADLO					
			Appr		P6700 Bodyside LH - Robot Cell 2V09	Scale 1:1		Document type: EPB	Project nr: 22-16150
Modification	Date	Name	Original		Replacement of	Replaced by			Page 1 / 1533

Parts list

F01_001

Device tag	Quantity	Designation	Type number	Supplier	Part number
=V1AR11UQ41UQ4.1-BGS/R	1	Inductive sensor Monitoring Kit for Vario Clamps	1324633	TUNKERS	TUN.1324633

+.AR11UQ41UQ3.2/1

+.AR11UQ41UQ4.2/1

			Date	1/17/2023	Volvo Trucks North America	Valiant TMS	Parts list : TUN.1324633 - TUN.1324633	Drawing name: =2V09&EFS-EL	= + V1AR11UQ41UQ4.1
			Ed.	MKLEPADLO					
			Appr		P6700 Bodyside LH - Robot Cell 2V09	Scale 1:1		Document type: EPB	Project nr: 22-16150
Modification	Date	Name	Original		Replacement of	Replaced by			Page 1 / 1533

Parts list

F01_001

Device tag	Quantity	Designation	Type number	Supplier	Part number
=V1AR11UQ41UQ4.2-BGS/R	1	Inductive sensor Monitoring Kit for Vario Clamps	1324633	TUNKERS	TUN.1324633

+.AR11UQ41UQ4.1/1

+.AR11UQ41UQ4.3/1

			Date	1/17/2023	Volvo Trucks North America	Valiant TMS	Parts list : TUN.1324633 - TUN.1324633	Drawing name: =2V09&EFS-EL	= + V1AR11UQ41UQ4.2
			Ed.	MKLEPADLO					
			Appr		P6700 Bodyside LH - Robot Cell 2V09	Scale 1:1		Document type: EPB / Project nr: 22-16150	Page 1 / 1533
Modification	Date	Name	Original		Replacement of / Replaced by				

Parts list

F01_001

Device tag	Quantity	Designation	Type number	Supplier	Part number
=V1AR11UQ41UQ4.3-BGS/R	1	Inductive sensor Monitoring Kit for Vario Clamps	1324633	TUNKERS	TUN.1324633

+.AR11UQ41UQ4.2/1

+.AR11UQ41UQ5.1/1

			Date	1/17/2023	Volvo Trucks North America	Valiant TMS	Parts list : TUN.1324633 - TUN.1324633	Drawing name: =2V09&EFS-EL	= + V1AR11UQ41UQ4.3
			Ed.	MKLEPADLO					
			Appr		P6700 Bodyside LH - Robot Cell 2V09	Scale 1:1		Document type: EPB	Project nr: 22-16150
Modification	Date	Name	Original		Replacement of	Replaced by			Page 1 / 1533

Parts list

F01_001

Device tag	Quantity	Designation	Type number	Supplier	Part number
=V1AR11UQ41UQ5.1-BGS/R	1	Inductive sensor Monitoring Kit for Vario Clamps	1324633	TUNKERS	TUN.1324633

+.AR11UQ41UQ4.3/1

+.AR11UQ41UQ5.2/1

			Date	1/17/2023	Volvo Trucks North America	Valiant TMS	Parts list : TUN.1324633 - TUN.1324633	Drawing name: =2V09&EFS-EL	= + V1AR11UQ41UQ5.1
			Ed.	MKLEPADLO					
			Appr		P6700 Bodyside LH - Robot Cell 2V09	Scale 1:1		Document type: EPB	Project nr: 22-16150
Modification	Date	Name	Original		Replacement of	Replaced by			Page 1 / 1533

Parts list

F01_001

Device tag	Quantity	Designation	Type number	Supplier	Part number
=V1AR11UQ41UQ5.2-BGS/R	1	Inductive sensor Monitoring Kit for Vario Clamps	1324633	TUNKERS	TUN.1324633

+.AR11UQ41UQ5.1/1

+.AR11UQ41UQ5.3/1

			Date	1/17/2023	Volvo Trucks North America	Valiant TMS	Parts list : TUN.1324633 - TUN.1324633	Drawing name: =2V09&EFS-EL	=	
			Ed.	MKLEPADLO					+ V1AR11UQ41UQ5.2	
			Appr		P6700 Bodyside LH - Robot Cell 2V09	Scale 1:1		Document type: EPB	Project nr: 22-16150	Page 1
Modification	Date	Name	Original		Replacement of	Replaced by				1533

Parts list

F01_001

Device tag	Quantity	Designation	Type number	Supplier	Part number
=V1AR11UQ41UQ5.3-BGS/R	1	Inductive sensor Monitoring Kit for Vario Clamps	1324633	TUNKERS	TUN.1324633

+.AR11UQ41UQ5.2/1

+.AR11UQ41UQ6.1/1

			Date	1/17/2023	Volvo Trucks North America	Valiant TMS	Parts list : TUN.1324633 - TUN.1324633	Drawing name: =2V09&EFS-EL	=	
			Ed.	MKLEPADLO					+ V1AR11UQ41UQ5.3	
			Appr		P6700 Bodyside LH - Robot Cell 2V09	Scale 1:1		Document type: EPB	Project nr: 22-16150	Page 1 / 1533
Modification	Date	Name	Original		Replacement of	Replaced by				

Parts list

F01_001

Device tag	Quantity	Designation	Type number	Supplier	Part number
=V1AR11UQ41UQ6.1-BGS/R	1	Inductive sensor Monitoring Kit for Vario Clamps	1324633	TUNKERS	TUN.1324633

+.AR11UQ41UQ5.3/1

+.AR11UQ41UQ7.1/1

			Date	1/17/2023	Volvo Trucks North America	Valiant TMS	Parts list : TUN.1324633 - TUN.1324633	Drawing name: =2V09&EFS-EL	= + V1AR11UQ41UQ6.1
			Ed.	MKLEPADLO					
			Appr		P6700 Bodyside LH - Robot Cell 2V09	Scale 1:1		Document type: EPB	Project nr: 22-16150
Modification	Date	Name	Original		Replacement of	Replaced by			Page 1 / 1533

Parts list

F01_001

Device tag	Quantity	Designation	Type number	Supplier	Part number
=V1AR11UQ41UQ7.1-BGS/R	1	Inductive sensor Monitoring Kit for Vario Clamps	1324633	TUNKERS	TUN.1324633

+.AR11UQ41UQ6.1/1

+.AR11UQ41UQ7.2/1

			Date	1/17/2023	Volvo Trucks North America	Valiant TMS	Parts list : TUN.1324633 - TUN.1324633	Drawing name: =2V09&EFS-EL	= + V1AR11UQ41UQ7.1
			Ed.	MKLEPADLO					
			Appr		P6700 Bodyside LH - Robot Cell 2V09	Scale 1:1		Document type: EPB	Project nr: 22-16150
Modification	Date	Name	Original		Replacement of	Replaced by			Page 1 / 1533

Parts list

F01_001

Device tag	Quantity	Designation	Type number	Supplier	Part number
=V1AR11UQ41UQ7.2-BGS/R	1	Inductive sensor Monitoring Kit for Vario Clamps	1324633	TUNKERS	TUN.1324633

+.AR11UQ41UQ7.1/1

+.AR11UQ41UQ8.1/1

			Date	1/17/2023	Volvo Trucks North America	Valiant TMS	Parts list : TUN.1324633 - TUN.1324633	Drawing name: =2V09&EFS-EL	= + V1AR11UQ41UQ7.2
			Ed.	MKLEPADLO					
			Appr		P6700 Bodyside LH - Robot Cell 2V09	Scale 1:1		Document type: EPB	Project nr: 22-16150
Modification	Date	Name	Original		Replacement of	Replaced by			Page 1 / 1533

Parts list

F01_001

Device tag	Quantity	Designation	Type number	Supplier	Part number
=V1AR11UQ41UQ8.1-BGS/R	1	Inductive sensor Monitoring Kit for Vario Clamps	1324633	TUNKERS	TUN.1324633

+.AR11UQ41UQ7.2/1

+.AR11UQ41UQ9.1/1

			Date	1/17/2023	Volvo Trucks North America	Valiant TMS	Parts list : TUN.1324633 - TUN.1324633	Drawing name: =2V09&EFS-EL	= + V1AR11UQ41UQ8.1
			Ed.	MKLEPADLO					
			Appr		P6700 Bodyside LH - Robot Cell 2V09	Scale 1:1		Document type: EPB	Project nr: 22-16150
Modification	Date	Name	Original		Replacement of	Replaced by			Page 1 / 1533

Parts list

F01_001

Device tag	Quantity	Designation	Type number	Supplier	Part number
=V1AR11UQ41UQ9.1-BGS/R	1	Inductive sensor Monitoring Kit for Vario Clamps	1324633	TUNKERS	TUN.1324633

+.AR11UQ41UQ8.1/1

+.AR11UQ41UQ9.2/1

			Date	1/17/2023	Volvo Trucks North America	Valiant TMS	Parts list : TUN.1324633 - TUN.1324633	Drawing name: =2V09&EFS-EL	= + V1AR11UQ41UQ9.1
			Ed.	MKLEPADLO					
			Appr		P6700 Bodyside LH - Robot Cell 2V09	Scale 1:1		Document type: EPB / Project nr: 22-16150	Page 1 / 1533
Modification	Date	Name	Original		Replacement of / Replaced by				

Parts list

F01_001

Device tag	Quantity	Designation	Type number	Supplier	Part number
=V1AR11UQ41UQ9.2-BGS/R	1	Inductive sensor Monitoring Kit for Vario Clamps	1324633	TUNKERS	TUN.1324633

+.AR11UQ41UQ9.1/1

+.AR21XQ11UC01/1

			Date	1/17/2023	Volvo Trucks North America	Valiant TMS	Parts list : TUN.1324633 - TUN.1324633	Drawing name: =2V09&EFS-EL	= + V1AR11UQ41UQ9.2
			Ed.	MKLEPADLO					
			Appr		P6700 Bodyside LH - Robot Cell 2V09	Scale 1:1		Document type: EPB / Project nr: 22-16150	Page 1 / 1533
Modification	Date	Name	Original		Replacement of / Replaced by				

Parts list

F01_001

Device tag	Quantity	Designation	Type number	Supplier	Part number
=V1AR21XQ11WC1-XG1	1	Surface socket-outlet		ABB	ABB.2CMA193115R1000

+.AR11UQ41UQ9.2/1

+.AR21XQ12UC01/1

			Date	1/17/2023	Volvo Trucks North America	Valiant TMS	Parts list : ABB.2CMA193115R1000 - ABB.2CMA193115R1000	Drawing name: =2V09&EFS-EL	= + V1AR21XQ11UC01
			Ed.	MKLEPADLO					
			Appr		P6700 Bodyside LH - Robot Cell 2V09	Scale 1:1		Document type: EPB	Project nr: 22-16150
Modification	Date	Name	Original		Replacement of	Replaced by			Page 1 / 1533

Parts list

F01_001

Device tag	Quantity	Designation	Type number	Supplier	Part number
=V1AR21XQ12WC1-XG1	1	Surface socket-outlet		ABB	ABB.2CMA193115R1000

+.AR21XQ11UC01/1

+.AR22XQ11UC01/1

			Date	1/17/2023	Volvo Trucks North America	Valiant TMS	Parts list : ABB.2CMA193115R1000 - ABB.2CMA193115R1000	Drawing name: =2V09&EFS-EL	= + V1AR21XQ12UC01
			Ed.	MKLEPADLO					
			Appr		P6700 Bodyside LH - Robot Cell 2V09	Scale 1:1		Document type: EPB	Project nr: 22-16150
Modification	Date	Name	Original		Replacement of	Replaced by			Page 1 / 1533

Parts list

F01_001

Device tag	Quantity	Designation	Type number	Supplier	Part number
=V1AR22XQ11WC1-XG1	1	Surface socket-outlet		ABB	ABB.2CMA193115R1000

+.AR21XQ12UC01/1

+.AR22XQ12UC01/1

			Date	1/17/2023	Volvo Trucks North America	Valiant TMS	Parts list : ABB.2CMA193115R1000 - ABB.2CMA193115R1000	Drawing name: =2V09&EFS-EL	= + V1AR22XQ11UC01
			Ed.	MKLEPADLO					
			Appr		P6700 Bodyside LH - Robot Cell 2V09	Scale 1:1		Document type: EPB	Project nr: 22-16150
Modification	Date	Name	Original		Replacement of	Replaced by			Page 1 / 1533

Parts list

F01_001

Device tag	Quantity	Designation	Type number	Supplier	Part number
=V1AR22XQ12WC1-XG1	1	Surface socket-outlet		ABB	ABB.2CMA193115R1000

+.AR22XQ11UC01/1

+.AR23XQ11UC01/1

			Date	1/17/2023	Volvo Trucks North America	Valiant TMS	Parts list : ABB.2CMA193115R1000 - ABB.2CMA193115R1000	Drawing name: =2V09&EFS-EL	= + V1AR22XQ12UC01
			Ed.	MKLEPADLO					
			Appr		P6700 Bodyside LH - Robot Cell 2V09	Scale 1:1		Document type: EPB	Project nr: 22-16150
Modification	Date	Name	Original		Replacement of	Replaced by			Page 1 / 1533

Parts list

F01_001

Device tag	Quantity	Designation	Type number	Supplier	Part number
=V1AR23XQ11WC1-XG1	1	Surface socket-outlet		ABB	ABB.2CMA193115R1000

+.AR22XQ12UC01/1

+.AR23XQ12UC01/1

			Date	1/17/2023	Volvo Trucks North America	Valiant TMS	Parts list : ABB.2CMA193115R1000 - ABB.2CMA193115R1000	Drawing name: =2V09&EFS-EL	= + V1AR23XQ11UC01
			Ed.	MKLEPADLO					
			Appr		P6700 Bodyside LH - Robot Cell 2V09			Document type: EPB	Project nr: 22-16150
Modification	Date	Name	Original		Replacement of	Replaced by	Scale 1:1		Page 1 / 1533

Parts list

F01_001

Device tag	Quantity	Designation	Type number	Supplier	Part number
=V1AR23XQ12WC1-XG1	1	Surface socket-outlet		ABB	ABB.2CMA193115R1000

+.AR23XQ11UC01/1

+.AR24XQ11UC01/1

			Date	1/17/2023	Volvo Trucks North America	Valiant TMS	Parts list : ABB.2CMA193115R1000 - ABB.2CMA193115R1000	Drawing name: =2V09&EFS-EL	= + V1AR23XQ12UC01
			Ed.	MKLEPADLO					
			Appr		P6700 Bodyside LH - Robot Cell 2V09	Scale 1:1		Document type: EPB	Project nr: 22-16150
Modification	Date	Name	Original		Replacement of	Replaced by			Page 1 / 1533

Parts list

F01_001

Device tag	Quantity	Designation	Type number	Supplier	Part number
=V1AR24XQ11WC1-XG1	1	Surface socket-outlet		ABB	ABB.2CMA193115R1000

+.AR23XQ12UC01/1

+.AR25XQ11UC01/1

			Date	1/17/2023	Volvo Trucks North America	Valiant TMS	Parts list : ABB.2CMA193115R1000 - ABB.2CMA193115R1000	Drawing name: =2V09&EFS-EL	= + V1AR24XQ11UC01
			Ed.	MKLEPADLO					
			Appr		P6700 Bodyside LH - Robot Cell 2V09	Scale 1:1		Document type: EPB	Project nr: 22-16150
Modification	Date	Name	Original		Replacement of	Replaced by			Page 1 / 1533

Parts list

F01_001

Device tag	Quantity	Designation	Type number	Supplier	Part number
=V1AR25XQ11WC1-XG1	1	Surface socket-outlet		ABB	ABB.2CMA193115R1000

+.AR24XQ11UC01/1

+.AR26XQ11UC01/1

			Date	1/17/2023	Volvo Trucks North America	Valiant TMS	Parts list : ABB.2CMA193115R1000 - ABB.2CMA193115R1000	Drawing name: =2V09&EFS-EL	= + V1AR25XQ11UC01
			Ed.	MKLEPADLO					
			Appr		P6700 Bodyside LH - Robot Cell 2V09	Scale 1:1		Document type: EPB	Project nr: 22-16150
Modification	Date	Name	Original		Replacement of	Replaced by			Page 1 / 1533

Parts list

F01_001

Device tag	Quantity	Designation	Type number	Supplier	Part number
=V1AR26XQ11WC1-XG1	1	Surface socket-outlet		ABB	ABB.2CMA193115R1000

+.AR25XQ11UC01/1

+.AR28XQ11UC01/1

			Date	1/17/2023	Volvo Trucks North America	Valiant TMS	Parts list : ABB.2CMA193115R1000 - ABB.2CMA193115R1000	Drawing name: =2V09&EFS-EL	= + V1AR26XQ11UC01
			Ed.	MKLEPADLO					
			Appr		P6700 Bodyside LH - Robot Cell 2V09	Scale 1:1		Document type: EPB	Project nr: 22-16150
Modification	Date	Name	Original		Replacement of	Replaced by			Page 1 / 1533

Parts list

F01_001

Device tag	Quantity	Designation	Type number	Supplier	Part number
=V1AR28XQ11WC1-XG1	1	Surface socket-outlet		ABB	ABB.2CMA193115R1000

+.AR26XQ11UC01/1

+.AR28XQ12UC01/1

			Date	1/17/2023	Volvo Trucks North America	Valiant TMS	Parts list : ABB.2CMA193115R1000 - ABB.2CMA193115R1000	Drawing name: =2V09&EFS-EL	= + V1AR28XQ11UC01
			Ed.	MKLEPADLO					
			Appr		P6700 Bodyside LH - Robot Cell 2V09			Document type: EPB	Project nr: 22-16150
Modification	Date	Name	Original		Replacement of	Replaced by	Scale 1:1		Page 1 / 1533

Parts list

F01_001

Device tag	Quantity	Designation	Type number	Supplier	Part number
=V1AR28XQ12WC1-XG1	1	Surface socket-outlet		ABB	ABB.2CMA193115R1000

+.AR28XQ11UC01/1

+.AR29XQ11UC01/1

			Date	1/17/2023	Volvo Trucks North America	Valiant TMS	Parts list : ABB.2CMA193115R1000 - ABB.2CMA193115R1000	Drawing name: =2V09&EFS-EL	= + V1AR28XQ12UC01
			Ed.	MKLEPADLO					
			Appr		P6700 Bodyside LH - Robot Cell 2V09			Document type: EPB	Project nr: 22-16150
Modification	Date	Name	Original		Replacement of	Replaced by	Scale 1:1		Page 1 / 1533

Parts list

F01_001

Device tag	Quantity	Designation	Type number	Supplier	Part number
=V1AR29XQ11WC1-XG1	1	Surface socket-outlet		ABB	ABB.2CMA193115R1000

+.AR28XQ12UC01/1

+.AR31UQ41/1

			Date	1/17/2023	Volvo Trucks North America	Valiant TMS	Parts list : ABB.2CMA193115R1000 - ABB.2CMA193115R1000	Drawing name: =2V09&EFS-EL	= + V1AR29XQ11UC01
			Ed.	MKLEPADLO					
			Appr		P6700 Bodyside LH - Robot Cell 2V09	Scale 1:1		Document type: EPB	Project nr: 22-16150
Modification	Date	Name	Original		Replacement of	Replaced by			Page 1 / 1533

Parts list

F01_001

Device tag	Quantity	Designation	Type number	Supplier	Part number
=V1AR31UQ41BG0-BG01	1	Inductive sensor	NI50U-CK40-AP6X2-H1141/S1590 W/BS4_A	Turck	TUR.1625891
=V1AR31UQ41BG0-BG02	1	Inductive sensor	NI50U-CK40-AP6X2-H1141/S1590 W/BS4_A	Turck	TUR.1625891
=V1AR31UQ41BG0-BG03	1	Inductive sensor	NI50U-CK40-AP6X2-H1141/S1590 W/BS4_A	Turck	TUR.1625891
=V1AR31UQ41BG0-BG04	1	Inductive sensor	NI50U-CK40-AP6X2-H1141/S1590 W/BS4_A	Turck	TUR.1625891
=V1AR31UQ41BG0-BG05	1	Inductive sensor	NI50U-CK40-AP6X2-H1141/S1590 W/BS4_A	Turck	TUR.1625891
=V1AR31UQ41BG0-XG1/2	1	Y splitter	U2-30676	TURCK	TUR.VB2-FSM 4.4/2FKM 4/S3450
=V1AR31UQ41BG0-XG3/4	1	Y splitter	U2-30676	TURCK	TUR.VB2-FSM 4.4/2FKM 4/S3450
=V1AR31UQ41KF1-KF1	0	Bus node	CPX-FB33	FES	FES.548755
=V1AR31UQ41KF1-KF1	0	Interlinking block	CPX-M-GE-EV-S-7/8-5POL	FES	FES.550208
=V1AR31UQ41KF1-KF1.11	0	Manifold block	CPX-M-AB-8-M12X2-5POL	FES	FES.549335
=V1AR31UQ41KF1-KF1.12	0	Manifold block	CPX-M-AB-8-M12X2-5POL	FES	FES.549335
=V1AR31UQ41KF1-KF1.13	0	Manifold block	CPX-M-AB-8-M12X2-5POL	FES	FES.549335

+.AR29XQ11UC01/1

+.AR31UQ41UQ1.1/1

			Date	1/17/2023	Volvo Trucks North America	Valiant TMS	Parts list : TUR.1625891 - FES.549335	Drawing name: =2V09&EFS-EL	=	
			Ed.	MKLEPADLO					+ V1AR31UQ41	
			Appr		P6700 Bodyside LH - Robot Cell 2V09			Document type: EPB	Project nr: 22-16150	Page 1
Modification	Date	Name	Original		Replacement of / Replaced by	Scale 1:1				1533

Parts list

F01_001

Device tag	Quantity	Designation	Type number	Supplier	Part number
=V1AR31UQ41UQ1.1-BGS/R	1	4-Wire, 4-Pin, DC M12 X 1 (PNP)	WWS001A	WEL	WEL.WWS001A

+V1AR31UQ41/1

+.AR31UQ41UQ2.1/1

			Date	1/17/2023	Volvo Trucks North America	Valiant TMS	Parts list : WEL.WWS001A - WEL.WWS001A	Drawing name: =2V09&EFS-EL	= + V1AR31UQ41UQ1.1
			Ed.	MKLEPADLO					
			Appr		P6700 Bodyside LH - Robot Cell 2V09			Document type: EPB	Project nr: 22-16150
Modification	Date	Name	Original		Replacement of / Replaced by	Scale 1:1			Page 1 / 1533

Parts list

F01_001

Device tag	Quantity	Designation	Type number	Supplier	Part number
=V1AR31UQ41UQ2.1-BGS/R	1	Inductive sensor Monitoring Kit for Power Clamps	1324638	TUNKERS	TUN.1324638

+.AR31UQ41UQ1.1/1

+.AR31UQ41UQ2.2/1

Parts list

F01_001

Device tag	Quantity	Designation	Type number	Supplier	Part number
=V1AR31UQ41UQ2.2-BGS/R	1	Inductive sensor Monitoring Kit for Power Clamps	1324638	TUNKERS	TUN.1324638

+.AR31UQ41UQ2.1/1

+.AR31UQ41UQ3.1/1

			Date	1/17/2023	Volvo Trucks North America	Valiant TMS	Parts list : TUN.1324638 - TUN.1324638	Drawing name: =2V09&EFS-EL	= + V1AR31UQ41UQ2.2
			Ed.	MKLEPADLO					
			Appr		P6700 Bodyside LH - Robot Cell 2V09	Scale 1:1		Document type: EPB	Project nr: 22-16150
Modification	Date	Name	Original		Replacement of	Replaced by			Page 1 / 1533

Parts list

F01_001

Device tag	Quantity	Designation	Type number	Supplier	Part number
=V1AR31UQ41UQ3.1-BGS/R	1	Inductive sensor Monitoring Kit for Power Clamps	1324638	TUNKERS	TUN.1324638

+.AR31UQ41UQ2.2/1

+.AR31UQ41UQ4.1/1

			Date	1/17/2023	Volvo Trucks North America	Valiant TMS	Parts list : TUN.1324638 - TUN.1324638	Drawing name: =2V09&EFS-EL	= + V1AR31UQ41UQ3.1
			Ed.	MKLEPADLO					
			Appr		P6700 Bodyside LH - Robot Cell 2V09	Scale 1:1		Document type: EPB	Project nr: 22-16150
Modification	Date	Name	Original		Replacement of	Replaced by			Page 1 / 1533

Parts list

F01_001

Device tag	Quantity	Designation	Type number	Supplier	Part number
=V1AR31UQ41UQ4.1-BGS/R	1	Inductive sensor Monitoring Kit for Power Clamps	1324638	TUNKERS	TUN.1324638

+.AR31UQ41UQ3.1/1

+.AR31UQ41UQ5.1/1

			Date	1/17/2023	Volvo Trucks North America	Valiant TMS	Parts list : TUN.1324638 - TUN.1324638	Drawing name: =2V09&EFS-EL	= + V1AR31UQ41UQ4.1
			Ed.	MKLEPADLO					
			Appr		P6700 Bodyside LH - Robot Cell 2V09	Scale 1:1		Document type: EPB	Project nr: 22-16150
Modification	Date	Name	Original		Replacement of	Replaced by			Page 1 / 1533

Parts list

F01_001

Device tag	Quantity	Designation	Type number	Supplier	Part number
=V1AR31UQ41UQ5.1-BGS/R	1	Inductive sensor Monitoring Kit for Power Clamps	1324638	TUNKERS	TUN.1324638

+.AR31UQ41UQ4.1/1

+.AR31UQ41UQ6.1/1

			Date	1/17/2023	Volvo Trucks North America	Valiant TMS	Parts list : TUN.1324638 - TUN.1324638	Drawing name: =2V09&EFS-EL	= + V1AR31UQ41UQ5.1
			Ed.	MKLEPADLO					
			Appr		P6700 Bodyside LH - Robot Cell 2V09	Scale 1:1		Document type: EPB	Project nr: 22-16150
Modification	Date	Name	Original		Replacement of	Replaced by			Page 1 / 1533

Parts list

F01_001

Device tag	Quantity	Designation	Type number	Supplier	Part number
=V1AR31UQ41UQ6.1-BGS/R	1	Inductive sensor Monitoring Kit for Power Clamps	1324638	TUNKERS	TUN.1324638

+.AR31UQ41UQ5.1/1

+.AR31UQ41UQ7.1/1

			Date	1/17/2023	Volvo Trucks North America	Valiant TMS	Parts list : TUN.1324638 - TUN.1324638	Drawing name: =2V09&EFS-EL	=	
			Ed.	MKLEPADLO					+ V1AR31UQ41UQ6.1	
			Appr		P6700 Bodyside LH - Robot Cell 2V09			Document type: EPB	Project nr: 22-16150	Page 1
Modification	Date	Name	Original		Replacement of / Replaced by	Scale 1:1				1533

Parts list

F01_001

Device tag	Quantity	Designation	Type number	Supplier	Part number
=V1AR31UQ41UQ7.1-BGS/R	1	Inductive sensor Monitoring Kit for Power Clamps	1324638	TUNKERS	TUN.1324638

+.AR31UQ41UQ6.1/1

+.AR31UQ41UQ7.2/1

Parts list

F01_001

Device tag	Quantity	Designation	Type number	Supplier	Part number
=V1AR31UQ41UQ7.2-BGS/R	1	Inductive sensor Monitoring Kit for Power Clamps	1324638	TUNKERS	TUN.1324638

+.AR31UQ41UQ7.1/1

+.AR31UQ41UQ8.1/1

			Date	1/17/2023	Volvo Trucks North America	Valiant TMS	Parts list : TUN.1324638 - TUN.1324638	Drawing name: =2V09&EFS-EL	= + V1AR31UQ41UQ7.2
			Ed.	MKLEPADLO					
			Appr		P6700 Bodyside LH - Robot Cell 2V09	Scale 1:1		Document type: EPB	Project nr: 22-16150
Modification	Date	Name	Original		Replacement of	Replaced by			Page 1 / 1533

Parts list

F01_001

Device tag	Quantity	Designation	Type number	Supplier	Part number
=V1AR31UQ41UQ8.1-BGS/R	1	Inductive sensor Monitoring Kit for Power Clamps	1324638	TUNKERS	TUN.1324638

+.AR31UQ41UQ7.2/1

+.AR31UQ41UQ8.2/1

			Date	1/17/2023	Volvo Trucks North America	Valiant TMS	Parts list : TUN.1324638 - TUN.1324638	Drawing name: =2V09&EFS-EL	= + V1AR31UQ41UQ8.1
			Ed.	MKLEPADLO					
			Appr		P6700 Bodyside LH - Robot Cell 2V09	Scale 1:1		Document type: EPB	Project nr: 22-16150
Modification	Date	Name	Original		Replacement of	Replaced by			Page 1 / 1533

Parts list

F01_001

Device tag	Quantity	Designation	Type number	Supplier	Part number
=V1AR31UQ41UQ8.2-BGS/R	1	Inductive sensor Monitoring Kit for Power Clamps	1324638	TUNKERS	TUN.1324638

+.AR31UQ41UQ8.1/1

+.AR31UQ41UQ9.1/1

			Date	1/17/2023	Volvo Trucks North America	Valiant TMS	Parts list : TUN.1324638 - TUN.1324638	Drawing name: =2V09&EFS-EL	= + V1AR31UQ41UQ8.2
			Ed.	MKLEPADLO					
			Appr		P6700 Bodyside LH - Robot Cell 2V09	Scale 1:1		Document type: EPB / Project nr: 22-16150	Page 1 / 1533
Modification	Date	Name	Original		Replacement of / Replaced by				

Parts list

F01_001

Device tag	Quantity	Designation	Type number	Supplier	Part number
=V1AR31UQ41UQ9.1-BGS/R	1	Inductive sensor Monitoring Kit for Power Clamps	1324638	TUNKERS	TUN.1324638

+.AR31UQ41UQ8.2/1

+.AR31UQ41UQ9.2/1

			Date	1/17/2023	Volvo Trucks North America	Valiant TMS	Parts list : TUN.1324638 - TUN.1324638	Drawing name: =2V09&EFS-EL	=	
			Ed.	MKLEPADLO					+ V1AR31UQ41UQ9.1	
			Appr		P6700 Bodyside LH - Robot Cell 2V09	Scale 1:1		Document type: EPB	Project nr: 22-16150	Page 1 / 1533
Modification	Date	Name	Original		Replacement of	Replaced by				

Parts list

F01_001

Device tag	Quantity	Designation	Type number	Supplier	Part number
=V1AR31UQ41UQ9.2-BGS/R	1	Inductive sensor Monitoring Kit for Power Clamps	1324638	TUNKERS	TUN.1324638

+.AR31UQ41UQ9.1/1

+.AR31XQ41/1

			Date	1/17/2023	Volvo Trucks North America	Valiant TMS	Parts list : TUN.1324638 - TUN.1324638	Drawing name: =2V09&EFS-EL	=	
			Ed.	MKLEPADLO					+ V1AR31UQ41UQ9.2	
			Appr		P6700 Bodyside LH - Robot Cell 2V09	Scale 1:1		Document type: EPB	Project nr: 22-16150	Page 1 / 1533
Modification	Date	Name	Original		Replacement of	Replaced by				

Parts list

F01_001

Device tag	Quantity	Designation	Type number	Supplier	Part number
=V1AR31XQ41KF1-KF1	0	Bus node	CPX-FB33	FES	FES.548755
=V1AR31XQ41KF1-KF1	0	Interlinking block	CPX-M-GE-EV-S-7/8-5POL	FES	FES.550208
=V1AR31XQ41KF1-KF1.11	0	Manifold block	CPX-M-AB-8-M12X2-5POL	FES	FES.549335

+.AR31UQ41UQ9.2/1

+.AR31XQ41UQ1.1/1

			Date	1/17/2023	Volvo Trucks North America	Valiant TMS	Parts list : FES.548755 - FES.549335	Drawing name: =2V09&EFS-EL	=
			Ed.	MKLEPADLO					+ V1AR31XQ41
			Appr		P6700 Bodyside LH - Robot Cell 2V09			Document type: EPB	Project nr: 22-16150
Modification	Date	Name	Original		Replacement of / Replaced by	Scale 1:1			Page 1 / 1533

Parts list

F01_001

Device tag	Quantity	Designation	Type number	Supplier	Part number
=V1AR31XQ41UQ1.1-BGR	1	Inductive sensor	BI20U-CA40-AP6X2-H1141/S1590 W/BS2.0	Turck	TUR.1627205
=V1AR31XQ41UQ1.1-BGS	1	Inductive sensor	BI20U-CA40-AP6X2-H1141/S1590 W/BS2.0	Turck	TUR.1627205
=V1AR31XQ41UQ1.1-XG1/2	1	Y splitter	U2-30676	TURCK	TUR.VB2-FSM 4.4/2FKM 4/S3450

+V1AR31XQ41/1

+.AR81UQ41/1

			Date	1/17/2023	Volvo Trucks North America	Valiant TMS	Parts list : TUR.1627205 - TUR.VB2-FSM 4.4/2FKM 4/S3450	Drawing name: =2V09&EFS-EL	= + V1AR31XQ41UQ1.1
			Ed.	MKLEPADLO					
			Appr		P6700 Bodyside LH - Robot Cell 2V09	Scale 1:1		Document type: EPB	Project nr: 22-16150
Modification	Date	Name	Original		Replacement of	Replaced by			Page 1 / 1533

Parts list

F01_001

Device tag	Quantity	Designation	Type number	Supplier	Part number
=V1AR81UQ41BG0-BG01	1	Inductive sensor	NI50U-CK40-AP6X2-H1141/S1590 W/BS4_A	Turck	TUR.1625891
=V1AR81UQ41BG0-BG02	1	Inductive sensor	NI50U-CK40-AP6X2-H1141/S1590 W/BS4_A	Turck	TUR.1625891
=V1AR81UQ41BG0-BG03	1	Inductive sensor	NI50U-CK40-AP6X2-H1141/S1590 W/BS4_A	Turck	TUR.1625891
=V1AR81UQ41BG0-BG04	1	Inductive sensor	NI50U-CK40-AP6X2-H1141/S1590 W/BS4_A	Turck	TUR.1625891
=V1AR81UQ41BG0-BG05	1	Inductive sensor	NI50U-CK40-AP6X2-H1141/S1590 W/BS4_A	Turck	TUR.1625891
=V1AR81UQ41BG0-XG1/2	1	Y splitter	U2-30676	TURCK	TUR.VB2-FSM 4.4/2FKM 4/S3450
=V1AR81UQ41BG0-XG3/4	1	Y splitter	U2-30676	TURCK	TUR.VB2-FSM 4.4/2FKM 4/S3450
=V1AR81UQ41KF1-KF1	0	Bus node	CPX-FB33	FES	FES.548755
=V1AR81UQ41KF1-KF1	0	Interlinking block	CPX-M-GE-EV-S-7/8-5POL	FES	FES.550208
=V1AR81UQ41KF1-KF1.11	0	Manifold block	CPX-M-AB-8-M12X2-5POL	FES	FES.549335
=V1AR81UQ41KF1-KF1.12	0	Manifold block	CPX-M-AB-8-M12X2-5POL	FES	FES.549335
=V1AR81UQ41KF1-KF1.13	0	Manifold block	CPX-M-AB-8-M12X2-5POL	FES	FES.549335

Parts list

F01_001

Device tag	Quantity	Designation	Type number	Supplier	Part number
=V1AR81UQ41UQ1.1-BGS/R	1	4-Wire, 4-Pin, DC M12 X 1 (PNP)	WWS001A	WEL	WEL.WWS001A

+V1AR81UQ41/1

+.AR81UQ41UQ2.1/1

			Date	1/17/2023	Volvo Trucks North America	Valiant TMS	Parts list : WEL.WWS001A - WEL.WWS001A	Drawing name: =2V09&EFS-EL	= + V1AR81UQ41UQ1.1
			Ed.	MKLEPADLO					
			Appr		P6700 Bodyside LH - Robot Cell 2V09			Document type: EPB	Project nr: 22-16150
Modification	Date	Name	Original		Replacement of	Replaced by	Scale 1:1		Page 1 / 1533

Parts list

F01_001

Device tag	Quantity	Designation	Type number	Supplier	Part number
=V1AR81UQ41UQ2.1-BGS/R	1	4-Wire, 4-Pin, DC M12 X 1 (PNP)	WWS001A	WEL	WEL.WWS001A

+.AR81UQ41UQ1.1/1

+.AR81UQ41UQ3.1/1

			Date	1/17/2023	Volvo Trucks North America	Valiant TMS	Parts list : WEL.WWS001A - WEL.WWS001A	Drawing name: =2V09&EFS-EL	= + V1AR81UQ41UQ2.1
			Ed.	MKLEPADLO					
			Appr		P6700 Bodyside LH - Robot Cell 2V09	Scale 1:1		Document type: EPB	Project nr: 22-16150
Modification	Date	Name	Original		Replacement of	Replaced by			Page 1 / 1533

Parts list

F01_001

Device tag	Quantity	Designation	Type number	Supplier	Part number
=V1AR81UQ41UQ3.1-BGS/R	1	4-Wire, 4-Pin, DC M12 X 1 (PNP)	WWS001A	WEL	WEL.WWS001A

+.AR81UQ41UQ2.1/1

+.AR81UQ41UQ4.1/1

			Date	1/17/2023	Volvo Trucks North America	Valiant TMS	Parts list : WEL.WWS001A - WEL.WWS001A	Drawing name: =2V09&EFS-EL	= + V1AR81UQ41UQ3.1
			Ed.	MKLEPADLO					
			Appr		P6700 Bodyside LH - Robot Cell 2V09	Scale 1:1		Document type: EPB	Project nr: 22-16150
Modification	Date	Name	Original		Replacement of	Replaced by			Page 1 / 1533

Parts list

F01_001

Device tag	Quantity	Designation	Type number	Supplier	Part number
=V1AR81UQ41UQ4.1-BGS/R	1	4-Wire, 4-Pin, DC M12 X 1 (PNP)	WWS001A	WEL	WEL.WWS001A

+.AR81UQ41UQ3.1/1

+.AR81UQ41UQ5.1/1

			Date	1/17/2023	Volvo Trucks North America	Valiant TMS	Parts list : WEL.WWS001A - WEL.WWS001A	Drawing name: =2V09&EFS-EL	= + V1AR81UQ41UQ4.1
			Ed.	MKLEPADLO					
			Appr		P6700 Bodyside LH - Robot Cell 2V09	Scale 1:1		Document type: EPB	Project nr: 22-16150
Modification	Date	Name	Original		Replacement of / Replaced by				Page 1 / 1533

Parts list

F01_001

Device tag	Quantity	Designation	Type number	Supplier	Part number
=V1AR81UQ41UQ5.1-BGS/R	1	4-Wire, 4-Pin, DC M12 X 1 (PNP)	WWS001A	WEL	WEL.WWS001A

+.AR81UQ41UQ4.1/1

+.AR81UQ41UQ6.1/1

			Date	1/17/2023	Volvo Trucks North America	Valiant TMS	Parts list : WEL.WWS001A - WEL.WWS001A	Drawing name: =2V09&EFS-EL	= + V1AR81UQ41UQ5.1
			Ed.	MKLEPADLO					
			Appr		P6700 Bodyside LH - Robot Cell 2V09	Scale 1:1		Document type: EPB	Project nr: 22-16150
Modification	Date	Name	Original		Replacement of	Replaced by			Page 1 / 1533

Parts list

F01_001

Device tag	Quantity	Designation	Type number	Supplier	Part number
=V1AR81UQ41UQ6.1-BGS/R	1	Inductive sensor Monitoring Kit for Power Clamps	1324638	TUNKERS	TUN.1324638

+.AR81UQ41UQ5.1/1

+.AR81UQ41UQ6.2/1

			Date	1/17/2023	Volvo Trucks North America	Valiant TMS	Parts list : TUN.1324638 - TUN.1324638	Drawing name: =2V09&EFS-EL	= + V1AR81UQ41UQ6.1
			Ed.	MKLEPADLO					
			Appr		P6700 Bodyside LH - Robot Cell 2V09	Scale 1:1		Document type: EPB	Project nr: 22-16150
Modification	Date	Name	Original		Replacement of	Replaced by			Page 1 / 1533

Parts list

F01_001

Device tag	Quantity	Designation	Type number	Supplier	Part number
=V1AR81UQ41UQ6.2-BGS/R	1	Inductive sensor Monitoring Kit for Power Clamps	1324638	TUNKERS	TUN.1324638

+.AR81UQ41UQ6.1/1

+.AR81UQ41UQ6.3/1

			Date	1/17/2023	Volvo Trucks North America	Valiant TMS	Parts list : TUN.1324638 - TUN.1324638	Drawing name: =2V09&EFS-EL	=	
			Ed.	MKLEPADLO					+ V1AR81UQ41UQ6.2	
			Appr		P6700 Bodyside LH - Robot Cell 2V09	Scale 1:1		Document type: EPB	Project nr: 22-16150	Page 1 / 1533
Modification	Date	Name	Original		Replacement of	Replaced by				

Parts list

F01_001

Device tag	Quantity	Designation	Type number	Supplier	Part number
=V1AR81UQ41UQ6.3-BGS/R	1	Inductive sensor Monitoring Kit for Power Clamps	1324638	TUNKERS	TUN.1324638

+.AR81UQ41UQ6.2/1

+.AR81UQ41UQ6.4/1

			Date	1/17/2023	Volvo Trucks North America	Valiant TMS	Parts list : TUN.1324638 - TUN.1324638	Drawing name: =2V09&EFS-EL	=	
			Ed.	MKLEPADLO					+ V1AR81UQ41UQ6.3	
			Appr		P6700 Bodyside LH - Robot Cell 2V09	Scale 1:1		Document type: EPB	Project nr: 22-16150	Page 1 / 1533
Modification	Date	Name	Original		Replacement of	Replaced by				

Parts list

F01_001

Device tag	Quantity	Designation	Type number	Supplier	Part number
=V1AR81UQ41UQ6.4-BGS/R	1	Inductive sensor Monitoring Kit for Power Clamps	1324638	TUNKERS	TUN.1324638

+.AR81UQ41UQ6.3/1

+.AR81UQ41UQ7.1/1

			Date	1/17/2023	Volvo Trucks North America	Valiant TMS	Parts list : TUN.1324638 - TUN.1324638	Drawing name: =2V09&EFS-EL	= + V1AR81UQ41UQ6.4
			Ed.	MKLEPADLO					
			Appr		P6700 Bodyside LH - Robot Cell 2V09	Scale 1:1		Document type: EPB	Project nr: 22-16150
Modification	Date	Name	Original		Replacement of	Replaced by			Page 1 / 1533

Parts list

F01_001

Device tag	Quantity	Designation	Type number	Supplier	Part number
=V1AR81UQ41UQ7.1-BGS/R	1	Inductive sensor Monitoring Kit for Power Clamps	1324638	TUNKERS	TUN.1324638

+.AR81UQ41UQ6.4/1

+.AR81UQ41UQ7.2/1

			Date	1/17/2023	Volvo Trucks North America	Valiant TMS	Parts list : TUN.1324638 - TUN.1324638	Drawing name: =2V09&EFS-EL	=	
			Ed.	MKLEPADLO					+ V1AR81UQ41UQ7.1	
			Appr		P6700 Bodyside LH - Robot Cell 2V09	Scale 1:1		Document type: EPB	Project nr: 22-16150	Page 1 / 1533
Modification	Date	Name	Original		Replacement of	Replaced by				

Parts list

F01_001

Device tag	Quantity	Designation	Type number	Supplier	Part number
=V1AR81UQ41UQ7.2-BGS/R	1	Inductive sensor Monitoring Kit for Power Clamps	1324638	TUNKERS	TUN.1324638

+.AR81UQ41UQ7.1/1

+.AR81UQ41UQ8.1/1

			Date	1/17/2023	Volvo Trucks North America	Valiant TMS	Parts list : TUN.1324638 - TUN.1324638	Drawing name: =2V09&EFS-EL	=	
			Ed.	MKLEPADLO					+ V1AR81UQ41UQ7.2	
			Appr		P6700 Bodyside LH - Robot Cell 2V09	Scale 1:1		Document type: EPB	Project nr: 22-16150	Page 1 / 1533
Modification	Date	Name	Original		Replacement of	Replaced by				

Parts list

F01_001

Device tag	Quantity	Designation	Type number	Supplier	Part number
=V1AR81UQ41UQ8.1-BGS/R	1	Inductive sensor Monitoring Kit for Power Clamps	1324638	TUNKERS	TUN.1324638

+.AR81UQ41UQ7.2/1

+.AR81UQ41UQ8.2/1

			Date	1/17/2023	Volvo Trucks North America	Valiant TMS	Parts list : TUN.1324638 - TUN.1324638	Drawing name: =2V09&EFS-EL	= + V1AR81UQ41UQ8.1
			Ed.	MKLEPADLO					
			Appr		P6700 Bodyside LH - Robot Cell 2V09	Scale 1:1		Document type: EPB	Project nr: 22-16150
Modification	Date	Name	Original		Replacement of	Replaced by			Page 1 / 1533

Parts list

F01_001

Device tag	Quantity	Designation	Type number	Supplier	Part number
=V1AR81UQ41UQ8.2-BGS/R	1	Inductive sensor Monitoring Kit for Power Clamps	1324638	TUNKERS	TUN.1324638

+.AR81UQ41UQ8.1/1

+.AR81UQ41UQ9.1/1

			Date	1/17/2023	Volvo Trucks North America	Valiant TMS	Parts list : TUN.1324638 - TUN.1324638	Drawing name: =2V09&EFS-EL	= + V1AR81UQ41UQ8.2
			Ed.	MKLEPADLO					
			Appr		P6700 Bodyside LH - Robot Cell 2V09	Scale 1:1		Document type: EPB	Project nr: 22-16150
Modification	Date	Name	Original		Replacement of	Replaced by			Page 1 / 1533

Parts list

F01_001

Device tag	Quantity	Designation	Type number	Supplier	Part number
=V1AR81UQ41UQ9.1-BGS/R	1	Inductive sensor Monitoring Kit for Power Clamps	1324638	TUNKERS	TUN.1324638

+.AR81UQ41UQ8.2/1

+.AR81UQ41UQ9.2/1

			Date	1/17/2023	Volvo Trucks North America	Valiant TMS	Parts list : TUN.1324638 - TUN.1324638	Drawing name: =2V09&EFS-EL	=	
			Ed.	MKLEPADLO					+ V1AR81UQ41UQ9.1	
			Appr		P6700 Bodyside LH - Robot Cell 2V09	Scale 1:1		Document type: EPB	Project nr: 22-16150	Page 1 / 1533
Modification	Date	Name	Original		Replacement of	Replaced by				

Parts list

F01_001

Device tag	Quantity	Designation	Type number	Supplier	Part number
=V1AR81UQ41UQ9.2-BGS/R	1	Inductive sensor Monitoring Kit for Power Clamps	1324638	TUNKERS	TUN.1324638

+.AR81UQ41UQ9.1/1

+.AR81XQ51UC01/1

			Date	1/17/2023	Volvo Trucks North America	Valiant TMS	Parts list : TUN.1324638 - TUN.1324638	Drawing name: =2V09&EFS-EL	= + V1AR81UQ41UQ9.2
			Ed.	MKLEPADLO					
			Appr		P6700 Bodyside LH - Robot Cell 2V09	Scale 1:1		Document type: EPB / Project nr: 22-16150	Page 1 / 1533
Modification	Date	Name	Original		Replacement of / Replaced by				

Parts list

F01_001

Device tag	Quantity	Designation	Type number	Supplier	Part number
=V1AR81XQ51WC1-XG1	1	Surface socket-outlet		ABB	ABB.2CMA193115R1000

+.AR81UQ41UQ9.2/1

+.AR81XQ52UC01/1

			Date	1/17/2023	Volvo Trucks North America	Valiant TMS	Parts list : ABB.2CMA193115R1000 - ABB.2CMA193115R1000	Drawing name: =2V09&EFS-EL	=	
			Ed.	MKLEPADLO					+ V1AR81XQ51UC01	
			Appr		P6700 Bodyside LH - Robot Cell 2V09	Scale 1:1		Document type: EPB	Project nr: 22-16150	Page 1 / 1533
Modification	Date	Name	Original		Replacement of	Replaced by				

Parts list

F01_001

Device tag	Quantity	Designation	Type number	Supplier	Part number
=V1AR81XQ52WC1-XG1	1	Surface socket-outlet		ABB	ABB.2CMA193115R1000

+.AR81XQ51UC01/1

+.AR211XQ11UC01/1

			Date	1/17/2023	Volvo Trucks North America	Valiant TMS	Parts list : ABB.2CMA193115R1000 - ABB.2CMA193115R1000	Drawing name: =2V09&EFS-EL	= + V1AR81XQ52UC01
			Ed.	MKLEPADLO					
			Appr		P6700 Bodyside LH - Robot Cell 2V09	Scale 1:1		Document type: EPB	Project nr: 22-16150
Modification	Date	Name	Original		Replacement of	Replaced by			Page 1 / 1533

Parts list

F01_001

Device tag	Quantity	Designation	Type number	Supplier	Part number
=V1AR211XQ11WC1-XG1	1	Surface socket-outlet		ABB	ABB.2CMA193115R1000

+.AR81XQ52UC01/1

+.AR212XQ11UC01/1

			Date	1/17/2023	Volvo Trucks North America	Valiant TMS	Parts list : ABB.2CMA193115R1000 - ABB.2CMA193115R1000	Drawing name: =2V09&EFS-EL	= + V1AR211XQ11UC01
			Ed.	MKLEPADLO					
			Appr		P6700 Bodyside LH - Robot Cell 2V09	Scale 1:1		Document type: EPB	Project nr: 22-16150
Modification	Date	Name	Original		Replacement of	Replaced by			Page 1 / 1533

Parts list

F01_001

Device tag	Quantity	Designation	Type number	Supplier	Part number
=V1AR212XQ11WC1-XG1	1	Surface socket-outlet		ABB	ABB.2CMA193115R1000

+.AR211XQ11UC01/1

+.FQ1/1

			Date	1/17/2023	Volvo Trucks North America	Valiant TMS	Parts list : ABB.2CMA193115R1000 - ABB.2CMA193115R1000	Drawing name: =2V09&EFS-EL	= + V1AR212XQ11UC01
			Ed.	MKLEPADLO					
			Appr		P6700 Bodyside LH - Robot Cell 2V09	Scale 1:1		Document type: EPB	Project nr: 22-16150
Modification	Date	Name	Original		Replacement of	Replaced by			Page 1 / 1533

Parts list

F01_001

Device tag	Quantity	Designation	Type number	Supplier	Part number
=V1FQ1-BR11	1	EZ-Screen System	SLSCP30-1200P44NT	BANNER	BAN.SLSCP30-1200P44NT
=V1FQ1-BR12	1	EZ-Screen System	SLSCP30-1200P88	BANNER	BAN.SLSCP30-1200P88
=V1FQ1-BR13	1	EZ-Screen System	SLSCP30-1200P44NT	BANNER	BAN.SLSCP30-1200P44NT
=V1FQ1-BR14	1	EZ-Screen System	SLSCP30-1200P88	BANNER	BAN.SLSCP30-1200P88
=V1FQ1-BR15	1	EZ-Screen System	SLSCP30-1200P44NT	BANNER	BAN.SLSCP30-1200P44NT
=V1FQ1-BR16	1	EZ-Screen System	SLSCP30-1200P44NT	BANNER	BAN.SLSCP30-1200P44NT
=V1FQ1-BR17	1	EZ-Screen System	SLSCP30-1200P88	BANNER	BAN.SLSCP30-1200P88
=V1FQ1-BR18	1	EZ-Screen System	SLSCP30-1200P44NT	BANNER	BAN.SLSCP30-1200P44NT
=V1FQ1-BR19	1	EZ-Screen System	SLSCP30-1200P88	BANNER	BAN.SLSCP30-1200P88
=V1FQ1-BR20	1	EZ-Screen System	SLSCP30-1200P44NT	BANNER	BAN.SLSCP30-1200P44NT

+.AR212XQ11UC01/1

+.FQ1BG1/1

			Date	1/17/2023	Volvo Trucks North America	Valiant TMS	Parts list : BAN.SLSCP30-1200P44NT - BAN.SLSCP30-1200P44NT	Drawing name: =2V09&EFS-EL	=	
			Ed.	MKLEPADLO					+ V1FQ1	
			Appr		P6700 Bodyside LH - Robot Cell 2V09			Document type: EPB	Project nr: 22-16150	Page 1
Modification	Date	Name	Original		Replacement of	Replaced by	Scale 1:1			1533

Parts list

F01_001

Device tag	Quantity	Designation	Type number	Supplier	Part number
=V1FQ1-BG1	1	SWITCH	MGB-L2B-PNA-L-121863	EUCHNER	EUC.MGB-L2B-PNA-L-121863
=V1FQ1-BG1	1	HANDLE	MGB-H-AA1A2-L-106221	EUCHNER	EUC.MGB-H-AA1A2-L-106221
=V1FQ1-BG1	1	MOUNTING PLATE	MGB-A-MOUNTINGPLATE-H-109491	EUCHNER	EUC.MGB-A-MOUNTINGPLATE-H-109491
=V1FQ1-BG1	1	ESCAPE RELEASE	MGB-E-A2-106051	EUCHNER	EUC.MGB-E-A2-106051

+V1FQ1/1

+.FQ1BG2/1

			Date	1/17/2023	Volvo Trucks North America	Valiant TMS	Parts list : EUC.MGB-L2B-PNA-L-121863 - EUC.MGB-E-A2-106051	Drawing name: =2V09&EFS-EL	=	
			Ed.	MKLEPADLO					+ V1FQ1BG1	
			Appr		P6700 Bodyside LH - Robot Cell 2V09	Scale 1:1		Document type: EPB	Project nr: 22-16150	Page 1 / 1533
Modification	Date	Name	Original		Replacement of	Replaced by				

Parts list

F01_001

Device tag	Quantity	Designation	Type number	Supplier	Part number
=V1FQ1-BG2	1	SWITCH	MGB-L2B-PNA-L-121863	EUCHNER	EUC.MGB-L2B-PNA-L-121863
=V1FQ1-BG2	1	HANDLE	MGB-H-AA1A2-L-106221	EUCHNER	EUC.MGB-H-AA1A2-L-106221
=V1FQ1-BG2	1	MOUNTING PLATE	MGB-A-MOUNTINGPLATE-H-109491	EUCHNER	EUC.MGB-A-MOUNTINGPLATE-H-109491
=V1FQ1-BG2	1	ESCAPE RELEASE	MGB-E-A2-106051	EUCHNER	EUC.MGB-E-A2-106051

+.FQ1BG1/1

+.FQ1BG3/1

			Date	1/17/2023	Volvo Trucks North America	Valiant TMS	Parts list : EUC.MGB-L2B-PNA-L-121863 - EUC.MGB-E-A2-106051	Drawing name: =2V09&EFS-EL	=	
			Ed.	MKLEPADLO					+ V1FQ1BG2	
			Appr		P6700 Bodyside LH - Robot Cell 2V09	Scale 1:1		Document type: EPB	Project nr: 22-16150	Page 1 / 1533
Modification	Date	Name	Original		Replacement of	Replaced by				

Parts list

F01_001

Device tag	Quantity	Designation	Type number	Supplier	Part number
=V1FQ1-BG3	1	SWITCH	MGB-L2B-PNA-L-121863	EUCHNER	EUC.MGB-L2B-PNA-L-121863
=V1FQ1-BG3	1	HANDLE	MGB-H-AA1A2-L-106221	EUCHNER	EUC.MGB-H-AA1A2-L-106221
=V1FQ1-BG3	1	MOUNTING PLATE	MGB-A-MOUNTINGPLATE-H-109491	EUCHNER	EUC.MGB-A-MOUNTINGPLATE-H-109491
=V1FQ1-BG3	1	ESCAPE RELEASE	MGB-E-A2-106051	EUCHNER	EUC.MGB-E-A2-106051

+.FQ1BG2/1

+.FQ1BG4/1

			Date	1/17/2023	Volvo Trucks North America	Valiant TMS	Parts list : EUC.MGB-L2B-PNA-L-121863 - EUC.MGB-E-A2-106051	Drawing name: =2V09&EFS-EL	= + V1FQ1BG3
			Ed.	MKLEPADLO					
			Appr		P6700 Bodyside LH - Robot Cell 2V09	Scale 1:1		Document type: EPB	Project nr: 22-16150
Modification	Date	Name	Original		Replacement of / Replaced by				Page 1 / 1533

Parts list

F01_001

Device tag	Quantity	Designation	Type number	Supplier	Part number
=V1FQ1-BG4	1	SWITCH	MGB-L2B-PNA-L-121863	EUCHNER	EUC.MGB-L2B-PNA-L-121863
=V1FQ1-BG4	1	HANDLE	MGB-H-AA1A2-L-106221	EUCHNER	EUC.MGB-H-AA1A2-L-106221
=V1FQ1-BG4	1	MOUNTING PLATE	MGB-A-MOUNTINGPLATE-H-109491	EUCHNER	EUC.MGB-A-MOUNTINGPLATE-H-109491
=V1FQ1-BG4	1	ESCAPE RELEASE	MGB-E-A2-106051	EUCHNER	EUC.MGB-E-A2-106051

+.FQ1BG3/1

+.FQ1BG5/1

			Date	1/17/2023	Volvo Trucks North America	Valiant TMS	Parts list : EUC.MGB-L2B-PNA-L-121863 - EUC.MGB-E-A2-106051	Drawing name: =2V09&EFS-EL	=	
			Ed.	MKLEPADLO					+ V1FQ1BG4	
			Appr		P6700 Bodyside LH - Robot Cell 2V09	Scale 1:1		Document type: EPB	Project nr: 22-16150	Page 1 / 1533
Modification	Date	Name	Original		Replacement of	Replaced by				

Parts list

F01_001

Device tag	Quantity	Designation	Type number	Supplier	Part number
=V1FQ1-BG5	1	SWITCH	MGB-L2B-PNA-L-121863	EUCHNER	EUC.MGB-L2B-PNA-L-121863
=V1FQ1-BG5	1	HANDLE	MGB-H-AA1A2-L-106221	EUCHNER	EUC.MGB-H-AA1A2-L-106221
=V1FQ1-BG5	1	MOUNTING PLATE	MGB-A-MOUNTINGPLATE-H-109491	EUCHNER	EUC.MGB-A-MOUNTINGPLATE-H-109491
=V1FQ1-BG5	1	ESCAPE RELEASE	MGB-E-A2-106051	EUCHNER	EUC.MGB-E-A2-106051

+.FQ1BG4/1

+.FQ1BG6/1

			Date	1/17/2023	Volvo Trucks North America	Valiant TMS	Parts list : EUC.MGB-L2B-PNA-L-121863 - EUC.MGB-E-A2-106051	Drawing name: =2V09&EFS-EL	=	
			Ed.	MKLEPADLO					+ V1FQ1BG5	
			Appr		P6700 Bodyside LH - Robot Cell 2V09	Scale 1:1		Document type: EPB	Project nr: 22-16150	Page 1 / 1533
Modification	Date	Name	Original		Replacement of	Replaced by				

Parts list

F01_001

Device tag	Quantity	Designation	Type number	Supplier	Part number
=V1FQ1-BG6	1	SWITCH	MGB-L2B-PNA-L-121863	EUCHNER	EUC.MGB-L2B-PNA-L-121863
=V1FQ1-BG6	1	HANDLE	MGB-H-AA1A2-L-106221	EUCHNER	EUC.MGB-H-AA1A2-L-106221
=V1FQ1-BG6	1	MOUNTING PLATE	MGB-A-MOUNTINGPLATE-H-109491	EUCHNER	EUC.MGB-A-MOUNTINGPLATE-H-109491
=V1FQ1-BG6	1	ESCAPE RELEASE	MGB-E-A2-106051	EUCHNER	EUC.MGB-E-A2-106051

+.FQ1BG5/1

+.GL1UQ51/1

			Date	1/17/2023	Volvo Trucks North America	Valiant TMS	Parts list : EUC.MGB-L2B-PNA-L-121863 - EUC.MGB-E-A2-106051	Drawing name: =2V09&EFS-EL	=	
			Ed.	MKLEPADLO					+ V1FQ1BG6	
			Appr		P6700 Bodyside LH - Robot Cell 2V09	Scale 1:1		Document type: EPB	Project nr: 22-16150	Page 1 / 1533
Modification	Date	Name	Original		Replacement of	Replaced by				

Parts list

F01_001

Device tag	Quantity	Designation	Type number	Supplier	Part number
=V1GL1UQ51BG0-BG01	1	Inductive sensor	BI20U-CA40-AP6X2-H1141/S1590W/BS2.0	Turck	TUR.1627297
=V1GL1UQ51BG0-BG02	1	Inductive sensor	BI20U-CA40-AP6X2-H1141/S1590W/BS2.0	Turck	TUR.1627297
=V1GL1UQ51BG0-BG03	1	Inductive sensor	BI20U-CA40-AP6X2-H1141/S1590W/BS2.0	Turck	TUR.1627297
=V1GL1UQ51BG0-BG04	1	Inductive sensor	BI20U-CA40-AP6X2-H1141/S1590W/BS2.0	Turck	TUR.1627297
=V1GL1UQ51BG0-BG05	1	Inductive sensor	BI20U-CA40-AP6X2-H1141/S1590W/BS2.0	Turck	TUR.1627297
=V1GL1UQ51BG0-BG06	1	Inductive sensor	BI20U-CA40-AP6X2-H1141/S1590W/BS2.0	Turck	TUR.1627297
=V1GL1UQ51BG0-BG07	1	Inductive sensor	BI20U-CA40-AP6X2-H1141/S1590W/BS2.0	Turck	TUR.1627297
=V1GL1UQ51BG0-BG08	1	Inductive sensor	BI10U-MT18-AP6X2-H1141/S1589	TURCK	TUR.16449050
=V1GL1UQ51BG0-BG09	1	Inductive sensor	BI10U-MT18-AP6X2-H1141/S1589	TURCK	TUR.16449050
=V1GL1UQ51BG0-BG10	1	Inductive sensor	BI10U-MT18-AP6X2-H1141/S1589	TURCK	TUR.16449050
=V1GL1UQ51BG0-BG11	1	Inductive sensor	BI20U-CA40-AP6X2-H1141/S1590W/BS2.0	Turck	TUR.1627297
=V1GL1UQ51BG0-BG12	1				1627297
=V1GL1UQ51BG0-BG13	1	Inductive sensor	BI10U-MT18-AP6X2-H1141/S1589	TURCK	TUR.16449050
=V1GL1UQ51BG0-BG14	1	Inductive sensor	BI10U-MT18-AP6X2-H1141/S1589	TURCK	TUR.16449050
=V1GL1UQ51BG0-BG15	1	Inductive sensor	BI10U-MT18-AP6X2-H1141/S1589	TURCK	TUR.16449050
=V1GL1UQ51BG0-BG16	1	Inductive sensor	BI20U-CA40-AP6X2-H1141/S1590W/BS2.0	Turck	TUR.1627297
=V1GL1UQ51BG0-BG17	1	Inductive sensor	BI20U-CA40-AP6X2-H1141/S1590W/BS2.0	Turck	TUR.1627297
=V1GL1UQ51BG0-BG18	1	Inductive sensor	BI10U-MT18-AP6X2-H1141/S1589	TURCK	TUR.16449050
=V1GL1UQ51BG0-BG19	1	Inductive sensor	BI20U-CA40-AP6X2-H1141/S1590 W/BS2.0	Turck	TUR.1627205
=V1GL1UQ51BG0-BG20	1	Inductive sensor	BI20U-CA40-AP6X2-H1141/S1590 W/BS2.0	Turck	TUR.1627205
=V1GL1UQ51BG0-BG21	1	Inductive sensor	BI10U-MT18-AP6X2-H1141/S1589	TURCK	TUR.16449050
=V1GL1UQ51BG0-BG22	1	QS30 Series High-Performance Long-Range Sensor	QS30FF600QPMA16		BAN.73093
=V1GL1UQ51BG0-BG23	1	Inductive sensor	BI4U-MT12E-AP6X2-H1141/S1589	TURCK	TUR.1644797
=V1GL1UQ51BG0-BG24	1	Inductive sensor	BI10U-MT18-AP6X2-H1141/S1589	TURCK	TUR.16449050
=V1GL1UQ51BG0-XG1/2	1	Y splitter	U2-30676	TURCK	TUR.VB2-FSM 4.4/2FKM 4/S3450
=V1GL1UQ51BG0-XG3/4	1	Y splitter	U2-30676	TURCK	TUR.VB2-FSM 4.4/2FKM 4/S3450
=V1GL1UQ51BG0-XG5/6	1	Y splitter	U2-30676	TURCK	TUR.VB2-FSM 4.4/2FKM 4/S3450
=V1GL1UQ51BG0-XG7/8	1	Y splitter	U2-30676	TURCK	TUR.VB2-FSM 4.4/2FKM 4/S3450
=V1GL1UQ51BG0-XG9/10	1	Y splitter	U2-30676	TURCK	TUR.VB2-FSM 4.4/2FKM 4/S3450
=V1GL1UQ51BG0-XG11/12	1	Y splitter	U2-30676	TURCK	TUR.VB2-FSM 4.4/2FKM 4/S3450
=V1GL1UQ51BG0-XG13/14	1	Y splitter	U2-30676	TURCK	TUR.VB2-FSM 4.4/2FKM 4/S3450
=V1GL1UQ51BG0-XG15/16	1	Y splitter	U2-30676	TURCK	TUR.VB2-FSM 4.4/2FKM 4/S3450
=V1GL1UQ51BG0-XG17/18	1	Y splitter	U2-30676	TURCK	TUR.VB2-FSM 4.4/2FKM 4/S3450
=V1GL1UQ51BG0-XG19/20	1	Y splitter	U2-30676	TURCK	TUR.VB2-FSM 4.4/2FKM 4/S3450
=V1GL1UQ51BG0-XG21/22	1	Y splitter	U2-30676	TURCK	TUR.VB2-FSM 4.4/2FKM 4/S3450
=V1GL1UQ51BG0-XG23/24	1	Y splitter	U2-30676	TURCK	TUR.VB2-FSM 4.4/2FKM 4/S3450
=V1GL1UQ51KF1-KF1	0	Bus node	CPX-FB33	FES	FES.548755
=V1GL1UQ51KF1-KF1	0	Interlinking block	CPX-M-GE-EV-S-7/8-5POL	FES	FES.550208
=V1GL1UQ51KF1-KF1.11	0	Manifold block	CPX-M-AB-8-M12X2-5POL	FES	FES.549335
=V1GL1UQ51KF1-KF1.12	0	Manifold block	CPX-M-AB-8-M12X2-5POL	FES	FES.549335
=V1GL1UQ51KF1-KF1.13	0	Manifold block	CPX-M-AB-8-M12X2-5POL	FES	FES.549335
=V1GL1UQ51KF1-KF1.14	0	Manifold block	CPX-M-AB-8-M12X2-5POL	FES	FES.549335
=V1GL1UQ51KF2-KF2	0	Bus node	CPX-FB33	FES	FES.548755
=V1GL1UQ51KF2-KF2	0	Interlinking block	CPX-M-GE-EV-S-7/8-5POL	FES	FES.550208
=V1GL1UQ51KF2-KF2.11	0	Manifold block	CPX-M-AB-8-M12X2-5POL	FES	FES.549335
=V1GL1UQ51KF2-KF2.12	0	Manifold block	CPX-M-AB-8-M12X2-5POL	FES	FES.549335
=V1GL1UQ51KF2-KF2.13	0	Manifold block	CPX-M-AB-8-M12X2-5POL	FES	FES.549335
=V1GL1UQ51KF2-KF2.14	0	Manifold block	CPX-M-AB-8-M12X2-5POL	FES	FES.549335
=V1GL1UQ51KF3-KF3	0	Bus node	CPX-FB33	FES	FES.548755
=V1GL1UQ51KF3-KF3	0	Interlinking block	CPX-M-GE-EV-S-7/8-5POL	FES	FES.550208
=V1GL1UQ51KF3-KF3.11	0	Manifold block	CPX-M-AB-8-M12X2-5POL	FES	FES.549335
=V1GL1UQ51WC4-XG51.1	1	TEE, 5-PIN MINI, STANDARD KEYWAY	RSM-2RKM 50	TURCK	TUR.RSM-2RKM 50
=V1GL1UQ51WC4-XG51.2	1	TEE, 5-PIN MINI, STANDARD KEYWAY	RSM-2RKM 50	TURCK	TUR.RSM-2RKM 50

Parts list

F01_001

Device tag	Quantity	Designation	Type number	Supplier	Part number
=V1GL1UQ51UQ1.1-BGS/R	1	4-Wire, 4-Pin, DC M12 X 1 (PNP)	WWS001A	WEL	WEL.WWS001A

+V1GL1UQ51/1

+.GL1UQ51UQ1.2/1

			Date	1/17/2023	Volvo Trucks North America	Valiant TMS	Parts list : WEL.WWS001A - WEL.WWS001A	Drawing name: =2V09&EFS-EL	= + V1GL1UQ51UQ1.1
			Ed.	MKLEPADLO					
			Appr		P6700 Bodyside LH - Robot Cell 2V09			Document type: EPB	Project nr: 22-16150
Modification	Date	Name	Original		Replacement of	Replaced by	Scale 1:1		Page 1 / 1533

Parts list

F01_001

Device tag	Quantity	Designation	Type number	Supplier	Part number
=V1GL1UQ51UQ1.2-BGS/R	1	4-Wire, 4-Pin, DC M12 X 1 (PNP)	WWS001A	WEL	WEL.WWS001A

+.GL1UQ51UQ1.1/1

+.GL1UQ51UQ1.3/1

			Date	1/17/2023	Volvo Trucks North America	Valiant TMS	Parts list : WEL.WWS001A - WEL.WWS001A	Drawing name: =2V09&EFS-EL	= + V1GL1UQ51UQ1.2
			Ed.	MKLEPADLO					
			Appr		P6700 Bodyside LH - Robot Cell 2V09	Scale 1:1		Document type: EPB / Project nr: 22-16150	Page 1 / 1533
Modification	Date	Name	Original		Replacement of / Replaced by				

Parts list

F01_001

Device tag	Quantity	Designation	Type number	Supplier	Part number
=V1GL1UQ51UQ1.3-BGS/R	1	4-Wire, 4-Pin, DC M12 X 1 (PNP)	WWS001A	WEL	WEL.WWS001A

+.GL1UQ51UQ1.2/1

+.GL1UQ51UQ2.1/1

			Date	1/17/2023	Volvo Trucks North America	Valiant TMS	Parts list : WEL.WWS001A - WEL.WWS001A	Drawing name: =2V09&EFS-EL	=	
			Ed.	MKLEPADLO					+ V1GL1UQ51UQ1.3	
			Appr		P6700 Bodyside LH - Robot Cell 2V09	Scale 1:1		Document type: EPB	Project nr: 22-16150	Page 1 / 1533
Modification	Date	Name	Original		Replacement of	Replaced by				

Parts list

F01_001

Device tag	Quantity	Designation	Type number	Supplier	Part number
=V1GL1UQ51UQ2.1-BGS/R	1	4-Wire, 4-Pin, DC M12 X 1 (PNP)	WWS001A	WEL	WEL.WWS001A

+.GL1UQ51UQ1.3/1

+.GL1UQ51UQ3.1/1

			Date	1/17/2023	Volvo Trucks North America	Valiant TMS	Parts list : WEL.WWS001A - WEL.WWS001A	Drawing name: =2V09&EFS-EL	=	
			Ed.	MKLEPADLO					+ V1GL1UQ51UQ2.1	
			Appr		P6700 Bodyside LH - Robot Cell 2V09	Scale 1:1		Document type: EPB	Project nr: 22-16150	Page 1 / 1533
Modification	Date	Name	Original		Replacement of / Replaced by					

Parts list

F01_001

Device tag	Quantity	Designation	Type number	Supplier	Part number
=V1GL1UQ51UQ3.1-BGS/R	1	4-Wire, 4-Pin, DC M12 X 1 (PNP)	WWS001A	WEL	WEL.WWS001A

+.GL1UQ51UQ2.1/1

+.GL1UQ51UQ3.2/1

			Date	1/17/2023	Volvo Trucks North America	Valiant TMS	Parts list : WEL.WWS001A - WEL.WWS001A	Drawing name: =2V09&EFS-EL	=	
			Ed.	MKLEPADLO					+ V1GL1UQ51UQ3.1	
			Appr		P6700 Bodyside LH - Robot Cell 2V09	Scale 1:1		Document type: EPB	Project nr: 22-16150	Page 1
Modification	Date	Name	Original		Replacement of	Replaced by				1533

Parts list

F01_001

Device tag	Quantity	Designation	Type number	Supplier	Part number
=V1GL1UQ51UQ3.2-BGS/R	1	4-Wire, 4-Pin, DC M12 X 1 (PNP)	WWS001A	WEL	WEL.WWS001A

+.GL1UQ51UQ3.1/1

+.GL1UQ51UQ4.1/1

			Date	1/17/2023	Volvo Trucks North America	Valiant TMS	Parts list : WEL.WWS001A - WEL.WWS001A	Drawing name: =2V09&EFS-EL	=	
			Ed.	MKLEPADLO					+ V1GL1UQ51UQ3.2	
			Appr		P6700 Bodyside LH - Robot Cell 2V09	Scale 1:1		Document type: EPB	Project nr: 22-16150	Page 1 / 1533
Modification	Date	Name	Original		Replacement of	Replaced by				

Parts list

F01_001

Device tag	Quantity	Designation	Type number	Supplier	Part number
=V1GL1UQ51UQ4.1-BGS/R	1	4-Wire, 4-Pin, DC M12 X 1 (PNP)	WWS001A	WEL	WEL.WWS001A

+.GL1UQ51UQ3.2/1

+.GL1UQ51UQ4.2/1

			Date	1/17/2023	Volvo Trucks North America	Valiant TMS	Parts list : WEL.WWS001A - WEL.WWS001A	Drawing name: =2V09&EFS-EL	=	
			Ed.	MKLEPADLO					+ V1GL1UQ51UQ4.1	
			Appr		P6700 Bodyside LH - Robot Cell 2V09	Scale 1:1		Document type: EPB	Project nr: 22-16150	Page 1 / 1533
Modification	Date	Name	Original		Replacement of	Replaced by				

Parts list

F01_001

Device tag	Quantity	Designation	Type number	Supplier	Part number
=V1GL1UQ51UQ4.2-BGS/R	1	4-Wire, 4-Pin, DC M12 X 1 (PNP)	WWS001A	WEL	WEL.WWS001A

+.GL1UQ51UQ4.1/1

+.GL1UQ51UQ5.1/1

			Date	1/17/2023	Volvo Trucks North America	Valiant TMS	Parts list : WEL.WWS001A - WEL.WWS001A	Drawing name: =2V09&EFS-EL	=	
			Ed.	MKLEPADLO					+ V1GL1UQ51UQ4.2	
			Appr		P6700 Bodyside LH - Robot Cell 2V09	Scale 1:1		Document type: EPB	Project nr: 22-16150	Page 1 / 1533
Modification	Date	Name	Original		Replacement of	Replaced by				

Parts list

F01_001

Device tag	Quantity	Designation	Type number	Supplier	Part number
=V1GL1UQ51UQ5.1-BGS/R	1	4-Wire, 4-Pin, DC M12 X 1 (PNP)	WWS001A	WEL	WEL.WWS001A

+.GL1UQ51UQ4.2/1

+.GL1UQ51UQ6.1/1

			Date	1/17/2023	Volvo Trucks North America	Valiant TMS	Parts list : WEL.WWS001A - WEL.WWS001A	Drawing name: =2V09&EFS-EL	=	
			Ed.	MKLEPADLO					+ V1GL1UQ51UQ5.1	
			Appr		P6700 Bodyside LH - Robot Cell 2V09	Scale 1:1		Document type: EPB	Project nr: 22-16150	Page 1 / 1533
Modification	Date	Name	Original		Replacement of	Replaced by				

Parts list

F01_001

Device tag	Quantity	Designation	Type number	Supplier	Part number
=V1GL1UQ51UQ6.1-BGS/R	1	4-Wire, 4-Pin, DC M12 X 1 (PNP)	WWS001A	WEL	WEL.WWS001A

+.GL1UQ51UQ5.1/1

+.GL1UQ51UQ7.1/1

			Date	1/17/2023	Volvo Trucks North America	Valiant TMS	Parts list : WEL.WWS001A - WEL.WWS001A	Drawing name: =2V09&EFS-EL	=	
			Ed.	MKLEPADLO					+ V1GL1UQ51UQ6.1	
			Appr		P6700 Bodyside LH - Robot Cell 2V09	Scale 1:1		Document type: EPB	Project nr: 22-16150	Page 1 / 1533
Modification	Date	Name	Original		Replacement of	Replaced by				

Parts list

F01_001

Device tag	Quantity	Designation	Type number	Supplier	Part number
=V1GL1UQ51UQ7.1-BGR	1	Inductive sensor	BI2-CRS260-AP4X2-H1141/S34	TURCK	TUR.BI2-CRS260-AP4X2-H1141/S34
=V1GL1UQ51UQ7.1-BGS	1	Inductive sensor	BI2-CRS260-AP4X2-H1141/S34	TURCK	TUR.BI2-CRS260-AP4X2-H1141/S34
=V1GL1UQ51UQ7.1-XGR/S	1	Y splitter	U2-30676	TURCK	TUR.VB2-FSM 4.4/2FKM 4/S3450

+.GL1UQ51UQ6.1/1

+.GL1UQ51UQ8.1/1

			Date	1/17/2023	Volvo Trucks North America	Valiant TMS	Parts list : TUR.BI2-CRS260-AP4X2-H1141/S34 - TUR.VB2-FSM 4.4/2FKM 4/S3450	Drawing name: =2V09&EFS-EL	= + V1GL1UQ51UQ7.1
			Ed.	MKLEPADLO					
			Appr		P6700 Bodyside LH - Robot Cell 2V09	Scale 1:1		Document type: EPB	Project nr: 22-16150
Modification	Date	Name	Original		Replacement of	Replaced by			Page 1 / 1533

Parts list

F01_001

Device tag	Quantity	Designation	Type number	Supplier	Part number
=V1GL1UQ51UQ8.1-BGS/R	1	4-Wire, 4-Pin, DC M12 X 1 (PNP)	WWS001A	WEL	WEL.WWS001A

+.GL1UQ51UQ7.1/1

+.GL1UQ51UQ8.2/1

			Date	1/17/2023	Volvo Trucks North America	Valiant TMS	Parts list : WEL.WWS001A - WEL.WWS001A	Drawing name: =2V09&EFS-EL	= + V1GL1UQ51UQ8.1
			Ed.	MKLEPADLO					
			Appr		P6700 Bodyside LH - Robot Cell 2V09	Scale 1:1		Document type: EPB	Project nr: 22-16150
Modification	Date	Name	Original		Replacement of	Replaced by			Page 1 / 1533

Parts list

F01_001

Device tag	Quantity	Designation	Type number	Supplier	Part number
=V1GL1UQ51UQ8.2-BGS/R	1	4-Wire, 4-Pin, DC M12 X 1 (PNP)	WWS001A	WEL	WEL.WWS001A

+.GL1UQ51UQ8.1/1

+.GL1UQ51UQ8.3/1

			Date	1/17/2023	Volvo Trucks North America	Valiant TMS	Parts list : WEL.WWS001A - WEL.WWS001A	Drawing name: =2V09&EFS-EL	=	
			Ed.	MKLEPADLO					+ V1GL1UQ51UQ8.2	
			Appr		P6700 Bodyside LH - Robot Cell 2V09	Scale 1:1		Document type: EPB	Project nr: 22-16150	Page 1 / 1533
Modification	Date	Name	Original		Replacement of	Replaced by				

Parts list

F01_001

Device tag	Quantity	Designation	Type number	Supplier	Part number
=V1GL1UQ51UQ8.3-BGS/R	1	4-Wire, 4-Pin, DC M12 X 1 (PNP)	WWS001A	WEL	WEL.WWS001A

+.GL1UQ51UQ8.2/1

+.GL1UQ51UQ9.1/1

			Date	1/17/2023	Volvo Trucks North America	Valiant TMS	Parts list : WEL.WWS001A - WEL.WWS001A	Drawing name: =2V09&EFS-EL	=	
			Ed.	MKLEPADLO					+ V1GL1UQ51UQ8.3	
			Appr		P6700 Bodyside LH - Robot Cell 2V09	Scale 1:1		Document type: EPB	Project nr: 22-16150	Page 1 / 1533
Modification	Date	Name	Original		Replacement of	Replaced by				

Parts list

F01_001

Device tag	Quantity	Designation	Type number	Supplier	Part number
=V1GL1UQ51UQ9.1-BGS/R	1	4-Wire, 4-Pin, DC M12 X 1 (PNP)	WWS001A	WEL	WEL.WWS001A

+.GL1UQ51UQ8.3/1

+.GL1UQ51UQ10.1/1

			Date	1/17/2023	Volvo Trucks North America	Valiant TMS	Parts list : WEL.WWS001A - WEL.WWS001A	Drawing name: =2V09&EFS-EL	=	
			Ed.	MKLEPADLO					+ V1GL1UQ51UQ9.1	
			Appr		P6700 Bodyside LH - Robot Cell 2V09	Scale 1:1		Document type: EPB	Project nr: 22-16150	Page 1 / 1533
Modification	Date	Name	Original		Replacement of	Replaced by				

Parts list

F01_001

Device tag	Quantity	Designation	Type number	Supplier	Part number
=V1GL1UQ51UQ10.1-BGS/R	1	4-Wire, 4-Pin, DC M12 X 1 (PNP)	WWS001A	WEL	WEL.WWS001A

+.GL1UQ51UQ9.1/1

+.GL1UQ51UQ11.1/1

			Date	1/17/2023	Volvo Trucks North America	Valiant TMS	Parts list : WEL.WWS001A - WEL.WWS001A	Drawing name: =2V09&EFS-EL	=	
			Ed.	MKLEPADLO					+ V1GL1UQ51UQ10.1	
			Appr		P6700 Bodyside LH - Robot Cell 2V09	Scale 1:1		Document type: EPB	Project nr: 22-16150	Page 1 / 1533
Modification	Date	Name	Original		Replacement of	Replaced by				

Parts list

F01_001

Device tag	Quantity	Designation	Type number	Supplier	Part number
=V1GL1UQ51UQ11.1-BGS/R	1	Inductive sensor Monitoring Kit for Power Clamps	1324638	TUNKERS	TUN.1324638

+.GL1UQ51UQ10.1/1

+.GL1UQ51UQ11.2/1

Parts list

F01_001

Device tag	Quantity	Designation	Type number	Supplier	Part number
=V1GL1UQ51UQ11.2-BGS/R	1	Inductive sensor Monitoring Kit for Power Clamps	1324638	TUNKERS	TUN.1324638

+.GL1UQ51UQ11.1/1

+.GL1UQ51UQ11.3/1

			Date	1/17/2023	Volvo Trucks North America	Valiant TMS	Parts list : TUN.1324638 - TUN.1324638	Drawing name: =2V09&EFS-EL	= + V1GL1UQ51UQ11.2
			Ed.	MKLEPADLO					
			Appr		P6700 Bodyside LH - Robot Cell 2V09	Scale 1:1		Document type: EPB	Project nr: 22-16150
Modification	Date	Name	Original		Replacement of	Replaced by			Page 1 / 1533

Parts list

F01_001

Device tag	Quantity	Designation	Type number	Supplier	Part number
=V1GL1UQ51UQ11.3-BGS/R	1	Inductive sensor Monitoring Kit for Power Clamps	1324638	TUNKERS	TUN.1324638

+.GL1UQ51UQ11.2/1

+.GL1UQ51UQ11.4/1

			Date	1/17/2023	Volvo Trucks North America	Valiant TMS	Parts list : TUN.1324638 - TUN.1324638	Drawing name: =2V09&EFS-EL	= + V1GL1UQ51UQ11.3
			Ed.	MKLEPADLO					
			Appr		P6700 Bodyside LH - Robot Cell 2V09	Scale 1:1		Document type: EPB	Project nr: 22-16150
Modification	Date	Name	Original		Replacement of	Replaced by			Page 1 / 1533

Parts list

F01_001

Device tag	Quantity	Designation	Type number	Supplier	Part number
=V1GL1UQ51UQ11.4-BGS/R	1	Inductive sensor Monitoring Kit for Power Clamps	1324638	TUNKERS	TUN.1324638

+.GL1UQ51UQ11.3/1

+.GL1UQ51UQ11.5/1

			Date	1/17/2023	Volvo Trucks North America	Valiant TMS	Parts list : TUN.1324638 - TUN.1324638	Drawing name: =2V09&EFS-EL	= + V1GL1UQ51UQ11.4
			Ed.	MKLEPADLO					
			Appr		P6700 Bodyside LH - Robot Cell 2V09	Scale 1:1		Document type: EPB	Project nr: 22-16150
Modification	Date	Name	Original		Replacement of	Replaced by			Page 1 / 1533

Parts list

F01_001

Device tag	Quantity	Designation	Type number	Supplier	Part number
=V1GL1UQ51UQ11.5-BGS/R	1	Inductive sensor Monitoring Kit for Power Clamps	1324638	TUNKERS	TUN.1324638

+.GL1UQ51UQ11.4/1

+.GL1UQ51UQ11.6/1

			Date	1/17/2023	Volvo Trucks North America	Valiant TMS	Parts list : TUN.1324638 - TUN.1324638	Drawing name: =2V09&EFS-EL	= + V1GL1UQ51UQ11.5
			Ed.	MKLEPADLO					
			Appr		P6700 Bodyside LH - Robot Cell 2V09	Scale 1:1		Document type: EPB	Project nr: 22-16150
Modification	Date	Name	Original		Replacement of	Replaced by			Page 1 / 1533

Parts list

F01_001

Device tag	Quantity	Designation	Type number	Supplier	Part number
=V1GL1UQ51UQ11.6-BGS/R	1	Inductive sensor Monitoring Kit for Power Clamps	1324638	TUNKERS	TUN.1324638

+.GL1UQ51UQ11.5/1

+.GL1UQ51UQ12.1/1

			Date	1/17/2023	Volvo Trucks North America	Valiant TMS	Parts list : TUN.1324638 - TUN.1324638	Drawing name: =2V09&EFS-EL	= + V1GL1UQ51UQ11.6
			Ed.	MKLEPADLO					
			Appr		P6700 Bodyside LH - Robot Cell 2V09	Scale 1:1		Document type: EPB	Project nr: 22-16150
Modification	Date	Name	Original		Replacement of	Replaced by			Page 1 / 1533

Parts list

F01_001

Device tag	Quantity	Designation	Type number	Supplier	Part number
=V1GL1UQ51UQ12.1-BGS/R	1	Inductive sensor Monitoring Kit for Power Clamps	1324644	TUNKERS	TUN.1324644

+.GL1UQ51UQ11.6/1

+.GL1UQ51UQ12.2/1

			Date	1/17/2023	Volvo Trucks North America	Valiant TMS	Parts list : TUN.1324644 - TUN.1324644	Drawing name: =2V09&EFS-EL	= + V1GL1UQ51UQ12.1
			Ed.	MKLEPADLO					
			Appr		P6700 Bodyside LH - Robot Cell 2V09	Scale 1:1		Document type: EPB	Project nr: 22-16150
Modification	Date	Name	Original		Replacement of	Replaced by			Page 1 / 1533

Parts list

F01_001

Device tag	Quantity	Designation	Type number	Supplier	Part number
=V1GL1UQ51UQ12.2-BGS/R	1	Inductive sensor Monitoring Kit for Power Clamps	1324644	TUNKERS	TUN.1324644

+.GL1UQ51UQ12.1/1

+.GL1UQ51UQ12.3/1

			Date	1/17/2023	Volvo Trucks North America	Valiant TMS	Parts list : TUN.1324644 - TUN.1324644	Drawing name: =2V09&EFS-EL	= + V1GL1UQ51UQ12.2
			Ed.	MKLEPADLO					
			Appr		P6700 Bodyside LH - Robot Cell 2V09	Scale 1:1		Document type: EPB	Project nr: 22-16150
Modification	Date	Name	Original		Replacement of	Replaced by			Page 1 / 1533

Parts list

F01_001

Device tag	Quantity	Designation	Type number	Supplier	Part number
=V1GL1UQ51UQ12.3-BGS/R	1	Inductive sensor Monitoring Kit for Power Clamps	1324638	TUNKERS	TUN.1324638

+.GL1UQ51UQ12.2/1

+.GL1UQ51UQ12.4/1

			Date	1/17/2023	Volvo Trucks North America	Valiant TMS	Parts list : TUN.1324638 - TUN.1324638	Drawing name: =2V09&EFS-EL	= + V1GL1UQ51UQ12.3
			Ed.	MKLEPADLO					
			Appr		P6700 Bodyside LH - Robot Cell 2V09	Scale 1:1		Document type: EPB	Project nr: 22-16150
Modification	Date	Name	Original		Replacement of	Replaced by			Page 1 / 1533

Parts list

F01_001

Device tag	Quantity	Designation	Type number	Supplier	Part number
=V1GL1UQ51UQ12.4-BGS/R	1	Inductive sensor Monitoring Kit for Power Clamps	1324638	TUNKERS	TUN.1324638

			Date	1/17/2023	Volvo Trucks North America	Valiant TMS	Parts list : TUN.1324638 - TUN.1324638	Drawing name: =2V09&EFS-EL	=	
			Ed.	MKLEPADLO					+ V1GL1UQ51UQ12.4	
			Appr		P6700 Bodyside LH - Robot Cell 2V09	Scale 1:1		Document type: EPB	Project nr: 22-16150	Page 1 / 1533
Modification	Date	Name	Original		Replacement of	Replaced by				

Parts list

F01_001

Device tag	Quantity	Designation	Type number	Supplier	Part number
=V1GL1UQ51UQ13.1-BGS/R	1	Inductive sensor Monitoring Kit for Power Clamps	1324638	TUNKERS	TUN.1324638

			Date	1/17/2023	Volvo Trucks North America	Valiant TMS	Parts list : TUN.1324638 - TUN.1324638	Drawing name: =2V09&EFS-EL	= + V1GL1UQ51UQ13.1
			Ed.	MKLEPADLO					
			Appr		P6700 Bodyside LH - Robot Cell 2V09	Scale 1:1		Document type: EPB	Project nr: 22-16150
Modification	Date	Name	Original		Replacement of	Replaced by			Page 1 / 1533

Parts list

F01_001

Device tag	Quantity	Designation	Type number	Supplier	Part number
=V1GL1UQ51UQ13.2-BGS/R	1	Inductive sensor Monitoring Kit for Power Clamps	1324638	TUNKERS	TUN.1324638

+.GL1UQ51UQ13.1/1

+.GL1UQ51UQ14.1/1

			Date	1/17/2023	Volvo Trucks North America	Valiant TMS	Parts list : TUN.1324638 - TUN.1324638	Drawing name: =2V09&EFS-EL	= + V1GL1UQ51UQ13.2
			Ed.	MKLEPADLO					
			Appr		P6700 Bodyside LH - Robot Cell 2V09	Scale 1:1		Document type: EPB	Project nr: 22-16150
Modification	Date	Name	Original		Replacement of	Replaced by			Page 1 / 1533

Parts list

F01_001

Device tag	Quantity	Designation	Type number	Supplier	Part number
=V1GL1UQ51UQ14.1-BGS/R	1	Inductive sensor Monitoring Kit for Power Clamps	1324644	TUNKERS	TUN.1324644

+.GL1UQ51UQ13.2/1

+.GL1UQ51UQ14.2/1

			Date	1/17/2023	Volvo Trucks North America	Valiant TMS	Parts list : TUN.1324644 - TUN.1324644	Drawing name: =2V09&EFS-EL	= + V1GL1UQ51UQ14.1
			Ed.	MKLEPADLO					
			Appr		P6700 Bodyside LH - Robot Cell 2V09	Scale 1:1		Document type: EPB	Project nr: 22-16150
Modification	Date	Name	Original		Replacement of	Replaced by			Page 1 / 1533

Parts list

F01_001

Device tag	Quantity	Designation	Type number	Supplier	Part number
=V1GL1UQ51UQ14.2-BGS/R	1	Inductive sensor Monitoring Kit for Power Clamps	1324644	TUNKERS	TUN.1324644

+.GL1UQ51UQ14.1/1

+.GL1UQ51UQ14.3/1

			Date	1/17/2023	Volvo Trucks North America	Valiant TMS	Parts list : TUN.1324644 - TUN.1324644	Drawing name: =2V09&EFS-EL	= + V1GL1UQ51UQ14.2
			Ed.	MKLEPADLO					
			Appr		P6700 Bodyside LH - Robot Cell 2V09	Scale 1:1		Document type: EPB	Project nr: 22-16150
Modification	Date	Name	Original		Replacement of	Replaced by			Page 1 / 1533

Parts list

F01_001

Device tag	Quantity	Designation	Type number	Supplier	Part number
=V1GL1UQ51UQ14.3-BGS/R	1	Inductive sensor Monitoring Kit for Power Clamps	1324644	TUNKERS	TUN.1324644

+.GL1UQ51UQ14.2/1

+.GL1UQ51UQ14.4/1

			Date	1/17/2023	Volvo Trucks North America	Valiant TMS	Parts list : TUN.1324644 - TUN.1324644	Drawing name: =2V09&EFS-EL	= + V1GL1UQ51UQ14.3
			Ed.	MKLEPADLO					
			Appr		P6700 Bodyside LH - Robot Cell 2V09	Scale 1:1		Document type: EPB	Project nr: 22-16150
Modification	Date	Name	Original		Replacement of	Replaced by			Page 1 / 1533

Parts list

F01_001

Device tag	Quantity	Designation	Type number	Supplier	Part number
=V1GL1UQ51UQ14.4-BGS/R	1	Inductive sensor Monitoring Kit for Power Clamps	1324644	TUNKERS	TUN.1324644

+.GL1UQ51UQ14.3/1

+.GL1UQ51UQ15.1/1

			Date	1/17/2023	Volvo Trucks North America	Valiant TMS	Parts list : TUN.1324644 - TUN.1324644	Drawing name: =2V09&EFS-EL	= + V1GL1UQ51UQ14.4
			Ed.	MKLEPADLO					
			Appr		P6700 Bodyside LH - Robot Cell 2V09	Scale 1:1		Document type: EPB	Project nr: 22-16150
Modification	Date	Name	Original		Replacement of	Replaced by			Page 1 / 1533

Parts list

F01_001

Device tag	Quantity	Designation	Type number	Supplier	Part number
=V1GL1UQ51UQ15.1-BGS/R	1	Inductive sensor Monitoring Kit for Power Clamps	285425	TUNKERS	TUN.285425

+.GL1UQ51UQ14.4/1

+.GL1UQ51UQ16.1/1

			Date	1/17/2023	Volvo Trucks North America	Valiant TMS	Parts list : TUN.285425 - TUN.285425	Drawing name: =2V09&EFS-EL	=	
			Ed.	MKLEPADLO					+ V1GL1UQ51UQ15.1	
			Appr		P6700 Bodyside LH - Robot Cell 2V09	Scale 1:1		Document type: EPB	Project nr: 22-16150	Page 1 / 1533
Modification	Date	Name	Original		Replacement of	Replaced by				

Parts list

F01_001

Device tag	Quantity	Designation	Type number	Supplier	Part number
=V1GL1UQ51UQ16.1-BGS/R	1	Inductive sensor Monitoring Kit for Power Clamps	1324644	TUNKERS	TUN.1324644

+.GL1UQ51UQ15.1/1

+.GL1UQ51UQ17.1/1

			Date	1/17/2023	Volvo Trucks North America	Valiant TMS	Parts list : TUN.1324644 - TUN.1324644	Drawing name: =2V09&EFS-EL	= + V1GL1UQ51UQ16.1
			Ed.	MKLEPADLO					
			Appr		P6700 Bodyside LH - Robot Cell 2V09	Scale 1:1		Document type: EPB	Project nr: 22-16150
Modification	Date	Name	Original		Replacement of	Replaced by			Page 1 / 1533

Parts list

F01_001

Device tag	Quantity	Designation	Type number	Supplier	Part number
=V1GL1UQ51UQ17.1-BGS/R	1	Inductive sensor Monitoring Kit for Power Clamps	1324638	TUNKERS	TUN.1324638

+.GL1UQ51UQ16.1/1

+.GL1UQ51UQ18.1/1

			Date	1/17/2023	Volvo Trucks North America	Valiant TMS	Parts list : TUN.1324638 - TUN.1324638	Drawing name: =2V09&EFS-EL	= + V1GL1UQ51UQ17.1
			Ed.	MKLEPADLO					
			Appr		P6700 Bodyside LH - Robot Cell 2V09	Scale 1:1		Document type: EPB	Project nr: 22-16150
Modification	Date	Name	Original		Replacement of	Replaced by			Page 1 / 1533

Parts list

F01_001

Device tag	Quantity	Designation	Type number	Supplier	Part number
=V1GL1UQ51UQ18.1-BGS/R	1	50MM RANGE 4-PIN M12 INDUCTIVE SENSOR	NBN2-F581-100S6-E8-V1	P+F	P+F.NBN2-F581-100S6-E8-V1

+.GL1UQ51UQ17.1/1

+.GL1UQ51UQ19.1/1

			Date	1/17/2023	Volvo Trucks North America	Valiant TMS	Parts list : P+F.NBN2-F581-100S6-E8-V1 - P+F.NBN2-F581-100S6-E8-V1	Drawing name: =2V09&EFS-EL	= + V1GL1UQ51UQ18.1
			Ed.	MKLEPADLO					
			Appr		P6700 Bodyside LH - Robot Cell 2V09	Scale 1:1		Document type: EPB	Project nr: 22-16150
Modification	Date	Name	Original		Replacement of	Replaced by			Page 1 / 1533

Parts list

F01_001

Device tag	Quantity	Designation	Type number	Supplier	Part number
=V1GL1UQ51UQ19.1-BGS/R	1	Inductive sensor Monitoring Kit for Power Clamps	1324638	TUNKERS	TUN.1324638

+.GL1UQ51UQ18.1/1

+.GL1UQ51UQ20.1/1

Parts list

F01_001

Device tag	Quantity	Designation	Type number	Supplier	Part number
=V1GL1UQ51UQ20.1-BGS/R	1	Inductive sensor Monitoring Kit for Power Clamps	1324638	TUNKERS	TUN.1324638

+.GL1UQ51UQ19.1/1

+.GL1UQ51UQ21.1/1

			Date	1/17/2023	Volvo Trucks North America	Valiant TMS	Parts list : TUN.1324638 - TUN.1324638	Drawing name: =2V09&EFS-EL	= + V1GL1UQ51UQ20.1
			Ed.	MKLEPADLO					
			Appr		P6700 Bodyside LH - Robot Cell 2V09	Scale 1:1		Document type: EPB	Project nr: 22-16150
Modification	Date	Name	Original		Replacement of	Replaced by			Page 1 / 1533

Parts list

F01_001

Device tag	Quantity	Designation	Type number	Supplier	Part number
=V1GL1UQ51UQ21.1-BGS/R	1	Inductive sensor Monitoring Kit for Power Clamps	1324644	TUNKERS	TUN.1324644

+.GL1UQ51UQ20.1/1

+.GL1UQ51UQ22.1/1

			Date	1/17/2023	Volvo Trucks North America	Valiant TMS	Parts list : TUN.1324644 - TUN.1324644	Drawing name: =2V09&EFS-EL	= + V1GL1UQ51UQ21.1
			Ed.	MKLEPADLO					
			Appr		P6700 Bodyside LH - Robot Cell 2V09	Scale 1:1		Document type: EPB	Project nr: 22-16150
Modification	Date	Name	Original		Replacement of	Replaced by			Page 1 / 1533

Parts list

F01_001

Device tag	Quantity	Designation	Type number	Supplier	Part number
=V1GL1UQ51UQ22.1-BGS/R	1	Inductive sensor Monitoring Kit for Power Clamps	1324638	TUNKERS	TUN.1324638

+.GL1UQ51UQ21.1/1

+.GL1UQ51UQ23.1/1

			Date	1/17/2023	Volvo Trucks North America	Valiant TMS	Parts list : TUN.1324638 - TUN.1324638	Drawing name: =2V09&EFS-EL	= + V1GL1UQ51UQ22.1
			Ed.	MKLEPADLO					
			Appr		P6700 Bodyside LH - Robot Cell 2V09	Scale 1:1		Document type: EPB	Project nr: 22-16150
Modification	Date	Name	Original		Replacement of	Replaced by			Page 1 / 1533

Parts list

F01_001

Device tag	Quantity	Designation	Type number	Supplier	Part number
=V1GL1UQ51UQ23.1-BGS/R	1	Inductive sensor Monitoring Kit for Power Clamps	1324644	TUNKERS	TUN.1324644

+.GL1UQ51UQ22.1/1

+.GL1UQ51UQ24.1/1

			Date	1/17/2023	Volvo Trucks North America	Valiant TMS	Parts list : TUN.1324644 - TUN.1324644	Drawing name: =2V09&EFS-EL	= + V1GL1UQ51UQ23.1
			Ed.	MKLEPADLO					
			Appr		P6700 Bodyside LH - Robot Cell 2V09	Scale 1:1		Document type: EPB	Project nr: 22-16150
Modification	Date	Name	Original		Replacement of	Replaced by			Page 1 / 1533

Parts list

F01_001

Device tag	Quantity	Designation	Type number	Supplier	Part number
=V1GL1UQ51UQ24.1-BGS/R	1	Inductive sensor Monitoring Kit for Power Clamps	1324638	TUNKERS	TUN.1324638

+.GL1UQ51UQ23.1/1

+.GL1UQ51UQ25.1/1

			Date	1/17/2023	Volvo Trucks North America	Valiant TMS	Parts list : TUN.1324638 - TUN.1324638	Drawing name: =2V09&EFS-EL	= + V1GL1UQ51UQ24.1
			Ed.	MKLEPADLO					
			Appr		P6700 Bodyside LH - Robot Cell 2V09	Scale 1:1		Document type: EPB	Project nr: 22-16150
Modification	Date	Name	Original		Replacement of	Replaced by			Page 1 / 1533

Parts list

F01_001

Device tag	Quantity	Designation	Type number	Supplier	Part number
=V1GL1UQ51UQ25.1-BGS/R	1	Inductive sensor Monitoring Kit for Power Clamps	1324638	TUNKERS	TUN.1324638

+.GL1UQ51UQ24.1/1

+.GL1UQ51UQ25.2/1

			Date	1/17/2023	Volvo Trucks North America	Valiant TMS	Parts list : TUN.1324638 - TUN.1324638	Drawing name: =2V09&EFS-EL	=	
			Ed.	MKLEPADLO					+ V1GL1UQ51UQ25.1	
			Appr		P6700 Bodyside LH - Robot Cell 2V09	Scale 1:1		Document type: EPB	Project nr: 22-16150	Page 1 / 1533
Modification	Date	Name	Original		Replacement of	Replaced by				

Parts list

F01_001

Device tag	Quantity	Designation	Type number	Supplier	Part number
=V1GL1UQ51UQ25.2-BGS/R	1	Inductive sensor Monitoring Kit for Power Clamps	1324638	TUNKERS	TUN.1324638

+.GL1UQ51UQ25.1/1

+.GL1UQ52/1

			Date	1/17/2023	Volvo Trucks North America	Valiant TMS	Parts list : TUN.1324638 - TUN.1324638	Drawing name: =2V09&EFS-EL	= + V1GL1UQ51UQ25.2
			Ed.	MKLEPADLO					
			Appr		P6700 Bodyside LH - Robot Cell 2V09	Scale 1:1		Document type: EPB	Project nr: 22-16150
Modification	Date	Name	Original		Replacement of	Replaced by			Page 1 / 1533

Parts list

F01_001

Device tag	Quantity	Designation	Type number	Supplier	Part number
=V1GL1UQ52BG0-BG01	1	Inductive sensor	BI20U-CA40-AP6X2-H1141/S1590W/BS2.0	Turck	TUR.1627297
=V1GL1UQ52BG0-BG02	1	Inductive sensor	BI20U-CA40-AP6X2-H1141/S1590W/BS2.0	Turck	TUR.1627297
=V1GL1UQ52BG0-BG03	1	Inductive sensor	BI20U-CA40-AP6X2-H1141/S1590W/BS2.0	Turck	TUR.1627297
=V1GL1UQ52BG0-BG04	1	QS30 Series High-Performance Long-Range Sensor	QS30FF600QPMA16		BAN.73093
=V1GL1UQ52BG0-BG05	1	Inductive sensor	BI20U-CA40-AP6X2-H1141/S1590W/BS2.0	Turck	TUR.1627297
=V1GL1UQ52BG0-BG06	1	QS30 Series High-Performance Long-Range Sensor	QS30FF600QPMA16		BAN.73093
=V1GL1UQ52BG0-BG07	1	Inductive sensor	BI20U-CA40-AP6X2-H1141/S1590W/BS2.0	Turck	TUR.1627297
=V1GL1UQ52BG0-BG08	1	Inductive sensor	BI20U-CA40-AP6X2-H1141/S1590W/BS2.0	Turck	TUR.1627297
=V1GL1UQ52BG0-BG09	1	Inductive sensor	BI20U-CA40-AP6X2-H1141/S1590W/BS2.0	Turck	TUR.1627297
=V1GL1UQ52BG0-BG10	1	Inductive sensor	BI10U-MT18-AP6X2-H1141/S1589	Turck	TUR.1644905
=V1GL1UQ52BG0-BG11	1	Inductive sensor	BI10U-MT18-AP6X2-H1141/S1589	Turck	TUR.1644905
=V1GL1UQ52BG0-BG12	1				1627297
=V1GL1UQ52BG0-BG13	1	Inductive sensor	BI20U-CA40-AP6X2-H1141/S1590W/BS2.0	Turck	TUR.1627297
=V1GL1UQ52BG0-BG14	1	Inductive sensor	BI20U-CA40-AP6X2-H1141/S1590W/BS2.0	Turck	TUR.1627297
=V1GL1UQ52BG0-BG15	1	Inductive sensor	BI20U-CA40-AP6X2-H1141/S1590W/BS2.0	Turck	TUR.1627297
=V1GL1UQ52BG0-BG16	1	Inductive sensor	BI20U-CA40-AP6X2-H1141/S1590W/BS2.0	Turck	TUR.1627297
=V1GL1UQ52BG0-BG17	1	Inductive sensor	BI20U-CA40-AP6X2-H1141/S1590W/BS2.0	Turck	TUR.1627297
=V1GL1UQ52BG0-BG18	1	Inductive sensor	BI20U-CA40-AP6X2-H1141/S1590W/BS2.0	Turck	TUR.1627297
=V1GL1UQ52BG0-BG19	1	Inductive sensor	BI20U-CA40-AP6X2-H1141/S1590W/BS2.0	Turck	TUR.1627297
=V1GL1UQ52BG0-BG20	1	Inductive sensor	BI20U-CA40-AP6X2-H1141/S1590W/BS2.0	Turck	TUR.1627297
=V1GL1UQ52BG0-BG21	1	Inductive sensor	BI20U-CA40-AP6X2-H1141/S1590W/BS2.0	Turck	TUR.1627297
=V1GL1UQ52BG0-BG22	1	Inductive sensor	BI10U-MT18-AP6X2-H1141/S1589	Turck	TUR.1644905
=V1GL1UQ52BG0-BG23	1	Inductive sensor	BI20U-CA40-AP6X2-H1141/S1590W/BS2.0	Turck	TUR.1627297
=V1GL1UQ52BG0-BG24	1	Inductive sensor	BI10U-MT18-AP6X2-H1141/S1589	Turck	TUR.1644905
=V1GL1UQ52BG0-BG25	1	Inductive sensor	BI20U-CA40-AP6X2-H1141/S1590W/BS2.0	Turck	TUR.1627297
=V1GL1UQ52BG0-BG26	1	Inductive sensor	BI10U-MT18-AP6X2-H1141/S1589	Turck	TUR.1644905
=V1GL1UQ52BG0-BG27	1	Inductive sensor	BI20U-CA40-AP6X2-H1141/S1590W/BS2.0	Turck	TUR.1627297
=V1GL1UQ52BG0-BG28	1	Inductive sensor	BI10U-MT18-AP6X2-H1141/S1589	Turck	TUR.1644905
=V1GL1UQ52BG0-BG29	1	Inductive sensor	BI4U-MT12E-AP6X-H1141/S1589	Turck	TUR.1644979
=V1GL1UQ52BG0-BG30	1	Magnetic field sensor For Detection of Ferromagnetic Parts	NIMFE-M12/4.6L88-UN6X-H1141	TURCK	TUR.1600610
=V1GL1UQ52BG0-XG1/2	1	Y splitter	U2-30676	TURCK	TUR.VB2-FSM 4.4/2FKM 4/S3450
=V1GL1UQ52BG0-XG3/4	1	Y splitter	U2-30676	TURCK	TUR.VB2-FSM 4.4/2FKM 4/S3450
=V1GL1UQ52BG0-XG5/6	1	Y splitter	U2-30676	TURCK	TUR.VB2-FSM 4.4/2FKM 4/S3450
=V1GL1UQ52BG0-XG7/8	1	Y splitter	U2-30676	TURCK	TUR.VB2-FSM 4.4/2FKM 4/S3450
=V1GL1UQ52BG0-XG9/10	1	Y splitter	U2-30676	TURCK	TUR.VB2-FSM 4.4/2FKM 4/S3450
=V1GL1UQ52BG0-XG11/12	1	Y splitter	U2-30676	TURCK	TUR.VB2-FSM 4.4/2FKM 4/S3450
=V1GL1UQ52BG0-XG13/14	1	Y splitter	U2-30676	TURCK	TUR.VB2-FSM 4.4/2FKM 4/S3450
=V1GL1UQ52BG0-XG15/16	1	Y splitter	U2-30676	TURCK	TUR.VB2-FSM 4.4/2FKM 4/S3450
=V1GL1UQ52BG0-XG17/18	1	Y splitter	U2-30676	TURCK	TUR.VB2-FSM 4.4/2FKM 4/S3450
=V1GL1UQ52BG0-XG19/20	1	Y splitter	U2-30676	TURCK	TUR.VB2-FSM 4.4/2FKM 4/S3450
=V1GL1UQ52BG0-XG21/22	1	Y splitter	U2-30676	TURCK	TUR.VB2-FSM 4.4/2FKM 4/S3450
=V1GL1UQ52BG0-XG23/24	1	Y splitter	U2-30676	TURCK	TUR.VB2-FSM 4.4/2FKM 4/S3450
=V1GL1UQ52BG0-XG25/26	1	Y splitter	U2-30676	TURCK	TUR.VB2-FSM 4.4/2FKM 4/S3450
=V1GL1UQ52BG0-XG27/28	1	Y splitter	U2-30676	TURCK	TUR.VB2-FSM 4.4/2FKM 4/S3450
=V1GL1UQ52BG0-XG29/30	1	Y splitter	U2-30676	TURCK	TUR.VB2-FSM 4.4/2FKM 4/S3450
=V1GL1UQ52KF1-KF1	0	Bus node	CPX-FB33	FES	FES.548755
=V1GL1UQ52KF1-KF1	0	Interlinking block	CPX-M-GE-EV-S-7/8-5POL	FES	FES.550208
=V1GL1UQ52KF1-KF1.11	0	Manifold block	CPX-M-AB-8-M12X2-5POL	FES	FES.549335
=V1GL1UQ52KF1-KF1.12	0	Manifold block	CPX-M-AB-8-M12X2-5POL	FES	FES.549335
=V1GL1UQ52KF1-KF1.13	0	Manifold block	CPX-M-AB-8-M12X2-5POL	FES	FES.549335
=V1GL1UQ52KF1-KF1.14	0	Manifold block	CPX-M-AB-8-M12X2-5POL	FES	FES.549335
=V1GL1UQ52KF2-KF2	0	Bus node	CPX-FB33	FES	FES.548755
=V1GL1UQ52KF2-KF2	0	Interlinking block	CPX-M-GE-EV-S-7/8-5POL	FES	FES.550208
=V1GL1UQ52KF2-KF2.11	0	Manifold block	CPX-M-AB-8-M12X2-5POL	FES	FES.549335
=V1GL1UQ52KF2-KF2.12	0	Manifold block	CPX-M-AB-8-M12X2-5POL	FES	FES.549335
=V1GL1UQ52KF2-KF2.13	0	Manifold block	CPX-M-AB-8-M12X2-5POL	FES	FES.549335

			Date	1/17/2023	Volvo Trucks North America	Valiant TMS	Parts list : TUR.1627297 - FES.549335	Drawing name: =2V09&EFS-EL	= + V1GL1UQ52
			Ed.	MKLEPADLO					
			Appr		P6700 Bodyside LH - Robot Cell 2V09	Scale 1:1		Document type: EPB	Project nr: 22-16150
Modification	Date	Name	Original		Replacement of	Replaced by			Page 1 / 1533

Parts list

F01_001

Device tag	Quantity	Designation	Type number	Supplier	Part number
=V1GL1UQ52KF2-KF2.14	0	Manifold block	CPX-M-AB-8-M12X2-5POL	FES	FES.549335
=V1GL1UQ52KF3-KF3	0	Bus node	CPX-FB33	FES	FES.548755
=V1GL1UQ52KF3-KF3	0	Interlinking block	CPX-M-GE-EV-S-7/8-5POL	FES	FES.550208
=V1GL1UQ52KF3-KF3.11	0	Manifold block	CPX-M-AB-8-M12X2-5POL	FES	FES.549335
=V1GL1UQ52WC4-XG51.1	1	TEE, 5-PIN MINI, STANDARD KEYWAY	RSM-2RKM 50	TURCK	TUR.RSM-2RKM 50
=V1GL1UQ52WC4-XG51.2	1	TEE, 5-PIN MINI, STANDARD KEYWAY	RSM-2RKM 50	TURCK	TUR.RSM-2RKM 50
=V1GL2UQ51WC4-XG51.1	1	TEE, 5-PIN MINI, STANDARD KEYWAY	RSM-2RKM 50	TURCK	TUR.RSM-2RKM 50
=V1GL2UQ51WC4-XG51.2	1	TEE, 5-PIN MINI, STANDARD KEYWAY	RSM-2RKM 50	TURCK	TUR.RSM-2RKM 50
=V1GL2UQ51WC4-XG51.3	1	TEE, 5-PIN MINI, STANDARD KEYWAY	RSM-2RKM 50	TURCK	TUR.RSM-2RKM 50

			Date	1/17/2023	Volvo Trucks North America	Valiant TMS	Parts list : FES.549335 - TUR.RSM-2RKM 50	Drawing name: =2V09&EFS-EL	=	
			Ed.	MKLEPADLO					+ V1GL1UQ52	
			Appr		P6700 Bodyside LH - Robot Cell 2V09			Document type: EPB	Project nr: 22-16150	Page 2
Modification	Date	Name	Original		Replacement of / Replaced by	Scale 1:1				1533

Parts list

F01_001

Device tag	Quantity	Designation	Type number	Supplier	Part number
=V1GL1UQ52UQ1.1-BGS/R	1	4-Wire, 4-Pin, DC M12 X 1 (PNP)	WWS001A	WEL	WEL.WWS001A

+V1GL1UQ52/2

+.GL1UQ52UQ1.2/1

			Date	1/17/2023	Volvo Trucks North America	Valiant TMS	Parts list : WEL.WWS001A - WEL.WWS001A	Drawing name: =2V09&EFS-EL	= + V1GL1UQ52UQ1.1
			Ed.	MKLEPADLO					
			Appr		P6700 Bodyside LH - Robot Cell 2V09			Document type: EPB	Project nr: 22-16150
Modification	Date	Name	Original		Replacement of	Replaced by	Scale 1:1		Page 1 / 1533

Parts list

F01_001

Device tag	Quantity	Designation	Type number	Supplier	Part number
=V1GL1UQ52UQ1.2-BGS/R	1	4-Wire, 4-Pin, DC M12 X 1 (PNP)	WWS001A	WEL	WEL.WWS001A

+.GL1UQ52UQ1.1/1

+.GL1UQ52UQ1.3/1

			Date	1/17/2023	Volvo Trucks North America	Valiant TMS	Parts list : WEL.WWS001A - WEL.WWS001A	Drawing name: =2V09&EFS-EL	= + V1GL1UQ52UQ1.2
			Ed.	MKLEPADLO					
			Appr		P6700 Bodyside LH - Robot Cell 2V09	Scale 1:1		Document type: EPB / Project nr: 22-16150	Page 1 / 1533
Modification	Date	Name	Original		Replacement of / Replaced by				

Parts list

F01_001

Device tag	Quantity	Designation	Type number	Supplier	Part number
=V1GL1UQ52UQ1.3-BGS/R	1	4-Wire, 4-Pin, DC M12 X 1 (PNP)	WWS001A	WEL	WEL.WWS001A

+.GL1UQ52UQ1.2/1

+.GL1UQ52UQ1.4/1

			Date	1/17/2023	Volvo Trucks North America	Valiant TMS	Parts list : WEL.WWS001A - WEL.WWS001A	Drawing name: =2V09&EFS-EL	= + V1GL1UQ52UQ1.3
			Ed.	MKLEPADLO					
			Appr		P6700 Bodyside LH - Robot Cell 2V09	Scale 1:1		Document type: EPB / Project nr: 22-16150	Page 1 / 1533
Modification	Date	Name	Original		Replacement of / Replaced by				

Parts list

F01_001

Device tag	Quantity	Designation	Type number	Supplier	Part number
=V1GL1UQ52UQ1.4-BGS/R	1	4-Wire, 4-Pin, DC M12 X 1 (PNP)	WWS001A	WEL	WEL.WWS001A

+.GL1UQ52UQ1.3/1

+.GL1UQ52UQ1.5/1

			Date	1/17/2023	Volvo Trucks North America	Valiant TMS	Parts list : WEL.WWS001A - WEL.WWS001A	Drawing name: =2V09&EFS-EL	=	
			Ed.	MKLEPADLO					+ V1GL1UQ52UQ1.4	
			Appr		P6700 Bodyside LH - Robot Cell 2V09	Scale 1:1		Document type: EPB	Project nr: 22-16150	Page 1 / 1533
Modification	Date	Name	Original		Replacement of	Replaced by				

Parts list

F01_001

Device tag	Quantity	Designation	Type number	Supplier	Part number
=V1GL1UQ52UQ1.5-BGS/R	1	4-Wire, 4-Pin, DC M12 X 1 (PNP)	WWS001A	WEL	WEL.WWS001A

+.GL1UQ52UQ1.4/1

+.GL1UQ52UQ1.6/1

			Date	1/17/2023	Volvo Trucks North America	Valiant TMS	Parts list : WEL.WWS001A - WEL.WWS001A	Drawing name: =2V09&EFS-EL	=	
			Ed.	MKLEPADLO					+ V1GL1UQ52UQ1.5	
			Appr		P6700 Bodyside LH - Robot Cell 2V09	Scale 1:1		Document type: EPB	Project nr: 22-16150	Page 1 / 1533
Modification	Date	Name	Original		Replacement of	Replaced by				

Parts list

F01_001

Device tag	Quantity	Designation	Type number	Supplier	Part number
=V1GL1UQ52UQ1.6-BGS/R	1	4-Wire, 4-Pin, DC M12 X 1 (PNP)	WWS001A	WEL	WEL.WWS001A

+.GL1UQ52UQ1.5/1

+.GL1UQ52UQ2.1/1

			Date	1/17/2023	Volvo Trucks North America	Valiant TMS	Parts list : WEL.WWS001A - WEL.WWS001A	Drawing name: =2V09&EFS-EL	=	
			Ed.	MKLEPADLO					+ V1GL1UQ52UQ1.6	
			Appr		P6700 Bodyside LH - Robot Cell 2V09	Scale 1:1		Document type: EPB	Project nr: 22-16150	Page 1 / 1533
Modification	Date	Name	Original		Replacement of	Replaced by				

Parts list

F01_001

Device tag	Quantity	Designation	Type number	Supplier	Part number
=V1GL1UQ52UQ2.1-BGS/R	1	4-Wire, 4-Pin, DC M12 X 1 (PNP)	WWS001A	WEL	WEL.WWS001A

+.GL1UQ52UQ1.6/1

+.GL1UQ52UQ3.1/1

			Date	1/17/2023	Volvo Trucks North America	Valiant TMS	Parts list : WEL.WWS001A - WEL.WWS001A	Drawing name: =2V09&EFS-EL	=	
			Ed.	MKLEPADLO					+ V1GL1UQ52UQ2.1	
			Appr		P6700 Bodyside LH - Robot Cell 2V09	Scale 1:1		Document type: EPB	Project nr: 22-16150	Page 1 / 1533
Modification	Date	Name	Original		Replacement of	Replaced by				

Parts list

F01_001

Device tag	Quantity	Designation	Type number	Supplier	Part number
=V1GL1UQ52UQ3.1-BGS/R	1	4-Wire, 4-Pin, DC M12 X 1 (PNP)	WWS001A	WEL	WEL.WWS001A

+.GL1UQ52UQ2.1/1

+.GL1UQ52UQ3.2/1

			Date	1/17/2023	Volvo Trucks North America	Valiant TMS	Parts list : WEL.WWS001A - WEL.WWS001A	Drawing name: =2V09&EFS-EL	=	
			Ed.	MKLEPADLO					+ V1GL1UQ52UQ3.1	
			Appr		P6700 Bodyside LH - Robot Cell 2V09	Scale 1:1		Document type: EPB	Project nr: 22-16150	Page 1 / 1533
Modification	Date	Name	Original		Replacement of	Replaced by				

Parts list

F01_001

Device tag	Quantity	Designation	Type number	Supplier	Part number
=V1GL1UQ52UQ3.2-BGS/R	1	4-Wire, 4-Pin, DC M12 X 1 (PNP)	WWS001A	WEL	WEL.WWS001A

+.GL1UQ52UQ3.1/1

+.GL1UQ52UQ3.3/1

			Date	1/17/2023	Volvo Trucks North America	Valiant TMS	Parts list : WEL.WWS001A - WEL.WWS001A	Drawing name: =2V09&EFS-EL	= + V1GL1UQ52UQ3.2
			Ed.	MKLEPADLO					
			Appr		P6700 Bodyside LH - Robot Cell 2V09	Scale 1:1		Document type: EPB	Project nr: 22-16150
Modification	Date	Name	Original		Replacement of	Replaced by			Page 1 / 1533

Parts list

F01_001

Device tag	Quantity	Designation	Type number	Supplier	Part number
=V1GL1UQ52UQ3.3-BGS/R	1	4-Wire, 4-Pin, DC M12 X 1 (PNP)	WWS001A	WEL	WEL.WWS001A

+.GL1UQ52UQ3.2/1

+.GL1UQ52UQ3.4/1

			Date	1/17/2023	Volvo Trucks North America	Valiant TMS	Parts list : WEL.WWS001A - WEL.WWS001A	Drawing name: =2V09&EFS-EL	= + V1GL1UQ52UQ3.3
			Ed.	MKLEPADLO					
			Appr		P6700 Bodyside LH - Robot Cell 2V09	Scale 1:1		Document type: EPB	Project nr: 22-16150
Modification	Date	Name	Original		Replacement of	Replaced by			Page 1 / 1533

Parts list

F01_001

Device tag	Quantity	Designation	Type number	Supplier	Part number
=V1GL1UQ52UQ3.4-BGS/R	1	4-Wire, 4-Pin, DC M12 X 1 (PNP)	WWS001A	WEL	WEL.WWS001A

+.GL1UQ52UQ3.3/1

+.GL1UQ52UQ3.5/1

			Date	1/17/2023	Volvo Trucks North America	Valiant TMS	Parts list : WEL.WWS001A - WEL.WWS001A	Drawing name: =2V09&EFS-EL	=	
			Ed.	MKLEPADLO					+ V1GL1UQ52UQ3.4	
			Appr		P6700 Bodyside LH - Robot Cell 2V09	Scale 1:1		Document type: EPB	Project nr: 22-16150	Page 1 / 1533
Modification	Date	Name	Original		Replacement of	Replaced by				

Parts list

F01_001

Device tag	Quantity	Designation	Type number	Supplier	Part number
=V1GL1UQ52UQ3.5-BGS/R	1	4-Wire, 4-Pin, DC M12 X 1 (PNP)	WWS001A	WEL	WEL.WWS001A

+.GL1UQ52UQ3.4/1

+.GL1UQ52UQ4.1/1

			Date	1/17/2023	Volvo Trucks North America	Valiant TMS	Parts list : WEL.WWS001A - WEL.WWS001A	Drawing name: =2V09&EFS-EL	=	
			Ed.	MKLEPADLO					+ V1GL1UQ52UQ3.5	
			Appr		P6700 Bodyside LH - Robot Cell 2V09	Scale 1:1		Document type: EPB	Project nr: 22-16150	Page 1 / 1533
Modification	Date	Name	Original		Replacement of	Replaced by				

Parts list

F01_001

Device tag	Quantity	Designation	Type number	Supplier	Part number
=V1GL1UQ52UQ4.1-BGS/R	1	4-Wire, 4-Pin, DC M12 X 1 (PNP)	WWS001A	WEL	WEL.WWS001A

+.GL1UQ52UQ3.5/1

+.GL1UQ52UQ4.2/1

			Date	1/17/2023	Volvo Trucks North America	Valiant TMS	Parts list : WEL.WWS001A - WEL.WWS001A	Drawing name: =2V09&EFS-EL	=	
			Ed.	MKLEPADLO					+ V1GL1UQ52UQ4.1	
			Appr		P6700 Bodyside LH - Robot Cell 2V09	Scale 1:1		Document type: EPB	Project nr: 22-16150	Page 1 / 1533
Modification	Date	Name	Original		Replacement of	Replaced by				

Parts list

F01_001

Device tag	Quantity	Designation	Type number	Supplier	Part number
=V1GL1UQ52UQ4.2-BGS/R	1	4-Wire, 4-Pin, DC M12 X 1 (PNP)	WWS001A	WEL	WEL.WWS001A

+.GL1UQ52UQ4.1/1

+.GL1UQ52UQ5.1/1

			Date	1/17/2023	Volvo Trucks North America	Valiant TMS	Parts list : WEL.WWS001A - WEL.WWS001A	Drawing name: =2V09&EFS-EL	=	
			Ed.	MKLEPADLO					+ V1GL1UQ52UQ4.2	
			Appr		P6700 Bodyside LH - Robot Cell 2V09	Scale 1:1		Document type: EPB	Project nr: 22-16150	Page 1 / 1533
Modification	Date	Name	Original		Replacement of	Replaced by				

Parts list

F01_001

Device tag	Quantity	Designation	Type number	Supplier	Part number
=V1GL1UQ52UQ5.1-BGS/R	1	4-Wire, 4-Pin, DC M12 X 1 (PNP)	WWS001A	WEL	WEL.WWS001A

+.GL1UQ52UQ4.2/1

+.GL1UQ52UQ5.2/1

			Date	1/17/2023	Volvo Trucks North America	Valiant TMS	Parts list : WEL.WWS001A - WEL.WWS001A	Drawing name: =2V09&EFS-EL	=	
			Ed.	MKLEPADLO					+ V1GL1UQ52UQ5.1	
			Appr		P6700 Bodyside LH - Robot Cell 2V09	Scale 1:1		Document type: EPB	Project nr: 22-16150	Page 1 / 1533
Modification	Date	Name	Original		Replacement of	Replaced by				

Parts list

F01_001

Device tag	Quantity	Designation	Type number	Supplier	Part number
=V1GL1UQ52UQ5.2-BGS/R	1	4-Wire, 4-Pin, DC M12 X 1 (PNP)	WWS001A	WEL	WEL.WWS001A

+.GL1UQ52UQ5.1/1

+.GL1UQ52UQ6.1/1

			Date	1/17/2023	Volvo Trucks North America	Valiant TMS	Parts list : WEL.WWS001A - WEL.WWS001A	Drawing name: =2V09&EFS-EL	= + V1GL1UQ52UQ5.2
			Ed.	MKLEPADLO					
			Appr		P6700 Bodyside LH - Robot Cell 2V09	Scale 1:1		Document type: EPB	Project nr: 22-16150
Modification	Date	Name	Original		Replacement of	Replaced by			Page 1 / 1533

Parts list

F01_001

Device tag	Quantity	Designation	Type number	Supplier	Part number
=V1GL1UQ52UQ6.1-BGS/R	1	4-Wire, 4-Pin, DC M12 X 1 (PNP)	WWS001A	WEL	WEL.WWS001A

+.GL1UQ52UQ5.2/1

+.GL1UQ52UQ7.1/1

			Date	1/17/2023	Volvo Trucks North America	Valiant TMS	Parts list : WEL.WWS001A - WEL.WWS001A	Drawing name: =2V09&EFS-EL	=	
			Ed.	MKLEPADLO					+ V1GL1UQ52UQ6.1	
			Appr		P6700 Bodyside LH - Robot Cell 2V09	Scale 1:1		Document type: EPB	Project nr: 22-16150	Page 1 / 1533
Modification	Date	Name	Original		Replacement of	Replaced by				

Parts list

F01_001

Device tag	Quantity	Designation	Type number	Supplier	Part number
=V1GL1UQ52UQ7.1-BGS/R	1	4-Wire, 4-Pin, DC M12 X 1 (PNP)	WWS001A	WEL	WEL.WWS001A

+.GL1UQ52UQ6.1/1

+.GL1UQ52UQ8.1/1

			Date	1/17/2023	Volvo Trucks North America	Valiant TMS	Parts list : WEL.WWS001A - WEL.WWS001A	Drawing name: =2V09&EFS-EL	=	
			Ed.	MKLEPADLO					+ V1GL1UQ52UQ7.1	
			Appr		P6700 Bodyside LH - Robot Cell 2V09	Scale 1:1		Document type: EPB	Project nr: 22-16150	Page 1 / 1533
Modification	Date	Name	Original		Replacement of	Replaced by				

Parts list

F01_001

Device tag	Quantity	Designation	Type number	Supplier	Part number
=V1GL1UQ52UQ8.1-BGR	1	Inductive sensor	BI10U-MT18-AP6X2-H1141/S1589	TURCK	TUR.16449050
=V1GL1UQ52UQ8.1-BGS	1	Inductive sensor	BI10U-MT18-AP6X2-H1141/S1589	TURCK	TUR.16449050
=V1GL1UQ52UQ8.1-XGR/S	1	Y splitter	U2-30676	TURCK	TUR.VB2-FSM 4.4/2FKM 4/S3450

+.GL1UQ52UQ7.1/1

+.GL1UQ52UQ9.1/1

			Date	1/17/2023	Volvo Trucks North America	Valiant TMS	Parts list : TUR.16449050 - TUR.VB2-FSM 4.4/2FKM 4/S3450	Drawing name: =2V09&EFS-EL	= + V1GL1UQ52UQ8.1
			Ed.	MKLEPADLO					
			Appr		P6700 Bodyside LH - Robot Cell 2V09	Scale 1:1		Document type: EPB	Project nr: 22-16150
Modification	Date	Name	Original		Replacement of	Replaced by			Page 1 / 1533

Parts list

F01_001

Device tag	Quantity	Designation	Type number	Supplier	Part number
=V1GL1UQ52UQ9.1-BGS/R	1	4-Wire, 4-Pin, DC M12 X 1 (PNP)	WWS001A	WEL	WEL.WWS001A

+.GL1UQ52UQ8.1/1

+.GL1UQ52UQ9.2/1

			Date	1/17/2023	Volvo Trucks North America	Valiant TMS	Parts list : WEL.WWS001A - WEL.WWS001A	Drawing name: =2V09&EFS-EL	= + V1GL1UQ52UQ9.1
			Ed.	MKLEPADLO					
			Appr		P6700 Bodyside LH - Robot Cell 2V09	Scale 1:1		Document type: EPB	Project nr: 22-16150
Modification	Date	Name	Original		Replacement of	Replaced by			Page 1 / 1533

Parts list

F01_001

Device tag	Quantity	Designation	Type number	Supplier	Part number
=V1GL1UQ52UQ9.2-BGS/R	1	4-Wire, 4-Pin, DC M12 X 1 (PNP)	WWS001A	WEL	WEL.WWS001A

+.GL1UQ52UQ9.1/1

+.GL1UQ52UQ10.1/1

			Date	1/17/2023	Volvo Trucks North America	Valiant TMS	Parts list : WEL.WWS001A - WEL.WWS001A	Drawing name: =2V09&EFS-EL	= + V1GL1UQ52UQ9.2
			Ed.	MKLEPADLO					
			Appr		P6700 Bodyside LH - Robot Cell 2V09	Scale 1:1		Document type: EPB	Project nr: 22-16150
Modification	Date	Name	Original		Replacement of	Replaced by			Page 1 / 1533

Parts list

F01_001

Device tag	Quantity	Designation	Type number	Supplier	Part number
=V1GL1UQ52UQ10.1-BGS/R	1	Inductive sensor Monitoring Kit for Power Clamps	1324638	TUNKERS	TUN.1324638

+.GL1UQ52UQ9.2/1

+.GL1UQ52UQ10.2/1

			Date	1/17/2023	Volvo Trucks North America	Valiant TMS	Parts list : TUN.1324638 - TUN.1324638	Drawing name: =2V09&EFS-EL	= + V1GL1UQ52UQ10.1
			Ed.	MKLEPADLO					
			Appr		P6700 Bodyside LH - Robot Cell 2V09	Scale 1:1		Document type: EPB	Project nr: 22-16150
Modification	Date	Name	Original		Replacement of	Replaced by			Page 1 / 1533

Parts list

F01_001

Device tag	Quantity	Designation	Type number	Supplier	Part number
=V1GL1UQ52UQ10.2-BGS/R	1	Inductive sensor Monitoring Kit for Power Clamps	1324644	TUNKERS	TUN.1324644

+.GL1UQ52UQ10.1/1

+.GL1UQ52UQ10.3/1

			Date	1/17/2023	Volvo Trucks North America	Valiant TMS	Parts list : TUN.1324644 - TUN.1324644	Drawing name: =2V09&EFS-EL	= + V1GL1UQ52UQ10.2
			Ed.	MKLEPADLO					
			Appr		P6700 Bodyside LH - Robot Cell 2V09	Scale 1:1		Document type: EPB / Project nr: 22-16150	Page 1 / 1533
Modification	Date	Name	Original		Replacement of / Replaced by				

Parts list

F01_001

Device tag	Quantity	Designation	Type number	Supplier	Part number
=V1GL1UQ52UQ10.3-BGS/R	1	Inductive sensor Monitoring Kit for Power Clamps	1324638	TUNKERS	TUN.1324638

			Date	1/17/2023	Volvo Trucks North America	Valiant TMS	Parts list : TUN.1324638 - TUN.1324638	Drawing name: =2V09&EFS-EL	=	
			Ed.	MKLEPADLO					+ V1GL1UQ52UQ10.3	
			Appr		P6700 Bodyside LH - Robot Cell 2V09	Scale 1:1		Document type: EPB	Project nr: 22-16150	Page 1
Modification	Date	Name	Original		Replacement of	Replaced by				1533

Parts list

F01_001

Device tag	Quantity	Designation	Type number	Supplier	Part number
=V1GL1UQ52UQ10.4-BGS/R	1	Inductive sensor Monitoring Kit for Power Clamps	1324638	TUNKERS	TUN.1324638

			Date	1/17/2023	Volvo Trucks North America	Valiant TMS	Parts list : TUN.1324638 - TUN.1324638	Drawing name: =2V09&EFS-EL	= + V1GL1UQ52UQ10.4
			Ed.	MKLEPADLO					
			Appr		P6700 Bodyside LH - Robot Cell 2V09	Scale 1:1		Document type: EPB / Project nr: 22-16150	Page 1 / 1533
Modification	Date	Name	Original		Replacement of / Replaced by				

Parts list

F01_001

Device tag	Quantity	Designation	Type number	Supplier	Part number
=V1GL1UQ52UQ10.5-BGS/R	1	Inductive sensor Monitoring Kit for Power Clamps	1324638	TUNKERS	TUN.1324638

Parts list

F01_001

Device tag	Quantity	Designation	Type number	Supplier	Part number
=V1GL1UQ52UQ10.6-BGS/R	1	Inductive sensor Monitoring Kit for Power Clamps	1324638	TUNKERS	TUN.1324638

			Date	1/17/2023	Volvo Trucks North America	Valiant TMS	Parts list : TUN.1324638 - TUN.1324638	Drawing name: =2V09&EFS-EL	=		
			Ed.	MKLEPADLO					+ V1GL1UQ52UQ10.6		
			Appr		P6700 Bodyside LH - Robot Cell 2V09	Scale 1:1		Document type: EPB	Project nr: 22-16150	Page	1
Modification	Date	Name	Original		Replacement of	Replaced by					1533

Parts list

F01_001

Device tag	Quantity	Designation	Type number	Supplier	Part number
=V1GL1UQ52UQ11.1-BGS/R	1	Inductive sensor Monitoring Kit for Power Clamps	1324644	TUNKERS	TUN.1324644

+.GL1UQ52UQ10.6/1

+.GL1UQ52UQ11.2/1

			Date	1/17/2023	Volvo Trucks North America	Valiant TMS	Parts list : TUN.1324644 - TUN.1324644	Drawing name: =2V09&EFS-EL	= + V1GL1UQ52UQ11.1
			Ed.	MKLEPADLO					
			Appr		P6700 Bodyside LH - Robot Cell 2V09	Scale 1:1		Document type: EPB	Project nr: 22-16150
Modification	Date	Name	Original		Replacement of	Replaced by			Page 1 / 1533

Parts list

F01_001

Device tag	Quantity	Designation	Type number	Supplier	Part number
=V1GL1UQ52UQ11.2-BGS/R	1	Inductive sensor Monitoring Kit for Power Clamps	1324644	TUNKERS	TUN.1324644

+.GL1UQ52UQ11.1/1

+.GL1UQ52UQ11.3/1

			Date	1/17/2023	Volvo Trucks North America	Valiant TMS	Parts list : TUN.1324644 - TUN.1324644	Drawing name: =2V09&EFS-EL	= + V1GL1UQ52UQ11.2
			Ed.	MKLEPADLO					
			Appr		P6700 Bodyside LH - Robot Cell 2V09	Scale 1:1		Document type: EPB	Project nr: 22-16150
Modification	Date	Name	Original		Replacement of	Replaced by			Page 1 / 1533

Parts list

F01_001

Device tag	Quantity	Designation	Type number	Supplier	Part number
=V1GL1UQ52UQ11.3-BGS/R	1	Inductive sensor Monitoring Kit for Power Clamps	1324638	TUNKERS	TUN.1324638

			Date	1/17/2023	Volvo Trucks North America	Valiant TMS	Parts list : TUN.1324638 - TUN.1324638	Drawing name: =2V09&EFS-EL	=	
			Ed.	MKLEPADLO					+ V1GL1UQ52UQ11.3	
			Appr		P6700 Bodyside LH - Robot Cell 2V09	Scale 1:1		Document type: EPB	Project nr: 22-16150	Page 1
Modification	Date	Name	Original		Replacement of	Replaced by				1533

Parts list

F01_001

Device tag	Quantity	Designation	Type number	Supplier	Part number
=V1GL1UQ52UQ11.4-BGS/R	1	Inductive sensor Monitoring Kit for Power Clamps	1324638	TUNKERS	TUN.1324638

+.GL1UQ52UQ11.3/1

+.GL1UQ52UQ11.5/1

			Date	1/17/2023	Volvo Trucks North America	Valiant TMS	Parts list : TUN.1324638 - TUN.1324638	Drawing name: =2V09&EFS-EL	= + V1GL1UQ52UQ11.4
			Ed.	MKLEPADLO					
			Appr		P6700 Bodyside LH - Robot Cell 2V09			Document type: EPB	Project nr: 22-16150
Modification	Date	Name	Original		Replacement of	Replaced by	Scale 1:1		Page 1 / 1533

Parts list

F01_001

Device tag	Quantity	Designation	Type number	Supplier	Part number
=V1GL1UQ52UQ11.5-BGS/R	1	Inductive sensor Monitoring Kit for Power Clamps	1324644	TUNKERS	TUN.1324644

+.GL1UQ52UQ11.4/1

+.GL1UQ52UQ12.1/1

			Date	1/17/2023	Volvo Trucks North America	Valiant TMS	Parts list : TUN.1324644 - TUN.1324644	Drawing name: =2V09&EFS-EL	=	
			Ed.	MKLEPADLO					+ V1GL1UQ52UQ11.5	
			Appr		P6700 Bodyside LH - Robot Cell 2V09	Scale 1:1		Document type: EPB	Project nr: 22-16150	Page 1 / 1533
Modification	Date	Name	Original		Replacement of	Replaced by				

Parts list

F01_001

Device tag	Quantity	Designation	Type number	Supplier	Part number
=V1GL1UQ52UQ12.1-BGS/R	1	Inductive sensor Monitoring Kit for Power Clamps	1324638	TUNKERS	TUN.1324638

+.GL1UQ52UQ11.5/1

+.GL1UQ52UQ12.2/1

			Date	1/17/2023	Volvo Trucks North America	Valiant TMS	Parts list : TUN.1324638 - TUN.1324638	Drawing name: =2V09&EFS-EL	= + V1GL1UQ52UQ12.1
			Ed.	MKLEPADLO					
			Appr		P6700 Bodyside LH - Robot Cell 2V09	Scale 1:1		Document type: EPB	Project nr: 22-16150
Modification	Date	Name	Original		Replacement of	Replaced by			Page 1 / 1533

Parts list

F01_001

Device tag	Quantity	Designation	Type number	Supplier	Part number
=V1GL1UQ52UQ12.2-BGS/R	1	Inductive sensor Monitoring Kit for Power Clamps	1324644	TUNKERS	TUN.1324644

+.GL1UQ52UQ12.1/1

+.GL1UQ52UQ12.3/1

			Date	1/17/2023	Volvo Trucks North America	Valiant TMS	Parts list : TUN.1324644 - TUN.1324644	Drawing name: =2V09&EFS-EL	= + V1GL1UQ52UQ12.2
			Ed.	MKLEPADLO					
			Appr		P6700 Bodyside LH - Robot Cell 2V09	Scale 1:1		Document type: EPB	Project nr: 22-16150
Modification	Date	Name	Original		Replacement of	Replaced by			Page 1 / 1533

Parts list

F01_001

Device tag	Quantity	Designation	Type number	Supplier	Part number
=V1GL1UQ52UQ12.3-BGS/R	1	Inductive sensor Monitoring Kit for Power Clamps	1324644	TUNKERS	TUN.1324644

+.GL1UQ52UQ12.2/1

+.GL1UQ52UQ12.4/1

			Date	1/17/2023	Volvo Trucks North America	Valiant TMS	Parts list : TUN.1324644 - TUN.1324644	Drawing name: =2V09&EFS-EL	= + V1GL1UQ52UQ12.3
			Ed.	MKLEPADLO					
			Appr		P6700 Bodyside LH - Robot Cell 2V09	Scale 1:1		Document type: EPB	Project nr: 22-16150
Modification	Date	Name	Original		Replacement of	Replaced by			Page 1 / 1533

Parts list

F01_001

Device tag	Quantity	Designation	Type number	Supplier	Part number
=V1GL1UQ52UQ12.4-BGS/R	1	Inductive sensor Monitoring Kit for Power Clamps	1324644	TUNKERS	TUN.1324644

			Date	1/17/2023	Volvo Trucks North America	Valiant TMS	Parts list : TUN.1324644 - TUN.1324644	Drawing name: =2V09&EFS-EL	= + V1GL1UQ52UQ12.4
			Ed.	MKLEPADLO					
			Appr		P6700 Bodyside LH - Robot Cell 2V09	Scale 1:1		Document type: EPB	Project nr: 22-16150
Modification	Date	Name	Original		Replacement of	Replaced by			Page 1 / 1533

Parts list

F01_001

Device tag	Quantity	Designation	Type number	Supplier	Part number
=V1GL1UQ52UQ12.5-BGS/R	1	Inductive sensor Monitoring Kit for Power Clamps	1324638	TUNKERS	TUN.1324638

+.GL1UQ52UQ12.4/1

+.GL1UQ52UQ12.6/1

			Date	1/17/2023	Volvo Trucks North America	Valiant TMS	Parts list : TUN.1324638 - TUN.1324638	Drawing name: =2V09&EFS-EL	=	
			Ed.	MKLEPADLO					+ V1GL1UQ52UQ12.5	
			Appr		P6700 Bodyside LH - Robot Cell 2V09	Scale 1:1		Document type: EPB	Project nr: 22-16150	Page 1 / 1533
Modification	Date	Name	Original		Replacement of	Replaced by				

Parts list

F01_001

Device tag	Quantity	Designation	Type number	Supplier	Part number
=V1GL1UQ52UQ12.6-BGS/R	1	Inductive sensor Monitoring Kit for Power Clamps	1324644	TUNKERS	TUN.1324644

+.GL1UQ52UQ12.5/1

+.GL1UQ52UQ13.1/1

			Date	1/17/2023	Volvo Trucks North America	Valiant TMS	Parts list : TUN.1324644 - TUN.1324644	Drawing name: =2V09&EFS-EL	= + V1GL1UQ52UQ12.6
			Ed.	MKLEPADLO					
			Appr		P6700 Bodyside LH - Robot Cell 2V09	Scale 1:1		Document type: EPB	Project nr: 22-16150
Modification	Date	Name	Original		Replacement of	Replaced by			Page 1 / 1533

Parts list

F01_001

Device tag	Quantity	Designation	Type number	Supplier	Part number
=V1GL1UQ52UQ13.1-BGS/R	1	Inductive sensor Monitoring Kit for Power Clamps	1324644	TUNKERS	TUN.1324644

+.GL1UQ52UQ12.6/1

+.GL1UQ52UQ14.1/1

			Date	1/17/2023	Volvo Trucks North America	Valiant TMS	Parts list : TUN.1324644 - TUN.1324644	Drawing name: =2V09&EFS-EL	= + V1GL1UQ52UQ13.1
			Ed.	MKLEPADLO					
			Appr		P6700 Bodyside LH - Robot Cell 2V09	Scale 1:1		Document type: EPB	Project nr: 22-16150
Modification	Date	Name	Original		Replacement of	Replaced by			Page 1 / 1533

Parts list

F01_001

Device tag	Quantity	Designation	Type number	Supplier	Part number
=V1GL1UQ52UQ14.1-BGS/R	1	Inductive sensor Monitoring Kit for Power Clamps	1324644	TUNKERS	TUN.1324644

+.GL1UQ52UQ13.1/1

+.GL1UQ52UQ15.1/1

			Date	1/17/2023	Volvo Trucks North America	Valiant TMS	Parts list : TUN.1324644 - TUN.1324644	Drawing name: =2V09&EFS-EL	=	
			Ed.	MKLEPADLO					+ V1GL1UQ52UQ14.1	
			Appr		P6700 Bodyside LH - Robot Cell 2V09	Scale 1:1		Document type: EPB	Project nr: 22-16150	Page 1 / 1533
Modification	Date	Name	Original		Replacement of	Replaced by				

Parts list

F01_001

Device tag	Quantity	Designation	Type number	Supplier	Part number
=V1GL1UQ52UQ15.1-BGS/R	1	Inductive sensor Monitoring Kit for Power Clamps	1324638	TUNKERS	TUN.1324638

+.GL1UQ52UQ14.1/1

+.GL1UQ52UQ16.1/1

			Date	1/17/2023	Volvo Trucks North America	Valiant TMS	Parts list : TUN.1324638 - TUN.1324638	Drawing name: =2V09&EFS-EL	= + V1GL1UQ52UQ15.1
			Ed.	MKLEPADLO					
			Appr		P6700 Bodyside LH - Robot Cell 2V09	Scale 1:1		Document type: EPB	Project nr: 22-16150
Modification	Date	Name	Original		Replacement of	Replaced by			Page 1 / 1533

Parts list

F01_001

Device tag	Quantity	Designation	Type number	Supplier	Part number
=V1GL1UQ52UQ16.1-BGS/R	1	Inductive sensor Monitoring Kit for Power Clamps	1324638	TUNKERS	TUN.1324638

+.GL1UQ52UQ15.1/1

+.GL1UQ52UQ16.2/1

			Date	1/17/2023	Volvo Trucks North America	Valiant TMS	Parts list : TUN.1324638 - TUN.1324638	Drawing name: =2V09&EFS-EL	= + V1GL1UQ52UQ16.1
			Ed.	MKLEPADLO					
			Appr		P6700 Bodyside LH - Robot Cell 2V09	Scale 1:1		Document type: EPB	Project nr: 22-16150
Modification	Date	Name	Original		Replacement of	Replaced by			Page 1 / 1533

Parts list

F01_001

Device tag	Quantity	Designation	Type number	Supplier	Part number
=V1GL1UQ52UQ16.2-BGS/R	1	Inductive sensor Monitoring Kit for Power Clamps	1324644	TUNKERS	TUN.1324644

+.GL1UQ52UQ16.1/1

+.GL1UQ52UQ16.3/1

			Date	1/17/2023	Volvo Trucks North America	Valiant TMS	Parts list : TUN.1324644 - TUN.1324644	Drawing name: =2V09&EFS-EL	= + V1GL1UQ52UQ16.2
			Ed.	MKLEPADLO					
			Appr		P6700 Bodyside LH - Robot Cell 2V09	Scale 1:1		Document type: EPB	Project nr: 22-16150
Modification	Date	Name	Original		Replacement of	Replaced by			Page 1 / 1533

Parts list

F01_001

Device tag	Quantity	Designation	Type number	Supplier	Part number
=V1GL1UQ52UQ16.3-BGS/R	1	Inductive sensor Monitoring Kit for Power Clamps	1324644	TUNKERS	TUN.1324644

+.GL1UQ52UQ16.2/1

+.GL1UQ52UQ17.1/1

			Date	1/17/2023	Volvo Trucks North America	Valiant TMS	Parts list : TUN.1324644 - TUN.1324644	Drawing name: =2V09&EFS-EL	= + V1GL1UQ52UQ16.3
			Ed.	MKLEPADLO					
			Appr		P6700 Bodyside LH - Robot Cell 2V09	Scale 1:1		Document type: EPB	Project nr: 22-16150
Modification	Date	Name	Original		Replacement of	Replaced by			Page 1 / 1533

Parts list

F01_001

Device tag	Quantity	Designation	Type number	Supplier	Part number
=V1GL1UQ52UQ17.1-BGS/R	1	Inductive sensor Monitoring Kit for Power Clamps	1324638	TUNKERS	TUN.1324638

+.GL1UQ52UQ16.3/1

+.GL1UQ52UQ18.1/1

			Date	1/17/2023	Volvo Trucks North America	Valiant TMS	Parts list : TUN.1324638 - TUN.1324638	Drawing name: =2V09&EFS-EL	= + V1GL1UQ52UQ17.1
			Ed.	MKLEPADLO					
			Appr		P6700 Bodyside LH - Robot Cell 2V09	Scale 1:1		Document type: EPB	Project nr: 22-16150
Modification	Date	Name	Original		Replacement of	Replaced by			Page 1 / 1533

Parts list

F01_001

Device tag	Quantity	Designation	Type number	Supplier	Part number
=V1GL1UQ52UQ18.1-BGS/R	1	4-Wire, 4-Pin, DC M12 X 1 (PNP)	WWS001A	WEL	WEL.WWS001A

+.GL1UQ52UQ17.1/1

+.GL1UQ52UQ18.2/1

			Date	1/17/2023	Volvo Trucks North America	Valiant TMS	Parts list : WEL.WWS001A - WEL.WWS001A	Drawing name: =2V09&EFS-EL	= + V1GL1UQ52UQ18.1
			Ed.	MKLEPADLO					
			Appr		P6700 Bodyside LH - Robot Cell 2V09	Scale 1:1		Document type: EPB	Project nr: 22-16150
Modification	Date	Name	Original		Replacement of	Replaced by			Page 1 / 1533

Parts list

F01_001

Device tag	Quantity	Designation	Type number	Supplier	Part number
=V1GL1UQ52UQ18.2-BGS/R	1	4-Wire, 4-Pin, DC M12 X 1 (PNP)	WWS001A	WEL	WEL.WWS001A

+.GL1UQ52UQ18.1/1

+.GL1UQ52UQ19.1/1

			Date	1/17/2023	Volvo Trucks North America	Valiant TMS	Parts list : WEL.WWS001A - WEL.WWS001A	Drawing name: =2V09&EFS-EL	= + V1GL1UQ52UQ18.2
			Ed.	MKLEPADLO					
			Appr		P6700 Bodyside LH - Robot Cell 2V09	Scale 1:1		Document type: EPB	Project nr: 22-16150
Modification	Date	Name	Original		Replacement of	Replaced by			Page 1 / 1533

Parts list

F01_001

Device tag	Quantity	Designation	Type number	Supplier	Part number
=V1GL1UQ52UQ19.1-BGS/R	1	Inductive sensor Monitoring Kit for Power Clamps	1324638	TUNKERS	TUN.1324638

+.GL1UQ52UQ18.2/1

+.GL1UQ52UQ19.2/1

			Date	1/17/2023	Volvo Trucks North America	Valiant TMS	Parts list : TUN.1324638 - TUN.1324638	Drawing name: =2V09&EFS-EL	= + V1GL1UQ52UQ19.1
			Ed.	MKLEPADLO					
			Appr		P6700 Bodyside LH - Robot Cell 2V09	Scale 1:1		Document type: EPB	Project nr: 22-16150
Modification	Date	Name	Original		Replacement of	Replaced by			Page 1 / 1533

Parts list

F01_001

Device tag	Quantity	Designation	Type number	Supplier	Part number
=V1GL1UQ52UQ19.2-BGS/R	1	Inductive sensor Monitoring Kit for Power Clamps	1324638	TUNKERS	TUN.1324638

+.GL1UQ52UQ19.1/1

+.GL1UQ52UQ20.1/1

			Date	1/17/2023	Volvo Trucks North America	Valiant TMS	Parts list : TUN.1324638 - TUN.1324638	Drawing name: =2V09&EFS-EL	= + V1GL1UQ52UQ19.2
			Ed.	MKLEPADLO					
			Appr		P6700 Bodyside LH - Robot Cell 2V09	Scale 1:1		Document type: EPB	Project nr: 22-16150
Modification	Date	Name	Original		Replacement of	Replaced by			Page 1 / 1533

Parts list

F01_001

Device tag	Quantity	Designation	Type number	Supplier	Part number
=V1GL1UQ52UQ20.1-BGS/R	1	Inductive sensor Monitoring Kit for Power Clamps	1324638	TUNKERS	TUN.1324638

+.GL1UQ52UQ19.2/1

+.GL1UQ52UQ21.1/1

			Date	1/17/2023	Volvo Trucks North America	Valiant TMS	Parts list : TUN.1324638 - TUN.1324638	Drawing name: =2V09&EFS-EL	= + V1GL1UQ52UQ20.1
			Ed.	MKLEPADLO					
			Appr		P6700 Bodyside LH - Robot Cell 2V09	Scale 1:1		Document type: EPB / Project nr: 22-16150	Page 1 / 1533
Modification	Date	Name	Original		Replacement of / Replaced by				

Parts list

F01_001

Device tag	Quantity	Designation	Type number	Supplier	Part number
=V1GL1UQ52UQ21.1-BGS/R	1	4-Wire, 4-Pin, DC M12 X 1 (PNP)	WWS001A	WEL	WEL.WWS001A

+.GL1UQ52UQ20.1/1

+.GL1UQ52UQ22.1/1

			Date	1/17/2023	Volvo Trucks North America	Valiant TMS	Parts list : WEL.WWS001A - WEL.WWS001A	Drawing name: =2V09&EFS-EL	=	
			Ed.	MKLEPADLO					+ V1GL1UQ52UQ21.1	
			Appr		P6700 Bodyside LH - Robot Cell 2V09	Scale 1:1		Document type: EPB	Project nr: 22-16150	Page 1 / 1533
Modification	Date	Name	Original		Replacement of	Replaced by				

Parts list

F01_001

Device tag	Quantity	Designation	Type number	Supplier	Part number
=V1GL1UQ52UQ22.1-BGS/R	1	4-Wire, 4-Pin, DC M12 X 1 (PNP)	WWS001A	WEL	WEL.WWS001A

+.GL1UQ52UQ21.1/1

+.GL1UQ52UQ23.1/1

			Date	1/17/2023	Volvo Trucks North America	Valiant TMS	Parts list : WEL.WWS001A - WEL.WWS001A	Drawing name: =2V09&EFS-EL	=	
			Ed.	MKLEPADLO					+ V1GL1UQ52UQ22.1	
			Appr		P6700 Bodyside LH - Robot Cell 2V09	Scale 1:1		Document type: EPB	Project nr: 22-16150	Page 1 / 1533
Modification	Date	Name	Original		Replacement of	Replaced by				

Parts list

F01_001

Device tag	Quantity	Designation	Type number	Supplier	Part number
=V1GL1UQ52UQ23.1-BGS/R	1	4-Wire, 4-Pin, DC M12 X 1 (PNP)	WWS001A	WEL	WEL.WWS001A

+.GL1UQ52UQ22.1/1

+.GL1UQ53/1

			Date	1/17/2023	Volvo Trucks North America	Valiant TMS	Parts list : WEL.WWS001A - WEL.WWS001A	Drawing name: =2V09&EFS-EL	=	
			Ed.	MKLEPADLO					+ V1GL1UQ52UQ23.1	
			Appr		P6700 Bodyside LH - Robot Cell 2V09	Scale 1:1		Document type: EPB	Project nr: 22-16150	Page 1 / 1533
Modification	Date	Name	Original		Replacement of	Replaced by				

Parts list

F01_001

Device tag	Quantity	Designation	Type number	Supplier	Part number
=V1GL1UQ53BG0-BG01	1	Inductive sensor	BI20U-CA40-AP6X2-H1141/S1590W/BS2.0	Turck	TUR.1627297
=V1GL1UQ53BG0-BG02	1	Inductive sensor	BI20U-CA40-AP6X2-H1141/S1590W/BS2.0	Turck	TUR.1627297
=V1GL1UQ53BG0-BG03	1	Inductive sensor	BI20U-CA40-AP6X2-H1141/S1590W/BS2.0	Turck	TUR.1627297
=V1GL1UQ53BG0-BG04	1	Inductive sensor	BI20U-CA40-AP6X2-H1141/S1590W/BS2.0	Turck	TUR.1627297
=V1GL1UQ53BG0-BG05	1	Inductive sensor	BI20U-CA40-AP6X2-H1141/S1590W/BS2.0	Turck	TUR.1627297
=V1GL1UQ53BG0-BG06	1	Inductive sensor	BI20U-CA40-AP6X2-H1141/S1590W/BS2.0	Turck	TUR.1627297
=V1GL1UQ53BG0-BG07	1	Inductive sensor	BI20U-CA40-AP6X2-H1141/S1590W/BS2.0	Turck	TUR.1627297
=V1GL1UQ53BG0-BG08	1	Inductive sensor	BI10U-MT18-AP6X2-H1141/S1589	TURCK	TUR.16449050
=V1GL1UQ53BG0-BG09	1	Inductive sensor	BI10U-MT18-AP6X2-H1141/S1589	TURCK	TUR.16449050
=V1GL1UQ53BG0-BG10	1	Inductive sensor	BI10U-MT18-AP6X2-H1141/S1589	TURCK	TUR.16449050
=V1GL1UQ53BG0-BG11	1	Inductive sensor	BI20U-CA40-AP6X2-H1141/S1590W/BS2.0	Turck	TUR.1627297
=V1GL1UQ53BG0-BG12	1				1627297
=V1GL1UQ53BG0-BG13	1	Inductive sensor	BI10U-MT18-AP6X2-H1141/S1589	TURCK	TUR.16449050
=V1GL1UQ53BG0-BG14	1	Inductive sensor	BI10U-MT18-AP6X2-H1141/S1589	TURCK	TUR.16449050
=V1GL1UQ53BG0-BG15	1	Inductive sensor	BI10U-MT18-AP6X2-H1141/S1589	TURCK	TUR.16449050
=V1GL1UQ53BG0-BG16	1	Inductive sensor	BI20U-CA40-AP6X2-H1141/S1590W/BS2.0	Turck	TUR.1627297
=V1GL1UQ53BG0-BG17	1	Inductive sensor	BI20U-CA40-AP6X2-H1141/S1590W/BS2.0	Turck	TUR.1627297
=V1GL1UQ53BG0-BG18	1	Inductive sensor	BI10U-MT18-AP6X2-H1141/S1589	TURCK	TUR.16449050
=V1GL1UQ53BG0-BG19	1	Inductive sensor	BI20U-CA40-AP6X2-H1141/S1590 W/BS2.0	Turck	TUR.1627205
=V1GL1UQ53BG0-BG20	1	Inductive sensor	BI20U-CA40-AP6X2-H1141/S1590 W/BS2.0	Turck	TUR.1627205
=V1GL1UQ53BG0-BG21	1	Inductive sensor	BI10U-MT18-AP6X2-H1141/S1589	TURCK	TUR.16449050
=V1GL1UQ53BG0-BG22	1	QS30 Series High-Performance Long-Range Sensor	QS30FF600QPMA16		BAN.73093
=V1GL1UQ53BG0-BG23	1	Inductive sensor	BI4U-MT12E-AP6X2-H1141/S1589	TURCK	TUR.1644797
=V1GL1UQ53BG0-BG24	1	Inductive sensor	BI10U-MT18-AP6X2-H1141/S1589	TURCK	TUR.16449050
=V1GL1UQ53BG0-XG1/2	1	Y splitter	U2-30676	TURCK	TUR.VB2-FSM 4.4/2FKM 4/S3450
=V1GL1UQ53BG0-XG3/4	1	Y splitter	U2-30676	TURCK	TUR.VB2-FSM 4.4/2FKM 4/S3450
=V1GL1UQ53BG0-XG5/6	1	Y splitter	U2-30676	TURCK	TUR.VB2-FSM 4.4/2FKM 4/S3450
=V1GL1UQ53BG0-XG7/8	1	Y splitter	U2-30676	TURCK	TUR.VB2-FSM 4.4/2FKM 4/S3450
=V1GL1UQ53BG0-XG9/10	1	Y splitter	U2-30676	TURCK	TUR.VB2-FSM 4.4/2FKM 4/S3450
=V1GL1UQ53BG0-XG11/12	1	Y splitter	U2-30676	TURCK	TUR.VB2-FSM 4.4/2FKM 4/S3450
=V1GL1UQ53BG0-XG13/14	1	Y splitter	U2-30676	TURCK	TUR.VB2-FSM 4.4/2FKM 4/S3450
=V1GL1UQ53BG0-XG15/16	1	Y splitter	U2-30676	TURCK	TUR.VB2-FSM 4.4/2FKM 4/S3450
=V1GL1UQ53BG0-XG17/18	1	Y splitter	U2-30676	TURCK	TUR.VB2-FSM 4.4/2FKM 4/S3450
=V1GL1UQ53BG0-XG19/20	1	Y splitter	U2-30676	TURCK	TUR.VB2-FSM 4.4/2FKM 4/S3450
=V1GL1UQ53BG0-XG21/22	1	Y splitter	U2-30676	TURCK	TUR.VB2-FSM 4.4/2FKM 4/S3450
=V1GL1UQ53BG0-XG23/24	1	Y splitter	U2-30676	TURCK	TUR.VB2-FSM 4.4/2FKM 4/S3450
=V1GL1UQ53KF1-KF1	0	Bus node	CPX-FB33	FES	FES.548755
=V1GL1UQ53KF1-KF1	0	Interlinking block	CPX-M-GE-EV-S-7/8-5POL	FES	FES.550208
=V1GL1UQ53KF1-KF1.11	0	Manifold block	CPX-M-AB-8-M12X2-5POL	FES	FES.549335
=V1GL1UQ53KF1-KF1.12	0	Manifold block	CPX-M-AB-8-M12X2-5POL	FES	FES.549335
=V1GL1UQ53KF1-KF1.13	0	Manifold block	CPX-M-AB-8-M12X2-5POL	FES	FES.549335
=V1GL1UQ53KF1-KF1.14	0	Manifold block	CPX-M-AB-8-M12X2-5POL	FES	FES.549335
=V1GL1UQ53KF2-KF2	0	Bus node	CPX-FB33	FES	FES.548755
=V1GL1UQ53KF2-KF2	0	Interlinking block	CPX-M-GE-EV-S-7/8-5POL	FES	FES.550208
=V1GL1UQ53KF2-KF2.11	0	Manifold block	CPX-M-AB-8-M12X2-5POL	FES	FES.549335
=V1GL1UQ53KF2-KF2.12	0	Manifold block	CPX-M-AB-8-M12X2-5POL	FES	FES.549335
=V1GL1UQ53KF2-KF2.13	0	Manifold block	CPX-M-AB-8-M12X2-5POL	FES	FES.549335
=V1GL1UQ53KF2-KF2.14	0	Manifold block	CPX-M-AB-8-M12X2-5POL	FES	FES.549335
=V1GL1UQ53KF3-KF3	0	Bus node	CPX-FB33	FES	FES.548755
=V1GL1UQ53KF3-KF3	0	Interlinking block	CPX-M-GE-EV-S-7/8-5POL	FES	FES.550208
=V1GL1UQ53KF3-KF3.11	0	Manifold block	CPX-M-AB-8-M12X2-5POL	FES	FES.549335
=V1GL1UQ53WC4-XG51.1	1	TEE, 5-PIN MINI, STANDARD KEYWAY	RSM-2RKM 50	TURCK	TUR.RSM-2RKM 50
=V1GL1UQ53WC4-XG51.2	1	TEE, 5-PIN MINI, STANDARD KEYWAY	RSM-2RKM 50	TURCK	TUR.RSM-2RKM 50

Parts list

F01_001

Device tag	Quantity	Designation	Type number	Supplier	Part number
=V1GL1UQ53UQ1.1-BGS/R	1	4-Wire, 4-Pin, DC M12 X 1 (PNP)	WWS001A	WEL	WEL.WWS001A

+V1GL1UQ53/1

+.GL1UQ53UQ1.2/1

			Date	1/17/2023	Volvo Trucks North America	Valiant TMS	Parts list : WEL.WWS001A - WEL.WWS001A	Drawing name: =2V09&EFS-EL	=	
			Ed.	MKLEPADLO					+ V1GL1UQ53UQ1.1	
			Appr		P6700 Bodyside LH - Robot Cell 2V09	Scale 1:1		Document type: EPB	Project nr: 22-16150	Page 1 / 1533
Modification	Date	Name	Original		Replacement of	Replaced by				

Parts list

F01_001

Device tag	Quantity	Designation	Type number	Supplier	Part number
=V1GL1UQ53UQ1.2-BGS/R	1	4-Wire, 4-Pin, DC M12 X 1 (PNP)	WWS001A	WEL	WEL.WWS001A

+.GL1UQ53UQ1.1/1

+.GL1UQ53UQ1.3/1

			Date	1/17/2023	Volvo Trucks North America	Valiant TMS	Parts list : WEL.WWS001A - WEL.WWS001A	Drawing name: =2V09&EFS-EL	=	
			Ed.	MKLEPADLO					+ V1GL1UQ53UQ1.2	
			Appr		P6700 Bodyside LH - Robot Cell 2V09	Scale 1:1		Document type: EPB	Project nr: 22-16150	Page 1 / 1533
Modification	Date	Name	Original		Replacement of	Replaced by				

Parts list

F01_001

Device tag	Quantity	Designation	Type number	Supplier	Part number
=V1GL1UQ53UQ1.3-BGS/R	1	4-Wire, 4-Pin, DC M12 X 1 (PNP)	WWS001A	WEL	WEL.WWS001A

+.GL1UQ53UQ1.2/1

+.GL1UQ53UQ2.1/1

			Date	1/17/2023	Volvo Trucks North America	Valiant TMS	Parts list : WEL.WWS001A - WEL.WWS001A	Drawing name: =2V09&EFS-EL	= + V1GL1UQ53UQ1.3
			Ed.	MKLEPADLO					
			Appr		P6700 Bodyside LH - Robot Cell 2V09	Scale 1:1		Document type: EPB	Project nr: 22-16150
Modification	Date	Name	Original		Replacement of	Replaced by			Page 1 / 1533

Parts list

F01_001

Device tag	Quantity	Designation	Type number	Supplier	Part number
=V1GL1UQ53UQ2.1-BGS/R	1	4-Wire, 4-Pin, DC M12 X 1 (PNP)	WWS001A	WEL	WEL.WWS001A

+.GL1UQ53UQ1.3/1

+.GL1UQ53UQ3.1/1

			Date	1/17/2023	Volvo Trucks North America	Valiant TMS	Parts list : WEL.WWS001A - WEL.WWS001A	Drawing name: =2V09&EFS-EL	=	
			Ed.	MKLEPADLO					+ V1GL1UQ53UQ2.1	
			Appr		P6700 Bodyside LH - Robot Cell 2V09	Scale 1:1		Document type: EPB	Project nr: 22-16150	Page 1 / 1533
Modification	Date	Name	Original		Replacement of	Replaced by				

Parts list

F01_001

Device tag	Quantity	Designation	Type number	Supplier	Part number
=V1GL1UQ53UQ3.1-BGS/R	1	4-Wire, 4-Pin, DC M12 X 1 (PNP)	WWS001A	WEL	WEL.WWS001A

+.GL1UQ53UQ2.1/1

+.GL1UQ53UQ3.2/1

			Date	1/17/2023	Volvo Trucks North America	Valiant TMS	Parts list : WEL.WWS001A - WEL.WWS001A	Drawing name: =2V09&EFS-EL	=	
			Ed.	MKLEPADLO					+ V1GL1UQ53UQ3.1	
			Appr		P6700 Bodyside LH - Robot Cell 2V09	Scale 1:1		Document type: EPB	Project nr: 22-16150	Page 1 / 1533
Modification	Date	Name	Original		Replacement of	Replaced by				

Parts list

F01_001

Device tag	Quantity	Designation	Type number	Supplier	Part number
=V1GL1UQ53UQ3.2-BGS/R	1	4-Wire, 4-Pin, DC M12 X 1 (PNP)	WWS001A	WEL	WEL.WWS001A

+.GL1UQ53UQ3.1/1

+.GL1UQ53UQ4.1/1

			Date	1/17/2023	Volvo Trucks North America	Valiant TMS	Parts list : WEL.WWS001A - WEL.WWS001A	Drawing name: =2V09&EFS-EL	=	
			Ed.	MKLEPADLO					+ V1GL1UQ53UQ3.2	
			Appr		P6700 Bodyside LH - Robot Cell 2V09	Scale 1:1		Document type: EPB	Project nr: 22-16150	Page 1 / 1533
Modification	Date	Name	Original		Replacement of	Replaced by				

Parts list

F01_001

Device tag	Quantity	Designation	Type number	Supplier	Part number
=V1GL1UQ53UQ4.1-BGS/R	1	4-Wire, 4-Pin, DC M12 X 1 (PNP)	WWS001A	WEL	WEL.WWS001A

+.GL1UQ53UQ3.2/1

+.GL1UQ53UQ4.2/1

			Date	1/17/2023	Volvo Trucks North America	Valiant TMS	Parts list : WEL.WWS001A - WEL.WWS001A	Drawing name: =2V09&EFS-EL	=	
			Ed.	MKLEPADLO					+ V1GL1UQ53UQ4.1	
			Appr		P6700 Bodyside LH - Robot Cell 2V09	Scale 1:1		Document type: EPB	Project nr: 22-16150	Page 1 / 1533
Modification	Date	Name	Original		Replacement of	Replaced by				

Parts list

F01_001

Device tag	Quantity	Designation	Type number	Supplier	Part number
=V1GL1UQ53UQ4.2-BGS/R	1	4-Wire, 4-Pin, DC M12 X 1 (PNP)	WWS001A	WEL	WEL.WWS001A

+.GL1UQ53UQ4.1/1

+.GL1UQ53UQ5.1/1

			Date	1/17/2023	Volvo Trucks North America	Valiant TMS	Parts list : WEL.WWS001A - WEL.WWS001A	Drawing name: =2V09&EFS-EL	= + V1GL1UQ53UQ4.2
			Ed.	MKLEPADLO					
			Appr		P6700 Bodyside LH - Robot Cell 2V09	Scale 1:1		Document type: EPB	Project nr: 22-16150
Modification	Date	Name	Original		Replacement of	Replaced by			Page 1 / 1533

Parts list

F01_001

Device tag	Quantity	Designation	Type number	Supplier	Part number
=V1GL1UQ53UQ5.1-BGS/R	1	4-Wire, 4-Pin, DC M12 X 1 (PNP)	WWS001A	WEL	WEL.WWS001A

+.GL1UQ53UQ4.2/1

+.GL1UQ53UQ6.1/1

			Date	1/17/2023	Volvo Trucks North America	Valiant TMS	Parts list : WEL.WWS001A - WEL.WWS001A	Drawing name: =2V09&EFS-EL	=	
			Ed.	MKLEPADLO					+ V1GL1UQ53UQ5.1	
			Appr		P6700 Bodyside LH - Robot Cell 2V09	Scale 1:1		Document type: EPB	Project nr: 22-16150	Page 1 / 1533
Modification	Date	Name	Original		Replacement of	Replaced by				

Parts list

F01_001

Device tag	Quantity	Designation	Type number	Supplier	Part number
=V1GL1UQ53UQ6.1-BGS/R	1	4-Wire, 4-Pin, DC M12 X 1 (PNP)	WWS001A	WEL	WEL.WWS001A

+.GL1UQ53UQ5.1/1

+.GL1UQ53UQ7.1/1

			Date	1/17/2023	Volvo Trucks North America	Valiant TMS	Parts list : WEL.WWS001A - WEL.WWS001A	Drawing name: =2V09&EFS-EL	=	
			Ed.	MKLEPADLO					+ V1GL1UQ53UQ6.1	
			Appr		P6700 Bodyside LH - Robot Cell 2V09	Scale 1:1		Document type: EPB	Project nr: 22-16150	Page 1 / 1533
Modification	Date	Name	Original		Replacement of	Replaced by				

Parts list

F01_001

Device tag	Quantity	Designation	Type number	Supplier	Part number
=V1GL1UQ53UQ7.1-BGR	1	Inductive sensor	BI2-CRS260-AP4X2-H1141/S34	TURCK	TUR.BI2-CRS260-AP4X2-H1141/S34
=V1GL1UQ53UQ7.1-BGS	1	Inductive sensor	BI2-CRS260-AP4X2-H1141/S34	TURCK	TUR.BI2-CRS260-AP4X2-H1141/S34
=V1GL1UQ53UQ7.1-XGR/S	1	Y splitter	U2-30676	TURCK	TUR.VB2-FSM 4.4/2FKM 4/S3450

+.GL1UQ53UQ6.1/1

+.GL1UQ53UQ8.1/1

			Date	1/17/2023	Volvo Trucks North America	Valiant TMS	Parts list : TUR.BI2-CRS260-AP4X2-H1141/S34 - TUR.VB2-FSM 4.4/2FKM 4/S3450	Drawing name: =2V09&EFS-EL	= + V1GL1UQ53UQ7.1
			Ed.	MKLEPADLO					
			Appr		P6700 Bodyside LH - Robot Cell 2V09	Scale 1:1		Document type: EPB	Project nr: 22-16150
Modification	Date	Name	Original		Replacement of	Replaced by			Page 1 / 1533

Parts list

F01_001

Device tag	Quantity	Designation	Type number	Supplier	Part number
=V1GL1UQ53UQ8.1-BGS/R	1	4-Wire, 4-Pin, DC M12 X 1 (PNP)	WWS001A	WEL	WEL.WWS001A

+.GL1UQ53UQ7.1/1

+.GL1UQ53UQ8.2/1

			Date	1/17/2023	Volvo Trucks North America	Valiant TMS	Parts list : WEL.WWS001A - WEL.WWS001A	Drawing name: =2V09&EFS-EL	=	
			Ed.	MKLEPADLO					+ V1GL1UQ53UQ8.1	
			Appr		P6700 Bodyside LH - Robot Cell 2V09	Scale 1:1		Document type: EPB	Project nr: 22-16150	Page 1 / 1533
Modification	Date	Name	Original		Replacement of	Replaced by				

Parts list

F01_001

Device tag	Quantity	Designation	Type number	Supplier	Part number
=V1GL1UQ53UQ8.2-BGS/R	1	4-Wire, 4-Pin, DC M12 X 1 (PNP)	WWS001A	WEL	WEL.WWS001A

+.GL1UQ53UQ8.1/1

+.GL1UQ53UQ8.3/1

			Date	1/17/2023	Volvo Trucks North America	Valiant TMS	Parts list : WEL.WWS001A - WEL.WWS001A	Drawing name: =2V09&EFS-EL	= + V1GL1UQ53UQ8.2
			Ed.	MKLEPADLO					
			Appr		P6700 Bodyside LH - Robot Cell 2V09	Scale 1:1		Document type: EPB / Project nr: 22-16150	Page 1 / 1533
Modification	Date	Name	Original		Replacement of / Replaced by				

Parts list

F01_001

Device tag	Quantity	Designation	Type number	Supplier	Part number
=V1GL1UQ53UQ8.3-BGS/R	1	4-Wire, 4-Pin, DC M12 X 1 (PNP)	WWS001A	WEL	WEL.WWS001A

+.GL1UQ53UQ8.2/1

+.GL1UQ53UQ9.1/1

			Date	1/17/2023	Volvo Trucks North America	Valiant TMS	Parts list : WEL.WWS001A - WEL.WWS001A	Drawing name: =2V09&EFS-EL	=	
			Ed.	MKLEPADLO					+ V1GL1UQ53UQ8.3	
			Appr		P6700 Bodyside LH - Robot Cell 2V09	Scale 1:1		Document type: EPB	Project nr: 22-16150	Page 1 / 1533
Modification	Date	Name	Original		Replacement of	Replaced by				

Parts list

F01_001

Device tag	Quantity	Designation	Type number	Supplier	Part number
=V1GL1UQ53UQ9.1-BGS/R	1	4-Wire, 4-Pin, DC M12 X 1 (PNP)	WWS001A	WEL	WEL.WWS001A

+.GL1UQ53UQ8.3/1

+.GL1UQ53UQ10.1/1

			Date	1/17/2023	Volvo Trucks North America	Valiant TMS	Parts list : WEL.WWS001A - WEL.WWS001A	Drawing name: =2V09&EFS-EL	=	
			Ed.	MKLEPADLO					+ V1GL1UQ53UQ9.1	
			Appr		P6700 Bodyside LH - Robot Cell 2V09	Scale 1:1		Document type: EPB	Project nr: 22-16150	Page 1 / 1533
Modification	Date	Name	Original		Replacement of	Replaced by				

Parts list

F01_001

Device tag	Quantity	Designation	Type number	Supplier	Part number
=V1GL1UQ53UQ10.1-BGS/R	1	4-Wire, 4-Pin, DC M12 X 1 (PNP)	WWS001A	WEL	WEL.WWS001A

+.GL1UQ53UQ9.1/1

+.GL1UQ53UQ11.1/1

			Date	1/17/2023	Volvo Trucks North America	Valiant TMS	Parts list : WEL.WWS001A - WEL.WWS001A	Drawing name: =2V09&EFS-EL	= + V1GL1UQ53UQ10.1
			Ed.	MKLEPADLO					
			Appr		P6700 Bodyside LH - Robot Cell 2V09	Scale 1:1		Document type: EPB	Project nr: 22-16150
Modification	Date	Name	Original		Replacement of	Replaced by			Page 1 / 1533

Parts list

F01_001

Device tag	Quantity	Designation	Type number	Supplier	Part number
=V1GL1UQ53UQ11.1-BGS/R	1	Inductive sensor Monitoring Kit for Power Clamps	1324638	TUNKERS	TUN.1324638

+.GL1UQ53UQ10.1/1

+.GL1UQ53UQ11.2/1

			Date	1/17/2023	Volvo Trucks North America	Valiant TMS	Parts list : TUN.1324638 - TUN.1324638	Drawing name: =2V09&EFS-EL	= + V1GL1UQ53UQ11.1
			Ed.	MKLEPADLO					
			Appr		P6700 Bodyside LH - Robot Cell 2V09	Scale 1:1		Document type: EPB / Project nr: 22-16150	Page 1 / 1533
Modification	Date	Name	Original		Replacement of / Replaced by				

Parts list

F01_001

Device tag	Quantity	Designation	Type number	Supplier	Part number
=V1GL1UQ53UQ11.2-BGS/R	1	Inductive sensor Monitoring Kit for Power Clamps	1324638	TUNKERS	TUN.1324638

+.GL1UQ53UQ11.1/1

+.GL1UQ53UQ11.3/1

			Date	1/17/2023	Volvo Trucks North America	Valiant TMS	Parts list : TUN.1324638 - TUN.1324638	Drawing name: =2V09&EFS-EL	=	
			Ed.	MKLEPADLO					+ V1GL1UQ53UQ11.2	
			Appr		P6700 Bodyside LH - Robot Cell 2V09	Scale 1:1		Document type: EPB	Project nr: 22-16150	Page 1 / 1533
Modification	Date	Name	Original		Replacement of	Replaced by				

Parts list

F01_001

Device tag	Quantity	Designation	Type number	Supplier	Part number
=V1GL1UQ53UQ11.3-BGS/R	1	Inductive sensor Monitoring Kit for Power Clamps	1324638	TUNKERS	TUN.1324638

			Date	1/17/2023	Volvo Trucks North America	Valiant TMS	Parts list : TUN.1324638 - TUN.1324638	Drawing name: =2V09&EFS-EL	= + V1GL1UQ53UQ11.3
			Ed.	MKLEPADLO					
			Appr		P6700 Bodyside LH - Robot Cell 2V09	Scale 1:1		Document type: EPB / Project nr: 22-16150	Page 1 / 1533
Modification	Date	Name	Original		Replacement of / Replaced by				

Parts list

F01_001

Device tag	Quantity	Designation	Type number	Supplier	Part number
=V1GL1UQ53UQ11.4-BGS/R	1	Inductive sensor Monitoring Kit for Power Clamps	1324638	TUNKERS	TUN.1324638

+.GL1UQ53UQ11.3/1

+.GL1UQ53UQ11.5/1

			Date	1/17/2023	Volvo Trucks North America	Valiant TMS	Parts list : TUN.1324638 - TUN.1324638	Drawing name: =2V09&EFS-EL	= + V1GL1UQ53UQ11.4
			Ed.	MKLEPADLO					
			Appr		P6700 Bodyside LH - Robot Cell 2V09	Scale 1:1		Document type: EPB	Project nr: 22-16150
Modification	Date	Name	Original		Replacement of	Replaced by			Page 1 / 1533

Parts list

F01_001

Device tag	Quantity	Designation	Type number	Supplier	Part number
=V1GL1UQ53UQ11.5-BGS/R	1	Inductive sensor Monitoring Kit for Power Clamps	1324638	TUNKERS	TUN.1324638

			Date	1/17/2023	Volvo Trucks North America	Valiant TMS	Parts list : TUN.1324638 - TUN.1324638	Drawing name: =2V09&EFS-EL	=	
			Ed.	MKLEPADLO					+ V1GL1UQ53UQ11.5	
			Appr		P6700 Bodyside LH - Robot Cell 2V09	Scale 1:1		Document type: EPB	Project nr: 22-16150	Page 1 / 1533
Modification	Date	Name	Original		Replacement of	Replaced by				

Parts list

F01_001

Device tag	Quantity	Designation	Type number	Supplier	Part number
=V1GL1UQ53UQ11.6-BGS/R	1	Inductive sensor Monitoring Kit for Power Clamps	1324638	TUNKERS	TUN.1324638

+.GL1UQ53UQ11.5/1

+.GL1UQ53UQ12.1/1

			Date	1/17/2023	Volvo Trucks North America	Valiant TMS	Parts list : TUN.1324638 - TUN.1324638	Drawing name: =2V09&EFS-EL	=	
			Ed.	MKLEPADLO					+ V1GL1UQ53UQ11.6	
			Appr		P6700 Bodyside LH - Robot Cell 2V09	Scale 1:1		Document type: EPB	Project nr: 22-16150	Page 1 / 1533
Modification	Date	Name	Original		Replacement of	Replaced by				

Parts list

F01_001

Device tag	Quantity	Designation	Type number	Supplier	Part number
=V1GL1UQ53UQ12.1-BGS/R	1	Inductive sensor Monitoring Kit for Power Clamps	1324644	TUNKERS	TUN.1324644

+.GL1UQ53UQ11.6/1

+.GL1UQ53UQ12.2/1

			Date	1/17/2023	Volvo Trucks North America	Valiant TMS	Parts list : TUN.1324644 - TUN.1324644	Drawing name: =2V09&EFS-EL	= + V1GL1UQ53UQ12.1
			Ed.	MKLEPADLO					
			Appr		P6700 Bodyside LH - Robot Cell 2V09	Scale 1:1		Document type: EPB	Project nr: 22-16150
Modification	Date	Name	Original		Replacement of	Replaced by			Page 1 / 1533

Parts list

F01_001

Device tag	Quantity	Designation	Type number	Supplier	Part number
=V1GL1UQ53UQ12.2-BGS/R	1	Inductive sensor Monitoring Kit for Power Clamps	1324644	TUNKERS	TUN.1324644

+.GL1UQ53UQ12.1/1

+.GL1UQ53UQ12.3/1

			Date	1/17/2023	Volvo Trucks North America	Valiant TMS	Parts list : TUN.1324644 - TUN.1324644	Drawing name: =2V09&EFS-EL	= + V1GL1UQ53UQ12.2
			Ed.	MKLEPADLO					
			Appr		P6700 Bodyside LH - Robot Cell 2V09	Scale 1:1		Document type: EPB / Project nr: 22-16150	Page 1 / 1533
Modification	Date	Name	Original		Replacement of / Replaced by				

Parts list

F01_001

Device tag	Quantity	Designation	Type number	Supplier	Part number
=V1GL1UQ53UQ12.3-BGS/R	1	Inductive sensor Monitoring Kit for Power Clamps	1324638	TUNKERS	TUN.1324638

			Date	1/17/2023	Volvo Trucks North America	Valiant TMS	Parts list : TUN.1324638 - TUN.1324638	Drawing name: =2V09&EFS-EL	=	
			Ed.	MKLEPADLO					+ V1GL1UQ53UQ12.3	
			Appr		P6700 Bodyside LH - Robot Cell 2V09	Scale 1:1		Document type: EPB	Project nr: 22-16150	Page 1 / 1533
Modification	Date	Name	Original		Replacement of	Replaced by				

Parts list

F01_001

Device tag	Quantity	Designation	Type number	Supplier	Part number
=V1GL1UQ53UQ12.4-BGS/R	1	Inductive sensor Monitoring Kit for Power Clamps	1324638	TUNKERS	TUN.1324638

+.GL1UQ53UQ12.3/1

+.GL1UQ53UQ13.1/1

			Date	1/17/2023	Volvo Trucks North America	Valiant TMS	Parts list : TUN.1324638 - TUN.1324638	Drawing name: =2V09&EFS-EL	=	
			Ed.	MKLEPADLO					+ V1GL1UQ53UQ12.4	
			Appr		P6700 Bodyside LH - Robot Cell 2V09			Document type: EPB	Project nr: 22-16150	Page 1
Modification	Date	Name	Original		Replacement of / Replaced by	Scale 1:1				1533

Parts list

F01_001

Device tag	Quantity	Designation	Type number	Supplier	Part number
=V1GL1UQ53UQ13.1-BGS/R	1	Inductive sensor Monitoring Kit for Power Clamps	1324638	TUNKERS	TUN.1324638

+.GL1UQ53UQ12.4/1

+.GL1UQ53UQ13.2/1

Parts list

F01_001

Device tag	Quantity	Designation	Type number	Supplier	Part number
=V1GL1UQ53UQ13.2-BGS/R	1	Inductive sensor Monitoring Kit for Power Clamps	1324638	TUNKERS	TUN.1324638

			Date	1/17/2023	Volvo Trucks North America	Valiant TMS	Parts list : TUN.1324638 - TUN.1324638	Drawing name: =2V09&EFS-EL	=	
			Ed.	MKLEPADLO					+ V1GL1UQ53UQ13.2	
			Appr		P6700 Bodyside LH - Robot Cell 2V09	Scale 1:1		Document type: EPB	Project nr: 22-16150	Page 1
Modification	Date	Name	Original		Replacement of	Replaced by				1533

Parts list

F01_001

Device tag	Quantity	Designation	Type number	Supplier	Part number
=V1GL1UQ53UQ14.1-BGS/R	1	Inductive sensor Monitoring Kit for Power Clamps	1324644	TUNKERS	TUN.1324644

+.GL1UQ53UQ13.2/1

+.GL1UQ53UQ14.2/1

			Date	1/17/2023	Volvo Trucks North America	Valiant TMS	Parts list : TUN.1324644 - TUN.1324644	Drawing name: =2V09&EFS-EL	= + V1GL1UQ53UQ14.1
			Ed.	MKLEPADLO					
			Appr		P6700 Bodyside LH - Robot Cell 2V09	Scale 1:1		Document type: EPB	Project nr: 22-16150
Modification	Date	Name	Original		Replacement of	Replaced by			Page 1 / 1533

Parts list

F01_001

Device tag	Quantity	Designation	Type number	Supplier	Part number
=V1GL1UQ53UQ14.2-BGS/R	1	Inductive sensor Monitoring Kit for Power Clamps	1324644	TUNKERS	TUN.1324644

+.GL1UQ53UQ14.1/1

+.GL1UQ53UQ14.3/1

			Date	1/17/2023	Volvo Trucks North America	Valiant TMS	Parts list : TUN.1324644 - TUN.1324644	Drawing name: =2V09&EFS-EL	= + V1GL1UQ53UQ14.2
			Ed.	MKLEPADLO					
			Appr		P6700 Bodyside LH - Robot Cell 2V09	Scale 1:1		Document type: EPB	Project nr: 22-16150
Modification	Date	Name	Original		Replacement of	Replaced by			Page 1 / 1533

Parts list

F01_001

Device tag	Quantity	Designation	Type number	Supplier	Part number
=V1GL1UQ53UQ14.3-BGS/R	1	Inductive sensor Monitoring Kit for Power Clamps	1324644	TUNKERS	TUN.1324644

			Date	1/17/2023	Volvo Trucks North America	Valiant TMS	Parts list : TUN.1324644 - TUN.1324644	Drawing name: =2V09&EFS-EL	= + V1GL1UQ53UQ14.3
			Ed.	MKLEPADLO					
			Appr		P6700 Bodyside LH - Robot Cell 2V09	Scale 1:1		Document type: EPB	Project nr: 22-16150
Modification	Date	Name	Original		Replacement of	Replaced by			Page 1 / 1533

Parts list

F01_001

Device tag	Quantity	Designation	Type number	Supplier	Part number
=V1GL1UQ53UQ14.4-BGS/R	1	Inductive sensor Monitoring Kit for Power Clamps	1324644	TUNKERS	TUN.1324644

+.GL1UQ53UQ14.3/1

+.GL1UQ53UQ15.1/1

			Date	1/17/2023	Volvo Trucks North America	Valiant TMS	Parts list : TUN.1324644 - TUN.1324644	Drawing name: =2V09&EFS-EL	= + V1GL1UQ53UQ14.4
			Ed.	MKLEPADLO					
			Appr		P6700 Bodyside LH - Robot Cell 2V09	Scale 1:1		Document type: EPB	Project nr: 22-16150
Modification	Date	Name	Original		Replacement of	Replaced by			Page 1 / 1533

Parts list

F01_001

Device tag	Quantity	Designation	Type number	Supplier	Part number
=V1GL1UQ53UQ15.1-BGS/R	1	Inductive sensor Monitoring Kit for Power Clamps	285425	TUNKERS	TUN.285425

+.GL1UQ53UQ14.4/1

+.GL1UQ53UQ16.1/1

			Date	1/17/2023	Volvo Trucks North America	Valiant TMS	Parts list : TUN.285425 - TUN.285425	Drawing name: =2V09&EFS-EL	=	
			Ed.	MKLEPADLO					+ V1GL1UQ53UQ15.1	
			Appr		P6700 Bodyside LH - Robot Cell 2V09	Scale 1:1		Document type: EPB	Project nr: 22-16150	Page 1 / 1533
Modification	Date	Name	Original		Replacement of	Replaced by				

Parts list

F01_001

Device tag	Quantity	Designation	Type number	Supplier	Part number
=V1GL1UQ53UQ16.1-BGS/R	1	Inductive sensor Monitoring Kit for Power Clamps	1324644	TUNKERS	TUN.1324644

+.GL1UQ53UQ15.1/1

+.GL1UQ53UQ17.1/1

			Date	1/17/2023	Volvo Trucks North America	Valiant TMS	Parts list : TUN.1324644 - TUN.1324644	Drawing name: =2V09&EFS-EL	= + V1GL1UQ53UQ16.1
			Ed.	MKLEPADLO					
			Appr		P6700 Bodyside LH - Robot Cell 2V09	Scale 1:1		Document type: EPB	Project nr: 22-16150
Modification	Date	Name	Original		Replacement of	Replaced by			Page 1 / 1533

Parts list

F01_001

Device tag	Quantity	Designation	Type number	Supplier	Part number
=V1GL1UQ53UQ17.1-BGS/R	1	Inductive sensor Monitoring Kit for Power Clamps	1324638	TUNKERS	TUN.1324638

+.GL1UQ53UQ16.1/1

+.GL1UQ53UQ18.1/1

			Date	1/17/2023	Volvo Trucks North America	Valiant TMS	Parts list : TUN.1324638 - TUN.1324638	Drawing name: =2V09&EFS-EL	= + V1GL1UQ53UQ17.1
			Ed.	MKLEPADLO					
			Appr		P6700 Bodyside LH - Robot Cell 2V09	Scale 1:1		Document type: EPB	Project nr: 22-16150
Modification	Date	Name	Original		Replacement of	Replaced by			Page 1 / 1533

Parts list

F01_001

Device tag	Quantity	Designation	Type number	Supplier	Part number
=V1GL1UQ53UQ18.1-BGS/R	1	50MM RANGE 4-PIN M12 INDUCTIVE SENSOR	NBN2-F581-100S6-E8-V1	P+F	P+F.NBN2-F581-100S6-E8-V1

+.GL1UQ53UQ17.1/1

+.GL1UQ53UQ19.1/1

			Date	1/17/2023	Volvo Trucks North America	Valiant TMS	Parts list : P+F.NBN2-F581-100S6-E8-V1 - P+F.NBN2-F581-100S6-E8-V1	Drawing name: =2V09&EFS-EL	= + V1GL1UQ53UQ18.1
			Ed.	MKLEPADLO					
			Appr		P6700 Bodyside LH - Robot Cell 2V09	Scale 1:1		Document type: EPB	Project nr: 22-16150 / Page 1 / 1533
Modification	Date	Name	Original		Replacement of / Replaced by				

Parts list

F01_001

Device tag	Quantity	Designation	Type number	Supplier	Part number
=V1GL1UQ53UQ19.1-BGS/R	1	Inductive sensor Monitoring Kit for Power Clamps	1324638	TUNKERS	TUN.1324638

+.GL1UQ53UQ18.1/1

+.GL1UQ53UQ20.1/1

			Date	1/17/2023	Volvo Trucks North America	Valiant TMS	Parts list : TUN.1324638 - TUN.1324638	Drawing name: =2V09&EFS-EL	= + V1GL1UQ53UQ19.1
			Ed.	MKLEPADLO					
			Appr		P6700 Bodyside LH - Robot Cell 2V09	Scale 1:1		Document type: EPB / Project nr: 22-16150	Page 1 / 1533
Modification	Date	Name	Original		Replacement of / Replaced by				

Parts list

F01_001

Device tag	Quantity	Designation	Type number	Supplier	Part number
=V1GL1UQ53UQ20.1-BGS/R	1	Inductive sensor Monitoring Kit for Power Clamps	1324638	TUNKERS	TUN.1324638

+.GL1UQ53UQ19.1/1

+.GL1UQ53UQ21.1/1

			Date	1/17/2023	Volvo Trucks North America	Valiant TMS	Parts list : TUN.1324638 - TUN.1324638	Drawing name: =2V09&EFS-EL	= + V1GL1UQ53UQ20.1
			Ed.	MKLEPADLO					
			Appr		P6700 Bodyside LH - Robot Cell 2V09	Scale 1:1		Document type: EPB	Project nr: 22-16150
Modification	Date	Name	Original		Replacement of	Replaced by			Page 1 / 1533

Parts list

F01_001

Device tag	Quantity	Designation	Type number	Supplier	Part number
=V1GL1UQ53UQ21.1-BGS/R	1	Inductive sensor Monitoring Kit for Power Clamps	1324644	TUNKERS	TUN.1324644

+.GL1UQ53UQ20.1/1

+.GL1UQ53UQ22.1/1

			Date	1/17/2023	Volvo Trucks North America	Valiant TMS	Parts list : TUN.1324644 - TUN.1324644	Drawing name: =2V09&EFS-EL	= + V1GL1UQ53UQ21.1
			Ed.	MKLEPADLO					
			Appr		P6700 Bodyside LH - Robot Cell 2V09	Scale 1:1		Document type: EPB / Project nr: 22-16150	Page 1 / 1533
Modification	Date	Name	Original		Replacement of / Replaced by				

Parts list

F01_001

Device tag	Quantity	Designation	Type number	Supplier	Part number
=V1GL1UQ53UQ22.1-BGS/R	1	Inductive sensor Monitoring Kit for Power Clamps	1324638	TUNKERS	TUN.1324638

+.GL1UQ53UQ21.1/1

+.GL1UQ53UQ23.1/1

			Date	1/17/2023	Volvo Trucks North America	Valiant TMS	Parts list : TUN.1324638 - TUN.1324638	Drawing name: =2V09&EFS-EL	=	
			Ed.	MKLEPADLO					+ V1GL1UQ53UQ22.1	
			Appr		P6700 Bodyside LH - Robot Cell 2V09	Scale 1:1		Document type: EPB	Project nr: 22-16150	Page 1 / 1533
Modification	Date	Name	Original		Replacement of	Replaced by				

Parts list

F01_001

Device tag	Quantity	Designation	Type number	Supplier	Part number
=V1GL1UQ53UQ23.1-BGS/R	1	Inductive sensor Monitoring Kit for Power Clamps	1324644	TUNKERS	TUN.1324644

+.GL1UQ53UQ22.1/1

+.GL1UQ53UQ24.1/1

			Date	1/17/2023	Volvo Trucks North America	Valiant TMS	Parts list : TUN.1324644 - TUN.1324644	Drawing name: =2V09&EFS-EL	= + V1GL1UQ53UQ23.1
			Ed.	MKLEPADLO					
			Appr		P6700 Bodyside LH - Robot Cell 2V09	Scale 1:1		Document type: EPB	Project nr: 22-16150
Modification	Date	Name	Original		Replacement of	Replaced by			Page 1 / 1533

Parts list

F01_001

Device tag	Quantity	Designation	Type number	Supplier	Part number
=V1GL1UQ53UQ24.1-BGS/R	1	Inductive sensor Monitoring Kit for Power Clamps	1324638	TUNKERS	TUN.1324638

+.GL1UQ53UQ23.1/1

+.GL1UQ53UQ25.1/1

			Date	1/17/2023	Volvo Trucks North America	Valiant TMS	Parts list : TUN.1324638 - TUN.1324638	Drawing name: =2V09&EFS-EL	=	
			Ed.	MKLEPADLO					+ V1GL1UQ53UQ24.1	
			Appr		P6700 Bodyside LH - Robot Cell 2V09	Scale 1:1		Document type: EPB	Project nr: 22-16150	Page 1 / 1533
Modification	Date	Name	Original		Replacement of	Replaced by				

Parts list

F01_001

Device tag	Quantity	Designation	Type number	Supplier	Part number
=V1GL1UQ53UQ25.1-BGS/R	1	Inductive sensor Monitoring Kit for Power Clamps	1324638	TUNKERS	TUN.1324638

+.GL1UQ53UQ24.1/1

+.GL1UQ53UQ25.2/1

			Date	1/17/2023	Volvo Trucks North America	Valiant TMS	Parts list : TUN.1324638 - TUN.1324638	Drawing name: =2V09&EFS-EL	= + V1GL1UQ53UQ25.1
			Ed.	MKLEPADLO					
			Appr		P6700 Bodyside LH - Robot Cell 2V09	Scale 1:1		Document type: EPB	Project nr: 22-16150
Modification	Date	Name	Original		Replacement of	Replaced by			Page 1 / 1533

Parts list

F01_001

Device tag	Quantity	Designation	Type number	Supplier	Part number
=V1GL1UQ53UQ25.2-BGS/R	1	Inductive sensor Monitoring Kit for Power Clamps	1324638	TUNKERS	TUN.1324638

+.GL1UQ53UQ25.1/1

+.GL1UQ54/1

			Date	1/17/2023	Volvo Trucks North America	Valiant TMS	Parts list : TUN.1324638 - TUN.1324638	Drawing name: =2V09&EFS-EL	= + V1GL1UQ53UQ25.2
			Ed.	MKLEPADLO					
			Appr		P6700 Bodyside LH - Robot Cell 2V09	Scale 1:1		Document type: EPB	Project nr: 22-16150
Modification	Date	Name	Original		Replacement of	Replaced by			Page 1 / 1533

Parts list

F01_001

Device tag	Quantity	Designation	Type number	Supplier	Part number
=V1GL1UQ54BG0-BG01	1	Inductive sensor	BI20U-CA40-AP6X2-H1141/S1590W/BS2.0	Turck	TUR.1627297
=V1GL1UQ54BG0-BG02	1	Inductive sensor	BI20U-CA40-AP6X2-H1141/S1590W/BS2.0	Turck	TUR.1627297
=V1GL1UQ54BG0-BG03	1	Inductive sensor	BI20U-CA40-AP6X2-H1141/S1590W/BS2.0	Turck	TUR.1627297
=V1GL1UQ54BG0-BG04	1	QS30 Series High-Performance Long-Range Sensor	QS30FF600QPMA16		BAN.73093
=V1GL1UQ54BG0-BG05	1	Inductive sensor	BI20U-CA40-AP6X2-H1141/S1590W/BS2.0	Turck	TUR.1627297
=V1GL1UQ54BG0-BG06	1	QS30 Series High-Performance Long-Range Sensor	QS30FF600QPMA16		BAN.73093
=V1GL1UQ54BG0-BG07	1	Inductive sensor	BI20U-CA40-AP6X2-H1141/S1590W/BS2.0	Turck	TUR.1627297
=V1GL1UQ54BG0-BG08	1	Inductive sensor	BI20U-CA40-AP6X2-H1141/S1590W/BS2.0	Turck	TUR.1627297
=V1GL1UQ54BG0-BG09	1	Inductive sensor	BI20U-CA40-AP6X2-H1141/S1590W/BS2.0	Turck	TUR.1627297
=V1GL1UQ54BG0-BG10	1	Inductive sensor	BI10U-MT18-AP6X2-H1141/S1589	Turck	TUR.1644905
=V1GL1UQ54BG0-BG11	1	Inductive sensor	BI10U-MT18-AP6X2-H1141/S1589	Turck	TUR.1644905
=V1GL1UQ54BG0-BG12	1				1627297
=V1GL1UQ54BG0-BG13	1	Inductive sensor	BI20U-CA40-AP6X2-H1141/S1590W/BS2.0	Turck	TUR.1627297
=V1GL1UQ54BG0-BG14	1	Inductive sensor	BI20U-CA40-AP6X2-H1141/S1590W/BS2.0	Turck	TUR.1627297
=V1GL1UQ54BG0-BG15	1	Inductive sensor	BI20U-CA40-AP6X2-H1141/S1590W/BS2.0	Turck	TUR.1627297
=V1GL1UQ54BG0-BG16	1	Inductive sensor	BI20U-CA40-AP6X2-H1141/S1590W/BS2.0	Turck	TUR.1627297
=V1GL1UQ54BG0-BG17	1	Inductive sensor	BI20U-CA40-AP6X2-H1141/S1590W/BS2.0	Turck	TUR.1627297
=V1GL1UQ54BG0-BG18	1	Inductive sensor	BI20U-CA40-AP6X2-H1141/S1590W/BS2.0	Turck	TUR.1627297
=V1GL1UQ54BG0-BG19	1	Inductive sensor	BI20U-CA40-AP6X2-H1141/S1590W/BS2.0	Turck	TUR.1627297
=V1GL1UQ54BG0-BG20	1	Inductive sensor	BI20U-CA40-AP6X2-H1141/S1590W/BS2.0	Turck	TUR.1627297
=V1GL1UQ54BG0-BG21	1	Inductive sensor	BI20U-CA40-AP6X2-H1141/S1590W/BS2.0	Turck	TUR.1627297
=V1GL1UQ54BG0-BG22	1	Inductive sensor	BI10U-MT18-AP6X2-H1141/S1589	Turck	TUR.1644905
=V1GL1UQ54BG0-BG23	1	Inductive sensor	BI20U-CA40-AP6X2-H1141/S1590W/BS2.0	Turck	TUR.1627297
=V1GL1UQ54BG0-BG24	1	Inductive sensor	BI10U-MT18-AP6X2-H1141/S1589	Turck	TUR.1644905
=V1GL1UQ54BG0-BG25	1	Inductive sensor	BI20U-CA40-AP6X2-H1141/S1590W/BS2.0	Turck	TUR.1627297
=V1GL1UQ54BG0-BG26	1	Inductive sensor	BI10U-MT18-AP6X2-H1141/S1589	Turck	TUR.1644905
=V1GL1UQ54BG0-BG27	1	Inductive sensor	BI20U-CA40-AP6X2-H1141/S1590W/BS2.0	Turck	TUR.1627297
=V1GL1UQ54BG0-BG28	1	Inductive sensor	BI10U-MT18-AP6X2-H1141/S1589	Turck	TUR.1644905
=V1GL1UQ54BG0-BG29	1	Inductive sensor	BI4U-MT12E-AP6X-H1141/S1589	Turck	TUR.1644979
=V1GL1UQ54BG0-BG30	1	Magnetic field sensor For Detection of Ferromagnetic Parts	NIMFE-M12/4.6L88-UN6X-H1141	TURCK	TUR.1600610
=V1GL1UQ54BG0-XG1/2	1	Y splitter	U2-30676	TURCK	TUR.VB2-FSM 4.4/2FKM 4/S3450
=V1GL1UQ54BG0-XG3/4	1	Y splitter	U2-30676	TURCK	TUR.VB2-FSM 4.4/2FKM 4/S3450
=V1GL1UQ54BG0-XG5/6	1	Y splitter	U2-30676	TURCK	TUR.VB2-FSM 4.4/2FKM 4/S3450
=V1GL1UQ54BG0-XG7/8	1	Y splitter	U2-30676	TURCK	TUR.VB2-FSM 4.4/2FKM 4/S3450
=V1GL1UQ54BG0-XG9/10	1	Y splitter	U2-30676	TURCK	TUR.VB2-FSM 4.4/2FKM 4/S3450
=V1GL1UQ54BG0-XG11/12	1	Y splitter	U2-30676	TURCK	TUR.VB2-FSM 4.4/2FKM 4/S3450
=V1GL1UQ54BG0-XG13/14	1	Y splitter	U2-30676	TURCK	TUR.VB2-FSM 4.4/2FKM 4/S3450
=V1GL1UQ54BG0-XG15/16	1	Y splitter	U2-30676	TURCK	TUR.VB2-FSM 4.4/2FKM 4/S3450
=V1GL1UQ54BG0-XG17/18	1	Y splitter	U2-30676	TURCK	TUR.VB2-FSM 4.4/2FKM 4/S3450
=V1GL1UQ54BG0-XG19/20	1	Y splitter	U2-30676	TURCK	TUR.VB2-FSM 4.4/2FKM 4/S3450
=V1GL1UQ54BG0-XG21/22	1	Y splitter	U2-30676	TURCK	TUR.VB2-FSM 4.4/2FKM 4/S3450
=V1GL1UQ54BG0-XG23/24	1	Y splitter	U2-30676	TURCK	TUR.VB2-FSM 4.4/2FKM 4/S3450
=V1GL1UQ54BG0-XG25/26	1	Y splitter	U2-30676	TURCK	TUR.VB2-FSM 4.4/2FKM 4/S3450
=V1GL1UQ54BG0-XG27/28	1	Y splitter	U2-30676	TURCK	TUR.VB2-FSM 4.4/2FKM 4/S3450
=V1GL1UQ54BG0-XG29/30	1	Y splitter	U2-30676	TURCK	TUR.VB2-FSM 4.4/2FKM 4/S3450
=V1GL1UQ54KF1-KF1	0	Bus node	CPX-FB33	FES	FES.548755
=V1GL1UQ54KF1-KF1	0	Interlinking block	CPX-M-GE-EV-S-7/8-5POL	FES	FES.550208
=V1GL1UQ54KF1-KF1.11	0	Manifold block	CPX-M-AB-8-M12X2-5POL	FES	FES.549335
=V1GL1UQ54KF1-KF1.12	0	Manifold block	CPX-M-AB-8-M12X2-5POL	FES	FES.549335
=V1GL1UQ54KF1-KF1.13	0	Manifold block	CPX-M-AB-8-M12X2-5POL	FES	FES.549335
=V1GL1UQ54KF1-KF1.14	0	Manifold block	CPX-M-AB-8-M12X2-5POL	FES	FES.549335
=V1GL1UQ54KF2-KF2	0	Bus node	CPX-FB33	FES	FES.548755
=V1GL1UQ54KF2-KF2	0	Interlinking block	CPX-M-GE-EV-S-7/8-5POL	FES	FES.550208
=V1GL1UQ54KF2-KF2.11	0	Manifold block	CPX-M-AB-8-M12X2-5POL	FES	FES.549335
=V1GL1UQ54KF2-KF2.12	0	Manifold block	CPX-M-AB-8-M12X2-5POL	FES	FES.549335
=V1GL1UQ54KF2-KF2.13	0	Manifold block	CPX-M-AB-8-M12X2-5POL	FES	FES.549335

Parts list

F01_001

Device tag	Quantity	Designation	Type number	Supplier	Part number
=V1GL1UQ54KF2-KF2.14	0	Manifold block	CPX-M-AB-8-M12X2-5POL	FES	FES.549335
=V1GL1UQ54KF3-KF3	0	Bus node	CPX-FB33	FES	FES.548755
=V1GL1UQ54KF3-KF3	0	Interlinking block	CPX-M-GE-EV-S-7/8-5POL	FES	FES.550208
=V1GL1UQ54KF3-KF3.11	0	Manifold block	CPX-M-AB-8-M12X2-5POL	FES	FES.549335
=V1GL1UQ54WC4-XG51.1	1	TEE, 5-PIN MINI, STANDARD KEYWAY	RSM-2RKM 50	TURCK	TUR.RSM-2RKM 50
=V1GL1UQ54WC4-XG51.2	1	TEE, 5-PIN MINI, STANDARD KEYWAY	RSM-2RKM 50	TURCK	TUR.RSM-2RKM 50

Parts list

F01_001

Device tag	Quantity	Designation	Type number	Supplier	Part number
=V1GL1UQ54UQ1.1-BGS/R	1	4-Wire, 4-Pin, DC M12 X 1 (PNP)	WWS001A	WEL	WEL.WWS001A

+V1GL1UQ54/2

+.GL1UQ54UQ1.2/1

			Date	1/17/2023	Volvo Trucks North America	Valiant TMS	Parts list : WEL.WWS001A - WEL.WWS001A	Drawing name: =2V09&EFS-EL	= + V1GL1UQ54UQ1.1
			Ed.	MKLEPADLO					
			Appr		P6700 Bodyside LH - Robot Cell 2V09	Scale 1:1		Document type: EPB	Project nr: 22-16150
Modification	Date	Name	Original		Replacement of	Replaced by			Page 1 / 1533

Parts list

F01_001

Device tag	Quantity	Designation	Type number	Supplier	Part number
=V1GL1UQ54UQ1.2-BGS/R	1	4-Wire, 4-Pin, DC M12 X 1 (PNP)	WWS001A	WEL	WEL.WWS001A

+.GL1UQ54UQ1.1/1

+.GL1UQ54UQ1.3/1

			Date	1/17/2023	Volvo Trucks North America	Valiant TMS	Parts list : WEL.WWS001A - WEL.WWS001A	Drawing name: =2V09&EFS-EL	=	
			Ed.	MKLEPADLO					+ V1GL1UQ54UQ1.2	
			Appr		P6700 Bodyside LH - Robot Cell 2V09	Scale 1:1		Document type: EPB	Project nr: 22-16150	Page 1 / 1533
Modification	Date	Name	Original		Replacement of	Replaced by				

Parts list

F01_001

Device tag	Quantity	Designation	Type number	Supplier	Part number
=V1GL1UQ54UQ1.3-BGS/R	1	4-Wire, 4-Pin, DC M12 X 1 (PNP)	WWS001A	WEL	WEL.WWS001A

+.GL1UQ54UQ1.2/1

+.GL1UQ54UQ1.4/1

			Date	1/17/2023	Volvo Trucks North America	Valiant TMS	Parts list : WEL.WWS001A - WEL.WWS001A	Drawing name: =2V09&EFS-EL	=	
			Ed.	MKLEPADLO					+ V1GL1UQ54UQ1.3	
			Appr		P6700 Bodyside LH - Robot Cell 2V09	Scale 1:1		Document type: EPB	Project nr: 22-16150	Page 1 / 1533
Modification	Date	Name	Original		Replacement of	Replaced by				

Parts list

F01_001

Device tag	Quantity	Designation	Type number	Supplier	Part number
=V1GL1UQ54UQ1.4-BGS/R	1	4-Wire, 4-Pin, DC M12 X 1 (PNP)	WWS001A	WEL	WEL.WWS001A

+.GL1UQ54UQ1.3/1

+.GL1UQ54UQ1.5/1

			Date	1/17/2023	Volvo Trucks North America	Valiant TMS	Parts list : WEL.WWS001A - WEL.WWS001A	Drawing name: =2V09&EFS-EL	=	
			Ed.	MKLEPADLO					+ V1GL1UQ54UQ1.4	
			Appr		P6700 Bodyside LH - Robot Cell 2V09	Scale 1:1		Document type: EPB	Project nr: 22-16150	Page 1 / 1533
Modification	Date	Name	Original		Replacement of	Replaced by				

Parts list

F01_001

Device tag	Quantity	Designation	Type number	Supplier	Part number
=V1GL1UQ54UQ1.5-BGS/R	1	4-Wire, 4-Pin, DC M12 X 1 (PNP)	WWS001A	WEL	WEL.WWS001A

+.GL1UQ54UQ1.4/1

+.GL1UQ54UQ1.6/1

			Date	1/17/2023	Volvo Trucks North America	Valiant TMS	Parts list : WEL.WWS001A - WEL.WWS001A	Drawing name: =2V09&EFS-EL	=	
			Ed.	MKLEPADLO					+ V1GL1UQ54UQ1.5	
			Appr		P6700 Bodyside LH - Robot Cell 2V09	Scale 1:1		Document type: EPB	Project nr: 22-16150	Page 1 / 1533
Modification	Date	Name	Original		Replacement of	Replaced by				

Parts list

F01_001

Device tag	Quantity	Designation	Type number	Supplier	Part number
=V1GL1UQ54UQ1.6-BGS/R	1	4-Wire, 4-Pin, DC M12 X 1 (PNP)	WWS001A	WEL	WEL.WWS001A

+.GL1UQ54UQ1.5/1

+.GL1UQ54UQ2.1/1

			Date	1/17/2023	Volvo Trucks North America	Valiant TMS	Parts list : WEL.WWS001A - WEL.WWS001A	Drawing name: =2V09&EFS-EL	=	
			Ed.	MKLEPADLO					+ V1GL1UQ54UQ1.6	
			Appr		P6700 Bodyside LH - Robot Cell 2V09	Scale 1:1		Document type: EPB	Project nr: 22-16150	Page 1 / 1533
Modification	Date	Name	Original		Replacement of	Replaced by				

Parts list

F01_001

Device tag	Quantity	Designation	Type number	Supplier	Part number
=V1GL1UQ54UQ2.1-BGS/R	1	4-Wire, 4-Pin, DC M12 X 1 (PNP)	WWS001A	WEL	WEL.WWS001A

+.GL1UQ54UQ1.6/1

+.GL1UQ54UQ3.1/1

			Date	1/17/2023	Volvo Trucks North America	Valiant TMS	Parts list : WEL.WWS001A - WEL.WWS001A	Drawing name: =2V09&EFS-EL	=	
			Ed.	MKLEPADLO					+ V1GL1UQ54UQ2.1	
			Appr		P6700 Bodyside LH - Robot Cell 2V09	Scale 1:1		Document type: EPB	Project nr: 22-16150	Page 1 / 1533
Modification	Date	Name	Original		Replacement of	Replaced by				

Parts list

F01_001

Device tag	Quantity	Designation	Type number	Supplier	Part number
=V1GL1UQ54UQ3.1-BGS/R	1	4-Wire, 4-Pin, DC M12 X 1 (PNP)	WWS001A	WEL	WEL.WWS001A

+.GL1UQ54UQ2.1/1

+.GL1UQ54UQ3.2/1

			Date	1/17/2023	Volvo Trucks North America	Valiant TMS	Parts list : WEL.WWS001A - WEL.WWS001A	Drawing name: =2V09&EFS-EL	=	
			Ed.	MKLEPADLO					+ V1GL1UQ54UQ3.1	
			Appr		P6700 Bodyside LH - Robot Cell 2V09	Scale 1:1		Document type: EPB	Project nr: 22-16150	Page 1 / 1533
Modification	Date	Name	Original		Replacement of	Replaced by				

Parts list

F01_001

Device tag	Quantity	Designation	Type number	Supplier	Part number
=V1GL1UQ54UQ3.2-BGS/R	1	4-Wire, 4-Pin, DC M12 X 1 (PNP)	WWS001A	WEL	WEL.WWS001A

+.GL1UQ54UQ3.1/1

+.GL1UQ54UQ3.3/1

			Date	1/17/2023	Volvo Trucks North America	Valiant TMS	Parts list : WEL.WWS001A - WEL.WWS001A	Drawing name: =2V09&EFS-EL	=	
			Ed.	MKLEPADLO					+ V1GL1UQ54UQ3.2	
			Appr		P6700 Bodyside LH - Robot Cell 2V09	Scale 1:1		Document type: EPB	Project nr: 22-16150	Page 1 / 1533
Modification	Date	Name	Original		Replacement of	Replaced by				

Parts list

F01_001

Device tag	Quantity	Designation	Type number	Supplier	Part number
=V1GL1UQ54UQ3.3-BGS/R	1	4-Wire, 4-Pin, DC M12 X 1 (PNP)	WWS001A	WEL	WEL.WWS001A

+.GL1UQ54UQ3.2/1

+.GL1UQ54UQ3.4/1

			Date	1/17/2023	Volvo Trucks North America	Valiant TMS	Parts list : WEL.WWS001A - WEL.WWS001A	Drawing name: =2V09&EFS-EL	= + V1GL1UQ54UQ3.3
			Ed.	MKLEPADLO					
			Appr		P6700 Bodyside LH - Robot Cell 2V09	Scale 1:1		Document type: EPB	Project nr: 22-16150
Modification	Date	Name	Original		Replacement of	Replaced by			Page 1 / 1533

Parts list

F01_001

Device tag	Quantity	Designation	Type number	Supplier	Part number
=V1GL1UQ54UQ3.4-BGS/R	1	4-Wire, 4-Pin, DC M12 X 1 (PNP)	WWS001A	WEL	WEL.WWS001A

+.GL1UQ54UQ3.3/1

+.GL1UQ54UQ3.5/1

			Date	1/17/2023	Volvo Trucks North America	Valiant TMS	Parts list : WEL.WWS001A - WEL.WWS001A	Drawing name: =2V09&EFS-EL	=	
			Ed.	MKLEPADLO					+ V1GL1UQ54UQ3.4	
			Appr		P6700 Bodyside LH - Robot Cell 2V09	Scale 1:1		Document type: EPB	Project nr: 22-16150	Page 1 / 1533
Modification	Date	Name	Original		Replacement of	Replaced by				

Parts list

F01_001

Device tag	Quantity	Designation	Type number	Supplier	Part number
=V1GL1UQ54UQ3.5-BGS/R	1	4-Wire, 4-Pin, DC M12 X 1 (PNP)	WWS001A	WEL	WEL.WWS001A

+.GL1UQ54UQ3.4/1

+.GL1UQ54UQ4.1/1

			Date	1/17/2023	Volvo Trucks North America	Valiant TMS	Parts list : WEL.WWS001A - WEL.WWS001A	Drawing name: =2V09&EFS-EL	=		
			Ed.	MKLEPADLO					+ V1GL1UQ54UQ3.5		
			Appr		P6700 Bodyside LH - Robot Cell 2V09	Scale 1:1		Document type: EPB	Project nr: 22-16150	Page	1
Modification	Date	Name	Original		Replacement of	Replaced by					1533

Parts list

F01_001

Device tag	Quantity	Designation	Type number	Supplier	Part number
=V1GL1UQ54UQ4.1-BGS/R	1	4-Wire, 4-Pin, DC M12 X 1 (PNP)	WWS001A	WEL	WEL.WWS001A

+.GL1UQ54UQ3.5/1

+.GL1UQ54UQ4.2/1

			Date	1/17/2023	Volvo Trucks North America	Valiant TMS	Parts list : WEL.WWS001A - WEL.WWS001A	Drawing name: =2V09&EFS-EL	=	
			Ed.	MKLEPADLO					+ V1GL1UQ54UQ4.1	
			Appr		P6700 Bodyside LH - Robot Cell 2V09	Scale 1:1		Document type: EPB	Project nr: 22-16150	Page 1 / 1533
Modification	Date	Name	Original		Replacement of	Replaced by				

Parts list

F01_001

Device tag	Quantity	Designation	Type number	Supplier	Part number
=V1GL1UQ54UQ4.2-BGS/R	1	4-Wire, 4-Pin, DC M12 X 1 (PNP)	WWS001A	WEL	WEL.WWS001A

+.GL1UQ54UQ4.1/1

+.GL1UQ54UQ5.1/1

			Date	1/17/2023	Volvo Trucks North America	Valiant TMS	Parts list : WEL.WWS001A - WEL.WWS001A	Drawing name: =2V09&EFS-EL	= + V1GL1UQ54UQ4.2
			Ed.	MKLEPADLO					
			Appr		P6700 Bodyside LH - Robot Cell 2V09	Scale 1:1		Document type: EPB	Project nr: 22-16150
Modification	Date	Name	Original		Replacement of	Replaced by			Page 1 / 1533

Parts list

F01_001

Device tag	Quantity	Designation	Type number	Supplier	Part number
=V1GL1UQ54UQ5.1-BGS/R	1	4-Wire, 4-Pin, DC M12 X 1 (PNP)	WWS001A	WEL	WEL.WWS001A

+.GL1UQ54UQ4.2/1

+.GL1UQ54UQ5.2/1

			Date	1/17/2023	Volvo Trucks North America	Valiant TMS	Parts list : WEL.WWS001A - WEL.WWS001A	Drawing name: =2V09&EFS-EL	=	
			Ed.	MKLEPADLO					+ V1GL1UQ54UQ5.1	
			Appr		P6700 Bodyside LH - Robot Cell 2V09	Scale 1:1		Document type: EPB	Project nr: 22-16150	Page 1 / 1533
Modification	Date	Name	Original		Replacement of	Replaced by				

Parts list

F01_001

Device tag	Quantity	Designation	Type number	Supplier	Part number
=V1GL1UQ54UQ5.2-BGS/R	1	4-Wire, 4-Pin, DC M12 X 1 (PNP)	WWS001A	WEL	WEL.WWS001A

+.GL1UQ54UQ5.1/1

+.GL1UQ54UQ6.1/1

			Date	1/17/2023	Volvo Trucks North America	Valiant TMS	Parts list : WEL.WWS001A - WEL.WWS001A	Drawing name: =2V09&EFS-EL	= + V1GL1UQ54UQ5.2
			Ed.	MKLEPADLO					
			Appr		P6700 Bodyside LH - Robot Cell 2V09	Scale 1:1		Document type: EPB	Project nr: 22-16150
Modification	Date	Name	Original		Replacement of	Replaced by			Page 1 / 1533

Parts list

F01_001

Device tag	Quantity	Designation	Type number	Supplier	Part number
=V1GL1UQ54UQ6.1-BGS/R	1	4-Wire, 4-Pin, DC M12 X 1 (PNP)	WWS001A	WEL	WEL.WWS001A

+.GL1UQ54UQ5.2/1

+.GL1UQ54UQ7.1/1

			Date	1/17/2023	Volvo Trucks North America	Valiant TMS	Parts list : WEL.WWS001A - WEL.WWS001A	Drawing name: =2V09&EFS-EL	=	
			Ed.	MKLEPADLO					+ V1GL1UQ54UQ6.1	
			Appr		P6700 Bodyside LH - Robot Cell 2V09	Scale 1:1		Document type: EPB	Project nr: 22-16150	Page 1 / 1533
Modification	Date	Name	Original		Replacement of	Replaced by				

Parts list

F01_001

Device tag	Quantity	Designation	Type number	Supplier	Part number
=V1GL1UQ54UQ7.1-BGS/R	1	4-Wire, 4-Pin, DC M12 X 1 (PNP)	WWS001A	WEL	WEL.WWS001A

+.GL1UQ54UQ6.1/1

+.GL1UQ54UQ8.1/1

			Date	1/17/2023	Volvo Trucks North America	Valiant TMS	Parts list : WEL.WWS001A - WEL.WWS001A	Drawing name: =2V09&EFS-EL	=	
			Ed.	MKLEPADLO					+ V1GL1UQ54UQ7.1	
			Appr		P6700 Bodyside LH - Robot Cell 2V09	Scale 1:1		Document type: EPB	Project nr: 22-16150	Page 1 / 1533
Modification	Date	Name	Original		Replacement of	Replaced by				

Parts list

F01_001

Device tag	Quantity	Designation	Type number	Supplier	Part number
=V1GL1UQ54UQ8.1-BGR	1	Inductive sensor	BI10U-MT18-AP6X2-H1141/S1589	TURCK	TUR.16449050
=V1GL1UQ54UQ8.1-BGS	1	Inductive sensor	BI10U-MT18-AP6X2-H1141/S1589	TURCK	TUR.16449050
=V1GL1UQ54UQ8.1-XGR/S	1	Y splitter	U2-30676	TURCK	TUR.VB2-FSM 4.4/2FKM 4/S3450

+.GL1UQ54UQ7.1/1

+.GL1UQ54UQ9.1/1

			Date	1/17/2023	Volvo Trucks North America	Valiant TMS	Parts list : TUR.16449050 - TUR.VB2-FSM 4.4/2FKM 4/S3450	Drawing name: =2V09&EFS-EL	= + V1GL1UQ54UQ8.1
			Ed.	MKLEPADLO					
			Appr		P6700 Bodyside LH - Robot Cell 2V09	Scale 1:1		Document type: EPB	Project nr: 22-16150
Modification	Date	Name	Original		Replacement of	Replaced by			Page 1 / 1533

Parts list

F01_001

Device tag	Quantity	Designation	Type number	Supplier	Part number
=V1GL1UQ54UQ9.1-BGS/R	1	4-Wire, 4-Pin, DC M12 X 1 (PNP)	WWS001A	WEL	WEL.WWS001A

+.GL1UQ54UQ8.1/1

+.GL1UQ54UQ9.2/1

			Date	1/17/2023	Volvo Trucks North America	Valiant TMS	Parts list : WEL.WWS001A - WEL.WWS001A	Drawing name: =2V09&EFS-EL	= + V1GL1UQ54UQ9.1
			Ed.	MKLEPADLO					
			Appr		P6700 Bodyside LH - Robot Cell 2V09	Scale 1:1		Document type: EPB	Project nr: 22-16150
Modification	Date	Name	Original		Replacement of	Replaced by			Page 1 / 1533

Parts list

F01_001

Device tag	Quantity	Designation	Type number	Supplier	Part number
=V1GL1UQ54UQ9.2-BGS/R	1	4-Wire, 4-Pin, DC M12 X 1 (PNP)	WWS001A	WEL	WEL.WWS001A

+.GL1UQ54UQ9.1/1

+.GL1UQ54UQ10.1/1

			Date	1/17/2023	Volvo Trucks North America	Valiant TMS	Parts list : WEL.WWS001A - WEL.WWS001A	Drawing name: =2V09&EFS-EL	= + V1GL1UQ54UQ9.2
			Ed.	MKLEPADLO					
			Appr		P6700 Bodyside LH - Robot Cell 2V09	Scale 1:1		Document type: EPB	Project nr: 22-16150
Modification	Date	Name	Original		Replacement of	Replaced by			Page 1 / 1533

Parts list

F01_001

Device tag	Quantity	Designation	Type number	Supplier	Part number
=V1GL1UQ54UQ10.1-BGS/R	1	Inductive sensor Monitoring Kit for Power Clamps	1324638	TUNKERS	TUN.1324638

+.GL1UQ54UQ9.2/1

+.GL1UQ54UQ10.2/1

			Date	1/17/2023	Volvo Trucks North America	Valiant TMS	Parts list : TUN.1324638 - TUN.1324638	Drawing name: =2V09&EFS-EL	= + V1GL1UQ54UQ10.1
			Ed.	MKLEPADLO					
			Appr		P6700 Bodyside LH - Robot Cell 2V09	Scale 1:1		Document type: EPB	Project nr: 22-16150
Modification	Date	Name	Original		Replacement of	Replaced by			Page 1 / 1533

Parts list

F01_001

Device tag	Quantity	Designation	Type number	Supplier	Part number
=V1GL1UQ54UQ10.2-BGS/R	1	Inductive sensor Monitoring Kit for Power Clamps	1324644	TUNKERS	TUN.1324644

+.GL1UQ54UQ10.1/1

+.GL1UQ54UQ10.3/1

			Date	1/17/2023	Volvo Trucks North America	Valiant TMS	Parts list : TUN.1324644 - TUN.1324644	Drawing name: =2V09&EFS-EL	= + V1GL1UQ54UQ10.2
			Ed.	MKLEPADLO					
			Appr		P6700 Bodyside LH - Robot Cell 2V09	Scale 1:1		Document type: EPB	Project nr: 22-16150
Modification	Date	Name	Original		Replacement of	Replaced by			Page 1 / 1533

Parts list

F01_001

Device tag	Quantity	Designation	Type number	Supplier	Part number
=V1GL1UQ54UQ10.3-BGS/R	1	Inductive sensor Monitoring Kit for Power Clamps	1324638	TUNKERS	TUN.1324638

			Date	1/17/2023	Volvo Trucks North America	Valiant TMS	Parts list : TUN.1324638 - TUN.1324638	Drawing name: =2V09&EFS-EL	=	
			Ed.	MKLEPADLO					+ V1GL1UQ54UQ10.3	
			Appr		P6700 Bodyside LH - Robot Cell 2V09	Scale 1:1		Document type: EPB	Project nr: 22-16150	Page 1 / 1533
Modification	Date	Name	Original		Replacement of	Replaced by				

Parts list

F01_001

Device tag	Quantity	Designation	Type number	Supplier	Part number
=V1GL1UQ54UQ10.4-BGS/R	1	Inductive sensor Monitoring Kit for Power Clamps	1324638	TUNKERS	TUN.1324638

+.GL1UQ54UQ10.3/1

+.GL1UQ54UQ10.5/1

			Date	1/17/2023	Volvo Trucks North America	Valiant TMS	Parts list : TUN.1324638 - TUN.1324638	Drawing name: =2V09&EFS-EL	= + V1GL1UQ54UQ10.4
			Ed.	MKLEPADLO					
			Appr		P6700 Bodyside LH - Robot Cell 2V09	Scale 1:1		Document type: EPB	Project nr: 22-16150
Modification	Date	Name	Original		Replacement of	Replaced by			Page 1 / 1533

Parts list

F01_001

Device tag	Quantity	Designation	Type number	Supplier	Part number
=V1GL1UQ54UQ10.5-BGS/R	1	Inductive sensor Monitoring Kit for Power Clamps	1324638	TUNKERS	TUN.1324638

			Date	1/17/2023	Volvo Trucks North America	Valiant TMS	Parts list : TUN.1324638 - TUN.1324638	Drawing name: =2V09&EFS-EL	=	
			Ed.	MKLEPADLO					+ V1GL1UQ54UQ10.5	
			Appr		P6700 Bodyside LH - Robot Cell 2V09	Scale 1:1		Document type: EPB	Project nr: 22-16150	Page 1 / 1533
Modification	Date	Name	Original		Replacement of	Replaced by				

Parts list

F01_001

Device tag	Quantity	Designation	Type number	Supplier	Part number
=V1GL1UQ54UQ10.6-BGS/R	1	Inductive sensor Monitoring Kit for Power Clamps	1324638	TUNKERS	TUN.1324638

+.GL1UQ54UQ10.5/1

+.GL1UQ54UQ11.1/1

			Date	1/17/2023	Volvo Trucks North America	Valiant TMS	Parts list : TUN.1324638 - TUN.1324638	Drawing name: =2V09&EFS-EL	= + V1GL1UQ54UQ10.6
			Ed.	MKLEPADLO					
			Appr		P6700 Bodyside LH - Robot Cell 2V09	Scale 1:1		Document type: EPB	Project nr: 22-16150
Modification	Date	Name	Original		Replacement of	Replaced by			Page 1 / 1533

Parts list

F01_001

Device tag	Quantity	Designation	Type number	Supplier	Part number
=V1GL1UQ54UQ11.1-BGS/R	1	Inductive sensor Monitoring Kit for Power Clamps	1324644	TUNKERS	TUN.1324644

+.GL1UQ54UQ10.6/1

+.GL1UQ54UQ11.2/1

			Date	1/17/2023	Volvo Trucks North America	Valiant TMS	Parts list : TUN.1324644 - TUN.1324644	Drawing name: =2V09&EFS-EL	= + V1GL1UQ54UQ11.1
			Ed.	MKLEPADLO					
			Appr		P6700 Bodyside LH - Robot Cell 2V09	Scale 1:1		Document type: EPB	Project nr: 22-16150
Modification	Date	Name	Original		Replacement of	Replaced by			Page 1 / 1533

Parts list

F01_001

Device tag	Quantity	Designation	Type number	Supplier	Part number
=V1GL1UQ54UQ11.2-BGS/R	1	Inductive sensor Monitoring Kit for Power Clamps	1324644	TUNKERS	TUN.1324644

+.GL1UQ54UQ11.1/1

+.GL1UQ54UQ11.3/1

			Date	1/17/2023	Volvo Trucks North America	Valiant TMS	Parts list : TUN.1324644 - TUN.1324644	Drawing name: =2V09&EFS-EL	= + V1GL1UQ54UQ11.2
			Ed.	MKLEPADLO					
			Appr		P6700 Bodyside LH - Robot Cell 2V09	Scale 1:1		Document type: EPB	Project nr: 22-16150
Modification	Date	Name	Original		Replacement of	Replaced by			Page 1 / 1533

Parts list

F01_001

Device tag	Quantity	Designation	Type number	Supplier	Part number
=V1GL1UQ54UQ11.3-BGS/R	1	Inductive sensor Monitoring Kit for Power Clamps	1324638	TUNKERS	TUN.1324638

			Date	1/17/2023	Volvo Trucks North America	Valiant TMS	Parts list : TUN.1324638 - TUN.1324638	Drawing name: =2V09&EFS-EL	=	
			Ed.	MKLEPADLO					+ V1GL1UQ54UQ11.3	
			Appr		P6700 Bodyside LH - Robot Cell 2V09	Scale 1:1		Document type: EPB	Project nr: 22-16150	Page 1 / 1533
Modification	Date	Name	Original		Replacement of	Replaced by				

Parts list

F01_001

Device tag	Quantity	Designation	Type number	Supplier	Part number
=V1GL1UQ54UQ11.4-BGS/R	1	Inductive sensor Monitoring Kit for Power Clamps	1324638	TUNKERS	TUN.1324638

+.GL1UQ54UQ11.3/1

+.GL1UQ54UQ11.5/1

Parts list

F01_001

Device tag	Quantity	Designation	Type number	Supplier	Part number
=V1GL1UQ54UQ11.5-BGS/R	1	Inductive sensor Monitoring Kit for Power Clamps	1324644	TUNKERS	TUN.1324644

+.GL1UQ54UQ11.4/1

+.GL1UQ54UQ12.1/1

			Date	1/17/2023	Volvo Trucks North America	Valiant TMS	Parts list : TUN.1324644 - TUN.1324644	Drawing name: =2V09&EFS-EL	= + V1GL1UQ54UQ11.5
			Ed.	MKLEPADLO					
			Appr		P6700 Bodyside LH - Robot Cell 2V09	Scale 1:1		Document type: EPB	Project nr: 22-16150
Modification	Date	Name	Original		Replacement of	Replaced by			Page 1 / 1533

Parts list

F01_001

Device tag	Quantity	Designation	Type number	Supplier	Part number
=V1GL1UQ54UQ12.1-BGS/R	1	Inductive sensor Monitoring Kit for Power Clamps	1324638	TUNKERS	TUN.1324638

+.GL1UQ54UQ11.5/1

+.GL1UQ54UQ12.2/1

			Date	1/17/2023	Volvo Trucks North America	Valiant TMS	Parts list : TUN.1324638 - TUN.1324638	Drawing name: =2V09&EFS-EL	= + V1GL1UQ54UQ12.1
			Ed.	MKLEPADLO					
			Appr		P6700 Bodyside LH - Robot Cell 2V09	Scale 1:1		Document type: EPB	Project nr: 22-16150
Modification	Date	Name	Original		Replacement of	Replaced by			Page 1 / 1533

Parts list

F01_001

Device tag	Quantity	Designation	Type number	Supplier	Part number
=V1GL1UQ54UQ12.2-BGS/R	1	Inductive sensor Monitoring Kit for Power Clamps	1324644	TUNKERS	TUN.1324644

+.GL1UQ54UQ12.1/1

+.GL1UQ54UQ12.3/1

			Date	1/17/2023	Volvo Trucks North America	Valiant TMS	Parts list : TUN.1324644 - TUN.1324644	Drawing name: =2V09&EFS-EL	= + V1GL1UQ54UQ12.2
			Ed.	MKLEPADLO					
			Appr		P6700 Bodyside LH - Robot Cell 2V09	Scale 1:1		Document type: EPB	Project nr: 22-16150
Modification	Date	Name	Original		Replacement of	Replaced by			Page 1 / 1533

Parts list

F01_001

Device tag	Quantity	Designation	Type number	Supplier	Part number
=V1GL1UQ54UQ12.3-BGS/R	1	Inductive sensor Monitoring Kit for Power Clamps	1324644	TUNKERS	TUN.1324644

+.GL1UQ54UQ12.2/1

+.GL1UQ54UQ12.4/1

			Date	1/17/2023	Volvo Trucks North America	Valiant TMS	Parts list : TUN.1324644 - TUN.1324644	Drawing name: =2V09&EFS-EL	= + V1GL1UQ54UQ12.3
			Ed.	MKLEPADLO					
			Appr		P6700 Bodyside LH - Robot Cell 2V09	Scale 1:1		Document type: EPB / Project nr: 22-16150	Page 1 / 1533
Modification	Date	Name	Original		Replacement of / Replaced by				

Parts list

F01_001

Device tag	Quantity	Designation	Type number	Supplier	Part number
=V1GL1UQ54UQ12.4-BGS/R	1	Inductive sensor Monitoring Kit for Power Clamps	1324644	TUNKERS	TUN.1324644

			Date	1/17/2023	Volvo Trucks North America	Valiant TMS	Parts list : TUN.1324644 - TUN.1324644	Drawing name: =2V09&EFS-EL	=	
			Ed.	MKLEPADLO					+ V1GL1UQ54UQ12.4	
			Appr		P6700 Bodyside LH - Robot Cell 2V09	Scale 1:1		Document type: EPB	Project nr: 22-16150	Page 1 / 1533
Modification	Date	Name	Original		Replacement of	Replaced by				

Parts list

F01_001

Device tag	Quantity	Designation	Type number	Supplier	Part number
=V1GL1UQ54UQ12.5-BGS/R	1	Inductive sensor Monitoring Kit for Power Clamps	1324638	TUNKERS	TUN.1324638

			Date	1/17/2023	Volvo Trucks North America	Valiant TMS	Parts list : TUN.1324638 - TUN.1324638	Drawing name: =2V09&EFS-EL	=	
			Ed.	MKLEPADLO					+ V1GL1UQ54UQ12.5	
			Appr		P6700 Bodyside LH - Robot Cell 2V09	Scale 1:1		Document type: EPB	Project nr: 22-16150	Page 1 / 1533
Modification	Date	Name	Original		Replacement of	Replaced by				

Parts list

F01_001

Device tag	Quantity	Designation	Type number	Supplier	Part number
=V1GL1UQ54UQ12.6-BGS/R	1	Inductive sensor Monitoring Kit for Power Clamps	1324644	TUNKERS	TUN.1324644

+.GL1UQ54UQ12.5/1

+.GL1UQ54UQ13.1/1

			Date	1/17/2023	Volvo Trucks North America	Valiant TMS	Parts list : TUN.1324644 - TUN.1324644	Drawing name: =2V09&EFS-EL	= + V1GL1UQ54UQ12.6
			Ed.	MKLEPADLO					
			Appr		P6700 Bodyside LH - Robot Cell 2V09	Scale 1:1		Document type: EPB	Project nr: 22-16150
Modification	Date	Name	Original		Replacement of	Replaced by			Page 1 / 1533

Parts list

F01_001

Device tag	Quantity	Designation	Type number	Supplier	Part number
=V1GL1UQ54UQ13.1-BGS/R	1	Inductive sensor Monitoring Kit for Power Clamps	1324644	TUNKERS	TUN.1324644

+.GL1UQ54UQ12.6/1

+.GL1UQ54UQ14.1/1

			Date	1/17/2023	Volvo Trucks North America	Valiant TMS	Parts list : TUN.1324644 - TUN.1324644	Drawing name: =2V09&EFS-EL	= + V1GL1UQ54UQ13.1
			Ed.	MKLEPADLO					
			Appr		P6700 Bodyside LH - Robot Cell 2V09	Scale 1:1		Document type: EPB	Project nr: 22-16150
Modification	Date	Name	Original		Replacement of	Replaced by			Page 1 / 1533

Parts list

F01_001

Device tag	Quantity	Designation	Type number	Supplier	Part number
=V1GL1UQ54UQ14.1-BGS/R	1	Inductive sensor Monitoring Kit for Power Clamps	1324644	TUNKERS	TUN.1324644

+.GL1UQ54UQ13.1/1

+.GL1UQ54UQ15.1/1

			Date	1/17/2023	Volvo Trucks North America	Valiant TMS	Parts list : TUN.1324644 - TUN.1324644	Drawing name: =2V09&EFS-EL	= + V1GL1UQ54UQ14.1
			Ed.	MKLEPADLO					
			Appr		P6700 Bodyside LH - Robot Cell 2V09	Scale 1:1		Document type: EPB	Project nr: 22-16150
Modification	Date	Name	Original		Replacement of	Replaced by			Page 1 / 1533

Parts list

F01_001

Device tag	Quantity	Designation	Type number	Supplier	Part number
=V1GL1UQ54UQ15.1-BGS/R	1	Inductive sensor Monitoring Kit for Power Clamps	1324638	TUNKERS	TUN.1324638

			Date	1/17/2023	Volvo Trucks North America	Valiant TMS	Parts list : TUN.1324638 - TUN.1324638	Drawing name: =2V09&EFS-EL	= + V1GL1UQ54UQ15.1
			Ed.	MKLEPADLO					
			Appr		P6700 Bodyside LH - Robot Cell 2V09	Scale 1:1		Document type: EPB	Project nr: 22-16150
Modification	Date	Name	Original		Replacement of	Replaced by			Page 1 / 1533

Parts list

F01_001

Device tag	Quantity	Designation	Type number	Supplier	Part number
=V1GL1UQ54UQ16.1-BGS/R	1	Inductive sensor Monitoring Kit for Power Clamps	1324638	TUNKERS	TUN.1324638

+.GL1UQ54UQ15.1/1

+.GL1UQ54UQ16.2/1

			Date	1/17/2023	Volvo Trucks North America	Valiant TMS	Parts list : TUN.1324638 - TUN.1324638	Drawing name: =2V09&EFS-EL	= + V1GL1UQ54UQ16.1
			Ed.	MKLEPADLO					
			Appr		P6700 Bodyside LH - Robot Cell 2V09	Scale 1:1		Document type: EPB	Project nr: 22-16150
Modification	Date	Name	Original		Replacement of	Replaced by			Page 1 / 1533

Parts list

F01_001

Device tag	Quantity	Designation	Type number	Supplier	Part number
=V1GL1UQ54UQ16.2-BGS/R	1	Inductive sensor Monitoring Kit for Power Clamps	1324644	TUNKERS	TUN.1324644

+.GL1UQ54UQ16.1/1

+.GL1UQ54UQ16.3/1

			Date	1/17/2023	Volvo Trucks North America	Valiant TMS	Parts list : TUN.1324644 - TUN.1324644	Drawing name: =2V09&EFS-EL	= + V1GL1UQ54UQ16.2
			Ed.	MKLEPADLO					
			Appr		P6700 Bodyside LH - Robot Cell 2V09	Scale 1:1		Document type: EPB	Project nr: 22-16150
Modification	Date	Name	Original		Replacement of	Replaced by			Page 1 / 1533

Parts list

F01_001

Device tag	Quantity	Designation	Type number	Supplier	Part number
=V1GL1UQ54UQ16.3-BGS/R	1	Inductive sensor Monitoring Kit for Power Clamps	1324644	TUNKERS	TUN.1324644

+.GL1UQ54UQ16.2/1

+.GL1UQ54UQ17.1/1

			Date	1/17/2023	Volvo Trucks North America	Valiant TMS	Parts list : TUN.1324644 - TUN.1324644	Drawing name: =2V09&EFS-EL	= + V1GL1UQ54UQ16.3
			Ed.	MKLEPADLO					
			Appr		P6700 Bodyside LH - Robot Cell 2V09	Scale 1:1		Document type: EPB	Project nr: 22-16150
Modification	Date	Name	Original		Replacement of	Replaced by			Page 1 / 1533

Parts list

F01_001

Device tag	Quantity	Designation	Type number	Supplier	Part number
=V1GL1UQ54UQ17.1-BGS/R	1	Inductive sensor Monitoring Kit for Power Clamps	1324638	TUNKERS	TUN.1324638

+.GL1UQ54UQ16.3/1

+.GL1UQ54UQ18.1/1

			Date	1/17/2023	Volvo Trucks North America	Valiant TMS	Parts list : TUN.1324638 - TUN.1324638	Drawing name: =2V09&EFS-EL	= + V1GL1UQ54UQ17.1
			Ed.	MKLEPADLO					
			Appr		P6700 Bodyside LH - Robot Cell 2V09	Scale 1:1		Document type: EPB	Project nr: 22-16150
Modification	Date	Name	Original		Replacement of	Replaced by			Page 1 / 1533

Parts list

F01_001

Device tag	Quantity	Designation	Type number	Supplier	Part number
=V1GL1UQ54UQ18.1-BGS/R	1	4-Wire, 4-Pin, DC M12 X 1 (PNP)	WWS001A	WEL	WEL.WWS001A

+.GL1UQ54UQ17.1/1

+.GL1UQ54UQ18.2/1

			Date	1/17/2023	Volvo Trucks North America	Valiant TMS	Parts list : WEL.WWS001A - WEL.WWS001A	Drawing name: =2V09&EFS-EL	= + V1GL1UQ54UQ18.1
			Ed.	MKLEPADLO					
			Appr		P6700 Bodyside LH - Robot Cell 2V09	Scale 1:1		Document type: EPB	Project nr: 22-16150
Modification	Date	Name	Original		Replacement of	Replaced by			Page 1 / 1533

Parts list

F01_001

Device tag	Quantity	Designation	Type number	Supplier	Part number
=V1GL1UQ54UQ18.2-BGS/R	1	4-Wire, 4-Pin, DC M12 X 1 (PNP)	WWS001A	WEL	WEL.WWS001A

+.GL1UQ54UQ18.1/1

+.GL1UQ54UQ19.1/1

			Date	1/17/2023	Volvo Trucks North America	Valiant TMS	Parts list : WEL.WWS001A - WEL.WWS001A	Drawing name: =2V09&EFS-EL	= + V1GL1UQ54UQ18.2
			Ed.	MKLEPADLO					
			Appr		P6700 Bodyside LH - Robot Cell 2V09	Scale 1:1		Document type: EPB	Project nr: 22-16150
Modification	Date	Name	Original		Replacement of	Replaced by			Page 1 / 1533

Parts list

F01_001

Device tag	Quantity	Designation	Type number	Supplier	Part number
=V1GL1UQ54UQ19.1-BGS/R	1	Inductive sensor Monitoring Kit for Power Clamps	1324638	TUNKERS	TUN.1324638

+.GL1UQ54UQ18.2/1

+.GL1UQ54UQ19.2/1

			Date	1/17/2023	Volvo Trucks North America	Valiant TMS	Parts list : TUN.1324638 - TUN.1324638	Drawing name: =2V09&EFS-EL	= + V1GL1UQ54UQ19.1
			Ed.	MKLEPADLO					
			Appr		P6700 Bodyside LH - Robot Cell 2V09	Scale 1:1		Document type: EPB	Project nr: 22-16150
Modification	Date	Name	Original		Replacement of	Replaced by			Page 1 / 1533

Parts list

F01_001

Device tag	Quantity	Designation	Type number	Supplier	Part number
=V1GL1UQ54UQ19.2-BGS/R	1	Inductive sensor Monitoring Kit for Power Clamps	1324638	TUNKERS	TUN.1324638

+.GL1UQ54UQ19.1/1

+.GL1UQ54UQ20.1/1

			Date	1/17/2023	Volvo Trucks North America	Valiant TMS	Parts list : TUN.1324638 - TUN.1324638	Drawing name: =2V09&EFS-EL	= + V1GL1UQ54UQ19.2
			Ed.	MKLEPADLO					
			Appr		P6700 Bodyside LH - Robot Cell 2V09	Scale 1:1		Document type: EPB	Project nr: 22-16150
Modification	Date	Name	Original		Replacement of	Replaced by			Page 1 / 1533

Parts list

F01_001

Device tag	Quantity	Designation	Type number	Supplier	Part number
=V1GL1UQ54UQ20.1-BGS/R	1	Inductive sensor Monitoring Kit for Power Clamps	1324638	TUNKERS	TUN.1324638

+.GL1UQ54UQ19.2/1

+.GL1UQ54UQ21.1/1

			Date	1/17/2023	Volvo Trucks North America	Valiant TMS	Parts list : TUN.1324638 - TUN.1324638	Drawing name: =2V09&EFS-EL	= + V1GL1UQ54UQ20.1
			Ed.	MKLEPADLO					
			Appr		P6700 Bodyside LH - Robot Cell 2V09	Scale 1:1		Document type: EPB	Project nr: 22-16150
Modification	Date	Name	Original		Replacement of	Replaced by			Page 1 / 1533

Parts list

F01_001

Device tag	Quantity	Designation	Type number	Supplier	Part number
=V1GL1UQ54UQ21.1-BGS/R	1	4-Wire, 4-Pin, DC M12 X 1 (PNP)	WWS001A	WEL	WEL.WWS001A

+.GL1UQ54UQ20.1/1

+.GL1UQ54UQ22.1/1

			Date	1/17/2023	Volvo Trucks North America	Valiant TMS	Parts list : WEL.WWS001A - WEL.WWS001A	Drawing name: =2V09&EFS-EL	=	
			Ed.	MKLEPADLO					+ V1GL1UQ54UQ21.1	
			Appr		P6700 Bodyside LH - Robot Cell 2V09	Scale 1:1		Document type: EPB	Project nr: 22-16150	Page 1 / 1533
Modification	Date	Name	Original		Replacement of	Replaced by				

Parts list

F01_001

Device tag	Quantity	Designation	Type number	Supplier	Part number
=V1GL1UQ54UQ22.1-BGS/R	1	4-Wire, 4-Pin, DC M12 X 1 (PNP)	WWS001A	WEL	WEL.WWS001A

+.GL1UQ54UQ21.1/1

+.GL1UQ54UQ23.1/1

			Date	1/17/2023	Volvo Trucks North America	Valiant TMS	Parts list : WEL.WWS001A - WEL.WWS001A	Drawing name: =2V09&EFS-EL	=	
			Ed.	MKLEPADLO					+ V1GL1UQ54UQ22.1	
			Appr		P6700 Bodyside LH - Robot Cell 2V09	Scale 1:1		Document type: EPB	Project nr: 22-16150	Page 1 / 1533
Modification	Date	Name	Original		Replacement of	Replaced by				

Parts list

F01_001

Device tag	Quantity	Designation	Type number	Supplier	Part number
=V1GL1UQ54UQ23.1-BGS/R	1	4-Wire, 4-Pin, DC M12 X 1 (PNP)	WWS001A	WEL	WEL.WWS001A

+.GL1UQ54UQ22.1/1

+.GL1UQ56/1

			Date	1/17/2023	Volvo Trucks North America	Valiant TMS	Parts list : WEL.WWS001A - WEL.WWS001A	Drawing name: =2V09&EFS-EL	= + V1GL1UQ54UQ23.1
			Ed.	MKLEPADLO					
			Appr		P6700 Bodyside LH - Robot Cell 2V09	Scale 1:1		Document type: EPB	Project nr: 22-16150
Modification	Date	Name	Original		Replacement of	Replaced by			Page 1 / 1533

Parts list

F01_001

Device tag	Quantity	Designation	Type number	Supplier	Part number
=V1GL1UQ56KF1-KF1	0	Bus node	CPX-FB33	FES	FES.548755
=V1GL1UQ56KF1-KF1	0	Interlinking block	CPX-M-GE-EV-S-7/8-5POL	FES	FES.550208
=V1GL1UQ56KF1-KF1.11	0	Manifold block	CPX-M-AB-8-M12X2-5POL	FES	FES.549335

+.GL1UQ54UQ23.1/1

+.GL1UQ56UQ1.1/1

			Date	1/17/2023	Volvo Trucks North America	Valiant TMS	Parts list : FES.548755 - FES.549335	Drawing name: =2V09&EFS-EL	=
			Ed.	MKLEPADLO					+ V1GL1UQ56
			Appr		P6700 Bodyside LH - Robot Cell 2V09	Scale 1:1		Document type: EPB	Project nr: 22-16150
Modification	Date	Name	Original		Replacement of	Replaced by			Page 1 / 1533

Parts list

F01_001

Device tag	Quantity	Designation	Type number	Supplier	Part number
=V1GL1UQ56UQ1.1-BGR	1	Inductive sensor	BI4U-MT12E-AP6X2-H1141/S1589	TURCK	TUR.1644797
=V1GL1UQ56UQ1.1-BGS	1	Inductive sensor	BI4U-MT12E-AP6X2-H1141/S1589	TURCK	TUR.1644797
=V1GL1UQ56UQ1.1-XGR/S	1	Y splitter	U2-30676	TURCK	TUR.VB2-FSM 4.4/2FKM 4/S3450

+V1GL1UQ56/1

+.GL1UQ57/1

			Date	1/17/2023	Volvo Trucks North America	Valiant TMS	Parts list : TUR.1644797 - TUR.VB2-FSM 4.4/2FKM 4/S3450	Drawing name: =2V09&EFS-EL	= + V1GL1UQ56UQ1.1
			Ed.	MKLEPADLO					
			Appr		P6700 Bodyside LH - Robot Cell 2V09	Scale 1:1		Document type: EPB	Project nr: 22-16150 — Page 1 / 1533
Modification	Date	Name	Original		Replacement of	Replaced by			

Parts list

F01_001

Device tag	Quantity	Designation	Type number	Supplier	Part number
=V1GL1UQ57KF1-KF1	0	Bus node	CPX-FB33	FES	FES.548755
=V1GL1UQ57KF1-KF1	0	Interlinking block	CPX-M-GE-EV-S-7/8-5POL	FES	FES.550208
=V1GL1UQ57KF1-KF1.11	0	Manifold block	CPX-M-AB-8-M12X2-5POL	FES	FES.549335

+.GL1UQ56UQ1.1/1

+.GL1UQ57UQ1.1/1

			Date	1/17/2023	Volvo Trucks North America	Valiant TMS	Parts list : FES.548755 - FES.549335	Drawing name: =2V09&EFS-EL	=	
			Ed.	MKLEPADLO					+ V1GL1UQ57	
			Appr		P6700 Bodyside LH - Robot Cell 2V09	Scale 1:1		Document type: EPB	Project nr: 22-16150	Page 1 / 1533
Modification	Date	Name	Original		Replacement of	Replaced by				

Parts list

F01_001

Device tag	Quantity	Designation	Type number	Supplier	Part number
=V1GL1UQ57UQ1.1-BGR	1	Inductive sensor	BI4U-MT12E-AP6X2-H1141/S1589	TURCK	TUR.1644797
=V1GL1UQ57UQ1.1-BGS	1	Inductive sensor	BI4U-MT12E-AP6X2-H1141/S1589	TURCK	TUR.1644797
=V1GL1UQ57UQ1.1-XGR/S	1	Y splitter	U2-30676	TURCK	TUR.VB2-FSM 4.4/2FKM 4/S3450

+V1GL1UQ57/1

+.GL2/1

			Date	1/17/2023	Volvo Trucks North America	Valiant TMS	Parts list : TUR.1644797 - TUR.VB2-FSM 4.4/2FKM 4/S3450	Drawing name: =2V09&EFS-EL	= + V1GL1UQ57UQ1.1
			Ed.	MKLEPADLO					
			Appr		P6700 Bodyside LH - Robot Cell 2V09	Scale 1:1		Document type: EPB	Project nr: 22-16150
Modification	Date	Name	Original		Replacement of	Replaced by			Page 1 / 1533

Parts list

F01_001

Device tag	Quantity	Designation	Type number	Supplier	Part number
=V1GL2KF1-KF1	0	Bus node	CPX-FB33	FES	FES.548755
=V1GL2KF1-KF1	0	Interlinking block	CPX-M-GE-EV-S-7/8-5POL	FES	FES.550208
=V1GL2KF1-KF1.11	0	Manifold block	CPX-AB-4-M12X2-5POL-R	FES	FES.541254
=V1GL2KF1-KF1.12	1	Manifold block	CPX-AB-4-M12X2-5POL-R	FES	FES.541254
=V1GL2KF1-KF1.13	1	Manifold block	CPX-AB-4-M12X2-5POL-R	FES	FES.541254
=V1GL2WC4-UCMS1	1	5 PIN MINI FIELD ATTACHABLE, FEMALE, STRAIGHT	BS 4151-0/9	TURCK	TUR.BS 4151-0/9
=V1GL2WC4-W1.1	1	5 PIN MINI FIELD ATTACHABLE, FEMALE, STRAIGHT	BS 4151-0/9	TURCK	TUR.BS 4151-0/9
=V1GL2WC4-W1.2	1	5 PIN MINI FIELD ATTACHABLE, FEMALE, STRAIGHT	BS 4151-0/9	TURCK	TUR.BS 4151-0/9

+.GL1UQ57UQ1.1/1

+.GL2UQ51/1

			Date	1/17/2023	Volvo Trucks North America	Valiant TMS	Parts list : FES.548755 - TUR.BS 4151-0/9	Drawing name: =2V09&EFS-EL	=	
			Ed.	MKLEPADLO					+ V1GL2	
			Appr		P6700 Bodyside LH - Robot Cell 2V09	Scale 1:1		Document type: EPB	Project nr: 22-16150	Page 1 / 1533
Modification	Date	Name	Original		Replacement of	Replaced by				

Parts list

F01_001

Device tag	Quantity	Designation	Type number	Supplier	Part number
=V1GL2UQ51BG0-BG01	1	Inductive sensor	BI20U-CA40-AP6X2-H1141/S1590W/BS2.0	Turck	TUR.1627297
=V1GL2UQ51BG0-BG02	1	Inductive sensor	BI20U-CA40-AP6X2-H1141/S1590W/BS2.0	Turck	TUR.1627297
=V1GL2UQ51BG0-BG03	1	Inductive sensor	BI20U-CA40-AP6X2-H1141/S1590W/BS2.0	Turck	TUR.1627297
=V1GL2UQ51BG0-BG04	1	Inductive sensor	BI20U-CA40-AP6X2-H1141/S1590W/BS2.0	Turck	TUR.1627297
=V1GL2UQ51BG0-BG05	1	Inductive sensor	BI20U-CA40-AP6X2-H1141/S1590W/BS2.0	Turck	TUR.1627297
=V1GL2UQ51BG0-BG06	1	Inductive sensor	BI20U-CA40-AP6X2-H1141/S1590W/BS2.0	Turck	TUR.1627297
=V1GL2UQ51BG0-BG07	1	Inductive sensor	BI20U-CA40-AP6X2-H1141/S1590W/BS2.0	Turck	TUR.1627297
=V1GL2UQ51BG0-BG08	1	Inductive sensor	BI20U-CA40-AP6X2-H1141/S1590W/BS2.0	Turck	TUR.1627297
=V1GL2UQ51BG0-BG09	1	Inductive sensor	BI20U-CA40-AP6X2-H1141/S1590W/BS2.0	Turck	TUR.1627297
=V1GL2UQ51BG0-BG10	1	Inductive sensor	BI20U-CA40-AP6X2-H1141/S1590W/BS2.0	Turck	TUR.1627297
=V1GL2UQ51BG0-BG11	1	Inductive sensor	BI10U-MT18-AP6X2-H1141/S1589	Turck	TUR.1644905
=V1GL2UQ51BG0-BG12	1	Inductive sensor	BI10U-MT18-AP6X2-H1141/S1589	Turck	TUR.1644905
=V1GL2UQ51BG0-BG13	1	Inductive sensor	BI20U-CA40-AP6X2-H1141/S1590W/BS2.0	Turck	TUR.1627297
=V1GL2UQ51BG0-BG14	1	Inductive sensor	BI20U-CA40-AP6X2-H1141/S1590W/BS2.0	Turck	TUR.1627297
=V1GL2UQ51BG0-BG15	1	Inductive sensor	BI20U-CA40-AP6X2-H1141/S1590W/BS2.0	Turck	TUR.1627297
=V1GL2UQ51BG0-BG16	1	Inductive sensor	BI20U-CA40-AP6X2-H1141/S1590W/BS2.0	Turck	TUR.1627297
=V1GL2UQ51BG0-BG17	1	Inductive sensor	BI20U-CA40-AP6X2-H1141/S1590W/BS2.0	Turck	TUR.1627297
=V1GL2UQ51BG0-BG18	1	Inductive sensor	BI20U-CA40-AP6X2-H1141/S1590W/BS2.0	Turck	TUR.1627297
=V1GL2UQ51BG0-XG1/2	1	Y splitter	U2-30676	TURCK	TUR.VB2-FSM 4.4/2FKM 4/S3450
=V1GL2UQ51BG0-XG3/4	1	Y splitter	U2-30676	TURCK	TUR.VB2-FSM 4.4/2FKM 4/S3450
=V1GL2UQ51BG0-XG5/6	1	Y splitter	U2-30676	TURCK	TUR.VB2-FSM 4.4/2FKM 4/S3450
=V1GL2UQ51BG0-XG7/8	1	Y splitter	U2-30676	TURCK	TUR.VB2-FSM 4.4/2FKM 4/S3450
=V1GL2UQ51BG0-XG9/10	1	Y splitter	U2-30676	TURCK	TUR.VB2-FSM 4.4/2FKM 4/S3450
=V1GL2UQ51BG0-XG11/12	1	Y splitter	U2-30676	TURCK	TUR.VB2-FSM 4.4/2FKM 4/S3450
=V1GL2UQ51BG0-XG13/14	1	Y splitter	U2-30676	TURCK	TUR.VB2-FSM 4.4/2FKM 4/S3450
=V1GL2UQ51BG0-XG15/16	1	Y splitter	U2-30676	TURCK	TUR.VB2-FSM 4.4/2FKM 4/S3450
=V1GL2UQ51KF1-KF1	0	Bus node	CPX-FB33	FES	FES.548755
=V1GL2UQ51KF1-KF1	0	Interlinking block	CPX-M-GE-EV-S-7/8-5POL	FES	FES.550208
=V1GL2UQ51KF1-KF1.11	0	Manifold block	CPX-M-AB-8-M12X2-5POL	FES	FES.549335
=V1GL2UQ51KF1-KF1.12	0	Manifold block	CPX-M-AB-8-M12X2-5POL	FES	FES.549335
=V1GL2UQ51KF2-KF2	0	Bus node	CPX-FB33	FES	FES.548755
=V1GL2UQ51KF2-KF2	0	Interlinking block	CPX-M-GE-EV-S-7/8-5POL	FES	FES.550208
=V1GL2UQ51KF2-KF2.11	0	Manifold block	CPX-M-AB-8-M12X2-5POL	FES	FES.549335
=V1GL2UQ51KF2-KF2.12	0	Manifold block	CPX-M-AB-8-M12X2-5POL	FES	FES.549335
=V1GL2UQ51KF2-KF2.13	0	Manifold block	CPX-M-AB-8-M12X2-5POL	FES	FES.549335
=V1GL2UQ51KF3-KF3	0	Bus node	CPX-FB33	FES	FES.548755
=V1GL2UQ51KF3-KF3	0	Interlinking block	CPX-M-GE-EV-S-7/8-5POL	FES	FES.550208
=V1GL2UQ51KF3-KF3.11	0	Manifold block	CPX-M-AB-8-M12X2-5POL	FES	FES.549335
=V1GL2UQ51KF3-KF3.12	0	Manifold block	CPX-M-AB-8-M12X2-5POL	FES	FES.549335
=V1GL2UQ51KF3-KF3.13	0	Manifold block	CPX-M-AB-8-M12X2-5POL	FES	FES.549335
=V1GL2UQ51KF4-KF4	0	Bus node	CPX-FB33	FES	FES.548755
=V1GL2UQ51KF4-KF4	0	Interlinking block	CPX-M-GE-EV-S-7/8-5POL	FES	FES.550208
=V1GL2UQ51KF4-KF4.11	0	Manifold block	CPX-M-AB-8-M12X2-5POL	FES	FES.549335

+V1GL2/1

+.GL2UQ51UQ1.1/1

			Date	1/17/2023	Volvo Trucks North America	Valiant TMS	Parts list : TUR.1627297 - FES.549335	Drawing name: =2V09&EFS-EL	=	
			Ed.	MKLEPADLO					+ V1GL2UQ51	
			Appr		P6700 Bodyside LH - Robot Cell 2V09	Scale 1:1		Document type: EPB	Project nr: 22-16150	Page 1 / 1533
Modification	Date	Name	Original		Replacement of	Replaced by				

Parts list

F01_001

Device tag	Quantity	Designation	Type number	Supplier	Part number
=V1GL2UQ51UQ1.1-BGR	1	Inductive sensor	BI10U-MT18-AP6X2-H1141/S1589	Turck	TUR.1644905
=V1GL2UQ51UQ1.1-BGS	1	Inductive sensor	BI10U-MT18-AP6X2-H1141/S1589	Turck	TUR.1644905
=V1GL2UQ51UQ1.1-XGR/S	1	Y splitter	U2-30676	TURCK	TUR.VB2-FSM 4.4/2FKM 4/S3450

+V1GL2UQ51/1

+.GL2UQ51UQ2.1/1

			Date	1/17/2023	Volvo Trucks North America	Valiant TMS	Parts list : TUR.1644905 - TUR.VB2-FSM 4.4/2FKM 4/S3450	Drawing name: =2V09&EFS-EL	= + V1GL2UQ51UQ1.1
			Ed.	MKLEPADLO					
			Appr		P6700 Bodyside LH - Robot Cell 2V09	Scale 1:1		Document type: EPB	Project nr: 22-16150
Modification	Date	Name	Original		Replacement of	Replaced by			Page 1 / 1533

Parts list

F01_001

Device tag	Quantity	Designation	Type number	Supplier	Part number
=V1GL2UQ51UQ2.1-BGR	1	Inductive sensor	BI10U-MT18-AP6X2-H1141/S1589	Turck	TUR.1644905
=V1GL2UQ51UQ2.1-BGS	1	Inductive sensor	BI10U-MT18-AP6X2-H1141/S1589	Turck	TUR.1644905
=V1GL2UQ51UQ2.1-XGR/S	1	Y splitter	U2-30676	TURCK	TUR.VB2-FSM 4.4/2FKM 4/S3450

+.GL2UQ51UQ1.1/1

+.GL2UQ51UQ3.1/1

			Date	1/17/2023	Volvo Trucks North America	Valiant TMS	Parts list : TUR.1644905 - TUR.VB2-FSM 4.4/2FKM 4/S3450	Drawing name: =2V09&EFS-EL	= + V1GL2UQ51UQ2.1	
			Ed.	MKLEPADLO						
			Appr		P6700 Bodyside LH - Robot Cell 2V09	Scale 1:1		Document type: EPB	Project nr: 22-16150	Page 1 / 1533
Modification	Date	Name	Original		Replacement of	Replaced by				

Parts list

F01_001

Device tag	Quantity	Designation	Type number	Supplier	Part number
=V1GL2UQ51UQ3.1-BGR	1	Inductive sensor	BI10U-MT18-AP6X2-H1141/S1589	Turck	TUR.1644905
=V1GL2UQ51UQ3.1-BGS	1	Inductive sensor	BI10U-MT18-AP6X2-H1141/S1589	Turck	TUR.1644905
=V1GL2UQ51UQ3.1-XGR/S	1	Y splitter	U2-30676	TURCK	TUR.VB2-FSM 4.4/2FKM 4/S3450

+.GL2UQ51UQ2.1/1

+.GL2UQ51UQ4.1/1

			Date	1/17/2023	Volvo Trucks North America	Valiant TMS	Parts list : TUR.1644905 - TUR.VB2-FSM 4.4/2FKM 4/S3450	Drawing name: =2V09&EFS-EL	= + V1GL2UQ51UQ3.1	
			Ed.	MKLEPADLO						
			Appr		P6700 Bodyside LH - Robot Cell 2V09	Scale 1:1		Document type: EPB	Project nr: 22-16150	Page 1 / 1533
Modification	Date	Name	Original		Replacement of	Replaced by				

Parts list

F01_001

Device tag	Quantity	Designation	Type number	Supplier	Part number
=V1GL2UQ51UQ4.1-BGR	1	Inductive sensor	BI2-CRS260-AP4X2-H1141/S34	TURCK	TUR.BI2-CRS260-AP4X2-H1141/S34
=V1GL2UQ51UQ4.1-BGS	1	Inductive sensor	BI2-CRS260-AP4X2-H1141/S34	TURCK	TUR.BI2-CRS260-AP4X2-H1141/S34
=V1GL2UQ51UQ4.1-XGR/S	1	Y splitter	U2-30676	TURCK	TUR.VB2-FSM 4.4/2FKM 4/S3450

+.GL2UQ51UQ3.1/1

+.GL2UQ51UQ4.2/1

			Date	1/17/2023	Volvo Trucks North America	Valiant TMS	Parts list : TUR.BI2-CRS260-AP4X2-H1141/S34 - TUR.VB2-FSM 4.4/2FKM 4/S3450	Drawing name: =2V09&EFS-EL	= + V1GL2UQ51UQ4.1
			Ed.	MKLEPADLO					
			Appr		P6700 Bodyside LH - Robot Cell 2V09	Scale 1:1		Document type: EPB	Project nr: 22-16150
Modification	Date	Name	Original		Replacement of	Replaced by			Page 1 / 1533

Parts list

F01_001

Device tag	Quantity	Designation	Type number	Supplier	Part number
=V1GL2UQ51UQ4.2-BGS/R	1	4-Wire, 4-Pin, DC M12 X 1 (PNP)	WWS001A	WEL	WEL.WWS001A

+.GL2UQ51UQ4.1/1

+.GL2UQ51UQ4.3/1

			Date	1/17/2023	Volvo Trucks North America	Valiant TMS	Parts list : WEL.WWS001A - WEL.WWS001A	Drawing name: =2V09&EFS-EL	= + V1GL2UQ51UQ4.2
			Ed.	MKLEPADLO					
			Appr		P6700 Bodyside LH - Robot Cell 2V09	Scale 1:1		Document type: EPB	Project nr: 22-16150
Modification	Date	Name	Original		Replacement of	Replaced by			Page 1 / 1533

Parts list

F01_001

Device tag	Quantity	Designation	Type number	Supplier	Part number
=V1GL2UQ51UQ4.3-BGR	1	Inductive sensor	BI2-CRS260-AP4X2-H1141/S34	TURCK	TUR.BI2-CRS260-AP4X2-H1141/S34
=V1GL2UQ51UQ4.3-BGS	1	Inductive sensor	BI2-CRS260-AP4X2-H1141/S34	TURCK	TUR.BI2-CRS260-AP4X2-H1141/S34
=V1GL2UQ51UQ4.3-XGR/S	1	Y splitter	U2-30676	TURCK	TUR.VB2-FSM 4.4/2FKM 4/S3450

+.GL2UQ51UQ4.2/1

+.GL2UQ51UQ5.1/1

			Date	1/17/2023	Volvo Trucks North America	Valiant TMS	Parts list : TUR.BI2-CRS260-AP4X2-H1141/S34 - TUR.VB2-FSM 4.4/2FKM 4/S3450	Drawing name: =2V09&EFS-EL	= + V1GL2UQ51UQ4.3
			Ed.	MKLEPADLO					
			Appr		P6700 Bodyside LH - Robot Cell 2V09	Scale 1:1		Document type: EPB	Project nr: 22-16150
Modification	Date	Name	Original		Replacement of	Replaced by			Page 1 / 1533

Parts list

F01_001

Device tag	Quantity	Designation	Type number	Supplier	Part number
=V1GL2UQ51UQ5.1-BGS/R	1	4-Wire, 4-Pin, DC M12 X 1 (PNP)	WWS001A	WEL	WEL.WWS001A

+.GL2UQ51UQ4.3/1

+.GL2UQ51UQ5.2/1

			Date	1/17/2023	Volvo Trucks North America	Valiant TMS	Parts list : WEL.WWS001A - WEL.WWS001A	Drawing name: =2V09&EFS-EL	=	
			Ed.	MKLEPADLO					+ V1GL2UQ51UQ5.1	
			Appr		P6700 Bodyside LH - Robot Cell 2V09	Scale 1:1		Document type: EPB	Project nr: 22-16150	Page 1 / 1533
Modification	Date	Name	Original		Replacement of	Replaced by				

Parts list

F01_001

Device tag	Quantity	Designation	Type number	Supplier	Part number
=V1GL2UQ51UQ5.2-BGS/R	1	4-Wire, 4-Pin, DC M12 X 1 (PNP)	WWS001A	WEL	WEL.WWS001A

+.GL2UQ51UQ5.1/1

+.GL2UQ51UQ5.3/1

			Date	1/17/2023	Volvo Trucks North America	Valiant TMS	Parts list : WEL.WWS001A - WEL.WWS001A	Drawing name: =2V09&EFS-EL	=	
			Ed.	MKLEPADLO					+ V1GL2UQ51UQ5.2	
			Appr		P6700 Bodyside LH - Robot Cell 2V09	Scale 1:1		Document type: EPB	Project nr: 22-16150	Page 1 / 1533
Modification	Date	Name	Original		Replacement of	Replaced by				

Parts list

F01_001

Device tag	Quantity	Designation	Type number	Supplier	Part number
=V1GL2UQ51UQ5.3-BGS/R	1	4-Wire, 4-Pin, DC M12 X 1 (PNP)	WWS001A	WEL	WEL.WWS001A

+.GL2UQ51UQ5.2/1

+.GL2UQ51UQ6.1/1

			Date	1/17/2023	Volvo Trucks North America	Valiant TMS	Parts list : WEL.WWS001A - WEL.WWS001A	Drawing name: =2V09&EFS-EL	=	
			Ed.	MKLEPADLO					+ V1GL2UQ51UQ5.3	
			Appr		P6700 Bodyside LH - Robot Cell 2V09	Scale 1:1		Document type: EPB	Project nr: 22-16150	Page 1 / 1533
Modification	Date	Name	Original		Replacement of	Replaced by				

Parts list

F01_001

Device tag	Quantity	Designation	Type number	Supplier	Part number
=V1GL2UQ51UQ6.1-BGR	1	Inductive sensor	BI2-CRS260-AP4X2-H1141/S34	TURCK	TUR.BI2-CRS260-AP4X2-H1141/S34
=V1GL2UQ51UQ6.1-BGS	1	Inductive sensor	BI2-CRS260-AP4X2-H1141/S34	TURCK	TUR.BI2-CRS260-AP4X2-H1141/S34
=V1GL2UQ51UQ6.1-XGR/S	1	Y splitter	U2-30676	TURCK	TUR.VB2-FSM 4.4/2FKM 4/S3450

+.GL2UQ51UQ5.3/1

+.GL2UQ51UQ6.2/1

			Date	1/17/2023	Volvo Trucks North America	Valiant TMS	Parts list : TUR.BI2-CRS260-AP4X2-H1141/S34 - TUR.VB2-FSM 4.4/2FKM 4/S3450	Drawing name: =2V09&EFS-EL	= + V1GL2UQ51UQ6.1
			Ed.	MKLEPADLO					
			Appr		P6700 Bodyside LH - Robot Cell 2V09	Scale 1:1		Document type: EPB	Project nr: 22-16150
Modification	Date	Name	Original		Replacement of	Replaced by			Page 1 / 1533

Parts list

F01_001

Device tag	Quantity	Designation	Type number	Supplier	Part number
=V1GL2UQ51UQ6.2-BGR	1	Inductive sensor	BI2-CRS260-AP4X2-H1141/S34	TURCK	TUR.BI2-CRS260-AP4X2-H1141/S34
=V1GL2UQ51UQ6.2-BGS	1	Inductive sensor	BI2-CRS260-AP4X2-H1141/S34	TURCK	TUR.BI2-CRS260-AP4X2-H1141/S34
=V1GL2UQ51UQ6.2-XGR/S	1	Y splitter	U2-30676	TURCK	TUR.VB2-FSM 4.4/2FKM 4/S3450

Parts list

F01_001

Device tag	Quantity	Designation	Type number	Supplier	Part number
=V1GL2UQ51UQ7.1-BGR	1	Inductive sensor	BI2-CRS260-AP4X2-H1141/S34	TURCK	TUR.BI2-CRS260-AP4X2-H1141/S34
=V1GL2UQ51UQ7.1-BGS	1	Inductive sensor	BI2-CRS260-AP4X2-H1141/S34	TURCK	TUR.BI2-CRS260-AP4X2-H1141/S34
=V1GL2UQ51UQ7.1-XGR/S	1	Y splitter	U2-30676	TURCK	TUR.VB2-FSM 4.4/2FKM 4/S3450

+.GL2UQ51UQ6.2/1

+.GL2UQ51UQ8.1/1

			Date	1/17/2023	Volvo Trucks North America	Valiant TMS	Parts list : TUR.BI2-CRS260-AP4X2-H1141/S34 - TUR.VB2-FSM 4.4/2FKM 4/S3450	Drawing name: =2V09&EFS-EL	= + V1GL2UQ51UQ7.1
			Ed.	MKLEPADLO					
			Appr		P6700 Bodyside LH - Robot Cell 2V09	Scale 1:1		Document type: EPB	Project nr: 22-16150
Modification	Date	Name	Original		Replacement of	Replaced by			Page 1 / 1533

Parts list

F01_001

Device tag	Quantity	Designation	Type number	Supplier	Part number
=V1GL2UQ51UQ8.1-BGS/R	1	4-Wire, 4-Pin, DC M12 X 1 (PNP)	WWS001A	WEL	WEL.WWS001A

+.GL2UQ51UQ7.1/1

+.GL2UQ51UQ8.2/1

			Date	1/17/2023	Volvo Trucks North America	Valiant TMS	Parts list : WEL.WWS001A - WEL.WWS001A	Drawing name: =2V09&EFS-EL	= + V1GL2UQ51UQ8.1
			Ed.	MKLEPADLO					
			Appr		P6700 Bodyside LH - Robot Cell 2V09	Scale 1:1		Document type: EPB	Project nr: 22-16150
Modification	Date	Name	Original		Replacement of / Replaced by				Page 1 / 1533

Parts list

F01_001

Device tag	Quantity	Designation	Type number	Supplier	Part number
=V1GL2UQ51UQ8.2-BGS/R	1	4-Wire, 4-Pin, DC M12 X 1 (PNP)	WWS001A	WEL	WEL.WWS001A

+.GL2UQ51UQ8.1/1

+.GL2UQ51UQ8.3/1

			Date	1/17/2023	Volvo Trucks North America	Valiant TMS	Parts list : WEL.WWS001A - WEL.WWS001A	Drawing name: =2V09&EFS-EL	= + V1GL2UQ51UQ8.2
			Ed.	MKLEPADLO					
			Appr		P6700 Bodyside LH - Robot Cell 2V09	Scale 1:1		Document type: EPB	Project nr: 22-16150
Modification	Date	Name	Original		Replacement of	Replaced by			Page 1 / 1533

Parts list

F01_001

Device tag	Quantity	Designation	Type number	Supplier	Part number
=V1GL2UQ51UQ8.3-BGS/R	1	4-Wire, 4-Pin, DC M12 X 1 (PNP)	WWS001A	WEL	WEL.WWS001A

+.GL2UQ51UQ8.2/1

+.GL2UQ51UQ8.4/1

			Date	1/17/2023	Volvo Trucks North America	Valiant TMS	Parts list : WEL.WWS001A - WEL.WWS001A	Drawing name: =2V09&EFS-EL	=	
			Ed.	MKLEPADLO					+ V1GL2UQ51UQ8.3	
			Appr		P6700 Bodyside LH - Robot Cell 2V09	Scale 1:1		Document type: EPB	Project nr: 22-16150	Page 1 / 1533
Modification	Date	Name	Original		Replacement of	Replaced by				

Parts list

F01_001

Device tag	Quantity	Designation	Type number	Supplier	Part number
=V1GL2UQ51UQ8.4-BGS/R	1	4-Wire, 4-Pin, DC M12 X 1 (PNP)	WWS001A	WEL	WEL.WWS001A

+.GL2UQ51UQ8.3/1

+.GL2UQ51UQ9.1/1

			Date	1/17/2023	Volvo Trucks North America	Valiant TMS	Parts list : WEL.WWS001A - WEL.WWS001A	Drawing name: =2V09&EFS-EL	=	
			Ed.	MKLEPADLO					+ V1GL2UQ51UQ8.4	
			Appr		P6700 Bodyside LH - Robot Cell 2V09	Scale 1:1		Document type: EPB	Project nr: 22-16150	Page 1 / 1533
Modification	Date	Name	Original		Replacement of	Replaced by				

Parts list

F01_001

Device tag	Quantity	Designation	Type number	Supplier	Part number
=V1GL2UQ51UQ9.1-BGS/R	1	4-Wire, 4-Pin, DC M12 X 1 (PNP)	WWS001A	WEL	WEL.WWS001A

+.GL2UQ51UQ8.4/1

+.GL2UQ51UQ10.1/1

			Date	1/17/2023	Volvo Trucks North America	Valiant TMS	Parts list : WEL.WWS001A - WEL.WWS001A	Drawing name: =2V09&EFS-EL	=	
			Ed.	MKLEPADLO					+ V1GL2UQ51UQ9.1	
			Appr		P6700 Bodyside LH - Robot Cell 2V09	Scale 1:1		Document type: EPB	Project nr: 22-16150	Page 1 / 1533
Modification	Date	Name	Original		Replacement of	Replaced by				

Parts list

F01_001

Device tag	Quantity	Designation	Type number	Supplier	Part number
=V1GL2UQ51UQ10.1-BGS/R	1	Inductive sensor Monitoring Kit for Power Clamps	1324638	TUNKERS	TUN.1324638

+.GL2UQ51UQ9.1/1

+.GL2UQ51UQ10.2/1

			Date	1/17/2023	Volvo Trucks North America	Valiant TMS	Parts list : TUN.1324638 - TUN.1324638	Drawing name: =2V09&EFS-EL	= + V1GL2UQ51UQ10.1
			Ed.	MKLEPADLO					
			Appr		P6700 Bodyside LH - Robot Cell 2V09	Scale 1:1		Document type: EPB	Project nr: 22-16150
Modification	Date	Name	Original		Replacement of	Replaced by			Page 1 / 1533

Parts list

F01_001

Device tag	Quantity	Designation	Type number	Supplier	Part number
=V1GL2UQ51UQ10.2-BGS/R	1	Inductive sensor Monitoring Kit for Power Clamps	1324638	TUNKERS	TUN.1324638

			Date	1/17/2023	Volvo Trucks North America	Valiant TMS	Parts list : TUN.1324638 - TUN.1324638	Drawing name: =2V09&EFS-EL	= + V1GL2UQ51UQ10.2
			Ed.	MKLEPADLO					
			Appr		P6700 Bodyside LH - Robot Cell 2V09	Scale 1:1		Document type: EPB / Project nr: 22-16150	Page 1 / 1533
Modification	Date	Name	Original		Replacement of / Replaced by				

Parts list

F01_001

Device tag	Quantity	Designation	Type number	Supplier	Part number
=V1GL2UQ51UQ10.3-BGS/R	1	Inductive sensor Monitoring Kit for Power Clamps	1324638	TUNKERS	TUN.1324638

			Date	1/17/2023	Volvo Trucks North America	Valiant TMS	Parts list : TUN.1324638 - TUN.1324638	Drawing name: =2V09&EFS-EL	=	
			Ed.	MKLEPADLO					+ V1GL2UQ51UQ10.3	
			Appr		P6700 Bodyside LH - Robot Cell 2V09	Scale 1:1		Document type: EPB	Project nr: 22-16150	Page 1 / 1533
Modification	Date	Name	Original		Replacement of	Replaced by				

Parts list

F01_001

Device tag	Quantity	Designation	Type number	Supplier	Part number
=V1GL2UQ51UQ10.4-BGS/R	1	Inductive sensor Monitoring Kit for Power Clamps	1324638	TUNKERS	TUN.1324638

			Date	1/17/2023	Volvo Trucks North America	Valiant TMS	Parts list : TUN.1324638 - TUN.1324638	Drawing name: =2V09&EFS-EL	= + V1GL2UQ51UQ10.4
			Ed.	MKLEPADLO					
			Appr		P6700 Bodyside LH - Robot Cell 2V09	Scale 1:1		Document type: EPB	Project nr: 22-16150
Modification	Date	Name	Original		Replacement of	Replaced by			Page 1 / 1533

Parts list

F01_001

Device tag	Quantity	Designation	Type number	Supplier	Part number
=V1GL2UQ51UQ10.5-BGS/R	1	Inductive sensor Monitoring Kit for Power Clamps	1324638	TUNKERS	TUN.1324638

+.GL2UQ51UQ10.4/1

+.GL2UQ51UQ10.6/1

			Date	1/17/2023	Volvo Trucks North America	Valiant TMS	Parts list : TUN.1324638 - TUN.1324638	Drawing name: =2V09&EFS-EL	=	
			Ed.	MKLEPADLO					+ V1GL2UQ51UQ10.5	
			Appr		P6700 Bodyside LH - Robot Cell 2V09	Scale 1:1		Document type: EPB	Project nr: 22-16150	Page 1 / 1533
Modification	Date	Name	Original		Replacement of	Replaced by				

Parts list

F01_001

Device tag	Quantity	Designation	Type number	Supplier	Part number
=V1GL2UQ51UQ10.6-BGS/R	1	Inductive sensor Monitoring Kit for Power Clamps	1324644	TUNKERS	TUN.1324644

+.GL2UQ51UQ10.5/1

+.GL2UQ51UQ11.1/1

			Date	1/17/2023	Volvo Trucks North America	Valiant TMS	Parts list : TUN.1324644 - TUN.1324644	Drawing name: =2V09&EFS-EL	=	
			Ed.	MKLEPADLO					+ V1GL2UQ51UQ10.6	
			Appr		P6700 Bodyside LH - Robot Cell 2V09	Scale 1:1		Document type: EPB	Project nr: 22-16150	Page 1 / 1533
Modification	Date	Name	Original		Replacement of	Replaced by				

Parts list

F01_001

Device tag	Quantity	Designation	Type number	Supplier	Part number
=V1GL2UQ51UQ11.1-BGS/R	1	Inductive sensor Monitoring Kit for Power Clamps	1324644	TUNKERS	TUN.1324644

+.GL2UQ51UQ10.6/1

+.GL2UQ51UQ12.1/1

			Date	1/17/2023	Volvo Trucks North America	Valiant TMS	Parts list : TUN.1324644 - TUN.1324644	Drawing name: =2V09&EFS-EL	= + V1GL2UQ51UQ11.1
			Ed.	MKLEPADLO					
			Appr		P6700 Bodyside LH - Robot Cell 2V09	Scale 1:1		Document type: EPB	Project nr: 22-16150
Modification	Date	Name	Original		Replacement of	Replaced by			Page 1 / 1533

Parts list

F01_001

Device tag	Quantity	Designation	Type number	Supplier	Part number
=V1GL2UQ51UQ12.1-BGS/R	1	Inductive sensor Monitoring Kit for Power Clamps	1324638	TUNKERS	TUN.1324638

+.GL2UQ51UQ11.1/1

+.GL2UQ51UQ13.1/1

			Date	1/17/2023	Volvo Trucks North America	Valiant TMS	Parts list : TUN.1324638 - TUN.1324638	Drawing name: =2V09&EFS-EL	= + V1GL2UQ51UQ12.1
			Ed.	MKLEPADLO					
			Appr		P6700 Bodyside LH - Robot Cell 2V09	Scale 1:1		Document type: EPB	Project nr: 22-16150
Modification	Date	Name	Original		Replacement of	Replaced by			Page 1 / 1533

Parts list

F01_001

Device tag	Quantity	Designation	Type number	Supplier	Part number
=V1GL2UQ51UQ13.1-BGS/R	1	Inductive sensor Monitoring Kit for Power Clamps	1324644	TUNKERS	TUN.1324644

+.GL2UQ51UQ12.1/1

+.GL2UQ51UQ14.1/1

			Date	1/17/2023	Volvo Trucks North America	Valiant TMS	Parts list : TUN.1324644 - TUN.1324644	Drawing name: =2V09&EFS-EL	= + V1GL2UQ51UQ13.1
			Ed.	MKLEPADLO					
			Appr		P6700 Bodyside LH - Robot Cell 2V09	Scale 1:1		Document type: EPB	Project nr: 22-16150
Modification	Date	Name	Original		Replacement of	Replaced by			Page 1 / 1533

Parts list

F01_001

Device tag	Quantity	Designation	Type number	Supplier	Part number
=V1GL2UQ51UQ14.1-BGS/R	1	Inductive sensor Monitoring Kit for Power Clamps	1324644	TUNKERS	TUN.1324644

+.GL2UQ51UQ13.1/1

+.GL2UQ51UQ15.1/1

			Date	1/17/2023	Volvo Trucks North America	Valiant TMS	Parts list : TUN.1324644 - TUN.1324644	Drawing name: =2V09&EFS-EL	= + V1GL2UQ51UQ14.1
			Ed.	MKLEPADLO					
			Appr		P6700 Bodyside LH - Robot Cell 2V09	Scale 1:1		Document type: EPB	Project nr: 22-16150
Modification	Date	Name	Original		Replacement of	Replaced by			Page 1 / 1533

Parts list

F01_001

Device tag	Quantity	Designation	Type number	Supplier	Part number
=V1GL2UQ51UQ15.1-BGS/R	1	Inductive sensor Monitoring Kit for Power Clamps	1324638	TUNKERS	TUN.1324638

+.GL2UQ51UQ14.1/1

+.GL2UQ51UQ16.1/1

			Date	1/17/2023	Volvo Trucks North America	Valiant TMS	Parts list : TUN.1324638 - TUN.1324638	Drawing name: =2V09&EFS-EL	= + V1GL2UQ51UQ15.1
			Ed.	MKLEPADLO					
			Appr		P6700 Bodyside LH - Robot Cell 2V09	Scale 1:1		Document type: EPB	Project nr: 22-16150
Modification	Date	Name	Original		Replacement of	Replaced by			Page 1 / 1533

Parts list

F01_001

Device tag	Quantity	Designation	Type number	Supplier	Part number
=V1GL2UQ51UQ16.1-BGS/R	1	Inductive sensor Monitoring Kit for Power Clamps	1324644	TUNKERS	TUN.1324644

+.GL2UQ51UQ15.1/1

+.GL2UQ51UQ17.1/1

			Date	1/17/2023	Volvo Trucks North America	Valiant TMS	Parts list : TUN.1324644 - TUN.1324644	Drawing name: =2V09&EFS-EL	=	
			Ed.	MKLEPADLO					+ V1GL2UQ51UQ16.1	
			Appr		P6700 Bodyside LH - Robot Cell 2V09	Scale 1:1		Document type: EPB	Project nr: 22-16150	Page 1 / 1533
Modification	Date	Name	Original		Replacement of	Replaced by				

Parts list

F01_001

Device tag	Quantity	Designation	Type number	Supplier	Part number
=V1GL2UQ51UQ17.1-BGS/R	1	Inductive sensor Monitoring Kit for Power Clamps	1324638	TUNKERS	TUN.1324638

+.GL2UQ51UQ16.1/1

+.GL2UQ51UQ17.2/1

			Date	1/17/2023	Volvo Trucks North America	Valiant TMS	Parts list : TUN.1324638 - TUN.1324638	Drawing name: =2V09&EFS-EL	= + V1GL2UQ51UQ17.1
			Ed.	MKLEPADLO					
			Appr		P6700 Bodyside LH - Robot Cell 2V09	Scale 1:1		Document type: EPB	Project nr: 22-16150
Modification	Date	Name	Original		Replacement of	Replaced by			Page 1 / 1533

Parts list

F01_001

Device tag	Quantity	Designation	Type number	Supplier	Part number
=V1GL2UQ51UQ17.2-BGS/R	1	Inductive sensor Monitoring Kit for Power Clamps	1324638	TUNKERS	TUN.1324638

+.GL2UQ51UQ17.1/1

+.GL2UQ51UQ17.3/1

			Date	1/17/2023	Volvo Trucks North America	Valiant TMS	Parts list : TUN.1324638 - TUN.1324638	Drawing name: =2V09&EFS-EL	= + V1GL2UQ51UQ17.2
			Ed.	MKLEPADLO					
			Appr		P6700 Bodyside LH - Robot Cell 2V09	Scale 1:1		Document type: EPB	Project nr: 22-16150
Modification	Date	Name	Original		Replacement of	Replaced by			Page 1 / 1533

Parts list

F01_001

Device tag	Quantity	Designation	Type number	Supplier	Part number
=V1GL2UQ51UQ17.3-BGS/R	1	Inductive sensor Monitoring Kit for Power Clamps	1324638	TUNKERS	TUN.1324638

+.GL2UQ51UQ17.2/1

+.GL2UQ51UQ17.4/1

			Date	1/17/2023	Volvo Trucks North America	Valiant TMS	Parts list : TUN.1324638 - TUN.1324638	Drawing name: =2V09&EFS-EL	=	
			Ed.	MKLEPADLO					+ V1GL2UQ51UQ17.3	
			Appr		P6700 Bodyside LH - Robot Cell 2V09	Scale 1:1		Document type: EPB	Project nr: 22-16150	Page 1 / 1533
Modification	Date	Name	Original		Replacement of	Replaced by				

Parts list

F01_001

Device tag	Quantity	Designation	Type number	Supplier	Part number
=V1GL2UQ51UQ17.4-BGS/R	1	Inductive sensor Monitoring Kit for Power Clamps	1324638	TUNKERS	TUN.1324638

+.GL2UQ51UQ17.3/1

+.GL2UQ51UQ18.1/1

			Date	1/17/2023	Volvo Trucks North America	Valiant TMS	Parts list : TUN.1324638 - TUN.1324638	Drawing name: =2V09&EFS-EL	=	
			Ed.	MKLEPADLO					+ V1GL2UQ51UQ17.4	
			Appr		P6700 Bodyside LH - Robot Cell 2V09	Scale 1:1		Document type: EPB	Project nr: 22-16150	Page 1 / 1533
Modification	Date	Name	Original		Replacement of	Replaced by				

Parts list

F01_001

Device tag	Quantity	Designation	Type number	Supplier	Part number
=V1GL2UQ51UQ18.1-BGS/R	1	Inductive sensor Monitoring Kit for Power Clamps	1324638	TUNKERS	TUN.1324638

+.GL2UQ51UQ17.4/1

+.GL2UQ51UQ18.2/1

			Date	1/17/2023	Volvo Trucks North America	Valiant TMS	Parts list : TUN.1324638 - TUN.1324638	Drawing name: =2V09&EFS-EL	= + V1GL2UQ51UQ18.1
			Ed.	MKLEPADLO					
			Appr		P6700 Bodyside LH - Robot Cell 2V09	Scale 1:1		Document type: EPB	Project nr: 22-16150
Modification	Date	Name	Original		Replacement of	Replaced by			Page 1 / 1533

Parts list

F01_001

Device tag	Quantity	Designation	Type number	Supplier	Part number
=V1GL2UQ51UQ18.2-BGS/R	1	Inductive sensor Monitoring Kit for Power Clamps	1324638	TUNKERS	TUN.1324638

+.GL2UQ51UQ18.1/1

+.GL2UQ51UQ19.1/1

			Date	1/17/2023	Volvo Trucks North America	Valiant TMS	Parts list : TUN.1324638 - TUN.1324638	Drawing name: =2V09&EFS-EL	= + V1GL2UQ51UQ18.2
			Ed.	MKLEPADLO					
			Appr		P6700 Bodyside LH - Robot Cell 2V09	Scale 1:1		Document type: EPB	Project nr: 22-16150
Modification	Date	Name	Original		Replacement of	Replaced by			Page 1 / 1533

Parts list

F01_001

Device tag	Quantity	Designation	Type number	Supplier	Part number
=V1GL2UQ51UQ19.1-BGS/R	1	Inductive sensor Monitoring Kit for Power Clamps	1324638	TUNKERS	TUN.1324638

+.GL2UQ51UQ18.2/1

+.GL2UQ51UQ19.2/1

			Date	1/17/2023	Volvo Trucks North America	Valiant TMS	Parts list : TUN.1324638 - TUN.1324638	Drawing name: =2V09&EFS-EL	= + V1GL2UQ51UQ19.1
			Ed.	MKLEPADLO					
			Appr		P6700 Bodyside LH - Robot Cell 2V09	Scale 1:1		Document type: EPB	Project nr: 22-16150
Modification	Date	Name	Original		Replacement of	Replaced by			Page 1 / 1533

Parts list

F01_001

Device tag	Quantity	Designation	Type number	Supplier	Part number
=V1GL2UQ51UQ19.2-BGS/R	1	Inductive sensor Monitoring Kit for Power Clamps	1324638	TUNKERS	TUN.1324638

+.GL2UQ51UQ19.1/1

+.GL2UQ51UQ20.1/1

			Date	1/17/2023	Volvo Trucks North America	Valiant TMS	Parts list : TUN.1324638 - TUN.1324638	Drawing name: =2V09&EFS-EL	= + V1GL2UQ51UQ19.2
			Ed.	MKLEPADLO					
			Appr		P6700 Bodyside LH - Robot Cell 2V09	Scale 1:1		Document type: EPB	Project nr: 22-16150
Modification	Date	Name	Original		Replacement of	Replaced by			Page 1 / 1533

Parts list

F01_001

Device tag	Quantity	Designation	Type number	Supplier	Part number
=V1GL2UQ51UQ20.1-BGS/R	1	Inductive sensor Monitoring Kit for Power Clamps	1324644	TUNKERS	TUN.1324644

+.GL2UQ51UQ19.2/1

+.GL2UQ51UQ21.1/1

			Date	1/17/2023	Volvo Trucks North America	Valiant TMS	Parts list : TUN.1324644 - TUN.1324644	Drawing name: =2V09&EFS-EL	= + V1GL2UQ51UQ20.1
			Ed.	MKLEPADLO					
			Appr		P6700 Bodyside LH - Robot Cell 2V09	Scale 1:1		Document type: EPB	Project nr: 22-16150
Modification	Date	Name	Original		Replacement of	Replaced by			Page 1 / 1533

Parts list

F01_001

Device tag	Quantity	Designation	Type number	Supplier	Part number
=V1GL2UQ51UQ21.1-BGS/R	1	Inductive sensor Monitoring Kit for Power Clamps	1324644	TUNKERS	TUN.1324644

+.GL2UQ51UQ20.1/1

+.GL2UQ51UQ22.1/1

			Date	1/17/2023	Volvo Trucks North America	Valiant TMS	Parts list : TUN.1324644 - TUN.1324644	Drawing name: =2V09&EFS-EL	= + V1GL2UQ51UQ21.1
			Ed.	MKLEPADLO					
			Appr		P6700 Bodyside LH - Robot Cell 2V09	Scale 1:1		Document type: EPB	Project nr: 22-16150
Modification	Date	Name	Original		Replacement of	Replaced by			Page 1 / 1533

Parts list

F01_001

Device tag	Quantity	Designation	Type number	Supplier	Part number
=V1GL2UQ51UQ22.1-BGS/R	1	Inductive sensor Monitoring Kit for Power Clamps	1324638	TUNKERS	TUN.1324638

+.GL2UQ51UQ21.1/1

+.GL2UQ51UQ22.2/1

			Date	1/17/2023	Volvo Trucks North America	Valiant TMS	Parts list : TUN.1324638 - TUN.1324638	Drawing name: =2V09&EFS-EL	= + V1GL2UQ51UQ22.1
			Ed.	MKLEPADLO					
			Appr		P6700 Bodyside LH - Robot Cell 2V09	Scale 1:1		Document type: EPB	Project nr: 22-16150
Modification	Date	Name	Original		Replacement of	Replaced by			Page 1 / 1533

Parts list

F01_001

Device tag	Quantity	Designation	Type number	Supplier	Part number
=V1GL2UQ51UQ22.2-BGS/R	1	Inductive sensor Monitoring Kit for Power Clamps	1324638	TUNKERS	TUN.1324638

+.GL2UQ51UQ22.1/1

+.GL2UQ51UQ22.3/1

			Date	1/17/2023	Volvo Trucks North America	Valiant TMS	Parts list : TUN.1324638 - TUN.1324638	Drawing name: =2V09&EFS-EL	= + V1GL2UQ51UQ22.2
			Ed.	MKLEPADLO					
			Appr		P6700 Bodyside LH - Robot Cell 2V09	Scale 1:1		Document type: EPB	Project nr: 22-16150
Modification	Date	Name	Original		Replacement of	Replaced by			Page 1 / 1533

Parts list

F01_001

Device tag	Quantity	Designation	Type number	Supplier	Part number
=V1GL2UQ51UQ22.3-BGS/R	1	Inductive sensor Monitoring Kit for Power Clamps	1324638	TUNKERS	TUN.1324638

+.GL2UQ51UQ22.2/1

+.GL2UQ51UQ23.1/1

			Date	1/17/2023	Volvo Trucks North America	Valiant TMS	Parts list : TUN.1324638 - TUN.1324638	Drawing name: =2V09&EFS-EL	= + V1GL2UQ51UQ22.3
			Ed.	MKLEPADLO					
			Appr		P6700 Bodyside LH - Robot Cell 2V09	Scale 1:1		Document type: EPB	Project nr: 22-16150
Modification	Date	Name	Original		Replacement of	Replaced by			Page 1 / 1533

Parts list

F01_001

Device tag	Quantity	Designation	Type number	Supplier	Part number
=V1GL2UQ51UQ23.1-BGS/R	1	Inductive sensor Monitoring Kit for Power Clamps	1324638	TUNKERS	TUN.1324638

+.GL2UQ51UQ22.3/1

+.GL2UQ51UQ24.1/1

			Date	1/17/2023	Volvo Trucks North America	Valiant TMS	Parts list : TUN.1324638 - TUN.1324638	Drawing name: =2V09&EFS-EL	=	
			Ed.	MKLEPADLO					+ V1GL2UQ51UQ23.1	
			Appr		P6700 Bodyside LH - Robot Cell 2V09	Scale 1:1		Document type: EPB	Project nr: 22-16150	Page 1 / 1533
Modification	Date	Name	Original		Replacement of	Replaced by				

Parts list

F01_001

Device tag	Quantity	Designation	Type number	Supplier	Part number
=V1GL2UQ51UQ24.1-BGS/R	1	Inductive sensor Monitoring Kit for Power Clamps	1324638	TUNKERS	TUN.1324638

+.GL2UQ51UQ23.1/1

+.GL2UQ51UQ25.1/1

			Date	1/17/2023	Volvo Trucks North America	Valiant TMS	Parts list : TUN.1324638 - TUN.1324638	Drawing name: =2V09&EFS-EL	= + V1GL2UQ51UQ24.1
			Ed.	MKLEPADLO					
			Appr		P6700 Bodyside LH - Robot Cell 2V09	Scale 1:1		Document type: EPB	Project nr: 22-16150
Modification	Date	Name	Original		Replacement of	Replaced by			Page 1 / 1533

Parts list

F01_001

Device tag	Quantity	Designation	Type number	Supplier	Part number
=V1GL2UQ51UQ25.1-BGS/R	1	Inductive sensor Monitoring Kit for Power Clamps	1324638	TUNKERS	TUN.1324638

+.GL2UQ51UQ24.1/1

+.GL2UQ51UQ26.1/1

			Date	1/17/2023	Volvo Trucks North America	Valiant TMS	Parts list : TUN.1324638 - TUN.1324638	Drawing name: =2V09&EFS-EL	= + V1GL2UQ51UQ25.1
			Ed.	MKLEPADLO					
			Appr		P6700 Bodyside LH - Robot Cell 2V09	Scale 1:1		Document type: EPB	Project nr: 22-16150
Modification	Date	Name	Original		Replacement of	Replaced by			Page 1 / 1533

Parts list

F01_001

Device tag	Quantity	Designation	Type number	Supplier	Part number
=V1GL2UQ51UQ26.1-BGS/R	1	Inductive sensor Monitoring Kit for Power Clamps	1324638	TUNKERS	TUN.1324638

+.GL2UQ51UQ25.1/1

+.GL2UQ51UQ27.1/1

			Date	1/17/2023	Volvo Trucks North America	Valiant TMS	Parts list : TUN.1324638 - TUN.1324638	Drawing name: =2V09&EFS-EL	= + V1GL2UQ51UQ26.1
			Ed.	MKLEPADLO					
			Appr		P6700 Bodyside LH - Robot Cell 2V09	Scale 1:1		Document type: EPB	Project nr: 22-16150
Modification	Date	Name	Original		Replacement of	Replaced by			Page 1 / 1533

Parts list

F01_001

Device tag	Quantity	Designation	Type number	Supplier	Part number
=V1GL2UQ51UQ27.1-BGS/R	1	Inductive sensor Monitoring Kit for Power Clamps	1324638	TUNKERS	TUN.1324638

+.GL2UQ51UQ26.1/1

+.GL2UQ51UQ28.1/1

			Date	1/17/2023	Volvo Trucks North America	Valiant TMS	Parts list : TUN.1324638 - TUN.1324638	Drawing name: =2V09&EFS-EL	=	
			Ed.	MKLEPADLO					+ V1GL2UQ51UQ27.1	
			Appr		P6700 Bodyside LH - Robot Cell 2V09	Scale 1:1		Document type: EPB	Project nr: 22-16150	Page 1 / 1533
Modification	Date	Name	Original		Replacement of	Replaced by				

Parts list

F01_001

Device tag	Quantity	Designation	Type number	Supplier	Part number
=V1GL2UQ51UQ28.1-BGS/R	1	Inductive sensor Monitoring Kit for Power Clamps	1324638	TUNKERS	TUN.1324638

+.GL2UQ51UQ27.1/1

+.GL2UQ51UQ29.1/1

			Date	1/17/2023	Volvo Trucks North America	Valiant TMS	Parts list : TUN.1324638 - TUN.1324638	Drawing name: =2V09&EFS-EL	= + V1GL2UQ51UQ28.1
			Ed.	MKLEPADLO					
			Appr		P6700 Bodyside LH - Robot Cell 2V09	Scale 1:1		Document type: EPB	Project nr: 22-16150
Modification	Date	Name	Original		Replacement of	Replaced by			Page 1 / 1533

Parts list

F01_001

Device tag	Quantity	Designation	Type number	Supplier	Part number
=V1GL2UQ51UQ29.1-BGR	1	Inductive sensor	BI2-CRS260-AP4X2-H1141/S34	TURCK	TUR.BI2-CRS260-AP4X2-H1141/S34
=V1GL2UQ51UQ29.1-BGS	1	Inductive sensor	BI2-CRS260-AP4X2-H1141/S34	TURCK	TUR.BI2-CRS260-AP4X2-H1141/S34
=V1GL2UQ51UQ29.1-XGR/S	1	Y splitter	U2-30676	TURCK	TUR.VB2-FSM 4.4/2FKM 4/S3450

			Date	1/17/2023	Volvo Trucks North America	Valiant TMS	Parts list : TUR.BI2-CRS260-AP4X2-H1141/S34 - TUR.VB2-FSM 4.4/2FKM 4/S3450	Drawing name: =2V09&EFS-EL	= + V1GL2UQ51UQ29.1
			Ed.	MKLEPADLO					
			Appr		P6700 Bodyside LH - Robot Cell 2V09	Scale 1:1		Document type: EPB	Project nr: 22-16150
Modification	Date	Name	Original		Replacement of	Replaced by			Page 1 / 1533

Parts list

F01_001

Device tag	Quantity	Designation	Type number	Supplier	Part number
=V1GL2UQ51UQ30.1-BGS/R	1	Inductive sensor Monitoring Kit for Power Clamps	1324638	TUNKERS	TUN.1324638

+.GL2UQ51UQ29.1/1

+.GL2UQ51UQ31.1/1

			Date	1/17/2023	Volvo Trucks North America	Valiant TMS	Parts list : TUN.1324638 - TUN.1324638	Drawing name: =2V09&EFS-EL	= + V1GL2UQ51UQ30.1
			Ed.	MKLEPADLO					
			Appr		P6700 Bodyside LH - Robot Cell 2V09	Scale 1:1		Document type: EPB	Project nr: 22-16150
Modification	Date	Name	Original		Replacement of	Replaced by			Page 1 / 1533

Parts list

F01_001

Device tag	Quantity	Designation	Type number	Supplier	Part number
=V1GL2UQ51UQ31.1-BGS/R	1	Inductive sensor Monitoring Kit for Power Clamps	1329440	TUNKERS	TUN.1329440

+.GL2UQ51UQ30.1/1

+.GL2UQ51UQ32.1/1

			Date	1/17/2023	Volvo Trucks North America	Valiant TMS	Parts list : TUN.1329440 - TUN.1329440	Drawing name: =2V09&EFS-EL	= + V1GL2UQ51UQ31.1
			Ed.	MKLEPADLO					
			Appr		P6700 Bodyside LH - Robot Cell 2V09	Scale 1:1		Document type: EPB	Project nr: 22-16150
Modification	Date	Name	Original		Replacement of	Replaced by			Page 1 / 1533

Parts list

F01_001

Device tag	Quantity	Designation	Type number	Supplier	Part number
=V1GL2UQ51UQ32.1-BGS/R	1	4-Wire, 4-Pin, DC M12 X 1 (PNP)	WWS001A	WEL	WEL.WWS001A

+.GL2UQ51UQ31.1/1

+.GL17UQ51/1

			Date	1/17/2023	Volvo Trucks North America	Valiant TMS	Parts list : WEL.WWS001A - WEL.WWS001A	Drawing name: =2V09&EFS-EL	=	
			Ed.	MKLEPADLO					+ V1GL2UQ51UQ32.1	
			Appr		P6700 Bodyside LH - Robot Cell 2V09	Scale 1:1		Document type: EPB	Project nr: 22-16150	Page 1 / 1533
Modification	Date	Name	Original		Replacement of	Replaced by				

Parts list

F01_001

Device tag	Quantity	Designation	Type number	Supplier	Part number
=V1GL17UQ51BG0-BG01	1				TUR.16447411
=V1GL17UQ51BG0-BG02	1				TUR.16447411
=V1GL17UQ51BG0-BG03	1				TUR.16447411
=V1GL17UQ51BG0-BG04	1				TUR.16447411
=V1GL17UQ51BG0-BG10	1				TUR.16447411
=V1GL17UQ51BG0-BG11	1				TUR.16447411
=V1GL17UQ51BG0-XG1/2	1	Y splitter	U2-30676	TURCK	TUR.VB2-FSM 4.4/2FKM 4/S3450
=V1GL17UQ51BG0-XG3/4	1	Y splitter	U2-30676	TURCK	TUR.VB2-FSM 4.4/2FKM 4/S3450
=V1GL17UQ51BG0-XG5/11	1	Y splitter	U2-30676	TURCK	TUR.VB2-FSM 4.4/2FKM 4/S3450
=V1GL17UQ51KF1-KF1	0	Bus node	CPX-FB33	FES	FES.548755
=V1GL17UQ51KF1-KF1	0	Interlinking block	CPX-M-GE-EV-S-7/8-5POL	FES	FES.550208
=V1GL17UQ51KF1-KF1.11	0	Manifold block	CPX-M-AB-8-M12X2-5POL	FES	FES.549335
=V1GL17UQ51KF1-KF1.12	0	Manifold block	CPX-M-AB-8-M12X2-5POL	FES	FES.549335
=V1GL17UQ51KF1-KF1.13	0	Manifold block	CPX-M-AB-8-M12X2-5POL	FES	FES.549335

+.GL2UQ51UQ32.1/1

+.GL17UQ51UQ1.1/1

			Date	1/17/2023	Volvo Trucks North America	Valiant TMS	Parts list : TUR.16447411 - FES.549335	Drawing name: =2V09&EFS-EL	=	
			Ed.	MKLEPADLO					+ V1GL17UQ51	
			Appr		P6700 Bodyside LH - Robot Cell 2V09	Scale 1:1		Document type: EPB	Project nr: 22-16150	Page 1 / 1533
Modification	Date	Name	Original		Replacement of	Replaced by				

Parts list

F01_001

Device tag	Quantity	Designation	Type number	Supplier	Part number
=V1GL17UQ51UQ1.1-BGR	1				TUR.16447411
=V1GL17UQ51UQ1.1-BGS	1				TUR.16447411
=V1GL17UQ51UQ1.1-XGR/S	1	Y splitter	U2-30676	TURCK	TUR.VB2-FSM 4.4/2FKM 4/S3450

+V1GL17UQ51/1

+.GL17UQ51UQ2.1/1

			Date	1/17/2023	Volvo Trucks North America	Valiant TMS	Parts list : TUR.16447411 - TUR.VB2-FSM 4.4/2FKM 4/S3450	Drawing name: =2V09&EFS-EL	= + V1GL17UQ51UQ1.1	
			Ed.	MKLEPADLO						
			Appr		P6700 Bodyside LH - Robot Cell 2V09	Scale 1:1		Document type: EPB	Project nr: 22-16150	Page 1 / 1533
Modification	Date	Name	Original		Replacement of	Replaced by				

Parts list

F01_001

Device tag	Quantity	Designation	Type number	Supplier	Part number
=V1GL17UQ51UQ2.1-BGR	1				TUR.16447411
=V1GL17UQ51UQ2.1-BGS	1				TUR.16447411
=V1GL17UQ51UQ2.1-XGR/S	1	Y splitter	U2-30676	TURCK	TUR.VB2-FSM 4.4/2FKM 4/S3450

+.GL17UQ51UQ1.1/1

+.GL17UQ51UQ6.1/1

			Date	1/17/2023	Volvo Trucks North America	Valiant TMS	Parts list : TUR.16447411 - TUR.VB2-FSM 4.4/2FKM 4/S3450	Drawing name: =2V09&EFS-EL	= + V1GL17UQ51UQ2.1	
			Ed.	MKLEPADLO						
			Appr		P6700 Bodyside LH - Robot Cell 2V09	Scale 1:1		Document type: EPB	Project nr: 22-16150	Page 1 / 1533
Modification	Date	Name	Original		Replacement of	Replaced by				

Parts list

F01_001

Device tag	Quantity	Designation	Type number	Supplier	Part number
=V1GL17UQ51UQ6.1-BGR	1				TUR.16447411
=V1GL17UQ51UQ6.1-BGS	1				TUR.16447411
=V1GL17UQ51UQ6.1-XGR/S	1	Y splitter	U2-30676	TURCK	TUR.VB2-FSM 4.4/2FKM 4/S3450

+.GL17UQ51UQ2.1/1

+.PF1/1

			Date	1/17/2023	Volvo Trucks North America	Valiant TMS	Parts list : TUR.16447411 - TUR.VB2-FSM 4.4/2FKM 4/S3450	Drawing name: =2V09&EFS-EL	= + V1GL17UQ51UQ6.1
			Ed.	MKLEPADLO					
			Appr		P6700 Bodyside LH - Robot Cell 2V09	Scale 1:1		Document type: EPB	Project nr: 22-16150
Modification	Date	Name	Original		Replacement of	Replaced by			Page 1 / 1533

Parts list

F01_001

Device tag	Quantity	Designation	Type number	Supplier	Part number
=V1PF1KF1-KF1	0	Bus node	CPX-FB33	FES	FES.548755
=V1PF1KF1-KF1	0	Interlinking block	CPX-M-GE-EV-S-7/8-5POL	FES	FES.550208
=V1PF1KF1-KF1.11	0	Manifold block	CPX-M-AB-8-M12X2-5POL	FES	FES.549335

+.GL17UQ51UQ6.1/1

+.PF1UQ1.1/1

Parts list

F01_001

Device tag	Quantity	Designation	Type number	Supplier	Part number
=V1PF1UQ1.1-BGS/R	1	Inductive sensor Monitoring Kit for Power Clamps	1324638	TUNKERS	TUN.1324638

+V1PF1/1

+.U10/1

			Date	1/17/2023	Volvo Trucks North America	Valiant TMS	Parts list : TUN.1324638 - TUN.1324638	Drawing name: =2V09&EFS-EL	=	
			Ed.	MKLEPADLO					+ V1PF1UQ1.1	
			Appr		P6700 Bodyside LH - Robot Cell 2V09	Scale 1:1		Document type: EPB	Project nr: 22-16150	Page 1 / 1533
Modification	Date	Name	Original		Replacement of	Replaced by				

Parts list

F01_001

Device tag	Quantity	Designation	Type number	Supplier	Part number
=V1U10FQ1-BG01	1	NEMA Limit Switch - NEMA Type 4 & 13 Oiltight Construction	802T-AMP	A-B	A-B.802T-AMP

+.PF1UQ1.1/1

+.U10U01/1

			Date	1/17/2023	Volvo Trucks North America	Valiant TMS	Parts list : A-B.802T-AMP - A-B.802T-AMP	Drawing name: =2V09&EFS-EL	=	
			Ed.	MKLEPADLO					+ V1U10	
			Appr		P6700 Bodyside LH - Robot Cell 2V09	Scale 1:1		Document type: EPB	Project nr: 22-16150	Page 1 / 1533
Modification	Date	Name	Original		Replacement of	Replaced by				

Parts list

F01_001

Device tag	Quantity	Designation	Type number	Supplier	Part number
=V1U10U01KF1-KF1.11	1	MVK-MPNIO DI8 DO8 FSU	MVK-MPNIO DI8 DO8 FSU	MURR	MURR.55339
=V1U10U01PF1-PF1	1	K50L Series Daylight Visible Indicators	K50L2RGB7QP	BANNER	BAN.805371
=V1U10U01PF1-PF1	1	Mounting kit	SMB30A	BANNER	BAN.32723

+V1U10/1

+.U20U01/1

			Date	1/17/2023	Volvo Trucks North America	Valiant TMS	Parts list : MURR.55339 - BAN.32723	Drawing name: =2V09&EFS-EL	=	
			Ed.	MKLEPADLO					+ V1U10U01	
			Appr		P6700 Bodyside LH - Robot Cell 2V09			Document type: EPB	Project nr: 22-16150	Page 1
Modification	Date	Name	Original		Replacement of / Replaced by	Scale 1:1				1533

Parts list

F01_001

Device tag	Quantity	Designation	Type number	Supplier	Part number
=V1U20U01KF1-KF1.11	1	MVK-MPNIO DI8 DO8 FSU	MVK-MPNIO DI8 DO8 FSU	MURR	MURR.55339
=V1U20U01PF1-PF1	1	K50L Series Daylight Visible Indicators	K50L2RGB7QP	BANNER	BAN.805371
=V1U20U01PF1-PF1	1	Mounting kit	SMB30A	BANNER	BAN.32723

+.U10U01/1

+.UC11/1

			Date	1/17/2023	Volvo Trucks North America	Valiant TMS	Parts list : MURR.55339 - BAN.32723	Drawing name: =2V09&EFS-EL	=	
			Ed.	MKLEPADLO					+ V1U20U01	
			Appr		P6700 Bodyside LH - Robot Cell 2V09			Document type: EPB	Project nr: 22-16150	Page 1
Modification	Date	Name	Original		Replacement of / Replaced by	Scale 1:1				1533

Parts list

F01_001

Device tag	Quantity	Designation	Type number	Supplier	Part number
=V1AR11-FC1	1		EMPD3FBCB-025A-M	Electro-Matic	EMPD3FBCB-025A-M
=V1AR21-FC1	1		EMPD3FBCB-025A-M	Electro-Matic	EMPD3FBCB-025A-M
=V1AR22-FC1	1		EMPD3FBCB-025A-M	Electro-Matic	EMPD3FBCB-025A-M
=V1AR23-FC1	1		EMPD3FBCB-025A-M	Electro-Matic	EMPD3FBCB-025A-M
=V1AR24-FC1	1		EMPD3FBCB-025A-M	Electro-Matic	EMPD3FBCB-025A-M
=V1AR25-FC1	1		EMPD3FBCB-025A-M	Electro-Matic	EMPD3FBCB-025A-M
=V1AR26-FC1	1		EMPD3FBCB-025A-M	Electro-Matic	EMPD3FBCB-025A-M
=V1AR28-FC1	1		EMPD3FBCB-025A-M	Electro-Matic	EMPD3FBCB-025A-M
=V1AR29-FC1	1		EMPD3FBCB-025A-M	Electro-Matic	EMPD3FBCB-025A-M
=V1AR31-FC1	1		EMPD3FBCB-025A-M	Electro-Matic	EMPD3FBCB-025A-M
=V1AR31XQ41-FC1	1		EMPD3FBCB-060A-M	Electro-Matic	EMPD3FBCB-060A-M
=V1AR81-FC1	1		EMPD3FBCB-025A-M	Electro-Matic	EMPD3FBCB-025A-M
=V1AR81XQ51-FC1	1		EMPD3FBCB-025A-M	Electro-Matic	EMPD3FBCB-025A-M
=V1AR81XQ52-FC1	1		EMPD3FBCB-025A-M	Electro-Matic	EMPD3FBCB-025A-M
=V1AR191-FC1	1		EMPD3FBCB-025A-M	Electro-Matic	EMPD3FBCB-025A-M
=V1AR211-FC1	1		EMPD3FBCB-025A-M	Electro-Matic	EMPD3FBCB-025A-M
=V1AR212-FC1	1		EMPD3FBCB-025A-M	Electro-Matic	EMPD3FBCB-025A-M
=V1G10GL21-FC1	1	3P-C32	S203-C32	ABB	ABB.2CDS253001R0324
=V1G10GL21-FC1	1	Auxiliary Contact	S2C-H6R	ABB	ABB.2CDS200912R0001
=V1GL2-FC1	1		EMPD3FBCB-025A-M	Electro-Matic	EMPD3FBCB-025A-M
=V1KF1-KF11	1				SIE.6ES7155-6AA01-0BN0_subassembly
=V1KF1-KF11	1	ET200SP, SERVERMODULE	6ES7193-6PA00-0AA0		SIE.6ES7193-6PA00-0AA0
=V1KF1-KF11.11	1	ET 200SP, DI 16x 24V DC ST, PU 1	6ES7131-6BH01-0BA0	SIE	SIE.6ES7131-6BH01-0BA0
=V1KF1-KF11.11	1	BASEUNIT TYPE A0, BU15-P16+A0+2D	6ES7193-6BP00-0DA0	SIE	SIE.6ES7193-6BP00-0DA0
=V1KF1-KF11.12	1	ET 200SP, DI 16x 24V DC ST, PU 1	6ES7131-6BH01-0BA0	SIE	SIE.6ES7131-6BH01-0BA0
=V1KF1-KF11.12	1	BASEUNIT TYPE A0, BU15-P16+A0+2B	6ES7193-6BP00-0BA0	SIE	SIE.6ES7193-6BP00-0BA0
=V1KF1-KF11.13	1	ET 200SP, DI 16x 24V DC ST, PU 1	6ES7131-6BH01-0BA0	SIE	SIE.6ES7131-6BH01-0BA0
=V1KF1-KF11.13	1	BASEUNIT TYPE A0, BU15-P16+A0+2B	6ES7193-6BP00-0BA0	SIE	SIE.6ES7193-6BP00-0BA0
=V1KF1-KF11.14	1	ET 200SP, DI 16x 24V DC ST, PU 1	6ES7131-6BH01-0BA0	SIE	SIE.6ES7131-6BH01-0BA0
=V1KF1-KF11.14	1	BASEUNIT TYPE A0, BU15-P16+A0+2B	6ES7193-6BP00-0BA0	SIE	SIE.6ES7193-6BP00-0BA0
=V1KF1-KF11.21	1	ET 200SP, DQ 16x 24V DC/0,5A ST, PU 1	6ES7132-6BH01-0BA0	SIE	SIE.6ES7132-6BH01-0BA0
=V1KF1-KF11.21	1	BASEUNIT TYPE A0, BU15-P16+A0+2D	6ES7193-6BP00-0DA0	SIE	SIE.6ES7193-6BP00-0DA0
=V1KF1-KF11.31	1	ET 200SP, El-Mod., F-DI 8x24VDC HF	6ES7136-6BA00-0CA0		SIE.6ES7136-6BA00-0CA0
=V1KF1-KF11.31	1	BASEUNIT TYPE A0, BU15-P16+A0+2B	6ES7193-6BP00-0BA0	SIE	SIE.6ES7193-6BP00-0BA0
=V1KF1-KF11.32	1	ET 200SP, El-Mod., F-DI 8x24VDC HF	6ES7136-6BA00-0CA0		SIE.6ES7136-6BA00-0CA0
=V1KF1-KF11.32	1	BASEUNIT TYPE A0, BU15-P16+A0+2B	6ES7193-6BP00-0BA0	SIE	SIE.6ES7193-6BP00-0BA0
=V1KF1-KF11.41	1	ET 200SP, El-Mod., F-DQ 4xDC 24V/2A	6ES7136-6DB00-0CA0		SIE.6ES7136-6DB00-0CA0
=V1KF1-KF11.41	1	BASEUNIT TYPE A0, BU15-P16+A0+2B	6ES7193-6BP00-0BA0	SIE	SIE.6ES7193-6BP00-0BA0
=V1KF1-KF11.42	1	ET 200SP, El-Mod., F-DQ 4xDC 24V/2A	6ES7136-6DB00-0CA0		SIE.6ES7136-6DB00-0CA0
=V1KF1-KF11.42	1	BASEUNIT TYPE A0, BU15-P16+A0+2B	6ES7193-6BP00-0BA0	SIE	SIE.6ES7193-6BP00-0BA0
=V1KF1-KF11.51	1	ET 200SP, F-RQ 1x24VDC/24..230VAC/5A ST	6ES7136-6RA00-0BF0		SIE.6ES7136-6RA00-0BF0
=V1KF1-KF11.51	1	BASEUNIT TYPE F0, BU20-P8+A4+0B	6ES7193-6BP20-0BF0	SIE	SIE.6ES7193-6BP20-0BF0
=V1KF1-KF11.52	1	ET 200SP, F-RQ 1x24VDC/24..230VAC/5A ST	6ES7136-6RA00-0BF0		SIE.6ES7136-6RA00-0BF0
=V1KF1-KF11.52	1	BASEUNIT TYPE F0, BU20-P8+A4+0B	6ES7193-6BP20-0BF0	SIE	SIE.6ES7193-6BP20-0BF0
=V1KF1-KF11.53	1	ET 200SP, F-RQ 1x24VDC/24..230VAC/5A ST	6ES7136-6RA00-0BF0		SIE.6ES7136-6RA00-0BF0
=V1KF1-KF11.53	1	BASEUNIT TYPE F0, BU20-P8+A4+0B	6ES7193-6BP20-0BF0	SIE	SIE.6ES7193-6BP20-0BF0
=V1KF1-KF11.54	1	ET 200SP, F-RQ 1x24VDC/24..230VAC/5A ST	6ES7136-6RA00-0BF0		SIE.6ES7136-6RA00-0BF0
=V1KF1-KF11.54	1	BASEUNIT TYPE F0, BU20-P8+A4+0B	6ES7193-6BP20-0BF0	SIE	SIE.6ES7193-6BP20-0BF0
=V1KF1-KF100.11	1	SCALANCE XC216	6GK5216-0BA00-2AC2	SIE	SIE.6GK5216-0BA00-2AC2
=V1WC1-FC1	1	MCCB_UL_FS125_15A_3P_65KA_TM_ FTFM	3VA5195-6ED31-0AA0	SIE	SIE.3VA5195-6ED31-0AA0
=V1WC1-KF1.1	1	BREAKER DATA SERVER, COM100	3VA9977-0TA20	SIE	SIE.3VA9977-0TA20
=V1WC1-KF1.2	1	Switched Ethernet PROFINET Module V3	7KM9300-0AE02-0AA0		SIE.7KM9300-0AE02-0AA0
=V1WC1-QB1	1	MCCB_UL_FS400_400A_3P_65KA_ETU8_LSI	3VA6340-6KP31-0AA0	SIE	SIE.3VA6340-6KP31-0AA0
=V1WC1-QB1-KF1	1	COMMUNICATION MODULE COM060	3VA9177-0TB10	SIE	SIE.3VA9177-0TB10
=V1WC1-TA1	1	Transformer	PTN102-3K	POWERTRAN	PTN102-3K
=V1WC2-A3	1	Multi-Environment Voltage Indicator and Safe-Test Point Combination Unit with Vertical Flange Tab	R-range Warning Label		GT.R-3W2MT-LMF

+.U20U01/1

			Date	1/17/2023	Volvo Trucks North America	Valiant TMS	Parts list : EMPD3FBCB-025A-M - GT.R-3W2MT-LMF	Drawing name: =2V09&EFS-EL	= + V1UC11	
			Ed.	MKLEPADLO						
			Appr		P6700 Bodyside LH - Robot Cell 2V09	Scale 1:1		Document type: EPB	Project nr: 22-16150	Page 1 / 1533
Modification	Date	Name	Original		Replacement of	Replaced by				

Parts list

F01_001

Device tag	Quantity	Designation	Type number	Supplier	Part number
=V1WC2-FC1	1	MCCB_UL_FS125_20A_3P_65KA_TM_ FTFM	3VA5120-6ED31-0AA0	SIE	SIE.3VA5120-6ED31-0AA0
=V1WC2-FC1	1	SENTRON auxiliary switch Accessories for 3VA circuit breakers	3VA9978-0AA12	SIE	SIE.3VA9978-0AA12
=V1WC2-TA2	1	Transformer	PTN102-7.5K	POWERTRAN	PTN102-7.5K
=V1WC3-FC2	1	CIRCUIT BREAKER 240V 14KA, 1-POLE, C, 20A, D=70MM	5SJ4120-7HG41	SIE	SIE.5SJ4120-7HG41
=V1WC3-FC2	1	AUXILARY SWITCH 1NO1NC UL489	5ST3010-0HG	SIE	SIE.5ST3010-0HG
=V1WC3-FC3	1	CIRCUIT BREAKER 240V 14KA, 1-POLE, C, 10A, D=70MM	5SJ4110-7HG41	SIE	SIE.5SJ4110-7HG41
=V1WC3-FC3	1	AUXILARY SWITCH 1NO1NC UL489	5ST3010-0HG	SIE	SIE.5ST3010-0HG
=V1WC3-FC4	1	CIRCUIT BREAKER 240V 14KA, 1-POLE, C, 3A, D=70MM	5SJ4103-7HG41	SIE	SIE.5SJ4103-7HG41
=V1WC3-FC4	1	AUXILARY SWITCH 1NO1NC UL489	5ST3010-0HG	SIE	SIE.5ST3010-0HG
=V1WC3-FC5	1	CIRCUIT BREAKER 240V 14KA, 1-POLE, C, 16A, D=70MM	5SJ4116-7HG41	SIE	SIE.5SJ4116-7HG41
=V1WC3-FC6	1	CIRCUIT BREAKER 240V 14KA, 1-POLE, C, 16A, D=70MM	5SJ4116-7HG41	SIE	SIE.5SJ4116-7HG41
=V1WC3-FC6	1	AUXILARY SWITCH 1NO1NC UL489	5ST3010-0HG	SIE	SIE.5ST3010-0HG
=V1WC3-FC7	1	CIRCUIT BREAKER 240V 14KA, 1-POLE, C, 16A, D=70MM	5SJ4116-7HG41	SIE	SIE.5SJ4116-7HG41
=V1WC3-FC7	1	AUXILARY SWITCH 1NO1NC UL489	5ST3010-0HG	SIE	SIE.5ST3010-0HG
=V1WC3-FC8	1	CIRCUIT BREAKER 240V 14KA, 1-POLE, C, 16A, D=70MM	5SJ4116-7HG41	SIE	SIE.5SJ4116-7HG41
=V1WC3-FC8	1	AUXILARY SWITCH 1NO1NC UL489	5ST3010-0HG	SIE	SIE.5ST3010-0HG
=V1WC3-FC9	1	CIRCUIT BREAKER 240V 14KA, 1-POLE, C, 6A, D=70MM	5SJ4106-7HG41	SIE	SIE.5SJ4106-7HG41
=V1WC3-FC9	1	AUXILARY SWITCH 1NO1NC UL489	5ST3010-0HG	SIE	SIE.5ST3010-0HG
=V1WC3-FC10	1	CIRCUIT BREAKER 240V 14KA, 1-POLE, C, 30A, D=70MM	5SJ4130-7HG41	SIE	SIE.5SJ4130-7HG41
=V1WC3-FC10	1	AUXILARY SWITCH 1NO1NC UL489	5ST3010-0HG	SIE	SIE.5ST3010-0HG
=V1WC3-FC11	1	CIRCUIT BREAKER 240V 14KA, 1-POLE, C, 6A, D=70MM	5SJ4106-7HG41	SIE	SIE.5SJ4106-7HG41
=V1WC3-FC11	1	AUXILARY SWITCH 1NO1NC UL489	5ST3010-0HG	SIE	SIE.5ST3010-0HG
=V1WC3-FC12	1	CIRCUIT BREAKER 240V 14KA, 1-POLE, C, 16A, D=70MM	5SJ4116-7HG41	SIE	SIE.5SJ4116-7HG41
=V1WC3-XG1	2	DBL175 Series Distribution Block	1SNL317510R0000	ENTRELEC	1SNL317510R0000
=V1WC3-XG2	2	DBL175 Series Distribution Block	1SNL317510R0000	ENTRELEC	1SNL317510R0000
=V1WC3-XG3	1	Panel Interface Connector with USB Type A/F to USB Type A/M [Qty: 2]; Category 5e RJ45 Feed-Through; Housing; UL Type 4; Duplex Outlet; 5 Amp Circuit Breaker	P45USB2HOUSE		GT_N.P-P11#2R2-K3RD5
=V1WC4-FC11	1	SITOP SEL1200 8 x 10A	6EP4438-7FB00-3DX0		SIE.6EP4438-7FB00-3DX0
=V1WC4-FC12	1	SITOP SEL1200 8 x 10A	6EP4438-7FB00-3DX0		SIE.6EP4438-7FB00-3DX0
=V1WC4-FC11	1	SITOP SEL1200 8 x 10A	6EP4438-7FB00-3DX0		SIE.6EP4438-7FB00-3DX0
=V1WC4-FC12	1	SITOP SEL1200 8 x 10A	6EP4438-7FB00-3DX0		SIE.6EP4438-7FB00-3DX0
=V1WC4-TA1	1	SITOP PSU6200 1ph 24 V/20 A	6EP3336-7SB00-3AX0		SIE.6EP3336-7SB00-3AX0
=V1WC4-TA2	1	SITOP PSU6200 1ph 24 V/20 A	6EP3336-7SB00-3AX0		SIE.6EP3336-7SB00-3AX0
=WC1-WC1	1	Golvskåp TS 8 sidskåp	TS8	RIT	RIT.SETS8205SID5
=WC1-WC1	1	TS Trim panel, sides, H: 100 mm, for W: 500 mm, RAL 7022, sheet steel	TS.8601050	RIT	RIT.8601050
=WC1-WC1	1	TS Base/plinth component, rear, H: 100 mm, for W: 1200 mm, RAL 7022, sheet steel	TS.8601200	RIT	RIT.8601200
=WC1-WC1	1	TS Side panel, screw-fastened, for TS, TS IT, for WD: 2000x500 mm, Sheet steel	TS.8105235	RIT	RIT.8105235
=WC1-WC1	1	PS Wiring plan pockets, for TS, CM, SE, PC, TP pedestal, sheet steel	TS.4115000	RIT	RIT.4115000

Parts list

F01_001

Device tag	Quantity	Designation	Type number	Supplier	Part number
=V1AR12-FC1	1		EMPD3FBCB-025A-M	Electro-Matic	EMPD3FBCB-025A-M
=V1AR13-FC1	1		EMPD3FBCB-025A-M	Electro-Matic	EMPD3FBCB-025A-M
=V1AR14-FC1	1		EMPD3FBCB-025A-M	Electro-Matic	EMPD3FBCB-025A-M
=V1AR22-FC1	1		EMPD3FBCB-025A-M	Electro-Matic	EMPD3FBCB-025A-M
=V1AR24-FC1	1		EMPD3FBCB-025A-M	Electro-Matic	EMPD3FBCB-025A-M
=V1AR25-FC1	1		EMPD3FBCB-025A-M	Electro-Matic	EMPD3FBCB-025A-M
=V1AR27-FC1	1		EMPD3FBCB-025A-M	Electro-Matic	EMPD3FBCB-025A-M
=V1AR29-FC1	1		EMPD3FBCB-025A-M	Electro-Matic	EMPD3FBCB-025A-M
=V1AR51-FC1	1		EMPD3FBCB-025A-M	Electro-Matic	EMPD3FBCB-025A-M
=V1AR51XQ51-FC1	1		EMPD3FBCB-030A-M	Electro-Matic	EMPD3FBCB-030A-M
=V1AR53-FC1	1		EMPD3FBCB-025A-M	Electro-Matic	EMPD3FBCB-025A-M
=V1AR53XQ51-FC1	1		EMPD3FBCB-030A-M	Electro-Matic	EMPD3FBCB-030A-M
=V1AR141-FC1	1		EMPD3FBCB-025A-M	Electro-Matic	EMPD3FBCB-025A-M
=V1AR191-FC1	1		EMPD3FBCB-025A-M	Electro-Matic	EMPD3FBCB-025A-M
=V1AR192-FC1	1		EMPD3FBCB-025A-M	Electro-Matic	EMPD3FBCB-025A-M
=V1AR212-FC1	1		EMPD3FBCB-025A-M	Electro-Matic	EMPD3FBCB-025A-M
=V1KF1-KF12	1				SIE.6ES7155-6AA01-0BN0_subassembly
=V1KF1-KF12	1	ET200SP, SERVERMODULE	6ES7193-6PA00-0AA0		SIE.6ES7193-6PA00-0AA0
=V1KF1-KF12.11	1	ET 200SP, DI 16x 24V DC ST, PU 1	6ES7131-6BH01-0BA0	SIE	SIE.6ES7131-6BH01-0BA0
=V1KF1-KF12.11	1	BASEUNIT TYPE A0, BU15-P16+A0+2D	6ES7193-6BP00-0DA0	SIE	SIE.6ES7193-6BP00-0DA0
=V1KF1-KF12.12	1	ET 200SP, DI 16x 24V DC ST, PU 1	6ES7131-6BH01-0BA0	SIE	SIE.6ES7131-6BH01-0BA0
=V1KF1-KF12.12	1	BASEUNIT TYPE A0, BU15-P16+A0+2D	6ES7193-6BP00-0DA0	SIE	SIE.6ES7193-6BP00-0DA0
=V1KF1-KF12.13	1	ET 200SP, DI 16x 24V DC ST, PU 1	6ES7131-6BH01-0BA0	SIE	SIE.6ES7131-6BH01-0BA0
=V1KF1-KF12.13	1	BASEUNIT TYPE A0, BU15-P16+A0+2D	6ES7193-6BP00-0DA0	SIE	SIE.6ES7193-6BP00-0DA0
=V1KF1-KF12.14	1	ET 200SP, DI 16x 24V DC ST, PU 1	6ES7131-6BH01-0BA0	SIE	SIE.6ES7131-6BH01-0BA0
=V1KF1-KF12.14	1	BASEUNIT TYPE A0, BU15-P16+A0+2D	6ES7193-6BP00-0DA0	SIE	SIE.6ES7193-6BP00-0DA0
=V1KF1-KF12.21	1	ET 200SP, DQ 16x 24V DC/0,5A ST, PU 1	6ES7132-6BH01-0BA0	SIE	SIE.6ES7132-6BH01-0BA0
=V1KF1-KF12.21	1	BASEUNIT TYPE A0, BU15-P16+A0+2D	6ES7193-6BP00-0DA0	SIE	SIE.6ES7193-6BP00-0DA0
=V1KF1-KF12.31	1	ET 200SP, El-Mod., F-DI 8x24VDC HF	6ES7136-6BA00-0CA0		SIE.6ES7136-6BA00-0CA0
=V1KF1-KF12.31	1	BASEUNIT TYPE A0, BU15-P16+A0+2B	6ES7193-6BP00-0BA0	SIE	SIE.6ES7193-6BP00-0BA0
=V1KF1-KF12.32	1	ET 200SP, El-Mod., F-DI 8x24VDC HF	6ES7136-6BA00-0CA0		SIE.6ES7136-6BA00-0CA0
=V1KF1-KF12.32	1	BASEUNIT TYPE A0, BU15-P16+A0+2B	6ES7193-6BP00-0BA0	SIE	SIE.6ES7193-6BP00-0BA0
=V1KF1-KF12.41	1	ET 200SP, El-Mod., F-DQ 4xDC 24V/2A	6ES7136-6DB00-0CA0		SIE.6ES7136-6DB00-0CA0
=V1KF1-KF12.41	1	BASEUNIT TYPE A0, BU15-P16+A0+2B	6ES7193-6BP00-0BA0	SIE	SIE.6ES7193-6BP00-0BA0
=V1KF1-KF12.42	1	ET 200SP, El-Mod., F-DQ 4xDC 24V/2A	6ES7136-6DB00-0CA0		SIE.6ES7136-6DB00-0CA0
=V1KF1-KF12.42	1	BASEUNIT TYPE A0, BU15-P16+A0+2B	6ES7193-6BP00-0BA0	SIE	SIE.6ES7193-6BP00-0BA0
=V1KF1-KF12.51	1	ET 200SP, F-RQ 1x24VDC/24..230VAC/5A ST	6ES7136-6RA00-0BF0		SIE.6ES7136-6RA00-0BF0
=V1KF1-KF12.51	1	BASEUNIT TYPE F0, BU20-P8+A4+0B	6ES7193-6BP20-0BF0	SIE	SIE.6ES7193-6BP20-0BF0
=V1KF1-KF12.52	1	ET 200SP, F-RQ 1x24VDC/24..230VAC/5A ST	6ES7136-6RA00-0BF0		SIE.6ES7136-6RA00-0BF0
=V1KF1-KF12.52	1	BASEUNIT TYPE F0, BU20-P8+A4+0B	6ES7193-6BP20-0BF0	SIE	SIE.6ES7193-6BP20-0BF0
=V1KF1-KF12.53	1	ET 200SP, F-RQ 1x24VDC/24..230VAC/5A ST	6ES7136-6RA00-0BF0		SIE.6ES7136-6RA00-0BF0
=V1KF1-KF12.53	1	BASEUNIT TYPE F0, BU20-P8+A4+0B	6ES7193-6BP20-0BF0	SIE	SIE.6ES7193-6BP20-0BF0
=V1KF1-KF12.54	1	ET 200SP, F-RQ 1x24VDC/24..230VAC/5A ST	6ES7136-6RA00-0BF0		SIE.6ES7136-6RA00-0BF0
=V1KF1-KF12.54	1	BASEUNIT TYPE F0, BU20-P8+A4+0B	6ES7193-6BP20-0BF0	SIE	SIE.6ES7193-6BP20-0BF0
=V1KF1-KF100.12	1	SCALANCE XC216	6GK5216-0BA00-2AC2	SIE	SIE.6GK5216-0BA00-2AC2
=V1KF1-KF100.12	1	C-PLUG	6GK1900-0AB10	SIE	SIE.6GK1900-0AB10
=V1WC1-FC1	1	MCCB_UL_FS125_15A_3P_65KA_TM_ FTFM	3VA5195-6ED31-0AA0	SIE	SIE.3VA5195-6ED31-0AA0
=V1WC1-KF1.1	1	BREAKER DATA SERVER, COM100	3VA9977-0TA20	SIE	SIE.3VA9977-0TA20
=V1WC1-KF1.2	1	Switched Ethernet PROFINET Module V3	7KM9300-0AE02-0AA0		SIE.7KM9300-0AE02-0AA0
=V1WC1-QB1	1	MCCB_UL_FS250_250A_3P_65KA_ETU8_LSI	3VA6225-6KP31-0AA0	SIE	SIE.3VA6225-6KP31-0AA0
=V1WC1-QB1-KF1	1	COMMUNICATION MODULE COM060	3VA9177-0TB10	SIE	SIE.3VA9177-0TB10
=V1WC1-TA1	1	Transformer	PTN102-3K	POWERTRAN	PTN102-3K
=V1WC2-A3	1	Multi-Environment Voltage Indicator and Safe-Test Point Combination Unit with Vertical Flange Mount	R-3W2MT-LMF Warning Label		GT.R-3W2MT-LMF
=V1WC2-FC1	1	MCCB_UL_FS125_20A_3P_65KA_TM_ FTFM	3VA5120-6ED31-0AA0	SIE	SIE.3VA5120-6ED31-0AA0
=V1WC2-FC1	1	SENTRON auxiliary switch Accessories for 3VA circuit breakers	3VA9978-0AA12	SIE	SIE.3VA9978-0AA12
=V1WC2-TA2	1	Transformer	PTN102-7.5K	POWERTRAN	PTN102-7.5K

			Date	1/17/2023	Volvo Trucks North America	Valiant TMS	Parts list : EMPD3FBCB-025A-M - PTN102-7.5K	Drawing name: =2V09&EFS-EL	= + V1UC12
			Ed.	MKLEPADLO					
			Appr		P6700 Bodyside LH - Robot Cell 2V09	Scale 1:1		Document type: EPB	Project nr: 22-16150
Modification	Date	Name	Original		Replacement of	Replaced by			Page 1 / 1533

Parts list

F01_001

Device tag	Quantity	Designation	Type number	Supplier	Part number
=V1WC3-FC2	1	CIRCUIT BREAKER 240V 14KA, 1-POLE, C, 20A, D=70MM	5SJ4120-7HG41	SIE	SIE.5SJ4120-7HG41
=V1WC3-FC2	1	AUXILARY SWITCH 1NO1NC UL489	5ST3010-0HG	SIE	SIE.5ST3010-0HG
=V1WC3-FC3	1	CIRCUIT BREAKER 240V 14KA, 1-POLE, C, 10A, D=70MM	5SJ4110-7HG41	SIE	SIE.5SJ4110-7HG41
=V1WC3-FC3	1	AUXILARY SWITCH 1NO1NC UL489	5ST3010-0HG	SIE	SIE.5ST3010-0HG
=V1WC3-FC4	1	CIRCUIT BREAKER 240V 14KA, 1-POLE, C, 3A, D=70MM	5SJ4103-7HG41	SIE	SIE.5SJ4103-7HG41
=V1WC3-FC4	1	AUXILARY SWITCH 1NO1NC UL489	5ST3010-0HG	SIE	SIE.5ST3010-0HG
=V1WC3-FC5	1	CIRCUIT BREAKER 240V 14KA, 1-POLE, C, 16A, D=70MM	5SJ4116-7HG41	SIE	SIE.5SJ4116-7HG41
=V1WC3-FC6	1	CIRCUIT BREAKER 240V 14KA, 1-POLE, C, 16A, D=70MM	5SJ4116-7HG41	SIE	SIE.5SJ4116-7HG41
=V1WC3-FC6	1	AUXILARY SWITCH 1NO1NC UL489	5ST3010-0HG	SIE	SIE.5ST3010-0HG
=V1WC3-FC7	1	CIRCUIT BREAKER 240V 14KA, 1-POLE, C, 16A, D=70MM	5SJ4116-7HG41	SIE	SIE.5SJ4116-7HG41
=V1WC3-FC7	1	AUXILARY SWITCH 1NO1NC UL489	5ST3010-0HG	SIE	SIE.5ST3010-0HG
=V1WC3-FC8	1	CIRCUIT BREAKER 240V 14KA, 1-POLE, C, 16A, D=70MM	5SJ4116-7HG41	SIE	SIE.5SJ4116-7HG41
=V1WC3-FC8	1	AUXILARY SWITCH 1NO1NC UL489	5ST3010-0HG	SIE	SIE.5ST3010-0HG
=V1WC3-FC9	1	CIRCUIT BREAKER 240V 14KA, 1-POLE, C, 6A, D=70MM	5SJ4106-7HG41	SIE	SIE.5SJ4106-7HG41
=V1WC3-FC9	1	AUXILARY SWITCH 1NO1NC UL489	5ST3010-0HG	SIE	SIE.5ST3010-0HG
=V1WC3-FC10	1	CIRCUIT BREAKER 240V 14KA, 1-POLE, C, 16A, D=70MM	5SJ4116-7HG41	SIE	SIE.5SJ4116-7HG41
=V1WC3-XG1	2	DBL175 Series Distribution Block	1SNL317510R0000	ENTRELEC	1SNL317510R0000
=V1WC3-XG2	2	DBL175 Series Distribution Block	1SNL317510R0000	ENTRELEC	1SNL317510R0000
=V1WC3-XG3	1	Panel Interface Connector with USB Type A/F to USB Type A/M [Qty: 2]; Category 5e RJ45 Feed-Through; Housing; UL Type 4; Duplex Outlet; 5 Amp Circuit Breaker	GT_N.P-P11#2R2-K3RD5		GT_N.P-P11#2R2-K3RD5
=V1WC4-FC11	1	SITOP SEL1200 8 x 10A	6EP4438-7FB00-3DX0		SIE.6EP4438-7FB00-3DX0
=V1WC4-FC12	1	SITOP SEL1200 8 x 10A	6EP4438-7FB00-3DX0		SIE.6EP4438-7FB00-3DX0
=V1WC4-TA1	1	SITOP PSU6200 1ph 24 V/20 A	6EP3336-7SB00-3AX0		SIE.6EP3336-7SB00-3AX0
=V1WC4-TA2	1	SITOP PSU6200 1ph 24 V/20 A	6EP3336-7SB00-3AX0		SIE.6EP3336-7SB00-3AX0
=WC1-WC1	1	Golvskåp TS 8 sidskåp	TS8	RIT	RIT.SETS8205SID5
=WC1-WC1	1	TS Trim panel, sides, H: 100 mm, for W: 500 mm, RAL 7022, sheet steel	TS.8601050	RIT	RIT.8601050
=WC1-WC1	1	TS Base/plinth component, rear, H: 100 mm, for W: 1200 mm, RAL 7022, sheet steel	TS.8601200	RIT	RIT.8601200
=WC1-WC1	1	TS Side panel, screw-fastened, for TS, TS IT, for WD: 2000x500 mm, Sheet steel	TS.8105235	RIT	RIT.8105235
=WC1-WC1	1	PS Wiring plan pockets, for TS, CM, SE, PC, TP pedestal, sheet steel	TS.4115000	RIT	RIT.4115000

1

+.UC14/1

			Date	1/17/2023	Volvo Trucks North America	Valiant TMS	Parts list : SIE.5SJ4120-7HG41 - RIT.4115000	Drawing name: =2V09&EFS-EL	=	
			Ed.	MKLEPADLO					+ V1UC12	
			Appr		P6700 Bodyside LH - Robot Cell 2V09			Document type: EPB	Project nr: 22-16150	Page 2
Modification	Date	Name	Original		Replacement of	Replaced by	Scale 1:1			1533

Parts list

F01_001

Device tag	Quantity	Designation	Type number	Supplier	Part number
=V1KF1-KF14	1				SIE.6ES7155-6AA01-0BN0_subassembly
=V1KF1-KF14	1	ET200SP, SERVERMODULE	6ES7193-6PA00-0AA0		SIE.6ES7193-6PA00-0AA0
=V1KF1-KF14.11	1	ET 200SP, DI 16x 24V DC ST, PU 1	6ES7131-6BH01-0BA0	SIE	SIE.6ES7131-6BH01-0BA0
=V1KF1-KF14.11	1	BASEUNIT TYPE A0, BU15-P16+A0+2D	6ES7193-6BP00-0DA0	SIE	SIE.6ES7193-6BP00-0DA0
=V1KF1-KF14.12	1	ET 200SP, DI 16x 24V DC ST, PU 1	6ES7131-6BH01-0BA0	SIE	SIE.6ES7131-6BH01-0BA0
=V1KF1-KF14.12	1	BASEUNIT TYPE A0, BU15-P16+A0+2D	6ES7193-6BP00-0DA0	SIE	SIE.6ES7193-6BP00-0DA0
=V1KF1-KF14.21	1	ET 200SP, DQ 16x 24V DC/0,5A ST, PU 1	6ES7132-6BH01-0BA0	SIE	SIE.6ES7132-6BH01-0BA0
=V1KF1-KF14.21	1	BASEUNIT TYPE A0, BU15-P16+A0+2D	6ES7193-6BP00-0DA0	SIE	SIE.6ES7193-6BP00-0DA0
=V1KF1-KF14.31	1	ET 200SP, El-Mod., F-DI 8x24VDC HF	6ES7136-6BA00-0CA0		SIE.6ES7136-6BA00-0CA0
=V1KF1-KF14.31	1	BASEUNIT TYPE A0, BU15-P16+A0+2B	6ES7193-6BP00-0BA0	SIE	SIE.6ES7193-6BP00-0BA0
=V1KF1-KF14.32	1	ET 200SP, El-Mod., F-DI 8x24VDC HF	6ES7136-6BA00-0CA0		SIE.6ES7136-6BA00-0CA0
=V1KF1-KF14.32	1	BASEUNIT TYPE A0, BU15-P16+A0+2B	6ES7193-6BP00-0BA0	SIE	SIE.6ES7193-6BP00-0BA0
=V1KF1-KF14.41	1	ET 200SP, El-Mod., F-DQ 4xDC 24V/2A	6ES7136-6DB00-0CA0		SIE.6ES7136-6DB00-0CA0
=V1KF1-KF14.41	1	BASEUNIT TYPE A0, BU15-P16+A0+2B	6ES7193-6BP00-0BA0	SIE	SIE.6ES7193-6BP00-0BA0
=V1KF1-KF14.42	1	ET 200SP, El-Mod., F-DQ 4xDC 24V/2A	6ES7136-6DB00-0CA0		SIE.6ES7136-6DB00-0CA0
=V1KF1-KF14.42	1	BASEUNIT TYPE A0, BU15-P16+A0+2B	6ES7193-6BP00-0BA0	SIE	SIE.6ES7193-6BP00-0BA0
=V1KF1-KF14.51	1	ET 200SP, F-RQ 1x24VDC/24..230VAC/5A ST	6ES7136-6RA00-0BF0		SIE.6ES7136-6RA00-0BF0
=V1KF1-KF14.51	1	BASEUNIT TYPE F0, BU20-P8+A4+0B	6ES7193-6BP20-0BF0	SIE	SIE.6ES7193-6BP20-0BF0
=V1KF1-KF14.52	1	ET 200SP, F-RQ 1x24VDC/24..230VAC/5A ST	6ES7136-6RA00-0BF0		SIE.6ES7136-6RA00-0BF0
=V1KF1-KF14.52	1	BASEUNIT TYPE F0, BU20-P8+A4+0B	6ES7193-6BP20-0BF0	SIE	SIE.6ES7193-6BP20-0BF0
=V1KF1-KF14.53	1	ET 200SP, F-RQ 1x24VDC/24..230VAC/5A ST	6ES7136-6RA00-0BF0		SIE.6ES7136-6RA00-0BF0
=V1KF1-KF14.53	1	BASEUNIT TYPE F0, BU20-P8+A4+0B	6ES7193-6BP20-0BF0	SIE	SIE.6ES7193-6BP20-0BF0
=V1KF1-KF14.54	1	ET 200SP, F-RQ 1x24VDC/24..230VAC/5A ST	6ES7136-6RA00-0BF0		SIE.6ES7136-6RA00-0BF0
=V1KF1-KF14.54	1	BASEUNIT TYPE F0, BU20-P8+A4+0B	6ES7193-6BP20-0BF0	SIE	SIE.6ES7193-6BP20-0BF0
=V1KF1-KF100.14	1	SCALANCE XC216	6GK5216-0BA00-2AC2	SIE	SIE.6GK5216-0BA00-2AC2
=V1KF1-KF100.14	1	C-PLUG	6GK1900-0AB10	SIE	SIE.6GK1900-0AB10
=V1WC3-FC1	1	CIRCUIT BREAKER 240V 14KA, 1-POLE, C, 16A, D=70MM	5SJ4116-7HG41	SIE	SIE.5SJ4116-7HG41
=V1WC3-FC1	1	AUXILARY SWITCH 1NO1NC UL489	5ST3010-0HG	SIE	SIE.5ST3010-0HG
=V1WC3-FC2	1	CIRCUIT BREAKER 240V 14KA, 1-POLE, C, 3A, D=70MM	5SJ4103-7HG41	SIE	SIE.5SJ4103-7HG41
=V1WC3-FC2	1	AUXILARY SWITCH 1NO1NC UL489	5ST3010-0HG	SIE	SIE.5ST3010-0HG
=V1WC3-FC3	1	CIRCUIT BREAKER 240V 14KA, 1-POLE, C, 16A, D=70MM	5SJ4116-7HG41	SIE	SIE.5SJ4116-7HG41
=V1WC3-XG2	1	Panel Interface Connector with USB Type A/F to USB Type A/M [Qty: 2]; Category 5e RJ45 Panel Mount Housing; UL Type 4; Duplex Outlet; 5 Amp Circuit Breaker	RSM-2RKM 50RD5		GT_N.P-P11#2R2-K3RD5
=V1WC4-FC11	1	SITOP SEL1200 8 x 10A	6EP4438-7FB00-3DX0		SIE.6EP4438-7FB00-3DX0
=V1WC4-FC12	1	SITOP SEL1200 8 x 10A	6EP4438-7FB00-3DX0		SIE.6EP4438-7FB00-3DX0
=V1WC4-TA1	1	SITOP PSU6200 1ph 24 V/20 A	6EP3336-7SB00-3AX0		SIE.6EP3336-7SB00-3AX0
=V1WC4-XG51	1	TEE, 5-PIN MINI, STANDARD KEYWAY	RSM-2RKM 50	TURCK	TUR.RSM-2RKM 50

			Date	1/17/2023	Volvo Trucks North America	Valiant TMS	Parts list : SIE.6ES7155-6AA01-0BN0_subassembly - TUR.RSM-2RKM 50	Drawing name: =2V09&EFS-EL	= + V1UC14
			Ed.	MKLEPADLO					
			Appr		P6700 Bodyside LH - Robot Cell 2V09	Scale 1:1		Document type: EPB	Project nr: 22-16150
Modification	Date	Name	Original		Replacement of	Replaced by			Page 1 / 1533

Parts list

F01_001

Device tag	Quantity	Designation	Type number	Supplier	Part number
=V1KF1-KF15	1				SIE.6ES7155-6AA01-0BN0_subassembly
=V1KF1-KF15	1	ET200SP, SERVERMODULE	6ES7193-6PA00-0AA0		SIE.6ES7193-6PA00-0AA0
=V1KF1-KF15.11	1	ET 200SP, DI 16x 24V DC ST, PU 1	6ES7131-6BH01-0BA0	SIE	SIE.6ES7131-6BH01-0BA0
=V1KF1-KF15.11	1	BASEUNIT TYPE A0, BU15-P16+A0+2D	6ES7193-6BP00-0DA0	SIE	SIE.6ES7193-6BP00-0DA0
=V1KF1-KF15.12	1	ET 200SP, DI 16x 24V DC ST, PU 1	6ES7131-6BH01-0BA0	SIE	SIE.6ES7131-6BH01-0BA0
=V1KF1-KF15.12	1	BASEUNIT TYPE A0, BU15-P16+A0+2D	6ES7193-6BP00-0DA0	SIE	SIE.6ES7193-6BP00-0DA0
=V1KF1-KF15.21	1	ET 200SP, DQ 16x 24V DC/0,5A ST, PU 1	6ES7132-6BH01-0BA0	SIE	SIE.6ES7132-6BH01-0BA0
=V1KF1-KF15.21	1	BASEUNIT TYPE A0, BU15-P16+A0+2D	6ES7193-6BP00-0DA0	SIE	SIE.6ES7193-6BP00-0DA0
=V1KF1-KF15.31	1	ET 200SP, El-Mod., F-DI 8x24VDC HF	6ES7136-6BA00-0CA0		SIE.6ES7136-6BA00-0CA0
=V1KF1-KF15.31	1	BASEUNIT TYPE A0, BU15-P16+A0+2B	6ES7193-6BP00-0BA0	SIE	SIE.6ES7193-6BP00-0BA0
=V1KF1-KF15.32	1	ET 200SP, El-Mod., F-DI 8x24VDC HF	6ES7136-6BA00-0CA0		SIE.6ES7136-6BA00-0CA0
=V1KF1-KF15.32	1	BASEUNIT TYPE A0, BU15-P16+A0+2B	6ES7193-6BP00-0BA0	SIE	SIE.6ES7193-6BP00-0BA0
=V1KF1-KF15.41	1	ET 200SP, El-Mod., F-DQ 4xDC 24V/2A	6ES7136-6DB00-0CA0		SIE.6ES7136-6DB00-0CA0
=V1KF1-KF15.41	1	BASEUNIT TYPE A0, BU15-P16+A0+2B	6ES7193-6BP00-0BA0	SIE	SIE.6ES7193-6BP00-0BA0
=V1KF1-KF15.42	1	ET 200SP, El-Mod., F-DQ 4xDC 24V/2A	6ES7136-6DB00-0CA0		SIE.6ES7136-6DB00-0CA0
=V1KF1-KF15.42	1	BASEUNIT TYPE A0, BU15-P16+A0+2B	6ES7193-6BP00-0BA0	SIE	SIE.6ES7193-6BP00-0BA0
=V1KF1-KF15.51	1	ET 200SP, F-RQ 1x24VDC/24..230VAC/5A ST	6ES7136-6RA00-0BF0		SIE.6ES7136-6RA00-0BF0
=V1KF1-KF15.51	1	BASEUNIT TYPE F0, BU20-P8+A4+0B	6ES7193-6BP20-0BF0	SIE	SIE.6ES7193-6BP20-0BF0
=V1KF1-KF15.52	1	ET 200SP, F-RQ 1x24VDC/24..230VAC/5A ST	6ES7136-6RA00-0BF0		SIE.6ES7136-6RA00-0BF0
=V1KF1-KF15.52	1	BASEUNIT TYPE F0, BU20-P8+A4+0B	6ES7193-6BP20-0BF0	SIE	SIE.6ES7193-6BP20-0BF0
=V1KF1-KF15.53	1	ET 200SP, F-RQ 1x24VDC/24..230VAC/5A ST	6ES7136-6RA00-0BF0		SIE.6ES7136-6RA00-0BF0
=V1KF1-KF15.53	1	BASEUNIT TYPE F0, BU20-P8+A4+0B	6ES7193-6BP20-0BF0	SIE	SIE.6ES7193-6BP20-0BF0
=V1KF1-KF15.54	1	ET 200SP, F-RQ 1x24VDC/24..230VAC/5A ST	6ES7136-6RA00-0BF0		SIE.6ES7136-6RA00-0BF0
=V1KF1-KF15.54	1	BASEUNIT TYPE F0, BU20-P8+A4+0B	6ES7193-6BP20-0BF0	SIE	SIE.6ES7193-6BP20-0BF0
=V1KF1-KF100.15	1	SCALANCE XC216	6GK5216-0BA00-2AC2	SIE	SIE.6GK5216-0BA00-2AC2
=V1KF1-KF100.15	1	C-PLUG	6GK1900-0AB10	SIE	SIE.6GK1900-0AB10
=V1WC3-FC1	1	CIRCUIT BREAKER 240V 14KA, 1-POLE, C, 16A, D=70MM	5SJ4116-7HG41	SIE	SIE.5SJ4116-7HG41
=V1WC3-FC1	1	AUXILARY SWITCH 1NO1NC UL489	5ST3010-0HG	SIE	SIE.5ST3010-0HG
=V1WC3-FC2	1	CIRCUIT BREAKER 240V 14KA, 1-POLE, C, 3A, D=70MM	5SJ4103-7HG41	SIE	SIE.5SJ4103-7HG41
=V1WC3-FC2	1	AUXILARY SWITCH 1NO1NC UL489	5ST3010-0HG	SIE	SIE.5ST3010-0HG
=V1WC3-FC3	1	CIRCUIT BREAKER 240V 14KA, 1-POLE, C, 16A, D=70MM	5SJ4116-7HG41	SIE	SIE.5SJ4116-7HG41
=V1WC3-XG2	1	Panel Interface Connector with USB Type A/F to USB Type A/M [Qty: 2]; Category 5e RJ45 Feed-Through; Housing; UL Type 4; Duplex Outlet; 5 Amp Circuit Breaker	GT_N.P-P11#2R2-K3RD5		GT_N.P-P11#2R2-K3RD5
=V1WC4-FC11	1	SITOP SEL1200 8 x 10A	6EP4438-7FB00-3DX0		SIE.6EP4438-7FB00-3DX0
=V1WC4-FC12	1	SITOP SEL1200 8 x 10A	6EP4438-7FB00-3DX0		SIE.6EP4438-7FB00-3DX0
=V1WC4-TA1	1	SITOP PSU6200 1ph 24 V/20 A	6EP3336-7SB00-3AX0		SIE.6EP3336-7SB00-3AX0

+.UC14/1

+.UC32/1

			Date	1/17/2023	Volvo Trucks North America	Valiant TMS	Parts list : SIE.6ES7155-6AA01-0BN0_subassembly - SIE.6EP3336-7SB00-3AX0	Drawing name: =2V09&EFS-EL	= + V1UC15
			Ed.	MKLEPADLO					
			Appr		P6700 Bodyside LH - Robot Cell 2V09	Scale 1:1		Document type: EPB	Project nr: 22-16150
Modification	Date	Name	Original		Replacement of	Replaced by			Page 1 / 1533

Parts list

F01_001

Device tag	Quantity	Designation	Type number	Supplier	Part number
=V1KF1-KF32	1				SIE.6ES7155-6AA01-0BN0_subassembly
=V1KF1-KF32	1	ET200SP, SERVERMODULE	6ES7193-6PA00-0AA0		SIE.6ES7193-6PA00-0AA0
=V1KF1-KF32.11	1	ET 200SP, DI 16x 24V DC ST, PU 1	6ES7131-6BH01-0BA0	SIE	SIE.6ES7131-6BH01-0BA0
=V1KF1-KF32.11	1	BASEUNIT TYPE A0, BU15-P16+A0+2D	6ES7193-6BP00-0DA0	SIE	SIE.6ES7193-6BP00-0DA0
=V1KF1-KF32.21	1	ET 200SP, DQ 16x 24V DC/0,5A ST, PU 1	6ES7132-6BH01-0BA0	SIE	SIE.6ES7132-6BH01-0BA0
=V1KF1-KF32.21	1	BASEUNIT TYPE A0, BU15-P16+A0+2D	6ES7193-6BP00-0DA0	SIE	SIE.6ES7193-6BP00-0DA0
=V1KF1-KF32.31	1	ET 200SP, El-Mod., F-DI 8x24VDC HF	6ES7136-6BA01-0CA0	SIE	SIE.6ES7136-6BA01-0CA0
=V1KF1-KF32.31	1	BASEUNIT TYPE A0, BU15-P16+A0+2D	6ES7193-6BP00-0DA0	SIE	SIE.6ES7193-6BP00-0DA0
=V1KF1-PNET1	1	Profinet cable - RJ45 plug to M12 Female receptacle; 1m long	RJ45S FKSDED 423-1M	TURCK	TUR.RJ45S FKSDED 423-1M
=V1SF0PG1-M1	1	Ground bar kit, 5 positions.	ECGB5	SIE	US2.ECGB5
=V1SF0PG1-M1	1	Wiring Duct Covers, PVC	C1.5LG6	PAN	PAN.C1.5LG6
=V1SF0PG1-M1	1	Wiring Duct Covers, PVC	C1LG6	PAN	PAN.C1LG6
=V1SF0PG1-M1	1	Wide Slotted Wiring Duct, PVC	G1.5X4LG6	PAN	PAN.G1.5X4LG6
=V1SF0PG1-M1	1	Wide Slotted Wiring Duct, PVC	G1X4LG6	PAN	PAN.G1X4LG6
=V1SF0PG1-PG1	1	SIMATIC HMI TP1500 COMFORT	6AV2124-0QC02-0AX1	SIE	SIE.6AV2124-0QC02-0AX1
=V1SF0PG1-PG1	1	SIMATIC HMI SD MEMORY CARD 2 GB	6AV2181-8XP00-0AX0	SIE	SIE.6AV2181-8XP00-0AX0
=V1SF0PG1-SF1	1	PUSHBUTTON CP1-10G-20	CP1-10G-20	ABB	ABB.1SFA619100R1022
=V1SF0PG1-SF2	1	PUSHBUTTON CP1-10Y-20	CP1-10Y-20	ABB	ABB.1SFA619100R1023
=V1SF0PG1-SF3/PF3	1	PUSHBUTTON CP1-11C-10	CP1-11C-10	ABB	ABB.1SFA619100R1118
=V1SF0PG1-UC01	1	Compact enclosure AX	AX.6315450	RIT	RIT.6315450
=V1SF0PG1-UC01	1	Pedestal, open	CP.6106500	RIT	RIT.6106500
=V1SF0PG1-UC01	1	Coupling CP 60	CP.6206300	RIT	RIT.6206300
=V1SF0PG1-UC01	1	Accessory bag, for AX	AX.5051300	RIT	RIT.5051300
=V1SF0PG1-UC01	1	Mounting plate, for AX	AX.5051375	RIT	RIT.5051375
=V1WC4-FC1	1	Miniature Circuit Breaker MCBs - S200UDC - Number of Poles 1 - Tripping characteristic K	S201UDC-K5	ABB	ABB.2CDS271517R0357
=V1WC4-FC1	1	S2C-H6RU - Auxiliary Contact	S2C-H6RU	ABB	ABB.2CDS200914R0001
=V1WC4-FC2	1	Miniature Circuit Breaker MCBs - S200UDC - Number of Poles 1 - Tripping characteristic K	S201UDC-K5	ABB	ABB.2CDS271517R0357
=V1WC4-FC2	1	S2C-H6RU - Auxiliary Contact	S2C-H6RU	ABB	ABB.2CDS200914R0001
=V1WC4-PG1	1	SIMATIC HMI TP1500 COMFORT	6AV2124-0QC02-0AX1	SIE	SIE.6AV2124-0QC02-0AX1
=V1WC4-XD1	1	RECEPTACLE MINI 5P MALE 1M	RSF 50-1M/NPT	TURCK	TUR.RSF 50-1M/NPT

+.UC15/1

+.UC51/1

			Date	1/17/2023	Volvo Trucks North America	Valiant TMS	Parts list : SIE.6ES7155-6AA01-0BN0_subassembly - TUR.RSF 50-1M/NPT	Drawing name: =2V09&EFS-EL	= + V1UC32	
			Ed.	MKLEPADLO						
			Appr		P6700 Bodyside LH - Robot Cell 2V09	Scale 1:1		Document type: EPB	Project nr: 22-16150	Page 1 / 1533
Modification	Date	Name	Original		Replacement of	Replaced by				

Parts list

F01_001

Device tag	Quantity	Designation	Type number	Supplier	Part number
=V1SF0PG1-UC01	1	Compact enclosure AX	AX.6315150	RIT	RIT.6315150
=V1SF0PG2-PG1	1	SIMATIC HMI TP700 COMFORT	6AV2124-0GC01-0AX0	SIE	SIE.6AV2124-0GC01-0AX0
=V1SF0PG2-PG1	1	SIMATIC HMI SD MEMORY CARD 2 GB	6AV2181-8XP00-0AX0	SIE	SIE.6AV2181-8XP00-0AX0
=V1SF0PG2-PNET1	1	Profinet cable - RJ45 plug to M12 Female receptacle; 0.5m long	RJ45S FKSDED 423-0.5M	TURCK	TUR.RJ45S FKSDED 423-0.5M
=V1SF0PG2-UC01	1	Compact enclosure AX	AX.6315150	RIT	RIT.6315150
=V1SF0PG2-UC01	1	Accessory bag, for AX	AX.5051300	RIT	RIT.5051300
=V1SF0PG2-UC01	1	Mounting plate, for AX	AX.5051368	RIT	RIT.5051368
=V1SF0PG2-XD1	1	RECEPTACLE MINI 5P MALE 1M	RSF 50-1M/NPT	TURCK	TUR.RSF 50-1M/NPT
=V1SF0PG2-XG1	1	TEE, 5-PIN MINI, STANDARD KEYWAY	RSM-2RKM 50	TURCK	TUR.RSM-2RKM 50

+.UC32/1

+.UC52/1

			Date	1/17/2023	Volvo Trucks North America	Valiant TMS	Parts list : RIT.6315150 - TUR.RSM-2RKM 50	Drawing name: =2V09&EFS-EL	=	
			Ed.	MKLEPADLO					+ V1UC51	
			Appr		P6700 Bodyside LH - Robot Cell 2V09	Scale 1:1		Document type: EPB	Project nr: 22-16150	Page 1 / 1533
Modification	Date	Name	Original		Replacement of	Replaced by				

Parts list

F01_001

Device tag	Quantity	Designation	Type number	Supplier	Part number
=V1SF0PG2-UC01	1	Compact enclosure AX	AX.6315150	RIT	RIT.6315150
=V1SF0PG3-PG1	1	SIMATIC HMI TP700 COMFORT	6AV2124-0GC01-0AX0	SIE	SIE.6AV2124-0GC01-0AX0
=V1SF0PG3-PG1	1	SIMATIC HMI SD MEMORY CARD 2 GB	6AV2181-8XP00-0AX0	SIE	SIE.6AV2181-8XP00-0AX0
=V1SF0PG3-PNET1	1	Profinet cable - RJ45 plug to M12 Female receptacle; 0.5m long	RJ45S FKSDED 423-0.5M	TURCK	TUR.RJ45S FKSDED 423-0.5M
=V1SF0PG3-UC01	1	Compact enclosure AX	AX.6315150	RIT	RIT.6315150
=V1SF0PG3-UC01	1	Accessory bag, for AX	AX.5051300	RIT	RIT.5051300
=V1SF0PG3-UC01	1	Mounting plate, for AX	AX.5051368	RIT	RIT.5051368
=V1SF0PG3-XD1	1	RECEPTACLE MINI 5P MALE 1M	RSF 50-1M/NPT	TURCK	TUR.RSF 50-1M/NPT

+.UC51/1

+.UC53/1

			Date	1/17/2023	Volvo Trucks North America	Valiant TMS	Parts list : RIT.6315150 - TUR.RSF 50-1M/NPT	Drawing name: =2V09&EFS-EL	=	
			Ed.	MKLEPADLO					+ V1UC52	
			Appr		P6700 Bodyside LH - Robot Cell 2V09	Scale 1:1		Document type: EPB	Project nr: 22-16150	Page 1 / 1533
Modification	Date	Name	Original		Replacement of	Replaced by				

Parts list

F01_001

Device tag	Quantity	Designation	Type number	Supplier	Part number
=V1SF0PG3-UC01	1	Compact enclosure AX	AX.6315150	RIT	RIT.6315150
=V1SF0PG3-UC01	1	Accessory bag, for AX	AX.5051300	RIT	RIT.5051300
=V1SF0PG3-UC01	1	Mounting plate, for AX	AX.5051368	RIT	RIT.5051368
=V1SF0PG4-PG1	1	SIMATIC HMI TP700 COMFORT	6AV2124-0GC01-0AX0	SIE	SIE.6AV2124-0GC01-0AX0
=V1SF0PG4-PG1	1	SIMATIC HMI SD MEMORY CARD 2 GB	6AV2181-8XP00-0AX0	SIE	SIE.6AV2181-8XP00-0AX0
=V1SF0PG4-PNET1	1	Profinet cable - RJ45 plug to M12 Female receptacle; 0.5m long	RJ45S FKSDED 423-0.5M	TURCK	TUR.RJ45S FKSDED 423-0.5M
=V1SF0PG4-XD1	1	RECEPTACLE MINI 5P MALE 1M	RSF 50-1M/NPT	TURCK	TUR.RSF 50-1M/NPT
=V1SF0PG4-XG1	1	TEE, 5-PIN MINI, STANDARD KEYWAY	RSM-2RKM 50	TURCK	TUR.RSM-2RKM 50

+.UC52/1

+.UC54/1

			Date	1/17/2023	Volvo Trucks North America	Valiant TMS	Parts list : RIT.6315150 - TUR.RSM-2RKM 50	Drawing name: =2V09&EFS-EL	=	
			Ed.	MKLEPADLO					+ V1UC53	
			Appr		P6700 Bodyside LH - Robot Cell 2V09	Scale 1:1		Document type: EPB	Project nr: 22-16150	Page 1 / 1533
Modification	Date	Name	Original		Replacement of	Replaced by				

Parts list

F01_001

Device tag	Quantity	Designation	Type number	Supplier	Part number
=V1SF0PG4-UC01	1	Compact enclosure AX	AX.6315150	RIT	RIT.6315150
=V1SF0PG5-PG1	1	SIMATIC HMI TP700 COMFORT	6AV2124-0GC01-0AX0	SIE	SIE.6AV2124-0GC01-0AX0
=V1SF0PG5-PG1	1	SIMATIC HMI SD MEMORY CARD 2 GB	6AV2181-8XP00-0AX0	SIE	SIE.6AV2181-8XP00-0AX0
=V1SF0PG5-PNET1	1	Profinet cable - RJ45 plug to M12 Female receptacle; 0.5m long	RJ45S FKSDED 423-0.5M	TURCK	TUR.RJ45S FKSDED 423-0.5M
=V1SF0PG5-UC01	1	Compact enclosure AX	AX.6315150	RIT	RIT.6315150
=V1SF0PG5-UC01	1	Accessory bag, for AX	AX.5051300	RIT	RIT.5051300
=V1SF0PG5-UC01	1	Mounting plate, for AX	AX.5051368	RIT	RIT.5051368
=V1SF0PG5-XD1	1	RECEPTACLE MINI 5P MALE 1M	RSF 50-1M/NPT	TURCK	TUR.RSF 50-1M/NPT
=V1SF0PG5-XG2	1	TEE, 5-PIN MINI, STANDARD KEYWAY	RSM-2RKM 50	TURCK	TUR.RSM-2RKM 50

+.UC53/1

+.UC61/1

			Date	1/17/2023	Volvo Trucks North America	Valiant TMS	Parts list : RIT.6315150 - TUR.RSM-2RKM 50	Drawing name: =2V09&EFS-EL	= + V1UC54
			Ed.	MKLEPADLO					
			Appr		P6700 Bodyside LH - Robot Cell 2V09	Scale 1:1		Document type: EPB	Project nr: 22-16150
Modification	Date	Name	Original		Replacement of	Replaced by			Page 1 / 1533

Parts list

F01_001

Device tag	Quantity	Designation	Type number	Supplier	Part number
=V1PZ1PF1-PF1	1	Signaling column connection element for pipe mounting incl. end cover and seal	8WD4408-0AA	SIE	SIE.8WD4408-0AA
=V1PZ1PF1-PF1	1	Tube with foot, tube length 100 mm, accessory for signaling columns 8WD44, D=70 mm	8WD4308-0DA	SIEMENS	SIE.8WD4308-0DA
=V1PZ1PF1-PF1	1	Signaling column multifunctional siren element different sounds can be set 24 V	8WD4420-0EA2		SIE.8WD4420-0EA2
=V1PZ1PF1-PF1	1	Signaling column continuous light element LED red, 24 V AC/DC	8WD4420-5AB	SIE	SIE.8WD4420-5AB
=V1PZ1PF1-PF1	1	Signaling column continuous light element LED green, 24 V AC/DC	8WD4420-5AC	SIE	SIE.8WD4420-5AC
=V1PZ1PF1-PF1	1	Signaling column continuous light element LED yellow, 24 V AC/DC	8WD4420-5AD	SIE	SIE.8WD4420-5AD
=V1PZ1PF1-PF1	1	Signaling column continuous light element LED blue, 24 V AC/DC	8WD4420-5AF	SIE	SIE.8WD4420-5AF
=V1PZ1PF1-UC01	1	Small enclosures KX	KX.1574000		RIT.1574000
=V1PZ1PF1-XD1	1	RECEPTACLE 1-1/8" MINIFAST 10P MALE 2M	RSF 106-2M/14.5/NPT/CS16486	TURCK	TUR.RSF 106-2M/14.5/NPT/CS16486

+.UC54/1

+.UC62/1

			Date	1/17/2023	Volvo Trucks North America	Valiant TMS	Parts list : SIE.8WD4408-0AA - TUR.RSF 106-2M/14.5/NPT/CS16486	Drawing name: =2V09&EFS-EL	= + V1UC61	
			Ed.	MKLEPADLO						
			Appr		P6700 Bodyside LH - Robot Cell 2V09	Scale 1:1		Document type: EPB	Project nr: 22-16150	Page 1 / 1533
Modification	Date	Name	Original		Replacement of	Replaced by				

Parts list

F01_001

Device tag	Quantity	Designation	Type number	Supplier	Part number
=V1PZ1PF2-PF1	1	Signaling column connection element for pipe mounting incl. end cover and seal	8WD4408-0AA	SIE	SIE.8WD4408-0AA
=V1PZ1PF2-PF1	1	Tube with foot, tube length 100 mm, accessory for signaling columns 8WD44, D=70 mm	8WD4308-0DA	SIEMENS	SIE.8WD4308-0DA
=V1PZ1PF2-PF1	1	Signaling column multifunctional siren element different sounds can be set 24 V	8WD4420-0EA2		SIE.8WD4420-0EA2
=V1PZ1PF2-PF1	1	Signaling column continuous light element LED red, 24 V AC/DC	8WD4420-5AB	SIE	SIE.8WD4420-5AB
=V1PZ1PF2-PF1	1	Signaling column continuous light element LED green, 24 V AC/DC	8WD4420-5AC	SIE	SIE.8WD4420-5AC
=V1PZ1PF2-PF1	1	Signaling column continuous light element LED yellow, 24 V AC/DC	8WD4420-5AD	SIE	SIE.8WD4420-5AD
=V1PZ1PF2-PF1	1	Signaling column continuous light element LED blue, 24 V AC/DC	8WD4420-5AF	SIE	SIE.8WD4420-5AF
=V1PZ1PF2-UC01	1	Small enclosures KX	KX.1574000		RIT.1574000
=V1PZ1PF2-XD1	1	RECEPTACLE 1-1/8" MINIFAST 10P MALE 2M	RSF 106-2M/14.5/NPT/CS16486	TURCK	TUR.RSF 106-2M/14.5/NPT/CS16486

+.UC61/1

+.UC63/1

			Date	1/17/2023	Volvo Trucks North America	Valiant TMS	Parts list : SIE.8WD4408-0AA - TUR.RSF 106-2M/14.5/NPT/CS16486	Drawing name: =2V09&EFS-EL	= + V1UC62	
			Ed.	MKLEPADLO						
			Appr		P6700 Bodyside LH - Robot Cell 2V09			Document type: EPB	Project nr: 22-16150	Page 1 / 1533
Modification	Date	Name	Original		Replacement of	Replaced by	Scale 1:1			

Parts list

F01_001

Device tag	Quantity	Designation	Type number	Supplier	Part number
=V1PZ1PF3-PF1	1	Signaling column connection element for pipe mounting incl. end cover and seal	8WD4408-0AA	SIE	SIE.8WD4408-0AA
=V1PZ1PF3-PF1	1	Tube with foot, tube length 100 mm, accessory for signaling columns 8WD44, D=70 mm	8WD4308-0DA	SIEMENS	SIE.8WD4308-0DA
=V1PZ1PF3-PF1	1	Signaling column multifunctional siren element different sounds can be set 24 V	8WD4420-0EA2		SIE.8WD4420-0EA2
=V1PZ1PF3-PF1	1	Signaling column continuous light element LED red, 24 V AC/DC	8WD4420-5AB	SIE	SIE.8WD4420-5AB
=V1PZ1PF3-PF1	1	Signaling column continuous light element LED green, 24 V AC/DC	8WD4420-5AC	SIE	SIE.8WD4420-5AC
=V1PZ1PF3-PF1	1	Signaling column continuous light element LED yellow, 24 V AC/DC	8WD4420-5AD	SIE	SIE.8WD4420-5AD
=V1PZ1PF3-PF1	1	Signaling column continuous light element LED blue, 24 V AC/DC	8WD4420-5AF	SIE	SIE.8WD4420-5AF
=V1PZ1PF3-UC01	1	Small enclosures KX	KX.1574000		RIT.1574000
=V1PZ1PF3-XD1	1	RECEPTACLE 1-1/8" MINIFAST 10P MALE 2M	RSF 106-2M/14.5/NPT/CS16486	TURCK	TUR.RSF 106-2M/14.5/NPT/CS16486

+.UC62/1

+.UC64/1

			Date	1/17/2023	Volvo Trucks North America	Valiant TMS	Parts list : SIE.8WD4408-0AA - TUR.RSF 106-2M/14.5/NPT/CS16486	Drawing name: =2V09&EFS-EL	= + V1UC63	
			Ed.	MKLEPADLO						
			Appr		P6700 Bodyside LH - Robot Cell 2V09	Scale 1:1		Document type: EPB	Project nr: 22-16150	Page 1 / 1533
Modification	Date	Name	Original		Replacement of	Replaced by				

Parts list

F01_001

Device tag	Quantity	Designation	Type number	Supplier	Part number
=V1PZ1PF4-PF1	1	Signaling column connection element for pipe mounting incl. end cover and seal	8WD4408-0AA	SIE	SIE.8WD4408-0AA
=V1PZ1PF4-PF1	1	Tube with foot, tube length 100 mm, accessory for signaling columns 8WD44, D=70 mm	8WD4308-0DA	SIEMENS	SIE.8WD4308-0DA
=V1PZ1PF4-PF1	1	Signaling column multifunctional siren element different sounds can be set 24 V	8WD4420-0EA2		SIE.8WD4420-0EA2
=V1PZ1PF4-PF1	1	Signaling column continuous light element LED red, 24 V AC/DC	8WD4420-5AB	SIE	SIE.8WD4420-5AB
=V1PZ1PF4-PF1	1	Signaling column continuous light element LED green, 24 V AC/DC	8WD4420-5AC	SIE	SIE.8WD4420-5AC
=V1PZ1PF4-PF1	1	Signaling column continuous light element LED yellow, 24 V AC/DC	8WD4420-5AD	SIE	SIE.8WD4420-5AD
=V1PZ1PF4-PF1	1	Signaling column continuous light element LED blue, 24 V AC/DC	8WD4420-5AF	SIE	SIE.8WD4420-5AF
=V1PZ1PF4-UC01	1	Small enclosures KX	KX.1574000		RIT.1574000
=V1PZ1PF4-XD1	1	RECEPTACLE 1-1/8" MINIFAST 10P MALE 2M	RSF 106-2M/14.5/NPT/CS16486	TURCK	TUR.RSF 106-2M/14.5/NPT/CS16486

+.UC63/1

+.UC71/1

			Date	1/17/2023	Volvo Trucks North America	Valiant TMS	Parts list : SIE.8WD4408-0AA - TUR.RSF 106-2M/14.5/NPT/CS16486	Drawing name: =2V09&EFS-EL	= + V1UC64	
			Ed.	MKLEPADLO						
			Appr		P6700 Bodyside LH - Robot Cell 2V09	Scale 1:1		Document type: EPB	Project nr: 22-16150	Page 1 / 1533
Modification	Date	Name	Original		Replacement of	Replaced by				

Parts list

F01_001

Device tag	Quantity	Designation	Type number	Supplier	Part number
=V1SF0SF1-SF1	1	Push-to-Stop, Twist-to-Release Electro-Mechanical Push Buttons	SSA-EBM Series	BANNER	BAN.SSA-EBM-12EB1Q8OTBB

+.UC64/1

+.UC72/1

Parts list

F01_001

Device tag	Quantity	Designation	Type number	Supplier	Part number
=V1SF0SF2-SF1	1	Push-to-Stop, Twist-to-Release Electro-Mechanical Push Buttons	SSA-EBM Series	BANNER	BAN.SSA-EBM-12EB1Q8OTBB

+.UC71/1

+.UC73/1

			Date	1/17/2023	Volvo Trucks North America	Valiant TMS	Parts list : BAN.SSA-EBM-12EB1Q8OTBB - BAN.SSA-EBM-12EB1Q8OTBB	Drawing name: =2V09&EFS-EL		=	
			Ed.	MKLEPADLO						+ V1UC72	
			Appr		P6700 Bodyside LH - Robot Cell 2V09	Scale 1:1		Document type: EPB	Project nr: 22-16150	Page	1
Modification	Date	Name	Original		Replacement of	Replaced by					1533

Parts list

F01_001

Device tag	Quantity	Designation	Type number	Supplier	Part number
=V1SF0SF3-SF1	1	Push-to-Stop, Twist-to-Release Electro-Mechanical Push Buttons	SSA-EBM Series	BANNER	BAN.SSA-EBM-12EB1Q8OTBB

+.UC72/1

+.UC74/1

			Date	1/17/2023	Volvo Trucks North America	Valiant TMS	Parts list : BAN.SSA-EBM-12EB1Q8OTBB - BAN.SSA-EBM-12EB1Q8OTBB	Drawing name: =2V09&EFS-EL	=	
			Ed.	MKLEPADLO					+ V1UC73	
			Appr		P6700 Bodyside LH - Robot Cell 2V09	Scale 1:1		Document type: EPB	Project nr: 22-16150	Page 1 / 1533
Modification	Date	Name	Original		Replacement of	Replaced by				

Parts list

F01_001

Device tag	Quantity	Designation	Type number	Supplier	Part number
=V1SF0SF4-SF1	1	Push-to-Stop, Twist-to-Release Electro-Mechanical Push Buttons	SSA-EBM Series	BANNER	BAN.SSA-EBM-12EB1Q8OTBB

+.UC73/1

+.UC161/1

			Date	1/17/2023	Volvo Trucks North America	Valiant TMS	Parts list : BAN.SSA-EBM-12EB1Q8OTBB - BAN.SSA-EBM-12EB1Q8OTBB	Drawing name: =2V09&EFS-EL	=	
			Ed.	MKLEPADLO					+ V1UC74	
			Appr		P6700 Bodyside LH - Robot Cell 2V09	Scale 1:1		Document type: EPB	Project nr: 22-16150	Page 1 / 1533
Modification	Date	Name	Original		Replacement of	Replaced by				

Parts list

F01_001

Device tag	Quantity	Designation	Type number	Supplier	Part number
=V1WC2-XG1	1	3P DISTRIBUTION BLOCK 2 LINE / 6 LOAD	CPB-E2G06-03	SYNDEVCO	CPB-E2G06-03
=V1WC2-XG2	1	3P GROUND BLOCK 2 LINE / 6 LOAD	HCG-E2G06	SYNDEVCO	HCG-E2G06
=WC1-WC1	1	Golvskåp TS 8 sidskåp	TS8	RIT	RIT.SETS8205SID5
=WC1-WC1	1	TS Trim panel, sides, H: 100 mm, for W: 500 mm, RAL 7022, sheet steel	TS.8601050	RIT	RIT.8601050
=WC1-WC1	1	TS Base/plinth component, rear, H: 100 mm, for W: 1200 mm, RAL 7022, sheet steel	TS.8601200	RIT	RIT.8601200
=WC1-WC1	1	TS Side panel, screw-fastened, for TS, TS IT, for WD: 2000x500 mm, Sheet steel	TS.8105235	RIT	RIT.8105235
=WC1-WC1	1	PS Wiring plan pockets, for TS, CM, SE, PC, TP pedestal, sheet steel	TS.4115000	RIT	RIT.4115000

+.UC74/1

+.UC162/1

			Date	1/17/2023	Volvo Trucks North America	Valiant TMS	Parts list : CPB-E2G06-03 - RIT.4115000	Drawing name: =2V09&EFS-EL	=	
			Ed.	MKLEPADLO					+ V1UC161	
			Appr		P6700 Bodyside LH - Robot Cell 2V09			Document type: EPB	Project nr: 22-16150	Page 1
Modification	Date	Name	Original		Replacement of / Replaced by	Scale 1:1				1533

Parts list

F01_001

Device tag	Quantity	Designation	Type number	Supplier	Part number
=V1WC2-XG1	1	3P DISTRIBUTION BLOCK 2 LINE / 6 LOAD	CPB-E2G06-03	SYNDEVCO	CPB-E2G06-03
=V1WC2-XG2	1	3P GROUND BLOCK 2 LINE / 6 LOAD	HCG-E2G06	SYNDEVCO	HCG-E2G06
=WC1-WC1	1	Golvskåp TS 8 sidskåp	TS8	RIT	RIT.SETS8205SID5
=WC1-WC1	1	TS Trim panel, sides, H: 100 mm, for W: 500 mm, RAL 7022, sheet steel	TS.8601050	RIT	RIT.8601050
=WC1-WC1	1	TS Base/plinth component, rear, H: 100 mm, for W: 1200 mm, RAL 7022, sheet steel	TS.8601200	RIT	RIT.8601200
=WC1-WC1	1	TS Side panel, screw-fastened, for TS, TS IT, for WD: 2000x500 mm, Sheet steel	TS.8105235	RIT	RIT.8105235
=WC1-WC1	1	PS Wiring plan pockets, for TS, CM, SE, PC, TP pedestal, sheet steel	TS.4115000	RIT	RIT.4115000

+.UC161/1

+.UC163/1

			Date	1/17/2023	Volvo Trucks North America	Valiant TMS	Parts list : CPB-E2G06-03 - RIT.4115000	Drawing name: =2V09&EFS-EL	=	
			Ed.	MKLEPADLO					+ V1UC162	
			Appr		P6700 Bodyside LH - Robot Cell 2V09	Scale 1:1		Document type: EPB	Project nr: 22-16150	Page 1 / 1533
Modification	Date	Name	Original		Replacement of / Replaced by					

Parts list

F01_001

Device tag	Quantity	Designation	Type number	Supplier	Part number
=V1WC2-XG1	1	3P DISTRIBUTION BLOCK 1 LINE / 4 LOAD	MB-231-03	SYNDEVCO	MB-231-03
=V1WC2-XG2	1	3P GROUND BLOCK 3 LINE / 3 LOAD	STGS-3D-3D	SYNDEVCO	STGS-3D-3D
=WC1-WC1	1	Golvskåp TS 8 sidskåp	TS8	RIT	RIT.SETS8205SID5
=WC1-WC1	1	TS Trim panel, sides, H: 100 mm, for W: 500 mm, RAL 7022, sheet steel	TS.8601050	RIT	RIT.8601050
=WC1-WC1	1	TS Base/plinth component, rear, H: 100 mm, for W: 1200 mm, RAL 7022, sheet steel	TS.8601200	RIT	RIT.8601200
=WC1-WC1	1	TS Side panel, screw-fastened, for TS, TS IT, for WD: 2000x500 mm, Sheet steel	TS.8105235	RIT	RIT.8105235
=WC1-WC1	1	PS Wiring plan pockets, for TS, CM, SE, PC, TP pedestal, sheet steel	TS.4115000	RIT	RIT.4115000

+.UC162/1

+.UC164/1

			Date	1/17/2023	Volvo Trucks North America	Valiant TMS	Parts list : MB-231-03 - RIT.4115000	Drawing name: =2V09&EFS-EL	=	
			Ed.	MKLEPADLO					+ V1UC163	
			Appr		P6700 Bodyside LH - Robot Cell 2V09			Document type: EPB	Project nr: 22-16150	Page 1
Modification	Date	Name	Original		Replacement of	Replaced by	Scale 1:1			1533

Parts list

F01_001

Device tag	Quantity	Designation	Type number	Supplier	Part number
=V1WC2-XG1	1	3P DISTRIBUTION BLOCK 1 LINE / 4 LOAD	MB-231-03	SYNDEVCO	MB-231-03
=V1WC2-XG2	1	3P GROUND BLOCK 3 LINE / 3 LOAD	STGS-3D-3D	SYNDEVCO	STGS-3D-3D
=WC1-WC1	1	Golvskåp TS 8 sidskåp	TS8	RIT	RIT.SETS8205SID5
=WC1-WC1	1	TS Trim panel, sides, H: 100 mm, for W: 500 mm, RAL 7022, sheet steel	TS.8601050	RIT	RIT.8601050
=WC1-WC1	1	TS Base/plinth component, rear, H: 100 mm, for W: 1200 mm, RAL 7022, sheet steel	TS.8601200	RIT	RIT.8601200
=WC1-WC1	1	TS Side panel, screw-fastened, for TS, TS IT, for WD: 2000x500 mm, Sheet steel	TS.8105235	RIT	RIT.8105235
=WC1-WC1	1	PS Wiring plan pockets, for TS, CM, SE, PC, TP pedestal, sheet steel	TS.4115000	RIT	RIT.4115000

+.UC163/1

+.UN1/1

			Date	1/17/2023	Volvo Trucks North America	Valiant TMS	Parts list : MB-231-03 - RIT.4115000	Drawing name: =2V09&EFS-EL	=	
			Ed.	MKLEPADLO					+ V1UC164	
			Appr		P6700 Bodyside LH - Robot Cell 2V09			Document type: EPB	Project nr: 22-16150	Page 1
Modification	Date	Name	Original		Replacement of	Replaced by	Scale 1:1			1533

Parts list

F01_001

Device tag	Quantity	Designation	Type number	Supplier	Part number
=V1UN1BG0-BG01	1				BAN.801918
=V1UN1BG0-BG02	1				TUR.BI20U-CA40-AP6X2-H1141/S1590W/BS2.0
=V1UN1BG0-BG03	1	Inductive sensor	BI20U-CA40-AP6X2-H1141/S1590W/BS2.0	Turck	TUR.1627297
=V1UN1BG0-BG04	1	Inductive sensor	BI5U-MT18-AP6X2-H1141/S395/S1589	TURCK	TUR.1635291
=V1UN1BG0-XG1/2	1	Y splitter	U2-30676	TURCK	TUR.VB2-FSM 4.4/2FKM 4/S3450
=V1UN1FQ1-BG01	1	NEMA Limit Switch - NEMA Type 4 & 13 Oiltight Construction	802T-AMP	A-B	A-B.802T-AMP
=V1UN1KF1-KF1.11	1	MVK-MPNIO DI8 DO8 FSU	MVK-MPNIO DI8 DO8 FSU	MURR	MURR.55339
=V1UN1PF1-PF1	1	K50L Series Daylight Visible Indicators	K50L2RGB7QP	BANNER	BAN.805371
=V1UN1PF1-PF1	1	Mounting kit	SMB30A	BANNER	BAN.32723

+.UC164/1

+.UQ51/1

			Date	1/17/2023	Volvo Trucks North America	Valiant TMS	Parts list : BAN.801918 - BAN.32723	Drawing name: =2V09&EFS-EL	=	
			Ed.	MKLEPADLO					+ V1UN1	
			Appr		P6700 Bodyside LH - Robot Cell 2V09	Scale 1:1		Document type: EPB	Project nr: 22-16150	Page 1 / 1533
Modification	Date	Name	Original		Replacement of / Replaced by					

Parts list

F01_001

Device tag	Quantity	Designation	Type number	Supplier	Part number
=V1UQ51BG0-BG01	1	Inductive sensor	BI20U-CA40-AP6X2-H1141/S1590W/BS2.0	Turck	TUR.1627297
=V1UQ51BG0-BG02	1	Inductive sensor	BI20U-CA40-AP6X2-H1141/S1590W/BS2.0	Turck	TUR.1627297
=V1UQ51BG0-BG03	1	Inductive sensor	BI20U-CA40-AP6X2-H1141/S1590W/BS2.0	Turck	TUR.1627297
=V1UQ51BG0-BG04	1	Inductive sensor	BI20U-CA40-AP6X2-H1141/S1590W/BS2.0	Turck	TUR.1627297
=V1UQ51BG0-BG05	1	Inductive sensor	BI20U-CA40-AP6X2-H1141/S1590W/BS2.0	Turck	TUR.1627297
=V1UQ51BG0-XG1/2	1	Y splitter	U2-30676	TURCK	TUR.VB2-FSM 4.4/2FKM 4/S3450
=V1UQ51BG0-XG3/4	1	Y splitter	U2-30676	TURCK	TUR.VB2-FSM 4.4/2FKM 4/S3450
=V1UQ51KF1-KF1	0	Bus node	CPX-FB33	FES	FES.548755
=V1UQ51KF1-KF1	0	Interlinking block	CPX-M-GE-EV-S-7/8-5POL	FES	FES.550208
=V1UQ51KF1-KF1.11	0	Manifold block	CPX-M-AB-8-M12X2-5POL	FES	FES.549335
=V1UQ51KF1-KF1.12	0	Manifold block	CPX-M-AB-8-M12X2-5POL	FES	FES.549335
=V1UQ51KF1-KF1.13	0	Manifold block	CPX-M-AB-8-M12X2-5POL	FES	FES.549335

+.UN1/1

+.UQ51UQ1.1/1

			Date	1/17/2023	Volvo Trucks North America	Valiant TMS	Parts list : TUR.1627297 - FES.549335	Drawing name: =2V09&EFS-EL	=	
			Ed.	MKLEPADLO					+ V1UQ51	
			Appr		P6700 Bodyside LH - Robot Cell 2V09	Scale 1:1		Document type: EPB	Project nr: 22-16150	Page 1 / 1533
Modification	Date	Name	Original		Replacement of	Replaced by				

Parts list

F01_001

Device tag	Quantity	Designation	Type number	Supplier	Part number
=V1UQ51UQ1.1-BGS/R	1	4-Wire, 4-Pin, DC M12 X 1 (PNP)	WWS001A	WEL	WEL.WWS001A

+V1UQ51/1

+.UQ51UQ2.1/1

			Date	1/17/2023	Volvo Trucks North America	Valiant TMS	Parts list : WEL.WWS001A - WEL.WWS001A	Drawing name: =2V09&EFS-EL	= + V1UQ51UQ1.1
			Ed.	MKLEPADLO					
			Appr		P6700 Bodyside LH - Robot Cell 2V09			Document type: EPB	Project nr: 22-16150
Modification	Date	Name	Original		Replacement of	Replaced by	Scale 1:1		Page 1 / 1533

Parts list

F01_001

Device tag	Quantity	Designation	Type number	Supplier	Part number
=V1UQ51UQ2.1-BGS/R	1	4-Wire, 4-Pin, DC M12 X 1 (PNP)	WWS001A	WEL	WEL.WWS001A

+.UQ51UQ1.1/1

+.UQ51UQ3.1/1

			Date	1/17/2023	Volvo Trucks North America	Valiant TMS	Parts list : WEL.WWS001A - WEL.WWS001A	Drawing name: =2V09&EFS-EL	= + V1UQ51UQ2.1
			Ed.	MKLEPADLO					
			Appr		P6700 Bodyside LH - Robot Cell 2V09	Scale 1:1		Document type: EPB	Project nr: 22-16150
Modification	Date	Name	Original		Replacement of	Replaced by			Page 1 / 1533

Parts list

F01_001

Device tag	Quantity	Designation	Type number	Supplier	Part number
=V1UQ51UQ3.1-BGS/R	1	4-Wire, 4-Pin, DC M12 X 1 (PNP)	WWS001A	WEL	WEL.WWS001A

+.UQ51UQ2.1/1

+.UQ51UQ4.1/1

			Date	1/17/2023	Volvo Trucks North America	Valiant TMS	Parts list : WEL.WWS001A - WEL.WWS001A	Drawing name: =2V09&EFS-EL	= + V1UQ51UQ3.1
			Ed.	MKLEPADLO					
			Appr		P6700 Bodyside LH - Robot Cell 2V09	Scale 1:1		Document type: EPB / Project nr: 22-16150	Page 1 / 1533
Modification	Date	Name	Original		Replacement of / Replaced by				

Parts list

F01_001

Device tag	Quantity	Designation	Type number	Supplier	Part number
=V1UQ51UQ4.1-BGS/R	1	Inductive sensor Monitoring Kit for Power Clamps	1324638	TUNKERS	TUN.1324638

+.UQ51UQ3.1/1

+.UQ51UQ4.2/1

			Date	1/17/2023	Volvo Trucks North America	Valiant TMS	Parts list : TUN.1324638 - TUN.1324638	Drawing name: =2V09&EFS-EL	= + V1UQ51UQ4.1
			Ed.	MKLEPADLO					
			Appr		P6700 Bodyside LH - Robot Cell 2V09	Scale 1:1		Document type: EPB	Project nr: 22-16150
Modification	Date	Name	Original		Replacement of	Replaced by			Page 1 / 1533

Parts list

F01_001

Device tag	Quantity	Designation	Type number	Supplier	Part number
=V1UQ51UQ4.2-BGS/R	1	Inductive sensor Monitoring Kit for Power Clamps	1324638	TUNKERS	TUN.1324638

+.UQ51UQ4.1/1

+.UQ51UQ5.1/1

			Date	1/17/2023	Volvo Trucks North America	Valiant TMS	Parts list : TUN.1324638 - TUN.1324638	Drawing name: =2V09&EFS-EL	=	
			Ed.	MKLEPADLO					+ V1UQ51UQ4.2	
			Appr		P6700 Bodyside LH - Robot Cell 2V09	Scale 1:1		Document type: EPB	Project nr: 22-16150	Page 1 / 1533
Modification	Date	Name	Original		Replacement of	Replaced by				

Parts list

F01_001

Device tag	Quantity	Designation	Type number	Supplier	Part number
=V1UQ51UQ5.1-BGS/R	1	Inductive sensor Monitoring Kit for Power Clamps	1324638	TUNKERS	TUN.1324638

+.UQ51UQ4.2/1

+.UQ51UQ5.2/1

			Date	1/17/2023	Volvo Trucks North America	Valiant TMS	Parts list : TUN.1324638 - TUN.1324638	Drawing name: =2V09&EFS-EL	= + V1UQ51UQ5.1
			Ed.	MKLEPADLO					
			Appr		P6700 Bodyside LH - Robot Cell 2V09	Scale 1:1		Document type: EPB	Project nr: 22-16150
Modification	Date	Name	Original		Replacement of	Replaced by			Page 1 / 1533

Parts list

F01_001

Device tag	Quantity	Designation	Type number	Supplier	Part number
=V1UQ51UQ5.2-BGS/R	1	Inductive sensor Monitoring Kit for Power Clamps	1324638	TUNKERS	TUN.1324638

+.UQ51UQ5.1/1

+.UQ51UQ6.1/1

			Date	1/17/2023	Volvo Trucks North America	Valiant TMS	Parts list : TUN.1324638 - TUN.1324638	Drawing name: =2V09&EFS-EL	= + V1UQ51UQ5.2
			Ed.	MKLEPADLO					
			Appr		P6700 Bodyside LH - Robot Cell 2V09	Scale 1:1		Document type: EPB	Project nr: 22-16150
Modification	Date	Name	Original		Replacement of	Replaced by			Page 1 / 1533

Parts list

F01_001

Device tag	Quantity	Designation	Type number	Supplier	Part number
=V1UQ51UQ6.1-BGS/R	1	Inductive sensor Monitoring Kit for Power Clamps	1324638	TUNKERS	TUN.1324638

+.UQ51UQ5.2/1

+.UQ51UQ7.1/1

			Date	1/17/2023	Volvo Trucks North America	Valiant TMS	Parts list : TUN.1324638 - TUN.1324638	Drawing name: =2V09&EFS-EL	= + V1UQ51UQ6.1
			Ed.	MKLEPADLO					
			Appr		P6700 Bodyside LH - Robot Cell 2V09	Scale 1:1		Document type: EPB	Project nr: 22-16150
Modification	Date	Name	Original		Replacement of	Replaced by			Page 1 / 1533

Parts list

F01_001

Device tag	Quantity	Designation	Type number	Supplier	Part number
=V1UQ51UQ7.1-BGS/R	1	Inductive sensor Monitoring Kit for Power Clamps	1324638	TUNKERS	TUN.1324638

+.UQ51UQ6.1/1

+.UQ51UQ7.2/1

			Date	1/17/2023	Volvo Trucks North America	Valiant TMS	Parts list : TUN.1324638 - TUN.1324638	Drawing name: =2V09&EFS-EL	= + V1UQ51UQ7.1
			Ed.	MKLEPADLO					
			Appr		P6700 Bodyside LH - Robot Cell 2V09	Scale 1:1		Document type: EPB	Project nr: 22-16150
Modification	Date	Name	Original		Replacement of	Replaced by			Page 1 / 1533

Parts list

F01_001

Device tag	Quantity	Designation	Type number	Supplier	Part number
=V1UQ51UQ7.2-BGS/R	1	Inductive sensor Monitoring Kit for Power Clamps	1324638	TUNKERS	TUN.1324638

+.UQ51UQ7.1/1

+.UQ51UQ7.3/1

			Date	1/17/2023	Volvo Trucks North America	Valiant TMS	Parts list : TUN.1324638 - TUN.1324638	Drawing name: =2V09&EFS-EL	= + V1UQ51UQ7.2
			Ed.	MKLEPADLO					
			Appr		P6700 Bodyside LH - Robot Cell 2V09	Scale 1:1		Document type: EPB	Project nr: 22-16150
Modification	Date	Name	Original		Replacement of	Replaced by			Page 1 / 1533

Parts list

F01_001

Device tag	Quantity	Designation	Type number	Supplier	Part number
=V1UQ51UQ7.3-BGS/R	1	Inductive sensor Monitoring Kit for Power Clamps	1324638	TUNKERS	TUN.1324638

+.UQ51UQ7.2/1

+.UQ51UQ7.4/1

			Date	1/17/2023	Volvo Trucks North America	Valiant TMS	Parts list : TUN.1324638 - TUN.1324638	Drawing name: =2V09&EFS-EL	= + V1UQ51UQ7.3
			Ed.	MKLEPADLO					
			Appr		P6700 Bodyside LH - Robot Cell 2V09	Scale 1:1		Document type: EPB	Project nr: 22-16150
Modification	Date	Name	Original		Replacement of	Replaced by			Page 1 / 1533

Parts list

F01_001

Device tag	Quantity	Designation	Type number	Supplier	Part number
=V1UQ51UQ7.4-BGS/R	1	Inductive sensor Monitoring Kit for Power Clamps	1324638	TUNKERS	TUN.1324638

+.UQ51UQ7.3/1

+.UQ51UQ7.5/1

Parts list

F01_001

Device tag	Quantity	Designation	Type number	Supplier	Part number
=V1UQ51UQ7.5-BGS/R	1	Inductive sensor Monitoring Kit for Power Clamps	1324638	TUNKERS	TUN.1324638

+.UQ51UQ7.4/1

+.UQ51UQ8.1/1

Parts list

F01_001

Device tag	Quantity	Designation	Type number	Supplier	Part number
=V1UQ51UQ8.1-BGS/R	1	Inductive sensor Monitoring Kit for Power Clamps	1324638	TUNKERS	TUN.1324638

+.UQ51UQ7.5/1

+.UQ51UQ9.1/1

Parts list

F01_001

Device tag	Quantity	Designation	Type number	Supplier	Part number
=V1UQ51UQ9.1-BGS/R	1	Inductive sensor Monitoring Kit for Power Clamps	1324638	TUNKERS	TUN.1324638

+.UQ51UQ8.1/1

+.UQ51UQ9.2/1

Parts list

F01_001

Device tag	Quantity	Designation	Type number	Supplier	Part number
=V1UQ51UQ9.2-BGS/R	1	Inductive sensor Monitoring Kit for Power Clamps	1324638	TUNKERS	TUN.1324638

+.UQ51UQ9.1/1

+.UQ51UQ10.1/1

Parts list

F01_001

Device tag	Quantity	Designation	Type number	Supplier	Part number
=V1UQ51UQ10.1-BGS/R	1	Inductive sensor Monitoring Kit for Power Clamps	1324638	TUNKERS	TUN.1324638

+.UQ51UQ9.2/1

+.UQ51UQ10.2/1

Parts list

F01_001

Device tag	Quantity	Designation	Type number	Supplier	Part number
=V1UQ51UQ10.2-BGS/R	1	Inductive sensor Monitoring Kit for Power Clamps	1324638	TUNKERS	TUN.1324638

+.UQ51UQ10.1/1

+.UQ52/1

			Date	1/17/2023	Volvo Trucks North America	Valiant TMS	Parts list : TUN.1324638 - TUN.1324638	Drawing name: =2V09&EFS-EL	= + V1UQ51UQ10.2
			Ed.	MKLEPADLO					
			Appr		P6700 Bodyside LH - Robot Cell 2V09	Scale 1:1		Document type: EPB	Project nr: 22-16150
Modification	Date	Name	Original		Replacement of	Replaced by			Page 1 / 1533

Parts list

F01_001

Device tag	Quantity	Designation	Type number	Supplier	Part number
=V1UQ52BG0-BG01	1	Inductive sensor	BI20U-CA40-AP6X2-H1141/S1590W/BS2.0	Turck	TUR.1627297
=V1UQ52BG0-BG02	1	Inductive sensor	BI20U-CA40-AP6X2-H1141/S1590W/BS2.0	Turck	TUR.1627297
=V1UQ52BG0-BG03	1	Inductive sensor	BI10U-MT18-AP6X2-H1141/S1589	Turck	TUR.1644905
=V1UQ52BG0-BG04	1	Inductive sensor	BI20U-CA40-AP6X2-H1141/S1590W/BS2.0	Turck	TUR.1627297
=V1UQ52BG0-BG05	1	Inductive sensor	BI20U-CA40-AP6X2-H1141/S1590W/BS2.0	Turck	TUR.1627297
=V1UQ52BG0-BG06	1	Inductive sensor	BI10U-MT18-AP6X2-H1141/S1589	Turck	TUR.1644905
=V1UQ52BG0-BG07	1	Inductive sensor	BI20U-CA40-AP6X2-H1141/S1590W/BS2.0	Turck	TUR.1627297
=V1UQ52BG0-BG08	1	Inductive sensor	BI20U-CA40-AP6X2-H1141/S1590W/BS2.0	Turck	TUR.1627297
=V1UQ52BG0-BG09	1	Inductive sensor	BI20U-CA40-AP6X2-H1141/S1590W/BS2.0	Turck	TUR.1627297
=V1UQ52BG0-BG10	1	Inductive sensor	BI20U-CA40-AP6X2-H1141/S1590W/BS2.0	Turck	TUR.1627297
=V1UQ52BG0-XG1/2	1	Y splitter	U2-30676	TURCK	TUR.VB2-FSM 4.4/2FKM 4/S3450
=V1UQ52BG0-XG3/4	1	Y splitter	U2-30676	TURCK	TUR.VB2-FSM 4.4/2FKM 4/S3450
=V1UQ52BG0-XG5/6	1	Y splitter	U2-30676	TURCK	TUR.VB2-FSM 4.4/2FKM 4/S3450
=V1UQ52BG0-XG7/8	1	Y splitter	U2-30676	TURCK	TUR.VB2-FSM 4.4/2FKM 4/S3450
=V1UQ52BG0-XG9/10	1	Y splitter	U2-30676	TURCK	TUR.VB2-FSM 4.4/2FKM 4/S3450
=V1UQ52KF1-KF1	0	Bus node	CPX-FB33	FES	FES.548755
=V1UQ52KF1-KF1	0	Interlinking block	CPX-M-GE-EV-S-7/8-5POL	FES	FES.550208
=V1UQ52KF1-KF1.11	0	Manifold block	CPX-M-AB-8-M12X2-5POL	FES	FES.549335
=V1UQ52KF1-KF1.12	0	Manifold block	CPX-M-AB-8-M12X2-5POL	FES	FES.549335
=V1UQ52KF1-KF1.13	0	Manifold block	CPX-M-AB-8-M12X2-5POL	FES	FES.549335
=V1UQ52KF2-KF2	0	Bus node	CPX-FB33	FES	FES.548755
=V1UQ52KF2-KF2	0	Interlinking block	CPX-M-GE-EV-S-7/8-5POL	FES	FES.550208
=V1UQ52KF2-KF2.11	0	Manifold block	CPX-M-AB-8-M12X2-5POL	FES	FES.549335
=V1UQ52KF2-KF2.12	0	Manifold block	CPX-M-AB-8-M12X2-5POL	FES	FES.549335
=V1UQ52KF2-KF2.13	0	Manifold block	CPX-M-AB-8-M12X2-5POL	FES	FES.549335
=V1UQ52KF3-KF3	0	Bus node	CPX-FB33	FES	FES.548755
=V1UQ52KF3-KF3	0	Interlinking block	CPX-M-GE-EV-S-7/8-5POL	FES	FES.550208
=V1UQ52KF3-KF3.11	0	Manifold block	CPX-M-AB-8-M12X2-5POL	FES	FES.549335
=V1UQ52KF3-KF3.12	0	Manifold block	CPX-M-AB-8-M12X2-5POL	FES	FES.549335
=V1UQ52KF3-KF3.13	0	Manifold block	CPX-M-AB-8-M12X2-5POL	FES	FES.549335
=V1UQ52KF4-KF4	0	Bus node	CPX-FB33	FES	FES.548755
=V1UQ52KF4-KF4	0	Interlinking block	CPX-M-GE-EV-S-7/8-5POL	FES	FES.550208
=V1UQ52KF4-KF4.11	0	Manifold block	CPX-M-AB-8-M12X2-5POL	FES	FES.549335
=V1UQ52KF4-KF4.12	0	Manifold block	CPX-M-AB-8-M12X2-5POL	FES	FES.549335
=V1UQ52KF4-KF4.13	0	Manifold block	CPX-M-AB-8-M12X2-5POL	FES	FES.549335
=V1UQ52KF5-KF5	0	Bus node	CPX-FB33	FES	FES.548755
=V1UQ52KF5-KF5	0	Interlinking block	CPX-M-GE-EV-S-7/8-5POL	FES	FES.550208
=V1UQ52KF5-KF5.11	0	Manifold block	CPX-M-AB-8-M12X2-5POL	FES	FES.549335
=V1UQ52KF5-KF5.12	0	Manifold block	CPX-M-AB-8-M12X2-5POL	FES	FES.549335
=V1UQ52WC4-XG51.1	1	TEE, 5-PIN MINI, STANDARD KEYWAY	RSM-2RKM 50	TURCK	TUR.RSM-2RKM 50
=V1UQ52WC4-XG51.2	1	TEE, 5-PIN MINI, STANDARD KEYWAY	RSM-2RKM 50	TURCK	TUR.RSM-2RKM 50
=V1UQ52WC4-XG51.3	1	TEE, 5-PIN MINI, STANDARD KEYWAY	RSM-2RKM 50	TURCK	TUR.RSM-2RKM 50

+.UQ51UQ10.2/1

+.UQ52UQ1.1/1

Parts list

F01_001

Device tag	Quantity	Designation	Type number	Supplier	Part number
=V1UQ52UQ1.1-BGS/R	1	4-Wire, 4-Pin, DC M12 X 1 (PNP)	WWS001A	WEL	WEL.WWS001A

+V1UQ52/1

+.UQ52UQ2.1/1

			Date	1/17/2023	Volvo Trucks North America	Valiant TMS	Parts list : WEL.WWS001A - WEL.WWS001A	Drawing name: =2V09&EFS-EL	=	
			Ed.	MKLEPADLO					+ V1UQ52UQ1.1	
			Appr		P6700 Bodyside LH - Robot Cell 2V09			Document type: EPB	Project nr: 22-16150	Page 1
Modification	Date	Name	Original		Replacement of	Replaced by	Scale 1:1			1533

Parts list

F01_001

Device tag	Quantity	Designation	Type number	Supplier	Part number
=V1UQ52UQ2.1-BGR	1	Inductive sensor	BI2-CRS260-AP4X2-H1141/S34	TURCK	TUR.BI2-CRS260-AP4X2-H1141/S34
=V1UQ52UQ2.1-BGS	1	Inductive sensor	BI2-CRS260-AP4X2-H1141/S34	TURCK	TUR.BI2-CRS260-AP4X2-H1141/S34
=V1UQ52UQ2.1-XG2	1	Y splitter	U2-30676	TURCK	TUR.VB2-FSM 4.4/2FKM 4/S3450

+.UQ52UQ1.1/1

+.UQ52UQ2.2/1

			Date	1/17/2023	Volvo Trucks North America	Valiant TMS	Parts list : TUR.BI2-CRS260-AP4X2-H1141/S34 - TUR.VB2-FSM 4.4/2FKM 4/S3450	Drawing name: =2V09&EFS-EL	= + V1UQ52UQ2.1
			Ed.	MKLEPADLO					
			Appr		P6700 Bodyside LH - Robot Cell 2V09	Scale 1:1		Document type: EPB	Project nr: 22-16150
Modification	Date	Name	Original		Replacement of	Replaced by			Page 1 / 1533

Parts list

F01_001

Device tag	Quantity	Designation	Type number	Supplier	Part number
=V1UQ52UQ2.2-BGS/R	1	4-Wire, 4-Pin, DC M12 X 1 (PNP)	WWS001A	WEL	WEL.WWS001A

+.UQ52UQ2.1/1

+.UQ52UQ2.3/1

			Date	1/17/2023	Volvo Trucks North America	Valiant TMS	Parts list : WEL.WWS001A - WEL.WWS001A	Drawing name: =2V09&EFS-EL	=	
			Ed.	MKLEPADLO					+ V1UQ52UQ2.2	
			Appr		P6700 Bodyside LH - Robot Cell 2V09	Scale 1:1		Document type: EPB	Project nr: 22-16150	Page 1 / 1533
Modification	Date	Name	Original		Replacement of	Replaced by				

Parts list

F01_001

Device tag	Quantity	Designation	Type number	Supplier	Part number
=V1UQ52UQ2.3-BGS/R	1	4-Wire, 4-Pin, DC M12 X 1 (PNP)	WWS001A	WEL	WEL.WWS001A

+.UQ52UQ2.2/1

+.UQ52UQ3.1/1

			Date	1/17/2023	Volvo Trucks North America	Valiant TMS	Parts list : WEL.WWS001A - WEL.WWS001A	Drawing name: =2V09&EFS-EL	= + V1UQ52UQ2.3
			Ed.	MKLEPADLO					
			Appr		P6700 Bodyside LH - Robot Cell 2V09	Scale 1:1		Document type: EPB / Project nr: 22-16150	Page 1 / 1533
Modification	Date	Name	Original		Replacement of / Replaced by				

Parts list

F01_001

Device tag	Quantity	Designation	Type number	Supplier	Part number
=V1UQ52UQ3.1-BGS/R	1	4-Wire, 4-Pin, DC M12 X 1 (PNP)	WWS001A	WEL	WEL.WWS001A

+.UQ52UQ2.3/1

+.UQ52UQ4.1/1

			Date	1/17/2023	Volvo Trucks North America	Valiant TMS	Parts list : WEL.WWS001A - WEL.WWS001A	Drawing name: =2V09&EFS-EL	= + V1UQ52UQ3.1
			Ed.	MKLEPADLO					
			Appr		P6700 Bodyside LH - Robot Cell 2V09	Scale 1:1		Document type: EPB	Project nr: 22-16150
Modification	Date	Name	Original		Replacement of	Replaced by			Page 1 / 1533

Parts list

F01_001

Device tag	Quantity	Designation	Type number	Supplier	Part number
=V1UQ52UQ4.1-BGR	1	Inductive sensor	BI2-CRS260-AP4X2-H1141/S34	TURCK	TUR.BI2-CRS260-AP4X2-H1141/S34
=V1UQ52UQ4.1-BGS	1	Inductive sensor	BI2-CRS260-AP4X2-H1141/S34	TURCK	TUR.BI2-CRS260-AP4X2-H1141/S34
=V1UQ52UQ4.1-XG4	1	Y splitter	U2-30676	TURCK	TUR.VB2-FSM 4.4/2FKM 4/S3450

+.UQ52UQ3.1/1

+.UQ52UQ5.1/1

			Date	1/17/2023	Volvo Trucks North America	Valiant TMS	Parts list : TUR.BI2-CRS260-AP4X2-H1141/S34 - TUR.VB2-FSM 4.4/2FKM 4/S3450	Drawing name: =2V09&EFS-EL	= + V1UQ52UQ4.1
			Ed.	MKLEPADLO					
			Appr		P6700 Bodyside LH - Robot Cell 2V09	Scale 1:1		Document type: EPB	Project nr: 22-16150
Modification	Date	Name	Original		Replacement of	Replaced by			Page 1 / 1533

Parts list

F01_001

Device tag	Quantity	Designation	Type number	Supplier	Part number
=V1UQ52UQ5.1-BGS/R	1	4-Wire, 4-Pin, DC M12 X 1 (PNP)	WWS001A	WEL	WEL.WWS001A

+.UQ52UQ4.1/1

+.UQ52UQ6.1/1

			Date	1/17/2023	Volvo Trucks North America	Valiant TMS	Parts list : WEL.WWS001A - WEL.WWS001A	Drawing name: =2V09&EFS-EL	= + V1UQ52UQ5.1
			Ed.	MKLEPADLO					
			Appr		P6700 Bodyside LH - Robot Cell 2V09			Document type: EPB / Project nr: 22-16150	Page 1 / 1533
Modification	Date	Name	Original		Replacement of / Replaced by	Scale 1:1			

Parts list

F01_001

Device tag	Quantity	Designation	Type number	Supplier	Part number
=V1UQ52UQ6.1-BGS/R	1	4-Wire, 4-Pin, DC M12 X 1 (PNP)	WWS001A	WEL	WEL.WWS001A

+.UQ52UQ5.1/1

+.UQ52UQ7.1/1

			Date	1/17/2023	Volvo Trucks North America	Valiant TMS	Parts list : WEL.WWS001A - WEL.WWS001A	Drawing name: =2V09&EFS-EL	=	
			Ed.	MKLEPADLO					+ V1UQ52UQ6.1	
			Appr		P6700 Bodyside LH - Robot Cell 2V09	Scale 1:1		Document type: EPB	Project nr: 22-16150	Page 1 / 1533
Modification	Date	Name	Original		Replacement of	Replaced by				

Parts list

F01_001

Device tag	Quantity	Designation	Type number	Supplier	Part number
=V1UQ52UQ7.1-BGS/R	1	4-Wire, 4-Pin, DC M12 X 1 (PNP)	WWS001A	WEL	WEL.WWS001A

+.UQ52UQ6.1/1

+.UQ52UQ8.1/1

			Date	1/17/2023	Volvo Trucks North America	Valiant TMS	Parts list : WEL.WWS001A - WEL.WWS001A	Drawing name: =2V09&EFS-EL	=	
			Ed.	MKLEPADLO					+ V1UQ52UQ7.1	
			Appr		P6700 Bodyside LH - Robot Cell 2V09	Scale 1:1		Document type: EPB	Project nr: 22-16150	Page 1 / 1533
Modification	Date	Name	Original		Replacement of	Replaced by				

Parts list

F01_001

Device tag	Quantity	Designation	Type number	Supplier	Part number
=V1UQ52UQ8.1-BGS/R	1	4-Wire, 4-Pin, DC M12 X 1 (PNP)	WWS001A	WEL	WEL.WWS001A

+.UQ52UQ7.1/1

+.UQ52UQ8.2/1

			Date	1/17/2023	Volvo Trucks North America	Valiant TMS	Parts list : WEL.WWS001A - WEL.WWS001A	Drawing name: =2V09&EFS-EL	= + V1UQ52UQ8.1
			Ed.	MKLEPADLO					
			Appr		P6700 Bodyside LH - Robot Cell 2V09	Scale 1:1		Document type: EPB	Project nr: 22-16150
Modification	Date	Name	Original		Replacement of	Replaced by			Page 1 / 1533

Parts list

F01_001

Device tag	Quantity	Designation	Type number	Supplier	Part number
=V1UQ52UQ8.2-BGS/R	1	4-Wire, 4-Pin, DC M12 X 1 (PNP)	WWS001A	WEL	WEL.WWS001A

+.UQ52UQ8.1/1

+.UQ52UQ9.1/1

			Date	1/17/2023	Volvo Trucks North America	Valiant TMS	Parts list : WEL.WWS001A - WEL.WWS001A	Drawing name: =2V09&EFS-EL	= + V1UQ52UQ8.2
			Ed.	MKLEPADLO					
			Appr		P6700 Bodyside LH - Robot Cell 2V09	Scale 1:1		Document type: EPB / Project nr: 22-16150	Page 1 / 1533
Modification	Date	Name	Original		Replacement of / Replaced by				

Parts list

F01_001

Device tag	Quantity	Designation	Type number	Supplier	Part number
=V1UQ52UQ9.1-BGS/R	1	4-Wire, 4-Pin, DC M12 X 1 (PNP)	WWS001A	WEL	WEL.WWS001A

+.UQ52UQ8.2/1

+.UQ52UQ10.1/1

			Date	1/17/2023	Volvo Trucks North America	Valiant TMS	Parts list : WEL.WWS001A - WEL.WWS001A	Drawing name: =2V09&EFS-EL	=	
			Ed.	MKLEPADLO					+ V1UQ52UQ9.1	
			Appr		P6700 Bodyside LH - Robot Cell 2V09	Scale 1:1		Document type: EPB	Project nr: 22-16150	Page 1 / 1533
Modification	Date	Name	Original		Replacement of	Replaced by				

Parts list

F01_001

Device tag	Quantity	Designation	Type number	Supplier	Part number
=V1UQ52UQ10.1-BGS/R	1	Inductive sensor Monitoring Kit for Power Clamps	1324638	TUNKERS	TUN.1324638

+.UQ52UQ9.1/1

+.UQ52UQ10.2/1

			Date	1/17/2023	Volvo Trucks North America	Valiant TMS	Parts list : TUN.1324638 - TUN.1324638	Drawing name: =2V09&EFS-EL	= + V1UQ52UQ10.1
			Ed.	MKLEPADLO					
			Appr		P6700 Bodyside LH - Robot Cell 2V09	Scale 1:1		Document type: EPB	Project nr: 22-16150
Modification	Date	Name	Original		Replacement of	Replaced by			Page 1 / 1533

Parts list

F01_001

Device tag	Quantity	Designation	Type number	Supplier	Part number
=V1UQ52UQ10.2-BGS/R	1	Inductive sensor Monitoring Kit for Power Clamps	1324638	TUNKERS	TUN.1324638

+.UQ52UQ10.1/1

+.UQ52UQ10.3/1

			Date	1/17/2023	Volvo Trucks North America	Valiant TMS	Parts list : TUN.1324638 - TUN.1324638	Drawing name: =2V09&EFS-EL	= + V1UQ52UQ10.2
			Ed.	MKLEPADLO					
			Appr		P6700 Bodyside LH - Robot Cell 2V09	Scale 1:1		Document type: EPB	Project nr: 22-16150
Modification	Date	Name	Original		Replacement of	Replaced by			Page 1 / 1533

Parts list

F01_001

Device tag	Quantity	Designation	Type number	Supplier	Part number
=V1UQ52UQ10.3-BGS/R	1	Inductive sensor Monitoring Kit for Power Clamps	1324638	TUNKERS	TUN.1324638

+.UQ52UQ10.2/1

+.UQ52UQ10.4/1

			Date	1/17/2023	Volvo Trucks North America	Valiant TMS	Parts list : TUN.1324638 - TUN.1324638	Drawing name: =2V09&EFS-EL	= + V1UQ52UQ10.3
			Ed.	MKLEPADLO					
			Appr		P6700 Bodyside LH - Robot Cell 2V09	Scale 1:1		Document type: EPB	Project nr: 22-16150
Modification	Date	Name	Original		Replacement of	Replaced by			Page 1 / 1533

Parts list

F01_001

Device tag	Quantity	Designation	Type number	Supplier	Part number
=V1UQ52UQ10.4-BGS/R	1	Inductive sensor Monitoring Kit for Power Clamps	1324638	TUNKERS	TUN.1324638

+.UQ52UQ10.3/1

+.UQ52UQ10.5/1

			Date	1/17/2023	Volvo Trucks North America	Valiant TMS	Parts list : TUN.1324638 - TUN.1324638	Drawing name: =2V09&EFS-EL	= + V1UQ52UQ10.4
			Ed.	MKLEPADLO					
			Appr		P6700 Bodyside LH - Robot Cell 2V09	Scale 1:1		Document type: EPB	Project nr: 22-16150
Modification	Date	Name	Original		Replacement of	Replaced by			Page 1 / 1533

Parts list

F01_001

Device tag	Quantity	Designation	Type number	Supplier	Part number
=V1UQ52UQ10.5-BGS/R	1	Inductive sensor Monitoring Kit for Power Clamps	1324638	TUNKERS	TUN.1324638

+.UQ52UQ10.4/1

+.UQ52UQ10.6/1

			Date	1/17/2023	Volvo Trucks North America	Valiant TMS	Parts list : TUN.1324638 - TUN.1324638	Drawing name: =2V09&EFS-EL	= + V1UQ52UQ10.5
			Ed.	MKLEPADLO					
			Appr		P6700 Bodyside LH - Robot Cell 2V09	Scale 1:1		Document type: EPB	Project nr: 22-16150
Modification	Date	Name	Original		Replacement of	Replaced by			Page 1 / 1533

Parts list

F01_001

Device tag	Quantity	Designation	Type number	Supplier	Part number
=V1UQ52UQ10.6-BGS/R	1	Inductive sensor Monitoring Kit for Power Clamps	1324638	TUNKERS	TUN.1324638

+.UQ52UQ10.5/1

+.UQ52UQ11.1/1

			Date	1/17/2023	Volvo Trucks North America	Valiant TMS	Parts list : TUN.1324638 - TUN.1324638	Drawing name: =2V09&EFS-EL	= + V1UQ52UQ10.6
			Ed.	MKLEPADLO					
			Appr		P6700 Bodyside LH - Robot Cell 2V09	Scale 1:1		Document type: EPB	Project nr: 22-16150
Modification	Date	Name	Original		Replacement of	Replaced by			Page 1 / 1533

Parts list

F01_001

Device tag	Quantity	Designation	Type number	Supplier	Part number
=V1UQ52UQ11.1-BGS/R	1	Inductive sensor Monitoring Kit for Power Clamps	1324638	TUNKERS	TUN.1324638

+.UQ52UQ10.6/1

+.UQ52UQ11.2/1

			Date	1/17/2023	Volvo Trucks North America	Valiant TMS	Parts list : TUN.1324638 - TUN.1324638	Drawing name: =2V09&EFS-EL	= + V1UQ52UQ11.1
			Ed.	MKLEPADLO					
			Appr		P6700 Bodyside LH - Robot Cell 2V09	Scale 1:1		Document type: EPB	Project nr: 22-16150
Modification	Date	Name	Original		Replacement of	Replaced by			Page 1 / 1533

Parts list

F01_001

Device tag	Quantity	Designation	Type number	Supplier	Part number
=V1UQ52UQ11.2-BGS/R	1	Inductive sensor Monitoring Kit for Power Clamps	1324644	TUNKERS	TUN.1324644

+.UQ52UQ11.1/1

+.UQ52UQ11.3/1

			Date	1/17/2023	Volvo Trucks North America	Valiant TMS	Parts list : TUN.1324644 - TUN.1324644	Drawing name: =2V09&EFS-EL	= + V1UQ52UQ11.2
			Ed.	MKLEPADLO					
			Appr		P6700 Bodyside LH - Robot Cell 2V09	Scale 1:1		Document type: EPB	Project nr: 22-16150
Modification	Date	Name	Original		Replacement of	Replaced by			Page 1 / 1533

Parts list

F01_001

Device tag	Quantity	Designation	Type number	Supplier	Part number
=V1UQ52UQ11.3-BGS/R	1	Inductive sensor Monitoring Kit for Power Clamps	1324644	TUNKERS	TUN.1324644

+.UQ52UQ11.2/1

+.UQ52UQ12.1/1

			Date	1/17/2023	Volvo Trucks North America	Valiant TMS	Parts list : TUN.1324644 - TUN.1324644	Drawing name: =2V09&EFS-EL	= + V1UQ52UQ11.3
			Ed.	MKLEPADLO					
			Appr		P6700 Bodyside LH - Robot Cell 2V09	Scale 1:1		Document type: EPB	Project nr: 22-16150
Modification	Date	Name	Original		Replacement of	Replaced by			Page 1 / 1533

Parts list

F01_001

Device tag	Quantity	Designation	Type number	Supplier	Part number
=V1UQ52UQ12.1-BGS/R	1	Inductive sensor Monitoring Kit for Power Clamps	1324638	TUNKERS	TUN.1324638

+.UQ52UQ11.3/1

+.UQ52UQ12.2/1

			Date	1/17/2023	Volvo Trucks North America	Valiant TMS	Parts list : TUN.1324638 - TUN.1324638	Drawing name: =2V09&EFS-EL	= + V1UQ52UQ12.1
			Ed.	MKLEPADLO					
			Appr		P6700 Bodyside LH - Robot Cell 2V09	Scale 1:1		Document type: EPB	Project nr: 22-16150
Modification	Date	Name	Original		Replacement of	Replaced by			Page 1 / 1533

Parts list

F01_001

Device tag	Quantity	Designation	Type number	Supplier	Part number
=V1UQ52UQ12.2-BGS/R	1	Inductive sensor Monitoring Kit for Power Clamps	1324638	TUNKERS	TUN.1324638

+.UQ52UQ12.1/1

+.UQ52UQ13.1/1

			Date	1/17/2023	Volvo Trucks North America	Valiant TMS	Parts list : TUN.1324638 - TUN.1324638	Drawing name: =2V09&EFS-EL	= + V1UQ52UQ12.2
			Ed.	MKLEPADLO					
			Appr		P6700 Bodyside LH - Robot Cell 2V09	Scale 1:1		Document type: EPB	Project nr: 22-16150
Modification	Date	Name	Original		Replacement of	Replaced by			Page 1 / 1533

Parts list

F01_001

Device tag	Quantity	Designation	Type number	Supplier	Part number
=V1UQ52UQ13.1-BGS/R	1	Inductive sensor Monitoring Kit for Power Clamps	1324638	TUNKERS	TUN.1324638

+.UQ52UQ12.2/1

+.UQ52UQ14.1/1

			Date	1/17/2023	Volvo Trucks North America	Valiant TMS	Parts list : TUN.1324638 - TUN.1324638	Drawing name: =2V09&EFS-EL	= + V1UQ52UQ13.1
			Ed.	MKLEPADLO					
			Appr		P6700 Bodyside LH - Robot Cell 2V09	Scale 1:1		Document type: EPB	Project nr: 22-16150
Modification	Date	Name	Original		Replacement of	Replaced by			Page 1 / 1533

Parts list

F01_001

Device tag	Quantity	Designation	Type number	Supplier	Part number
=V1UQ52UQ14.1-BGS/R	1	Inductive sensor Monitoring Kit for Power Clamps	1324638	TUNKERS	TUN.1324638

+.UQ52UQ13.1/1

+.UQ52UQ14.2/1

			Date	1/17/2023	Volvo Trucks North America	Valiant TMS	Parts list : TUN.1324638 - TUN.1324638	Drawing name: =2V09&EFS-EL	= + V1UQ52UQ14.1
			Ed.	MKLEPADLO					
			Appr		P6700 Bodyside LH - Robot Cell 2V09	Scale 1:1		Document type: EPB	Project nr: 22-16150
Modification	Date	Name	Original		Replacement of	Replaced by			Page 1 / 1533

Parts list

F01_001

Device tag	Quantity	Designation	Type number	Supplier	Part number
=V1UQ52UQ14.2-BGS/R	1	Inductive sensor Monitoring Kit for Power Clamps	1324638	TUNKERS	TUN.1324638

+.UQ52UQ14.1/1

+.UQ52UQ14.3/1

			Date	1/17/2023	Volvo Trucks North America	Valiant TMS	Parts list : TUN.1324638 - TUN.1324638	Drawing name: =2V09&EFS-EL	= + V1UQ52UQ14.2
			Ed.	MKLEPADLO					
			Appr		P6700 Bodyside LH - Robot Cell 2V09	Scale 1:1		Document type: EPB	Project nr: 22-16150
Modification	Date	Name	Original		Replacement of	Replaced by			Page 1 / 1533

Parts list

F01_001

Device tag	Quantity	Designation	Type number	Supplier	Part number
=V1UQ52UQ14.3-BGS/R	1	Inductive sensor Monitoring Kit for Power Clamps	1324638	TUNKERS	TUN.1324638

+.UQ52UQ14.2/1

+.UQ52UQ15.1/1

			Date	1/17/2023	Volvo Trucks North America	Valiant TMS	Parts list : TUN.1324638 - TUN.1324638	Drawing name: =2V09&EFS-EL	= + V1UQ52UQ14.3
			Ed.	MKLEPADLO					
			Appr		P6700 Bodyside LH - Robot Cell 2V09	Scale 1:1		Document type: EPB	Project nr: 22-16150
Modification	Date	Name	Original		Replacement of	Replaced by			Page 1 / 1533

Parts list

F01_001

Device tag	Quantity	Designation	Type number	Supplier	Part number
=V1UQ52UQ15.1-BGS/R	1	Inductive sensor Monitoring Kit for Power Clamps	1324638	TUNKERS	TUN.1324638

+.UQ52UQ14.3/1

+.UQ52UQ16.1/1

Parts list

F01_001

Device tag	Quantity	Designation	Type number	Supplier	Part number
=V1UQ52UQ16.1-BGS/R	1	Inductive sensor Monitoring Kit for Power Clamps	1324638	TUNKERS	TUN.1324638

+.UQ52UQ15.1/1

+.UQ52UQ17.1/1

			Date	1/17/2023	Volvo Trucks North America	Valiant TMS	Parts list : TUN.1324638 - TUN.1324638	Drawing name: =2V09&EFS-EL	= + V1UQ52UQ16.1
			Ed.	MKLEPADLO					
			Appr		P6700 Bodyside LH - Robot Cell 2V09	Scale 1:1		Document type: EPB	Project nr: 22-16150
Modification	Date	Name	Original		Replacement of	Replaced by			Page 1 / 1533

Parts list

F01_001

Device tag	Quantity	Designation	Type number	Supplier	Part number
=V1UQ52UQ17.1-BGS/R	1	Inductive sensor Monitoring Kit for Power Clamps	1324638	TUNKERS	TUN.1324638

+.UQ52UQ16.1/1

+.UQ52UQ18.1/1

			Date	1/17/2023	Volvo Trucks North America	Valiant TMS	Parts list : TUN.1324638 - TUN.1324638	Drawing name: =2V09&EFS-EL	= + V1UQ52UQ17.1
			Ed.	MKLEPADLO					
			Appr		P6700 Bodyside LH - Robot Cell 2V09	Scale 1:1		Document type: EPB	Project nr: 22-16150
Modification	Date	Name	Original		Replacement of	Replaced by			Page 1 / 1533

Parts list

F01_001

Device tag	Quantity	Designation	Type number	Supplier	Part number
=V1UQ52UQ18.1-BGS/R	1	Inductive sensor Monitoring Kit for Power Clamps	1324638	TUNKERS	TUN.1324638

+.UQ52UQ17.1/1

+.UQ52UQ19.1/1

			Date	1/17/2023	Volvo Trucks North America	Valiant TMS	Parts list : TUN.1324638 - TUN.1324638	Drawing name: =2V09&EFS-EL	= + V1UQ52UQ18.1
			Ed.	MKLEPADLO					
			Appr		P6700 Bodyside LH - Robot Cell 2V09	Scale 1:1		Document type: EPB	Project nr: 22-16150
Modification	Date	Name	Original		Replacement of	Replaced by			Page 1 / 1533

Parts list

F01_001

Device tag	Quantity	Designation	Type number	Supplier	Part number
=V1UQ52UQ19.1-BGS/R	1	Inductive sensor Monitoring Kit for Power Clamps	1324638	TUNKERS	TUN.1324638

+.UQ52UQ18.1/1

+.UQ52UQ20.1/1

			Date	1/17/2023	Volvo Trucks North America	Valiant TMS	Parts list : TUN.1324638 - TUN.1324638	Drawing name: =2V09&EFS-EL	= + V1UQ52UQ19.1
			Ed.	MKLEPADLO					
			Appr		P6700 Bodyside LH - Robot Cell 2V09	Scale 1:1		Document type: EPB	Project nr: 22-16150
Modification	Date	Name	Original		Replacement of	Replaced by			Page 1 / 1533

Parts list

F01_001

Device tag	Quantity	Designation	Type number	Supplier	Part number
=V1UQ52UQ20.1-BGS/R	1	Inductive sensor Monitoring Kit for Power Clamps	1324644	TUNKERS	TUN.1324644

+.UQ52UQ19.1/1

+.UQ52UQ21.1/1

			Date	1/17/2023	Volvo Trucks North America	Valiant TMS	Parts list : TUN.1324644 - TUN.1324644	Drawing name: =2V09&EFS-EL	= + V1UQ52UQ20.1
			Ed.	MKLEPADLO					
			Appr		P6700 Bodyside LH - Robot Cell 2V09	Scale 1:1		Document type: EPB	Project nr: 22-16150
Modification	Date	Name	Original		Replacement of	Replaced by			Page 1 / 1533

Parts list

F01_001

Device tag	Quantity	Designation	Type number	Supplier	Part number
=V1UQ52UQ21.1-BGS/R	1	Inductive sensor Monitoring Kit for Power Clamps	1324638	TUNKERS	TUN.1324638

+.UQ52UQ20.1/1

+.UQ52UQ22.1/1

			Date	1/17/2023	Volvo Trucks North America	Valiant TMS	Parts list : TUN.1324638 - TUN.1324638	Drawing name: =2V09&EFS-EL	= + V1UQ52UQ21.1
			Ed.	MKLEPADLO					
			Appr		P6700 Bodyside LH - Robot Cell 2V09	Scale 1:1		Document type: EPB	Project nr: 22-16150
Modification	Date	Name	Original		Replacement of	Replaced by			Page 1 / 1533

Parts list

F01_001

Device tag	Quantity	Designation	Type number	Supplier	Part number
=V1UQ52UQ22.1-BGS/R	1	Inductive sensor Monitoring Kit for Power Clamps	1324638	TUNKERS	TUN.1324638

+.UQ52UQ21.1/1

+.UQ52UQ23.1/1

			Date	1/17/2023	Volvo Trucks North America	Valiant TMS	Parts list : TUN.1324638 - TUN.1324638	Drawing name: =2V09&EFS-EL	= + V1UQ52UQ22.1
			Ed.	MKLEPADLO					
			Appr		P6700 Bodyside LH - Robot Cell 2V09	Scale 1:1		Document type: EPB	Project nr: 22-16150
Modification	Date	Name	Original		Replacement of	Replaced by			Page 1 / 1533

Parts list

F01_001

Device tag	Quantity	Designation	Type number	Supplier	Part number
=V1UQ52UQ23.1-BGS/R	1	4-Wire, 4-Pin, DC M12 X 1 (PNP)	WWS001A	WEL	WEL.WWS001A

+.UQ52UQ22.1/1

+.UQ52UQ24.1/1

			Date	1/17/2023	Volvo Trucks North America	Valiant TMS	Parts list : WEL.WWS001A - WEL.WWS001A	Drawing name: =2V09&EFS-EL	= + V1UQ52UQ23.1
			Ed.	MKLEPADLO					
			Appr		P6700 Bodyside LH - Robot Cell 2V09	Scale 1:1		Document type: EPB / Project nr: 22-16150	Page 1 / 1533
Modification	Date	Name	Original		Replacement of / Replaced by				

Parts list

F01_001

Device tag	Quantity	Designation	Type number	Supplier	Part number
=V1UQ52UQ24.1-BGS/R	1	Inductive sensor Monitoring Kit for Power Clamps	1324638	TUNKERS	TUN.1324638

+.UQ52UQ23.1/1

+.UQ52UQ25.1/1

Parts list

F01_001

Device tag	Quantity	Designation	Type number	Supplier	Part number
=V1UQ52UQ25.1-BGR	1	Inductive sensor	BI10U-MT18-AP6X2-H1141/S1589	Turck	TUR.1644905
=V1UQ52UQ25.1-BGS	1	Inductive sensor	BI10U-MT18-AP6X2-H1141/S1589	Turck	TUR.1644905
=V1UQ52UQ25.1-XGR/S	1	Y splitter	U2-30676	TURCK	TUR.VB2-FSM 4.4/2FKM 4/S3450

+.UQ52UQ24.1/1

+.UQ52UQ26.1/1

			Date	1/17/2023	Volvo Trucks North America	Valiant TMS	Parts list : TUR.1644905 - TUR.VB2-FSM 4.4/2FKM 4/S3450	Drawing name: =2V09&EFS-EL	= + V1UQ52UQ25.1
			Ed.	MKLEPADLO					
			Appr		P6700 Bodyside LH - Robot Cell 2V09	Scale 1:1		Document type: EPB	Project nr: 22-16150
Modification	Date	Name	Original		Replacement of	Replaced by			Page 1 / 1533

Parts list

F01_001

Device tag	Quantity	Designation	Type number	Supplier	Part number
=V1UQ52UQ26.1-BGS/R	1	4-Wire, 4-Pin, DC M12 X 1 (PNP)	WWS001A	WEL	WEL.WWS001A

+.UQ52UQ25.1/1

+.UQ52UQ27.1/1

			Date	1/17/2023	Volvo Trucks North America	Valiant TMS	Parts list : WEL.WWS001A - WEL.WWS001A	Drawing name: =2V09&EFS-EL	= + V1UQ52UQ26.1
			Ed.	MKLEPADLO					
			Appr		P6700 Bodyside LH - Robot Cell 2V09	Scale 1:1		Document type: EPB	Project nr: 22-16150
Modification	Date	Name	Original		Replacement of	Replaced by			Page 1 / 1533

Parts list

F01_001

Device tag	Quantity	Designation	Type number	Supplier	Part number
=V1UQ52UQ27.1-BGS/R	1	Inductive sensor Monitoring Kit for Power Clamps	1324638	TUNKERS	TUN.1324638

+.UQ52UQ26.1/1

+.UQ52UQ28.1/1

Parts list

F01_001

Device tag	Quantity	Designation	Type number	Supplier	Part number
=V1UQ52UQ28.1-BGS/R	1	Inductive sensor Monitoring Kit for Power Clamps	1324638	TUNKERS	TUN.1324638

+.UQ52UQ27.1/1

+.UQ52UQ29.1/1

			Date	1/17/2023	Volvo Trucks North America	Valiant TMS	Parts list : TUN.1324638 - TUN.1324638	Drawing name: =2V09&EFS-EL	= + V1UQ52UQ28.1
			Ed.	MKLEPADLO					
			Appr		P6700 Bodyside LH - Robot Cell 2V09	Scale 1:1		Document type: EPB	Project nr: 22-16150
Modification	Date	Name	Original		Replacement of	Replaced by			Page 1 / 1533

Parts list

F01_001

Device tag	Quantity	Designation	Type number	Supplier	Part number
=V1UQ52UQ29.1-BGS/R	1	Inductive sensor Monitoring Kit for Power Clamps	1324638	TUNKERS	TUN.1324638

+.UQ52UQ28.1/1

+.UQ52UQ30.1/1

			Date	1/17/2023	Volvo Trucks North America	Valiant TMS	Parts list : TUN.1324638 - TUN.1324638	Drawing name: =2V09&EFS-EL	= + V1UQ52UQ29.1
			Ed.	MKLEPADLO					
			Appr		P6700 Bodyside LH - Robot Cell 2V09	Scale 1:1		Document type: EPB	Project nr: 22-16150
Modification	Date	Name	Original		Replacement of	Replaced by			Page 1 / 1533

Parts list

F01_001

Device tag	Quantity	Designation	Type number	Supplier	Part number
=V1UQ52UQ30.1-BGS/R	1	Inductive sensor Monitoring Kit for Power Clamps	1324638	TUNKERS	TUN.1324638

+.UQ52UQ29.1/1

+.UQ52UQ31.1/1

			Date	1/17/2023	Volvo Trucks North America	Valiant TMS	Parts list : TUN.1324638 - TUN.1324638	Drawing name: =2V09&EFS-EL	= + V1UQ52UQ30.1
			Ed.	MKLEPADLO					
			Appr		P6700 Bodyside LH - Robot Cell 2V09	Scale 1:1		Document type: EPB	Project nr: 22-16150
Modification	Date	Name	Original		Replacement of	Replaced by			Page 1 / 1533

Parts list

F01_001

Device tag	Quantity	Designation	Type number	Supplier	Part number
=V1UQ52UQ31.1-BGS/R	1	Inductive sensor Monitoring Kit for Power Clamps	1324638	TUNKERS	TUN.1324638

+.UQ52UQ30.1/1

+.UQ52UQ32.1/1

			Date	1/17/2023	Volvo Trucks North America	Valiant TMS	Parts list : TUN.1324638 - TUN.1324638	Drawing name: =2V09&EFS-EL	= + V1UQ52UQ31.1
			Ed.	MKLEPADLO					
			Appr		P6700 Bodyside LH - Robot Cell 2V09	Scale 1:1		Document type: EPB	Project nr: 22-16150
Modification	Date	Name	Original		Replacement of	Replaced by			Page 1 / 1533

Parts list

F01_001

Device tag	Quantity	Designation	Type number	Supplier	Part number
=V1UQ52UQ32.1-BGS/R	1	Inductive sensor Monitoring Kit for Power Clamps	1324638	TUNKERS	TUN.1324638

+.UQ52UQ31.1/1

+.UQ52UQ33.1/1

			Date	1/17/2023	Volvo Trucks North America	Valiant TMS	Parts list : TUN.1324638 - TUN.1324638	Drawing name: =2V09&EFS-EL	= + V1UQ52UQ32.1
			Ed.	MKLEPADLO					
			Appr		P6700 Bodyside LH - Robot Cell 2V09	Scale 1:1		Document type: EPB	Project nr: 22-16150
Modification	Date	Name	Original		Replacement of	Replaced by			Page 1 / 1533

Parts list

F01_001

Device tag	Quantity	Designation	Type number	Supplier	Part number
=V1UQ52UQ33.1-BGS/R	1	Inductive sensor Monitoring Kit for Power Clamps	1324638	TUNKERS	TUN.1324638

+.UQ52UQ32.1/1

+.UQ52UQ34.1/1

			Date	1/17/2023	Volvo Trucks North America	Valiant TMS	Parts list : TUN.1324638 - TUN.1324638	Drawing name: =2V09&EFS-EL	= + V1UQ52UQ33.1
			Ed.	MKLEPADLO					
			Appr		P6700 Bodyside LH - Robot Cell 2V09	Scale 1:1		Document type: EPB	Project nr: 22-16150
Modification	Date	Name	Original		Replacement of	Replaced by			Page 1 / 1533

Parts list

F01_001

Device tag	Quantity	Designation	Type number	Supplier	Part number
=V1UQ52UQ34.1-BGS/R	1	Inductive sensor Monitoring Kit for Power Clamps	1324638	TUNKERS	TUN.1324638

+.UQ52UQ33.1/1

+.UQ52UQ35.1/1

			Date	1/17/2023	Volvo Trucks North America	Valiant TMS	Parts list : TUN.1324638 - TUN.1324638	Drawing name: =2V09&EFS-EL	= + V1UQ52UQ34.1
			Ed.	MKLEPADLO					
			Appr		P6700 Bodyside LH - Robot Cell 2V09	Scale 1:1		Document type: EPB	Project nr: 22-16150
Modification	Date	Name	Original		Replacement of	Replaced by			Page 1 / 1533

Parts list

F01_001

Device tag	Quantity	Designation	Type number	Supplier	Part number
=V1UQ52UQ35.1-BGS/R	1	4-Wire, 4-Pin, DC M12 X 1 (PNP)	WWS001A	WEL	WEL.WWS001A

+.UQ52UQ34.1/1

+.UQ52UQ36.1/1

			Date	1/17/2023	Volvo Trucks North America	Valiant TMS	Parts list : WEL.WWS001A - WEL.WWS001A	Drawing name: =2V09&EFS-EL	= + V1UQ52UQ35.1
			Ed.	MKLEPADLO					
			Appr		P6700 Bodyside LH - Robot Cell 2V09			Document type: EPB	Project nr: 22-16150
Modification	Date	Name	Original		Replacement of	Replaced by	Scale 1:1		Page 1 / 1533

Parts list

F01_001

Device tag	Quantity	Designation	Type number	Supplier	Part number
=V1UQ52UQ36.1-BGS/R	1	Inductive sensor Monitoring Kit for Power Clamps	1324638	TUNKERS	TUN.1324638

+.UQ52UQ35.1/1

+.UQ52UQ37.1/1

			Date	1/17/2023	Volvo Trucks North America	Valiant TMS	Parts list : TUN.1324638 - TUN.1324638	Drawing name: =2V09&EFS-EL	= + V1UQ52UQ36.1
			Ed.	MKLEPADLO					
			Appr		P6700 Bodyside LH - Robot Cell 2V09	Scale 1:1		Document type: EPB	Project nr: 22-16150
Modification	Date	Name	Original		Replacement of	Replaced by			Page 1 / 1533

Parts list

F01_001

Device tag	Quantity	Designation	Type number	Supplier	Part number
=V1UQ52UQ37.1-BGS/R	1	Inductive sensor Monitoring Kit for Power Clamps	1324638	TUNKERS	TUN.1324638

+.UQ52UQ36.1/1

+.UQ52UQ38.1/1

			Date	1/17/2023	Volvo Trucks North America	Valiant TMS	Parts list : TUN.1324638 - TUN.1324638	Drawing name: =2V09&EFS-EL	= + V1UQ52UQ37.1
			Ed.	MKLEPADLO					
			Appr		P6700 Bodyside LH - Robot Cell 2V09	Scale 1:1		Document type: EPB	Project nr: 22-16150
Modification	Date	Name	Original		Replacement of	Replaced by			Page 1 / 1533

Parts list

F01_001

Device tag	Quantity	Designation	Type number	Supplier	Part number
=V1UQ52UQ38.1-BGS/R	1	Inductive sensor Monitoring Kit for Power Clamps	1324644	TUNKERS	TUN.1324644

+.UQ52UQ37.1/1

+.UQ52UQ39.1/1

			Date	1/17/2023	Volvo Trucks North America	Valiant TMS	Parts list : TUN.1324644 - TUN.1324644	Drawing name: =2V09&EFS-EL	= + V1UQ52UQ38.1
			Ed.	MKLEPADLO					
			Appr		P6700 Bodyside LH - Robot Cell 2V09	Scale 1:1		Document type: EPB	Project nr: 22-16150
Modification	Date	Name	Original		Replacement of	Replaced by			Page 1 / 1533

Parts list

F01_001

Device tag	Quantity	Designation	Type number	Supplier	Part number
=V1UQ52UQ39.1-BGS/R	1	4-Wire, 4-Pin, DC M12 X 1 (PNP)	WWS001A	WEL	WEL.WWS001A

+.UQ52UQ38.1/1

+.UQ52UQ40.1/1

			Date	1/17/2023	Volvo Trucks North America	Valiant TMS	Parts list : WEL.WWS001A - WEL.WWS001A	Drawing name: =2V09&EFS-EL	= + V1UQ52UQ39.1
			Ed.	MKLEPADLO					
			Appr		P6700 Bodyside LH - Robot Cell 2V09	Scale 1:1		Document type: EPB	Project nr: 22-16150
Modification	Date	Name	Original		Replacement of	Replaced by			Page 1 / 1533

Parts list

F01_001

Device tag	Quantity	Designation	Type number	Supplier	Part number
=V1UQ52UQ40.1-BGS/R	1	Inductive sensor Monitoring Kit for Power Clamps	1324644	TUNKERS	TUN.1324644

+.UQ52UQ39.1/1

+.UQ52UQ41.1/1

			Date	1/17/2023	Volvo Trucks North America	Valiant TMS	Parts list : TUN.1324644 - TUN.1324644	Drawing name: =2V09&EFS-EL	= + V1UQ52UQ40.1
			Ed.	MKLEPADLO					
			Appr		P6700 Bodyside LH - Robot Cell 2V09	Scale 1:1		Document type: EPB	Project nr: 22-16150
Modification	Date	Name	Original		Replacement of	Replaced by			Page 1 / 1533

Parts list

F01_001

Device tag	Quantity	Designation	Type number	Supplier	Part number
=V1UQ52UQ41.1-BGS/R	1	Inductive sensor Monitoring Kit for Power Clamps	1324644	TUNKERS	TUN.1324644

+.UQ52UQ40.1/1

+.UQ52UQ42.1/1

			Date	1/17/2023	Volvo Trucks North America	Valiant TMS	Parts list : TUN.1324644 - TUN.1324644	Drawing name: =2V09&EFS-EL	= + V1UQ52UQ41.1
			Ed.	MKLEPADLO					
			Appr		P6700 Bodyside LH - Robot Cell 2V09	Scale 1:1		Document type: EPB	Project nr: 22-16150
Modification	Date	Name	Original		Replacement of	Replaced by			Page 1 / 1533

Parts list

F01_001

Device tag	Quantity	Designation	Type number	Supplier	Part number
=V1UQ52UQ42.1-BGS/R	1	Inductive sensor Monitoring Kit for Power Clamps	1324638	TUNKERS	TUN.1324638

+.UQ52UQ41.1/1

+.UQ52UQ42.2/1

			Date	1/17/2023	Volvo Trucks North America	Valiant TMS	Parts list : TUN.1324638 - TUN.1324638	Drawing name: =2V09&EFS-EL	= + V1UQ52UQ42.1
			Ed.	MKLEPADLO					
			Appr		P6700 Bodyside LH - Robot Cell 2V09	Scale 1:1		Document type: EPB	Project nr: 22-16150
Modification	Date	Name	Original		Replacement of	Replaced by			Page 1 / 1533

Parts list

F01_001

Device tag	Quantity	Designation	Type number	Supplier	Part number
=V1UQ52UQ42.2-BGS/R	1	Inductive sensor Monitoring Kit for Power Clamps	1324638	TUNKERS	TUN.1324638

+.UQ52UQ42.1/1

+.UQ52UQ43.1/1

			Date	1/17/2023	Volvo Trucks North America	Valiant TMS	Parts list : TUN.1324638 - TUN.1324638	Drawing name: =2V09&EFS-EL	= + V1UQ52UQ42.2
			Ed.	MKLEPADLO					
			Appr		P6700 Bodyside LH - Robot Cell 2V09	Scale 1:1		Document type: EPB	Project nr: 22-16150
Modification	Date	Name	Original		Replacement of	Replaced by			Page 1 / 1533

Parts list

F01_001

Device tag	Quantity	Designation	Type number	Supplier	Part number
=V1UQ52UQ43.1-BGS/R	1	Inductive sensor Monitoring Kit for Power Clamps	1324638	TUNKERS	TUN.1324638

+.UQ52UQ42.2/1

+.UQ52UQ44.1/1

			Date	1/17/2023	Volvo Trucks North America	Valiant TMS	Parts list : TUN.1324638 - TUN.1324638	Drawing name: =2V09&EFS-EL	= + V1UQ52UQ43.1
			Ed.	MKLEPADLO					
			Appr		P6700 Bodyside LH - Robot Cell 2V09	Scale 1:1		Document type: EPB	Project nr: 22-16150
Modification	Date	Name	Original		Replacement of	Replaced by			Page 1 / 1533

Parts list

F01_001

Device tag	Quantity	Designation	Type number	Supplier	Part number
=V1UQ52UQ44.1-BGS/R	1	4-Wire, 4-Pin, DC M12 X 1 (PNP)	WWS001A	WEL	WEL.WWS001A

+.UQ52UQ43.1/1

+.UQ52UQ44.2/1

			Date	1/17/2023	Volvo Trucks North America	Valiant TMS	Parts list : WEL.WWS001A - WEL.WWS001A	Drawing name: =2V09&EFS-EL	= + V1UQ52UQ44.1
			Ed.	MKLEPADLO					
			Appr		P6700 Bodyside LH - Robot Cell 2V09	Scale 1:1		Document type: EPB	Project nr: 22-16150
Modification	Date	Name	Original		Replacement of	Replaced by			Page 1 / 1533

Parts list

F01_001

Device tag	Quantity	Designation	Type number	Supplier	Part number
=V1UQ52UQ44.2-BGS/R	1	4-Wire, 4-Pin, DC M12 X 1 (PNP)	WWS001A	WEL	WEL.WWS001A

+.UQ52UQ44.1/1

+.UQ52UQ45.1/1

			Date	1/17/2023	Volvo Trucks North America	Valiant TMS	Parts list : WEL.WWS001A - WEL.WWS001A	Drawing name: =2V09&EFS-EL	= + V1UQ52UQ44.2
			Ed.	MKLEPADLO					
			Appr		P6700 Bodyside LH - Robot Cell 2V09	Scale 1:1		Document type: EPB	Project nr: 22-16150
Modification	Date	Name	Original		Replacement of	Replaced by			Page 1 / 1533

Parts list

F01_001

Device tag	Quantity	Designation	Type number	Supplier	Part number
=V1UQ52UQ45.1-BGS/R	1	Inductive sensor Monitoring Kit for Power Clamps	1324638	TUNKERS	TUN.1324638

+.UQ52UQ44.2/1

+.UQ52UQ46.1/1

			Date	1/17/2023	Volvo Trucks North America	Valiant TMS	Parts list : TUN.1324638 - TUN.1324638	Drawing name: =2V09&EFS-EL	= + V1UQ52UQ45.1
			Ed.	MKLEPADLO					
			Appr		P6700 Bodyside LH - Robot Cell 2V09	Scale 1:1		Document type: EPB	Project nr: 22-16150
Modification	Date	Name	Original		Replacement of	Replaced by			Page 1 / 1533

Parts list

F01_001

Device tag	Quantity	Designation	Type number	Supplier	Part number
=V1UQ52UQ46.1-BGS/R	1	Inductive sensor Monitoring Kit for Power Clamps	1324644	TUNKERS	TUN.1324644

+.UQ52UQ45.1/1

+.UQ53/1

			Date	1/17/2023	Volvo Trucks North America	Valiant TMS	Parts list : TUN.1324644 - TUN.1324644	Drawing name: =2V09&EFS-EL	=	
			Ed.	MKLEPADLO					+ V1UQ52UQ46.1	
			Appr		P6700 Bodyside LH - Robot Cell 2V09	Scale 1:1		Document type: EPB	Project nr: 22-16150	Page 1 / 1533
Modification	Date	Name	Original		Replacement of	Replaced by				

Parts list

F01_001

Device tag	Quantity	Designation	Type number	Supplier	Part number
=V1UQ53BG0-BG01	1	Inductive sensor	BI20U-CA40-AP6X2-H1141/S1590W/BS2.0	Turck	TUR.1627297
=V1UQ53BG0-BG02	1	Inductive sensor	BI20U-CA40-AP6X2-H1141/S1590W/BS2.0	Turck	TUR.1627297
=V1UQ53BG0-BG03	1	Inductive sensor	BI20U-CA40-AP6X2-H1141/S1590W/BS2.0	Turck	TUR.1627297
=V1UQ53BG0-BG04	1	Inductive sensor	BI20U-CA40-AP6X2-H1141/S1590W/BS2.0	Turck	TUR.1627297
=V1UQ53BG0-BG05	1	Inductive sensor	BI20U-CA40-AP6X2-H1141/S1590W/BS2.0	Turck	TUR.1627297
=V1UQ53BG0-XG1/2	1	Y splitter	U2-30676	TURCK	TUR.VB2-FSM 4.4/2FKM 4/S3450
=V1UQ53BG0-XG3/4	1	Y splitter	U2-30676	TURCK	TUR.VB2-FSM 4.4/2FKM 4/S3450
=V1UQ53KF1-KF1	0	Bus node	CPX-FB33	FES	FES.548755
=V1UQ53KF1-KF1	0	Interlinking block	CPX-M-GE-EV-S-7/8-5POL	FES	FES.550208
=V1UQ53KF1-KF1.11	0	Manifold block	CPX-M-AB-8-M12X2-5POL	FES	FES.549335
=V1UQ53KF1-KF1.12	0	Manifold block	CPX-M-AB-8-M12X2-5POL	FES	FES.549335
=V1UQ53KF1-KF1.13	0	Manifold block	CPX-M-AB-8-M12X2-5POL	FES	FES.549335
=V1UQ53KF2-KF2	0	Bus node	CPX-FB33	FES	FES.548755
=V1UQ53KF2-KF2	0	Interlinking block	CPX-M-GE-EV-S-7/8-5POL	FES	FES.550208
=V1UQ53KF2-KF2.11	0	Manifold block	CPX-M-AB-8-M12X2-5POL	FES	FES.549335
=V1UQ53KF2-KF2.12	0	Manifold block	CPX-M-AB-8-M12X2-5POL	FES	FES.549335
=V1UQ53WC4-XG51	1	TEE, 5-PIN MINI, STANDARD KEYWAY	RSM-2RKM 50	TURCK	TUR.RSM-2RKM 50

+.UQ52UQ46.1/1

+.UQ53UQ1.1/1

			Date	1/17/2023	Volvo Trucks North America	Valiant TMS	Parts list : TUR.1627297 - TUR.RSM-2RKM 50	Drawing name: =2V09&EFS-EL	=	
			Ed.	MKLEPADLO					+ V1UQ53	
			Appr		P6700 Bodyside LH - Robot Cell 2V09			Document type: EPB	Project nr: 22-16150	Page 1
Modification	Date	Name	Original		Replacement of	Replaced by	Scale 1:1			1533

Parts list

F01_001

Device tag	Quantity	Designation	Type number	Supplier	Part number
=V1UQ53UQ1.1-BGS/R	1	4-Wire, 4-Pin, DC M12 X 1 (PNP)	WWS001A	WEL	WEL.WWS001A

+V1UQ53/1

+.UQ53UQ2.1/1

			Date	1/17/2023	Volvo Trucks North America	Valiant TMS	Parts list : WEL.WWS001A - WEL.WWS001A	Drawing name: =2V09&EFS-EL	=	
			Ed.	MKLEPADLO					+ V1UQ53UQ1.1	
			Appr		P6700 Bodyside LH - Robot Cell 2V09	Scale 1:1		Document type: EPB	Project nr: 22-16150	Page 1 / 1533
Modification	Date	Name	Original		Replacement of	Replaced by				

Parts list

F01_001

Device tag	Quantity	Designation	Type number	Supplier	Part number
=V1UQ53UQ2.1-BGS/R	1	4-Wire, 4-Pin, DC M12 X 1 (PNP)	WWS001A	WEL	WEL.WWS001A

+.UQ53UQ1.1/1

+.UQ53UQ3.1/1

			Date	1/17/2023	Volvo Trucks North America	Valiant TMS	Parts list : WEL.WWS001A - WEL.WWS001A	Drawing name: =2V09&EFS-EL	= + V1UQ53UQ2.1
			Ed.	MKLEPADLO					
			Appr		P6700 Bodyside LH - Robot Cell 2V09	Scale 1:1		Document type: EPB	Project nr: 22-16150
Modification	Date	Name	Original		Replacement of	Replaced by			Page 1 / 1533

Parts list

F01_001

Device tag	Quantity	Designation	Type number	Supplier	Part number
=V1UQ53UQ3.1-BGS/R	1	Inductive sensor Monitoring Kit for Power Clamps	1324638	TUNKERS	TUN.1324638

+.UQ53UQ2.1/1

+.UQ53UQ3.2/1

Parts list

F01_001

Device tag	Quantity	Designation	Type number	Supplier	Part number
=V1UQ53UQ3.2-BGS/R	1	Inductive sensor Monitoring Kit for Power Clamps	1324638	TUNKERS	TUN.1324638

+.UQ53UQ3.1/1

+.UQ53UQ3.3/1

			Date	1/17/2023	Volvo Trucks North America	Valiant TMS	Parts list : TUN.1324638 - TUN.1324638	Drawing name: =2V09&EFS-EL	= + V1UQ53UQ3.2
			Ed.	MKLEPADLO					
			Appr		P6700 Bodyside LH - Robot Cell 2V09	Scale 1:1		Document type: EPB	Project nr: 22-16150
Modification	Date	Name	Original		Replacement of	Replaced by			Page 1 / 1533

Parts list

F01_001

Device tag	Quantity	Designation	Type number	Supplier	Part number
=V1UQ53UQ3.3-BGS/R	1	Inductive sensor Monitoring Kit for Power Clamps	1324638	TUNKERS	TUN.1324638

+.UQ53UQ3.2/1

+.UQ53UQ3.4/1

			Date	1/17/2023	Volvo Trucks North America	Valiant TMS	Parts list : TUN.1324638 - TUN.1324638	Drawing name: =2V09&EFS-EL	= + V1UQ53UQ3.3
			Ed.	MKLEPADLO					
			Appr		P6700 Bodyside LH - Robot Cell 2V09	Scale 1:1		Document type: EPB	Project nr: 22-16150
Modification	Date	Name	Original		Replacement of	Replaced by			Page 1 / 1533

Parts list

F01_001

Device tag	Quantity	Designation	Type number	Supplier	Part number
=V1UQ53UQ3.4-BGS/R	1	Inductive sensor Monitoring Kit for Power Clamps	1324638	TUNKERS	TUN.1324638

+.UQ53UQ3.3/1

+.UQ53UQ3.5/1

			Date	1/17/2023	Volvo Trucks North America	Valiant TMS	Parts list : TUN.1324638 - TUN.1324638	Drawing name: =2V09&EFS-EL	= + V1UQ53UQ3.4
			Ed.	MKLEPADLO					
			Appr		P6700 Bodyside LH - Robot Cell 2V09	Scale 1:1		Document type: EPB	Project nr: 22-16150
Modification	Date	Name	Original		Replacement of	Replaced by			Page 1 / 1533

Parts list

F01_001

Device tag	Quantity	Designation	Type number	Supplier	Part number
=V1UQ53UQ3.5-BGS/R	1	Inductive sensor Monitoring Kit for Power Clamps	1324638	TUNKERS	TUN.1324638

+.UQ53UQ3.4/1

+.UQ53UQ4.1/1

Parts list

F01_001

Device tag	Quantity	Designation	Type number	Supplier	Part number
=V1UQ53UQ4.1-BGS/R	1	Inductive sensor Monitoring Kit for Power Clamps	1324638	TUNKERS	TUN.1324638

+.UQ53UQ3.5/1

+.UQ53UQ4.2/1

Parts list

F01_001

Device tag	Quantity	Designation	Type number	Supplier	Part number
=V1UQ53UQ4.2-BGS/R	1	Inductive sensor Monitoring Kit for Power Clamps	1324638	TUNKERS	TUN.1324638

+.UQ53UQ4.1/1

+.UQ53UQ4.3/1

Parts list

F01_001

Device tag	Quantity	Designation	Type number	Supplier	Part number
=V1UQ53UQ4.3-BGS/R	1	Inductive sensor Monitoring Kit for Power Clamps	1324638	TUNKERS	TUN.1324638

+.UQ53UQ4.2/1

+.UQ53UQ5.1/1

Parts list

F01_001

Device tag	Quantity	Designation	Type number	Supplier	Part number
=V1UQ53UQ5.1-BGS/R	1	Inductive sensor Monitoring Kit for Power Clamps	1324638	TUNKERS	TUN.1324638

+.UQ53UQ4.3/1

+.UQ53UQ5.2/1

Parts list

F01_001

Device tag	Quantity	Designation	Type number	Supplier	Part number
=V1UQ53UQ5.2-BGS/R	1	Inductive sensor Monitoring Kit for Power Clamps	1324638	TUNKERS	TUN.1324638

+.UQ53UQ5.1/1

+.UQ53UQ5.3/1

			Date	1/17/2023	Volvo Trucks North America	Valiant TMS	Parts list : TUN.1324638 - TUN.1324638	Drawing name: =2V09&EFS-EL	= + V1UQ53UQ5.2
			Ed.	MKLEPADLO					
			Appr		P6700 Bodyside LH - Robot Cell 2V09	Scale 1:1		Document type: EPB	Project nr: 22-16150
Modification	Date	Name	Original		Replacement of	Replaced by			Page 1 / 1533

Parts list

F01_001

Device tag	Quantity	Designation	Type number	Supplier	Part number
=V1UQ53UQ5.3-BGS/R	1	Inductive sensor Monitoring Kit for Power Clamps	1324638	TUNKERS	TUN.1324638

+.UQ53UQ5.2/1

+.UQ53UQ6.1/1

			Date	1/17/2023	Volvo Trucks North America	Valiant TMS	Parts list : TUN.1324638 - TUN.1324638	Drawing name: =2V09&EFS-EL	= + V1UQ53UQ5.3
			Ed.	MKLEPADLO					
			Appr		P6700 Bodyside LH - Robot Cell 2V09	Scale 1:1		Document type: EPB	Project nr: 22-16150
Modification	Date	Name	Original		Replacement of	Replaced by			Page 1 / 1533

Parts list

F01_001

Device tag	Quantity	Designation	Type number	Supplier	Part number
=V1UQ53UQ6.1-BGS/R	1	Inductive sensor Monitoring Kit for Power Clamps	1324638	TUNKERS	TUN.1324638

+.UQ53UQ5.3/1

+.UQ53UQ7.1/1

Parts list

F01_001

Device tag	Quantity	Designation	Type number	Supplier	Part number
=V1UQ53UQ7.1-BGS/R	1	Inductive sensor Monitoring Kit for Power Clamps	1324638	TUNKERS	TUN.1324638

+.UQ53UQ6.1/1

+.UQ53UQ8.1/1

Parts list

F01_001

Device tag	Quantity	Designation	Type number	Supplier	Part number
=V1UQ53UQ8.1-BGS/R	1	Inductive sensor Monitoring Kit for Power Clamps	1324638	TUNKERS	TUN.1324638

+.UQ53UQ7.1/1

+.UQ53UQ8.2/1

Parts list

F01_001

Device tag	Quantity	Designation	Type number	Supplier	Part number
=V1UQ53UQ8.2-BGS/R	1	Inductive sensor Monitoring Kit for Power Clamps	1324638	TUNKERS	TUN.1324638

+.UQ53UQ8.1/1

+.UQ53UQ9.1/1

Parts list

F01_001

Device tag	Quantity	Designation	Type number	Supplier	Part number
=V1UQ53UQ9.1-BGS/R	1	Inductive sensor Monitoring Kit for Power Clamps	1324638	TUNKERS	TUN.1324638

+.UQ53UQ8.2/1

+.UQ53UQ10.1/1

Parts list

F01_001

Device tag	Quantity	Designation	Type number	Supplier	Part number
=V1UQ53UQ10.1-BGS/R	1	Inductive sensor Monitoring Kit for Power Clamps	1324638	TUNKERS	TUN.1324638

+.UQ53UQ9.1/1

+.UQ53UQ10.2/1

Parts list

F01_001

Device tag	Quantity	Designation	Type number	Supplier	Part number
=V1UQ53UQ10.2-BGS/R	1	Inductive sensor Monitoring Kit for Power Clamps	1324638	TUNKERS	TUN.1324638

+.UQ53UQ10.1/1

+.UQ53UQ11.1/1

			Date	1/17/2023	Volvo Trucks North America	Valiant TMS	Parts list : TUN.1324638 - TUN.1324638	Drawing name: =2V09&EFS-EL	= + V1UQ53UQ10.2
			Ed.	MKLEPADLO					
			Appr		P6700 Bodyside LH - Robot Cell 2V09	Scale 1:1		Document type: EPB	Project nr: 22-16150
Modification	Date	Name	Original		Replacement of	Replaced by			Page 1 / 1533

Parts list

F01_001

Device tag	Quantity	Designation	Type number	Supplier	Part number
=V1UQ53UQ11.1-BGS/R	1	Inductive sensor Monitoring Kit for Power Clamps	1324638	TUNKERS	TUN.1324638

+.UQ53UQ10.2/1

+.UQ53UQ11.2/1

Parts list

F01_001

Device tag	Quantity	Designation	Type number	Supplier	Part number
=V1UQ53UQ11.2-BGS/R	1	Inductive sensor Monitoring Kit for Power Clamps	1324638	TUNKERS	TUN.1324638

+.UQ53UQ11.1/1

+.UQ53UQ12.1/1

			Date	1/17/2023	Volvo Trucks North America	Valiant TMS	Parts list : TUN.1324638 - TUN.1324638	Drawing name: =2V09&EFS-EL	= + V1UQ53UQ11.2
			Ed.	MKLEPADLO					
			Appr		P6700 Bodyside LH - Robot Cell 2V09	Scale 1:1		Document type: EPB	Project nr: 22-16150
Modification	Date	Name	Original		Replacement of	Replaced by			Page 1 / 1533

Parts list

F01_001

Device tag	Quantity	Designation	Type number	Supplier	Part number
=V1UQ53UQ12.1-BGS/R	1	Inductive sensor Monitoring Kit for Power Clamps	1324638	TUNKERS	TUN.1324638

+.UQ53UQ11.2/1

+.UQ53UQ13.1/1

Parts list

F01_001

Device tag	Quantity	Designation	Type number	Supplier	Part number
=V1UQ53UQ13.1-BGS/R	1	Inductive sensor Monitoring Kit for Power Clamps	1324638	TUNKERS	TUN.1324638

+.UQ53UQ12.1/1

+.UQ53UQ14.1/1

Parts list

F01_001

Device tag	Quantity	Designation	Type number	Supplier	Part number
=V1UQ53UQ14.1-BGS/R	1	4-Wire, 4-Pin, DC M12 X 1 (PNP)	WWS001A	WEL	WEL.WWS001A

+.UQ53UQ13.1/1

+.UQ53UQ15.1/1

			Date	1/17/2023	Volvo Trucks North America	Valiant TMS	Parts list : WEL.WWS001A - WEL.WWS001A	Drawing name: =2V09&EFS-EL	= + V1UQ53UQ14.1
			Ed.	MKLEPADLO					
			Appr		P6700 Bodyside LH - Robot Cell 2V09	Scale 1:1		Document type: EPB	Project nr: 22-16150
Modification	Date	Name	Original		Replacement of	Replaced by			Page 1 / 1533

Parts list

F01_001

Device tag	Quantity	Designation	Type number	Supplier	Part number
=V1UQ53UQ15.1-BGS/R	1	4-Wire, 4-Pin, DC M12 X 1 (PNP)	WWS001A	WEL	WEL.WWS001A

+.UQ53UQ14.1/1

+.UQ53UQ16.1/1

			Date	1/17/2023	Volvo Trucks North America	Valiant TMS	Parts list : WEL.WWS001A - WEL.WWS001A	Drawing name: =2V09&EFS-EL	= + V1UQ53UQ15.1
			Ed.	MKLEPADLO					
			Appr		P6700 Bodyside LH - Robot Cell 2V09	Scale 1:1		Document type: EPB	Project nr: 22-16150
Modification	Date	Name	Original		Replacement of	Replaced by			Page 1 / 1533

Parts list

F01_001

Device tag	Quantity	Designation	Type number	Supplier	Part number
=V1UQ53UQ16.1-BGS/R	1	4-Wire, 4-Pin, DC M12 X 1 (PNP)	WWS001A	WEL	WEL.WWS001A

+.UQ53UQ15.1/1

+.UQ53UQ17.1/1

			Date	1/17/2023	Volvo Trucks North America	Valiant TMS	Parts list : WEL.WWS001A - WEL.WWS001A	Drawing name: =2V09&EFS-EL	= + V1UQ53UQ16.1
			Ed.	MKLEPADLO					
			Appr		P6700 Bodyside LH - Robot Cell 2V09	Scale 1:1		Document type: EPB	Project nr: 22-16150
Modification	Date	Name	Original		Replacement of	Replaced by			Page 1 / 1533

Parts list

F01_001

Device tag	Quantity	Designation	Type number	Supplier	Part number
=V1UQ53UQ17.1-BGS/R	1	4-Wire, 4-Pin, DC M12 X 1 (PNP)	WWS001A	WEL	WEL.WWS001A

+.UQ53UQ16.1/1

+.UQ54/1

			Date	1/17/2023	Volvo Trucks North America	Valiant TMS	Parts list : WEL.WWS001A - WEL.WWS001A	Drawing name: =2V09&EFS-EL	=	
			Ed.	MKLEPADLO					+ V1UQ53UQ17.1	
			Appr		P6700 Bodyside LH - Robot Cell 2V09	Scale 1:1		Document type: EPB	Project nr: 22-16150	Page 1 / 1533
Modification	Date	Name	Original		Replacement of	Replaced by				

Parts list

F01_001

Device tag	Quantity	Designation	Type number	Supplier	Part number
=V1UQ54BG0-BG01	1	Inductive sensor	BI20U-CA40-AP6X2-H1141/S1590W/BS2.0	Turck	TUR.1627297
=V1UQ54BG0-BG02	1	Inductive sensor	BI20U-CA40-AP6X2-H1141/S1590W/BS2.0	Turck	TUR.1627297
=V1UQ54BG0-BG03	1	Inductive sensor	BI20U-CA40-AP6X2-H1141/S1590W/BS2.0	Turck	TUR.1627297
=V1UQ54BG0-BG04	1	Inductive sensor	BI20U-CA40-AP6X2-H1141/S1590W/BS2.0	Turck	TUR.1627297
=V1UQ54BG0-BG05	1	Inductive sensor	BI20U-CA40-AP6X2-H1141/S1590W/BS2.0	Turck	TUR.1627297
=V1UQ54BG0-XG1/2	1	Y splitter	U2-30676	TURCK	TUR.VB2-FSM 4.4/2FKM 4/S3450
=V1UQ54BG0-XG3/4	1	Y splitter	U2-30676	TURCK	TUR.VB2-FSM 4.4/2FKM 4/S3450
=V1UQ54KF1-KF1	0	Bus node	CPX-FB33	FES	FES.548755
=V1UQ54KF1-KF1	0	Interlinking block	CPX-M-GE-EV-S-7/8-5POL	FES	FES.550208
=V1UQ54KF1-KF1.11	0	Manifold block	CPX-M-AB-8-M12X2-5POL	FES	FES.549335
=V1UQ54KF1-KF1.12	0	Manifold block	CPX-M-AB-8-M12X2-5POL	FES	FES.549335
=V1UQ54KF1-KF1.13	0	Manifold block	CPX-M-AB-8-M12X2-5POL	FES	FES.549335
=V1UQ54KF2-KF2	0	Bus node	CPX-FB33	FES	FES.548755
=V1UQ54KF2-KF2	0	Interlinking block	CPX-M-GE-EV-S-7/8-5POL	FES	FES.550208
=V1UQ54KF2-KF2.11	0	Manifold block	CPX-M-AB-8-M12X2-5POL	FES	FES.549335
=V1UQ54KF2-KF2.12	0	Manifold block	CPX-M-AB-8-M12X2-5POL	FES	FES.549335
=V1UQ54WC4-XG51	1	TEE, 5-PIN MINI, STANDARD KEYWAY	RSM-2RKM 50	TURCK	TUR.RSM-2RKM 50

+.UQ53UQ17.1/1

+.UQ54UQ1.1/1

			Date	1/17/2023	Volvo Trucks North America	Valiant TMS	Parts list : TUR.1627297 - TUR.RSM-2RKM 50	Drawing name: =2V09&EFS-EL	=	
			Ed.	MKLEPADLO					+ V1UQ54	
			Appr		P6700 Bodyside LH - Robot Cell 2V09			Document type: EPB	Project nr: 22-16150	Page 1
Modification	Date	Name	Original		Replacement of	Replaced by	Scale 1:1			1533

Parts list

F01_001

Device tag	Quantity	Designation	Type number	Supplier	Part number
=V1UQ54UQ1.1-BGS/R	1	4-Wire, 4-Pin, DC M12 X 1 (PNP)	WWS001A	WEL	WEL.WWS001A

+V1UQ54/1

+.UQ54UQ2.1/1

			Date	1/17/2023	Volvo Trucks North America	Valiant TMS	Parts list : WEL.WWS001A - WEL.WWS001A	Drawing name: =2V09&EFS-EL	=	
			Ed.	MKLEPADLO					+ V1UQ54UQ1.1	
			Appr		P6700 Bodyside LH - Robot Cell 2V09	Scale 1:1		Document type: EPB	Project nr: 22-16150	Page 1 / 1533
Modification	Date	Name	Original		Replacement of	Replaced by				

Parts list

F01_001

Device tag	Quantity	Designation	Type number	Supplier	Part number
=V1UQ54UQ2.1-BGS/R	1	4-Wire, 4-Pin, DC M12 X 1 (PNP)	WWS001A	WEL	WEL.WWS001A

+.UQ54UQ1.1/1

+.UQ54UQ3.1/1

			Date	1/17/2023	Volvo Trucks North America	Valiant TMS	Parts list : WEL.WWS001A - WEL.WWS001A	Drawing name: =2V09&EFS-EL	= + V1UQ54UQ2.1
			Ed.	MKLEPADLO					
			Appr		P6700 Bodyside LH - Robot Cell 2V09	Scale 1:1		Document type: EPB	Project nr: 22-16150
Modification	Date	Name	Original		Replacement of	Replaced by			Page 1 / 1533

Parts list

F01_001

Device tag	Quantity	Designation	Type number	Supplier	Part number
=V1UQ54UQ3.1-BGS/R	1	Inductive sensor Monitoring Kit for Power Clamps	1324638	TUNKERS	TUN.1324638

+.UQ54UQ2.1/1

+.UQ54UQ3.2/1

			Date	1/17/2023	Volvo Trucks North America	Valiant TMS	Parts list : TUN.1324638 - TUN.1324638	Drawing name: =2V09&EFS-EL	= + V1UQ54UQ3.1
			Ed.	MKLEPADLO					
			Appr		P6700 Bodyside LH - Robot Cell 2V09	Scale 1:1		Document type: EPB	Project nr: 22-16150
Modification	Date	Name	Original		Replacement of	Replaced by			Page 1 / 1533

Parts list

F01_001

Device tag	Quantity	Designation	Type number	Supplier	Part number
=V1UQ54UQ3.2-BGS/R	1	Inductive sensor Monitoring Kit for Power Clamps	1324638	TUNKERS	TUN.1324638

+.UQ54UQ3.1/1

+.UQ54UQ3.3/1

			Date	1/17/2023	Volvo Trucks North America	Valiant TMS	Parts list : TUN.1324638 - TUN.1324638	Drawing name: =2V09&EFS-EL	= + V1UQ54UQ3.2
			Ed.	MKLEPADLO					
			Appr		P6700 Bodyside LH - Robot Cell 2V09	Scale 1:1		Document type: EPB	Project nr: 22-16150
Modification	Date	Name	Original		Replacement of	Replaced by			Page 1 / 1533

Parts list

F01_001

Device tag	Quantity	Designation	Type number	Supplier	Part number
=V1UQ54UQ3.3-BGS/R	1	Inductive sensor Monitoring Kit for Power Clamps	1324638	TUNKERS	TUN.1324638

+.UQ54UQ3.2/1

+.UQ54UQ4.1/1

			Date	1/17/2023	Volvo Trucks North America	Valiant TMS	Parts list : TUN.1324638 - TUN.1324638	Drawing name: =2V09&EFS-EL	= + V1UQ54UQ3.3
			Ed.	MKLEPADLO					
			Appr		P6700 Bodyside LH - Robot Cell 2V09	Scale 1:1		Document type: EPB	Project nr: 22-16150
Modification	Date	Name	Original		Replacement of	Replaced by			Page 1 / 1533

Parts list

F01_001

Device tag	Quantity	Designation	Type number	Supplier	Part number
=V1UQ54UQ4.1-BGS/R	1	Inductive sensor Monitoring Kit for Power Clamps	1324638	TUNKERS	TUN.1324638

+.UQ54UQ3.3/1

+.UQ54UQ4.2/1

Parts list

F01_001

Device tag	Quantity	Designation	Type number	Supplier	Part number
=V1UQ54UQ4.2-BGS/R	1	Inductive sensor Monitoring Kit for Power Clamps	1324638	TUNKERS	TUN.1324638

+.UQ54UQ4.1/1

+.UQ54UQ4.3/1

			Date	1/17/2023	Volvo Trucks North America	Valiant TMS	Parts list : TUN.1324638 - TUN.1324638	Drawing name: =2V09&EFS-EL	= + V1UQ54UQ4.2
			Ed.	MKLEPADLO					
			Appr		P6700 Bodyside LH - Robot Cell 2V09	Scale 1:1		Document type: EPB	Project nr: 22-16150
Modification	Date	Name	Original		Replacement of	Replaced by			Page 1 / 1533

Parts list

F01_001

Device tag	Quantity	Designation	Type number	Supplier	Part number
=V1UQ54UQ4.3-BGS/R	1	Inductive sensor Monitoring Kit for Power Clamps	1324638	TUNKERS	TUN.1324638

+.UQ54UQ4.2/1

+.UQ54UQ5.1/1

			Date	1/17/2023	Volvo Trucks North America	Valiant TMS	Parts list : TUN.1324638 - TUN.1324638	Drawing name: =2V09&EFS-EL	= + V1UQ54UQ4.3
			Ed.	MKLEPADLO					
			Appr		P6700 Bodyside LH - Robot Cell 2V09	Scale 1:1		Document type: EPB	Project nr: 22-16150
Modification	Date	Name	Original		Replacement of	Replaced by			Page 1 / 1533

Parts list

F01_001

Device tag	Quantity	Designation	Type number	Supplier	Part number
=V1UQ54UQ5.1-BGS/R	1	Inductive sensor Monitoring Kit for Power Clamps	1324638	TUNKERS	TUN.1324638

+.UQ54UQ4.3/1

+.UQ54UQ5.2/1

			Date	1/17/2023	Volvo Trucks North America	Valiant TMS	Parts list : TUN.1324638 - TUN.1324638	Drawing name: =2V09&EFS-EL	= + V1UQ54UQ5.1
			Ed.	MKLEPADLO					
			Appr		P6700 Bodyside LH - Robot Cell 2V09	Scale 1:1		Document type: EPB	Project nr: 22-16150
Modification	Date	Name	Original		Replacement of	Replaced by			Page 1 / 1533

Parts list

F01_001

Device tag	Quantity	Designation	Type number	Supplier	Part number
=V1UQ54UQ5.2-BGS/R	1	Inductive sensor Monitoring Kit for Power Clamps	1324638	TUNKERS	TUN.1324638

+.UQ54UQ5.1/1

+.UQ54UQ5.3/1

			Date	1/17/2023	Volvo Trucks North America	Valiant TMS	Parts list : TUN.1324638 - TUN.1324638	Drawing name: =2V09&EFS-EL	= + V1UQ54UQ5.2
			Ed.	MKLEPADLO					
			Appr		P6700 Bodyside LH - Robot Cell 2V09	Scale 1:1		Document type: EPB	Project nr: 22-16150
Modification	Date	Name	Original		Replacement of	Replaced by			Page 1 / 1533

Parts list

F01_001

Device tag	Quantity	Designation	Type number	Supplier	Part number
=V1UQ54UQ5.3-BGS/R	1	Inductive sensor Monitoring Kit for Power Clamps	1324638	TUNKERS	TUN.1324638

+.UQ54UQ5.2/1

+.UQ54UQ5.4/1

			Date	1/17/2023	Volvo Trucks North America	Valiant TMS	Parts list : TUN.1324638 - TUN.1324638	Drawing name: =2V09&EFS-EL	= + V1UQ54UQ5.3
			Ed.	MKLEPADLO					
			Appr		P6700 Bodyside LH - Robot Cell 2V09	Scale 1:1		Document type: EPB	Project nr: 22-16150
Modification	Date	Name	Original		Replacement of	Replaced by			Page 1 / 1533

Parts list

F01_001

Device tag	Quantity	Designation	Type number	Supplier	Part number
=V1UQ54UQ5.4-BGS/R	1	Inductive sensor Monitoring Kit for Power Clamps	1324638	TUNKERS	TUN.1324638

+.UQ54UQ5.3/1

+.UQ54UQ6.1/1

			Date	1/17/2023	Volvo Trucks North America	Valiant TMS	Parts list : TUN.1324638 - TUN.1324638	Drawing name: =2V09&EFS-EL	= + V1UQ54UQ5.4
			Ed.	MKLEPADLO					
			Appr		P6700 Bodyside LH - Robot Cell 2V09	Scale 1:1		Document type: EPB	Project nr: 22-16150
Modification	Date	Name	Original		Replacement of	Replaced by			Page 1 / 1533

Parts list

F01_001

Device tag	Quantity	Designation	Type number	Supplier	Part number
=V1UQ54UQ6.1-BGS/R	1	Inductive sensor Monitoring Kit for Power Clamps	1324638	TUNKERS	TUN.1324638

+.UQ54UQ5.4/1

+.UQ54UQ6.2/1

Parts list

F01_001

Device tag	Quantity	Designation	Type number	Supplier	Part number
=V1UQ54UQ6.2-BGS/R	1	Inductive sensor Monitoring Kit for Power Clamps	1324638	TUNKERS	TUN.1324638

+.UQ54UQ6.1/1

+.UQ54UQ7.1/1

			Date	1/17/2023	Volvo Trucks North America	Valiant TMS	Parts list : TUN.1324638 - TUN.1324638	Drawing name: =2V09&EFS-EL	= + V1UQ54UQ6.2
			Ed.	MKLEPADLO					
			Appr		P6700 Bodyside LH - Robot Cell 2V09	Scale 1:1		Document type: EPB	Project nr: 22-16150
Modification	Date	Name	Original		Replacement of	Replaced by			Page 1 / 1533

Parts list

F01_001

Device tag	Quantity	Designation	Type number	Supplier	Part number
=V1UQ54UQ7.1-BGS/R	1	Inductive sensor Monitoring Kit for Power Clamps	1324638	TUNKERS	TUN.1324638

+.UQ54UQ6.2/1

+.UQ54UQ8.1/1

			Date	1/17/2023	Volvo Trucks North America	Valiant TMS	Parts list : TUN.1324638 - TUN.1324638	Drawing name: =2V09&EFS-EL	= + V1UQ54UQ7.1
			Ed.	MKLEPADLO					
			Appr		P6700 Bodyside LH - Robot Cell 2V09	Scale 1:1		Document type: EPB	Project nr: 22-16150
Modification	Date	Name	Original		Replacement of	Replaced by			Page 1 / 1533

Parts list

F01_001

Device tag	Quantity	Designation	Type number	Supplier	Part number
=V1UQ54UQ8.1-BGS/R	1	Inductive sensor Monitoring Kit for Power Clamps	1324638	TUNKERS	TUN.1324638

+.UQ54UQ7.1/1

+.UQ54UQ8.2/1

			Date	1/17/2023	Volvo Trucks North America	Valiant TMS	Parts list : TUN.1324638 - TUN.1324638	Drawing name: =2V09&EFS-EL	= + V1UQ54UQ8.1
			Ed.	MKLEPADLO					
			Appr		P6700 Bodyside LH - Robot Cell 2V09	Scale 1:1		Document type: EPB	Project nr: 22-16150
Modification	Date	Name	Original		Replacement of	Replaced by			Page 1 / 1533

Parts list

F01_001

Device tag	Quantity	Designation	Type number	Supplier	Part number
=V1UQ54UQ8.2-BGS/R	1	Inductive sensor Monitoring Kit for Power Clamps	1324638	TUNKERS	TUN.1324638

+.UQ54UQ8.1/1

+.UQ54UQ9.1/1

			Date	1/17/2023	Volvo Trucks North America	Valiant TMS	Parts list : TUN.1324638 - TUN.1324638	Drawing name: =2V09&EFS-EL	= + V1UQ54UQ8.2
			Ed.	MKLEPADLO					
			Appr		P6700 Bodyside LH - Robot Cell 2V09	Scale 1:1		Document type: EPB	Project nr: 22-16150
Modification	Date	Name	Original		Replacement of	Replaced by			Page 1 / 1533

Parts list

F01_001

Device tag	Quantity	Designation	Type number	Supplier	Part number
=V1UQ54UQ9.1-BGS/R	1	Inductive sensor Monitoring Kit for Power Clamps	1324638	TUNKERS	TUN.1324638

+.UQ54UQ8.2/1

+.UQ54UQ10.1/1

Parts list

F01_001

Device tag	Quantity	Designation	Type number	Supplier	Part number
=V1UQ54UQ10.1-BGS/R	1	Inductive sensor Monitoring Kit for Power Clamps	1324638	TUNKERS	TUN.1324638

+.UQ54UQ9.1/1

+.UQ54UQ10.2/1

Parts list

F01_001

Device tag	Quantity	Designation	Type number	Supplier	Part number
=V1UQ54UQ10.2-BGS/R	1	Inductive sensor Monitoring Kit for Power Clamps	1324638	TUNKERS	TUN.1324638

+.UQ54UQ10.1/1

+.UQ54UQ11.1/1

			Date	1/17/2023	Volvo Trucks North America	Valiant TMS	Parts list : TUN.1324638 - TUN.1324638	Drawing name: =2V09&EFS-EL	= + V1UQ54UQ10.2
			Ed.	MKLEPADLO					
			Appr		P6700 Bodyside LH - Robot Cell 2V09	Scale 1:1		Document type: EPB	Project nr: 22-16150
Modification	Date	Name	Original		Replacement of	Replaced by			Page 1 / 1533

Parts list

F01_001

Device tag	Quantity	Designation	Type number	Supplier	Part number
=V1UQ54UQ11.1-BGS/R	1	4-Wire, 4-Pin, DC M12 X 1 (PNP)	WWS001A	WEL	WEL.WWS001A

+.UQ54UQ10.2/1

+.UQ54UQ12.1/1

			Date	1/17/2023	Volvo Trucks North America	Valiant TMS	Parts list : WEL.WWS001A - WEL.WWS001A	Drawing name: =2V09&EFS-EL	= + V1UQ54UQ11.1
			Ed.	MKLEPADLO					
			Appr		P6700 Bodyside LH - Robot Cell 2V09	Scale 1:1		Document type: EPB	Project nr: 22-16150
Modification	Date	Name	Original		Replacement of	Replaced by			Page 1 / 1533

Parts list

F01_001

Device tag	Quantity	Designation	Type number	Supplier	Part number
=V1UQ54UQ12.1-BGS/R	1	4-Wire, 4-Pin, DC M12 X 1 (PNP)	WWS001A	WEL	WEL.WWS001A

+.UQ54UQ11.1/1

+.UQ54UQ13.1/1

			Date	1/17/2023	Volvo Trucks North America	Valiant TMS	Parts list : WEL.WWS001A - WEL.WWS001A	Drawing name: =2V09&EFS-EL	= + V1UQ54UQ12.1
			Ed.	MKLEPADLO					
			Appr		P6700 Bodyside LH - Robot Cell 2V09	Scale 1:1		Document type: EPB	Project nr: 22-16150
Modification	Date	Name	Original		Replacement of	Replaced by			Page 1 / 1533

Parts list

F01_001

Device tag	Quantity	Designation	Type number	Supplier	Part number
=V1UQ54UQ13.1-BGS/R	1	4-Wire, 4-Pin, DC M12 X 1 (PNP)	WWS001A	WEL	WEL.WWS001A

+.UQ54UQ12.1/1

+.UQ54UQ14.1/1

			Date	1/17/2023	Volvo Trucks North America	Valiant TMS	Parts list : WEL.WWS001A - WEL.WWS001A	Drawing name: =2V09&EFS-EL	= + V1UQ54UQ13.1
			Ed.	MKLEPADLO					
			Appr		P6700 Bodyside LH - Robot Cell 2V09	Scale 1:1		Document type: EPB	Project nr: 22-16150
Modification	Date	Name	Original		Replacement of	Replaced by			Page 1 / 1533

Parts list

F01_001

Device tag	Quantity	Designation	Type number	Supplier	Part number
=V1UQ54UQ14.1-BGS/R	1	4-Wire, 4-Pin, DC M12 X 1 (PNP)	WWS001A	WEL	WEL.WWS001A

+.UQ54UQ13.1/1

+.UQ55/1

			Date	1/17/2023	Volvo Trucks North America	Valiant TMS	Parts list : WEL.WWS001A - WEL.WWS001A	Drawing name: =2V09&EFS-EL	=	
			Ed.	MKLEPADLO					+ V1UQ54UQ14.1	
			Appr		P6700 Bodyside LH - Robot Cell 2V09	Scale 1:1		Document type: EPB	Project nr: 22-16150	Page 1 / 1533
Modification	Date	Name	Original		Replacement of	Replaced by				

Parts list

F01_001

Device tag	Quantity	Designation	Type number	Supplier	Part number
=V1UQ55BG0-BG01	1	Inductive sensor	BI20U-CA40-AP6X2-H1141/S1590W/BS2.0	Turck	TUR.1627297
=V1UQ55BG0-BG02	1	Inductive sensor	BI20U-CA40-AP6X2-H1141/S1590W/BS2.0	Turck	TUR.1627297
=V1UQ55BG0-BG03	1	Inductive sensor	BI20U-CA40-AP6X2-H1141/S1590W/BS2.0	Turck	TUR.1627297
=V1UQ55BG0-BG04	1	Inductive sensor	BI20U-CA40-AP6X2-H1141/S1590W/BS2.0	Turck	TUR.1627297
=V1UQ55BG0-BG05	1	Inductive sensor	BI20U-CA40-AP6X2-H1141/S1590W/BS2.0	Turck	TUR.1627297
=V1UQ55BG0-XG1/2	1	Y splitter	U2-30676	TURCK	TUR.VB2-FSM 4.4/2FKM 4/S3450
=V1UQ55BG0-XG3/4	1	Y splitter	U2-30676	TURCK	TUR.VB2-FSM 4.4/2FKM 4/S3450
=V1UQ55KF1-KF1	0	Bus node	CPX-FB33	FES	FES.548755
=V1UQ55KF1-KF1	0	Interlinking block	CPX-M-GE-EV-S-7/8-5POL	FES	FES.550208
=V1UQ55KF1-KF1.11	0	Manifold block	CPX-M-AB-8-M12X2-5POL	FES	FES.549335
=V1UQ55KF1-KF1.12	0	Manifold block	CPX-M-AB-8-M12X2-5POL	FES	FES.549335

			Date	1/17/2023	Volvo Trucks North America	Valiant TMS	Parts list : TUR.1627297 - FES.549335	Drawing name: =2V09&EFS-EL	=	
			Ed.	MKLEPADLO					+ V1UQ55	
			Appr		P6700 Bodyside LH - Robot Cell 2V09	Scale 1:1		Document type: EPB	Project nr: 22-16150	Page 1 / 1533
Modification	Date	Name	Original		Replacement of	Replaced by				

Parts list

F01_001

Device tag	Quantity	Designation	Type number	Supplier	Part number
=V1UQ55UQ1.1-BGS/R	1	4-Wire, 4-Pin, DC M12 X 1 (PNP)	WWS001A	WEL	WEL.WWS001A

+V1UQ55/1

+.UQ55UQ2.1/1

			Date	1/17/2023	Volvo Trucks North America	Valiant TMS	Parts list : WEL.WWS001A - WEL.WWS001A	Drawing name: =2V09&EFS-EL	=	
			Ed.	MKLEPADLO					+ V1UQ55UQ1.1	
			Appr		P6700 Bodyside LH - Robot Cell 2V09	Scale 1:1		Document type: EPB	Project nr: 22-16150	Page 1 / 1533
Modification	Date	Name	Original		Replacement of	Replaced by				

Parts list

F01_001

Device tag	Quantity	Designation	Type number	Supplier	Part number
=V1UQ55UQ2.1-BGS/R	1	4-Wire, 4-Pin, DC M12 X 1 (PNP)	WWS001A	WEL	WEL.WWS001A

+.UQ55UQ1.1/1

+.UQ55UQ3.1/1

			Date	1/17/2023	Volvo Trucks North America	Valiant TMS	Parts list : WEL.WWS001A - WEL.WWS001A	Drawing name: =2V09&EFS-EL	= + V1UQ55UQ2.1
			Ed.	MKLEPADLO					
			Appr		P6700 Bodyside LH - Robot Cell 2V09	Scale 1:1		Document type: EPB	Project nr: 22-16150
Modification	Date	Name	Original		Replacement of	Replaced by			Page 1 / 1533

Parts list

F01_001

Device tag	Quantity	Designation	Type number	Supplier	Part number
=V1UQ55UQ3.1-BGS/R	1	4-Wire, 4-Pin, DC M12 X 1 (PNP)	WWS001A	WEL	WEL.WWS001A

+.UQ55UQ2.1/1

+.UQ55UQ4.1/1

			Date	1/17/2023	Volvo Trucks North America	Valiant TMS	Parts list : WEL.WWS001A - WEL.WWS001A	Drawing name: =2V09&EFS-EL	= + V1UQ55UQ3.1
			Ed.	MKLEPADLO					
			Appr		P6700 Bodyside LH - Robot Cell 2V09	Scale 1:1		Document type: EPB	Project nr: 22-16150
Modification	Date	Name	Original		Replacement of	Replaced by			Page 1 / 1533

Parts list

F01_001

Device tag	Quantity	Designation	Type number	Supplier	Part number
=V1UQ55UQ4.1-BGS/R	1	Inductive sensor Monitoring Kit for Power Clamps	1324638	TUNKERS	TUN.1324638

+.UQ55UQ3.1/1

+.UQ55UQ4.2/1

			Date	1/17/2023	Volvo Trucks North America	Valiant TMS	Parts list : TUN.1324638 - TUN.1324638	Drawing name: =2V09&EFS-EL	= + V1UQ55UQ4.1
			Ed.	MKLEPADLO					
			Appr		P6700 Bodyside LH - Robot Cell 2V09	Scale 1:1		Document type: EPB	Project nr: 22-16150
Modification	Date	Name	Original		Replacement of	Replaced by			Page 1 / 1533

Parts list

F01_001

Device tag	Quantity	Designation	Type number	Supplier	Part number
=V1UQ55UQ4.2-BGS/R	1	Inductive sensor Monitoring Kit for Power Clamps	1324638	TUNKERS	TUN.1324638

+.UQ55UQ4.1/1

&ETT+/1

			Date	1/17/2023	Volvo Trucks North America	Valiant TMS	Parts list : TUN.1324638 - TUN.1324638	Drawing name: =2V09&EFS-EL	= + V1UQ55UQ4.2
			Ed.	MKLEPADLO					
			Appr		P6700 Bodyside LH - Robot Cell 2V09	Scale 1:1		Document type: EPB	Project nr: 22-16150
Modification	Date	Name	Original		Replacement of	Replaced by			Page 1 / 1533

Terminal line-up diagram

F12_001

Part number					
Mounting rail			Strip label	End angle rear	End plate
Terminal					
Part number	Type number	Cross-section	Terminal label	Jumper	Cover

=KF0KF1+UC31-PC1

	DVI	

Terminal line-up diagram

F12_001

Part number					
Mounting rail			Strip label	End angle rear	End plate
Terminal					
Part number	Type number	Cross-section	Terminal label	Jumper	Cover

=KF0KF1+UC31-PH1

DVI

Terminal line-up diagram

F12_001

Part number					
Mounting rail			Strip label	End angle rear	End plate

Terminal					
Part number	Type number	Cross-section	Terminal label	Jumper	Cover
WEI.1608510000	ZDU 2.5	2.5			
WEI.1608740000	ZAP/TW 1				
WEI.9540000000	ZEW 35				
WEI.1608520000	ZDU 2.5 BL	2.5 mm²			
WEI.1608520000	ZDU 2.5 BL	2.5 mm²			

=KF0WC3+UC31-XD1

'	L1	
'	N	
'		
'	PE	
'		

2

4

			Date	1/17/2023	Volvo Trucks North America	Valiant TMS	Terminal line-up diagram =KF0WC3+UC31-XD1	Drawing name: =2V09&EFS-EL	=
			Ed.	MKLEPADLO					+
			Appr		P6700 Bodyside LH - Robot Cell 2V09			Document type: ETT	Project nr: 22-16150	Page 3
Modification	Date	Name	Original		Replacement of	Replaced by	Scale 1:1			1533

Terminal line-up diagram

F12_001

Part number					
Mounting rail			Strip label	End angle rear	End plate

Terminal					
Part number	Type number	Cross-section	Terminal label	Jumper	Cover
WEI.1608510000	ZDU 2.5	2.5			
WEI.1608740000	ZAP/TW 1				
WEI.9540000000	ZEW 35				
WEI.1608520000	ZDU 2.5 BL	2.5 mm²			
WEI.1608520000	ZDU 2.5 BL	2.5 mm²			

=KF0WC3+UC31-XD2

'	1L1	
'	N	
'		
'	PE	
'		

3

5

			Date	1/17/2023	Volvo Trucks North America	Valiant TMS	Terminal line-up diagram =KF0WC3+UC31-XD2	Drawing name: =2V09&EFS-EL	=
			Ed.	MKLEPADLO					+
			Appr		P6700 Bodyside LH - Robot Cell 2V09			Document type: ETT	Project nr: 22-16150	Page 4
Modification	Date	Name	Original		Replacement of	Replaced by	Scale 1:1			1533

Terminal line-up diagram

F12_001

Part number					
Mounting rail			Strip label	End angle rear	End plate

Terminal					
Part number	Type number	Cross-section	Terminal label	Jumper	Cover
WEI.8731720000	ZTR 2.5/3AN	2.5			
WEI.1608800000	ZAP/TW 3				
WEI.9540000000	ZEW 35				
WEI.8731720000	ZTR 2.5/3AN	2.5			
WEI.8731720000	ZTR 2.5/3AN	2.5			
WEI.8731720000	ZTR 2.5/3AN	2.5			
WEI.8731720000	ZTR 2.5/3AN	2.5			
WEI.8731720000	ZTR 2.5/3AN	2.5			

=KF0WC4+UC31-XD11

	1	
	2	
	3	
	11	
	12	
	13	

4 6

			Date	1/17/2023	Volvo Trucks North America	Valiant TMS	Terminal line-up diagram =KF0WC4+UC31-XD11	Drawing name: =2V09&EFS-EL	=
			Ed.	MKLEPADLO					+
			Appr		P6700 Bodyside LH - Robot Cell 2V09			Document type: ETT	Project nr: 22-16150	Page 5
Modification	Date	Name	Original		Replacement of	Replaced by	Scale 1:1			1533

Terminal line-up diagram

F12_001

Part number					
Mounting rail			Strip label	End angle rear	End plate

Terminal					
Part number	Type number	Cross-section	Terminal label	Jumper	Cover
WEI.8731720000	ZTR 2.5/3AN	2.5			
WEI.1608800000	ZAP/TW 3				
WEI.9540000000	ZEW 35				
WEI.8731720000	ZTR 2.5/3AN	2.5			
WEI.8731720000	ZTR 2.5/3AN	2.5			
WEI.8731720000	ZTR 2.5/3AN	2.5			
WEI.8731720000	ZTR 2.5/3AN	2.5			
WEI.8731720000	ZTR 2.5/3AN	2.5			
WEI.8731720000	ZTR 2.5/3AN	2.5			
WEI.8731720000	ZTR 2.5/3AN	2.5			
WEI.8731720000	ZTR 2.5/3AN	2.5			

=KF0WC4+UC31-XD12

	1	
	2	
	3	
	4	
	11	
	12	
	13	
	14	

5 7

			Date	1/17/2023	Volvo Trucks North America	Valiant TMS	Terminal line-up diagram =KF0WC4+UC31-XD12	Drawing name: =2V09&EFS-EL	=
			Ed.	MKLEPADLO					+
			Appr		P6700 Bodyside LH - Robot Cell 2V09			Document type: ETT	Project nr: 22-16150	Page 6 / 1533
Modification	Date	Name	Original		Replacement of / Replaced by	Scale 1:1			

Terminal line-up diagram

F12_001

Part number					
Mounting rail			Strip label	End angle rear	End plate

Terminal					
Part number	Type number	Cross-section	Terminal label	Jumper	Cover
WEI.8731720000	ZTR 2.5/3AN	2.5			
WEI.1608800000	ZAP/TW 3				
WEI.9540000000	ZEW 35				
WEI.8731720000	ZTR 2.5/3AN	2.5			
WEI.8731720000	ZTR 2.5/3AN	2.5			
WEI.8731720000	ZTR 2.5/3AN	2.5			
WEI.8731720000	ZTR 2.5/3AN	2.5			
WEI.8731720000	ZTR 2.5/3AN	2.5			

=KF0WC4+UC31-XD13

	1	
	2	
	3	
	11	
	12	
	13	

6

8

			Date	1/17/2023	Volvo Trucks North America	Valiant TMS	Terminal line-up diagram =KF0WC4+UC31-XD13	Drawing name: =2V09&EFS-EL	=
			Ed.	MKLEPADLO					+
			Appr		P6700 Bodyside LH - Robot Cell 2V09			Document type: ETT	Project nr: 22-16150
Modification	Date	Name	Original		Replacement of	Replaced by	Scale 1:1		Page 7 / 1533

Terminal line-up diagram

F12_001

Part number					
Mounting rail			Strip label	End angle rear	End plate

Terminal					
Part number	Type number	Cross-section	Terminal label	Jumper	Cover
WEI.8731720000	ZTR 2.5/3AN	2.5			
WEI.1608800000	ZAP/TW 3				
WEI.9540000000	ZEW 35				
WEI.8731720000	ZTR 2.5/3AN	2.5			
WEI.8731720000	ZTR 2.5/3AN	2.5			
WEI.8731720000	ZTR 2.5/3AN	2.5			
WEI.8731720000	ZTR 2.5/3AN	2.5			
WEI.8731720000	ZTR 2.5/3AN	2.5			
WEI.8731720000	ZTR 2.5/3AN	2.5			
WEI.8731720000	ZTR 2.5/3AN	2.5			
WEI.8731720000	ZTR 2.5/3AN	2.5			

=KF0WC4+UC31-XD14

	1	
	2	
	3	
	4	
	11	
	12	
	13	
	14	

7

9

			Date	1/17/2023	Volvo Trucks North America	Valiant TMS	Terminal line-up diagram =KF0WC4+UC31-XD14	Drawing name: =2V09&EFS-EL	=
			Ed.	MKLEPADLO					+
			Appr		P6700 Bodyside LH - Robot Cell 2V09			Document type: ETT	Project nr: 22-16150
Modification	Date	Name	Original		Replacement of / Replaced by	Scale 1:1			Page 8 / 1533

Terminal line-up diagram

F12_001

Part number					
Mounting rail			Strip label	End angle rear	End plate
Terminal					
Part number	Type number	Cross-section	Terminal label	Jumper	Cover

=V1WC1+V1UC11-PE

PE

Modification	Date	Name	Date	1/17/2023	Volvo Trucks North America	Valiant TMS	Terminal line-up diagram =V1WC1+V1UC11-PE	Drawing name: =2V09&EFS-EL	=
			Ed.	MKLEPADLO	P6700 Bodyside LH - Robot Cell 2V09	Scale 1:1		Document type: ETT	+
			Appr		Replacement of	Replaced by		Project nr: 22-16150	Page 9 / 1533
			Original						

Terminal line-up diagram

F12_001

Part number					
Mounting rail			Strip label	End angle rear	End plate

Terminal					
Part number	Type number	Cross-section	Terminal label	Jumper	Cover
1SNK705012R0000	ZK2.5-4P	2.5			
1SNK705012R0000	ZK2.5-4P	2.5			
1SNK705012R0000	ZK2.5-4P	2.5			
1SNK705012R0000	ZK2.5-4P	2.5			
1SNK705012R0000	ZK2.5-4P	2.5			
1SNK705012R0000	ZK2.5-4P	2.5			
1SNK705012R0000	ZK2.5-4P	2.5			
1SNK705012R0000	ZK2.5-4P	2.5			
1SNK705012R0000	ZK2.5-4P	2.5			
1SNK705012R0000	ZK2.5-4P	2.5			
1SNK705012R0000	ZK2.5-4P	2.5			
1SNK705012R0000	ZK2.5-4P	2.5			
1SNK705012R0000	ZK2.5-4P	2.5			
1SNK705012R0000	ZK2.5-4P	2.5			
1SNK705012R0000	ZK2.5-4P	2.5			

=V1WC2+V1UC11-XD1

	1	
	2	
	3	
	4	
	5	
	6	
	7	
	8	
	9	
	10	
	11	
	12	
	13	
	14	
	15	
	16	

			Date	1/17/2023	Volvo Trucks North America	Valiant TMS	Terminal line-up diagram =V1WC2+V1UC11-XD1	Drawing name: =2V09&EFS-EL	=
			Ed.	MKLEPADLO					+
			Appr		P6700 Bodyside LH - Robot Cell 2V09	Scale 1:1		Document type: ETT	Project nr: 22-16150	Page 10 / 1533
Modification	Date	Name	Original		Replacement of	Replaced by			

Terminal line-up diagram

F12_001

Part number					
Mounting rail			Strip label	End angle rear	End plate

Terminal					
Part number	Type number	Cross-section	Terminal label	Jumper	Cover
1SNK705012R0000	ZK2.5-4P	2.5			
1SNK705012R0000	ZK2.5-4P	2.5			
1SNK705012R0000	ZK2.5-4P	2.5			
1SNK705012R0000	ZK2.5-4P	2.5			
1SNK705012R0000	ZK2.5-4P	2.5			
1SNK705012R0000	ZK2.5-4P	2.5			
1SNK705012R0000	ZK2.5-4P	2.5			
1SNK705012R0000	ZK2.5-4P	2.5			

=V1WC2+V1UC11-XD2

	1	
	2	
	3	
	4	
	5	
	6	
	7	
	8	

			Date	1/17/2023	Volvo Trucks North America	Valiant TMS	Terminal line-up diagram =V1WC2+V1UC11-XD2	Drawing name: =2V09&EFS-EL	=
			Ed.	MKLEPADLO					+
			Appr		P6700 Bodyside LH - Robot Cell 2V09			Document type: ETT	Project nr: 22-16150
Modification	Date	Name	Original		Replacement of	Replaced by	Scale 1:1		Page 11 / 1533

Terminal line-up diagram

F12_001

Part number					
Mounting rail			Strip label	End angle rear	End plate

Terminal					
Part number	Type number	Cross-section	Terminal label	Jumper	Cover
1SNK705012R0000	ZK2.5-4P	2.5			
1SNK705012R0000	ZK2.5-4P	2.5			
1SNK705012R0000	ZK2.5-4P	2.5			
1SNK705012R0000	ZK2.5-4P	2.5			
1SNK705012R0000	ZK2.5-4P	2.5			

=V1WC2+V1UC11-XD3

	1	
	2	
	3	
	4	
	5	

11

13

			Date	1/17/2023	Volvo Trucks North America	Valiant TMS	Terminal line-up diagram =V1WC2+V1UC11-XD3	Drawing name: =2V09&EFS-EL	=
			Ed.	MKLEPADLO					+
			Appr		P6700 Bodyside LH - Robot Cell 2V09			Document type: ETT	Project nr: 22-16150
Modification	Date	Name	Original		Replacement of	Replaced by	Scale 1:1		Page 12 / 1533

Terminal line-up diagram

F12_001

Part number					
Mounting rail			Strip label	End angle rear	End plate
Terminal					
Part number	Type number	Cross-section	Terminal label	Jumper	Cover
1SNK706012R0000	ZK4-4P	4			
1SNK706012R0000	ZK4-4P	4			
1SNK706012R0000	ZK4-4P	4			
1SNK706012R0000	ZK4-4P	4			

=V1WC3+V1UC11-XD1

'	1	
'	2	
'	3	
'	4	

12

14

			Date	1/17/2023	Volvo Trucks North America	Valiant TMS	Terminal line-up diagram =V1WC3+V1UC11-XD1	Drawing name: =2V09&EFS-EL
			Ed.	MKLEPADLO				
			Appr		P6700 Bodyside LH - Robot Cell 2V09			Document type: ETT / Project nr: 22-16150 / Page 13 / 1533
Modification	Date	Name	Original		Replacement of / Replaced by	Scale 1:1		

Terminal line-up diagram

F12_001

Part number					
Mounting rail			Strip label	End angle rear	End plate

Terminal					
Part number	Type number	Cross-section	Terminal label	Jumper	Cover
1SNK706012R0000	ZK4-4P	4			
1SNK706012R0000	ZK4-4P	4			
1SNK706012R0000	ZK4-4P	4			
1SNK706012R0000	ZK4-4P	4			
1SNK706012R0000	ZK4-4P	4			
1SNK706012R0000	ZK4-4P	4			
1SNK706012R0000	ZK4-4P	4			
1SNK706012R0000	ZK4-4P	4			
1SNK706012R0000	ZK4-4P	4			
1SNK706012R0000	ZK4-4P	4			
1SNK706012R0000	ZK4-4P	4			
1SNK706012R0000	ZK4-4P	4			

=V1WC3+V1UC11-XD2

'	1	
'	2	
'	3	
'	4	
'	5	
'	6	
'	7	
'	8	
'	9	
'	10	
'	11	
'	12	

13

15

			Date	1/17/2023	Volvo Trucks North America	Valiant TMS	Terminal line-up diagram =V1WC3+V1UC11-XD2	Drawing name: =2V09&EFS-EL	=	
			Ed.	MKLEPADLO					+	
			Appr		P6700 Bodyside LH - Robot Cell 2V09			Document type: ETT	Project nr: 22-16150	Page 14 / 1533
Modification	Date	Name	Original		Replacement of	Replaced by	Scale 1:1			

Terminal line-up diagram

F12_001

Part number					
Mounting rail			Strip label	End angle rear	End plate

Terminal					
Part number	Type number	Cross-section	Terminal label	Jumper	Cover
1SNK705012R0000	ZK2.5-4P	2.5			
1SNK705012R0000	ZK2.5-4P	2.5			
1SNK705012R0000	ZK2.5-4P	2.5			
1SNK705012R0000	ZK2.5-4P	2.5			
1SNK705012R0000	ZK2.5-4P	2.5			
1SNK705012R0000	ZK2.5-4P	2.5			
1SNK705012R0000	ZK2.5-4P	2.5			
1SNK705012R0000	ZK2.5-4P	2.5			
1SNK705012R0000	ZK2.5-4P	2.5			

=V1WC3+V1UC11-XD3

	1
	2
	3
	4
	5
	6
	7
	8
	9

			Date	1/17/2023	Volvo Trucks North America	Valiant TMS	Terminal line-up diagram =V1WC3+V1UC11-XD3	Drawing name: =2V09&EFS-EL	=
			Ed.	MKLEPADLO					+
			Appr		P6700 Bodyside LH - Robot Cell 2V09			Document type: ETT	Project nr: 22-16150
Modification	Date	Name	Original		Replacement of	Replaced by	Scale 1:1		Page 15 / 1533

Terminal line-up diagram

F12_001

Part number					
Mounting rail			Strip label	End angle rear	End plate
Terminal					
Part number	Type number	Cross-section	Terminal label	Jumper	Cover
WEI.8731720000	ZTR 2.5/3AN	2.5			
WEI.8731720000	ZTR 2.5/3AN	2.5			
WEI.8731720000	ZTR 2.5/3AN	2.5			
WEI.8731720000	ZTR 2.5/3AN	2.5			

=V1WC4+V1UC11-KF11.14

'	1	
'	2	
'	3	
'	4	

Terminal line-up diagram

F12_001

Part number					
Mounting rail			Strip label	End angle rear	End plate
Terminal					
Part number	Type number	Cross-section	Terminal label	Jumper	Cover

=V1WC4+V1UC11-XD5

1

Terminal line-up diagram

F12_001

Part number					
Mounting rail			Strip label	End angle rear	End plate
Terminal					
Part number	Type number	Cross-section	Terminal label	Jumper	Cover

=V1WC4+V1UC11-XD6

1

Terminal line-up diagram

F12_001

Part number					
Mounting rail			Strip label	End angle rear	End plate

Terminal					
Part number	Type number	Cross-section	Terminal label	Jumper	Cover
WEI.8731720000	ZTR 2.5/3AN	2.5			
WEI.8731720000	ZTR 2.5/3AN	2.5			
WEI.8731720000	ZTR 2.5/3AN	2.5			
WEI.8731720000	ZTR 2.5/3AN	2.5			
WEI.8731720000	ZTR 2.5/3AN	2.5			
WEI.8731720000	ZTR 2.5/3AN	2.5			
WEI.8731720000	ZTR 2.5/3AN	2.5			
WEI.8731720000	ZTR 2.5/3AN	2.5			
WEI.8731720000	ZTR 2.5/3AN	2.5			
WEI.8731720000	ZTR 2.5/3AN	2.5			
WEI.8731720000	ZTR 2.5/3AN	2.5			
WEI.8731720000	ZTR 2.5/3AN	2.5			
WEI.8731720000	ZTR 2.5/3AN	2.5			
WEI.8731720000	ZTR 2.5/3AN	2.5			

=V1WC4+V1UC11-XD10

	1	
	2	
	3	
	5	
	4	
	6	
	7	
	8	
	9	
	10	
	11	
	12	
	13	
	14	
	15	

			Date	1/17/2023	Volvo Trucks North America	Valiant TMS	Terminal line-up diagram =V1WC4+V1UC11-XD10	Drawing name: =2V09&EFS-EL	=
			Ed.	MKLEPADLO					+
			Appr		P6700 Bodyside LH - Robot Cell 2V09			Document type: ETT	Project nr: 22-16150
Modification	Date	Name	Original		Replacement of	Replaced by	Scale 1:1		Page 19 / 1533

Terminal line-up diagram

F12_001

Part number					
Mounting rail			Strip label	End angle rear	End plate
Terminal					
Part number	Type number	Cross-section	Terminal label	Jumper	Cover
WEI.8731720000	ZTR 2.5/3AN	2.5			

Terminal line-up diagram

F12_001

Part number					
Mounting rail			Strip label	End angle rear	End plate

Terminal					
Part number	Type number	Cross-section	Terminal label	Jumper	Cover
WEI.8731720000	ZTR 2.5/3AN	2.5			
WEI.8731720000	ZTR 2.5/3AN	2.5			

=V1WC4+V1UC11-XD12

	1	
	2	

			Date	1/17/2023	Volvo Trucks North America	Valiant TMS	Terminal line-up diagram =V1WC4+V1UC11-XD12	Drawing name: =2V09&EFS-EL	=
			Ed.	MKLEPADLO					+
			Appr		P6700 Bodyside LH - Robot Cell 2V09			Document type: ETT	Project nr: 22-16150
Modification	Date	Name	Original		Replacement of / Replaced by	Scale 1:1			Page 21 / 1533

Terminal line-up diagram

F12_001

Part number					
Mounting rail			Strip label	End angle rear	End plate

Terminal					
Part number	Type number	Cross-section	Terminal label	Jumper	Cover
WEI.8731720000	ZTR 2.5/3AN	2.5			
WEI.8731720000	ZTR 2.5/3AN	2.5			
WEI.8731720000	ZTR 2.5/3AN	2.5			
WEI.8731720000	ZTR 2.5/3AN	2.5			
WEI.8731720000	ZTR 2.5/3AN	2.5			
WEI.8731720000	ZTR 2.5/3AN	2.5			
WEI.8731720000	ZTR 2.5/3AN	2.5			
WEI.8731720000	ZTR 2.5/3AN	2.5			

=V1WC4+V1UC11-XD13

	1	
	2	
	3	
	4	
	5	
	6	
	7	
	8	

			Date	1/17/2023	Volvo Trucks North America	Valiant TMS	Terminal line-up diagram =V1WC4+V1UC11-XD13	Drawing name: =2V09&EFS-EL
			Ed.	MKLEPADLO				
			Appr		P6700 Bodyside LH - Robot Cell 2V09			Document type: ETT / Project nr: 22-16150 / Page 22 / 1533
Modification	Date	Name	Original		Replacement of / Replaced by	Scale 1:1		

Terminal line-up diagram

F12_001

Part number					
Mounting rail			Strip label	End angle rear	End plate
Terminal					
Part number	Type number	Cross-section	Terminal label	Jumper	Cover
WEI.8731720000	ZTR 2.5/3AN	2.5			
WEI.8731720000	ZTR 2.5/3AN	2.5			

Terminal line-up diagram

F12_001

Part number					
Mounting rail			Strip label	End angle rear	End plate
Terminal					
Part number	Type number	Cross-section	Terminal label	Jumper	Cover
WEI.8731720000	ZTR 2.5/3AN	2.5			
WEI.8731720000	ZTR 2.5/3AN	2.5			
WEI.8731720000	ZTR 2.5/3AN	2.5			
WEI.8731720000	ZTR 2.5/3AN	2.5			
WEI.8731720000	ZTR 2.5/3AN	2.5			
WEI.8731720000	ZTR 2.5/3AN	2.5			
WEI.8731720000	ZTR 2.5/3AN	2.5			
WEI.8731720000	ZTR 2.5/3AN	2.5			

=V1WC4+V1UC11-XD20

	1	
	2	
	3	
	4	
	5	
	6	
	7	
	8	

			Date	1/17/2023	Volvo Trucks North America	Valiant TMS	Terminal line-up diagram =V1WC4+V1UC11-XD20	Drawing name: =2V09&EFS-EL	=
			Ed.	MKLEPADLO					+
			Appr		P6700 Bodyside LH - Robot Cell 2V09			Document type: ETT	Project nr: 22-16150
Modification	Date	Name	Original		Replacement of	Replaced by	Scale 1:1		Page 24 / 1533

Terminal line-up diagram

F12_001

Part number					
Mounting rail			Strip label	End angle rear	End plate

Terminal					
Part number	Type number	Cross-section	Terminal label	Jumper	Cover
WEI.8731720000	ZTR 2.5/3AN	2.5			
WEI.8731720000	ZTR 2.5/3AN	2.5			

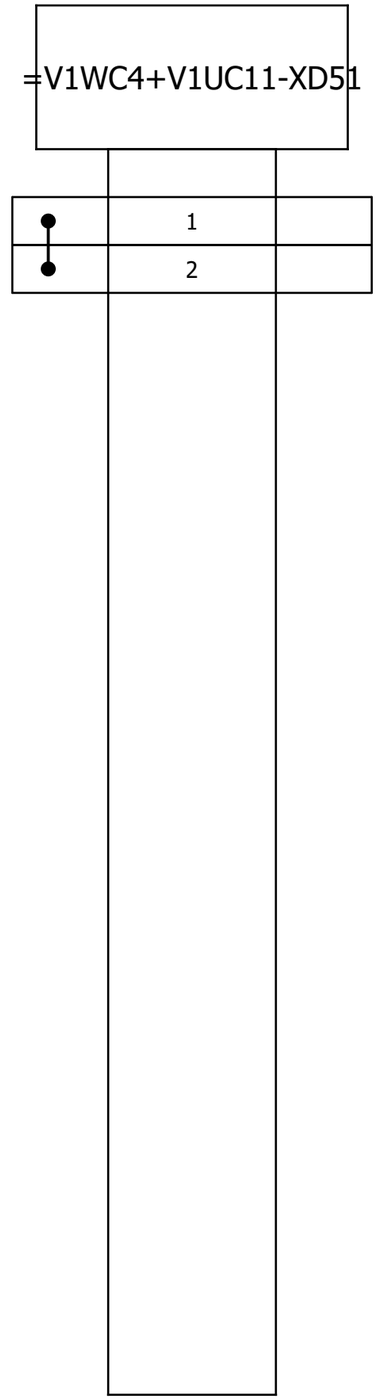

			Date	1/17/2023	Volvo Trucks North America	Valiant TMS	Terminal line-up diagram =V1WC4+V1UC11-XD51	Drawing name: =2V09&EFS-EL	=
			Ed.	MKLEPADLO					+
			Appr		P6700 Bodyside LH - Robot Cell 2V09			Document type: ETT	Project nr: 22-16150
Modification	Date	Name	Original		Replacement of	Replaced by	Scale 1:1		Page 25 / 1533

0	1	2	3	4	5	6	7	8	9

Terminal line-up diagram

F12_001

Part number					
Mounting rail			Strip label	End angle rear	End plate
Terminal					
Part number	Type number	Cross-section	Terminal label	Jumper	Cover
WEI.8731720000	ZTR 2.5/3AN	2.5			
WEI.8731720000	ZTR 2.5/3AN	2.5			

=V1WC4+V1UC11-XD52

●	1	
●	2	

			Date	1/17/2023	Volvo Trucks North America	Valiant TMS	Terminal line-up diagram =V1WC4+V1UC11-XD52	Drawing name: =2V09&EFS-EL	=
			Ed.	MKLEPADLO					+
			Appr		P6700 Bodyside LH - Robot Cell 2V09			Document type: ETT	Project nr: 22-16150	Page 26
Modification	Date	Name	Original		Replacement of	Replaced by	Scale 1:1			1533

Terminal line-up diagram

F12_001

Part number					
Mounting rail			Strip label	End angle rear	End plate

Terminal					
Part number	Type number	Cross-section	Terminal label	Jumper	Cover
WEI.8731720000	ZTR 2.5/3AN	2.5			
WEI.8731720000	ZTR 2.5/3AN	2.5			

=V1WC4+V1UC11-XD53

	1	
	2	

			Date	1/17/2023	Volvo Trucks North America	Valiant TMS	Terminal line-up diagram =V1WC4+V1UC11-XD53	Drawing name: =2V09&EFS-EL	=
			Ed.	MKLEPADLO					+
			Appr		P6700 Bodyside LH - Robot Cell 2V09			Document type: ETT	Project nr: 22-16150
Modification	Date	Name	Original		Replacement of	Replaced by	Scale 1:1		Page 27 / 1533

Terminal line-up diagram

F12_001

Part number					
Mounting rail			Strip label	End angle rear	End plate

Terminal					
Part number	Type number	Cross-section	Terminal label	Jumper	Cover
WEI.8731720000	ZTR 2.5/3AN	2.5			
WEI.8731720000	ZTR 2.5/3AN	2.5			

=V1WC4+V1UC11-XD54

	1	
	2	

			Date	1/17/2023	Volvo Trucks North America	Valiant TMS	Terminal line-up diagram =V1WC4+V1UC11-XD54	Drawing name: =2V09&EFS-EL	=
			Ed.	MKLEPADLO					+
			Appr		P6700 Bodyside LH - Robot Cell 2V09			Document type: ETT	Project nr: 22-16150
Modification	Date	Name	Original		Replacement of	Replaced by	Scale 1:1		Page 28 / 1533

Terminal line-up diagram

F12_001

Part number					
Mounting rail			Strip label	End angle rear	End plate
Terminal					
Part number	Type number	Cross-section	Terminal label	Jumper	Cover

=V1WC1+V1UC12-PE

'	PE	

Terminal line-up diagram

F12_001

Part number					
Mounting rail			Strip label	End angle rear	End plate

Terminal					
Part number	Type number	Cross-section	Terminal label	Jumper	Cover
1SNK705012R0000	ZK2.5-4P	2.5			
1SNK705012R0000	ZK2.5-4P	2.5			
1SNK705012R0000	ZK2.5-4P	2.5			
1SNK705012R0000	ZK2.5-4P	2.5			
1SNK705012R0000	ZK2.5-4P	2.5			
1SNK705012R0000	ZK2.5-4P	2.5			
1SNK705012R0000	ZK2.5-4P	2.5			
1SNK705012R0000	ZK2.5-4P	2.5			
1SNK705012R0000	ZK2.5-4P	2.5			
1SNK705012R0000	ZK2.5-4P	2.5			
1SNK705012R0000	ZK2.5-4P	2.5			
1SNK705012R0000	ZK2.5-4P	2.5			
1SNK705012R0000	ZK2.5-4P	2.5			
1SNK705012R0000	ZK2.5-4P	2.5			
1SNK705012R0000	ZK2.5-4P	2.5			

=V1WC2+V1UC12-XD1

	1	
	2	
	3	
	4	
	5	
	6	
	7	
	8	
	9	
	10	
	11	
	12	
	13	
	14	
	15	
	16	

29

31

			Date	1/17/2023	Volvo Trucks North America	Valiant TMS	Terminal line-up diagram =V1WC2+V1UC12-XD1	Drawing name: =2V09&EFS-EL	=
			Ed.	MKLEPADLO					+
			Appr		P6700 Bodyside LH - Robot Cell 2V09			Document type: ETT	Project nr: 22-16150
Modification	Date	Name	Original		Replacement of	Replaced by	Scale 1:1		Page 30 / 1533

Terminal line-up diagram

F12_001

Part number					
Mounting rail			Strip label	End angle rear	End plate

Terminal					
Part number	Type number	Cross-section	Terminal label	Jumper	Cover
1SNK705012R0000	ZK2.5-4P	2.5			
1SNK705012R0000	ZK2.5-4P	2.5			
1SNK705012R0000	ZK2.5-4P	2.5			
1SNK705012R0000	ZK2.5-4P	2.5			
1SNK705012R0000	ZK2.5-4P	2.5			
1SNK705012R0000	ZK2.5-4P	2.5			
1SNK705012R0000	ZK2.5-4P	2.5			
1SNK705012R0000	ZK2.5-4P	2.5			

=V1WC2+V1UC12-XD2

	1	
	2	
	3	
	4	
	5	
	6	
	7	
	8	

			Date	1/17/2023	Volvo Trucks North America	Valiant TMS	Terminal line-up diagram =V1WC2+V1UC12-XD2	Drawing name: =2V09&EFS-EL	=
			Ed.	MKLEPADLO					+
			Appr		P6700 Bodyside LH - Robot Cell 2V09			Document type: ETT	Project nr: 22-16150
Modification	Date	Name	Original		Replacement of	Replaced by	Scale 1:1		Page 31 / 1533

Terminal line-up diagram

F12_001

Part number					
Mounting rail			Strip label	End angle rear	End plate

Terminal					
Part number	Type number	Cross-section	Terminal label	Jumper	Cover
1SNK705012R0000	ZK2.5-4P	2.5			
1SNK705012R0000	ZK2.5-4P	2.5			
1SNK705012R0000	ZK2.5-4P	2.5			
1SNK705012R0000	ZK2.5-4P	2.5			
1SNK705012R0000	ZK2.5-4P	2.5			

=V1WC2+V1UC12-XD3

	1
	2
	3
	4
	5

			Date	1/17/2023	Volvo Trucks North America	Valiant TMS	Terminal line-up diagram =V1WC2+V1UC12-XD3	Drawing name: =2V09&EFS-EL	=
			Ed.	MKLEPADLO					+
			Appr		P6700 Bodyside LH - Robot Cell 2V09			Document type: ETT	Project nr: 22-16150
Modification	Date	Name	Original		Replacement of	Replaced by	Scale 1:1		Page 32 / 1533

Terminal line-up diagram

F12_001

Part number					
Mounting rail			Strip label	End angle rear	End plate

Terminal					
Part number	Type number	Cross-section	Terminal label	Jumper	Cover
1SNK706012R0000	ZK4-4P	4			
1SNK706012R0000	ZK4-4P	4			
1SNK706012R0000	ZK4-4P	4			
1SNK706012R0000	ZK4-4P	4			

=V1WC3+V1UC12-XD1

'	1	
'	2	
'	3	
'	4	

32

34

			Date	1/17/2023	Volvo Trucks North America	Valiant TMS	Terminal line-up diagram =V1WC3+V1UC12-XD1	Drawing name: =2V09&EFS-EL	=
			Ed.	MKLEPADLO					+
			Appr		P6700 Bodyside LH - Robot Cell 2V09			Document type: ETT	Project nr: 22-16150
Modification	Date	Name	Original		Replacement of	Replaced by	Scale 1:1		Page 33 / 1533

Terminal line-up diagram

F12_001

Part number					
Mounting rail			Strip label	End angle rear	End plate

Terminal					
Part number	Type number	Cross-section	Terminal label	Jumper	Cover
1SNK706012R0000	ZK4-4P	4			
1SNK706012R0000	ZK4-4P	4			
1SNK706012R0000	ZK4-4P	4			
1SNK706012R0000	ZK4-4P	4			
1SNK706012R0000	ZK4-4P	4			
1SNK706012R0000	ZK4-4P	4			
1SNK706012R0000	ZK4-4P	4			
1SNK706012R0000	ZK4-4P	4			

=V1WC3+V1UC12-XD2

'	1	
'	2	
'	3	
'	4	
'	7	
'	8	
'	9	
'	10	

33

35

			Date	1/17/2023	Volvo Trucks North America	Valiant TMS	Terminal line-up diagram =V1WC3+V1UC12-XD2	Drawing name: =2V09&EFS-EL	=
			Ed.	MKLEPADLO					+
			Appr		P6700 Bodyside LH - Robot Cell 2V09			Document type: ETT	Project nr: 22-16150
Modification	Date	Name	Original		Replacement of	Replaced by	Scale 1:1		Page 34 / 1533

Terminal line-up diagram

F12_001

Part number					
Mounting rail			Strip label	End angle rear	End plate

Terminal					
Part number	Type number	Cross-section	Terminal label	Jumper	Cover
1SNK705012R0000	ZK2.5-4P	2.5			
1SNK705012R0000	ZK2.5-4P	2.5			
1SNK705012R0000	ZK2.5-4P	2.5			
1SNK705012R0000	ZK2.5-4P	2.5			
1SNK705012R0000	ZK2.5-4P	2.5			
1SNK705012R0000	ZK2.5-4P	2.5			
1SNK705012R0000	ZK2.5-4P	2.5			
1SNK705012R0000	ZK2.5-4P	2.5			

=V1WC3+V1UC12-XD3

	1	
	2	
	3	
	4	
	5	
	6	
	7	
	8	

			Date	1/17/2023	Volvo Trucks North America	Valiant TMS	Terminal line-up diagram =V1WC3+V1UC12-XD3	Drawing name: =2V09&EFS-EL	=
			Ed.	MKLEPADLO					+
			Appr		P6700 Bodyside LH - Robot Cell 2V09			Document type: ETT	Project nr: 22-16150
Modification	Date	Name	Original		Replacement of	Replaced by	Scale 1:1		Page 35 / 1533

Terminal line-up diagram

F12_001

Part number					
Mounting rail			Strip label	End angle rear	End plate
Terminal					
Part number	Type number	Cross-section	Terminal label	Jumper	Cover
1SNK705012R0000	ZK2.5-4P	2.5			
1SNK705012R0000	ZK2.5-4P	2.5			
1SNK705012R0000	ZK2.5-4P	2.5			
1SNK705012R0000	ZK2.5-4P	2.5			

=V1WC4+V1UC12-KF12.14

'	1	
'	2	
'	3	
'	4	

Modification	Date	Name	Original	
			Date	1/17/2023
			Ed.	MKLEPADLO
			Appr	

Volvo Trucks North America
P6700 Bodyside LH - Robot Cell 2V09
Replacement of | Replaced by
Valiant TMS
Scale 1:1
Terminal line-up diagram
=V1WC4+V1UC12-KF12.14
Drawing name: =2V09&EFS-EL
=
+
Document type: ETT
Project nr: 22-16150
Page 36
1533

0	1	2	3	4	5	6	7	8	9

Terminal line-up diagram

F12_001

Part number					
Mounting rail			Strip label	End angle rear	End plate
Terminal					
Part number	Type number	Cross-section	Terminal label	Jumper	Cover
1SNK705012R0000	ZK2.5-4P	2.5			

=V1WC4+V1UC12-XD5

1

Terminal line-up diagram

F12_001

Part number					
Mounting rail			Strip label	End angle rear	End plate
Terminal					
Part number	Type number	Cross-section	Terminal label	Jumper	Cover
1SNK705012R0000	ZK2.5-4P	2.5			

=V1WC4+V1UC12-XD6

1

Terminal line-up diagram

F12_001

Part number					
Mounting rail			Strip label	End angle rear	End plate

Terminal					
Part number	Type number	Cross-section	Terminal label	Jumper	Cover
1SNK705012R0000	ZK2.5-4P	2.5			
1SNK705012R0000	ZK2.5-4P	2.5			
1SNK705012R0000	ZK2.5-4P	2.5			
1SNK705012R0000	ZK2.5-4P	2.5			
1SNK705012R0000	ZK2.5-4P	2.5			
1SNK705012R0000	ZK2.5-4P	2.5			
1SNK705012R0000	ZK2.5-4P	2.5			
1SNK705012R0000	ZK2.5-4P	2.5			
1SNK705012R0000	ZK2.5-4P	2.5			
1SNK705012R0000	ZK2.5-4P	2.5			
1SNK705012R0000	ZK2.5-4P	2.5			
1SNK705012R0000	ZK2.5-4P	2.5			
1SNK705012R0000	ZK2.5-4P	2.5			
1SNK705012R0000	ZK2.5-4P	2.5			
1SNK705012R0000	ZK2.5-4P	2.5			

=V1WC4+V1UC12-XD10

	1	
	2	
	3	
	5	
	4	
	6	
	7	
	8	
	9	
	10	
	11	
	12	
	13	
	14	
	15	
	16	

			Date	1/17/2023	Volvo Trucks North America	Valiant TMS	Terminal line-up diagram =V1WC4+V1UC12-XD10	Drawing name: =2V09&EFS-EL	=
			Ed.	MKLEPADLO					+
			Appr		P6700 Bodyside LH - Robot Cell 2V09			Document type: ETT	Project nr: 22-16150
Modification	Date	Name	Original		Replacement of	Replaced by	Scale 1:1		Page 39 / 1533

Terminal line-up diagram

F12_001

Part number					
Mounting rail			Strip label	End angle rear	End plate
Terminal					
Part number	Type number	Cross-section	Terminal label	Jumper	Cover
1SNK705012R0000	ZK2.5-4P	2.5			

=V1WC4+V1UC12-XD11

1

			Date	1/17/2023	Volvo Trucks North America	Valiant TMS	Terminal line-up diagram =V1WC4+V1UC12-XD11	Drawing name: =2V09&EFS-EL	=
			Ed.	MKLEPADLO					+
			Appr		P6700 Bodyside LH - Robot Cell 2V09			Document type: ETT	Project nr: 22-16150
Modification	Date	Name	Original		Replacement of / Replaced by	Scale 1:1			Page 40 / 1533

Terminal line-up diagram

F12_001

Part number					
Mounting rail			Strip label	End angle rear	End plate

Terminal					
Part number	Type number	Cross-section	Terminal label	Jumper	Cover
1SNK705012R0000	ZK2.5-4P	2.5			
1SNK705012R0000	ZK2.5-4P	2.5			

=V1WC4+V1UC12-XD12

	1	
	2	

Terminal line-up diagram

F12_001

Part number					
Mounting rail			Strip label	End angle rear	End plate

Terminal					
Part number	Type number	Cross-section	Terminal label	Jumper	Cover
1SNK705012R0000	ZK2.5-4P	2.5			
1SNK705012R0000	ZK2.5-4P	2.5			
1SNK705012R0000	ZK2.5-4P	2.5			
1SNK705012R0000	ZK2.5-4P	2.5			
1SNK705012R0000	ZK2.5-4P	2.5			
1SNK705012R0000	ZK2.5-4P	2.5			
1SNK705012R0000	ZK2.5-4P	2.5			
1SNK705012R0000	ZK2.5-4P	2.5			

=V1WC4+V1UC12-XD13

	1	
	2	
	3	
	4	
	5	
	6	
	7	
	8	

41

43

			Date	1/17/2023	Volvo Trucks North America	Valiant TMS	Terminal line-up diagram =V1WC4+V1UC12-XD13	Drawing name: =2V09&EFS-EL	=
			Ed.	MKLEPADLO					+
			Appr		P6700 Bodyside LH - Robot Cell 2V09			Document type: ETT	Project nr: 22-16150
Modification	Date	Name	Original		Replacement of	Replaced by	Scale 1:1		Page 42 / 1533

Terminal line-up diagram

F12_001

Part number					
Mounting rail			Strip label	End angle rear	End plate
Terminal					
Part number	Type number	Cross-section	Terminal label	Jumper	Cover
1SNK705012R0000	ZK2.5-4P	2.5			
1SNK705012R0000	ZK2.5-4P	2.5			

Terminal line-up diagram

F12_001

Part number					
Mounting rail			Strip label	End angle rear	End plate

Terminal					
Part number	Type number	Cross-section	Terminal label	Jumper	Cover
1SNK705012R0000	ZK2.5-4P	2.5			
1SNK705012R0000	ZK2.5-4P	2.5			
1SNK705012R0000	ZK2.5-4P	2.5			
1SNK705012R0000	ZK2.5-4P	2.5			
1SNK705012R0000	ZK2.5-4P	2.5			
1SNK705012R0000	ZK2.5-4P	2.5			
1SNK705012R0000	ZK2.5-4P	2.5			
1SNK705012R0000	ZK2.5-4P	2.5			

=V1WC4+V1UC12-XD20

	1	
	2	
	3	
	4	
	5	
	6	
	7	
	8	

			Date	1/17/2023	Volvo Trucks North America	Valiant TMS	Terminal line-up diagram =V1WC4+V1UC12-XD20	Drawing name: =2V09&EFS-EL	=
			Ed.	MKLEPADLO					+
			Appr		P6700 Bodyside LH - Robot Cell 2V09			Document type: ETT	Project nr: 22-16150
Modification	Date	Name	Original		Replacement of	Replaced by	Scale 1:1		Page 44 / 1533

Terminal line-up diagram

F12_001

Part number					
Mounting rail			Strip label	End angle rear	End plate

Terminal					
Part number	Type number	Cross-section	Terminal label	Jumper	Cover
1SNK705012R0000	ZK2.5-4P	2.5			
1SNK705012R0000	ZK2.5-4P	2.5			

Terminal line-up diagram

F12_001

Part number					
Mounting rail			Strip label	End angle rear	End plate
Terminal					
Part number	Type number	Cross-section	Terminal label	Jumper	Cover
1SNK705012R0000	ZK2.5-4P	2.5			
1SNK705012R0000	ZK2.5-4P	2.5			

=V1WC4+V1UC12-XD52

●	1	
●	2	

Terminal line-up diagram

F12_001

Part number					
Mounting rail			Strip label	End angle rear	End plate
Terminal					
Part number	Type number	Cross-section	Terminal label	Jumper	Cover
1SNK705012R0000	ZK2.5-4P	2.5			
1SNK705012R0000	ZK2.5-4P	2.5			

Modification	Date	Name	Date	1/17/2023	Volvo Trucks North America	Valiant TMS	Terminal line-up diagram =V1WC4+V1UC12-XD53	Drawing name: =2V09&EFS-EL	=
			Ed.	MKLEPADLO	P6700 Bodyside LH - Robot Cell 2V09	Scale 1:1		Document type: ETT	+
			Appr		Replacement of	Replaced by		Project nr: 22-16150	Page 47 / 1533
			Original						

Terminal line-up diagram

F12_001

Part number					
Mounting rail			Strip label	End angle rear	End plate
Terminal					
Part number	Type number	Cross-section	Terminal label	Jumper	Cover
1SNK705012R0000	ZK2.5-4P	2.5			
1SNK705012R0000	ZK2.5-4P	2.5			

47

49

Terminal line-up diagram

F12_001

Part number					
Mounting rail			Strip label	End angle rear	End plate

Terminal					
Part number	Type number	Cross-section	Terminal label	Jumper	Cover
WEI.1608510000	ZDU 2.5	2.5			
WEI.1608740000	ZAP/TW 1				
WEI.9540000000	ZEW 35				
WEI.1608520000	ZDU 2.5 BL	2.5 mm²			
WEI.1608520000	ZDU 2.5 BL	2.5 mm²			

=V1WC3+V1UC14-XD1

'	L1	
'	N	
'		
'	PE	
'		

			Date	1/17/2023	Volvo Trucks North America	Valiant TMS	Terminal line-up diagram =V1WC3+V1UC14-XD1	Drawing name: =2V09&EFS-EL = +
			Ed.	MKLEPADLO	P6700 Bodyside LH - Robot Cell 2V09			
			Appr					Document type: ETT / Project nr: 22-16150 / Page 49 / 1533
Modification	Date	Name	Original		Replacement of / Replaced by	Scale 1:1		

Terminal line-up diagram

F12_001

Part number					
Mounting rail			Strip label	End angle rear	End plate

Terminal					
Part number	Type number	Cross-section	Terminal label	Jumper	Cover
WEI.8731720000	ZTR 2.5/3AN	2.5			
WEI.8731720000	ZTR 2.5/3AN	2.5			
WEI.8731720000	ZTR 2.5/3AN	2.5			
WEI.8731720000	ZTR 2.5/3AN	2.5			

=V1WC4+V1UC14-KF14.12

'	1	
'	2	
'	3	
'	4	

			Date	1/17/2023	Volvo Trucks North America	Valiant TMS	Terminal line-up diagram =V1WC4+V1UC14-KF14.12	Drawing name: =2V09&EFS-EL	=
			Ed.	MKLEPADLO					+
			Appr		P6700 Bodyside LH - Robot Cell 2V09			Document type: ETT	Project nr: 22-16150
Modification	Date	Name	Original		Replacement of	Replaced by	Scale 1:1		Page 50 / 1533

Terminal line-up diagram

F12_001

Part number					
Mounting rail			Strip label	End angle rear	End plate
Terminal					
Part number	Type number	Cross-section	Terminal label	Jumper	Cover

			Date	1/17/2023	Volvo Trucks North America	Valiant TMS
			Ed.	MKLEPADLO		
			Appr		P6700 Bodyside LH - Robot Cell 2V09	Scale 1:1
Modification	Date	Name	Original		Replacement of / Replaced by	

Terminal line-up diagram =V1WC4+V1UC14-XD5

Drawing name: =2V09&EFS-EL		=	
		+	
Document type: ETT	Project nr: 22-16150	Page 51	1533

Terminal line-up diagram

F12_001

Part number					
Mounting rail			Strip label	End angle rear	End plate
Terminal					
Part number	Type number	Cross-section	Terminal label	Jumper	Cover

=V1WC4+V1UC14-XD6

1

Terminal line-up diagram

F12_001

Part number					
Mounting rail			Strip label	End angle rear	End plate

Terminal					
Part number	Type number	Cross-section	Terminal label	Jumper	Cover
WEI.8731720000	ZTR 2.5/3AN	2.5			
WEI.8731720000	ZTR 2.5/3AN	2.5			
WEI.8731720000	ZTR 2.5/3AN	2.5			
WEI.8731720000	ZTR 2.5/3AN	2.5			
WEI.8731720000	ZTR 2.5/3AN	2.5			
WEI.8731720000	ZTR 2.5/3AN	2.5			
WEI.8731720000	ZTR 2.5/3AN	2.5			
WEI.8731720000	ZTR 2.5/3AN	2.5			
WEI.8731720000	ZTR 2.5/3AN	2.5			
WEI.8731720000	ZTR 2.5/3AN	2.5			
WEI.8731720000	ZTR 2.5/3AN	2.5			
WEI.8731720000	ZTR 2.5/3AN	2.5			
WEI.8731720000	ZTR 2.5/3AN	2.5			
WEI.8731720000	ZTR 2.5/3AN	2.5			
WEI.8731720000	ZTR 2.5/3AN	2.5			
WEI.8731720000	ZTR 2.5/3AN	2.5			
WEI.8731720000	ZTR 2.5/3AN	2.5			
WEI.8731720000	ZTR 2.5/3AN	2.5			
WEI.8731720000	ZTR 2.5/3AN	2.5			
WEI.8731720000	ZTR 2.5/3AN	2.5			

=V1WC4+V1UC14-XD10

	1	
	2	
	4	
	3	
	7	
	9	
	11	
	5	
	6	
	8	
	10	
	12	
	13	
	14	
	15	
	16	
	17	
	18	
	19	
	20	

			Date	1/17/2023	Volvo Trucks North America	Valiant TMS	Terminal line-up diagram =V1WC4+V1UC14-XD10	Drawing name: =2V09&EFS-EL	=
			Ed.	MKLEPADLO					+
			Appr		P6700 Bodyside LH - Robot Cell 2V09			Document type: ETT	Project nr: 22-16150
Modification	Date	Name	Original		Replacement of / Replaced by	Scale 1:1			Page 53 / 1533

Terminal line-up diagram

F12_001

Part number					
Mounting rail			Strip label	End angle rear	End plate
Terminal					
Part number	Type number	Cross-section	Terminal label	Jumper	Cover
WEI.8731720000	ZTR 2.5/3AN	2.5			

Terminal line-up diagram

F12_001

Part number					
Mounting rail			Strip label	End angle rear	End plate
Terminal					
Part number	Type number	Cross-section	Terminal label	Jumper	Cover
WEI.8731720000	ZTR 2.5/3AN	2.5			
WEI.8731720000	ZTR 2.5/3AN	2.5			

=V1WC4+V1UC14-XD12

	1	
	2	

			Date	1/17/2023	Volvo Trucks North America	Valiant TMS	Terminal line-up diagram =V1WC4+V1UC14-XD12	Drawing name: =2V09&EFS-EL	=
			Ed.	MKLEPADLO					+
			Appr		P6700 Bodyside LH - Robot Cell 2V09			Document type: ETT	Project nr: 22-16150
Modification	Date	Name	Original		Replacement of / Replaced by	Scale 1:1			Page 55 / 1533

Terminal line-up diagram

F12_001

Part number					
Mounting rail			Strip label	End angle rear	End plate

Terminal					
Part number	Type number	Cross-section	Terminal label	Jumper	Cover
WEI.8731720000	ZTR 2.5/3AN	2.5			

=V1WC4+V1UC14-XD13

'	1	

			Date	1/17/2023	Volvo Trucks North America	Valiant TMS	Terminal line-up diagram =V1WC4+V1UC14-XD13	Drawing name: =2V09&EFS-EL	=
			Ed.	MKLEPADLO					+
			Appr		P6700 Bodyside LH - Robot Cell 2V09			Document type: ETT	Project nr: 22-16150
Modification	Date	Name	Original		Replacement of	Replaced by	Scale 1:1		Page 56 / 1533

Terminal line-up diagram

F12_001

Part number					
Mounting rail			Strip label	End angle rear	End plate

Terminal					
Part number	Type number	Cross-section	Terminal label	Jumper	Cover
WEI.8731720000	ZTR 2.5/3AN	2.5			
WEI.8731720000	ZTR 2.5/3AN	2.5			

=V1WC4+V1UC14-XD14

	1	
	2	

			Date	1/17/2023	Volvo Trucks North America	Valiant TMS	Terminal line-up diagram =V1WC4+V1UC14-XD14	Drawing name: =2V09&EFS-EL	=
			Ed.	MKLEPADLO					+
			Appr		P6700 Bodyside LH - Robot Cell 2V09			Document type: ETT	Project nr: 22-16150
Modification	Date	Name	Original		Replacement of / Replaced by	Scale 1:1			Page 57 / 1533

Terminal line-up diagram

F12_001

Part number					
Mounting rail			Strip label	End angle rear	End plate

Terminal					
Part number	Type number	Cross-section	Terminal label	Jumper	Cover
WEI.8731720000	ZTR 2.5/3AN	2.5			
WEI.8731720000	ZTR 2.5/3AN	2.5			

=V1WC4+V1UC14-XD15

	1	
	2	

			Date	1/17/2023	Volvo Trucks North America	Valiant TMS	Terminal line-up diagram =V1WC4+V1UC14-XD15	Drawing name: =2V09&EFS-EL	=
			Ed.	MKLEPADLO					+
			Appr		P6700 Bodyside LH - Robot Cell 2V09			Document type: ETT	Project nr: 22-16150
Modification	Date	Name	Original		Replacement of / Replaced by	Scale 1:1			Page 58 / 1533

Terminal line-up diagram

F12_001

Part number					
Mounting rail			Strip label	End angle rear	End plate
Terminal					
Part number	Type number	Cross-section	Terminal label	Jumper	Cover
WEI.8731720000	ZTR 2.5/3AN	2.5			
WEI.8731720000	ZTR 2.5/3AN	2.5			

=V1WC4+V1UC14-XD16

	1	
	2	

			Date	1/17/2023	Volvo Trucks North America	Valiant TMS	Terminal line-up diagram =V1WC4+V1UC14-XD16	Drawing name: =2V09&EFS-EL	=
			Ed.	MKLEPADLO					+
			Appr		P6700 Bodyside LH - Robot Cell 2V09			Document type: ETT	Project nr: 22-16150
Modification	Date	Name	Original		Replacement of / Replaced by	Scale 1:1			Page 59 / 1533

Terminal line-up diagram

F12_001

Part number					
Mounting rail			Strip label	End angle rear	End plate

Terminal					
Part number	Type number	Cross-section	Terminal label	Jumper	Cover
WEI.8731720000	ZTR 2.5/3AN	2.5			
WEI.8731720000	ZTR 2.5/3AN	2.5			

=V1WC4+V1UC14-XD17

	1	
	2	

			Date	1/17/2023	Volvo Trucks North America	Valiant TMS	Terminal line-up diagram =V1WC4+V1UC14-XD17	Drawing name: =2V09&EFS-EL	=
			Ed.	MKLEPADLO					+
			Appr		P6700 Bodyside LH - Robot Cell 2V09			Document type: ETT	Project nr: 22-16150
Modification	Date	Name	Original		Replacement of / Replaced by	Scale 1:1			Page 60 / 1533

Terminal line-up diagram

F12_001

Part number					
Mounting rail			Strip label	End angle rear	End plate

Terminal					
Part number	Type number	Cross-section	Terminal label	Jumper	Cover
WEI.8731720000	ZTR 2.5/3AN	2.5			

=V1WC4+V1UC14-XD18

'	1	

			Date	1/17/2023	Volvo Trucks North America	Valiant TMS	Terminal line-up diagram =V1WC4+V1UC14-XD18	Drawing name: =2V09&EFS-EL	=
			Ed.	MKLEPADLO					+
			Appr		P6700 Bodyside LH - Robot Cell 2V09			Document type: ETT	Project nr: 22-16150
Modification	Date	Name	Original		Replacement of / Replaced by	Scale 1:1			Page 61 / 1533

Terminal line-up diagram

F12_001

Part number					
Mounting rail			Strip label	End angle rear	End plate

Terminal					
Part number	Type number	Cross-section	Terminal label	Jumper	Cover
WEI.8731720000	ZTR 2.5/3AN	2.5			
WEI.8731720000	ZTR 2.5/3AN	2.5			

=V1WC4+V1UC14-XD51

	1	
	2	

			Date	1/17/2023	Volvo Trucks North America	Valiant TMS	Terminal line-up diagram =V1WC4+V1UC14-XD51	Drawing name: =2V09&EFS-EL	=
			Ed.	MKLEPADLO					+
			Appr		P6700 Bodyside LH - Robot Cell 2V09			Document type: ETT	Project nr: 22-16150
Modification	Date	Name	Original		Replacement of	Replaced by	Scale 1:1		Page 62 / 1533

Terminal line-up diagram

F12_001

Part number					
Mounting rail			Strip label	End angle rear	End plate

Terminal					
Part number	Type number	Cross-section	Terminal label	Jumper	Cover
WEI.8731720000	ZTR 2.5/3AN	2.5			
WEI.8731720000	ZTR 2.5/3AN	2.5			

=V1WC4+V1UC14-XD52

	1	
	2	

			Date	1/17/2023	Volvo Trucks North America	Valiant TMS	Terminal line-up diagram =V1WC4+V1UC14-XD52	Drawing name: =2V09&EFS-EL	=
			Ed.	MKLEPADLO					+
			Appr		P6700 Bodyside LH - Robot Cell 2V09			Document type: ETT	Project nr: 22-16150
Modification	Date	Name	Original		Replacement of	Replaced by	Scale 1:1		Page 63 / 1533

Terminal line-up diagram

F12_001

Part number					
Mounting rail			Strip label	End angle rear	End plate

Terminal					
Part number	Type number	Cross-section	Terminal label	Jumper	Cover
WEI.8731720000	ZTR 2.5/3AN	2.5			
WEI.8731720000	ZTR 2.5/3AN	2.5			

=V1WC4+V1UC14-XD53

	1	
	2	

			Date	1/17/2023	Volvo Trucks North America	Valiant TMS	Terminal line-up diagram =V1WC4+V1UC14-XD53	Drawing name: =2V09&EFS-EL	=
			Ed.	MKLEPADLO					+
			Appr		P6700 Bodyside LH - Robot Cell 2V09			Document type: ETT	Project nr: 22-16150
Modification	Date	Name	Original		Replacement of	Replaced by	Scale 1:1		Page 64 / 1533

Terminal line-up diagram

F12_001

Part number					
Mounting rail			Strip label	End angle rear	End plate
Terminal					
Part number	Type number	Cross-section	Terminal label	Jumper	Cover
WEI.8731720000	ZTR 2.5/3AN	2.5			
WEI.8731720000	ZTR 2.5/3AN	2.5			

Terminal line-up diagram

F12_001

Part number					
Mounting rail			Strip label	End angle rear	End plate

Terminal					
Part number	Type number	Cross-section	Terminal label	Jumper	Cover
WEI.1608510000	ZDU 2.5	2.5			
WEI.1608740000	ZAP/TW 1				
WEI.9540000000	ZEW 35				
WEI.1608520000	ZDU 2.5 BL	2.5 mm²			
WEI.1608520000	ZDU 2.5 BL	2.5 mm²			

=V1WC3+V1UC15-XD1

'	L1	
'	N	
'		
'	PE	
'		

			Date	1/17/2023	Volvo Trucks North America	Valiant TMS	Terminal line-up diagram =V1WC3+V1UC15-XD1	Drawing name: =2V09&EFS-EL	=
			Ed.	MKLEPADLO					+
			Appr		P6700 Bodyside LH - Robot Cell 2V09			Document type: ETT	Project nr: 22-16150
Modification	Date	Name	Original		Replacement of	Replaced by	Scale 1:1		Page 66 / 1533

Terminal line-up diagram

F12_001

Part number					
Mounting rail			Strip label	End angle rear	End plate
Terminal					
Part number	Type number	Cross-section	Terminal label	Jumper	Cover
WEI.8731720000	ZTR 2.5/3AN	2.5			
WEI.8731720000	ZTR 2.5/3AN	2.5			
WEI.8731720000	ZTR 2.5/3AN	2.5			
WEI.8731720000	ZTR 2.5/3AN	2.5			

=V1WC4+V1UC15-KF15.12

'	1	
'	2	
'	3	
'	4	

			Date	1/17/2023	Volvo Trucks North America	Valiant TMS	Terminal line-up diagram =V1WC4+V1UC15-KF15.12	Drawing name: =2V09&EFS-EL / = / +
			Ed.	MKLEPADLO	P6700 Bodyside LH - Robot Cell 2V09			
			Appr			Scale 1:1		Document type: ETT / Project nr: 22-16150 / Page 67 / 1533
Modification	Date	Name	Original		Replacement of / Replaced by			

Terminal line-up diagram

F12_001

Part number					
Mounting rail			Strip label	End angle rear	End plate
Terminal					
Part number	Type number	Cross-section	Terminal label	Jumper	Cover

=V1WC4+V1UC15-XD5

1

			Date	1/17/2023	Volvo Trucks North America	Valiant TMS	Terminal line-up diagram =V1WC4+V1UC15-XD5	Drawing name: =2V09&EFS-EL	=
			Ed.	MKLEPADLO					+
			Appr		P6700 Bodyside LH - Robot Cell 2V09			Document type: ETT	Project nr: 22-16150
Modification	Date	Name	Original		Replacement of / Replaced by	Scale 1:1			Page 68 / 1533

Terminal line-up diagram

F12_001

Part number					
Mounting rail			Strip label	End angle rear	End plate
Terminal					
Part number	Type number	Cross-section	Terminal label	Jumper	Cover

=V1WC4+V1UC15-XD6

1

Terminal line-up diagram

F12_001

Part number					
Mounting rail			Strip label	End angle rear	End plate

Terminal					
Part number	Type number	Cross-section	Terminal label	Jumper	Cover
WEI.8731720000	ZTR 2.5/3AN	2.5			
WEI.8731720000	ZTR 2.5/3AN	2.5			
WEI.8731720000	ZTR 2.5/3AN	2.5			
WEI.8731720000	ZTR 2.5/3AN	2.5			
WEI.8731720000	ZTR 2.5/3AN	2.5			
WEI.8731720000	ZTR 2.5/3AN	2.5			
WEI.8731720000	ZTR 2.5/3AN	2.5			
WEI.8731720000	ZTR 2.5/3AN	2.5			
WEI.8731720000	ZTR 2.5/3AN	2.5			
WEI.8731720000	ZTR 2.5/3AN	2.5			
WEI.8731720000	ZTR 2.5/3AN	2.5			
WEI.8731720000	ZTR 2.5/3AN	2.5			
WEI.8731720000	ZTR 2.5/3AN	2.5			
WEI.8731720000	ZTR 2.5/3AN	2.5			
WEI.8731720000	ZTR 2.5/3AN	2.5			
WEI.8731720000	ZTR 2.5/3AN	2.5			
WEI.8731720000	ZTR 2.5/3AN	2.5			
WEI.8731720000	ZTR 2.5/3AN	2.5			

=V1WC4+V1UC15-XD10

	1	
	2	
	4	
	3	
	7	
	9	
	11	
	5	
	6	
	8	
	10	
	12	
	13	
	14	
	15	
	16	
	17	
	18	
	19	
	20	

			Date	1/17/2023	Volvo Trucks North America	Valiant TMS	Terminal line-up diagram =V1WC4+V1UC15-XD10	Drawing name: =2V09&EFS-EL	=
			Ed.	MKLEPADLO					+
			Appr		P6700 Bodyside LH - Robot Cell 2V09			Document type: ETT	Project nr: 22-16150
Modification	Date	Name	Original		Replacement of / Replaced by	Scale 1:1			Page 70 / 1533

Terminal line-up diagram

F12_001

Part number					
Mounting rail			Strip label	End angle rear	End plate

Terminal					
Part number	Type number	Cross-section	Terminal label	Jumper	Cover
WEI.8731720000	ZTR 2.5/3AN	2.5			

=V1WC4+V1UC15-XD11

'	1	

			Date	1/17/2023	Volvo Trucks North America	Valiant TMS	Terminal line-up diagram =V1WC4+V1UC15-XD11	Drawing name: =2V09&EFS-EL	=
			Ed.	MKLEPADLO					+
			Appr		P6700 Bodyside LH - Robot Cell 2V09			Document type: ETT	Project nr: 22-16150	Page 71
Modification	Date	Name	Original		Replacement of	Replaced by	Scale 1:1			1533

Terminal line-up diagram

F12_001

Part number					
Mounting rail			Strip label	End angle rear	End plate
Terminal					
Part number	Type number	Cross-section	Terminal label	Jumper	Cover
WEI.8731720000	ZTR 2.5/3AN	2.5			
WEI.8731720000	ZTR 2.5/3AN	2.5			

=V1WC4+V1UC15-XD12

	1	
	2	

			Date	1/17/2023	Volvo Trucks North America	Valiant TMS	Terminal line-up diagram =V1WC4+V1UC15-XD12	Drawing name: =2V09&EFS-EL =
			Ed.	MKLEPADLO				+
			Appr		P6700 Bodyside LH - Robot Cell 2V09			Document type: ETT / Project nr: 22-16150 / Page 72
Modification	Date	Name	Original		Replacement of / Replaced by	Scale 1:1		1533

Terminal line-up diagram

F12_001

Part number					
Mounting rail			Strip label	End angle rear	End plate

Terminal					
Part number	Type number	Cross-section	Terminal label	Jumper	Cover
WEI.8731720000	ZTR 2.5/3AN	2.5			

=V1WC4+V1UC15-XD13

'	1	

			Date	1/17/2023	Volvo Trucks North America	Valiant TMS	Terminal line-up diagram =V1WC4+V1UC15-XD13	Drawing name: =2V09&EFS-EL
			Ed.	MKLEPADLO	P6700 Bodyside LH - Robot Cell 2V09			
			Appr			Scale 1:1		Document type: ETT / Project nr: 22-16150 / Page 73 / 1533
Modification	Date	Name	Original		Replacement of / Replaced by			

Terminal line-up diagram

F12_001

Part number					
Mounting rail			Strip label	End angle rear	End plate
Terminal					
Part number	Type number	Cross-section	Terminal label	Jumper	Cover
WEI.8731720000	ZTR 2.5/3AN	2.5			
WEI.8731720000	ZTR 2.5/3AN	2.5			

			Date	1/17/2023	Volvo Trucks North America	Valiant TMS	Terminal line-up diagram =V1WC4+V1UC15-XD14	Drawing name: =2V09&EFS-EL
			Ed.	MKLEPADLO	P6700 Bodyside LH - Robot Cell 2V09			=
			Appr			Scale 1:1		+
Modification	Date	Name	Original		Replacement of / Replaced by			Document type: ETT / Project nr: 22-16150 / Page 74 / 1533

Terminal line-up diagram

F12_001

Part number					
Mounting rail			Strip label	End angle rear	End plate
Terminal					
Part number	Type number	Cross-section	Terminal label	Jumper	Cover
WEI.8731720000	ZTR 2.5/3AN	2.5			
WEI.8731720000	ZTR 2.5/3AN	2.5			

=V1WC4+V1UC15-XD15

	1	
	2	

Terminal line-up diagram

F12_001

Part number					
Mounting rail			Strip label	End angle rear	End plate

Terminal					
Part number	Type number	Cross-section	Terminal label	Jumper	Cover
WEI.8731720000	ZTR 2.5/3AN	2.5			
WEI.8731720000	ZTR 2.5/3AN	2.5			

=V1WC4+V1UC15-XD16

	1	
	2	

			Date	1/17/2023	Volvo Trucks North America	Valiant TMS	Terminal line-up diagram =V1WC4+V1UC15-XD16	Drawing name: =2V09&EFS-EL
			Ed.	MKLEPADLO	P6700 Bodyside LH - Robot Cell 2V09			Document type: ETT
			Appr			Scale 1:1		Project nr: 22-16150
Modification	Date	Name	Original		Replacement of	Replaced by		Page 76 / 1533

Terminal line-up diagram

F12_001

Part number					
Mounting rail			Strip label	End angle rear	End plate
Terminal					
Part number	Type number	Cross-section	Terminal label	Jumper	Cover
WEI.8731720000	ZTR 2.5/3AN	2.5			
WEI.8731720000	ZTR 2.5/3AN	2.5			

=V1WC4+V1UC15-XD17

●	1		
●	2		

Modification	Date	Name				
			Date	1/17/2023	Volvo Trucks North America	Valiant TMS
			Ed.	MKLEPADLO		
			Appr		P6700 Bodyside LH - Robot Cell 2V09	
			Original		Replacement of / Replaced by	Scale 1:1

Terminal line-up diagram =V1WC4+V1UC15-XD17

Drawing name: =2V09&EFS-EL | = | +

Document type: ETT | Project nr: 22-16150 | Page 77 / 1533

Terminal line-up diagram

F12_001

Part number					
Mounting rail			Strip label	End angle rear	End plate
Terminal					
Part number	Type number	Cross-section	Terminal label	Jumper	Cover
WEI.8731720000	ZTR 2.5/3AN	2.5			

=V1WC4+V1UC15-XD18

1

			Date	1/17/2023	Volvo Trucks North America
			Ed.	MKLEPADLO	
			Appr		P6700 Bodyside LH - Robot Cell 2V09
Modification	Date	Name	Original		Replacement of / Replaced by

Valiant TMS

Scale 1:1

Terminal line-up diagram =V1WC4+V1UC15-XD18

Drawing name: =2V09&EFS-EL

=

+

Document type: ETT

Project nr: 22-16150

Terminal line-up diagram

F12_001

Part number					
Mounting rail			Strip label	End angle rear	End plate
Terminal					
Part number	Type number	Cross-section	Terminal label	Jumper	Cover
WEI.8731720000	ZTR 2.5/3AN	2.5			
WEI.8731720000	ZTR 2.5/3AN	2.5			

=V1WC4+V1UC15-XD51

●	1	
●	2	

Terminal line-up diagram

F12_001

Part number					
Mounting rail			Strip label	End angle rear	End plate
Terminal					
Part number	Type number	Cross-section	Terminal label	Jumper	Cover
WEI.8731720000	ZTR 2.5/3AN	2.5			
WEI.8731720000	ZTR 2.5/3AN	2.5			

Terminal line-up diagram

F12_001

Part number					
Mounting rail			Strip label	End angle rear	End plate

Terminal					
Part number	Type number	Cross-section	Terminal label	Jumper	Cover
WEI.8731720000	ZTR 2.5/3AN	2.5			
WEI.8731720000	ZTR 2.5/3AN	2.5			

Modification	Date	Name	Date	1/17/2023	Volvo Trucks North America	Valiant TMS	Terminal line-up diagram =V1WC4+V1UC15-XD53	Drawing name: =2V09&EFS-EL	=
			Ed.	MKLEPADLO	P6700 Bodyside LH - Robot Cell 2V09	Scale 1:1		Document type: ETT	+
			Appr		Replacement of	Replaced by		Project nr: 22-16150	Page 81 / 1533
			Original						

Terminal line-up diagram

F12_001

Part number					
Mounting rail			Strip label	End angle rear	End plate
Terminal					
Part number	Type number	Cross-section	Terminal label	Jumper	Cover
WEI.8731720000	ZTR 2.5/3AN	2.5			
WEI.8731720000	ZTR 2.5/3AN	2.5			

=V1WC4+V1UC15-XD54

	1	
	2	

			Date	1/17/2023	Volvo Trucks North America	Valiant TMS	Terminal line-up diagram =V1WC4+V1UC15-XD54
			Ed.	MKLEPADLO			Drawing name: =2V09&EFS-EL
			Appr		P6700 Bodyside LH - Robot Cell 2V09	Scale 1:1	Document type: ETT; Project nr: 22-16150
Modification	Date	Name	Original		Replacement of / Replaced by		Page 82 / 1533

=
+

Terminal line-up diagram

F12_001

Part number					
Mounting rail			Strip label	End angle rear	End plate
Terminal					
Part number	Type number	Cross-section	Terminal label	Jumper	Cover
WEI.8731720000	ZTR 2.5/3AN	2.5			
WEI.1608800000	ZAP/TW 3				
WEI.9540000000	ZEW 35				
WEI.8731720000	ZTR 2.5/3AN	2.5			
WEI.8731720000	ZTR 2.5/3AN	2.5			
WEI.8731720000	ZTR 2.5/3AN	2.5			
WEI.8731720000	ZTR 2.5/3AN	2.5			
WEI.8731720000	ZTR 2.5/3AN	2.5			
WEI.8731720000	ZTR 2.5/3AN	2.5			
WEI.8731720000	ZTR 2.5/3AN	2.5			
WEI.8731720000	ZTR 2.5/3AN	2.5			
WEI.8731720000	ZTR 2.5/3AN	2.5			
WEI.8731720000	ZTR 2.5/3AN	2.5			
WEI.8731720000	ZTR 2.5/3AN	2.5			
WEI.8731720000	ZTR 2.5/3AN	2.5			
WEI.8731720000	ZTR 2.5/3AN	2.5			

			Date	1/17/2023	Volvo Trucks North America	Valiant TMS	Terminal line-up diagram =V1WC4+V1UC32-XD11	Drawing name: =2V09&EFS-EL	=
			Ed.	MKLEPADLO					+
			Appr		P6700 Bodyside LH - Robot Cell 2V09			Document type: ETT	Project nr: 22-16150	Page 83
Modification	Date	Name	Original		Replacement of / Replaced by	Scale 1:1				1533

Terminal line-up diagram

F12_001

Part number					
Mounting rail			Strip label	End angle rear	End plate

Terminal					
Part number	Type number	Cross-section	Terminal label	Jumper	Cover
WEI.1608520000	ZDU 2.5 BL	2.5 mm²			
WEI.1608740000	ZAP/TW 1				
WEI.9540000000	ZEW 35				
WEI.1608520000	ZDU 2.5 BL	2.5 mm²			
WEI.1608520000	ZDU 2.5 BL	2.5 mm²			
WEI.1608520000	ZDU 2.5 BL	2.5 mm²			
WEI.1608520000	ZDU 2.5 BL	2.5 mm²			
WEI.1608520000	ZDU 2.5 BL	2.5 mm²			
WEI.1608520000	ZDU 2.5 BL	2.5 mm²			
WEI.1608520000	ZDU 2.5 BL	2.5 mm²			
WEI.1608520000	ZDU 2.5 BL	2.5 mm²			
WEI.1608520000	ZDU 2.5 BL	2.5 mm²			

=V1PZ1PF1+V1UC61-XD11

	10	
	1	
	2	
	3	
	4	
	5	
	6	
	7	
	8	
	9	

			Date	1/17/2023	Volvo Trucks North America	Valiant TMS	Terminal line-up diagram =V1PZ1PF1+V1UC61-XD11	Drawing name: =2V09&EFS-EL	=
			Ed.	MKLEPADLO					+
			Appr		P6700 Bodyside LH - Robot Cell 2V09			Document type: ETT	Project nr: 22-16150
Modification	Date	Name	Original		Replacement of	Replaced by	Scale 1:1		Page 84 / 1533

Terminal line-up diagram

F12_001

Part number					
Mounting rail			Strip label	End angle rear	End plate
Terminal					
Part number	Type number	Cross-section	Terminal label	Jumper	Cover
WEI.1608520000	ZDU 2.5 BL	2.5 mm²			
WEI.1608740000	ZAP/TW 1				
WEI.9540000000	ZEW 35				
WEI.1608520000	ZDU 2.5 BL	2.5 mm²			
WEI.1608520000	ZDU 2.5 BL	2.5 mm²			
WEI.1608520000	ZDU 2.5 BL	2.5 mm²			
WEI.1608520000	ZDU 2.5 BL	2.5 mm²			
WEI.1608520000	ZDU 2.5 BL	2.5 mm²			
WEI.1608520000	ZDU 2.5 BL	2.5 mm²			
WEI.1608520000	ZDU 2.5 BL	2.5 mm²			
WEI.1608520000	ZDU 2.5 BL	2.5 mm²			

=V1PZ1PF2+V1UC62-XD11

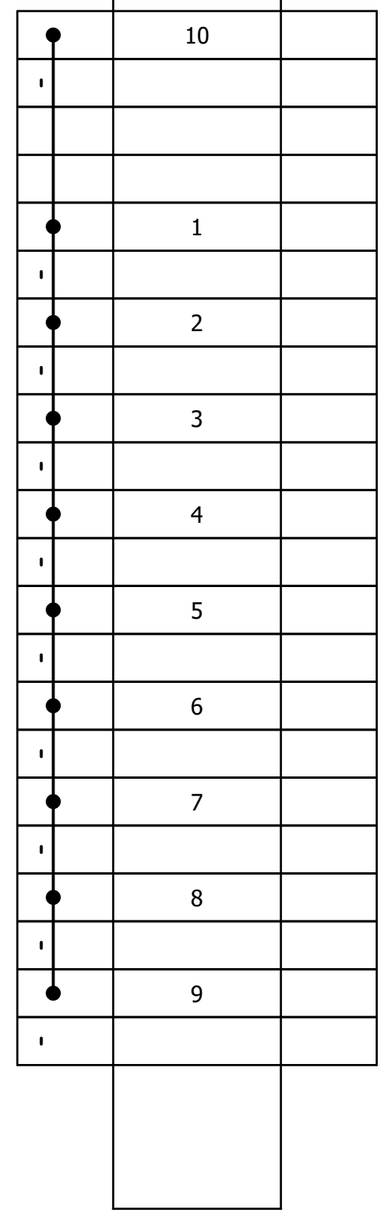

			Date	1/17/2023	Volvo Trucks North America	Valiant TMS	Terminal line-up diagram =V1PZ1PF2+V1UC62-XD11	Drawing name: =2V09&EFS-EL	=	
			Ed.	MKLEPADLO					+	
			Appr		P6700 Bodyside LH - Robot Cell 2V09			Document type: ETT	Project nr: 22-16150	Page 85
Modification	Date	Name	Original		Replacement of	Replaced by	Scale 1:1			1533

Terminal line-up diagram

F12_001

Part number					
Mounting rail			Strip label	End angle rear	End plate
Terminal					
Part number	Type number	Cross-section	Terminal label	Jumper	Cover
WEI.1608520000	ZDU 2.5 BL	2.5 mm²			
WEI.1608740000	ZAP/TW 1				
WEI.9540000000	ZEW 35				
WEI.1608520000	ZDU 2.5 BL	2.5 mm²			
WEI.1608520000	ZDU 2.5 BL	2.5 mm²			
WEI.1608520000	ZDU 2.5 BL	2.5 mm²			
WEI.1608520000	ZDU 2.5 BL	2.5 mm²			
WEI.1608520000	ZDU 2.5 BL	2.5 mm²			
WEI.1608520000	ZDU 2.5 BL	2.5 mm²			
WEI.1608520000	ZDU 2.5 BL	2.5 mm²			
WEI.1608520000	ZDU 2.5 BL	2.5 mm²			
WEI.1608520000	ZDU 2.5 BL	2.5 mm²			

=V1PZ1PF3+V1UC63-XD11

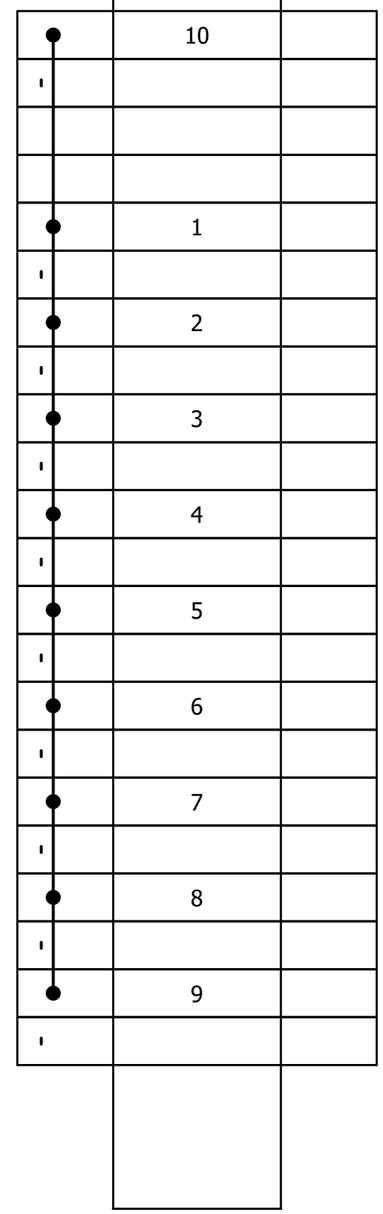

			Date	1/17/2023	Volvo Trucks North America	Valiant TMS	Terminal line-up diagram =V1PZ1PF3+V1UC63-XD11	Drawing name: =2V09&EFS-EL	=		
			Ed.	MKLEPADLO					+		
			Appr		P6700 Bodyside LH - Robot Cell 2V09	Scale 1:1		Document type: ETT	Project nr: 22-16150	Page	86
Modification	Date	Name	Original		Replacement of / Replaced by						1533

Terminal line-up diagram

F12_001

Part number					
Mounting rail			Strip label	End angle rear	End plate
Terminal					
Part number	Type number	Cross-section	Terminal label	Jumper	Cover
WEI.1608520000	ZDU 2.5 BL	2.5 mm²			
WEI.1608740000	ZAP/TW 1				
WEI.9540000000	ZEW 35				
WEI.1608520000	ZDU 2.5 BL	2.5 mm²			
WEI.1608520000	ZDU 2.5 BL	2.5 mm²			
WEI.1608520000	ZDU 2.5 BL	2.5 mm²			
WEI.1608520000	ZDU 2.5 BL	2.5 mm²			
WEI.1608520000	ZDU 2.5 BL	2.5 mm²			
WEI.1608520000	ZDU 2.5 BL	2.5 mm²			
WEI.1608520000	ZDU 2.5 BL	2.5 mm²			
WEI.1608520000	ZDU 2.5 BL	2.5 mm²			

=V1PZ1PF4+V1UC64-XD11

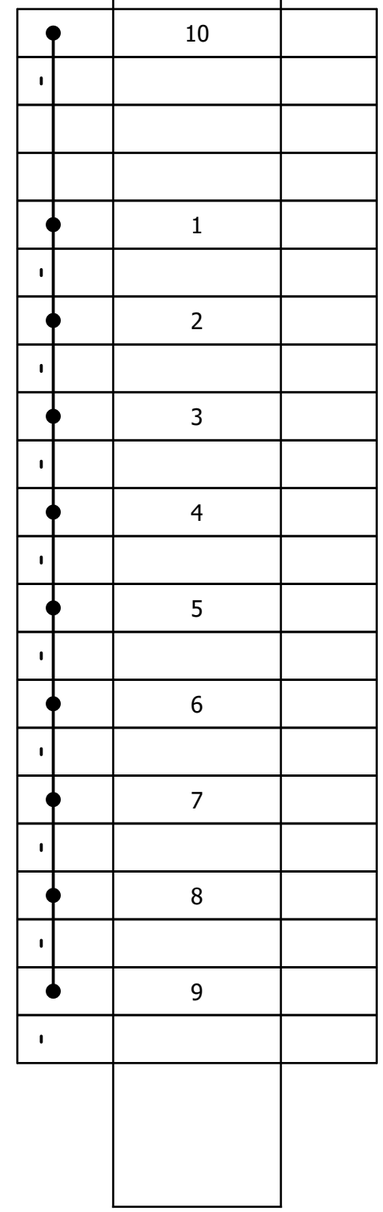

			Date	1/17/2023	Volvo Trucks North America	Valiant TMS	Terminal line-up diagram =V1PZ1PF4+V1UC64-XD11	Drawing name: =2V09&EFS-EL	=	
			Ed.	MKLEPADLO					+	
			Appr		P6700 Bodyside LH - Robot Cell 2V09	Scale 1:1		Document type: ETT	Project nr: 22-16150	Page 87
Modification	Date	Name	Original		Replacement of	Replaced by				1533

Summarized parts list

F02_001

Order number	Quantity	Description Designation	Type number Part number	Manufacturer Supplier	Unit price	Total price	Pos
	9 Piece	Mounting rail EN 50 022 (35x7,5)	TS 35_7,5 TS 35_7,5		0.00	0.00	
1SFA619550R1051	2 PCE	EMERGENCY STOP CE4T-10R-02	CE4T-10R-02 ABB.1SFA619550R1051	ABB ABB	0.00	0.00	
1SFA616915R1005	3 Piece	LEGEND PLATET KTC15-1005	KTC15-1005 ABB.1SFA616915R1005	ABB	0.00	0.00	
	0					0.00	
ECGB5	2 Piece	Ground bar kit, 5 positions.	ECGB5 US2.ECGB5	SIE SIE	0.00	0.00	
C1.5LG6	2 ft	Wiring Duct Covers, PVC	C1.5LG6 PAN.C1.5LG6	PAN PAN	0.00	0.00	
C1LG6	2 ft	Wiring Duct Covers, PVC	C1LG6 PAN.C1LG6	PAN PAN	0.00	0.00	
G1.5X4LG6	2 ft	Wide Slotted Wiring Duct, PVC	G1.5X4LG6 PAN.G1.5X4LG6	PAN PAN	0.00	0.00	
G1X4LG6	2 ft	Wide Slotted Wiring Duct, PVC	G1X4LG6 PAN.G1X4LG6	PAN PAN	0.00	0.00	
6ES5710-8MA11	1	STAND.SECTIONAL RAIL 35MM, LENGTH 483MM	6ES5710-8MA11 SIE.6ES5710-8MA11	SIE Siemens AG	0.00	0.00	
5386050	1 pc(s).	PC PC enclosure system, WHD: 800x1600x600 mm, Sheet steel	PC.5386050 RIT.5386050	RIT RIT	0.00	0.00	
8617580	1 pc(s).	VX Partial mounting plate, for VX: 700x700 mm	VX.8617580 RIT.8617580	RIT RIT	0.00	0.00	
E4PBG	2 piece	Pushbutton Enclosure, Type 12, 4PB, 22.5mm holes, 10.00Hx3.25Wx2.75D, Gray, Steel	E4PBG HOFFMAN.E4PBG	HOFFMAN HOFFMAN	0.00	0.00	
ASPBG	2 piece	Hol-Sealers Hole Seal, 1.22" diameter, Gray, Steel	ASPBG ASPBG	HOFFMAN HOFFMAN	0.00	0.00	
6ES7517-3FP00-0AB0	1	CPU 1517F-3 PN/DP, 3MB PROG., 8MB DATA	6ES7517-3FP00-0AB0 SIE.6ES7517-3FP00-0AB0	SIE SIE	0.00	0.00	
6ES7590-1AC40-0AA0	1	MOUNTING RAIL 245MM (9.6")	6ES7590-1AC40-0AA0 SIE.6ES7590-1AC40-0AA0	SIE SIE	0.00	0.00	
6ES7155-6AA01-0BN0	6	ET 200SP, IM155-6PN ST INCL. BA 2XRJ45	6ES7155-6AA01-0BN0 SIE.6ES7155-6AA01-0BN0	SIE SIE	0.00	0.00	
6ES7131-6BH01-0BA0	14	ET 200SP, DI 16x 24V DC ST, PU 1	6ES7131-6BH01-0BA0 SIE.6ES7131-6BH01-0BA0	SIE SIE	0.00	0.00	
6ES7132-6BH01-0BA0	6	ET 200SP, DQ 16x 24V DC/0,5A ST, PU 1	6ES7132-6BH01-0BA0 SIE.6ES7132-6BH01-0BA0	SIE SIE	0.00	0.00	

			Date	1/17/2023	Volvo Trucks North America	Valiant TMS	Summarized parts list : TS 35_7,5 - SIE.6ES7132-6BH01-0BA0	Drawing name: =2V09&EFS-EL	=
			Ed.	MKLEPADLO					+
			Appr		P6700 Bodyside LH - Robot Cell 2V09			Document type: EXX	Project nr: 22-16150
Modification	Date	Name	Original		Replacement of / Replaced by	Scale 1:1			Page 1 / 1533

Summarized parts list

F02_001

Order number	Quantity	Description Designation	Type number Part number	Manufacturer Supplier	Unit price	Total price	Pos
6ES7136-6BA01-0CA0	2	ET 200SP, El-Mod., F-DI 8x24VDC HF	6ES7136-6BA01-0CA0 SIE.6ES7136-6BA01-0CA0	SIE SIE	0.00	0.00	
6GK5615-0AA00-2AA2	1	SCALANCE S615	6GK5615-0AA00-2AA2 SIE.6GK5615-0AA00-2AA2	SIE SIE	0.00	0.00	
6GK5216-0BA00-2AC2	5	SCALANCE XC216	6GK5216-0BA00-2AC2 SIE.6GK5216-0BA00-2AC2	SIE SIE	0.00	0.00	
RJ45S FKSDED 423-1M	76	Profinet cable - RJ45 plug to M12 Female receptacle; 1m long	RJ45S FKSDED 423-1M TUR.RJ45S FKSDED 423-1M	TURCK TURCK	0.00	0.00	
	2		4000-73000-0180000		0.00	0.00	
8WD4408-0AA	5 piece	Signaling column connection element for pipe mounting incl. end cover and seal	8WD4408-0AA SIE.8WD4408-0AA	SIE SIE	0.00	0.00	
8WD4420-0EA2	5 piece	Signaling column multifunctional siren element different sounds can be set 24 V	8WD4420-0EA2 SIE.8WD4420-0EA2	SIE	0.00	0.00	
8WD4420-5AB	5 piece	Signaling column continuous light element LED red, 24 V AC/DC	8WD4420-5AB SIE.8WD4420-5AB	SIE SIE	0.00	0.00	
8WD4420-5AC	5 piece	Signaling column continuous light element LED green, 24 V AC/DC	8WD4420-5AC SIE.8WD4420-5AC	SIE SIE	0.00	0.00	
1SFA619100R1022	2 PCE	PUSHBUTTON CP1-10G-20	CP1-10G-20 ABB.1SFA619100R1022	ABB ABB	0.00	0.00	
1SFA619100R1023	2 PCE	PUSHBUTTON CP1-10Y-20	CP1-10Y-20 ABB.1SFA619100R1023	ABB ABB	0.00	0.00	
1SFA619100R1111	1 PCE	PUSHBUTTON CP1-11R-10 24V AC/DC	CP1-11R-10 ABB.1SFA619100R1111	ABB ABB	0.00	0.00	
1SFA619100R1026	1 PCE	PUSHBUTTON CP1-10B-20	CP1-10B-20 ABB.1SFA619100R1026	ABB ABB	0.00	0.00	
1SFA619100R1118	2 PCE	PUSHBUTTON CP1-11C-10	CP1-11C-10 ABB.1SFA619100R1118	ABB ABB	0.00	0.00	
1SFA619200R1016	1 PCE	SELECTOR SWITCH C2SS1-10B-10	C2SS1-10B-10 ABB.1SFA619200R1016	ABB ABB	0.00	0.00	
2CDS271337R0104	2 PCE	Miniature Circuit Breaker - SU200 M - 1P - C - 10 A	SU201M-C10 ABB.2CDS271337R0104	ABB ABB	0.00	0.00	
6EP19612BA41	1	4x3-10A	6EP1961-2BA41 SIE.6EP1961-2BA41	SIE SIE	0.00	0.00	
6EP4134-3AB00-2AY0	1	SITOP UPS1600	6EP4134-3AB00-2AY0 SIE.6EP4134-3AB00-2AY0	SIE	0.00	0.00	
6EP4134-0GB00-0AY0	1	SITOP UPS1100	6EP4134-0GB00-0AY0 SIE.6EP4134-0GB00-0AY0	SIE SIE	0.00	0.00	

1 3

			Date	1/17/2023	Volvo Trucks North America	Valiant TMS	Summarized parts list : SIE.6ES7136-6BA01-0CA0 - SIE.6EP4134-0GB00-0AY0	Drawing name: =2V09&EFS-EL	=
			Ed.	MKLEPADLO					+
			Appr		P6700 Bodyside LH - Robot Cell 2V09			Document type: EXX	Project nr: 22-16150
Modification	Date	Name	Original		Replacement of	Replaced by	Scale 1:1		Page 2 / 1533

Summarized parts list

F02_001

Order number	Quantity	Description Designation	Type number Part number	Manufacturer Supplier	Unit price	Total price	Pos
6EP3336-7SB00-3AX0	7	SITOP PSU6200 1ph 24 V/20 A	6EP3336-7SB00-3AX0 SIE.6EP3336-7SB00-3AX0	SIE	0.00	0.00	
	1		TUR.BS 8251-0/PG9			0.00	
EMPD3FBCB-025A-M	31		EMPD3FBCB-025A-M EMPD3FBCB-025A-M	Electro-Matic Electro-Matic	0.00	0.00	
1625891	20 piece	Inductive sensor	NI50U-CK40-AP6X2-H1141/S1590 W/BS4_A TUR.1625891	TUR Turck	0.00	0.00	
VB2-FSM 4.4/2FKM 4/S3450	110	Y splitter	U2-30676 TUR.VB2-FSM 4.4/2FKM 4/S3450	TURCK TURCK	0.00	0.00	
548755	0	Bus node	CPX-FB33 FES.548755	FES FES	0.00	0.00	
550208	0	Interlinking block	CPX-M-GE-EV-S-7/8-5POL FES.550208	FES FES	0.00	0.00	
549335	0	Manifold block	CPX-M-AB-8-M12X2-5POL FES.549335	FES FES	0.00	0.00	
55530	1 Piece	MVK-MPNIO DIO16 IRT 7/8" 5pin	MVK-MPNIO DI16 MURR.55530	MURR MURR	0.00	0.00	
U2109-9	21 piece	TEE, 5-PIN MINI, STANDARD KEYWAY	RSM-2RKM 50 TUR.RSM-2RKM 50	TURCK TURCK	0.00	0.00	
WWS001A	4 piece	Inductive sensor Monitoring Kit for Power Clamps	WWS001A WELKER.WWS001A	WELKER WELKER	0.00	0.00	
1324633	17 piece	Inductive sensor Monitoring Kit for Vario Clamps	1324633 TUN.1324633	TUNKERS TUNKERS	0.00	0.00	
2CMA193115R1000	16	Surface socket-outlet	ABB.2CMA193115R1000	ABB ABB	0.00	0.00	
WWS001A	130	4-Wire, 4-Pin, DC M12 X 1 (PNP)	WWS001A WEL.WWS001A	WEL WEL	0.00	0.00	
1324638	204 piece	Inductive sensor Monitoring Kit for Power Clamps	1324638 TUN.1324638	TUNKERS TUNKERS	0.00	0.00	
EMPD3FBCB-060A-M	1		EMPD3FBCB-060A-M EMPD3FBCB-060A-M	Electro-Matic Electro-Matic	0.00	0.00	
1627205	6 piece	Inductive sensor	BI20U-CA40-AP6X2-H1141/S1590 W/BS2.0 TUR.1627205	TUR Turck	0.00	0.00	
EMPD3FBCB-030A-M	2		EMPD3FBCB-030A-M EMPD3FBCB-030A-M	Electro-Matic Electro-Matic	0.00	0.00	
SLSCP30-1200P44NT	6	EZ-Screen System	SLSCP30-1200P44NT BAN.SLSCP30-1200P44NT	BANNER BANNER	0.00	0.00	

Summarized parts list

F02_001

Order number	Quantity	Description Designation	Type number Part number	Manufacturer Supplier	Unit price	Total price	Pos
SLSCP30-1200P88	4	EZ-Screen System	SLSCP30-1200P88 BAN.SLSCP30-1200P88	BANNER BANNER	0.00	0.00	
MGB-L2B-PNA-L-121863	6 Piece	SWITCH	MGB-L2B-PNA-L-121863 EUC.MGB-L2B-PNA-L-121863	EUCHNER EUCHNER	0.00	0.00	
MGB-H-AA1A2-L-106221	6 Piece	HANDLE	MGB-H-AA1A2-L-106221 EUC.MGB-H-AA1A2-L-106221	EUCHNER EUCHNER	0.00	0.00	
MGB-A-MOUNTINGPLATE-H-109491	6 Piece	MOUNTING PLATE	MGB-A-MOUNTINGPLATE-H-109491 EUC.MGB-A-MOUNTINGPLATE-H-109491	EUCHNER EUCHNER	0.00	0.00	
MGB-E-A2-106051	6 Piece	ESCAPE RELEASE	MGB-E-A2-106051 EUC.MGB-E-A2-106051	EUCHNER EUCHNER	0.00	0.00	
2CDS253001R0324	1 PCE	3P-C32	S203-C32 ABB.2CDS253001R0324	ABB ABB	0.00	0.00	
1627297	103 piece	Inductive sensor	BI20U-CA40-AP6X2-H1141/S1590W/BS2.0 TUR.1627297	TUR Turck	0.00	0.00	
16449050	22 piece	Inductive sensor	BI10U-MT18-AP6X2-H1141/S1589 TUR.16449050	TURCK TURCK	0.00	0.00	
	4		1627297			0.00	
73093	6 Piece	QS30 Series High-Performance Long-Range Sensor	QS30FF600QPMA16 BAN.73093	BAN	0.00	0.00	
1644797	6 piece	Inductive sensor	BI4U-MT12E-AP6X2-H1141/S1589 TUR.1644797	TURCK TURCK	0.00	0.00	
4570890	20 piece	Inductive sensor	BI2-CRS260-AP4X2-H1141/S34 TUR.BI2-CRS260-AP4X2-H1141/S34	TURCK TURCK	0.00	0.00	
1324644	56 piece	Inductive sensor Monitoring Kit for Power Clamps	1324644 TUN.1324644	TUNKERS TUNKERS	0.00	0.00	
285425	2 piece	Inductive sensor Monitoring Kit for Power Clamps	285425 TUN.285425	TUNKERS TUNKERS	0.00	0.00	
NBN2-F581-¶100S6-E8-V1	2	50MM RANGE 4-PIN M12 INDUCTIVE SENSOR	NBN2-F581-100S6-E8-V1 P+F.NBN2-F581-100S6-E8-V1	P+F P+F	0.00	0.00	
1644905	24 piece	Inductive sensor	BI10U-MT18-AP6X2-H1141/S1589 TUR.1644905	TUR Turck	0.00	0.00	
1644979	2 piece	Inductive sensor	BI4U-MT12E-AP6X-H1141/S1589 TUR.1644979	TUR Turck	0.00	0.00	
1600610	2 piece	Magnetic field sensor For Detection of Ferromagnetic Parts	NIMFE-M12/4.6L88-UN6X-H1141 TUR.1600610	TURCK TURCK	0.00	0.00	
541254	2	Manifold block	CPX-AB-4-M12X2-5POL-R FES.541254	FES FES	0.00	0.00	

Summarized parts list

F02_001

Order number	Quantity	Description Designation	Type number Part number	Manufacturer Supplier	Unit price	Total price	Pos
1329440	1 piece	Inductive sensor Monitoring Kit for Power Clamps	1329440 TUN.1329440	TUNKERS TUNKERS	0.00	0.00	
BS 4151-0/9	3 piece	5 PIN MINI FIELD ATTACHABLE, FEMALE, STRAIGHT	BS 4151-0/9 TUR.BS 4151-0/9	TURCK TURCK	0.00	0.00	
	12		TUR.16447411			0.00	
6ES7136-6BA00-0CA0	8	ET 200SP, El-Mod., F-DI 8x24VDC HF	6ES7136-6BA00-0CA0 SIE.6ES7136-6BA00-0CA0	SIE	0.00	0.00	
6ES7136-6DB00-0CA0	8	ET 200SP, El-Mod., F-DQ 4xDC 24V/2A	6ES7136-6DB00-0CA0 SIE.6ES7136-6DB00-0CA0	SIE	0.00	0.00	
6ES7136-6RA00-0BF0	16	ET 200SP, F-RQ 1x24VDC/24..230VAC/5A ST	6ES7136-6RA00-0BF0 SIE.6ES7136-6RA00-0BF0	SIE	0.00	0.00	
6ES7193-6BP20-0BF0	16	BASEUNIT TYPE F0, BU20-P8+A4+0B	6ES7193-6BP20-0BF0 SIE.6ES7193-6BP20-0BF0	SIE SIE	0.00	0.00	
6ES7193-6BP00-0DA0	8	BASEUNIT TYPE A0, BU15-P16+A0+2D	6ES7193-6BP00-0DA0 SIE.6ES7193-6BP00-0DA0	SIE SIE	0.00	0.00	
6GK1900-0AB10	3	C-PLUG	6GK1900-0AB10 SIE.6GK1900-0AB10	SIE SIE	0.00	0.00	
8WD4420-5AD	4 piece	Signaling column continuous light element LED yellow, 24 V AC/DC	8WD4420-5AD SIE.8WD4420-5AD	SIE SIE	0.00	0.00	
8WD4420-5AF	4 piece	Signaling column continuous light element LED blue, 24 V AC/DC	8WD4420-5AF SIE.8WD4420-5AF	SIE SIE	0.00	0.00	
1574000	4 piece	Small enclosures KX	KX.1574000 RIT.1574000	RIT	0.00	0.00	
RSF 106-2M/14.5/NPT/CS16486	4	RECEPTACLE 1-1/8" MINIFAST 10P MALE 2M	RSF 106-2M/14.5/NPT/CS16486 TUR.RSF 106-2M/14.5/NPT/CS16486	TURCK TURCK	0.00	0.00	
6AV2124-0QC02-0AX1	2	SIMATIC HMI TP1500 COMFORT	6AV2124-0QC02-0AX1 SIE.6AV2124-0QC02-0AX1	SIE SIE	0.00	0.00	
6315450	1 piece	Compact enclosure AX	AX.6315450 RIT.6315450	RIT RIT	0.00	0.00	
6106500	1 piece	Pedestal, open	CP.6106500 RIT.6106500	RIT RIT	0.00	0.00	
6206300	1 piece	Coupling CP 60	CP.6206300 RIT.6206300	RIT RIT	0.00	0.00	
5051300	5 pc(s).	Accessory bag, for AX	AX.5051300 RIT.5051300	RIT RIT	0.00	0.00	
5051375	1 pc(s).	Mounting plate, for AX	AX.5051375 RIT.5051375	RIT RIT	0.00	0.00	

Summarized parts list

F02_001

Order number	Quantity	Description Designation	Type number Part number	Manufacturer Supplier	Unit price	Total price	Pos
6315150	7 piece	Compact enclosure AX	AX.6315150 RIT.6315150	RIT RIT	0.00	0.00	
6AV2124-0GC01-0AX0	4	SIMATIC HMI TP700 COMFORT	6AV2124-0GC01-0AX0 SIE.6AV2124-0GC01-0AX0	SIE SIE	0.00	0.00	
RJ45S FKSDED 423-0.5M	8	Profinet cable - RJ45 plug to M12 Female receptacle; 0.5m long	RJ45S FKSDED 423-0.5M TUR.RJ45S FKSDED 423-0.5M	TURCK TURCK	0.00	0.00	
5051368	4 pc(s).	Mounting plate, for AX	AX.5051368 RIT.5051368	RIT RIT	0.00	0.00	
RSF 50-1M/NPT	5	RECEPTACLE MINI 5P MALE 1M	RSF 50-1M/NPT TUR.RSF 50-1M/NPT	TURCK TURCK	0.00	0.00	
SSA-EBM-12EB1Q8OTBB	4 piece	Push-to-Stop, Twist-to-Release Electro-Mechanical Push Buttons	SSA-EBM Series BAN.SSA-EBM-12EB1Q8OTBB	BANNER BANNER	0.00	0.00	
802T-AMP	2	NEMA Limit Switch - NEMA Type 4 & 13 Oiltight Construction	802T-AMP A-B.802T-AMP	A-B A-B	0.00	0.00	
55339	3 Piece	MVK-MPNIO DI8 DO8 FSU	MVK-MPNIO DI8 DO8 FSU MURR.55339	MURR MURR	0.00	0.00	
805371	3 piece	K50L Series Daylight Visible Indicators	K50L2RGB7QP BAN.805371	BANNER BANNER	0.00	0.00	
SMB30A	3	Mounting kit	SMB30A BAN.32723	BANNER BANNER	0.00	0.00	
	1		BAN.801918			0.00	
	1		TUR.BI20U-CA40-AP6X2-H1141/S1590W/BS2.0			0.00	
1635291	1 piece	Inductive sensor	BI5U-MT18-AP6X2-H1141/S395/S1589 TUR.1635291	TURCK TURCK	0.00	0.00	
3VA5195-6ED31-0AA0	2	MCCB_UL_FS125_15A_3P_65KA_TM_ FTFM	3VA5195-6ED31-0AA0 SIE.3VA5195-6ED31-0AA0	SIE SIE	0.00	0.00	
3VA9977-0TA20	2	BREAKER DATA SERVER, COM100	3VA9977-0TA20 SIE.3VA9977-0TA20	SIE SIE	0.00	0.00	
7KM9300-0AE02-0AA0	2 Piece	Switched Ethernet PROFINET Module V3	7KM9300-0AE02-0AA0 SIE.7KM9300-0AE02-0AA0	SIE	0.00	0.00	
3VA6340-6KP31-0AA0	1	MCCB_UL_FS400_400A_3P_65KA_ETU8_LSI	3VA6340-6KP31-0AA0 SIE.3VA6340-6KP31-0AA0	SIE SIE	0.00	0.00	
3VA9177-0TB10	2	COMMUNICATION MODULE COM060	3VA9177-0TB10 SIE.3VA9177-0TB10	SIE SIE	0.00	0.00	
PTN102-3K	2 Piece	Transformer	PTN102-3K PTN102-3K	POWERTRAN POWERTRAN	0.00	0.00	

Summarized parts list

F02_001

Order number	Quantity	Description Designation	Type number Part number	Manufacturer Supplier	Unit price	Total price	Pos
3VA6225-6KP31-0AA0	1	MCCB_UL_FS250_250A_3P_65KA_ETU8_LSI	3VA6225-6KP31-0AA0 SIE.3VA6225-6KP31-0AA0	SIE SIE	0.00	0.00	
R-3W2MT-LMF	2 piece	Multi-Environment Voltage Indicator and Safe-Test Point Combination R-3W2MT-LMF Vertical/Flange Warning Label	R-3W2MT-LMF GT_R-3W2MT-LMF	GT	0.00	0.00	
3VA5120-6ED31-0AA0	2	MCCB_UL_FS125_20A_3P_65KA_TM_ FTFM	3VA5120-6ED31-0AA0 SIE.3VA5120-6ED31-0AA0	SIE SIE	0.00	0.00	
PTN102-7.5K	2 Piece	Transformer	PTN102-7.5K PTN102-7.5K	POWERTRAN POWERTRAN	0.00	0.00	
CPB-E2G06-03	2	3P DISTRIBUTION BLOCK 2 LINE / 6 LOAD	CPB-E2G06-03 CPB-E2G06-03	SYNDEVCO SYNDEVCO	0.00	0.00	
HCG-E2G06	2	3P GROUND BLOCK 2 LINE / 6 LOAD	HCG-E2G06 HCG-E2G06	SYNDEVCO SYNDEVCO	0.00	0.00	
MB-231-03	2	3P DISTRIBUTION BLOCK 1 LINE / 4 LOAD	MB-231-03 MB-231-03	SYNDEVCO SYNDEVCO	0.00	0.00	
STGS-3D-3D	2	3P GROUND BLOCK 3 LINE / 3 LOAD	STGS-3D-3D STGS-3D-3D	SYNDEVCO SYNDEVCO	0.00	0.00	
5SJ4120-7HG41	2	CIRCUIT BREAKER 240V 14KA, 1-POLE, C, 20A, D=70MM	5SJ4120-7HG41 SIE.5SJ4120-7HG41	SIE SIE	0.00	0.00	
5ST3010-0HG	20	AUXILARY SWITCH 1NO1NC UL489	5ST3010-0HG SIE.5ST3010-0HG	SIE SIE	0.00	0.00	
5SJ4110-7HG41	2	CIRCUIT BREAKER 240V 14KA, 1-POLE, C, 10A, D=70MM	5SJ4110-7HG41 SIE.5SJ4110-7HG41	SIE SIE	0.00	0.00	
5SJ4103-7HG41	4	CIRCUIT BREAKER 240V 14KA, 1-POLE, C, 3A, D=70MM	5SJ4103-7HG41 SIE.5SJ4103-7HG41	SIE SIE	0.00	0.00	
5SJ4116-7HG41	14	CIRCUIT BREAKER 240V 14KA, 1-POLE, C, 16A, D=70MM	5SJ4116-7HG41 SIE.5SJ4116-7HG41	SIE SIE	0.00	0.00	
5SJ4106-7HG41	3	CIRCUIT BREAKER 240V 14KA, 1-POLE, C, 6A, D=70MM	5SJ4106-7HG41 SIE.5SJ4106-7HG41	SIE SIE	0.00	0.00	
5SJ4130-7HG41	1	CIRCUIT BREAKER 240V 14KA, 1-POLE, C, 30A, D=70MM	5SJ4130-7HG41 SIE.5SJ4130-7HG41	SIE SIE	0.00	0.00	
1SNL317510R0000	8	DBL175 Series Distribution Block	1SNL317510R0000 1SNL317510R0000	ENTRELEC ENTRELEC	0.00	0.00	
P-P11#2R2-K3RD5	4 piece	Panel Interface Connector with USB Type A/F to USB Type A/M [QTY: 1]; Category 5 RJ45; Panel Mount Housing; UL Type 4; Duplex Outlet; 5 Amp Circuit Breaker	P-P11#2R2-K3RD5 GT_P-P11#2R2-K3RD5	GT_N GT	0.00	0.00	
6EP4438-7FB00-3DX0	8	SITOP SEL1200 8 x 10A	6EP4438-7FB00-3DX0 SIE.6EP4438-7FB00-3DX0	SIE	0.00	0.00	
2CDS271517R0357	2 PCE	Miniature Circuit Breaker MCBs - S200UDC - Number of Poles 1 - Tripping Characteristic K	S201UDC-K5 ABB.2CDS271517R0357	ABB ABB	0.00	0.00	

			Date	1/17/2023	Volvo Trucks North America	Valiant TMS	Summarized parts list : SIE.3VA6225-6KP31-0AA0 - ABB.2CDS271517R0357	Drawing name: =2V09&EFS-EL	= +
			Ed.	MKLEPADLO	P6700 Bodyside LH - Robot Cell 2V09				
			Appr			Scale 1:1		Document type: EXX	Project nr: 22-16150
Modification	Date	Name	Original		Replacement of / Replaced by				Page 7 / 1533

Summarized parts list

F02_001

Order number	Quantity	Description Designation	Type number Part number	Manufacturer Supplier	Unit price	Total price	Pos
SETS8205SID5	6	Golvskåp TS 8 sidskåp	TS8 RIT.SETS8205SID5	RIT RIT	0.00	0.00	

			Date	1/17/2023	Volvo Trucks North America	Valiant TMS	Summarized parts list : RIT.SETS8205SID5 - RIT.SETS8205SID5	Drawing name: =2V09&EFS-EL	=
			Ed.	MKLEPADLO					+
			Appr		P6700 Bodyside LH - Robot Cell 2V09			Document type: EXX	Project nr: 22-16150
Modification	Date	Name	Original		Replacement of / Replaced by	Scale 1:1			Page 8 / 1533

Terminal-strip overview

F14_001

Terminal strip	Terminal strip definition text	Terminals					Graphical page of terminal diagrams
		first	last	Total PE	Total N	Total number	
=KF0KF1+UC31-PC1		DVI		0	0	4	
=KF0KF1+UC31-PH1		DVI	DVI	0	0	1	
=KF0WC3+UC31-XD1		L1	PE	0	0	5	
=KF0WC3+UC31-XD2		1L1	PE	0	0	5	
=KF0WC4+UC31-XD11		1	13	0	0	6	
=KF0WC4+UC31-XD12		1	14	0	0	8	
=KF0WC4+UC31-XD13		1	13	0	0	6	
=KF0WC4+UC31-XD14		1	14	0	0	8	

			Date	1/17/2023	Volvo Trucks North America	Valiant TMS	Terminal-strip overview : =KF0KF1+UC31-PC1 - =KF0WC4+UC31-XD14	Drawing name: =2V09&EFS-EL	=
			Ed.	MKLEPADLO					+
			Appr		P6700 Bodyside LH - Robot Cell 2V09	Scale 1:1		Document type: EYY	Project nr: 22-16150	Page 1 / 1533
Modification	Date	Name	Original		Replacement of	Replaced by			

Terminal-strip overview

F14_001

Terminal strip	Terminal strip definition text	Terminals					Graphical page of terminal diagrams
		first	last	Total PE	Total N	Total number	
=V1WC1+V1UC11-PE		PE	PE	0	0	1	
=V1WC2+V1UC11-XD1		1	16	0	0	16	
=V1WC2+V1UC11-XD2		1	8	0	0	8	
=V1WC2+V1UC11-XD3		1	5	0	0	5	
=V1WC3+V1UC11-XD1		1	4	0	0	4	
=V1WC3+V1UC11-XD2		1	12	0	0	12	
=V1WC3+V1UC11-XD3		1	9	0	0	9	
=V1WC4+V1UC11-KF11.14		1	4	0	0	4	
=V1WC4+V1UC11-XD5		1	1	0	0	1	
=V1WC4+V1UC11-XD6		1	1	0	0	1	
=V1WC4+V1UC11-XD10		1	15	0	0	15	
=V1WC4+V1UC11-XD11		1	1	0	0	1	
=V1WC4+V1UC11-XD12		1	2	0	0	2	
=V1WC4+V1UC11-XD13		1	8	0	0	8	
=V1WC4+V1UC11-XD14		1	2	0	0	2	
=V1WC4+V1UC11-XD20		1	8	0	0	8	
=V1WC4+V1UC11-XD51		1	2	0	0	2	
=V1WC4+V1UC11-XD52		1	2	0	0	2	
=V1WC4+V1UC11-XD53		1	2	0	0	2	
=V1WC4+V1UC11-XD54		1	2	0	0	2	

			Date	1/17/2023	Volvo Trucks North America	Valiant TMS	Terminal-strip overview : =V1WC1+V1UC11-PE - =V1WC4+V1UC11-XD54	Drawing name: =2V09&EFS-EL	=
			Ed.	MKLEPADLO					+
			Appr		P6700 Bodyside LH - Robot Cell 2V09	Scale 1:1		Document type: EYY	Project nr: 22-16150	Page 2 / 1533
Modification	Date	Name	Original		Replacement of	Replaced by			

Terminal-strip overview

F14_001

Terminal strip	Terminal strip definition text	Terminals					Graphical page of terminal diagrams
		first	last	Total PE	Total N	Total number	
=V1WC1+V1UC12-PE		PE	PE	0	0	1	
=V1WC2+V1UC12-XD1		1	16	0	0	16	
=V1WC2+V1UC12-XD2		1	8	0	0	8	
=V1WC2+V1UC12-XD3		1	5	0	0	5	
=V1WC3+V1UC12-XD1		1	4	0	0	4	
=V1WC3+V1UC12-XD2		1	10	0	0	8	
=V1WC3+V1UC12-XD3		1	8	0	0	8	
=V1WC4+V1UC12-KF12.14		1	4	0	0	4	
=V1WC4+V1UC12-XD5		1	1	0	0	1	
=V1WC4+V1UC12-XD6		1	1	0	0	1	
=V1WC4+V1UC12-XD10		1	16	0	0	16	
=V1WC4+V1UC12-XD11		1	1	0	0	1	
=V1WC4+V1UC12-XD12		1	2	0	0	2	
=V1WC4+V1UC12-XD13		1	8	0	0	8	
=V1WC4+V1UC12-XD14		1	2	0	0	2	
=V1WC4+V1UC12-XD20		1	8	0	0	8	
=V1WC4+V1UC12-XD51		1	2	0	0	2	
=V1WC4+V1UC12-XD52		1	2	0	0	2	
=V1WC4+V1UC12-XD53		1	2	0	0	2	
=V1WC4+V1UC12-XD54		1	2	0	0	2	

			Date	1/17/2023	Volvo Trucks North America	Valiant TMS	Terminal-strip overview : =V1WC1+V1UC12-PE - =V1WC4+V1UC12-XD54	Drawing name: =2V09&EFS-EL	=
			Ed.	MKLEPADLO					+
			Appr		P6700 Bodyside LH - Robot Cell 2V09	Scale 1:1		Document type: EYY	Project nr: 22-16150	Page 3 / 1533
Modification	Date	Name	Original		Replacement of	Replaced by			

Terminal-strip overview

F14_001

Terminal strip	Terminal strip definition text	Terminals					Graphical page of terminal diagrams
		first	last	Total PE	Total N	Total number	
=V1WC3+V1UC14-XD1		L1	PE	0	0	5	
=V1WC4+V1UC14-KF14.12		1	4	0	0	4	
=V1WC4+V1UC14-XD5		1	1	0	0	1	
=V1WC4+V1UC14-XD6		1	1	0	0	1	
=V1WC4+V1UC14-XD10		1	20	0	0	20	
=V1WC4+V1UC14-XD11		1	1	0	0	1	
=V1WC4+V1UC14-XD12		1	2	0	0	2	
=V1WC4+V1UC14-XD13		1	1	0	0	1	
=V1WC4+V1UC14-XD14		1	2	0	0	2	
=V1WC4+V1UC14-XD15		1	2	0	0	2	
=V1WC4+V1UC14-XD16		1	2	0	0	2	
=V1WC4+V1UC14-XD17		1	2	0	0	2	
=V1WC4+V1UC14-XD18		1	1	0	0	1	
=V1WC4+V1UC14-XD51		1	2	0	0	2	
=V1WC4+V1UC14-XD52		1	2	0	0	2	
=V1WC4+V1UC14-XD53		1	2	0	0	2	
=V1WC4+V1UC14-XD54		1	2	0	0	2	

			Date	1/17/2023	Volvo Trucks North America	Valiant TMS	Terminal-strip overview : =V1WC3+V1UC14-XD1 - =V1WC4+V1UC14-XD54	Drawing name: =2V09&EFS-EL	=	
			Ed.	MKLEPADLO					+	
			Appr		P6700 Bodyside LH - Robot Cell 2V09	Scale 1:1		Document type: EYY	Project nr: 22-16150	Page 4 / 1533
Modification	Date	Name	Original		Replacement of	Replaced by				

Terminal-strip overview

F14_001

Terminal strip	Terminal strip definition text	Terminals					Graphical page of terminal diagrams
		first	last	Total PE	Total N	Total number	
=V1WC3+V1UC15-XD1		L1	PE	0	0	5	
=V1WC4+V1UC15-KF15.12		1	4	0	0	4	
=V1WC4+V1UC15-XD5		1	1	0	0	1	
=V1WC4+V1UC15-XD6		1	1	0	0	1	
=V1WC4+V1UC15-XD10		1	20	0	0	20	
=V1WC4+V1UC15-XD11		1	1	0	0	1	
=V1WC4+V1UC15-XD12		1	2	0	0	2	
=V1WC4+V1UC15-XD13		1	1	0	0	1	
=V1WC4+V1UC15-XD14		1	2	0	0	2	
=V1WC4+V1UC15-XD15		1	2	0	0	2	
=V1WC4+V1UC15-XD16		1	2	0	0	2	
=V1WC4+V1UC15-XD17		1	2	0	0	2	
=V1WC4+V1UC15-XD18		1	1	0	0	1	
=V1WC4+V1UC15-XD51		1	2	0	0	2	
=V1WC4+V1UC15-XD52		1	2	0	0	2	
=V1WC4+V1UC15-XD53		1	2	0	0	2	
=V1WC4+V1UC15-XD54		1	2	0	0	2	

			Date	1/17/2023	Volvo Trucks North America	Valiant TMS	Terminal-strip overview : =V1WC3+V1UC15-XD1 - =V1WC4+V1UC15-XD54	Drawing name: =2V09&EFS-EL	=	
			Ed.	MKLEPADLO					+	
			Appr		P6700 Bodyside LH - Robot Cell 2V09			Document type: EYY	Project nr: 22-16150	Page 5
Modification	Date	Name	Original		Replacement of	Replaced by	Scale 1:1			1533

Terminal-strip overview

F14_001

Terminal strip	Terminal strip definition text	Terminals					Graphical page of terminal diagrams
		first	last	Total PE	Total N	Total number	
=V1WC4+V1UC32-XD11		1	17	0	0	14	

			Date	1/17/2023	Volvo Trucks North America	Valiant TMS	Terminal-strip overview : =V1WC4+V1UC32-XD11 - =V1WC4+V1UC32-XD11
			Ed.	MKLEPADLO			
			Appr		P6700 Bodyside LH - Robot Cell 2V09	Scale 1:1	
Modification	Date	Name	Original		Replacement of / Replaced by		

Drawing name: =2V09&EFS-EL	=		
	+		
Document type: EYY	Project nr: 22-16150	Page	6
			1533

Terminal-strip overview

F14_001

Terminal strip	Terminal strip definition text	Terminals					Graphical page of terminal diagrams
		first	last	Total PE	Total N	Total number	
=V1PZ1PF1+V1UC61-XD11		10	9	0	0	20	

			Date	1/17/2023	Volvo Trucks North America	Valiant TMS	Terminal-strip overview : =V1PZ1PF1+V1UC61-XD11 - =V1PZ1PF1+V1UC61-XD11	Drawing name: =2V09&EFS-EL / = / +
			Ed.	MKLEPADLO	P6700 Bodyside LH - Robot Cell 2V09			
			Appr			Scale 1:1		Document type: EYY / Project nr: 22-16150 / Page 7 / 1533
Modification	Date	Name	Original		Replacement of	Replaced by		

Terminal-strip overview

F14_001

Terminal strip	Terminal strip definition text	Terminals					Graphical page of terminal diagrams
		first	last	Total PE	Total N	Total number	
=V1PZ1PF2+V1UC62-XD11		10	9	0	0	20	

			Date	1/17/2023	Volvo Trucks North America	Valiant TMS	Terminal-strip overview : =V1PZ1PF2+V1UC62-XD11 - =V1PZ1PF2+V1UC62-XD11	Drawing name: =2V09&EFS-EL	=
			Ed.	MKLEPADLO					+
			Appr		P6700 Bodyside LH - Robot Cell 2V09	Scale 1:1		Document type: EYY	Project nr: 22-16150	Page 8 / 1533
Modification	Date	Name	Original		Replacement of	Replaced by			

Terminal-strip overview

F14_001

Terminal strip	Terminal strip definition text	Terminals					Graphical page of terminal diagrams
		first	last	Total PE	Total N	Total number	
=V1PZ1PF3+V1UC63-XD11		10	9	0	0	20	

			Date	1/17/2023	Volvo Trucks North America	Valiant TMS	Terminal-strip overview : =V1PZ1PF3+V1UC63-XD11 - =V1PZ1PF3+V1UC63-XD11	Drawing name: =2V09&EFS-EL	=
			Ed.	MKLEPADLO					+
			Appr		P6700 Bodyside LH - Robot Cell 2V09	Scale 1:1		Document type: EYY	Project nr: 22-16150	Page 9 / 1533
Modification	Date	Name	Original		Replacement of	Replaced by			

Terminal-strip overview

F14_001

Terminal strip	Terminal strip definition text	Terminals					Graphical page of terminal diagrams
		first	last	Total PE	Total N	Total number	
=V1PZ1PF4+V1UC64-XD11		10	9	0	0	20	

			Date	1/17/2023	Volvo Trucks North America	Valiant TMS	Terminal-strip overview : =V1PZ1PF4+V1UC64-XD11 - =V1PZ1PF4+V1UC64-XD11	Drawing name: =2V09&EFS-EL	=
			Ed.	MKLEPADLO					+
			Appr		P6700 Bodyside LH - Robot Cell 2V09			Document type: EYY	Project nr: 22-16150
Modification	Date	Name	Original		Replacement of	Replaced by	Scale 1:1		Page 10 / 1533

MODIFIED DRAWINGS NOT REVISED IN THE ORIGINAL				DRAWINGS FOR REVISION			REPLACE AFTER REV. BY ORIGINAL		
DATE	SIGN.	DRAWING NR:	SHEET NR:	DATE	SIGN.	REV. AV	DATE	SIGN.	REV.

&EYY/10

2

			Date	1/17/2023	Volvo Trucks North America	Valiant TMS	Amendment page	Drawing name: =2V09&EFS-EL	=
			Ed.	MKLEPADLO					+
			Appr		P6700 Bodyside LH - Robot Cell 2V09			Document type: EAZ	Project nr: 22-16150
Modification	Date	Name	Original		Replacement of / Replaced by	Scale 1:10		Page 1	1533

1	2	3	4	5	6	7	8	9	10

LATEST REVISION

REV.	DATE	SIGN.	DRAWING NR:	SHEET NR:
1	2022-12-16	KMAFFRE	&EFS=KF0SF1+UC31	1
1	2022-12-16	KMAFFRE	&EFS=KF0KF1+UC31	10
1	2022-12-16	KMAFFRE	&EFS=V1KF1+V1UC32	5
1	2022-12-16	KMAFFRE	&EFS=V1SF0PG1+V1UC32	2
1	2022-12-16	KMAFFRE	&ELU=KF0+UC31	3
1	2022-12-16	KMAFFRE	&ELU=V1SF0PG1+V1UC32	1

1 3

			Date	1/17/2023	Volvo Trucks North America	Valiant TMS	Amendment page	Drawing name: =2V09&EFS-EL	=
			Ed.	MKLEPADLO					+
			Appr		P6700 Bodyside LH - Robot Cell 2V09			Document type: EAZ	Project nr: 22-16150
Modification	Date	Name	Original		Replacement of / Replaced by	Scale 1:10			Page 2 / 1533

LATEST REVISION

REV.	DATE	SIGN.	DRAWING NR:	SHEET NR:
2	2023-01-09	MKLEPADLO	&EFS=V1GL2UQ51BG0+V1GL2UQ51	4
2	2023-01-09	MKLEPADLO	&EFS=V1GL2UQ51KF3+V1GL2UQ51	3
2	2023-01-09	MKLEPADLO	&EFS=V1GL1UQ51KF1+V1GL1UQ51	1
2	2023-01-09	MKLEPADLO	&EFS=V1GL1UQ51WC4+V1GL1UQ51	1
2	2023-01-09	MKLEPADLO	&EFS=V1GL1UQ52KF1+V1GL1UQ52	1
2	2023-01-09	MKLEPADLO	&EFS=V1GL1UQ52WC4+V1GL1UQ52	1
2	2023-01-09	MKLEPADLO	&EFS=V1GL1UQ53BG0+V1GL1UQ53	1,2,3,4
2	2023-01-09	MKLEPADLO	&EFS=V1GL1UQ53KF1+V1GL1UQ53	1,2,3,4,5
2	2023-01-09	MKLEPADLO	&EFS=V1GL1UQ53KF2+V1GL1UQ53	1,2,3,4,5
2	2023-01-09	MKLEPADLO	&EFS=V1GL1UQ53KF3+V1GL1UQ53	1,2
2	2023-01-09	MKLEPADLO	&EFS=V1GL1UQ53UQ1+V1GL1UQ53UQ1	1
2	2023-01-09	MKLEPADLO	&EFS=V1GL1UQ53UQ2+V1GL1UQ53UQ2	1
2	2023-01-09	MKLEPADLO	&EFS=V1GL1UQ53UQ3+V1GL1UQ53UQ3	1
2	2023-01-09	MKLEPADLO	&EFS=V1GL1UQ53UQ4+V1GL1UQ53UQ4	1
2	2023-01-09	MKLEPADLO	&EFS=V1GL1UQ53UQ5+V1GL1UQ53UQ5	1
2	2023-01-09	MKLEPADLO	&EFS=V1GL1UQ53UQ6+V1GL1UQ53UQ6	1
2	2023-01-09	MKLEPADLO	&EFS=V1GL1UQ53UQ7+V1GL1UQ53UQ7	1
2	2023-01-09	MKLEPADLO	&EFS=V1GL1UQ53UQ8+V1GL1UQ53UQ8	1
2	2023-01-09	MKLEPADLO	&EFS=V1GL1UQ53UQ9+V1GL1UQ53UQ9	1
2	2023-01-09	MKLEPADLO	&EFS=V1GL1UQ53UQ10+V1GL1UQ53UQ10	1
2	2023-01-09	MKLEPADLO	&EFS=V1GL1UQ53UQ11+V1GL1UQ53UQ11	1
2	2023-01-09	MKLEPADLO	&EFS=V1GL1UQ53UQ12+V1GL1UQ53UQ12	1
2	2023-01-09	MKLEPADLO	&EFS=V1GL1UQ53UQ13+V1GL1UQ53UQ13	1
2	2023-01-09	MKLEPADLO	&EFS=V1GL1UQ53UQ14+V1GL1UQ53UQ14	1
2	2023-01-09	MKLEPADLO	&EFS=V1GL1UQ53UQ15+V1GL1UQ53UQ15	1
2	2023-01-09	MKLEPADLO	&EFS=V1GL1UQ53UQ16+V1GL1UQ53UQ16	1
2	2023-01-09	MKLEPADLO	&EFS=V1GL1UQ53UQ17+V1GL1UQ53UQ17	1
2	2023-01-09	MKLEPADLO	&EFS=V1GL1UQ53UQ18+V1GL1UQ53UQ18	1
2	2023-01-09	MKLEPADLO	&EFS=V1GL1UQ53UQ19+V1GL1UQ53UQ19	1
2	2023-01-09	MKLEPADLO	&EFS=V1GL1UQ53UQ20+V1GL1UQ53UQ20	1
2	2023-01-09	MKLEPADLO	&EFS=V1GL1UQ53UQ21+V1GL1UQ53UQ21	1
2	2023-01-09	MKLEPADLO	&EFS=V1GL1UQ53UQ22+V1GL1UQ53UQ22	1

			Date	1/17/2023	Volvo Trucks North America	Valiant TMS	Amendment page	Drawing name: =2V09&EFS-EL	=	
			Ed.	MKLEPADLO					+	
			Appr		P6700 Bodyside LH - Robot Cell 2V09			Document type: EAZ	Project nr: 22-16150	Page 3 / 1533
Modification	Date	Name	Original		Replacement of	Replaced by	Scale 1:10			

1	2	3	4	5	6	7	8	9	10

LATEST REVISION

REV.	DATE	SIGN.	DRAWING NR:	SHEET NR:
2	2023-01-09	MKLEPADLO	&EFS=V1GL1UQ53UQ23+V1GL1UQ53UQ23	1
2	2023-01-09	MKLEPADLO	&EFS=V1GL1UQ53UQ24+V1GL1UQ53UQ24	1
2	2023-01-09	MKLEPADLO	&EFS=V1GL1UQ53UQ25+V1GL1UQ53UQ25	1
2	2023-01-09	MKLEPADLO	&EFS=V1GL1UQ53WC4+V1GL1UQ53	1
2	2023-01-09	MKLEPADLO	&EFS=V1GL1UQ54BG0+V1GL1UQ54	1,2,3,4,5
2	2023-01-09	MKLEPADLO	&EFS=V1GL1UQ54KF1+V1GL1UQ54	1,2,3,4,5
2	2023-01-09	MKLEPADLO	&EFS=V1GL1UQ54KF2+V1GL1UQ54	1,2,3,4,5
2	2023-01-09	MKLEPADLO	&EFS=V1GL1UQ54KF3+V1GL1UQ54	1,2
2	2023-01-09	MKLEPADLO	&EFS=V1GL1UQ54UQ1+V1GL1UQ54UQ1	1
2	2023-01-09	MKLEPADLO	&EFS=V1GL1UQ54UQ2+V1GL1UQ54UQ2	1
2	2023-01-09	MKLEPADLO	&EFS=V1GL1UQ54UQ3+V1GL1UQ54UQ3	1
2	2023-01-09	MKLEPADLO	&EFS=V1GL1UQ54UQ4+V1GL1UQ54UQ4	1
2	2023-01-09	MKLEPADLO	&EFS=V1GL1UQ54UQ5+V1GL1UQ54UQ5	1
2	2023-01-09	MKLEPADLO	&EFS=V1GL1UQ54UQ6+V1GL1UQ54UQ6	1
2	2023-01-09	MKLEPADLO	&EFS=V1GL1UQ54UQ7+V1GL1UQ54UQ7	1
2	2023-01-09	MKLEPADLO	&EFS=V1GL1UQ54UQ8+V1GL1UQ54UQ8	1
2	2023-01-09	MKLEPADLO	&EFS=V1GL1UQ54UQ9+V1GL1UQ54UQ9	1
2	2023-01-09	MKLEPADLO	&EFS=V1GL1UQ54UQ10+V1GL1UQ54UQ10	1
2	2023-01-09	MKLEPADLO	&EFS=V1GL1UQ54UQ11+V1GL1UQ54UQ11	1
2	2023-01-09	MKLEPADLO	&EFS=V1GL1UQ54UQ12+V1GL1UQ54UQ12	1
2	2023-01-09	MKLEPADLO	&EFS=V1GL1UQ54UQ13+V1GL1UQ54UQ13	1
2	2023-01-09	MKLEPADLO	&EFS=V1GL1UQ54UQ14+V1GL1UQ54UQ14	1
2	2023-01-09	MKLEPADLO	&EFS=V1GL1UQ54UQ15+V1GL1UQ54UQ15	1
2	2023-01-09	MKLEPADLO	&EFS=V1GL1UQ54UQ16+V1GL1UQ54UQ16	1
2	2023-01-09	MKLEPADLO	&EFS=V1GL1UQ54UQ17+V1GL1UQ54UQ17	1
2	2023-01-09	MKLEPADLO	&EFS=V1GL1UQ54UQ18+V1GL1UQ54UQ18	1
2	2023-01-09	MKLEPADLO	&EFS=V1GL1UQ54UQ19+V1GL1UQ54UQ19	1
2	2023-01-09	MKLEPADLO	&EFS=V1GL1UQ54UQ20+V1GL1UQ54UQ20	1
2	2023-01-09	MKLEPADLO	&EFS=V1GL1UQ54UQ21+V1GL1UQ54UQ21	1
2	2023-01-09	MKLEPADLO	&EFS=V1GL1UQ54UQ22+V1GL1UQ54UQ22	1
2	2023-01-09	MKLEPADLO	&EFS=V1GL1UQ54UQ23+V1GL1UQ54UQ23	1
2	2023-01-09	MKLEPADLO	&EFS=V1GL1UQ54WC4+V1GL1UQ54	1

3 5

			Date	1/17/2023	Volvo Trucks North America	Valiant TMS	Amendment page	Drawing name: =2V09&EFS-EL	=
			Ed.	MKLEPADLO					+
			Appr		P6700 Bodyside LH - Robot Cell 2V09			Document type: EAZ / Project nr: 22-16150	Page 4 / 1533
Modification	Date	Name	Original		Replacement of / Replaced by	Scale 1:10			

1	2	3	4	5	6	7	8	9	10

LATEST REVISION

REV.	DATE	SIGN.	DRAWING NR:	SHEET NR:
2	2023-01-09	MKLEPADLO	&EFS=V1GL1UQ56KF1+V1GL1UQ56	1,2
2	2023-01-09	MKLEPADLO	&EFS=V1GL1UQ56UQ1+V1GL1UQ56UQ1	1
2	2023-01-09	MKLEPADLO	&EFS=V1GL1UQ57KF1+V1GL1UQ57	1,2
2	2023-01-09	MKLEPADLO	&EFS=V1GL1UQ57UQ1+V1GL1UQ57UQ1	1

4 6

			Date	1/17/2023	Volvo Trucks North America		Valiant TMS	Amendment page	Drawing name: =2V09&EFS-EL	=
			Ed.	MKLEPADLO						+
			Appr		P6700 Bodyside LH - Robot Cell 2V09		Scale 1:10		Document type: EAZ	Project nr: 22-16150
Modification	Date	Name	Original		Replacement of	Replaced by				Page 5 / 1533

1	2	3	4	5	6	7	8	9	10

LATEST REVISION

REV.	DATE	SIGN.	DRAWING NR:	SHEET NR:
3	2023-01-17	MKLEPADLO	&EFS=V1UN1BG0+V1UN1	1
3	2023-01-17	MKLEPADLO	&EFS=V1UN1KF1+V1UN1	10

5

			Date	1/17/2023	Volvo Trucks North America	Valiant TMS	Amendment page	Drawing name: =2V09&EFS-EL	=
			Ed.	MKLEPADLO					+
			Appr		P6700 Bodyside LH - Robot Cell 2V09			Document type: EAZ	Project nr: 22-16150
Modification	Date	Name	Original		Replacement of	Replaced by	Scale 1:10		Page 6 / 1533