F26_001_VLU_V1

Valiant TMS

Company / customer	Volvo Trucks NA
Project description	P6700 Bodyside RH - Robot Cell 2V10
drawing number	22-16150
Commission	Volvo Trucks North America
Manufacturer (company)	Valiant TMS
Project name	=2V10&EFS_EL
Type	P6700 Bodyside RH - Robot Cell 2V10

Created on 11/24/2022

Edit date 1/17/2023 by (short name) MKLEPADLO

Number of pages 1579

Plant	Main Area	Area	Sub area	Main function	Sub function	Component
=	=					-
2V11						
	V01	W12	W02	WL01		MA01
	V02	V06		AR11		UC01
	V01	U10		AR31	UQ01	QN01
				FQ0	V02	SF01
This is the base of the structure. However only presented on the main cabinet and the label of the project files.	The plant is devided into main areas.	The plant is structured into areas. The areas are developed by the flow and process stages of the plant.	In an area you can have several positions. Let say you have an input area. In that area you have 5 transport conveyors. They would be labeled. W02, W04, W06, W08 and W10. Areas always only have one letter in the name.	Here you explain what type of function happening in the area. In some rare cases you skip the area before the function this is when the function is of greater importence then the area. Like emergency stop, (FQ0). Functions always have two letters in the name.	Sometimes is just one level of function not enough. You might need to add an under function or in somecases like above an area to a function.	Once you have the full function structure you finally need to define what type of component it is. A component always start with an minus followed with two letters.

1. VLU letter codes.

• Our interpretation of IEC 81346-2 is presented in the Excel document: “VLU 81346-2 (interpretation)”

2. Colour coding

Description	**Colour**	**IEC 60204**	**Minimum area**
Power circuits 400/230 VAC	Black	bk	1,5mm²
Control circuit 230 VAC	Red	rd	1,0mm²
Control circuit 24 VAC	Red	rd	1,0mm²
Control circuit 24 VDC	Dark blue	bu	1,0mm²
Control circuit before main switch or external control signals	Orange	og	1,5mm²
Protective conductor PE (Earth)	Green/yellow	gnye	1,5mm²
Neutral	Light blue	bu	1,5mm²
Test leads	Blue	bu	1,5mm²
EX safe circuit	Medium blue	bu	1,5mm²
Shield	Transparent	sh	1,5mm²

Purpose

This document is made to avoid any misconcenptions about the standards we have to uphold regarding equipment grounding connections in compliance with the electrical regulations contained in NEC 250.119.

Fundemental principles

All equipment bonding connections originate from one grounding block, which is mounted either on the outside or directly on the main cabinet. This block is then connected with a minimum size 6 AWG green/yellow wire from the main cabinets grounding bar, this wire is labled (GND1).

From this block a network of green/yellow wiring is spread across the plant. At every bonding connection point a 10 AWG wire composed of a tapp-off clamp as well as a cableharness is used to connect the surface to the bonding network.

Equipment Bonding example

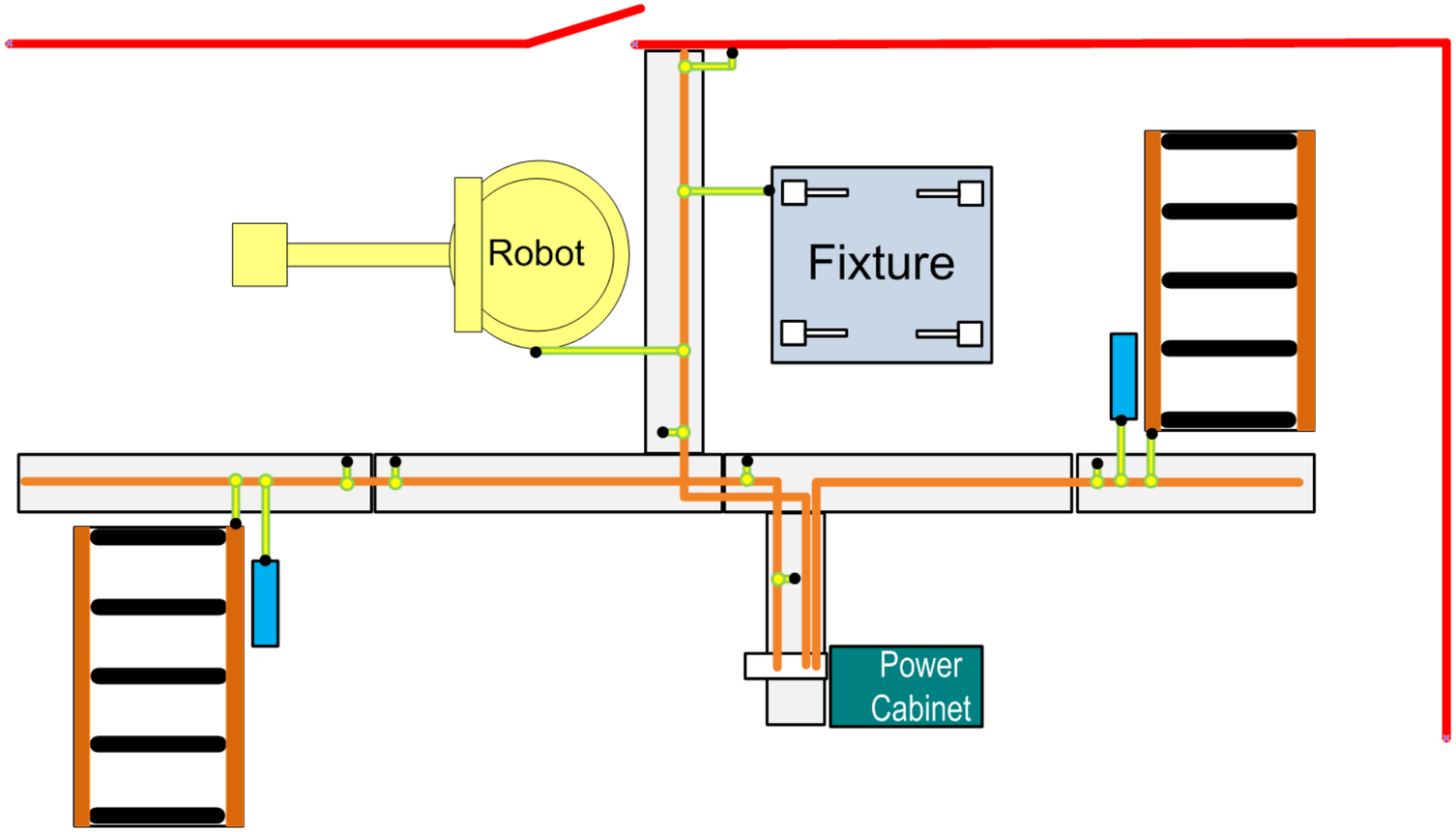

PLC Card Naming:
The following chart shall be used to cross-reference the naming of PLC cards in PDP & RIO enclosures. This chart is generic and not every enclosure will exist in this package.

Enc Type	Number	Slot 1	Slot 2	Slot 3	Slot 4	Slot 5	Slot 6	Slot 7	Slot 8	Slot 9	Slot 10	Slot 11	Slot 12	Slot 13	Slot 14
PDP	UC11 PDP1														
	UC11	KF11.11	KF11.12	KF11.13	KF11.14	KF11.31	KF11.32	KF11.21	KF11.41	KF11.42	KF11.51	KF11.52	KF11.53	KF11.54	
		DI x16	DI x16	DI x16	DI x16	F-DI x 8	F-DI x 8	DQ x16	F-DQ x 4	F-DQ x 4	F-RQ x 1	F-RQ x 1	F-RQ x 1	F-RQ x 1	
		IB 50..51	IB 52..53	IB 54..55	IB 56..57	IB 5050..5055	IB 5056..5061		IB 5062..5066	IB 5067..5071	IB 5072	IB 5073	IB 5074	IB 5075	
						QB 5050..5053	QB 5056..5059	QB 50..51	QB 5062..5066	QB 5067..5071					
	UC12 PDP2														
	UC12	KF12.11	KF12.12	KF12.13	KF12.14	KF12.31	KF12.32	KF12.21	KF12.41	KF12.42	KF12.51	KF12.52	KF12.53	KF12.54	
		DI x16	DI x16	DI x16	DI x16	F-DI x 8	F-DI x 8	DQ x16	F-DQ x 4	F-DQ x 4	F-RQ x 1	F-RQ x 1	F-RQ x 1	F-RQ x 1	
		IB 80..81	IB 82..83	IB 84..85	IB 86..87	IB 5080..5085	IB 5086..5091		IB 5092..5096	IB 5097..5101	IB 5102	IB 5103	IB 5104	IB 5105	
						QB 5080..5083	QB 5086..5089	QB 80..81	QB 5092..5096	QB 5097..5101					
	UC13 PDP3														
	UC13	KF13.11	KF13.12	KF13.13	KF13.14	KF13.31	KF13.32	KF13.21	KF13.41	KF13.42	KF13.51	KF13.52	KF13.53	KF13.54	
		DI x16	DI x16	DI x16	DI x16	F-DI x 8	F-DI x 8	DQ x16	F-DQ x 4	F-DQ x 4	F-RQ x 1	F-RQ x 1	F-RQ x 1	F-RQ x 1	
		IB 110..111	IB 112..113	IB 114..115	IB 116..117	IB 5110..5115	IB 5116..5121		IB 5122..5126	IB 5127..5131	IB 5132	IB 5133	IB 5134	IB 5135	
						QB 5110..5113	QB 5116..5119	QB 110..111	QB 5122..5126	QB 5127..5131					
RIO	UC14 RIO1														
	UC14	KF14.11	KF14.12	KF14.31	KF14.32	KF14.21	KF14.41	KF14.42	KF14.51	KF14.52	KF14.53	KF14.54			
		DI x16	DI x16	F-DI x 8	F-DI x 8	DQ x16	F-DQ x 4	F-DQ x 4	F-RQ x 1	F-RQ x 1	F-RQ x 1	F-RQ x 1			
		IB 200..201	IB 202..203	IB 5200..5205	IB 5206..5211		IB 5212..5216	IB 5217..5221	IB 5222	IB 5223	IB 5224	IB 5225			
				QB 5200..5203	QB 5206..5209	QB 200..201	QB 5212..5216	QB 5217..5221							
	UC15 RIO2														
	UC15	KF15.11	KF15.12	KF15.31	KF15.32	KF15.21	KF15.41	KF15.42	KF15.51	KF15.52	KF15.53	KF15.54			
		DI x16	DI x16	F-DI x 8	F-DI x 8	DQ x16	F-DQ x 4	F-DQ x 4	F-RQ x 1	F-RQ x 1	F-RQ x 1	F-RQ x 1			
		IB 230..231	IB 232..233	IB 5230..5235	IB 5236..5241		IB 5242..5246	IB 5247..5251	IB 5252	IB 5253	IB 5254	IB 5255			
				QB 5230..5233	QB 5236..5239	QB 230..231	QB 5242..5246	QB 5247..5251							
	UC16 RIO3														
	UC16	KF16.11	KF16.12	KF16.31	KF16.32	KF16.21	KF16.41	KF16.42	KF16.51	KF16.52	KF16.53	KF16.54			
		DI x16	DI x16	F-DI x 8	F-DI x 8	DQ x16	F-DQ x 4	F-DQ x 4	F-RQ x 1	F-RQ x 1	F-RQ x 1	F-RQ x 1			
		IB 260..261	IB 262..263	IB 5260..5265	IB 5266..5271		IB 5272..5276	IB 5277..5281	IB 5282	IB 5283	IB 5284	IB 5285			
				QB 5260..5263	QB 5266..5269	QB 260..261	QB 5272..5276	QB 5287..5281							
	UC17 RIO4														
	UC17	KF17.11	KF17.12	KF17.31	KF17.32	KF17.21	KF17.41	KF17.42	KF17.51	KF17.52	KF17.53	KF17.54			
		DI x16	DI x16	F-DI x 8	F-DI x 8	DQ x16	F-DQ x 4	F-DQ x 4	F-RQ x 1	F-RQ x 1	F-RQ x 1	F-RQ x 1			
		IB 290..291	IB 292..293	IB 5290..5295	IB 5296..5301		IB 5302..5306	IB 5307..5311	IB 5312	IB 5313	IB 5314	IB 5315			
				QB 5290..5293	QB 5296..5299	QB 290..291	QB 5302..5306	QB 5307..5311							

Table of contents

Column X: An automatically generated page was edited

F06_001

Page	Page description	supplementary page field	Date	Edited by	X
&EAA/1	Title page / cover sheet		1/17/2023	MKLEPADLO	X
&EAA/2	Project structure		1/17/2023	MKLEPADLO	
&EAA/3	Letter codes/colors		1/17/2023	MKLEPADLO	
&EAA/4	Equipment Grounding policy		1/17/2023	MKLEPADLO	
&EAA/5	PLC Card Naming		1/17/2023	MKLEPADLO	
&EAB/1	Table of contents : &EAA/1 - &EAB/28		1/17/2023	MKLEPADLO	
&EAB/2	Table of contents : &EAB/29 - &EFS=KF0KF1+UC31/4		1/17/2023	MKLEPADLO	
&EAB/3	Table of contents : &EFS=KF0KF1+UC31/5 - &EFS=V1AR11UQ41BG0+V1AR11UQ41/1		1/17/2023	MKLEPADLO	
&EAB/4	Table of contents : &EFS=V1AR11UQ41BG0+V1AR11UQ41/2 - &EFS=V1AR25XQ11WC1+V1AR25XQ11UC01/1		1/17/2023	MKLEPADLO	
&EAB/5	Table of contents : &EFS=V1AR26KF1+V1AR26UC01/1 - &EFS=V1AR31XQ41UQ1+V1AR31XQ41UQ1/1		1/17/2023	MKLEPADLO	
&EAB/6	Table of contents : &EFS=V1AR31XQ41WC1+V1AR31XQ41UC01/1 - &EFS=V1FQ1+V1FQ1/3		1/17/2023	MKLEPADLO	
&EAB/7	Table of contents : &EFS=V1FQ1+V1FQ1/4 - &EFS=V1GL1UQ51KF1+V1GL1UQ51/3		1/17/2023	MKLEPADLO	
&EAB/8	Table of contents : &EFS=V1GL1UQ51KF1+V1GL1UQ51/4 - &EFS=V1GL1UQ51UQ25+V1GL1UQ51UQ25/1		1/17/2023	MKLEPADLO	
&EAB/9	Table of contents : &EFS=V1GL1UQ51UQ26+V1GL1UQ51UQ26/1 - &EFS=V1GL1UQ52UQ11+V1GL1UQ52UQ11/1		1/17/2023	MKLEPADLO	
&EAB/10	Table of contents : &EFS=V1GL1UQ52UQ12+V1GL1UQ52UQ12/1 - &EFS=V1GL1UQ53UQ2+V1GL1UQ53UQ2/1		1/17/2023	MKLEPADLO	
&EAB/11	Table of contents : &EFS=V1GL1UQ53UQ3+V1GL1UQ53UQ3/1 - &EFS=V1GL1UQ54KF1+V1GL1UQ54/2		1/17/2023	MKLEPADLO	
&EAB/12	Table of contents : &EFS=V1GL1UQ54KF1+V1GL1UQ54/3 - &EFS=V1GL1UQ54UQ21+V1GL1UQ54UQ21/1		1/17/2023	MKLEPADLO	
&EAB/13	Table of contents : &EFS=V1GL1UQ54UQ22+V1GL1UQ54UQ22/1 - &EFS=V1GL2UQ51KF4+V1GL2UQ51/2		1/17/2023	MKLEPADLO	
&EAB/14	Table of contents : &EFS=V1GL2UQ51KF4+V1GL2UQ51/3 - &EFS=V1GL2UQ51UQ31+V1GL2UQ51UQ31/1		1/17/2023	MKLEPADLO	
&EAB/15	Table of contents : &EFS=V1GL2UQ51UQ32+V1GL2UQ51UQ32/1 - &EFS=V1KF1+V1UC11/14		1/17/2023	MKLEPADLO	
&EAB/16	Table of contents : &EFS=V1KF1+V1UC11/15 - &EFS=V1KF1+V1UC14/5		1/17/2023	MKLEPADLO	
&EAB/17	Table of contents : &EFS=V1KF1+V1UC14/6 - &EFS=V1KF1+V1UC32/2		1/17/2023	MKLEPADLO	
&EAB/18	Table of contents : &EFS=V1KF1+V1UC32/3 - &EFS=V1UQ51BG0+V1UQ51/1		1/17/2023	MKLEPADLO	
&EAB/19	Table of contents : &EFS=V1UQ51KF1+V1UQ51/1 - &EFS=V1UQ52KF5+V1UQ52/3		1/17/2023	MKLEPADLO	
&EAB/20	Table of contents : &EFS=V1UQ52UQ1+V1UQ52UQ1/1 - &EFS=V1UQ52UQ33+V1UQ52UQ33/1		1/17/2023	MKLEPADLO	
&EAB/21	Table of contents : &EFS=V1UQ52UQ34+V1UQ52UQ34/1 - &EFS=V1UQ53UQ9+V1UQ53UQ9/1		1/17/2023	MKLEPADLO	
&EAB/22	Table of contents : &EFS=V1UQ53UQ10+V1UQ53UQ10/1 - &EFS=V1UQ55BG0+V1UQ55/1		1/17/2023	MKLEPADLO	
&EAB/23	Table of contents : &EFS=V1UQ55KF1+V1UQ55/1 - &EFS=V1WC2+V1UC12/42		1/17/2023	MKLEPADLO	
&EAB/24	Table of contents : &EFS=V1WC2+V1UC12/43 - &EFS=V1WC4+V1UC11/15		1/17/2023	MKLEPADLO	
&EAB/25	Table of contents : &EFS=V1WC4+V1UC11/16 - &EFS=V1WC4+V1UC12/21		1/17/2023	MKLEPADLO	
&EAB/26	Table of contents : &EFS=V1WC4+V1UC12/22 - &EFS=V1WC4+V1UC15/5		1/17/2023	MKLEPADLO	
&EAB/27	Table of contents : &EFS=V1WC4+V1UC15/6 - &ELU=V1SF0PG1+V1UC32/2		1/17/2023	MKLEPADLO	
&EAB/28	Table of contents : &ELU=V1SF0PG2+V1UC51/1 - &EMC/17		1/17/2023	MKLEPADLO	

Table of contents

Column X: An automatically generated page was edited

F06_001

Page	Page description	supplementary page field	Date	Edited by	X
&EAB/29	Table of contents : &EMC/18 - &EPB+V1AR11UQ41UQ6.1/1		1/17/2023	MKLEPADLO	
&EAB/30	Table of contents : &EPB+V1AR11UQ41UQ7.1/1 - &EPB+V1AR31UQ41UQ9.2/1		1/17/2023	MKLEPADLO	
&EAB/31	Table of contents : &EPB+V1AR31XQ41/1 - &EPB+V1GL1UQ51UQ1.3/1		1/17/2023	MKLEPADLO	
&EAB/32	Table of contents : &EPB+V1GL1UQ51UQ2.1/1 - &EPB+V1GL1UQ51UQ18.1/1		1/17/2023	MKLEPADLO	
&EAB/33	Table of contents : &EPB+V1GL1UQ51UQ19.1/1 - &EPB+V1GL1UQ52UQ8.1/1		1/17/2023	MKLEPADLO	
&EAB/34	Table of contents : &EPB+V1GL1UQ52UQ9.1/1 - &EPB+V1GL1UQ52UQ23.1/1		1/17/2023	MKLEPADLO	
&EAB/35	Table of contents : &EPB+V1GL1UQ52UQ24.1/1 - &EPB+V1GL1UQ53UQ14.3/1		1/17/2023	MKLEPADLO	
&EAB/36	Table of contents : &EPB+V1GL1UQ53UQ14.4/1 - &EPB+V1GL1UQ54UQ5.1/1		1/17/2023	MKLEPADLO	
&EAB/37	Table of contents : &EPB+V1GL1UQ54UQ5.2/1 - &EPB+V1GL1UQ54UQ19.1/1		1/17/2023	MKLEPADLO	
&EAB/38	Table of contents : &EPB+V1GL1UQ54UQ19.2/1 - &EPB+V1GL2UQ51UQ10.1/1		1/17/2023	MKLEPADLO	
&EAB/39	Table of contents : &EPB+V1GL2UQ51UQ10.2/1 - &EPB+V1GL2UQ51UQ31.1/1		1/17/2023	MKLEPADLO	
&EAB/40	Table of contents : &EPB+V1GL2UQ51UQ32.1/1 - &EPB+V1UC161/1		1/17/2023	MKLEPADLO	
&EAB/41	Table of contents : &EPB+V1UC162/1 - &EPB+V1UQ52UQ6.1/1		1/17/2023	MKLEPADLO	
&EAB/42	Table of contents : &EPB+V1UQ52UQ7.1/1 - &EPB+V1UQ52UQ28.1/1		1/17/2023	MKLEPADLO	
&EAB/43	Table of contents : &EPB+V1UQ52UQ29.1/1 - &EPB+V1UQ53UQ5.1/1		1/17/2023	MKLEPADLO	
&EAB/44	Table of contents : &EPB+V1UQ53UQ5.2/1 - &EPB+V1UQ54UQ7.1/1		1/17/2023	MKLEPADLO	
&EAB/45	Table of contents : &EPB+V1UQ54UQ8.1/1 - &ETT/17		1/17/2023	MKLEPADLO	
&EAB/46	Table of contents : &ETT/18 - &ETT/50		1/17/2023	MKLEPADLO	
&EAB/47	Table of contents : &ETT/51 - &ETT/83		1/17/2023	MKLEPADLO	
&EAB/48	Table of contents : &ETT/84 - &EAZ/6		1/17/2023	MKLEPADLO	
&EFA=FQ99V1+V1/1	EQUIPMENT BONDING		1/11/2023	MKLEPADLO	
&EFA=FQ99V1+V1/2	EQUIPMENT BONDING		1/11/2023	MKLEPADLO	
&EFA=FQ99V1+V1/3	EQUIPMENT BONDING		1/11/2023	MKLEPADLO	
&EFA=FQ99V1+V1/4	EQUIPMENT BONDING		1/11/2023	MKLEPADLO	
&EFA=FQ99V1+V1/5	EQUIPMENT BONDING		1/11/2023	MKLEPADLO	
&EFA=FQ99V1+V1/6	EQUIPMENT BONDING		1/11/2023	MKLEPADLO	
&EFA=FQ99V1+V1/7	EQUIPMENT BONDING		1/11/2023	MKLEPADLO	
&EFS=FQ0V1SF1S01+V1UC32/1	Emergency stop +V1SF1S01UC32		1/11/2023	MKLEPADLO	
&EFS=KF0FQ0+UC31/1	Operating box UC91 MOP		1/11/2023	MKLEPADLO	
&EFS=KF0KF1+UC31/1	CPU 1517-F-3PN/DP, Failsafe		1/11/2023	MKLEPADLO	
&EFS=KF0KF1+UC31/2	Cell interface S615		1/11/2023	MKLEPADLO	
&EFS=KF0KF1+UC31/3	Switch, Scalance XC216		1/11/2023	MKLEPADLO	
&EFS=KF0KF1+UC31/4	MOP, PC		1/11/2023	MKLEPADLO	

Table of contents

Column X: An automatically generated page was edited

F06_001

Page	Page description	supplementary page field	Date	Edited by	X
&EFS=KF0KF1+UC31/5	Network overview		1/11/2023	MKLEPADLO	
&EFS=KF0KF1+UC31/6	IM 155 PN		1/11/2023	MKLEPADLO	
&EFS=KF0KF1+UC31/7	ET200S Wiring DI		1/11/2023	MKLEPADLO	
&EFS=KF0KF1+UC31/8	ET200S Wiring DO		1/11/2023	MKLEPADLO	
&EFS=KF0KF1+UC31/9	ET200S Wiring F-DI		1/11/2023	MKLEPADLO	
&EFS=KF0KF1+UC31/10	ET200S Cross-reference Input module		1/11/2023	MKLEPADLO	
&EFS=KF0KF1+UC31/11	ET200S Cross-reference Output module		1/11/2023	MKLEPADLO	
&EFS=KF0KF1+UC31/12	ET200S Cross-reference Safe input module		1/11/2023	MKLEPADLO	
&EFS=KF0PZ1+UC31/1	Indication column		1/11/2023	MKLEPADLO	
&EFS=KF0SF1+UC31/1	Operating box UC91 MOP		1/11/2023	MKLEPADLO	
&EFS=KF0SF1+UC31/2	Operating box UC92 MOP		1/11/2023	MKLEPADLO	
&EFS=KF0WC3+UC31/1	Incomming power supply 120 VAC		1/11/2023	MKLEPADLO	
&EFS=KF0WC3+UC31/2	Outlet PLC 120VAC		1/11/2023	MKLEPADLO	
&EFS=KF0WC3+UC31/3	Monitoring 120VAC		1/11/2023	MKLEPADLO	
&EFS=KF0WC4+UC31/1	Power distribution 24VDC		1/11/2023	MKLEPADLO	
&EFS=KF0WC4+UC31/2	Power distribution, UPS		1/11/2023	MKLEPADLO	
&EFS=KF0WC4+UC31/3	Power distribution 24VDC 1L+		1/11/2023	MKLEPADLO	
&EFS=KF0WC4+UC31/4	Power distribution 24VDC 2L+		1/11/2023	MKLEPADLO	
&EFS=KF0WC4+UC31/5	Power distribution 24VDC 3L+		1/11/2023	MKLEPADLO	
&EFS=KF0WC4+UC31/6	Power distribution 24VDC 4L+		1/11/2023	MKLEPADLO	
&EFS=KH0+KH0/1	Incoming air supply (Main)		1/11/2023	MKLEPADLO	
&EFS=KH0+KH0/2	Incoming air supply (S010)		1/11/2023	MKLEPADLO	
&EFS=KH0+KH0/3	Incoming air supply (S020)		1/11/2023	MKLEPADLO	
&EFS=KH0+KH0/4	Incoming air supply (S030)		1/11/2023	MKLEPADLO	
&EFS=KH0+KH0/5	Incoming air supply (S040)		1/11/2023	MKLEPADLO	
&EFS=KH0+KH0/6	Incoming air supply (S050)		1/11/2023	MKLEPADLO	
&EFS=KH0+KH0/7	Incoming air supply (S055)		1/11/2023	MKLEPADLO	
&EFS=KH0+KH0/8	Incoming air supply (S060)		1/11/2023	MKLEPADLO	
&EFS=KH0+KH0/9	Incoming air supply (S080)		1/11/2023	MKLEPADLO	
&EFS=KH3+KH3/1	Incoming water supply (Filter)		1/11/2023	MKLEPADLO	
&EFS=KH3+KH3/2	Incoming water supply		1/11/2023	MKLEPADLO	
&EFS=V1AR11KF1+V1AR11UC01/1	Incoming Profinet		1/11/2023	MKLEPADLO	
&EFS=V1AR11UQ41BG0+V1AR11UQ41/1	SENSORS		1/11/2023	MKLEPADLO	

Table of contents

Column X: An automatically generated page was edited

F06_001

Page	Page description	supplementary page field	Date	Edited by	X
&EFS=V1AR11UQ41BG0+V1AR11UQ41/2	SENSORS		1/11/2023	MKLEPADLO	
&EFS=V1AR11UQ41KF1+V1AR11UQ41/1	24VDC SUPPLY AND PROFINET HANDLING MODULE		1/11/2023	MKLEPADLO	
&EFS=V1AR11UQ41KF1+V1AR11UQ41/2	CONNECTING MOD. FOR MPA MANIFOLD		1/11/2023	MKLEPADLO	
&EFS=V1AR11UQ41KF1+V1AR11UQ41/3	I/O MOD. DI16 (8 x M12) FOR MPA		1/11/2023	MKLEPADLO	
&EFS=V1AR11UQ41KF1+V1AR11UQ41/4	I/O MOD. DI16 (8 x M12) FOR MPA		1/11/2023	MKLEPADLO	
&EFS=V1AR11UQ41KF1+V1AR11UQ41/5	CONNECTING MOD. FOR FESTO DQ		1/11/2023	MKLEPADLO	
&EFS=V1AR11UQ41KF1+V1AR11UQ41/6	MURR MODULE 16 IN/OUT		1/11/2023	MKLEPADLO	
&EFS=V1AR11UQ41UQ1+V1AR11UQ41UE1/1	FESTO DQ CONNECTION QN1		1/11/2023	MKLEPADLO	
&EFS=V1AR11UQ41UQ2+V1AR11UQ41UE2/1	FESTO DQ CONNECTION QN2		1/11/2023	MKLEPADLO	
&EFS=V1AR11UQ41UQ3+V1AR11UQ41UE3/1	FESTO DQ CONNECTION QN3		1/11/2023	MKLEPADLO	
&EFS=V1AR11UQ41UQ4+V1AR11UQ41UE4/1	FESTO DQ CONNECTION QN4		1/11/2023	MKLEPADLO	
&EFS=V1AR11UQ41UQ5+V1AR11UQ41UE5/1	FESTO DQ CONNECTION QN5		1/11/2023	MKLEPADLO	
&EFS=V1AR11UQ41UQ6+V1AR11UQ41UE6/1	FESTO DQ CONNECTION QN6		1/11/2023	MKLEPADLO	
&EFS=V1AR11UQ41UQ7+V1AR11UQ41UE7/1	FESTO DQ CONNECTION QN7		1/11/2023	MKLEPADLO	
&EFS=V1AR11UQ41UQ8+V1AR11UQ41UE8/1	FESTO DQ CONNECTION QN8		1/11/2023	MKLEPADLO	
&EFS=V1AR11UQ41UQ9+V1AR11UQ41UE9/1	FESTO DQ CONNECTION QN9		1/11/2023	MKLEPADLO	
&EFS=V1AR11UQ41UQ10+V1AR11UQ41UE10/1	FESTO DQ CONNECTION QN10		1/11/2023	MKLEPADLO	
&EFS=V1AR11WC1+V1AR11UC01/1	Incoming power		1/11/2023	MKLEPADLO	
&EFS=V1AR21KF1+V1AR21UC01/1	Incoming Profinet		1/11/2023	MKLEPADLO	
&EFS=V1AR21WC1+V1AR21UC01/1	Incoming power		1/11/2023	MKLEPADLO	
&EFS=V1AR21XQ11WC1+V1AR21XQ11UC01/1	Incoming power		1/11/2023	MKLEPADLO	
&EFS=V1AR22KF1+V1AR22UC01/1	Incoming Profinet		1/11/2023	MKLEPADLO	
&EFS=V1AR22WC1+V1AR22UC01/1	Incoming power		1/11/2023	MKLEPADLO	
&EFS=V1AR22XQ11WC1+V1AR22XQ11UC01/1	Incoming power		1/11/2023	MKLEPADLO	
&EFS=V1AR23KF1+V1AR23UC01/1	Incoming Profinet		1/11/2023	MKLEPADLO	
&EFS=V1AR23WC1+V1AR23UC01/1	Incoming power		1/11/2023	MKLEPADLO	
&EFS=V1AR23XQ11WC1+V1AR23XQ11UC01/1	Incoming power		1/11/2023	MKLEPADLO	
&EFS=V1AR24KF1+V1AR24UC01/1	Incoming Profinet		1/11/2023	MKLEPADLO	
&EFS=V1AR24WC1+V1AR24UC01/1	Incoming power		1/11/2023	MKLEPADLO	
&EFS=V1AR24XQ11WC1+V1AR24XQ11UC01/1	Incoming power		1/11/2023	MKLEPADLO	
&EFS=V1AR25KF1+V1AR25UC01/1	Incoming Profinet		1/11/2023	MKLEPADLO	
&EFS=V1AR25WC1+V1AR25UC01/1	Incoming power		1/11/2023	MKLEPADLO	
&EFS=V1AR25XQ11WC1+V1AR25XQ11UC01/1	Incoming power		1/11/2023	MKLEPADLO	

Table of contents

Column X: An automatically generated page was edited

F06_001

Page	Page description	supplementary page field	Date	Edited by	X
&EFS=V1AR26KF1+V1AR26UC01/1	Incoming Profinet		1/11/2023	MKLEPADLO	
&EFS=V1AR26WC1+V1AR26UC01/1	Incoming power		1/11/2023	MKLEPADLO	
&EFS=V1AR26XQ11WC1+V1AR26XQ11UC01/1	Incoming power		1/11/2023	MKLEPADLO	
&EFS=V1AR27KF1+V1AR27UC01/1	Incoming Profinet		1/11/2023	MKLEPADLO	
&EFS=V1AR27WC1+V1AR27UC01/1	Incoming power		1/11/2023	MKLEPADLO	
&EFS=V1AR27XQ11WC1+V1AR27XQ11UC01/1	Incoming power		1/11/2023	MKLEPADLO	
&EFS=V1AR28KF1+V1AR28UC01/1	Incoming Profinet		1/11/2023	MKLEPADLO	
&EFS=V1AR28WC1+V1AR28UC01/1	Incoming power		1/11/2023	MKLEPADLO	
&EFS=V1AR28XQ11WC1+V1AR28XQ11UC01/1	Incoming power		1/11/2023	MKLEPADLO	
&EFS=V1AR29KF1+V1AR29UC01/1	Incoming Profinet		1/11/2023	MKLEPADLO	
&EFS=V1AR29WC1+V1AR29UC01/1	Incoming power		1/11/2023	MKLEPADLO	
&EFS=V1AR29XQ11WC1+V1AR29XQ11UC01/1	Incoming power		1/11/2023	MKLEPADLO	
&EFS=V1AR31KF1+V1AR31UC01/1	Incoming Profinet		1/11/2023	MKLEPADLO	
&EFS=V1AR31UQ41BG0+V1AR31UQ41/1	SENSORS		1/11/2023	MKLEPADLO	
&EFS=V1AR31UQ41KF1+V1AR31UQ41/1	24VDC SUPPLY AND PROFINET HANDLING MODULE		1/11/2023	MKLEPADLO	
&EFS=V1AR31UQ41KF1+V1AR31UQ41/2	CONNECTING MOD. FOR MPA MANIFOLD		1/11/2023	MKLEPADLO	
&EFS=V1AR31UQ41KF1+V1AR31UQ41/3	I/O MOD. DI16 (8 x M12) FOR MPA		1/11/2023	MKLEPADLO	
&EFS=V1AR31UQ41KF1+V1AR31UQ41/4	I/O MOD. DI16 (8 x M12) FOR MPA		1/11/2023	MKLEPADLO	
&EFS=V1AR31UQ41KF1+V1AR31UQ41/5	CONNECTING MOD. FOR FESTO DQ		1/11/2023	MKLEPADLO	
&EFS=V1AR31UQ41UQ1+V1AR31UQ41UE1/1	FESTO DQ CONNECTION QN1		1/11/2023	MKLEPADLO	
&EFS=V1AR31UQ41UQ2+V1AR31UQ41UE2/1	FESTO DQ CONNECTION QN2		1/11/2023	MKLEPADLO	
&EFS=V1AR31UQ41UQ3+V1AR31UQ41UE3/1	FESTO DQ CONNECTION QN3		1/11/2023	MKLEPADLO	
&EFS=V1AR31UQ41UQ4+V1AR31UQ41UE4/1	FESTO DQ CONNECTION QN4		1/11/2023	MKLEPADLO	
&EFS=V1AR31UQ41UQ5+V1AR31UQ41UE5/1	FESTO DQ CONNECTION QN5		1/11/2023	MKLEPADLO	
&EFS=V1AR31UQ41UQ6+V1AR31UQ41UE6/1	FESTO DQ CONNECTION QN6		1/11/2023	MKLEPADLO	
&EFS=V1AR31UQ41UQ7+V1AR31UQ41UE7/1	FESTO DQ CONNECTION QN7		1/11/2023	MKLEPADLO	
&EFS=V1AR31UQ41UQ8+V1AR31UQ41UE8/1	FESTO DQ CONNECTION QN8		1/11/2023	MKLEPADLO	
&EFS=V1AR31UQ41UQ9+V1AR31UQ41UE9/1	FESTO DQ CONNECTION QN9		1/11/2023	MKLEPADLO	
&EFS=V1AR31UQ41UQ10+V1AR31UQ41UE10/1	FESTO DQ CONNECTION QN10		1/11/2023	MKLEPADLO	
&EFS=V1AR31WC1+V1AR31UC01/1	Incoming power		1/11/2023	MKLEPADLO	
&EFS=V1AR31XQ41KF1+V1AR31XQ41/1	CONNECTING MOD. FOR VTSA MANIFOLD		1/11/2023	MKLEPADLO	
&EFS=V1AR31XQ41KF1+V1AR31XQ41/2	CONNECTING MOD. FOR FESTO DQ		1/11/2023	MKLEPADLO	
&EFS=V1AR31XQ41UQ1+V1AR31XQ41UE1/1	FESTO DQ CONNECTION QN1		1/11/2023	MKLEPADLO	

Table of contents

Column X: An automatically generated page was edited

F06_001

Page	Page description	supplementary page field	Date	Edited by	X
&EFS=V1AR31XQ41WC1+V1AR31XQ41UC01/1	Incoming power		1/11/2023	MKLEPADLO	
&EFS=V1AR81KF1+V1AR81UC01/1	Incoming Profinet		1/11/2023	MKLEPADLO	
&EFS=V1AR81UQ41BG0+V1AR81UQ41/1	SENSORS		1/11/2023	MKLEPADLO	
&EFS=V1AR81UQ41KF1+V1AR81UQ41/1	24VDC SUPPLY AND PROFINET HANDLING MODULE		1/11/2023	MKLEPADLO	
&EFS=V1AR81UQ41KF1+V1AR81UQ41/2	CONNECTING MOD. FOR MPA MANIFOLD		1/11/2023	MKLEPADLO	
&EFS=V1AR81UQ41KF1+V1AR81UQ41/3	I/O MOD. DI16 (8 x M12) FOR MPA		1/11/2023	MKLEPADLO	
&EFS=V1AR81UQ41KF1+V1AR81UQ41/4	I/O MOD. DI16 (8 x M12) FOR MPA		1/11/2023	MKLEPADLO	
&EFS=V1AR81UQ41KF1+V1AR81UQ41/5	CONNECTING MOD. FOR FESTO DQ		1/11/2023	MKLEPADLO	
&EFS=V1AR81UQ41UQ1+V1AR81UQ41UE1/1	FESTO DQ CONNECTION QN1		1/11/2023	MKLEPADLO	
&EFS=V1AR81UQ41UQ2+V1AR81UQ41UE2/1	FESTO DQ CONNECTION QN2		1/11/2023	MKLEPADLO	
&EFS=V1AR81UQ41UQ3+V1AR81UQ41UE3/1	FESTO DQ CONNECTION QN3		1/11/2023	MKLEPADLO	
&EFS=V1AR81UQ41UQ4+V1AR81UQ41UE4/1	FESTO DQ CONNECTION QN4		1/11/2023	MKLEPADLO	
&EFS=V1AR81UQ41UQ5+V1AR81UQ41UE5/1	FESTO DQ CONNECTION QN5		1/11/2023	MKLEPADLO	
&EFS=V1AR81UQ41UQ6+V1AR81UQ41UE6/1	FESTO DQ CONNECTION QN6		1/11/2023	MKLEPADLO	
&EFS=V1AR81UQ41UQ7+V1AR81UQ41UE7/1	FESTO DQ CONNECTION QN7		1/11/2023	MKLEPADLO	
&EFS=V1AR81UQ41UQ8+V1AR81UQ41UE8/1	FESTO DQ CONNECTION QN8		1/11/2023	MKLEPADLO	
&EFS=V1AR81UQ41UQ9+V1AR81UQ41UE9/1	FESTO DQ CONNECTION QN9		1/11/2023	MKLEPADLO	
&EFS=V1AR81UQ41UQ10+V1AR81UQ41UE10/1	FESTO DQ CONNECTION QN10		1/11/2023	MKLEPADLO	
&EFS=V1AR81WC1+V1AR81UC01/1	Incoming power		1/11/2023	MKLEPADLO	
&EFS=V1AR81XQ51WC1+V1AR81XQ51UC01/1	Incoming power		1/11/2023	MKLEPADLO	
&EFS=V1AR81XQ52WC1+V1AR81XQ52UC01/1	Incoming power		1/11/2023	MKLEPADLO	
&EFS=V1AR191KF1+V1AR191UC01/1	Incoming Profinet		1/11/2023	MKLEPADLO	
&EFS=V1AR191WC1+V1AR191UC01/1	Incoming power		1/11/2023	MKLEPADLO	
&EFS=V1AR211KF1+V1AR211UC01/1	Incoming Profinet		1/11/2023	MKLEPADLO	
&EFS=V1AR211WC1+V1AR211UC01/1	Incoming power		1/11/2023	MKLEPADLO	
&EFS=V1AR211XQ11WC1+V1AR211XQ11UC01/1	Incoming power		1/11/2023	MKLEPADLO	
&EFS=V1AR212KF1+V1AR212UC01/1	Incoming Profinet		1/11/2023	MKLEPADLO	
&EFS=V1AR212WC1+V1AR212UC01/1	Incoming power		1/11/2023	MKLEPADLO	
&EFS=V1AR212XQ11WC1+V1AR212XQ11UC01/1	Incoming power		1/11/2023	MKLEPADLO	
&EFS=V1BX11WC3+V1BX11UC01/1	Incoming power & profinet		1/11/2023	MKLEPADLO	
&EFS=V1FQ1+V1FQ1/1	Door lock sensor -BG1		1/11/2023	MKLEPADLO	
&EFS=V1FQ1+V1FQ1/2	Door lock sensor -BG2		1/11/2023	MKLEPADLO	
&EFS=V1FQ1+V1FQ1/3	Door lock sensor -BG3		1/11/2023	MKLEPADLO	

Table of contents

Column X: An automatically generated page was edited

F06_001

Page	Page description	supplementary page field	Date	Edited by	X
&EFS=V1FQ1+V1FQ1/4	Door lock sensor -BG4		1/11/2023	MKLEPADLO	
&EFS=V1FQ1+V1FQ1/5	Door lock sensor -BG5		1/11/2023	MKLEPADLO	
&EFS=V1FQ1+V1FQ1/6	Door lock sensor -BG6		1/11/2023	MKLEPADLO	
&EFS=V1FQ1+V1FQ1/8	S010 Light Curtain		1/11/2023	MKLEPADLO	
&EFS=V1FQ1+V1FQ1/9	S010 Light Curtain		1/11/2023	MKLEPADLO	
&EFS=V1FQ1+V1FQ1/10	S010 Light Curtain		1/11/2023	MKLEPADLO	
&EFS=V1FQ1+V1FQ1/11	S020 Light Curtain		1/11/2023	MKLEPADLO	
&EFS=V1FQ1+V1FQ1/12	S020 Light Curtain		1/11/2023	MKLEPADLO	
&EFS=V1FQ1+V1FQ1/13	S020 Light Curtain		1/11/2023	MKLEPADLO	
&EFS=V1FQ1+V1UC11/1	Safety power monitoring RQ - KF11.51		1/11/2023	MKLEPADLO	
&EFS=V1FQ1+V1UC11/2	Safety power monitoring RQ - KF11.52		1/11/2023	MKLEPADLO	
&EFS=V1FQ1+V1UC11/3	Safety power monitoring RQ - KF11.53		1/11/2023	MKLEPADLO	
&EFS=V1FQ1+V1UC11/4	Safety power monitoring RQ - KF11.54		1/11/2023	MKLEPADLO	
&EFS=V1FQ1+V1UC12/1	Safety power monitoring RQ - KF12.51		1/11/2023	MKLEPADLO	
&EFS=V1FQ1+V1UC12/2	Safety power monitoring RQ - KF12.52		1/11/2023	MKLEPADLO	
&EFS=V1FQ1+V1UC12/3	Safety power monitoring RQ - KF12.53		1/11/2023	MKLEPADLO	
&EFS=V1FQ1+V1UC12/4	Safety power monitoring RQ - KF12.54		1/11/2023	MKLEPADLO	
&EFS=V1FQ1+V1UC14/1	Safety power monitoring RQ - KF14.51		1/11/2023	MKLEPADLO	
&EFS=V1FQ1+V1UC14/2	Safety power monitoring RQ - KF14.52		1/11/2023	MKLEPADLO	
&EFS=V1FQ1+V1UC14/3	Safety power monitoring RQ - KF14.53		1/11/2023	MKLEPADLO	
&EFS=V1FQ1+V1UC14/4	Safety power monitoring RQ - KF14.54		1/11/2023	MKLEPADLO	
&EFS=V1FQ1+V1UC15/1	Safety power monitoring RQ - KF15.51		1/11/2023	MKLEPADLO	
&EFS=V1FQ1+V1UC15/2	Safety power monitoring RQ - KF15.52		1/11/2023	MKLEPADLO	
&EFS=V1FQ1+V1UC15/3	Safety power monitoring RQ - KF15.53		1/11/2023	MKLEPADLO	
&EFS=V1FQ1+V1UC15/4	Safety power monitoring RQ - KF15.54		1/11/2023	MKLEPADLO	
&EFS=V1GL1UQ51BG0+V1GL1UQ51/1	SENSORS		1/11/2023	MKLEPADLO	
&EFS=V1GL1UQ51BG0+V1GL1UQ51/2	SENSORS		1/11/2023	MKLEPADLO	
&EFS=V1GL1UQ51BG0+V1GL1UQ51/3	SENSORS		1/11/2023	MKLEPADLO	
&EFS=V1GL1UQ51BG0+V1GL1UQ51/4	SENSORS		1/11/2023	MKLEPADLO	
&EFS=V1GL1UQ51BG0+V1GL1UQ51/5	SENSORS		1/11/2023	MKLEPADLO	
&EFS=V1GL1UQ51KF1+V1GL1UQ51/1	CONNECTING MOD. FOR VTSA MANIFOLD		1/11/2023	MKLEPADLO	
&EFS=V1GL1UQ51KF1+V1GL1UQ51/2	I/O MOD. DI16 (8 x M12) FOR VTSA-F		1/11/2023	MKLEPADLO	
&EFS=V1GL1UQ51KF1+V1GL1UQ51/3	I/O MOD. DI16 (8 x M12) FOR VTSA-F		1/11/2023	MKLEPADLO	

Table of contents

Column X: An automatically generated page was edited

F06_001

Page	Page description	supplementary page field	Date	Edited by	X
&EFS=V1GL1UQ51KF1+V1GL1UQ51/4	CONNECTING MOD. FOR FESTO DQ		1/11/2023	MKLEPADLO	
&EFS=V1GL1UQ51KF2+V1GL1UQ51/1	CONNECTING MOD. FOR VTSA MANIFOLD		1/11/2023	MKLEPADLO	
&EFS=V1GL1UQ51KF2+V1GL1UQ51/2	I/O MOD. DI16 (8 x M12) FOR VTSA-F		1/17/2023	MKLEPADLO	
&EFS=V1GL1UQ51KF2+V1GL1UQ51/3	I/O MOD. DI16 (8 x M12) FOR VTSA-F		1/17/2023	MKLEPADLO	
&EFS=V1GL1UQ51KF2+V1GL1UQ51/4	CONNECTING MOD. FOR FESTO DQ		1/11/2023	MKLEPADLO	
&EFS=V1GL1UQ51KF3+V1GL1UQ51/1	CONNECTING MOD. FOR VTSA MANIFOLD		1/11/2023	MKLEPADLO	
&EFS=V1GL1UQ51KF3+V1GL1UQ51/2	I/O MOD. DI16 (8 x M12) FOR VTSA-F		1/11/2023	MKLEPADLO	
&EFS=V1GL1UQ51KF3+V1GL1UQ51/3	CONNECTING MOD. FOR FESTO DQ		1/11/2023	MKLEPADLO	
&EFS=V1GL1UQ51UQ1+V1GL1UQ51UQ1/1	FESTO DQ CONNECTION QN1		1/11/2023	MKLEPADLO	
&EFS=V1GL1UQ51UQ2+V1GL1UQ51UQ2/1	FESTO DQ CONNECTION QN2		1/11/2023	MKLEPADLO	
&EFS=V1GL1UQ51UQ3+V1GL1UQ51UQ3/1	FESTO DQ CONNECTION QN3		1/11/2023	MKLEPADLO	
&EFS=V1GL1UQ51UQ4+V1GL1UQ51UQ4/1	FESTO DQ CONNECTION QN4		1/11/2023	MKLEPADLO	
&EFS=V1GL1UQ51UQ5+V1GL1UQ51UQ5/1	FESTO DQ CONNECTION QN5		1/11/2023	MKLEPADLO	
&EFS=V1GL1UQ51UQ6+V1GL1UQ51UQ6/1	FESTO DQ CONNECTION QN6		1/11/2023	MKLEPADLO	
&EFS=V1GL1UQ51UQ7+V1GL1UQ51UQ7/1	FESTO DQ CONNECTION QN7		1/11/2023	MKLEPADLO	
&EFS=V1GL1UQ51UQ8+V1GL1UQ51UQ8/1	FESTO DQ CONNECTION QN8		1/11/2023	MKLEPADLO	
&EFS=V1GL1UQ51UQ9+V1GL1UQ51UQ9/1	FESTO DQ CONNECTION QN9		1/11/2023	MKLEPADLO	
&EFS=V1GL1UQ51UQ10+V1GL1UQ51UQ10/1	FESTO DQ CONNECTION QN10		1/11/2023	MKLEPADLO	
&EFS=V1GL1UQ51UQ11+V1GL1UQ51UQ11/1	FESTO DQ CONNECTION QN11		1/11/2023	MKLEPADLO	
&EFS=V1GL1UQ51UQ12+V1GL1UQ51UQ12/1	FESTO DQ CONNECTION QN12		1/17/2023	MKLEPADLO	
&EFS=V1GL1UQ51UQ13+V1GL1UQ51UQ13/1	FESTO DQ CONNECTION QN13		1/17/2023	MKLEPADLO	
&EFS=V1GL1UQ51UQ14+V1GL1UQ51UQ14/1	FESTO DQ CONNECTION QN14		1/17/2023	MKLEPADLO	
&EFS=V1GL1UQ51UQ15+V1GL1UQ51UQ15/1	FESTO DQ CONNECTION QN15		1/17/2023	MKLEPADLO	
&EFS=V1GL1UQ51UQ16+V1GL1UQ51UQ16/1	FESTO DQ CONNECTION QN16		1/17/2023	MKLEPADLO	
&EFS=V1GL1UQ51UQ17+V1GL1UQ51UQ17/1	FESTO DQ CONNECTION QN17		1/17/2023	MKLEPADLO	
&EFS=V1GL1UQ51UQ18+V1GL1UQ51UQ18/1	FESTO DQ CONNECTION QN18		1/17/2023	MKLEPADLO	
&EFS=V1GL1UQ51UQ19+V1GL1UQ51UQ19/1	FESTO DQ CONNECTION QN19		1/17/2023	MKLEPADLO	
&EFS=V1GL1UQ51UQ20+V1GL1UQ51UQ20/1	FESTO DQ CONNECTION QN20		1/17/2023	MKLEPADLO	
&EFS=V1GL1UQ51UQ21+V1GL1UQ51UQ21/1	FESTO DQ CONNECTION QN21		1/11/2023	MKLEPADLO	
&EFS=V1GL1UQ51UQ22+V1GL1UQ51UQ22/1	FESTO DQ CONNECTION QN22		1/11/2023	MKLEPADLO	
&EFS=V1GL1UQ51UQ23+V1GL1UQ51UQ23/1	FESTO DQ CONNECTION QN23		1/11/2023	MKLEPADLO	
&EFS=V1GL1UQ51UQ24+V1GL1UQ51UQ24/1	FESTO DQ CONNECTION QN24		1/11/2023	MKLEPADLO	
&EFS=V1GL1UQ51UQ25+V1GL1UQ51UQ25/1	FESTO DQ CONNECTION QN25		1/11/2023	MKLEPADLO	

Table of contents

Column X: An automatically generated page was edited

F06_001

Page	Page description	supplementary page field	Date	Edited by	X
&EFS=V1GL1UQ51UQ26+V1GL1UQ51UQ26/1	FESTO DQ CONNECTION QN26		1/11/2023	MKLEPADLO	
&EFS=V1GL1UQ51WC4+V1GL1UQ51/1	24VDC		1/11/2023	MKLEPADLO	
&EFS=V1GL1UQ52BG0+V1GL1UQ52/1	SENSORS		1/11/2023	MKLEPADLO	
&EFS=V1GL1UQ52BG0+V1GL1UQ52/2	SENSORS		1/11/2023	MKLEPADLO	
&EFS=V1GL1UQ52BG0+V1GL1UQ52/3	SENSORS		1/11/2023	MKLEPADLO	
&EFS=V1GL1UQ52BG0+V1GL1UQ52/4	SENSORS		1/11/2023	MKLEPADLO	
&EFS=V1GL1UQ52BG0+V1GL1UQ52/5	SENSORS		1/11/2023	MKLEPADLO	
&EFS=V1GL1UQ52BG0+V1GL1UQ52/6	SENSORS		1/11/2023	MKLEPADLO	
&EFS=V1GL1UQ52KF1+V1GL1UQ52/1	CONNECTING MOD. FOR VTSA MANIFOLD		1/11/2023	MKLEPADLO	
&EFS=V1GL1UQ52KF1+V1GL1UQ52/2	I/O MOD. DI16 (8 x M12) FOR VTSA-F		1/11/2023	MKLEPADLO	
&EFS=V1GL1UQ52KF1+V1GL1UQ52/3	I/O MOD. DI16 (8 x M12) FOR VTSA-F		1/11/2023	MKLEPADLO	
&EFS=V1GL1UQ52KF1+V1GL1UQ52/4	I/O MOD. DI16 (8 x M12) FOR VTSA-F		1/11/2023	MKLEPADLO	
&EFS=V1GL1UQ52KF1+V1GL1UQ52/5	I/O MOD. DI16 (8 x M12) FOR VTSA-F		1/11/2023	MKLEPADLO	
&EFS=V1GL1UQ52KF1+V1GL1UQ52/6	CONNECTING MOD. FOR FESTO DQ		1/11/2023	MKLEPADLO	
&EFS=V1GL1UQ52KF2+V1GL1UQ52/1	CONNECTING MOD. FOR VTSA MANIFOLD		1/11/2023	MKLEPADLO	
&EFS=V1GL1UQ52KF2+V1GL1UQ52/2	I/O MOD. DI16 (8 x M12) FOR VTSA-F		1/11/2023	MKLEPADLO	
&EFS=V1GL1UQ52KF2+V1GL1UQ52/3	I/O MOD. DI16 (8 x M12) FOR VTSA-F		1/11/2023	MKLEPADLO	
&EFS=V1GL1UQ52KF2+V1GL1UQ52/4	I/O MOD. DI16 (8 x M12) FOR VTSA-F		1/11/2023	MKLEPADLO	
&EFS=V1GL1UQ52KF2+V1GL1UQ52/5	I/O MOD. DI16 (8 x M12) FOR VTSA-F		1/11/2023	MKLEPADLO	
&EFS=V1GL1UQ52KF2+V1GL1UQ52/6	CONNECTING MOD. FOR FESTO DQ		1/11/2023	MKLEPADLO	
&EFS=V1GL1UQ52KF3+V1GL1UQ52/1	CONNECTING MOD. FOR VTSA MANIFOLD		1/11/2023	MKLEPADLO	
&EFS=V1GL1UQ52KF3+V1GL1UQ52/2	CONNECTING MOD. FOR FESTO DQ		1/11/2023	MKLEPADLO	
&EFS=V1GL1UQ52UQ1+V1GL1UQ52UQ1/1	FESTO DQ CONNECTION QN1		1/11/2023	MKLEPADLO	
&EFS=V1GL1UQ52UQ2+V1GL1UQ52UQ2/1	FESTO DQ CONNECTION QN2		1/11/2023	MKLEPADLO	
&EFS=V1GL1UQ52UQ3+V1GL1UQ52UQ3/1	FESTO DQ CONNECTION QN3		1/11/2023	MKLEPADLO	
&EFS=V1GL1UQ52UQ4+V1GL1UQ52UQ4/1	FESTO DQ CONNECTION QN4		1/11/2023	MKLEPADLO	
&EFS=V1GL1UQ52UQ5+V1GL1UQ52UQ5/1	FESTO DQ CONNECTION QN5		1/11/2023	MKLEPADLO	
&EFS=V1GL1UQ52UQ6+V1GL1UQ52UQ6/1	FESTO DQ CONNECTION QN6		1/11/2023	MKLEPADLO	
&EFS=V1GL1UQ52UQ7+V1GL1UQ52UQ7/1	FESTO DQ CONNECTION QN7		1/11/2023	MKLEPADLO	
&EFS=V1GL1UQ52UQ8+V1GL1UQ52UQ8/1	FESTO DQ CONNECTION QN25		1/11/2023	MKLEPADLO	
&EFS=V1GL1UQ52UQ9+V1GL1UQ52UQ9/1	FESTO DQ CONNECTION QN8		1/11/2023	MKLEPADLO	
&EFS=V1GL1UQ52UQ10+V1GL1UQ52UQ10/1	FESTO DQ CONNECTION QN9		1/11/2023	MKLEPADLO	
&EFS=V1GL1UQ52UQ11+V1GL1UQ52UQ11/1	FESTO DQ CONNECTION QN10		1/11/2023	MKLEPADLO	

Table of contents

Column X: An automatically generated page was edited

F06_001

Page	Page description	supplementary page field	Date	Edited by	X
&EFS=V1GL1UQ52UQ12+V1GL1UQ52UQ12/1	FESTO DQ CONNECTION QN11		1/11/2023	MKLEPADLO	
&EFS=V1GL1UQ52UQ13+V1GL1UQ52UQ13/1	FESTO DQ CONNECTION QN12		1/11/2023	MKLEPADLO	
&EFS=V1GL1UQ52UQ14+V1GL1UQ52UQ14/1	FESTO DQ CONNECTION QN13		1/11/2023	MKLEPADLO	
&EFS=V1GL1UQ52UQ15+V1GL1UQ52UQ15/1	FESTO DQ CONNECTION QN14		1/11/2023	MKLEPADLO	
&EFS=V1GL1UQ52UQ16+V1GL1UQ52UQ16/1	FESTO DQ CONNECTION QN15		1/11/2023	MKLEPADLO	
&EFS=V1GL1UQ52UQ17+V1GL1UQ52UQ17/1	FESTO DQ CONNECTION QN16		1/11/2023	MKLEPADLO	
&EFS=V1GL1UQ52UQ18+V1GL1UQ52UQ18/1	FESTO DQ CONNECTION QN17		1/11/2023	MKLEPADLO	
&EFS=V1GL1UQ52UQ19+V1GL1UQ52UQ19/1	FESTO DQ CONNECTION QN18		1/11/2023	MKLEPADLO	
&EFS=V1GL1UQ52UQ20+V1GL1UQ52UQ20/1	FESTO DQ CONNECTION QN19		1/11/2023	MKLEPADLO	
&EFS=V1GL1UQ52UQ21+V1GL1UQ52UQ21/1	FESTO DQ CONNECTION QN20		1/11/2023	MKLEPADLO	
&EFS=V1GL1UQ52UQ22+V1GL1UQ52UQ22/1	FESTO DQ CONNECTION QN21		1/11/2023	MKLEPADLO	
&EFS=V1GL1UQ52UQ23+V1GL1UQ52UQ23/1	FESTO DQ CONNECTION QN22		1/11/2023	MKLEPADLO	
&EFS=V1GL1UQ52UQ24+V1GL1UQ52UQ24/1	FESTO DQ CONNECTION QN23		1/11/2023	MKLEPADLO	
&EFS=V1GL1UQ52UQ25+V1GL1UQ52UQ25/1	FESTO DQ CONNECTION QN24		1/11/2023	MKLEPADLO	
&EFS=V1GL1UQ52WC4+V1GL1UQ52/1	24VDC		1/11/2023	MKLEPADLO	
&EFS=V1GL1UQ53BG0+V1GL1UQ53/1	SENSORS		1/11/2023	MKLEPADLO	
&EFS=V1GL1UQ53BG0+V1GL1UQ53/2	SENSORS		1/11/2023	MKLEPADLO	
&EFS=V1GL1UQ53BG0+V1GL1UQ53/3	SENSORS		1/11/2023	MKLEPADLO	
&EFS=V1GL1UQ53BG0+V1GL1UQ53/4	SENSORS		1/11/2023	MKLEPADLO	
&EFS=V1GL1UQ53BG0+V1GL1UQ53/5	SENSORS		1/11/2023	MKLEPADLO	
&EFS=V1GL1UQ53KF1+V1GL1UQ53/1	CONNECTING MOD. FOR VTSA MANIFOLD		1/11/2023	MKLEPADLO	
&EFS=V1GL1UQ53KF1+V1GL1UQ53/2	I/O MOD. DI16 (8 x M12) FOR VTSA-F		1/11/2023	MKLEPADLO	
&EFS=V1GL1UQ53KF1+V1GL1UQ53/3	I/O MOD. DI16 (8 x M12) FOR VTSA-F		1/11/2023	MKLEPADLO	
&EFS=V1GL1UQ53KF1+V1GL1UQ53/4	CONNECTING MOD. FOR FESTO DQ		1/11/2023	MKLEPADLO	
&EFS=V1GL1UQ53KF2+V1GL1UQ53/1	CONNECTING MOD. FOR VTSA MANIFOLD		1/11/2023	MKLEPADLO	
&EFS=V1GL1UQ53KF2+V1GL1UQ53/2	I/O MOD. DI16 (8 x M12) FOR VTSA-F		1/17/2023	MKLEPADLO	
&EFS=V1GL1UQ53KF2+V1GL1UQ53/3	I/O MOD. DI16 (8 x M12) FOR VTSA-F		1/17/2023	MKLEPADLO	
&EFS=V1GL1UQ53KF2+V1GL1UQ53/4	CONNECTING MOD. FOR FESTO DQ		1/11/2023	MKLEPADLO	
&EFS=V1GL1UQ53KF3+V1GL1UQ53/1	CONNECTING MOD. FOR VTSA MANIFOLD		1/11/2023	MKLEPADLO	
&EFS=V1GL1UQ53KF3+V1GL1UQ53/2	I/O MOD. DI16 (8 x M12) FOR VTSA-F		1/11/2023	MKLEPADLO	
&EFS=V1GL1UQ53KF3+V1GL1UQ53/3	CONNECTING MOD. FOR FESTO DQ		1/11/2023	MKLEPADLO	
&EFS=V1GL1UQ53UQ1+V1GL1UQ53UQ1/1	FESTO DQ CONNECTION QN1		1/11/2023	MKLEPADLO	
&EFS=V1GL1UQ53UQ2+V1GL1UQ53UQ2/1	FESTO DQ CONNECTION QN2		1/11/2023	MKLEPADLO	

Table of contents

Column X: An automatically generated page was edited

F06_001

Page	Page description	supplementary page field	Date	Edited by	X
&EFS=V1GL1UQ53UQ3+V1GL1UQ53UQ3/1	FESTO DQ CONNECTION QN3		1/11/2023	MKLEPADLO	
&EFS=V1GL1UQ53UQ4+V1GL1UQ53UQ4/1	FESTO DQ CONNECTION QN4		1/11/2023	MKLEPADLO	
&EFS=V1GL1UQ53UQ5+V1GL1UQ53UQ5/1	FESTO DQ CONNECTION QN5		1/11/2023	MKLEPADLO	
&EFS=V1GL1UQ53UQ6+V1GL1UQ53UQ6/1	FESTO DQ CONNECTION QN6		1/11/2023	MKLEPADLO	
&EFS=V1GL1UQ53UQ7+V1GL1UQ53UQ7/1	FESTO DQ CONNECTION QN7		1/11/2023	MKLEPADLO	
&EFS=V1GL1UQ53UQ8+V1GL1UQ53UQ8/1	FESTO DQ CONNECTION QN8		1/11/2023	MKLEPADLO	
&EFS=V1GL1UQ53UQ9+V1GL1UQ53UQ9/1	FESTO DQ CONNECTION QN9		1/11/2023	MKLEPADLO	
&EFS=V1GL1UQ53UQ10+V1GL1UQ53UQ10/1	FESTO DQ CONNECTION QN10		1/11/2023	MKLEPADLO	
&EFS=V1GL1UQ53UQ11+V1GL1UQ53UQ11/1	FESTO DQ CONNECTION QN11		1/11/2023	MKLEPADLO	
&EFS=V1GL1UQ53UQ12+V1GL1UQ53UQ12/1	FESTO DQ CONNECTION QN12		1/17/2023	MKLEPADLO	
&EFS=V1GL1UQ53UQ13+V1GL1UQ53UQ13/1	FESTO DQ CONNECTION QN13		1/17/2023	MKLEPADLO	
&EFS=V1GL1UQ53UQ14+V1GL1UQ53UQ14/1	FESTO DQ CONNECTION QN14		1/17/2023	MKLEPADLO	
&EFS=V1GL1UQ53UQ15+V1GL1UQ53UQ15/1	FESTO DQ CONNECTION QN15		1/17/2023	MKLEPADLO	
&EFS=V1GL1UQ53UQ16+V1GL1UQ53UQ16/1	FESTO DQ CONNECTION QN16		1/17/2023	MKLEPADLO	
&EFS=V1GL1UQ53UQ17+V1GL1UQ53UQ17/1	FESTO DQ CONNECTION QN17		1/17/2023	MKLEPADLO	
&EFS=V1GL1UQ53UQ18+V1GL1UQ53UQ18/1	FESTO DQ CONNECTION QN18		1/17/2023	MKLEPADLO	
&EFS=V1GL1UQ53UQ19+V1GL1UQ53UQ19/1	FESTO DQ CONNECTION QN19		1/17/2023	MKLEPADLO	
&EFS=V1GL1UQ53UQ20+V1GL1UQ53UQ20/1	FESTO DQ CONNECTION QN20		1/17/2023	MKLEPADLO	
&EFS=V1GL1UQ53UQ21+V1GL1UQ53UQ21/1	FESTO DQ CONNECTION QN21		1/11/2023	MKLEPADLO	
&EFS=V1GL1UQ53UQ22+V1GL1UQ53UQ22/1	FESTO DQ CONNECTION QN22		1/11/2023	MKLEPADLO	
&EFS=V1GL1UQ53UQ23+V1GL1UQ53UQ23/1	FESTO DQ CONNECTION QN23		1/11/2023	MKLEPADLO	
&EFS=V1GL1UQ53UQ24+V1GL1UQ53UQ24/1	FESTO DQ CONNECTION QN24		1/11/2023	MKLEPADLO	
&EFS=V1GL1UQ53UQ25+V1GL1UQ53UQ25/1	FESTO DQ CONNECTION QN25		1/11/2023	MKLEPADLO	
&EFS=V1GL1UQ53UQ26+V1GL1UQ53UQ26/1	FESTO DQ CONNECTION QN26		1/11/2023	MKLEPADLO	
&EFS=V1GL1UQ53WC4+V1GL1UQ53/1	24VDC		1/11/2023	MKLEPADLO	
&EFS=V1GL1UQ54BG0+V1GL1UQ54/1	SENSORS		1/11/2023	MKLEPADLO	
&EFS=V1GL1UQ54BG0+V1GL1UQ54/2	SENSORS		1/11/2023	MKLEPADLO	
&EFS=V1GL1UQ54BG0+V1GL1UQ54/3	SENSORS		1/11/2023	MKLEPADLO	
&EFS=V1GL1UQ54BG0+V1GL1UQ54/4	SENSORS		1/11/2023	MKLEPADLO	
&EFS=V1GL1UQ54BG0+V1GL1UQ54/5	SENSORS		1/11/2023	MKLEPADLO	
&EFS=V1GL1UQ54BG0+V1GL1UQ54/6	SENSORS		1/11/2023	MKLEPADLO	
&EFS=V1GL1UQ54KF1+V1GL1UQ54/1	CONNECTING MOD. FOR VTSA MANIFOLD		1/11/2023	MKLEPADLO	
&EFS=V1GL1UQ54KF1+V1GL1UQ54/2	I/O MOD. DI16 (8 x M12) FOR VTSA-F		1/11/2023	MKLEPADLO	

Table of contents

Column X: An automatically generated page was edited

F06_001

Page	Page description	supplementary page field	Date	Edited by	X
&EFS=V1GL1UQ54KF1+V1GL1UQ54/3	I/O MOD. DI16 (8 x M12) FOR VTSA-F		1/11/2023	MKLEPADLO	
&EFS=V1GL1UQ54KF1+V1GL1UQ54/4	I/O MOD. DI16 (8 x M12) FOR VTSA-F		1/11/2023	MKLEPADLO	
&EFS=V1GL1UQ54KF1+V1GL1UQ54/5	I/O MOD. DI16 (8 x M12) FOR VTSA-F		1/11/2023	MKLEPADLO	
&EFS=V1GL1UQ54KF1+V1GL1UQ54/6	CONNECTING MOD. FOR FESTO DQ		1/11/2023	MKLEPADLO	
&EFS=V1GL1UQ54KF2+V1GL1UQ54/1	CONNECTING MOD. FOR VTSA MANIFOLD		1/11/2023	MKLEPADLO	
&EFS=V1GL1UQ54KF2+V1GL1UQ54/2	I/O MOD. DI16 (8 x M12) FOR VTSA-F		1/11/2023	MKLEPADLO	
&EFS=V1GL1UQ54KF2+V1GL1UQ54/3	I/O MOD. DI16 (8 x M12) FOR VTSA-F		1/11/2023	MKLEPADLO	
&EFS=V1GL1UQ54KF2+V1GL1UQ54/4	I/O MOD. DI16 (8 x M12) FOR VTSA-F		1/11/2023	MKLEPADLO	
&EFS=V1GL1UQ54KF2+V1GL1UQ54/5	I/O MOD. DI16 (8 x M12) FOR VTSA-F		1/11/2023	MKLEPADLO	
&EFS=V1GL1UQ54KF2+V1GL1UQ54/6	CONNECTING MOD. FOR FESTO DQ		1/11/2023	MKLEPADLO	
&EFS=V1GL1UQ54KF3+V1GL1UQ54/1	CONNECTING MOD. FOR VTSA MANIFOLD		1/11/2023	MKLEPADLO	
&EFS=V1GL1UQ54KF3+V1GL1UQ54/2	CONNECTING MOD. FOR FESTO DQ		1/11/2023	MKLEPADLO	
&EFS=V1GL1UQ54UQ1+V1GL1UQ54UQ1/1	FESTO DQ CONNECTION QN1		1/11/2023	MKLEPADLO	
&EFS=V1GL1UQ54UQ2+V1GL1UQ54UQ2/1	FESTO DQ CONNECTION QN2		1/11/2023	MKLEPADLO	
&EFS=V1GL1UQ54UQ3+V1GL1UQ54UQ3/1	FESTO DQ CONNECTION QN3		1/11/2023	MKLEPADLO	
&EFS=V1GL1UQ54UQ4+V1GL1UQ54UQ4/1	FESTO DQ CONNECTION QN4		1/11/2023	MKLEPADLO	
&EFS=V1GL1UQ54UQ5+V1GL1UQ54UQ5/1	FESTO DQ CONNECTION QN5		1/11/2023	MKLEPADLO	
&EFS=V1GL1UQ54UQ6+V1GL1UQ54UQ6/1	FESTO DQ CONNECTION QN6		1/11/2023	MKLEPADLO	
&EFS=V1GL1UQ54UQ7+V1GL1UQ54UQ7/1	FESTO DQ CONNECTION QN7		1/11/2023	MKLEPADLO	
&EFS=V1GL1UQ54UQ8+V1GL1UQ54UQ8/1	FESTO DQ CONNECTION QN25		1/11/2023	MKLEPADLO	
&EFS=V1GL1UQ54UQ9+V1GL1UQ54UQ9/1	FESTO DQ CONNECTION QN8		1/11/2023	MKLEPADLO	
&EFS=V1GL1UQ54UQ10+V1GL1UQ54UQ10/1	FESTO DQ CONNECTION QN9		1/11/2023	MKLEPADLO	
&EFS=V1GL1UQ54UQ11+V1GL1UQ54UQ11/1	FESTO DQ CONNECTION QN10		1/11/2023	MKLEPADLO	
&EFS=V1GL1UQ54UQ12+V1GL1UQ54UQ12/1	FESTO DQ CONNECTION QN11		1/11/2023	MKLEPADLO	
&EFS=V1GL1UQ54UQ13+V1GL1UQ54UQ13/1	FESTO DQ CONNECTION QN12		1/11/2023	MKLEPADLO	
&EFS=V1GL1UQ54UQ14+V1GL1UQ54UQ14/1	FESTO DQ CONNECTION QN13		1/11/2023	MKLEPADLO	
&EFS=V1GL1UQ54UQ15+V1GL1UQ54UQ15/1	FESTO DQ CONNECTION QN14		1/11/2023	MKLEPADLO	
&EFS=V1GL1UQ54UQ16+V1GL1UQ54UQ16/1	FESTO DQ CONNECTION QN15		1/11/2023	MKLEPADLO	
&EFS=V1GL1UQ54UQ17+V1GL1UQ54UQ17/1	FESTO DQ CONNECTION QN16		1/11/2023	MKLEPADLO	
&EFS=V1GL1UQ54UQ18+V1GL1UQ54UQ18/1	FESTO DQ CONNECTION QN17		1/11/2023	MKLEPADLO	
&EFS=V1GL1UQ54UQ19+V1GL1UQ54UQ19/1	FESTO DQ CONNECTION QN18		1/11/2023	MKLEPADLO	
&EFS=V1GL1UQ54UQ20+V1GL1UQ54UQ20/1	FESTO DQ CONNECTION QN19		1/11/2023	MKLEPADLO	
&EFS=V1GL1UQ54UQ21+V1GL1UQ54UQ21/1	FESTO DQ CONNECTION QN20		1/11/2023	MKLEPADLO	

Table of contents

Column X: An automatically generated page was edited

F06_001

Page	Page description	supplementary page field	Date	Edited by	X
&EFS=V1GL1UQ54UQ22+V1GL1UQ54UQ22/1	FESTO DQ CONNECTION QN21		1/11/2023	MKLEPADLO	
&EFS=V1GL1UQ54UQ23+V1GL1UQ54UQ23/1	FESTO DQ CONNECTION QN22		1/11/2023	MKLEPADLO	
&EFS=V1GL1UQ54UQ24+V1GL1UQ54UQ24/1	FESTO DQ CONNECTION QN23		1/11/2023	MKLEPADLO	
&EFS=V1GL1UQ54UQ25+V1GL1UQ54UQ25/1	FESTO DQ CONNECTION QN24		1/11/2023	MKLEPADLO	
&EFS=V1GL1UQ54WC4+V1GL1UQ54/1	24VDC		1/11/2023	MKLEPADLO	
&EFS=V1GL1UQ56KF1+V1GL1UQ56/1	CONNECTING MOD. FOR VTSA MANIFOLD		1/11/2023	MKLEPADLO	
&EFS=V1GL1UQ56KF1+V1GL1UQ56/2	CONNECTING MOD. FOR FESTO DQ		1/11/2023	MKLEPADLO	
&EFS=V1GL1UQ56UQ1+V1GL1UQ56UQ1/1	FESTO DQ CONNECTION QN1		1/11/2023	MKLEPADLO	
&EFS=V1GL1UQ57KF1+V1GL1UQ57/1	CONNECTING MOD. FOR VTSA MANIFOLD		1/11/2023	MKLEPADLO	
&EFS=V1GL1UQ57KF1+V1GL1UQ57/2	CONNECTING MOD. FOR FESTO DQ		1/11/2023	MKLEPADLO	
&EFS=V1GL1UQ57UQ1+V1GL1UQ57UQ1/1	FESTO DQ CONNECTION QN1		1/11/2023	MKLEPADLO	
&EFS=V1GL1WC1+V1GL1UC01/1	Incoming power		1/11/2023	MKLEPADLO	
&EFS=V1GL2KF1+V1GL2/1	CONNECTING MOD. FOR VTSA MANIFOLD		1/11/2023	MKLEPADLO	
&EFS=V1GL2KF1+V1GL2/2	I/O MOD. DI8 (4 x M12) FOR VTSA-F		1/11/2023	MKLEPADLO	
&EFS=V1GL2KF1+V1GL2/3	I/O MOD. DO8 (4 x M12) FOR VTSA-F		1/11/2023	MKLEPADLO	
&EFS=V1GL2KF1+V1GL2/4	CONNECTING MOD. FOR FESTO DQ		1/11/2023	MKLEPADLO	
&EFS=V1GL2UQ51BG0+V1GL2UQ51/1	SENSORS		1/11/2023	MKLEPADLO	
&EFS=V1GL2UQ51BG0+V1GL2UQ51/2	SENSORS		1/11/2023	MKLEPADLO	
&EFS=V1GL2UQ51BG0+V1GL2UQ51/3	SENSORS		1/11/2023	MKLEPADLO	
&EFS=V1GL2UQ51BG0+V1GL2UQ51/4	SENSORS		1/11/2023	MKLEPADLO	
&EFS=V1GL2UQ51KF1+V1GL2UQ51/1	CONNECTING MOD. FOR VTSA MANIFOLD		1/11/2023	MKLEPADLO	
&EFS=V1GL2UQ51KF1+V1GL2UQ51/2	I/O MOD. DI16 (8 x M12) FOR VTSA-F		1/11/2023	MKLEPADLO	
&EFS=V1GL2UQ51KF1+V1GL2UQ51/3	CONNECTING MOD. FOR FESTO DQ		1/11/2023	MKLEPADLO	
&EFS=V1GL2UQ51KF2+V1GL2UQ51/1	CONNECTING MOD. FOR VTSA MANIFOLD		1/11/2023	MKLEPADLO	
&EFS=V1GL2UQ51KF2+V1GL2UQ51/2	I/O MOD. DI16 (8 x M12) FOR VTSA-F		1/11/2023	MKLEPADLO	
&EFS=V1GL2UQ51KF2+V1GL2UQ51/3	I/O MOD. DI16 (8 x M12) FOR VTSA-F		1/11/2023	MKLEPADLO	
&EFS=V1GL2UQ51KF2+V1GL2UQ51/4	CONNECTING MOD. FOR FESTO DQ		1/11/2023	MKLEPADLO	
&EFS=V1GL2UQ51KF3+V1GL2UQ51/1	CONNECTING MOD. FOR VTSA MANIFOLD		1/11/2023	MKLEPADLO	
&EFS=V1GL2UQ51KF3+V1GL2UQ51/2	I/O MOD. DI16 (8 x M12) FOR VTSA-F		1/11/2023	MKLEPADLO	
&EFS=V1GL2UQ51KF3+V1GL2UQ51/3	I/O MOD. DI16 (8 x M12) FOR VTSA-F		1/11/2023	MKLEPADLO	
&EFS=V1GL2UQ51KF3+V1GL2UQ51/4	CONNECTING MOD. FOR FESTO DQ		1/11/2023	MKLEPADLO	
&EFS=V1GL2UQ51KF4+V1GL2UQ51/1	CONNECTING MOD. FOR VTSA MANIFOLD		1/11/2023	MKLEPADLO	
&EFS=V1GL2UQ51KF4+V1GL2UQ51/2	I/O MOD. DI16 (8 x M12) FOR VTSA-F		1/11/2023	MKLEPADLO	

Table of contents

Column X: An automatically generated page was edited

F06_001

Page	Page description	supplementary page field	Date	Edited by	X
&EFS=V1GL2UQ51KF4+V1GL2UQ51/3	I/O MOD. DI16 (8 x M12) FOR VTSA-F		1/11/2023	MKLEPADLO	
&EFS=V1GL2UQ51KF4+V1GL2UQ51/4	CONNECTING MOD. FOR FESTO DQ		1/11/2023	MKLEPADLO	
&EFS=V1GL2UQ51UQ1+V1GL2UQ51UQ1/1	FESTO DQ CONNECTION QN1		1/11/2023	MKLEPADLO	
&EFS=V1GL2UQ51UQ2+V1GL2UQ51UQ2/1	FESTO DQ CONNECTION QN2		1/11/2023	MKLEPADLO	
&EFS=V1GL2UQ51UQ3+V1GL2UQ51UQ3/1	FESTO DQ CONNECTION QN3		1/11/2023	MKLEPADLO	
&EFS=V1GL2UQ51UQ4+V1GL2UQ51UQ4/1	FESTO DQ CONNECTION QN4		1/11/2023	MKLEPADLO	
&EFS=V1GL2UQ51UQ5+V1GL2UQ51UQ5/1	FESTO DQ CONNECTION QN5		1/11/2023	MKLEPADLO	
&EFS=V1GL2UQ51UQ6+V1GL2UQ51UQ6/1	FESTO DQ CONNECTION QN6		1/11/2023	MKLEPADLO	
&EFS=V1GL2UQ51UQ7+V1GL2UQ51UQ7/1	FESTO DQ CONNECTION QN7		1/11/2023	MKLEPADLO	
&EFS=V1GL2UQ51UQ8+V1GL2UQ51UQ8/1	FESTO DQ CONNECTION QN8		1/11/2023	MKLEPADLO	
&EFS=V1GL2UQ51UQ9+V1GL2UQ51UQ9/1	FESTO DQ CONNECTION QN9		1/11/2023	MKLEPADLO	
&EFS=V1GL2UQ51UQ10+V1GL2UQ51UQ10/1	FESTO DQ CONNECTION QN10		1/11/2023	MKLEPADLO	
&EFS=V1GL2UQ51UQ11+V1GL2UQ51UQ11/1	FESTO DQ CONNECTION QN11		1/11/2023	MKLEPADLO	
&EFS=V1GL2UQ51UQ12+V1GL2UQ51UQ12/1	FESTO DQ CONNECTION QN12		1/11/2023	MKLEPADLO	
&EFS=V1GL2UQ51UQ13+V1GL2UQ51UQ13/1	FESTO DQ CONNECTION QN13		1/11/2023	MKLEPADLO	
&EFS=V1GL2UQ51UQ14+V1GL2UQ51UQ14/1	FESTO DQ CONNECTION QN14		1/11/2023	MKLEPADLO	
&EFS=V1GL2UQ51UQ15+V1GL2UQ51UQ15/1	FESTO DQ CONNECTION QN15		1/11/2023	MKLEPADLO	
&EFS=V1GL2UQ51UQ16+V1GL2UQ51UQ16/1	FESTO DQ CONNECTION QN16		1/11/2023	MKLEPADLO	
&EFS=V1GL2UQ51UQ17+V1GL2UQ51UQ17/1	FESTO DQ CONNECTION QN17		1/11/2023	MKLEPADLO	
&EFS=V1GL2UQ51UQ18+V1GL2UQ51UQ18/1	FESTO DQ CONNECTION QN18		1/11/2023	MKLEPADLO	
&EFS=V1GL2UQ51UQ19+V1GL2UQ51UQ19/1	FESTO DQ CONNECTION QN19		1/11/2023	MKLEPADLO	
&EFS=V1GL2UQ51UQ20+V1GL2UQ51UQ20/1	FESTO DQ CONNECTION QN20		1/11/2023	MKLEPADLO	
&EFS=V1GL2UQ51UQ21+V1GL2UQ51UQ21/1	FESTO DQ CONNECTION QN21		1/11/2023	MKLEPADLO	
&EFS=V1GL2UQ51UQ22+V1GL2UQ51UQ22/1	FESTO DQ CONNECTION QN22		1/11/2023	MKLEPADLO	
&EFS=V1GL2UQ51UQ23+V1GL2UQ51UQ23/1	FESTO DQ CONNECTION QN23		1/11/2023	MKLEPADLO	
&EFS=V1GL2UQ51UQ24+V1GL2UQ51UQ24/1	FESTO DQ CONNECTION QN24		1/11/2023	MKLEPADLO	
&EFS=V1GL2UQ51UQ25+V1GL2UQ51UQ25/1	FESTO DQ CONNECTION QN25		1/11/2023	MKLEPADLO	
&EFS=V1GL2UQ51UQ26+V1GL2UQ51UQ26/1	FESTO DQ CONNECTION QN26		1/11/2023	MKLEPADLO	
&EFS=V1GL2UQ51UQ27+V1GL2UQ51UQ27/1	FESTO DQ CONNECTION QN27		1/11/2023	MKLEPADLO	
&EFS=V1GL2UQ51UQ28+V1GL2UQ51UQ28/1	FESTO DQ CONNECTION QN28		1/11/2023	MKLEPADLO	
&EFS=V1GL2UQ51UQ29+V1GL2UQ51UQ29/1	FESTO DQ CONNECTION QN29		1/11/2023	MKLEPADLO	
&EFS=V1GL2UQ51UQ30+V1GL2UQ51UQ30/1	FESTO DQ CONNECTION QN30		1/11/2023	MKLEPADLO	
&EFS=V1GL2UQ51UQ31+V1GL2UQ51UQ31/1	FESTO DQ CONNECTION QN31		1/11/2023	MKLEPADLO	

Table of contents

Column X: An automatically generated page was edited

F06_001

Page	Page description	supplementary page field	Date	Edited by	X
&EFS=V1GL2UQ51UQ32+V1GL2UQ51UQ32/1	FESTO DQ CONNECTION QN32		1/11/2023	MKLEPADLO	
&EFS=V1GL2UQ51UQ33+V1GL2UQ51UQ33/1	FESTO DQ CONNECTION QN33		1/11/2023	MKLEPADLO	
&EFS=V1GL2UQ51UQ34+V1GL2UQ51UQ34/1	FESTO DQ CONNECTION QN34		1/11/2023	MKLEPADLO	
&EFS=V1GL2UQ51UQ35+V1GL2UQ51UQ35/1	FESTO DQ CONNECTION QN35		1/11/2023	MKLEPADLO	
&EFS=V1GL2UQ51UQ36+V1GL2UQ51UQ36/1	FESTO DQ CONNECTION QN36		1/11/2023	MKLEPADLO	
&EFS=V1GL2UQ51UQ37+V1GL2UQ51UQ37/1	FESTO DQ CONNECTION QN37		1/11/2023	MKLEPADLO	
&EFS=V1GL2UQ51UQ38+V1GL2UQ51UQ38/1	FESTO DQ CONNECTION QN38		1/11/2023	MKLEPADLO	
&EFS=V1GL2UQ51WC4+V1GL1UQ52/1	24VDC		1/11/2023	MKLEPADLO	
&EFS=V1GL2WC1+V1GL2UC01/1	Incoming power		1/11/2023	MKLEPADLO	
&EFS=V1GL2WC4+V1GL2/1	24VDC		1/11/2023	MKLEPADLO	
&EFS=V1GL18UQ51BG0+V1GL18UQ51/1	SENSORS		1/11/2023	MKLEPADLO	
&EFS=V1GL18UQ51KF1+V1GL18UQ51/1	CONNECTING MOD. FOR VTSA MANIFOLD		1/11/2023	MKLEPADLO	
&EFS=V1GL18UQ51KF1+V1GL18UQ51/2	I/O MOD. DI16 (8 x M12) FOR VTSA-F		1/11/2023	MKLEPADLO	
&EFS=V1GL18UQ51KF1+V1GL18UQ51/3	I/O MOD. DI16 (8 x M12) FOR VTSA-F		1/11/2023	MKLEPADLO	
&EFS=V1GL18UQ51KF1+V1GL18UQ51/4	CONNECTING MOD. FOR FESTO DQ		1/11/2023	MKLEPADLO	
&EFS=V1GL18UQ51UQ1+V1GL18UQ51UQ1/1	FESTO DQ CONNECTION QN1		1/11/2023	MKLEPADLO	
&EFS=V1GL18UQ51UQ2+V1GL18UQ51UQ2/1	FESTO DQ CONNECTION QN2		1/11/2023	MKLEPADLO	
&EFS=V1GL18UQ51UQ6+V1GL18UQ51UQ6/1	FESTO DQ CONNECTION QN3		1/11/2023	MKLEPADLO	
&EFS=V1GL18UQ51UQx+V1GL18UQ51UQx/1	FESTO DQ CONNECTION QN4		1/11/2023	MKLEPADLO	
&EFS=V1KF1+V1UC11/1	Switch, Scalance X216		1/11/2023	MKLEPADLO	
&EFS=V1KF1+V1UC11/2	Network Overview		1/11/2023	MKLEPADLO	
&EFS=V1KF1+V1UC11/3	IM 155 PN		1/11/2023	MKLEPADLO	
&EFS=V1KF1+V1UC11/4	ET200S Wiring DI		1/11/2023	MKLEPADLO	
&EFS=V1KF1+V1UC11/5	ET200S Wiring DI		1/11/2023	MKLEPADLO	
&EFS=V1KF1+V1UC11/6	ET200S Wiring F-DI		1/11/2023	MKLEPADLO	
&EFS=V1KF1+V1UC11/7	ET200S Wiring DQ		1/11/2023	MKLEPADLO	
&EFS=V1KF1+V1UC11/8	ET200S Wiring F-DQ		1/11/2023	MKLEPADLO	
&EFS=V1KF1+V1UC11/9	ET200S DI Overview KF11.11		1/11/2023	MKLEPADLO	
&EFS=V1KF1+V1UC11/10	ET200S DI Overview KF11.12		1/11/2023	MKLEPADLO	
&EFS=V1KF1+V1UC11/11	ET200S DI Overview KF11.13		1/11/2023	MKLEPADLO	
&EFS=V1KF1+V1UC11/12	ET200S DI Overview KF11.14		1/11/2023	MKLEPADLO	
&EFS=V1KF1+V1UC11/13	ET200S DQ Overview KF11.21		1/11/2023	MKLEPADLO	
&EFS=V1KF1+V1UC11/14	ET200S F-DI Overview KF11.31		1/11/2023	MKLEPADLO	

Table of contents

Column X: An automatically generated page was edited

F06_001

Page	Page description	supplementary page field	Date	Edited by	X
&EFS=V1KF1+V1UC11/15	ET200S F-DI Overview KF11.32		1/11/2023	MKLEPADLO	
&EFS=V1KF1+V1UC11/16	ET200S F-DQ Overview KF11.41		1/11/2023	MKLEPADLO	
&EFS=V1KF1+V1UC11/17	ET200S F-DQ Overview KF11.42		1/11/2023	MKLEPADLO	
&EFS=V1KF1+V1UC11/18	ET200S F-RQ Overview KF11.51		1/11/2023	MKLEPADLO	
&EFS=V1KF1+V1UC11/19	ET200S F-RQ Overview KF11.52		1/11/2023	MKLEPADLO	
&EFS=V1KF1+V1UC11/20	ET200S F-RQ Overview KF11.53		1/11/2023	MKLEPADLO	
&EFS=V1KF1+V1UC11/21	ET200S F-RQ Overview KF11.54		1/11/2023	MKLEPADLO	
&EFS=V1KF1+V1UC12/1	Switch, Scalance XC216		1/11/2023	MKLEPADLO	
&EFS=V1KF1+V1UC12/2	Network Overview		1/11/2023	MKLEPADLO	
&EFS=V1KF1+V1UC12/3	IM 155 PN		1/11/2023	MKLEPADLO	
&EFS=V1KF1+V1UC12/4	ET200S Wiring DI		1/11/2023	MKLEPADLO	
&EFS=V1KF1+V1UC12/5	ET200S Wiring DI		1/11/2023	MKLEPADLO	
&EFS=V1KF1+V1UC12/6	ET200S Wiring F-DI		1/11/2023	MKLEPADLO	
&EFS=V1KF1+V1UC12/7	ET200S Wiring DQ		1/11/2023	MKLEPADLO	
&EFS=V1KF1+V1UC12/8	ET200S Wiring F-DQ		1/11/2023	MKLEPADLO	
&EFS=V1KF1+V1UC12/9	ET200S DI Overview KF12.11		1/11/2023	MKLEPADLO	
&EFS=V1KF1+V1UC12/10	ET200S DI Overview KF12.12		1/11/2023	MKLEPADLO	
&EFS=V1KF1+V1UC12/11	ET200S DI Overview KF12.13		1/11/2023	MKLEPADLO	
&EFS=V1KF1+V1UC12/12	ET200S DI Overview KF12.14		1/11/2023	MKLEPADLO	
&EFS=V1KF1+V1UC12/13	ET200S DQ Overview KF12.21		1/11/2023	MKLEPADLO	
&EFS=V1KF1+V1UC12/14	ET200S F-DI Overview KF12.31		1/11/2023	MKLEPADLO	
&EFS=V1KF1+V1UC12/15	ET200S F-DI Overview KF12.32		1/11/2023	MKLEPADLO	
&EFS=V1KF1+V1UC12/16	ET200S F-DQ Overview KF12.41		1/11/2023	MKLEPADLO	
&EFS=V1KF1+V1UC12/17	ET200S F-DQ Overview KF12.42		1/11/2023	MKLEPADLO	
&EFS=V1KF1+V1UC12/18	ET200S F-RQ Overview KF12.51		1/11/2023	MKLEPADLO	
&EFS=V1KF1+V1UC12/19	ET200S F-RQ Overview KF12.52		1/11/2023	MKLEPADLO	
&EFS=V1KF1+V1UC12/20	ET200S F-RQ Overview KF12.53		1/11/2023	MKLEPADLO	
&EFS=V1KF1+V1UC12/21	ET200S F-RQ Overview KF12.54		1/11/2023	MKLEPADLO	
&EFS=V1KF1+V1UC14/1	Switch, Scalance XC216		1/11/2023	MKLEPADLO	
&EFS=V1KF1+V1UC14/2	Network Overview		1/11/2023	MKLEPADLO	
&EFS=V1KF1+V1UC14/3	IM 155 PN		1/11/2023	MKLEPADLO	
&EFS=V1KF1+V1UC14/4	ET200S Wiring DI		1/11/2023	MKLEPADLO	
&EFS=V1KF1+V1UC14/5	ET200S Wiring F-DI		1/11/2023	MKLEPADLO	

Table of contents

Column X: An automatically generated page was edited

F06_001

Page	Page description	supplementary page field	Date	Edited by	X
&EFS=V1KF1+V1UC14/6	ET200S Wiring DQ		1/11/2023	MKLEPADLO	
&EFS=V1KF1+V1UC14/7	ET200S Wiring F-DQ		1/11/2023	MKLEPADLO	
&EFS=V1KF1+V1UC14/8	ET200S DI Overview KF14.11		1/11/2023	MKLEPADLO	
&EFS=V1KF1+V1UC14/9	ET200S DI Overview KF14.12		1/11/2023	MKLEPADLO	
&EFS=V1KF1+V1UC14/10	ET200S DQ Overview KF14.21		1/11/2023	MKLEPADLO	
&EFS=V1KF1+V1UC14/11	ET200S F-DI Overview KF14.31		1/11/2023	MKLEPADLO	
&EFS=V1KF1+V1UC14/12	ET200S F-DI Overview KF14.32		1/11/2023	MKLEPADLO	
&EFS=V1KF1+V1UC14/13	ET200S F-DQ Overview KF14.41		1/11/2023	MKLEPADLO	
&EFS=V1KF1+V1UC14/14	ET200S F-DQ Overview KF14.42		1/11/2023	MKLEPADLO	
&EFS=V1KF1+V1UC14/15	ET200S F-RQ Overview KF14.51		1/11/2023	MKLEPADLO	
&EFS=V1KF1+V1UC14/16	ET200S F-RQ Overview KF14.52		1/11/2023	MKLEPADLO	
&EFS=V1KF1+V1UC14/17	ET200S F-RQ Overview KF14.53		1/11/2023	MKLEPADLO	
&EFS=V1KF1+V1UC14/18	ET200S F-RQ Overview KF14.54		1/11/2023	MKLEPADLO	
&EFS=V1KF1+V1UC15/1	Switch, Scalance XC216		1/11/2023	MKLEPADLO	
&EFS=V1KF1+V1UC15/2	Network Overview		1/11/2023	MKLEPADLO	
&EFS=V1KF1+V1UC15/3	IM 155 PN		1/11/2023	MKLEPADLO	
&EFS=V1KF1+V1UC15/4	ET200S Wiring DI		1/11/2023	MKLEPADLO	
&EFS=V1KF1+V1UC15/5	ET200S Wiring F-DI		1/11/2023	MKLEPADLO	
&EFS=V1KF1+V1UC15/6	ET200S Wiring DQ		1/11/2023	MKLEPADLO	
&EFS=V1KF1+V1UC15/7	ET200S Wiring F-DQ		1/11/2023	MKLEPADLO	
&EFS=V1KF1+V1UC15/8	ET200S DI Overview KF15.11		1/11/2023	MKLEPADLO	
&EFS=V1KF1+V1UC15/9	ET200S DI Overview KF15.12		1/11/2023	MKLEPADLO	
&EFS=V1KF1+V1UC15/10	ET200S DQ Overview KF15.21		1/11/2023	MKLEPADLO	
&EFS=V1KF1+V1UC15/11	ET200S F-DI Overview KF15.31		1/11/2023	MKLEPADLO	
&EFS=V1KF1+V1UC15/12	ET200S F-DI Overview KF15.32		1/11/2023	MKLEPADLO	
&EFS=V1KF1+V1UC15/13	ET200S F-DQ Overview KF15.41		1/11/2023	MKLEPADLO	
&EFS=V1KF1+V1UC15/14	ET200S F-DQ Overview KF15.42		1/11/2023	MKLEPADLO	
&EFS=V1KF1+V1UC15/15	ET200S F-RQ Overview KF15.51		1/11/2023	MKLEPADLO	
&EFS=V1KF1+V1UC15/16	ET200S F-RQ Overview KF15.52		1/11/2023	MKLEPADLO	
&EFS=V1KF1+V1UC15/17	ET200S F-RQ Overview KF15.53		1/11/2023	MKLEPADLO	
&EFS=V1KF1+V1UC15/18	ET200S F-RQ Overview KF15.54		1/11/2023	MKLEPADLO	
&EFS=V1KF1+V1UC32/1	IM 155 PN		1/11/2023	MKLEPADLO	
&EFS=V1KF1+V1UC32/2	ET200S Wiring DI		1/11/2023	MKLEPADLO	

Table of contents

Column X: An automatically generated page was edited

F06_001

Page	Page description	supplementary page field	Date	Edited by	X
&EFS=V1KF1+V1UC32/3	ET200S Wiring DO		1/11/2023	MKLEPADLO	
&EFS=V1KF1+V1UC32/4	ET200S Wiring F-DI		1/11/2023	MKLEPADLO	
&EFS=V1KF1+V1UC32/5	ET200S Cross-reference Input module		1/11/2023	MKLEPADLO	
&EFS=V1KF1+V1UC32/6	ET200S Cross-reference Output module		1/11/2023	MKLEPADLO	
&EFS=V1KF1+V1UC32/7	ET200S Cross-reference Safe input module		1/11/2023	MKLEPADLO	
&EFS=V1PF1KF1+V1PF1/1	CONNECTING MOD. FOR VTSA MANIFOLD		1/11/2023	MKLEPADLO	
&EFS=V1PF1KF1+V1PF1/2	CONNECTING MOD. FOR FESTO DQ		1/11/2023	MKLEPADLO	
&EFS=V1PF1UQ1+V1PF1UQ1/1	FESTO DQ CONNECTION QN1		1/11/2023	MKLEPADLO	
&EFS=V1PF1WC3+V1PF1UC01/1	Incoming power & profinet		1/11/2023	MKLEPADLO	
&EFS=V1PZ1PF1+V1UC61/1	S010 Indication column 1		1/11/2023	MKLEPADLO	
&EFS=V1PZ1PF2+V1UC62/1	S010 Indication column 2		1/11/2023	MKLEPADLO	
&EFS=V1PZ1PF3+V1UC63/1	S020 Indication column 1		1/11/2023	MKLEPADLO	
&EFS=V1PZ1PF4+V1UC64/1	S020 Indication column 2		1/11/2023	MKLEPADLO	
&EFS=V1SF0PG1+V1UC32/1	TP1500: SOP Display		1/11/2023	MKLEPADLO	
&EFS=V1SF0PG1+V1UC32/2	Operating box SOP		1/11/2023	MKLEPADLO	
&EFS=V1SF0PG2+V1UC51/1	TP700: S010 Display 1		1/11/2023	MKLEPADLO	
&EFS=V1SF0PG3+V1UC52/1	TP700: S010 Display 2		1/11/2023	MKLEPADLO	
&EFS=V1SF0PG4+V1UC53/1	TP700: S020 Display 1		1/11/2023	MKLEPADLO	
&EFS=V1SF0PG5+V1UC54/1	TP700: S020 Display 2		1/11/2023	MKLEPADLO	
&EFS=V1SF0SF1+V1UC71/1	S010 Operating box RB1		1/11/2023	MKLEPADLO	
&EFS=V1SF0SF2+V1UC72/1	S010 Operating box RB2		1/11/2023	MKLEPADLO	
&EFS=V1SF0SF3+V1UC73/1	S020 Operating box RB1		1/11/2023	MKLEPADLO	
&EFS=V1SF0SF4+V1UC74/1	S020 Operating box RB2		1/11/2023	MKLEPADLO	
&EFS=V1U10FQ1+V1U10/1	S010 Lift Assist Safety Switch		1/11/2023	MKLEPADLO	
&EFS=V1U10U01KF1+V1U10U01/10	MURR MODULE 8 IN/ 8 OUT		1/11/2023	MKLEPADLO	
&EFS=V1U10U01PF1+V1U10U01/2	Station Dome Light		1/11/2023	MKLEPADLO	
&EFS=V1U20U01KF1+V1U20U01/10	MURR MODULE 8 IN/ 8 OUT		1/11/2023	MKLEPADLO	
&EFS=V1U20U01PF1+V1U20U01/2	Station Dome Light		1/11/2023	MKLEPADLO	
&EFS=V1UN1BG0+V1UN1/1	SENSORS		1/17/2023	MKLEPADLO	
&EFS=V1UN1FQ1+V1UN1/1	S070 Lift Assist Safety Switch		1/11/2023	MKLEPADLO	
&EFS=V1UN1KF1+V1UN1/10	MURR MODULE 8 IN/ 8 OUT		1/17/2023	MKLEPADLO	
&EFS=V1UN1PF1+V1UN1/2	Station Dome Light		1/11/2023	MKLEPADLO	
&EFS=V1UQ51BG0+V1UQ51/1	SENSORS		1/11/2023	MKLEPADLO	

Table of contents

Column X: An automatically generated page was edited

F06_001

Page	Page description	supplementary page field	Date	Edited by	X
&EFS=V1UQ51KF1+V1UQ51/1	CONNECTING MOD. FOR VTSA MANIFOLD		1/11/2023	MKLEPADLO	
&EFS=V1UQ51KF1+V1UQ51/2	I/O MOD. DI16 (8 x M12) FOR VTSA-F		1/11/2023	MKLEPADLO	
&EFS=V1UQ51KF1+V1UQ51/3	I/O MOD. DI16 (8 x M12) FOR VTSA-F		1/11/2023	MKLEPADLO	
&EFS=V1UQ51KF1+V1UQ51/4	CONNECTING MOD. FOR FESTO DQ		1/11/2023	MKLEPADLO	
&EFS=V1UQ51UQ1+V1UQ51UQ1/1	FESTO DQ CONNECTION QN1		1/11/2023	MKLEPADLO	
&EFS=V1UQ51UQ2+V1UQ51UQ2/1	FESTO DQ CONNECTION QN2		1/11/2023	MKLEPADLO	
&EFS=V1UQ51UQ3+V1UQ51UQ3/1	FESTO DQ CONNECTION QN3		1/11/2023	MKLEPADLO	
&EFS=V1UQ51UQ4+V1UQ51UQ4/1	FESTO DQ CONNECTION QN4		1/11/2023	MKLEPADLO	
&EFS=V1UQ51UQ5+V1UQ51UQ5/1	FESTO DQ CONNECTION QN5		1/11/2023	MKLEPADLO	
&EFS=V1UQ51UQ6+V1UQ51UQ6/1	FESTO DQ CONNECTION QN6		1/11/2023	MKLEPADLO	
&EFS=V1UQ51UQ7+V1UQ51UQ7/1	FESTO DQ CONNECTION QN7		1/11/2023	MKLEPADLO	
&EFS=V1UQ51UQ8+V1UQ51UQ8/1	FESTO DQ CONNECTION QN8		1/11/2023	MKLEPADLO	
&EFS=V1UQ51UQ9+V1UQ51UQ9/1	FESTO DQ CONNECTION QN9		1/11/2023	MKLEPADLO	
&EFS=V1UQ51UQ10+V1UQ51UQ10/1	FESTO DQ CONNECTION QN10		1/11/2023	MKLEPADLO	
&EFS=V1UQ52BG0+V1UQ52/1	SENSORS		1/11/2023	MKLEPADLO	
&EFS=V1UQ52BG0+V1UQ52/2	SENSORS		1/11/2023	MKLEPADLO	
&EFS=V1UQ52KF1+V1UQ52/1	CONNECTING MOD. FOR VTSA MANIFOLD		1/11/2023	MKLEPADLO	
&EFS=V1UQ52KF1+V1UQ52/2	I/O MOD. DI16 (8 x M12) FOR VTSA-F		1/11/2023	MKLEPADLO	
&EFS=V1UQ52KF1+V1UQ52/3	I/O MOD. DI16 (8 x M12) FOR VTSA-F		1/11/2023	MKLEPADLO	
&EFS=V1UQ52KF1+V1UQ52/4	CONNECTING MOD. FOR FESTO DQ		1/11/2023	MKLEPADLO	
&EFS=V1UQ52KF2+V1UQ52/1	CONNECTING MOD. FOR VTSA MANIFOLD		1/11/2023	MKLEPADLO	
&EFS=V1UQ52KF2+V1UQ52/2	I/O MOD. DI16 (8 x M12) FOR VTSA-F		1/11/2023	MKLEPADLO	
&EFS=V1UQ52KF2+V1UQ52/3	I/O MOD. DI16 (8 x M12) FOR VTSA-F		1/11/2023	MKLEPADLO	
&EFS=V1UQ52KF2+V1UQ52/4	CONNECTING MOD. FOR FESTO DQ		1/11/2023	MKLEPADLO	
&EFS=V1UQ52KF3+V1UQ52/1	CONNECTING MOD. FOR VTSA MANIFOLD		1/11/2023	MKLEPADLO	
&EFS=V1UQ52KF3+V1UQ52/2	I/O MOD. DI16 (8 x M12) FOR VTSA-F		1/11/2023	MKLEPADLO	
&EFS=V1UQ52KF3+V1UQ52/3	CONNECTING MOD. FOR FESTO DQ		1/11/2023	MKLEPADLO	
&EFS=V1UQ52KF4+V1UQ52/1	CONNECTING MOD. FOR VTSA MANIFOLD		1/11/2023	MKLEPADLO	
&EFS=V1UQ52KF4+V1UQ52/2	I/O MOD. DI16 (8 x M12) FOR VTSA-F		1/11/2023	MKLEPADLO	
&EFS=V1UQ52KF4+V1UQ52/3	CONNECTING MOD. FOR FESTO DQ		1/11/2023	MKLEPADLO	
&EFS=V1UQ52KF5+V1UQ52/1	CONNECTING MOD. FOR VTSA MANIFOLD		1/11/2023	MKLEPADLO	
&EFS=V1UQ52KF5+V1UQ52/2	I/O MOD. DI16 (8 x M12) FOR VTSA-F		1/11/2023	MKLEPADLO	
&EFS=V1UQ52KF5+V1UQ52/3	CONNECTING MOD. FOR FESTO DQ		1/11/2023	MKLEPADLO	

Table of contents

Column X: An automatically generated page was edited

F06_001

Page	Page description	supplementary page field	Date	Edited by	X
&EFS=V1UQ52UQ1+V1UQ52UQ1/1	FESTO DQ CONNECTION QN1		1/11/2023	MKLEPADLO	
&EFS=V1UQ52UQ2+V1UQ52UQ2/1	FESTO DQ CONNECTION QN2		1/11/2023	MKLEPADLO	
&EFS=V1UQ52UQ3+V1UQ52UQ3/1	FESTO DQ CONNECTION QN3		1/11/2023	MKLEPADLO	
&EFS=V1UQ52UQ4+V1UQ52UQ4/1	FESTO DQ CONNECTION QN4		1/11/2023	MKLEPADLO	
&EFS=V1UQ52UQ5+V1UQ52UQ5/1	FESTO DQ CONNECTION QN5		1/11/2023	MKLEPADLO	
&EFS=V1UQ52UQ6+V1UQ52UQ6/1	FESTO DQ CONNECTION QN6		1/11/2023	MKLEPADLO	
&EFS=V1UQ52UQ7+V1UQ52UQ7/1	FESTO DQ CONNECTION QN7		1/11/2023	MKLEPADLO	
&EFS=V1UQ52UQ8+V1UQ52UQ8/1	FESTO DQ CONNECTION QN8		1/11/2023	MKLEPADLO	
&EFS=V1UQ52UQ9+V1UQ52UQ9/1	FESTO DQ CONNECTION QN9		1/11/2023	MKLEPADLO	
&EFS=V1UQ52UQ10+V1UQ52UQ10/1	FESTO DQ CONNECTION QN10		1/11/2023	MKLEPADLO	
&EFS=V1UQ52UQ11+V1UQ52UQ11/1	FESTO DQ CONNECTION QN11		1/11/2023	MKLEPADLO	
&EFS=V1UQ52UQ12+V1UQ52UQ12/1	FESTO DQ CONNECTION QN12		1/11/2023	MKLEPADLO	
&EFS=V1UQ52UQ13+V1UQ52UQ13/1	FESTO DQ CONNECTION QN13		1/11/2023	MKLEPADLO	
&EFS=V1UQ52UQ14+V1UQ52UQ14/1	FESTO DQ CONNECTION QN14		1/11/2023	MKLEPADLO	
&EFS=V1UQ52UQ15+V1UQ52UQ15/1	FESTO DQ CONNECTION QN15		1/11/2023	MKLEPADLO	
&EFS=V1UQ52UQ16+V1UQ52UQ16/1	FESTO DQ CONNECTION QN16		1/11/2023	MKLEPADLO	
&EFS=V1UQ52UQ17+V1UQ52UQ17/1	FESTO DQ CONNECTION QN17		1/11/2023	MKLEPADLO	
&EFS=V1UQ52UQ18+V1UQ52UQ18/1	FESTO DQ CONNECTION QN18		1/11/2023	MKLEPADLO	
&EFS=V1UQ52UQ19+V1UQ52UQ19/1	FESTO DQ CONNECTION QN19		1/11/2023	MKLEPADLO	
&EFS=V1UQ52UQ20+V1UQ52UQ20/1	FESTO DQ CONNECTION QN20		1/11/2023	MKLEPADLO	
&EFS=V1UQ52UQ21+V1UQ52UQ21/1	FESTO DQ CONNECTION QN21		1/11/2023	MKLEPADLO	
&EFS=V1UQ52UQ22+V1UQ52UQ22/1	FESTO DQ CONNECTION QN22		1/11/2023	MKLEPADLO	
&EFS=V1UQ52UQ23+V1UQ52UQ23/1	FESTO DQ CONNECTION QN23		1/11/2023	MKLEPADLO	
&EFS=V1UQ52UQ24+V1UQ52UQ24/1	FESTO DQ CONNECTION QN24		1/11/2023	MKLEPADLO	
&EFS=V1UQ52UQ25+V1UQ52UQ25/1	FESTO DQ CONNECTION QN25		1/11/2023	MKLEPADLO	
&EFS=V1UQ52UQ26+V1UQ52UQ26/1	FESTO DQ CONNECTION QN26		1/11/2023	MKLEPADLO	
&EFS=V1UQ52UQ27+V1UQ52UQ27/1	FESTO DQ CONNECTION QN27		1/11/2023	MKLEPADLO	
&EFS=V1UQ52UQ28+V1UQ52UQ28/1	FESTO DQ CONNECTION QN28		1/11/2023	MKLEPADLO	
&EFS=V1UQ52UQ29+V1UQ52UQ29/1	FESTO DQ CONNECTION QN29		1/11/2023	MKLEPADLO	
&EFS=V1UQ52UQ30+V1UQ52UQ30/1	FESTO DQ CONNECTION QN30		1/11/2023	MKLEPADLO	
&EFS=V1UQ52UQ31+V1UQ52UQ31/1	FESTO DQ CONNECTION QN31		1/11/2023	MKLEPADLO	
&EFS=V1UQ52UQ32+V1UQ52UQ32/1	FESTO DQ CONNECTION QN32		1/11/2023	MKLEPADLO	
&EFS=V1UQ52UQ33+V1UQ52UQ33/1	FESTO DQ CONNECTION QN34		1/11/2023	MKLEPADLO	

Table of contents

Column X: An automatically generated page was edited

F06_001

Page	Page description	supplementary page field	Date	Edited by	X
&EFS=V1UQ52UQ34+V1UQ52UQ34/1	FESTO DQ CONNECTION QN34		1/11/2023	MKLEPADLO	
&EFS=V1UQ52UQ35+V1UQ52UQ35/1	FESTO DQ CONNECTION QN35		1/11/2023	MKLEPADLO	
&EFS=V1UQ52UQ36+V1UQ52UQ36/1	FESTO DQ CONNECTION QN36		1/11/2023	MKLEPADLO	
&EFS=V1UQ52UQ37+V1UQ52UQ37/1	FESTO DQ CONNECTION QN37		1/11/2023	MKLEPADLO	
&EFS=V1UQ52UQ38+V1UQ52UQ38/1	FESTO DQ CONNECTION QN38		1/11/2023	MKLEPADLO	
&EFS=V1UQ52UQ39+V1UQ52UQ39/1	FESTO DQ CONNECTION QN39		1/11/2023	MKLEPADLO	
&EFS=V1UQ52UQ40+V1UQ52UQ40/1	FESTO DQ CONNECTION QN40		1/11/2023	MKLEPADLO	
&EFS=V1UQ52UQ41+V1UQ52UQ41/1	FESTO DQ CONNECTION QN41		1/11/2023	MKLEPADLO	
&EFS=V1UQ52UQ42+V1UQ52UQ42/1	FESTO DQ CONNECTION QN42		1/11/2023	MKLEPADLO	
&EFS=V1UQ52UQ43+V1UQ52UQ43/1	FESTO DQ CONNECTION QN43		1/11/2023	MKLEPADLO	
&EFS=V1UQ52UQ44+V1UQ52UQ44/1	FESTO DQ CONNECTION QN44		1/11/2023	MKLEPADLO	
&EFS=V1UQ52UQ45+V1UQ52UQ45/1	FESTO DQ CONNECTION QN45		1/11/2023	MKLEPADLO	
&EFS=V1UQ52UQ46+V1UQ52UQ46/1	FESTO DQ CONNECTION QN46		1/11/2023	MKLEPADLO	
&EFS=V1UQ52UQ47+V1UQ52UQ47/1	FESTO DQ CONNECTION QN47		1/11/2023	MKLEPADLO	
&EFS=V1UQ52WC4+V1UQ52/1	24VDC		1/11/2023	MKLEPADLO	
&EFS=V1UQ52WC4+V1UQ52/2	24VDC		1/11/2023	MKLEPADLO	
&EFS=V1UQ53BG0+V1UQ53/1	SENSORS		1/11/2023	MKLEPADLO	
&EFS=V1UQ53KF1+V1UQ53/1	CONNECTING MOD. FOR VTSA MANIFOLD		1/11/2023	MKLEPADLO	
&EFS=V1UQ53KF1+V1UQ53/2	I/O MOD. DI16 (8 x M12) FOR VTSA-F		1/11/2023	MKLEPADLO	
&EFS=V1UQ53KF1+V1UQ53/3	I/O MOD. DI16 (8 x M12) FOR VTSA-F		1/11/2023	MKLEPADLO	
&EFS=V1UQ53KF1+V1UQ53/4	CONNECTING MOD. FOR FESTO DQ		1/11/2023	MKLEPADLO	
&EFS=V1UQ53KF2+V1UQ53/1	CONNECTING MOD. FOR VTSA MANIFOLD		1/11/2023	MKLEPADLO	
&EFS=V1UQ53KF2+V1UQ53/2	I/O MOD. DI16 (8 x M12) FOR VTSA-F		1/11/2023	MKLEPADLO	
&EFS=V1UQ53KF2+V1UQ53/3	CONNECTING MOD. FOR FESTO DQ		1/11/2023	MKLEPADLO	
&EFS=V1UQ53UQ1+V1UQ53UQ1/1	FESTO DQ CONNECTION QN1		1/11/2023	MKLEPADLO	
&EFS=V1UQ53UQ2+V1UQ53UQ2/1	FESTO DQ CONNECTION QN2		1/11/2023	MKLEPADLO	
&EFS=V1UQ53UQ3+V1UQ53UQ3/1	FESTO DQ CONNECTION QN3		1/11/2023	MKLEPADLO	
&EFS=V1UQ53UQ4+V1UQ53UQ4/1	FESTO DQ CONNECTION QN4		1/11/2023	MKLEPADLO	
&EFS=V1UQ53UQ5+V1UQ53UQ5/1	FESTO DQ CONNECTION QN5		1/11/2023	MKLEPADLO	
&EFS=V1UQ53UQ6+V1UQ53UQ6/1	FESTO DQ CONNECTION QN6		1/11/2023	MKLEPADLO	
&EFS=V1UQ53UQ7+V1UQ53UQ7/1	FESTO DQ CONNECTION QN7		1/11/2023	MKLEPADLO	
&EFS=V1UQ53UQ8+V1UQ53UQ8/1	FESTO DQ CONNECTION QN8		1/11/2023	MKLEPADLO	
&EFS=V1UQ53UQ9+V1UQ53UQ9/1	FESTO DQ CONNECTION QN9		1/11/2023	MKLEPADLO	

Table of contents

Column X: An automatically generated page was edited

F06_001

Page	Page description	supplementary page field	Date	Edited by	X
&EFS=V1UQ53UQ10+V1UQ53UQ10/1	FESTO DQ CONNECTION QN10		1/11/2023	MKLEPADLO	
&EFS=V1UQ53UQ11+V1UQ53UQ11/1	FESTO DQ CONNECTION QN11		1/11/2023	MKLEPADLO	
&EFS=V1UQ53UQ12+V1UQ53UQ12/1	FESTO DQ CONNECTION QN12		1/11/2023	MKLEPADLO	
&EFS=V1UQ53UQ13+V1UQ53UQ13/1	FESTO DQ CONNECTION QN13		1/11/2023	MKLEPADLO	
&EFS=V1UQ53UQ14+V1UQ53UQ14/1	FESTO DQ CONNECTION QN14		1/11/2023	MKLEPADLO	
&EFS=V1UQ53UQ15+V1UQ53UQ15/1	FESTO DQ CONNECTION QN15		1/11/2023	MKLEPADLO	
&EFS=V1UQ53UQ16+V1UQ53UQ16/1	FESTO DQ CONNECTION QN16		1/11/2023	MKLEPADLO	
&EFS=V1UQ53UQ17+V1UQ53UQ17/1	FESTO DQ CONNECTION QN17		1/11/2023	MKLEPADLO	
&EFS=V1UQ53WC4+V1UQ53/1	24VDC		1/11/2023	MKLEPADLO	
&EFS=V1UQ54BG0+V1UQ54/1	SENSORS		1/11/2023	MKLEPADLO	
&EFS=V1UQ54KF1+V1UQ54/1	CONNECTING MOD. FOR VTSA MANIFOLD		1/11/2023	MKLEPADLO	
&EFS=V1UQ54KF1+V1UQ54/2	I/O MOD. DI16 (8 x M12) FOR VTSA-F		1/11/2023	MKLEPADLO	
&EFS=V1UQ54KF1+V1UQ54/3	I/O MOD. DI16 (8 x M12) FOR VTSA-F		1/11/2023	MKLEPADLO	
&EFS=V1UQ54KF1+V1UQ54/4	CONNECTING MOD. FOR FESTO DQ		1/11/2023	MKLEPADLO	
&EFS=V1UQ54KF2+V1UQ54/1	CONNECTING MOD. FOR VTSA MANIFOLD		1/11/2023	MKLEPADLO	
&EFS=V1UQ54KF2+V1UQ54/2	I/O MOD. DI16 (8 x M12) FOR VTSA-F		1/11/2023	MKLEPADLO	
&EFS=V1UQ54KF2+V1UQ54/3	CONNECTING MOD. FOR FESTO DQ		1/11/2023	MKLEPADLO	
&EFS=V1UQ54UQ1+V1UQ54UQ1/1	FESTO DQ CONNECTION QN1		1/11/2023	MKLEPADLO	
&EFS=V1UQ54UQ2+V1UQ54UQ2/1	FESTO DQ CONNECTION QN2		1/11/2023	MKLEPADLO	
&EFS=V1UQ54UQ3+V1UQ54UQ3/1	FESTO DQ CONNECTION QN3		1/11/2023	MKLEPADLO	
&EFS=V1UQ54UQ4+V1UQ54UQ4/1	FESTO DQ CONNECTION QN4		1/11/2023	MKLEPADLO	
&EFS=V1UQ54UQ5+V1UQ54UQ5/1	FESTO DQ CONNECTION QN5		1/11/2023	MKLEPADLO	
&EFS=V1UQ54UQ6+V1UQ54UQ6/1	FESTO DQ CONNECTION QN6		1/11/2023	MKLEPADLO	
&EFS=V1UQ54UQ7+V1UQ54UQ7/1	FESTO DQ CONNECTION QN7		1/11/2023	MKLEPADLO	
&EFS=V1UQ54UQ8+V1UQ54UQ8/1	FESTO DQ CONNECTION QN8		1/11/2023	MKLEPADLO	
&EFS=V1UQ54UQ9+V1UQ54UQ9/1	FESTO DQ CONNECTION QN9		1/11/2023	MKLEPADLO	
&EFS=V1UQ54UQ10+V1UQ54UQ10/1	FESTO DQ CONNECTION QN10		1/11/2023	MKLEPADLO	
&EFS=V1UQ54UQ11+V1UQ54UQ11/1	FESTO DQ CONNECTION QN11		1/11/2023	MKLEPADLO	
&EFS=V1UQ54UQ12+V1UQ54UQ12/1	FESTO DQ CONNECTION QN12		1/11/2023	MKLEPADLO	
&EFS=V1UQ54UQ13+V1UQ54UQ13/1	FESTO DQ CONNECTION QN13		1/11/2023	MKLEPADLO	
&EFS=V1UQ54UQ14+V1UQ54UQ14/1	FESTO DQ CONNECTION QN14		1/11/2023	MKLEPADLO	
&EFS=V1UQ54WC4+V1UQ54/1	24VDC		1/11/2023	MKLEPADLO	
&EFS=V1UQ55BG0+V1UQ55/1	SENSORS		1/11/2023	MKLEPADLO	

Table of contents

Column X: An automatically generated page was edited

F06_001

Page	Page description	supplementary page field	Date	Edited by	X
&EFS=V1UQ55KF1+V1UQ55/1	CONNECTING MOD. FOR VTSA MANIFOLD		1/11/2023	MKLEPADLO	
&EFS=V1UQ55KF1+V1UQ55/2	I/O MOD. DI16 (8 x M12) FOR VTSA-F		1/11/2023	MKLEPADLO	
&EFS=V1UQ55KF1+V1UQ55/3	CONNECTING MOD. FOR FESTO DQ		1/11/2023	MKLEPADLO	
&EFS=V1UQ55UQ1+V1UQ55UQ1/1	FESTO DQ CONNECTION QN1		1/11/2023	MKLEPADLO	
&EFS=V1UQ55UQ2+V1UQ55UQ2/1	FESTO DQ CONNECTION QN2		1/11/2023	MKLEPADLO	
&EFS=V1UQ55UQ3+V1UQ55UQ3/1	FESTO DQ CONNECTION QN3		1/11/2023	MKLEPADLO	
&EFS=V1UQ55UQ4+V1UQ55UQ4/1	FESTO DQ CONNECTION QN4		1/11/2023	MKLEPADLO	
&EFS=V1WC1+V1UC11/1	Incoming power supply 480 VAC		1/11/2023	MKLEPADLO	
&EFS=V1WC1+V1UC12/1	Incoming power supply 480 VAC		1/11/2023	MKLEPADLO	
&EFS=V1WC1+V1UC161/1	Incoming weld power supply 480 VAC		1/11/2023	MKLEPADLO	
&EFS=V1WC1+V1UC162/1	Incoming weld power supply 480 VAC		1/11/2023	MKLEPADLO	
&EFS=V1WC1+V1UC163/1	Incoming weld power supply 480 VAC		1/11/2023	MKLEPADLO	
&EFS=V1WC1+V1UC164/1	Incoming weld power supply 480 VAC		1/11/2023	MKLEPADLO	
&EFS=V1WC1+V1UC165/1	Incoming weld power supply 480 VAC		1/11/2023	MKLEPADLO	
&EFS=V1WC2+V1UC11/10	Power distribution 480 VAC		1/11/2023	MKLEPADLO	
&EFS=V1WC2+V1UC11/11	Power distribution 480 VAC		1/11/2023	MKLEPADLO	
&EFS=V1WC2+V1UC11/12	Power distribution 480 VAC		1/11/2023	MKLEPADLO	
&EFS=V1WC2+V1UC11/13	Power distribution 480 VAC		1/11/2023	MKLEPADLO	
&EFS=V1WC2+V1UC11/14	Power distribution 480 VAC		1/11/2023	MKLEPADLO	
&EFS=V1WC2+V1UC11/15	Power distribution 480 VAC		1/11/2023	MKLEPADLO	
&EFS=V1WC2+V1UC11/16	Power distribution 480 VAC		1/11/2023	MKLEPADLO	
&EFS=V1WC2+V1UC11/41	Power distribution 480 VAC monitoring		1/11/2023	MKLEPADLO	
&EFS=V1WC2+V1UC11/42	Power distribution 480 VAC monitoring		1/11/2023	MKLEPADLO	
&EFS=V1WC2+V1UC11/43	Power distribution 480 VAC monitoring		1/11/2023	MKLEPADLO	
&EFS=V1WC2+V1UC12/10	Power distribution 480 VAC		1/11/2023	MKLEPADLO	
&EFS=V1WC2+V1UC12/11	Power distribution 480 VAC		1/11/2023	MKLEPADLO	
&EFS=V1WC2+V1UC12/12	Power distribution 480 VAC		1/11/2023	MKLEPADLO	
&EFS=V1WC2+V1UC12/13	Power distribution 480 VAC		1/11/2023	MKLEPADLO	
&EFS=V1WC2+V1UC12/14	Power distribution 480 VAC		1/11/2023	MKLEPADLO	
&EFS=V1WC2+V1UC12/15	Power distribution 480 VAC		1/11/2023	MKLEPADLO	
&EFS=V1WC2+V1UC12/16	Power distribution 480 VAC		1/11/2023	MKLEPADLO	
&EFS=V1WC2+V1UC12/41	Power distribution 480 VAC monitoring		1/11/2023	MKLEPADLO	
&EFS=V1WC2+V1UC12/42	Power distribution 480 VAC monitoring		1/11/2023	MKLEPADLO	

Table of contents

Column X: An automatically generated page was edited

F06_001

Page	Page description	supplementary page field	Date	Edited by	X
&EFS=V1WC2+V1UC12/43	Power distribution 480 VAC monitoring		1/11/2023	MKLEPADLO	
&EFS=V1WC2+V1UC161/10	Weld power distribution 480 VAC		1/11/2023	MKLEPADLO	
&EFS=V1WC2+V1UC162/10	Weld power distribution 480 VAC		1/11/2023	MKLEPADLO	
&EFS=V1WC2+V1UC163/10	Weld power distribution 480 VAC		1/11/2023	MKLEPADLO	
&EFS=V1WC2+V1UC164/10	Weld power distribution 480 VAC		1/11/2023	MKLEPADLO	
&EFS=V1WC2+V1UC165/10	Weld power distribution 480 VAC		1/11/2023	MKLEPADLO	
&EFS=V1WC3+V1UC11/1	Power Distribution 120 VAC (Above Disconnect)		1/11/2023	MKLEPADLO	
&EFS=V1WC3+V1UC11/2	Power Distribution 120 VAC (Below Disconnect)		1/11/2023	MKLEPADLO	
&EFS=V1WC3+V1UC11/3	Power Distribution 120 VAC (Below Disconnect)		1/11/2023	MKLEPADLO	
&EFS=V1WC3+V1UC11/4	Power distribution 120 VAC monitoring (Above Disconnect)		1/11/2023	MKLEPADLO	
&EFS=V1WC3+V1UC12/1	Power Distribution 120 VAC (Above Disconnect)		1/11/2023	MKLEPADLO	
&EFS=V1WC3+V1UC12/2	Power Distribution 120 VAC (Below Disconnect)		1/11/2023	MKLEPADLO	
&EFS=V1WC3+V1UC12/3	Power Distribution 120 VAC (Below Disconnect)		1/11/2023	MKLEPADLO	
&EFS=V1WC3+V1UC12/4	Power distribution 120 VAC monitoring (Above Disconnect)		1/11/2023	MKLEPADLO	
&EFS=V1WC3+V1UC14/1	Power distribution 120 VAC		1/11/2023	MKLEPADLO	
&EFS=V1WC3+V1UC14/2	Monitoring 120VAC		1/11/2023	MKLEPADLO	
&EFS=V1WC3+V1UC15/1	Power distribution 120 VAC		1/11/2023	MKLEPADLO	
&EFS=V1WC3+V1UC15/2	Monitoring 120VAC		1/11/2023	MKLEPADLO	
&EFS=V1WC4+V1UC11/1	Power distribution 24VDC (Above Disconnect)		1/11/2023	MKLEPADLO	
&EFS=V1WC4+V1UC11/2	Power distribution 24VDC HL+		1/11/2023	MKLEPADLO	
&EFS=V1WC4+V1UC11/3	Power distribution 24VDC 1L+		1/11/2023	MKLEPADLO	
&EFS=V1WC4+V1UC11/4	Power distribution 24VDC 2L+		1/11/2023	MKLEPADLO	
&EFS=V1WC4+V1UC11/5	Power distribution 24VDC 3L+		1/11/2023	MKLEPADLO	
&EFS=V1WC4+V1UC11/6	Power distribution 24VDC 4L+		1/11/2023	MKLEPADLO	
&EFS=V1WC4+V1UC11/7	Power distribution 24VDC 5L+		1/11/2023	MKLEPADLO	
&EFS=V1WC4+V1UC11/8	Power distribution 24VDC 6L+		1/11/2023	MKLEPADLO	
&EFS=V1WC4+V1UC11/9	Power distribution 24VDC 7L+		1/11/2023	MKLEPADLO	
&EFS=V1WC4+V1UC11/10	Power distribution 24VDC 8L+		1/11/2023	MKLEPADLO	
&EFS=V1WC4+V1UC11/11	Power distribution 24VDC (Below Disconnect)		1/11/2023	MKLEPADLO	
&EFS=V1WC4+V1UC11/12	Power distribution 24VDC 11L+		1/11/2023	MKLEPADLO	
&EFS=V1WC4+V1UC11/13	Power distribution 24VDC 12L+		1/11/2023	MKLEPADLO	
&EFS=V1WC4+V1UC11/14	Power distribution 24VDC 13L+		1/11/2023	MKLEPADLO	
&EFS=V1WC4+V1UC11/15	Power distribution 24VDC 14L+		1/11/2023	MKLEPADLO	

Table of contents

Column X: An automatically generated page was edited

F06_001

Page	Page description	supplementary page field	Date	Edited by	X
&EFS=V1WC4+V1UC11/16	Power distribution 24VDC 15L+		1/11/2023	MKLEPADLO	
&EFS=V1WC4+V1UC11/17	Power distribution 24VDC 16L+		1/11/2023	MKLEPADLO	
&EFS=V1WC4+V1UC11/18	Power distribution 24VDC 17L+		1/11/2023	MKLEPADLO	
&EFS=V1WC4+V1UC11/19	Power distribution 24VDC 18L+		1/11/2023	MKLEPADLO	
&EFS=V1WC4+V1UC11/20	24VDC Unswitched Power 1		1/11/2023	MKLEPADLO	
&EFS=V1WC4+V1UC11/21	24VDC Unswitched Power 2		1/11/2023	MKLEPADLO	
&EFS=V1WC4+V1UC11/22	24VDC Unswitched Power 3		1/11/2023	MKLEPADLO	
&EFS=V1WC4+V1UC11/23	24VDC Unswitched Power 4		1/11/2023	MKLEPADLO	
&EFS=V1WC4+V1UC11/24	24VDC Switched Power 1		1/11/2023	MKLEPADLO	
&EFS=V1WC4+V1UC11/25	24VDC Switched Power 2		1/11/2023	MKLEPADLO	
&EFS=V1WC4+V1UC11/26	24VDC Switched Power 3		1/11/2023	MKLEPADLO	
&EFS=V1WC4+V1UC11/27	24VDC Switched Power 4		1/11/2023	MKLEPADLO	
&EFS=V1WC4+V1UC12/1	Power distribution 24VDC (Above Disconnect)		1/11/2023	MKLEPADLO	
&EFS=V1WC4+V1UC12/2	Power distribution 24VDC HL+		1/11/2023	MKLEPADLO	
&EFS=V1WC4+V1UC12/3	Power distribution 24VDC 1L+		1/11/2023	MKLEPADLO	
&EFS=V1WC4+V1UC12/4	Power distribution 24VDC 2L+		1/11/2023	MKLEPADLO	
&EFS=V1WC4+V1UC12/5	Power distribution 24VDC 3L+		1/11/2023	MKLEPADLO	
&EFS=V1WC4+V1UC12/6	Power distribution 24VDC 4L+		1/11/2023	MKLEPADLO	
&EFS=V1WC4+V1UC12/7	Power distribution 24VDC 5L+		1/11/2023	MKLEPADLO	
&EFS=V1WC4+V1UC12/8	Power distribution 24VDC 6L+		1/11/2023	MKLEPADLO	
&EFS=V1WC4+V1UC12/9	Power distribution 24VDC 7L+		1/11/2023	MKLEPADLO	
&EFS=V1WC4+V1UC12/10	Power distribution 24VDC 8L+		1/11/2023	MKLEPADLO	
&EFS=V1WC4+V1UC12/11	Power distribution 24VDC (Below Disconnect)		1/11/2023	MKLEPADLO	
&EFS=V1WC4+V1UC12/12	Power distribution 24VDC 11L+		1/11/2023	MKLEPADLO	
&EFS=V1WC4+V1UC12/13	Power distribution 24VDC 12L+		1/11/2023	MKLEPADLO	
&EFS=V1WC4+V1UC12/14	Power distribution 24VDC 13L+		1/11/2023	MKLEPADLO	
&EFS=V1WC4+V1UC12/15	Power distribution 24VDC 14L+		1/11/2023	MKLEPADLO	
&EFS=V1WC4+V1UC12/16	Power distribution 24VDC 15L+		1/11/2023	MKLEPADLO	
&EFS=V1WC4+V1UC12/17	Power distribution 24VDC 16L+		1/11/2023	MKLEPADLO	
&EFS=V1WC4+V1UC12/18	Power distribution 24VDC 17L+		1/11/2023	MKLEPADLO	
&EFS=V1WC4+V1UC12/19	Power distribution 24VDC 18L+		1/11/2023	MKLEPADLO	
&EFS=V1WC4+V1UC12/20	24VDC Unswitched Power 1		1/11/2023	MKLEPADLO	
&EFS=V1WC4+V1UC12/21	24VDC Unswitched Power 2		1/11/2023	MKLEPADLO	

Table of contents

Column X: An automatically generated page was edited

F06_001

Page	Page description	supplementary page field	Date	Edited by	X
&EFS=V1WC4+V1UC12/22	24VDC Unswitched Power 3		1/11/2023	MKLEPADLO	
&EFS=V1WC4+V1UC12/23	24VDC Unswitched Power 4		1/11/2023	MKLEPADLO	
&EFS=V1WC4+V1UC12/24	24VDC Switched Power 1		1/11/2023	MKLEPADLO	
&EFS=V1WC4+V1UC12/25	24VDC Switched Power 2		1/11/2023	MKLEPADLO	
&EFS=V1WC4+V1UC12/26	24VDC Switched Power 3		1/11/2023	MKLEPADLO	
&EFS=V1WC4+V1UC12/27	24VDC Switched Power 4		1/11/2023	MKLEPADLO	
&EFS=V1WC4+V1UC14/1	Power distribution 24VDC for Inputs		1/11/2023	MKLEPADLO	
&EFS=V1WC4+V1UC14/2	Power distribution 24VDC 1L+		1/11/2023	MKLEPADLO	
&EFS=V1WC4+V1UC14/3	Power distribution 24VDC 2L+		1/11/2023	MKLEPADLO	
&EFS=V1WC4+V1UC14/4	Power distribution 24VDC 3L+		1/11/2023	MKLEPADLO	
&EFS=V1WC4+V1UC14/5	Power distribution 24VDC 4L+		1/11/2023	MKLEPADLO	
&EFS=V1WC4+V1UC14/6	Power distribution 24VDC 5L+		1/11/2023	MKLEPADLO	
&EFS=V1WC4+V1UC14/7	Power distribution 24VDC 6L+		1/11/2023	MKLEPADLO	
&EFS=V1WC4+V1UC14/8	Power distribution 24VDC 7L+		1/11/2023	MKLEPADLO	
&EFS=V1WC4+V1UC14/9	Power distribution 24VDC 8L+		1/11/2023	MKLEPADLO	
&EFS=V1WC4+V1UC14/10	Power distribution 24VDC (Below Disconnect)		1/11/2023	MKLEPADLO	
&EFS=V1WC4+V1UC14/11	Power distribution 24VDC 11L+		1/11/2023	MKLEPADLO	
&EFS=V1WC4+V1UC14/12	Power distribution 24VDC 12L+		1/11/2023	MKLEPADLO	
&EFS=V1WC4+V1UC14/13	Power distribution 24VDC 13L+		1/11/2023	MKLEPADLO	
&EFS=V1WC4+V1UC14/14	Power distribution 24VDC 14L+		1/11/2023	MKLEPADLO	
&EFS=V1WC4+V1UC14/15	Power distribution 24VDC 15L+		1/11/2023	MKLEPADLO	
&EFS=V1WC4+V1UC14/16	Power distribution 24VDC 16L+		1/11/2023	MKLEPADLO	
&EFS=V1WC4+V1UC14/17	Power distribution 24VDC 17L+		1/11/2023	MKLEPADLO	
&EFS=V1WC4+V1UC14/18	Power distribution 24VDC 18L+		1/11/2023	MKLEPADLO	
&EFS=V1WC4+V1UC14/19	24VDC Switched Power 1		1/11/2023	MKLEPADLO	
&EFS=V1WC4+V1UC14/20	24VDC Switched Power 2		1/11/2023	MKLEPADLO	
&EFS=V1WC4+V1UC14/21	24VDC Switched Power 3		1/11/2023	MKLEPADLO	
&EFS=V1WC4+V1UC14/22	24VDC Switched Power 4		1/11/2023	MKLEPADLO	
&EFS=V1WC4+V1UC15/1	Power distribution 24VDC for Inputs		1/11/2023	MKLEPADLO	
&EFS=V1WC4+V1UC15/2	Power distribution 24VDC 1L+		1/11/2023	MKLEPADLO	
&EFS=V1WC4+V1UC15/3	Power distribution 24VDC 2L+		1/11/2023	MKLEPADLO	
&EFS=V1WC4+V1UC15/4	Power distribution 24VDC 3L+		1/11/2023	MKLEPADLO	
&EFS=V1WC4+V1UC15/5	Power distribution 24VDC 4L+		1/11/2023	MKLEPADLO	

Table of contents

Column X: An automatically generated page was edited

F06_001

Page	Page description	supplementary page field	Date	Edited by	X
&EFS=V1WC4+V1UC15/6	Power distribution 24VDC 5L+		1/11/2023	MKLEPADLO	
&EFS=V1WC4+V1UC15/7	Power distribution 24VDC 6L+		1/11/2023	MKLEPADLO	
&EFS=V1WC4+V1UC15/8	Power distribution 24VDC 7L+		1/11/2023	MKLEPADLO	
&EFS=V1WC4+V1UC15/9	Power distribution 24VDC 8L+		1/11/2023	MKLEPADLO	
&EFS=V1WC4+V1UC15/10	Power distribution 24VDC (Below Disconnect)		1/11/2023	MKLEPADLO	
&EFS=V1WC4+V1UC15/11	Power distribution 24VDC 11L+		1/11/2023	MKLEPADLO	
&EFS=V1WC4+V1UC15/12	Power distribution 24VDC 12L+		1/11/2023	MKLEPADLO	
&EFS=V1WC4+V1UC15/13	Power distribution 24VDC 13L+		1/11/2023	MKLEPADLO	
&EFS=V1WC4+V1UC15/14	Power distribution 24VDC 14L+		1/11/2023	MKLEPADLO	
&EFS=V1WC4+V1UC15/15	Power distribution 24VDC 15L+		1/11/2023	MKLEPADLO	
&EFS=V1WC4+V1UC15/16	Power distribution 24VDC 16L+		1/11/2023	MKLEPADLO	
&EFS=V1WC4+V1UC15/17	Power distribution 24VDC 17L+		1/11/2023	MKLEPADLO	
&EFS=V1WC4+V1UC15/18	Power distribution 24VDC 18L+		1/11/2023	MKLEPADLO	
&EFS=V1WC4+V1UC15/19	24VDC Switched Power 1		1/11/2023	MKLEPADLO	
&EFS=V1WC4+V1UC15/20	24VDC Switched Power 2		1/11/2023	MKLEPADLO	
&EFS=V1WC4+V1UC15/21	24VDC Switched Power 3		1/11/2023	MKLEPADLO	
&EFS=V1WC4+V1UC15/22	24VDC Switched Power 4		1/11/2023	MKLEPADLO	
&EFS=V1WC4+V1UC32/1	Incomming power supply 24 VDC		1/11/2023	MKLEPADLO	
&EFS=V1WC4+V1UC32/2	Power distribution 24VDC 1L+		1/11/2023	MKLEPADLO	
&EFS=V1WC4+V1UC32/3	Monitoring 24VDC		1/11/2023	MKLEPADLO	
&ELU=KF0+UC31/1	Layout		1/11/2023	MKLEPADLO	
&ELU=KF0+UC31/2	Layout UC31 External View		1/11/2023	MKLEPADLO	
&ELU=KF0+UC31/3	Layout UC31 Internal View		1/11/2023	MKLEPADLO	
&ELU=V1PZ1PF1+V1UC61/1	Layout UC61 SL External View		1/11/2023	MKLEPADLO	
&ELU=V1PZ1PF1+V1UC61/2	Layout UC61 SL Internal View		1/11/2023	MKLEPADLO	
&ELU=V1PZ1PF2+V1UC62/1	Layout UC62 SL External View		1/11/2023	MKLEPADLO	
&ELU=V1PZ1PF2+V1UC62/2	Layout UC62 SL Internal View		1/11/2023	MKLEPADLO	
&ELU=V1PZ1PF3+V1UC63/1	Layout UC63 SL External View		1/11/2023	MKLEPADLO	
&ELU=V1PZ1PF3+V1UC63/2	Layout UC63 SL Internal View		1/11/2023	MKLEPADLO	
&ELU=V1PZ1PF4+V1UC64/1	Layout UC64 SL External View		1/11/2023	MKLEPADLO	
&ELU=V1PZ1PF4+V1UC64/2	Layout UC64 SL Internal View		1/11/2023	MKLEPADLO	
&ELU=V1SF0PG1+V1UC32/1	Layout UC32 SOP External View		1/11/2023	MKLEPADLO	
&ELU=V1SF0PG1+V1UC32/2	Layout UC32 SOP Internal View		1/11/2023	MKLEPADLO	

Table of contents

Column X: An automatically generated page was edited

F06_001

Page	Page description	supplementary page field	Date	Edited by	X
&ELU=V1SF0PG2+V1UC51/1	Layout UC51 OD External View		1/11/2023	MKLEPADLO	
&ELU=V1SF0PG3+V1UC52/1	Layout UC52 OD External View		1/11/2023	MKLEPADLO	
&ELU=V1SF0PG4+V1UC53/1	Layout UC53 OD External View		1/11/2023	MKLEPADLO	
&ELU=V1SF0PG5+V1UC54/1	Layout UC54 OD External View		1/11/2023	MKLEPADLO	
&ELU=V1SF0SF1+V1UC71/1	LAYOUT UC71 RB EXTERNAL VIEW		1/11/2023	MKLEPADLO	
&ELU=V1SF0SF2+V1UC72/1	LAYOUT UC72 RB EXTERNAL VIEW		1/11/2023	MKLEPADLO	
&ELU=V1SF0SF3+V1UC73/1	LAYOUT UC73 RB EXTERNAL VIEW		1/11/2023	MKLEPADLO	
&ELU=V1SF0SF4+V1UC74/1	LAYOUT UC74 RB EXTERNAL VIEW		1/11/2023	MKLEPADLO	
&ELU=V1UC11+V1UC11/1	Layout UC11 PDP External View		1/11/2023	MKLEPADLO	
&ELU=V1UC11+V1UC11/2	Layout UC11 PDP Internal View		1/11/2023	MKLEPADLO	
&ELU=V1UC12+V1UC12/1	Layout UC12 PDP External View		1/11/2023	MKLEPADLO	
&ELU=V1UC12+V1UC12/2	Layout UC12 PDP Internal View		1/11/2023	MKLEPADLO	
&ELU=V1UC14+V1UC14/1	Layout UC14 RIO External View		1/11/2023	MKLEPADLO	
&ELU=V1UC14+V1UC14/2	Layout UC14 RIO Internal Controls View		1/11/2023	MKLEPADLO	
&ELU=V1UC15+V1UC15/1	Layout UC15 RIO External View		1/11/2023	MKLEPADLO	
&ELU=V1UC15+V1UC15/2	Layout UC15 RIO Internal Controls View		1/11/2023	MKLEPADLO	
&EMC/1	Cable overview		1/17/2023	MKLEPADLO	
&EMC/2	Cable overview		1/17/2023	MKLEPADLO	
&EMC/3	Cable overview		1/17/2023	MKLEPADLO	
&EMC/4	Cable overview		1/17/2023	MKLEPADLO	
&EMC/5	Cable overview		1/17/2023	MKLEPADLO	
&EMC/6	Cable overview		1/17/2023	MKLEPADLO	
&EMC/7	Cable overview		1/17/2023	MKLEPADLO	
&EMC/8	Cable overview		1/17/2023	MKLEPADLO	
&EMC/9	Cable overview		1/17/2023	MKLEPADLO	
&EMC/10	Cable overview		1/17/2023	MKLEPADLO	
&EMC/11	Cable overview		1/17/2023	MKLEPADLO	
&EMC/12	Cable overview		1/17/2023	MKLEPADLO	
&EMC/13	Cable overview		1/17/2023	MKLEPADLO	
&EMC/14	Cable overview		1/17/2023	MKLEPADLO	
&EMC/15	Cable overview		1/17/2023	MKLEPADLO	
&EMC/16	Cable overview		1/17/2023	MKLEPADLO	
&EMC/17	Cable overview		1/17/2023	MKLEPADLO	

Table of contents

Column X: An automatically generated page was edited

F06_001

Page	Page description	supplementary page field	Date	Edited by	X
&EMC/18	Cable overview		1/17/2023	MKLEPADLO	
&EMC/19	Cable overview		1/17/2023	MKLEPADLO	
&EMC/20	Cable overview		1/17/2023	MKLEPADLO	
&EMC/21	Cable overview		1/17/2023	MKLEPADLO	
&EMC/22	Cable overview		1/17/2023	MKLEPADLO	
&EMC/23	Cable overview		1/17/2023	MKLEPADLO	
&EMC/24	Cable overview		1/17/2023	MKLEPADLO	
&EMC/25	Cable overview		1/17/2023	MKLEPADLO	
&EMC/26	Cable overview		1/17/2023	MKLEPADLO	
&EMC/27	Cable overview		1/17/2023	MKLEPADLO	
&EPB/1	Parts list : TS 35_7,5 - TS 35_7,5		1/17/2023	MKLEPADLO	
&EPB+KH0/1	Parts list : TUR.BS 8251-0/PG9 - TUR.BS 8251-0/PG9		1/17/2023	MKLEPADLO	
&EPB+UC31/1	Parts list : US2.ECGB5 - SIE.6EP3336-7SB00-3AX0		1/17/2023	MKLEPADLO	
&EPB+UC31UC91/1	Parts list : ABB.1SFA619550R1051 - ABB.1SFA619100R1023		1/17/2023	MKLEPADLO	
&EPB+UC31UC92/1	Parts list : ABB.1SFA619100R1111 - ABB.1SFA619200R1016		1/17/2023	MKLEPADLO	
&EPB+UC32/1	Parts list : ABB.1SFA619550R1051 - ABB.1SFA616915R1005		1/17/2023	MKLEPADLO	
&EPB+V1AR11UQ41/1	Parts list : TUR.1625891 - TUR.RSM-2RKM 50		1/17/2023	MKLEPADLO	
&EPB+V1AR11UQ41UQ1.1/1	Parts list : WELKER.WWS001A - WELKER.WWS001A		1/17/2023	MKLEPADLO	
&EPB+V1AR11UQ41UQ1.2/1	Parts list : WELKER.WWS001A - WELKER.WWS001A		1/17/2023	MKLEPADLO	
&EPB+V1AR11UQ41UQ1.3/1	Parts list : WELKER.WWS001A - WELKER.WWS001A		1/17/2023	MKLEPADLO	
&EPB+V1AR11UQ41UQ1.4/1	Parts list : WELKER.WWS001A - WELKER.WWS001A		1/17/2023	MKLEPADLO	
&EPB+V1AR11UQ41UQ2.1/1	Parts list : TUN.1324633 - TUN.1324633		1/17/2023	MKLEPADLO	
&EPB+V1AR11UQ41UQ2.2/1	Parts list : TUN.1324633 - TUN.1324633		1/17/2023	MKLEPADLO	
&EPB+V1AR11UQ41UQ2.3/1	Parts list : TUN.1324633 - TUN.1324633		1/17/2023	MKLEPADLO	
&EPB+V1AR11UQ41UQ3.1/1	Parts list : TUN.1324633 - TUN.1324633		1/17/2023	MKLEPADLO	
&EPB+V1AR11UQ41UQ3.2/1	Parts list : TUN.1324633 - TUN.1324633		1/17/2023	MKLEPADLO	
&EPB+V1AR11UQ41UQ4.1/1	Parts list : TUN.1324633 - TUN.1324633		1/17/2023	MKLEPADLO	
&EPB+V1AR11UQ41UQ4.2/1	Parts list : TUN.1324633 - TUN.1324633		1/17/2023	MKLEPADLO	
&EPB+V1AR11UQ41UQ4.3/1	Parts list : TUN.1324633 - TUN.1324633		1/17/2023	MKLEPADLO	
&EPB+V1AR11UQ41UQ5.1/1	Parts list : TUN.1324633 - TUN.1324633		1/17/2023	MKLEPADLO	
&EPB+V1AR11UQ41UQ5.2/1	Parts list : TUN.1324633 - TUN.1324633		1/17/2023	MKLEPADLO	
&EPB+V1AR11UQ41UQ5.3/1	Parts list : TUN.1324633 - TUN.1324633		1/17/2023	MKLEPADLO	
&EPB+V1AR11UQ41UQ6.1/1	Parts list : TUN.1324633 - TUN.1324633		1/17/2023	MKLEPADLO	

Table of contents

Column X: An automatically generated page was edited

F06_001

Page	Page description	supplementary page field	Date	Edited by	X
&EPB+V1AR11UQ41UQ7.1/1	Parts list : TUN.1324633 - TUN.1324633		1/17/2023	MKLEPADLO	
&EPB+V1AR11UQ41UQ8.1/1	Parts list : TUN.1324633 - TUN.1324633		1/17/2023	MKLEPADLO	
&EPB+V1AR11UQ41UQ9.1/1	Parts list : TUN.1324633 - TUN.1324633		1/17/2023	MKLEPADLO	
&EPB+V1AR11UQ41UQ9.2/1	Parts list : TUN.1324633 - TUN.1324633		1/17/2023	MKLEPADLO	
&EPB+V1AR11UQ41UQ10.1/1	Parts list : TUN.1324633 - TUN.1324633		1/17/2023	MKLEPADLO	
&EPB+V1AR11UQ41UQ10.2/1	Parts list : TUN.1324633 - TUN.1324633		1/17/2023	MKLEPADLO	
&EPB+V1AR21XQ11UC01/1	Parts list : ABB.2CMA193115R1000 - ABB.2CMA193115R1000		1/17/2023	MKLEPADLO	
&EPB+V1AR21XQ12UC01/1	Parts list : ABB.2CMA193115R1000 - ABB.2CMA193115R1000		1/17/2023	MKLEPADLO	
&EPB+V1AR22XQ11UC01/1	Parts list : ABB.2CMA193115R1000 - ABB.2CMA193115R1000		1/17/2023	MKLEPADLO	
&EPB+V1AR22XQ12UC01/1	Parts list : ABB.2CMA193115R1000 - ABB.2CMA193115R1000		1/17/2023	MKLEPADLO	
&EPB+V1AR23XQ11UC01/1	Parts list : ABB.2CMA193115R1000 - ABB.2CMA193115R1000		1/17/2023	MKLEPADLO	
&EPB+V1AR23XQ12UC01/1	Parts list : ABB.2CMA193115R1000 - ABB.2CMA193115R1000		1/17/2023	MKLEPADLO	
&EPB+V1AR24XQ11UC01/1	Parts list : ABB.2CMA193115R1000 - ABB.2CMA193115R1000		1/17/2023	MKLEPADLO	
&EPB+V1AR25XQ11UC01/1	Parts list : ABB.2CMA193115R1000 - ABB.2CMA193115R1000		1/17/2023	MKLEPADLO	
&EPB+V1AR26XQ11UC01/1	Parts list : ABB.2CMA193115R1000 - ABB.2CMA193115R1000		1/17/2023	MKLEPADLO	
&EPB+V1AR27XQ11UC01/1	Parts list : ABB.2CMA193115R1000 - ABB.2CMA193115R1000		1/17/2023	MKLEPADLO	
&EPB+V1AR28XQ11UC01/1	Parts list : ABB.2CMA193115R1000 - ABB.2CMA193115R1000		1/17/2023	MKLEPADLO	
&EPB+V1AR28XQ12UC01/1	Parts list : ABB.2CMA193115R1000 - ABB.2CMA193115R1000		1/17/2023	MKLEPADLO	
&EPB+V1AR29XQ11UC01/1	Parts list : ABB.2CMA193115R1000 - ABB.2CMA193115R1000		1/17/2023	MKLEPADLO	
&EPB+V1AR31UQ41/1	Parts list : TUR.1625891 - FES.549335		1/17/2023	MKLEPADLO	
&EPB+V1AR31UQ41UQ1.1/1	Parts list : WEL.WWS001A - WEL.WWS001A		1/17/2023	MKLEPADLO	
&EPB+V1AR31UQ41UQ2.1/1	Parts list : TUN.1324638 - TUN.1324638		1/17/2023	MKLEPADLO	
&EPB+V1AR31UQ41UQ2.2/1	Parts list : TUN.1324638 - TUN.1324638		1/17/2023	MKLEPADLO	
&EPB+V1AR31UQ41UQ3.1/1	Parts list : TUN.1324638 - TUN.1324638		1/17/2023	MKLEPADLO	
&EPB+V1AR31UQ41UQ4.1/1	Parts list : TUN.1324638 - TUN.1324638		1/17/2023	MKLEPADLO	
&EPB+V1AR31UQ41UQ5.1/1	Parts list : TUN.1324638 - TUN.1324638		1/17/2023	MKLEPADLO	
&EPB+V1AR31UQ41UQ6.1/1	Parts list : TUN.1324638 - TUN.1324638		1/17/2023	MKLEPADLO	
&EPB+V1AR31UQ41UQ7.1/1	Parts list : TUN.1324638 - TUN.1324638		1/17/2023	MKLEPADLO	
&EPB+V1AR31UQ41UQ7.2/1	Parts list : TUN.1324638 - TUN.1324638		1/17/2023	MKLEPADLO	
&EPB+V1AR31UQ41UQ8.1/1	Parts list : TUN.1324638 - TUN.1324638		1/17/2023	MKLEPADLO	
&EPB+V1AR31UQ41UQ8.2/1	Parts list : TUN.1324638 - TUN.1324638		1/17/2023	MKLEPADLO	
&EPB+V1AR31UQ41UQ9.1/1	Parts list : TUN.1324638 - TUN.1324638		1/17/2023	MKLEPADLO	
&EPB+V1AR31UQ41UQ9.2/1	Parts list : TUN.1324638 - TUN.1324638		1/17/2023	MKLEPADLO	

Table of contents

Column X: An automatically generated page was edited

F06_001

Page	Page description	supplementary page field	Date	Edited by	X
&EPB+V1AR31XQ41/1	Parts list : FES.548755 - FES.549335		1/17/2023	MKLEPADLO	
&EPB+V1AR31XQ41UQ1.1/1	Parts list : TUR.1627205 - TUR.VB2-FSM 4.4/2FKM 4/S3450		1/17/2023	MKLEPADLO	
&EPB+V1AR81UQ41/1	Parts list : TUR.1625891 - FES.549335		1/17/2023	MKLEPADLO	
&EPB+V1AR81UQ41UQ1.1/1	Parts list : WEL.WWS001A - WEL.WWS001A		1/17/2023	MKLEPADLO	
&EPB+V1AR81UQ41UQ2.1/1	Parts list : WEL.WWS001A - WEL.WWS001A		1/17/2023	MKLEPADLO	
&EPB+V1AR81UQ41UQ3.1/1	Parts list : WEL.WWS001A - WEL.WWS001A		1/17/2023	MKLEPADLO	
&EPB+V1AR81UQ41UQ4.1/1	Parts list : WEL.WWS001A - WEL.WWS001A		1/17/2023	MKLEPADLO	
&EPB+V1AR81UQ41UQ5.1/1	Parts list : WEL.WWS001A - WEL.WWS001A		1/17/2023	MKLEPADLO	
&EPB+V1AR81UQ41UQ6.1/1	Parts list : TUN.1324638 - TUN.1324638		1/17/2023	MKLEPADLO	
&EPB+V1AR81UQ41UQ6.2/1	Parts list : TUN.1324638 - TUN.1324638		1/17/2023	MKLEPADLO	
&EPB+V1AR81UQ41UQ6.3/1	Parts list : TUN.1324638 - TUN.1324638		1/17/2023	MKLEPADLO	
&EPB+V1AR81UQ41UQ6.4/1	Parts list : TUN.1324638 - TUN.1324638		1/17/2023	MKLEPADLO	
&EPB+V1AR81UQ41UQ7.1/1	Parts list : TUN.1324638 - TUN.1324638		1/17/2023	MKLEPADLO	
&EPB+V1AR81UQ41UQ7.2/1	Parts list : TUN.1324638 - TUN.1324638		1/17/2023	MKLEPADLO	
&EPB+V1AR81UQ41UQ8.1/1	Parts list : TUN.1324638 - TUN.1324638		1/17/2023	MKLEPADLO	
&EPB+V1AR81UQ41UQ8.2/1	Parts list : TUN.1324638 - TUN.1324638		1/17/2023	MKLEPADLO	
&EPB+V1AR81UQ41UQ9.1/1	Parts list : TUN.1324638 - TUN.1324638		1/17/2023	MKLEPADLO	
&EPB+V1AR81UQ41UQ9.2/1	Parts list : TUN.1324638 - TUN.1324638		1/17/2023	MKLEPADLO	
&EPB+V1AR81XQ51UC01/1	Parts list : ABB.2CMA193115R1000 - ABB.2CMA193115R1000		1/17/2023	MKLEPADLO	
&EPB+V1AR81XQ52UC01/1	Parts list : ABB.2CMA193115R1000 - ABB.2CMA193115R1000		1/17/2023	MKLEPADLO	
&EPB+V1AR211XQ11UC01/1	Parts list : ABB.2CMA193115R1000 - ABB.2CMA193115R1000		1/17/2023	MKLEPADLO	
&EPB+V1AR212XQ11UC01/1	Parts list : ABB.2CMA193115R1000 - ABB.2CMA193115R1000		1/17/2023	MKLEPADLO	
&EPB+V1FQ1/1	Parts list : BAN.SLSCP30-1200P44NT - BAN.SLSCP30-1200P44NT		1/17/2023	MKLEPADLO	
&EPB+V1FQ1BG1/1	Parts list : EUC.MGB-L2B-PNA-L-121863 - EUC.MGB-E-A2-106051		1/17/2023	MKLEPADLO	
&EPB+V1FQ1BG2/1	Parts list : EUC.MGB-L2B-PNA-L-121863 - EUC.MGB-E-A2-106051		1/17/2023	MKLEPADLO	
&EPB+V1FQ1BG3/1	Parts list : EUC.MGB-L2B-PNA-L-121863 - EUC.MGB-E-A2-106051		1/17/2023	MKLEPADLO	
&EPB+V1FQ1BG4/1	Parts list : EUC.MGB-L2B-PNA-L-121863 - EUC.MGB-E-A2-106051		1/17/2023	MKLEPADLO	
&EPB+V1FQ1BG5/1	Parts list : EUC.MGB-L2B-PNA-L-121863 - EUC.MGB-E-A2-106051		1/17/2023	MKLEPADLO	
&EPB+V1FQ1BG6/1	Parts list : EUC.MGB-L2B-PNA-L-121863 - EUC.MGB-E-A2-106051		1/17/2023	MKLEPADLO	
&EPB+V1GL1UQ51/1	Parts list : TUR.1627297 - TUR.RSM-2RKM 50		1/17/2023	MKLEPADLO	
&EPB+V1GL1UQ51UQ1.1/1	Parts list : WEL.WWS001A - WEL.WWS001A		1/17/2023	MKLEPADLO	
&EPB+V1GL1UQ51UQ1.2/1	Parts list : WEL.WWS001A - WEL.WWS001A		1/17/2023	MKLEPADLO	
&EPB+V1GL1UQ51UQ1.3/1	Parts list : WEL.WWS001A - WEL.WWS001A		1/17/2023	MKLEPADLO	

Table of contents

Column X: An automatically generated page was edited

F06_001

Page	Page description	supplementary page field	Date	Edited by	X
&EPB+V1GL1UQ51UQ2.1/1	Parts list : WEL.WWS001A - WEL.WWS001A		1/17/2023	MKLEPADLO	
&EPB+V1GL1UQ51UQ3.1/1	Parts list : WEL.WWS001A - WEL.WWS001A		1/17/2023	MKLEPADLO	
&EPB+V1GL1UQ51UQ3.2/1	Parts list : WEL.WWS001A - WEL.WWS001A		1/17/2023	MKLEPADLO	
&EPB+V1GL1UQ51UQ4.1/1	Parts list : WEL.WWS001A - WEL.WWS001A		1/17/2023	MKLEPADLO	
&EPB+V1GL1UQ51UQ4.2/1	Parts list : WEL.WWS001A - WEL.WWS001A		1/17/2023	MKLEPADLO	
&EPB+V1GL1UQ51UQ5.1/1	Parts list : WEL.WWS001A - WEL.WWS001A		1/17/2023	MKLEPADLO	
&EPB+V1GL1UQ51UQ6.1/1	Parts list : WEL.WWS001A - WEL.WWS001A		1/17/2023	MKLEPADLO	
&EPB+V1GL1UQ51UQ7.1/1	Parts list : TUR.BI2-CRS260-AP4X2-H1141/S34 - TUR.VB2-FSM 4.4/2FKM 4/S3450		1/17/2023	MKLEPADLO	
&EPB+V1GL1UQ51UQ8.1/1	Parts list : WEL.WWS001A - WEL.WWS001A		1/17/2023	MKLEPADLO	
&EPB+V1GL1UQ51UQ8.2/1	Parts list : WEL.WWS001A - WEL.WWS001A		1/17/2023	MKLEPADLO	
&EPB+V1GL1UQ51UQ8.3/1	Parts list : WEL.WWS001A - WEL.WWS001A		1/17/2023	MKLEPADLO	
&EPB+V1GL1UQ51UQ9.1/1	Parts list : WEL.WWS001A - WEL.WWS001A		1/17/2023	MKLEPADLO	
&EPB+V1GL1UQ51UQ10.1/1	Parts list : WEL.WWS001A - WEL.WWS001A		1/17/2023	MKLEPADLO	
&EPB+V1GL1UQ51UQ11.1/1	Parts list : TUN.1324638 - TUN.1324638		1/17/2023	MKLEPADLO	
&EPB+V1GL1UQ51UQ11.2/1	Parts list : TUN.1324638 - TUN.1324638		1/17/2023	MKLEPADLO	
&EPB+V1GL1UQ51UQ11.3/1	Parts list : TUN.1324638 - TUN.1324638		1/17/2023	MKLEPADLO	
&EPB+V1GL1UQ51UQ11.4/1	Parts list : TUN.1324638 - TUN.1324638		1/17/2023	MKLEPADLO	
&EPB+V1GL1UQ51UQ11.5/1	Parts list : TUN.1324638 - TUN.1324638		1/17/2023	MKLEPADLO	
&EPB+V1GL1UQ51UQ11.6/1	Parts list : TUN.1324638 - TUN.1324638		1/17/2023	MKLEPADLO	
&EPB+V1GL1UQ51UQ12.1/1	Parts list : TUN.1324644 - TUN.1324644		1/17/2023	MKLEPADLO	
&EPB+V1GL1UQ51UQ12.2/1	Parts list : TUN.1324644 - TUN.1324644		1/17/2023	MKLEPADLO	
&EPB+V1GL1UQ51UQ12.3/1	Parts list : TUN.1324638 - TUN.1324638		1/17/2023	MKLEPADLO	
&EPB+V1GL1UQ51UQ12.4/1	Parts list : TUN.1324638 - TUN.1324638		1/17/2023	MKLEPADLO	
&EPB+V1GL1UQ51UQ13.1/1	Parts list : TUN.1324638 - TUN.1324638		1/17/2023	MKLEPADLO	
&EPB+V1GL1UQ51UQ13.2/1	Parts list : TUN.1324638 - TUN.1324638		1/17/2023	MKLEPADLO	
&EPB+V1GL1UQ51UQ14.1/1	Parts list : TUN.1324644 - TUN.1324644		1/17/2023	MKLEPADLO	
&EPB+V1GL1UQ51UQ14.2/1	Parts list : TUN.1324644 - TUN.1324644		1/17/2023	MKLEPADLO	
&EPB+V1GL1UQ51UQ14.3/1	Parts list : TUN.1324644 - TUN.1324644		1/17/2023	MKLEPADLO	
&EPB+V1GL1UQ51UQ14.4/1	Parts list : TUN.1324644 - TUN.1324644		1/17/2023	MKLEPADLO	
&EPB+V1GL1UQ51UQ15.1/1	Parts list : TUN.285425 - TUN.285425		1/17/2023	MKLEPADLO	
&EPB+V1GL1UQ51UQ16.1/1	Parts list : TUN.1324644 - TUN.1324644		1/17/2023	MKLEPADLO	
&EPB+V1GL1UQ51UQ17.1/1	Parts list : TUN.1324638 - TUN.1324638		1/17/2023	MKLEPADLO	
&EPB+V1GL1UQ51UQ18.1/1	Parts list : P+F.NBN2-F581-100S6-E8-V1 - P+F.NBN2-F581-100S6-E8-V1		1/17/2023	MKLEPADLO	

Table of contents

Column X: An automatically generated page was edited

F06_001

Page	Page description	supplementary page field	Date	Edited by	X
&EPB+V1GL1UQ51UQ19.1/1	Parts list : TUN.1324638 - TUN.1324638		1/17/2023	MKLEPADLO	
&EPB+V1GL1UQ51UQ20.1/1	Parts list : TUN.1324638 - TUN.1324638		1/17/2023	MKLEPADLO	
&EPB+V1GL1UQ51UQ21.1/1	Parts list : TUN.1324644 - TUN.1324644		1/17/2023	MKLEPADLO	
&EPB+V1GL1UQ51UQ22.1/1	Parts list : TUN.1324638 - TUN.1324638		1/17/2023	MKLEPADLO	
&EPB+V1GL1UQ51UQ23.1/1	Parts list : TUN.1324644 - TUN.1324644		1/17/2023	MKLEPADLO	
&EPB+V1GL1UQ51UQ24.1/1	Parts list : TUN.1324638 - TUN.1324638		1/17/2023	MKLEPADLO	
&EPB+V1GL1UQ51UQ25.1/1	Parts list : WEL.WWS001A - WEL.WWS001A		1/17/2023	MKLEPADLO	
&EPB+V1GL1UQ51UQ26.1/1	Parts list : TUN.1324638 - TUN.1324638		1/17/2023	MKLEPADLO	
&EPB+V1GL1UQ51UQ26.2/1	Parts list : TUN.1324644 - TUN.1324644		1/17/2023	MKLEPADLO	
&EPB+V1GL1UQ52/1	Parts list : TUR.1627297 - FES.549335		1/17/2023	MKLEPADLO	
&EPB+V1GL1UQ52/2	Parts list : FES.549335 - TUR.RSM-2RKM 50		1/17/2023	MKLEPADLO	
&EPB+V1GL1UQ52UQ1.1/1	Parts list : WEL.WWS001A - WEL.WWS001A		1/17/2023	MKLEPADLO	
&EPB+V1GL1UQ52UQ1.2/1	Parts list : WEL.WWS001A - WEL.WWS001A		1/17/2023	MKLEPADLO	
&EPB+V1GL1UQ52UQ1.3/1	Parts list : WEL.WWS001A - WEL.WWS001A		1/17/2023	MKLEPADLO	
&EPB+V1GL1UQ52UQ1.4/1	Parts list : WEL.WWS001A - WEL.WWS001A		1/17/2023	MKLEPADLO	
&EPB+V1GL1UQ52UQ1.5/1	Parts list : WEL.WWS001A - WEL.WWS001A		1/17/2023	MKLEPADLO	
&EPB+V1GL1UQ52UQ1.6/1	Parts list : WEL.WWS001A - WEL.WWS001A		1/17/2023	MKLEPADLO	
&EPB+V1GL1UQ52UQ2.1/1	Parts list : WEL.WWS001A - WEL.WWS001A		1/17/2023	MKLEPADLO	
&EPB+V1GL1UQ52UQ3.1/1	Parts list : WEL.WWS001A - WEL.WWS001A		1/17/2023	MKLEPADLO	
&EPB+V1GL1UQ52UQ3.2/1	Parts list : WEL.WWS001A - WEL.WWS001A		1/17/2023	MKLEPADLO	
&EPB+V1GL1UQ52UQ3.3/1	Parts list : WEL.WWS001A - WEL.WWS001A		1/17/2023	MKLEPADLO	
&EPB+V1GL1UQ52UQ3.4/1	Parts list : WEL.WWS001A - WEL.WWS001A		1/17/2023	MKLEPADLO	
&EPB+V1GL1UQ52UQ3.5/1	Parts list : WEL.WWS001A - WEL.WWS001A		1/17/2023	MKLEPADLO	
&EPB+V1GL1UQ52UQ3.6/1	Parts list : WEL.WWS001A - WEL.WWS001A		1/17/2023	MKLEPADLO	
&EPB+V1GL1UQ52UQ4.1/1	Parts list : WEL.WWS001A - WEL.WWS001A		1/17/2023	MKLEPADLO	
&EPB+V1GL1UQ52UQ4.2/1	Parts list : WEL.WWS001A - WEL.WWS001A		1/17/2023	MKLEPADLO	
&EPB+V1GL1UQ52UQ4.3/1	Parts list : WEL.WWS001A - WEL.WWS001A		1/17/2023	MKLEPADLO	
&EPB+V1GL1UQ52UQ5.1/1	Parts list : WEL.WWS001A - WEL.WWS001A		1/17/2023	MKLEPADLO	
&EPB+V1GL1UQ52UQ5.2/1	Parts list : WEL.WWS001A - WEL.WWS001A		1/17/2023	MKLEPADLO	
&EPB+V1GL1UQ52UQ5.3/1	Parts list : WEL.WWS001A - WEL.WWS001A		1/17/2023	MKLEPADLO	
&EPB+V1GL1UQ52UQ6.1/1	Parts list : WEL.WWS001A - WEL.WWS001A		1/17/2023	MKLEPADLO	
&EPB+V1GL1UQ52UQ7.1/1	Parts list : WEL.WWS001A - WEL.WWS001A		1/17/2023	MKLEPADLO	
&EPB+V1GL1UQ52UQ8.1/1	Parts list : TUR.16449050 - TUR.VB2-FSM 4.4/2FKM 4/S3450		1/17/2023	MKLEPADLO	

Table of contents

Column X: An automatically generated page was edited

F06_001

Page	Page description	supplementary page field	Date	Edited by	X
&EPB+V1GL1UQ52UQ9.1/1	Parts list : WEL.WWS001A - WEL.WWS001A		1/17/2023	MKLEPADLO	
&EPB+V1GL1UQ52UQ9.2/1	Parts list : WEL.WWS001A - WEL.WWS001A		1/17/2023	MKLEPADLO	
&EPB+V1GL1UQ52UQ10.1/1	Parts list : TUN.1324638 - TUN.1324638		1/17/2023	MKLEPADLO	
&EPB+V1GL1UQ52UQ10.2/1	Parts list : TUN.1324644 - TUN.1324644		1/17/2023	MKLEPADLO	
&EPB+V1GL1UQ52UQ10.3/1	Parts list : TUN.1324638 - TUN.1324638		1/17/2023	MKLEPADLO	
&EPB+V1GL1UQ52UQ10.4/1	Parts list : TUN.1324638 - TUN.1324638		1/17/2023	MKLEPADLO	
&EPB+V1GL1UQ52UQ10.5/1	Parts list : TUN.1324638 - TUN.1324638		1/17/2023	MKLEPADLO	
&EPB+V1GL1UQ52UQ10.6/1	Parts list : TUN.1324638 - TUN.1324638		1/17/2023	MKLEPADLO	
&EPB+V1GL1UQ52UQ11.1/1	Parts list : TUN.1324644 - TUN.1324644		1/17/2023	MKLEPADLO	
&EPB+V1GL1UQ52UQ11.2/1	Parts list : TUN.1324644 - TUN.1324644		1/17/2023	MKLEPADLO	
&EPB+V1GL1UQ52UQ11.3/1	Parts list : TUN.1324638 - TUN.1324638		1/17/2023	MKLEPADLO	
&EPB+V1GL1UQ52UQ11.4/1	Parts list : TUN.1324638 - TUN.1324638		1/17/2023	MKLEPADLO	
&EPB+V1GL1UQ52UQ11.5/1	Parts list : TUN.1324644 - TUN.1324644		1/17/2023	MKLEPADLO	
&EPB+V1GL1UQ52UQ12.1/1	Parts list : TUN.1324638 - TUN.1324638		1/17/2023	MKLEPADLO	
&EPB+V1GL1UQ52UQ12.2/1	Parts list : TUN.1324644 - TUN.1324644		1/17/2023	MKLEPADLO	
&EPB+V1GL1UQ52UQ12.3/1	Parts list : TUN.1324644 - TUN.1324644		1/17/2023	MKLEPADLO	
&EPB+V1GL1UQ52UQ12.4/1	Parts list : TUN.1324644 - TUN.1324644		1/17/2023	MKLEPADLO	
&EPB+V1GL1UQ52UQ12.5/1	Parts list : TUN.1324638 - TUN.1324638		1/17/2023	MKLEPADLO	
&EPB+V1GL1UQ52UQ12.6/1	Parts list : TUN.1324644 - TUN.1324644		1/17/2023	MKLEPADLO	
&EPB+V1GL1UQ52UQ13.1/1	Parts list : TUN.1324644 - TUN.1324644		1/17/2023	MKLEPADLO	
&EPB+V1GL1UQ52UQ14.1/1	Parts list : TUN.1324644 - TUN.1324644		1/17/2023	MKLEPADLO	
&EPB+V1GL1UQ52UQ15.1/1	Parts list : TUN.1324638 - TUN.1324638		1/17/2023	MKLEPADLO	
&EPB+V1GL1UQ52UQ16.1/1	Parts list : TUN.1324638 - TUN.1324638		1/17/2023	MKLEPADLO	
&EPB+V1GL1UQ52UQ16.2/1	Parts list : TUN.1324644 - TUN.1324644		1/17/2023	MKLEPADLO	
&EPB+V1GL1UQ52UQ17.1/1	Parts list : TUN.1324638 - TUN.1324638		1/17/2023	MKLEPADLO	
&EPB+V1GL1UQ52UQ18.1/1	Parts list : WEL.WWS001A - WEL.WWS001A		1/17/2023	MKLEPADLO	
&EPB+V1GL1UQ52UQ18.2/1	Parts list : WEL.WWS001A - WEL.WWS001A		1/17/2023	MKLEPADLO	
&EPB+V1GL1UQ52UQ19.1/1	Parts list : TUN.1324638 - TUN.1324638		1/17/2023	MKLEPADLO	
&EPB+V1GL1UQ52UQ19.2/1	Parts list : TUN.1324638 - TUN.1324638		1/17/2023	MKLEPADLO	
&EPB+V1GL1UQ52UQ20.1/1	Parts list : TUN.1324638 - TUN.1324638		1/17/2023	MKLEPADLO	
&EPB+V1GL1UQ52UQ21.1/1	Parts list : WEL.WWS001A - WEL.WWS001A		1/17/2023	MKLEPADLO	
&EPB+V1GL1UQ52UQ22.1/1	Parts list : WEL.WWS001A - WEL.WWS001A		1/17/2023	MKLEPADLO	
&EPB+V1GL1UQ52UQ23.1/1	Parts list : WEL.WWS001A - WEL.WWS001A		1/17/2023	MKLEPADLO	

Table of contents

Column X: An automatically generated page was edited

F06_001

Page	Page description	supplementary page field	Date	Edited by	X
&EPB+V1GL1UQ52UQ24.1/1	Parts list : TUN.1324644 - TUN.1324644		1/17/2023	MKLEPADLO	
&EPB+V1GL1UQ52UQ25.1/1	Parts list : TUN.1324644 - TUN.1324644		1/17/2023	MKLEPADLO	
&EPB+V1GL1UQ53/1	Parts list : TUR.1627297 - TUR.RSM-2RKM 50		1/17/2023	MKLEPADLO	
&EPB+V1GL1UQ53UQ1.1/1	Parts list : WEL.WWS001A - WEL.WWS001A		1/17/2023	MKLEPADLO	
&EPB+V1GL1UQ53UQ1.2/1	Parts list : WEL.WWS001A - WEL.WWS001A		1/17/2023	MKLEPADLO	
&EPB+V1GL1UQ53UQ1.3/1	Parts list : WEL.WWS001A - WEL.WWS001A		1/17/2023	MKLEPADLO	
&EPB+V1GL1UQ53UQ2.1/1	Parts list : WEL.WWS001A - WEL.WWS001A		1/17/2023	MKLEPADLO	
&EPB+V1GL1UQ53UQ3.1/1	Parts list : WEL.WWS001A - WEL.WWS001A		1/17/2023	MKLEPADLO	
&EPB+V1GL1UQ53UQ3.2/1	Parts list : WEL.WWS001A - WEL.WWS001A		1/17/2023	MKLEPADLO	
&EPB+V1GL1UQ53UQ4.1/1	Parts list : WEL.WWS001A - WEL.WWS001A		1/17/2023	MKLEPADLO	
&EPB+V1GL1UQ53UQ4.2/1	Parts list : WEL.WWS001A - WEL.WWS001A		1/17/2023	MKLEPADLO	
&EPB+V1GL1UQ53UQ5.1/1	Parts list : WEL.WWS001A - WEL.WWS001A		1/17/2023	MKLEPADLO	
&EPB+V1GL1UQ53UQ6.1/1	Parts list : WEL.WWS001A - WEL.WWS001A		1/17/2023	MKLEPADLO	
&EPB+V1GL1UQ53UQ7.1/1	Parts list : TUR.BI2-CRS260-AP4X2-H1141/S34 - TUR.VB2-FSM 4.4/2FKM 4/S3450		1/17/2023	MKLEPADLO	
&EPB+V1GL1UQ53UQ8.1/1	Parts list : WEL.WWS001A - WEL.WWS001A		1/17/2023	MKLEPADLO	
&EPB+V1GL1UQ53UQ8.2/1	Parts list : WEL.WWS001A - WEL.WWS001A		1/17/2023	MKLEPADLO	
&EPB+V1GL1UQ53UQ8.3/1	Parts list : WEL.WWS001A - WEL.WWS001A		1/17/2023	MKLEPADLO	
&EPB+V1GL1UQ53UQ9.1/1	Parts list : WEL.WWS001A - WEL.WWS001A		1/17/2023	MKLEPADLO	
&EPB+V1GL1UQ53UQ10.1/1	Parts list : WEL.WWS001A - WEL.WWS001A		1/17/2023	MKLEPADLO	
&EPB+V1GL1UQ53UQ11.1/1	Parts list : TUN.1324638 - TUN.1324638		1/17/2023	MKLEPADLO	
&EPB+V1GL1UQ53UQ11.2/1	Parts list : TUN.1324638 - TUN.1324638		1/17/2023	MKLEPADLO	
&EPB+V1GL1UQ53UQ11.3/1	Parts list : TUN.1324638 - TUN.1324638		1/17/2023	MKLEPADLO	
&EPB+V1GL1UQ53UQ11.4/1	Parts list : TUN.1324638 - TUN.1324638		1/17/2023	MKLEPADLO	
&EPB+V1GL1UQ53UQ11.5/1	Parts list : TUN.1324638 - TUN.1324638		1/17/2023	MKLEPADLO	
&EPB+V1GL1UQ53UQ11.6/1	Parts list : TUN.1324638 - TUN.1324638		1/17/2023	MKLEPADLO	
&EPB+V1GL1UQ53UQ12.1/1	Parts list : TUN.1324644 - TUN.1324644		1/17/2023	MKLEPADLO	
&EPB+V1GL1UQ53UQ12.2/1	Parts list : TUN.1324644 - TUN.1324644		1/17/2023	MKLEPADLO	
&EPB+V1GL1UQ53UQ12.3/1	Parts list : TUN.1324638 - TUN.1324638		1/17/2023	MKLEPADLO	
&EPB+V1GL1UQ53UQ13.1/1	Parts list : TUN.1324638 - TUN.1324638		1/17/2023	MKLEPADLO	
&EPB+V1GL1UQ53UQ13.2/1	Parts list : TUN.1324638 - TUN.1324638		1/17/2023	MKLEPADLO	
&EPB+V1GL1UQ53UQ14.1/1	Parts list : TUN.1324644 - TUN.1324644		1/17/2023	MKLEPADLO	
&EPB+V1GL1UQ53UQ14.2/1	Parts list : TUN.1324644 - TUN.1324644		1/17/2023	MKLEPADLO	
&EPB+V1GL1UQ53UQ14.3/1	Parts list : TUN.1324644 - TUN.1324644		1/17/2023	MKLEPADLO	

Table of contents

Column X: An automatically generated page was edited

F06_001

Page	Page description	supplementary page field	Date	Edited by	X
&EPB+V1GL1UQ53UQ14.4/1	Parts list : TUN.1324644 - TUN.1324644		1/17/2023	MKLEPADLO	
&EPB+V1GL1UQ53UQ15.1/1	Parts list : TUN.285425 - TUN.285425		1/17/2023	MKLEPADLO	
&EPB+V1GL1UQ53UQ16.1/1	Parts list : TUN.1324644 - TUN.1324644		1/17/2023	MKLEPADLO	
&EPB+V1GL1UQ53UQ17.1/1	Parts list : TUN.1324638 - TUN.1324638		1/17/2023	MKLEPADLO	
&EPB+V1GL1UQ53UQ18.1/1	Parts list : P+F.NBN2-F581-100S6-E8-V1 - P+F.NBN2-F581-100S6-E8-V1		1/17/2023	MKLEPADLO	
&EPB+V1GL1UQ53UQ19.1/1	Parts list : TUN.1324638 - TUN.1324638		1/17/2023	MKLEPADLO	
&EPB+V1GL1UQ53UQ20.1/1	Parts list : TUN.1324638 - TUN.1324638		1/17/2023	MKLEPADLO	
&EPB+V1GL1UQ53UQ21.1/1	Parts list : TUN.1324644 - TUN.1324644		1/17/2023	MKLEPADLO	
&EPB+V1GL1UQ53UQ22.1/1	Parts list : TUN.1324638 - TUN.1324638		1/17/2023	MKLEPADLO	
&EPB+V1GL1UQ53UQ23.1/1	Parts list : TUN.1324644 - TUN.1324644		1/17/2023	MKLEPADLO	
&EPB+V1GL1UQ53UQ24.1/1	Parts list : TUN.1324638 - TUN.1324638		1/17/2023	MKLEPADLO	
&EPB+V1GL1UQ53UQ25.1/1	Parts list : WEL.WWS001A - WEL.WWS001A		1/17/2023	MKLEPADLO	
&EPB+V1GL1UQ53UQ26.1/1	Parts list : TUN.1324638 - TUN.1324638		1/17/2023	MKLEPADLO	
&EPB+V1GL1UQ53UQ26.2/1	Parts list : TUN.1324644 - TUN.1324644		1/17/2023	MKLEPADLO	
&EPB+V1GL1UQ54/1	Parts list : TUR.1627297 - FES.549335		1/17/2023	MKLEPADLO	
&EPB+V1GL1UQ54/2	Parts list : FES.549335 - TUR.RSM-2RKM 50		1/17/2023	MKLEPADLO	
&EPB+V1GL1UQ54UQ1.1/1	Parts list : WEL.WWS001A - WEL.WWS001A		1/17/2023	MKLEPADLO	
&EPB+V1GL1UQ54UQ1.2/1	Parts list : WEL.WWS001A - WEL.WWS001A		1/17/2023	MKLEPADLO	
&EPB+V1GL1UQ54UQ1.3/1	Parts list : WEL.WWS001A - WEL.WWS001A		1/17/2023	MKLEPADLO	
&EPB+V1GL1UQ54UQ1.4/1	Parts list : WEL.WWS001A - WEL.WWS001A		1/17/2023	MKLEPADLO	
&EPB+V1GL1UQ54UQ1.5/1	Parts list : WEL.WWS001A - WEL.WWS001A		1/17/2023	MKLEPADLO	
&EPB+V1GL1UQ54UQ1.6/1	Parts list : WEL.WWS001A - WEL.WWS001A		1/17/2023	MKLEPADLO	
&EPB+V1GL1UQ54UQ2.1/1	Parts list : WEL.WWS001A - WEL.WWS001A		1/17/2023	MKLEPADLO	
&EPB+V1GL1UQ54UQ3.1/1	Parts list : WEL.WWS001A - WEL.WWS001A		1/17/2023	MKLEPADLO	
&EPB+V1GL1UQ54UQ3.2/1	Parts list : WEL.WWS001A - WEL.WWS001A		1/17/2023	MKLEPADLO	
&EPB+V1GL1UQ54UQ3.3/1	Parts list : WEL.WWS001A - WEL.WWS001A		1/17/2023	MKLEPADLO	
&EPB+V1GL1UQ54UQ3.4/1	Parts list : WEL.WWS001A - WEL.WWS001A		1/17/2023	MKLEPADLO	
&EPB+V1GL1UQ54UQ3.5/1	Parts list : WEL.WWS001A - WEL.WWS001A		1/17/2023	MKLEPADLO	
&EPB+V1GL1UQ54UQ3.6/1	Parts list : WEL.WWS001A - WEL.WWS001A		1/17/2023	MKLEPADLO	
&EPB+V1GL1UQ54UQ4.1/1	Parts list : WEL.WWS001A - WEL.WWS001A		1/17/2023	MKLEPADLO	
&EPB+V1GL1UQ54UQ4.2/1	Parts list : WEL.WWS001A - WEL.WWS001A		1/17/2023	MKLEPADLO	
&EPB+V1GL1UQ54UQ4.3/1	Parts list : WEL.WWS001A - WEL.WWS001A		1/17/2023	MKLEPADLO	
&EPB+V1GL1UQ54UQ5.1/1	Parts list : WEL.WWS001A - WEL.WWS001A		1/17/2023	MKLEPADLO	

Table of contents

Column X: An automatically generated page was edited

F06_001

Page	Page description	supplementary page field	Date	Edited by	X
&EPB+V1GL1UQ54UQ5.2/1	Parts list : WEL.WWS001A - WEL.WWS001A		1/17/2023	MKLEPADLO	
&EPB+V1GL1UQ54UQ5.3/1	Parts list : WEL.WWS001A - WEL.WWS001A		1/17/2023	MKLEPADLO	
&EPB+V1GL1UQ54UQ6.1/1	Parts list : WEL.WWS001A - WEL.WWS001A		1/17/2023	MKLEPADLO	
&EPB+V1GL1UQ54UQ7.1/1	Parts list : WEL.WWS001A - WEL.WWS001A		1/17/2023	MKLEPADLO	
&EPB+V1GL1UQ54UQ8.1/1	Parts list : TUR.16449050 - TUR.VB2-FSM 4.4/2FKM 4/S3450		1/17/2023	MKLEPADLO	
&EPB+V1GL1UQ54UQ9.1/1	Parts list : WEL.WWS001A - WEL.WWS001A		1/17/2023	MKLEPADLO	
&EPB+V1GL1UQ54UQ9.2/1	Parts list : WEL.WWS001A - WEL.WWS001A		1/17/2023	MKLEPADLO	
&EPB+V1GL1UQ54UQ10.1/1	Parts list : TUN.1324638 - TUN.1324638		1/17/2023	MKLEPADLO	
&EPB+V1GL1UQ54UQ10.2/1	Parts list : TUN.1324644 - TUN.1324644		1/17/2023	MKLEPADLO	
&EPB+V1GL1UQ54UQ10.3/1	Parts list : TUN.1324638 - TUN.1324638		1/17/2023	MKLEPADLO	
&EPB+V1GL1UQ54UQ10.4/1	Parts list : TUN.1324638 - TUN.1324638		1/17/2023	MKLEPADLO	
&EPB+V1GL1UQ54UQ10.5/1	Parts list : TUN.1324638 - TUN.1324638		1/17/2023	MKLEPADLO	
&EPB+V1GL1UQ54UQ10.6/1	Parts list : TUN.1324638 - TUN.1324638		1/17/2023	MKLEPADLO	
&EPB+V1GL1UQ54UQ11.1/1	Parts list : TUN.1324644 - TUN.1324644		1/17/2023	MKLEPADLO	
&EPB+V1GL1UQ54UQ11.2/1	Parts list : TUN.1324644 - TUN.1324644		1/17/2023	MKLEPADLO	
&EPB+V1GL1UQ54UQ11.3/1	Parts list : TUN.1324638 - TUN.1324638		1/17/2023	MKLEPADLO	
&EPB+V1GL1UQ54UQ11.4/1	Parts list : TUN.1324638 - TUN.1324638		1/17/2023	MKLEPADLO	
&EPB+V1GL1UQ54UQ11.5/1	Parts list : TUN.1324644 - TUN.1324644		1/17/2023	MKLEPADLO	
&EPB+V1GL1UQ54UQ12.1/1	Parts list : TUN.1324638 - TUN.1324638		1/17/2023	MKLEPADLO	
&EPB+V1GL1UQ54UQ12.2/1	Parts list : TUN.1324644 - TUN.1324644		1/17/2023	MKLEPADLO	
&EPB+V1GL1UQ54UQ12.3/1	Parts list : TUN.1324644 - TUN.1324644		1/17/2023	MKLEPADLO	
&EPB+V1GL1UQ54UQ12.4/1	Parts list : TUN.1324644 - TUN.1324644		1/17/2023	MKLEPADLO	
&EPB+V1GL1UQ54UQ12.5/1	Parts list : TUN.1324638 - TUN.1324638		1/17/2023	MKLEPADLO	
&EPB+V1GL1UQ54UQ12.6/1	Parts list : TUN.1324644 - TUN.1324644		1/17/2023	MKLEPADLO	
&EPB+V1GL1UQ54UQ13.1/1	Parts list : TUN.1324644 - TUN.1324644		1/17/2023	MKLEPADLO	
&EPB+V1GL1UQ54UQ14.1/1	Parts list : TUN.1324644 - TUN.1324644		1/17/2023	MKLEPADLO	
&EPB+V1GL1UQ54UQ15.1/1	Parts list : TUN.1324638 - TUN.1324638		1/17/2023	MKLEPADLO	
&EPB+V1GL1UQ54UQ16.1/1	Parts list : TUN.1324638 - TUN.1324638		1/17/2023	MKLEPADLO	
&EPB+V1GL1UQ54UQ16.2/1	Parts list : TUN.1324644 - TUN.1324644		1/17/2023	MKLEPADLO	
&EPB+V1GL1UQ54UQ17.1/1	Parts list : TUN.1324638 - TUN.1324638		1/17/2023	MKLEPADLO	
&EPB+V1GL1UQ54UQ18.1/1	Parts list : WEL.WWS001A - WEL.WWS001A		1/17/2023	MKLEPADLO	
&EPB+V1GL1UQ54UQ18.2/1	Parts list : WEL.WWS001A - WEL.WWS001A		1/17/2023	MKLEPADLO	
&EPB+V1GL1UQ54UQ19.1/1	Parts list : TUN.1324638 - TUN.1324638		1/17/2023	MKLEPADLO	

Table of contents

Column X: An automatically generated page was edited

F06_001

Page	Page description	supplementary page field	Date	Edited by	X
&EPB+V1GL1UQ54UQ19.2/1	Parts list : TUN.1324638 - TUN.1324638		1/17/2023	MKLEPADLO	
&EPB+V1GL1UQ54UQ20.1/1	Parts list : TUN.1324638 - TUN.1324638		1/17/2023	MKLEPADLO	
&EPB+V1GL1UQ54UQ21.1/1	Parts list : WEL.WWS001A - WEL.WWS001A		1/17/2023	MKLEPADLO	
&EPB+V1GL1UQ54UQ22.1/1	Parts list : WEL.WWS001A - WEL.WWS001A		1/17/2023	MKLEPADLO	
&EPB+V1GL1UQ54UQ23.1/1	Parts list : WEL.WWS001A - WEL.WWS001A		1/17/2023	MKLEPADLO	
&EPB+V1GL1UQ54UQ24.1/1	Parts list : TUN.1324644 - TUN.1324644		1/17/2023	MKLEPADLO	
&EPB+V1GL1UQ54UQ25.1/1	Parts list : TUN.1324644 - TUN.1324644		1/17/2023	MKLEPADLO	
&EPB+V1GL1UQ56/1	Parts list : FES.548755 - FES.549335		1/17/2023	MKLEPADLO	
&EPB+V1GL1UQ56UQ1.1/1	Parts list : TUR.1644797 - TUR.VB2-FSM 4.4/2FKM 4/S3450		1/17/2023	MKLEPADLO	
&EPB+V1GL1UQ57/1	Parts list : FES.548755 - FES.549335		1/17/2023	MKLEPADLO	
&EPB+V1GL1UQ57UQ1.1/1	Parts list : TUR.1644797 - TUR.VB2-FSM 4.4/2FKM 4/S3450		1/17/2023	MKLEPADLO	
&EPB+V1GL2/1	Parts list : FES.548755 - TUR.BS 4151-0/9		1/17/2023	MKLEPADLO	
&EPB+V1GL2UQ51/1	Parts list : TUR.1627297 - FES.549335		1/17/2023	MKLEPADLO	
&EPB+V1GL2UQ51UQ1.1/1	Parts list : TUR.1644905 - TUR.VB2-FSM 4.4/2FKM 4/S3450		1/17/2023	MKLEPADLO	
&EPB+V1GL2UQ51UQ2.1/1	Parts list : TUR.1644905 - TUR.VB2-FSM 4.4/2FKM 4/S3450		1/17/2023	MKLEPADLO	
&EPB+V1GL2UQ51UQ3.1/1	Parts list : TUR.1644905 - TUR.VB2-FSM 4.4/2FKM 4/S3450		1/17/2023	MKLEPADLO	
&EPB+V1GL2UQ51UQ4.1/1	Parts list : TUR.BI2-CRS260-AP4X2-H1141/S34 - TUR.VB2-FSM 4.4/2FKM 4/S3450		1/17/2023	MKLEPADLO	
&EPB+V1GL2UQ51UQ4.2/1	Parts list : WEL.WWS001A - WEL.WWS001A		1/17/2023	MKLEPADLO	
&EPB+V1GL2UQ51UQ4.3/1	Parts list : TUR.BI2-CRS260-AP4X2-H1141/S34 - TUR.VB2-FSM 4.4/2FKM 4/S3450		1/17/2023	MKLEPADLO	
&EPB+V1GL2UQ51UQ5.1/1	Parts list : WEL.WWS001A - WEL.WWS001A		1/17/2023	MKLEPADLO	
&EPB+V1GL2UQ51UQ5.2/1	Parts list : WEL.WWS001A - WEL.WWS001A		1/17/2023	MKLEPADLO	
&EPB+V1GL2UQ51UQ5.3/1	Parts list : WEL.WWS001A - WEL.WWS001A		1/17/2023	MKLEPADLO	
&EPB+V1GL2UQ51UQ6.1/1	Parts list : TUR.BI2-CRS260-AP4X2-H1141/S34 - TUR.VB2-FSM 4.4/2FKM 4/S3450		1/17/2023	MKLEPADLO	
&EPB+V1GL2UQ51UQ6.2/1	Parts list : TUR.BI2-CRS260-AP4X2-H1141/S34 - TUR.VB2-FSM 4.4/2FKM 4/S3450		1/17/2023	MKLEPADLO	
&EPB+V1GL2UQ51UQ7.1/1	Parts list : TUR.BI2-CRS260-AP4X2-H1141/S34 - TUR.VB2-FSM 4.4/2FKM 4/S3450		1/17/2023	MKLEPADLO	
&EPB+V1GL2UQ51UQ7.2/1	Parts list : WEL.WWS001A - WEL.WWS001A		1/17/2023	MKLEPADLO	
&EPB+V1GL2UQ51UQ8.1/1	Parts list : WEL.WWS001A - WEL.WWS001A		1/17/2023	MKLEPADLO	
&EPB+V1GL2UQ51UQ8.2/1	Parts list : WEL.WWS001A - WEL.WWS001A		1/17/2023	MKLEPADLO	
&EPB+V1GL2UQ51UQ8.3/1	Parts list : WEL.WWS001A - WEL.WWS001A		1/17/2023	MKLEPADLO	
&EPB+V1GL2UQ51UQ9.1/1	Parts list : WEL.WWS001A - WEL.WWS001A		1/17/2023	MKLEPADLO	
&EPB+V1GL2UQ51UQ9.2/1	Parts list : WEL.WWS001A - WEL.WWS001A		1/17/2023	MKLEPADLO	
&EPB+V1GL2UQ51UQ9.3/1	Parts list : WEL.WWS001A - WEL.WWS001A		1/17/2023	MKLEPADLO	
&EPB+V1GL2UQ51UQ10.1/1	Parts list : TUN.1324638 - TUN.1324638		1/17/2023	MKLEPADLO	

Table of contents

Column X: An automatically generated page was edited

F06_001

Page	Page description	supplementary page field	Date	Edited by	X
&EPB+V1GL2UQ51UQ10.2/1	Parts list : TUN.1324638 - TUN.1324638		1/17/2023	MKLEPADLO	
&EPB+V1GL2UQ51UQ10.3/1	Parts list : TUN.1324638 - TUN.1324638		1/17/2023	MKLEPADLO	
&EPB+V1GL2UQ51UQ10.4/1	Parts list : TUN.1324638 - TUN.1324638		1/17/2023	MKLEPADLO	
&EPB+V1GL2UQ51UQ10.5/1	Parts list : TUN.1324638 - TUN.1324638		1/17/2023	MKLEPADLO	
&EPB+V1GL2UQ51UQ10.6/1	Parts list : TUN.1324644 - TUN.1324644		1/17/2023	MKLEPADLO	
&EPB+V1GL2UQ51UQ11.1/1	Parts list : TUN.1324644 - TUN.1324644		1/17/2023	MKLEPADLO	
&EPB+V1GL2UQ51UQ12.1/1	Parts list : TUN.1324638 - TUN.1324638		1/17/2023	MKLEPADLO	
&EPB+V1GL2UQ51UQ13.1/1	Parts list : TUN.1324644 - TUN.1324644		1/17/2023	MKLEPADLO	
&EPB+V1GL2UQ51UQ14.1/1	Parts list : TUN.1324644 - TUN.1324644		1/17/2023	MKLEPADLO	
&EPB+V1GL2UQ51UQ15.1/1	Parts list : TUN.1324638 - TUN.1324638		1/17/2023	MKLEPADLO	
&EPB+V1GL2UQ51UQ16.1/1	Parts list : TUN.1324644 - TUN.1324644		1/17/2023	MKLEPADLO	
&EPB+V1GL2UQ51UQ17.1/1	Parts list : TUN.1324638 - TUN.1324638		1/17/2023	MKLEPADLO	
&EPB+V1GL2UQ51UQ17.2/1	Parts list : TUN.1324638 - TUN.1324638		1/17/2023	MKLEPADLO	
&EPB+V1GL2UQ51UQ17.3/1	Parts list : TUN.1324638 - TUN.1324638		1/17/2023	MKLEPADLO	
&EPB+V1GL2UQ51UQ17.4/1	Parts list : TUN.1324638 - TUN.1324638		1/17/2023	MKLEPADLO	
&EPB+V1GL2UQ51UQ18.1/1	Parts list : TUN.1324638 - TUN.1324638		1/17/2023	MKLEPADLO	
&EPB+V1GL2UQ51UQ18.2/1	Parts list : TUN.1324638 - TUN.1324638		1/17/2023	MKLEPADLO	
&EPB+V1GL2UQ51UQ19.1/1	Parts list : TUN.1324638 - TUN.1324638		1/17/2023	MKLEPADLO	
&EPB+V1GL2UQ51UQ19.2/1	Parts list : TUN.1324638 - TUN.1324638		1/17/2023	MKLEPADLO	
&EPB+V1GL2UQ51UQ20.1/1	Parts list : TUN.1324644 - TUN.1324644		1/17/2023	MKLEPADLO	
&EPB+V1GL2UQ51UQ21.1/1	Parts list : TUN.1324644 - TUN.1324644		1/17/2023	MKLEPADLO	
&EPB+V1GL2UQ51UQ22.1/1	Parts list : TUN.1324638 - TUN.1324638		1/17/2023	MKLEPADLO	
&EPB+V1GL2UQ51UQ22.2/1	Parts list : TUN.1324638 - TUN.1324638		1/17/2023	MKLEPADLO	
&EPB+V1GL2UQ51UQ22.3/1	Parts list : TUN.1324638 - TUN.1324638		1/17/2023	MKLEPADLO	
&EPB+V1GL2UQ51UQ23.1/1	Parts list : TUN.1324638 - TUN.1324638		1/17/2023	MKLEPADLO	
&EPB+V1GL2UQ51UQ24.1/1	Parts list : TUN.1324638 - TUN.1324638		1/17/2023	MKLEPADLO	
&EPB+V1GL2UQ51UQ25.1/1	Parts list : TUN.1324638 - TUN.1324638		1/17/2023	MKLEPADLO	
&EPB+V1GL2UQ51UQ26.1/1	Parts list : TUN.1324638 - TUN.1324638		1/17/2023	MKLEPADLO	
&EPB+V1GL2UQ51UQ27.1/1	Parts list : TUN.1324638 - TUN.1324638		1/17/2023	MKLEPADLO	
&EPB+V1GL2UQ51UQ28.1/1	Parts list : TUN.1324638 - TUN.1324638		1/17/2023	MKLEPADLO	
&EPB+V1GL2UQ51UQ29.1/1	Parts list : TUN.1324638 - TUN.1324638		1/17/2023	MKLEPADLO	
&EPB+V1GL2UQ51UQ30.1/1	Parts list : TUN.1324638 - TUN.1324638		1/17/2023	MKLEPADLO	
&EPB+V1GL2UQ51UQ31.1/1	Parts list : TUN.1329440 - TUN.1329440		1/17/2023	MKLEPADLO	

Table of contents

Column X: An automatically generated page was edited

F06_001

Page	Page description	supplementary page field	Date	Edited by	X
&EPB+V1GL2UQ51UQ32.1/1	Parts list : WEL.WWS001A - WEL.WWS001A		1/17/2023	MKLEPADLO	
&EPB+V1GL2UQ51UQ33.1/1	Parts list : TUN.1324638 - TUN.1324638		1/17/2023	MKLEPADLO	
&EPB+V1GL2UQ51UQ34.1/1	Parts list : TUR.BI2-CRS260-AP4X2-H1141/S34 - TUR.VB2-FSM 4.4/2FKM 4/S3450		1/17/2023	MKLEPADLO	
&EPB+V1GL2UQ51UQ35.1/1	Parts list : TUN.1324638 - TUN.1324638		1/17/2023	MKLEPADLO	
&EPB+V1GL18UQ51/1	Parts list : TUR.16447411 - FES.549335		1/17/2023	MKLEPADLO	
&EPB+V1GL18UQ51UQ1.1/1	Parts list : TUR.16447411 - TUR.VB2-FSM 4.4/2FKM 4/S3450		1/17/2023	MKLEPADLO	
&EPB+V1GL18UQ51UQ2.1/1	Parts list : TUR.16447411 - TUR.VB2-FSM 4.4/2FKM 4/S3450		1/17/2023	MKLEPADLO	
&EPB+V1GL18UQ51UQ6.1/1	Parts list : TUR.16447411 - TUR.VB2-FSM 4.4/2FKM 4/S3450		1/17/2023	MKLEPADLO	
&EPB+V1PF1/1	Parts list : FES.548755 - FES.549335		1/17/2023	MKLEPADLO	
&EPB+V1PF1UQ1.1/1	Parts list : TUN.1324638 - TUN.1324638		1/17/2023	MKLEPADLO	
&EPB+V1U10/1	Parts list : A-B.802T-AMP - A-B.802T-AMP		1/17/2023	MKLEPADLO	
&EPB+V1U10U01/1	Parts list : MURR.55339 - BAN.32723		1/17/2023	MKLEPADLO	
&EPB+V1U20U01/1	Parts list : MURR.55339 - BAN.32723		1/17/2023	MKLEPADLO	
&EPB+V1UC11/1	Parts list : EMPD3FBCB-025A-M - SIE.3VA5120-6ED31-0AA0		1/17/2023	MKLEPADLO	
&EPB+V1UC11/2	Parts list : SIE.3VA9978-0AA12 - RIT.4115000		1/17/2023	MKLEPADLO	
&EPB+V1UC12/1	Parts list : EMPD3FBCB-025A-M - PTN102-7.5K		1/17/2023	MKLEPADLO	
&EPB+V1UC12/2	Parts list : SIE.5SJ4120-7HG41 - RIT.4115000		1/17/2023	MKLEPADLO	
&EPB+V1UC14/1	Parts list : SIE.6ES7155-6AA01-0BN0_subassembly - TUR.RSM-2RKM 50		1/17/2023	MKLEPADLO	
&EPB+V1UC15/1	Parts list : SIE.6ES7155-6AA01-0BN0_subassembly - SIE.6EP3336-7SB00-3AX0		1/17/2023	MKLEPADLO	
&EPB+V1UC32/1	Parts list : SIE.6ES7155-6AA01-0BN0_subassembly - TUR.RSF 50-1M/NPT		1/17/2023	MKLEPADLO	
&EPB+V1UC51/1	Parts list : RIT.6315150 - TUR.RSM-2RKM 50		1/17/2023	MKLEPADLO	
&EPB+V1UC52/1	Parts list : RIT.6315150 - TUR.RSF 50-1M/NPT		1/17/2023	MKLEPADLO	
&EPB+V1UC53/1	Parts list : RIT.6315150 - TUR.RSM-2RKM 50		1/17/2023	MKLEPADLO	
&EPB+V1UC54/1	Parts list : RIT.6315150 - TUR.RSM-2RKM 50		1/17/2023	MKLEPADLO	
&EPB+V1UC61/1	Parts list : SIE.8WD4408-0AA - TUR.RSF 106-2M/14.5/NPT/CS16486		1/17/2023	MKLEPADLO	
&EPB+V1UC62/1	Parts list : SIE.8WD4408-0AA - TUR.RSF 106-2M/14.5/NPT/CS16486		1/17/2023	MKLEPADLO	
&EPB+V1UC63/1	Parts list : SIE.8WD4408-0AA - TUR.RSF 106-2M/14.5/NPT/CS16486		1/17/2023	MKLEPADLO	
&EPB+V1UC64/1	Parts list : SIE.8WD4408-0AA - TUR.RSF 106-2M/14.5/NPT/CS16486		1/17/2023	MKLEPADLO	
&EPB+V1UC71/1	Parts list : BAN.SSA-EBM-12EB1Q8OTBB - BAN.SSA-EBM-12EB1Q8OTBB		1/17/2023	MKLEPADLO	
&EPB+V1UC72/1	Parts list : BAN.SSA-EBM-12EB1Q8OTBB - BAN.SSA-EBM-12EB1Q8OTBB		1/17/2023	MKLEPADLO	
&EPB+V1UC73/1	Parts list : BAN.SSA-EBM-12EB1Q8OTBB - BAN.SSA-EBM-12EB1Q8OTBB		1/17/2023	MKLEPADLO	
&EPB+V1UC74/1	Parts list : BAN.SSA-EBM-12EB1Q8OTBB - BAN.SSA-EBM-12EB1Q8OTBB		1/17/2023	MKLEPADLO	
&EPB+V1UC161/1	Parts list : MB-231-03 - RIT.4115000		1/17/2023	MKLEPADLO	

Table of contents

Column X: An automatically generated page was edited

F06_001

Page	Page description	supplementary page field	Date	Edited by	X
&EPB+V1UC162/1	Parts list : CPB-E2G06-03 - RIT.4115000		1/17/2023	MKLEPADLO	
&EPB+V1UC163/1	Parts list : CPB-E2G06-03 - RIT.4115000		1/17/2023	MKLEPADLO	
&EPB+V1UC164/1	Parts list : CPB-E2G06-03 - RIT.4115000		1/17/2023	MKLEPADLO	
&EPB+V1UC165/1	Parts list : CPB-E2G06-03 - RIT.4115000		1/17/2023	MKLEPADLO	
&EPB+V1UN1/1	Parts list : BAN.801918 - BAN.32723		1/17/2023	MKLEPADLO	
&EPB+V1UQ51/1	Parts list : TUR.1627297 - FES.549335		1/17/2023	MKLEPADLO	
&EPB+V1UQ51UQ1.1/1	Parts list : WEL.WWS001A - WEL.WWS001A		1/17/2023	MKLEPADLO	
&EPB+V1UQ51UQ2.1/1	Parts list : WEL.WWS001A - WEL.WWS001A		1/17/2023	MKLEPADLO	
&EPB+V1UQ51UQ3.1/1	Parts list : WEL.WWS001A - WEL.WWS001A		1/17/2023	MKLEPADLO	
&EPB+V1UQ51UQ4.1/1	Parts list : TUN.1324638 - TUN.1324638		1/17/2023	MKLEPADLO	
&EPB+V1UQ51UQ4.2/1	Parts list : TUN.1324638 - TUN.1324638		1/17/2023	MKLEPADLO	
&EPB+V1UQ51UQ5.1/1	Parts list : TUN.1324638 - TUN.1324638		1/17/2023	MKLEPADLO	
&EPB+V1UQ51UQ5.2/1	Parts list : TUN.1324638 - TUN.1324638		1/17/2023	MKLEPADLO	
&EPB+V1UQ51UQ6.1/1	Parts list : TUN.1324638 - TUN.1324638		1/17/2023	MKLEPADLO	
&EPB+V1UQ51UQ7.1/1	Parts list : TUN.1324638 - TUN.1324638		1/17/2023	MKLEPADLO	
&EPB+V1UQ51UQ7.2/1	Parts list : TUN.1324638 - TUN.1324638		1/17/2023	MKLEPADLO	
&EPB+V1UQ51UQ7.3/1	Parts list : TUN.1324638 - TUN.1324638		1/17/2023	MKLEPADLO	
&EPB+V1UQ51UQ7.4/1	Parts list : TUN.1324638 - TUN.1324638		1/17/2023	MKLEPADLO	
&EPB+V1UQ51UQ7.5/1	Parts list : TUN.1324638 - TUN.1324638		1/17/2023	MKLEPADLO	
&EPB+V1UQ51UQ8.1/1	Parts list : TUN.1324638 - TUN.1324638		1/17/2023	MKLEPADLO	
&EPB+V1UQ51UQ9.1/1	Parts list : TUN.1324638 - TUN.1324638		1/17/2023	MKLEPADLO	
&EPB+V1UQ51UQ9.2/1	Parts list : TUN.1324638 - TUN.1324638		1/17/2023	MKLEPADLO	
&EPB+V1UQ51UQ10.1/1	Parts list : TUN.1324638 - TUN.1324638		1/17/2023	MKLEPADLO	
&EPB+V1UQ51UQ10.2/1	Parts list : TUN.1324638 - TUN.1324638		1/17/2023	MKLEPADLO	
&EPB+V1UQ52/1	Parts list : TUR.1627297 - TUR.RSM-2RKM 50		1/17/2023	MKLEPADLO	
&EPB+V1UQ52UQ1.1/1	Parts list : WEL.WWS001A - WEL.WWS001A		1/17/2023	MKLEPADLO	
&EPB+V1UQ52UQ2.1/1	Parts list : TUR.BI2-CRS260-AP4X2-H1141/S34 - TUR.VB2-FSM 4.4/2FKM 4/S3450		1/17/2023	MKLEPADLO	
&EPB+V1UQ52UQ2.2/1	Parts list : WEL.WWS001A - WEL.WWS001A		1/17/2023	MKLEPADLO	
&EPB+V1UQ52UQ2.3/1	Parts list : WEL.WWS001A - WEL.WWS001A		1/17/2023	MKLEPADLO	
&EPB+V1UQ52UQ3.1/1	Parts list : WEL.WWS001A - WEL.WWS001A		1/17/2023	MKLEPADLO	
&EPB+V1UQ52UQ4.1/1	Parts list : TUR.BI2-CRS260-AP4X2-H1141/S34 - TUR.VB2-FSM 4.4/2FKM 4/S3450		1/17/2023	MKLEPADLO	
&EPB+V1UQ52UQ5.1/1	Parts list : WEL.WWS001A - WEL.WWS001A		1/17/2023	MKLEPADLO	
&EPB+V1UQ52UQ6.1/1	Parts list : WEL.WWS001A - WEL.WWS001A		1/17/2023	MKLEPADLO	

Table of contents

Column X: An automatically generated page was edited

F06_001

Page	Page description	supplementary page field	Date	Edited by	X
&EPB+V1UQ52UQ7.1/1	Parts list : WEL.WWS001A - WEL.WWS001A		1/17/2023	MKLEPADLO	
&EPB+V1UQ52UQ8.1/1	Parts list : WEL.WWS001A - WEL.WWS001A		1/17/2023	MKLEPADLO	
&EPB+V1UQ52UQ8.2/1	Parts list : WEL.WWS001A - WEL.WWS001A		1/17/2023	MKLEPADLO	
&EPB+V1UQ52UQ9.1/1	Parts list : WEL.WWS001A - WEL.WWS001A		1/17/2023	MKLEPADLO	
&EPB+V1UQ52UQ10.1/1	Parts list : TUN.1324638 - TUN.1324638		1/17/2023	MKLEPADLO	
&EPB+V1UQ52UQ10.2/1	Parts list : TUN.1324638 - TUN.1324638		1/17/2023	MKLEPADLO	
&EPB+V1UQ52UQ10.3/1	Parts list : TUN.1324638 - TUN.1324638		1/17/2023	MKLEPADLO	
&EPB+V1UQ52UQ10.4/1	Parts list : TUN.1324638 - TUN.1324638		1/17/2023	MKLEPADLO	
&EPB+V1UQ52UQ10.5/1	Parts list : TUN.1324638 - TUN.1324638		1/17/2023	MKLEPADLO	
&EPB+V1UQ52UQ10.6/1	Parts list : TUN.1324638 - TUN.1324638		1/17/2023	MKLEPADLO	
&EPB+V1UQ52UQ11.1/1	Parts list : TUN.1324638 - TUN.1324638		1/17/2023	MKLEPADLO	
&EPB+V1UQ52UQ11.2/1	Parts list : TUN.1324644 - TUN.1324644		1/17/2023	MKLEPADLO	
&EPB+V1UQ52UQ11.3/1	Parts list : TUN.1324644 - TUN.1324644		1/17/2023	MKLEPADLO	
&EPB+V1UQ52UQ12.1/1	Parts list : TUN.1324638 - TUN.1324638		1/17/2023	MKLEPADLO	
&EPB+V1UQ52UQ12.2/1	Parts list : TUN.1324638 - TUN.1324638		1/17/2023	MKLEPADLO	
&EPB+V1UQ52UQ13.1/1	Parts list : TUN.1324638 - TUN.1324638		1/17/2023	MKLEPADLO	
&EPB+V1UQ52UQ14.1/1	Parts list : TUN.1324638 - TUN.1324638		1/17/2023	MKLEPADLO	
&EPB+V1UQ52UQ14.2/1	Parts list : TUN.1324638 - TUN.1324638		1/17/2023	MKLEPADLO	
&EPB+V1UQ52UQ14.3/1	Parts list : TUN.1324638 - TUN.1324638		1/17/2023	MKLEPADLO	
&EPB+V1UQ52UQ15.1/1	Parts list : TUN.1324638 - TUN.1324638		1/17/2023	MKLEPADLO	
&EPB+V1UQ52UQ16.1/1	Parts list : TUN.1324638 - TUN.1324638		1/17/2023	MKLEPADLO	
&EPB+V1UQ52UQ17.1/1	Parts list : TUN.1324638 - TUN.1324638		1/17/2023	MKLEPADLO	
&EPB+V1UQ52UQ18.1/1	Parts list : TUN.1324638 - TUN.1324638		1/17/2023	MKLEPADLO	
&EPB+V1UQ52UQ19.1/1	Parts list : TUN.1324638 - TUN.1324638		1/17/2023	MKLEPADLO	
&EPB+V1UQ52UQ20.1/1	Parts list : TUN.1324644 - TUN.1324644		1/17/2023	MKLEPADLO	
&EPB+V1UQ52UQ21.1/1	Parts list : TUN.1324638 - TUN.1324638		1/17/2023	MKLEPADLO	
&EPB+V1UQ52UQ22.1/1	Parts list : TUN.1324638 - TUN.1324638		1/17/2023	MKLEPADLO	
&EPB+V1UQ52UQ23.1/1	Parts list : WEL.WWS001A - WEL.WWS001A		1/17/2023	MKLEPADLO	
&EPB+V1UQ52UQ24.1/1	Parts list : TUN.1324638 - TUN.1324638		1/17/2023	MKLEPADLO	
&EPB+V1UQ52UQ25.1/1	Parts list : TUR.1644905 - TUR.VB2-FSM 4.4/2FKM 4/S3450		1/17/2023	MKLEPADLO	
&EPB+V1UQ52UQ26.1/1	Parts list : WEL.WWS001A - WEL.WWS001A		1/17/2023	MKLEPADLO	
&EPB+V1UQ52UQ27.1/1	Parts list : TUN.1324638 - TUN.1324638		1/17/2023	MKLEPADLO	
&EPB+V1UQ52UQ28.1/1	Parts list : TUN.1324638 - TUN.1324638		1/17/2023	MKLEPADLO	

Table of contents

Column X: An automatically generated page was edited

F06_001

Page	Page description	supplementary page field	Date	Edited by	X
&EPB+V1UQ52UQ29.1/1	Parts list : TUN.1324638 - TUN.1324638		1/17/2023	MKLEPADLO	
&EPB+V1UQ52UQ30.1/1	Parts list : TUN.1324638 - TUN.1324638		1/17/2023	MKLEPADLO	
&EPB+V1UQ52UQ31.1/1	Parts list : TUN.1324638 - TUN.1324638		1/17/2023	MKLEPADLO	
&EPB+V1UQ52UQ32.1/1	Parts list : TUN.1324638 - TUN.1324638		1/17/2023	MKLEPADLO	
&EPB+V1UQ52UQ33.1/1	Parts list : TUN.1324638 - TUN.1324638		1/17/2023	MKLEPADLO	
&EPB+V1UQ52UQ34.1/1	Parts list : TUN.1324638 - TUN.1324638		1/17/2023	MKLEPADLO	
&EPB+V1UQ52UQ35.1/1	Parts list : WEL.WWS001A - WEL.WWS001A		1/17/2023	MKLEPADLO	
&EPB+V1UQ52UQ36.1/1	Parts list : TUN.1324638 - TUN.1324638		1/17/2023	MKLEPADLO	
&EPB+V1UQ52UQ37.1/1	Parts list : TUN.1324638 - TUN.1324638		1/17/2023	MKLEPADLO	
&EPB+V1UQ52UQ38.1/1	Parts list : TUN.1324644 - TUN.1324644		1/17/2023	MKLEPADLO	
&EPB+V1UQ52UQ39.1/1	Parts list : WEL.WWS001A - WEL.WWS001A		1/17/2023	MKLEPADLO	
&EPB+V1UQ52UQ40.1/1	Parts list : TUN.1324644 - TUN.1324644		1/17/2023	MKLEPADLO	
&EPB+V1UQ52UQ41.1/1	Parts list : TUN.1324644 - TUN.1324644		1/17/2023	MKLEPADLO	
&EPB+V1UQ52UQ42.1/1	Parts list : TUN.1324638 - TUN.1324638		1/17/2023	MKLEPADLO	
&EPB+V1UQ52UQ42.2/1	Parts list : TUN.1324638 - TUN.1324638		1/17/2023	MKLEPADLO	
&EPB+V1UQ52UQ43.1/1	Parts list : TUN.1324638 - TUN.1324638		1/17/2023	MKLEPADLO	
&EPB+V1UQ52UQ44.1/1	Parts list : WEL.WWS001A - WEL.WWS001A		1/17/2023	MKLEPADLO	
&EPB+V1UQ52UQ44.2/1	Parts list : WEL.WWS001A - WEL.WWS001A		1/17/2023	MKLEPADLO	
&EPB+V1UQ52UQ45.1/1	Parts list : TUN.1324638 - TUN.1324638		1/17/2023	MKLEPADLO	
&EPB+V1UQ52UQ46.1/1	Parts list : TUN.1324644 - TUN.1324644		1/17/2023	MKLEPADLO	
&EPB+V1UQ52UQ47.1/1	Parts list : WEL.WWS001A - WEL.WWS001A		1/17/2023	MKLEPADLO	
&EPB+V1UQ53/1	Parts list : TUR.1627297 - TUR.RSM-2RKM 50		1/17/2023	MKLEPADLO	
&EPB+V1UQ53UQ1.1/1	Parts list : WEL.WWS001A - WEL.WWS001A		1/17/2023	MKLEPADLO	
&EPB+V1UQ53UQ2.1/1	Parts list : WEL.WWS001A - WEL.WWS001A		1/17/2023	MKLEPADLO	
&EPB+V1UQ53UQ3.1/1	Parts list : TUN.1324638 - TUN.1324638		1/17/2023	MKLEPADLO	
&EPB+V1UQ53UQ3.2/1	Parts list : TUN.1324638 - TUN.1324638		1/17/2023	MKLEPADLO	
&EPB+V1UQ53UQ3.3/1	Parts list : TUN.1324638 - TUN.1324638		1/17/2023	MKLEPADLO	
&EPB+V1UQ53UQ3.4/1	Parts list : TUN.1324638 - TUN.1324638		1/17/2023	MKLEPADLO	
&EPB+V1UQ53UQ3.5/1	Parts list : TUN.1324638 - TUN.1324638		1/17/2023	MKLEPADLO	
&EPB+V1UQ53UQ4.1/1	Parts list : TUN.1324638 - TUN.1324638		1/17/2023	MKLEPADLO	
&EPB+V1UQ53UQ4.2/1	Parts list : TUN.1324638 - TUN.1324638		1/17/2023	MKLEPADLO	
&EPB+V1UQ53UQ4.3/1	Parts list : TUN.1324638 - TUN.1324638		1/17/2023	MKLEPADLO	
&EPB+V1UQ53UQ5.1/1	Parts list : TUN.1324638 - TUN.1324638		1/17/2023	MKLEPADLO	

Table of contents

Column X: An automatically generated page was edited

F06_001

Page	Page description	supplementary page field	Date	Edited by	X
&EPB+V1UQ53UQ5.2/1	Parts list : TUN.1324638 - TUN.1324638		1/17/2023	MKLEPADLO	
&EPB+V1UQ53UQ5.3/1	Parts list : TUN.1324638 - TUN.1324638		1/17/2023	MKLEPADLO	
&EPB+V1UQ53UQ6.1/1	Parts list : TUN.1324638 - TUN.1324638		1/17/2023	MKLEPADLO	
&EPB+V1UQ53UQ7.1/1	Parts list : TUN.1324638 - TUN.1324638		1/17/2023	MKLEPADLO	
&EPB+V1UQ53UQ8.1/1	Parts list : TUN.1324638 - TUN.1324638		1/17/2023	MKLEPADLO	
&EPB+V1UQ53UQ8.2/1	Parts list : TUN.1324638 - TUN.1324638		1/17/2023	MKLEPADLO	
&EPB+V1UQ53UQ9.1/1	Parts list : TUN.1324638 - TUN.1324638		1/17/2023	MKLEPADLO	
&EPB+V1UQ53UQ10.1/1	Parts list : TUN.1324638 - TUN.1324638		1/17/2023	MKLEPADLO	
&EPB+V1UQ53UQ10.2/1	Parts list : TUN.1324638 - TUN.1324638		1/17/2023	MKLEPADLO	
&EPB+V1UQ53UQ11.1/1	Parts list : TUN.1324638 - TUN.1324638		1/17/2023	MKLEPADLO	
&EPB+V1UQ53UQ11.2/1	Parts list : TUN.1324638 - TUN.1324638		1/17/2023	MKLEPADLO	
&EPB+V1UQ53UQ12.1/1	Parts list : TUN.1324638 - TUN.1324638		1/17/2023	MKLEPADLO	
&EPB+V1UQ53UQ13.1/1	Parts list : TUN.1324638 - TUN.1324638		1/17/2023	MKLEPADLO	
&EPB+V1UQ53UQ14.1/1	Parts list : WEL.WWS001A - WEL.WWS001A		1/17/2023	MKLEPADLO	
&EPB+V1UQ53UQ15.1/1	Parts list : WEL.WWS001A - WEL.WWS001A		1/17/2023	MKLEPADLO	
&EPB+V1UQ53UQ16.1/1	Parts list : WEL.WWS001A - WEL.WWS001A		1/17/2023	MKLEPADLO	
&EPB+V1UQ53UQ17.1/1	Parts list : WEL.WWS001A - WEL.WWS001A		1/17/2023	MKLEPADLO	
&EPB+V1UQ54/1	Parts list : TUR.1627297 - TUR.RSM-2RKM 50		1/17/2023	MKLEPADLO	
&EPB+V1UQ54UQ1.1/1	Parts list : WEL.WWS001A - WEL.WWS001A		1/17/2023	MKLEPADLO	
&EPB+V1UQ54UQ2.1/1	Parts list : WEL.WWS001A - WEL.WWS001A		1/17/2023	MKLEPADLO	
&EPB+V1UQ54UQ3.1/1	Parts list : TUN.1324638 - TUN.1324638		1/17/2023	MKLEPADLO	
&EPB+V1UQ54UQ3.2/1	Parts list : TUN.1324638 - TUN.1324638		1/17/2023	MKLEPADLO	
&EPB+V1UQ54UQ3.3/1	Parts list : TUN.1324638 - TUN.1324638		1/17/2023	MKLEPADLO	
&EPB+V1UQ54UQ4.1/1	Parts list : TUN.1324638 - TUN.1324638		1/17/2023	MKLEPADLO	
&EPB+V1UQ54UQ4.2/1	Parts list : TUN.1324638 - TUN.1324638		1/17/2023	MKLEPADLO	
&EPB+V1UQ54UQ4.3/1	Parts list : TUN.1324638 - TUN.1324638		1/17/2023	MKLEPADLO	
&EPB+V1UQ54UQ5.1/1	Parts list : TUN.1324638 - TUN.1324638		1/17/2023	MKLEPADLO	
&EPB+V1UQ54UQ5.2/1	Parts list : TUN.1324638 - TUN.1324638		1/17/2023	MKLEPADLO	
&EPB+V1UQ54UQ5.3/1	Parts list : TUN.1324638 - TUN.1324638		1/17/2023	MKLEPADLO	
&EPB+V1UQ54UQ5.4/1	Parts list : TUN.1324638 - TUN.1324638		1/17/2023	MKLEPADLO	
&EPB+V1UQ54UQ6.1/1	Parts list : TUN.1324638 - TUN.1324638		1/17/2023	MKLEPADLO	
&EPB+V1UQ54UQ6.2/1	Parts list : TUN.1324638 - TUN.1324638		1/17/2023	MKLEPADLO	
&EPB+V1UQ54UQ7.1/1	Parts list : TUN.1324638 - TUN.1324638		1/17/2023	MKLEPADLO	

Table of contents

Column X: An automatically generated page was edited

F06_001

Page	Page description	supplementary page field	Date	Edited by	X
&EPB+V1UQ54UQ8.1/1	Parts list : TUN.1324638 - TUN.1324638		1/17/2023	MKLEPADLO	
&EPB+V1UQ54UQ8.2/1	Parts list : TUN.1324638 - TUN.1324638		1/17/2023	MKLEPADLO	
&EPB+V1UQ54UQ9.1/1	Parts list : TUN.1324638 - TUN.1324638		1/17/2023	MKLEPADLO	
&EPB+V1UQ54UQ10.1/1	Parts list : TUN.1324638 - TUN.1324638		1/17/2023	MKLEPADLO	
&EPB+V1UQ54UQ10.2/1	Parts list : TUN.1324638 - TUN.1324638		1/17/2023	MKLEPADLO	
&EPB+V1UQ54UQ11.1/1	Parts list : WEL.WWS001A - WEL.WWS001A		1/17/2023	MKLEPADLO	
&EPB+V1UQ54UQ12.1/1	Parts list : WEL.WWS001A - WEL.WWS001A		1/17/2023	MKLEPADLO	
&EPB+V1UQ54UQ13.1/1	Parts list : WEL.WWS001A - WEL.WWS001A		1/17/2023	MKLEPADLO	
&EPB+V1UQ54UQ14.1/1	Parts list : WEL.WWS001A - WEL.WWS001A		1/17/2023	MKLEPADLO	
&EPB+V1UQ55/1	Parts list : TUR.1627297 - FES.549335		1/17/2023	MKLEPADLO	
&EPB+V1UQ55UQ1.1/1	Parts list : WEL.WWS001A - WEL.WWS001A		1/17/2023	MKLEPADLO	
&EPB+V1UQ55UQ2.1/1	Parts list : WEL.WWS001A - WEL.WWS001A		1/17/2023	MKLEPADLO	
&EPB+V1UQ55UQ3.1/1	Parts list : WEL.WWS001A - WEL.WWS001A		1/17/2023	MKLEPADLO	
&EPB+V1UQ55UQ4.1/1	Parts list : TUN.1324638 - TUN.1324638		1/17/2023	MKLEPADLO	
&EPB+V1UQ55UQ4.2/1	Parts list : TUN.1324638 - TUN.1324638		1/17/2023	MKLEPADLO	
&EPB+V1GL1UQ53UQ12.4/1	Parts list : TUN.1324638 - TUN.1324638		1/17/2023	MKLEPADLO	
&ETT/1	Terminal line-up diagram =KF0KF1+UC31-PC1		1/17/2023	MKLEPADLO	
&ETT/2	Terminal line-up diagram =KF0KF1+UC31-PH1		1/17/2023	MKLEPADLO	
&ETT/3	Terminal line-up diagram =KF0WC3+UC31-XD1		1/17/2023	MKLEPADLO	
&ETT/4	Terminal line-up diagram =KF0WC3+UC31-XD2		1/17/2023	MKLEPADLO	
&ETT/5	Terminal line-up diagram =KF0WC4+UC31-XD11		1/17/2023	MKLEPADLO	
&ETT/6	Terminal line-up diagram =KF0WC4+UC31-XD12		1/17/2023	MKLEPADLO	
&ETT/7	Terminal line-up diagram =KF0WC4+UC31-XD13		1/17/2023	MKLEPADLO	
&ETT/8	Terminal line-up diagram =KF0WC4+UC31-XD14		1/17/2023	MKLEPADLO	
&ETT/9	Terminal line-up diagram =V1WC1+V1UC11-PE		1/17/2023	MKLEPADLO	
&ETT/10	Terminal line-up diagram =V1WC2+V1UC11-XD1		1/17/2023	MKLEPADLO	
&ETT/11	Terminal line-up diagram =V1WC2+V1UC11-XD2		1/17/2023	MKLEPADLO	
&ETT/12	Terminal line-up diagram =V1WC2+V1UC11-XD3		1/17/2023	MKLEPADLO	
&ETT/13	Terminal line-up diagram =V1WC3+V1UC11-XD1		1/17/2023	MKLEPADLO	
&ETT/14	Terminal line-up diagram =V1WC3+V1UC11-XD2		1/17/2023	MKLEPADLO	
&ETT/15	Terminal line-up diagram =V1WC3+V1UC11-XD3		1/17/2023	MKLEPADLO	
&ETT/16	Terminal line-up diagram =V1WC4+V1UC11-KF11.14		1/17/2023	MKLEPADLO	
&ETT/17	Terminal line-up diagram =V1WC4+V1UC11-XD5		1/17/2023	MKLEPADLO	

Table of contents

Column X: An automatically generated page was edited

F06_001

Page	Page description	supplementary page field	Date	Edited by	X
&ETT/18	Terminal line-up diagram =V1WC4+V1UC11-XD6		1/17/2023	MKLEPADLO	
&ETT/19	Terminal line-up diagram =V1WC4+V1UC11-XD10		1/17/2023	MKLEPADLO	
&ETT/20	Terminal line-up diagram =V1WC4+V1UC11-XD11		1/17/2023	MKLEPADLO	
&ETT/21	Terminal line-up diagram =V1WC4+V1UC11-XD12		1/17/2023	MKLEPADLO	
&ETT/22	Terminal line-up diagram =V1WC4+V1UC11-XD13		1/17/2023	MKLEPADLO	
&ETT/23	Terminal line-up diagram =V1WC4+V1UC11-XD14		1/17/2023	MKLEPADLO	
&ETT/24	Terminal line-up diagram =V1WC4+V1UC11-XD20		1/17/2023	MKLEPADLO	
&ETT/25	Terminal line-up diagram =V1WC4+V1UC11-XD51		1/17/2023	MKLEPADLO	
&ETT/26	Terminal line-up diagram =V1WC4+V1UC11-XD52		1/17/2023	MKLEPADLO	
&ETT/27	Terminal line-up diagram =V1WC4+V1UC11-XD53		1/17/2023	MKLEPADLO	
&ETT/28	Terminal line-up diagram =V1WC4+V1UC11-XD54		1/17/2023	MKLEPADLO	
&ETT/29	Terminal line-up diagram =V1WC1+V1UC12-PE		1/17/2023	MKLEPADLO	
&ETT/30	Terminal line-up diagram =V1WC2+V1UC12-XD1		1/17/2023	MKLEPADLO	
&ETT/31	Terminal line-up diagram =V1WC2+V1UC12-XD2		1/17/2023	MKLEPADLO	
&ETT/32	Terminal line-up diagram =V1WC2+V1UC12-XD3		1/17/2023	MKLEPADLO	
&ETT/33	Terminal line-up diagram =V1WC3+V1UC12-XD1		1/17/2023	MKLEPADLO	
&ETT/34	Terminal line-up diagram =V1WC3+V1UC12-XD2		1/17/2023	MKLEPADLO	
&ETT/35	Terminal line-up diagram =V1WC3+V1UC12-XD3		1/17/2023	MKLEPADLO	
&ETT/36	Terminal line-up diagram =V1WC4+V1UC12-KF12.14		1/17/2023	MKLEPADLO	
&ETT/37	Terminal line-up diagram =V1WC4+V1UC12-XD5		1/17/2023	MKLEPADLO	
&ETT/38	Terminal line-up diagram =V1WC4+V1UC12-XD6		1/17/2023	MKLEPADLO	
&ETT/39	Terminal line-up diagram =V1WC4+V1UC12-XD10		1/17/2023	MKLEPADLO	
&ETT/40	Terminal line-up diagram =V1WC4+V1UC12-XD11		1/17/2023	MKLEPADLO	
&ETT/41	Terminal line-up diagram =V1WC4+V1UC12-XD12		1/17/2023	MKLEPADLO	
&ETT/42	Terminal line-up diagram =V1WC4+V1UC12-XD13		1/17/2023	MKLEPADLO	
&ETT/43	Terminal line-up diagram =V1WC4+V1UC12-XD14		1/17/2023	MKLEPADLO	
&ETT/44	Terminal line-up diagram =V1WC4+V1UC12-XD20		1/17/2023	MKLEPADLO	
&ETT/45	Terminal line-up diagram =V1WC4+V1UC12-XD51		1/17/2023	MKLEPADLO	
&ETT/46	Terminal line-up diagram =V1WC4+V1UC12-XD52		1/17/2023	MKLEPADLO	
&ETT/47	Terminal line-up diagram =V1WC4+V1UC12-XD53		1/17/2023	MKLEPADLO	
&ETT/48	Terminal line-up diagram =V1WC4+V1UC12-XD54		1/17/2023	MKLEPADLO	
&ETT/49	Terminal line-up diagram =V1WC3+V1UC14-XD1		1/17/2023	MKLEPADLO	
&ETT/50	Terminal line-up diagram =V1WC4+V1UC14-KF14.12		1/17/2023	MKLEPADLO	

			Date	1/17/2023	Volvo Trucks North America	Valiant TMS	Table of contents : &ETT/18 - &ETT/50	Drawing name: =2V10&EFS-EL	=		
			Ed.	MKLEPADLO	P6700 Bodyside RH - Robot Cell 2V10				+		
			Appr					Document type: EAB	Project nr: 22-16150	Page	46
Modification	Date	Name	Original		Replacement of / Replaced by	Scale 1:1					1579

Table of contents

Column X: An automatically generated page was edited

F06_001

Page	Page description	supplementary page field	Date	Edited by	X
&ETT/51	Terminal line-up diagram =V1WC4+V1UC14-XD5		1/17/2023	MKLEPADLO	
&ETT/52	Terminal line-up diagram =V1WC4+V1UC14-XD6		1/17/2023	MKLEPADLO	
&ETT/53	Terminal line-up diagram =V1WC4+V1UC14-XD10		1/17/2023	MKLEPADLO	
&ETT/54	Terminal line-up diagram =V1WC4+V1UC14-XD11		1/17/2023	MKLEPADLO	
&ETT/55	Terminal line-up diagram =V1WC4+V1UC14-XD12		1/17/2023	MKLEPADLO	
&ETT/56	Terminal line-up diagram =V1WC4+V1UC14-XD13		1/17/2023	MKLEPADLO	
&ETT/57	Terminal line-up diagram =V1WC4+V1UC14-XD14		1/17/2023	MKLEPADLO	
&ETT/58	Terminal line-up diagram =V1WC4+V1UC14-XD15		1/17/2023	MKLEPADLO	
&ETT/59	Terminal line-up diagram =V1WC4+V1UC14-XD16		1/17/2023	MKLEPADLO	
&ETT/60	Terminal line-up diagram =V1WC4+V1UC14-XD17		1/17/2023	MKLEPADLO	
&ETT/61	Terminal line-up diagram =V1WC4+V1UC14-XD18		1/17/2023	MKLEPADLO	
&ETT/62	Terminal line-up diagram =V1WC4+V1UC14-XD51		1/17/2023	MKLEPADLO	
&ETT/63	Terminal line-up diagram =V1WC4+V1UC14-XD52		1/17/2023	MKLEPADLO	
&ETT/64	Terminal line-up diagram =V1WC4+V1UC14-XD53		1/17/2023	MKLEPADLO	
&ETT/65	Terminal line-up diagram =V1WC4+V1UC14-XD54		1/17/2023	MKLEPADLO	
&ETT/66	Terminal line-up diagram =V1WC3+V1UC15-XD1		1/17/2023	MKLEPADLO	
&ETT/67	Terminal line-up diagram =V1WC4+V1UC15-KF15.12		1/17/2023	MKLEPADLO	
&ETT/68	Terminal line-up diagram =V1WC4+V1UC15-XD5		1/17/2023	MKLEPADLO	
&ETT/69	Terminal line-up diagram =V1WC4+V1UC15-XD6		1/17/2023	MKLEPADLO	
&ETT/70	Terminal line-up diagram =V1WC4+V1UC15-XD10		1/17/2023	MKLEPADLO	
&ETT/71	Terminal line-up diagram =V1WC4+V1UC15-XD11		1/17/2023	MKLEPADLO	
&ETT/72	Terminal line-up diagram =V1WC4+V1UC15-XD12		1/17/2023	MKLEPADLO	
&ETT/73	Terminal line-up diagram =V1WC4+V1UC15-XD13		1/17/2023	MKLEPADLO	
&ETT/74	Terminal line-up diagram =V1WC4+V1UC15-XD14		1/17/2023	MKLEPADLO	
&ETT/75	Terminal line-up diagram =V1WC4+V1UC15-XD15		1/17/2023	MKLEPADLO	
&ETT/76	Terminal line-up diagram =V1WC4+V1UC15-XD16		1/17/2023	MKLEPADLO	
&ETT/77	Terminal line-up diagram =V1WC4+V1UC15-XD17		1/17/2023	MKLEPADLO	
&ETT/78	Terminal line-up diagram =V1WC4+V1UC15-XD18		1/17/2023	MKLEPADLO	
&ETT/79	Terminal line-up diagram =V1WC4+V1UC15-XD51		1/17/2023	MKLEPADLO	
&ETT/80	Terminal line-up diagram =V1WC4+V1UC15-XD52		1/17/2023	MKLEPADLO	
&ETT/81	Terminal line-up diagram =V1WC4+V1UC15-XD53		1/17/2023	MKLEPADLO	
&ETT/82	Terminal line-up diagram =V1WC4+V1UC15-XD54		1/17/2023	MKLEPADLO	
&ETT/83	Terminal line-up diagram =V1WC4+V1UC32-XD11		1/17/2023	MKLEPADLO	

Table of contents

Column X: An automatically generated page was edited

F06_001

Page	Page description	supplementary page field	Date	Edited by	X
&ETT/84	Terminal line-up diagram =V1PZ1PF1+V1UC61-XD11		1/17/2023	MKLEPADLO	
&ETT/85	Terminal line-up diagram =V1PZ1PF2+V1UC62-XD11		1/17/2023	MKLEPADLO	
&ETT/86	Terminal line-up diagram =V1PZ1PF3+V1UC63-XD11		1/17/2023	MKLEPADLO	
&ETT/87	Terminal line-up diagram =V1PZ1PF4+V1UC64-XD11		1/17/2023	MKLEPADLO	
&EXX/1	Summarized parts list : TS 35_7,5 - SIE.6ES7132-6BH01-0BA0		1/17/2023	MKLEPADLO	
&EXX/2	Summarized parts list : SIE.6ES7136-6BA01-0CA0 - SIE.6EP4134-0GB00-0AY0		1/17/2023	MKLEPADLO	
&EXX/3	Summarized parts list : SIE.6EP3336-7SB00-3AX0 - EMPD3FBCB-030A-M		1/17/2023	MKLEPADLO	
&EXX/4	Summarized parts list : BAN.SLSCP30-1200P44NT - FES.541254		1/17/2023	MKLEPADLO	
&EXX/5	Summarized parts list : TUN.1329440 - RIT.5051375		1/17/2023	MKLEPADLO	
&EXX/6	Summarized parts list : RIT.6315150 - PTN102-3K		1/17/2023	MKLEPADLO	
&EXX/7	Summarized parts list : SIE.3VA6225-6KP31-0AA0 - ABB.2CDS271517R0357		1/17/2023	MKLEPADLO	
&EXX/8	Summarized parts list : RIT.SETS8205SID5 - RIT.SETS8205SID5		1/17/2023	MKLEPADLO	
&EYY/1	Terminal-strip overview : =KF0KF1+UC31-PC1 - =KF0WC4+UC31-XD14		1/17/2023	MKLEPADLO	
&EYY/2	Terminal-strip overview : =V1WC1+V1UC11-PE - =V1WC4+V1UC11-XD54		1/17/2023	MKLEPADLO	
&EYY/3	Terminal-strip overview : =V1WC1+V1UC12-PE - =V1WC4+V1UC12-XD54		1/17/2023	MKLEPADLO	
&EYY/4	Terminal-strip overview : =V1WC3+V1UC14-XD1 - =V1WC4+V1UC14-XD54		1/17/2023	MKLEPADLO	
&EYY/5	Terminal-strip overview : =V1WC3+V1UC15-XD1 - =V1WC4+V1UC15-XD54		1/17/2023	MKLEPADLO	
&EYY/6	Terminal-strip overview : =V1WC4+V1UC32-XD11 - =V1WC4+V1UC32-XD11		1/17/2023	MKLEPADLO	
&EYY/7	Terminal-strip overview : =V1PZ1PF1+V1UC61-XD11 - =V1PZ1PF1+V1UC61-XD11		1/17/2023	MKLEPADLO	
&EYY/8	Terminal-strip overview : =V1PZ1PF2+V1UC62-XD11 - =V1PZ1PF2+V1UC62-XD11		1/17/2023	MKLEPADLO	
&EYY/9	Terminal-strip overview : =V1PZ1PF3+V1UC63-XD11 - =V1PZ1PF3+V1UC63-XD11		1/17/2023	MKLEPADLO	
&EYY/10	Terminal-strip overview : =V1PZ1PF4+V1UC64-XD11 - =V1PZ1PF4+V1UC64-XD11		1/17/2023	MKLEPADLO	
&EAZ/1	Amendment page		1/11/2023	MKLEPADLO	
&EAZ/2	Amendment page		1/11/2023	MKLEPADLO	
&EAZ/3	Amendment page		1/11/2023	MKLEPADLO	
&EAZ/4	Amendment page		1/11/2023	MKLEPADLO	
&EAZ/5	Amendment page		1/11/2023	MKLEPADLO	
&EAZ/6	Amendment page		1/17/2023	MKLEPADLO	

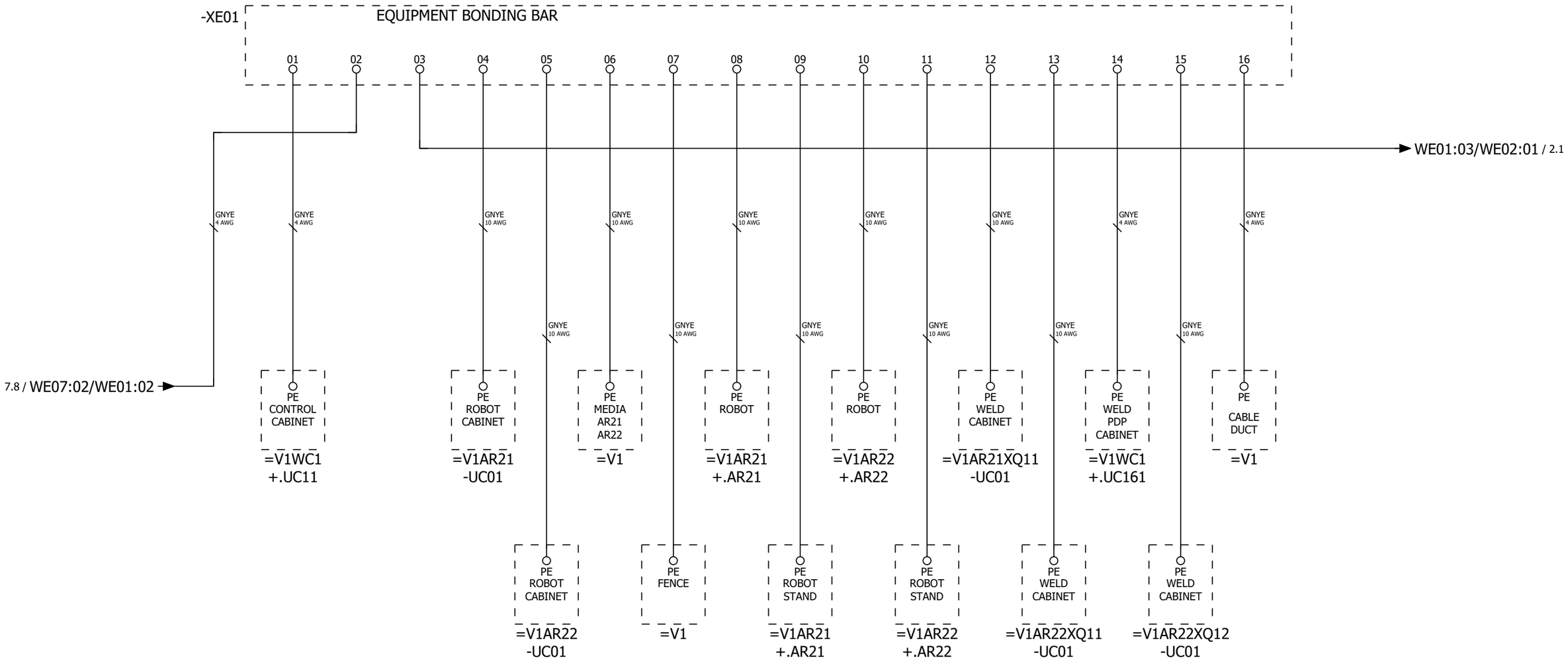

&EAB+/48

2

			Date	1/11/2023	Volvo Trucks North America	Valiant TMS	EQUIPMENT BONDING	Drawing name: =2V10&EFS-EL		= FQ99V1	
			Ed.	MKLEPADLO						+ V1	
			Appr		P6700 Bodyside RH - Robot Cell 2V10			Document type: EFA	Project nr: 22-16150		Page 1
Modification	Date	Name	Original		Replacement of / Replaced by	Scale 1:1					1579

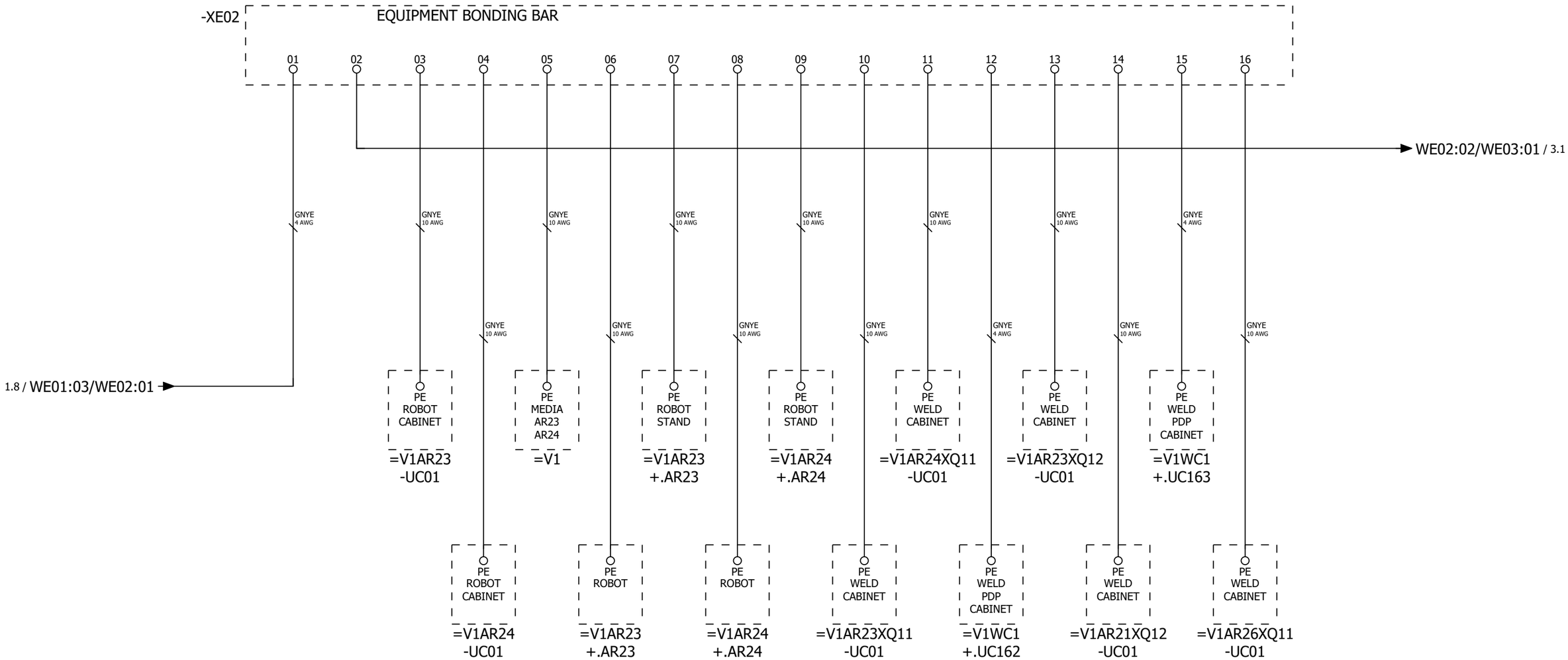

1 3

			Date	1/11/2023	Volvo Trucks North America	Valiant TMS	EQUIPMENT BONDING	Drawing name: =2V10&EFS-EL		= FQ99V1	
			Ed.	MKLEPADLO						+ V1	
			Appr		P6700 Bodyside RH - Robot Cell 2V10			Document type: EFA	Project nr: 22-16150		Page 2
Modification	Date	Name	Original		Replacement of / Replaced by	Scale 1:1					1579

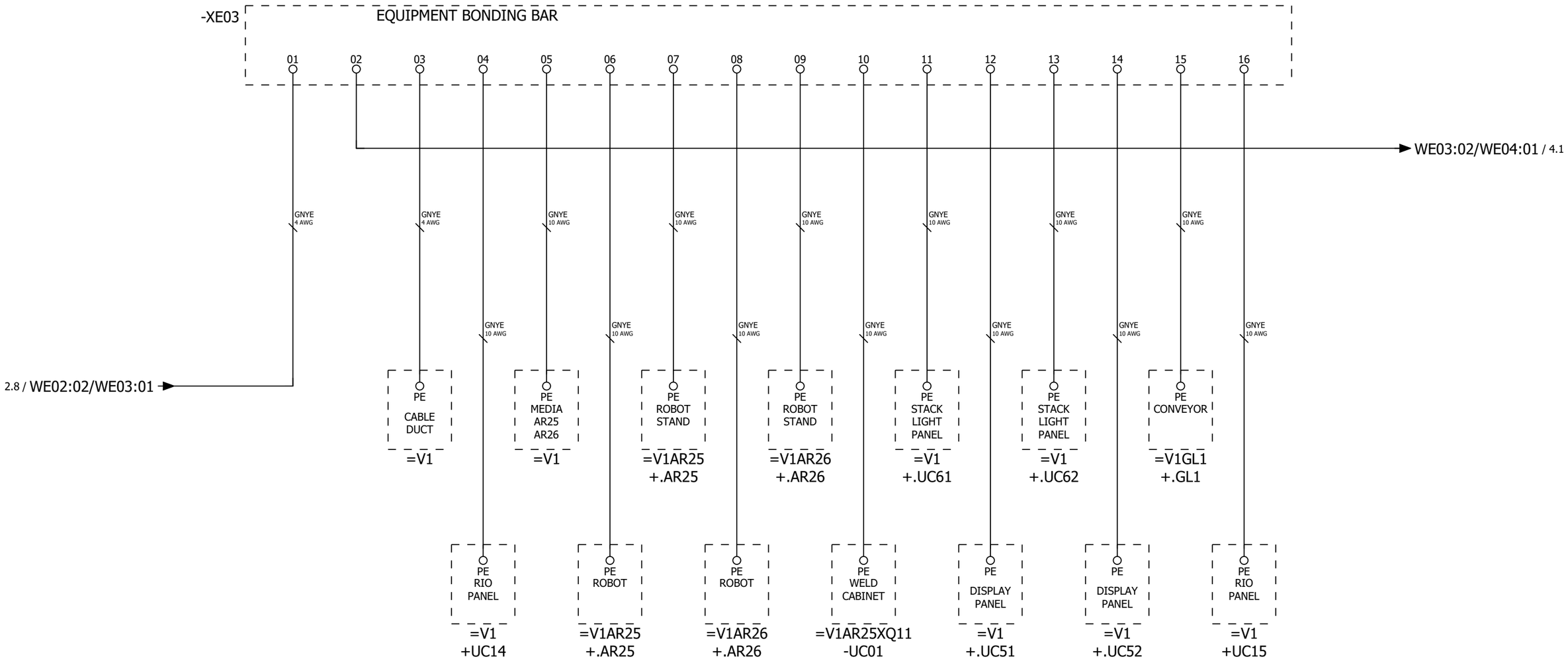
-XE03
EQUIPMENT BONDING BAR
01
02
03
04
05
06
07
08
09
10
11
12
13
14
15
16
WE03:02/WE04:01 / 4.1
2.8 / WE02:02/WE03:01
GNYE 4 AWG
GNYE 10 AWG
PE CABLE DUCT =V1
PE MEDIA AR25 AR26 =V1
PE ROBOT STAND =V1AR25 +.AR25
PE ROBOT STAND =V1AR26 +.AR26
PE STACK LIGHT PANEL =V1 +.UC61
PE STACK LIGHT PANEL =V1 +.UC62
PE CONVEYOR =V1GL1 +.GL1
PE RIO PANEL =V1 +UC14
PE ROBOT =V1AR25 +.AR25
PE ROBOT =V1AR26 +.AR26
PE WELD CABINET =V1AR25XQ11 -UC01
PE DISPLAY PANEL =V1 +.UC51
PE DISPLAY PANEL =V1 +.UC52
PE RIO PANEL =V1 +UC15

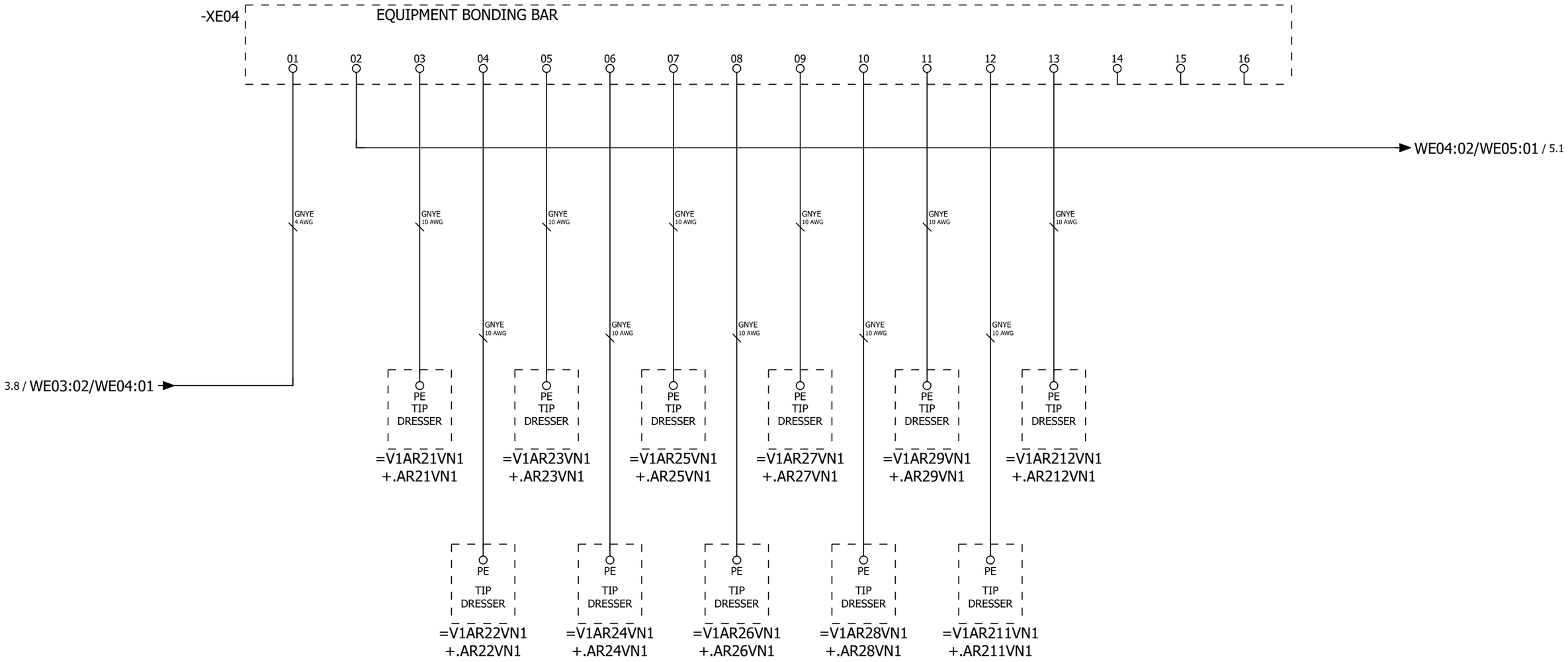
-XE04
EQUIPMENT BONDING BAR
01
02
03
04
05
06
07
08
09
10
11
12
13
14
15
16
WE04:02/WE05:01 / 5.1
GNYE
4 AWG
GNYE
10 AWG
3.8 / WE03:02/WE04:01
PE
TIP
DRESSER
=V1AR21VN1
+.AR21VN1
=V1AR23VN1
+.AR23VN1
=V1AR25VN1
+.AR25VN1
=V1AR27VN1
+.AR27VN1
=V1AR29VN1
+.AR29VN1
=V1AR212VN1
+.AR212VN1
=V1AR22VN1
+.AR22VN1
=V1AR24VN1
+.AR24VN1
=V1AR26VN1
+.AR26VN1
=V1AR28VN1
+.AR28VN1
=V1AR211VN1
+.AR211VN1

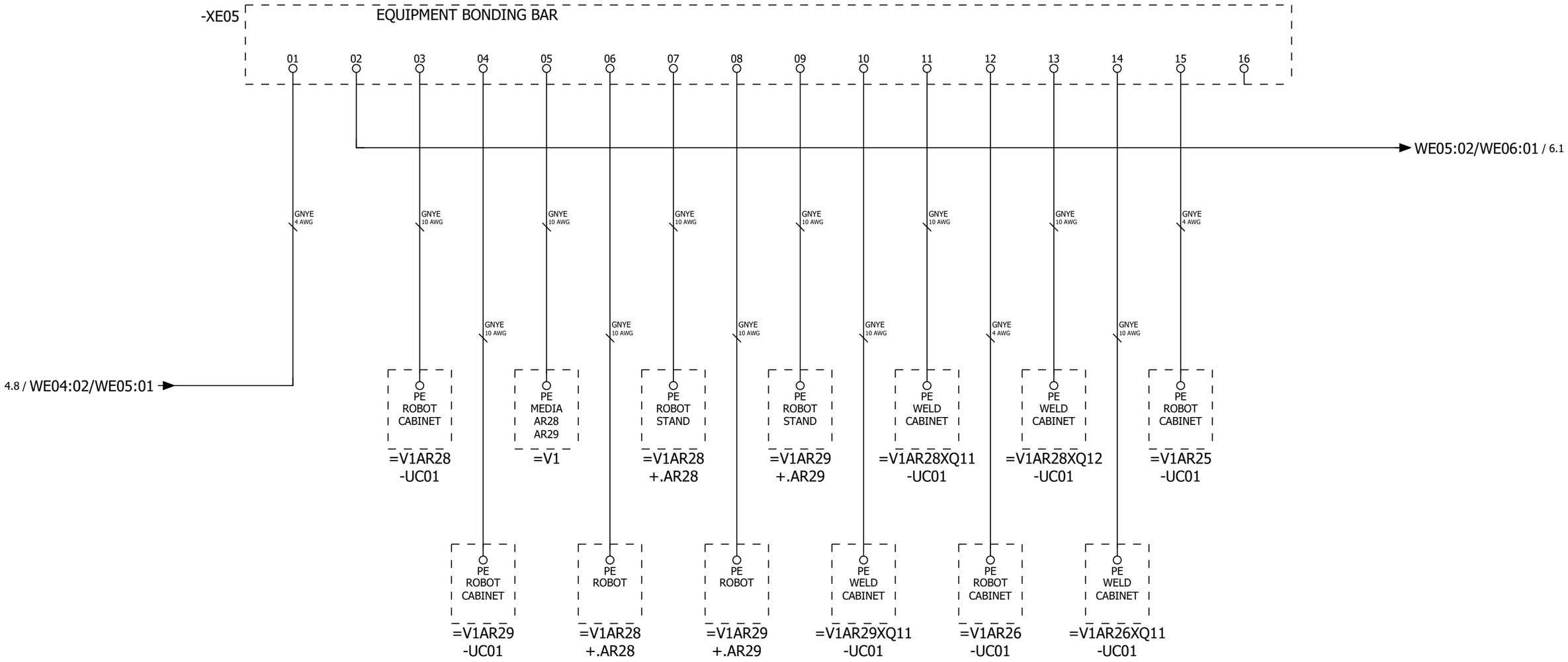
-XE05
EQUIPMENT BONDING BAR
01
02
03
04
05
06
07
08
09
10
11
12
13
14
15
16
WE05:02/WE06:01 / 6.1
4.8 / WE04:02/WE05:01
GNYE 4 AWG
GNYE 10 AWG
PE ROBOT CABINET
=V1AR28 -UC01
PE MEDIA AR28 AR29
=V1
PE ROBOT STAND
=V1AR28 +.AR28
=V1AR29 +.AR29
PE WELD CABINET
=V1AR28XQ11 -UC01
=V1AR28XQ12 -UC01
=V1AR25 -UC01
PE ROBOT
=V1AR29 -UC01
=V1AR28 +.AR28
=V1AR29 +.AR29
=V1AR29XQ11 -UC01
=V1AR26 -UC01
=V1AR26XQ11 -UC01

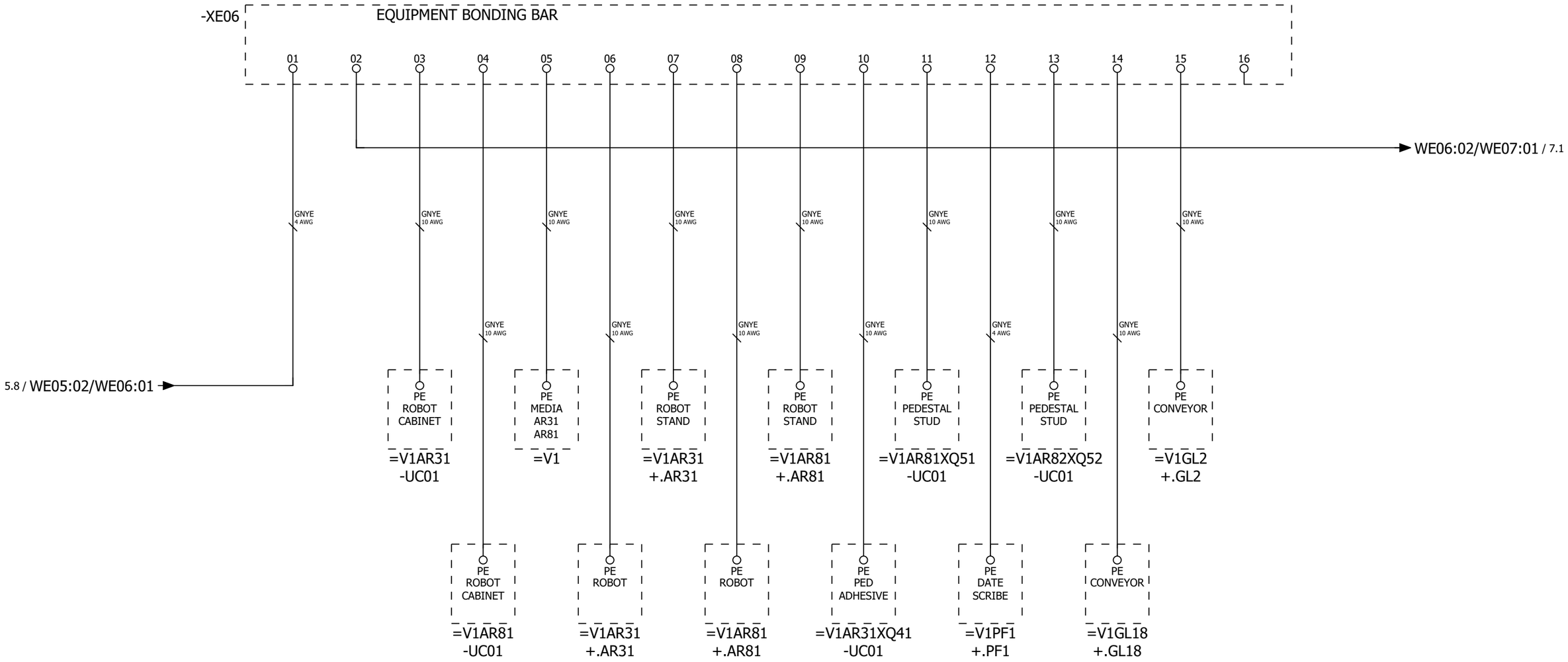
-XE06
EQUIPMENT BONDING BAR
01
02
03
04
05
06
07
08
09
10
11
12
13
14
15
16
WE06:02/WE07:01 / 7.1
5.8 / WE05:02/WE06:01
GNYE 4 AWG
GNYE 10 AWG
PE ROBOT CABINET
=V1AR31 -UC01
PE MEDIA AR31 AR81
=V1
PE ROBOT STAND
=V1AR31 +.AR31
PE ROBOT STAND
=V1AR81 +.AR81
PE PEDESTAL STUD
=V1AR81XQ51 -UC01
PE PEDESTAL STUD
=V1AR82XQ52 -UC01
PE CONVEYOR
=V1GL2 +.GL2
PE ROBOT CABINET
=V1AR81 -UC01
PE ROBOT
=V1AR31 +.AR31
PE ROBOT
=V1AR81 +.AR81
PE PED ADHESIVE
=V1AR31XQ41 -UC01
PE DATE SCRIBE
=V1PF1 +.PF1
PE CONVEYOR
=V1GL18 +.GL18

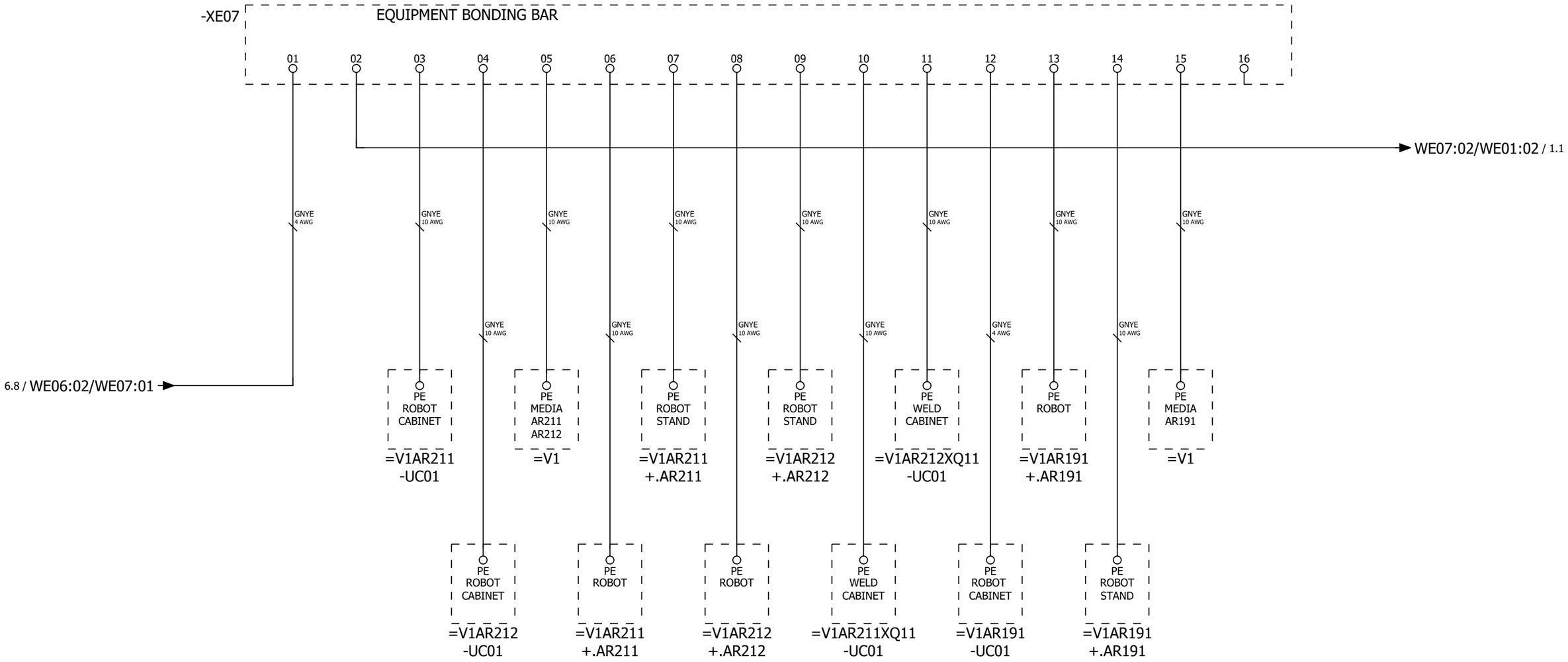

&EFS=FQ0V1SF1S01+.UC32/1

			Date	1/11/2023	Volvo Trucks North America	Valiant TMS	EQUIPMENT BONDING	Drawing name: =2V10&EFS-EL		= FQ99V1	
			Ed.	MKLEPADLO						+ V1	
			Appr		P6700 Bodyside RH - Robot Cell 2V10			Document type: EFA	Project nr: 22-16150		Page 7
Modification	Date	Name	Original		Replacement of / Replaced by	Scale 1:1					1579

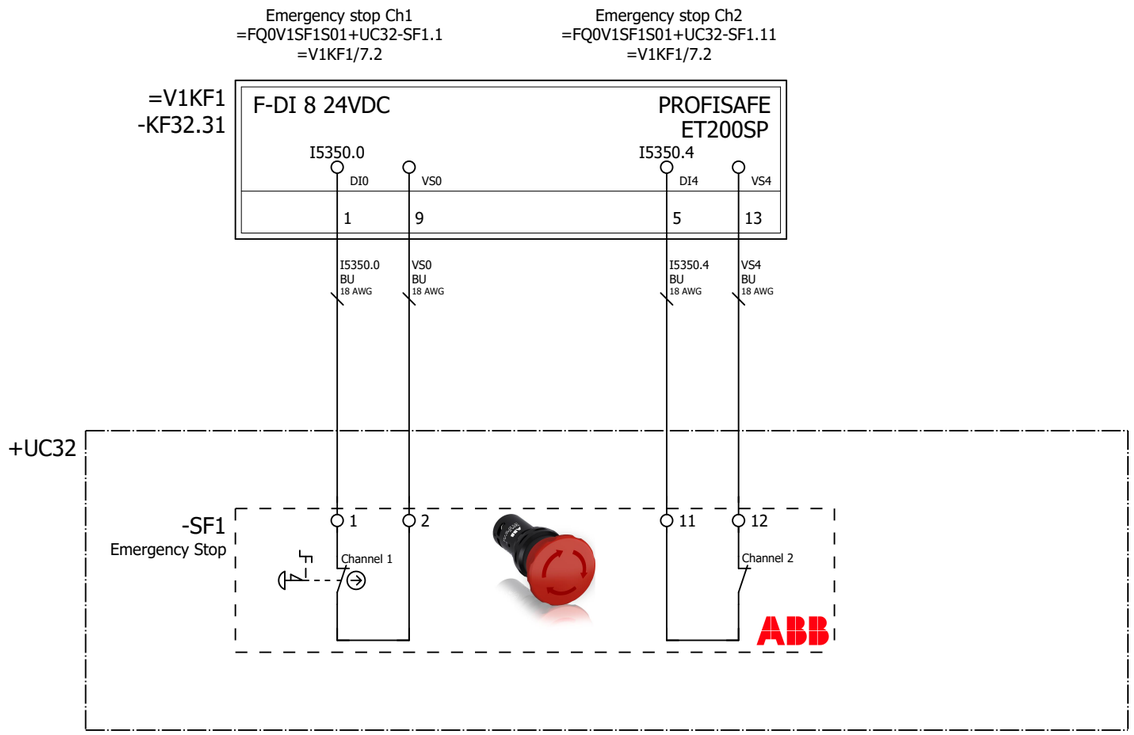

&EFA=FQ99V1+V1/7

=KF0FQ0+UC31/1

			Date	1/11/2023	Volvo Trucks North America	Valiant TMS	Emergency stop +V1SF1S01UC32	Drawing name: =2V10&EFS-EL		= FQ0V1SF1S01	
			Ed.	MKLEPADLO						+ V1UC32	
			Appr		P6700 Bodyside RH - Robot Cell 2V10			Document type: EFS	Project nr: 22-16150		Page 1
Modification	Date	Name	Original		Replacement of / Replaced by	Scale 1:1					1579

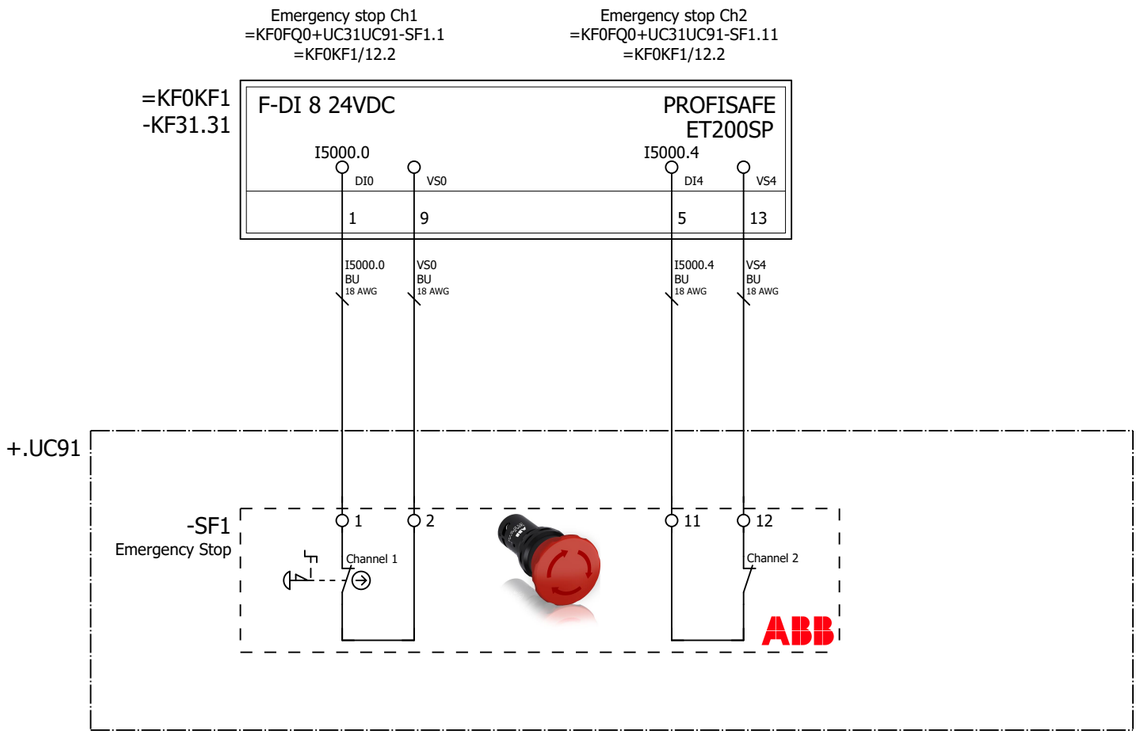

=FQ0V1SF1S01+V1UC32/1

=KF0KF1/1

			Date	1/11/2023	Volvo Trucks North America	Valiant TMS	Operating box UC91 MOP	Drawing name: =2V10&EFS-EL		= KF0FQ0	
			Ed.	MKLEPADLO						+ UC31	
			Appr		P6700 Bodyside RH - Robot Cell 2V10			Document type: EFS	Project nr: 22-16150		Page 1
Modification	Date	Name	Original		Replacement of / Replaced by	Scale 1:1					1579

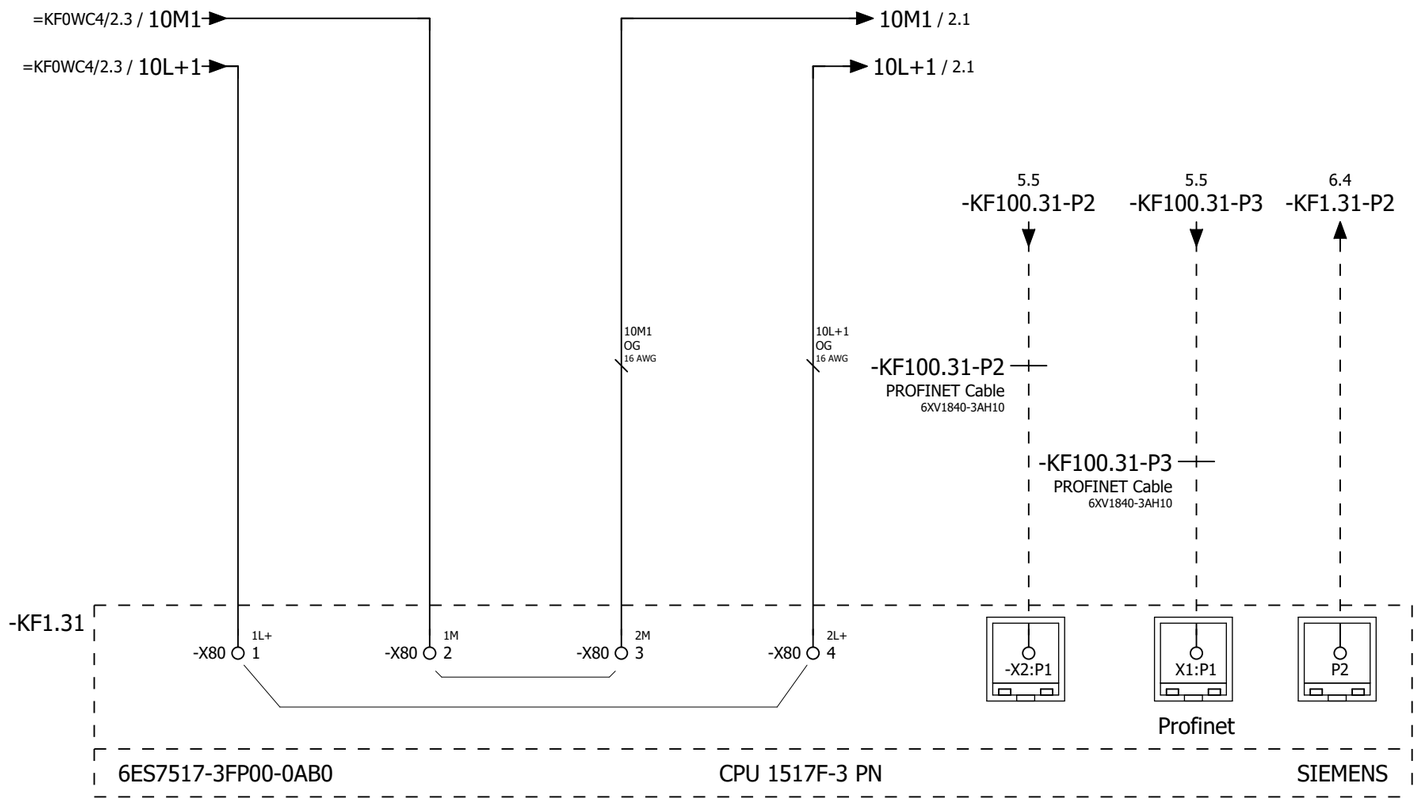

=KF0FQ0/1

2

			Date	1/11/2023	Volvo Trucks North America	Valiant TMS	CPU 1517-F-3PN/DP, Failsafe	Drawing name: =2V10&EFS-EL		= KF0KF1	
			Ed.	MKLEPADLO						+ UC31	
			Appr		P6700 Bodyside RH - Robot Cell 2V10			Document type: EFS	Project nr: 22-16150	Page	1
Modification	Date	Name	Original		Replacement of / Replaced by	Scale 1:1					1579

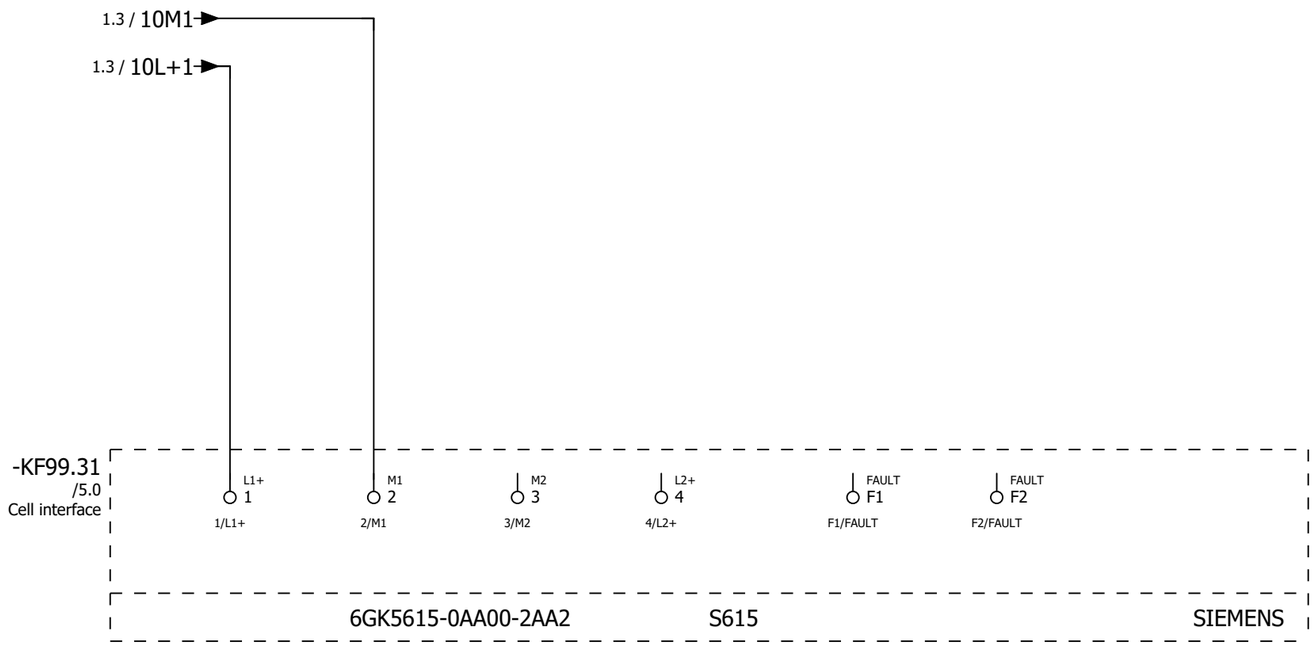

1 3

			Date	1/11/2023	Volvo Trucks North America	Valiant TMS	Cell interface S615	Drawing name: =2V10&EFS-EL		= KF0KF1	
			Ed.	MKLEPADLO						+ UC31	
			Appr		P6700 Bodyside RH - Robot Cell 2V10			Document type: EFS	Project nr: 22-16150		Page 2
Modification	Date	Name	Original		Replacement of	Replaced by	Scale 1:1				1579

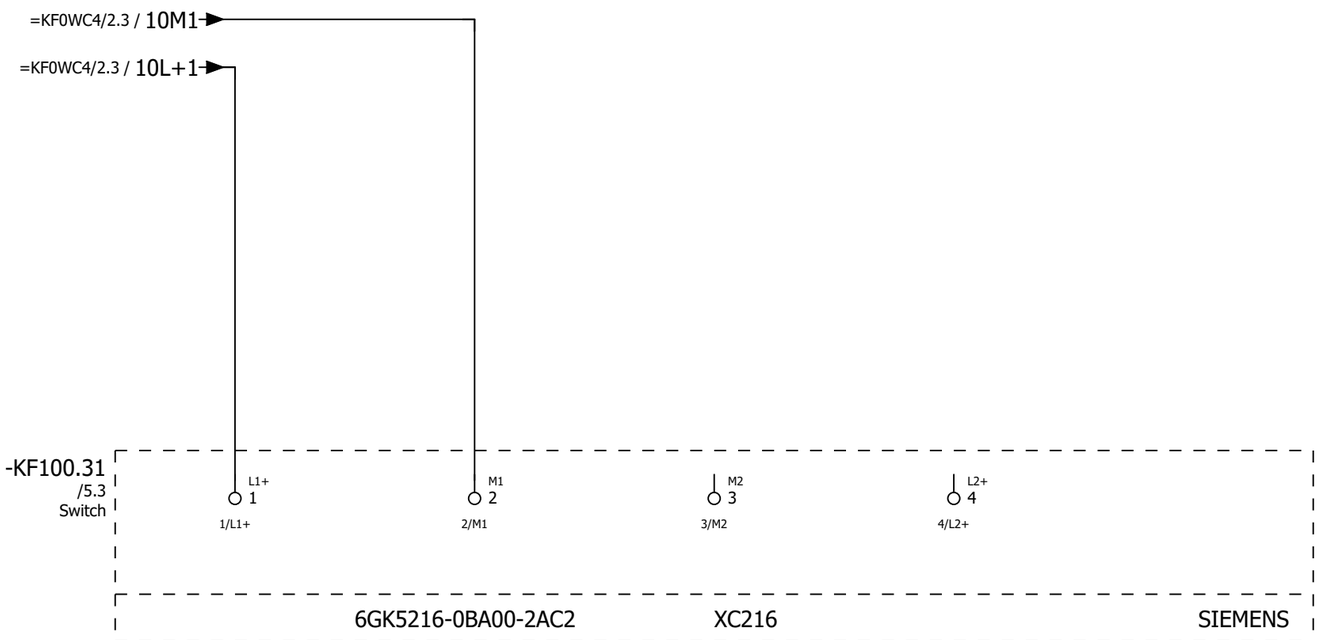

			Date	1/11/2023	Volvo Trucks North America	Valiant TMS	Switch, Scalance XC216	Drawing name: =2V10&EFS-EL		= KF0KF1	
			Ed.	MKLEPADLO	P6700 Bodyside RH - Robot Cell 2V10					+ UC31	
			Appr					Document type: EFS	Project nr: 22-16150		Page 3
Modification	Date	Name	Original		Replacement of	Replaced by	Scale 1:1				1579

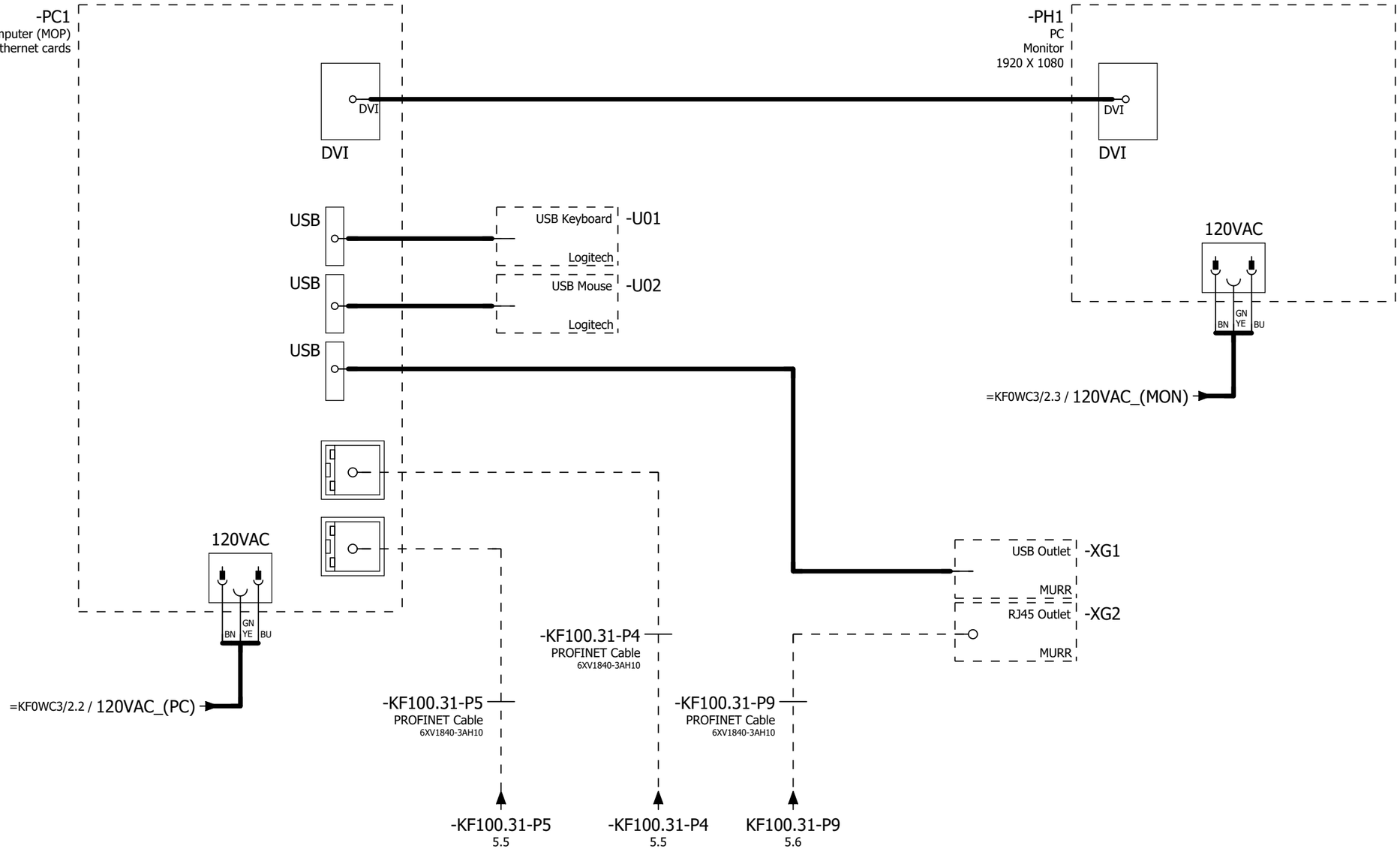

			Date	1/11/2023	Volvo Trucks North America		Valiant TMS	MOP, PC	Drawing name: =2V10&EFS-EL		= KF0KF1
			Ed.	MKLEPADLO							+ UC31
			Appr		P6700 Bodyside RH - Robot Cell 2V10				Document type: EFS	Project nr: 22-16150	Page 4
Modification	Date	Name	Original		Replacement of	Replaced by	Scale 1:1				1579

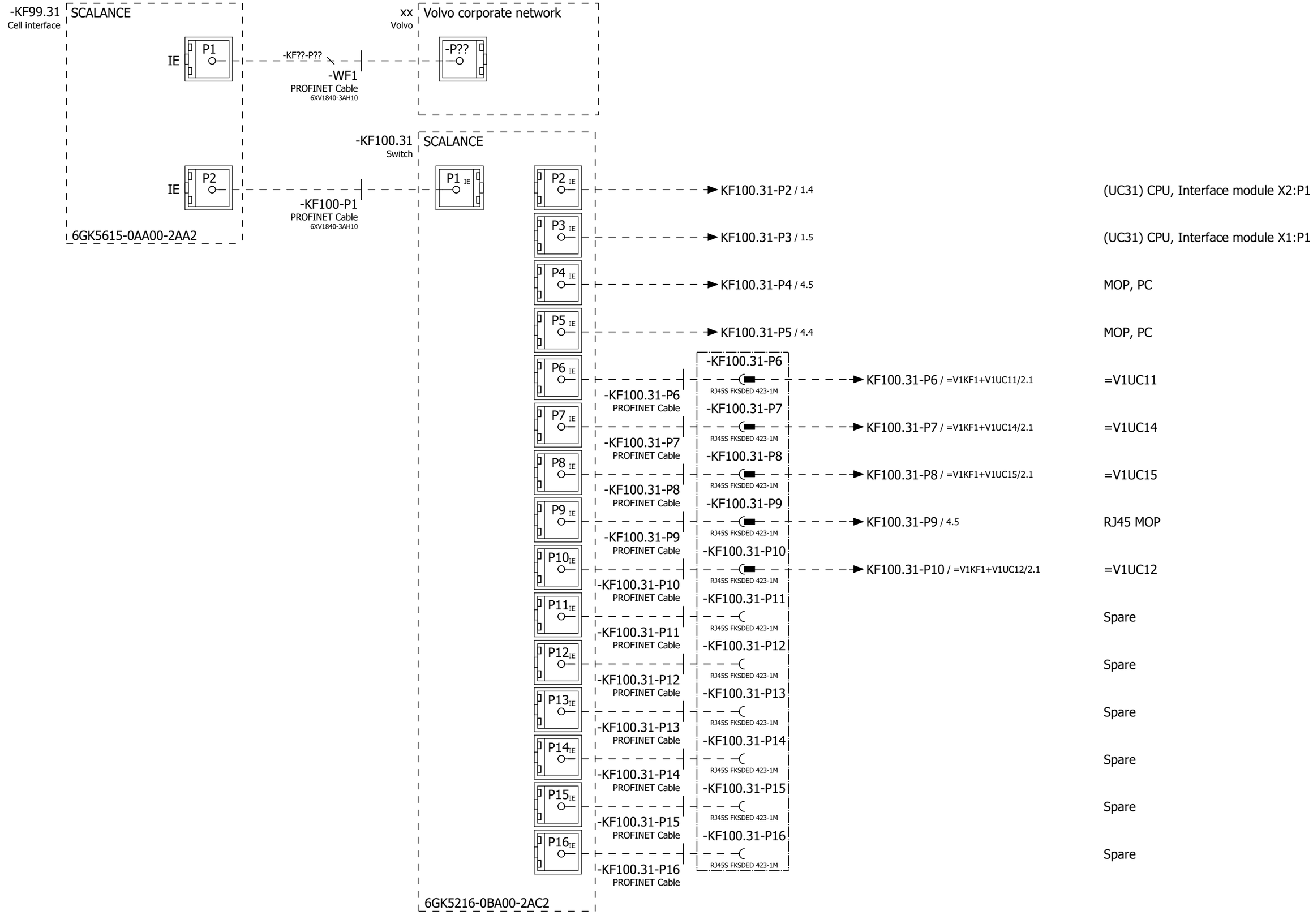

			Date	1/11/2023	Volvo Trucks North America		Valiant TMS	Network overview	Drawing name: =2V10&EFS-EL		= KF0KF1
			Ed.	MKLEPADLO							+ UC31
			Appr		P6700 Bodyside RH - Robot Cell 2V10				Document type: EFS	Project nr: 22-16150	Page 5
Modification	Date	Name	Original		Replacement of	Replaced by	Scale 1:1				1579

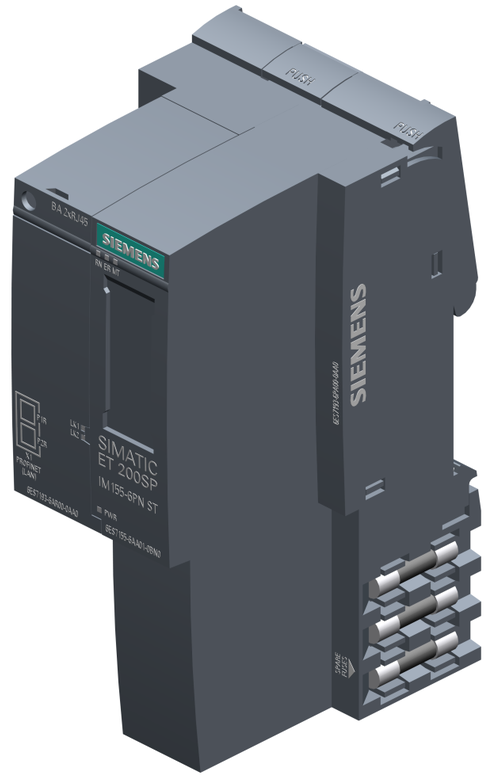

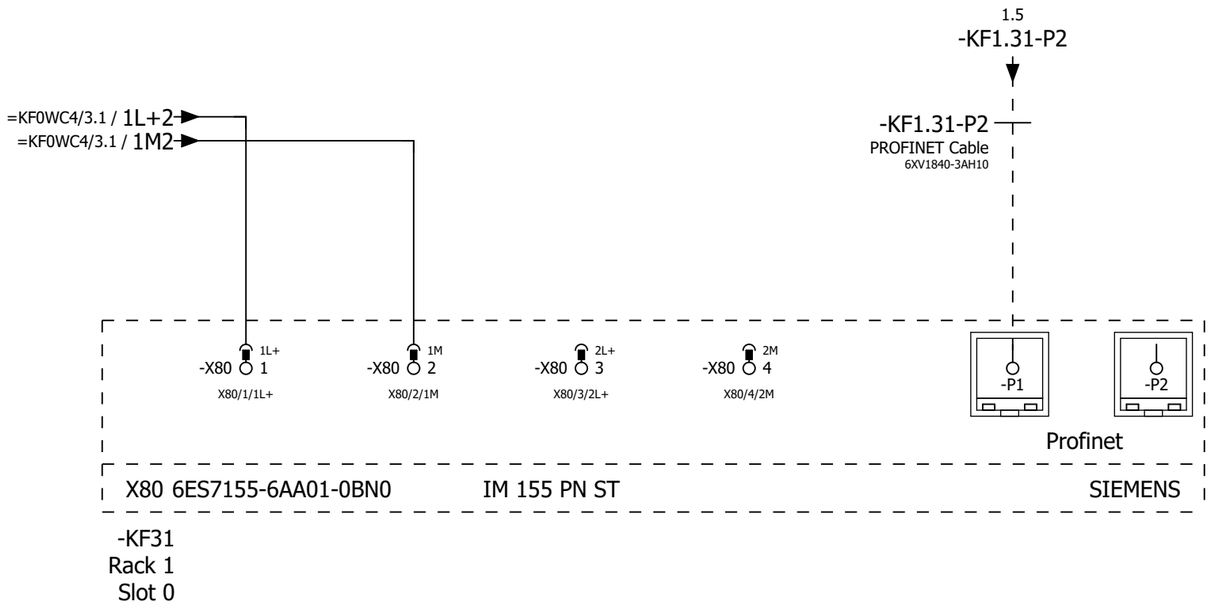

5 7

			Date	1/11/2023	Volvo Trucks North America	Valiant TMS	IM 155 PN	Drawing name: =2V10&EFS-EL	= KF0KF1	
			Ed.	MKLEPADLO					+ UC31	
			Appr		P6700 Bodyside RH - Robot Cell 2V10			Document type: EFS	Project nr: 22-16150	Page 6 / 1579
Modification	Date	Name	Original		Replacement of	Replaced by	Scale 1:1			

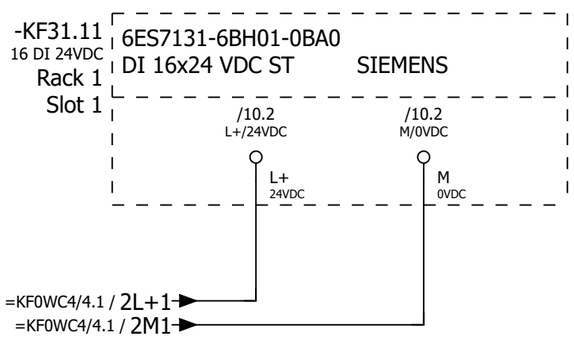

6 8

			Date	1/11/2023	Volvo Trucks North America	Valiant TMS	ET200S Wiring DI	Drawing name: =2V10&EFS-EL		= KF0KF1	
			Ed.	MKLEPADLO						+ UC31	
			Appr		P6700 Bodyside RH - Robot Cell 2V10			Document type: EFS	Project nr: 22-16150		Page 7
Modification	Date	Name	Original		Replacement of / Replaced by	Scale 1:1					1579

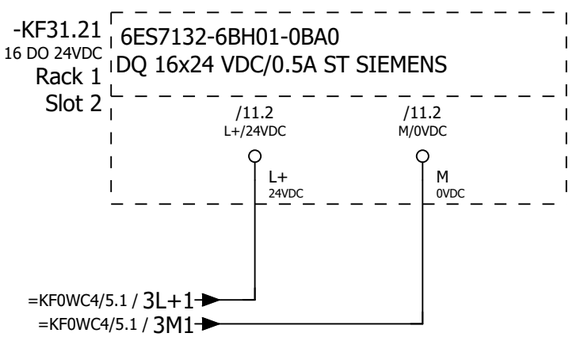

			Date	1/11/2023	Volvo Trucks North America	Valiant TMS	ET200S Wiring DO	Drawing name: =2V10&EFS-EL		= KF0KF1	
			Ed.	MKLEPADLO						+ UC31	
			Appr		P6700 Bodyside RH - Robot Cell 2V10			Document type: EFS	Project nr: 22-16150		Page 8
Modification	Date	Name	Original		Replacement of	Replaced by	Scale 1:1				1579

F-DI
8x24VDC
HF
DIAG
PROFIsafe
PWR
V1.0.3
6ES7136-6BA00-0CA0

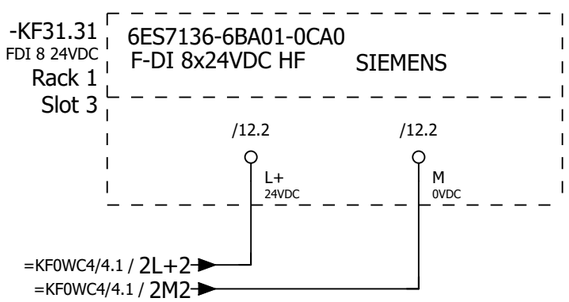
-KF31.31
FDI 8 24VDC
Rack 1
Slot 3
6ES7136-6BA01-0CA0
F-DI 8x24VDC HF
SIEMENS
/12.2
/12.2
L+
24VDC
M
0VDC
=KF0WC4/4.1 / 2L+2
=KF0WC4/4.1 / 2M2

-KF31.11

ET 200SP SIEMENS
DI 16x24 VDC ST

L+	/7.1		
M	/7.2		
I00.0	=KF0SF1/2.2	=KF0SF1+UC31UC92-SF1_I	Emergency stop tripped/reset PB
I00.1	=KF0SF1/2.5	=KF0SF1+UC31UC92-SF2_I	Enable power PB
I00.2	=KF0SF1/2.7	=KF0SF1+UC31UC92-SF3_I	Start auto PB
I00.3	=KF0SF1/2.7	=KF0SF1+UC31UC92-SF4_I	Man/Auto Sel Switch
I00.4	=KF0SF1/1.5	=KF0SF1+UC31UC91-SF5	Set PB
I00.5	=KF0SF1/1.2	=KF0SF1+UC31UC91-SF6	Reset PB
I00.6		I00.6	Spare
I00.7		I00.7	Spare
I01.0	=KF0WC4/2.6	=K0WC4-GA1.1	UPS Battery
I01.1	=KF0WC4/2.7	=K0WC4-GA1.2	UPS Alarm
I01.2	=KF0WC3/3.2	=KF0WC3+UC31-FC1	Monitoring 120 VAC
I01.3	=KF0WC3/3.4	=KF0WC3+UC31-FC2	Monitoring 120 VAC
I01.4	=KF0WC4/1.3	=KF0WC4+UC31-FC11_I	Monitoring 24 VDC
I01.5		I01.5	Spare
I01.6		I01.6	Spare
I01.7		I01.7	Spare

6ES7131-6BH01-0BA0

-KF31.21

ET 200SP SIEMENS
DQ 16x24 VDC/0.5A ST

L+/24VDC	L+ 24VDC		/8.1		
M/0VDC	M 0VDC		/8.2		
1/DQ0	1 DQ0	Q00.0	=KF0SF1/2.3	=KF0SF1+UC31UC92-PF1_Q	Emergency stop tripped/reset LT
2/DQ1	2 DQ1	Q00.1	=KF0SF1/2.8	=KF0SF1+UC31UC92-PF3_Q	Start auto LT
3/DQ2	3 DQ2	Q00.2		Q00.2	Spare
4/DQ3	4 DQ3	Q00.3		Q00.3	Spare
5/DQ4	5 DQ4	Q00.4		Q00.4	Spare
6/DQ5	6 DQ5	Q00.5		Q00.5	Spare
7/DQ6	7 DQ6	Q00.6		Q00.6	Spare
8/DQ7	8 DQ7	Q00.7		Q00.7	Spare
9/DQ8	9 DQ8	Q01.0	=KF0PZ1/1.3	=KF0PZ1+UC31-PF1_1	Indication column Green
10/DQ9	10 DQ9	Q01.1	=KF0PZ1/1.3	=KF0PZ1+UC31-PF1_2	Indication column Red
11/DQ10	11 DQ10	Q01.2	=KF0PZ1/1.4	=KF0PZ1+UC31-PF1_3	Indication column Siren
12/DQ11	12 DQ11	Q01.3		Q01.3	Spare
13/DQ12	13 DQ12	Q01.4		Q01.4	Spare
14/DQ13	14 DQ13	Q01.5		Q01.5	Spare
15/DQ14	15 DQ14	Q01.6		Q01.6	Spare
16/DQ15	16 DQ15	Q01.7		Q01.7	Spare

6ES7132-6BH01-0BA0

			Date	1/11/2023	Volvo Trucks North America	Valiant TMS	ET200S Cross-reference Output module	Drawing name: =2V10&EFS-EL		= KF0KF1	
			Ed.	MKLEPADLO						+ UC31	
			Appr		P6700 Bodyside RH - Robot Cell 2V10	Scale 1:1		Document type: EFS	Project nr: 22-16150	Page	11
Modification	Date	Name	Original		Replacement of / Replaced by						1579

-KF31.31
/9.0

ET 200SP SIEMENS
F-DI 8x24VDC HF

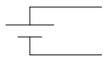

	L+ 24VDC	/9.1		
	M 0VDC	/9.2		
I5000.0	1 DI0	=KF0FQ0/1.3	=KF0FQ0+UC31UC91-SF1.1	Emergency stop Ch1
	9 VS0	=KF0FQ0/1.3		
I5000.1	2 DI1		I5000.1	Spare
	10 VS1			
I5000.2	3 DI2		I5000.2	Spare
	11 VS2			
I5000.3	4 DI3		I5000.3	Spare
	12 VS3			
I5000.4	5 DI4	=KF0FQ0/1.4	=KF0FQ0+UC31UC91-SF1.11	Emergency stop Ch2
	13 VS4	=KF0FQ0/1.4		
I5000.5	6 DI5		I5000.5	Spare
	14 VS5			
I5000.6	7 DI6		I5000.6	Spare
	15 VS6			
I5000.7	8 DI7		I5000.7	Spare
	16 VS7			

6ES7136-6BA01-0CA0

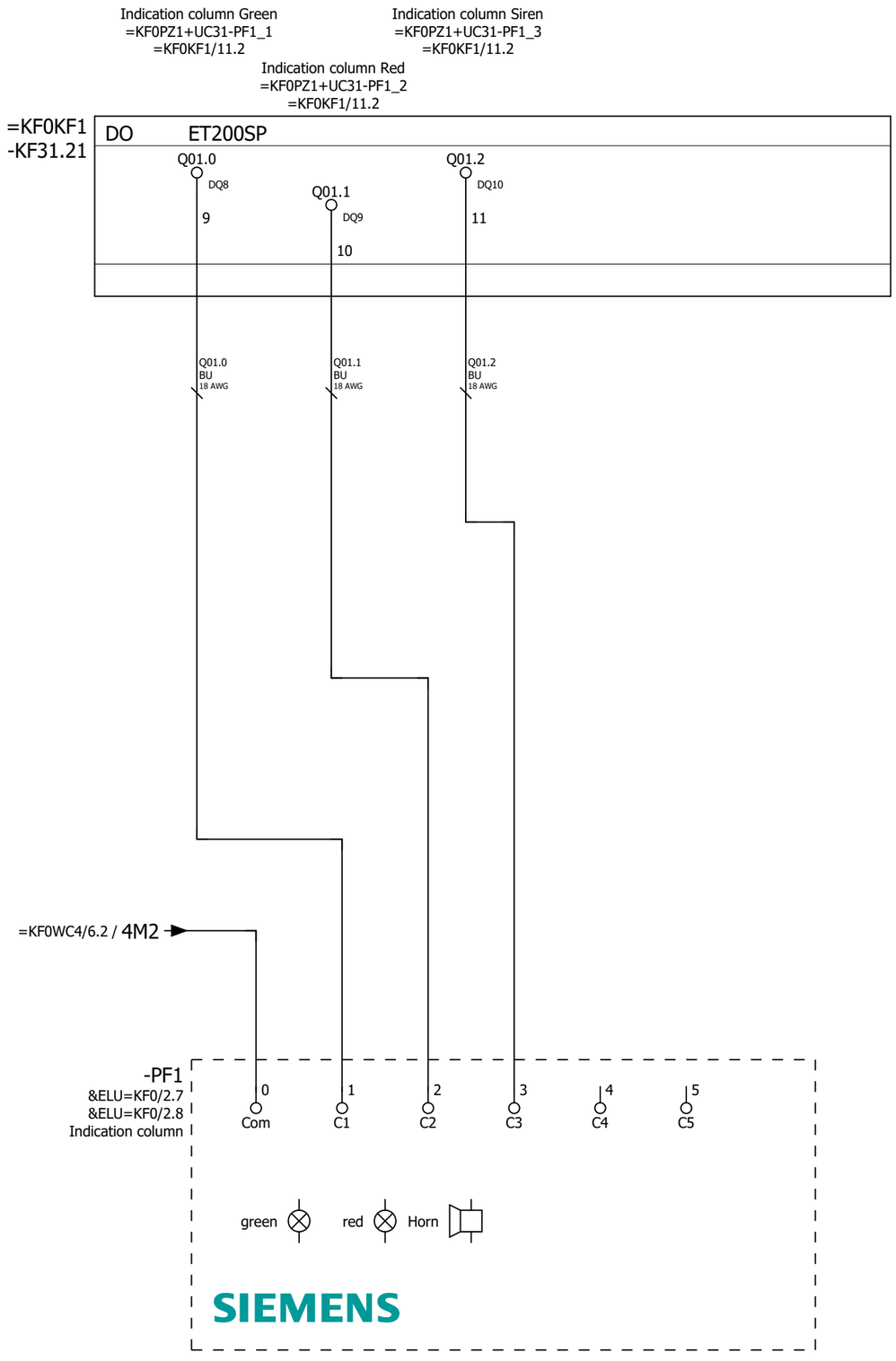

=KF0KF1/12

=KF0SF1/1

			Date	1/11/2023	Volvo Trucks North America	Valiant TMS	Indication column	Drawing name: =2V10&EFS-EL	= KF0PZ1	
			Ed.	MKLEPADLO					+ UC31	
			Appr		P6700 Bodyside RH - Robot Cell 2V10			Document type: EFS	Project nr: 22-16150	Page 1
Modification	Date	Name	Original		Replacement of	Replaced by	Scale 1:1			1579

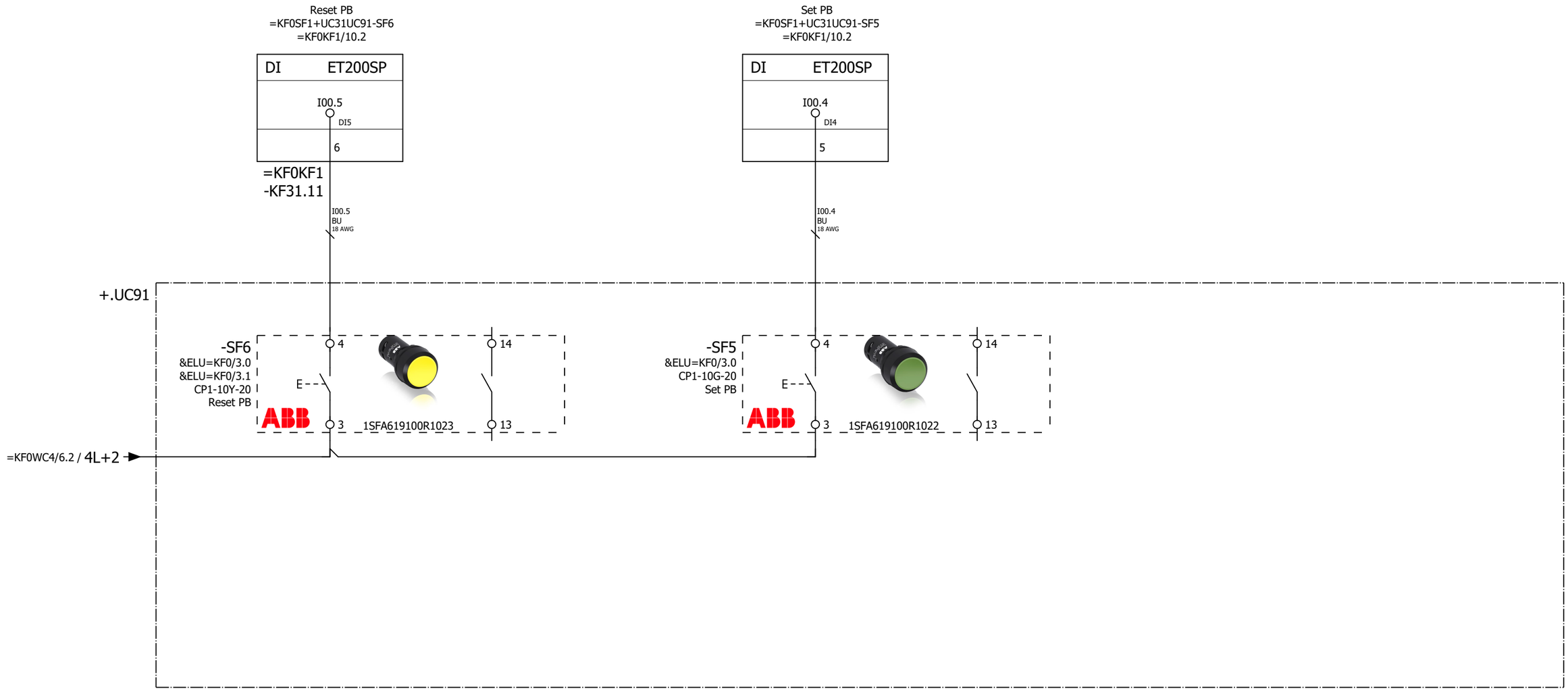

=KF0PZ1/1

2

			Date	1/11/2023	Volvo Trucks North America	Valiant TMS	Operating box UC91 MOP	Drawing name: =2V10&EFS-EL	= KF0SF1	
			Ed.	MKLEPADLO					+ UC31	
			Appr		P6700 Bodyside RH - Robot Cell 2V10			Document type: EFS	Project nr: 22-16150	Page 1
Modification	Date	Name	Original		Replacement of	Replaced by	Scale 1:1			1579

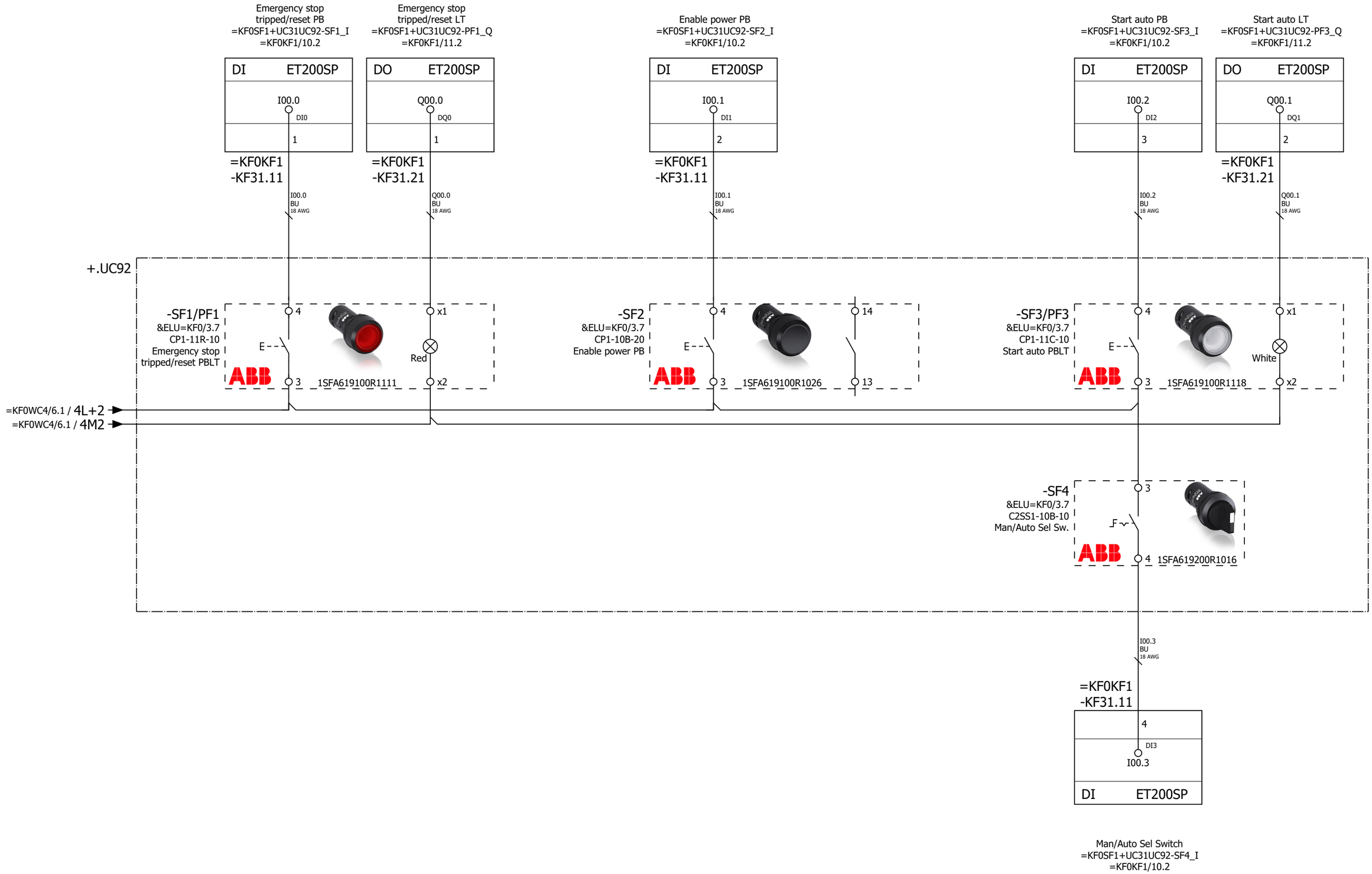

1

=KF0WC3/1

			Date	1/11/2023	Volvo Trucks North America	Valiant TMS	Operating box UC92 MOP	Drawing name: =2V10&EFS-EL	= KF0SF1	
			Ed.	MKLEPADLO					+ UC31	
			Appr		P6700 Bodyside RH - Robot Cell 2V10			Document type: EFS	Project nr: 22-16150	Page 2
Modification	Date	Name	Original		Replacement of	Replaced by	Scale 1:1			1579

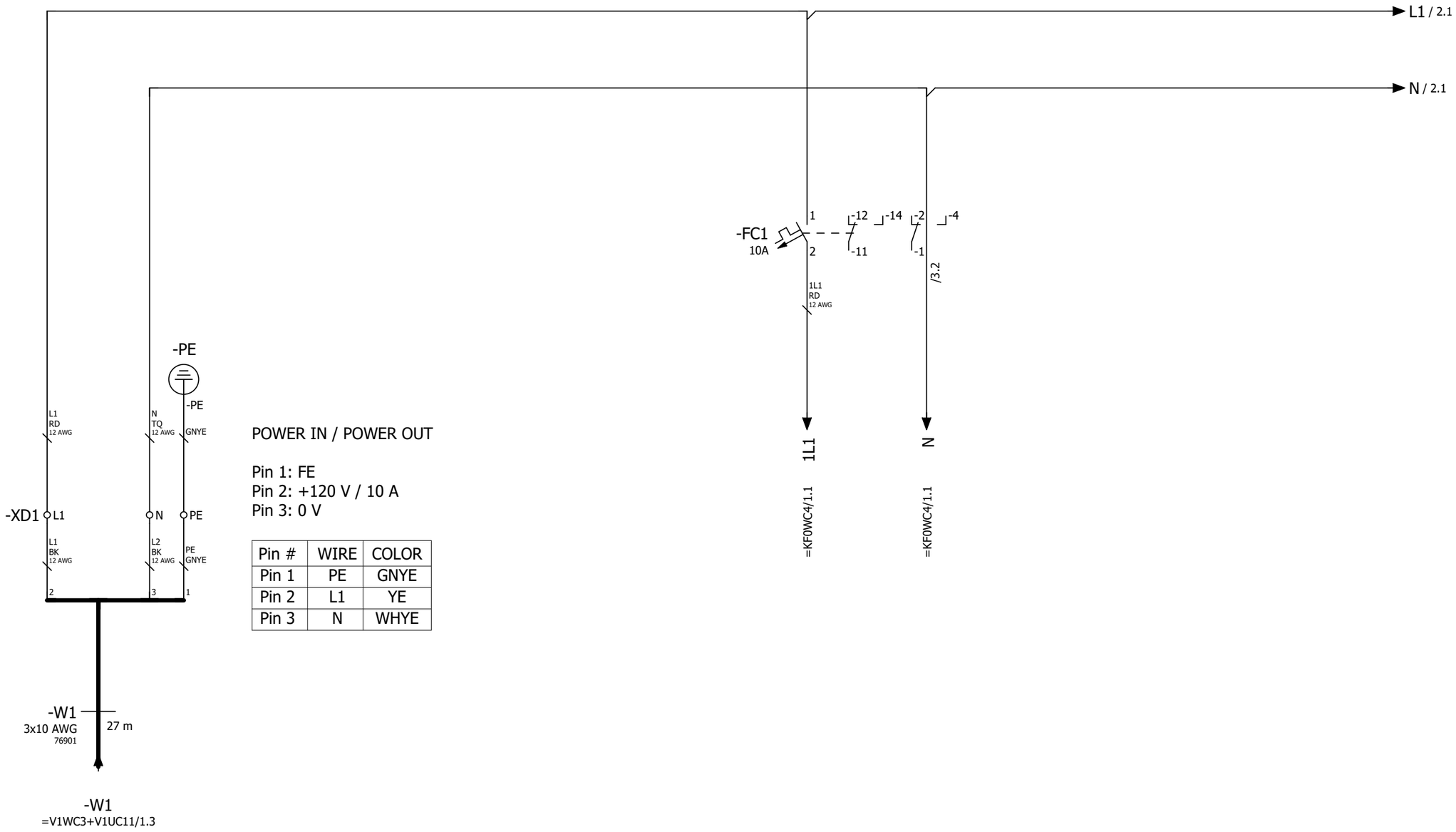

POWER IN / POWER OUT

Pin 1: FE
Pin 2: +120 V / 10 A
Pin 3: 0 V

Pin #	WIRE	COLOR
Pin 1	PE	GNYE
Pin 2	L1	YE
Pin 3	N	WHYE

Power
Distribution
24 VDC
Power Supply

=KF0SF1/2

2

			Date	1/11/2023	Volvo Trucks North America		Valiant TMS	Incomming power supply 120 VAC	Drawing name: =2V10&EFS-EL	= KF0WC3	
			Ed.	MKLEPADLO						+ UC31	
			Appr		P6700 Bodyside RH - Robot Cell 2V10				Document type: EFS	Project nr: 22-16150	Page 1
Modification	Date	Name	Original		Replacement of	Replaced by	Scale 1:1				1579

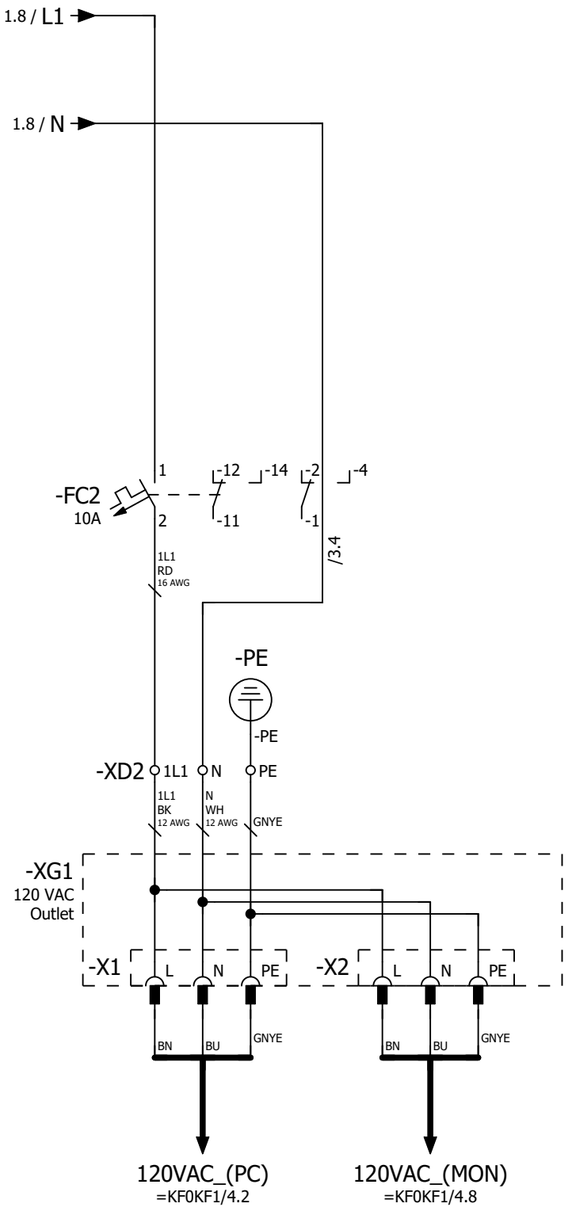

1 3

			Date	1/11/2023	Volvo Trucks North America	Valiant TMS	Outlet PLC 120VAC	Drawing name: =2V10&EFS-EL		= KF0WC3	
			Ed.	MKLEPADLO						+ UC31	
			Appr		P6700 Bodyside RH - Robot Cell 2V10			Document type: EFS	Project nr: 22-16150		Page 2
Modification	Date	Name	Original		Replacement of	Replaced by	Scale 1:1				1579

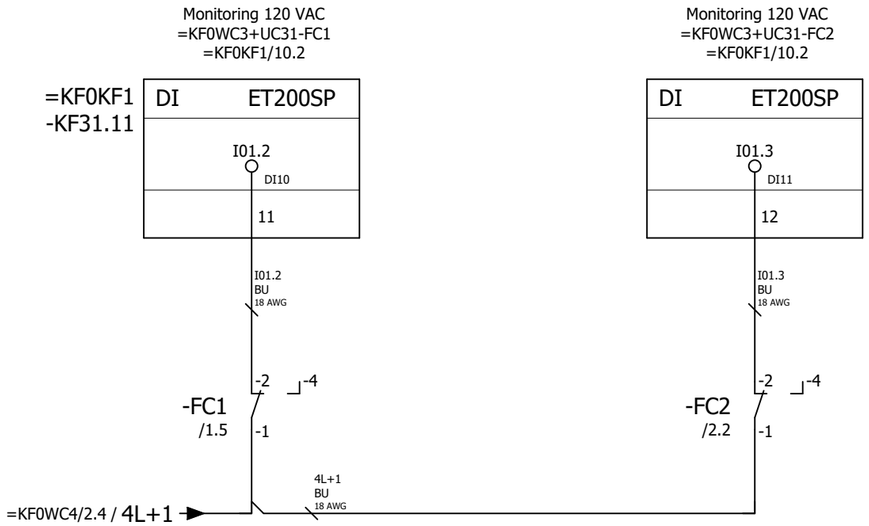

2

=KF0WC4/1

			Date	1/11/2023	Volvo Trucks North America	Valiant TMS	Monitoring 120VAC	Drawing name: =2V10&EFS-EL		= KF0WC3	
			Ed.	MKLEPADLO						+ UC31	
			Appr		P6700 Bodyside RH - Robot Cell 2V10			Document type: EFS	Project nr: 22-16150		Page 3
Modification	Date	Name	Original		Replacement of / Replaced by	Scale 1:1					1579

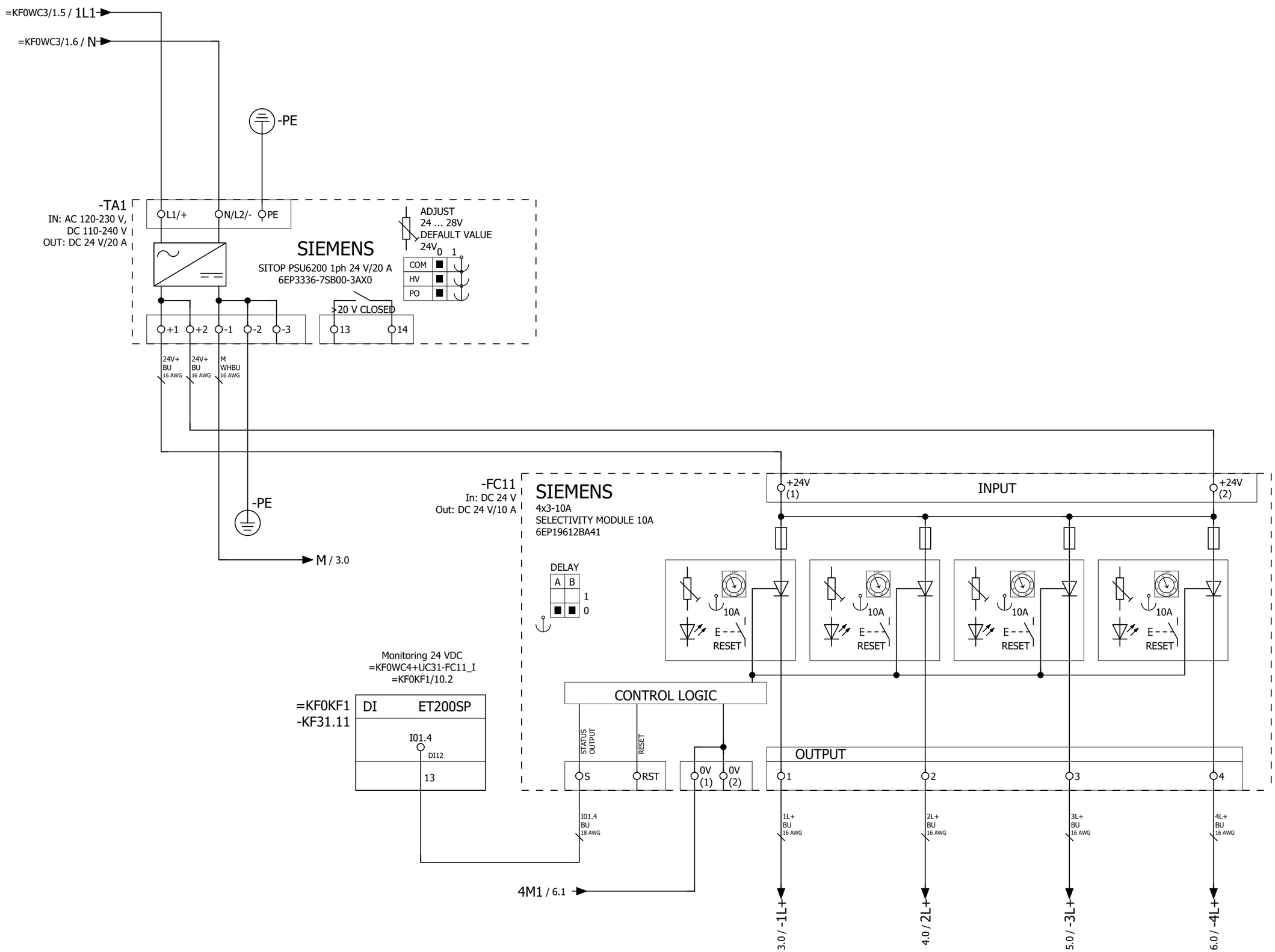

=KF0WC3/3

2

			Date	1/11/2023	Volvo Trucks North America		Valiant TMS	Power distribution 24VDC	Drawing name: =2V10&EFS-EL	= KF0WC4	
			Ed.	MKLEPADLO						+ UC31	
			Appr		P6700 Bodyside RH - Robot Cell 2V10				Document type: EFS	Project nr: 22-16150	Page 1
Modification	Date	Name	Original		Replacement of	Replaced by	Scale 1:1				1579

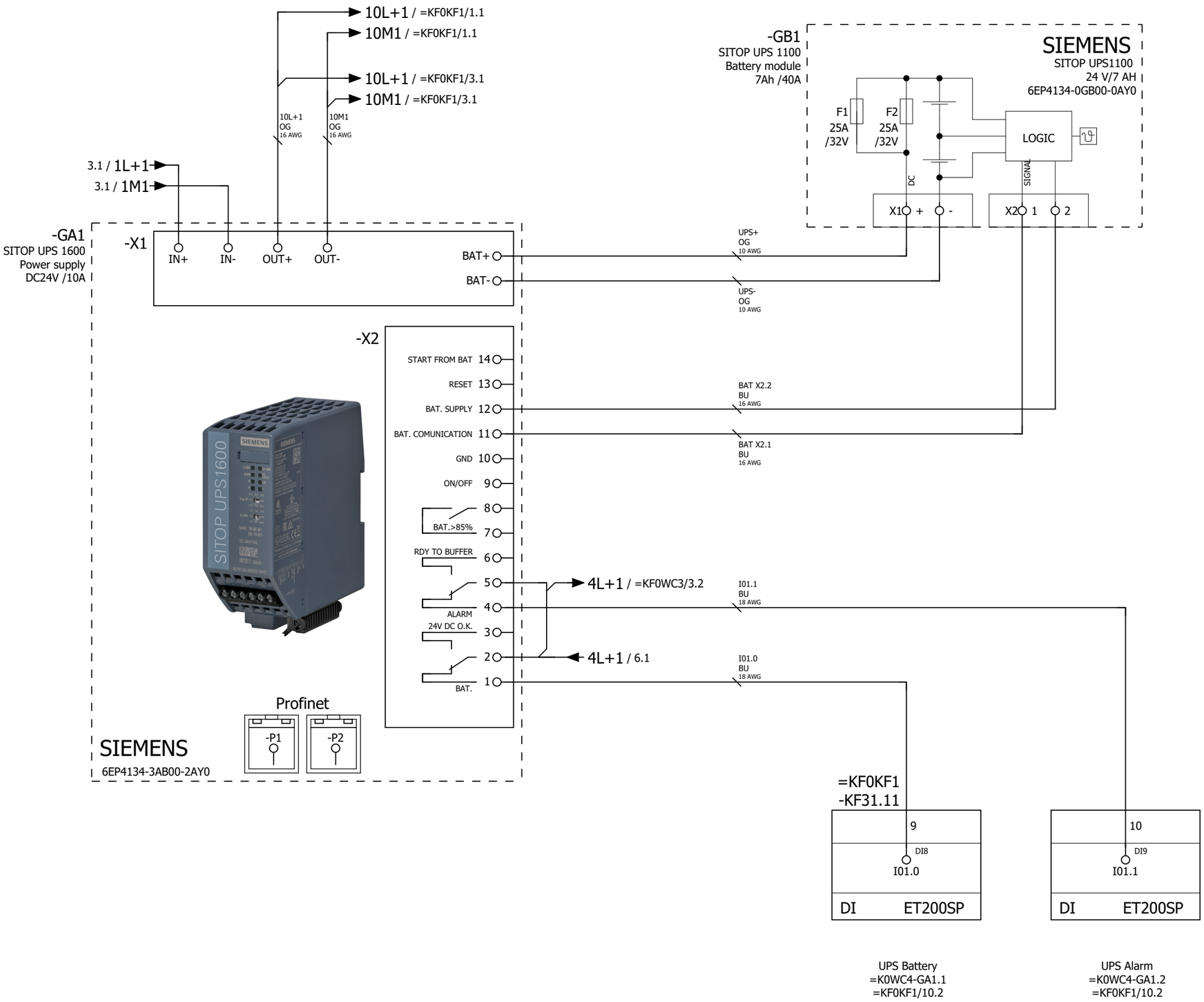

1 3

			Date	1/11/2023	Volvo Trucks North America	Valiant TMS	Power distribution, UPS	Drawing name: =2V10&EFS-EL		= KF0WC4	
			Ed.	MKLEPADLO						+ UC31	
			Appr		P6700 Bodyside RH - Robot Cell 2V10			Document type: EFS	Project nr: 22-16150		Page 2
Modification	Date	Name	Original		Replacement of / Replaced by	Scale 1:1					1579

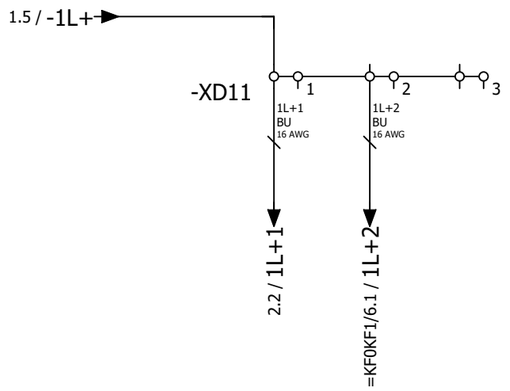

2 4

			Date	1/11/2023	Volvo Trucks North America	Valiant TMS	Power distribution 24VDC 1L+	Drawing name: =2V10&EFS-EL		= KF0WC4	
			Ed.	MKLEPADLO						+ UC31	
			Appr		P6700 Bodyside RH - Robot Cell 2V10			Document type: EFS	Project nr: 22-16150		Page 3
Modification	Date	Name	Original		Replacement of	Replaced by	Scale 1:1				1579

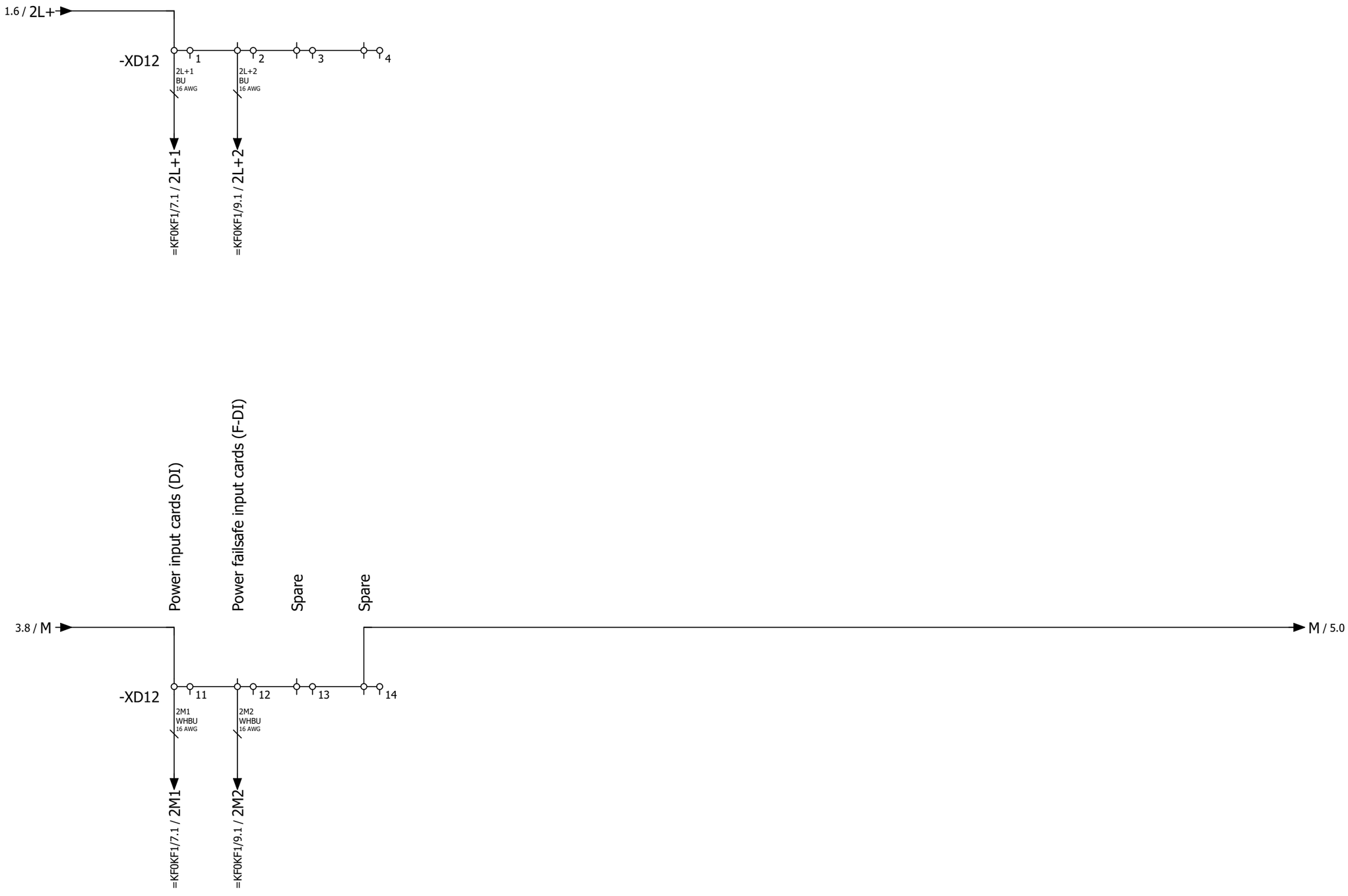

3 5

			Date	1/11/2023	Volvo Trucks North America	Valiant TMS	Power distribution 24VDC 2L+	Drawing name: =2V10&EFS-EL		= KF0WC4	
			Ed.	MKLEPADLO						+ UC31	
			Appr		P6700 Bodyside RH - Robot Cell 2V10			Document type: EFS	Project nr: 22-16150		Page 4
Modification	Date	Name	Original		Replacement of	Replaced by	Scale 1:1				1579

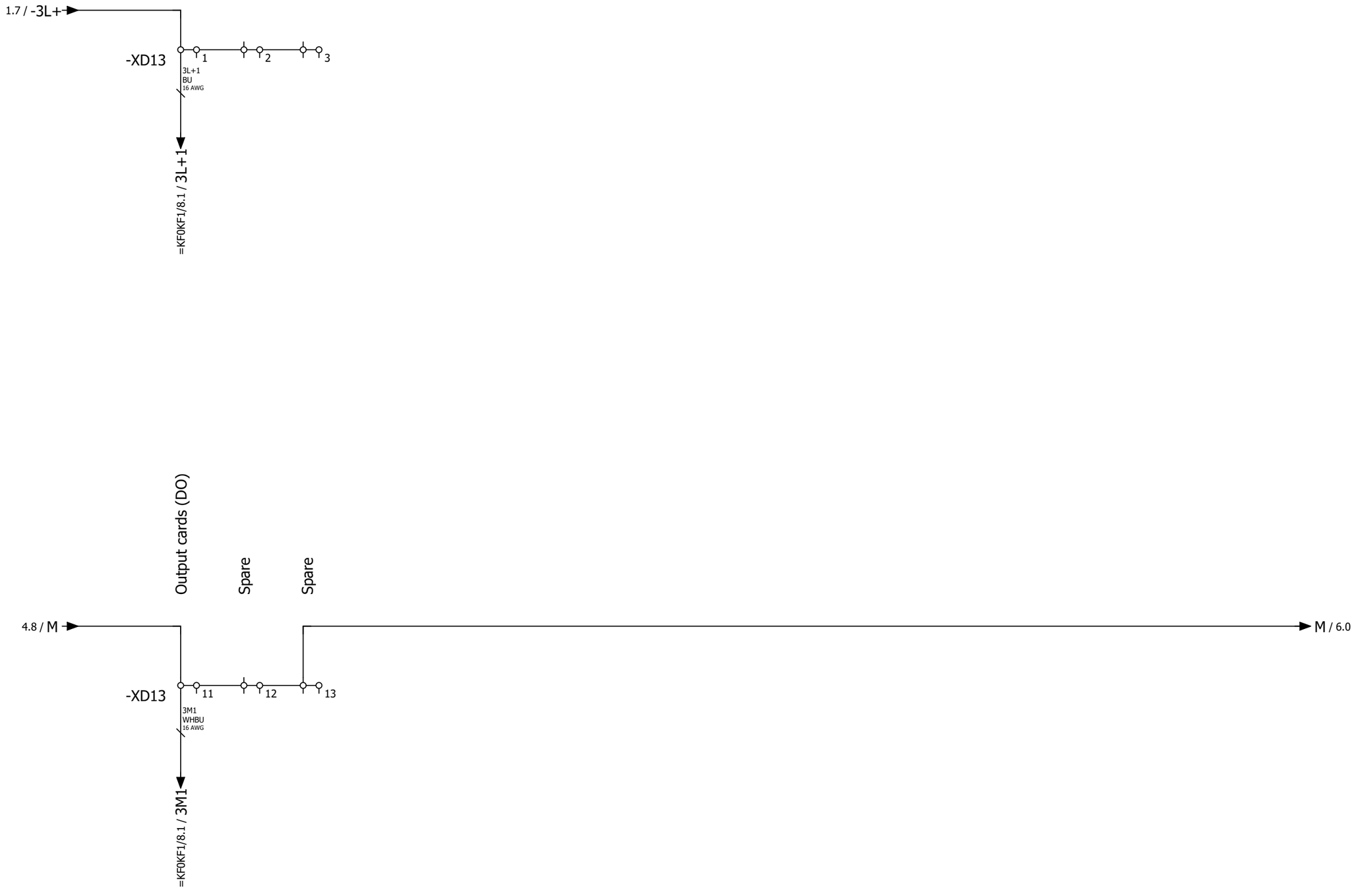

4

6

			Date	1/11/2023	Volvo Trucks North America	Valiant TMS	Power distribution 24VDC 3L+	Drawing name: =2V10&EFS-EL		= KF0WC4	
			Ed.	MKLEPADLO						+ UC31	
			Appr		P6700 Bodyside RH - Robot Cell 2V10			Document type: EFS	Project nr: 22-16150		Page 5
Modification	Date	Name	Original		Replacement of / Replaced by	Scale 1:1					1579

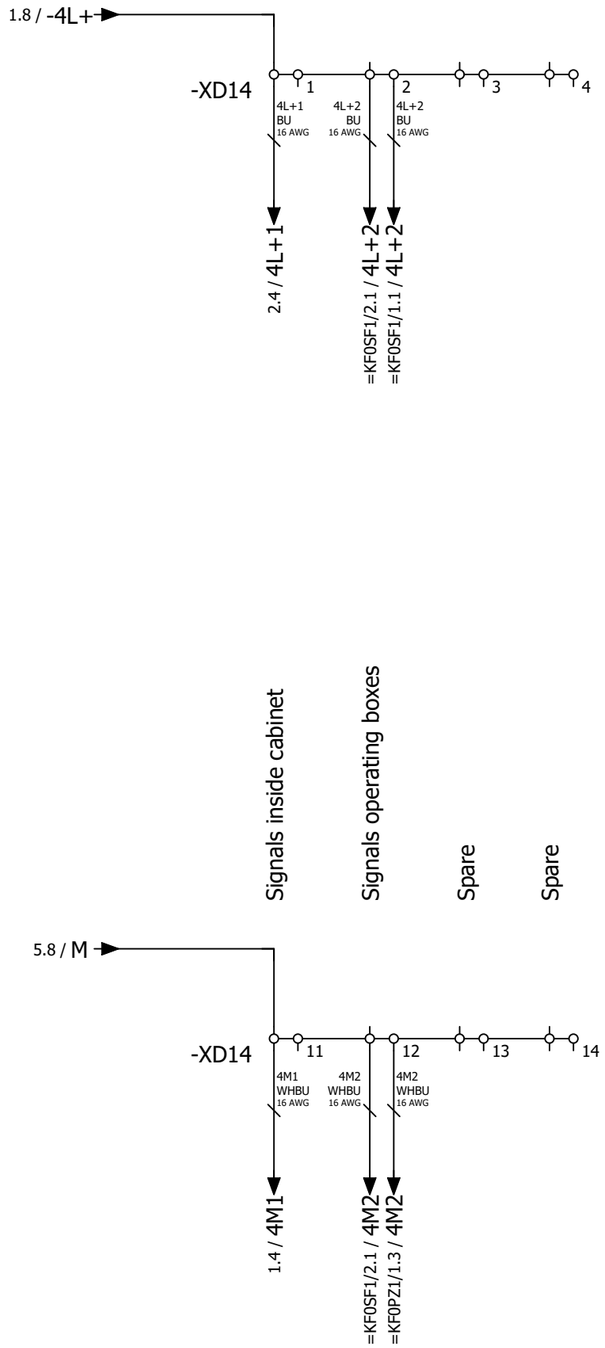

5

=KH0+KH0/1

			Date	1/11/2023	Volvo Trucks North America	Valiant TMS	Power distribution 24VDC 4L+	Drawing name: =2V10&EFS-EL		= KF0WC4	
			Ed.	MKLEPADLO						+ UC31	
			Appr		P6700 Bodyside RH - Robot Cell 2V10			Document type: EFS	Project nr: 22-16150		Page 6
Modification	Date	Name	Original		Replacement of / Replaced by	Scale 1:1					1579

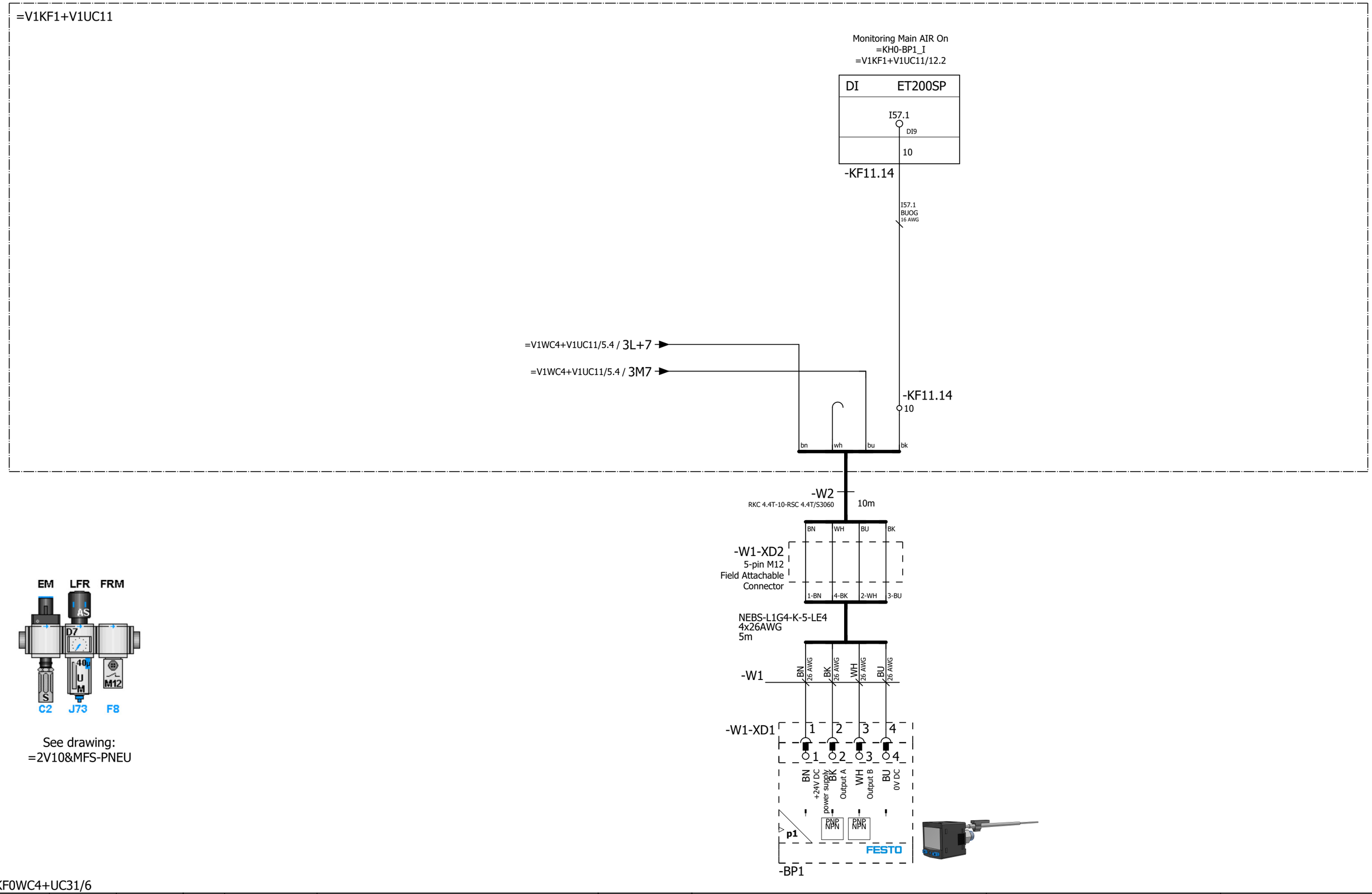

=KF0WC4+UC31/6

2

			Date	1/11/2023	Volvo Trucks North America	Valiant TMS	Incoming air supply (Main)	Drawing name: =2V10&EFS-EL	= KH0		
			Ed.	MKLEPADLO					+ KH0		
			Appr		P6700 Bodyside RH - Robot Cell 2V10			Document type: EFS	Project nr: 22-16150	Page	1
Modification	Date	Name	Original		Replacement of / Replaced by	Scale 1:1					1579

=V1KF1+V1UC12

Monitoring S010 Shuttle AIR On
=KH0-BP2_I
=V1KF1+V1UC12/12.2

DI	ET200SP
	I87.0 DI8
	9

-KF12.14

I87.0
BUOG
16 AWG

=V1WC4+V1UC12/5.4 / 3L+7

=V1WC4+V1UC12/5.4 / 3M7

-KF12.14
9

bn wh bu bk

-W2
RKC 4.4T-20-RSC 4.4T/S3060
20m

bn bu bk wh

-BP2
1 L+
3 L-
4 Out
2 n.c.
M12
P

FESTO

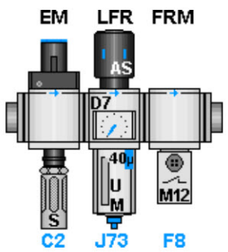

See drawing:
=2V10&MFS-PNEU

1 3

			Date	1/11/2023	Volvo Trucks North America	Valiant TMS	Incoming air supply (S010)	Drawing name: =2V10&EFS-EL	= KH0	
			Ed.	MKLEPADLO					+ KH0	
			Appr		P6700 Bodyside RH - Robot Cell 2V10			Document type: EFS	Project nr: 22-16150	Page 2
Modification	Date	Name	Original		Replacement of / Replaced by	Scale 1:1				1579

=V1KF1+V1UC14

Monitoring S020 Shuttle AIR On
=KH0-BP3_I
=V1KF1+V1UC14/9.2

DI	ET200SP
	I203.0 DI8
	9

-KF14.12

I203.0
BUOG
16 AWG

=V1WC4+V1UC14/7.2 / 6L+2

=V1WC4+V1UC14/7.2 / 6M2

-KF14.12
9

bn wh bu bk

-W3
RKC 4.4T-10-RSC 4.4T/S3060
10m

bn bu bk wh

-BP3
1 L+
3 L-
4 Out
2 n.c.
M12
P

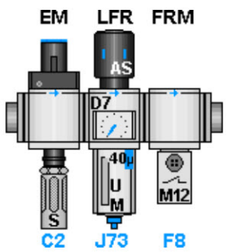

See drawing:
=2V10&MFS-PNEU

2 4

			Date	1/11/2023	Volvo Trucks North America	Valiant TMS	Incoming air supply (S020)	Drawing name: =2V10&EFS-EL	= KH0	
			Ed.	MKLEPADLO					+ KH0	
			Appr		P6700 Bodyside RH - Robot Cell 2V10			Document type: EFS	Project nr: 22-16150	Page 3
Modification	Date	Name	Original		Replacement of / Replaced by	Scale 1:1				1579

=V1KF1+V1UC15

Monitoring S030 Fixture AIR On
=KH0-BP4_I
=V1KF1+V1UC15/9.2

DI	ET200SP
	I233.0 DI8
	9

-KF15.12

I233.0
BUOG
16 AWG

=V1WC4+V1UC15/7.1 / 6L+1

=V1WC4+V1UC15/7.1 / 6M1

-KF15.12
9

bn wh bu bk

-W4
RKC 4.4T-10-RSC 4.4T/S3060
10m

bn bu bk wh

-BP4
1 L+
3 L-
4 Out
2 n.c.
M12
P
FESTO

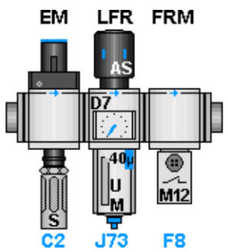

See drawing:
=2V10&MFS-PNEU

3 5

			Date	1/11/2023	Volvo Trucks North America	Valiant TMS	Incoming air supply (S030)	Drawing name: =2V10&EFS-EL	= KH0
			Ed.	MKLEPADLO					+ KH0
			Appr		P6700 Bodyside RH - Robot Cell 2V10			Document type: EFS	Project nr: 22-16150
Modification	Date	Name	Original		Replacement of / Replaced by	Scale 1:1			Page 4 / 1579

=V1KF1+V1UC11

Monitoring S040 Fixture AIR On
=KH0-BP5_I
=V1KF1+V1UC11/12.2

DI	ET200SP
	I57.2 DI10
	11

-KF11.14

I57.2
BUOG
16 AWG

=V1WC4+V1UC11/5.3 / 3L+6

=V1WC4+V1UC11/5.3 / 3M6

-KF11.14
11

bn wh bu bk

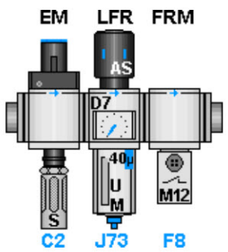

See drawing:
=2V10&MFS-PNEU

-W5
RKC 4.4T-10-RSC 4.4T/S3060
10m

bn bu bk wh

-BP5
1 L+
3 L-
4 Out
2 n.c.
M12
P
FESTO

4 6

			Date	1/11/2023	Volvo Trucks North America	Valiant TMS	Incoming air supply (S040)	Drawing name: =2V10&EFS-EL	= KH0	
			Ed.	MKLEPADLO					+ KH0	
			Appr		P6700 Bodyside RH - Robot Cell 2V10			Document type: EFS	Project nr: 22-16150	Page 5
Modification	Date	Name	Original		Replacement of / Replaced by	Scale 1:1				1579

=V1KF1+V1UC11

Monitoring S050 Fixture AIR On
=KH0-BP6_I
=V1KF1+V1UC11/12.2

DI	ET200SP
	I57.3 DI11
	12

-KF11.14

I57.3
BUOG
16 AWG

=V1WC4+V1UC11/5.4 / 3L+7

=V1WC4+V1UC11/5.4 / 3M7

-KF11.14
12

bn wh bu bk

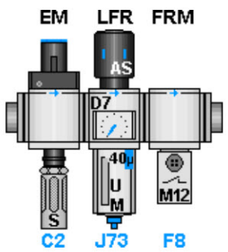

See drawing:
=2V10&MFS-PNEU

-W6
RKC 4.4T-10-RSC 4.4T/S3060
10m

bn bu bk wh

-BP6
1 L+
3 L-
4 Out
2 n.c.
M12
P
FESTO

5 7

			Date	1/11/2023	Volvo Trucks North America	Valiant TMS	Incoming air supply (S050)	Drawing name: =2V10&EFS-EL	= KH0	
			Ed.	MKLEPADLO					+ KH0	
			Appr		P6700 Bodyside RH - Robot Cell 2V10			Document type: EFS	Project nr: 22-16150	Page 6
Modification	Date	Name	Original		Replacement of / Replaced by	Scale 1:1				1579

=V1KF1+V1UC11

Monitoring S055 Fixture AIR On
=KH0-BP7_I
=V1KF1+V1UC11/12.2

DI	ET200SP
	I57.4 DI12
	13

-KF11.14

I57.4
BUOG
16 AWG

=V1WC4+V1UC11/5.3 / 3L+6

=V1WC4+V1UC11/5.3 / 3M6

-KF11.14
13

bn wh bu bk

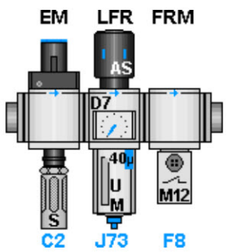

See drawing:
=2V10&MFS-PNEU

-W7
RKC 4.4T-30-RSC 4.4T/S3060
30m

bn bu bk wh

-BP7
1 L+
3 L-
4 Out
2 n.c.
M12
P
FESTO

6 8

			Date	1/11/2023	Volvo Trucks North America	Valiant TMS	Incoming air supply (S055)	Drawing name: =2V10&EFS-EL	= KH0	
			Ed.	MKLEPADLO					+ KH0	
			Appr		P6700 Bodyside RH - Robot Cell 2V10			Document type: EFS	Project nr: 22-16150	Page 7
Modification	Date	Name	Original		Replacement of / Replaced by	Scale 1:1				1579

=V1KF1+V1UC11

Monitoring S060 Fixture AIR On
=KH0-BP8_I
=V1KF1+V1UC11/12.2

DI	ET200SP
	I57.5 DI13
	14

-KF11.14

I57.5
BUOG
16 AWG

=V1WC4+V1UC11/5.4 / 3L+8

=V1WC4+V1UC11/5.4 / 3M8

-KF11.14
14

bn wh bu bk

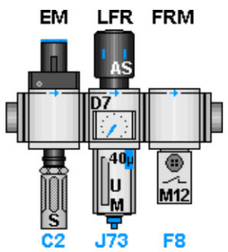

See drawing:
=2V10&MFS-PNEU

-W8
RKC 4.4T-20-RSC 4.4T/S3060
20m

bn bu bk wh

-BP8
1 L+
3 L-
4 Out
2 n.c.
M12
P
FESTO

7 9

			Date	1/11/2023	Volvo Trucks North America	Valiant TMS	Incoming air supply (S060)	Drawing name: =2V10&EFS-EL	= KH0	
			Ed.	MKLEPADLO					+ KH0	
			Appr		P6700 Bodyside RH - Robot Cell 2V10			Document type: EFS	Project nr: 22-16150	Page 8
Modification	Date	Name	Original		Replacement of / Replaced by	Scale 1:1				1579

=V1KF1+V1UC11

Monitoring S080 Conveyor Load AIR On
=KH0-BP9_I
=V1KF1+V1UC11/12.2

DI	ET200SP
	I57.6 DI14
	15

-KF11.14

I57.6
BUOG
16 AWG

=V1WC4+V1UC11/5.4 / 3L+8

=V1WC4+V1UC11/5.4 / 3M8

-KF11.14
15

bn wh bu bk

-W9
RKC 4.4T-35-RSC 4.4T/S3060
35m

bn bu bk wh

-BP9
1 L+
3 L-
4 Out
2 n.c.
M12
P

FESTO

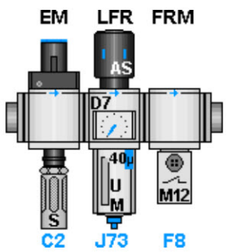

See drawing:
=2V10&MFS-PNEU

8

=KH3+KH3/1

			Date	1/11/2023	Volvo Trucks North America	Valiant TMS	Incoming air supply (S080)	Drawing name: =2V10&EFS-EL	= KH0	
			Ed.	MKLEPADLO					+ KH0	
			Appr		P6700 Bodyside RH - Robot Cell 2V10			Document type: EFS	Project nr: 22-16150	Page 9
Modification	Date	Name	Original		Replacement of / Replaced by	Scale 1:1				1579

=V1KF1+V1UC11

Monitoring Main Water Filter Dirty
=KH3-BF1_I
=V1KF1+V1UC11/12.2

DI	ET200SP
	I56.6 DI6
	7

-KF11.14

I56.6
BUOG
16 AWG

=V1WC4+V1UC11/5.3 / 3L+5

=V1WC4+V1UC11/5.3 / 3M5

-KF11.14
7

bn wh bu bk

-W1
RKC 4.4T-20-RSC 4.4T/S3060
20m

See drawing:
=2V10&MFS-WATER

bn bu bk wh

-BF1

1 L+ 3 L- 4 Out 2 n.c.

M12

P

=KH0+KH0/9

2

			Date	1/11/2023	Volvo Trucks North America	Valiant TMS	Incoming water supply (Filter)	Drawing name: =2V10&EFS-EL	= KH3		
			Ed.	MKLEPADLO					+ KH3		
			Appr		P6700 Bodyside RH - Robot Cell 2V10			Document type: EFS	Project nr: 22-16150		Page 1
Modification	Date	Name	Original		Replacement of	Replaced by	Scale 1:1				1579

=V1KF1+V1UC11

Monitoring Main Water On
=KH3-BF2_I
=V1KF1+V1UC11/12.2

DI	ET200SP
	I56.7 DI7
	8

-KF11.14

I56.7
BUOG
16 AWG

=V1WC4+V1UC11/5.3 / 3L+5

=V1WC4+V1UC11/5.3 / 3M5

-KF11.14
8

bn wh bu bk

-W2
RKC 4.4T-20-RSC 4.4T/S3060
20m

See drawing:
=2V10&MFS-WATER

bn bu bk wh

-BF2

1 L+
3 L-
4 Out
2 n.c.

M12

TURCK

1

=V1AR11KF1+V1AR11UC01/1

			Date	1/11/2023	Volvo Trucks North America	Valiant TMS	Incoming water supply	Drawing name: =2V10&EFS-EL	= KH3		
			Ed.	MKLEPADLO					+ KH3		
			Appr		P6700 Bodyside RH - Robot Cell 2V10			Document type: EFS	Project nr: 22-16150	Page	2
Modification	Date	Name	Original		Replacement of / Replaced by	Scale 1:1					1579

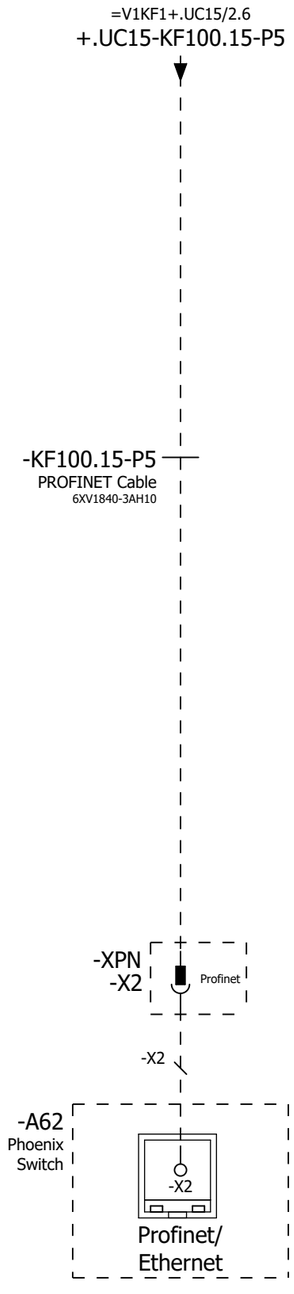

=KH3+KH3/2

=V1AR11UQ41BG0+.AR11UQ41/1

			Date	1/11/2023	Volvo Trucks North America		Valiant TMS	Incoming Profinet	Drawing name: =2V10&EFS-EL	= V1AR11KF1	
			Ed.	MKLEPADLO						+ V1AR11UC01	
			Appr		P6700 Bodyside RH - Robot Cell 2V10				Document type: EFS	Project nr: 22-16150	Page 1
Modification	Date	Name	Original		Replacement of	Replaced by	Scale 1:1				1579

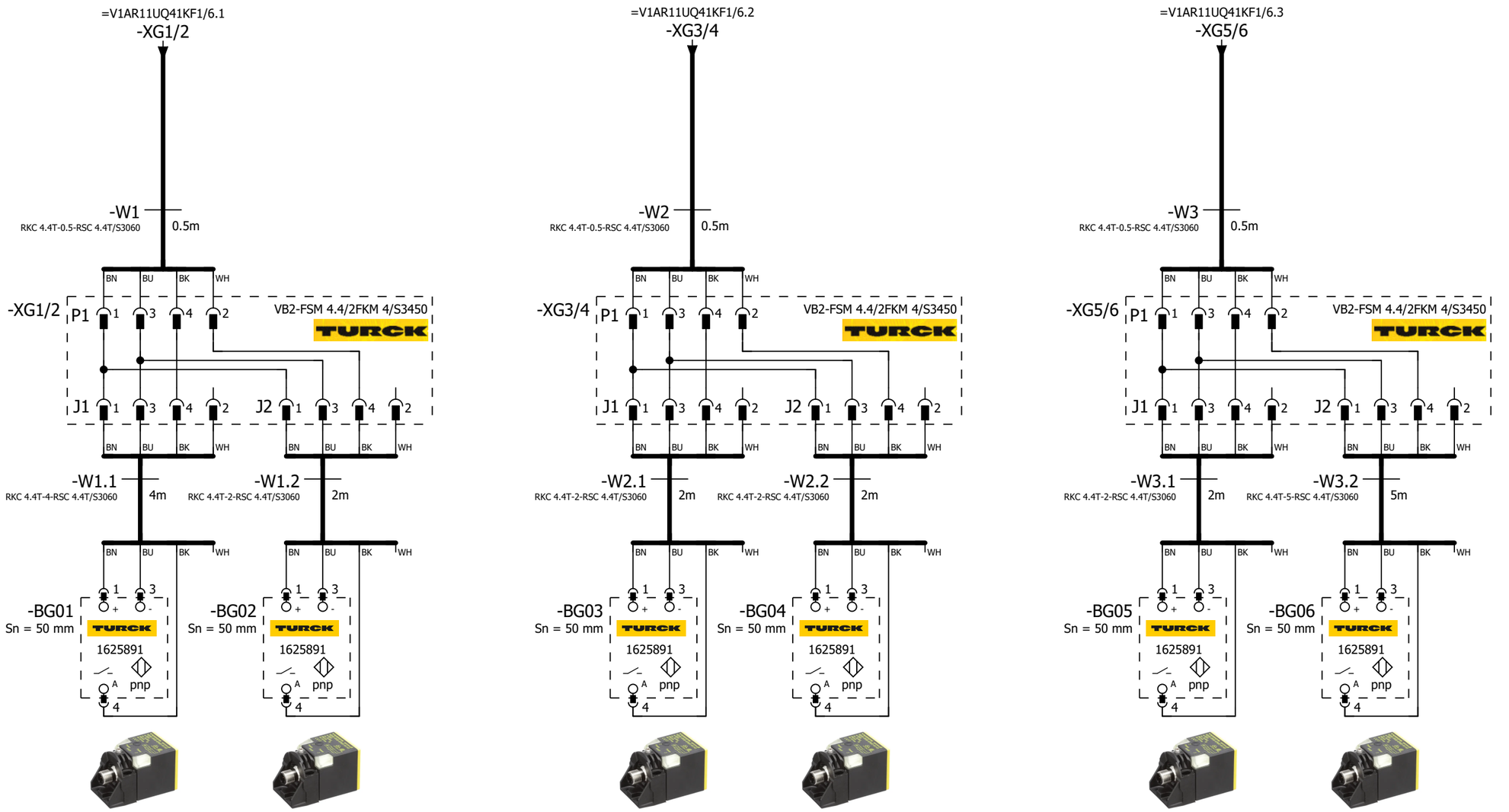

=V1AR11UQ41 -BG01 Common Outer	=V1AR11UQ41 -BG02 Day Cab Outer 78522978	=V1AR11UQ41 -BG03 Short Outer L230 78524952	=V1AR11UQ41 -BG04 Middle Outer L290 78522190	=V1AR11UQ41 -BG05 Long Outer L320 78521206	=V1AR11UQ41 -BG06 Common Inner

=V1AR11KF1+.AR11UC01/1

2

			Date	1/11/2023	Volvo Trucks North America	Valiant TMS	SENSORS	Drawing name: =2V10&EFS-EL	= V1AR11UQ41BG0	
			Ed.	MKLEPADLO					+ V1AR11UQ41	
			Appr		P6700 Bodyside RH - Robot Cell 2V10			Document type: EFS	Project nr: 22-16150	Page 1 / 1579
Modification	Date	Name	Original		Replacement of / Replaced by	Scale 1:1				

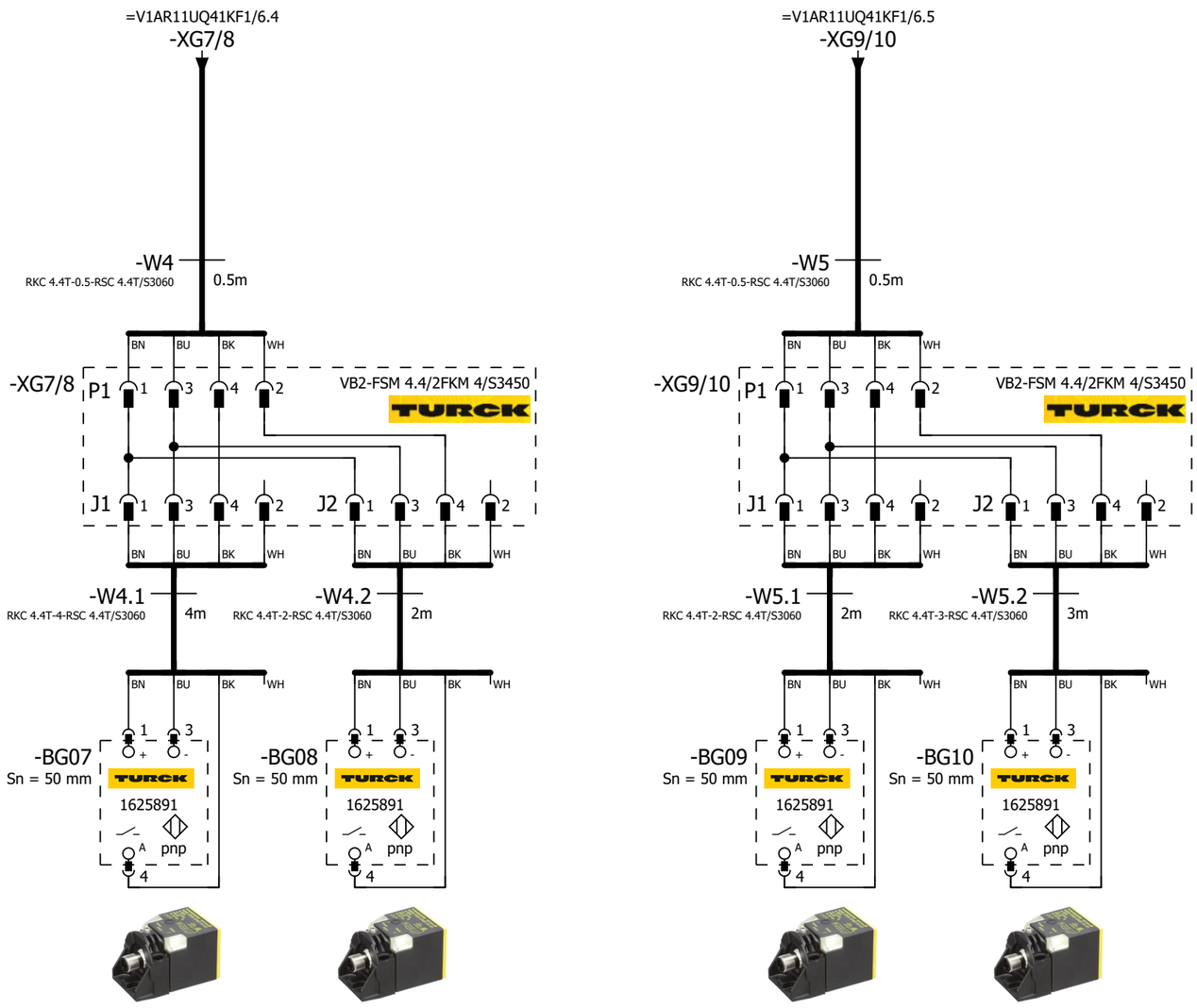

=V1AR11UQ41 -BG07 Common Inner	=V1AR11UQ41 -BG08 Short Inner L230 78525100	=V1AR11UQ41 -BG09 Middle Inner L290 78522189	=V1AR11UQ41 -BG10 Long Inner 78521205

1

=V1AR11UQ41KF1/1

			Date	1/11/2023	Volvo Trucks North America	Valiant TMS	SENSORS	Drawing name: =2V10&EFS-EL	= V1AR11UQ41BG0	
			Ed.	MKLEPADLO					+ V1AR11UQ41	
			Appr		P6700 Bodyside RH - Robot Cell 2V10			Document type: EFS	Project nr: 22-16150	Page 2
Modification	Date	Name	Original		Replacement of / Replaced by	Scale 1:1				1579

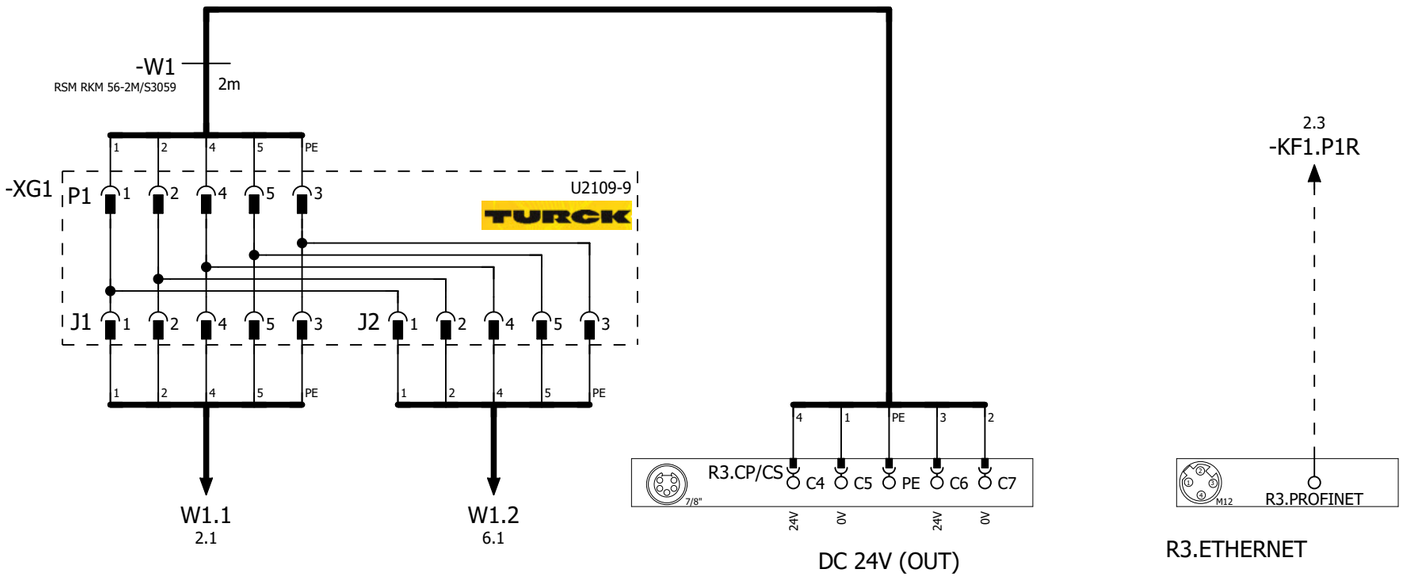

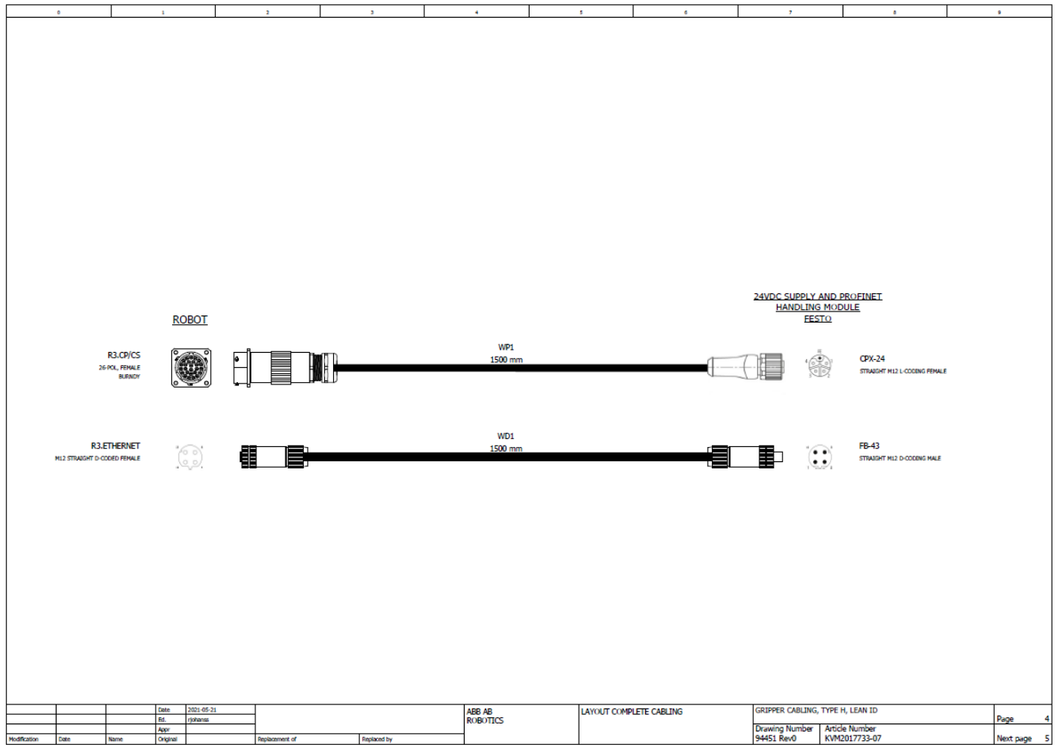

=V1AR11UQ41BG0/2

2

			Date	1/11/2023	Volvo Trucks North America	Valiant TMS	24VDC SUPPLY AND PROFINET HANDLING MODULE	Drawing name: =2V10&EFS-EL	= V1AR11UQ41KF1	
			Ed.	MKLEPADLO					+ V1AR11UQ41	
			Appr		P6700 Bodyside RH - Robot Cell 2V10			Document type: EFS	Project nr: 22-16150	Page 1
Modification	Date	Name	Original		Replacement of	Replaced by	Scale 1:1			1579

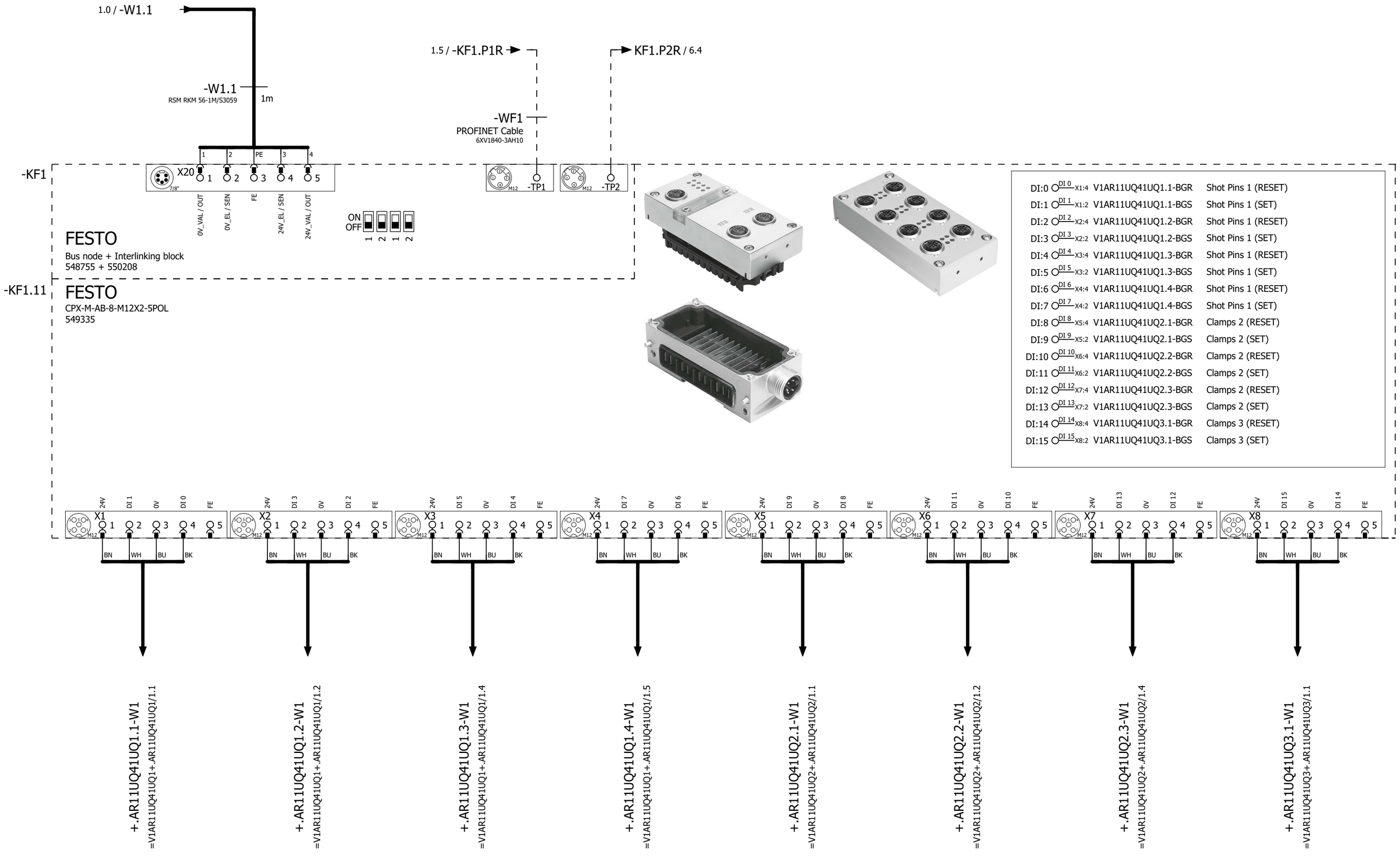

			Date	1/11/2023	Volvo Trucks North America		Valiant TMS	CONNECTING MOD. FOR MPA MANIFOLD	Drawing name: =2V10&EFS-EL	= V1AR11UQ41KF1	
			Ed.	MKLEPADLO						+ V1AR11UQ41	
			Appr		P6700 Bodyside RH - Robot Cell 2V10				Document type: EFS	Project nr: 22-16150	Page 2
Modification	Date	Name	Original		Replacement of	Replaced by	Scale 1:1				1579

DI:16	DI 0 X1:4	V1AR11UQ41UQ3.2-BGR	Clamps 3 (RESET)
DI:17	DI 1 X1:2	V1AR11UQ41UQ3.2-BGS	Clamps 3 (SET)
DI:18	DI 2 X2:4	V1AR11UQ41UQ4.1-BGR	Clamps 4 (RESET)
DI:19	DI 3 X2:2	V1AR11UQ41UQ4.1-BGS	Clamps 4 (SET)
DI:20	DI 4 X3:4	V1AR11UQ41UQ4.2-BGR	Clamps 4 (RESET)
DI:21	DI 5 X3:2	V1AR11UQ41UQ4.2-BGS	Clamps 4 (SET)
DI:22	DI 6 X4:4	V1AR11UQ41UQ4.3-BGR	Clamps 4 (RESET)
DI:23	DI 7 X4:2	V1AR11UQ41UQ4.3-BGS	Clamps 4 (SET)
DI:24	DI 8 X5:4	V1AR11UQ41UQ5.1-BGR	Clamps 5 (RESET)
DI:25	DI 9 X5:2	V1AR11UQ41UQ5.1-BGS	Clamps 5 (SET)
DI:26	DI 10 X6:4	V1AR11UQ41UQ5.2-BGR	Clamps 5 (RESET)
DI:27	DI 11 X6:2	V1AR11UQ41UQ5.2-BGS	Clamps 5 (SET)
DI:28	DI 12 X7:4	V1AR11UQ41UQ5.3-BGR	Clamps 5 (RESET)
DI:29	DI 13 X7:2	V1AR11UQ41UQ5.3-BGS	Clamps 5 (SET)
DI:30	DI 14 X8:4	V1AR11UQ41UQ6.1-BGR	Clamp 6 (RESET)
DI:31	DI 15 X8:2	V1AR11UQ41UQ6.1-BGS	Clamp 6 (SET)

-KF1.12

FESTO
CPX-M-AB-8-M12X2-5POL
549335

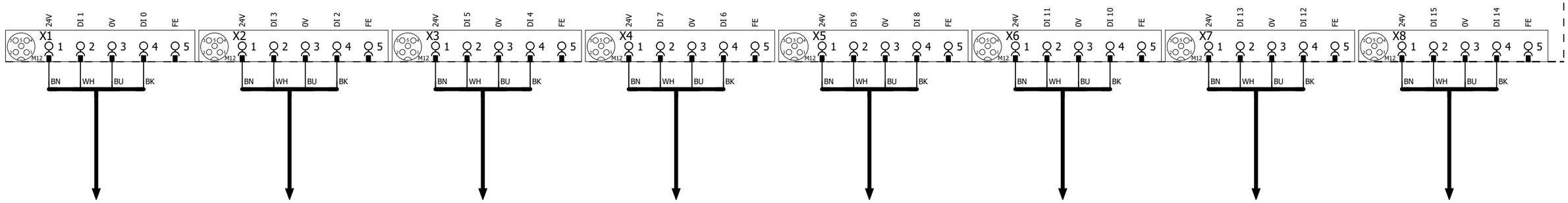

+.AR11UQ41UQ3.2-W1
=V1AR11UQ41UQ3+.AR11UQ41UQ3/1.2

+.AR11UQ41UQ4.1-W1
=V1AR11UQ41UQ4+.AR11UQ41UQ4/1.1

+.AR11UQ41UQ4.2-W1
=V1AR11UQ41UQ4+.AR11UQ41UQ4/1.2

+.AR11UQ41UQ4.3-W1
=V1AR11UQ41UQ4+.AR11UQ41UQ4/1.4

+.AR11UQ41UQ5.1-W1
=V1AR11UQ41UQ5+.AR11UQ41UQ5/1.1

+.AR11UQ41UQ5.2-W1
=V1AR11UQ41UQ5+.AR11UQ41UQ5/1.2

+.AR11UQ41UQ5.3-W1
=V1AR11UQ41UQ5+.AR11UQ41UQ5/1.4

+.AR11UQ41UQ6.1-W1
=V1AR11UQ41UQ6+.AR11UQ41UQ6/1.1

0	1	2	3	4	5	6	7	8	9

-KF1.13

FESTO
CPX-M-AB-8-M12X2-5POL
549335

DI:32	DI 0 X1:4	V1AR11UQ41UQ7.1-BGR	Clamps 7 (RESET)
DI:33	DI 1 X1:2	V1AR11UQ41UQ7.1-BGS	Clamps 7 (SET)
DI:34	DI 2 X2:4	V1AR11UQ41UQ8.1-BGR	Clamp 8 (RESET)
DI:35	DI 3 X2:2	V1AR11UQ41UQ8.1-BGS	Clamp 8 (SET)
DI:36	DI 4 X3:4	V1AR11UQ41UQ9.1-BGR	Clamps 9 (RESET)
DI:37	DI 5 X3:2	V1AR11UQ41UQ9.1-BGS	Clamps 9 (SET)
DI:38	DI 6 X4:4	V1AR11UQ41UQ9.2-BGS	Clamps 9 (RESET)
DI:39	DI 7 X4:2	V1AR11UQ41UQ9.2-BGS	Clamps 9 (SET)
DI:40	DI 8 X5:4	V1AR11UQ41UQ10.1-BGR	Clamps 10 (RESET)
DI:41	DI 9 X5:2	V1AR11UQ41UQ10.1-BGS	Clamps 10 (SET)
DI:42	DI 10 X6:4	V1AR11UQ41UQ10.2-BGR	Clamps 10 (RESET)
DI:43	DI 11 X6:2	V1AR11UQ41UQ10.2-BGS	Clamps 10 (SET)
DI:44	DI 12 X7:4	DI:44	Spare
DI:45	DI 13 X7:2	DI:45	Spare
DI:46	DI 14 X8:4	DI:46	Spare
DI:47	DI 15 X8:2	DI:47	Spare

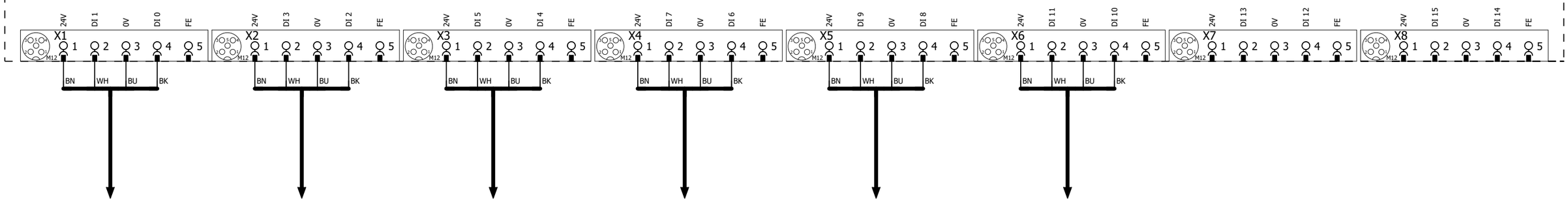

+.AR11UQ41UQ7.1-W1
=V1AR11UQ41UQ7+.AR11UQ41UQ7/1.1

+.AR11UQ41UQ8.1-W1
=V1AR11UQ41UQ8+.AR11UQ41UQ8/1.1

+.AR11UQ41UQ9.1-W1
=V1AR11UQ41UQ9+.AR11UQ41UQ9/1.1

+.AR11UQ41UQ9.2-W1
=V1AR11UQ41UQ9+.AR11UQ41UQ9/1.2

+.AR11UQ41UQ10.1-W1
=V1AR11UQ41UQ10+.AR11UQ41UQ10/1.1

+.AR11UQ41UQ10.2-W1
=V1AR11UQ41UQ10+.AR11UQ41UQ10/1.2

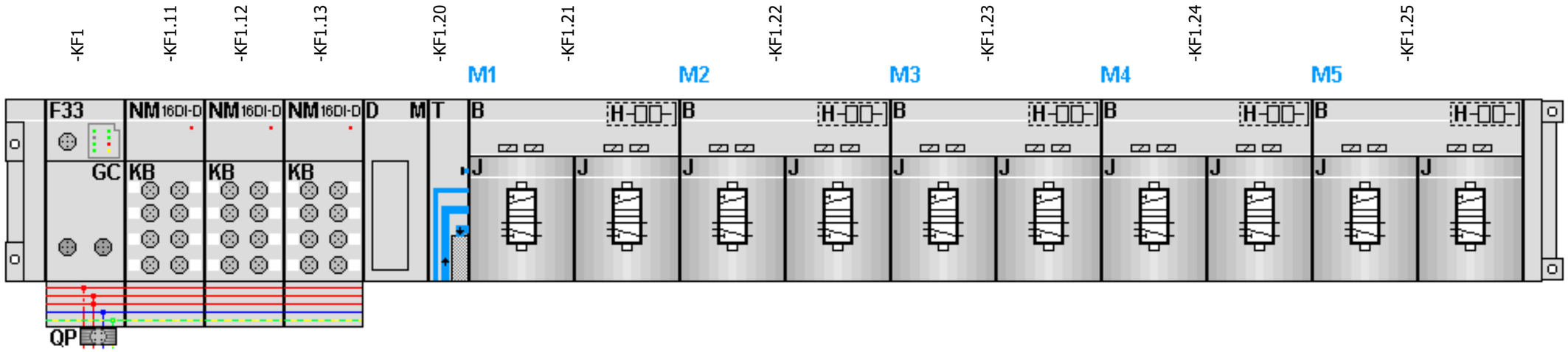

-KF1.21

=V1AR11UQ41UQ1+.AR11UQ41UQ1/1.3
=V1AR11UQ41UQ2+.AR11UQ41UQ2/1.3

FESTO

=V1AR11UQ41UQ1+.AR11UQ41UQ1/1.4	DO:0 DO 0 1.1	-QN1.1_Q	Shot Pins 1 (RST)
=V1AR11UQ41UQ1+.AR11UQ41UQ1/1.4	DO:1 DO 1 1.2	-QN1.2_Q	Shot Pins 1 (SET)
=V1AR11UQ41UQ2+.AR11UQ41UQ2/1.4	DO:2 DO 2 2.1	-QN2.1_Q	Clamps 2 (RST)
=V1AR11UQ41UQ2+.AR11UQ41UQ2/1.4	DO:3 DO 3 2.2	-QN2.2_Q	Clamps 2 (SET)

-KF1.22

=V1AR11UQ41UQ3+.AR11UQ41UQ3/1.3
=V1AR11UQ41UQ4+.AR11UQ41UQ4/1.3

FESTO

=V1AR11UQ41UQ3+.AR11UQ41UQ3/1.4	DO:4 DO 0 1.1	-QN3.1_Q	Clamps 3 (RST)
=V1AR11UQ41UQ3+.AR11UQ41UQ3/1.4	DO:5 DO 1 1.2	-QN3.2_Q	Clamps 3 (SET)
=V1AR11UQ41UQ4+.AR11UQ41UQ4/1.4	DO:6 DO 2 2.1	-QN4.1_Q	Clamps 4 (RST)
=V1AR11UQ41UQ4+.AR11UQ41UQ4/1.4	DO:7 DO 3 2.2	-QN4.2_Q	Clamps 4 (SET)

-KF1.23

=V1AR11UQ41UQ5+.AR11UQ41UQ5/1.3
=V1AR11UQ41UQ6+.AR11UQ41UQ6/1.3

FESTO

=V1AR11UQ41UQ5+.AR11UQ41UQ5/1.4	DO:8 DO 0 1.1	-QN5.1_Q	Clamps 5 (RST)
=V1AR11UQ41UQ5+.AR11UQ41UQ5/1.4	DO:9 DO 1 1.2	-QN5.2_Q	Clamps 5 (SET)
=V1AR11UQ41UQ6+.AR11UQ41UQ6/1.4	DO:10 DO 2 2.1	-QN6.1_Q	Clamp 6 (RST)
=V1AR11UQ41UQ6+.AR11UQ41UQ6/1.4	DO:11 DO 3 2.2	-QN6.2_Q	Clamp 6 (SET)

-KF1.24

=V1AR11UQ41UQ7+.AR11UQ41UQ7/1.3
=V1AR11UQ41UQ8+.AR11UQ41UQ8/1.3

FESTO

=V1AR11UQ41UQ7+.AR11UQ41UQ7/1.4	DO:12 DO 0 1.1	-QN7.1_Q	Clamp 7 (RST)
=V1AR11UQ41UQ7+.AR11UQ41UQ7/1.4	DO:13 DO 1 1.2	-QN7.2_Q	Clamp 7 (SET)
=V1AR11UQ41UQ8+.AR11UQ41UQ8/1.4	DO:14 DO 2 2.1	-QN8.1_Q	Clamp 8 (RST)
=V1AR11UQ41UQ8+.AR11UQ41UQ8/1.4	DO:15 DO 3 2.2	-QN8.2_Q	Clamp 8 (SET)

-KF1.25

=V1AR11UQ41UQ9+.AR11UQ41UQ9/1.3
=V1AR11UQ41UQ10+.AR11UQ41UQ10/1.3

FESTO

=V1AR11UQ41UQ9+.AR11UQ41UQ9/1.4	DO:16 DO 0 1.1	-QN9.1_Q	Clamps 9 (RST)
=V1AR11UQ41UQ9+.AR11UQ41UQ9/1.4	DO:17 DO 1 1.2	-QN9.2_Q	Clamps 9 (SET)
=V1AR11UQ41UQ10+.AR11UQ41UQ10/1.4	DO:18 DO 2 2.1	-QN10.1_Q	Clamps 10 (RST)
=V1AR11UQ41UQ10+.AR11UQ41UQ10/1.4	DO:19 DO 3 2.2	-QN10.2_Q	Clamps 10 (SET)

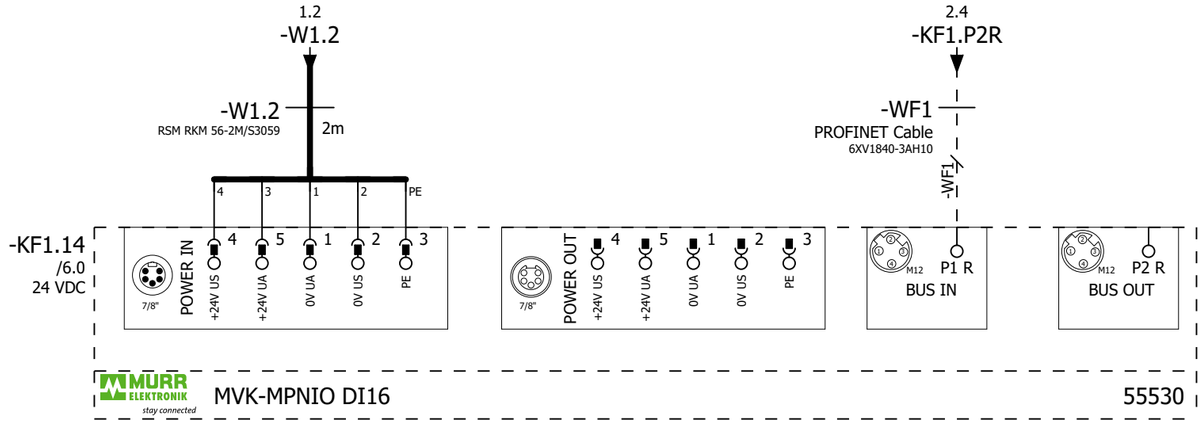

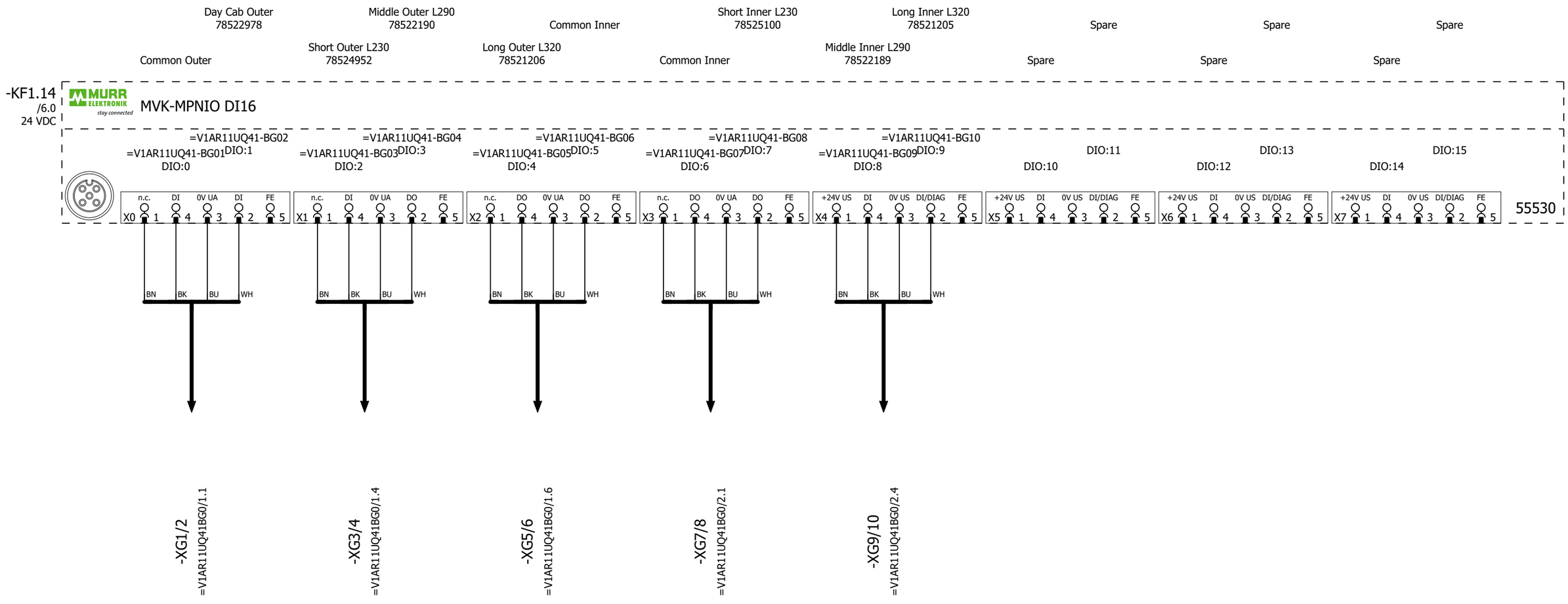

5

=V1AR11UQ41UQ1+.AR11UQ41UQ1/1

			Date	1/11/2023	Volvo Trucks North America	Valiant TMS	MURR MODULE 16 IN/OUT	Drawing name: =2V10&EFS-EL		= V1AR11UQ41KF1	
			Ed.	MKLEPADLO						+ V1AR11UQ41	
			Appr		P6700 Bodyside RH - Robot Cell 2V10			Document type: EFS	Project nr: 22-16150		Page 6
Modification	Date	Name	Original		Replacement of / Replaced by	Scale 1:1					1579

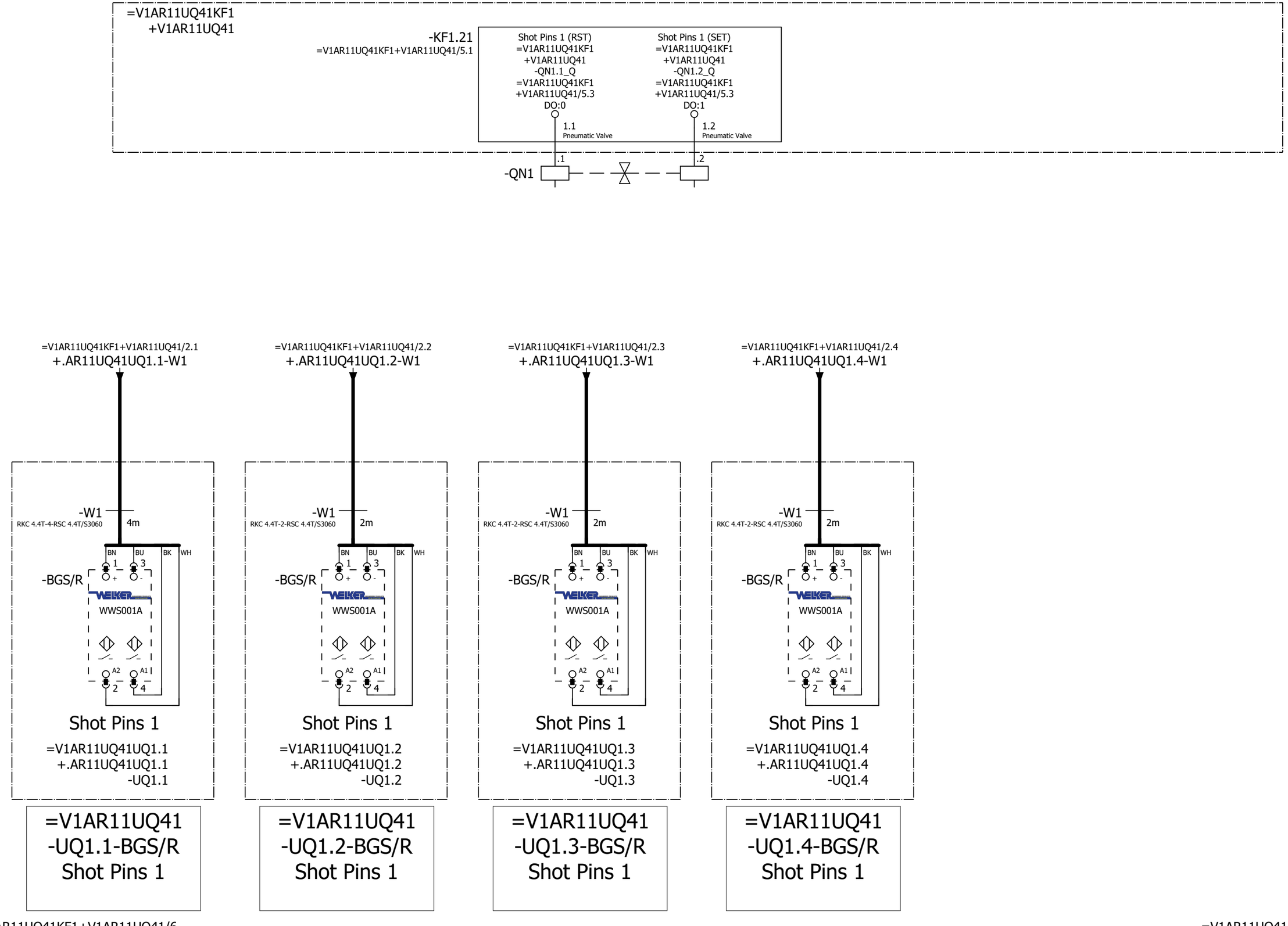

=V1AR11UQ41KF1+V1AR11UQ41/6

=V1AR11UQ41UQ2+.AR11UQ41UQ2/1

			Date	1/11/2023	Volvo Trucks North America		Valiant TMS	FESTO DQ CONNECTION QN1	Drawing name: =2V10&EFS-EL	= V1AR11UQ41UQ1	
			Ed.	MKLEPADLO						+ V1AR11UQ41UQ1	
			Appr		P6700 Bodyside RH - Robot Cell 2V10				Document type: EFS	Project nr: 22-16150	Page 1
Modification	Date	Name	Original		Replacement of	Replaced by	Scale 1:1				1579

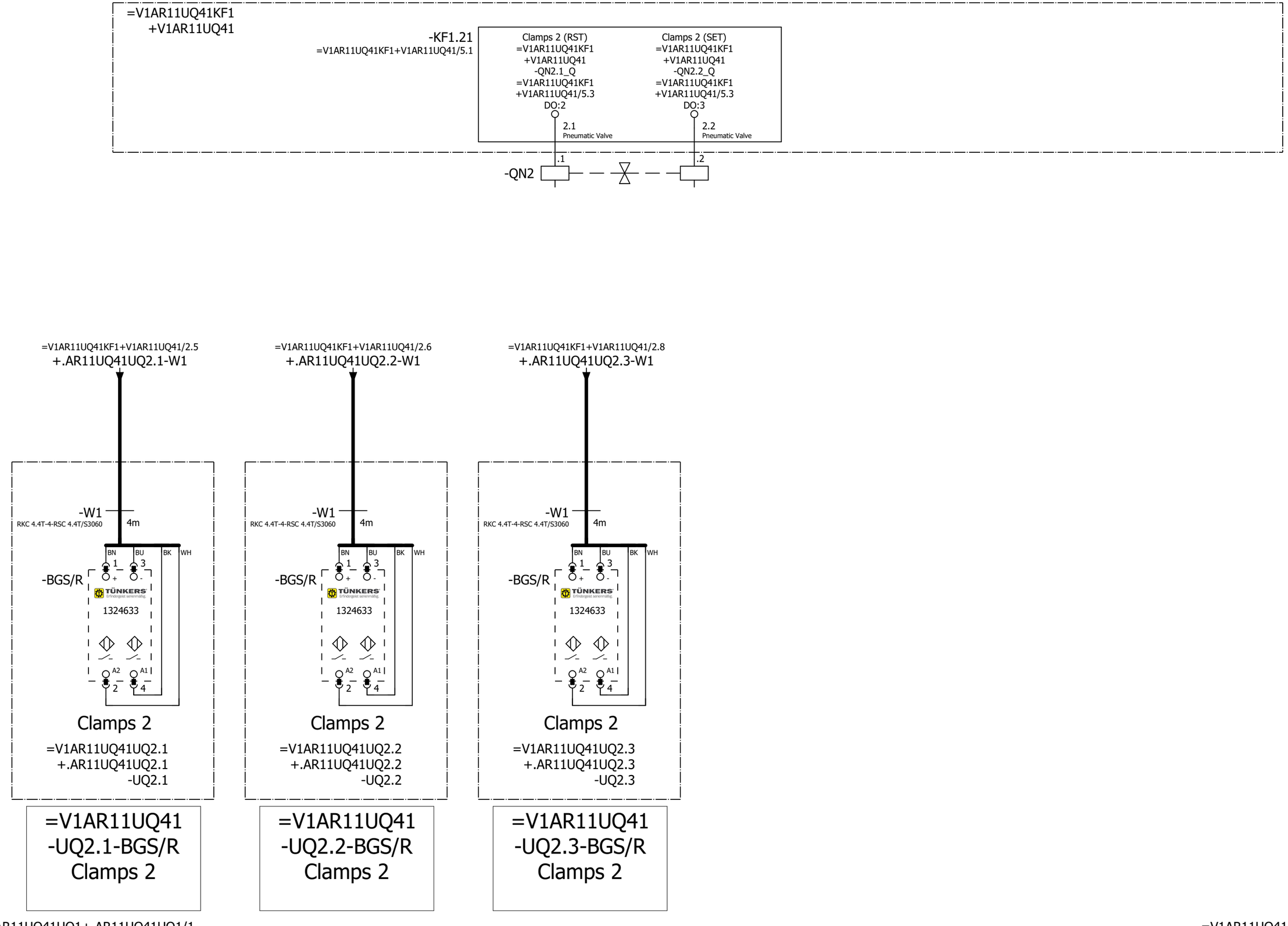

=V1AR11UQ41UQ1+.AR11UQ41UQ1/1

=V1AR11UQ41UQ3+.AR11UQ41UQ3/1

			Date	1/11/2023	Volvo Trucks North America		Valiant TMS	FESTO DQ CONNECTION QN2	Drawing name: =2V10&EFS-EL	= V1AR11UQ41UQ2	
			Ed.	MKLEPADLO						+ V1AR11UQ41UQ2	
			Appr		P6700 Bodyside RH - Robot Cell 2V10				Document type: EFS	Project nr: 22-16150	Page 1
Modification	Date	Name	Original		Replacement of	Replaced by	Scale 1:1				1579

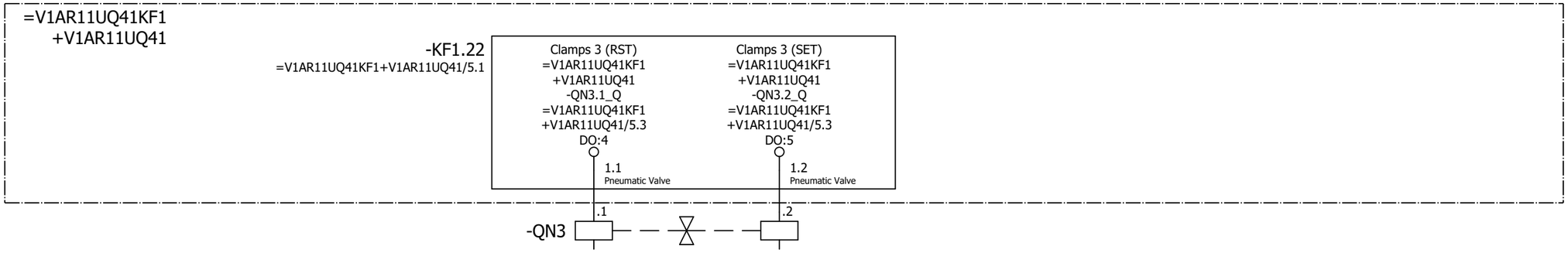

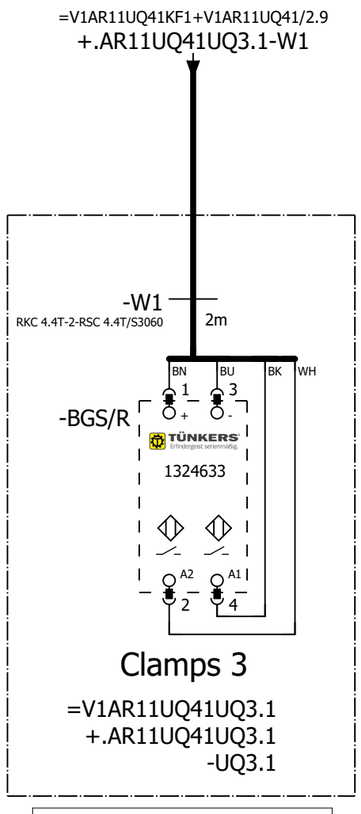

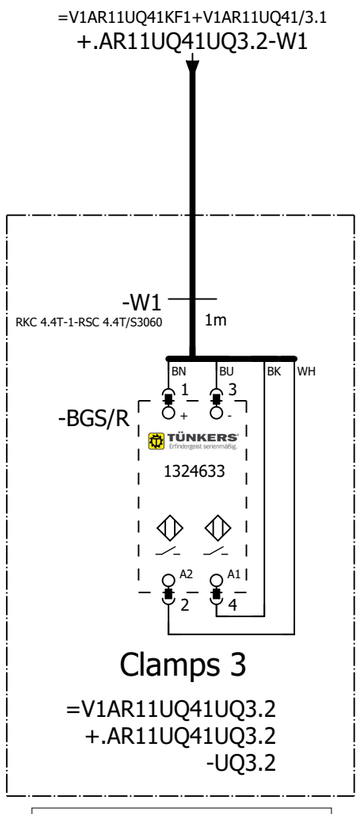

=V1AR11UQ41
-UQ3.1-BGS/R
Clamps 3

=V1AR11UQ41
-UQ3.2-BGS/R
Clamps 3

=V1AR11UQ41UQ2+.AR11UQ41UQ2/1

=V1AR11UQ41UQ4+.AR11UQ41UQ4/1

			Date	1/11/2023	Volvo Trucks North America		Valiant TMS	FESTO DQ CONNECTION QN3	Drawing name: =2V10&EFS-EL	= V1AR11UQ41UQ3	
			Ed.	MKLEPADLO						+ V1AR11UQ41UQ3	
			Appr		P6700 Bodyside RH - Robot Cell 2V10				Document type: EFS	Project nr: 22-16150	Page 1
Modification	Date	Name	Original		Replacement of	Replaced by	Scale 1:1				1579

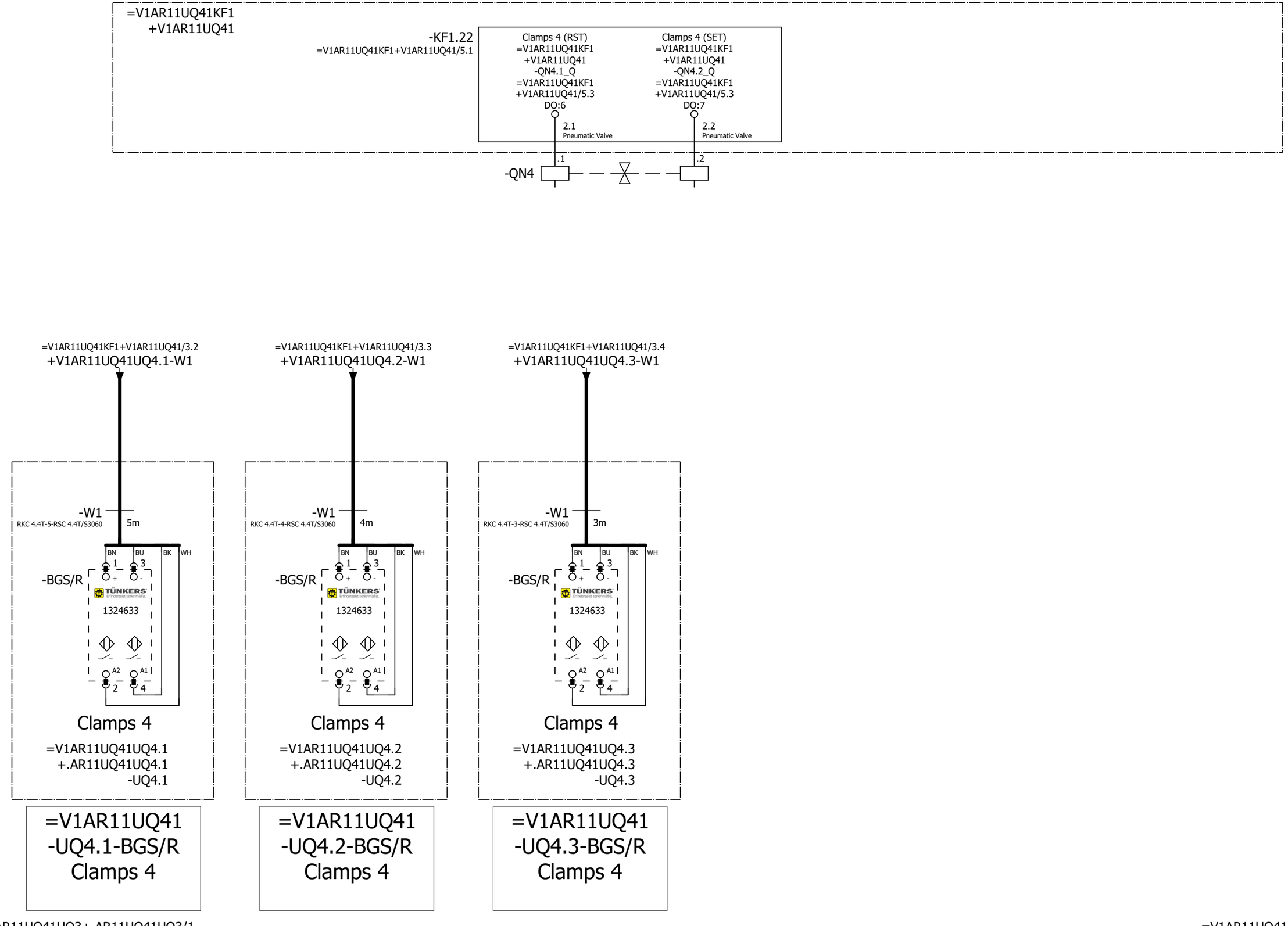

=V1AR11UQ41UQ3+.AR11UQ41UQ3/1

=V1AR11UQ41UQ5+.AR11UQ41UQ5/1

			Date	1/11/2023	Volvo Trucks North America	Valiant TMS	FESTO DQ CONNECTION QN4	Drawing name: =2V10&EFS-EL	= V1AR11UQ41UQ4		
			Ed.	MKLEPADLO					+ V1AR11UQ41UQ4		
			Appr		P6700 Bodyside RH - Robot Cell 2V10			Document type: EFS	Project nr: 22-16150	Page	1
Modification	Date	Name	Original		Replacement of / Replaced by	Scale 1:1					1579

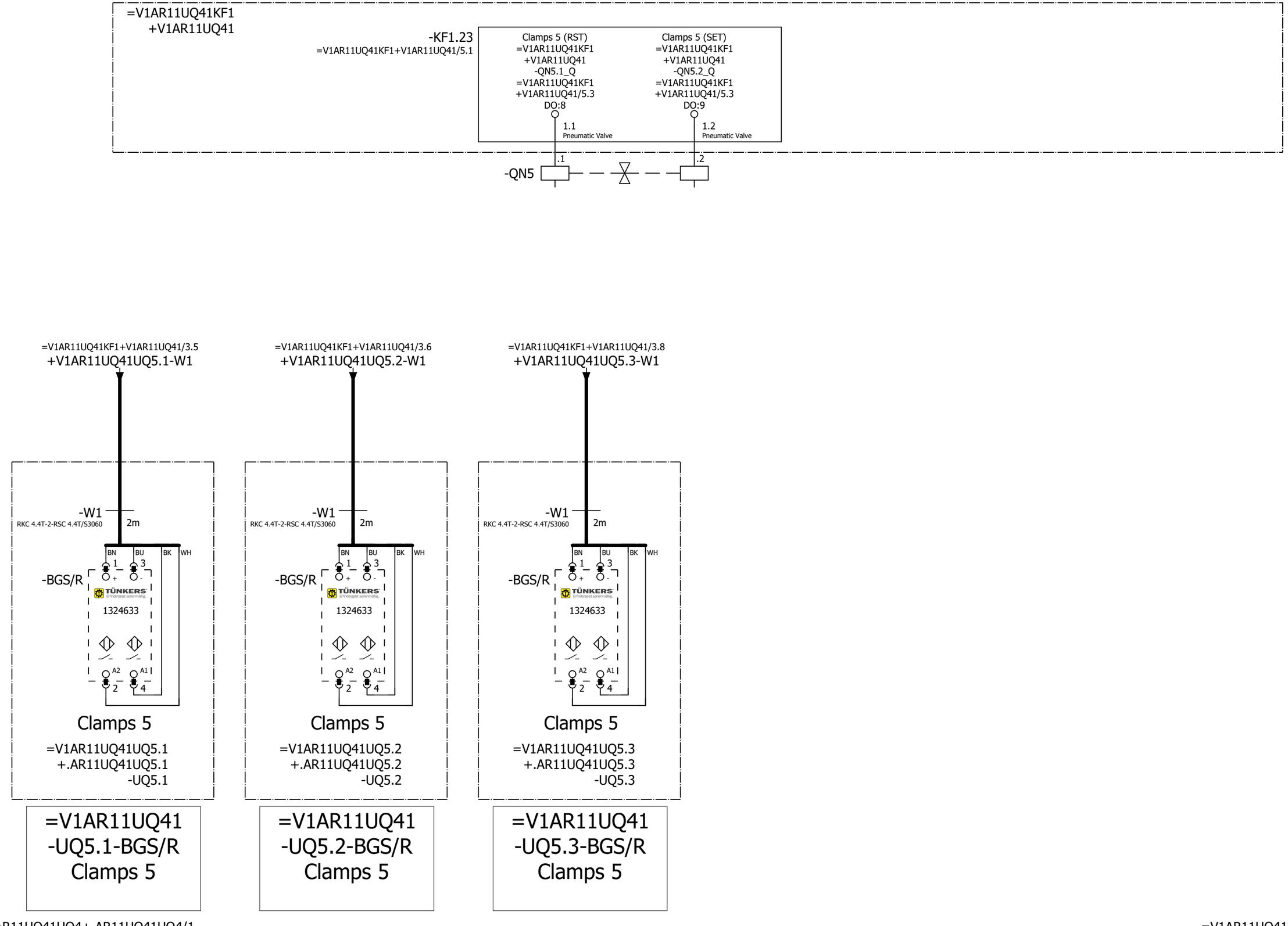

=V1AR11UQ41UQ4+.AR11UQ41UQ4/1

=V1AR11UQ41UQ6+.AR11UQ41UQ6/1

			Date	1/11/2023	Volvo Trucks North America		Valiant TMS	FESTO DQ CONNECTION QN5	Drawing name: =2V10&EFS-EL	= V1AR11UQ41UQ5	
			Ed.	MKLEPADLO						+ V1AR11UQ41UQ5	
			Appr		P6700 Bodyside RH - Robot Cell 2V10				Document type: EFS	Project nr: 22-16150	Page 1
Modification	Date	Name	Original		Replacement of	Replaced by	Scale 1:1				1579

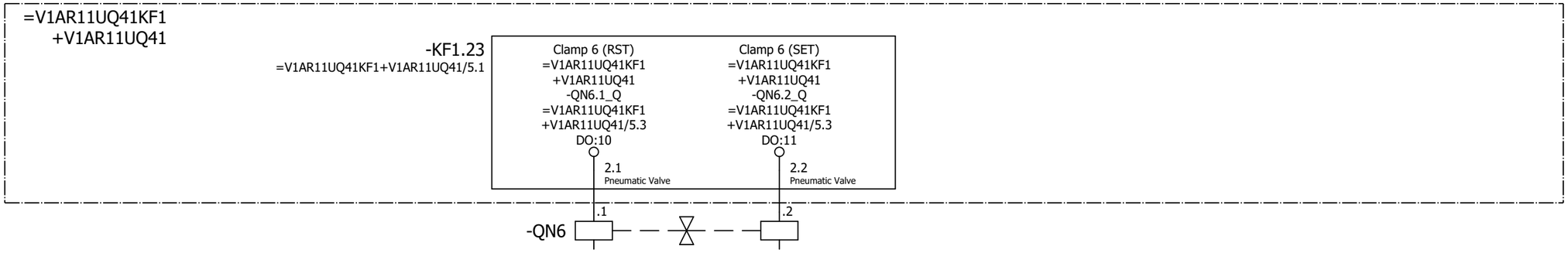

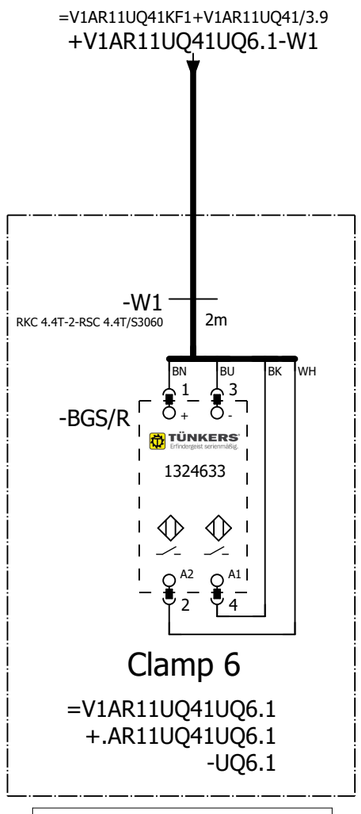

=V1AR11UQ41
-UQ6.1-BGS/R
Clamp 6

=V1AR11UQ41UQ5+.AR11UQ41UQ5/1

=V1AR11UQ41UQ7+.AR11UQ41UQ7/1

			Date	1/11/2023	Volvo Trucks North America		Valiant TMS	FESTO DQ CONNECTION QN6	Drawing name: =2V10&EFS-EL	= V1AR11UQ41UQ6	
			Ed.	MKLEPADLO						+ V1AR11UQ41UQ6	
			Appr		P6700 Bodyside RH - Robot Cell 2V10				Document type: EFS	Project nr: 22-16150	Page 1
Modification	Date	Name	Original		Replacement of	Replaced by	Scale 1:1				1579

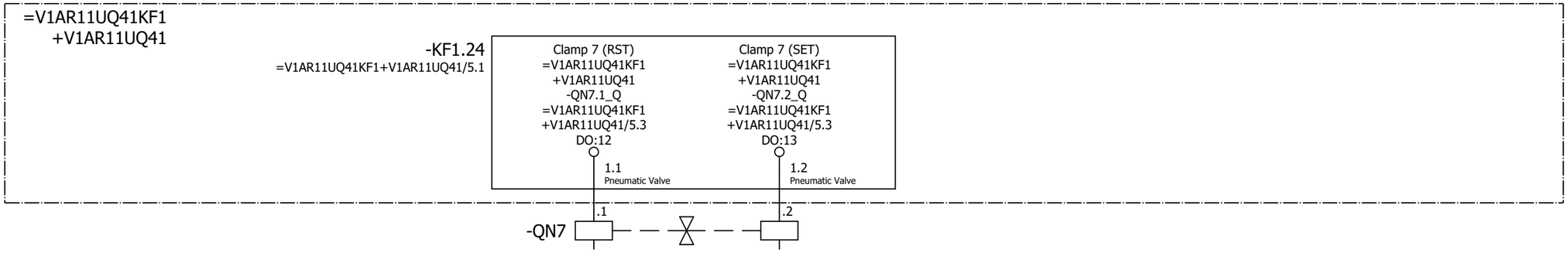

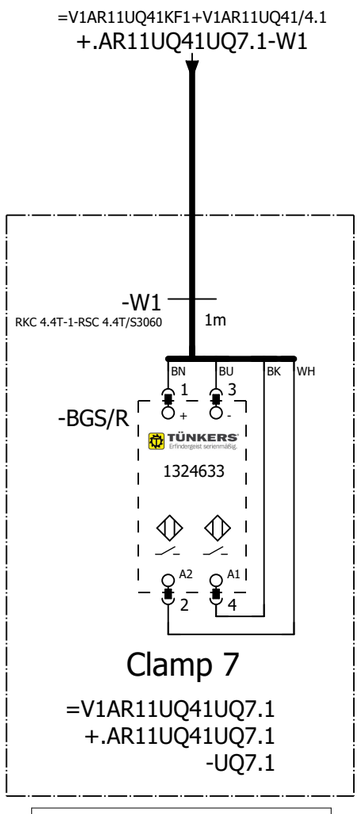

=V1AR11UQ41
-UQ7.1-BGS/R
Clamp 7

=V1AR11UQ41UQ6+.AR11UQ41UQ6/1

=V1AR11UQ41UQ8+.AR11UQ41UQ8/1

			Date	1/11/2023	Volvo Trucks North America		Valiant TMS	FESTO DQ CONNECTION QN7	Drawing name: =2V10&EFS-EL	= V1AR11UQ41UQ7	
			Ed.	MKLEPADLO						+ V1AR11UQ41UQ7	
			Appr		P6700 Bodyside RH - Robot Cell 2V10				Document type: EFS	Project nr: 22-16150	Page 1
Modification	Date	Name	Original		Replacement of	Replaced by	Scale 1:1				1579

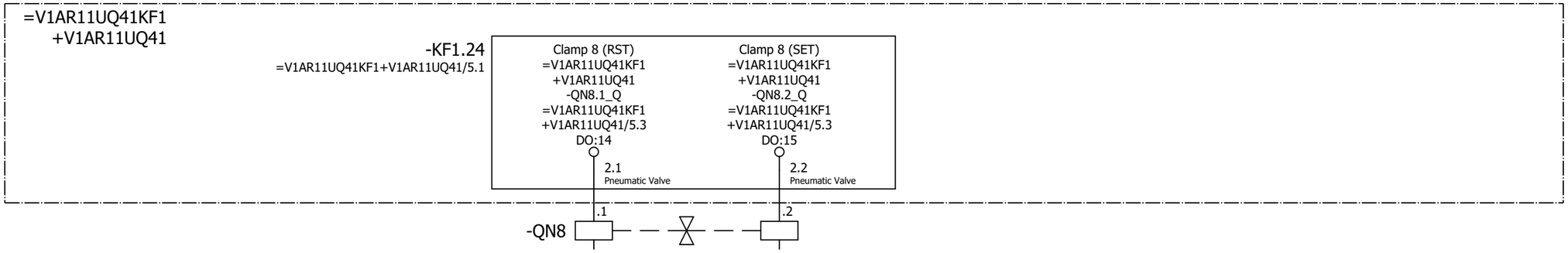

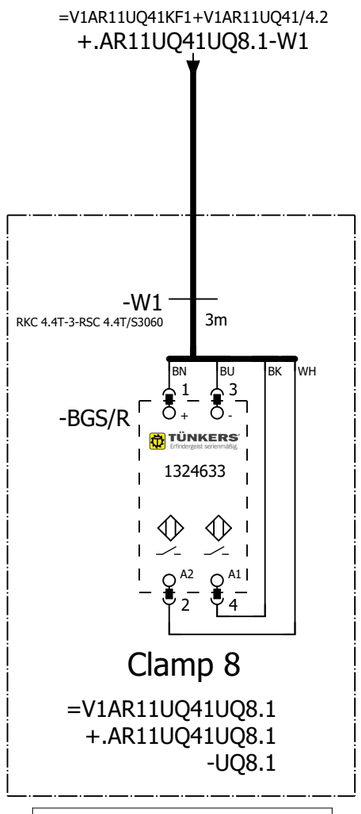

=V1AR11UQ41
-UQ8.1-BGS/R
Clamp 8

=V1AR11UQ41UQ7+.AR11UQ41UQ7/1

=V1AR11UQ41UQ9+.AR11UQ41UQ9/1

			Date	1/11/2023	Volvo Trucks North America	Valiant TMS	FESTO DQ CONNECTION QN8	Drawing name: =2V10&EFS-EL	= V1AR11UQ41UQ8	
			Ed.	MKLEPADLO					+ V1AR11UQ41UQ8	
			Appr		P6700 Bodyside RH - Robot Cell 2V10			Document type: EFS	Project nr: 22-16150	Page 1
Modification	Date	Name	Original		Replacement of / Replaced by	Scale 1:1				1579

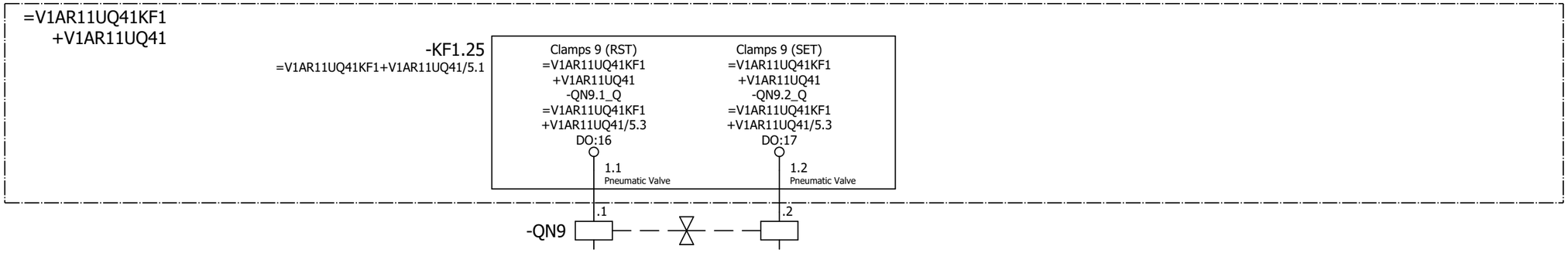

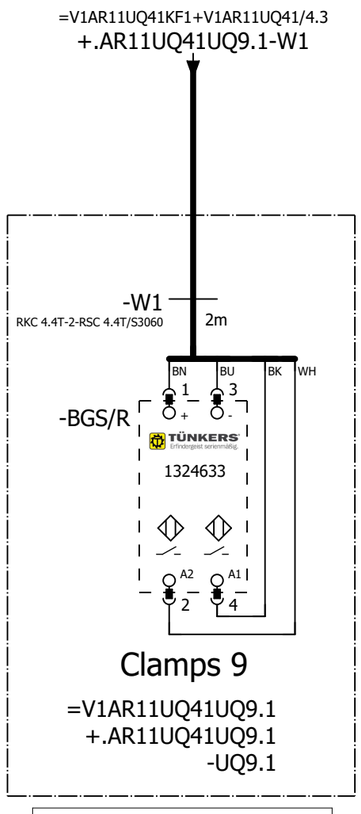

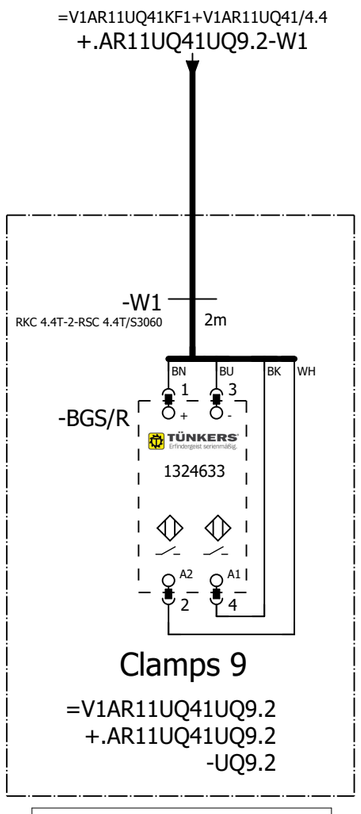

=V1AR11UQ41
-UQ9.1-BGS/R
Clamps 9

=V1AR11UQ41
-UQ9.2-BGS/R
Clamps 9

=V1AR11UQ41UQ8+.AR11UQ41UQ8/1

=V1AR11UQ41UQ10+.AR11UQ41UQ10/1

			Date	1/11/2023	Volvo Trucks North America		Valiant TMS	FESTO DQ CONNECTION QN9	Drawing name: =2V10&EFS-EL	= V1AR11UQ41UQ9	
			Ed.	MKLEPADLO						+ V1AR11UQ41UQ9	
			Appr		P6700 Bodyside RH - Robot Cell 2V10				Document type: EFS	Project nr: 22-16150	Page 1
Modification	Date	Name	Original		Replacement of	Replaced by	Scale 1:1				1579

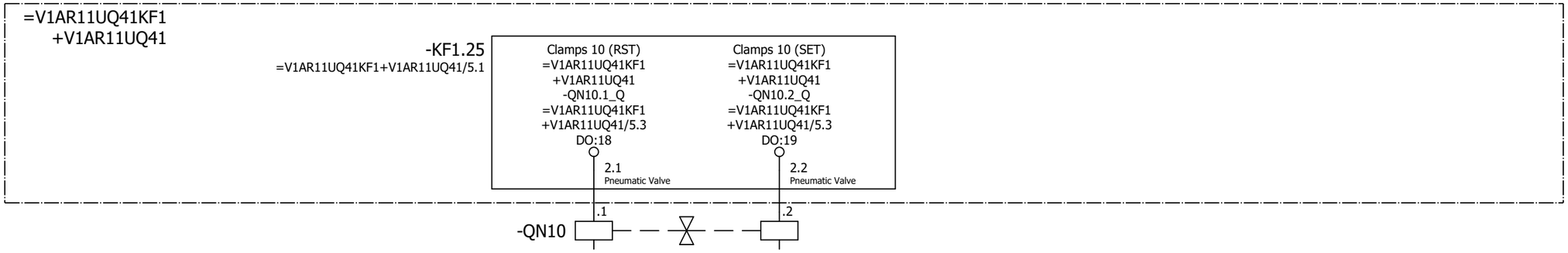

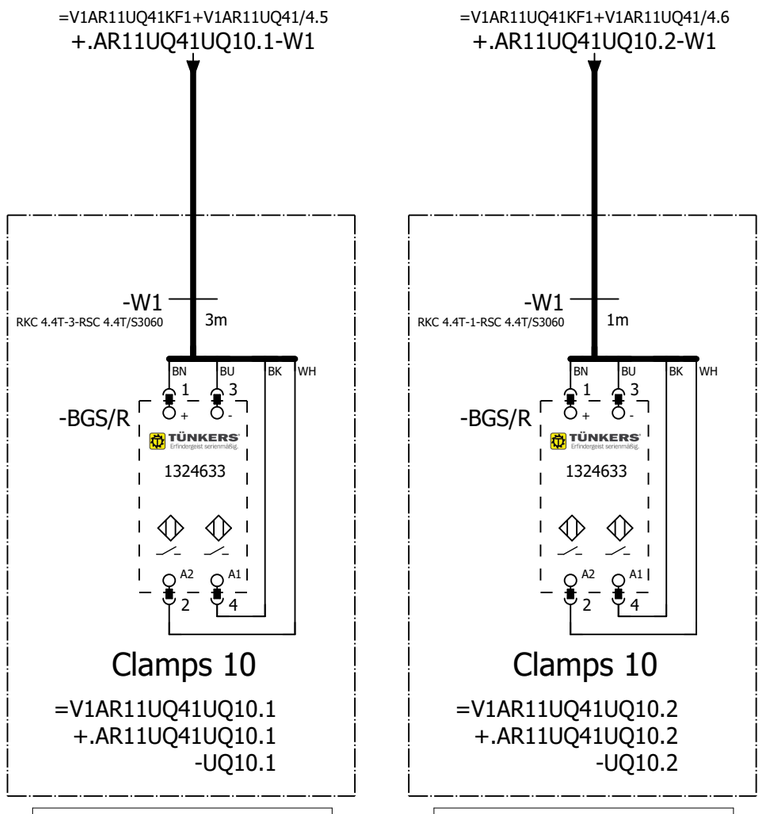

=V1AR11UQ41
-UQ10.1-BGS/R
Clamps 10

=V1AR11UQ41
-UQ10.2-BGS/R
Clamps 10

=V1AR11UQ41UQ9+.AR11UQ41UQ9/1

=V1AR11WC1+.AR11UC01/1

			Date	1/11/2023	Volvo Trucks North America	Valiant TMS	FESTO DQ CONNECTION QN10	Drawing name: =2V10&EFS-EL	= V1AR11UQ41UQ10		
			Ed.	MKLEPADLO					+ V1AR11UQ41UQ10		
			Appr		P6700 Bodyside RH - Robot Cell 2V10			Document type: EFS	Project nr: 22-16150	Page	1
Modification	Date	Name	Original		Replacement of / Replaced by	Scale 1:1					1579

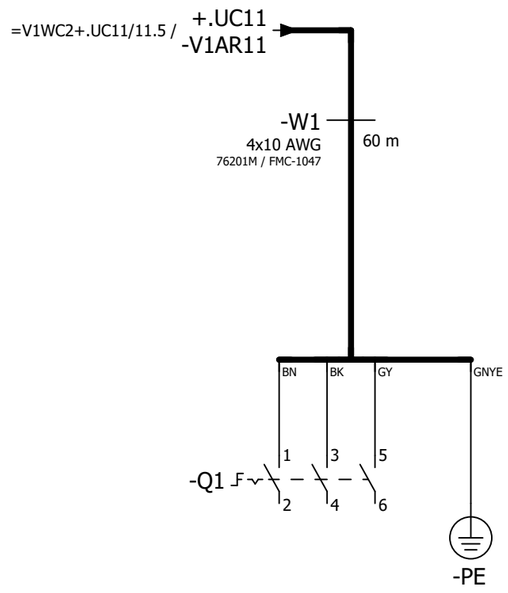

=V1AR11UQ41UQ10+.AR11UQ41UQ10/1

=V1AR21KF1+.AR21UC01/1

			Date	1/11/2023	Volvo Trucks North America	Valiant TMS	Incoming power	Drawing name: =2V10&EFS-EL	= V1AR11WC1	
			Ed.	MKLEPADLO					+ V1AR11UC01	
			Appr		P6700 Bodyside RH - Robot Cell 2V10			Document type: EFS	Project nr: 22-16150	Page 1
Modification	Date	Name	Original		Replacement of / Replaced by	Scale 1:1				1579

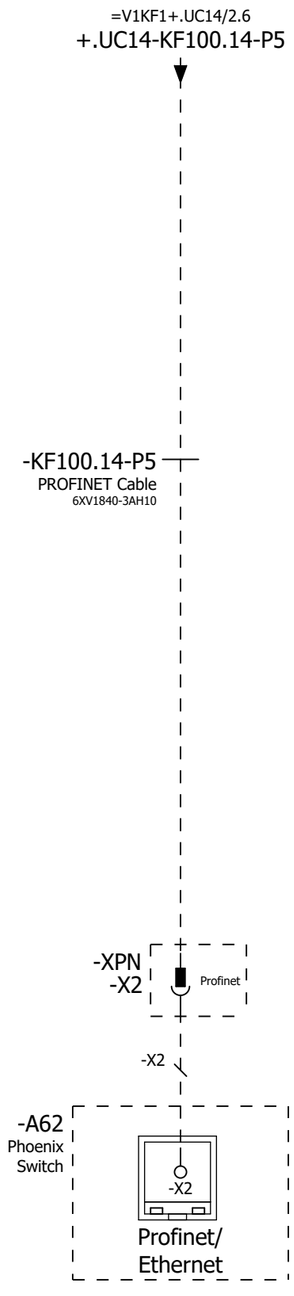

=V1AR11WC1+.AR11UC01/1

=V1AR21WC1/1

			Date	1/11/2023	Volvo Trucks North America	Valiant TMS	Incoming Profinet	Drawing name: =2V10&EFS-EL	= V1AR21KF1	
			Ed.	MKLEPADLO					+ V1AR21UC01	
			Appr		P6700 Bodyside RH - Robot Cell 2V10			Document type: EFS	Project nr: 22-16150	Page 1 / 1579
Modification	Date	Name	Original		Replacement of	Replaced by	Scale 1:1			

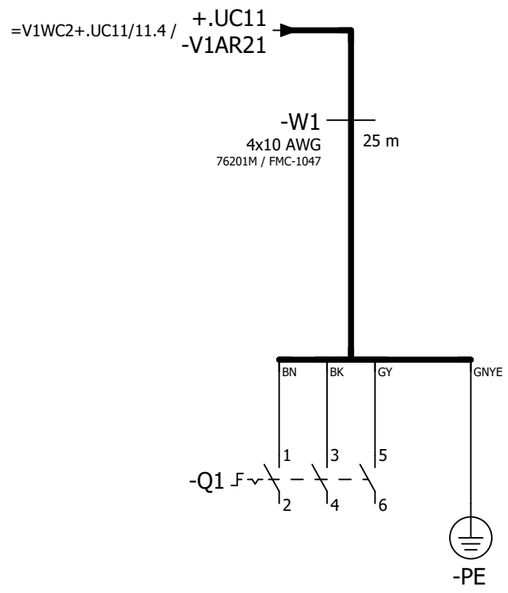

=V1AR21KF1/1

=V1AR21XQ11WC1+.AR21XQ11UC01/1

			Date	1/11/2023	Volvo Trucks North America	Valiant TMS	Incoming power	Drawing name: =2V10&EFS-EL	= V1AR21WC1	
			Ed.	MKLEPADLO					+ V1AR21UC01	
			Appr		P6700 Bodyside RH - Robot Cell 2V10			Document type: EFS	Project nr: 22-16150	Page 1
Modification	Date	Name	Original		Replacement of / Replaced by	Scale 1:1				1579

Tool-Change Application, One Weld Gun Connected at a Time (XQ11/XQ12)

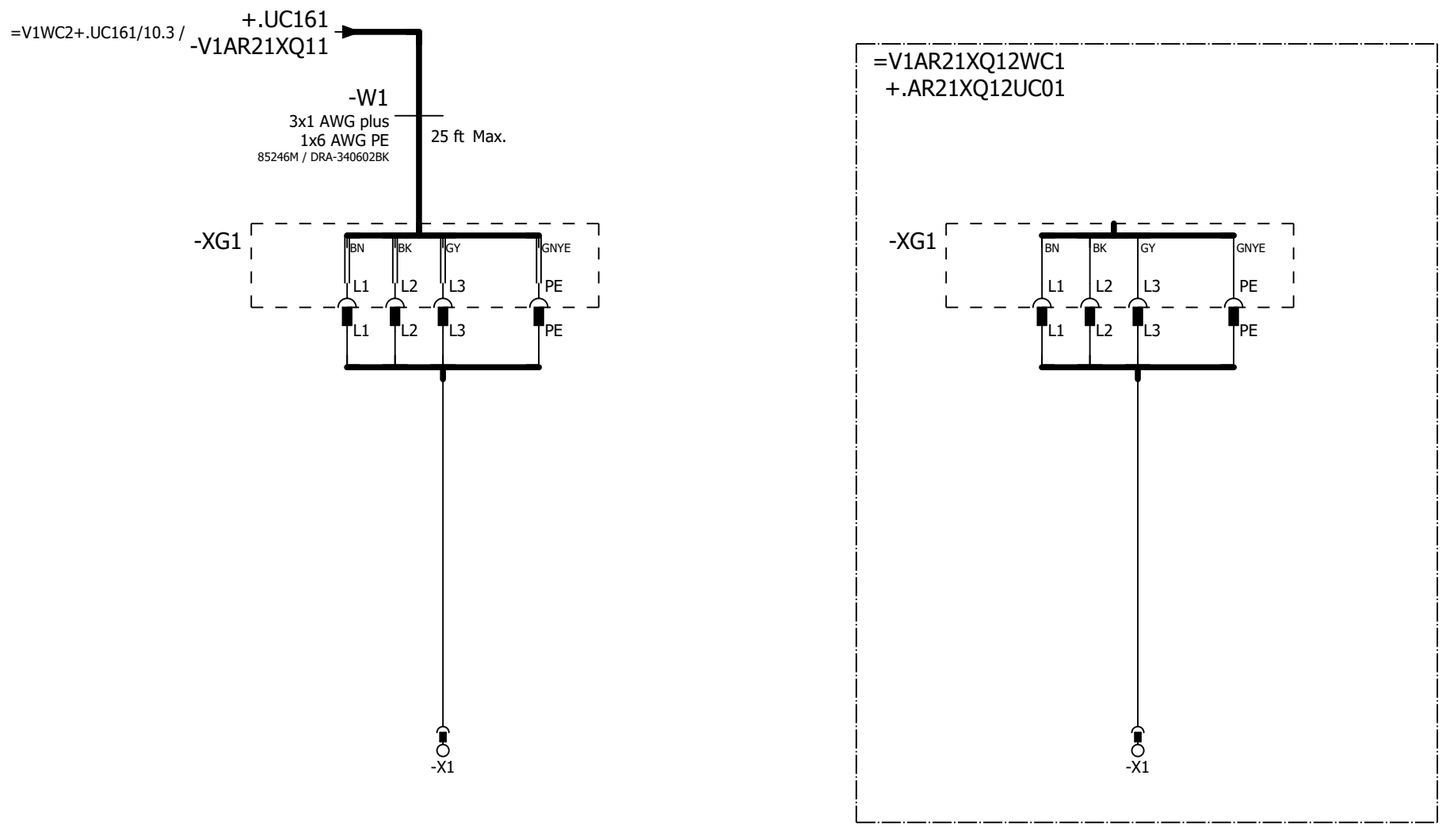

=V1AR21WC1+.AR21UC01/1

=V1AR22KF1+.AR22UC01/1

			Date	1/11/2023	Volvo Trucks North America	Valiant TMS	Incoming power	Drawing name: =2V10&EFS-EL		= V1AR21XQ11WC1	
			Ed.	MKLEPADLO						+ V1AR21XQ11UC01	
			Appr		P6700 Bodyside RH - Robot Cell 2V10			Document type: EFS	Project nr: 22-16150		Page 1
Modification	Date	Name	Original		Replacement of	Replaced by	Scale 1:1				1579

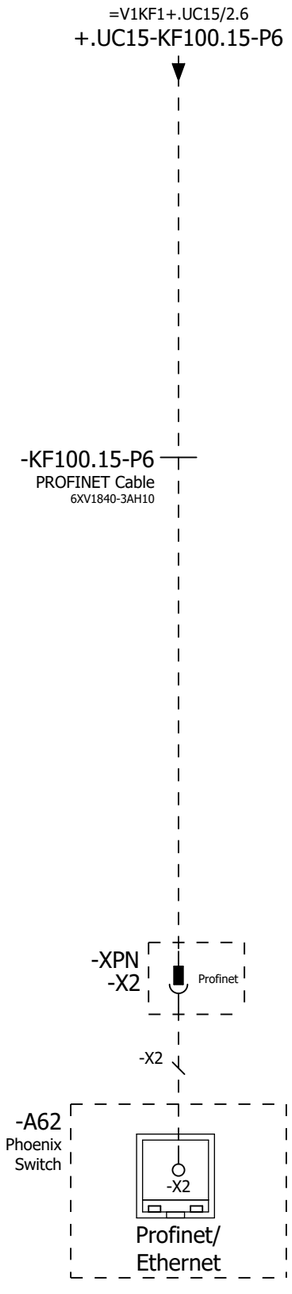

=V1AR21XQ11WC1+.AR21XQ11UC01/1

=V1AR22WC1/1

			Date	1/11/2023	Volvo Trucks North America	Valiant TMS	Incoming Profinet	Drawing name: =2V10&EFS-EL		= V1AR22KF1	
			Ed.	MKLEPADLO						+ V1AR22UC01	
			Appr		P6700 Bodyside RH - Robot Cell 2V10			Document type: EFS	Project nr: 22-16150		Page 1
Modification	Date	Name	Original		Replacement of	Replaced by	Scale 1:1				1579

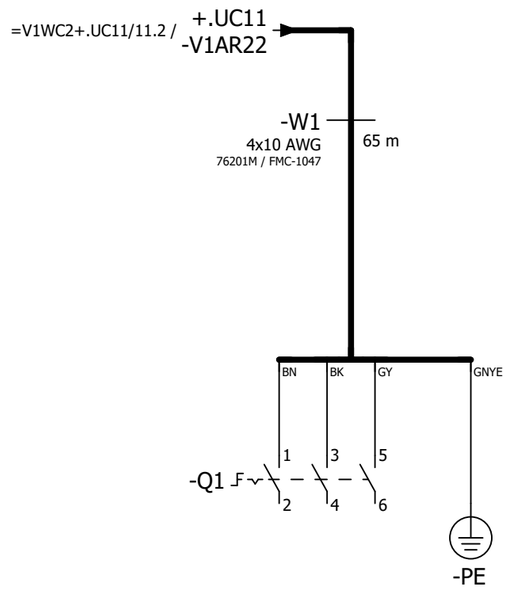

=V1AR22KF1/1

=V1AR22XQ11WC1+.AR22XQ11UC01/1

			Date	1/11/2023	Volvo Trucks North America	Valiant TMS	Incoming power	Drawing name: =2V10&EFS-EL	= V1AR22WC1	
			Ed.	MKLEPADLO					+ V1AR22UC01	
			Appr		P6700 Bodyside RH - Robot Cell 2V10			Document type: EFS	Project nr: 22-16150	Page 1
Modification	Date	Name	Original		Replacement of / Replaced by	Scale 1:1				1579

Tool-Change Application, One Weld Gun Connected at a Time (XQ11/XQ12)

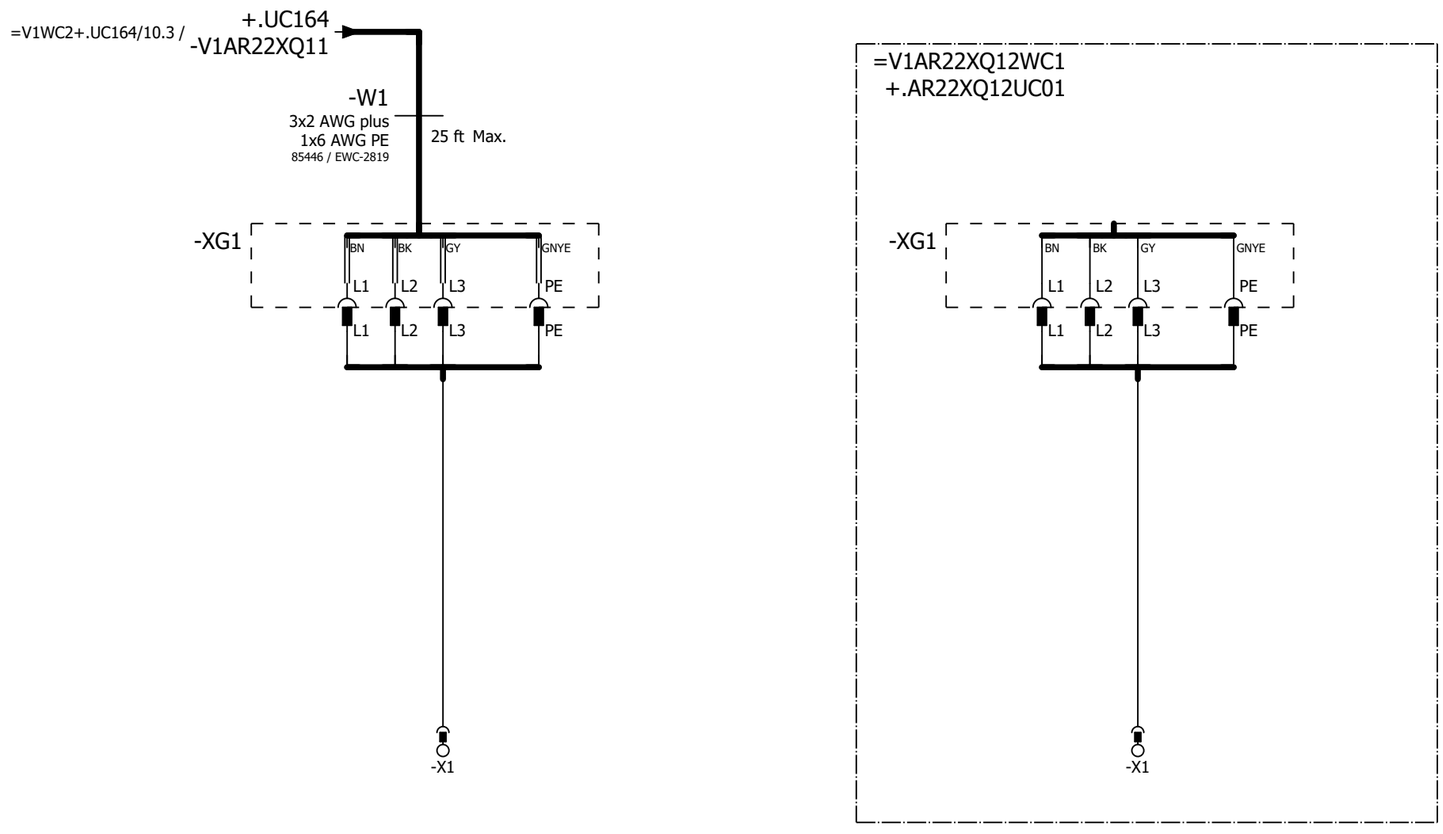

=V1AR22WC1+.AR22UC01/1

=V1AR23KF1+.AR23UC01/1

			Date	1/11/2023	Volvo Trucks North America	Valiant TMS	Incoming power	Drawing name: =2V10&EFS-EL		= V1AR22XQ11WC1	
			Ed.	MKLEPADLO						+ V1AR22XQ11UC01	
			Appr		P6700 Bodyside RH - Robot Cell 2V10			Document type: EFS	Project nr: 22-16150		Page 1
Modification	Date	Name	Original		Replacement of	Replaced by	Scale 1:1				1579

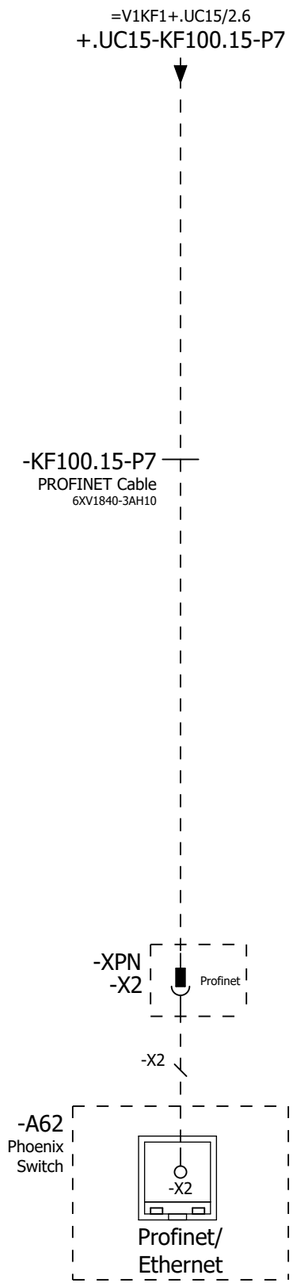

=V1AR22XQ11WC1+.AR22XQ11UC01/1

=V1AR23WC1/1

			Date	1/11/2023	Volvo Trucks North America		Valiant TMS	Incoming Profinet	Drawing name: =2V10&EFS-EL	= V1AR23KF1	
			Ed.	MKLEPADLO						+ V1AR23UC01	
			Appr		P6700 Bodyside RH - Robot Cell 2V10				Document type: EFS	Project nr: 22-16150	Page 1
Modification	Date	Name	Original		Replacement of	Replaced by	Scale 1:1				1579

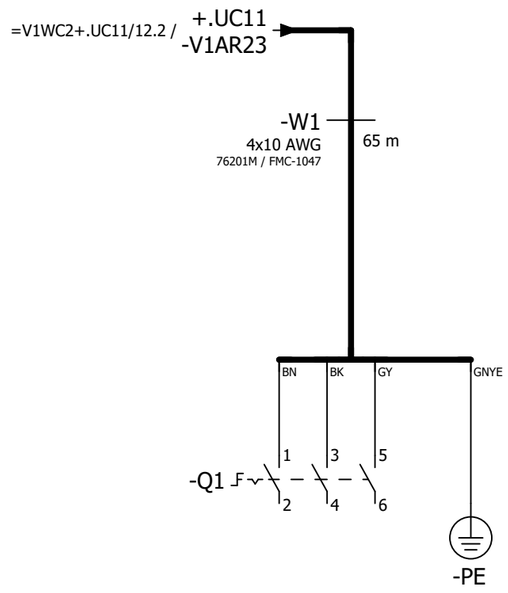

=V1AR23KF1/1

=V1AR23XQ11WC1+.AR23XQ11UC01/1

			Date	1/11/2023	Volvo Trucks North America	Valiant TMS	Incoming power	Drawing name: =2V10&EFS-EL	= V1AR23WC1	
			Ed.	MKLEPADLO					+ V1AR23UC01	
			Appr		P6700 Bodyside RH - Robot Cell 2V10			Document type: EFS	Project nr: 22-16150	Page 1
Modification	Date	Name	Original		Replacement of / Replaced by	Scale 1:1				1579

Tool-Change Application, One Weld Gun Connected at a Time (XQ11/XQ12)

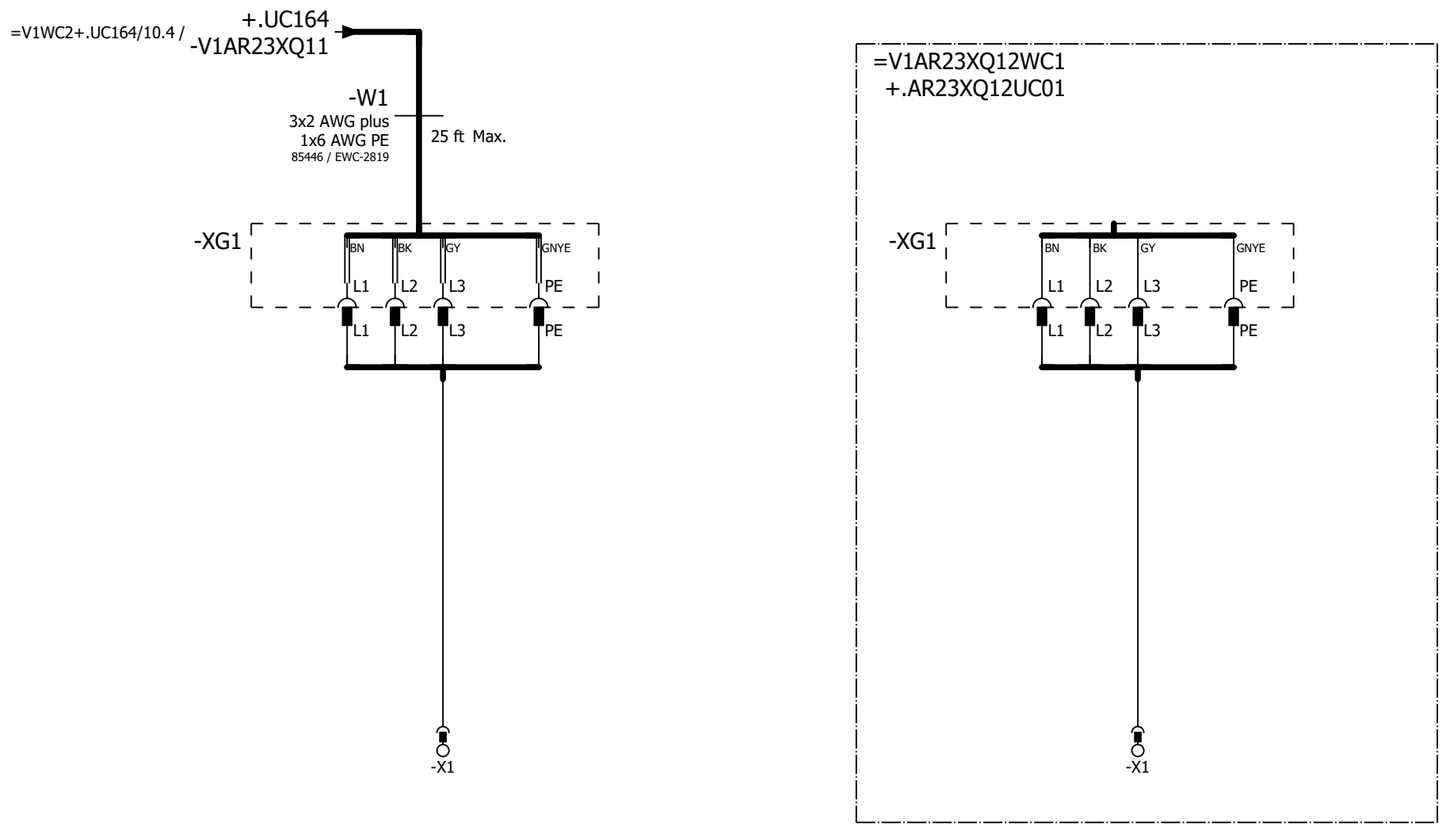

=V1AR23WC1+.AR23UC01/1

=V1AR24KF1+.AR24UC01/1

			Date	1/11/2023	Volvo Trucks North America	Valiant TMS	Incoming power	Drawing name: =2V10&EFS-EL		= V1AR23XQ11WC1	
			Ed.	MKLEPADLO						+ V1AR23XQ11UC01	
			Appr		P6700 Bodyside RH - Robot Cell 2V10			Document type: EFS	Project nr: 22-16150		Page 1
Modification	Date	Name	Original		Replacement of	Replaced by	Scale 1:1				1579

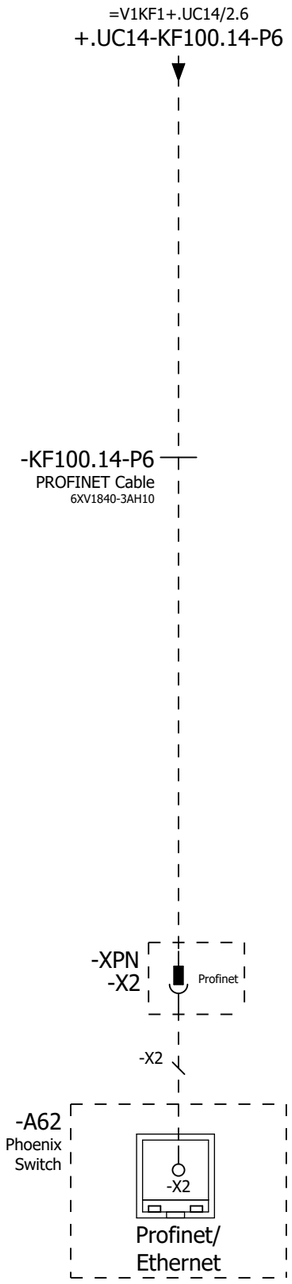

=V1AR23XQ11WC1+.AR23XQ11UC01/1

=V1AR24WC1/1

			Date	1/11/2023	Volvo Trucks North America	Valiant TMS	Incoming Profinet	Drawing name: =2V10&EFS-EL		= V1AR24KF1	
			Ed.	MKLEPADLO						+ V1AR24UC01	
			Appr		P6700 Bodyside RH - Robot Cell 2V10			Document type: EFS	Project nr: 22-16150		Page 1
Modification	Date	Name	Original		Replacement of	Replaced by	Scale 1:1				1579

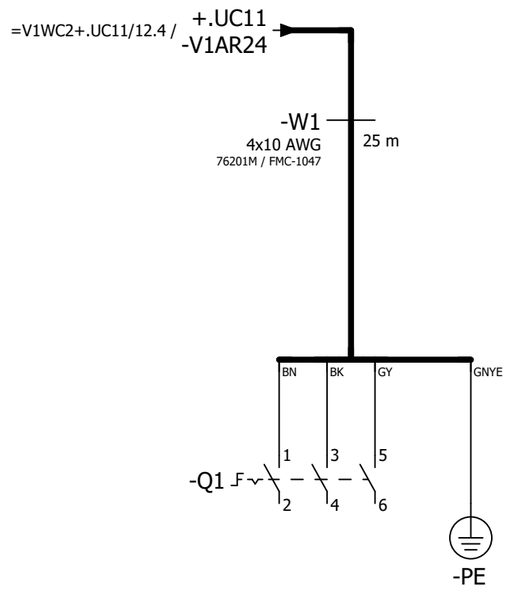

=V1AR24KF1/1

=V1AR24XQ11WC1+.AR24XQ11UC01/1

			Date	1/11/2023	Volvo Trucks North America	Valiant TMS	Incoming power	Drawing name: =2V10&EFS-EL	= V1AR24WC1	
			Ed.	MKLEPADLO					+ V1AR24UC01	
			Appr		P6700 Bodyside RH - Robot Cell 2V10			Document type: EFS	Project nr: 22-16150	Page 1
Modification	Date	Name	Original		Replacement of / Replaced by	Scale 1:1				1579

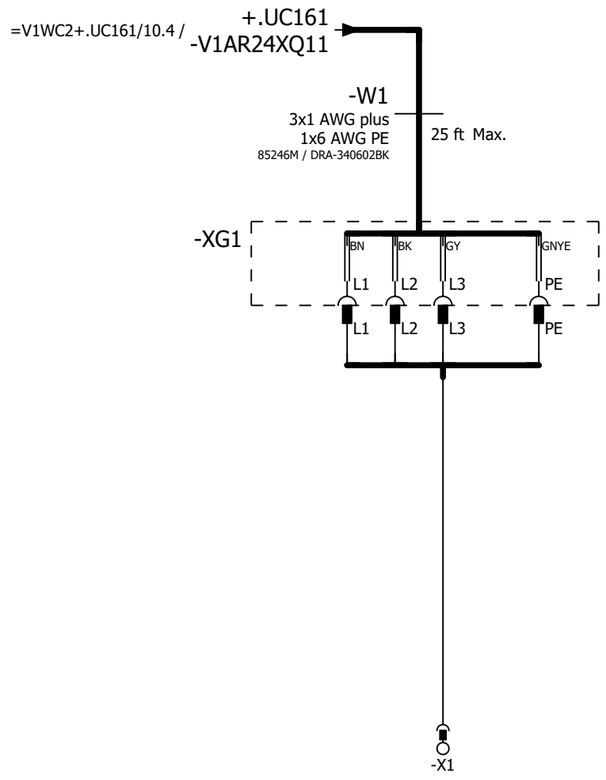

=V1AR24WC1+.AR24UC01/1

=V1AR25KF1+.AR25UC01/1

			Date	1/11/2023	Volvo Trucks North America	Valiant TMS	Incoming power	Drawing name: =2V10&EFS-EL		= V1AR24XQ11WC1	
			Ed.	MKLEPADLO						+ V1AR24XQ11UC01	
			Appr		P6700 Bodyside RH - Robot Cell 2V10			Document type: EFS	Project nr: 22-16150		Page 1
Modification	Date	Name	Original		Replacement of	Replaced by	Scale 1:1				1579

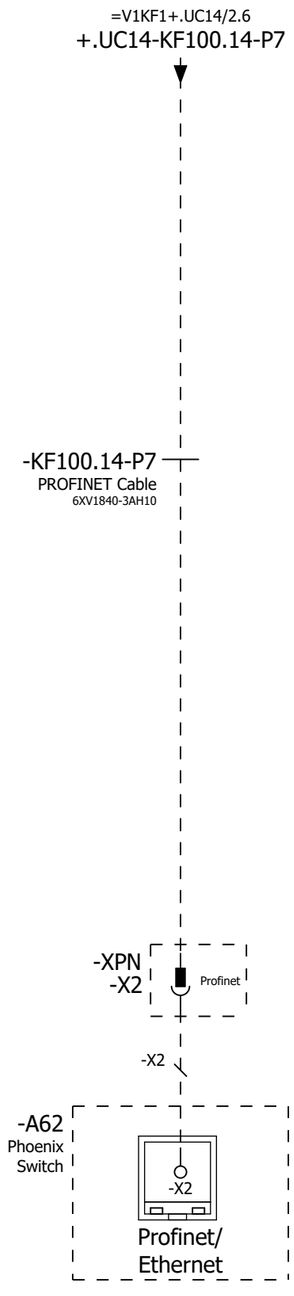

=V1AR24XQ11WC1+.AR24XQ11UC01/1

=V1AR25WC1/1

			Date	1/11/2023	Volvo Trucks North America	Valiant TMS	Incoming Profinet	Drawing name: =2V10&EFS-EL		= V1AR25KF1	
			Ed.	MKLEPADLO						+ V1AR25UC01	
			Appr		P6700 Bodyside RH - Robot Cell 2V10			Document type: EFS	Project nr: 22-16150		Page 1
Modification	Date	Name	Original		Replacement of	Replaced by	Scale 1:1				1579

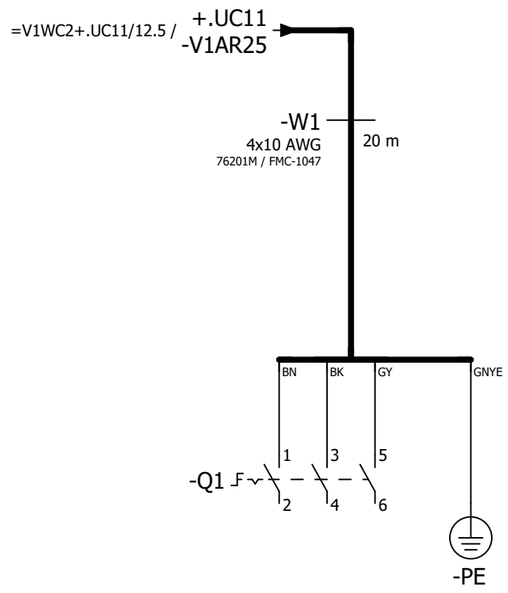

=V1AR25KF1/1

=V1AR25XQ11WC1+.AR25XQ11UC01/1

			Date	1/11/2023	Volvo Trucks North America	Valiant TMS	Incoming power	Drawing name: =2V10&EFS-EL	= V1AR25WC1	
			Ed.	MKLEPADLO					+ V1AR25UC01	
			Appr		P6700 Bodyside RH - Robot Cell 2V10			Document type: EFS	Project nr: 22-16150	Page 1
Modification	Date	Name	Original		Replacement of / Replaced by	Scale 1:1				1579

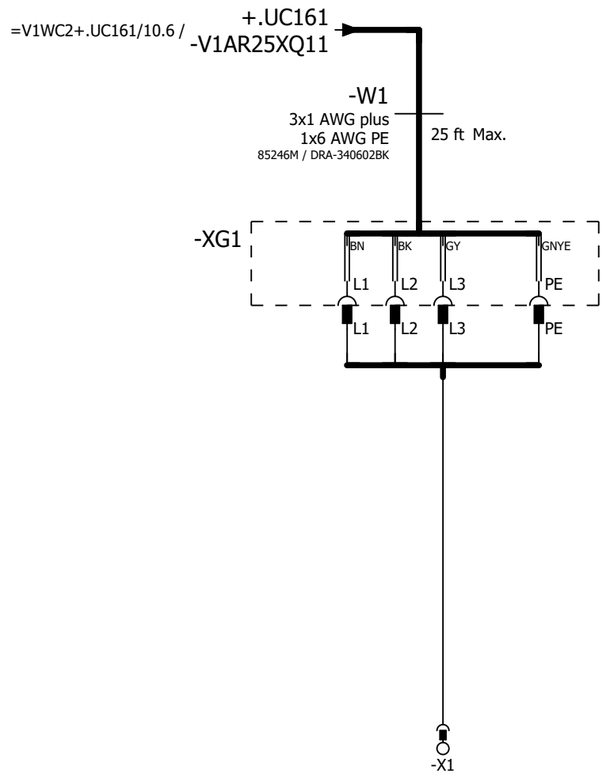

=V1AR25WC1+.AR25UC01/1

=V1AR26KF1+.AR26UC01/1

			Date	1/11/2023	Volvo Trucks North America	Valiant TMS	Incoming power	Drawing name: =2V10&EFS-EL		= V1AR25XQ11WC1	
			Ed.	MKLEPADLO						+ V1AR25XQ11UC01	
			Appr		P6700 Bodyside RH - Robot Cell 2V10			Document type: EFS	Project nr: 22-16150		Page 1
Modification	Date	Name	Original		Replacement of	Replaced by	Scale 1:1				1579

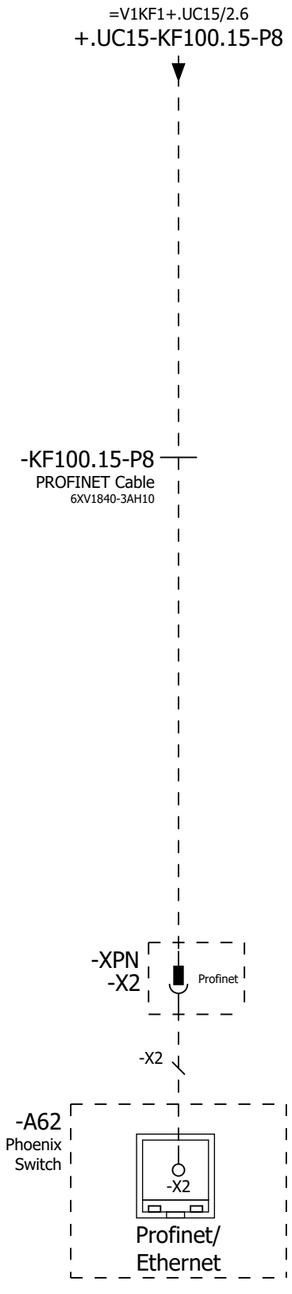

=V1AR25XQ11WC1+.AR25XQ11UC01/1

=V1AR26WC1/1

			Date	1/11/2023	Volvo Trucks North America	Valiant TMS	Incoming Profinet	Drawing name: =2V10&EFS-EL		= V1AR26KF1	
			Ed.	MKLEPADLO						+ V1AR26UC01	
			Appr		P6700 Bodyside RH - Robot Cell 2V10			Document type: EFS	Project nr: 22-16150	Page	1
Modification	Date	Name	Original		Replacement of	Replaced by	Scale 1:1				1579

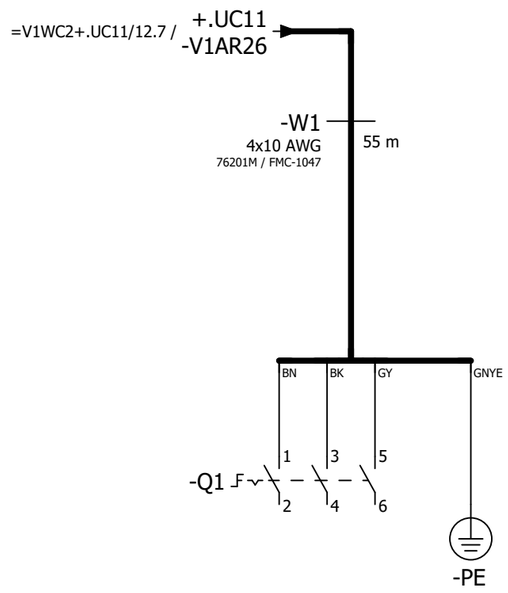

=V1AR26KF1/1

=V1AR26XQ11WC1+.AR26XQ11UC01/1

			Date	1/11/2023	Volvo Trucks North America	Valiant TMS	Incoming power	Drawing name: =2V10&EFS-EL	= V1AR26WC1	
			Ed.	MKLEPADLO					+ V1AR26UC01	
			Appr		P6700 Bodyside RH - Robot Cell 2V10			Document type: EFS	Project nr: 22-16150	Page 1
Modification	Date	Name	Original		Replacement of / Replaced by	Scale 1:1				1579

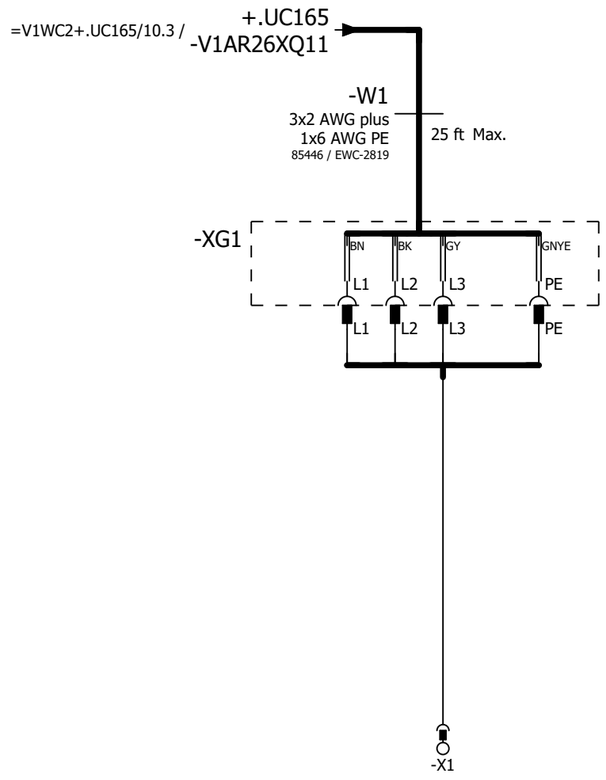

=V1AR26WC1+.AR26UC01/1

=V1AR27KF1+.AR27UC01/1

			Date	1/11/2023	Volvo Trucks North America	Valiant TMS	Incoming power	Drawing name: =2V10&EFS-EL		= V1AR26XQ11WC1	
			Ed.	MKLEPADLO						+ V1AR26XQ11UC01	
			Appr		P6700 Bodyside RH - Robot Cell 2V10			Document type: EFS	Project nr: 22-16150		Page 1
Modification	Date	Name	Original		Replacement of	Replaced by	Scale 1:1				1579

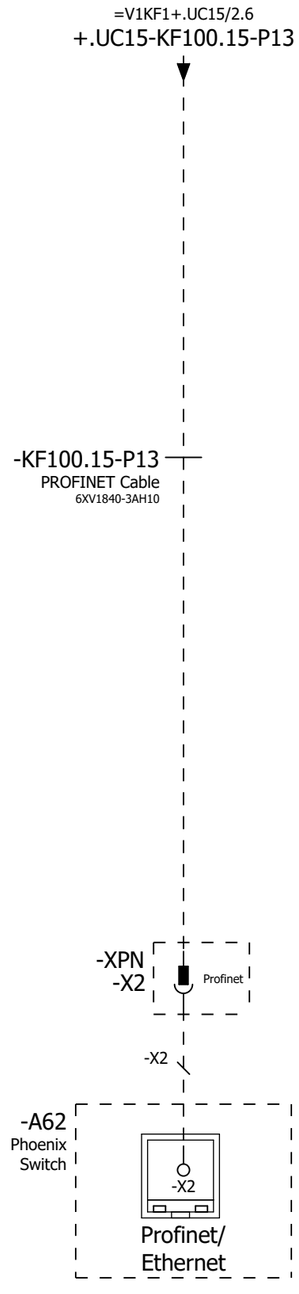

=V1AR26XQ11WC1+.AR26XQ11UC01/1

=V1AR27WC1/1

			Date	1/11/2023	Volvo Trucks North America		Valiant TMS	Incoming Profinet	Drawing name: =2V10&EFS-EL	= V1AR27KF1	
			Ed.	MKLEPADLO						+ V1AR27UC01	
			Appr		P6700 Bodyside RH - Robot Cell 2V10				Document type: EFS	Project nr: 22-16150	Page 1
Modification	Date	Name	Original		Replacement of	Replaced by	Scale 1:1				1579

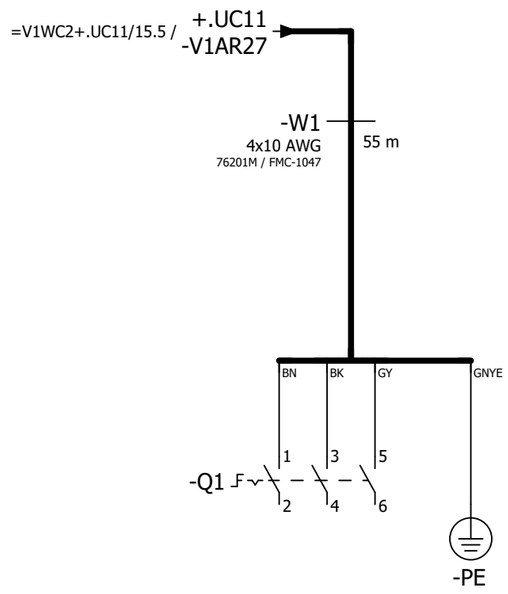

=V1AR27KF1/1

=V1AR27XQ11WC1+.AR27XQ11UC01/1

			Date	1/11/2023	Volvo Trucks North America	Valiant TMS	Incoming power	Drawing name: =2V10&EFS-EL	= V1AR27WC1	
			Ed.	MKLEPADLO					+ V1AR27UC01	
			Appr		P6700 Bodyside RH - Robot Cell 2V10			Document type: EFS	Project nr: 22-16150	Page 1
Modification	Date	Name	Original		Replacement of / Replaced by	Scale 1:1				1579

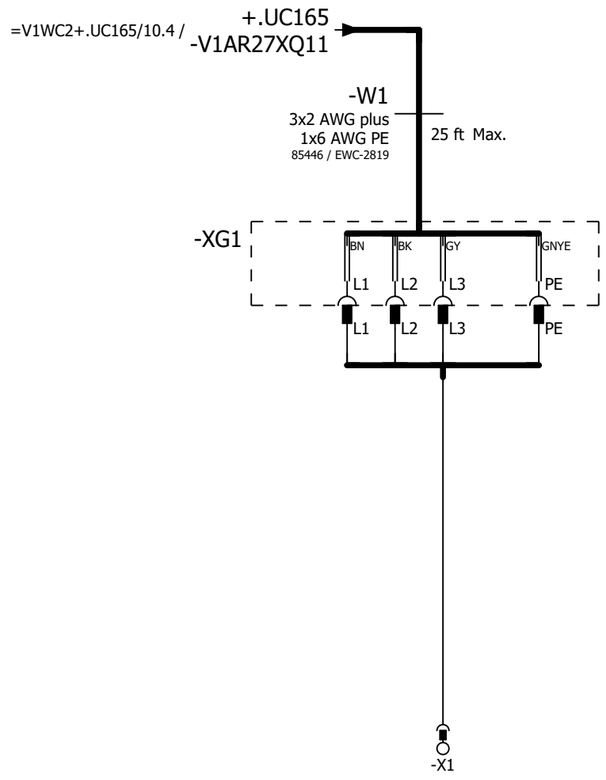

=V1AR27WC1+.AR27UC01/1

=V1AR28KF1+.AR28UC01/1

			Date	1/11/2023	Volvo Trucks North America	Valiant TMS	Incoming power	Drawing name: =2V10&EFS-EL		= V1AR27XQ11WC1	
			Ed.	MKLEPADLO						+ V1AR27XQ11UC01	
			Appr		P6700 Bodyside RH - Robot Cell 2V10			Document type: EFS	Project nr: 22-16150		Page 1
Modification	Date	Name	Original		Replacement of	Replaced by	Scale 1:1				1579

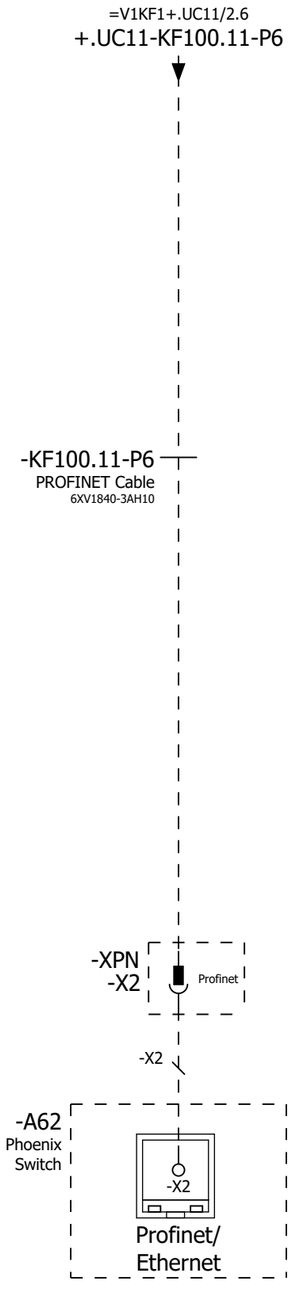

=V1AR27XQ11WC1+.AR27XQ11UC01/1

=V1AR28WC1/1

			Date	1/11/2023	Volvo Trucks North America	Valiant TMS	Incoming Profinet	Drawing name: =2V10&EFS-EL		= V1AR28KF1	
			Ed.	MKLEPADLO						+ V1AR28UC01	
			Appr		P6700 Bodyside RH - Robot Cell 2V10			Document type: EFS	Project nr: 22-16150		Page 1
Modification	Date	Name	Original		Replacement of	Replaced by	Scale 1:1				1579

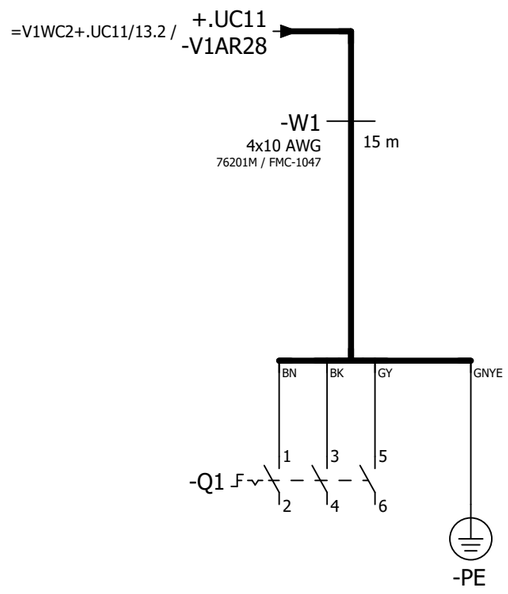

=V1AR28KF1/1

=V1AR28XQ11WC1+.AR28XQ11UC01/1

			Date	1/11/2023	Volvo Trucks North America	Valiant TMS	Incoming power	Drawing name: =2V10&EFS-EL	= V1AR28WC1	
			Ed.	MKLEPADLO					+ V1AR28UC01	
			Appr		P6700 Bodyside RH - Robot Cell 2V10			Document type: EFS	Project nr: 22-16150	Page 1
Modification	Date	Name	Original		Replacement of / Replaced by	Scale 1:1				1579

Tool-Change Application, One Weld Gun Connected at a Time (XQ11/XQ12)

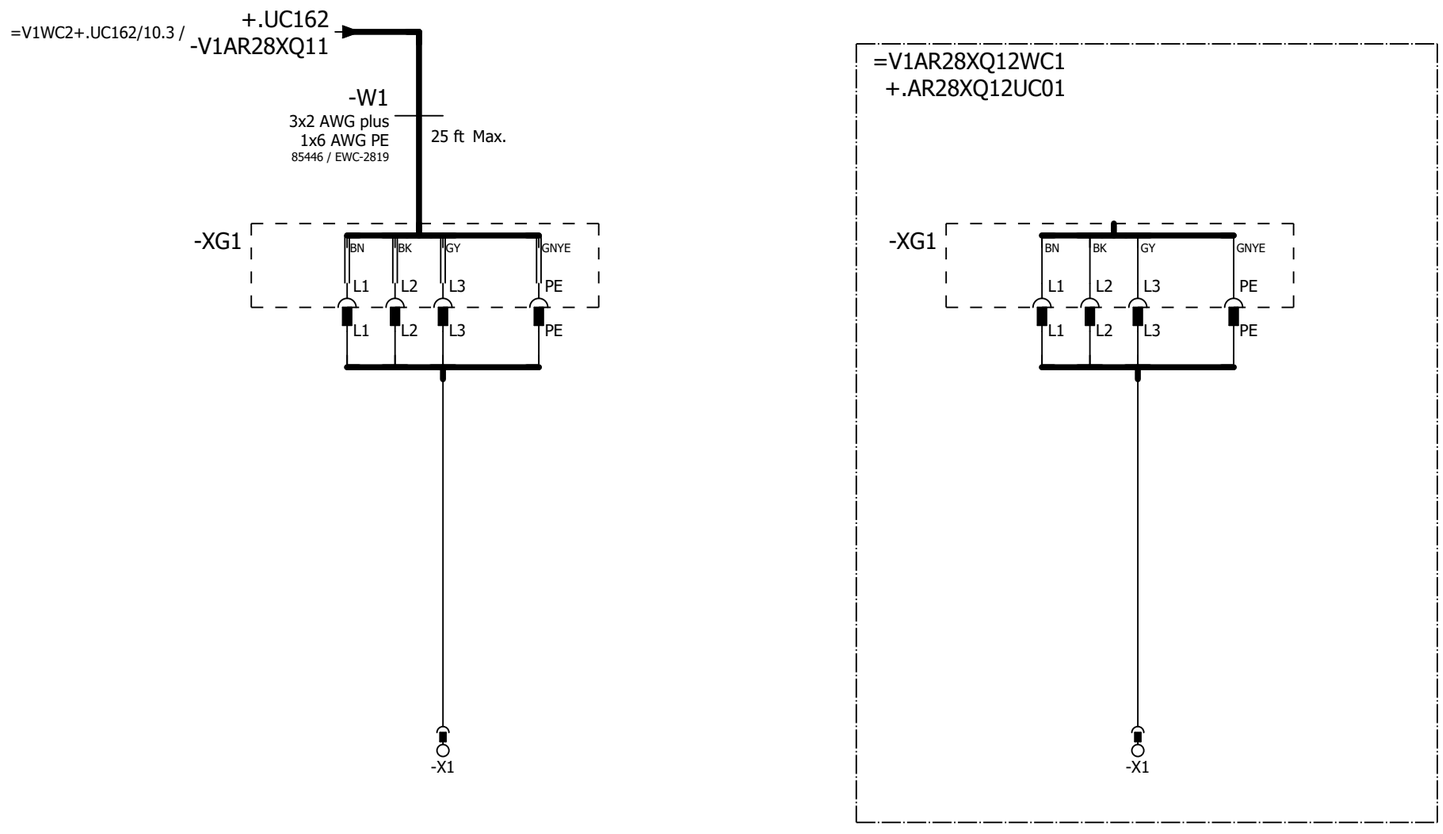

=V1AR28WC1+.AR28UC01/1

=V1AR29KF1+.AR29UC01/1

			Date	1/11/2023	Volvo Trucks North America	Valiant TMS	Incoming power	Drawing name: =2V10&EFS-EL		= V1AR28XQ11WC1	
			Ed.	MKLEPADLO						+ V1AR28XQ11UC01	
			Appr		P6700 Bodyside RH - Robot Cell 2V10			Document type: EFS	Project nr: 22-16150		Page 1
Modification	Date	Name	Original		Replacement of	Replaced by	Scale 1:1				1579

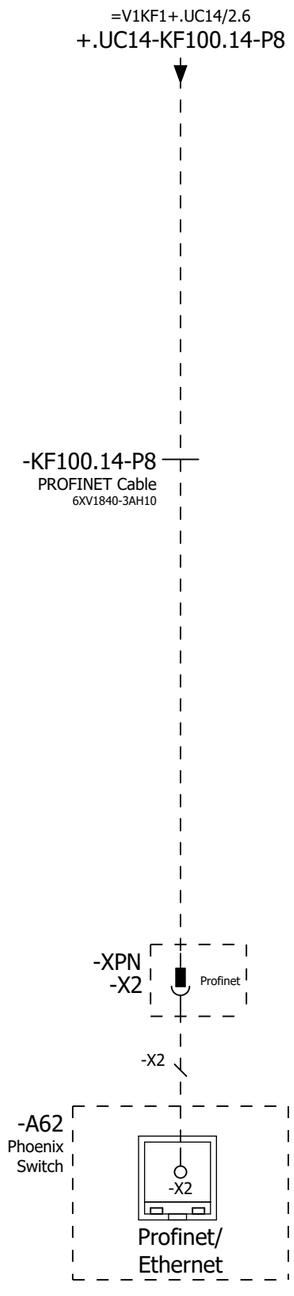

=V1AR28XQ11WC1+.AR28XQ11UC01/1

=V1AR29WC1/1

			Date	1/11/2023	Volvo Trucks North America	Valiant TMS	Incoming Profinet	Drawing name: =2V10&EFS-EL		= V1AR29KF1	
			Ed.	MKLEPADLO						+ V1AR29UC01	
			Appr		P6700 Bodyside RH - Robot Cell 2V10			Document type: EFS	Project nr: 22-16150		Page 1
Modification	Date	Name	Original		Replacement of	Replaced by	Scale 1:1				1579

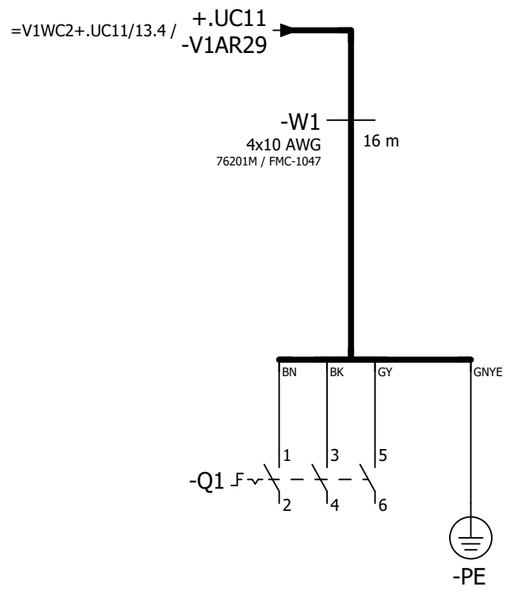

=V1AR29KF1/1

=V1AR29XQ11WC1+.AR29XQ11UC01/1

			Date	1/11/2023	Volvo Trucks North America	Valiant TMS	Incoming power	Drawing name: =2V10&EFS-EL	= V1AR29WC1	
			Ed.	MKLEPADLO					+ V1AR29UC01	
			Appr		P6700 Bodyside RH - Robot Cell 2V10			Document type: EFS	Project nr: 22-16150	Page 1
Modification	Date	Name	Original		Replacement of / Replaced by	Scale 1:1				1579

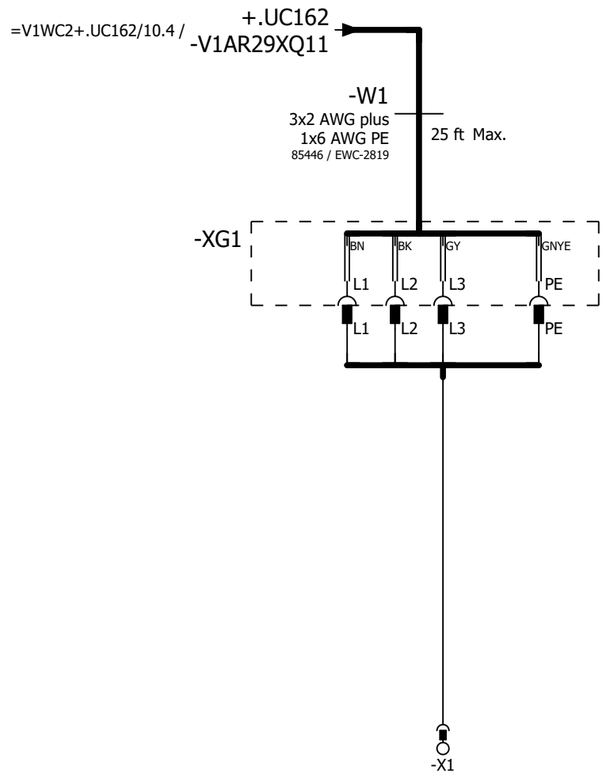

=V1AR29WC1+.AR29UC01/1

=V1AR31KF1+.AR31UC01/1

			Date	1/11/2023	Volvo Trucks North America	Valiant TMS	Incoming power	Drawing name: =2V10&EFS-EL		= V1AR29XQ11WC1	
			Ed.	MKLEPADLO						+ V1AR29XQ11UC01	
			Appr		P6700 Bodyside RH - Robot Cell 2V10			Document type: EFS	Project nr: 22-16150		Page 1
Modification	Date	Name	Original		Replacement of / Replaced by	Scale 1:1					1579

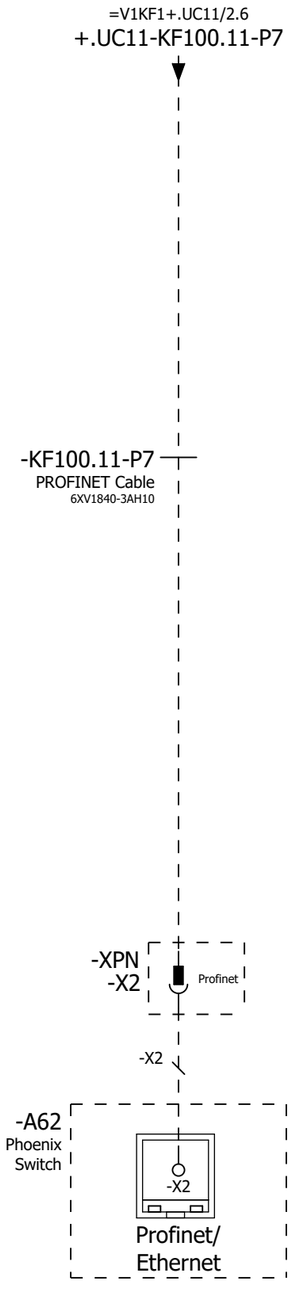

=V1AR29XQ11WC1+.AR29XQ11UC01/1

=V1AR31UQ41BG0+.AR31UQ41/1

			Date	1/11/2023	Volvo Trucks North America	Valiant TMS	Incoming Profinet	Drawing name: =2V10&EFS-EL	= V1AR31KF1	
			Ed.	MKLEPADLO					+ V1AR31UC01	
			Appr		P6700 Bodyside RH - Robot Cell 2V10			Document type: EFS	Project nr: 22-16150	Page 1
Modification	Date	Name	Original		Replacement of	Replaced by	Scale 1:1			1579

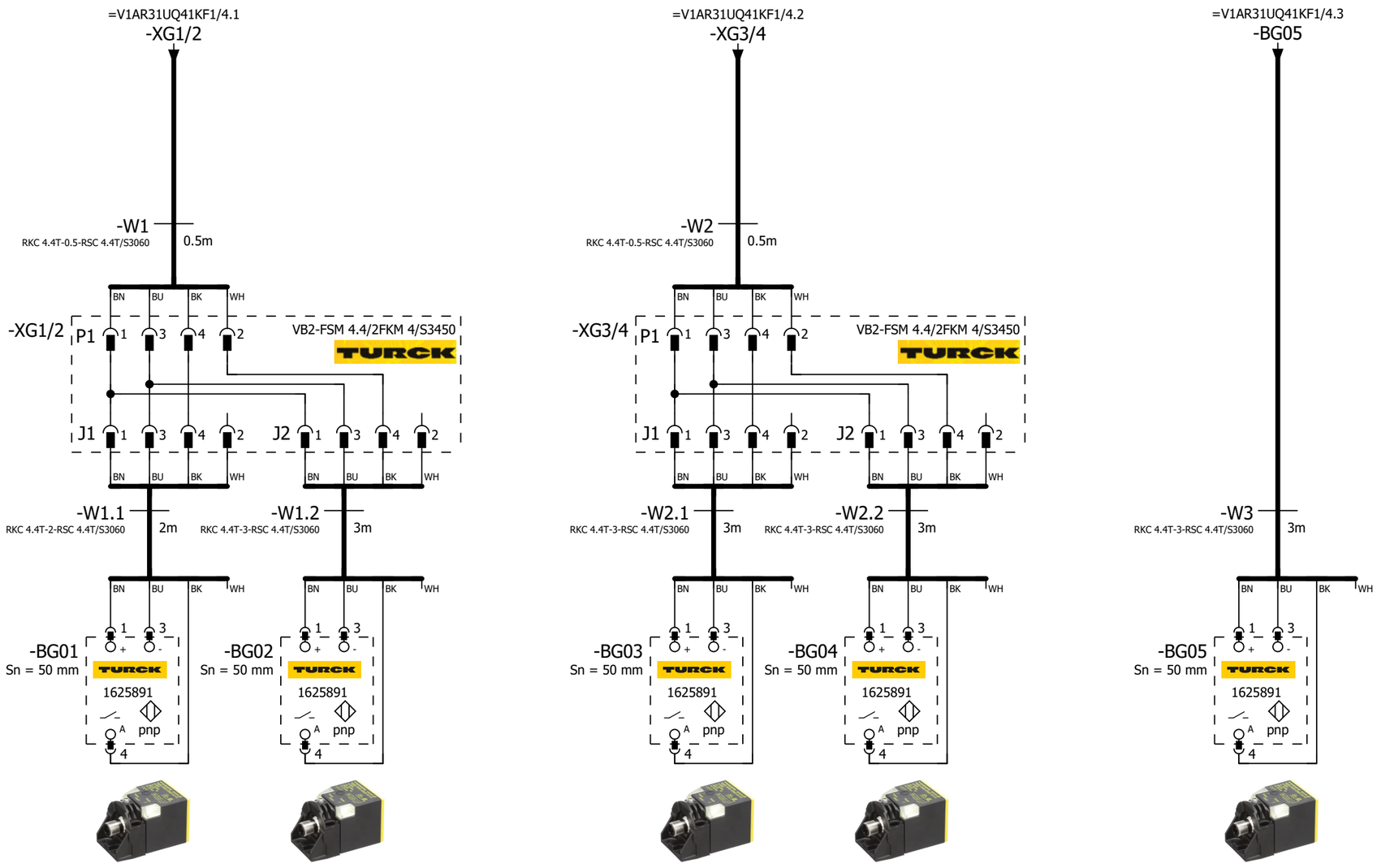

=V1AR31UQ41 -BG01 6576 ASSY	=V1AR31UQ41 -BG02 1360/0637 ASSY	=V1AR31UQ41 -BG03 2139/0486 ASSY	=V1AR31UQ41 -BG04 9674/9670 ASSY	=V1AR31UQ41 -BG05 Common

=V1AR31KF1+.AR31UC01/1

=V1AR31UQ41KF1/1

			Date	1/11/2023	Volvo Trucks North America		Valiant TMS	SENSORS	Drawing name: =2V10&EFS-EL	= V1AR31UQ41BG0	
			Ed.	MKLEPADLO						+ V1AR31UQ41	
			Appr		P6700 Bodyside RH - Robot Cell 2V10				Document type: EFS	Project nr: 22-16150	Page 1
Modification	Date	Name	Original		Replacement of	Replaced by	Scale 1:1				1579

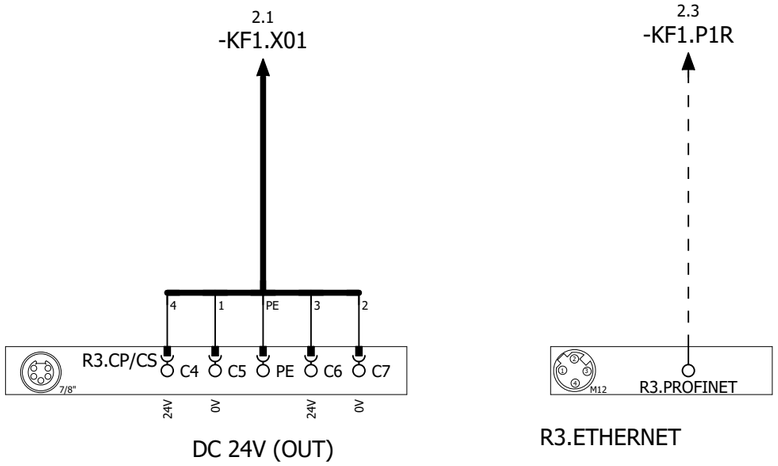

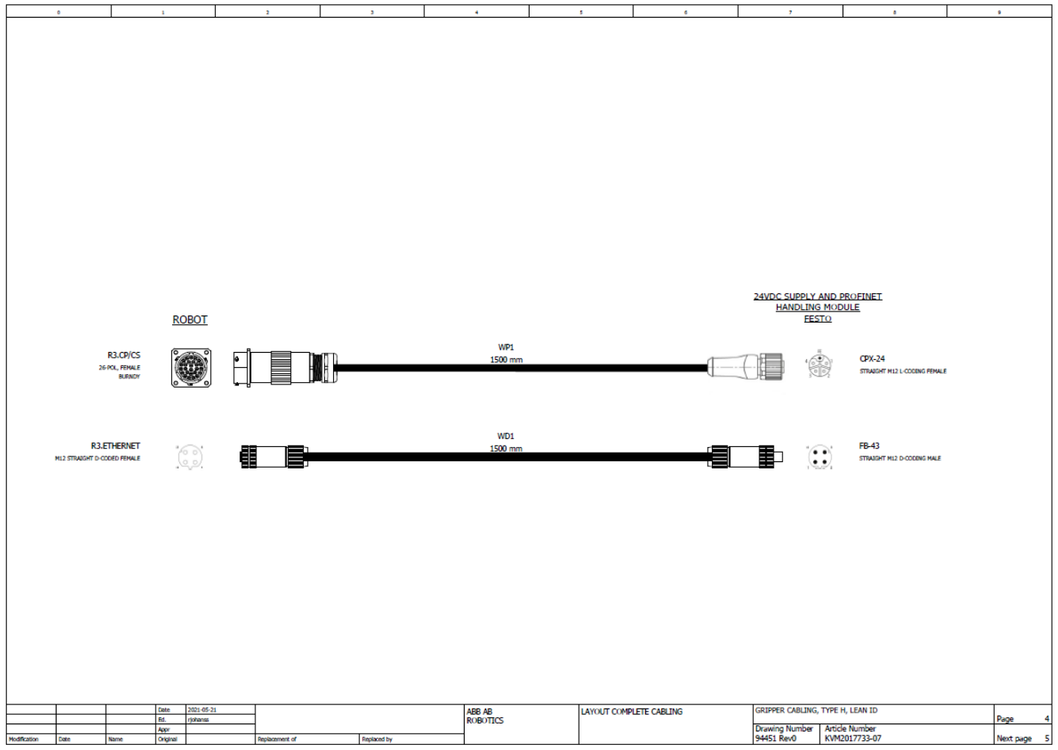

=V1AR31UQ41BG0/1

2

			Date	1/11/2023	Volvo Trucks North America		Valiant TMS	24VDC SUPPLY AND PROFINET HANDLING MODULE	Drawing name: =2V10&EFS-EL	= V1AR31UQ41KF1	
			Ed.	MKLEPADLO						+ V1AR31UQ41	
			Appr		P6700 Bodyside RH - Robot Cell 2V10				Document type: EFS	Project nr: 22-16150	Page 1 / 1579
Modification	Date	Name	Original		Replacement of	Replaced by	Scale 1:1				

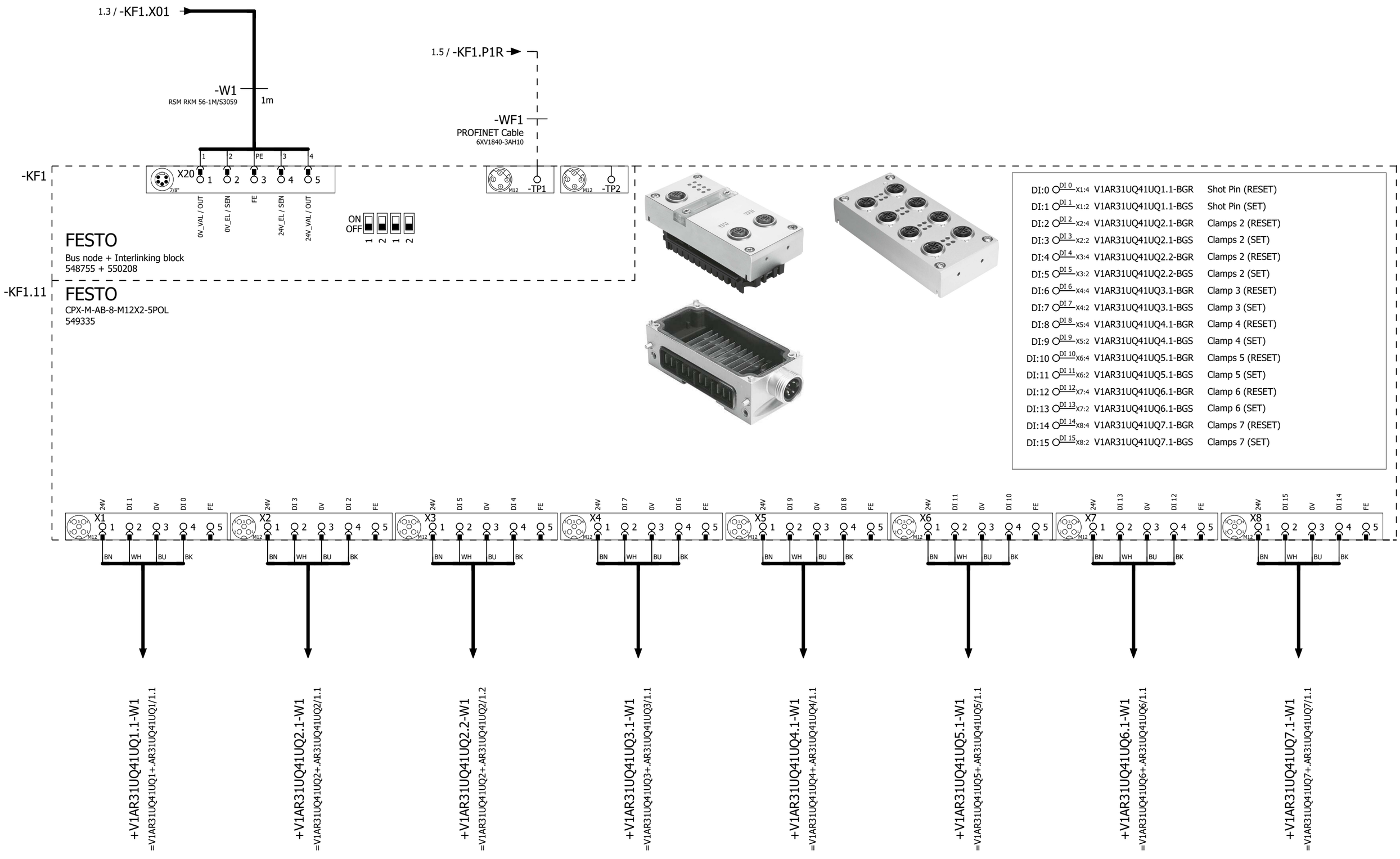

1 3

			Date	1/11/2023	Volvo Trucks North America	Valiant TMS	CONNECTING MOD. FOR MPA MANIFOLD	Drawing name: =2V10&EFS-EL	= V1AR31UQ41KF1		
			Ed.	MKLEPADLO					+ V1AR31UQ41		
			Appr		P6700 Bodyside RH - Robot Cell 2V10			Document type: EFS	Project nr: 22-16150	Page	2
Modification	Date	Name	Original		Replacement of	Replaced by	Scale 1:1				1579

0	1	2	3	4	5	6	7	8	9

DI:16	DI 0 X1:4	V1AR31UQ41UQ7.2-BGR	Clamps 7 (RESET)
DI:17	DI 1 X1:2	V1AR31UQ41UQ7.2-BGS	Clamps 7 (SET)
DI:18	DI 2 X2:4	V1AR31UQ41UQ8.1-BGR	Clamps 8 (RESET)
DI:19	DI 3 X2:2	V1AR31UQ41UQ8.1-BGS	Clamps 8 (SET)
DI:20	DI 4 X3:4	V1AR31UQ41UQ8.2-BGR	Clamps 8 (RESET)
DI:21	DI 5 X3:2	V1AR31UQ41UQ8.2-BGS	Clamps 8 (SET)
DI:22	DI 6 X4:4	V1AR31UQ41UQ9.1-BGR	Clamps 9 (RESET)
DI:23	DI 7 X4:2	V1AR31UQ41UQ9.1-BGS	Clamps 9 (SET)
DI:24	DI 8 X5:4	V1AR31UQ41UQ9.2-BGR	Clamps 9 (RESET)
DI:25	DI 9 X5:2	V1AR31UQ41UQ9.2-BGS	Clamps 9 (SET)
DI:26	DI 10 X6:4	DI:26	Spare
DI:27	DI 11 X6:2	DI:27	Spare
DI:28	DI 12 X7:4	DI:28	Spare
DI:29	DI 13 X7:2	DI:29	Spare
DI:30	DI 14 X8:4	DI:30	Spare
DI:31	DI 15 X8:2	DI:31	Spare

-KF1.12

FESTO
CPX-M-AB-8-M12X2-5POL
549335

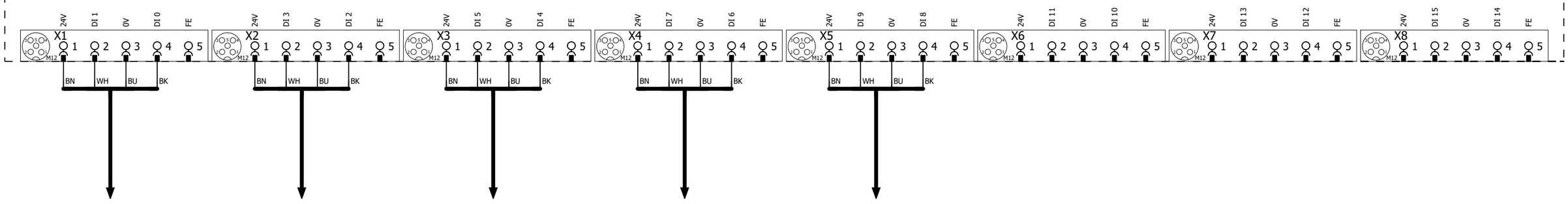

+V1AR31UQ41UQ7.2-W1
=V1AR31UQ41UQ7+.AR31UQ41UQ7/1.2

+V1AR31UQ41UQ8.1-W1
=V1AR31UQ41UQ8+.AR31UQ41UQ8/1.1

+V1AR31UQ41UQ8.2-W1
=V1AR31UQ41UQ8+.AR31UQ41UQ8/1.2

+V1AR31UQ41UQ9.1-W1
=V1AR31UQ41UQ9+.AR31UQ41UQ9/1.1

+V1AR31UQ41UQ9.2-W1
=V1AR31UQ41UQ9+.AR31UQ41UQ9/1.2

2 4

			Date	1/11/2023	Volvo Trucks North America	Valiant TMS	I/O MOD. DI16 (8 x M12) FOR MPA	Drawing name: =2V10&EFS-EL	= V1AR31UQ41KF1	
			Ed.	MKLEPADLO					+ V1AR31UQ41	
			Appr		P6700 Bodyside RH - Robot Cell 2V10			Document type: EFS	Project nr: 22-16150	Page 3
Modification	Date	Name	Original		Replacement of	Replaced by	Scale 1:1			1579

0	1	2	3	4	5	6	7	8	9

-KF1.13

FESTO

CPX-M-AB-8-M12X2-5POL
549335

DI:32	DI 0 X1:4	V1AR31UQ41-BG01	6576 ASSY
DI:33	DI 1 X1:2	V1AR31UQ41-BG02	1360/0637 ASSY
DI:34	DI 2 X2:4	V1AR31UQ41-BG03	2139/0486 ASSY
DI:35	DI 3 X2:2	V1AR31UQ41-BG04	9674/9670 ASSY
DI:36	DI 4 X3:4	V1AR31UQ41-BG05	BGO5
DI:37	DI 5 X3:2	DI:37	Spare
DI:38	DI 6 X4:4	DI:38	Spare
DI:39	DI 7 X4:2	DI:39	Spare
DI:40	DI 8 X5:4	DI:40	Spare
DI:41	DI 9 X5:2	DI:41	Spare
DI:42	DI 10 X6:4	DI:42	Spare
DI:43	DI 11 X6:2	DI:43	Spare
DI:44	DI 12 X7:4	DI:44	Spare
DI:45	DI 13 X7:2	DI:45	Spare
DI:46	DI 14 X8:4	DI:46	Spare
DI:47	DI 15 X8:2	DI:47	Spare

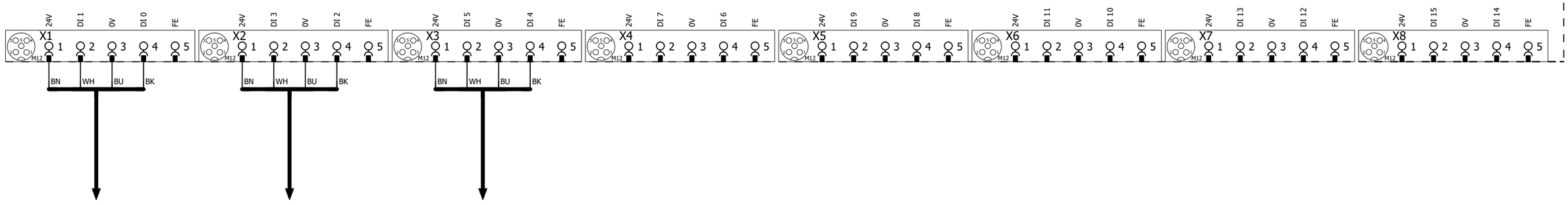

-XG1/2
=V1AR31UQ41BG0/1.1

-XG3/4
=V1AR31UQ41BG0/1.4

-BG05
=V1AR31UQ41BG0/1.6

3 5

			Date	1/11/2023	Volvo Trucks North America	Valiant TMS	I/O MOD. DI16 (8 x M12) FOR MPA	Drawing name: =2V10&EFS-EL	= V1AR31UQ41KF1	
			Ed.	MKLEPADLO					+ V1AR31UQ41	
			Appr		P6700 Bodyside RH - Robot Cell 2V10			Document type: EFS	Project nr: 22-16150	Page 4
Modification	Date	Name	Original		Replacement of / Replaced by	Scale 1:1				1579

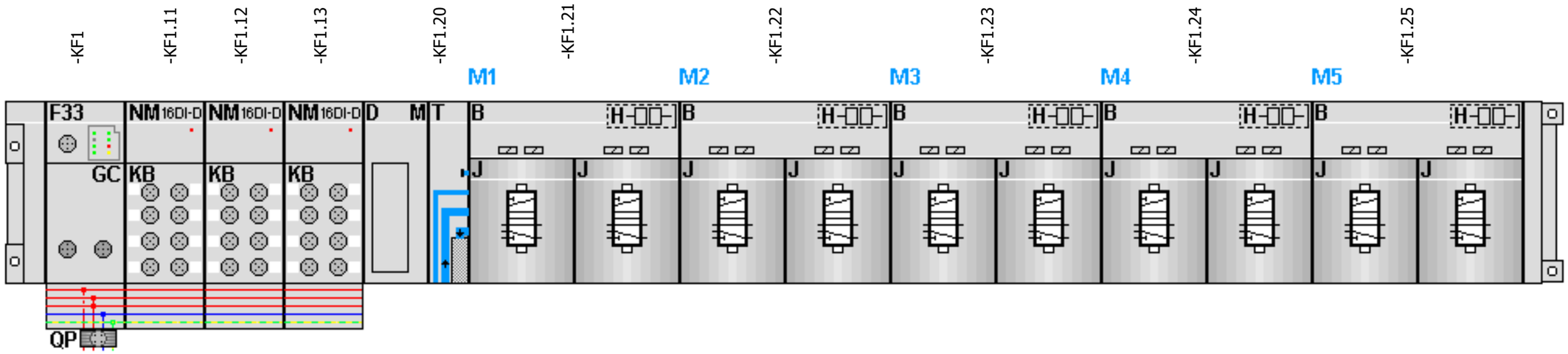

-KF1.21

=V1AR31UQ41UQ1+.AR31UQ41UQ1/1.3
=V1AR31UQ41UQ2+.AR31UQ41UQ2/1.3

FESTO

=V1AR31UQ41UQ1+.AR31UQ41UQ1/1.4	DO:0 DO 0 1.1	-QN1.1_Q	Shot Pin 1 (RST)
=V1AR31UQ41UQ1+.AR31UQ41UQ1/1.4	DO:1 DO 1 1.2	-QN1.2_Q	Shot Pin 1 (SET)
=V1AR31UQ41UQ2+.AR31UQ41UQ2/1.4	DO:2 DO 2 2.1	-QN2.1_Q	Clamps 2 (RST)
=V1AR31UQ41UQ2+.AR31UQ41UQ2/1.4	DO:3 DO 3 2.2	-QN2.2_Q	Clamps 2 (SET)

-KF1.22

=V1AR31UQ41UQ3+.AR31UQ41UQ3/1.3
=V1AR31UQ41UQ4+.AR31UQ41UQ4/1.3

FESTO

=V1AR31UQ41UQ3+.AR31UQ41UQ3/1.4	DO:4 DO 0 1.1	-QN3.1_Q	Clamp 3 (RST)
=V1AR31UQ41UQ3+.AR31UQ41UQ3/1.4	DO:5 DO 1 1.2	-QN3.2_Q	Clamp 3 (SET)
=V1AR31UQ41UQ4+.AR31UQ41UQ4/1.4	DO:6 DO 2 2.1	-QN4.1_Q	Clamp 4 (RST)
=V1AR31UQ41UQ4+.AR31UQ41UQ4/1.4	DO:7 DO 3 2.2	-QN4.2_Q	Clamp 4 (SET)

-KF1.23

=V1AR31UQ41UQ5+.AR31UQ41UQ5/1.3
=V1AR31UQ41UQ6+.AR31UQ41UQ6/1.3

FESTO

=V1AR31UQ41UQ5+.AR31UQ41UQ5/1.4	DO:8 DO 0 1.1	-QN5.1_Q	Clamp 5 (RST)
=V1AR31UQ41UQ5+.AR31UQ41UQ5/1.4	DO:9 DO 1 1.2	-QN5.2_Q	Clamp 5 (SET)
=V1AR31UQ41UQ6+.AR31UQ41UQ6/1.4	DO:10 DO 2 2.1	-QN6.1_Q	Clamp 6 (RST)
=V1AR31UQ41UQ6+.AR31UQ41UQ6/1.4	DO:11 DO 3 2.2	-QN6.2_Q	Clamp 6 (SET)

-KF1.24

=V1AR31UQ41UQ7+.AR31UQ41UQ7/1.3
=V1AR31UQ41UQ8+.AR31UQ41UQ8/1.3

FESTO

=V1AR31UQ41UQ7+.AR31UQ41UQ7/1.4	DO:12 DO 0 1.1	-QN7.1_Q	Clamps 7 (RST)
=V1AR31UQ41UQ7+.AR31UQ41UQ7/1.4	DO:13 DO 1 1.2	-QN7.2_Q	Clamps 7 (SET)
=V1AR31UQ41UQ8+.AR31UQ41UQ8/1.4	DO:14 DO 2 2.1	-QN8.1_Q	Clamps 8 (RST)
=V1AR31UQ41UQ8+.AR31UQ41UQ8/1.4	DO:15 DO 3 2.2	-QN8.2_Q	Clamps 8 (SET)

-KF1.25

=V1AR31UQ41UQ9+.AR31UQ41UQ9/1.3
=V1AR31UQ41UQ10+.AR31UQ41UQ10/1.3

FESTO

=V1AR31UQ41UQ9+.AR31UQ41UQ9/1.4	DO:16 DO 0 1.1	-QN9.1_Q	Clamps 9 (RST)
=V1AR31UQ41UQ9+.AR31UQ41UQ9/1.4	DO:17 DO 1 1.2	-QN9.2_Q	Clamps 9 (SET)
=V1AR31UQ41UQ10+.AR31UQ41UQ10/1.4	DO:18 DO 2 2.1	-QN10.1_Q	Spare (RST)
=V1AR31UQ41UQ10+.AR31UQ41UQ10/1.4	DO:19 DO 3 2.2	-QN10.2_Q	Spare (SET)

=V1AR31UQ41UQ1+.AR31UQ41UQ1/1

			Date	1/11/2023	Volvo Trucks North America		Valiant TMS	CONNECTING MOD. FOR FESTO DQ	Drawing name: =2V10&EFS-EL		= V1AR31UQ41KF1
			Ed.	MKLEPADLO							+ V1AR31UQ41
			Appr		P6700 Bodyside RH - Robot Cell 2V10				Document type: EFS	Project nr: 22-16150	Page 5
Modification	Date	Name	Original		Replacement of	Replaced by	Scale 1:1				1579

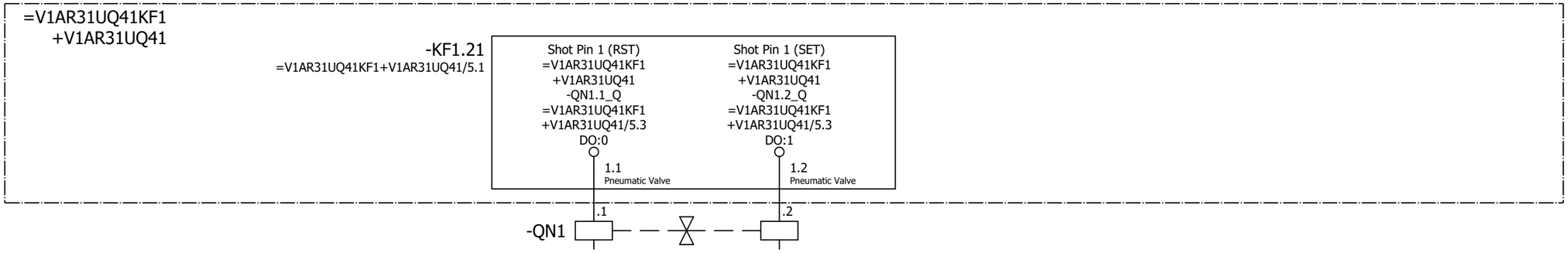

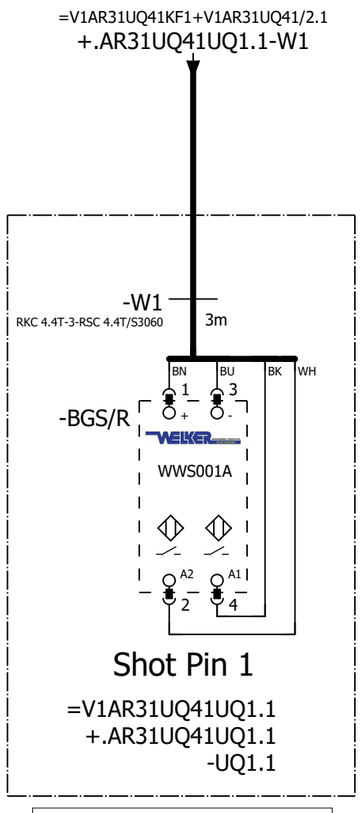

=V1AR31UQ41
-UQ1.1-BGS/R
Shot Pin 1

=V1AR31UQ41KF1+V1AR31UQ41/5

=V1AR31UQ41UQ2+.AR31UQ41UQ2/1

			Date	1/11/2023	Volvo Trucks North America		Valiant TMS	FESTO DQ CONNECTION QN1	Drawing name: =2V10&EFS-EL	= V1AR31UQ41UQ1	
			Ed.	MKLEPADLO						+ V1AR31UQ41UQ1	
			Appr		P6700 Bodyside RH - Robot Cell 2V10				Document type: EFS	Project nr: 22-16150	Page 1
Modification	Date	Name	Original		Replacement of	Replaced by	Scale 1:1				1579

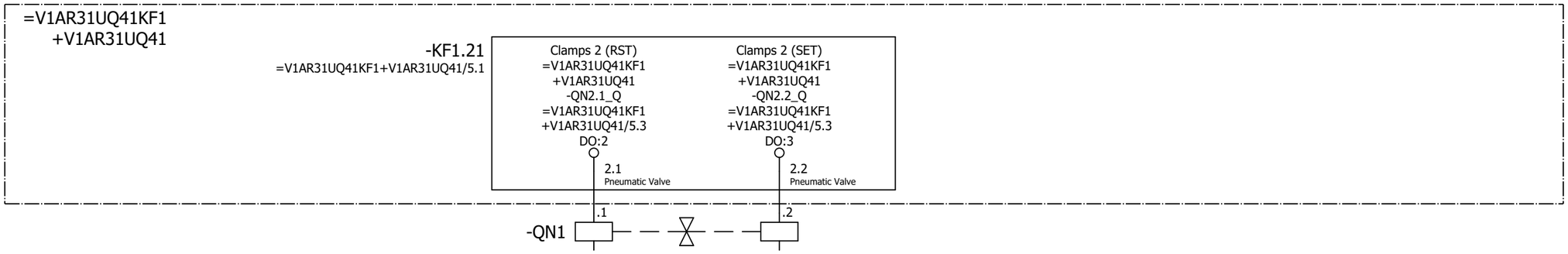

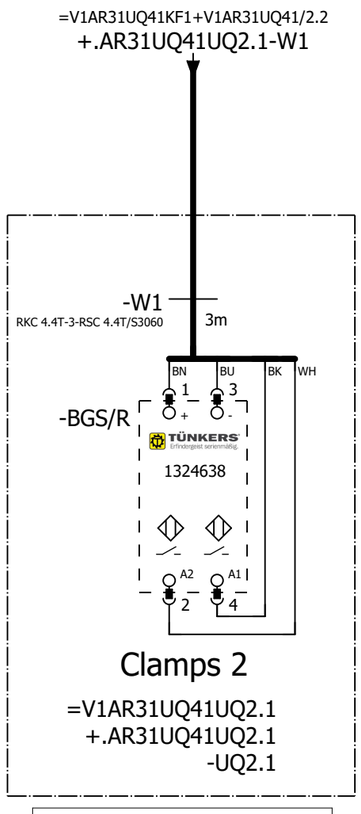

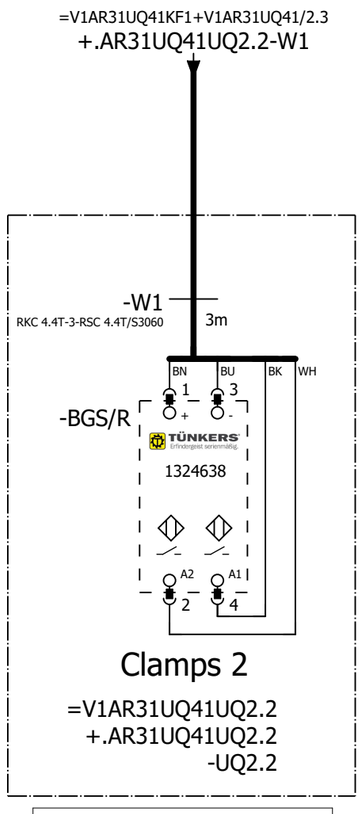

=V1AR31UQ41
-UQ2.1-BGS/R
Clamps 2

=V1AR31UQ41
-UQ2.2-BGS/R
Clamps 2

=V1AR31UQ41UQ1+.AR31UQ41UQ1/1

=V1AR31UQ41UQ3+.AR31UQ41UQ3/1

			Date	1/11/2023	Volvo Trucks North America		Valiant TMS	FESTO DQ CONNECTION QN2	Drawing name: =2V10&EFS-EL	= V1AR31UQ41UQ2	
			Ed.	MKLEPADLO						+ V1AR31UQ41UQ2	
			Appr		P6700 Bodyside RH - Robot Cell 2V10				Document type: EFS	Project nr: 22-16150	Page 1
Modification	Date	Name	Original		Replacement of	Replaced by	Scale 1:1				1579

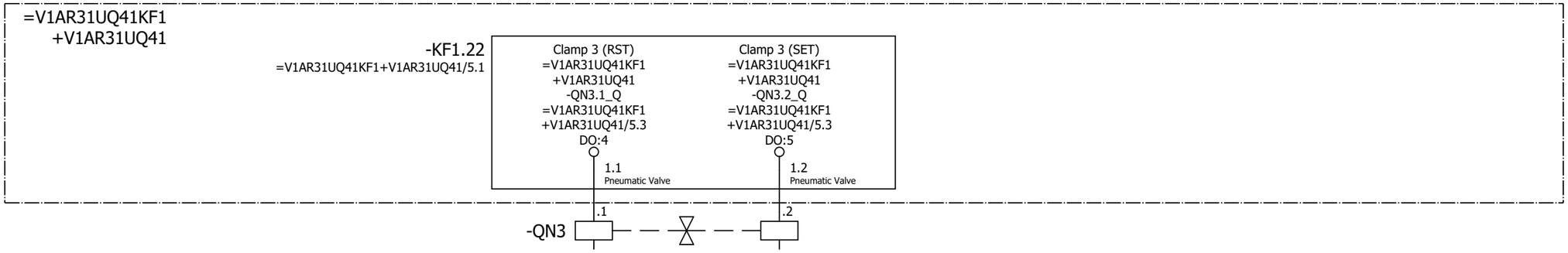

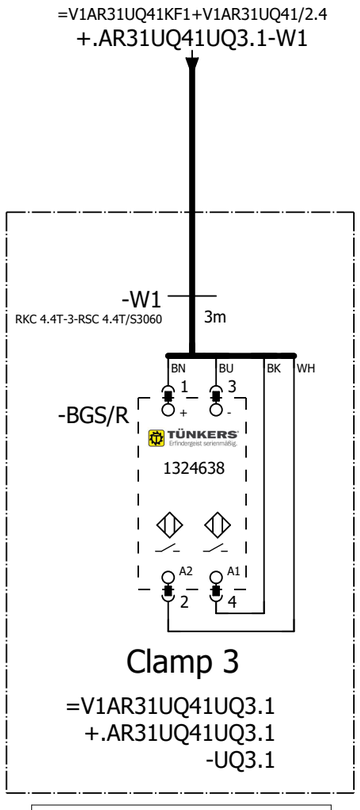

=V1AR31UQ41
-UQ3.1-BGS/R
Clamp 3

=V1AR31UQ41UQ2+.AR31UQ41UQ2/1

=V1AR31UQ41UQ4+.AR31UQ41UQ4/1

			Date	1/11/2023	Volvo Trucks North America		Valiant TMS	FESTO DQ CONNECTION QN3	Drawing name: =2V10&EFS-EL	= V1AR31UQ41UQ3	
			Ed.	MKLEPADLO						+ V1AR31UQ41UQ3	
			Appr		P6700 Bodyside RH - Robot Cell 2V10				Document type: EFS	Project nr: 22-16150	Page 1
Modification	Date	Name	Original		Replacement of	Replaced by	Scale 1:1				1579

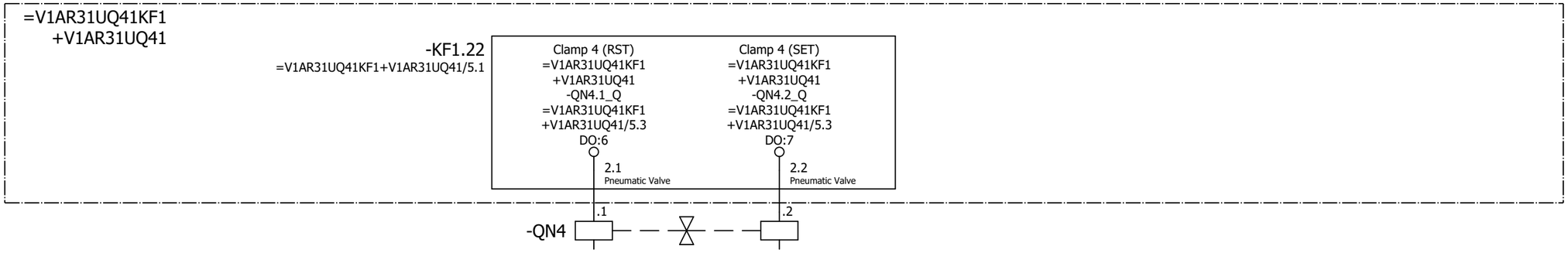

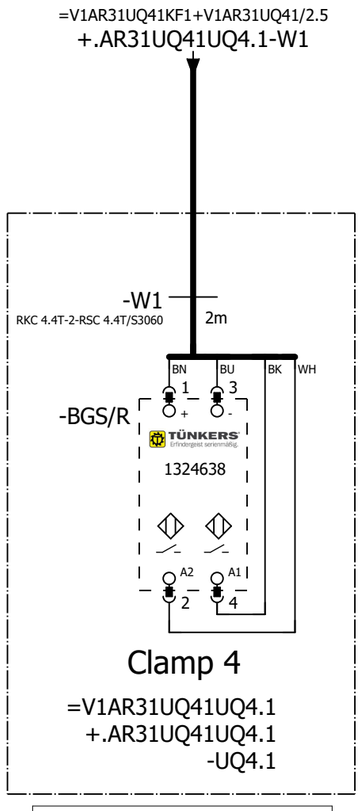

=V1AR31UQ41
-UQ4.1-BGS/R
Clamp 4

=V1AR31UQ41UQ3+.AR31UQ41UQ3/1

=V1AR31UQ41UQ5+.AR31UQ41UQ5/1

			Date	1/11/2023	Volvo Trucks North America	Valiant TMS	FESTO DQ CONNECTION QN4	Drawing name: =2V10&EFS-EL		= V1AR31UQ41UQ4	
			Ed.	MKLEPADLO						+ V1AR31UQ41UQ4	
			Appr		P6700 Bodyside RH - Robot Cell 2V10			Document type: EFS	Project nr: 22-16150		Page 1
Modification	Date	Name	Original		Replacement of / Replaced by	Scale 1:1					1579

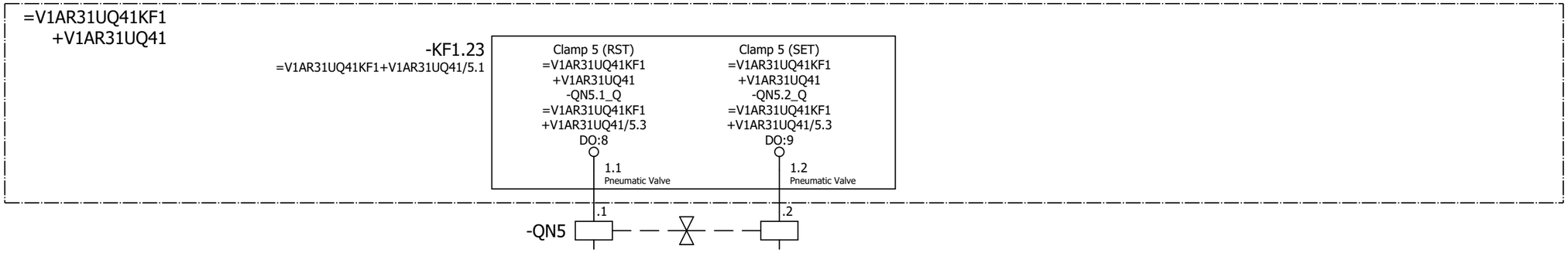

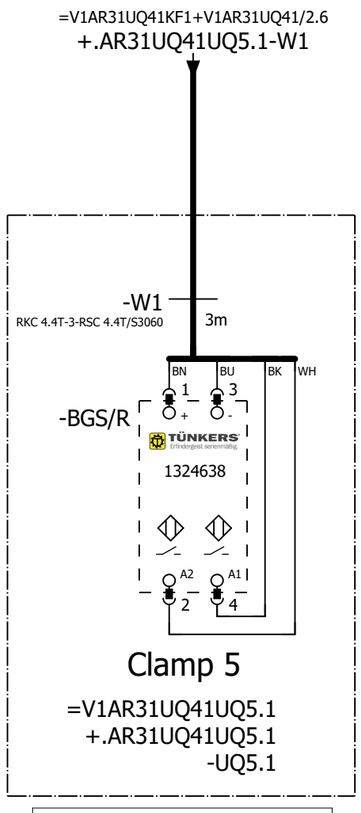

=V1AR31UQ41
-UQ5.1-BGS/R
Clamp 5

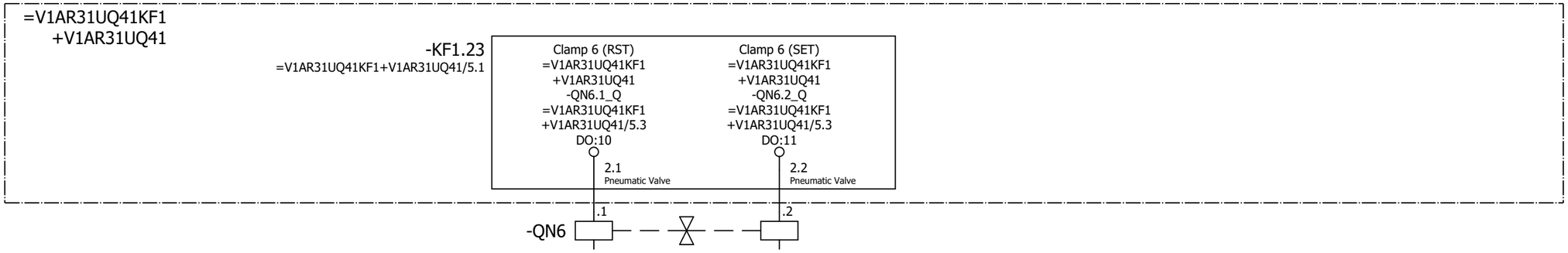

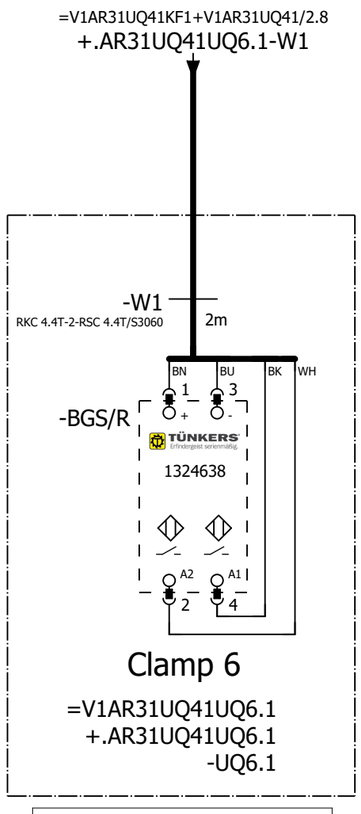

=V1AR31UQ41
-UQ6.1-BGS/R
Clamp 6

=V1AR31UQ41UQ5+.AR31UQ41UQ5/1

=V1AR31UQ41UQ7+.AR31UQ41UQ7/1

			Date	1/11/2023	Volvo Trucks North America		Valiant TMS	FESTO DQ CONNECTION QN6	Drawing name: =2V10&EFS-EL	= V1AR31UQ41UQ6	
			Ed.	MKLEPADLO						+ V1AR31UQ41UQ6	
			Appr		P6700 Bodyside RH - Robot Cell 2V10				Document type: EFS	Project nr: 22-16150	Page 1
Modification	Date	Name	Original		Replacement of	Replaced by	Scale 1:1				1579

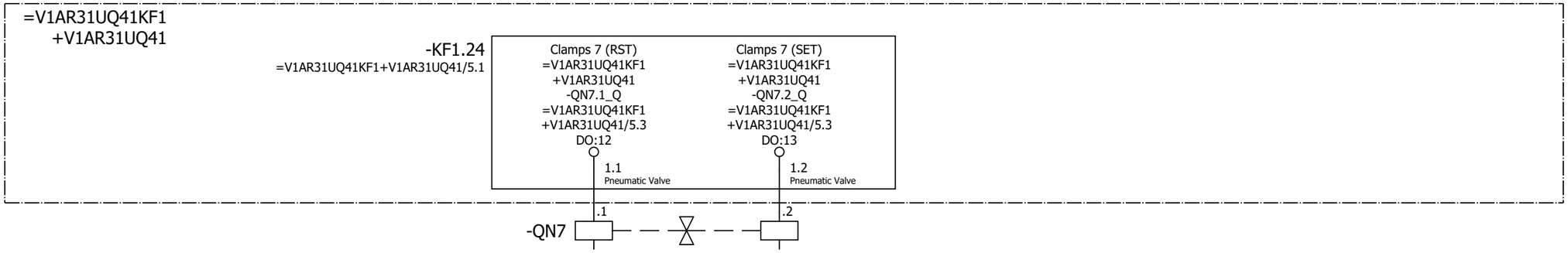

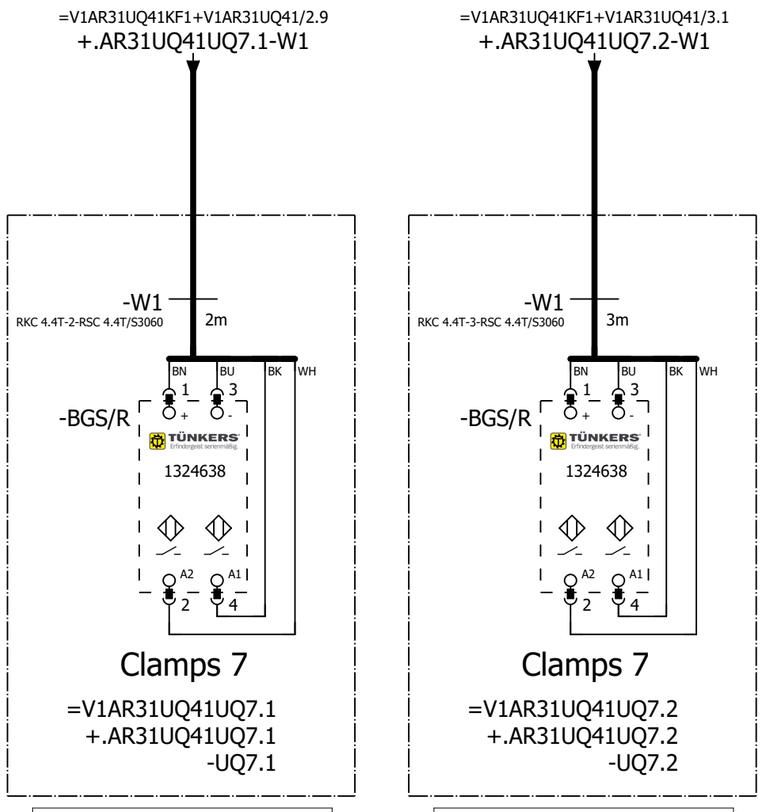

=V1AR31UQ41
-UQ7.1-BGS/R
Clamps 7

=V1AR31UQ41
-UQ7.2-BGS/R
Clamps 7

=V1AR31UQ41UQ6+.AR31UQ41UQ6/1

=V1AR31UQ41UQ8+.AR31UQ41UQ8/1

			Date	1/11/2023	Volvo Trucks North America		Valiant TMS	FESTO DQ CONNECTION QN7	Drawing name: =2V10&EFS-EL	= V1AR31UQ41UQ7	
			Ed.	MKLEPADLO						+ V1AR31UQ41UQ7	
			Appr		P6700 Bodyside RH - Robot Cell 2V10				Document type: EFS	Project nr: 22-16150	Page 1
Modification	Date	Name	Original		Replacement of	Replaced by	Scale 1:1				1579

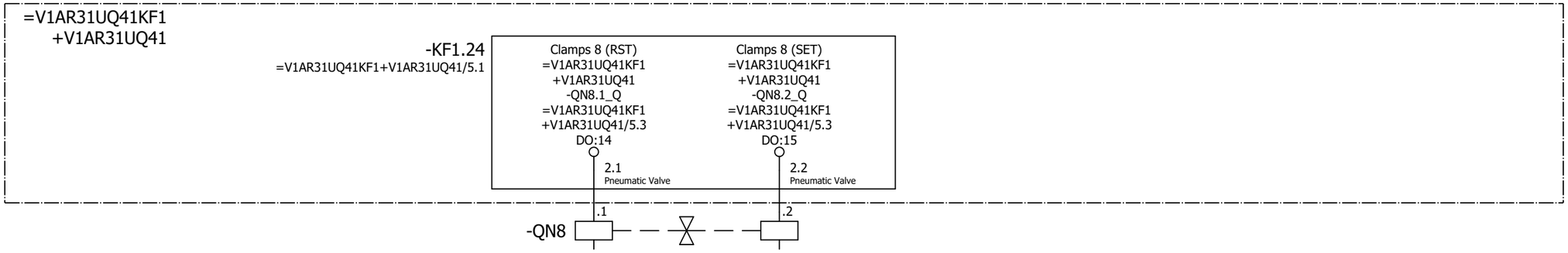

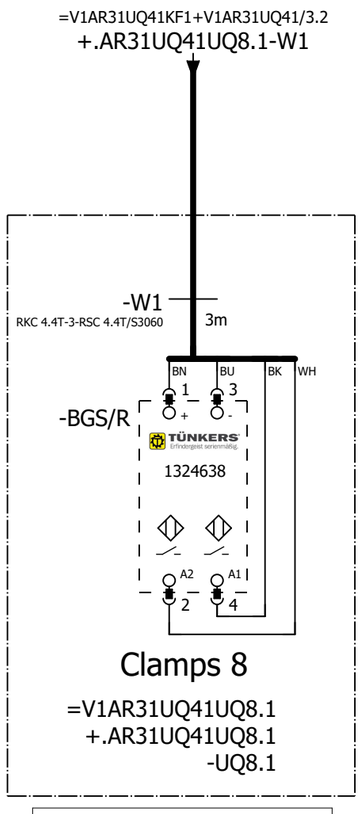

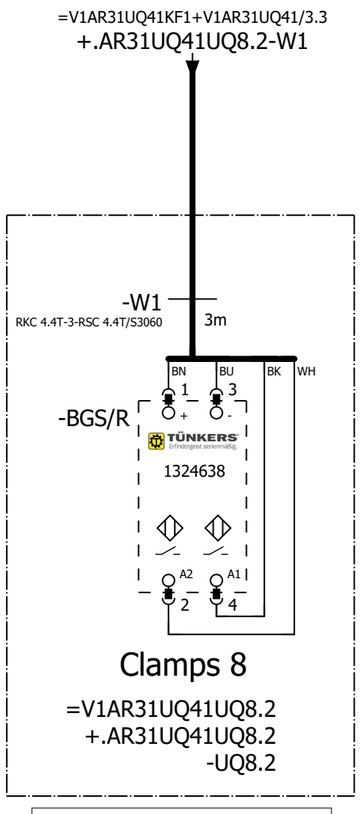

=V1AR31UQ41
-UQ8.1-BGS/R
Clamps 8

=V1AR31UQ41
-UQ8.2-BGS/R
Clamps 8

=V1AR31UQ41UQ7+.AR31UQ41UQ7/1

=V1AR31UQ41UQ9+.AR31UQ41UQ9/1

			Date	1/11/2023	Volvo Trucks North America		Valiant TMS	FESTO DQ CONNECTION QN8	Drawing name: =2V10&EFS-EL	= V1AR31UQ41UQ8	
			Ed.	MKLEPADLO						+ V1AR31UQ41UQ8	
			Appr		P6700 Bodyside RH - Robot Cell 2V10				Document type: EFS	Project nr: 22-16150	Page 1
Modification	Date	Name	Original		Replacement of	Replaced by	Scale 1:1				1579

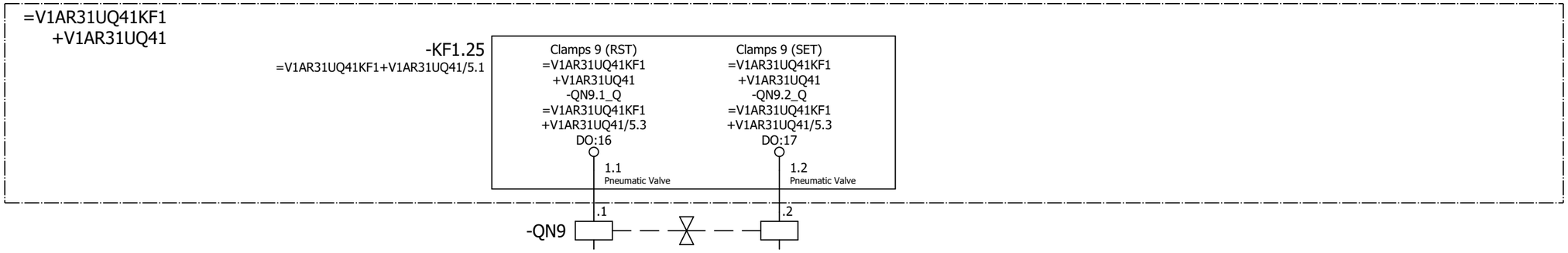

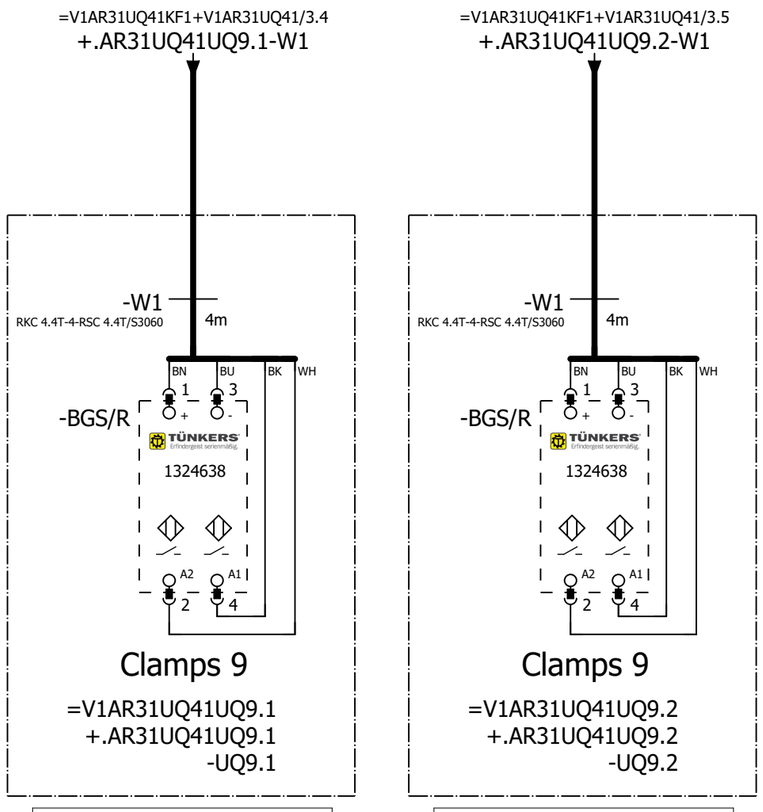

=V1AR31UQ41
-UQ9.1-BGS/R
Clamps 9

=V1AR31UQ41
-UQ9.2-BGS/R
Clamps 9

=V1AR31UQ41UQ8+.AR31UQ41UQ8/1

=V1AR31UQ41UQ10+.AR31UQ41UQ10/1

			Date	1/11/2023	Volvo Trucks North America		Valiant TMS	FESTO DQ CONNECTION QN9	Drawing name: =2V10&EFS-EL	= V1AR31UQ41UQ9	
			Ed.	MKLEPADLO						+ V1AR31UQ41UQ9	
			Appr		P6700 Bodyside RH - Robot Cell 2V10				Document type: EFS	Project nr: 22-16150	Page 1
Modification	Date	Name	Original		Replacement of	Replaced by	Scale 1:1				1579

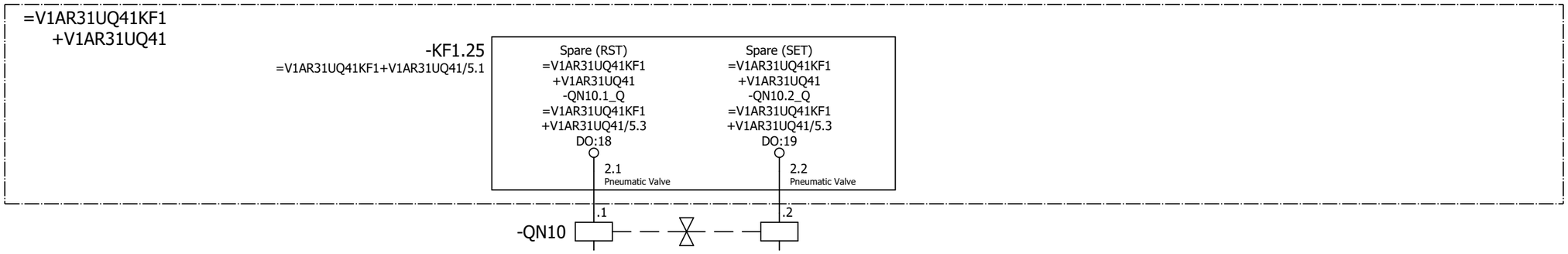

=V1AR31UQ41UQ9+.AR31UQ41UQ9/1

=V1AR31WC1+.AR31UC01/1

			Date	1/11/2023	Volvo Trucks North America	Valiant TMS	FESTO DQ CONNECTION QN10	Drawing name: =2V10&EFS-EL	= V1AR31UQ41UQ10	
			Ed.	MKLEPADLO					+ V1AR31UQ41UQ10	
			Appr		P6700 Bodyside RH - Robot Cell 2V10			Document type: EFS	Project nr: 22-16150	Page 1 / 1579
Modification	Date	Name	Original		Replacement of / Replaced by	Scale 1:1				

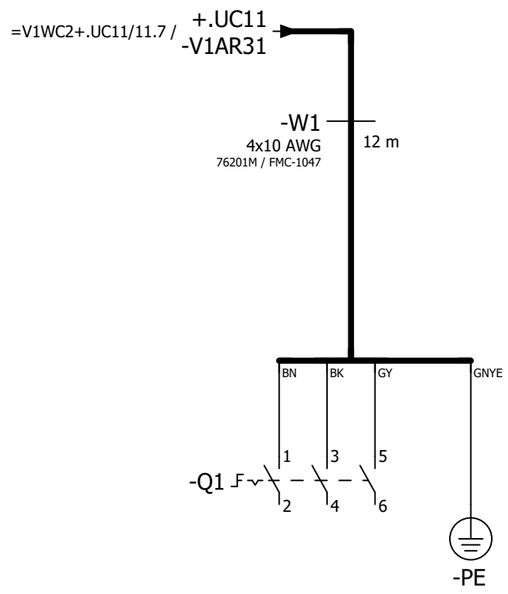

=V1AR31UQ41UQ10+.AR31UQ41UQ10/1

=V1AR31XQ41KF1+.AR31XQ41/1

			Date	1/11/2023	Volvo Trucks North America	Valiant TMS	Incoming power	Drawing name: =2V10&EFS-EL	= V1AR31WC1	
			Ed.	MKLEPADLO					+ V1AR31UC01	
			Appr		P6700 Bodyside RH - Robot Cell 2V10			Document type: EFS	Project nr: 22-16150	Page 1
Modification	Date	Name	Original		Replacement of / Replaced by	Scale 1:1				1579

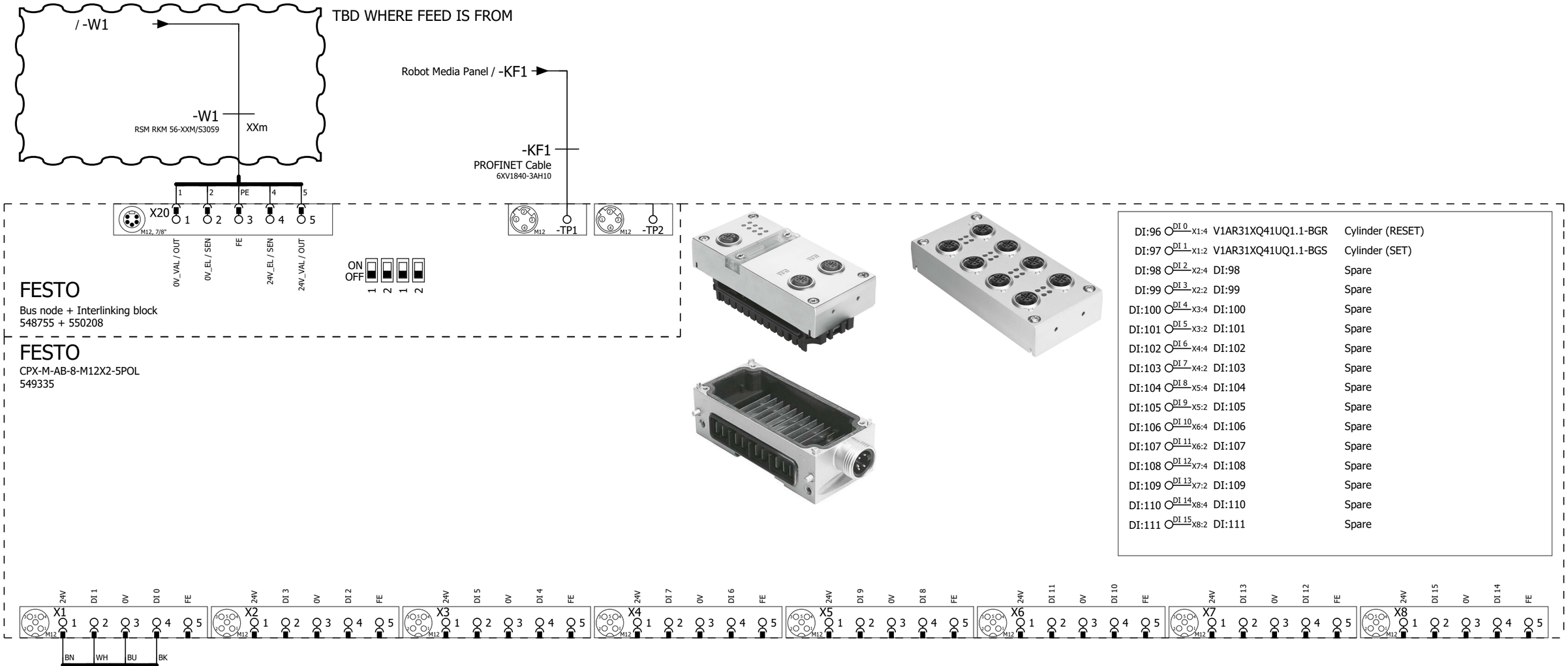

=V1AR31WC1+.AR31UC01/1

2

			Date	1/11/2023	Volvo Trucks North America	Valiant TMS	CONNECTING MOD. FOR VTSA MANIFOLD	Drawing name: =2V10&EFS-EL		= V1AR31XQ41KF1	
			Ed.	MKLEPADLO						+ V1AR31XQ41	
			Appr		P6700 Bodyside RH - Robot Cell 2V10			Document type: EFS	Project nr: 22-16150		Page 1
Modification	Date	Name	Original		Replacement of / Replaced by	Scale 1:1					1579

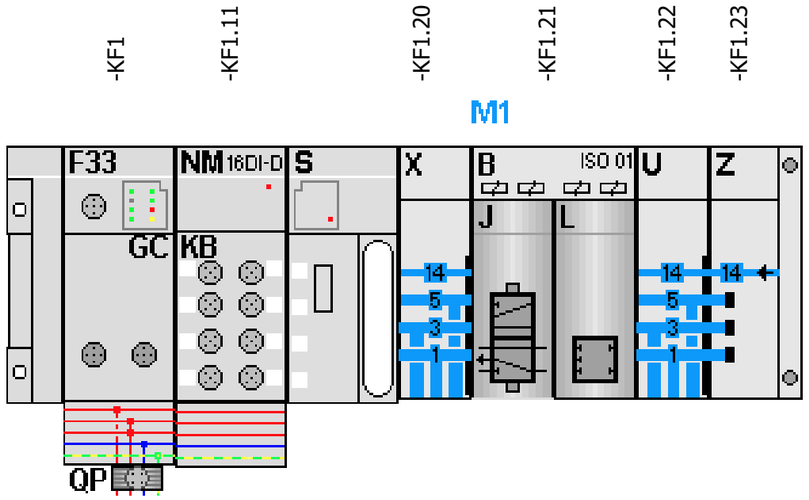

-KF1.21
=V1AR31XQ41UQ1+.AR31XQ41UQ1/1.3

FESTO

=V1AR31XQ41UQ1+.AR31XQ41UQ1/1.4	DO:32 DO 0 1.1	-QN1.1_Q	Cylinder (RST)
=V1AR31XQ41UQ1+.AR31XQ41UQ1/1.4	DO:33 DO 1 1.2	-QN1.2_Q	Cylinder (SET)
	DO:34 DO 2 2.1	-QN2.1_Q	Spare (RST)
	DO:35 DO 3 2.2	-QN2.2_Q	Spare (SET)

=V1AR31XQ41UQ1+.AR31XQ41UQ1/1

			Date	1/11/2023	Volvo Trucks North America	Valiant TMS	CONNECTING MOD. FOR FESTO DQ	Drawing name: =2V10&EFS-EL		= V1AR31XQ41KF1	
			Ed.	MKLEPADLO						+ V1AR31XQ41	
			Appr		P6700 Bodyside RH - Robot Cell 2V10			Document type: EFS	Project nr: 22-16150		Page 2
Modification	Date	Name	Original		Replacement of	Replaced by	Scale 1:1				1579

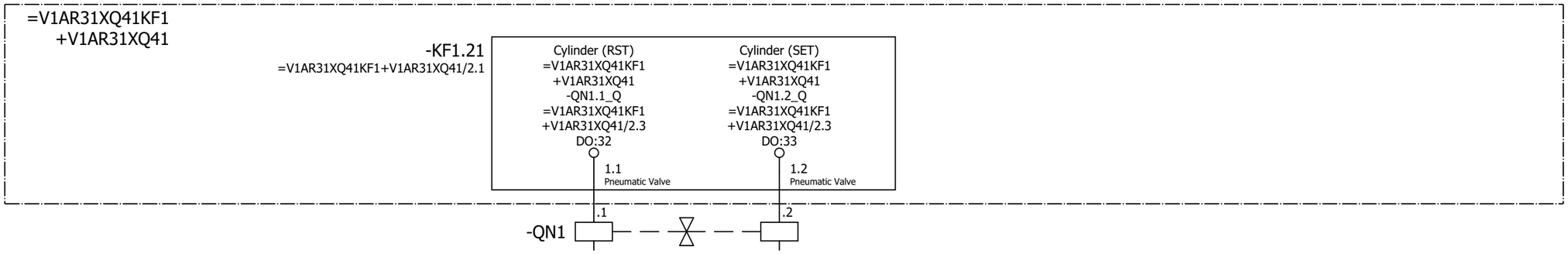

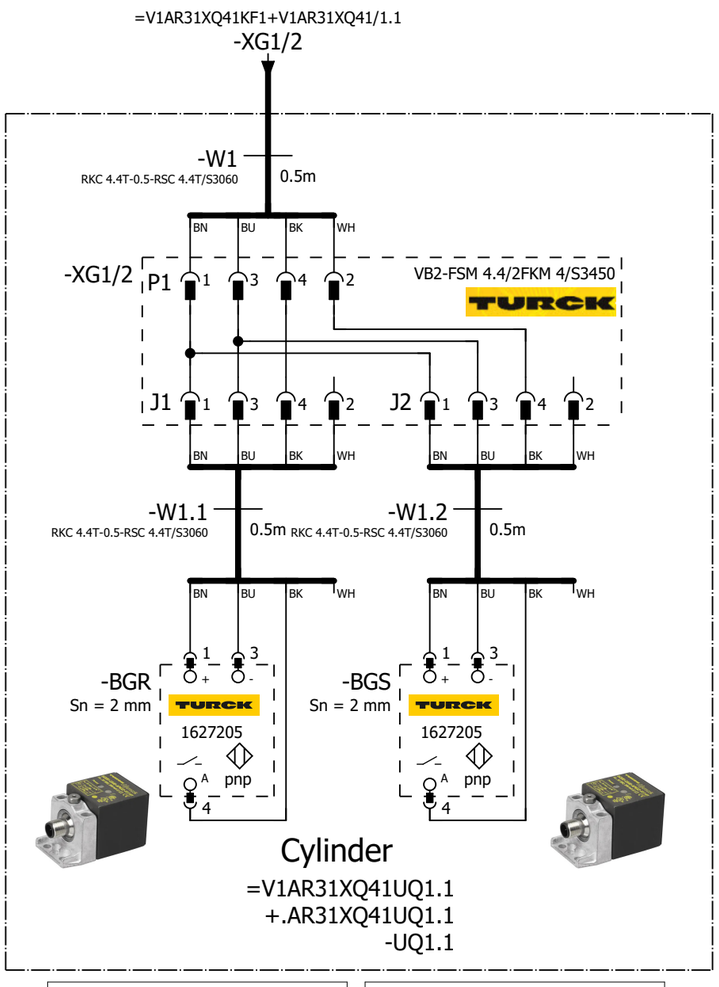

=V1AR31XQ41 -UQ1.1-BGR Cylinder	=V1AR31XQ41 -UQ1.1-BGS Cylinder

=V1AR31XQ41KF1+V1AR31XQ41/2

=V1AR31XQ41WC1+.AR31XQ41UC01/1

			Date	1/11/2023	Volvo Trucks North America	Valiant TMS	FESTO DQ CONNECTION QN1	Drawing name: =2V10&EFS-EL		= V1AR31XQ41UQ1	
			Ed.	MKLEPADLO	P6700 Bodyside RH - Robot Cell 2V10					+ V1AR31XQ41UQ1	
			Appr			Scale 1:1		Document type: EFS	Project nr: 22-16150		Page 1 / 1579
Modification	Date	Name	Original		Replacement of / Replaced by						

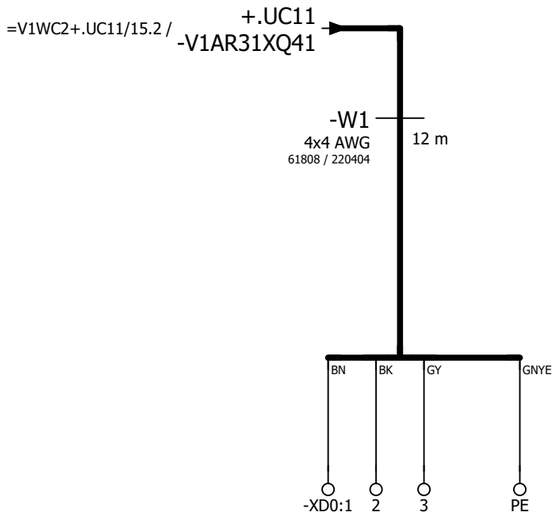

=V1AR31XQ41UQ1+.AR31XQ41UQ1/1

=V1AR81KF1+.AR81UC01/1

			Date	1/11/2023	Volvo Trucks North America	Valiant TMS	Incoming power	Drawing name: =2V10&EFS-EL		= V1AR31XQ41WC1	
			Ed.	MKLEPADLO						+ V1AR31XQ41UC01	
			Appr		P6700 Bodyside RH - Robot Cell 2V10			Document type: EFS	Project nr: 22-16150		Page 1
Modification	Date	Name	Original		Replacement of	Replaced by	Scale 1:1				1579

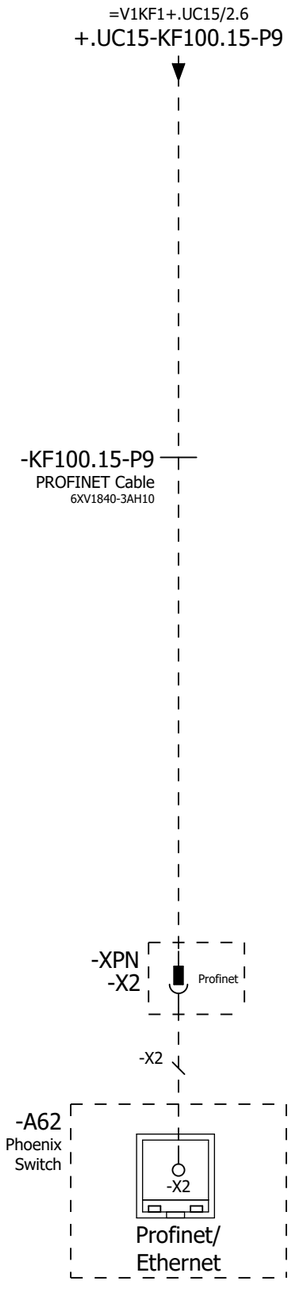

=V1AR31XQ41WC1+.AR31XQ41UC01/1

=V1AR81UQ41BG0+.AR81UQ41/1

			Date	1/11/2023	Volvo Trucks North America	Valiant TMS	Incoming Profinet	Drawing name: =2V10&EFS-EL		= V1AR81KF1	
			Ed.	MKLEPADLO						+ V1AR81UC01	
			Appr		P6700 Bodyside RH - Robot Cell 2V10			Document type: EFS	Project nr: 22-16150	Page	1
Modification	Date	Name	Original		Replacement of	Replaced by	Scale 1:1				1579

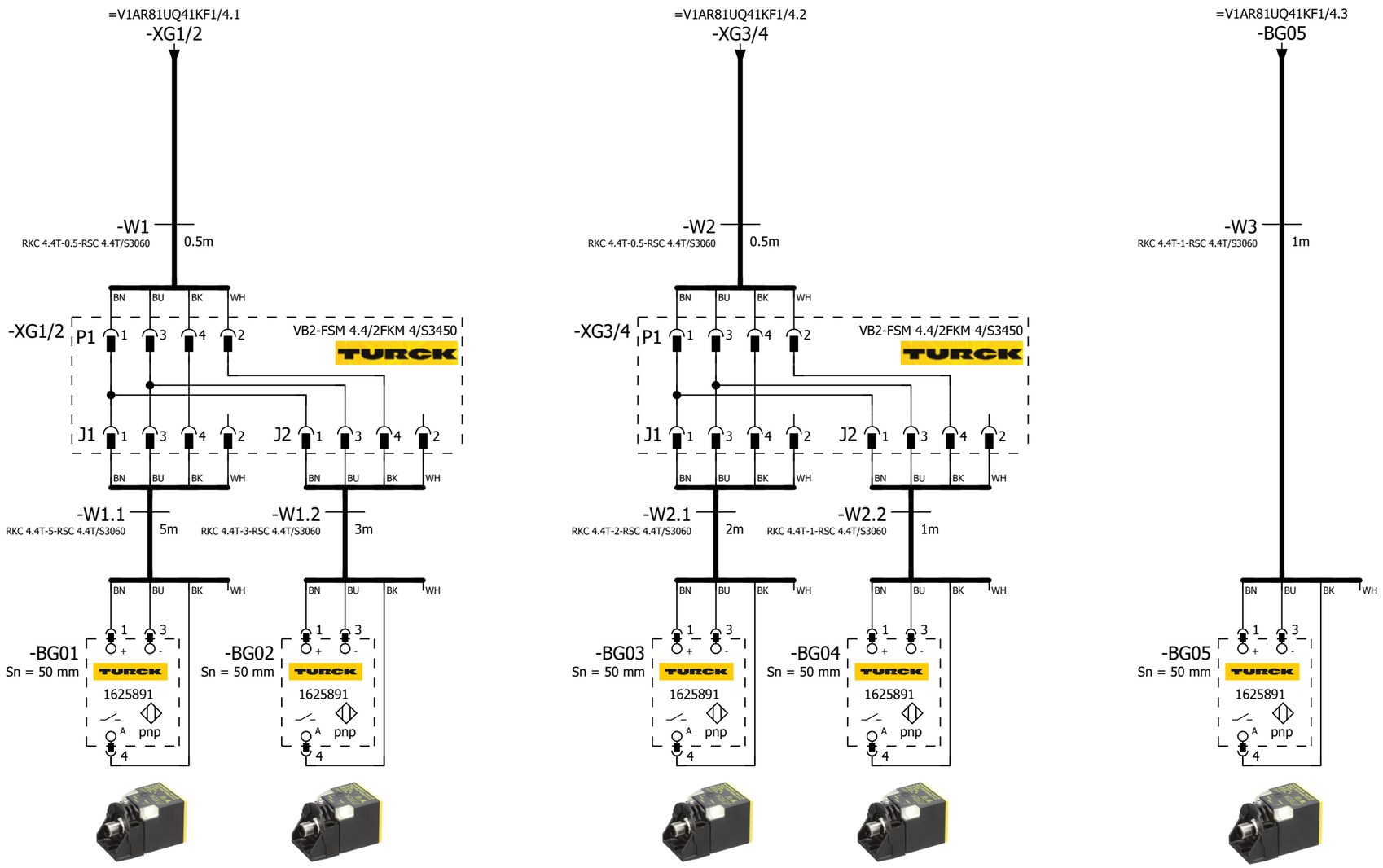

=V1AR81UQ41 -BG01 Day Cab Outer	=V1AR81UQ41 -BG02 Day Cab Outer	=V1AR81UQ41 -BG03 Short Outer	=V1AR81UQ41 -BG04 Medium Outer	=V1AR81UQ41 -BG05 Long Outer

=V1AR81KF1+.AR81UC01/1

=V1AR81UQ41KF1/1

			Date	1/11/2023	Volvo Trucks North America	Valiant TMS	SENSORS	Drawing name: =2V10&EFS-EL	= V1AR81UQ41BG0	
			Ed.	MKLEPADLO					+ V1AR81UQ41	
			Appr		P6700 Bodyside RH - Robot Cell 2V10			Document type: EFS	Project nr: 22-16150	Page 1 / 1579
Modification	Date	Name	Original		Replacement of / Replaced by	Scale 1:1				

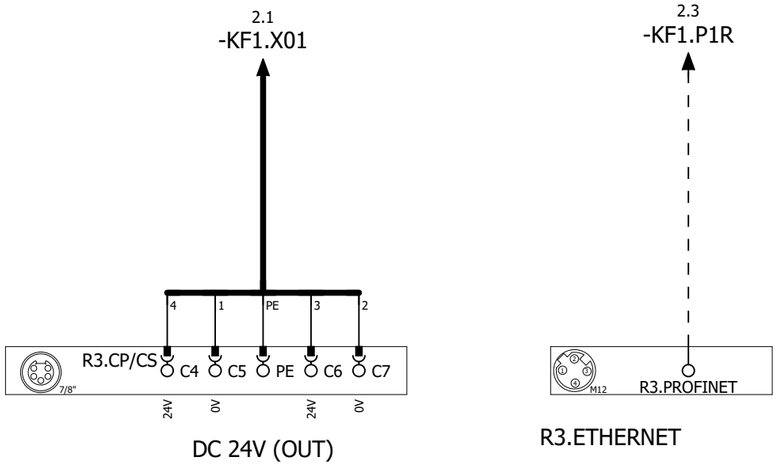

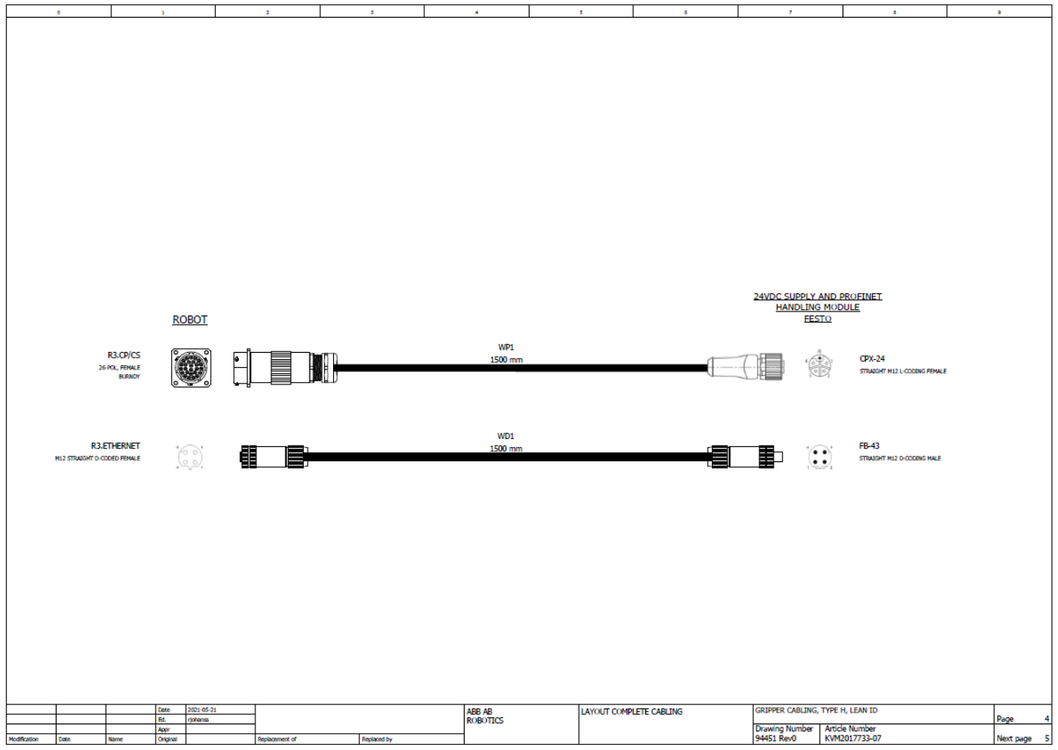

=V1AR81UQ41BG0/1

2

			Date	1/11/2023	Volvo Trucks North America		Valiant TMS	24VDC SUPPLY AND PROFINET HANDLING MODULE	Drawing name: =2V10&EFS-EL	= V1AR81UQ41KF1	
			Ed.	MKLEPADLO						+ V1AR81UQ41	
			Appr		P6700 Bodyside RH - Robot Cell 2V10				Document type: EFS	Project nr: 22-16150	Page 1
Modification	Date	Name	Original		Replacement of	Replaced by	Scale 1:1				1579

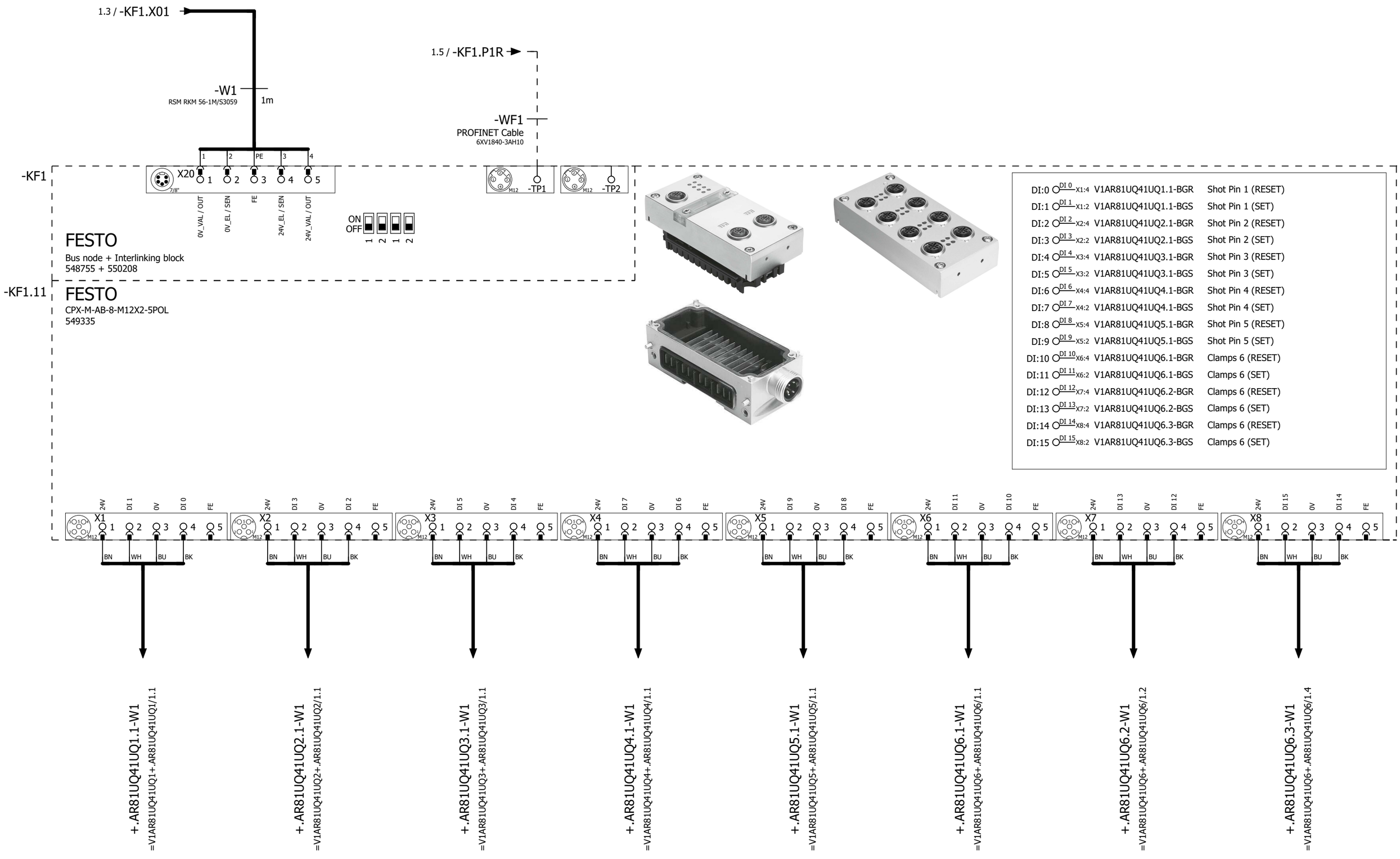

1 3

			Date	1/11/2023	Volvo Trucks North America	Valiant TMS	CONNECTING MOD. FOR MPA MANIFOLD	Drawing name: =2V10&EFS-EL	= V1AR81UQ41KF1		
			Ed.	MKLEPADLO					+ V1AR81UQ41		
			Appr		P6700 Bodyside RH - Robot Cell 2V10			Document type: EFS	Project nr: 22-16150	Page	2
Modification	Date	Name	Original		Replacement of	Replaced by	Scale 1:1				1579

-KF1.12

FESTO
CPX-M-AB-8-M12X2-5POL
549335

DI:16	DI 0 X1:4	V1AR81UQ41UQ6.4-BGR	Clamps 6 (RESET)
DI:17	DI 1 X1:2	V1AR81UQ41UQ6.4-BGS	Clamps 6 (SET)
DI:18	DI 2 X2:4	V1AR81UQ41UQ7.1-BGR	Clamps 7 (RESET)
DI:19	DI 3 X2:2	V1AR81UQ41UQ7.1-BGS	Clamps 7 (SET)
DI:20	DI 4 X3:4	V1AR81UQ41UQ7.2-BGR	Clamps 7 (RESET)
DI:21	DI 5 X3:2	V1AR81UQ41UQ7.2-BGS	Clamps 7 (SET)
DI:22	DI 6 X4:4	V1AR81UQ41UQ8.1-BGR	Clamps 8 (RESET)
DI:23	DI 7 X4:2	V1AR81UQ41UQ8.1-BGS	Clamps 8 (SET)
DI:24	DI 8 X5:4	V1AR81UQ41UQ8.2-BGR	Clamps 8 (RESET)
DI:25	DI 9 X5:2	V1AR81UQ41UQ8.2-BGS	Clamps8 (SET)
DI:26	DI 10 X6:4	V1AR81UQ41UQ9.1-BGR	Clamps 9 (RESET)
DI:27	DI 11 X6:2	V1AR81UQ41UQ9.1-BGS	Clamps 9 (SET)
DI:28	DI 12 X7:4	V1AR81UQ41UQ9.2-BGR	Clamps 9 (RESET)
DI:29	DI 13 X7:2	V1AR81UQ41UQ9.2-BGS	Clamps 9 (SET)
DI:30	DI 14 X8:4	DI:30	Spare
DI:31	DI 15 X8:2	DI:31	Spare

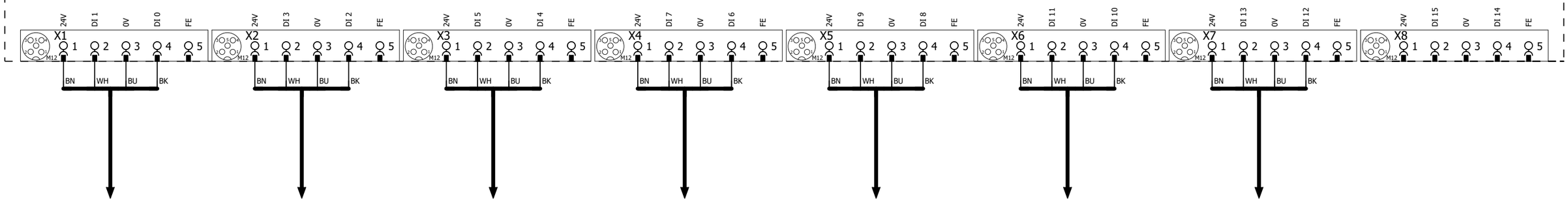

+.AR81UQ41UQ6.4-W1
=V1AR81UQ41UQ6+.AR81UQ41UQ6/1.5

+.AR81UQ41UQ7.1-W1
=V1AR81UQ41UQ7+.AR81UQ41UQ7/1.1

+.AR81UQ41UQ7.2-W1
=V1AR81UQ41UQ7+.AR81UQ41UQ7/1.2

+.AR81UQ41UQ8.1-W1
=V1AR81UQ41UQ8+.AR81UQ41UQ8/1.1

+.AR81UQ41UQ8.2-W1
=V1AR81UQ41UQ8+.AR81UQ41UQ8/1.2

+.AR81UQ41UQ9.1-W1
=V1AR81UQ41UQ9+.AR81UQ41UQ9/1.1

+.AR81UQ41UQ9.2-W1
=V1AR81UQ41UQ9+.AR81UQ41UQ9/1.2

DI:32	DI 0 X1:4	V1AR81UQ41-BG01	Day Cab Outer 78526576
DI:33	DI 1 X1:2	V1AR81UQ41-BG02	Day Cab Outer 78526576
DI:34	DI 2 X2:4	V1AR81UQ41-BG03	Short Outer 78520637
DI:35	DI 3 X2:2	V1AR81UQ41-BG04	Medium Outer 78520486
DI:36	DI 4 X3:4	V1AR81UQ41-BG05	Long Outer 78519670
DI:37	DI 5 X3:2	DI:37	Spare
DI:38	DI 6 X4:4	DI:38	Spare
DI:39	DI 7 X4:2	DI:39	Spare
DI:40	DI 8 X5:4	DI:40	Spare
DI:41	DI 9 X5:2	DI:41	Spare
DI:42	DI 10 X6:4	DI:42	Spare
DI:43	DI 11 X6:2	DI:43	Spare
DI:44	DI 12 X7:4	DI:44	Spare
DI:45	DI 13 X7:2	DI:45	Spare
DI:46	DI 14 X8:4	DI:46	Spare
DI:47	DI 15 X8:2	DI:47	Spare

-KF1.13

FESTO
CPX-M-AB-8-M12X2-5POL
549335

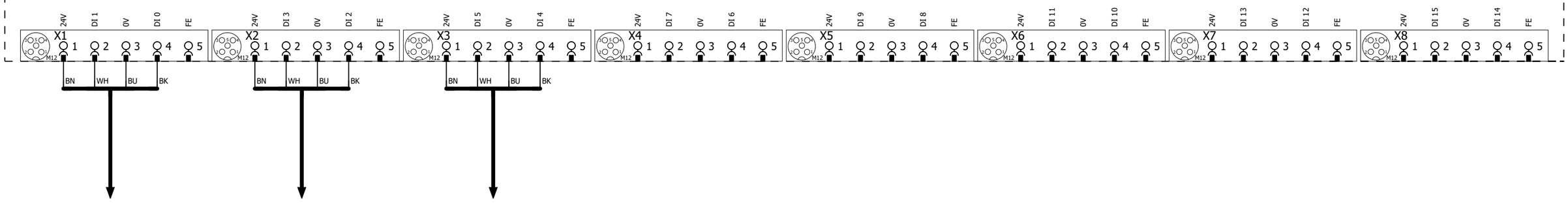

-XG1/2
=V1AR81UQ41BG0/1.1

-XG3/4
=V1AR81UQ41BG0/1.4

-BG05
=V1AR81UQ41BG0/1.6

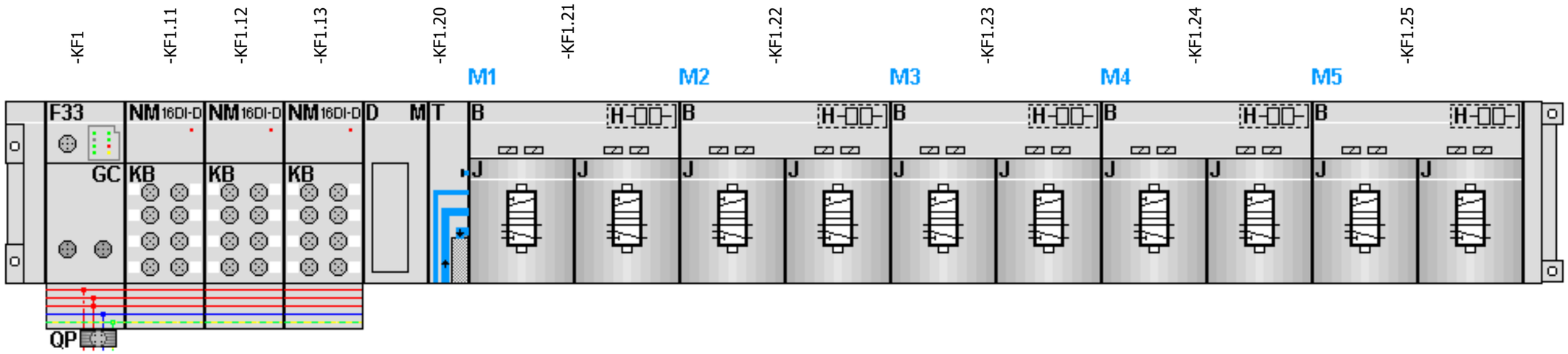

-KF1.21

=V1AR81UQ41UQ1+.AR81UQ41UQ1/1.3
=V1AR81UQ41UQ2+.AR81UQ41UQ2/1.3

FESTO

=V1AR81UQ41UQ1+.AR81UQ41UQ1/1.4	DO:0 DO 0 1.1	-QN1.1_Q	Shot Pin 1 (RST)
=V1AR81UQ41UQ1+.AR81UQ41UQ1/1.4	DO:1 DO 1 1.2	-QN1.2_Q	Shot Pin 1 (SET)
=V1AR81UQ41UQ2+.AR81UQ41UQ2/1.4	DO:2 DO 2 2.1	-QN2.1_Q	Shot Pin 2 (RST)
=V1AR81UQ41UQ2+.AR81UQ41UQ2/1.4	DO:3 DO 3 2.2	-QN2.2_Q	Shot Pin 2 (SET)

-KF1.22

=V1AR81UQ41UQ3+.AR81UQ41UQ3/1.3
=V1AR81UQ41UQ4+.AR81UQ41UQ4/1.3

FESTO

=V1AR81UQ41UQ3+.AR81UQ41UQ3/1.4	DO:4 DO 0 1.1	-QN3.1_Q	Shot Pin 3 (RST)
=V1AR81UQ41UQ3+.AR81UQ41UQ3/1.4	DO:5 DO 1 1.2	-QN3.2_Q	Shot Pin 3 (SET)
=V1AR81UQ41UQ4+.AR81UQ41UQ4/1.4	DO:6 DO 2 2.1	-QN4.1_Q	Shot Pin 4 (RST)
=V1AR81UQ41UQ4+.AR81UQ41UQ4/1.4	DO:7 DO 3 2.2	-QN4.2_Q	Shot Pin 4 (SET)

-KF1.23

=V1AR81UQ41UQ5+.AR81UQ41UQ5/1.3
=V1AR81UQ41UQ6+.AR81UQ41UQ6/1.3

FESTO

=V1AR81UQ41UQ5+.AR81UQ41UQ5/1.4	DO:8 DO 0 1.1	-QN5.1_Q	Shot Pin 5 (RST)
=V1AR81UQ41UQ5+.AR81UQ41UQ5/1.4	DO:9 DO 1 1.2	-QN5.2_Q	Shot Pin 5 (SET)
=V1AR81UQ41UQ6+.AR81UQ41UQ6/1.4	DO:10 DO 2 2.1	-QN6.1_Q	Clamps 6 (RST)
=V1AR81UQ41UQ6+.AR81UQ41UQ6/1.4	DO:11 DO 3 2.2	-QN6.2_Q	Clamps 6 (SET)

-KF1.24

=V1AR81UQ41UQ7+.AR81UQ41UQ7/1.3
=V1AR81UQ41UQ8+.AR81UQ41UQ8/1.3

FESTO

=V1AR81UQ41UQ7+.AR81UQ41UQ7/1.4	DO:12 DO 0 1.1	-QN7.1_Q	Clamps 7 (RST)
=V1AR81UQ41UQ7+.AR81UQ41UQ7/1.4	DO:13 DO 1 1.2	-QN7.2_Q	Clamps 7 (SET)
=V1AR81UQ41UQ8+.AR81UQ41UQ8/1.4	DO:14 DO 2 2.1	-QN8.1_Q	Clamps 8 (RST)
=V1AR81UQ41UQ8+.AR81UQ41UQ8/1.4	DO:15 DO 3 2.2	-QN8.2_Q	Clamps 8 (SET)

-KF1.25

=V1AR81UQ41UQ9+.AR81UQ41UQ9/1.3
=V1AR81UQ41UQ10+.AR81UQ41UQ10/1.3

FESTO

=V1AR81UQ41UQ9+.AR81UQ41UQ9/1.4	DO:16 DO 0 1.1	-QN9.1_Q	Clamps 9 (RST)
=V1AR81UQ41UQ9+.AR81UQ41UQ9/1.4	DO:17 DO 1 1.2	-QN9.2_Q	Clamps 9 (SET)
=V1AR81UQ41UQ10+.AR81UQ41UQ10/1.4	DO:18 DO 2 2.1	-QN10.1_Q	Spare (RST)
=V1AR81UQ41UQ10+.AR81UQ41UQ10/1.4	DO:19 DO 3 2.2	-QN10.2_Q	Spare (SET)

=V1AR81UQ41UQ1+.AR81UQ41UQ1/1

			Date	1/11/2023	Volvo Trucks North America	Valiant TMS	CONNECTING MOD. FOR FESTO DQ	Drawing name: =2V10&EFS-EL	= V1AR81UQ41KF1
			Ed.	MKLEPADLO					+ V1AR81UQ41
			Appr		P6700 Bodyside RH - Robot Cell 2V10			Document type: EFS	Project nr: 22-16150	Page 5
Modification	Date	Name	Original		Replacement of / Replaced by	Scale 1:1				1579

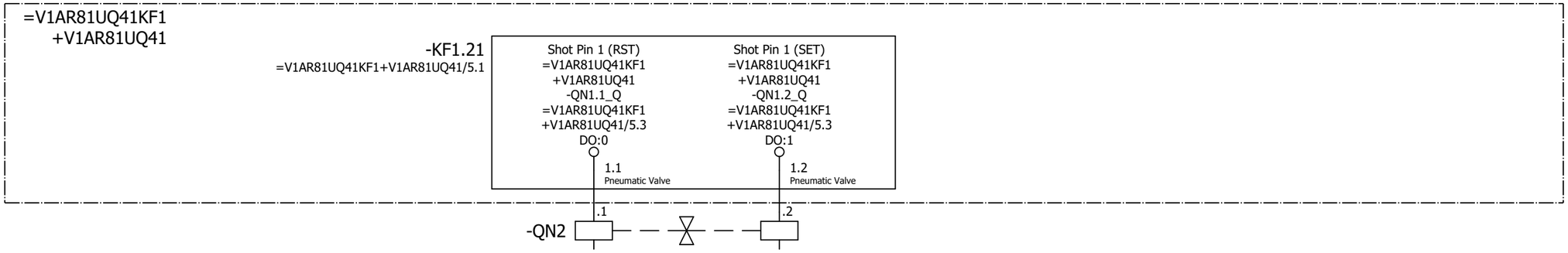

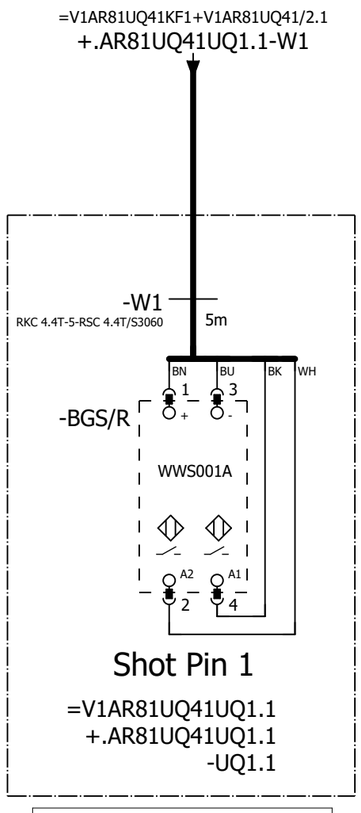

=V1AR81UQ41
-UQ1.1-BGS/R
Shot Pin 1

=V1AR81UQ41KF1+V1AR81UQ41/5

=V1AR81UQ41UQ2+.AR81UQ41UQ2/1

			Date	1/11/2023	Volvo Trucks North America		Valiant TMS	FESTO DQ CONNECTION QN1	Drawing name: =2V10&EFS-EL	= V1AR81UQ41UQ1	
			Ed.	MKLEPADLO						+ V1AR81UQ41UQ1	
			Appr		P6700 Bodyside RH - Robot Cell 2V10				Document type: EFS	Project nr: 22-16150	Page 1
Modification	Date	Name	Original		Replacement of	Replaced by	Scale 1:1				1579

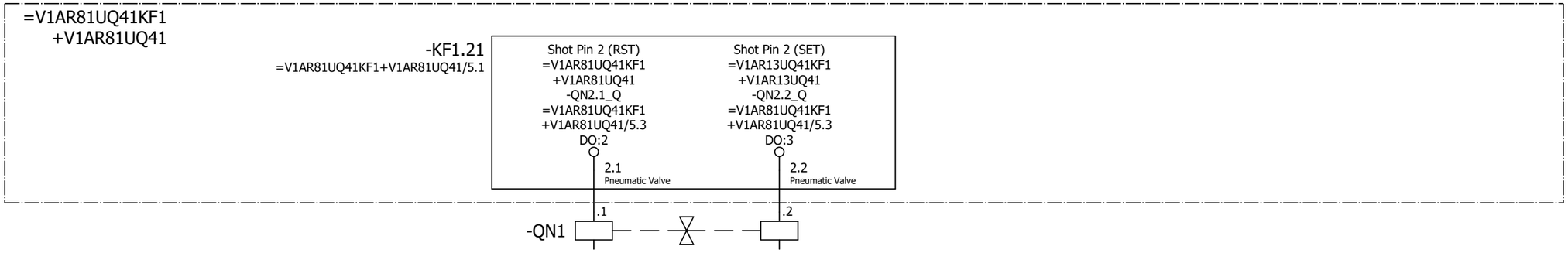

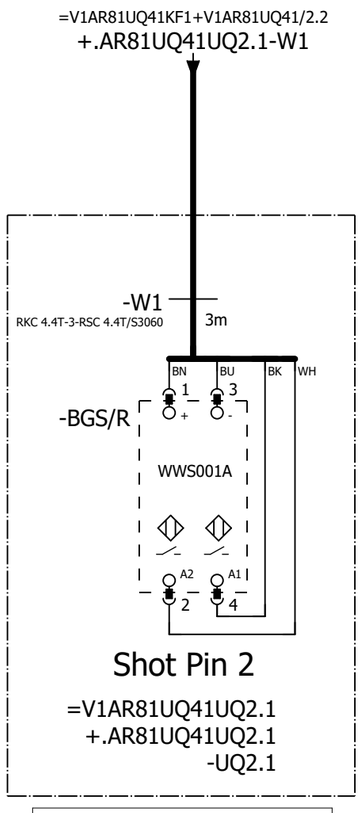

=V1AR81UQ41
-UQ2.1-BGS/R
Shot Pin 2

=V1AR81UQ41UQ1+.AR81UQ41UQ1/1

=V1AR81UQ41UQ3+.AR81UQ41UQ3/1

			Date	1/11/2023	Volvo Trucks North America	Valiant TMS	FESTO DQ CONNECTION QN2	Drawing name: =2V10&EFS-EL		= V1AR81UQ41UQ2	
			Ed.	MKLEPADLO						+ V1AR81UQ41UQ2	
			Appr		P6700 Bodyside RH - Robot Cell 2V10			Document type: EFS	Project nr: 22-16150		Page 1
Modification	Date	Name	Original		Replacement of / Replaced by	Scale 1:1					1579

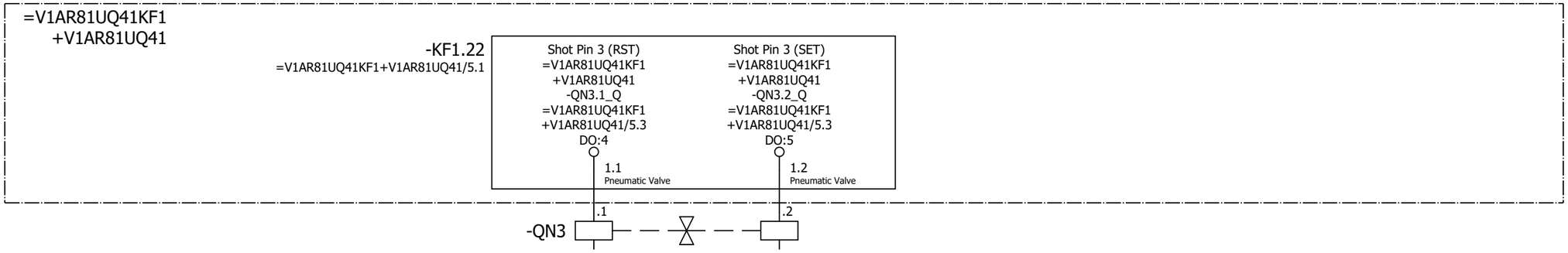

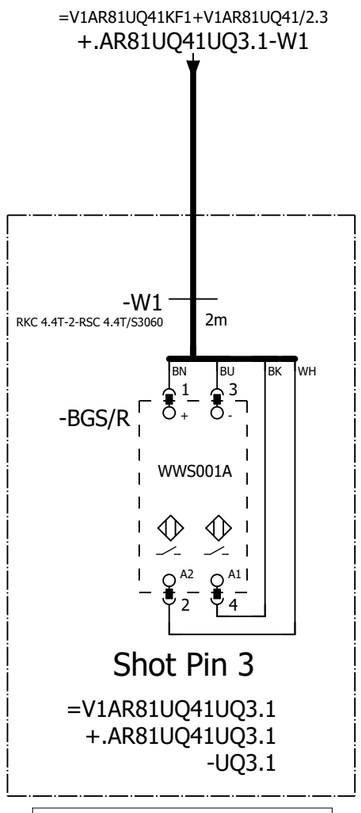

=V1AR81UQ41
-UQ3.1-BGS/R
Shot Pin 3

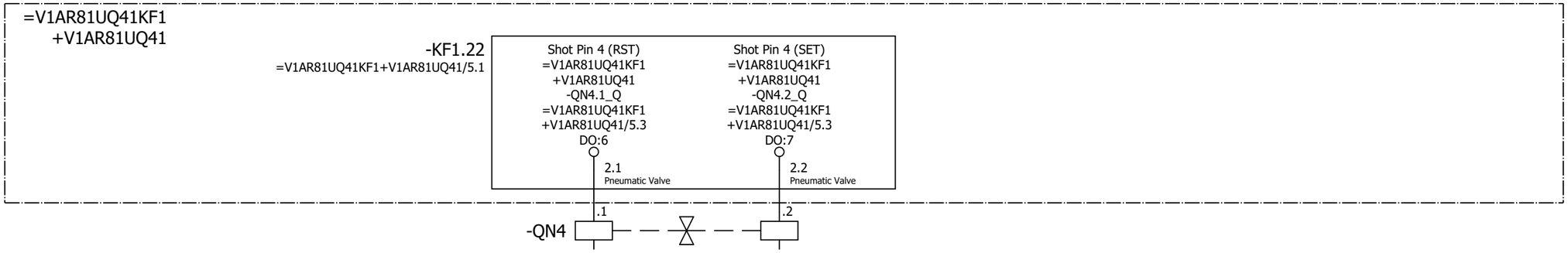

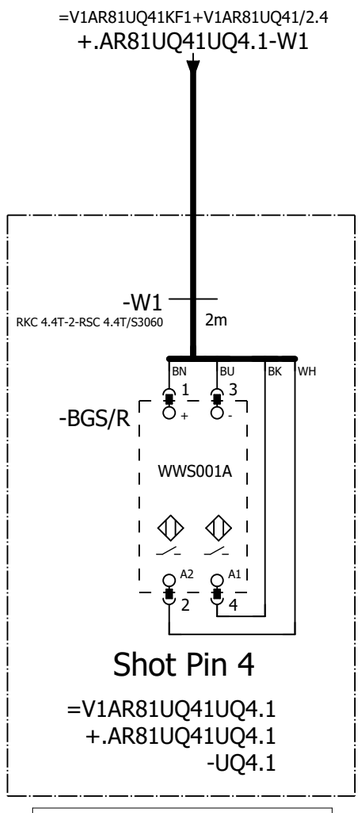

=V1AR81UQ41
-UQ4.1-BGS/R
Shot Pin 4

=V1AR81UQ41UQ3+.AR81UQ41UQ3/1

=V1AR81UQ41UQ5+.AR81UQ41UQ5/1

			Date	1/11/2023	Volvo Trucks North America	Valiant TMS	FESTO DQ CONNECTION QN4	Drawing name: =2V10&EFS-EL		= V1AR81UQ41UQ4	
			Ed.	MKLEPADLO						+ V1AR81UQ41UQ4	
			Appr		P6700 Bodyside RH - Robot Cell 2V10			Document type: EFS	Project nr: 22-16150		Page 1
Modification	Date	Name	Original		Replacement of / Replaced by	Scale 1:1					1579

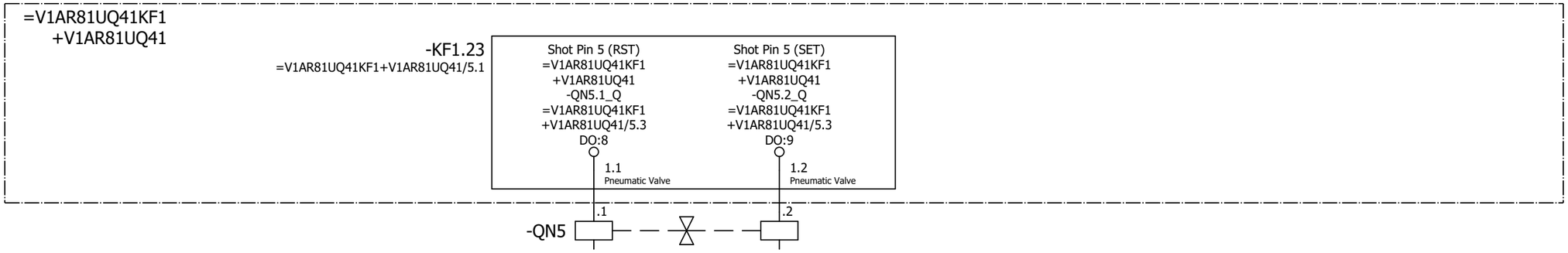

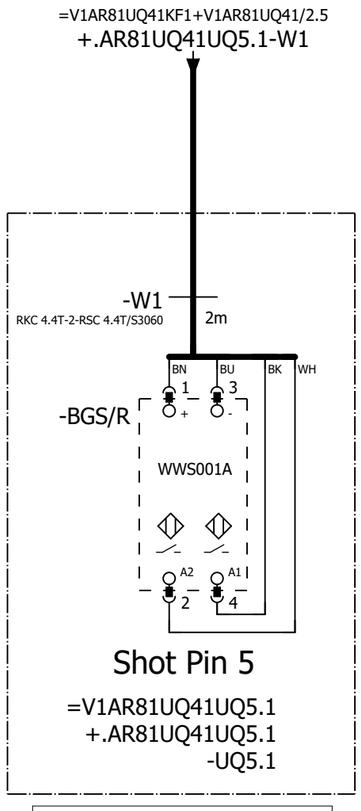

=V1AR81UQ41
-UQ5.1-BGS/R
Shot Pin 5

=V1AR81UQ41UQ4+.AR81UQ41UQ4/1

=V1AR81UQ41UQ6+.AR81UQ41UQ6/1

			Date	1/11/2023	Volvo Trucks North America	Valiant TMS	FESTO DQ CONNECTION QN5	Drawing name: =2V10&EFS-EL		= V1AR81UQ41UQ5	
			Ed.	MKLEPADLO						+ V1AR81UQ41UQ5	
			Appr		P6700 Bodyside RH - Robot Cell 2V10			Document type: EFS	Project nr: 22-16150		Page 1
Modification	Date	Name	Original		Replacement of	Replaced by	Scale 1:1				1579

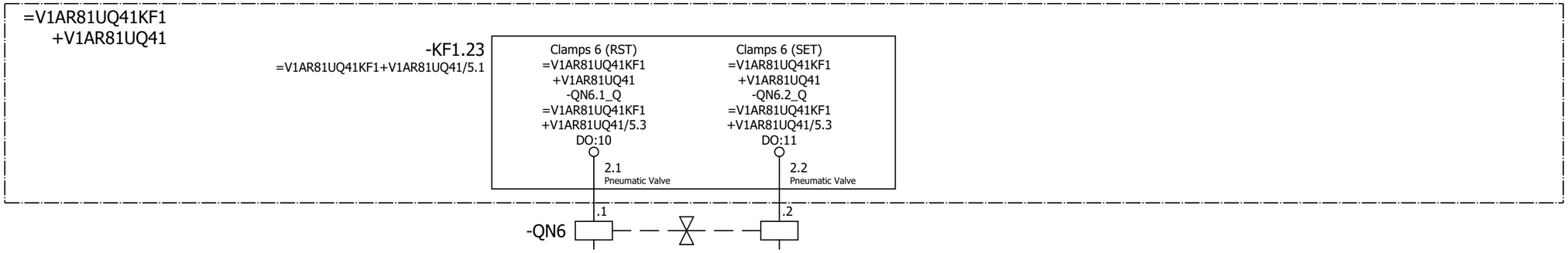

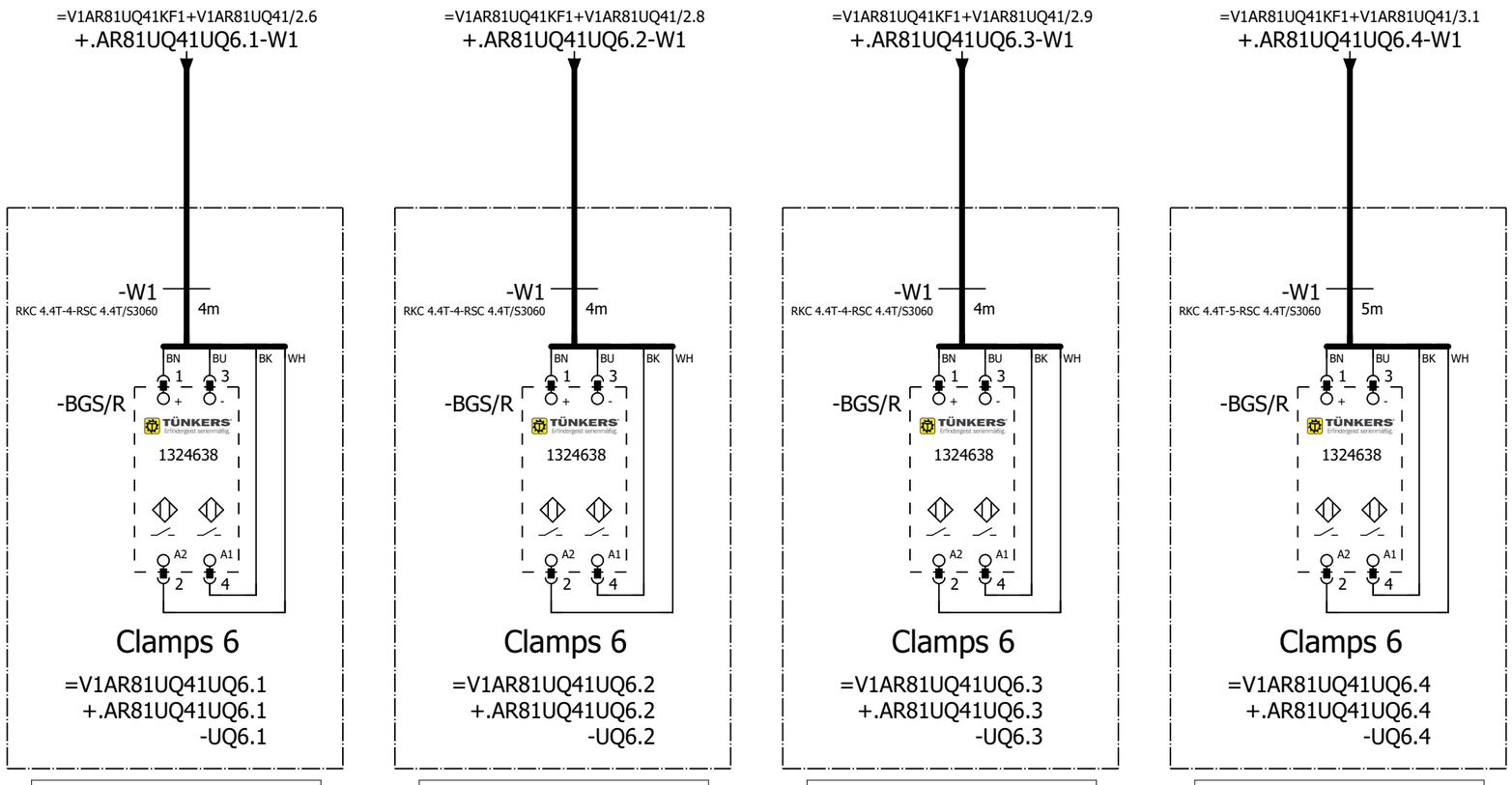

=V1AR81UQ41UQ5+.AR81UQ41UQ5/1

=V1AR81UQ41UQ7+.AR81UQ41UQ7/1

			Date	1/11/2023	Volvo Trucks North America	Valiant TMS	FESTO DQ CONNECTION QN6	Drawing name: =2V10&EFS-EL	= V1AR81UQ41UQ6		
			Ed.	MKLEPADLO					+ V1AR81UQ41UQ6		
			Appr		P6700 Bodyside RH - Robot Cell 2V10			Document type: EFS	Project nr: 22-16150	Page	1
Modification	Date	Name	Original		Replacement of / Replaced by	Scale 1:1					1579

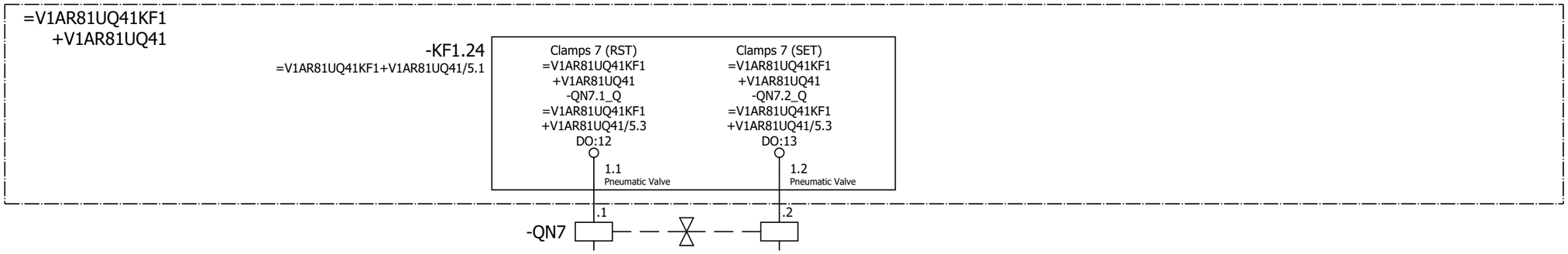

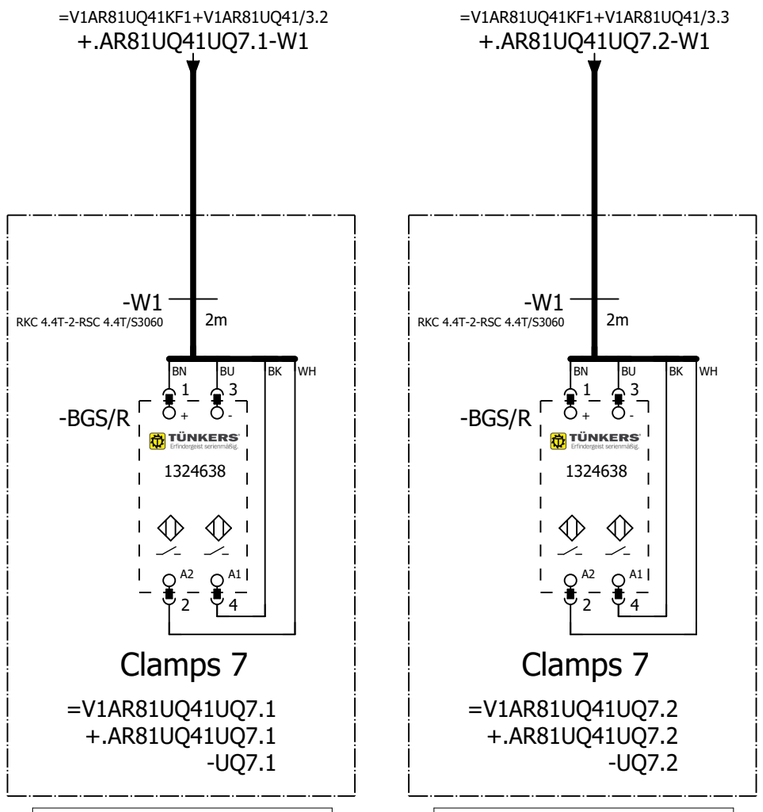

=V1AR81UQ41
-UQ7.1-BGS/R
Clamps 7

=V1AR81UQ41
-UQ7.2-BGS/R
Clamps 7

=V1AR81UQ41UQ6+.AR81UQ41UQ6/1

=V1AR81UQ41UQ8+.AR81UQ41UQ8/1

			Date	1/11/2023	Volvo Trucks North America		Valiant TMS	FESTO DQ CONNECTION QN7	Drawing name: =2V10&EFS-EL	= V1AR81UQ41UQ7	
			Ed.	MKLEPADLO						+ V1AR81UQ41UQ7	
			Appr		P6700 Bodyside RH - Robot Cell 2V10				Document type: EFS	Project nr: 22-16150	Page 1
Modification	Date	Name	Original		Replacement of	Replaced by	Scale 1:1				1579

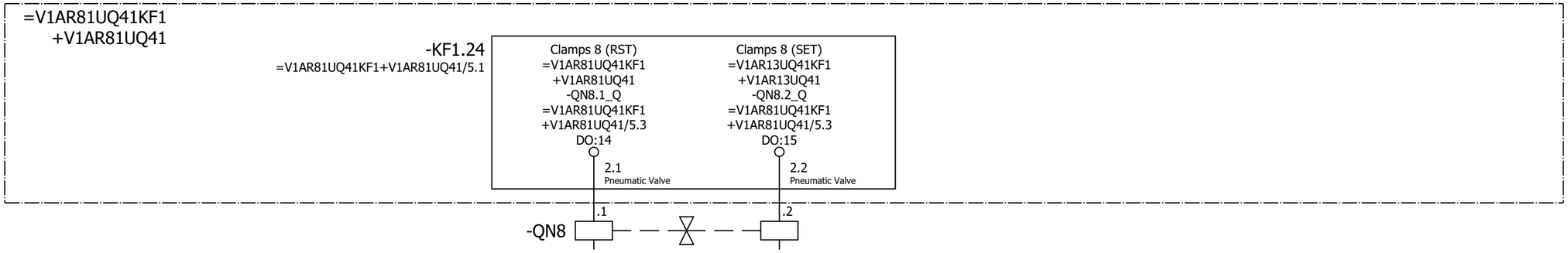

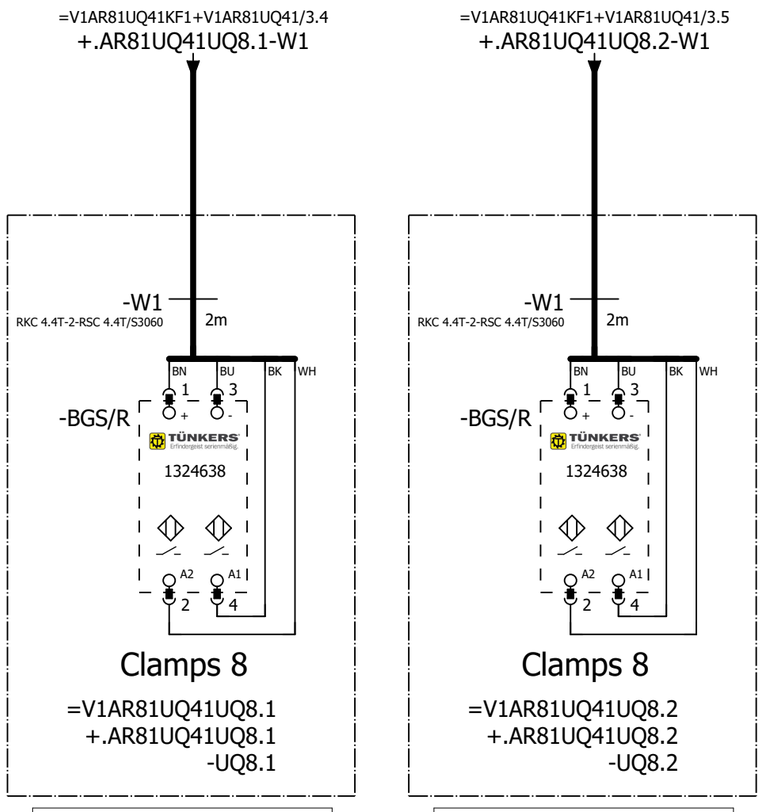

=V1AR81UQ41
-UQ8.1-BGS/R
Clamps 8

=V1AR81UQ41
-UQ8.2-BGS/R
Clamps 8

=V1AR81UQ41UQ7+.AR81UQ41UQ7/1

=V1AR81UQ41UQ9+.AR81UQ41UQ9/1

			Date	1/11/2023	Volvo Trucks North America		Valiant TMS	FESTO DQ CONNECTION QN8	Drawing name: =2V10&EFS-EL	= V1AR81UQ41UQ8	
			Ed.	MKLEPADLO						+ V1AR81UQ41UQ8	
			Appr		P6700 Bodyside RH - Robot Cell 2V10				Document type: EFS	Project nr: 22-16150	Page 1
Modification	Date	Name	Original		Replacement of	Replaced by	Scale 1:1				1579

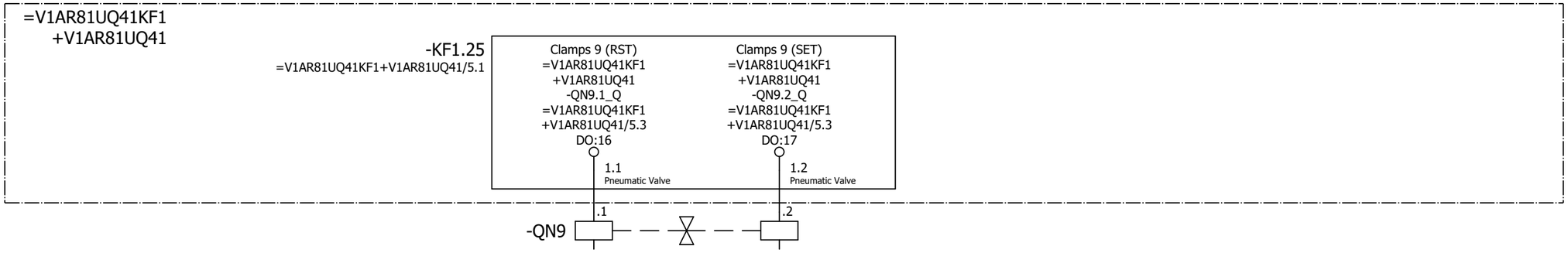

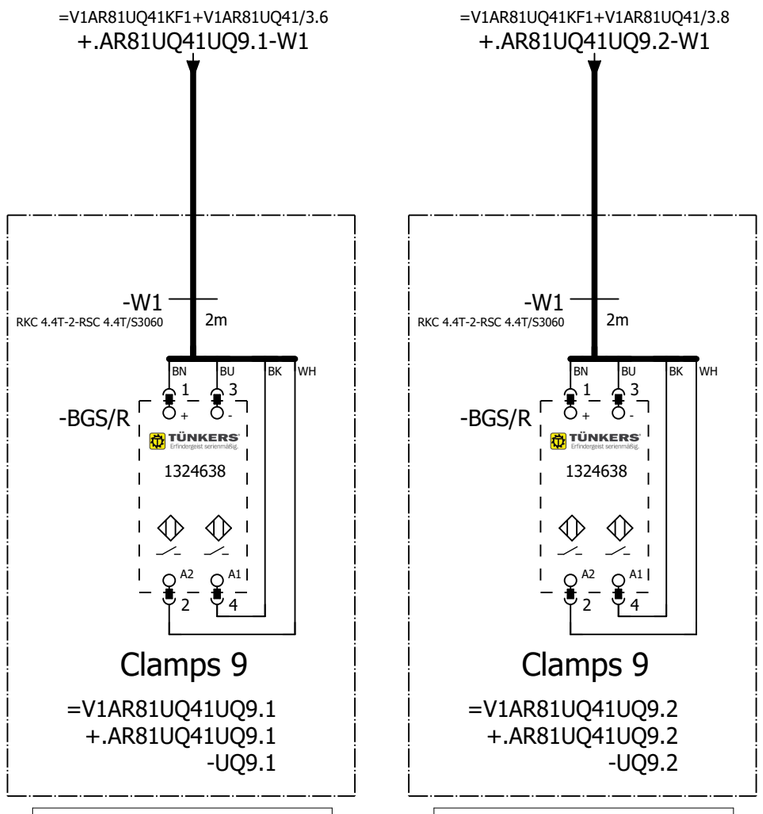

=V1AR81UQ41
-UQ9.1-BGS/R
Clamps 9

=V1AR81UQ41
-UQ9.2-BGS/R
Clamps 9

=V1AR81UQ41UQ8+.AR81UQ41UQ8/1

=V1AR81UQ41UQ10+.AR81UQ41UQ10/1

			Date	1/11/2023	Volvo Trucks North America		Valiant TMS	FESTO DQ CONNECTION QN9	Drawing name: =2V10&EFS-EL	= V1AR81UQ41UQ9	
			Ed.	MKLEPADLO						+ V1AR81UQ41UQ9	
			Appr		P6700 Bodyside RH - Robot Cell 2V10				Document type: EFS	Project nr: 22-16150	Page 1
Modification	Date	Name	Original		Replacement of	Replaced by	Scale 1:1				1579

0	1	2	3	4	5	6	7	8	9

=V1AR81UQ41KF1
+V1AR81UQ41

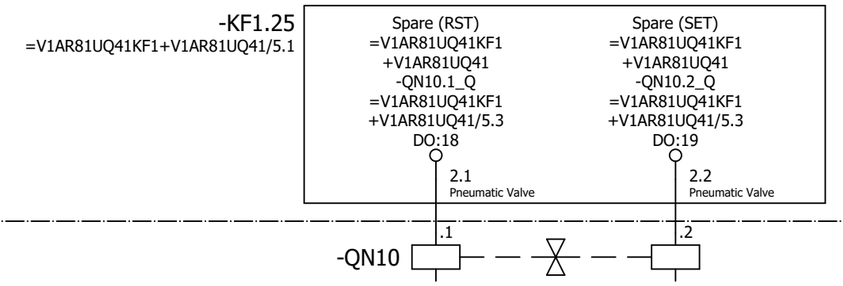

=V1AR81UQ41UQ9+.AR81UQ41UQ9/1

=V1AR81WC1+.AR81UC01/1

			Date	1/11/2023	Volvo Trucks North America	Valiant TMS	FESTO DQ CONNECTION QN10	Drawing name: =2V10&EFS-EL	= V1AR81UQ41UQ10	
			Ed.	MKLEPADLO					+ V1AR81UQ41UQ10	
			Appr		P6700 Bodyside RH - Robot Cell 2V10			Document type: EFS	Project nr: 22-16150	Page 1 / 1579
Modification	Date	Name	Original		Replacement of / Replaced by	Scale 1:1				

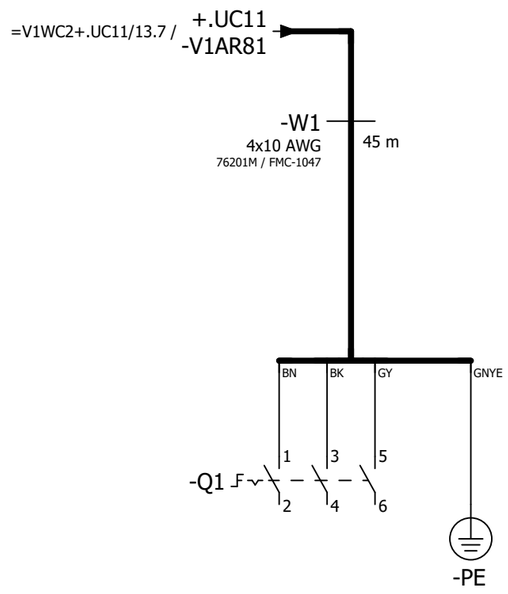

=V1AR81UQ41UQ10+.AR81UQ41UQ10/1

=V1AR81XQ51WC1+.AR81XQ51UC01/1

			Date	1/11/2023	Volvo Trucks North America	Valiant TMS	Incoming power	Drawing name: =2V10&EFS-EL	= V1AR81WC1	
			Ed.	MKLEPADLO					+ V1AR81UC01	
			Appr		P6700 Bodyside RH - Robot Cell 2V10			Document type: EFS	Project nr: 22-16150	Page 1
Modification	Date	Name	Original		Replacement of / Replaced by	Scale 1:1				1579

0	1	2	3	4	5	6	7	8	9

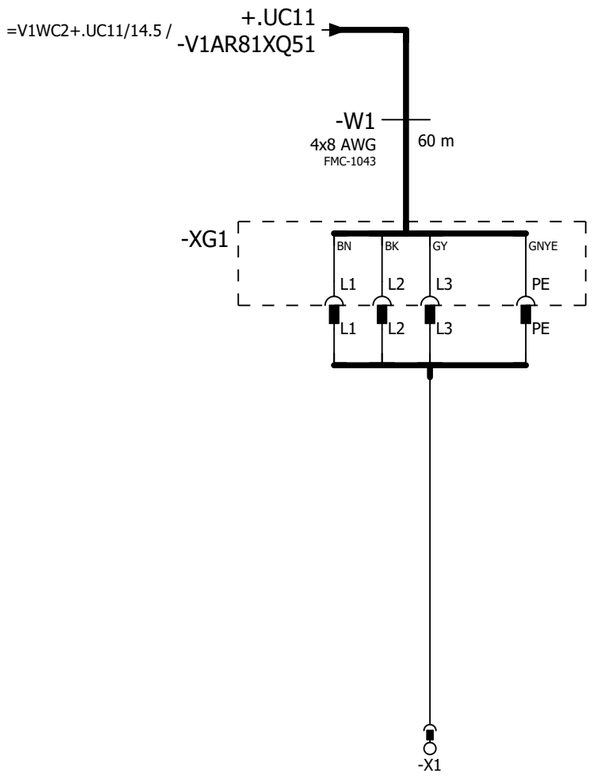

=V1AR81WC1+.AR81UC01/1

=V1AR81XQ52WC1+.AR81XQ52UC01/1

			Date	1/11/2023	Volvo Trucks North America	Valiant TMS	Incoming power	Drawing name: =2V10&EFS-EL	= V1AR81XQ51WC1	
			Ed.	MKLEPADLO					+ V1AR81XQ51UC01	
			Appr		P6700 Bodyside RH - Robot Cell 2V10			Document type: EFS	Project nr: 22-16150	Page 1 / 1579
Modification	Date	Name	Original		Replacement of / Replaced by	Scale 1:1				

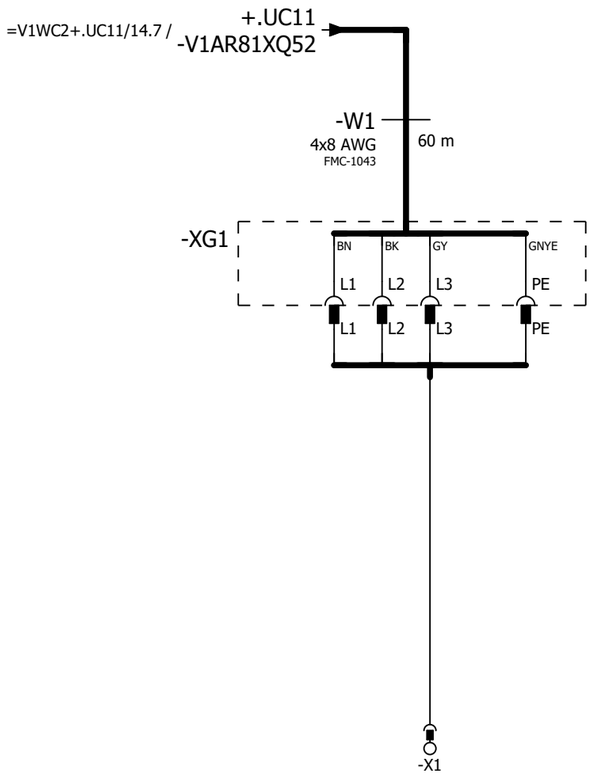

=V1AR81XQ51WC1+.AR81XQ51UC01/1

=V1AR191KF1+.AR191UC01/1

			Date	1/11/2023	Volvo Trucks North America	Valiant TMS	Incoming power	Drawing name: =2V10&EFS-EL		= V1AR81XQ52WC1	
			Ed.	MKLEPADLO						+ V1AR81XQ52UC01	
			Appr		P6700 Bodyside RH - Robot Cell 2V10			Document type: EFS	Project nr: 22-16150		Page 1
Modification	Date	Name	Original		Replacement of	Replaced by	Scale 1:1				1579

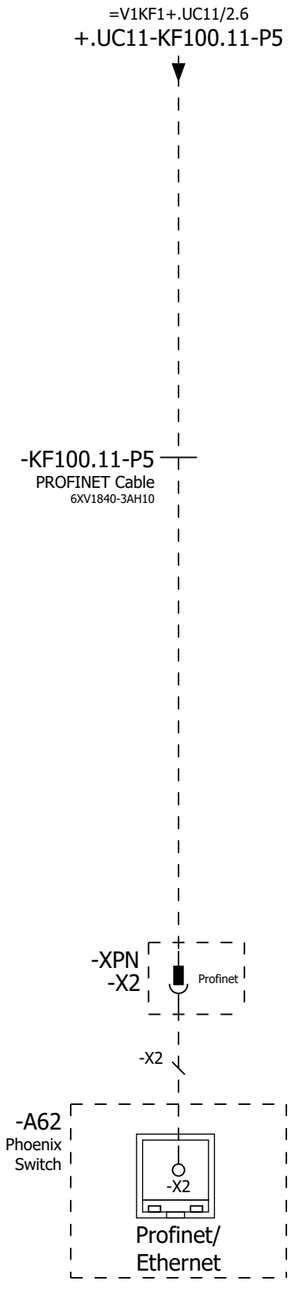

=V1AR81XQ52WC1+.AR81XQ52UC01/1

=V1AR191WC1/1

			Date	1/11/2023	Volvo Trucks North America	Valiant TMS	Incoming Profinet	Drawing name: =2V10&EFS-EL		= V1AR191KF1	
			Ed.	MKLEPADLO						+ V1AR191UC01	
			Appr		P6700 Bodyside RH - Robot Cell 2V10			Document type: EFS	Project nr: 22-16150	Page	1
Modification	Date	Name	Original		Replacement of	Replaced by	Scale 1:1				1579

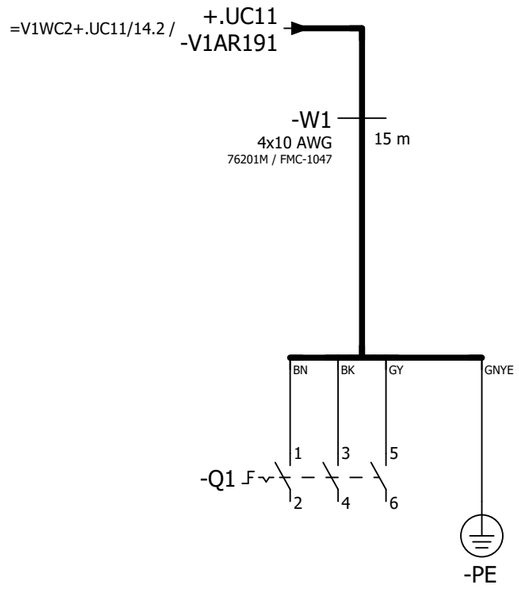

=V1AR191KF1/1

=V1AR211KF1+.AR211UC01/1

			Date	1/11/2023	Volvo Trucks North America	Valiant TMS	Incoming power	Drawing name: =2V10&EFS-EL		= V1AR191WC1	
			Ed.	MKLEPADLO						+ V1AR191UC01	
			Appr		P6700 Bodyside RH - Robot Cell 2V10	Scale 1:1		Document type: EFS	Project nr: 22-16150	Page	1
Modification	Date	Name	Original		Replacement of	Replaced by					1579

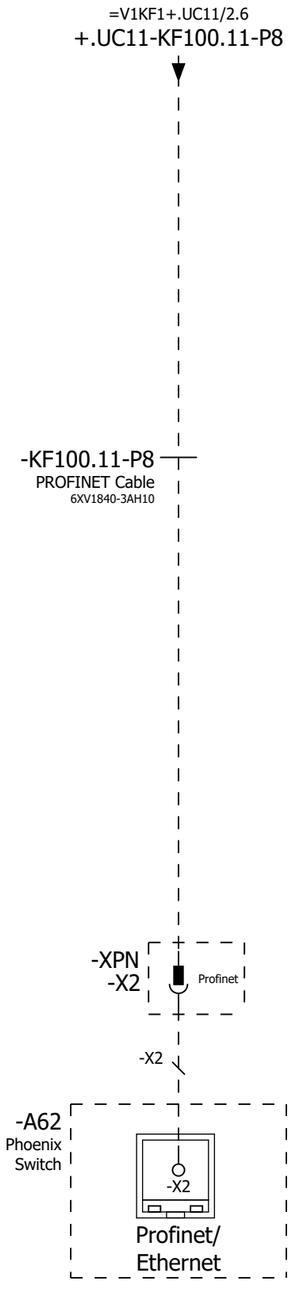

=V1AR191WC1+.AR191UC01/1

=V1AR211WC1/1

			Date	1/11/2023	Volvo Trucks North America	Valiant TMS	Incoming Profinet	Drawing name: =2V10&EFS-EL	= V1AR211KF1	
			Ed.	MKLEPADLO					+ V1AR211UC01	
			Appr		P6700 Bodyside RH - Robot Cell 2V10			Document type: EFS	Project nr: 22-16150	Page 1
Modification	Date	Name	Original		Replacement of	Replaced by	Scale 1:1			1579

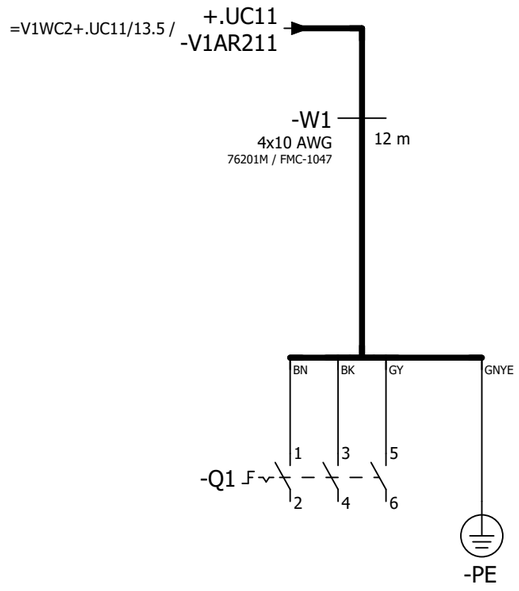

=V1AR211KF1/1

=V1AR211XQ11WC1+.AR211XQ11UC01/1

			Date	1/11/2023	Volvo Trucks North America		Valiant TMS	Incoming power	Drawing name: =2V10&EFS-EL	= V1AR211WC1	
			Ed.	MKLEPADLO						+ V1AR211UC01	
			Appr		P6700 Bodyside RH - Robot Cell 2V10				Document type: EFS	Project nr: 22-16150	Page 1
Modification	Date	Name	Original		Replacement of	Replaced by	Scale 1:1				1579

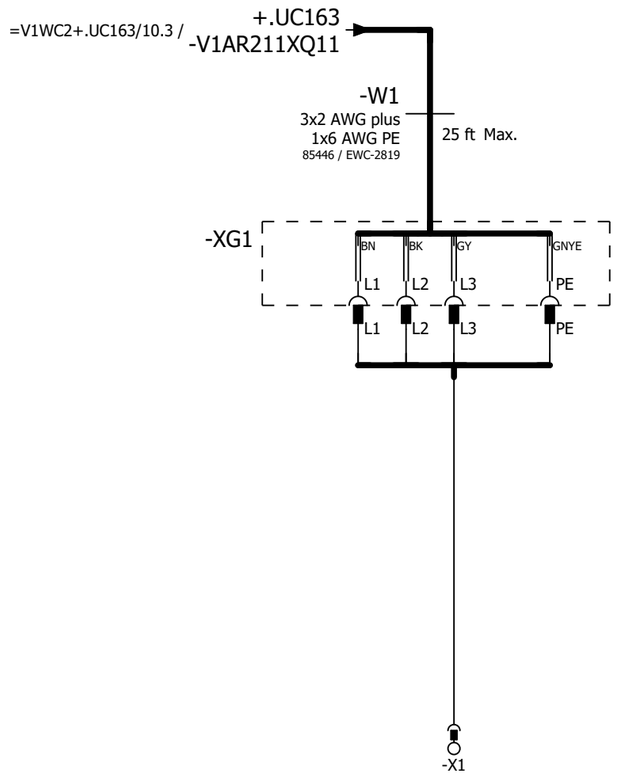

=V1AR211WC1+.AR211UC01/1

=V1AR212KF1+.AR212UC01/1

			Date	1/11/2023	Volvo Trucks North America	Valiant TMS	Incoming power	Drawing name: =2V10&EFS-EL		= V1AR211XQ11WC1	
			Ed.	MKLEPADLO						+ V1AR211XQ11UC01	
			Appr		P6700 Bodyside RH - Robot Cell 2V10			Document type: EFS	Project nr: 22-16150		Page 1
Modification	Date	Name	Original		Replacement of	Replaced by	Scale 1:1				1579

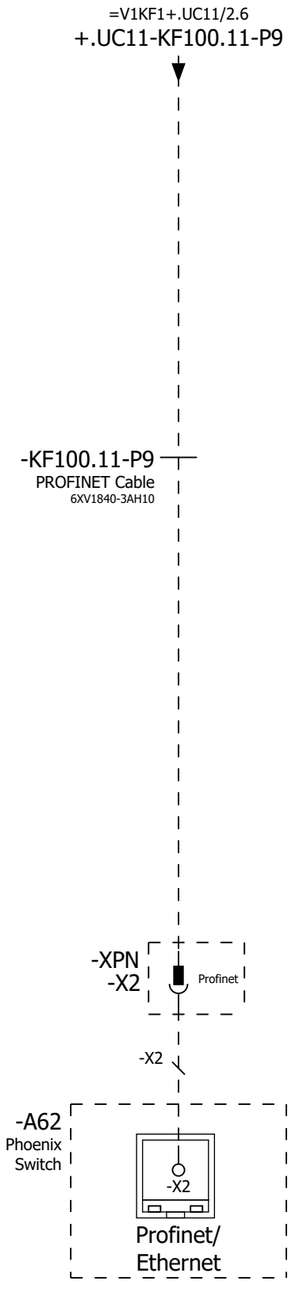

=V1AR211XQ11WC1+.AR211XQ11UC01/1

=V1AR212WC1/1

			Date	1/11/2023	Volvo Trucks North America		Valiant TMS	Incoming Profinet	Drawing name: =2V10&EFS-EL	= V1AR212KF1	
			Ed.	MKLEPADLO						+ V1AR212UC01	
			Appr		P6700 Bodyside RH - Robot Cell 2V10				Document type: EFS	Project nr: 22-16150	Page 1
Modification	Date	Name	Original		Replacement of	Replaced by	Scale 1:1				1579

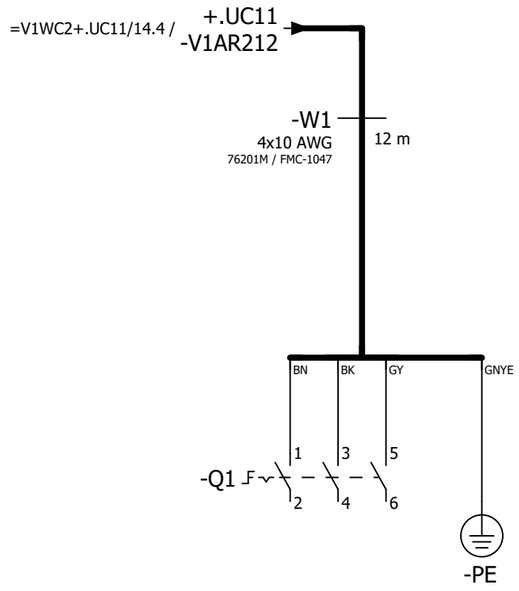

=V1AR212KF1/1

=V1AR212XQ11WC1+.AR212XQ11UC01/1

			Date	1/11/2023	Volvo Trucks North America	Valiant TMS	Incoming power	Drawing name: =2V10&EFS-EL		= V1AR212WC1	
			Ed.	MKLEPADLO						+ V1AR212UC01	
			Appr		P6700 Bodyside RH - Robot Cell 2V10			Document type: EFS	Project nr: 22-16150	Page	1
Modification	Date	Name	Original		Replacement of	Replaced by	Scale 1:1				1579

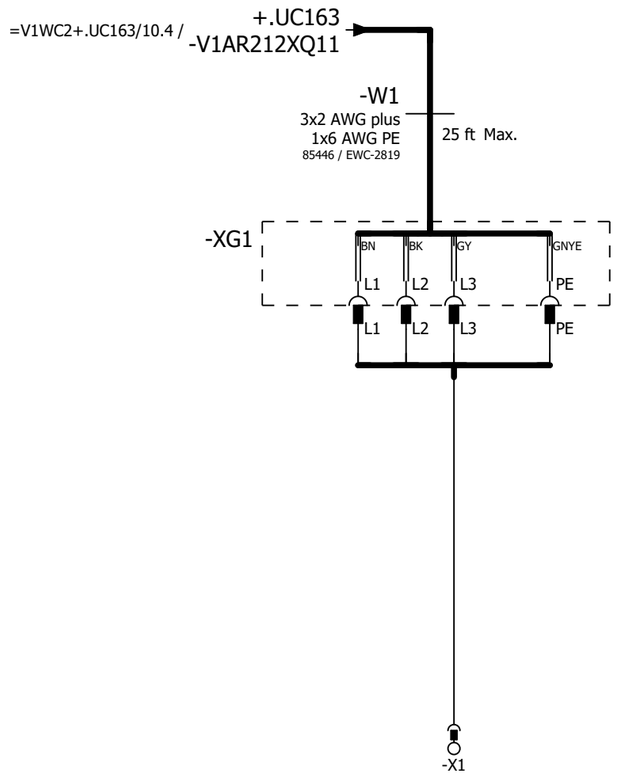

=V1AR212WC1+.AR212UC01/1

=V1BX11WC3+.BX11UC01/1

			Date	1/11/2023	Volvo Trucks North America	Valiant TMS	Incoming power	Drawing name: =2V10&EFS-EL		= V1AR212XQ11WC1	
			Ed.	MKLEPADLO						+ V1AR212XQ11UC01	
			Appr		P6700 Bodyside RH - Robot Cell 2V10			Document type: EFS	Project nr: 22-16150		Page 1
Modification	Date	Name	Original		Replacement of	Replaced by	Scale 1:1				1579

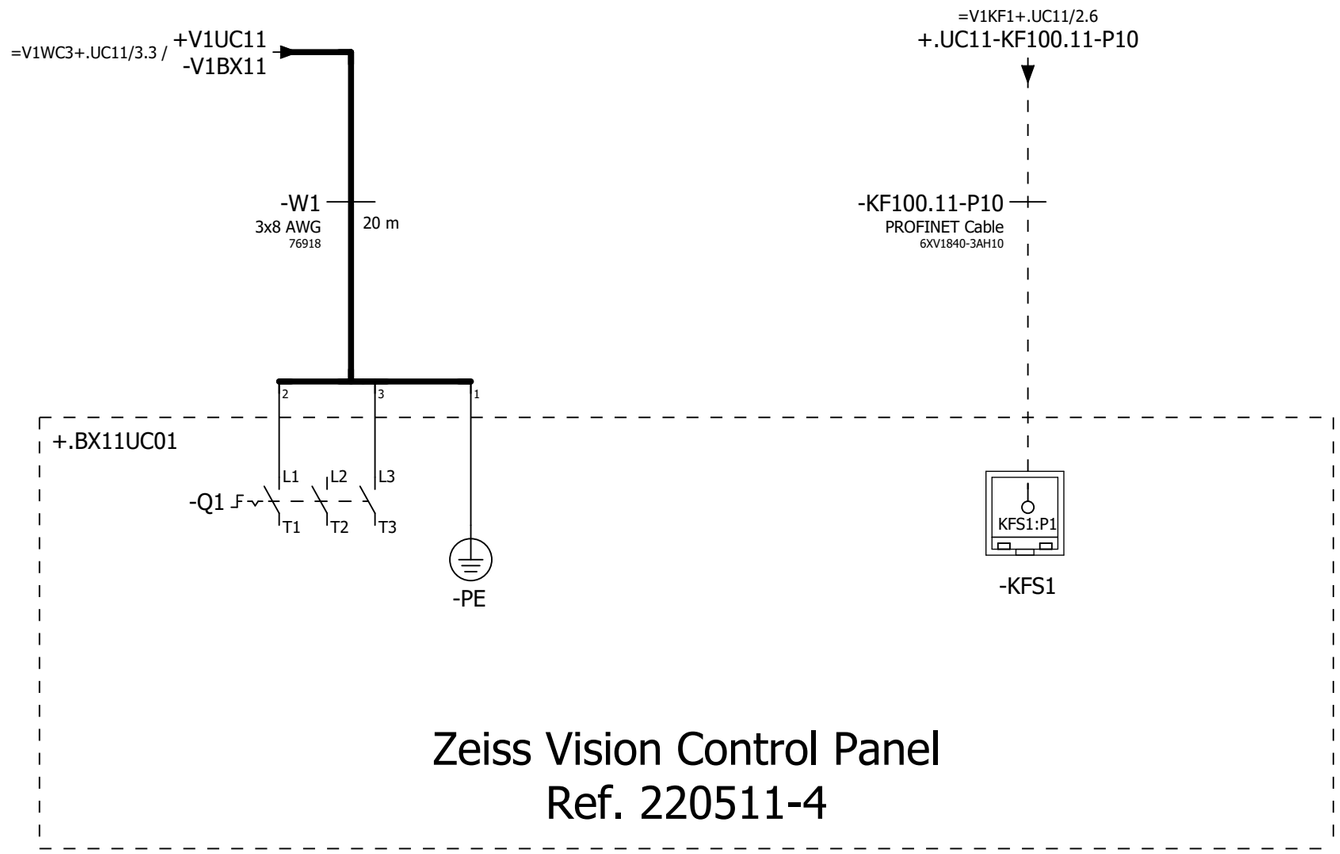

=V1AR212XQ11WC1+.AR212XQ11UC01/1

=V1FQ1+.FQ1/1

			Date	1/11/2023	Volvo Trucks North America	Valiant TMS	Incoming power & profinet	Drawing name: =2V10&EFS-EL		= V1BX11WC3	
			Ed.	MKLEPADLO						+ V1BX11UC01	
			Appr		P6700 Bodyside RH - Robot Cell 2V10			Document type: EFS	Project nr: 22-16150		Page 1
Modification	Date	Name	Original		Replacement of	Replaced by	Scale 1:1				1579

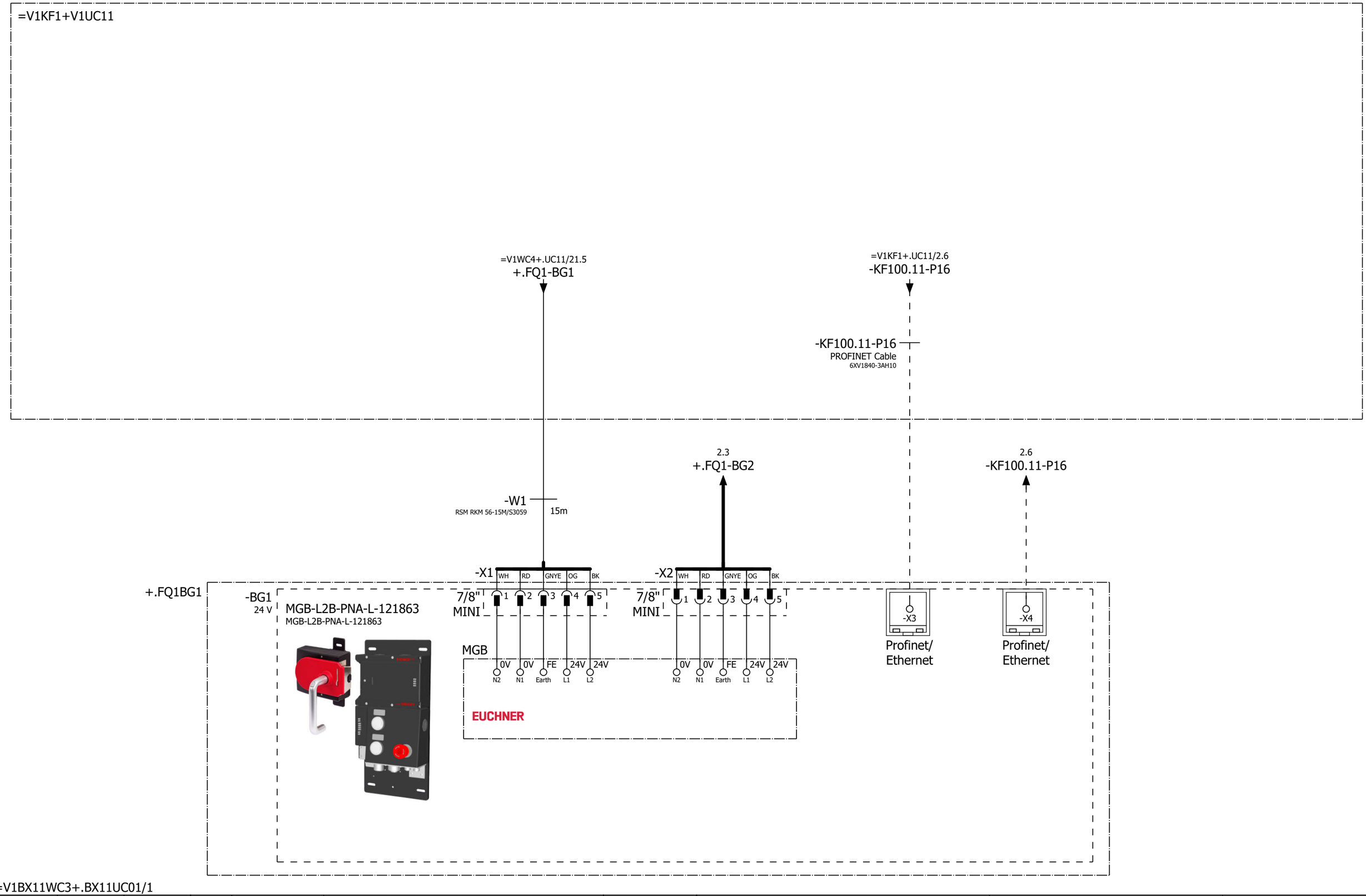

=V1BX11WC3+.BX11UC01/1

2

			Date	1/11/2023	Volvo Trucks North America	Valiant TMS	Door lock sensor -BG1	Drawing name: =2V10&EFS-EL		= V1FQ1	
			Ed.	MKLEPADLO						+ V1FQ1	
			Appr		P6700 Bodyside RH - Robot Cell 2V10			Document type: EFS	Project nr: 22-16150	Page	1
Modification	Date	Name	Original		Replacement of / Replaced by	Scale 1:1					1579

=V1KF1+V1UC11

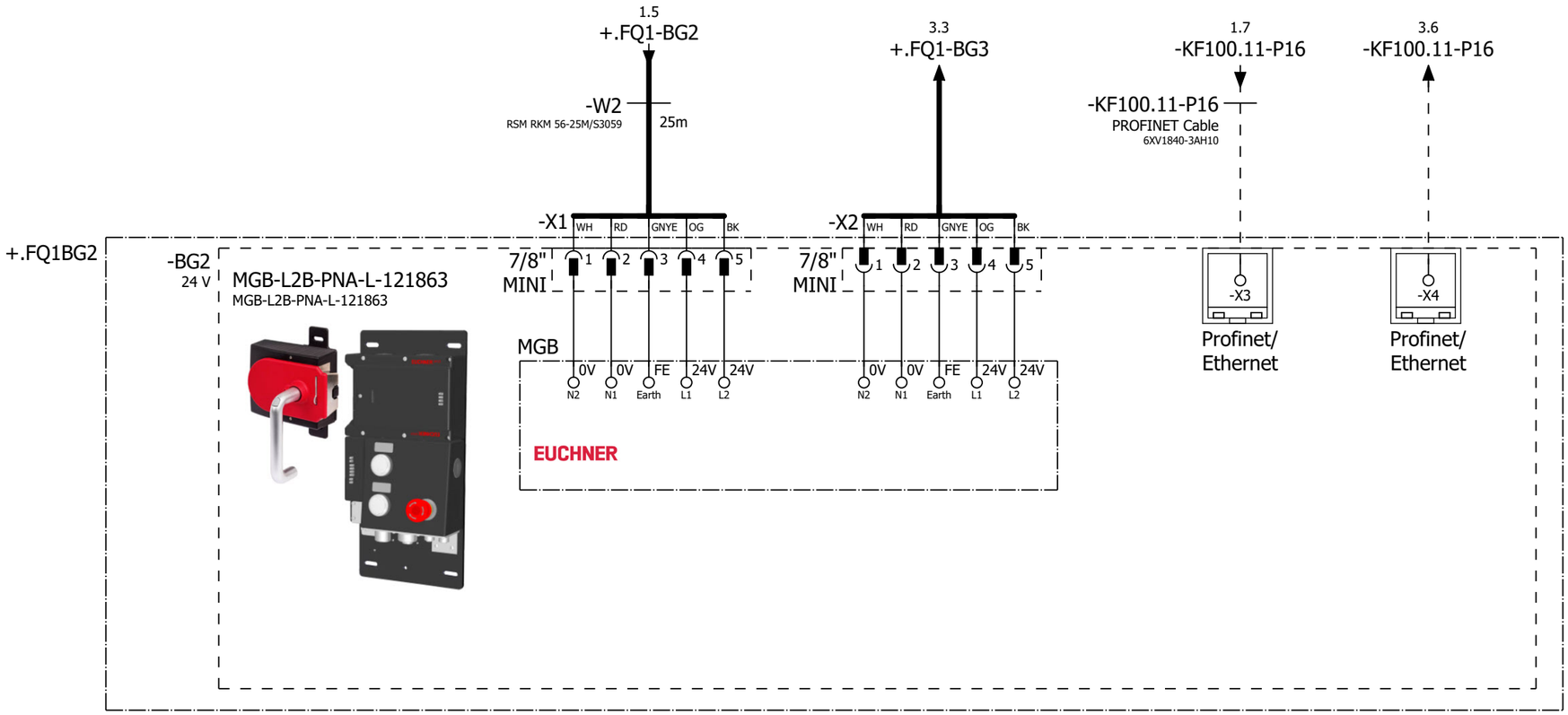

1 3

			Date	1/11/2023	Volvo Trucks North America	Valiant TMS	Door lock sensor -BG2	Drawing name: =2V10&EFS-EL		= V1FQ1	
			Ed.	MKLEPADLO						+ V1FQ1	
			Appr		P6700 Bodyside RH - Robot Cell 2V10			Document type: EFS	Project nr: 22-16150		Page 2
Modification	Date	Name	Original		Replacement of / Replaced by	Scale 1:1					1579

=V1KF1+V1UC11

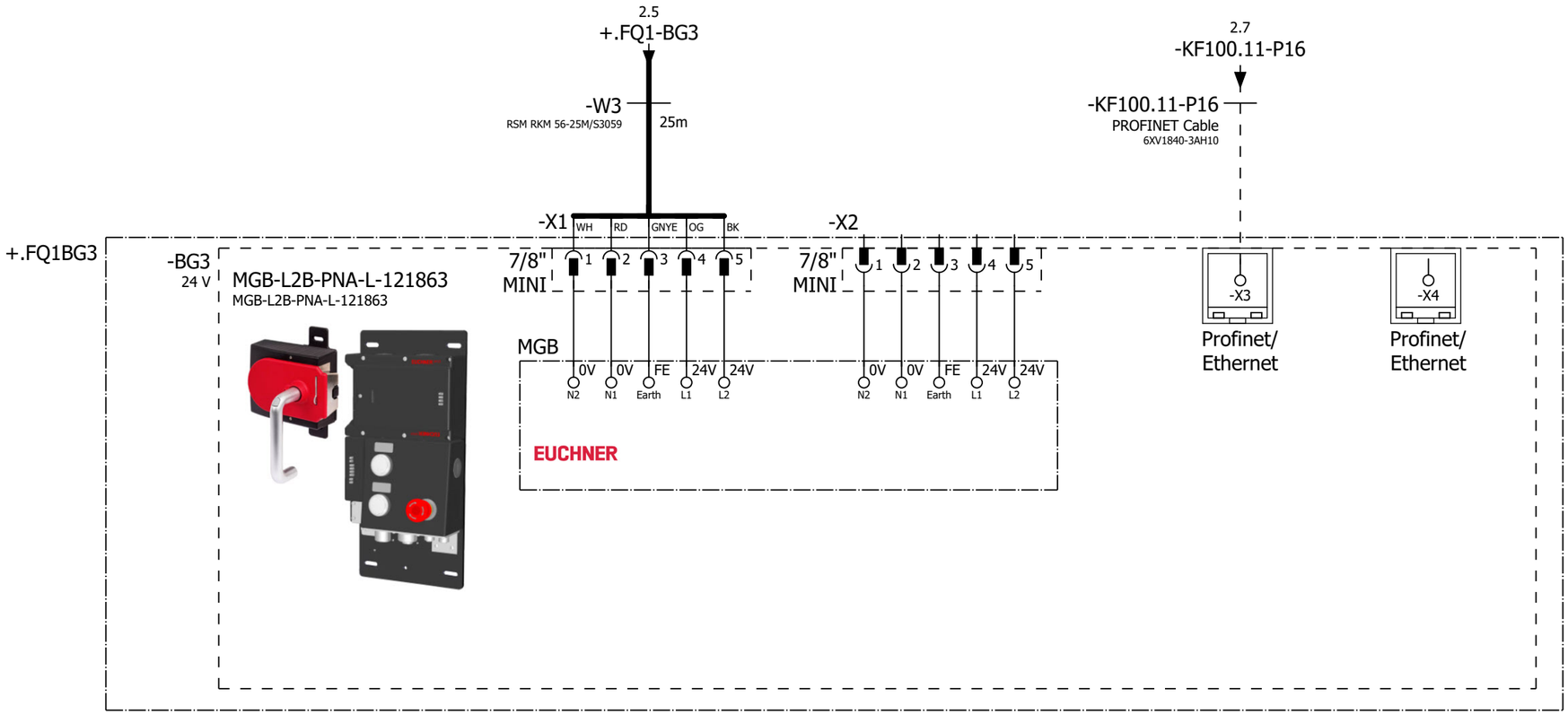

2

4

			Date	1/11/2023	Volvo Trucks North America	Valiant TMS	Door lock sensor -BG3	Drawing name: =2V10&EFS-EL		= V1FQ1	
			Ed.	MKLEPADLO						+ V1FQ1	
			Appr		P6700 Bodyside RH - Robot Cell 2V10			Document type: EFS	Project nr: 22-16150		Page 3
Modification	Date	Name	Original		Replacement of	Replaced by	Scale 1:1				1579

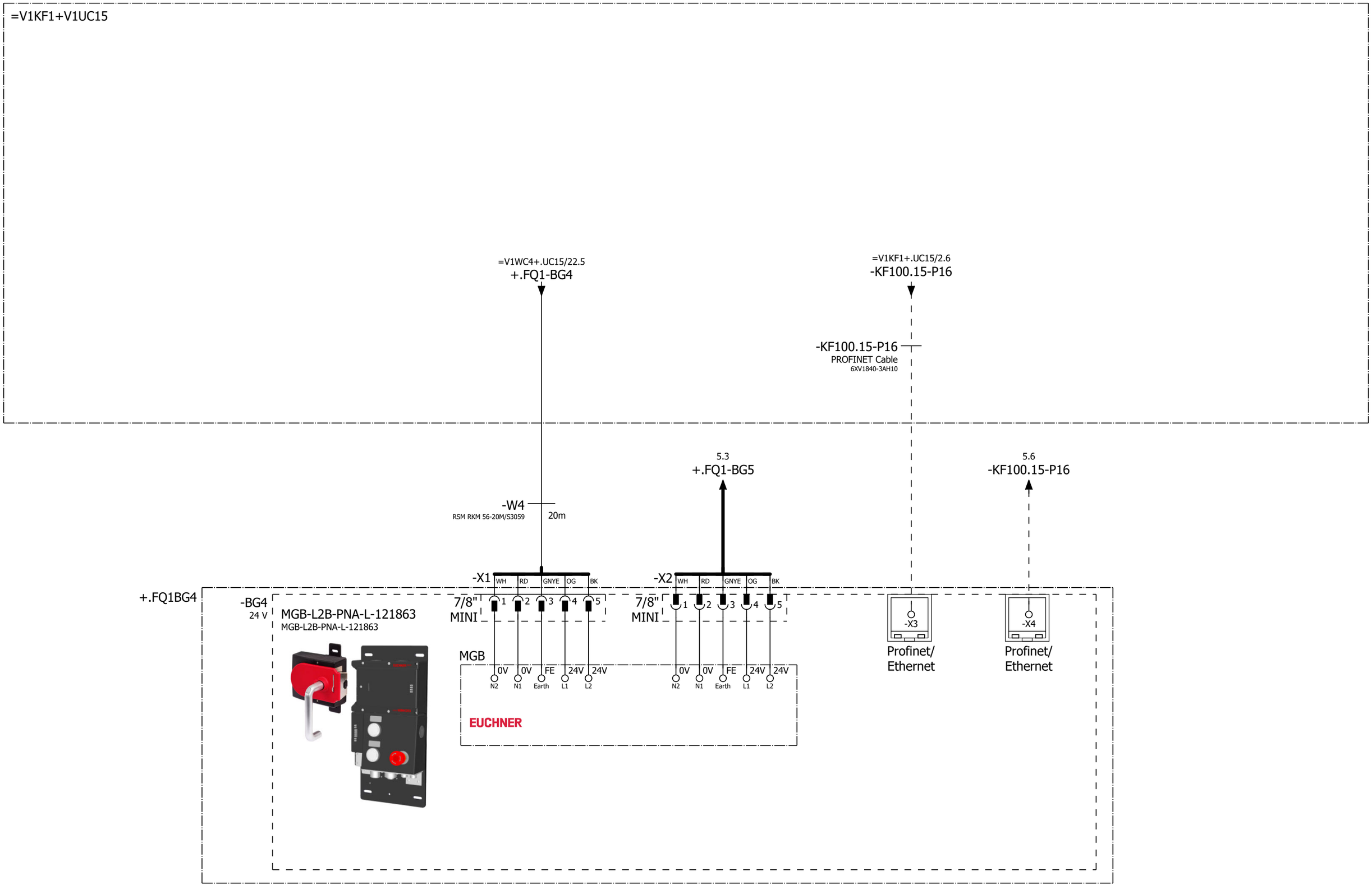

3 5

			Date	1/11/2023	Volvo Trucks North America	Valiant TMS	Door lock sensor -BG4	Drawing name: =2V10&EFS-EL		= V1FQ1	
			Ed.	MKLEPADLO						+ V1FQ1	
			Appr		P6700 Bodyside RH - Robot Cell 2V10			Document type: EFS	Project nr: 22-16150	Page	4
Modification	Date	Name	Original		Replacement of	Replaced by	Scale 1:1				1579

=V1KF1+V1UC12

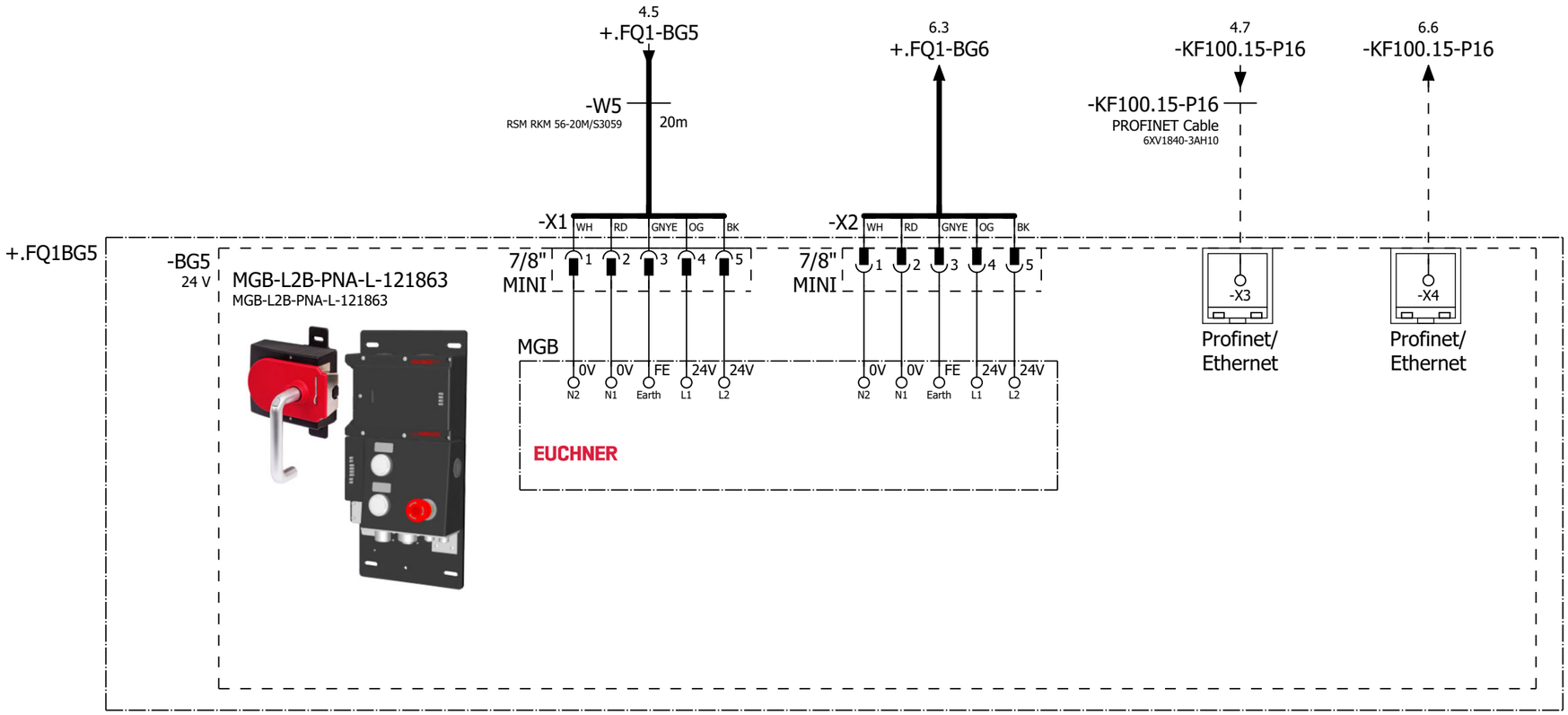

4

6

			Date	1/11/2023	Volvo Trucks North America	Valiant TMS	Door lock sensor -BG5	Drawing name: =2V10&EFS-EL		= V1FQ1	
			Ed.	MKLEPADLO						+ V1FQ1	
			Appr		P6700 Bodyside RH - Robot Cell 2V10			Document type: EFS	Project nr: 22-16150		Page 5
Modification	Date	Name	Original		Replacement of / Replaced by	Scale 1:1					1579

=V1KF1+V1UC12

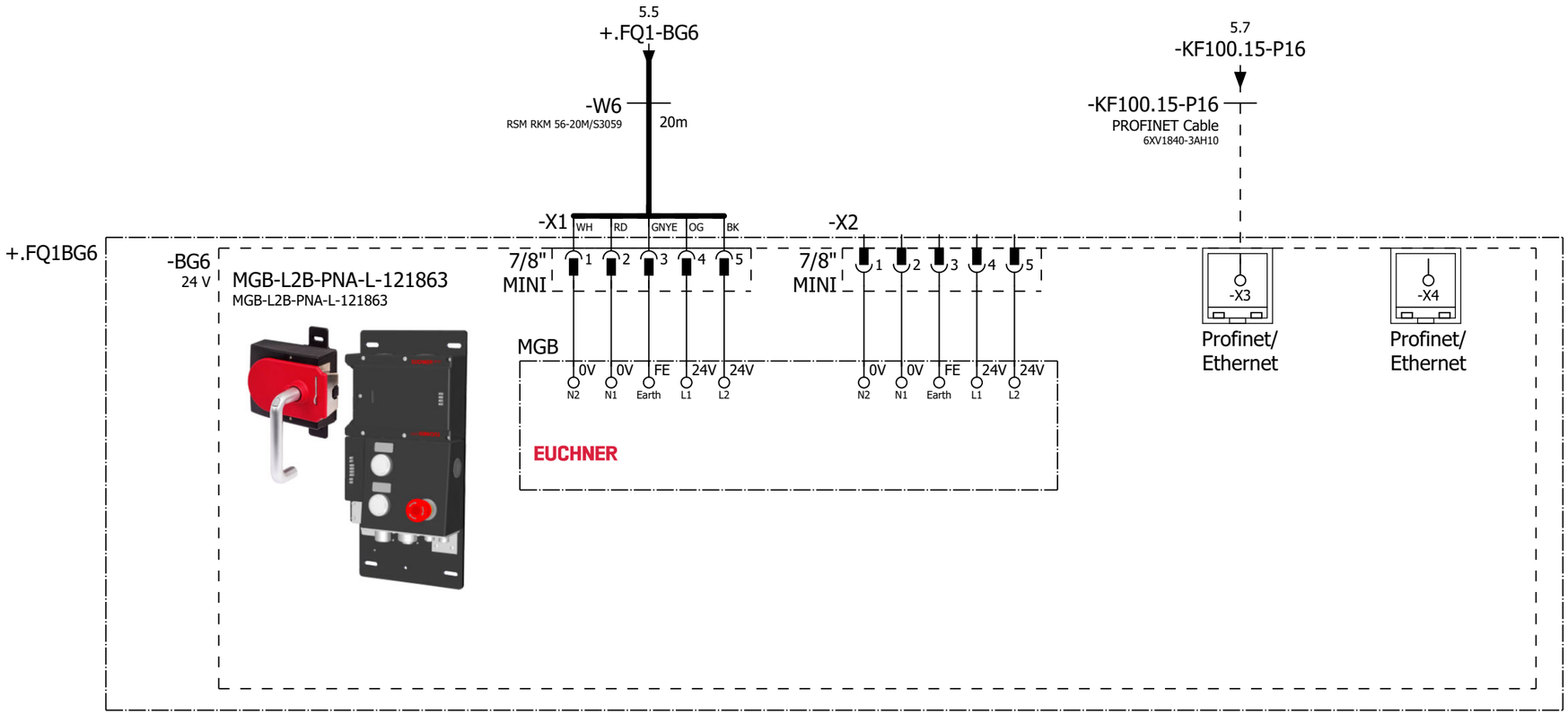

5

8

			Date	1/11/2023	Volvo Trucks North America	Valiant TMS	Door lock sensor -BG6	Drawing name: =2V10&EFS-EL	= V1FQ1	
			Ed.	MKLEPADLO					+ V1FQ1	
			Appr		P6700 Bodyside RH - Robot Cell 2V10			Document type: EFS	Project nr: 22-16150	Page 6
Modification	Date	Name	Original		Replacement of / Replaced by	Scale 1:1				1579

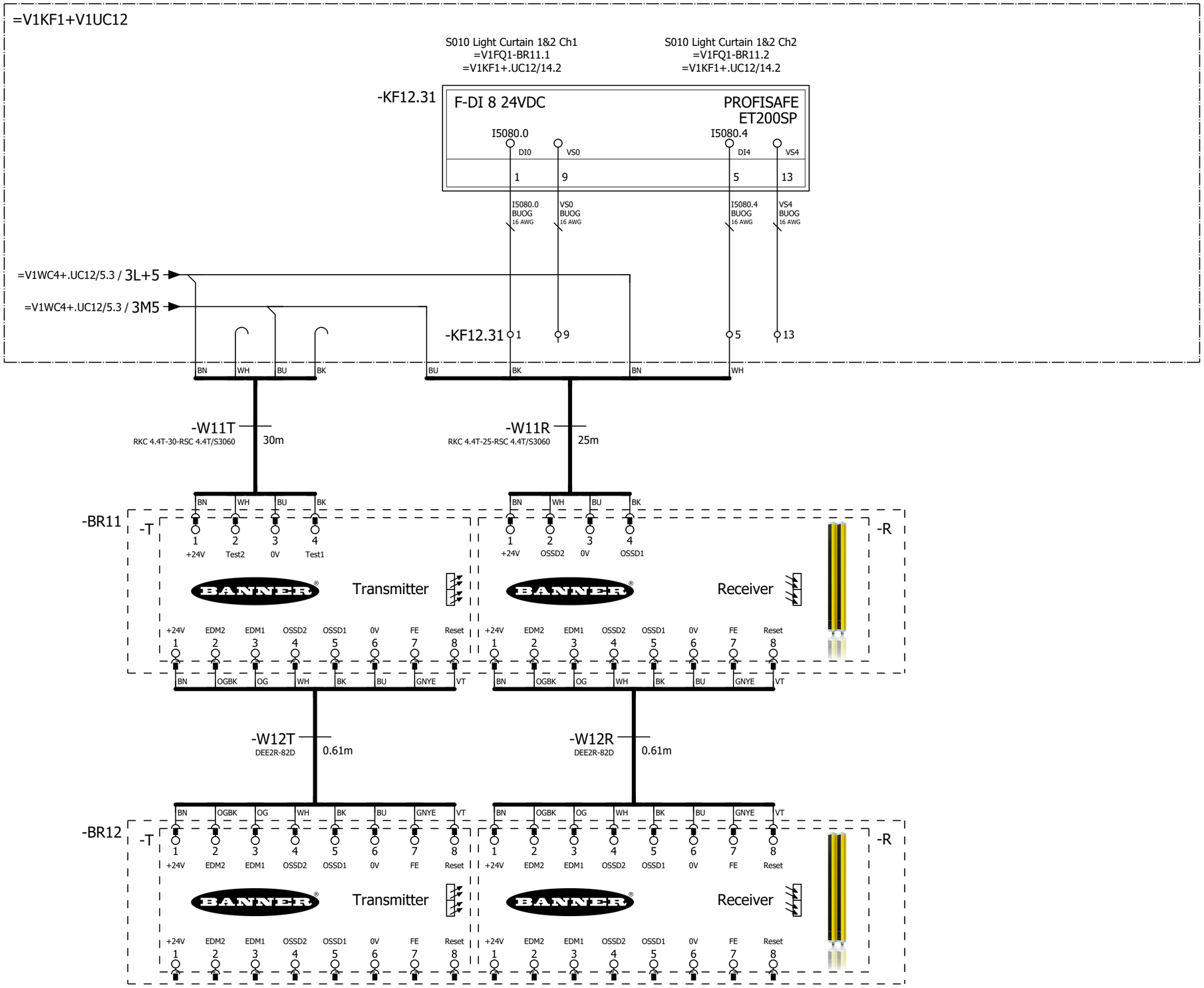

6 9

			Date	1/11/2023	Volvo Trucks North America	Valiant TMS	S010 Light Curtain	Drawing name: =2V10&EFS-EL	= V1FQ1		
			Ed.	MKLEPADLO					+ V1FQ1		
			Appr		P6700 Bodyside RH - Robot Cell 2V10			Document type: EFS	Project nr: 22-16150	Page	8
Modification	Date	Name	Original		Replacement of / Replaced by	Scale 1:1					1579

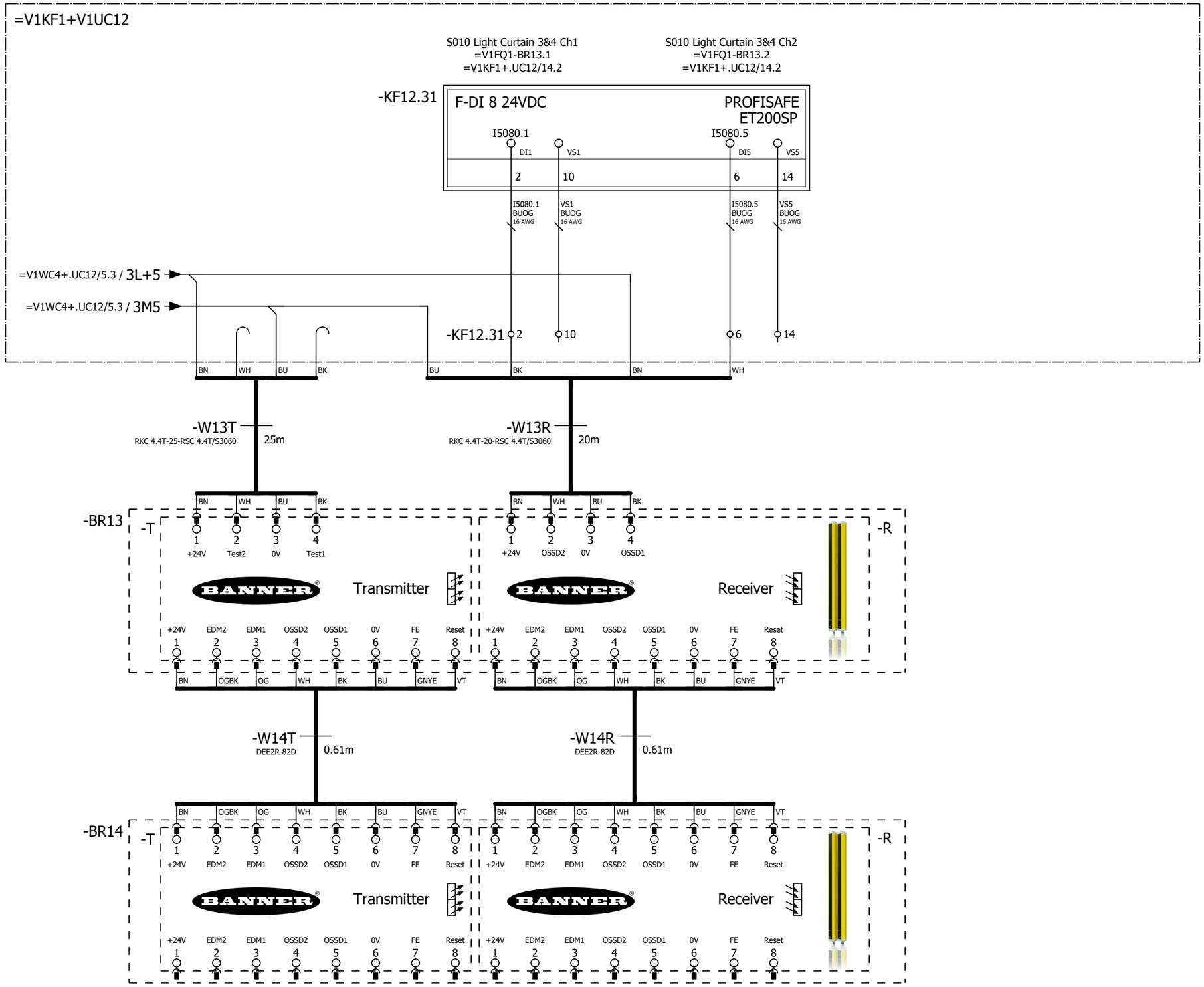

8

10

			Date	1/11/2023	Volvo Trucks North America	Valiant TMS	S010 Light Curtain	Drawing name: =2V10&EFS-EL		= V1FQ1	
			Ed.	MKLEPADLO						+ V1FQ1	
			Appr		P6700 Bodyside RH - Robot Cell 2V10			Document type: EFS	Project nr: 22-16150		Page 9
Modification	Date	Name	Original		Replacement of / Replaced by	Scale 1:1					1579

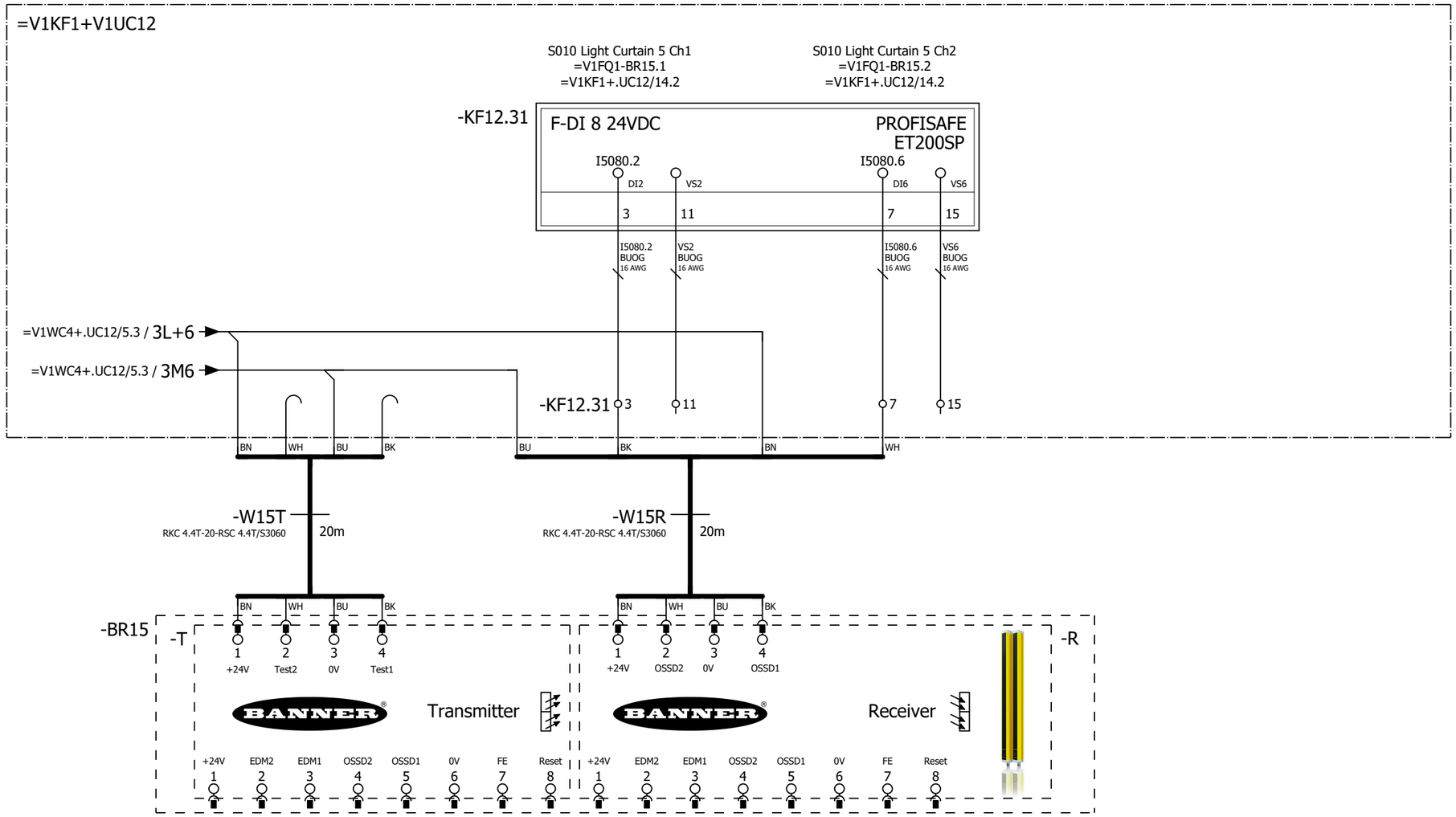

9

11

			Date	1/11/2023	Volvo Trucks North America	Valiant TMS	S010 Light Curtain	Drawing name: =2V10&EFS-EL		= V1FQ1	
			Ed.	MKLEPADLO						+ V1FQ1	
			Appr		P6700 Bodyside RH - Robot Cell 2V10			Document type: EFS	Project nr: 22-16150	Page	10
Modification	Date	Name	Original		Replacement of / Replaced by	Scale 1:1					1579

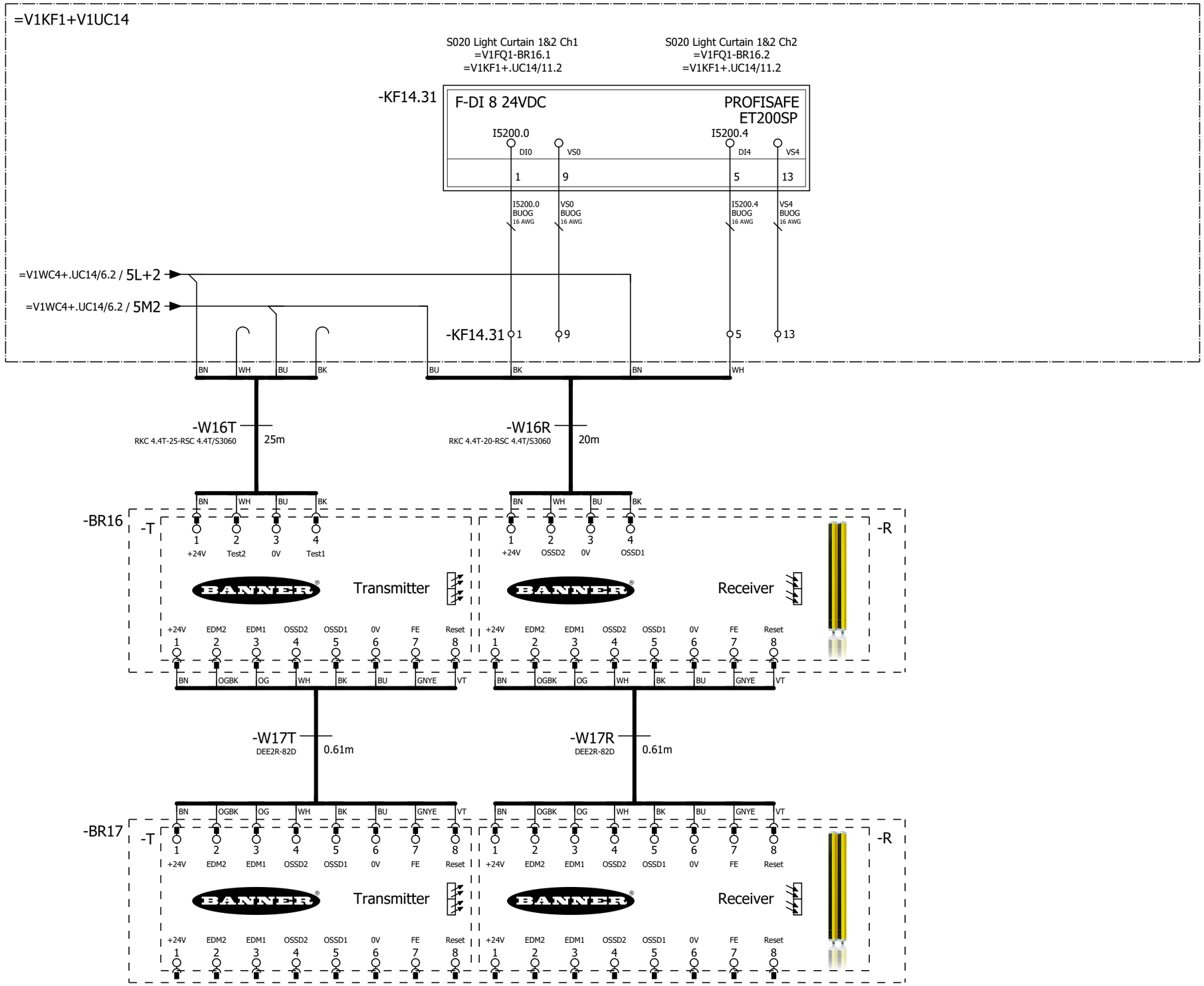

			Date	1/11/2023	Volvo Trucks North America	Valiant TMS	S020 Light Curtain	Drawing name: =2V10&EFS-EL	= V1FQ1		
			Ed.	MKLEPADLO					+ V1FQ1		
			Appr		P6700 Bodyside RH - Robot Cell 2V10			Document type: EFS	Project nr: 22-16150	Page	11
Modification	Date	Name	Original		Replacement of / Replaced by	Scale 1:1					1579

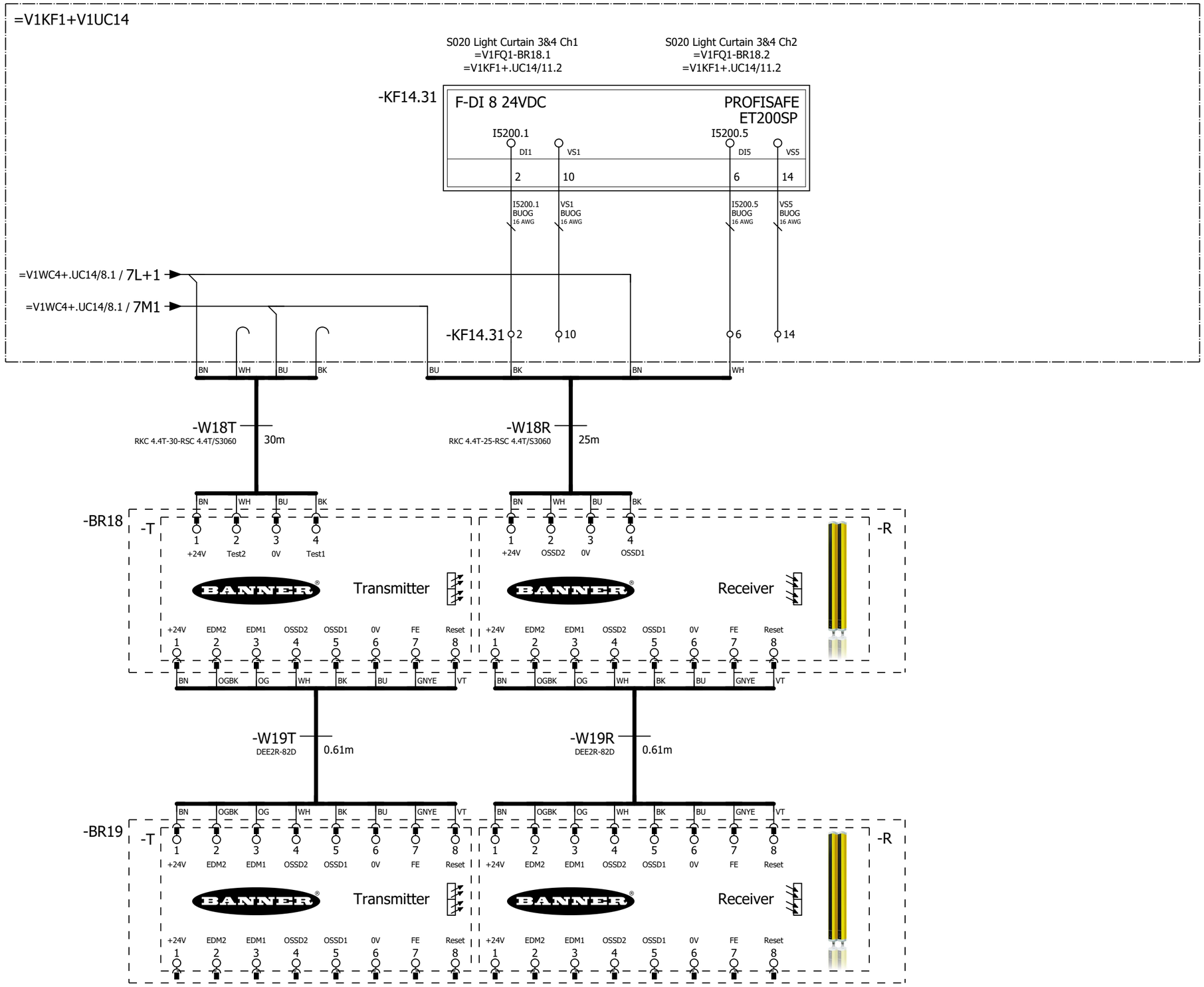

11

13

			Date	1/11/2023	Volvo Trucks North America	Valiant TMS	S020 Light Curtain	Drawing name: =2V10&EFS-EL		= V1FQ1	
			Ed.	MKLEPADLO						+ V1FQ1	
			Appr		P6700 Bodyside RH - Robot Cell 2V10			Document type: EFS	Project nr: 22-16150	Page	12
Modification	Date	Name	Original		Replacement of / Replaced by	Scale 1:1					1579

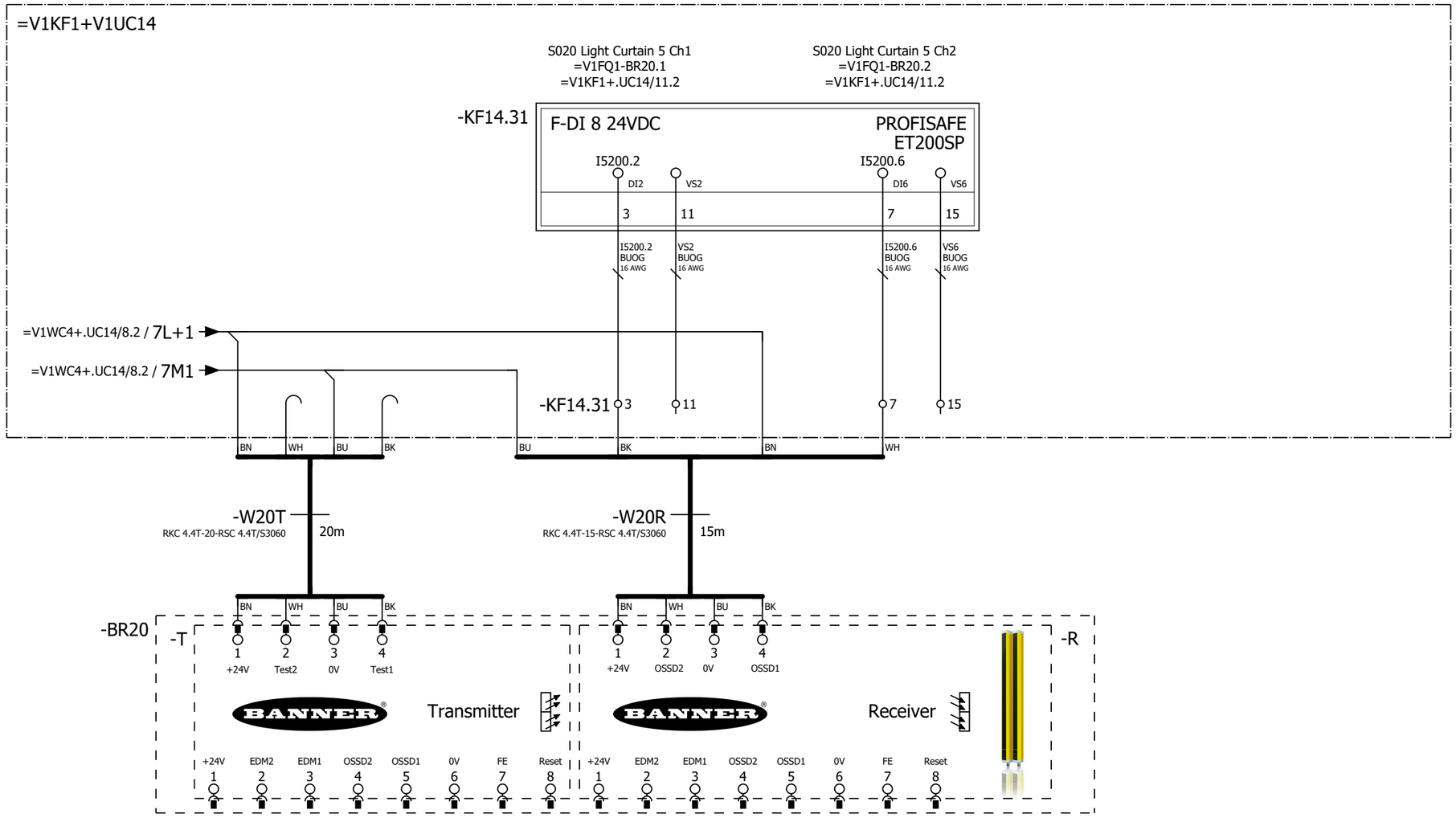

+.UC11/1

			Date	1/11/2023	Volvo Trucks North America	Valiant TMS	S020 Light Curtain	Drawing name: =2V10&EFS-EL	= V1FQ1		
			Ed.	MKLEPADLO					+ V1FQ1		
			Appr		P6700 Bodyside RH - Robot Cell 2V10			Document type: EFS	Project nr: 22-16150	Page	13
Modification	Date	Name	Original		Replacement of / Replaced by	Scale 1:1					1579

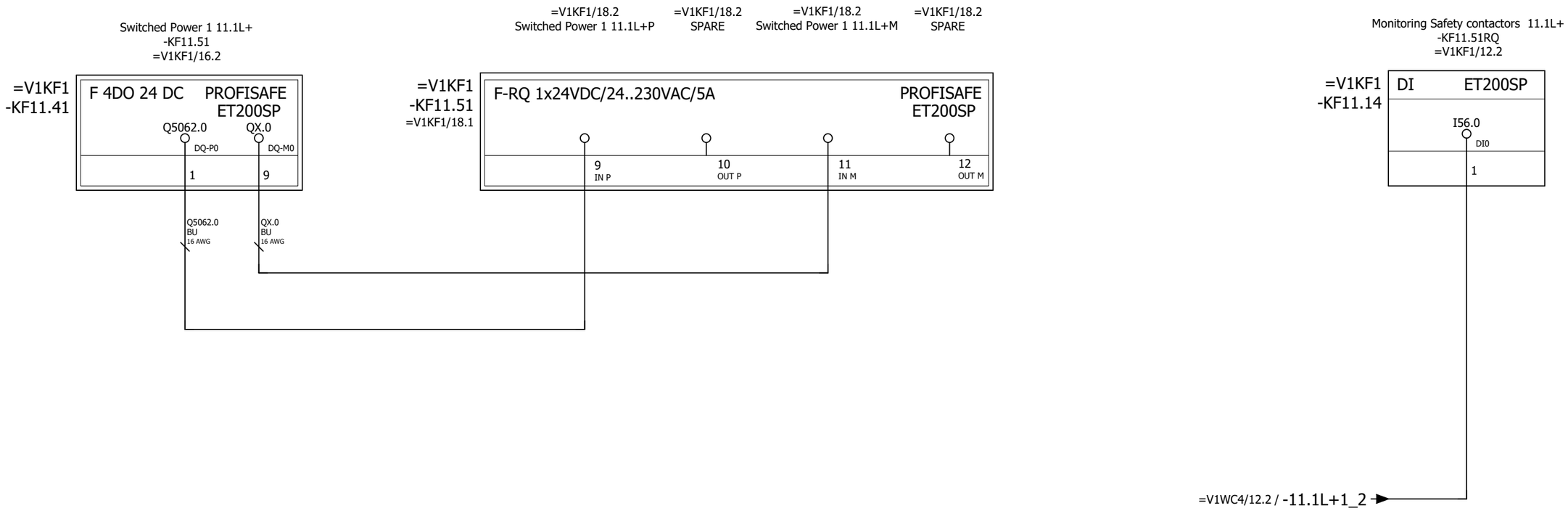

+.FQ1/13

2

			Date	1/11/2023	Volvo Trucks North America	Valiant TMS	Safety power monitoring RQ - KF11.51	Drawing name: =2V10&EFS-EL	= V1FQ1	
			Ed.	MKLEPADLO					+ V1UC11	
			Appr		P6700 Bodyside RH - Robot Cell 2V10			Document type: EFS	Project nr: 22-16150	Page 1
Modification	Date	Name	Original		Replacement of / Replaced by	Scale 1:1				1579

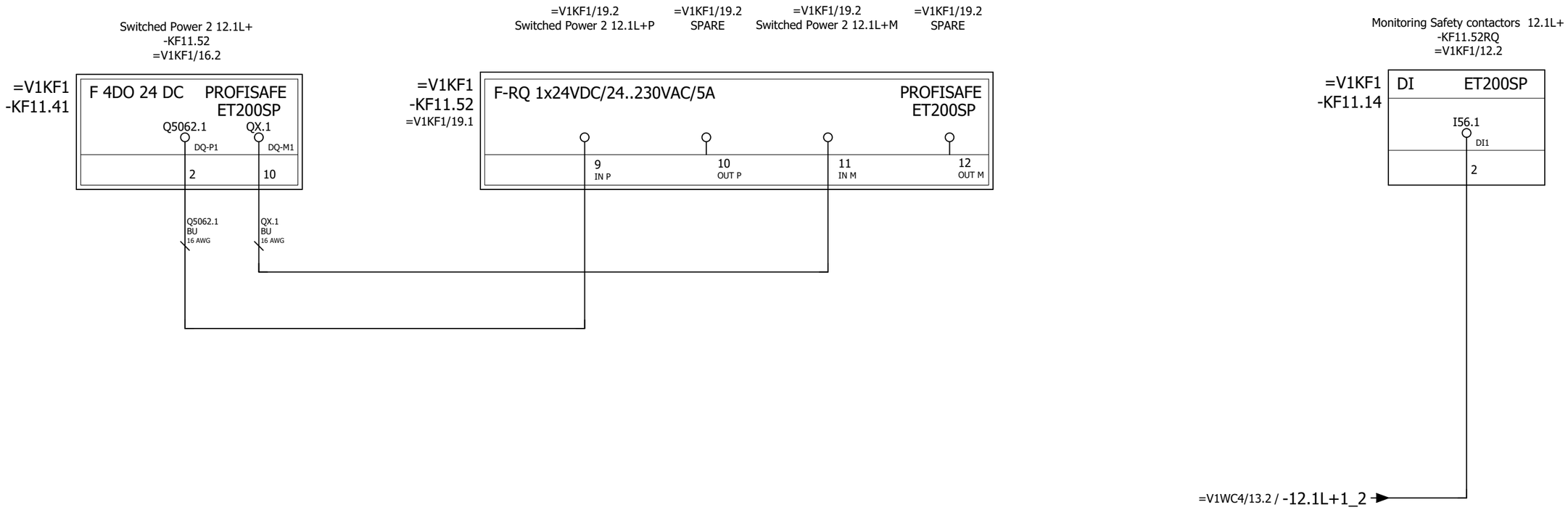

1 3

			Date	1/11/2023	Volvo Trucks North America	Valiant TMS	Safety power monitoring RQ - KF11.52	Drawing name: =2V10&EFS-EL		= V1FQ1	
			Ed.	MKLEPADLO						+ V1UC11	
			Appr		P6700 Bodyside RH - Robot Cell 2V10			Document type: EFS	Project nr: 22-16150		Page 2
Modification	Date	Name	Original		Replacement of / Replaced by	Scale 1:1					1579

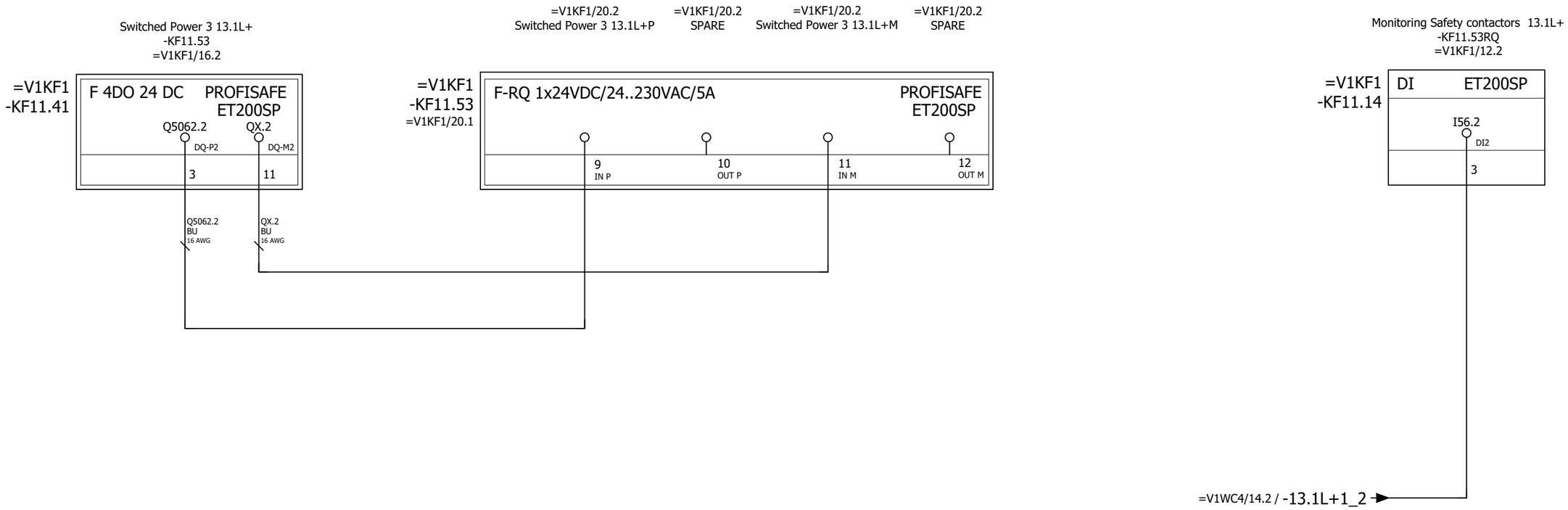

2

4

			Date	1/11/2023	Volvo Trucks North America	Valiant TMS	Safety power monitoring RQ - KF11.53	Drawing name: =2V10&EFS-EL		= V1FQ1	
			Ed.	MKLEPADLO						+ V1UC11	
			Appr		P6700 Bodyside RH - Robot Cell 2V10			Document type: EFS	Project nr: 22-16150		Page 3
Modification	Date	Name	Original		Replacement of / Replaced by	Scale 1:1					1579

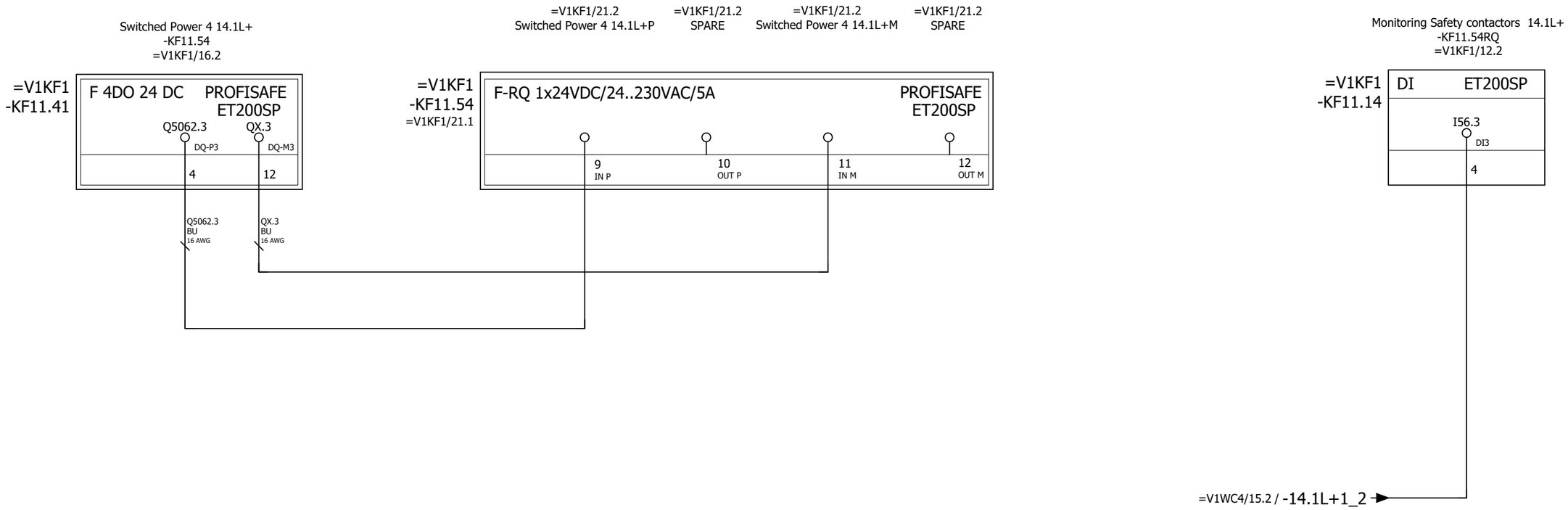

3

+.UC12/1

			Date	1/11/2023	Volvo Trucks North America	Valiant TMS	Safety power monitoring RQ - KF11.54	Drawing name: =2V10&EFS-EL		= V1FQ1	
			Ed.	MKLEPADLO						+ V1UC11	
			Appr		P6700 Bodyside RH - Robot Cell 2V10	Scale 1:1		Document type: EFS	Project nr: 22-16150		Page 4 / 1579
Modification	Date	Name	Original		Replacement of	Replaced by					

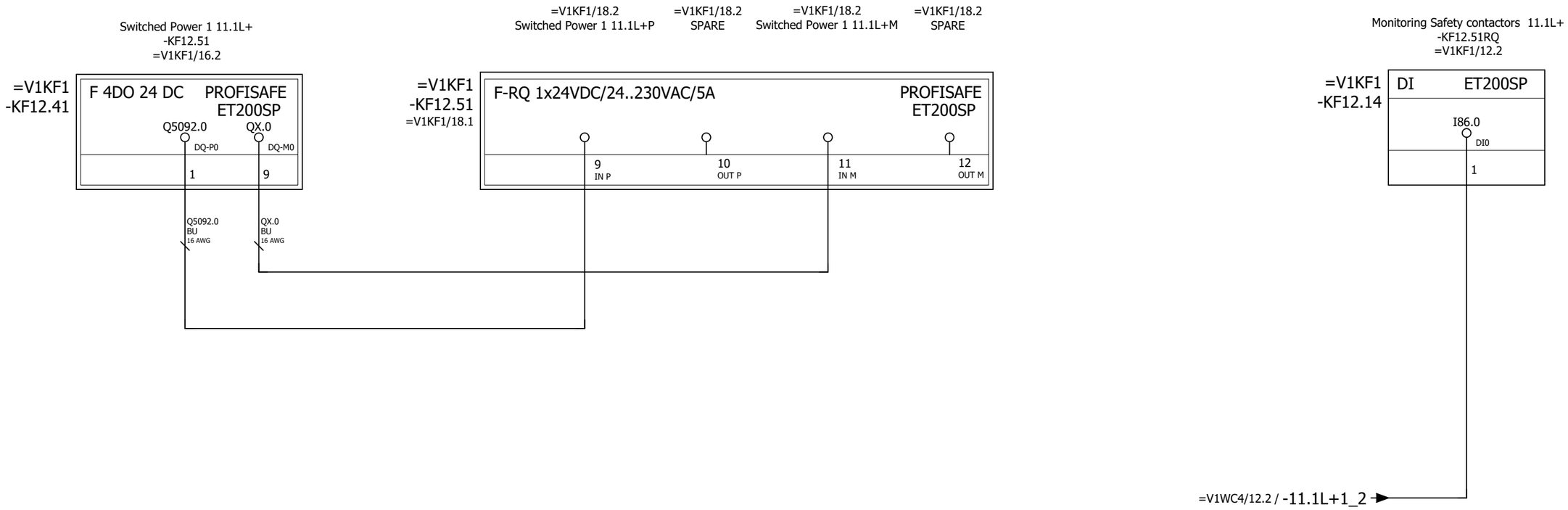

+.UC11/4

2

			Date	1/11/2023	Volvo Trucks North America	Valiant TMS	Safety power monitoring RQ - KF12.51	Drawing name: =2V10&EFS-EL	= V1FQ1	
			Ed.	MKLEPADLO					+ V1UC12	
			Appr		P6700 Bodyside RH - Robot Cell 2V10	Scale 1:1		Document type: EFS	Project nr: 22-16150	Page 1 / 1579
Modification	Date	Name	Original		Replacement of	Replaced by				

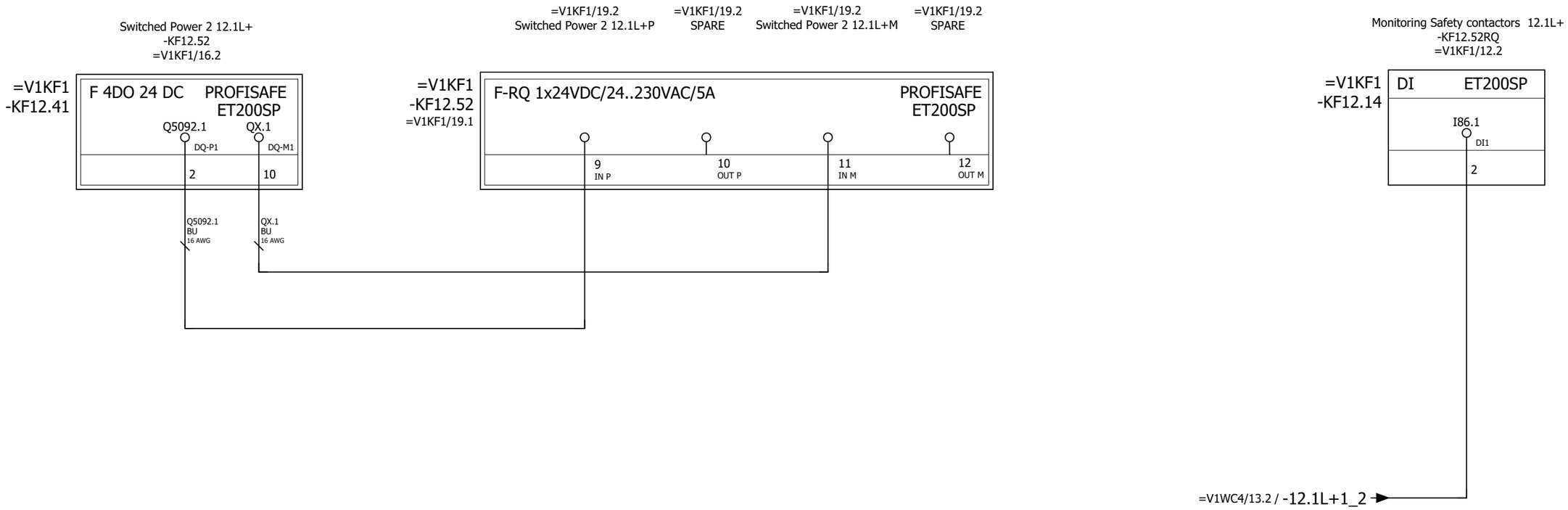

1

3

			Date	1/11/2023	Volvo Trucks North America	Valiant TMS	Safety power monitoring RQ - KF12.52	Drawing name: =2V10&EFS-EL		= V1FQ1	
			Ed.	MKLEPADLO						+ V1UC12	
			Appr		P6700 Bodyside RH - Robot Cell 2V10			Document type: EFS	Project nr: 22-16150		Page 2
Modification	Date	Name	Original		Replacement of / Replaced by	Scale 1:1					1579

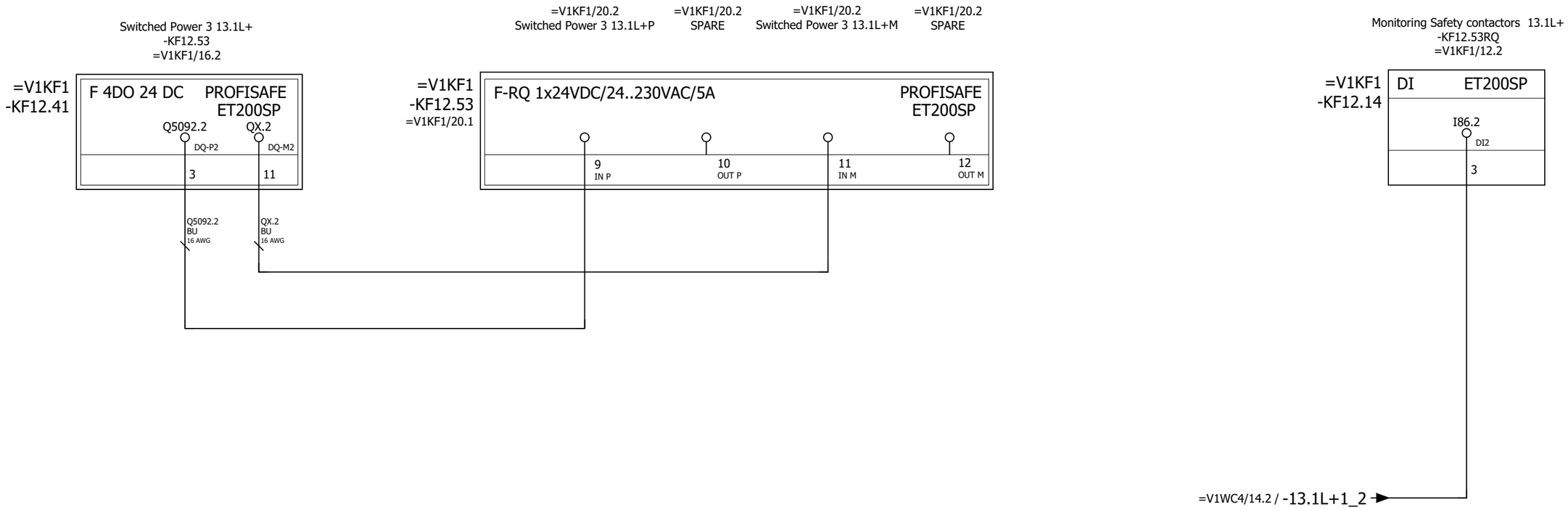

2

4

			Date	1/11/2023	Volvo Trucks North America	Valiant TMS	Safety power monitoring RQ - KF12.53	Drawing name: =2V10&EFS-EL		= V1FQ1	
			Ed.	MKLEPADLO						+ V1UC12	
			Appr		P6700 Bodyside RH - Robot Cell 2V10			Document type: EFS	Project nr: 22-16150		Page 3
Modification	Date	Name	Original		Replacement of / Replaced by	Scale 1:1					1579

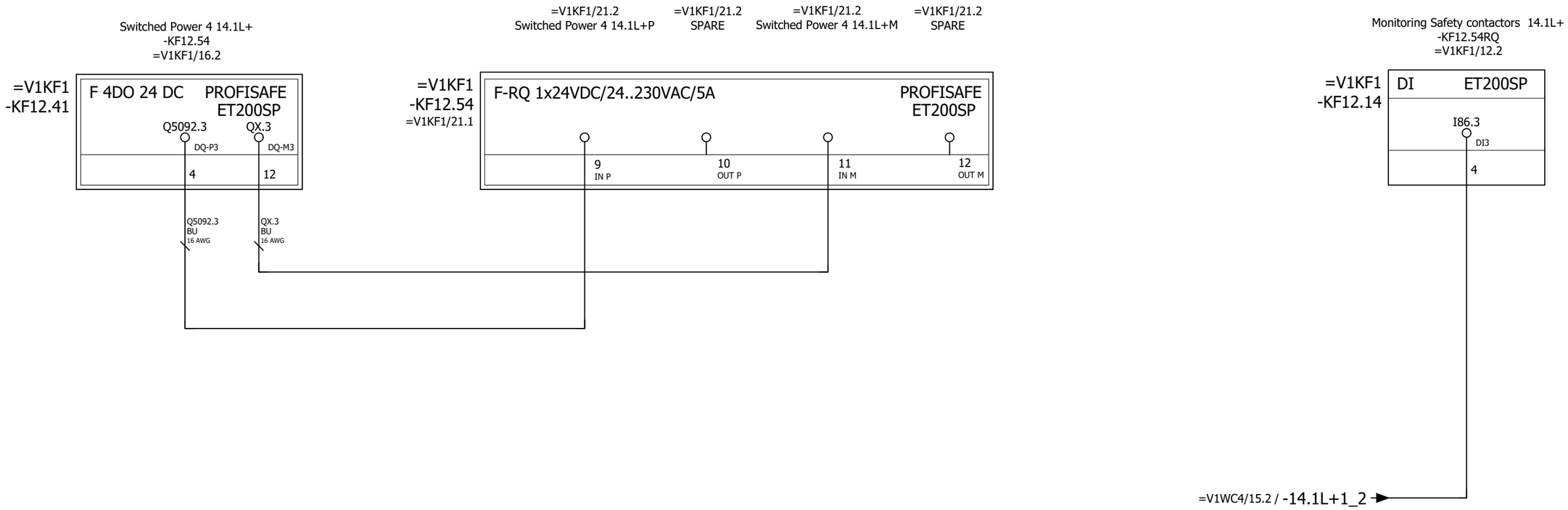

3

+.UC14/1

			Date	1/11/2023	Volvo Trucks North America	Valiant TMS	Safety power monitoring RQ - KF12.54	Drawing name: =2V10&EFS-EL		= V1FQ1	
			Ed.	MKLEPADLO						+ V1UC12	
			Appr		P6700 Bodyside RH - Robot Cell 2V10			Document type: EFS	Project nr: 22-16150		Page 4
Modification	Date	Name	Original		Replacement of / Replaced by	Scale 1:1					1579

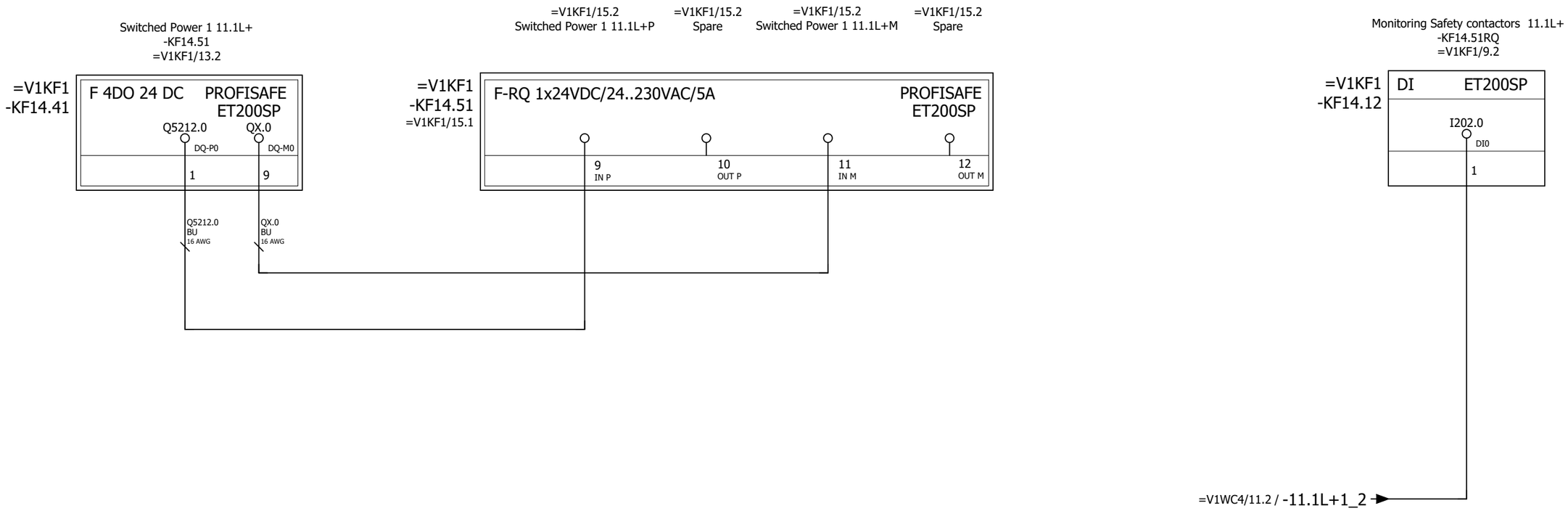

+.UC12/4

2

			Date	1/11/2023	Volvo Trucks North America	Valiant TMS	Safety power monitoring RQ - KF14.51	Drawing name: =2V10&EFS-EL		= V1FQ1	
			Ed.	MKLEPADLO						+ V1UC14	
			Appr		P6700 Bodyside RH - Robot Cell 2V10			Document type: EFS	Project nr: 22-16150		Page 1
Modification	Date	Name	Original		Replacement of / Replaced by	Scale 1:1					1579

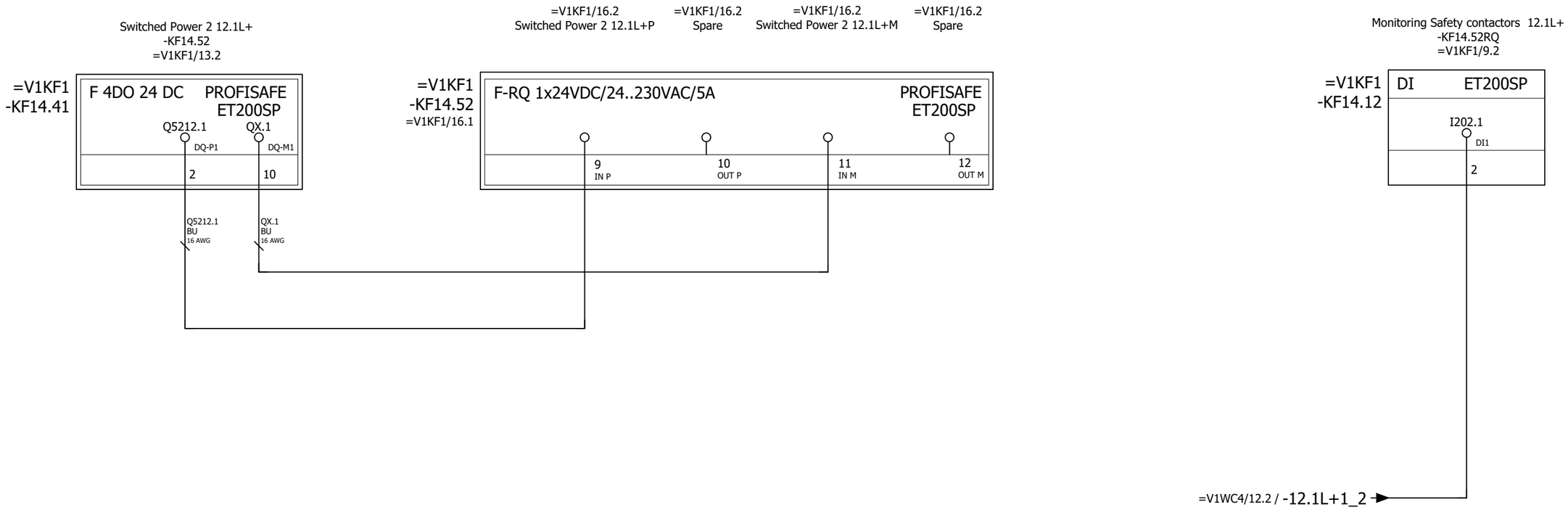

1 3

			Date	1/11/2023	Volvo Trucks North America	Valiant TMS	Safety power monitoring RQ - KF14.52	Drawing name: =2V10&EFS-EL	= V1FQ1	
			Ed.	MKLEPADLO					+ V1UC14	
			Appr		P6700 Bodyside RH - Robot Cell 2V10			Document type: EFS	Project nr: 22-16150	Page 2
Modification	Date	Name	Original		Replacement of / Replaced by	Scale 1:1				1579

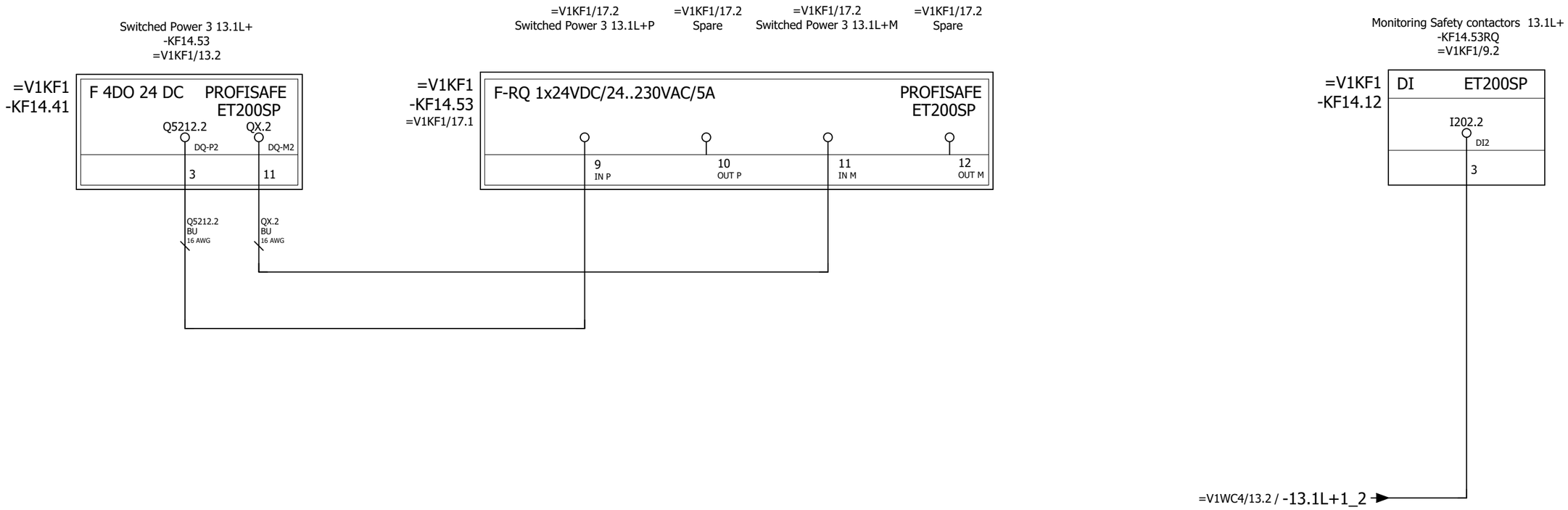

2

4

			Date	1/11/2023	Volvo Trucks North America	Valiant TMS	Safety power monitoring RQ - KF14.53	Drawing name: =2V10&EFS-EL		= V1FQ1	
			Ed.	MKLEPADLO						+ V1UC14	
			Appr		P6700 Bodyside RH - Robot Cell 2V10			Document type: EFS	Project nr: 22-16150		Page 3
Modification	Date	Name	Original		Replacement of / Replaced by	Scale 1:1					1579

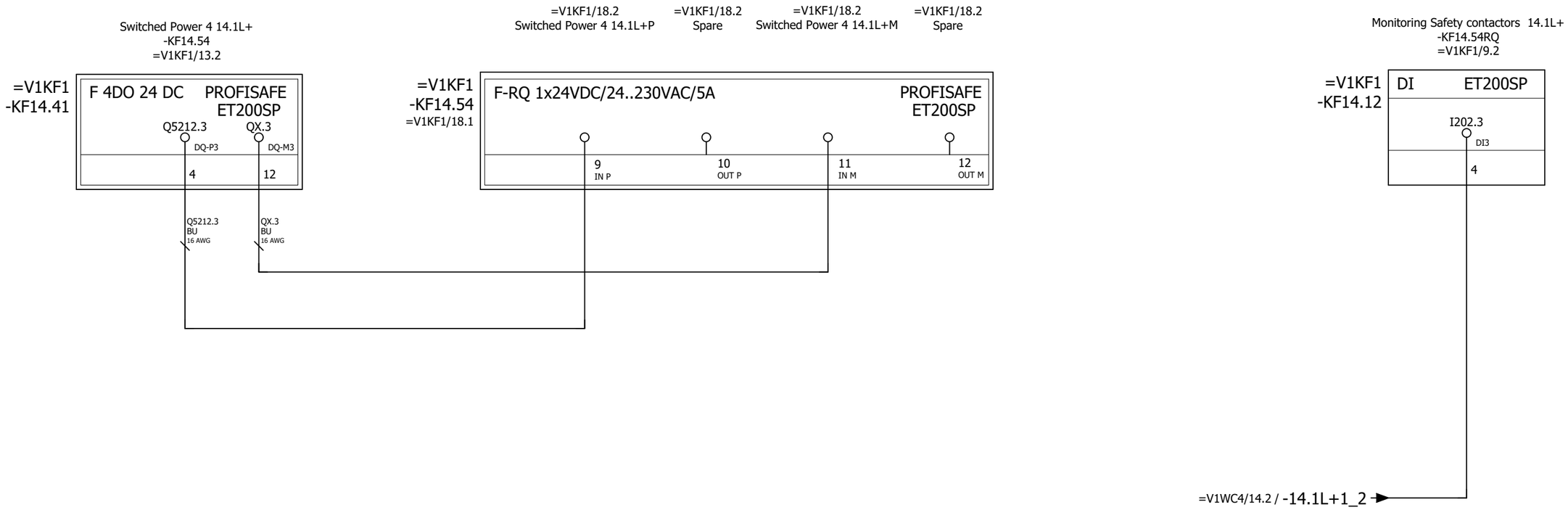

3

+.UC15/1

			Date	1/11/2023	Volvo Trucks North America	Valiant TMS	Safety power monitoring RQ - KF14.54	Drawing name: =2V10&EFS-EL		= V1FQ1	
			Ed.	MKLEPADLO						+ V1UC14	
			Appr		P6700 Bodyside RH - Robot Cell 2V10			Document type: EFS	Project nr: 22-16150		Page 4
Modification	Date	Name	Original		Replacement of / Replaced by	Scale 1:1					1579

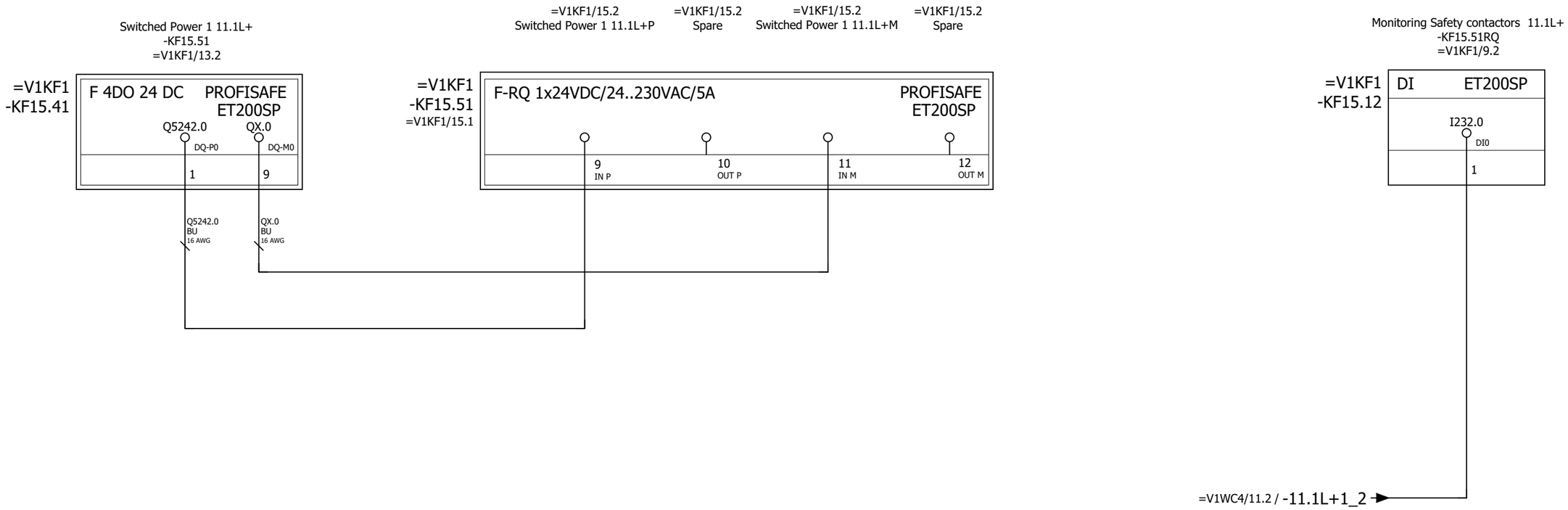

+.UC14/4

2

			Date	1/11/2023	Volvo Trucks North America	Valiant TMS	Safety power monitoring RQ - KF15.51	Drawing name: =2V10&EFS-EL		= V1FQ1	
			Ed.	MKLEPADLO						+ V1UC15	
			Appr		P6700 Bodyside RH - Robot Cell 2V10			Document type: EFS	Project nr: 22-16150		Page 1
Modification	Date	Name	Original		Replacement of / Replaced by	Scale 1:1					1579

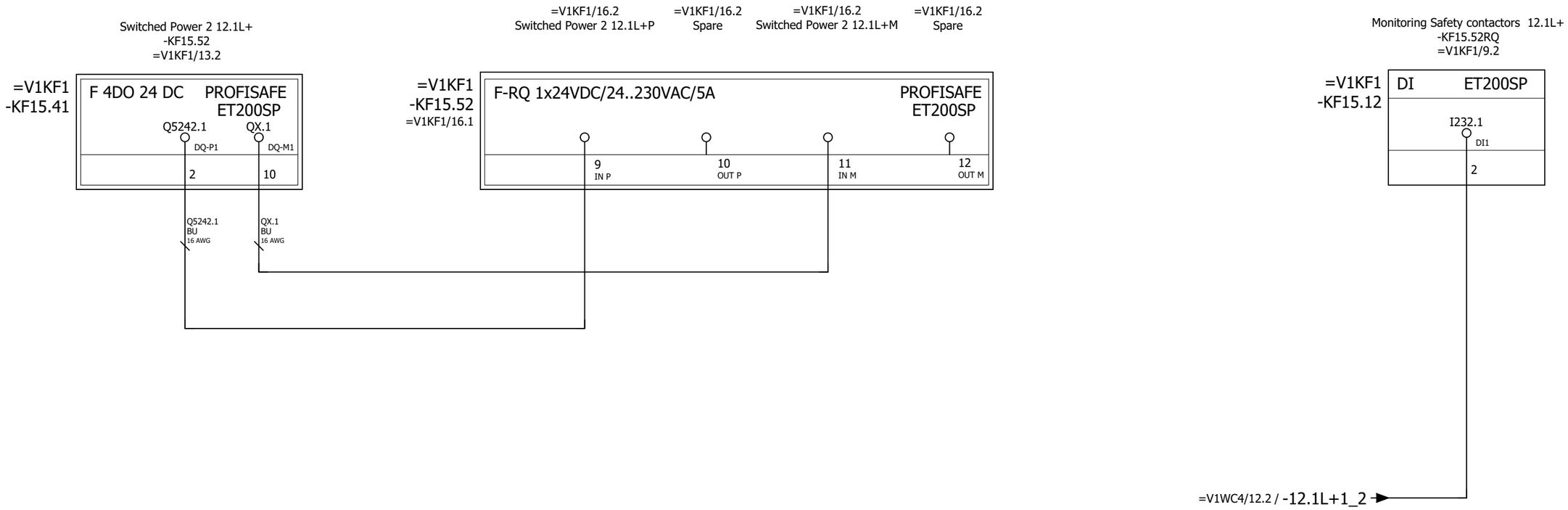

1 3

			Date	1/11/2023	Volvo Trucks North America	Valiant TMS	Safety power monitoring RQ - KF15.52	Drawing name: =2V10&EFS-EL		= V1FQ1	
			Ed.	MKLEPADLO						+ V1UC15	
			Appr		P6700 Bodyside RH - Robot Cell 2V10			Document type: EFS	Project nr: 22-16150		Page 2
Modification	Date	Name	Original		Replacement of / Replaced by	Scale 1:1					1579

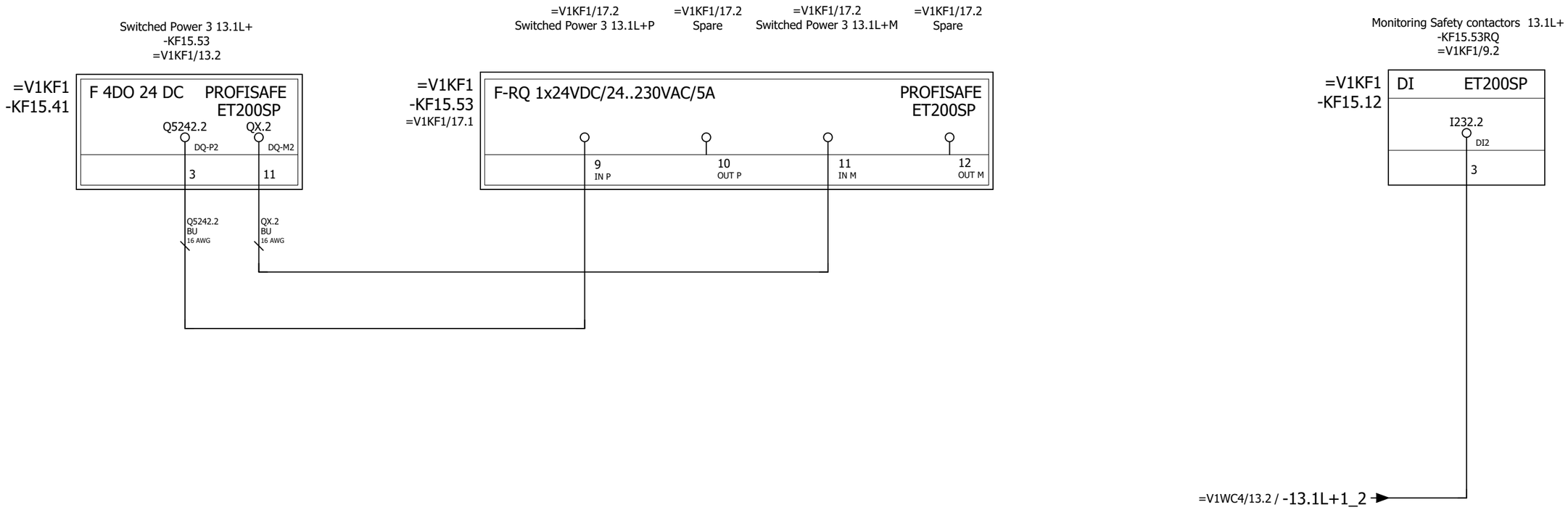

2

4

			Date	1/11/2023	Volvo Trucks North America	Valiant TMS	Safety power monitoring RQ - KF15.53	Drawing name: =2V10&EFS-EL		= V1FQ1	
			Ed.	MKLEPADLO						+ V1UC15	
			Appr		P6700 Bodyside RH - Robot Cell 2V10			Document type: EFS	Project nr: 22-16150		Page 3
Modification	Date	Name	Original		Replacement of / Replaced by	Scale 1:1					1579

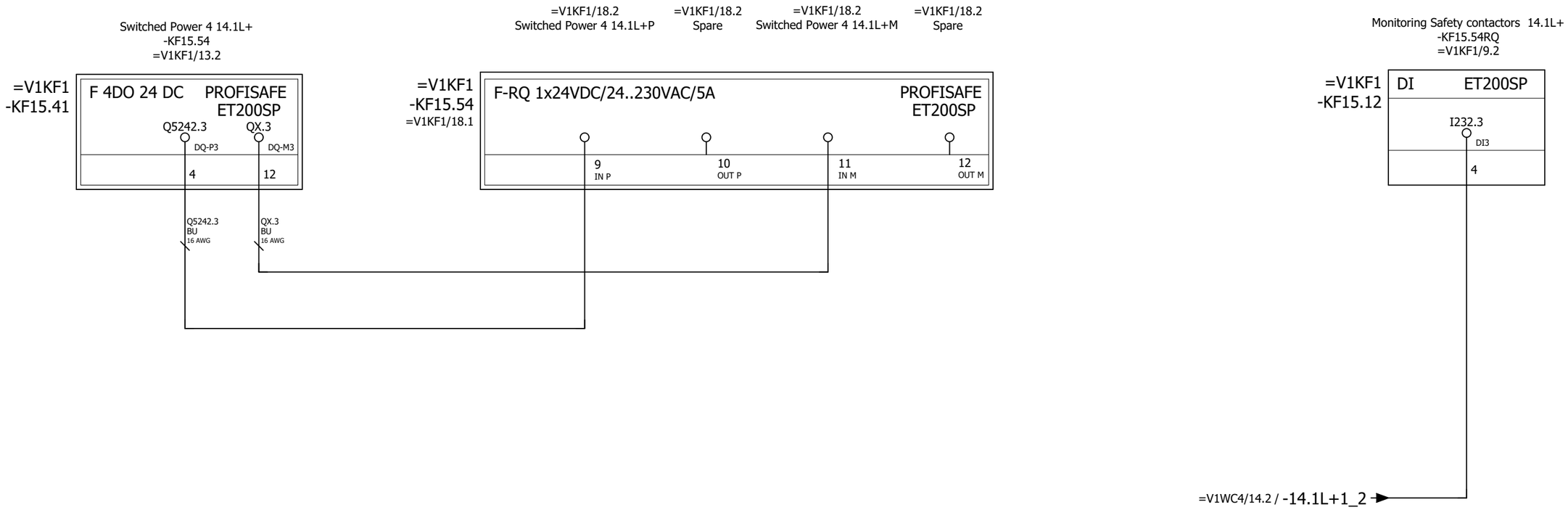

3

=V1GL1UQ51BG0+.GL1UQ51/1

			Date	1/11/2023	Volvo Trucks North America	Valiant TMS	Safety power monitoring RQ - KF15.54	Drawing name: =2V10&EFS-EL		= V1FQ1	
			Ed.	MKLEPADLO						+ V1UC15	
			Appr		P6700 Bodyside RH - Robot Cell 2V10			Document type: EFS	Project nr: 22-16150		Page 4
Modification	Date	Name	Original		Replacement of / Replaced by	Scale 1:1					1579

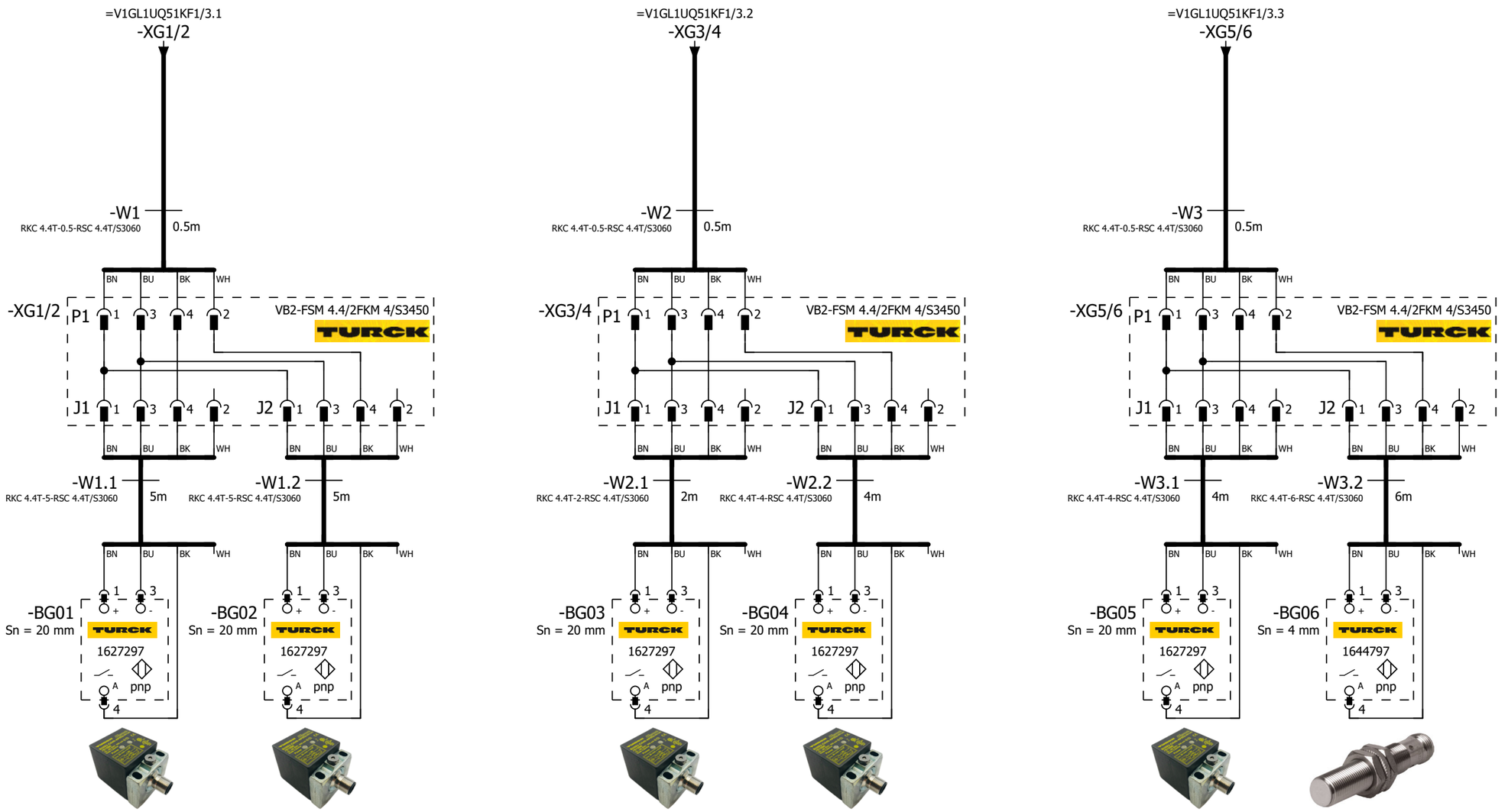

=V1GL1UQ51 -BG01 Header Sub Assembly	=V1GL1UQ51 -BG02 Header Sub Assembly	=V1GL1UQ51 -BG03 Door Frame Assembly	=V1GL1UQ51 -BG04 Outer Sill Member	=V1GL1UQ51 -BG05 Door Frame Assembly	=V1GL1UQ51 -BG06 Outer B-Dent Sill Member

=V1FQ1+.UC15/4

2

			Date	1/11/2023	Volvo Trucks North America		Valiant TMS	SENSORS	Drawing name: =2V10&EFS-EL	= V1GL1UQ51BG0	
			Ed.	MKLEPADLO						+ V1GL1UQ51	
			Appr		P6700 Bodyside RH - Robot Cell 2V10				Document type: EFS	Project nr: 22-16150	Page 1
Modification	Date	Name	Original		Replacement of	Replaced by	Scale 1:1				1579

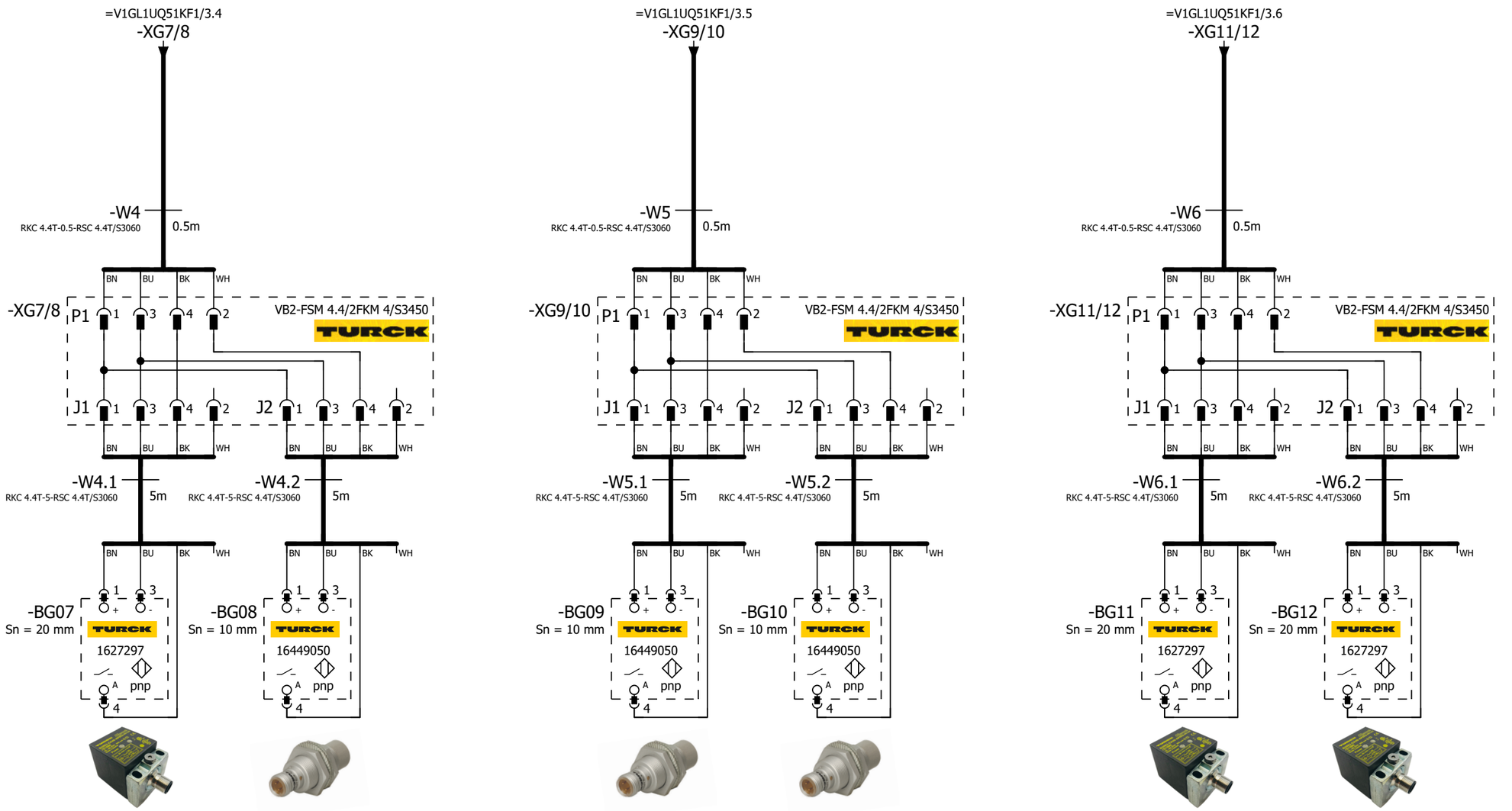

=V1GL1UQ51 -BG07 Outer Sill Member	=V1GL1UQ51 -BG08 Hinge Box	=V1GL1UQ51 -BG09 Hinge Box	=V1GL1UQ51 -BG10 Side Reinforcement	=V1GL1UQ51 -BG11 Bunk Support	=V1GL1UQ51 -BG12 Bunk Support

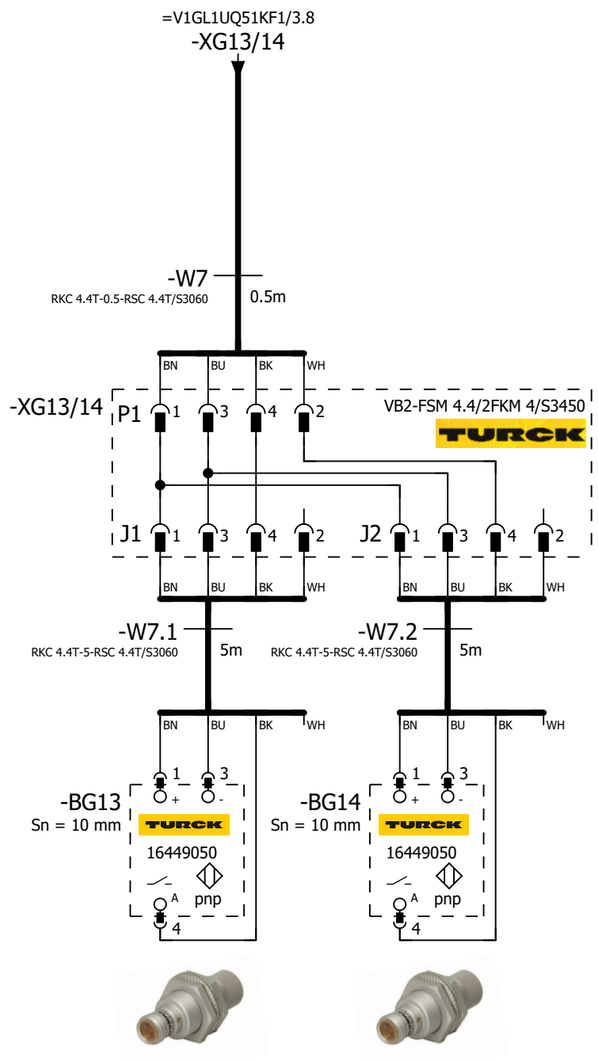

=V1GL1UQ51
-BG13
Bunk Support

=V1GL1UQ51
-BG14
Bridge Member

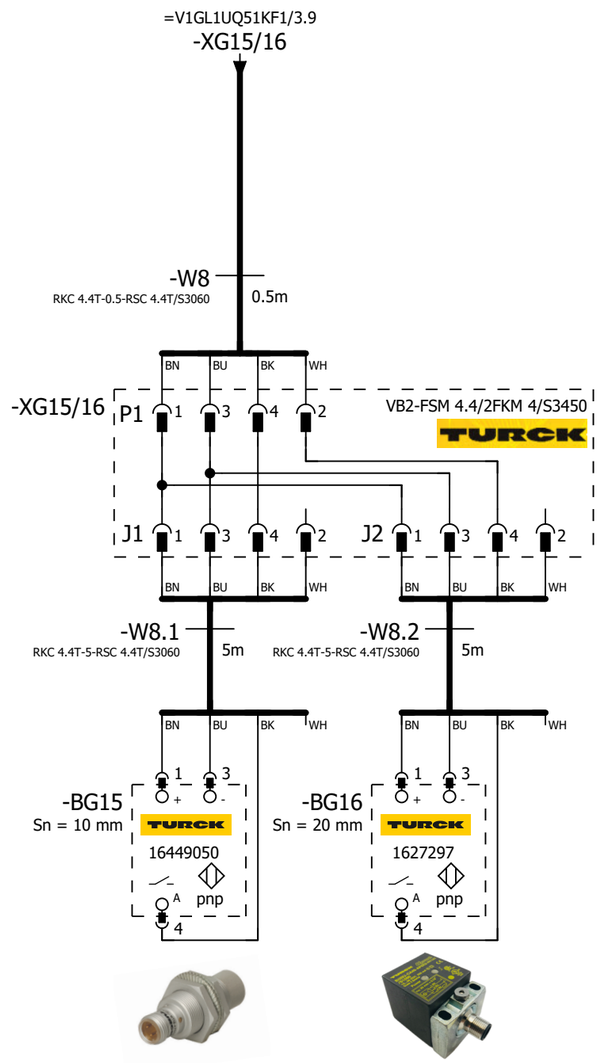

=V1GL1UQ51
-BG15
Bridge Member

=V1GL1UQ51
-BG16
Horizontal Crash
Beam

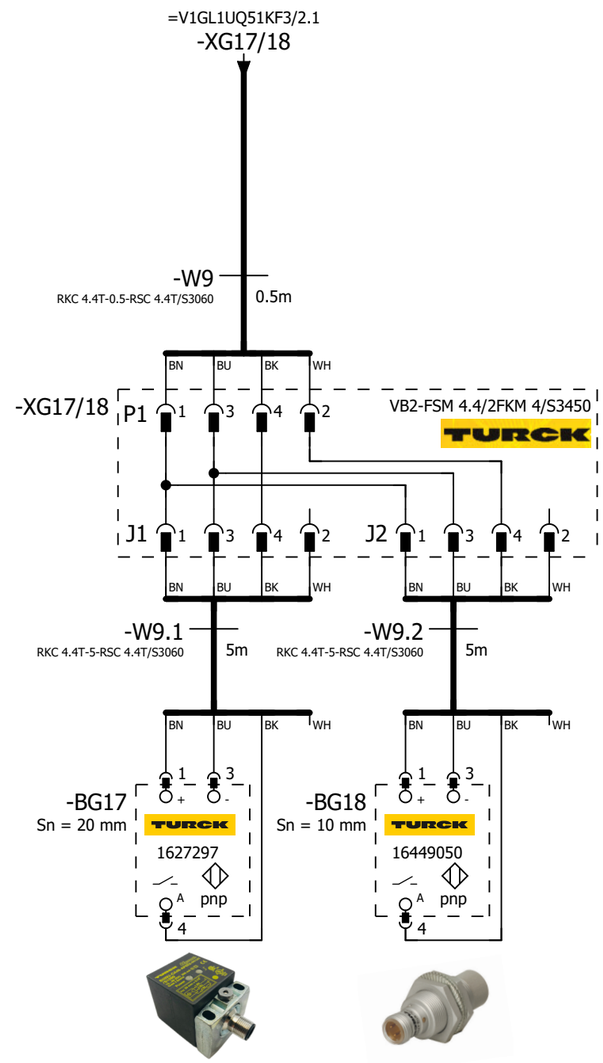

=V1GL1UQ51
-BG17
Horizontal Crash
Beam

=V1GL1UQ51
-BG18
Bridge Horizontal
Beam

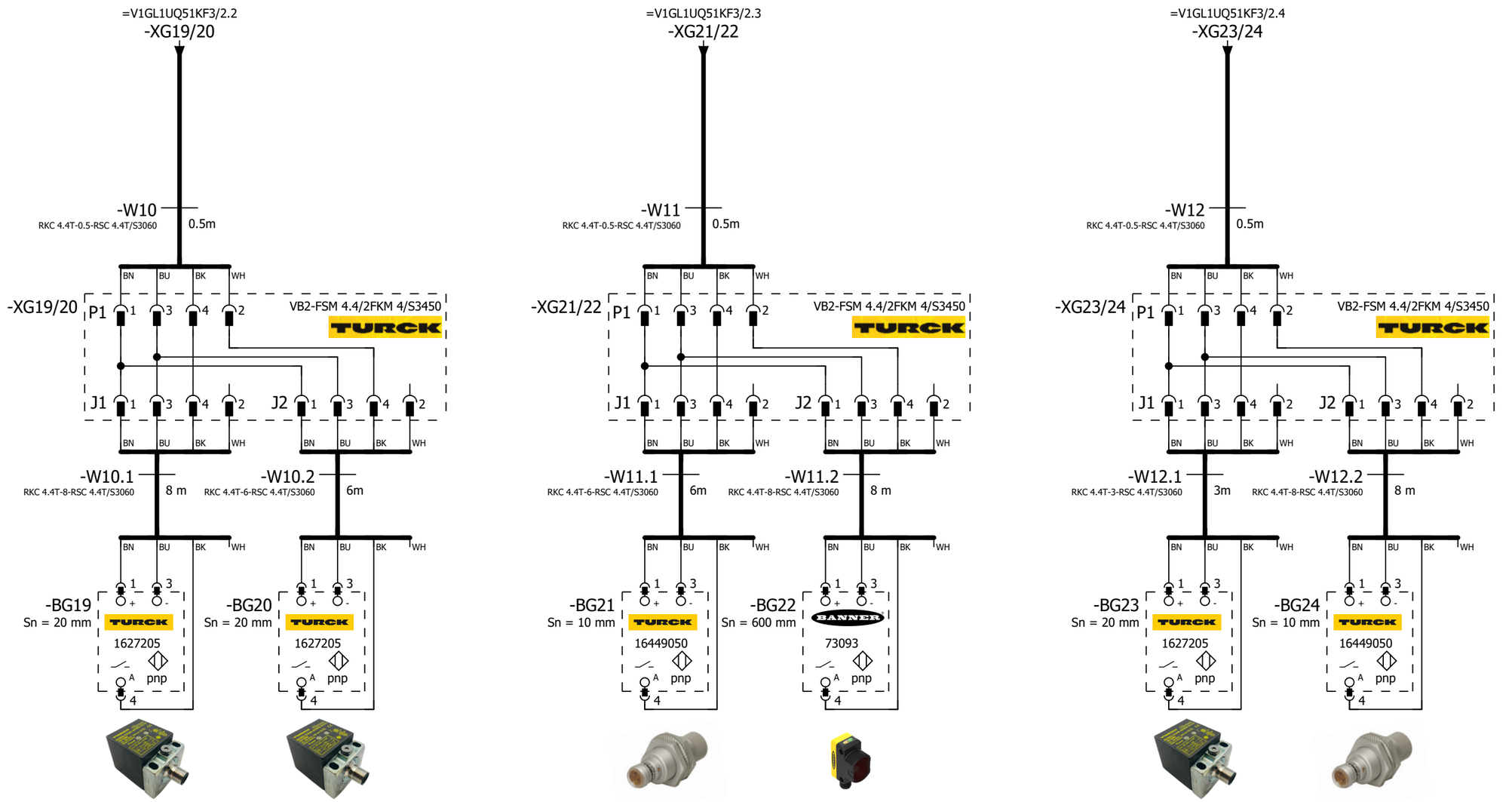

=V1GL1UQ51 -BG19 C-Pillar Assembly	=V1GL1UQ51 -BG20 C-Pillar Assembly	=V1GL1UQ51 -BG21 Head Sub Assembly	=V1GL1UQ51 -BG22 Extruded Seal Sleeper	=V1GL1UQ51 -BG23 Rocker Short Sleeper	=V1GL1UQ51 -BG24 Reinforcement

			Date	1/11/2023	Volvo Trucks North America	Valiant TMS	SENSORS	Drawing name: =2V10&EFS-EL	= V1GL1UQ51BG0	
			Ed.	MKLEPADLO	P6700 Bodyside RH - Robot Cell 2V10				+ V1GL1UQ51	
			Appr					Document type: EFS	Project nr: 22-16150	Page 4
Modification	Date	Name	Original		Replacement of / Replaced by	Scale 1:1				1579

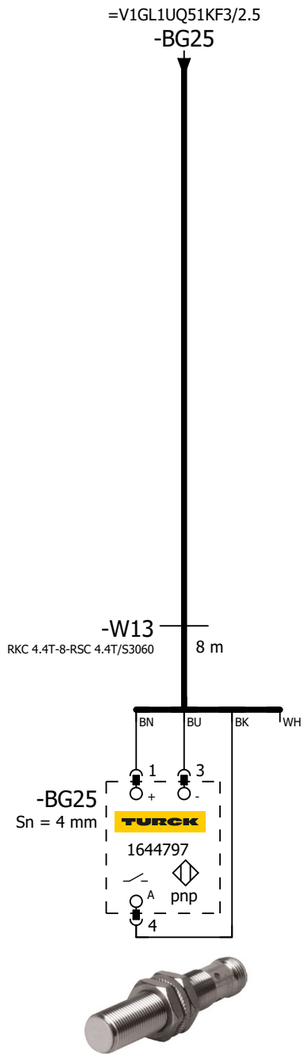

=V1GL1UQ51
-BG25
Reinforcement

4

=V1GL1UQ51KF1/1

			Date	1/11/2023	Volvo Trucks North America	Valiant TMS	SENSORS	Drawing name: =2V10&EFS-EL	= V1GL1UQ51BG0	
			Ed.	MKLEPADLO					+ V1GL1UQ51	
			Appr		P6700 Bodyside RH - Robot Cell 2V10			Document type: EFS	Project nr: 22-16150	Page 5 / 1579
Modification	Date	Name	Original		Replacement of / Replaced by	Scale 1:1				

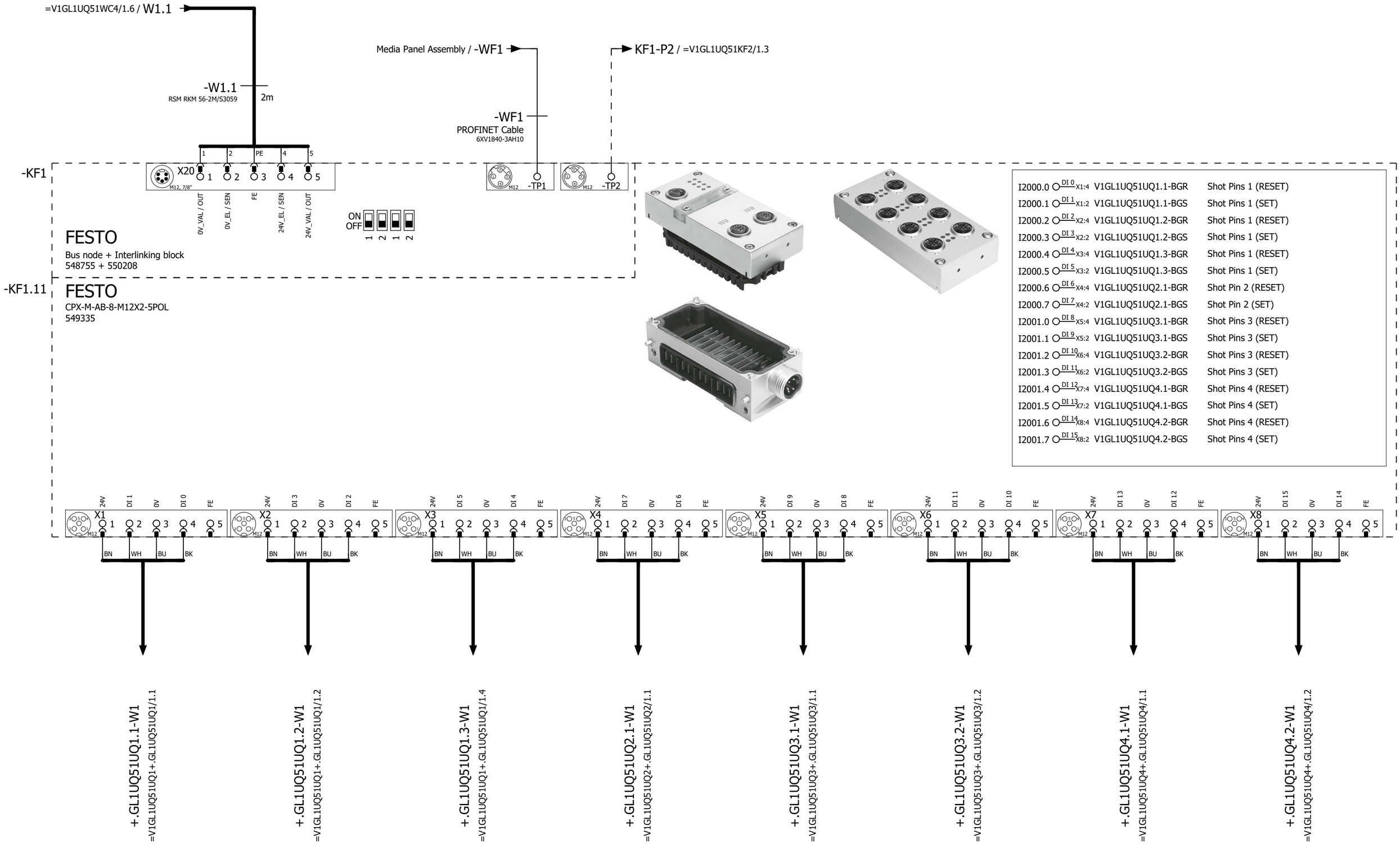

=V1GL1UQ51BG0/5

2

			Date	1/11/2023	Volvo Trucks North America	Valiant TMS	CONNECTING MOD. FOR VTSA MANIFOLD	Drawing name: =2V10&EFS-EL		= V1GL1UQ51KF1	
			Ed.	MKLEPADLO						+ V1GL1UQ51	
			Appr		P6700 Bodyside RH - Robot Cell 2V10			Document type: EFS	Project nr: 22-16150		Page 1
Modification	Date	Name	Original		Replacement of / Replaced by	Scale 1:1					1579

0	1	2	3	4	5	6	7	8	9

I2002.0	DI 0 X1:4	V1GL1UQ51UQ5.1-BGR	Shot Pin 5 (RESET)
I2002.1	DI 1 X1:2	V1GL1UQ51UQ5.1-BGS	Shot Pin 5 (SET)
I2002.2	DI 2 X2:4	V1GL1UQ51UQ6.1-BGR	Shot Pin 6 (RESET)
I2002.3	DI 3 X2:2	V1GL1UQ51UQ6.1-BGS	Shot Pin 6 (SET)
I2002.4	DI 4 X3:4	V1GL1UQ51UQ7.1-BGR	Shot Pin 7 (RESET)
I2002.5	DI 5 X3:2	V1GL1UQ51UQ7.1-BGS	Shot Pin 7 (SET)
I2002.6	DI 6 X4:4	V1GL1UQ51UQ8.1-BGR	Shot Pins 8 (RESET)
I2002.7	DI 7 X4:2	V1GL1UQ51UQ8.1-BGS	Shot Pins 8 (SET)
I2003.0	DI 8 X5:4	V1GL1UQ51UQ8.2-BGR	Shot Pins 8 (RESET)
I2003.1	DI 9 X5:2	V1GL1UQ51UQ8.2-BGS	Shot Pins 8 (SET)
I2003.2	DI 10 X6:4	V1GL1UQ51UQ8.3-BGR	Shot Pins 8 (RESET)
I2003.3	DI 11 X6:2	V1GL1UQ51UQ8.3-BGS	Shot Pins 8 (SET)
I2003.4	DI 12 X7:4	V1GL1UQ51UQ9.1-BGR	Shot Pin 9 (RESET)
I2003.5	DI 13 X7:2	V1GL1UQ51UQ9.1-BGS	Shot Pin 9 (SET)
I2003.6	DI 14 X8:4	V1GL1UQ51UQ10.1-BGR	Shot Pin 10 (RESET)
I2003.7	DI 15 X8:2	V1GL1UQ51UQ10.1-BGS	Shot Pin 10 (SET)

-KF1.12

FESTO
CPX-M-AB-8-M12X2-5POL
549335

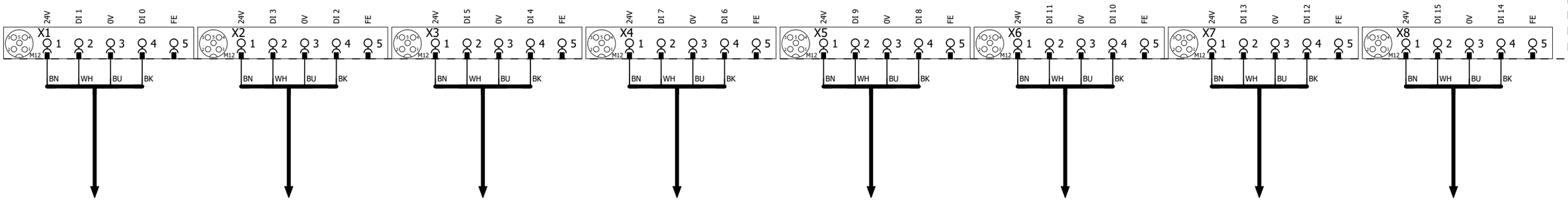

+.GL1UQ51UQ5.1-W1
=V1GL1UQ51UQ5+.GL1UQ51UQ5/1.1

+.GL1UQ51UQ6.1-W1
=V1GL1UQ51UQ6+.GL1UQ51UQ6/1.1

+.GL1UQ51UQ7.1-W1
=V1GL1UQ51UQ7+.GL1UQ51UQ7/1.1

+.GL1UQ51UQ8.1-W1
=V1GL1UQ51UQ8+.GL1UQ51UQ8/1.1

+.GL1UQ51UQ8.2-W1
=V1GL1UQ51UQ8+.GL1UQ51UQ8/1.2

+.GL1UQ51UQ8.3-W1
=V1GL1UQ51UQ8+.GL1UQ51UQ8/1.4

+.GL1UQ51UQ9.1-W1
=V1GL1UQ51UQ9+.GL1UQ51UQ9/1.1

+.GL1UQ51UQ10.1-W1
=V1GL1UQ51UQ10+.GL1UQ51UQ10/1.1

1 3

			Date	1/11/2023	Volvo Trucks North America	Valiant TMS	I/O MOD. DI16 (8 x M12) FOR VTSA-F	Drawing name: =2V10&EFS-EL		= V1GL1UQ51KF1	
			Ed.	MKLEPADLO						+ V1GL1UQ51	
			Appr		P6700 Bodyside RH - Robot Cell 2V10			Document type: EFS	Project nr: 22-16150		Page 2
Modification	Date	Name	Original		Replacement of	Replaced by	Scale 1:1				1579

-KF1.13

FESTO

CPX-M-AB-8-M12X2-5POL
549335

I2004.0	DI 0 X1:4	V1GL1UQ51-BG01	Sensor Header Sub Assembly
I2004.1	DI 1 X1:2	V1GL1UQ51-BG02	Sensor Header Sub Assembly
I2004.2	DI 2 X2:4	V1GL1UQ51-BG03	Sensor Door Frame Assembly
I2004.3	DI 3 X2:2	V1GL1UQ51-BG04	Sensor Outer Sill Member
I2004.4	DI 4 X3:4	V1GL1UQ51-BG05	Sensor Door Frame Assembly
I2004.5	DI 5 X3:2	V1GL1UQ51-BG06	Sensor Outer B-Dent Sill Member
I2004.6	DI 6 X4:4	V1GL1UQ51-BG07	Sensor Outer Sill Member
I2004.7	DI 7 X4:2	V1GL1UQ51-BG08	Sensor Hinge Box
I2005.0	DI 8 X5:4	V1GL1UQ51-BG09	Sensor Hinge Box
I2005.1	DI 9 X5:2	V1GL1UQ51-BG10	Sensor Side Reinforcement
I2005.2	DI 10 X6:4	V1GL1UQ51-BG11	Sensor Bunk Support
I2005.3	DI 11 X6:2	V1GL1UQ51-BG12	Sensor Bunk Support
I2005.4	DI 12 X7:4	V1GL1UQ51-BG13	Sensor Bunk Support
I2005.5	DI 13 X7:2	V1GL1UQ51-BG14	Sensor Bridge Member
I2005.6	DI 14 X8:4	V1GL1UQ51-BG15	Sensor Bridge Member
I2005.7	DI 15 X8:2	V1GL1UQ51-BG16	Sensor Horizontal Crash Beam

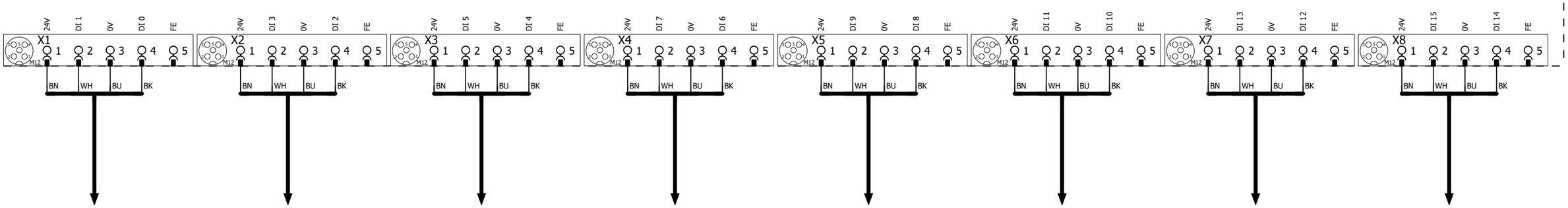

-XG1/2
=V1GL1UQ51BG0/1.1

-XG3/4
=V1GL1UQ51BG0/1.4

-XG5/6
=V1GL1UQ51BG0/1.6

-XG7/8
=V1GL1UQ51BG0/2.1

-XG9/10
=V1GL1UQ51BG0/2.4

-XG11/12
=V1GL1UQ51BG0/2.6

-XG13/14
=V1GL1UQ51BG0/3.1

-XG15/16
=V1GL1UQ51BG0/3.4

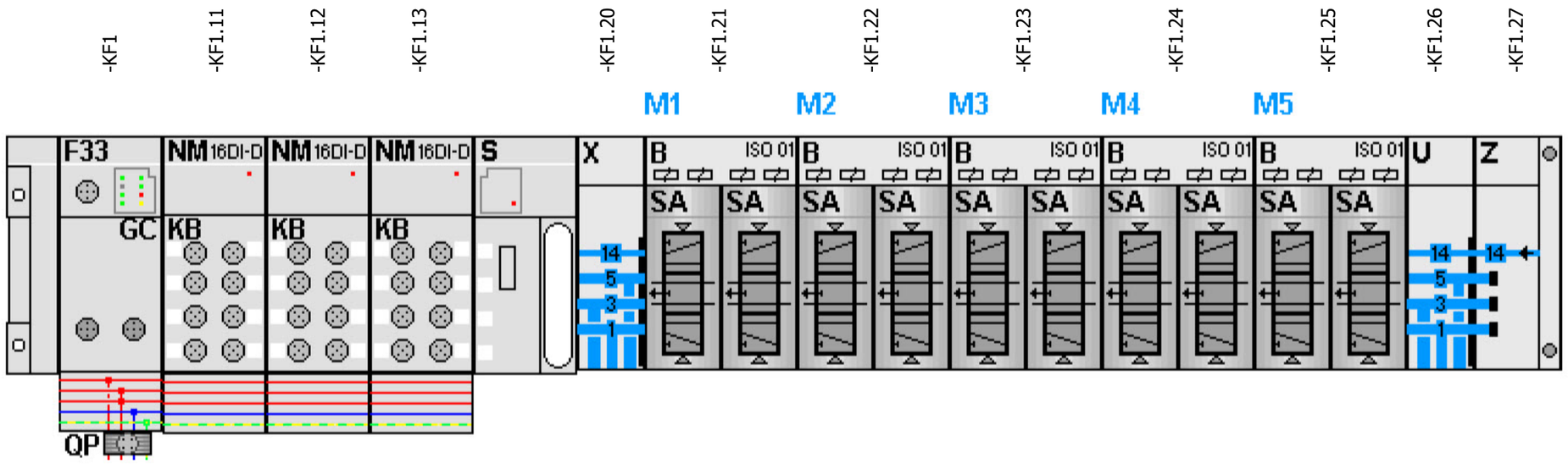

-KF1.21
=V1GL1UQ51UQ1+.GL1UQ51UQ1/1.3
=V1GL1UQ51UQ2+.GL1UQ51UQ2/1.3

FESTO

=V1GL1UQ51UQ1+.GL1UQ51UQ1/1.4	Q2000.0 DO 0 1.1	-QN1.1_Q	Shot Pins 1 (RST)
=V1GL1UQ51UQ1+.GL1UQ51UQ1/1.4	Q2000.1 DO 1 1.2	-QN1.2_Q	Shot Pins 1 (SET)
=V1GL1UQ51UQ2+.GL1UQ51UQ2/1.4	Q2000.2 DO 2 2.1	-QN2.1_Q	Shot Pin 2 (RST)
=V1GL1UQ51UQ2+.GL1UQ51UQ2/1.4	Q2000.3 DO 3 2.2	-QN2.2_Q	Shot Pin 2 (SET)

-KF1.22
=V1GL1UQ51UQ3+.GL1UQ51UQ3/1.3
=V1GL1UQ51UQ4+.GL1UQ51UQ4/1.3

FESTO

=V1GL1UQ51UQ3+.GL1UQ51UQ3/1.4	Q2000.4 DO 0 1.1	-QN3.1_Q	Shot Pins 3 (RST)
=V1GL1UQ51UQ3+.GL1UQ51UQ3/1.4	Q2000.5 DO 1 1.2	-QN3.2_Q	Shot Pins 3 (SET)
=V1GL1UQ51UQ4+.GL1UQ51UQ4/1.4	Q2000.6 DO 2 2.1	-QN4.1_Q	Shot Pins 4 (RST)
=V1GL1UQ51UQ4+.GL1UQ51UQ4/1.4	Q2000.7 DO 3 2.2	-QN4.2_Q	Shot Pins 4 (SET)

-KF1.23
=V1GL1UQ51UQ5+.GL1UQ51UQ5/1.3
=V1GL1UQ51UQ6+.GL1UQ51UQ6/1.3

FESTO

=V1GL1UQ51UQ5+.GL1UQ51UQ5/1.4	Q2001.0 DO 0 1.1	-QN5.1_Q	Shot Pin 5 (RST)
=V1GL1UQ51UQ5+.GL1UQ51UQ5/1.4	Q2001.1 DO 1 1.2	-QN5.2_Q	Shot Pin 5 (SET)
=V1GL1UQ51UQ6+.GL1UQ51UQ6/1.4	Q2001.2 DO 0 2.1	-QN6.1_Q	Shot Pin 6 (RST)
=V1GL1UQ51UQ6+.GL1UQ51UQ6/1.4	Q2001.3 DO 1 2.2	-QN6.2_Q	Shot Pin 6 (SET)

-KF1.24
=V1GL1UQ51UQ7+.GL1UQ51UQ7/1.3
=V1GL1UQ51UQ8+.GL1UQ51UQ8/1.3

FESTO

=V1GL1UQ51UQ7+.GL1UQ51UQ7/1.4	Q2001.4 DO 0 1.1	-QN7.1_Q	Shot Pin 7 (RST)
=V1GL1UQ51UQ7+.GL1UQ51UQ7/1.4	Q2001.5 DO 1 1.2	-QN7.2_Q	Shot Pin 7 (SET)
=V1GL1UQ51UQ8+.GL1UQ51UQ8/1.4	Q2001.6 DO 0 2.1	-QN8.1_Q	Shot Pins 8 (RST)
=V1GL1UQ51UQ8+.GL1UQ51UQ8/1.4	Q2001.7 DO 1 2.2	-QN8.2_Q	Shot Pins 8 (SET)

-KF1.25
=V1GL1UQ51UQ9+.GL1UQ51UQ9/1.3
=V1GL1UQ51UQ10+.GL1UQ51UQ10/1.3

FESTO

=V1GL1UQ51UQ9+.GL1UQ51UQ9/1.4	Q2002.0 DO 0 1.1	-QN9.1_Q	Shot Pin 9 (RST)
=V1GL1UQ51UQ9+.GL1UQ51UQ9/1.4	Q2002.1 DO 1 1.2	-QN9.2_Q	Shot Pin 9 (SET)
=V1GL1UQ51UQ10+.GL1UQ51UQ10/1.4	Q2002.2 DO 0 2.1	-QN10.1_Q	Shot Pin 10 (RST)
=V1GL1UQ51UQ10+.GL1UQ51UQ10/1.4	Q2002.3 DO 1 2.2	-QN10.2_Q	Shot Pin 10 (SET)

=V1GL1UQ51KF2/1

			Date	1/11/2023	Volvo Trucks North America	Valiant TMS	CONNECTING MOD. FOR FESTO DQ	Drawing name: =2V10&EFS-EL		= V1GL1UQ51KF1	
			Ed.	MKLEPADLO	P6700 Bodyside RH - Robot Cell 2V10					+ V1GL1UQ51	
			Appr			Scale 1:1		Document type: EFS	Project nr: 22-16150		Page 4
Modification	Date	Name	Original		Replacement of	Replaced by					1579

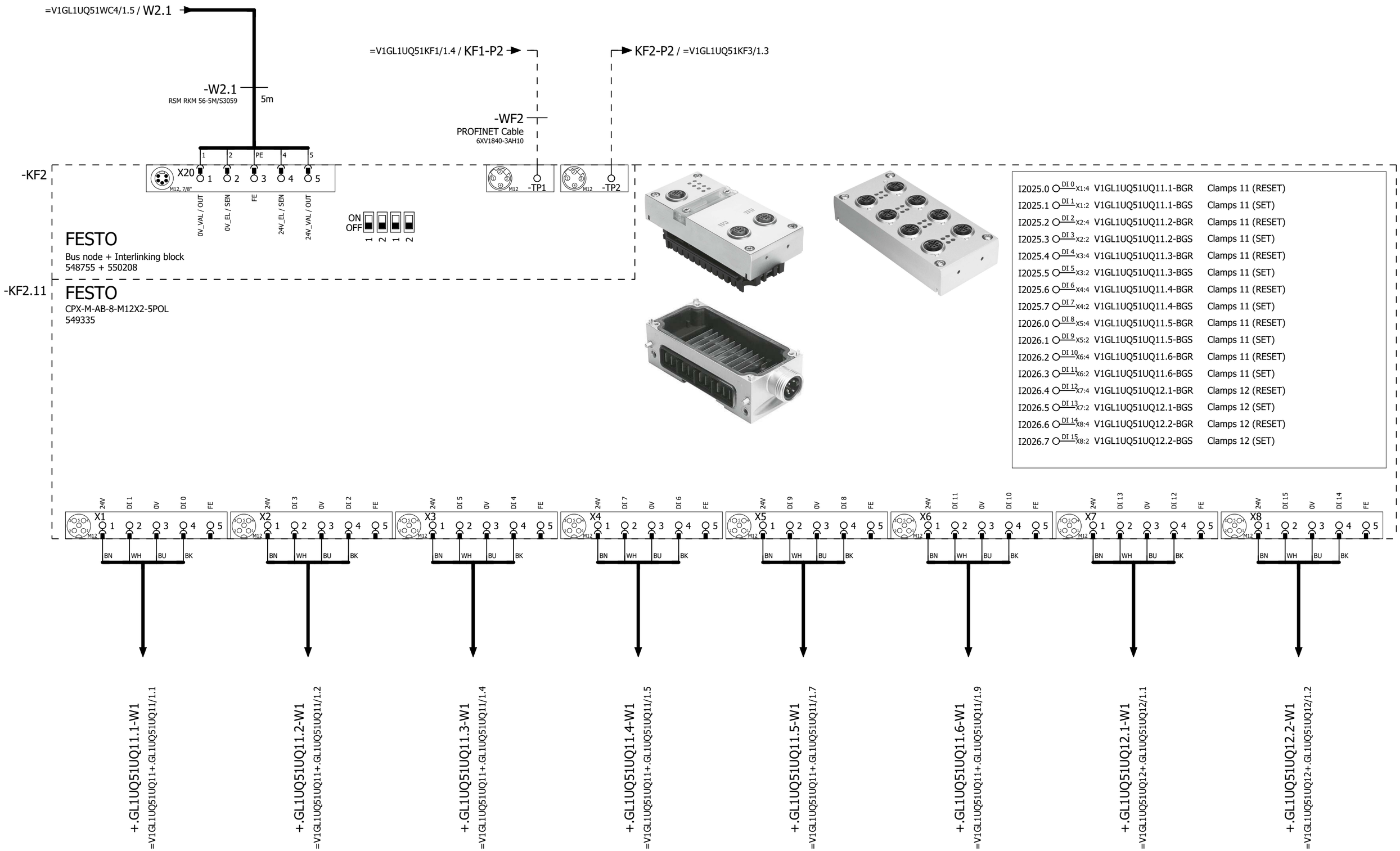

=V1GL1UQ51KF1/4

2

			Date	1/11/2023	Volvo Trucks North America	Valiant TMS	CONNECTING MOD. FOR VTSA MANIFOLD	Drawing name: =2V10&EFS-EL		= V1GL1UQ51KF2	
			Ed.	MKLEPADLO						+ V1GL1UQ51	
			Appr		P6700 Bodyside RH - Robot Cell 2V10			Document type: EFS	Project nr: 22-16150		Page 1
Modification	Date	Name	Original		Replacement of / Replaced by	Scale 1:1					1579

0	1	2	3	4	5	6	7	8	9

I2027.0	DI 0 X1:4	V1GL1UQ51UQ12.3-BGR	Clamps 12 (RESET)
I2027.1	DI 1 X1:2	V1GL1UQ51UQ12.3-BGS	Clamps 12 (SET)
I2027.2	DI 2 X2:4	V1GL1UQ51UQ12.4-BGR	Clamps 12 (RESET)
I2027.3	DI 3 X2:2	V1GL1UQ51UQ12.4-BGS	Clamps 12 (SET)
I2027.4	DI 4 X3:4	V1GL1UQ51UQ13.1-BGR	Clamps 13 (RESET)
I2027.5	DI 5 X3:2	V1GL1UQ51UQ13.1-BGS	Clamps 13 (SET)
I2027.6	DI 6 X4:4	V1GL1UQ51UQ13.2-BGR	Clamps 13 (RESET)
I2027.7	DI 7 X4:2	V1GL1UQ51UQ13.2-BGS	Clamps 13 (SET)
I2028.0	DI 8 X5:4	V1GL1UQ51UQ14.1-BGR	Clamps 14 (RESET)
I2028.1	DI 9 X5:2	V1GL1UQ51UQ14.1-BGS	Clamps 14 (SET)
I2028.2	DI 10 X6:4	V1GL1UQ51UQ14.2-BGR	Clamps 14 (RESET)
I2028.3	DI 11 X6:2	V1GL1UQ51UQ14.2-BGS	Clamps 14 (SET)
I2028.4	DI 12 X7:4	V1GL1UQ51UQ14.3-BGR	Clamps 14 (RESET)
I2028.5	DI 13 X7:2	V1GL1UQ51UQ14.3-BGS	Clamps 14 (SET)
I2028.6	DI 14 X8:4	V1GL1UQ51UQ14.4-BGR	Clamps 14 (RESET)
I2028.7	DI 15 X8:2	V1GL1UQ51UQ14.4-BGS	Clamps 14 (SET)

-KF2.12

FESTO

CPX-M-AB-8-M12X2-5POL

549335

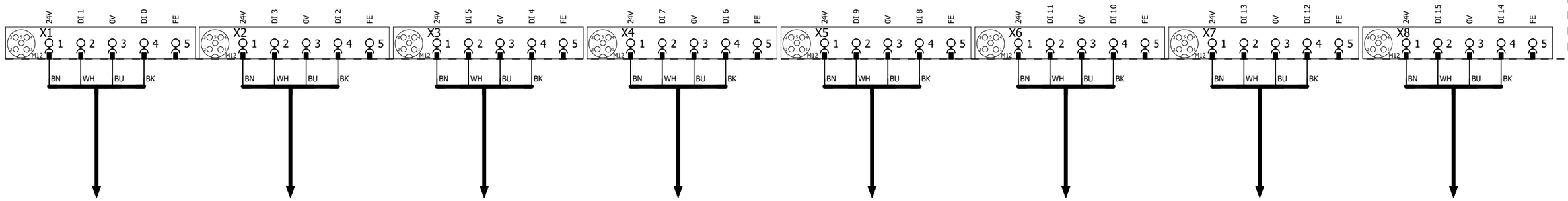

+.GL1UQ51UQ12.3-W1
=V1GL1UQ51UQ12+.GL1UQ51UQ12/1.4

+.GL1UQ51UQ12.4-W1
=V1GL1UQ51UQ12+.GL1UQ51UQ12/1.5

+.GL1UQ51UQ13.1-W1
=V1GL1UQ51UQ13+.GL1UQ51UQ13/1.1

+.GL1UQ51UQ13.2-W1
=V1GL1UQ51UQ13+.GL1UQ51UQ13/1.2

+.GL1UQ51UQ14.1-W1
=V1GL1UQ51UQ14+.GL1UQ51UQ14/1.1

+.GL1UQ51UQ14.2-W1
=V1GL1UQ51UQ14+.GL1UQ51UQ14/1.2

+.GL1UQ51UQ14.3-W1
=V1GL1UQ51UQ14+.GL1UQ51UQ14/1.4

+.GL1UQ51UQ14.4-W1
=V1GL1UQ51UQ14+.GL1UQ51UQ14/1.5

1 3

			Date	1/17/2023	Volvo Trucks North America	Valiant TMS	I/O MOD. DI16 (8 x M12) FOR VTSA-F	Drawing name: =2V10&EFS-EL		= V1GL1UQ51KF2	
			Ed.	MKLEPADLO						+ V1GL1UQ51	
			Appr		P6700 Bodyside RH - Robot Cell 2V10			Document type: EFS	Project nr: 22-16150		Page 2
Modification	Date	Name	Original		Replacement of	Replaced by	Scale 1:1				1579

-KF2.13

FESTO
CPX-M-AB-8-M12X2-5POL
549335

I2029.0	DI 0 X1:4	V1GL1UQ51UQ15.1-BGR	Clamp 15 (RESET)
I2029.1	DI 1 X1:2	V1GL1UQ51UQ15.1-BGS	Clamp 15 (SET)
I2029.2	DI 2 X2:4	V1GL1UQ51UQ16.1-BGR	Clamp 16 (RESET)
I2029.3	DI 3 X2:2	V1GL1UQ51UQ16.1-BGS	Clamp 16 (SET)
I2029.4	DI 4 X3:4	V1GL1UQ51UQ17.1-BGR	Clamp 17 (RESET)
I2029.5	DI 5 X3:2	V1GL1UQ51UQ17.1-BGS	Clamp 17 (SET)
I2029.6	DI 6 X4:4	V1GL1UQ51UQ18.1-BGR	Shot Pin 18 (RESET)
I2029.7	DI 7 X4:2	V1GL1UQ51UQ18.1-BGS	Shot Pin 18 (SET)
I2030.0	DI 8 X5:4	V1GL1UQ51UQ19.1-BGR	Clamp 19 (RESET)
I2030.1	DI 9 X5:2	V1GL1UQ51UQ19.1-BGS	Clamp 19 (SET)
I2030.2	DI 10 X6:4	V1GL1UQ51UQ20.1-BGR	Clamp 20 (RESET)
I2030.3	DI 11 X6:2	V1GL1UQ51UQ20.1-BGS	Clamp 20 (SET)
I2030.4	DI 12 X7:4	I2030.4	Spare
I2030.5	DI 13 X7:2	I2030.5	Spare
I2030.6	DI 14 X8:4	I2030.6	Spare
I2030.7	DI 15 X8:2	I2030.7	Spare

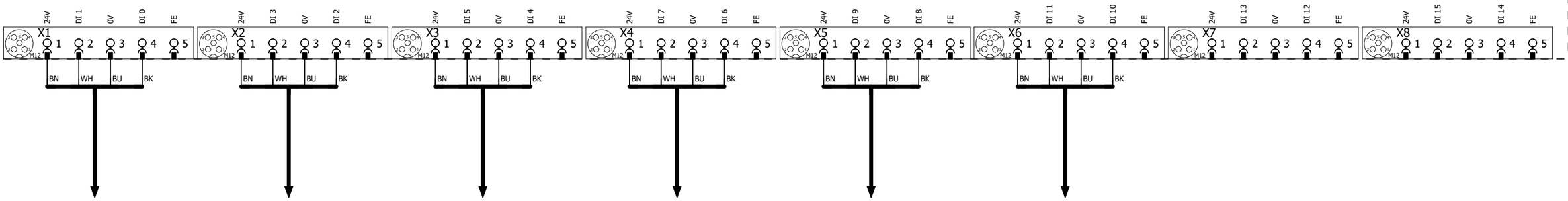

+.GL1UQ51UQ15.1-W1
=V1GL1UQ51UQ15+.GL1UQ51UQ15/1.1

+.GL1UQ51UQ16.1-W1
=V1GL1UQ51UQ16+.GL1UQ51UQ16/1.1

+.GL1UQ51UQ17.1-W1
=V1GL1UQ51UQ17+.GL1UQ51UQ17/1.1

+.GL1UQ51UQ18.1-W1
=V1GL1UQ51UQ18+.GL1UQ51UQ18/1.1

+.GL1UQ51UQ19.1-W1
=V1GL1UQ51UQ19+.GL1UQ51UQ19/1.1

+.GL1UQ51UQ20.1-W1
=V1GL1UQ51UQ20+.GL1UQ51UQ20/1.1

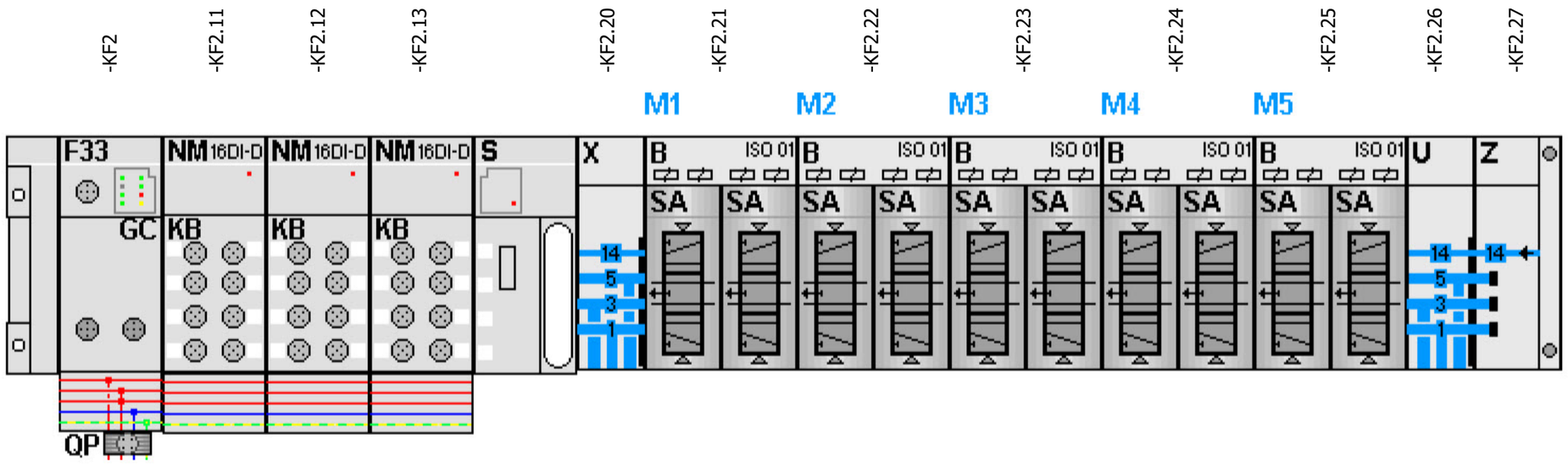

-KF2.21

=V1GL1UQ51UQ11+.GL1UQ51UQ11/1.3
=V1GL1UQ51UQ12+.GL1UQ51UQ12/1.3

FESTO

=V1GL1UQ51UQ11+.GL1UQ51UQ11/1.4	Q2025.0 DO 0 1.1	-QN11.1_Q	Clamps 11 (RST)
=V1GL1UQ51UQ11+.GL1UQ51UQ11/1.4	Q2025.1 DO 1 1.2	-QN11.2_Q	Clamps 11 (SET)
=V1GL1UQ51UQ12+.GL1UQ51UQ12/1.4	Q2025.2 DO 2 2.1	-QN12.1_Q	Clamps 12 (RST)
=V1GL1UQ51UQ12+.GL1UQ51UQ12/1.4	Q2025.3 DO 3 2.2	-QN12.2_Q	Clamps 12 (SET)

-KF2.22

=V1GL1UQ51UQ13+.GL1UQ51UQ13/1.3
=V1GL1UQ51UQ14+.GL1UQ51UQ14/1.3

FESTO

=V1GL1UQ51UQ13+.GL1UQ51UQ13/1.4	Q2025.4 DO 0 1.1	-QN13.1_Q	Clamps 13 (RST)
=V1GL1UQ51UQ13+.GL1UQ51UQ13/1.4	Q2025.5 DO 1 1.2	-QN13.2_Q	Clamps 13 (SET)
=V1GL1UQ51UQ14+.GL1UQ51UQ14/1.4	Q2025.6 DO 2 2.1	-QN14.1_Q	Clamps 14 (RST)
=V1GL1UQ51UQ14+.GL1UQ51UQ14/1.4	Q2025.7 DO 3 2.2	-QN14.2_Q	Clamps 14 (SET)

-KF2.23

=V1GL1UQ51UQ15+.GL1UQ51UQ15/1.3
=V1GL1UQ51UQ16+.GL1UQ51UQ16/1.3

FESTO

=V1GL1UQ51UQ15+.GL1UQ51UQ15/1.4	Q2026.0 DO 0 1.1	-QN15.1_Q	Clamp 15 (RST)
=V1GL1UQ51UQ15+.GL1UQ51UQ15/1.4	Q2026.1 DO 1 1.2	-QN15.2_Q	Clamp 15 (SET)
=V1GL1UQ51UQ16+.GL1UQ51UQ16/1.4	Q2026.2 DO 0 2.1	-QN16.1_Q	Clamp 16 (RST)
=V1GL1UQ51UQ16+.GL1UQ51UQ16/1.4	Q2026.3 DO 1 2.2	-QN16.2_Q	Clamp 16 (SET)

-KF2.24

=V1GL1UQ51UQ17+.GL1UQ51UQ17/1.3
=V1GL1UQ51UQ18+.GL1UQ51UQ18/1.3

FESTO

=V1GL1UQ51UQ17+.GL1UQ51UQ17/1.4	Q2026.4 DO 0 1.1	-QN17.1_Q	Clamp 17 (RST)
=V1GL1UQ51UQ17+.GL1UQ51UQ17/1.4	Q2026.5 DO 1 1.2	-QN17.2_Q	Clamp 17 (SET)
=V1GL1UQ51UQ18+.GL1UQ51UQ18/1.4	Q2026.6 DO 0 2.1	-QN18.1_Q	Shot Pin 18 (RST)
=V1GL1UQ51UQ18+.GL1UQ51UQ18/1.4	Q2026.7 DO 1 2.2	-QN18.2_Q	Shot Pin 18 (SET)

-KF2.25

=V1GL1UQ51UQ19+.GL1UQ51UQ19/1.3
=V1GL1UQ51UQ20+.GL1UQ51UQ20/1.3

FESTO

=V1GL1UQ51UQ19+.GL1UQ51UQ19/1.4	Q2027.0 DO 0 1.1	-QN19.1_Q	Clamp 19 (RST)
=V1GL1UQ51UQ19+.GL1UQ51UQ19/1.4	Q2027.1 DO 1 1.2	-QN19.2_Q	Clamp 19 (SET)
=V1GL1UQ51UQ20+.GL1UQ51UQ20/1.4	Q2027.2 DO 0 2.1	-QN20.1_Q	Clamp 20 (RST)
=V1GL1UQ51UQ20+.GL1UQ51UQ20/1.4	Q2027.3 DO 1 2.2	-QN20.2_Q	Clamp 20 (SET)

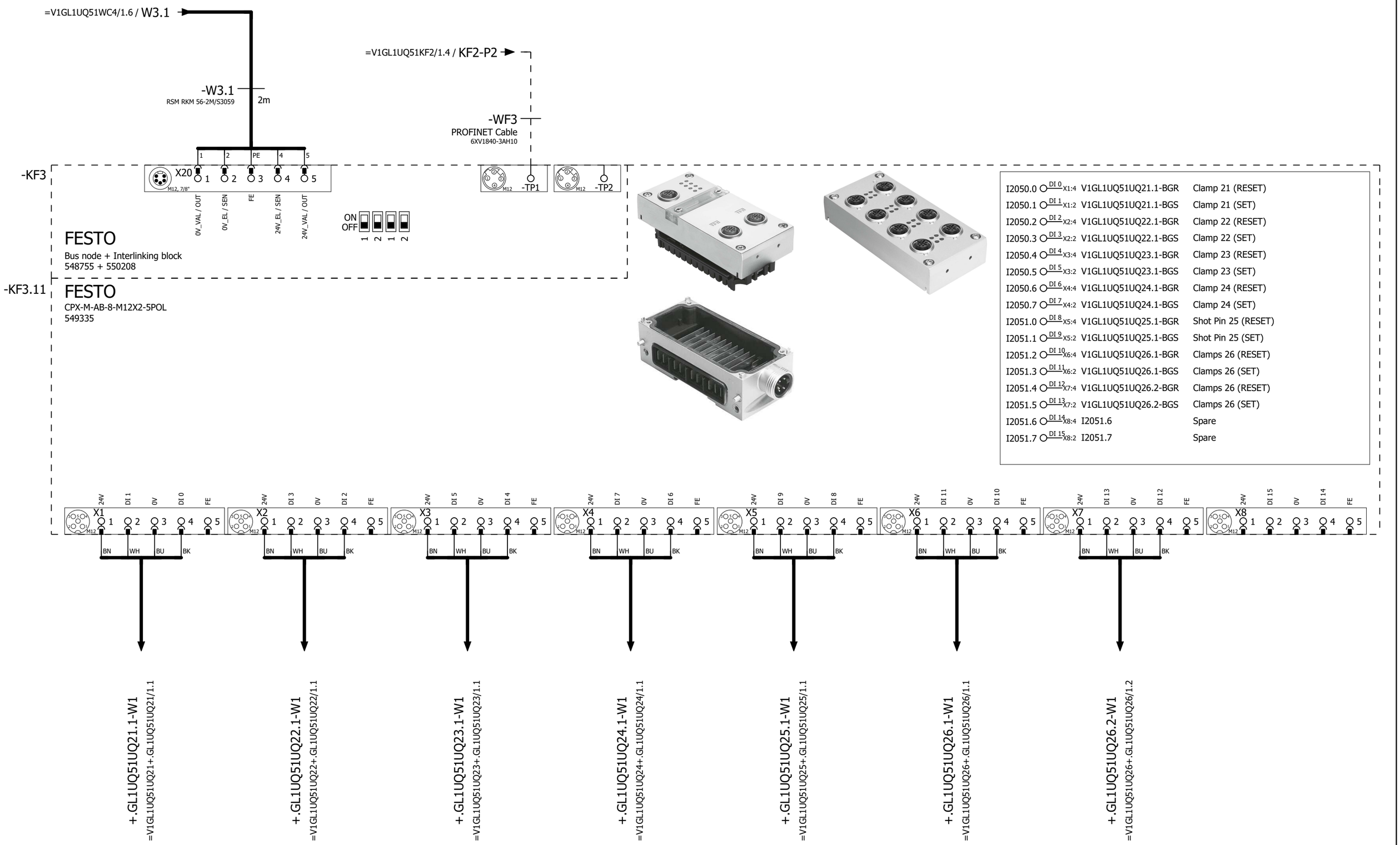

=V1GL1UQ51KF2/4

2

			Date	1/11/2023	Volvo Trucks North America	Valiant TMS	CONNECTING MOD. FOR VTSA MANIFOLD	Drawing name: =2V10&EFS-EL		= V1GL1UQ51KF3	
			Ed.	MKLEPADLO						+ V1GL1UQ51	
			Appr		P6700 Bodyside RH - Robot Cell 2V10			Document type: EFS	Project nr: 22-16150		Page 1
Modification	Date	Name	Original		Replacement of / Replaced by	Scale 1:1					1579

I2052.0	DI 0 X1:4	V1GL1UQ51-BG17	Sensor Horizontal Crash Beam
I2052.1	DI 1 X1:2	V1GL1UQ51-BG18	Sensor Bridge Horizontal Beam
I2052.2	DI 2 X2:4	V1GL1UQ51-BG19	Sensor C-Pillar Assembly
I2052.3	DI 3 X2:2	V1GL1UQ51-BG20	Sensor C-Pillar Assembly
I2052.4	DI 4 X3:4	V1GL1UQ51-BG21	Sensor Head Sub Assembly
I2052.5	DI 5 X3:2	V1GL1UQ51-BG22	Sensor Extruded Seal Sleeper
I2052.6	DI 6 X4:4	V1GL1UQ51-BG23	Sensor Rocker Short Sleeper
I2052.7	DI 7 X4:2	V1GL1UQ51-BG24	Sensor Reinforcement
I2053.0	DI 8 X5:4	V1GL1UQ51-BG25	Sensor Reinforcement
I2053.1	DI 9 X5:2	I2053.1	Spare
I2053.2	DI 10 X6:4	I2053.2	Spare
I2053.3	DI 11 X6:2	I2053.3	Spare
I2053.4	DI 12 X7:4	I2053.4	Spare
I2053.5	DI 13 X7:2	I2053.5	Spare
I2053.6	DI 14 X8:4	I2053.6	Spare
I2053.7	DI 15 X8:2	I2053.7	Spare

-KF3.12

FESTO
CPX-M-AB-8-M12X2-5POL
549335

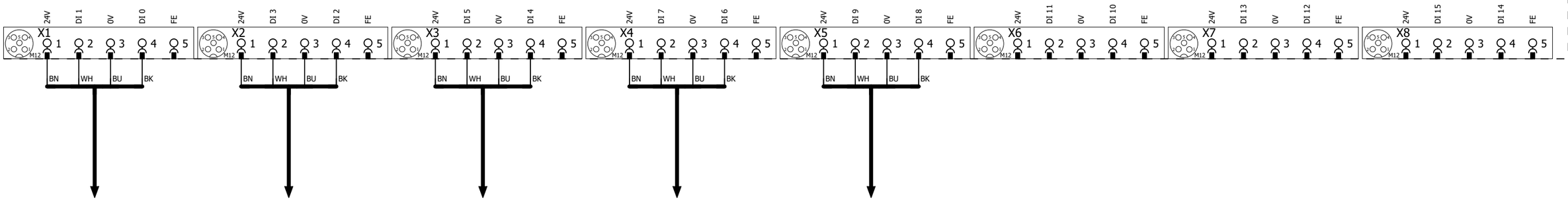

-XG17/18
=V1GL1UQ51BG0/3.6

-XG19/20
=V1GL1UQ51BG0/4.1

-XG21/22
=V1GL1UQ51BG0/4.4

-XG23/24
=V1GL1UQ51BG0/4.6

-BG25
=V1GL1UQ51BG0/5.1

1 3

			Date	1/11/2023	Volvo Trucks North America	Valiant TMS	I/O MOD. DI16 (8 x M12) FOR VTSA-F	Drawing name: =2V10&EFS-EL		= V1GL1UQ51KF3	
			Ed.	MKLEPADLO						+ V1GL1UQ51	
			Appr		P6700 Bodyside RH - Robot Cell 2V10			Document type: EFS	Project nr: 22-16150		Page 2
Modification	Date	Name	Original		Replacement of / Replaced by	Scale 1:1					1579

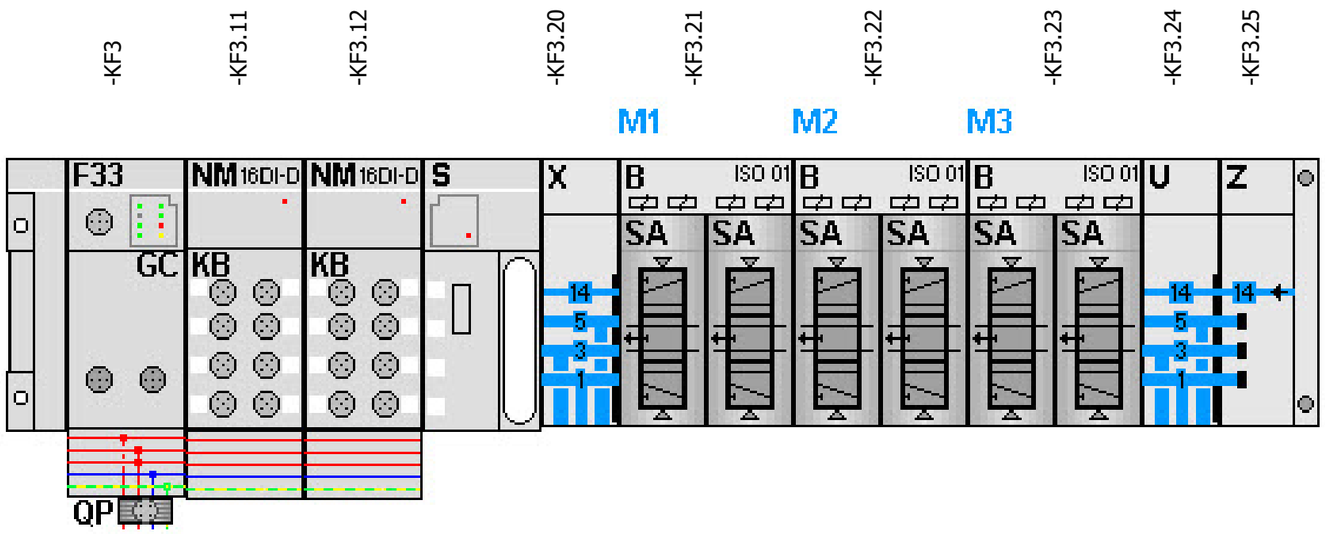

-KF3.21
=V1GL1UQ51UQ21+.GL1UQ51UQ21/1.3
=V1GL1UQ51UQ22+.GL1UQ51UQ22/1.3

FESTO

=V1GL1UQ51UQ21+.GL1UQ51UQ21/1.4	Q2050.0 DO 0 1.1	-QN21.1_Q	Clamp 21 (RST)
=V1GL1UQ51UQ21+.GL1UQ51UQ21/1.4	Q2050.1 DO 1 1.2	-QN21.2_Q	Clamp 21 (SET)
=V1GL1UQ51UQ22+.GL1UQ51UQ22/1.4	Q2050.2 DO 2 2.1	-QN22.1_Q	Clamp 22 (RST)
=V1GL1UQ51UQ22+.GL1UQ51UQ22/1.4	Q2050.3 DO 3 2.2	-QN22.2_Q	Clamp 22 (SET)

-KF3.22
=V1GL1UQ51UQ23+.GL1UQ51UQ23/1.3
=V1GL1UQ51UQ24+.GL1UQ51UQ24/1.3

FESTO

=V1GL1UQ51UQ23+.GL1UQ51UQ23/1.4	Q2050.4 DO 0 1.1	-QN23.1_Q	Clamp 23 (RST)
=V1GL1UQ51UQ23+.GL1UQ51UQ23/1.4	Q2050.5 DO 1 1.2	-QN23.2_Q	Clamp 23 (SET)
=V1GL1UQ51UQ24+.GL1UQ51UQ24/1.4	Q2050.6 DO 2 2.1	-QN24.1_Q	Clamp 24 (RST)
=V1GL1UQ51UQ24+.GL1UQ51UQ24/1.4	Q2050.7 DO 3 2.2	-QN24.2_Q	Clamp 24 (SET)

-KF3.23
=V1GL1UQ51UQ25+.GL1UQ51UQ25/1.3
=V1GL1UQ51UQ26+.GL1UQ51UQ26/1.3

FESTO

=V1GL1UQ51UQ25+.GL1UQ51UQ25/1.4	Q2051.0 DO 0 1.1	-QN25.1_Q	Shot Pin 25 (RST)
=V1GL1UQ51UQ25+.GL1UQ51UQ25/1.4	Q2051.1 DO 1 1.2	-QN25.2_Q	Shot Pin 25 (SET)
=V1GL1UQ51UQ26+.GL1UQ51UQ26/1.4	Q2051.2 DO 2 2.1	-QN26.1_Q	Clamps 26 (RST)
=V1GL1UQ51UQ26+.GL1UQ51UQ26/1.4	Q2051.3 DO 3 2.2	-QN26.2_Q	Clamps 26 (SET)

			Date	1/11/2023	Volvo Trucks North America		Valiant TMS	CONNECTING MOD. FOR FESTO DQ	Drawing name: =2V10&EFS-EL		= V1GL1UQ51KF3
			Ed.	MKLEPADLO							+ V1GL1UQ51
			Appr		P6700 Bodyside RH - Robot Cell 2V10				Document type: EFS	Project nr: 22-16150	Page 3
Modification	Date	Name	Original		Replacement of	Replaced by	Scale 1:1				1579

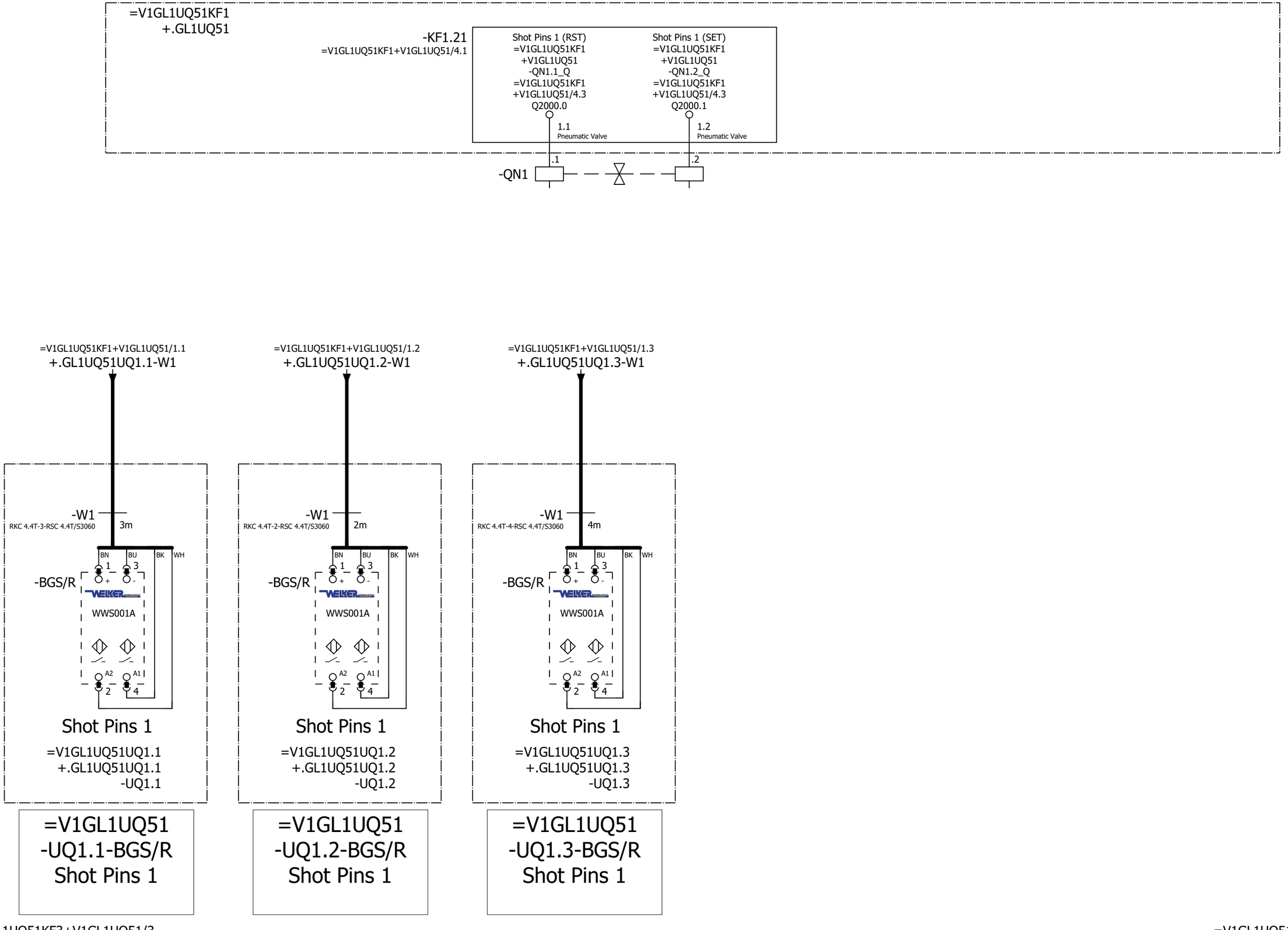

=V1GL1UQ51KF3+V1GL1UQ51/3

=V1GL1UQ51UQ2+.GL1UQ51UQ2/1

			Date	1/11/2023	Volvo Trucks North America		Valiant TMS	FESTO DQ CONNECTION QN1	Drawing name: =2V10&EFS-EL	= V1GL1UQ51UQ1	
			Ed.	MKLEPADLO						+ V1GL1UQ51UQ1	
			Appr		P6700 Bodyside RH - Robot Cell 2V10				Document type: EFS	Project nr: 22-16150	Page 1
Modification	Date	Name	Original		Replacement of	Replaced by	Scale 1:1				1579

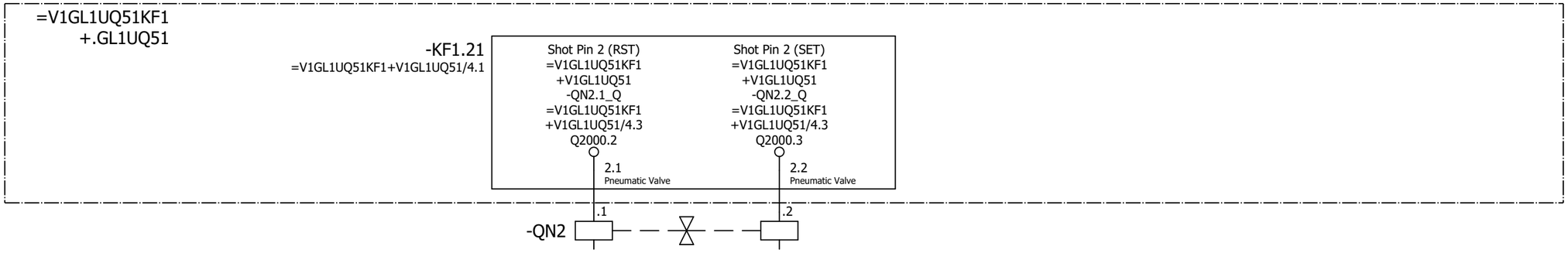

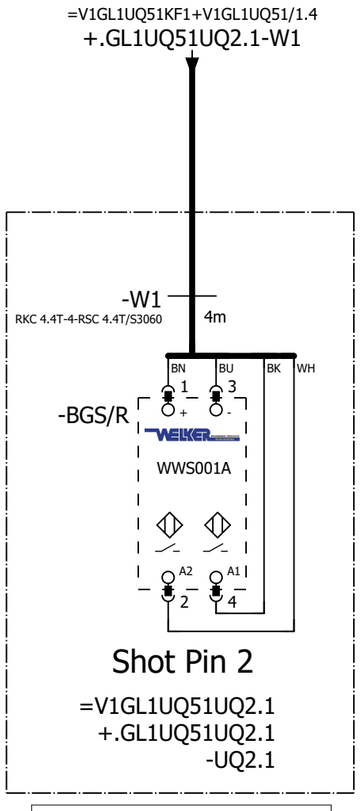

=V1GL1UQ51
-UQ2.1-BGS/R
Shot Pin 2

=V1GL1UQ51UQ1+.GL1UQ51UQ1/1

=V1GL1UQ51UQ3+.GL1UQ51UQ3/1

			Date	1/11/2023	Volvo Trucks North America		Valiant TMS	FESTO DQ CONNECTION QN2	Drawing name: =2V10&EFS-EL	= V1GL1UQ51UQ2
			Ed.	MKLEPADLO						+ V1GL1UQ51UQ2
			Appr		P6700 Bodyside RH - Robot Cell 2V10				Document type: EFS / Project nr: 22-16150	Page 1 / 1579
Modification	Date	Name	Original		Replacement of	Replaced by	Scale 1:1			

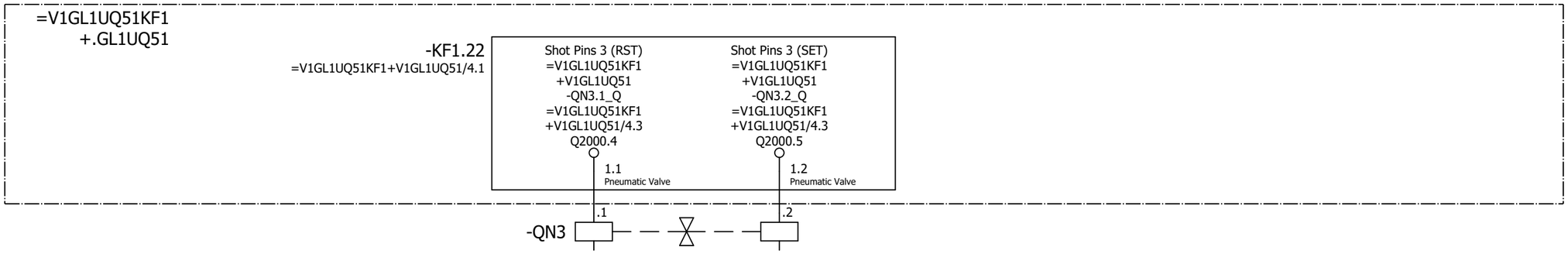

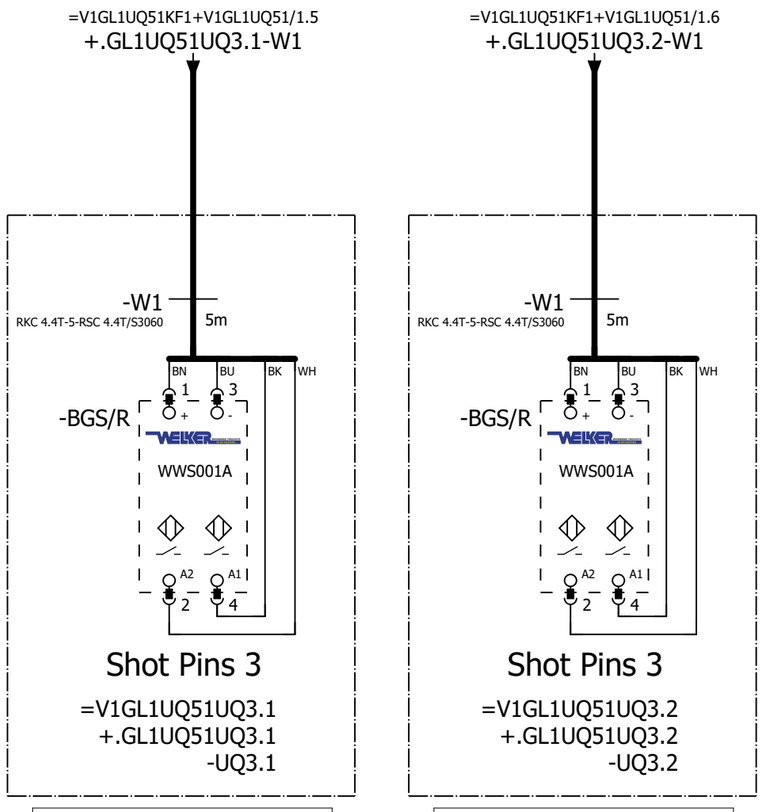

=V1GL1UQ51
-UQ3.1-BGS/R
Shot Pins 3

=V1GL1UQ51
-UQ3.2-BGS/R
Shot Pins 3

=V1GL1UQ51UQ2+.GL1UQ51UQ2/1

=V1GL1UQ51UQ4+.GL1UQ51UQ4/1

			Date	1/11/2023	Volvo Trucks North America		Valiant TMS	FESTO DQ CONNECTION QN3	Drawing name: =2V10&EFS-EL	= V1GL1UQ51UQ3	
			Ed.	MKLEPADLO						+ V1GL1UQ51UQ3	
			Appr		P6700 Bodyside RH - Robot Cell 2V10				Document type: EFS	Project nr: 22-16150	Page 1
Modification	Date	Name	Original		Replacement of	Replaced by	Scale 1:1				1579

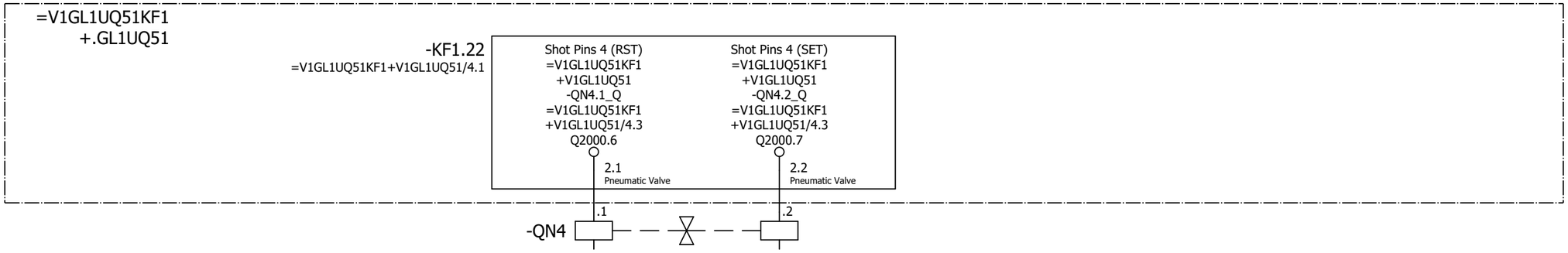

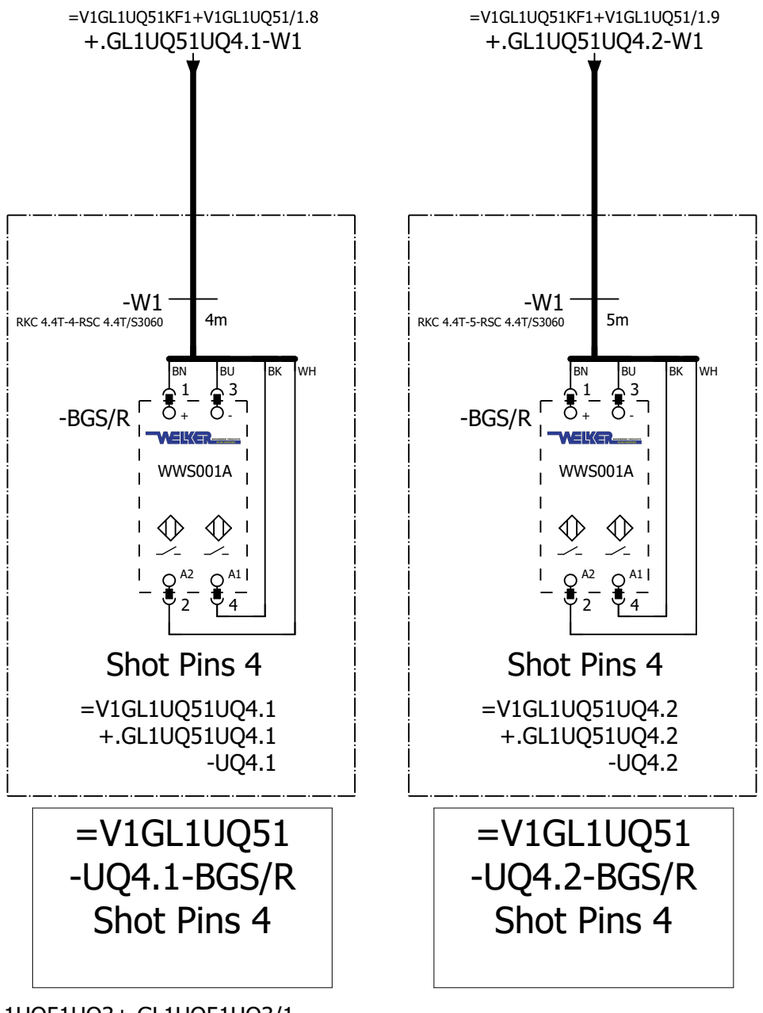

=V1GL1UQ51
-UQ4.1-BGS/R
Shot Pins 4

=V1GL1UQ51
-UQ4.2-BGS/R
Shot Pins 4

=V1GL1UQ51UQ3+.GL1UQ51UQ3/1

=V1GL1UQ51UQ5+.GL1UQ51UQ5/1

			Date	1/11/2023	Volvo Trucks North America		Valiant TMS	FESTO DQ CONNECTION QN4	Drawing name: =2V10&EFS-EL	= V1GL1UQ51UQ4	
			Ed.	MKLEPADLO						+ V1GL1UQ51UQ4	
			Appr		P6700 Bodyside RH - Robot Cell 2V10				Document type: EFS	Project nr: 22-16150	Page 1
Modification	Date	Name	Original		Replacement of	Replaced by	Scale 1:1				1579

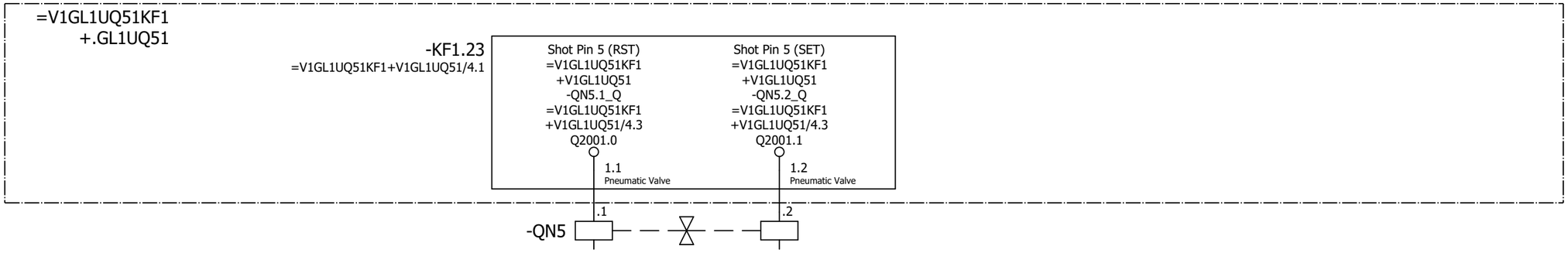

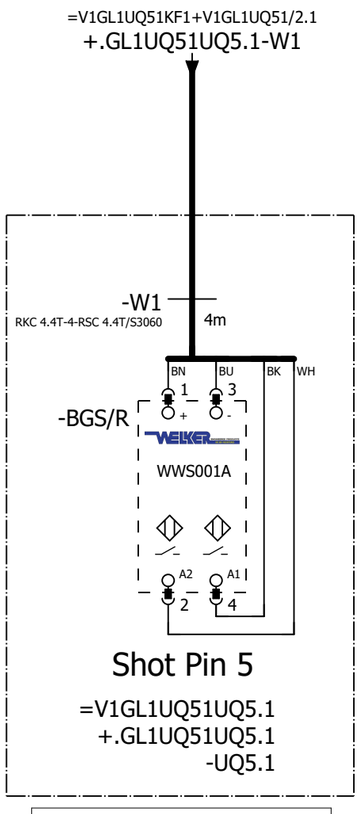

=V1GL1UQ51
-UQ5.1-BGS/R
Shot Pin 5

=V1GL1UQ51UQ4+.GL1UQ51UQ4/1

=V1GL1UQ51UQ6+.GL1UQ51UQ6/1

			Date	1/11/2023	Volvo Trucks North America		Valiant TMS	FESTO DQ CONNECTION QN5	Drawing name: =2V10&EFS-EL	= V1GL1UQ51UQ5	
			Ed.	MKLEPADLO						+ V1GL1UQ51UQ5	
			Appr		P6700 Bodyside RH - Robot Cell 2V10				Document type: EFS	Project nr: 22-16150	Page 1
Modification	Date	Name	Original		Replacement of	Replaced by	Scale 1:1				1579

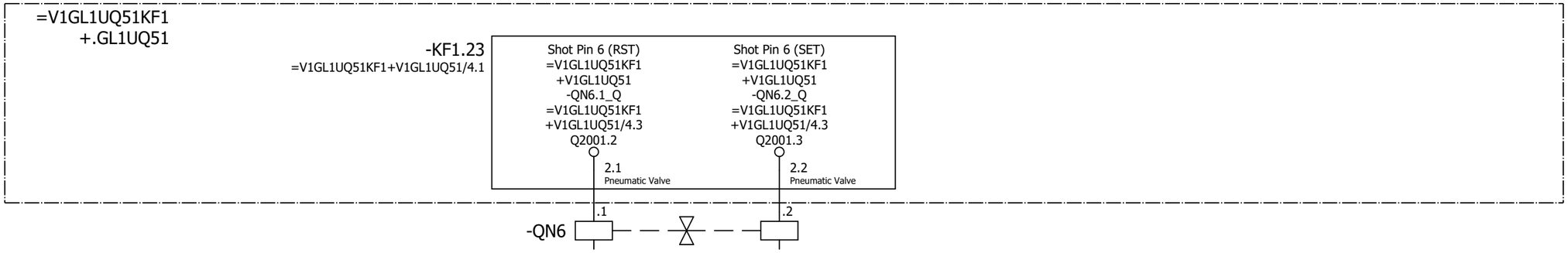

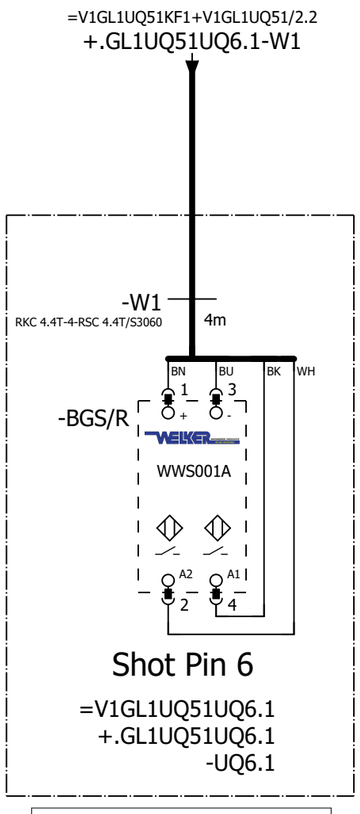

=V1GL1UQ51
-UQ6.1-BGS/R
Shot Pin 6

=V1GL1UQ51UQ5+.GL1UQ51UQ5/1

=V1GL1UQ51UQ7+.GL1UQ51UQ7/1

			Date	1/11/2023	Volvo Trucks North America		Valiant TMS	FESTO DQ CONNECTION QN6	Drawing name: =2V10&EFS-EL	= V1GL1UQ51UQ6	
			Ed.	MKLEPADLO						+ V1GL1UQ51UQ6	
			Appr		P6700 Bodyside RH - Robot Cell 2V10				Document type: EFS	Project nr: 22-16150	Page 1
Modification	Date	Name	Original		Replacement of	Replaced by	Scale 1:1				1579

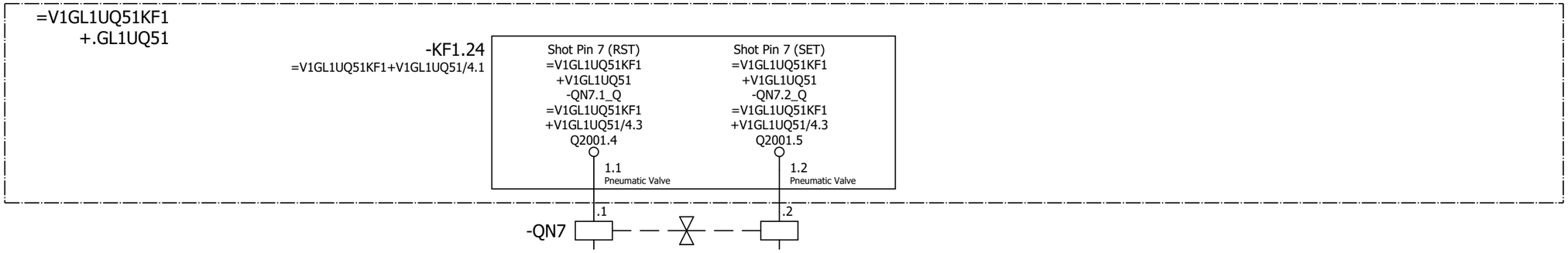

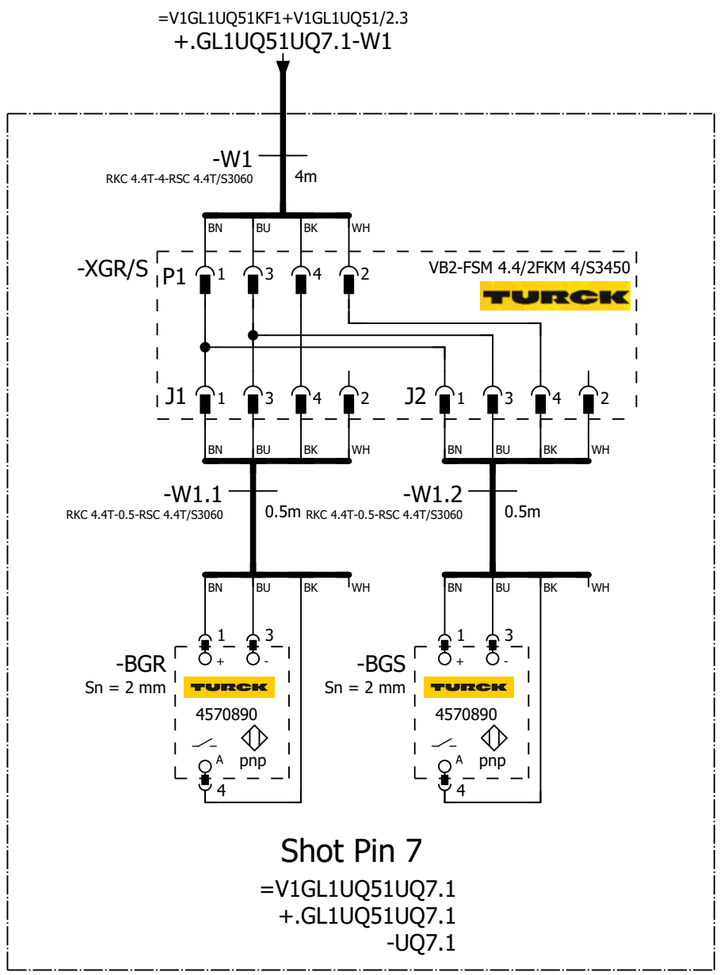

=V1GL1UQ51
-UQ7.1-BGR
Shot Pin 7

=V1GL1UQ51
-UQ7.1-BGS
Shot Pin 7

=V1GL1UQ51UQ6+.GL1UQ51UQ6/1

=V1GL1UQ51UQ8+.GL1UQ51UQ8/1

			Date	1/11/2023	Volvo Trucks North America	Valiant TMS	FESTO DQ CONNECTION QN7	Drawing name: =2V10&EFS-EL	= V1GL1UQ51UQ7		
			Ed.	MKLEPADLO					+ V1GL1UQ51UQ7		
			Appr		P6700 Bodyside RH - Robot Cell 2V10			Document type: EFS	Project nr: 22-16150	Page	1
Modification	Date	Name	Original		Replacement of / Replaced by	Scale 1:1					1579

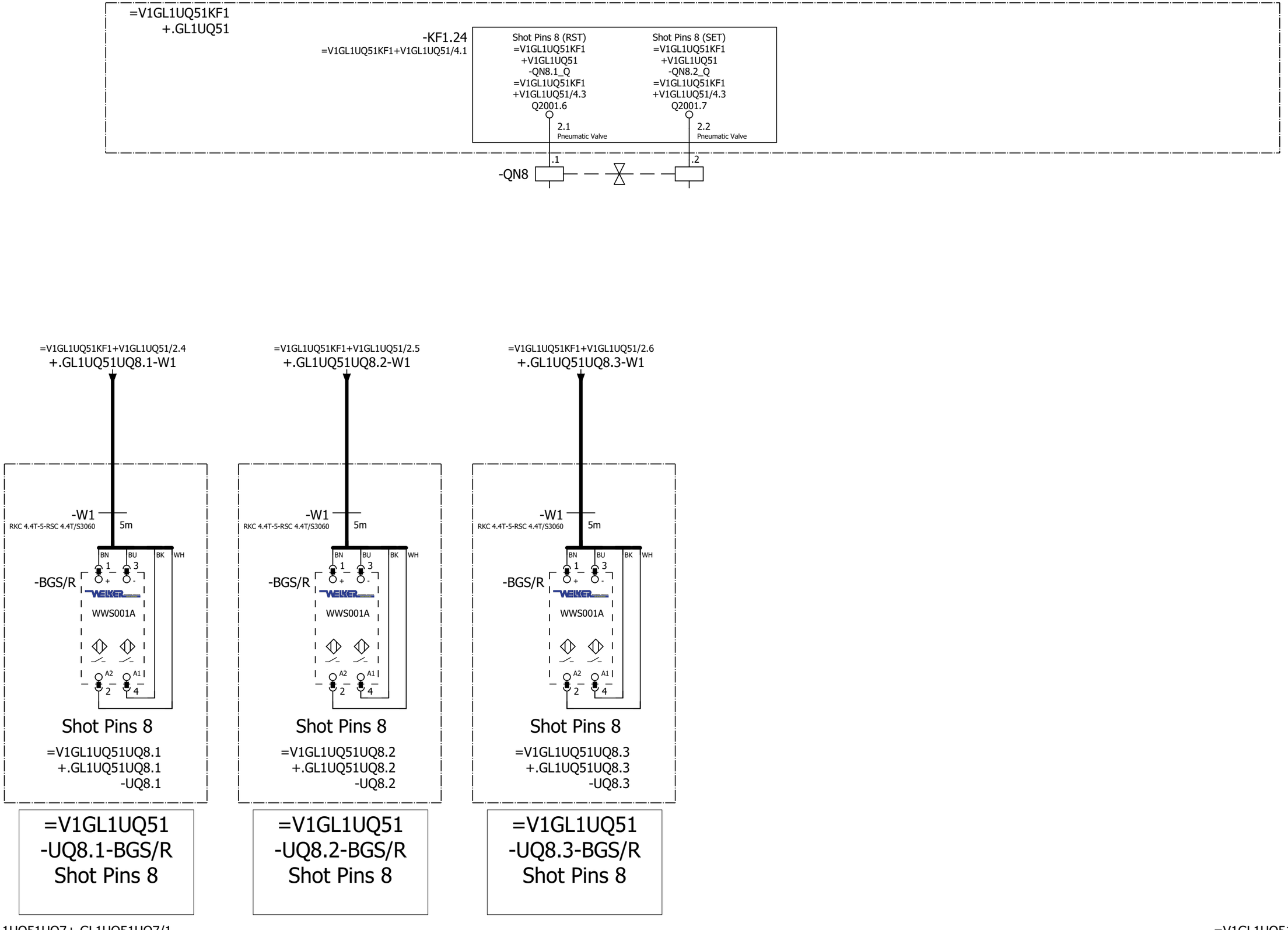

=V1GL1UQ51UQ7+.GL1UQ51UQ7/1

=V1GL1UQ51UQ9+.GL1UQ51UQ9/1

			Date	1/11/2023	Volvo Trucks North America	Valiant TMS	FESTO DQ CONNECTION QN8	Drawing name: =2V10&EFS-EL	= V1GL1UQ51UQ8		
			Ed.	MKLEPADLO					+ V1GL1UQ51UQ8		
			Appr		P6700 Bodyside RH - Robot Cell 2V10			Document type: EFS	Project nr: 22-16150	Page	1
Modification	Date	Name	Original		Replacement of / Replaced by	Scale 1:1					1579

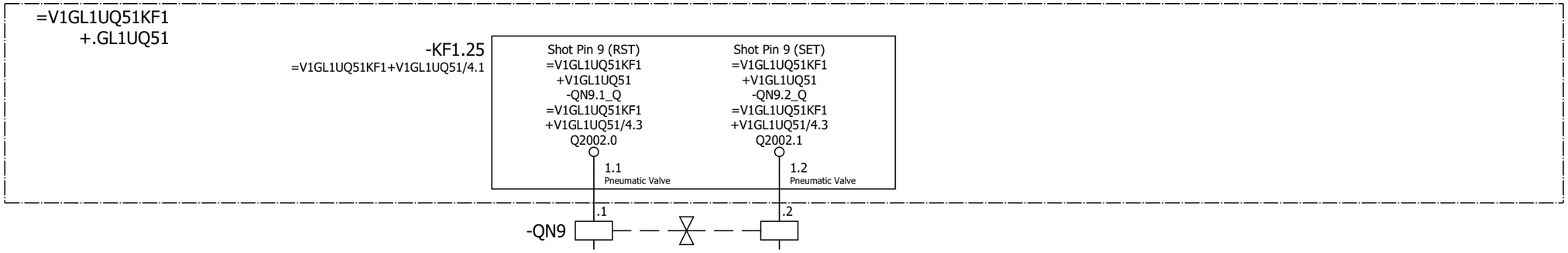

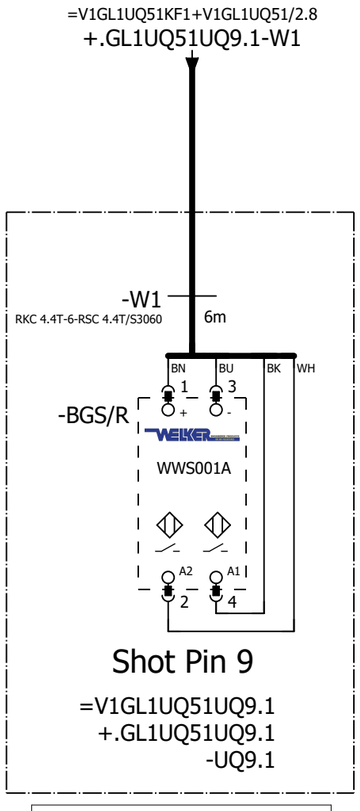

=V1GL1UQ51
-UQ9.1-BGS/R
Shot Pin 9

=V1GL1UQ51UQ8+.GL1UQ51UQ8/1

=V1GL1UQ51UQ10+.GL1UQ51UQ10/1

			Date	1/11/2023	Volvo Trucks North America	Valiant TMS	FESTO DQ CONNECTION QN9	Drawing name: =2V10&EFS-EL		= V1GL1UQ51UQ9	
			Ed.	MKLEPADLO						+ V1GL1UQ51UQ9	
			Appr		P6700 Bodyside RH - Robot Cell 2V10			Document type: EFS	Project nr: 22-16150		Page 1
Modification	Date	Name	Original		Replacement of	Replaced by	Scale 1:1				1579

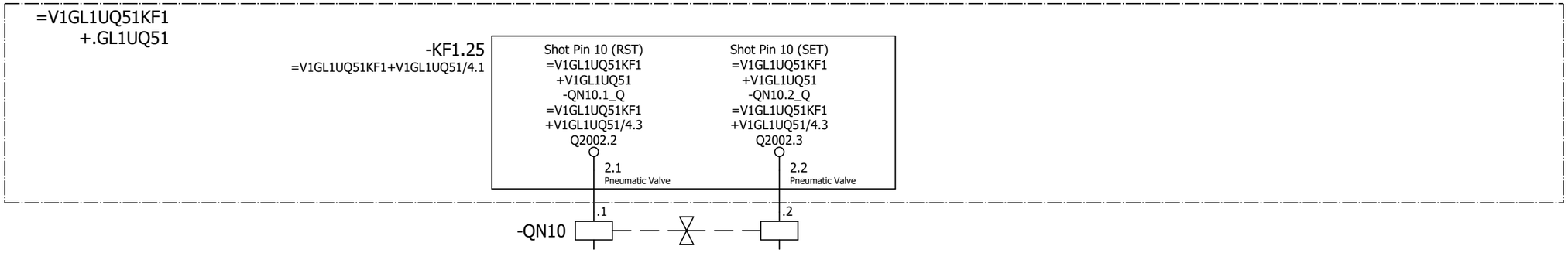

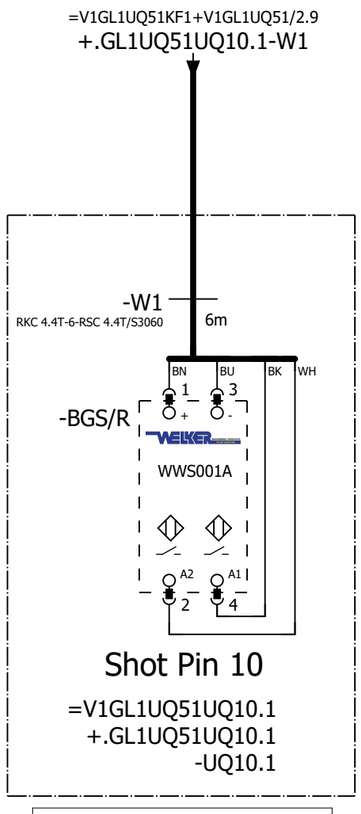

=V1GL1UQ51
-UQ10.1-BGS/R
Shot Pin 10

=V1GL1UQ51UQ9+.GL1UQ51UQ9/1

=V1GL1UQ51UQ11+.GL1UQ51UQ11/1

			Date	1/11/2023	Volvo Trucks North America		Valiant TMS	FESTO DQ CONNECTION QN10	Drawing name: =2V10&EFS-EL	= V1GL1UQ51UQ10	
			Ed.	MKLEPADLO						+ V1GL1UQ51UQ10	
			Appr		P6700 Bodyside RH - Robot Cell 2V10				Document type: EFS	Project nr: 22-16150	Page 1
Modification	Date	Name	Original		Replacement of	Replaced by	Scale 1:1				1579

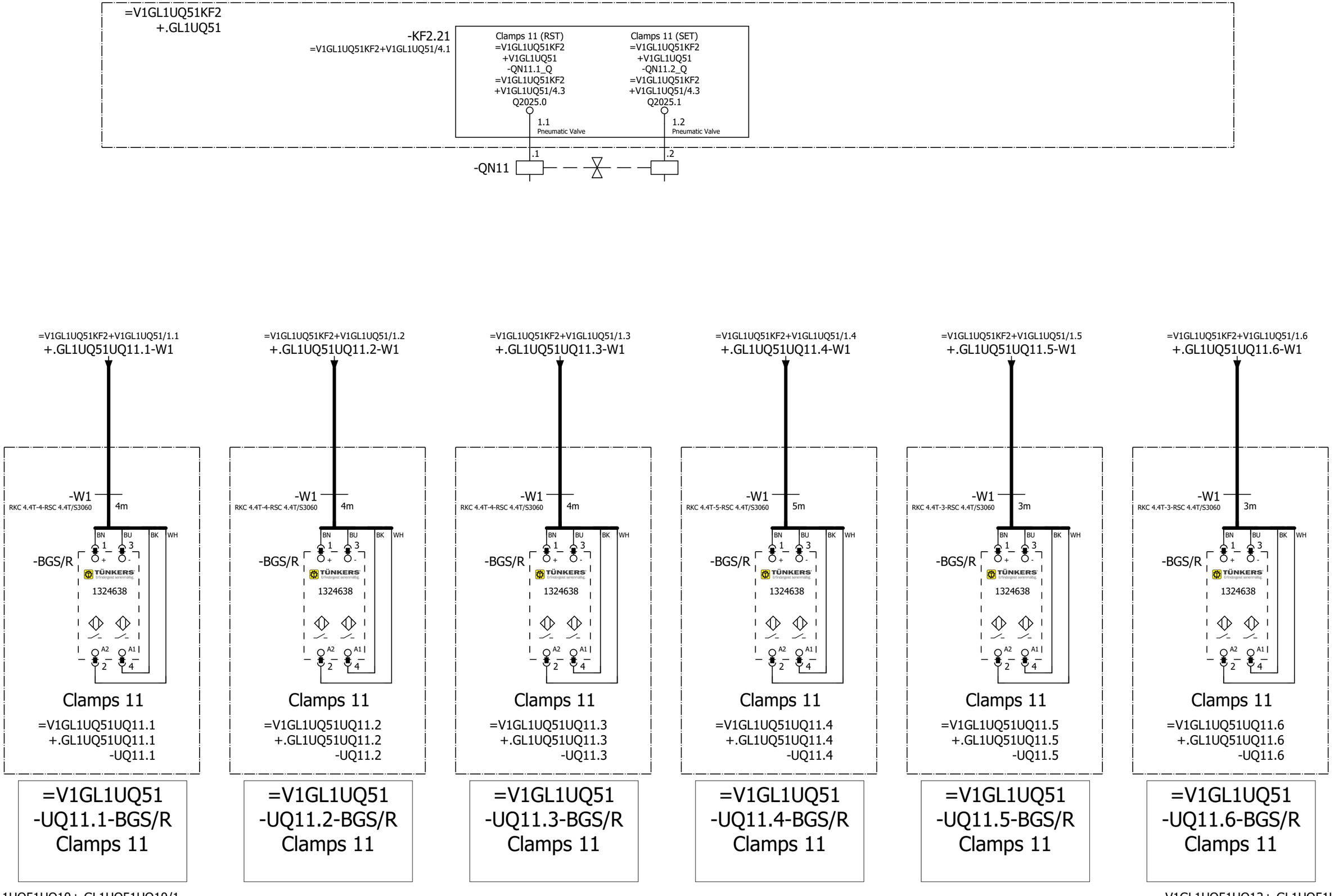

			Date	1/11/2023	Volvo Trucks North America		Valiant TMS	FESTO DQ CONNECTION QN11	Drawing name: =2V10&EFS-EL	= V1GL1UQ51UQ11	
			Ed.	MKLEPADLO						+ V1GL1UQ51UQ11	
			Appr		P6700 Bodyside RH - Robot Cell 2V10				Document type: EFS	Project nr: 22-16150	Page 1
Modification	Date	Name	Original		Replacement of	Replaced by	Scale 1:1				1579

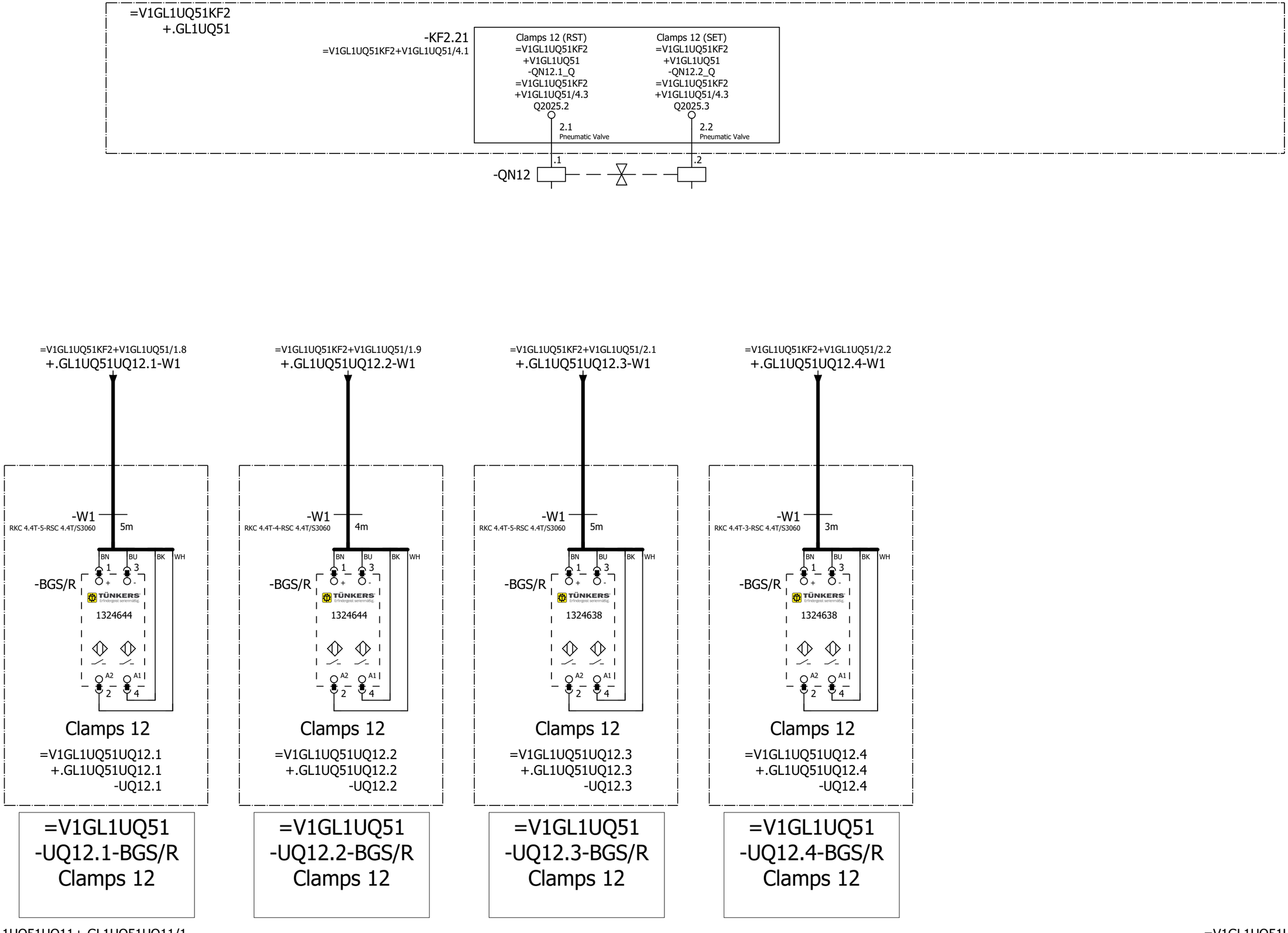

=V1GL1UQ51UQ11+.GL1UQ51UQ11/1

=V1GL1UQ51UQ13+.GL1UQ51UQ13/1

			Date	1/17/2023	Volvo Trucks North America	Valiant TMS	FESTO DQ CONNECTION QN12	Drawing name: =2V10&EFS-EL	= V1GL1UQ51UQ12		
			Ed.	MKLEPADLO					+ V1GL1UQ51UQ12		
			Appr		P6700 Bodyside RH - Robot Cell 2V10			Document type: EFS	Project nr: 22-16150	Page	1
Modification	Date	Name	Original		Replacement of / Replaced by	Scale 1:1					1579

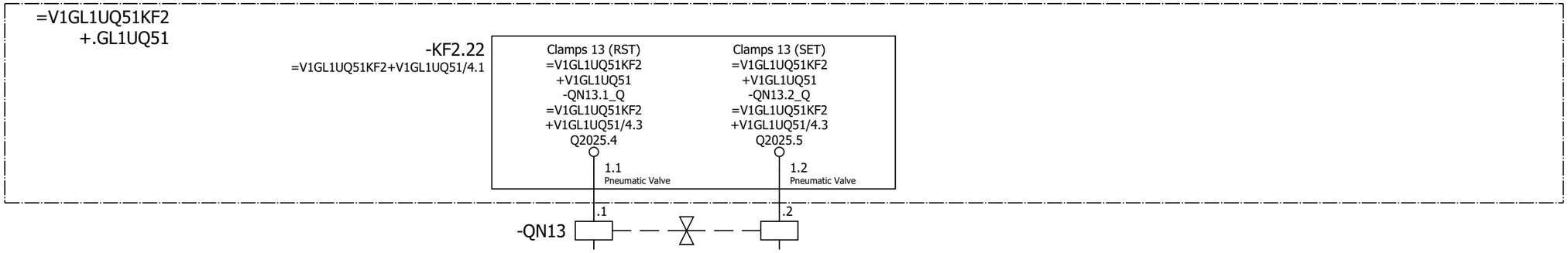

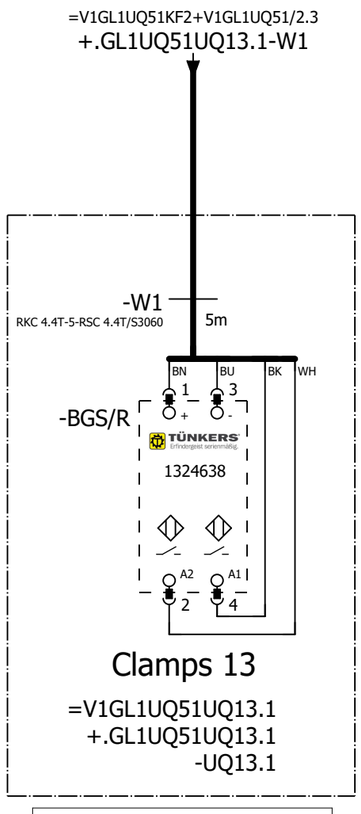

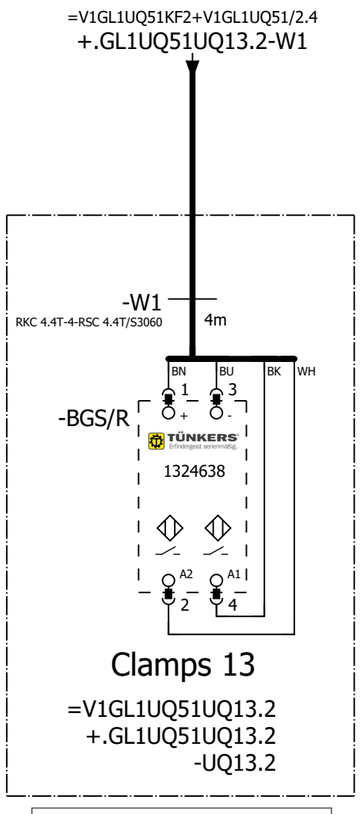

=V1GL1UQ51
-UQ13.1-BGS/R
Clamps 13

=V1GL1UQ51
-UQ13.2-BGS/R
Clamps 13

=V1GL1UQ51UQ12+.GL1UQ51UQ12/1

=V1GL1UQ51UQ14+.GL1UQ51UQ14/1

			Date	1/17/2023	Volvo Trucks North America		Valiant TMS	FESTO DQ CONNECTION QN13	Drawing name: =2V10&EFS-EL	= V1GL1UQ51UQ13	
			Ed.	MKLEPADLO						+ V1GL1UQ51UQ13	
			Appr		P6700 Bodyside RH - Robot Cell 2V10				Document type: EFS	Project nr: 22-16150	Page 1
Modification	Date	Name	Original		Replacement of	Replaced by	Scale 1:1				1579

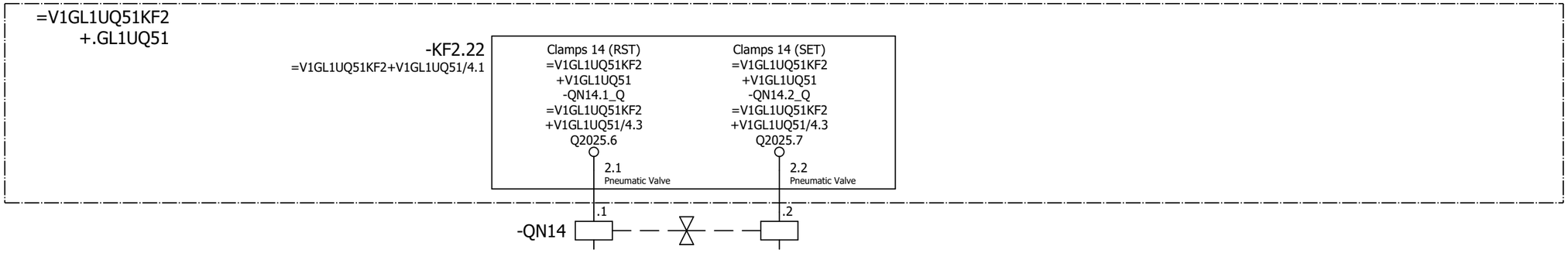

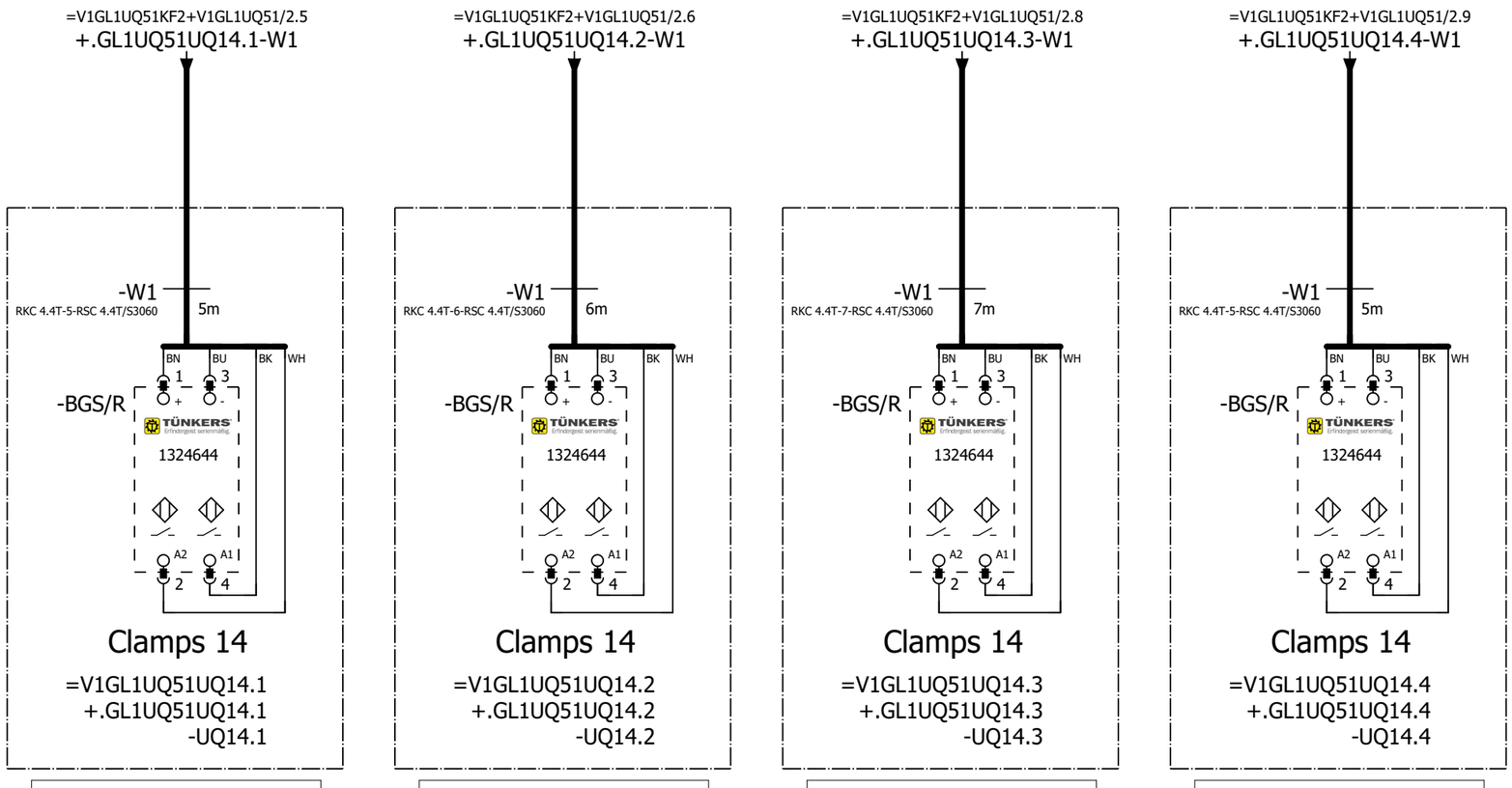

=V1GL1UQ51UQ13+.GL1UQ51UQ13/1

=V1GL1UQ51UQ15+.GL1UQ51UQ15/1

			Date	1/17/2023	Volvo Trucks North America	Valiant TMS	FESTO DQ CONNECTION QN14	Drawing name: =2V10&EFS-EL	= V1GL1UQ51UQ14		
			Ed.	MKLEPADLO					+ V1GL1UQ51UQ14		
			Appr		P6700 Bodyside RH - Robot Cell 2V10			Document type: EFS	Project nr: 22-16150	Page	1
Modification	Date	Name	Original		Replacement of / Replaced by	Scale 1:1					1579

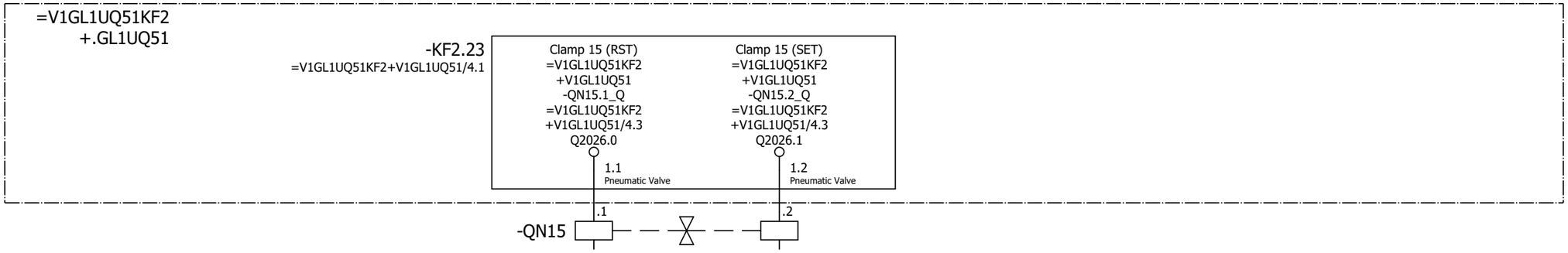

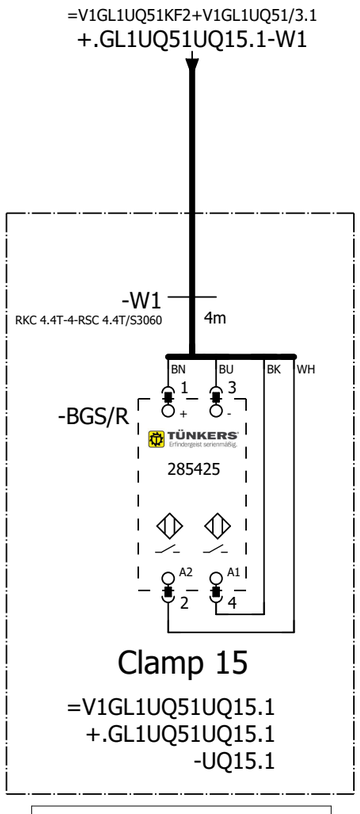

=V1GL1UQ51
-UQ15.1-BGS/R
Clamp 15

=V1GL1UQ51UQ14+.GL1UQ51UQ14/1

=V1GL1UQ51UQ16+.GL1UQ51UQ16/1

			Date	1/17/2023	Volvo Trucks North America	Valiant TMS	FESTO DQ CONNECTION QN15	Drawing name: =2V10&EFS-EL		= V1GL1UQ51UQ15	
			Ed.	MKLEPADLO						+ V1GL1UQ51UQ15	
			Appr		P6700 Bodyside RH - Robot Cell 2V10			Document type: EFS	Project nr: 22-16150		Page 1
Modification	Date	Name	Original		Replacement of	Replaced by	Scale 1:1				1579

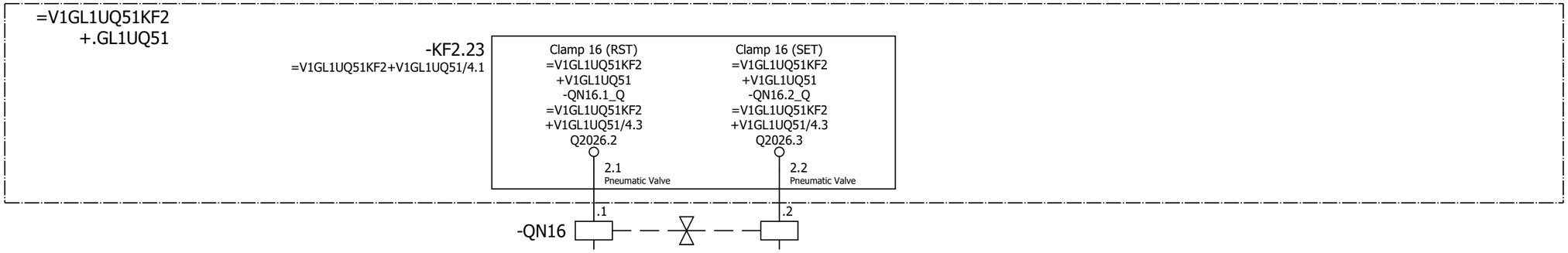

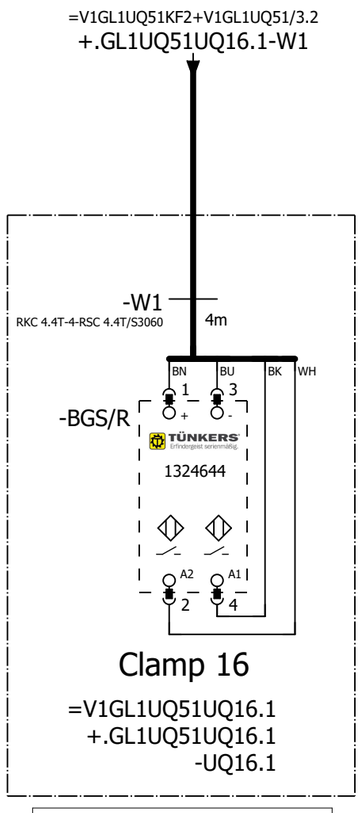

=V1GL1UQ51
-UQ16.1-BGS/R
Clamp 16

=V1GL1UQ51UQ15+.GL1UQ51UQ15/1

=V1GL1UQ51UQ17+.GL1UQ51UQ17/1

			Date	1/17/2023	Volvo Trucks North America		Valiant TMS	FESTO DQ CONNECTION QN16	Drawing name: =2V10&EFS-EL	= V1GL1UQ51UQ16	
			Ed.	MKLEPADLO						+ V1GL1UQ51UQ16	
			Appr		P6700 Bodyside RH - Robot Cell 2V10				Document type: EFS	Project nr: 22-16150	Page 1
Modification	Date	Name	Original		Replacement of	Replaced by	Scale 1:1				1579

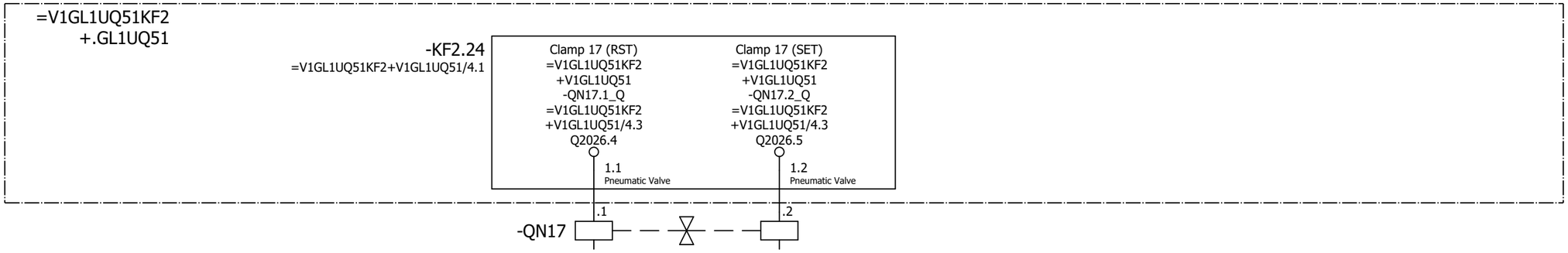

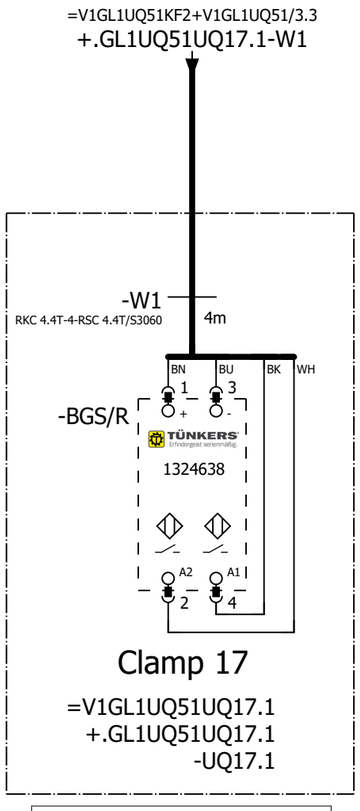

=V1GL1UQ51
-UQ17.1-BGS/R
Clamp 17

=V1GL1UQ51UQ16+.GL1UQ51UQ16/1

=V1GL1UQ51UQ18+.GL1UQ51UQ18/1

			Date	1/17/2023	Volvo Trucks North America		Valiant TMS	FESTO DQ CONNECTION QN17	Drawing name: =2V10&EFS-EL	= V1GL1UQ51UQ17	
			Ed.	MKLEPADLO						+ V1GL1UQ51UQ17	
			Appr		P6700 Bodyside RH - Robot Cell 2V10				Document type: EFS	Project nr: 22-16150	Page 1
Modification	Date	Name	Original		Replacement of	Replaced by	Scale 1:1				1579

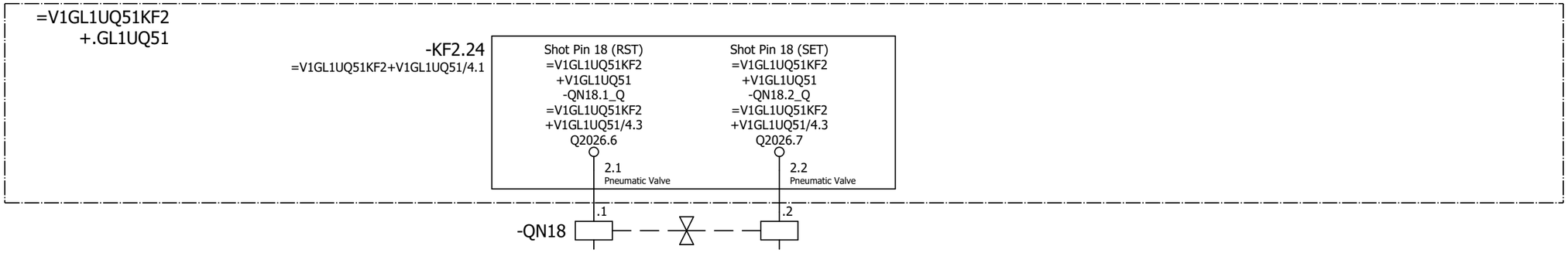

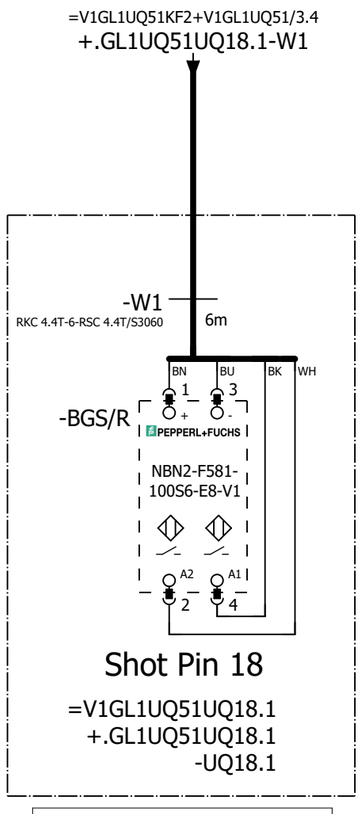

=V1GL1UQ51
-UQ18.1-BGS/R
Shot Pin 18

=V1GL1UQ51UQ17+.GL1UQ51UQ17/1

=V1GL1UQ51UQ19+.GL1UQ51UQ19/1

			Date	1/17/2023	Volvo Trucks North America	Valiant TMS	FESTO DQ CONNECTION QN18	Drawing name: =2V10&EFS-EL	= V1GL1UQ51UQ18	
			Ed.	MKLEPADLO					+ V1GL1UQ51UQ18	
			Appr		P6700 Bodyside RH - Robot Cell 2V10			Document type: EFS	Project nr: 22-16150	Page 1
Modification	Date	Name	Original		Replacement of	Replaced by	Scale 1:1			1579

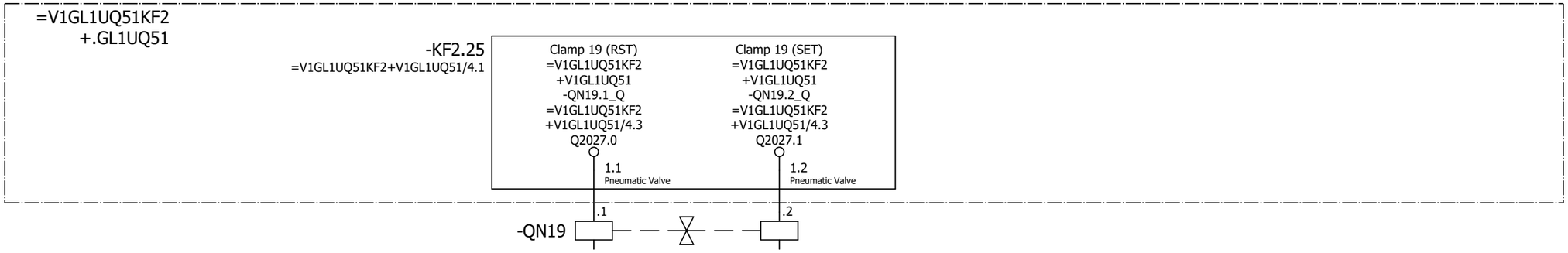

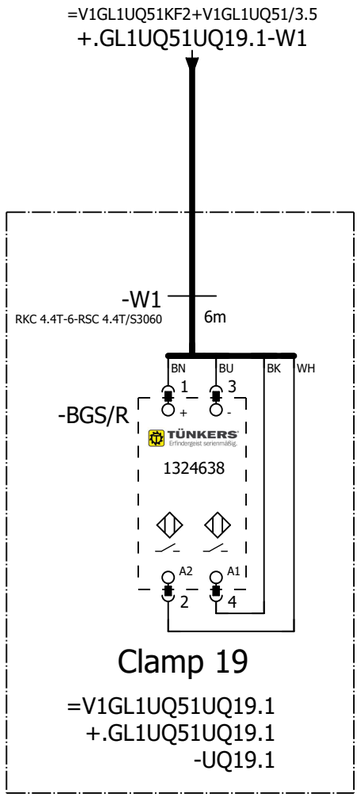

=V1GL1UQ51
-UQ19.1-BGS/R
Clamp 19

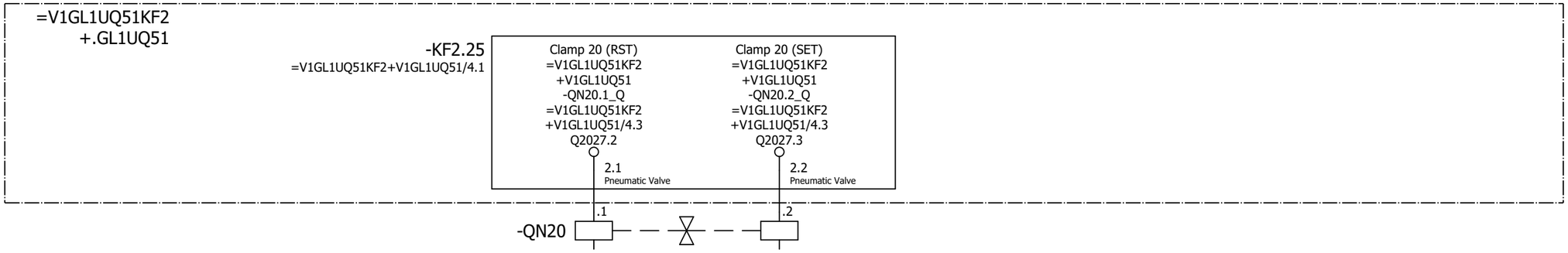

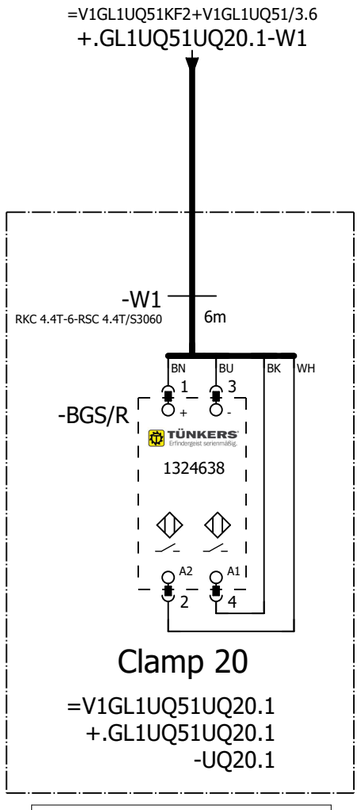

=V1GL1UQ51
-UQ20.1-BGS/R
Clamp 20

=V1GL1UQ51UQ19+.GL1UQ51UQ19/1

=V1GL1UQ51UQ21+.GL1UQ51UQ21/1

			Date	1/17/2023	Volvo Trucks North America		Valiant TMS	FESTO DQ CONNECTION QN20	Drawing name: =2V10&EFS-EL	= V1GL1UQ51UQ20	
			Ed.	MKLEPADLO						+ V1GL1UQ51UQ20	
			Appr		P6700 Bodyside RH - Robot Cell 2V10				Document type: EFS	Project nr: 22-16150	Page 1
Modification	Date	Name	Original		Replacement of	Replaced by	Scale 1:1				1579

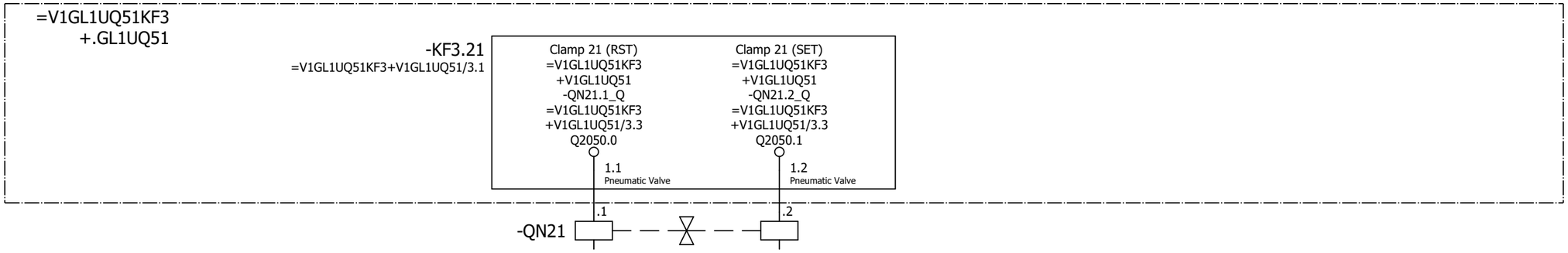

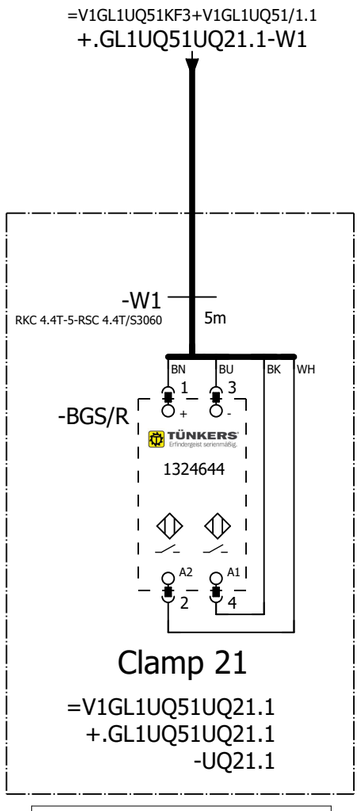

=V1GL1UQ51
-UQ21.1-BGS/R
Clamp 21

=V1GL1UQ51UQ20+.GL1UQ51UQ20/1

=V1GL1UQ51UQ22+.GL1UQ51UQ22/1

			Date	1/11/2023	Volvo Trucks North America		Valiant TMS	FESTO DQ CONNECTION QN21	Drawing name: =2V10&EFS-EL	= V1GL1UQ51UQ21	
			Ed.	MKLEPADLO						+ V1GL1UQ51UQ21	
			Appr		P6700 Bodyside RH - Robot Cell 2V10				Document type: EFS	Project nr: 22-16150	Page 1
Modification	Date	Name	Original		Replacement of	Replaced by	Scale 1:1				1579

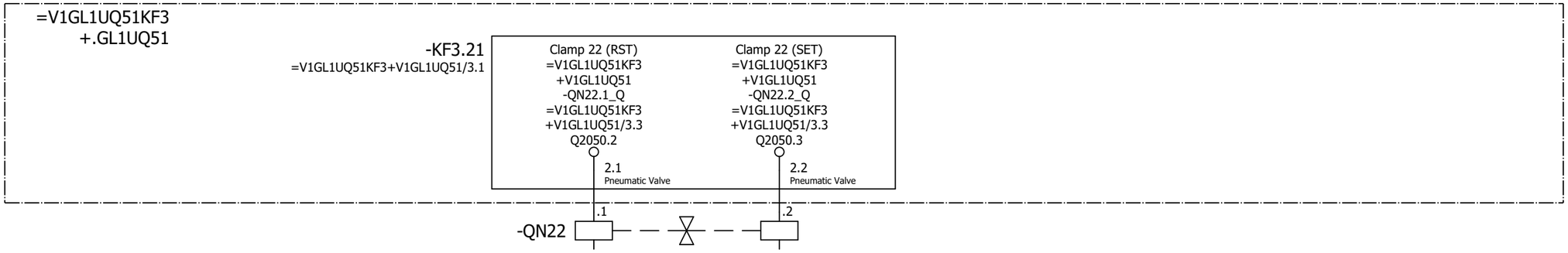

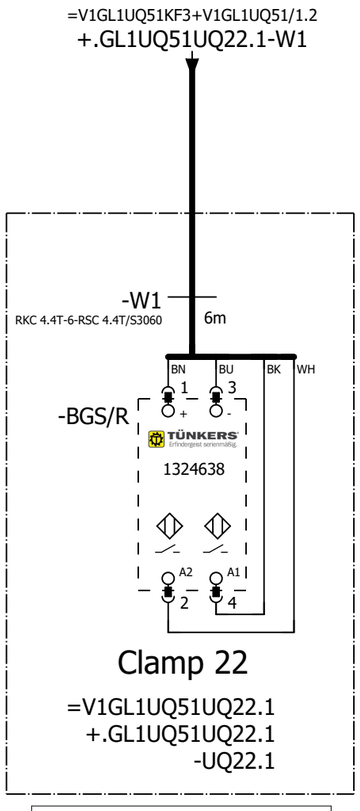

=V1GL1UQ51
-UQ22.1-BGS/R
Clamp 22

=V1GL1UQ51UQ21+.GL1UQ51UQ21/1

=V1GL1UQ51UQ23+.GL1UQ51UQ23/1

			Date	1/11/2023	Volvo Trucks North America		Valiant TMS	FESTO DQ CONNECTION QN22	Drawing name: =2V10&EFS-EL	= V1GL1UQ51UQ22	
			Ed.	MKLEPADLO						+ V1GL1UQ51UQ22	
			Appr		P6700 Bodyside RH - Robot Cell 2V10				Document type: EFS	Project nr: 22-16150	Page 1
Modification	Date	Name	Original		Replacement of	Replaced by	Scale 1:1				1579

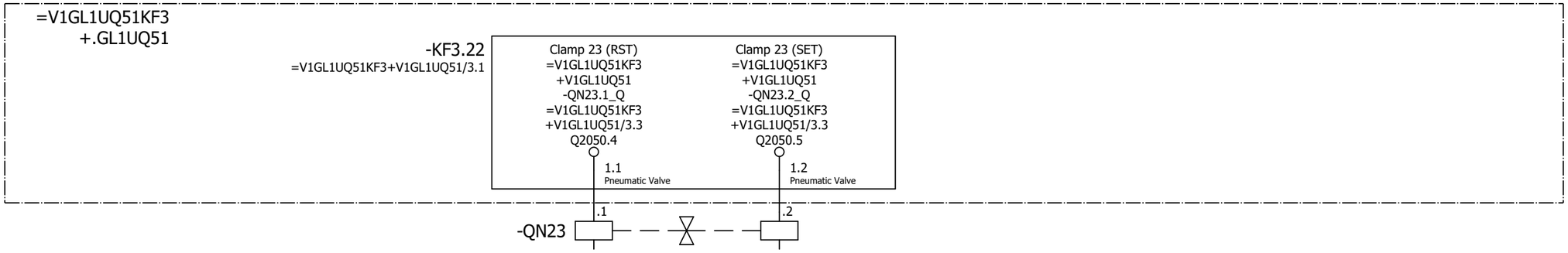

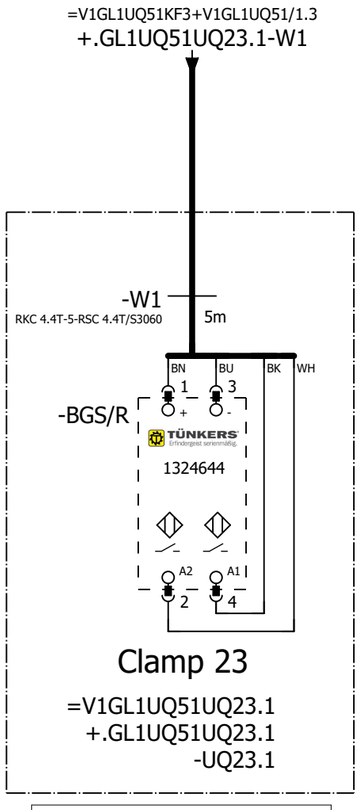

=V1GL1UQ51
-UQ23.1-BGS/R
Clamp 23

=V1GL1UQ51UQ22+.GL1UQ51UQ22/1

=V1GL1UQ51UQ24+.GL1UQ51UQ24/1

			Date	1/11/2023	Volvo Trucks North America		Valiant TMS	FESTO DQ CONNECTION QN23	Drawing name: =2V10&EFS-EL	= V1GL1UQ51UQ23	
			Ed.	MKLEPADLO						+ V1GL1UQ51UQ23	
			Appr		P6700 Bodyside RH - Robot Cell 2V10				Document type: EFS	Project nr: 22-16150	Page 1
Modification	Date	Name	Original		Replacement of	Replaced by	Scale 1:1				1579

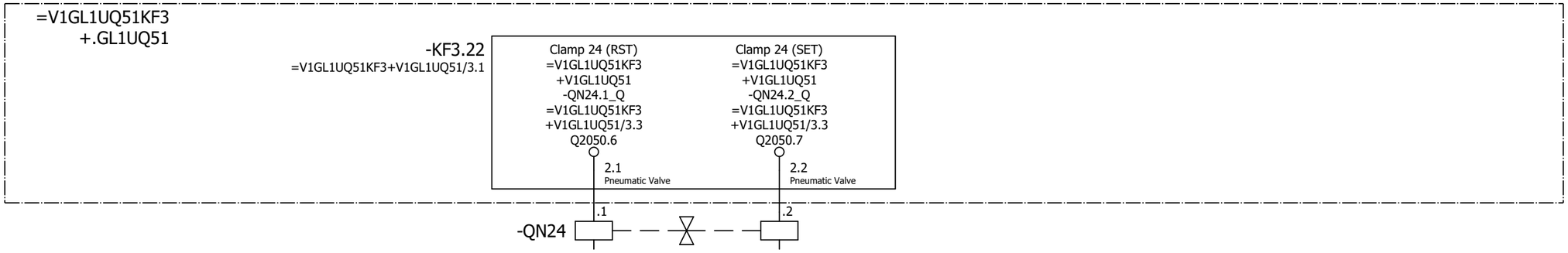

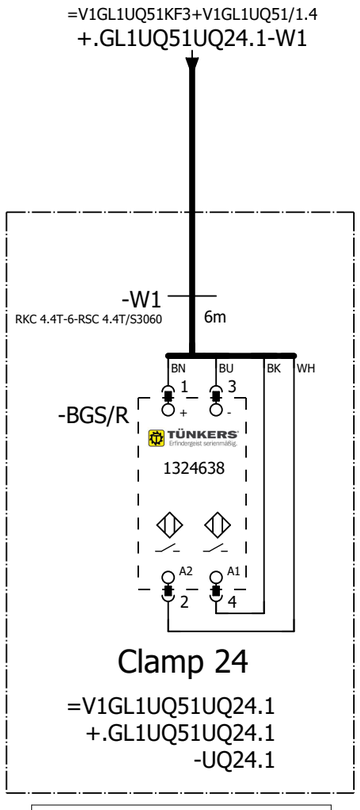

=V1GL1UQ51
-UQ24.1-BGS/R
Clamp 24

=V1GL1UQ51UQ23+.GL1UQ51UQ23/1

=V1GL1UQ51UQ25+.GL1UQ51UQ25/1

			Date	1/11/2023	Volvo Trucks North America		Valiant TMS	FESTO DQ CONNECTION QN24	Drawing name: =2V10&EFS-EL	= V1GL1UQ51UQ24	
			Ed.	MKLEPADLO						+ V1GL1UQ51UQ24	
			Appr		P6700 Bodyside RH - Robot Cell 2V10				Document type: EFS	Project nr: 22-16150	Page 1
Modification	Date	Name	Original		Replacement of	Replaced by	Scale 1:1				1579

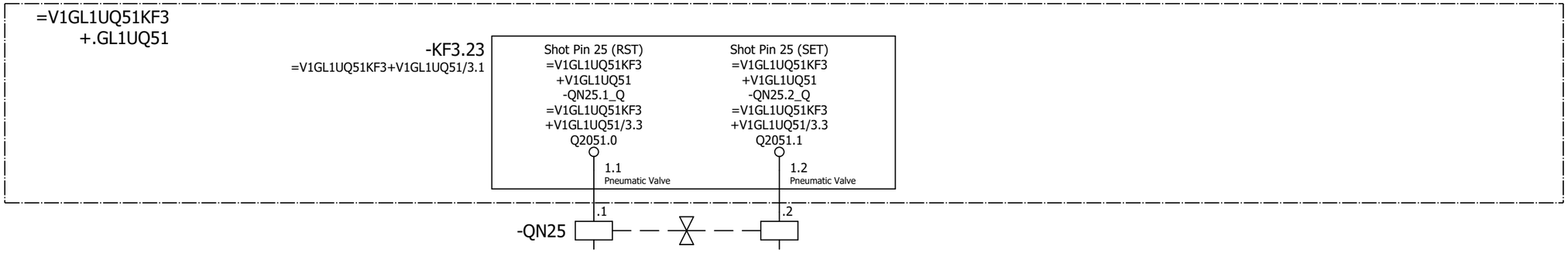

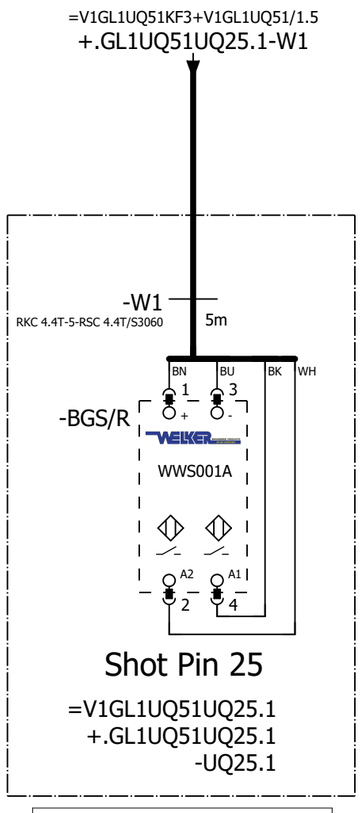

=V1GL1UQ51
-UQ25.1-BGS/R
Shot Pin 25

=V1GL1UQ51UQ24+.GL1UQ51UQ24/1

=V1GL1UQ51UQ26+.GL1UQ51UQ26/1

			Date	1/11/2023	Volvo Trucks North America		Valiant TMS	FESTO DQ CONNECTION QN25	Drawing name: =2V10&EFS-EL	= V1GL1UQ51UQ25	
			Ed.	MKLEPADLO						+ V1GL1UQ51UQ25	
			Appr		P6700 Bodyside RH - Robot Cell 2V10				Document type: EFS	Project nr: 22-16150	Page 1
Modification	Date	Name	Original		Replacement of	Replaced by	Scale 1:1				1579

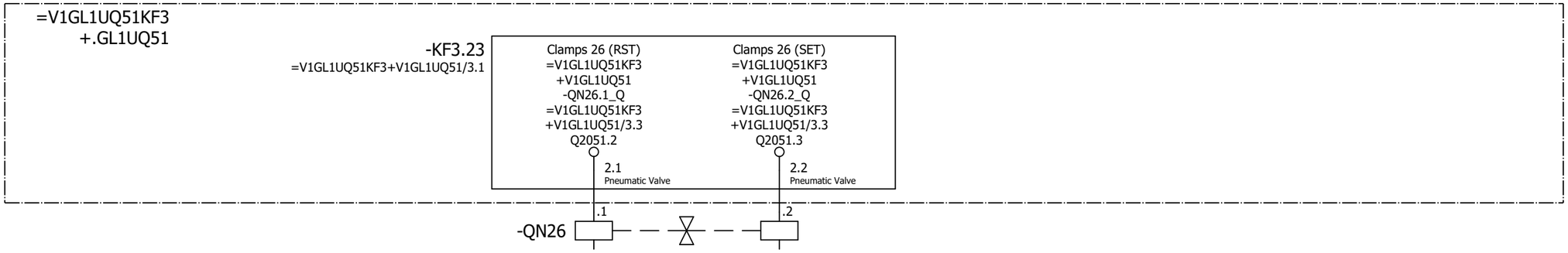

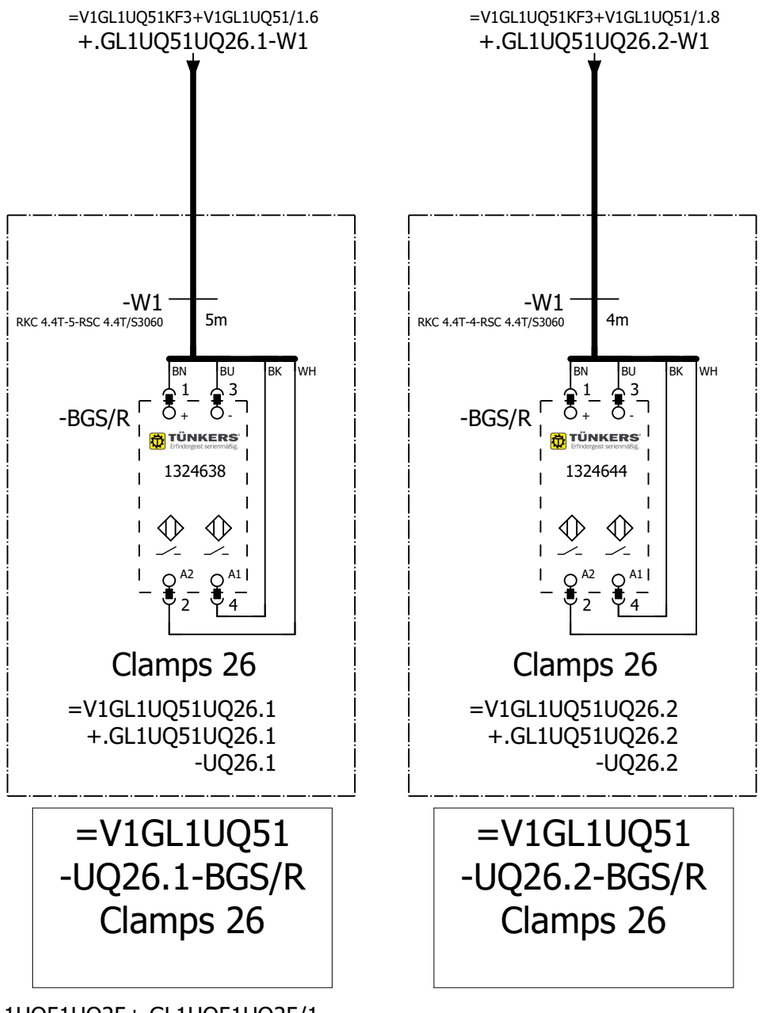

=V1GL1UQ51
-UQ26.1-BGS/R
Clamps 26

=V1GL1UQ51
-UQ26.2-BGS/R
Clamps 26

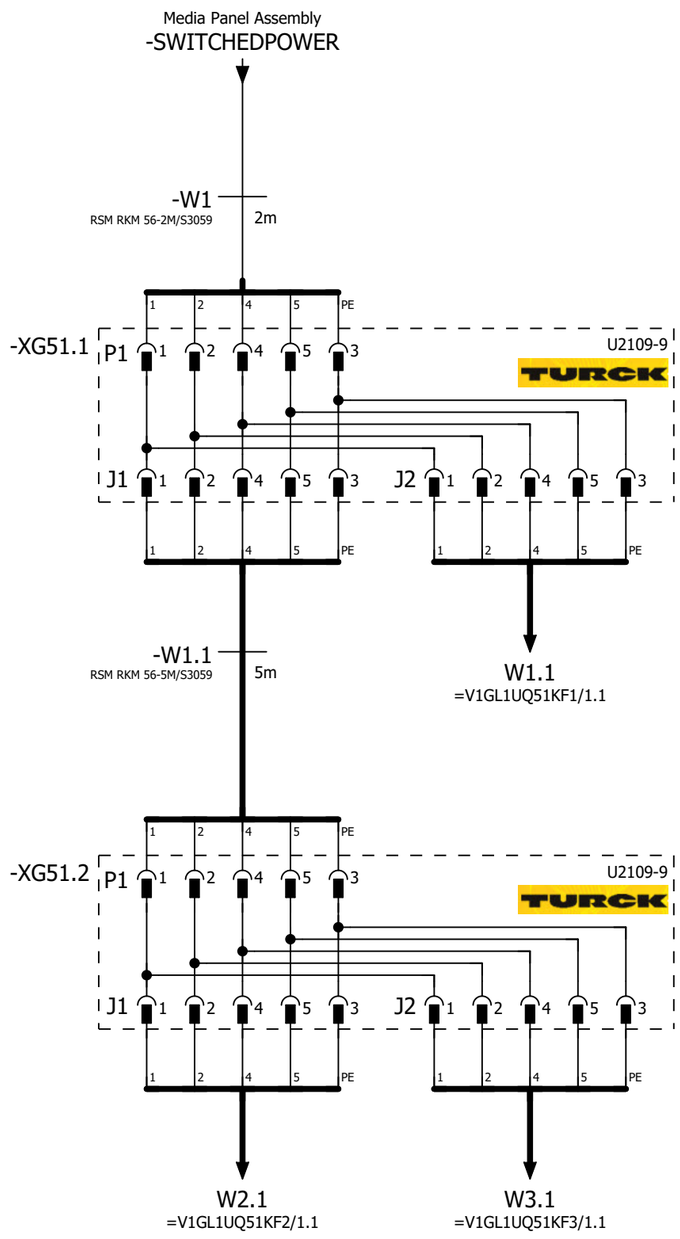

=V1GL1UQ51UQ26+.GL1UQ51UQ26/1

=V1GL1UQ52BG0+.GL1UQ52/1

			Date	1/11/2023	Volvo Trucks North America	Valiant TMS	24VDC	Drawing name: =2V10&EFS-EL		= V1GL1UQ51WC4	
			Ed.	MKLEPADLO	P6700 Bodyside RH - Robot Cell 2V10					+ V1GL1UQ51	
			Appr					Document type: EFS	Project nr: 22-16150		Page 1
Modification	Date	Name	Original		Replacement of	Replaced by	Scale 1:1				1579

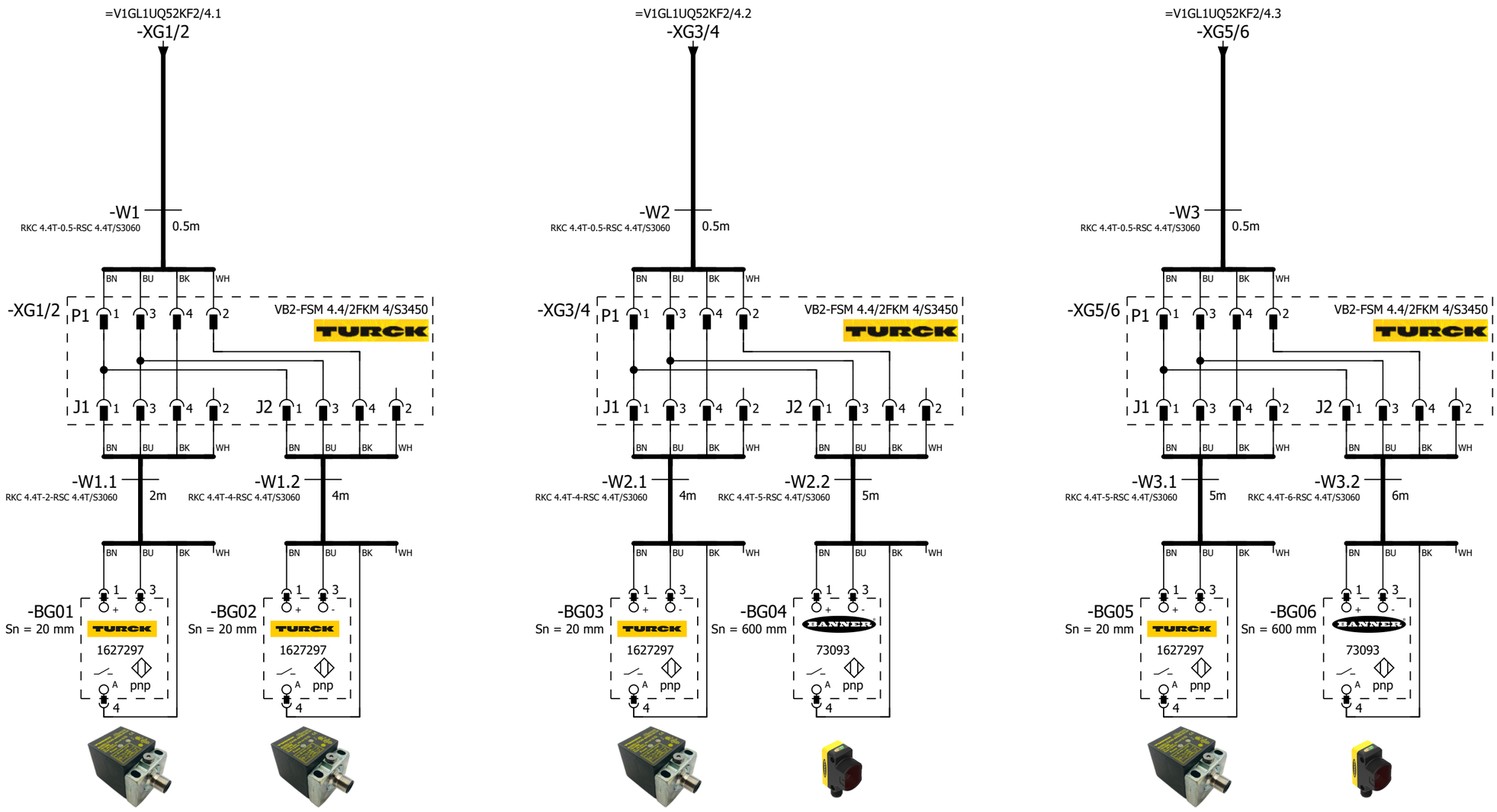

=V1GL1UQ52 -BG01 Door Frame Assembly	=V1GL1UQ52 -BG02 Door Frame Assembly	=V1GL1UQ52 -BG03 Outer Front Sill	=V1GL1UQ52 -BG04 Extruded Seal Front	=V1GL1UQ52 -BG05 Outer Front Sill	=V1GL1UQ52 -BG06 Extruded Seal Rear

=V1GL1UQ51WC4+.GL1UQ51/1

2

			Date	1/11/2023	Volvo Trucks North America	Valiant TMS	SENSORS	Drawing name: =2V10&EFS-EL	= V1GL1UQ52BG0	
			Ed.	MKLEPADLO					+ V1GL1UQ52	
			Appr		P6700 Bodyside RH - Robot Cell 2V10			Document type: EFS	Project nr: 22-16150	Page 1 / 1579
Modification	Date	Name	Original		Replacement of / Replaced by	Scale 1:1				

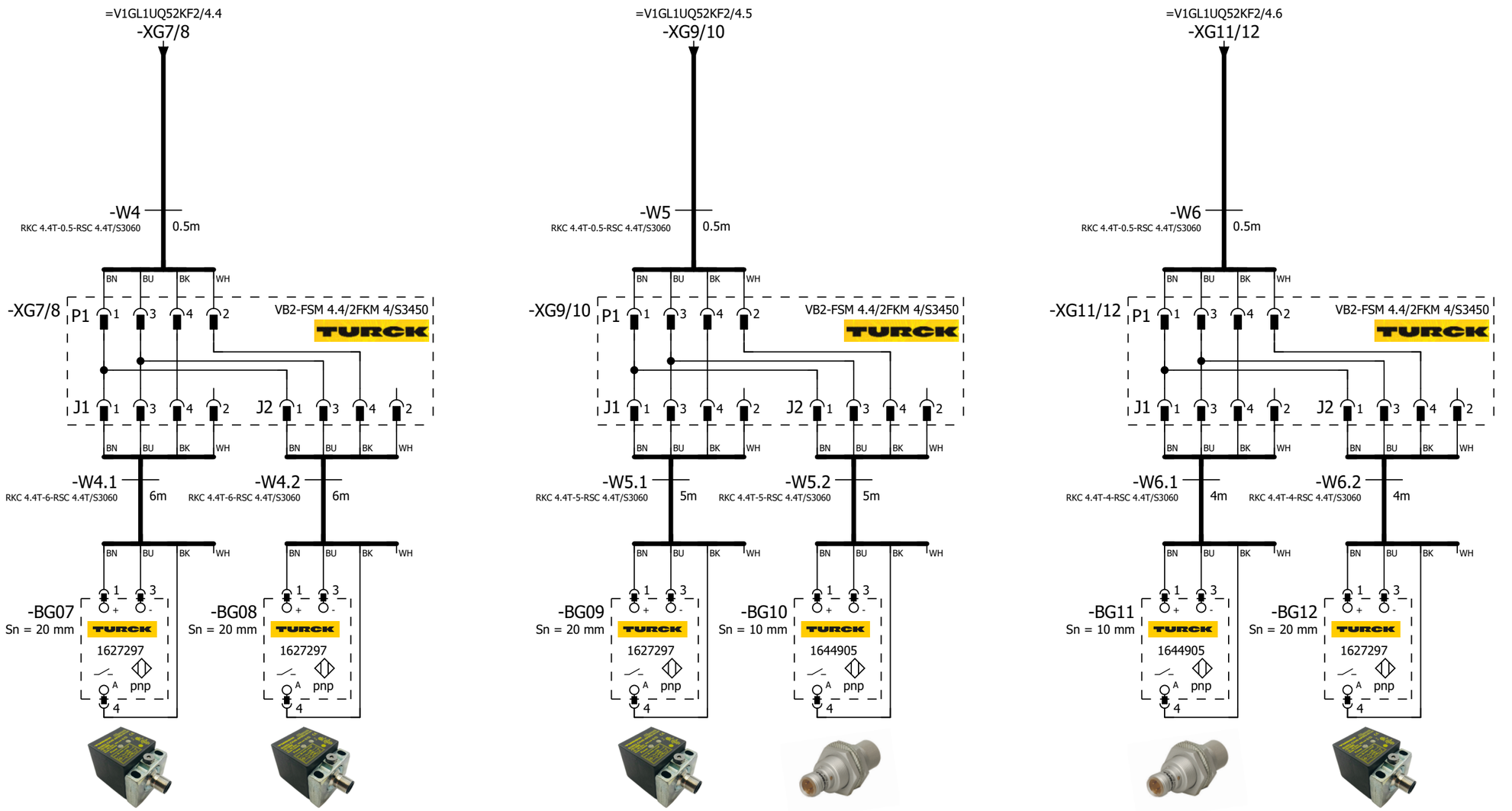

=V1GL1UQ52 -BG07 Rear Sill Sleeper	=V1GL1UQ52 -BG08 Rear Sill Sleeper	=V1GL1UQ52 -BG09 Lug Door Mnt Assembly	=V1GL1UQ52 -BG10 Lug Door Mnt Assembly	=V1GL1UQ52 -BG11 Lwr Cabinet Mnt Assembly	=V1GL1UQ52 -BG12 Header Sub Assembly

			Date	1/11/2023	Volvo Trucks North America	Valiant TMS	SENSORS	Drawing name: =2V10&EFS-EL	= V1GL1UQ52BG0	
			Ed.	MKLEPADLO					+ V1GL1UQ52	
			Appr		P6700 Bodyside RH - Robot Cell 2V10			Document type: EFS	Project nr: 22-16150	Page 2
Modification	Date	Name	Original		Replacement of / Replaced by	Scale 1:1				1579

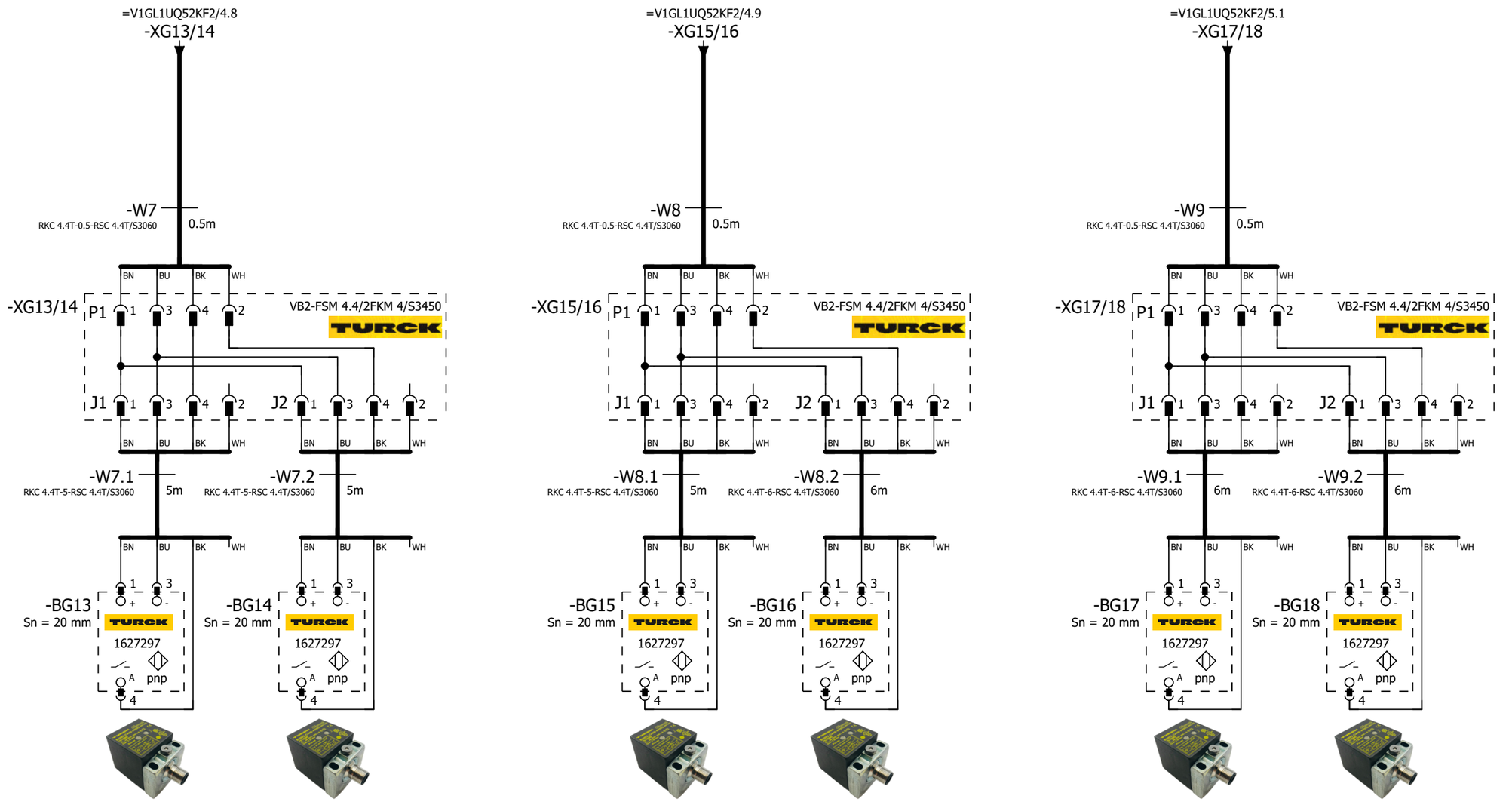

=V1GL1UQ52 -BG13 Header Sub Assembly	=V1GL1UQ52 -BG14 Bunk Support	=V1GL1UQ52 -BG15 Rear Lower Assembly	=V1GL1UQ52 -BG16 Rear Lower Assembly	=V1GL1UQ52 -BG17 Bunk Support	=V1GL1UQ52 -BG18 C-Pillar Assembly

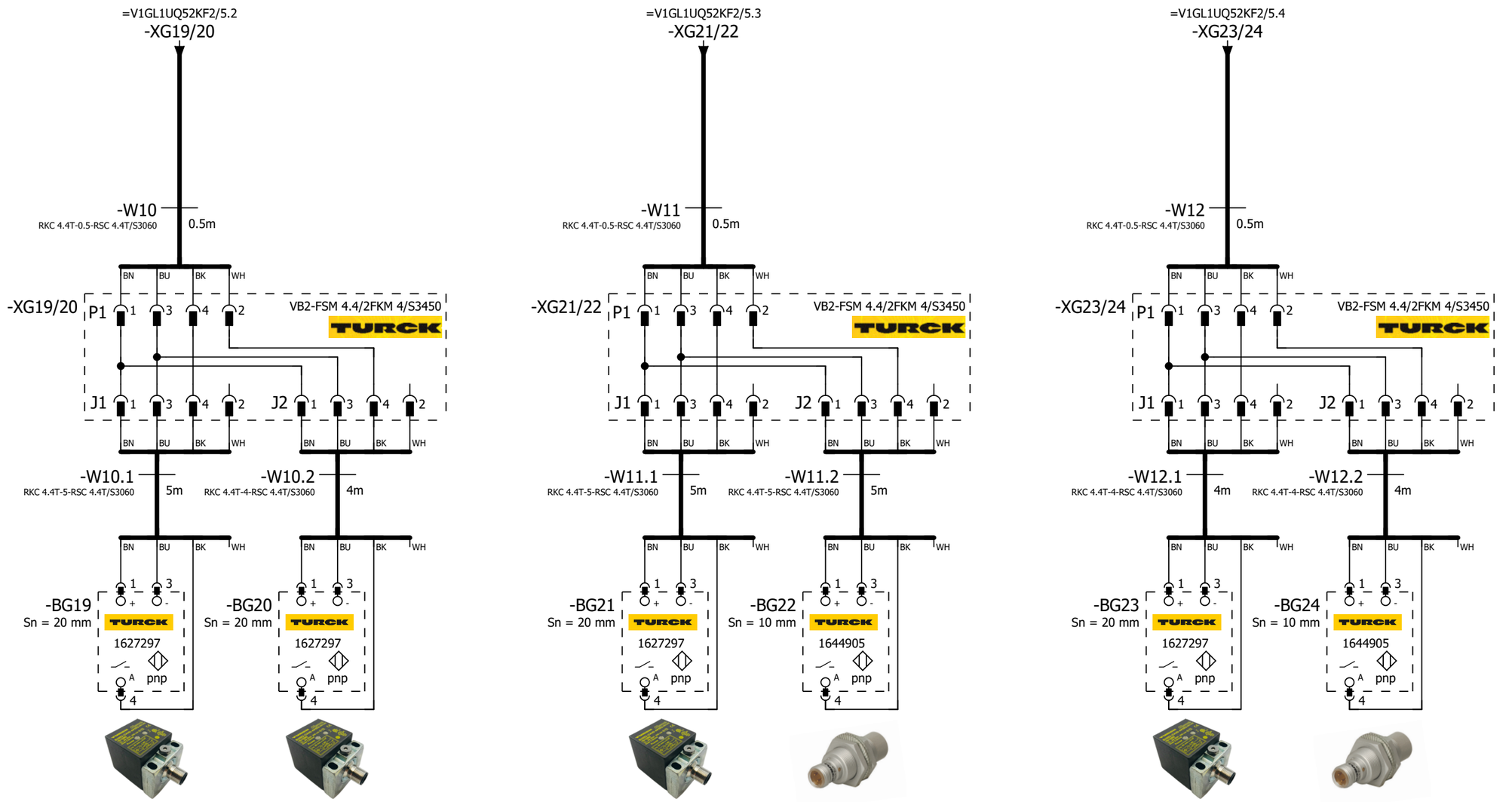

=V1GL1UQ52 -BG19 C-Pillar Assembly	=V1GL1UQ52 -BG20 Blind Lower	=V1GL1UQ52 -BG21 Blind Lower	=V1GL1UQ52 -BG22 Vertical Member	=V1GL1UQ52 -BG23 Vertical Member	=V1GL1UQ52 -BG24 Cabinet Mnt

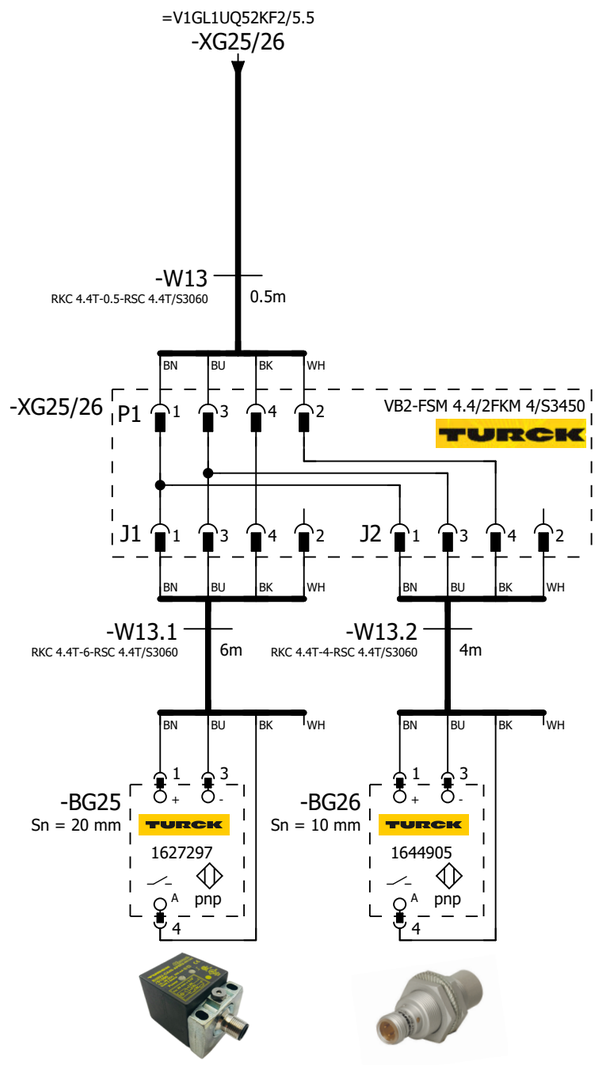

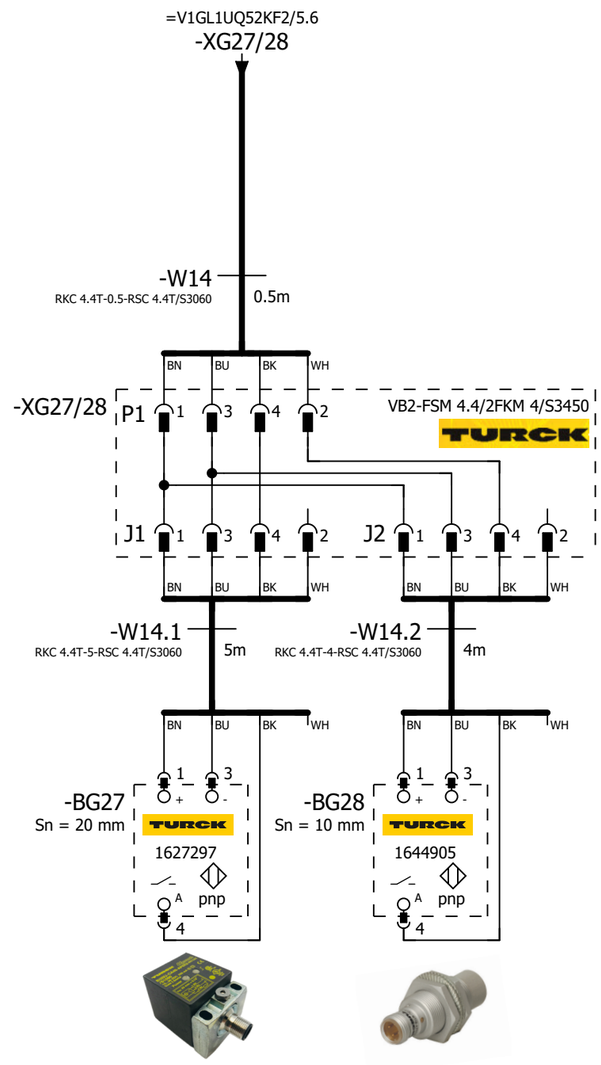

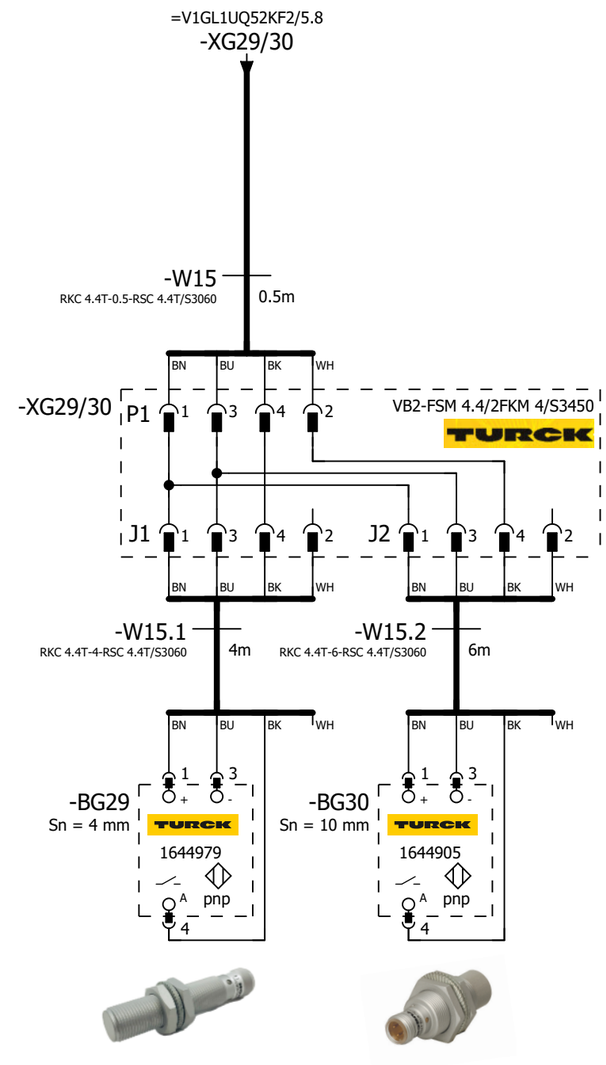

=V1GL1UQ52 -BG25 Header Sub Assembly	=V1GL1UQ52 -BG26 Cabinet Mount	=V1GL1UQ52 -BG27 Lw Cabinet Mnt Assembly LH/RH	=V1GL1UQ52 -BG28 Intermed H R Long
=V1GL1UQ52 -BG29 Cabinet Mount	=V1GL1UQ52 -BG30 Cabinet Mount		

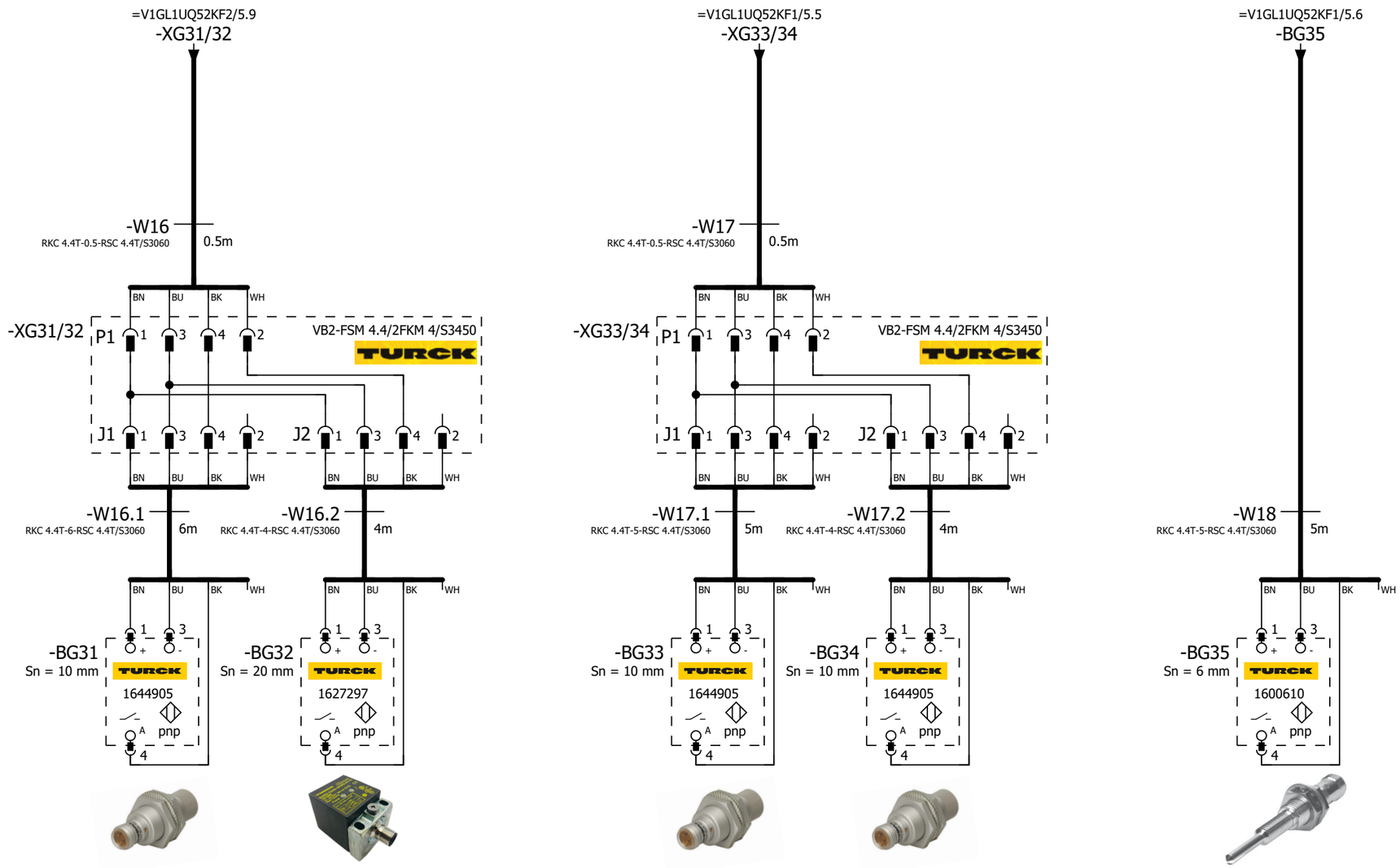

=V1GL1UQ52 -BG31 Cabinet Mount	=V1GL1UQ52 -BG32 Cabinet Mount	=V1GL1UQ52 -BG33 Rear TV Mount Bracket	=V1GL1UQ52 -BG34 Cabinet Mount	=V1GL1UQ52 -BG35 Nut L320 Part

=V1GL1UQ52KF1/1

			Date	1/11/2023	Volvo Trucks North America	Valiant TMS	SENSORS	Drawing name: =2V10&EFS-EL	= V1GL1UQ52BG0		
			Ed.	MKLEPADLO					+ V1GL1UQ52		
			Appr		P6700 Bodyside RH - Robot Cell 2V10			Document type: EFS	Project nr: 22-16150	Page	6
Modification	Date	Name	Original		Replacement of	Replaced by	Scale 1:1				1579

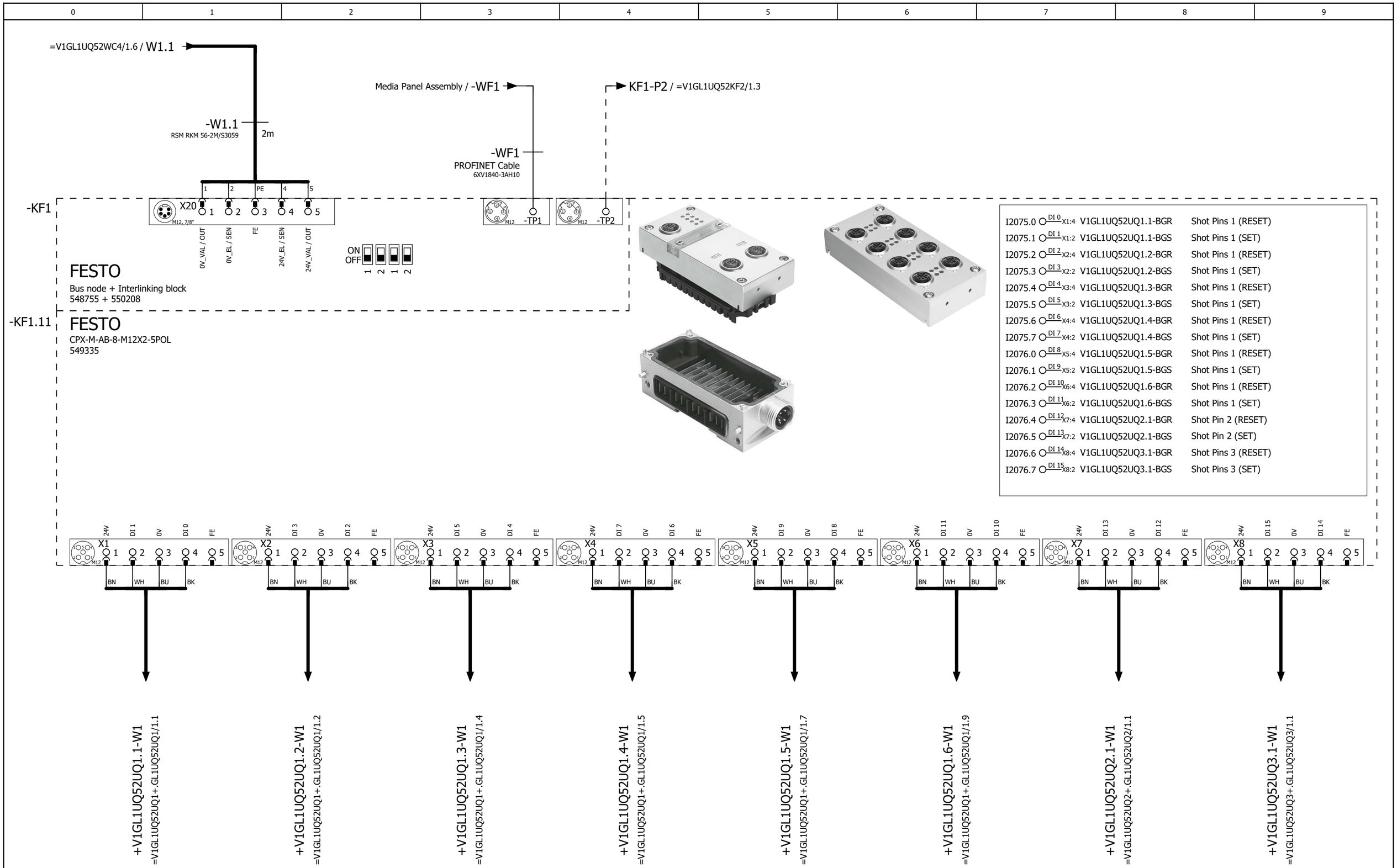

=V1GL1UQ52BG0/6

2

			Date	1/11/2023	Volvo Trucks North America	Valiant TMS	CONNECTING MOD. FOR VTSA MANIFOLD	Drawing name: =2V10&EFS-EL		= V1GL1UQ52KF1	
			Ed.	MKLEPADLO						+ V1GL1UQ52	
			Appr		P6700 Bodyside RH - Robot Cell 2V10			Document type: EFS	Project nr: 22-16150		Page 1
Modification	Date	Name	Original		Replacement of / Replaced by	Scale 1:1					1579

0	1	2	3	4	5	6	7	8	9

-KF1.12

FESTO

CPX-M-AB-8-M12X2-5POL
549335

I2077.0	DI 0 X1:4	V1GL1UQ52UQ3.2-BGR	Shot Pins 3 (RESET)
I2077.1	DI 1 X1:2	V1GL1UQ52UQ3.2-BGS	Shot Pins 3 (SET)
I2077.2	DI 2 X2:4	V1GL1UQ52UQ3.3-BGR	Shot Pins 3 (RESET)
I2077.3	DI 3 X2:2	V1GL1UQ52UQ3.3-BGS	Shot Pins 3 (SET)
I2077.4	DI 4 X3:4	V1GL1UQ52UQ3.4-BGR	Shot Pins 3 (RESET)
I2077.5	DI 5 X3:2	V1GL1UQ52UQ3.4-BGS	Shot Pins 3 (SET)
I2077.6	DI 6 X4:4	V1GL1UQ52UQ3.5-BGR	Shot Pins 3 (RESET)
I2077.7	DI 7 X4:2	V1GL1UQ52UQ3.5-BGS	Shot Pins 3 (SET)
I2078.0	DI 8 X5:4	V1GL1UQ52UQ3.6-BGR	Shot Pins 3 (RESET)
I2078.1	DI 9 X5:2	V1GL1UQ52UQ3.6-BGS	Shot Pins 3 (SET)
I2078.2	DI 10 X6:4	V1GL1UQ52UQ4.1-BGR	Shot Pins 4 (RESET)
I2078.3	DI 11 X6:2	V1GL1UQ52UQ4.1-BGS	Shot Pins 4 (SET)
I2078.4	DI 12 X7:4	V1GL1UQ52UQ4.2-BGR	Shot Pins 4 (RESET)
I2078.5	DI 13 X7:2	V1GL1UQ52UQ4.2-BGS	Shot Pins 4 (SET)
I2078.6	DI 14 X8:4	V1GL1UQ52UQ4.3-BGR	Shot Pins 4 (RESET)
I2078.7	DI 15 X8:2	V1GL1UQ52UQ4.3-BGS	Shot Pins 4 (SET)

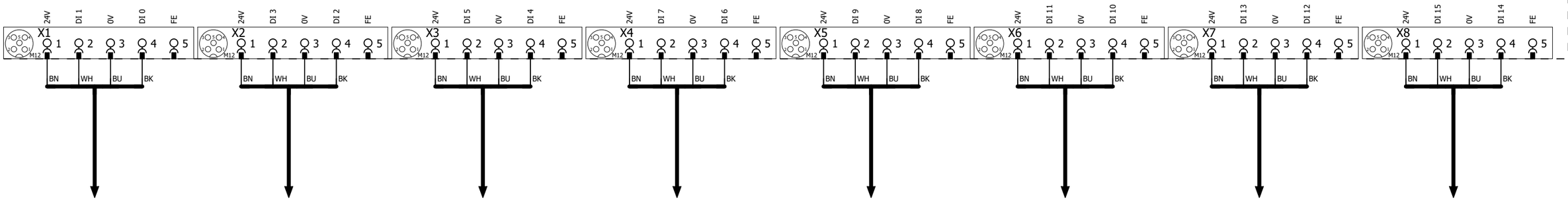

+V1GL1UQ52UQ3.2-W1
=V1GL1UQ52UQ3+.GL1UQ52UQ3/1.2

+V1GL1UQ52UQ3.3-W1
=V1GL1UQ52UQ3+.GL1UQ52UQ3/1.4

+V1GL1UQ52UQ3.4-W1
=V1GL1UQ52UQ3+.GL1UQ52UQ3/1.5

+V1GL1UQ52UQ3.5-W1
=V1GL1UQ52UQ3+.GL1UQ52UQ3/1.7

+.GL1UQ52UQ3.6-W1
=V1GL1UQ52UQ3+.GL1UQ52UQ3/1.9

+.GL1UQ52UQ4.1-W1
=V1GL1UQ52UQ4+.GL1UQ52UQ4/1.1

+.GL1UQ52UQ4.2-W1
=V1GL1UQ52UQ4+.GL1UQ52UQ4/1.2

+.GL1UQ52UQ4.3-W1
=V1GL1UQ52UQ4+.GL1UQ52UQ4/1.4

1 3

			Date	1/11/2023	Volvo Trucks North America	Valiant TMS	I/O MOD. DI16 (8 x M12) FOR VTSA-F	Drawing name: =2V10&EFS-EL		= V1GL1UQ52KF1	
			Ed.	MKLEPADLO						+ V1GL1UQ52	
			Appr		P6700 Bodyside RH - Robot Cell 2V10			Document type: EFS	Project nr: 22-16150		Page 2
Modification	Date	Name	Original		Replacement of	Replaced by	Scale 1:1				1579

0	1	2	3	4	5	6	7	8	9

-KF1.13

FESTO

CPX-M-AB-8-M12X2-5POL
549335

I2079.0	DI 0 X1:4	V1GL1UQ52UQ5.1-BGR	Shot Pins 5 (RESET)
I2079.1	DI 1 X1:2	V1GL1UQ52UQ5.1-BGS	Shot Pins 5 (SET)
I2079.2	DI 2 X2:4	V1GL1UQ52UQ5.2-BGR	Shot Pins 5 (RESET)
I2079.3	DI 3 X2:2	V1GL1UQ52UQ5.2-BGS	Shot Pins 5 (SET)
I2079.4	DI 4 X3:4	V1GL1UQ52UQ5.3-BGR	Shot Pins 5 (RESET)
I2079.5	DI 5 X3:2	V1GL1UQ52UQ5.3-BGS	Shot Pins 5 (SET)
I2079.6	DI 6 X4:4	V1GL1UQ52UQ6.1-BGR	Shot Pin 6 (RESET)
I2079.7	DI 7 X4:2	V1GL1UQ52UQ6.1-BGS	Shot Pin 6 (SET)
I2080.0	DI 8 X5:4	V1GL1UQ52UQ7.1-BGR	Shot Pin 7 (RESET)
I2080.1	DI 9 X5:2	V1GL1UQ52UQ7.1-BGS	Shot Pin 7 (SET)
I2080.2	DI 10 X6:4	V1GL1UQ52UQ9.1-BGR	Shot Pins 9 (RESET)
I2080.3	DI 11 X6:2	V1GL1UQ52UQ9.1-BGS	Shot Pins 9 (SET)
I2080.4	DI 12 X7:4	V1GL1UQ52UQ9.2-BGR	Shot Pins 9 (RESET)
I2080.5	DI 13 X7:2	V1GL1UQ52UQ9.2-BGS	Shot Pins 9 (SET)
I2080.6	DI 14 X8:4	V1GL1UQ52UQ10.1-BGR	Clamps 10 (RESET)
I2080.7	DI 15 X8:2	V1GL1UQ52UQ10.1-BGS	Clamps 10 (SET)

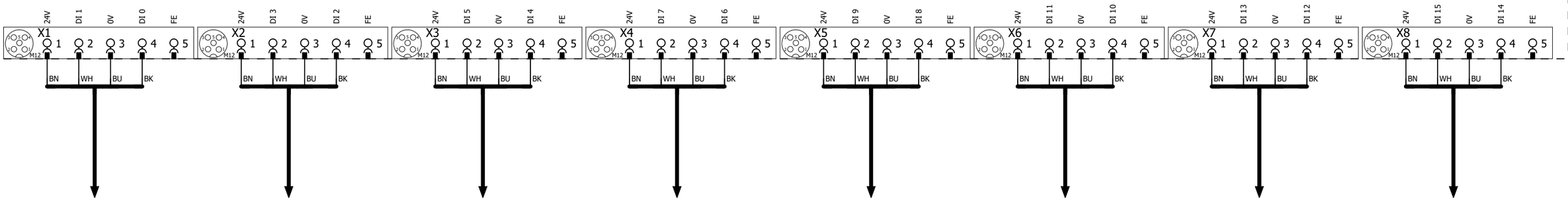

+.GL1UQ52UQ5.1-W1
=V1GL1UQ52UQ5+.GL1UQ52UQ5/1.1

+.GL1UQ52UQ5.2-W1
=V1GL1UQ52UQ5+.GL1UQ52UQ5/1.2

+.GL1UQ52UQ5.3-W1
=V1GL1UQ52UQ5+.GL1UQ52UQ5/1.4

+.GL1UQ52UQ6.1-W1
=V1GL1UQ52UQ6+.GL1UQ52UQ6/1.1

+.GL1UQ52UQ7.1-W1
=V1GL1UQ52UQ7+.GL1UQ52UQ7/1.1

+.GL1UQ52UQ9.1-W1
=V1GL1UQ52UQ9+.GL1UQ52UQ9/1.1

+.GL1UQ52UQ9.2-W1
=V1GL1UQ52UQ9+.GL1UQ52UQ9/1.2

+.GL1UQ52UQ10.1-W1
=V1GL1UQ52UQ10+.GL1UQ52UQ10/1.1

2 4

			Date	1/11/2023	Volvo Trucks North America	Valiant TMS	I/O MOD. DI16 (8 x M12) FOR VTSA-F	Drawing name: =2V10&EFS-EL		= V1GL1UQ52KF1	
			Ed.	MKLEPADLO						+ V1GL1UQ52	
			Appr		P6700 Bodyside RH - Robot Cell 2V10			Document type: EFS	Project nr: 22-16150		Page 3
Modification	Date	Name	Original		Replacement of	Replaced by	Scale 1:1				1579

0	1	2	3	4	5	6	7	8	9

I2081.0	DI 0 X1:4	V1GL1UQ52UQ10.2-BGR	Clamps 10 (RESET)
I2081.1	DI 1 X1:2	V1GL1UQ52UQ10.2-BGS	Clamps 10 (SET)
I2081.2	DI 2 X2:4	V1GL1UQ52UQ10.3-BGR	Clamps 10 (RESET)
I2081.3	DI 3 X2:2	V1GL1UQ52UQ10.3-BGS	Clamps 10 (SET)
I2081.4	DI 4 X3:4	V1GL1UQ52UQ10.4-BGR	Clamps 10 (RESET)
I2081.5	DI 5 X3:2	V1GL1UQ52UQ10.4-BGS	Clamps 10 (SET)
I2081.6	DI 6 X4:4	V1GL1UQ52UQ10.5-BGR	Clamps 10 (RESET)
I2081.7	DI 7 X4:2	V1GL1UQ52UQ10.5-BGS	Clamps 10 (SET)
I2082.0	DI 8 X5:4	V1GL1UQ52UQ10.6-BGR	Clamps 10 (RESET)
I2082.1	DI 9 X5:2	V1GL1UQ52UQ10.6-BGS	Clamps 10 (SET)
I2082.2	DI 10 X6:4	V1GL1UQ52UQ11.1-BGR	Clamps 11 (RESET)
I2082.3	DI 11 X6:2	V1GL1UQ52UQ11.1-BGS	Clamps 11 (SET)
I2082.4	DI 12 X7:4	V1GL1UQ52UQ11.2-BGR	Clamps 11 (RESET)
I2082.5	DI 13 X7:2	V1GL1UQ52UQ11.2-BGS	Clamps 11 (SET)
I2082.6	DI 14 X8:4	V1GL1UQ52UQ11.3-BGR	Clamps 11 (RESET)
I2082.7	DI 15 X8:2	V1GL1UQ52UQ11.3-BGS	Clamps 11 (SET)

-KF1.14

FESTO
CPX-M-AB-8-M12X2-5POL
549335

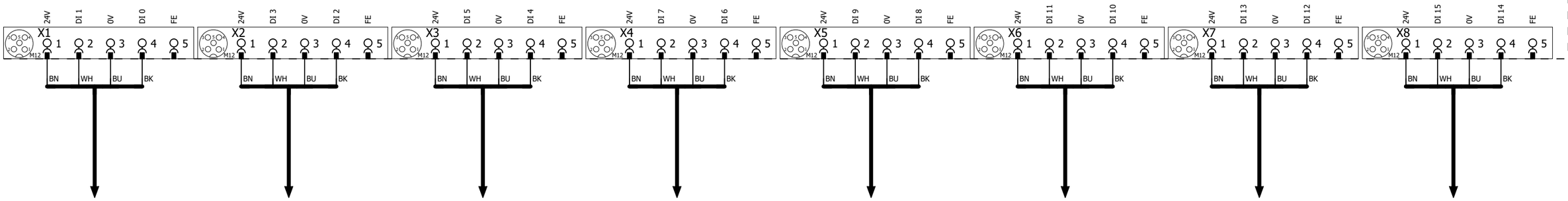

+.GL1UQ52UQ10.2-W1
=V1GL1UQ52UQ10+.GL1UQ52UQ10/1.2

+.GL1UQ52UQ10.3-W1
=V1GL1UQ52UQ10+.GL1UQ52UQ10/1.4

+.GL1UQ52UQ10.4-W1
=V1GL1UQ52UQ10+.GL1UQ52UQ10/1.5

+.GL1UQ52UQ10.5-W1
=V1GL1UQ52UQ10+.GL1UQ52UQ10/1.7

+.GL1UQ52UQ10.6-W1
=V1GL1UQ52UQ10+.GL1UQ52UQ10/1.9

+.GL1UQ52UQ11.1-W1
=V1GL1UQ52UQ11+.GL1UQ52UQ11/1.1

+.GL1UQ52UQ11.2-W1
=V1GL1UQ52UQ11+.GL1UQ52UQ11/1.2

+.GL1UQ52UQ11.3-W1
=V1GL1UQ52UQ11+.GL1UQ52UQ11/1.4

3 5

			Date	1/11/2023	Volvo Trucks North America	Valiant TMS	I/O MOD. DI16 (8 x M12) FOR VTSA-F	Drawing name: =2V10&EFS-EL		= V1GL1UQ52KF1	
			Ed.	MKLEPADLO						+ V1GL1UQ52	
			Appr		P6700 Bodyside RH - Robot Cell 2V10			Document type: EFS	Project nr: 22-16150		Page 4
Modification	Date	Name	Original		Replacement of / Replaced by	Scale 1:1					1579

I2083.0	DI 0 X1:4	V1GL1UQ52UQ11.4-BGR	Clamps 11 (RESET)
I2083.1	DI 1 X1:2	V1GL1UQ52UQ11.4-BGS	Clamps 11 (SET)
I2083.2	DI 2 X2:4	V1GL1UQ52UQ11.5-BGR	Clamps 11 (RESET)
I2083.3	DI 3 X2:2	V1GL1UQ52UQ11.5-BGS	Clamps 11 (SET)
I2083.4	DI 4 X3:4	I2083.4	Spare
I2083.5	DI 5 X3:2	I2083.5	Spare
I2083.6	DI 6 X4:4	I2083.6	Spare
I2083.7	DI 7 X4:2	I2083.7	Spare
I2084.0	DI 8 X5:4	V1GL1UQ52-BG33	Sensor Rear TV Mount Bracket
I2084.1	DI 9 X5:2	V1GL1UQ52-BG34	Sensor Cabinet Mount
I2084.2	DI 10 X6:4	V1GL1UQ52-BG35	Sensor Nut L320 Part
I2084.3	DI 11 X6:2	I2084.3	Spare
I2084.4	DI 12 X7:4	I2084.4	Spare
I2084.5	DI 13 X7:2	I2084.5	Spare
I2084.6	DI 14 X8:4	I2084.6	Spare
I2084.7	DI 15 X8:2	I2084.7	Spare

-KF1.15

FESTO
CPX-M-AB-8-M12X2-5POL
549335

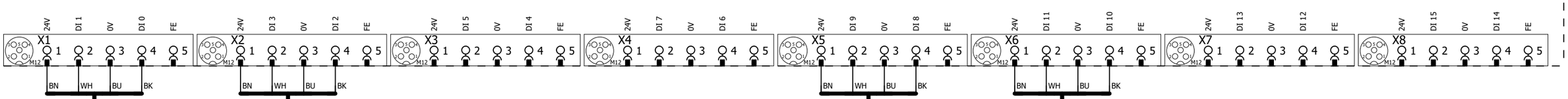

+.GL1UQ52UQ11.4-W1
=V1GL1UQ52UQ11+.GL1UQ52UQ11/1.5

+.GL1UQ52UQ11.5-W1
=V1GL1UQ52UQ11+.GL1UQ52UQ11/1.7

-XG33/34
=V1GL1UQ52BG0/6.4

-BG35
=V1GL1UQ52BG0/6.6

4 6

			Date	1/11/2023	Volvo Trucks North America	Valiant TMS	I/O MOD. DI16 (8 x M12) FOR VTSA-F	Drawing name: =2V10&EFS-EL		= V1GL1UQ52KF1	
			Ed.	MKLEPADLO						+ V1GL1UQ52	
			Appr		P6700 Bodyside RH - Robot Cell 2V10			Document type: EFS	Project nr: 22-16150		Page 5
Modification	Date	Name	Original		Replacement of / Replaced by	Scale 1:1					1579

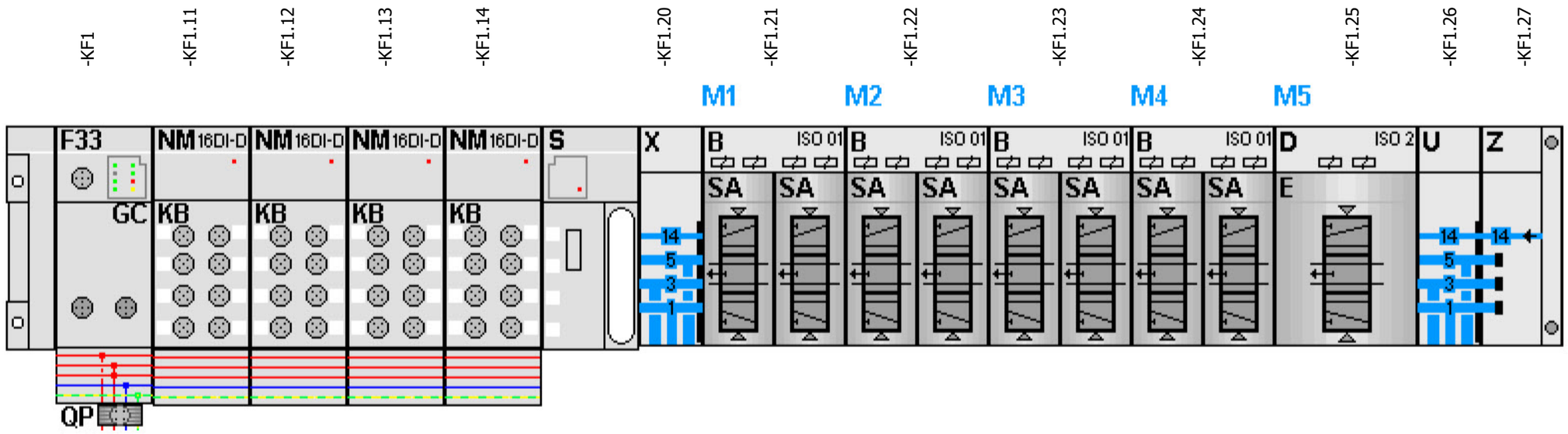

-KF1.21
=V1GL1UQ52UQ1+.GL1UQ52UQ1/1.3
=V1GL1UQ52UQ2+.GL1UQ52UQ2/1.3

FESTO

=V1GL1UQ52UQ1+.GL1UQ52UQ1/1.4	Q2075.0 DO 0 1.1	-QN1.1_Q	Shot Pins 1 (RST)
=V1GL1UQ52UQ1+.GL1UQ52UQ1/1.4	Q2075.1 DO 1 1.2	-QN1.2_Q	Shot Pins 1 (SET)
=V1GL1UQ52UQ2+.GL1UQ52UQ2/1.4	Q2075.2 DO 2 2.1	-QN2.1_Q	Shot Pin 2 (RST)
=V1GL1UQ52UQ2+.GL1UQ52UQ2/1.4	Q2075.3 DO 3 2.2	-QN2.2_Q	Shot Pin 2 (SET)

-KF1.22
=V1GL1UQ52UQ3+.GL1UQ52UQ3/1.3
=V1GL1UQ52UQ4+.GL1UQ52UQ4/1.3

FESTO

=V1GL1UQ52UQ3+.GL1UQ52UQ3/1.4	Q2075.4 DO 0 1.1	-QN3.1_Q	Shot Pins 3 (RST)
=V1GL1UQ52UQ3+.GL1UQ52UQ3/1.4	Q2075.5 DO 1 1.2	-QN3.2_Q	Shot Pins 3 (SET)
=V1GL1UQ52UQ4+.GL1UQ52UQ4/1.4	Q2075.6 DO 2 2.1	-QN4.1_Q	Shot Pins 4 (RST)
=V1GL1UQ52UQ4+.GL1UQ52UQ4/1.4	Q2075.7 DO 3 2.2	-QN4.2_Q	Shot Pins 4 (SET)

-KF1.23
=V1GL1UQ52UQ5+.GL1UQ52UQ5/1.3
=V1GL1UQ52UQ6+.GL1UQ52UQ6/1.3

FESTO

=V1GL1UQ52UQ5+.GL1UQ52UQ5/1.4	Q2076.0 DO 0 1.1	-QN5.1_Q	Shot Pins 5 (RST)
=V1GL1UQ52UQ5+.GL1UQ52UQ5/1.4	Q2076.1 DO 1 1.2	-QN5.2_Q	Shot Pins 5 (SET)
=V1GL1UQ52UQ6+.GL1UQ52UQ6/1.4	Q2076.2 DO 0 2.1	-QN6.1_Q	Shot Pin 6 (RST)
=V1GL1UQ52UQ6+.GL1UQ52UQ6/1.4	Q2076.3 DO 1 2.2	-QN6.2_Q	Shot Pin 6 (SET)

-KF1.24
=V1GL1UQ52UQ7+.GL1UQ52UQ7/1.3
=V1GL1UQ52UQ9+.GL1UQ52UQ9/1.3

FESTO

=V1GL1UQ52UQ7+.GL1UQ52UQ7/1.4	Q2076.4 DO 0 1.1	-QN7.1_Q	Shot Pin 7 (RST)
=V1GL1UQ52UQ7+.GL1UQ52UQ7/1.4	Q2076.5 DO 1 1.2	-QN7.2_Q	Shot Pin 7 (SET)
=V1GL1UQ52UQ9+.GL1UQ52UQ9/1.4	Q2076.6 DO 0 2.1	-QN8.1_Q	Shot Pins 9 (RST)
=V1GL1UQ52UQ9+.GL1UQ52UQ9/1.4	Q2076.7 DO 1 2.2	-QN8.2_Q	Shot Pins 9 (SET)

-KF1.25
=V1GL1UQ52UQ10+.GL1UQ52UQ10/1.3
=V1GL1UQ52UQ11+.GL1UQ52UQ11/1.3

FESTO

=V1GL1UQ52UQ10+.GL1UQ52UQ10/1.4	Q2077.0 DO 0 1.1	-QN9.1_Q	Clamps 10 (RST)
=V1GL1UQ52UQ10+.GL1UQ52UQ10/1.4	Q2077.1 DO 1 1.2	-QN9.2_Q	Clamps 10 (SET)
=V1GL1UQ52UQ11+.GL1UQ52UQ11/1.4	Q2077.2 DO 0 2.1	-QN10.1_Q	Clamps 11 (RST)
=V1GL1UQ52UQ11+.GL1UQ52UQ11/1.4	Q2077.3 DO 1 2.2	-QN10.2_Q	Clamps 11 (SET)

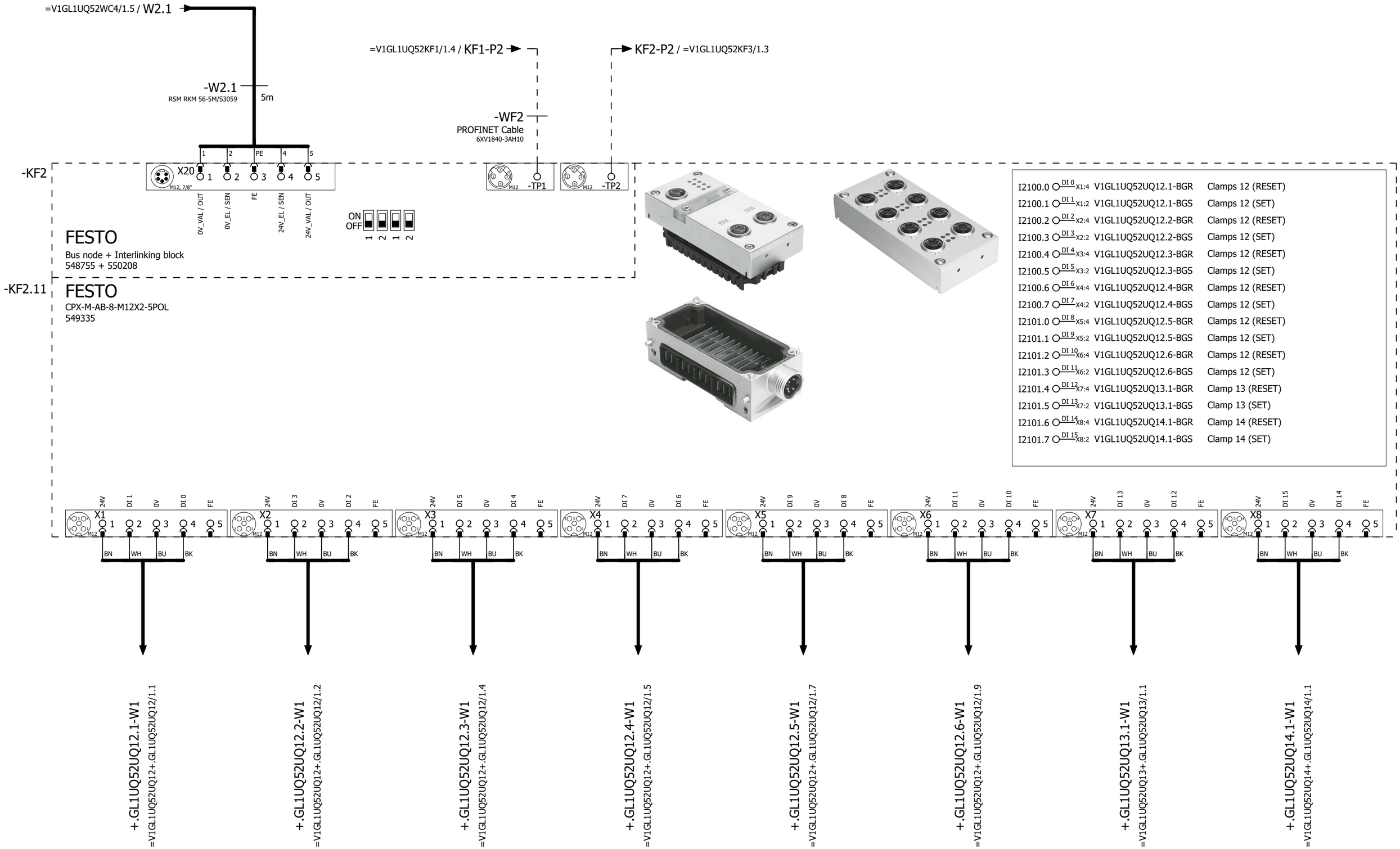

=V1GL1UQ52KF1/6

2

			Date	1/11/2023	Volvo Trucks North America	Valiant TMS	CONNECTING MOD. FOR VTSA MANIFOLD	Drawing name: =2V10&EFS-EL		= V1GL1UQ52KF2	
			Ed.	MKLEPADLO						+ V1GL1UQ52	
			Appr		P6700 Bodyside RH - Robot Cell 2V10			Document type: EFS	Project nr: 22-16150		Page 1
Modification	Date	Name	Original		Replacement of / Replaced by	Scale 1:1					1579

I2102.0	DI 0 X1:4	V1GL1UQ52UQ15.1-BGR	Clamp 15 (RESET)
I2102.1	DI 1 X1:2	V1GL1UQ52UQ15.1-BGS	Clamp 15 (SET)
I2102.2	DI 2 X2:4	V1GL1UQ52UQ16.1-BGR	Clamps 16 (RESET)
I2102.3	DI 3 X2:2	V1GL1UQ52UQ16.1-BGS	Clamps 16 (SET)
I2102.4	DI 4 X3:4	V1GL1UQ52UQ16.2-BGR	Clamps 16 (RESET)
I2102.5	DI 5 X3:2	V1GL1UQ52UQ16.2-BGS	Clamps 16 (SET)
I2102.6	DI 6 X4:4	V1GL1UQ52UQ17.1-BGR	Clamp 17 (RESET)
I2102.7	DI 7 X4:2	V1GL1UQ52UQ17.1-BGS	Clamp 17 (SET)
I2103.0	DI 8 X5:4	V1GL1UQ52UQ18.1-BGR	Shot Pins 18 (RESET)
I2103.1	DI 9 X5:2	V1GL1UQ52UQ18.1-BGS	Shot Pins 18 (SET)
I2103.2	DI 10 X6:4	V1GL1UQ52UQ18.2-BGR	Shot Pins 18 (RESET)
I2103.3	DI 11 X6:2	V1GL1UQ52UQ18.2-BGS	Shot Pins 18 (SET)
I2103.4	DI 12 X7:4	V1GL1UQ52UQ19.1-BGR	Clamps 19 (RESET)
I2103.5	DI 13 X7:2	V1GL1UQ52UQ19.1-BGS	Clamps 19 (SET)
I2103.6	DI 14 X8:4	V1GL1UQ52UQ19.2-BGR	Clamps 19 (RESET)
I2103.7	DI 15 X8:2	V1GL1UQ52UQ19.2-BGS	Clamps 19 (SET)

-KF2.12

FESTO
CPX-M-AB-8-M12X2-5POL
549335

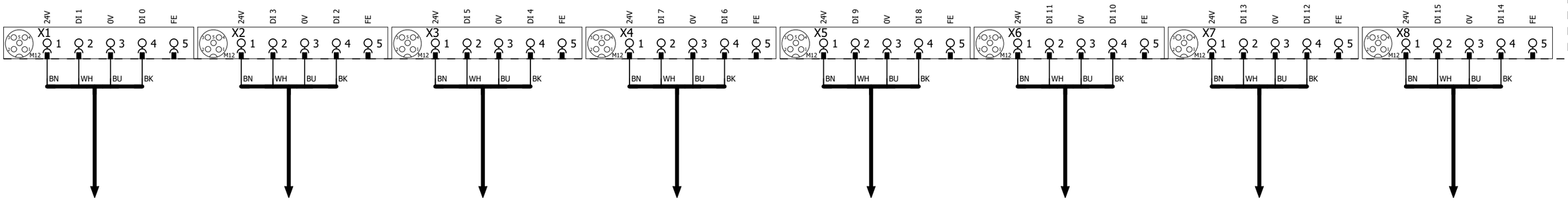

+.GL1UQ52UQ15.1-W1
=V1GL1UQ52UQ15+.GL1UQ52UQ15/1.1

+.GL1UQ52UQ16.1-W1
=V1GL1UQ52UQ16+.GL1UQ52UQ16/1.1

+.GL1UQ52UQ16.2-W1
=V1GL1UQ52UQ16+.GL1UQ52UQ16/1.2

+.GL1UQ52UQ17.1-W1
=V1GL1UQ52UQ17+.GL1UQ52UQ17/1.1

+.GL1UQ52UQ18.1-W1
=V1GL1UQ52UQ18+.GL1UQ52UQ18/1.1

+.GL1UQ52UQ18.2-W1
=V1GL1UQ52UQ18+.GL1UQ52UQ18/1.2

+.GL1UQ52UQ19.1-W1
=V1GL1UQ52UQ19+.GL1UQ52UQ19/1.1

+.GL1UQ52UQ19.2-W1
=V1GL1UQ52UQ19+.GL1UQ52UQ19/1.2

-KF2.13

FESTO

CPX-M-AB-8-M12X2-5POL
549335

I2104.0	DI 0 X1:4	V1GL1UQ52UQ20.1-BGR	Clamp 20 (RESET)
I2104.1	DI 1 X1:2	V1GL1UQ52UQ20.1-BGS	Clamp 20 (SET)
I2104.2	DI 2 X2:4	V1GL1UQ52UQ21.1-BGR	Shot Pin 21 (RESET)
I2104.3	DI 3 X2:2	V1GL1UQ52UQ21.1-BGS	Shot Pin 21 (SET)
I2104.4	DI 4 X3:4	I2104.4	Spare
I2104.5	DI 5 X3:2	I2104.5	Spare
I2104.6	DI 6 X4:4	I2104.6	Spare
I2104.7	DI 7 X4:2	I2104.7	Spare
I2105.0	DI 8 X5:4	I2105.0	Spare
I2105.1	DI 9 X5:2	I2105.1	Spare
I2105.2	DI 10 X6:4	I2105.2	Spare
I2105.3	DI 11 X6:2	I2105.3	Spare
I2105.4	DI 12 X7:4	I2105.4	Spare
I2105.5	DI 13 X7:2	I2105.5	Spare
I2105.6	DI 14 X8:4	I2105.6	Spare
I2105.7	DI 15 X8:2	I2105.7	Spare

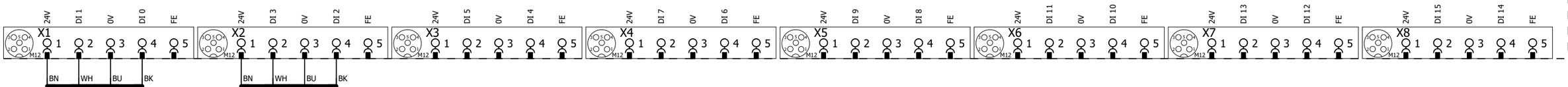

+.GL1UQ52UQ20.1-W1
=V1GL1UQ52UQ20+.GL1UQ52UQ20/1.1

+.GL1UQ52UQ21.1-W1
=V1GL1UQ52UQ21+.GL1UQ52UQ21/1.1

2 4

			Date	1/11/2023	Volvo Trucks North America	Valiant TMS	I/O MOD. DI16 (8 x M12) FOR VTSA-F	Drawing name: =2V10&EFS-EL		= V1GL1UQ52KF2	
			Ed.	MKLEPADLO						+ V1GL1UQ52	
			Appr		P6700 Bodyside RH - Robot Cell 2V10			Document type: EFS	Project nr: 22-16150		Page 3
Modification	Date	Name	Original		Replacement of / Replaced by	Scale 1:1					1579

-KF2.14

FESTO
CPX-M-AB-8-M12X2-5POL
549335

I2106.0	DI 0 X1:4	V1GL1UQ52-BG01	Sensor Door Frame Assembly
I2106.1	DI 1 X1:2	V1GL1UQ52-BG02	Sensor Door Frame Assembly
I2106.2	DI 2 X2:4	V1GL1UQ52-BG03	Sensor Outer Front Sill
I2106.3	DI 3 X2:2	V1GL1UQ52-BG04	Sensor Extruded Seal Front
I2106.4	DI 4 X3:4	V1GL1UQ52-BG05	Sensor Outer Front Sill
I2106.5	DI 5 X3:2	V1GL1UQ52-BG06	Sensor Extruded Seal Rear
I2106.6	DI 6 X4:4	V1GL1UQ52-BG07	Sensor Rear Sill Sleeper
I2106.7	DI 7 X4:2	V1GL1UQ52-BG08	Sensor Rear Sill Sleeper
I2107.0	DI 8 X5:4	V1GL1UQ52-BG09	Sensor Lug Door Mnt Assembly
I2107.1	DI 9 X5:2	V1GL1UQ52-BG10	Sensor Lug Door Mnt Assembly
I2107.2	DI 10 X6:4	V1GL1UQ52-BG11	Sensor Lower Cabinet Mnt Assembly
I2107.3	DI 11 X6:2	V1GL1UQ52-BG12	Sensor Header Sub Assembly
I2107.4	DI 12 X7:4	V1GL1UQ52-BG13	Sensor Header Sub Assembly
I2107.5	DI 13 X7:2	V1GL1UQ52-BG14	Sensor Bunk Support
I2107.6	DI 14 X8:4	V1GL1UQ52-BG15	Sensor Rear Lower Assembly
I2107.7	DI 15 X8:2	V1GL1UQ52-BG16	Sensor Rear Lower Assembly

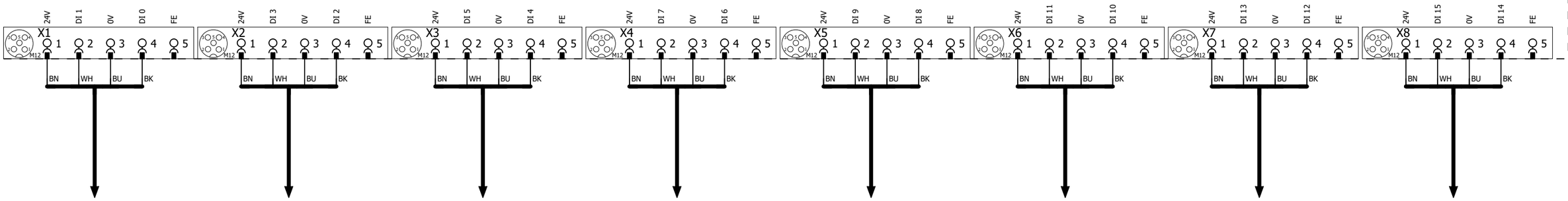

-XG1/2
=V1GL1UQ52BG0/1.1

-XG3/4
=V1GL1UQ52BG0/1.4

-XG5/6
=V1GL1UQ52BG0/1.6

-XG7/8
=V1GL1UQ52BG0/2.1

-XG9/10
=V1GL1UQ52BG0/2.4

-XG11/12
=V1GL1UQ52BG0/2.6

-XG13/14
=V1GL1UQ52BG0/3.1

-XG15/16
=V1GL1UQ52BG0/3.4

I2108.0	DI 0 X1:4	V1GL1UQ52-BG17	Sensor Bunk Support
I2108.1	DI 1 X1:2	V1GL1UQ52-BG18	Sensor C-Pillar Assembly
I2108.2	DI 2 X2:4	V1GL1UQ52-BG19	Sensor C-Pillar Assembly
I2108.3	DI 3 X2:2	V1GL1UQ52-BG20	Sensor Blind Lower
I2108.4	DI 4 X3:4	V1GL1UQ52-BG21	Sensor Blind Lower
I2108.5	DI 5 X3:2	V1GL1UQ52-BG22	Sensor Vertical Member
I2108.6	DI 6 X4:4	V1GL1UQ52-BG23	Sensor Vertical Member
I2108.7	DI 7 X4:2	V1GL1UQ52-BG24	Sensor Cabinet Mount
I2109.0	DI 8 X5:4	V1GL1UQ52-BG25	Sensor Header Sub Assembly
I2109.1	DI 9 X5:2	V1GL1UQ52-BG26	Sensor Cabinet Mount
I2109.2	DI 10 X6:4	V1GL1UQ52-BG27	Sensor Lower Cabinet Mnt Assembly
I2109.3	DI 11 X6:2	V1GL1UQ52-BG28	Sensor Intermed H R Long
I2109.4	DI 12 X7:4	V1GL1UQ52-BG29	Sensor Cabinet Mount
I2109.5	DI 13 X7:2	V1GL1UQ52-BG30	Sensor Cabinet Mount
I2109.6	DI 14 X8:4	V1GL1UQ52-BG31	Sensor Cabinet Mount
I2109.7	DI 15 X8:2	V1GL1UQ52-BG32	Sensor Cabinet Mount

-KF2.15

FESTO
CPX-M-AB-8-M12X2-5POL
549335

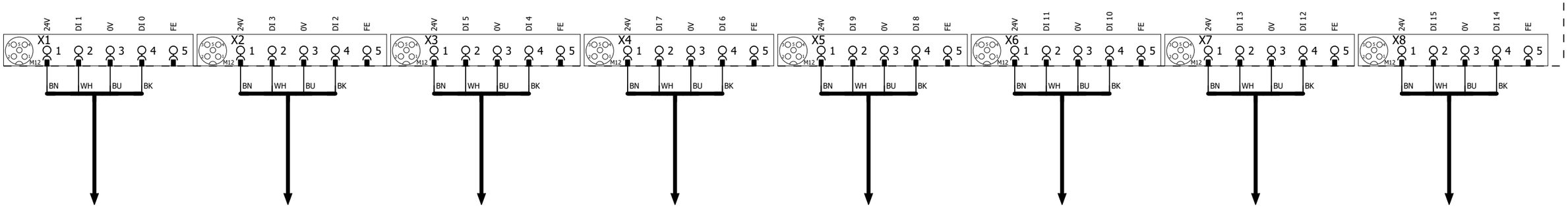

-XG17/18
=V1GL1UQ52BG0/3.6

-XG19/20
=V1GL1UQ52BG0/4.1

-XG21/22
=V1GL1UQ52BG0/4.4

-XG23/24
=V1GL1UQ52BG0/4.6

-XG25/26
=V1GL1UQ52BG0/5.1

-XG27/28
=V1GL1UQ52BG0/5.4

-XG29/30
=V1GL1UQ52BG0/5.6

-XG31/32
=V1GL1UQ52BG0/6.1

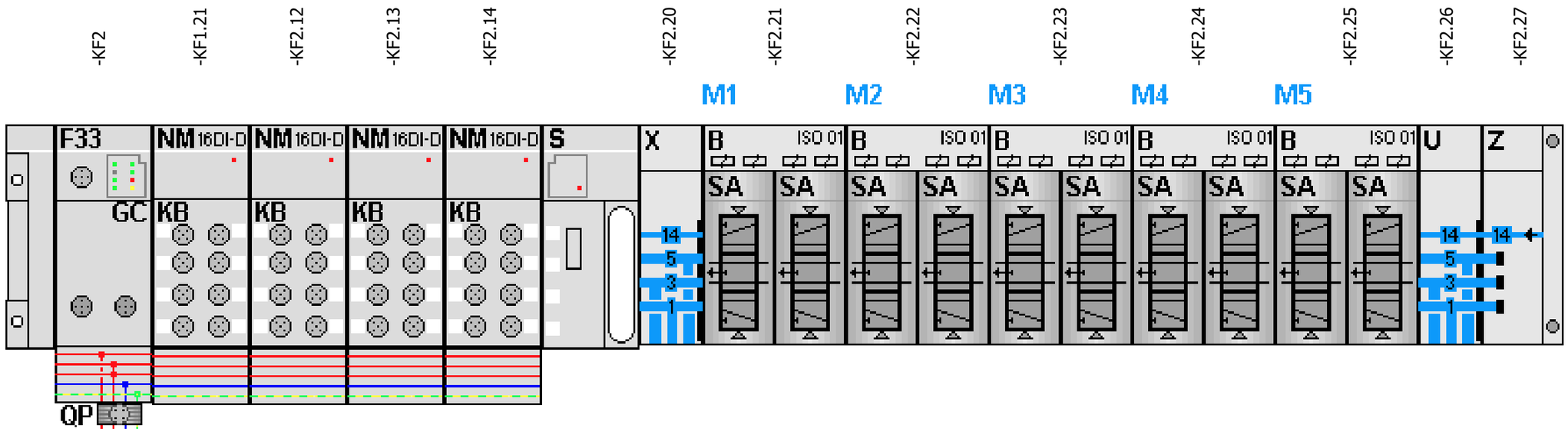

-KF2.21

=V1GL1UQ52UQ12+.GL1UQ52UQ12/1.3
=V1GL1UQ52UQ13+.GL1UQ52UQ13/1.3

FESTO

=V1GL1UQ52UQ12+.GL1UQ52UQ12/1.4	Q2100.0 DO 0 1.1	-QN11.1_Q	Clamps 12 (RST)
=V1GL1UQ52UQ12+.GL1UQ52UQ12/1.4	Q2100.1 DO 1 1.2	-QN11.2_Q	Clamps 12 (SET)
=V1GL1UQ52UQ13+.GL1UQ52UQ13/1.4	Q2100.2 DO 2 2.1	-QN12.1_Q	Clamp 13 (RST)
=V1GL1UQ52UQ13+.GL1UQ52UQ13/1.4	Q2100.3 DO 3 2.2	-QN12.2_Q	Clamp 13 (SET)

-KF2.22

=V1GL1UQ52UQ14+.GL1UQ52UQ14/1.3
=V1GL1UQ52UQ15+.GL1UQ52UQ15/1.3

FESTO

=V1GL1UQ52UQ14+.GL1UQ52UQ14/1.4	Q2100.4 DO 0 1.1	-QN13.1_Q	Clamp 14 (RST)
=V1GL1UQ52UQ14+.GL1UQ52UQ14/1.4	Q2100.5 DO 1 1.2	-QN13.2_Q	Clamp 14 (SET)
=V1GL1UQ52UQ15+.GL1UQ52UQ15/1.4	Q2100.6 DO 2 2.1	-QN14.1_Q	Clamp 15 (RST)
=V1GL1UQ52UQ15+.GL1UQ52UQ15/1.4	Q2100.7 DO 3 2.2	-QN14.2_Q	Clamp 15 (SET)

-KF2.23

=V1GL1UQ52UQ16+.GL1UQ52UQ16/1.3
=V1GL1UQ52UQ17+.GL1UQ52UQ17/1.3

FESTO

=V1GL1UQ52UQ16+.GL1UQ52UQ16/1.4	Q2101.0 DO 0 1.1	-QN15.1_Q	Clamps 16 (RST)
=V1GL1UQ52UQ16+.GL1UQ52UQ16/1.4	Q2101.1 DO 1 1.2	-QN15.2_Q	Clamps 16 (SET)
=V1GL1UQ52UQ17+.GL1UQ52UQ17/1.4	Q2101.2 DO 0 2.1	-QN16.1_Q	Clamp 17 (RST)
=V1GL1UQ52UQ17+.GL1UQ52UQ17/1.4	Q2101.3 DO 1 2.2	-QN16.2_Q	Clamp 17 (SET)

-KF2.24

=V1GL1UQ52UQ18+.GL1UQ52UQ18/1.3
=V1GL1UQ52UQ19+.GL1UQ52UQ19/1.3

FESTO

=V1GL1UQ52UQ18+.GL1UQ52UQ18/1.4	Q2101.4 DO 0 1.1	-QN17.1_Q	Shot Pins 18 (RST)
=V1GL1UQ52UQ18+.GL1UQ52UQ18/1.4	Q2101.5 DO 1 1.2	-QN17.2_Q	Shot Pins 18 (SET)
=V1GL1UQ52UQ19+.GL1UQ52UQ19/1.4	Q2101.6 DO 0 2.1	-QN18.1_Q	Clamps 19 (RST)
=V1GL1UQ52UQ19+.GL1UQ52UQ19/1.4	Q2101.7 DO 1 2.2	-QN18.2_Q	Clamps 19 (SET)

-KF2.25

=V1GL1UQ52UQ20+.GL1UQ52UQ20/1.3
=V1GL1UQ52UQ21+.GL1UQ52UQ21/1.3

FESTO

=V1GL1UQ52UQ20+.GL1UQ52UQ20/1.4	Q2102.0 DO 0 1.1	-QN19.1_Q	Clamp 20 (RST)
=V1GL1UQ52UQ20+.GL1UQ52UQ20/1.4	Q2102.1 DO 1 1.2	-QN19.2_Q	Clamp 20 (SET)
=V1GL1UQ52UQ21+.GL1UQ52UQ21/1.4	Q2102.2 DO 0 2.1	-QN20.1_Q	Shot Pin 21 (RST)
=V1GL1UQ52UQ21+.GL1UQ52UQ21/1.4	Q2102.3 DO 1 2.2	-QN20.2_Q	Shot Pin 21 (SET)

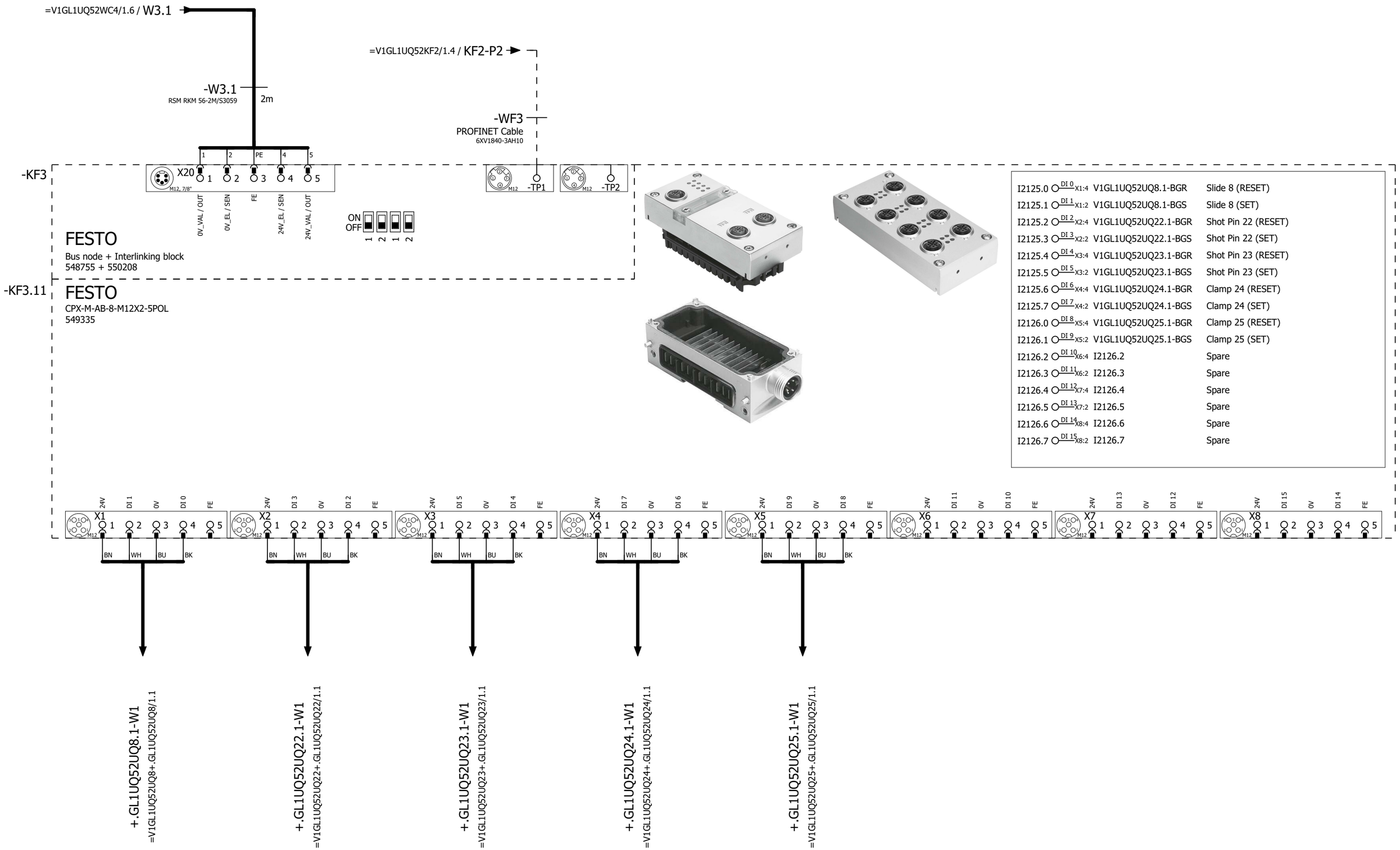

=V1GL1UQ52KF2/6

2

			Date	1/11/2023	Volvo Trucks North America	Valiant TMS	CONNECTING MOD. FOR VTSA MANIFOLD	Drawing name: =2V10&EFS-EL		= V1GL1UQ52KF3	
			Ed.	MKLEPADLO						+ V1GL1UQ52	
			Appr		P6700 Bodyside RH - Robot Cell 2V10			Document type: EFS	Project nr: 22-16150		Page 1
Modification	Date	Name	Original		Replacement of / Replaced by	Scale 1:1					1579

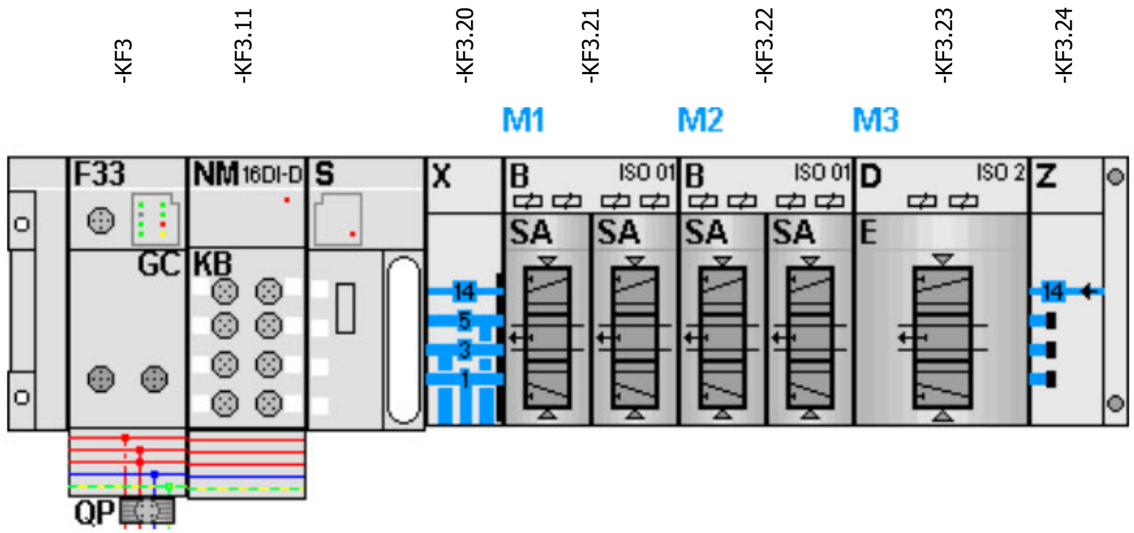

-KF3.21
=V1GL1UQ52UQ22+.GL1UQ52UQ22/1.3
=V1GL1UQ52UQ23+.GL1UQ52UQ23/1.3

FESTO

=V1GL1UQ52UQ22+.GL1UQ52UQ22/1.4	Q2125.0 DO 0 1.1	-QN21.1_Q	Shot Pin 22 (RST)
=V1GL1UQ52UQ22+.GL1UQ52UQ22/1.4	Q2125.1 DO 1 1.2	-QN21.2_Q	Shot Pin 22 (SET)
=V1GL1UQ52UQ23+.GL1UQ52UQ23/1.4	Q2125.2 DO 2 2.1	-QN22.1_Q	Shot Pin 23 (RST)
=V1GL1UQ52UQ23+.GL1UQ52UQ23/1.4	Q2125.3 DO 3 2.2	-QN22.2_Q	Shot Pin 23 (SET)

-KF3.22
=V1GL1UQ52UQ24+.GL1UQ52UQ24/1.3
=V1GL1UQ52UQ25+.GL1UQ52UQ25/1.3

FESTO

=V1GL1UQ52UQ24+.GL1UQ52UQ24/1.4	Q2125.4 DO 0 1.1	-QN23.1_Q	Clamp 24 (RST)
=V1GL1UQ52UQ24+.GL1UQ52UQ24/1.4	Q2125.5 DO 1 1.2	-QN23.2_Q	Clamp 24 (SET)
=V1GL1UQ52UQ25+.GL1UQ52UQ25/1.4	Q2125.6 DO 2 2.1	-QN24.1_Q	Clamp 25 (RST)
=V1GL1UQ52UQ25+.GL1UQ52UQ25/1.4	Q2125.7 DO 3 2.2	-QN24.2_Q	Clamp 25 (SET)

-KF3.23
=V1GL1UQ52UQ8+.GL1UQ52UQ8/1.3

FESTO

=V1GL1UQ52UQ8+.GL1UQ52UQ8/1.4	Q2126.0 DO 0 1.1	-QN25.1_Q	Slide 8 (RST)
=V1GL1UQ52UQ8+.GL1UQ52UQ8/1.4	Q2126.1 DO 1 1.2	-QN25.2_Q	Slide 8 (SET)

			Date	1/11/2023	Volvo Trucks North America	Valiant TMS	CONNECTING MOD. FOR FESTO DQ	Drawing name: =2V10&EFS-EL		= V1GL1UQ52KF3	
			Ed.	MKLEPADLO						+ V1GL1UQ52	
			Appr		P6700 Bodyside RH - Robot Cell 2V10			Document type: EFS	Project nr: 22-16150	Page	2
Modification	Date	Name	Original		Replacement of	Replaced by	Scale 1:1				1579

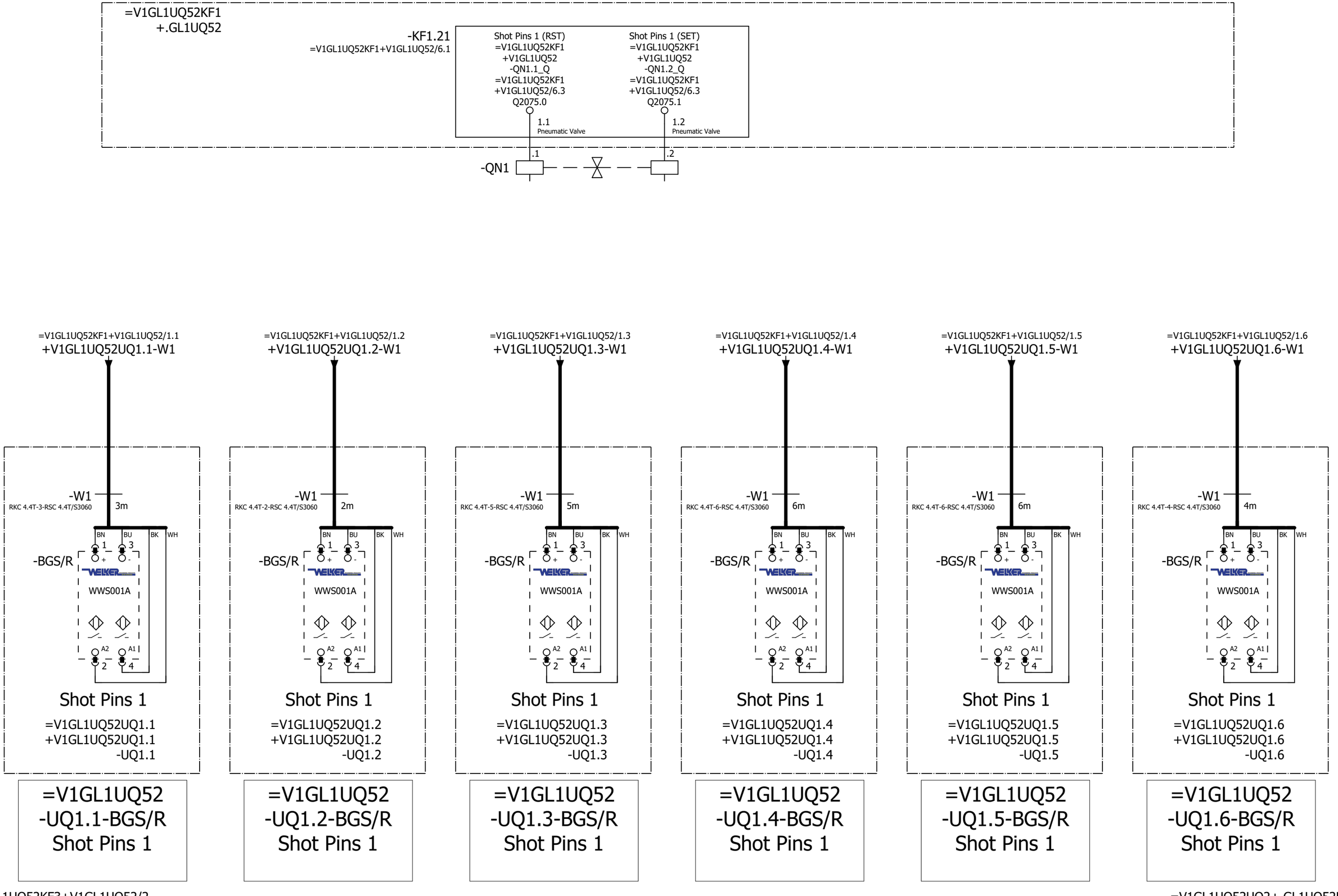

			Date	1/11/2023	Volvo Trucks North America		Valiant TMS	FESTO DQ CONNECTION QN1	Drawing name: =2V10&EFS-EL	= V1GL1UQ52UQ1	
			Ed.	MKLEPADLO						+ V1GL1UQ52UQ1	
			Appr		P6700 Bodyside RH - Robot Cell 2V10				Document type: EFS	Project nr: 22-16150	Page 1
Modification	Date	Name	Original		Replacement of	Replaced by	Scale 1:1				1579

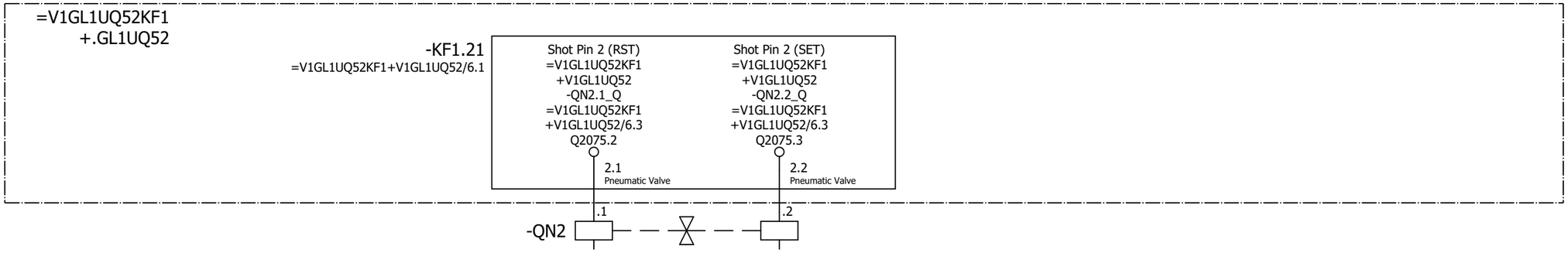

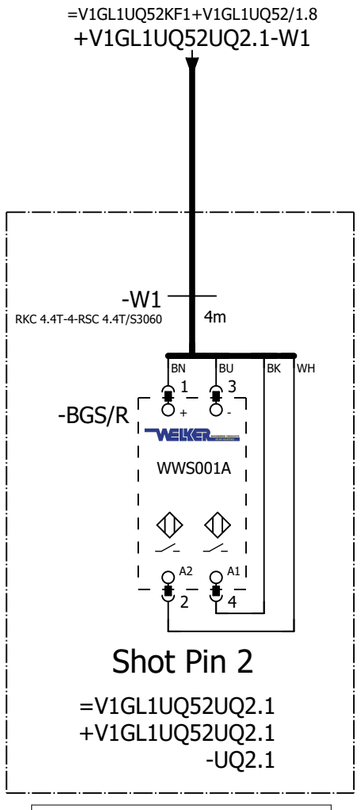

=V1GL1UQ52
-UQ2.1-BGS/R
Shot Pin 2

=V1GL1UQ52UQ1+.GL1UQ52UQ1/1

=V1GL1UQ52UQ3+.GL1UQ52UQ3/1

			Date	1/11/2023	Volvo Trucks North America		Valiant TMS	FESTO DQ CONNECTION QN2	Drawing name: =2V10&EFS-EL	= V1GL1UQ52UQ2	
			Ed.	MKLEPADLO						+ V1GL1UQ52UQ2	
			Appr		P6700 Bodyside RH - Robot Cell 2V10				Document type: EFS	Project nr: 22-16150	Page 1
Modification	Date	Name	Original		Replacement of	Replaced by	Scale 1:1				1579

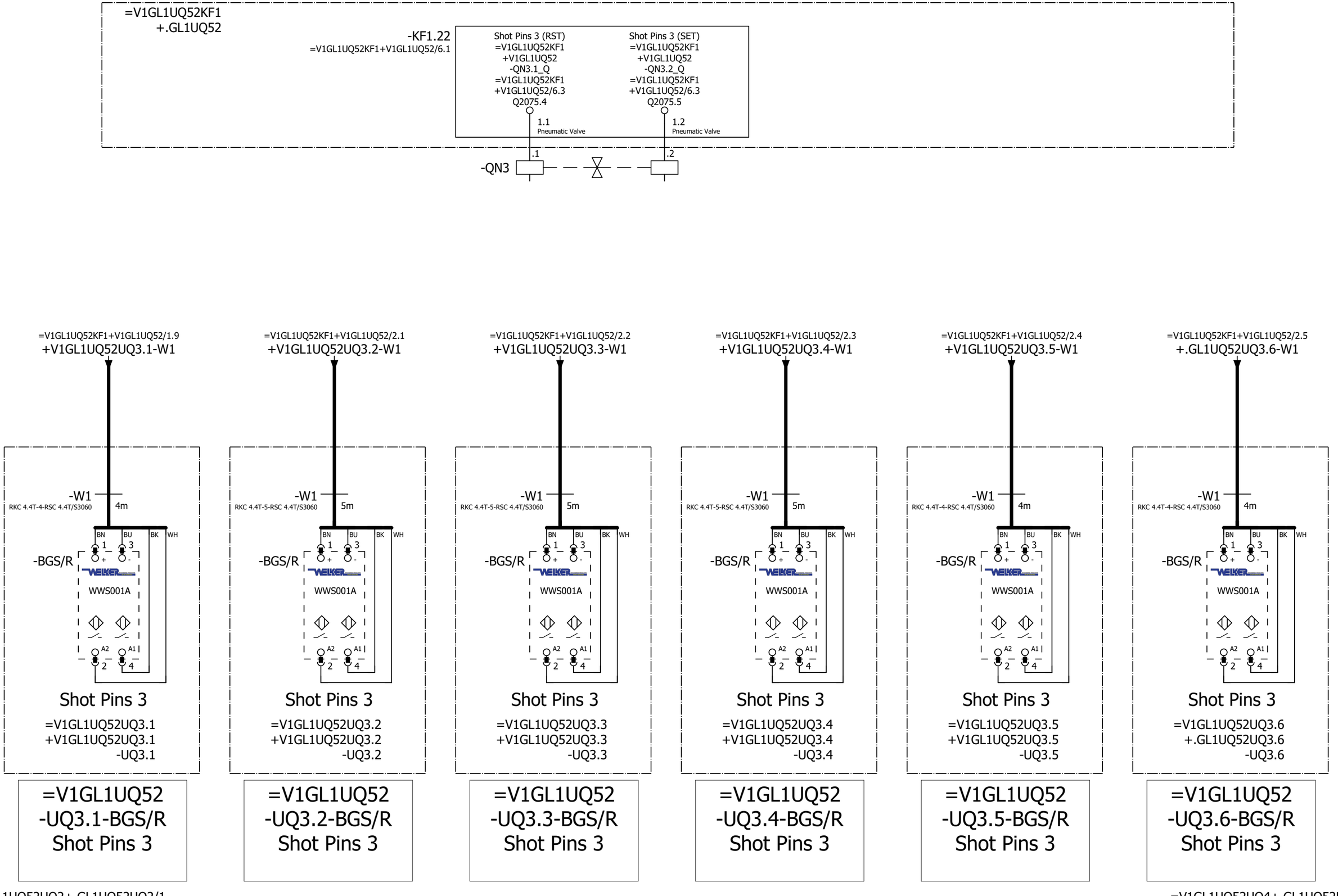

			Date	1/11/2023	Volvo Trucks North America		Valiant TMS	FESTO DQ CONNECTION QN3	Drawing name: =2V10&EFS-EL	= V1GL1UQ52UQ3	
			Ed.	MKLEPADLO						+ V1GL1UQ52UQ3	
			Appr		P6700 Bodyside RH - Robot Cell 2V10				Document type: EFS	Project nr: 22-16150	Page 1
Modification	Date	Name	Original		Replacement of	Replaced by	Scale 1:1				1579

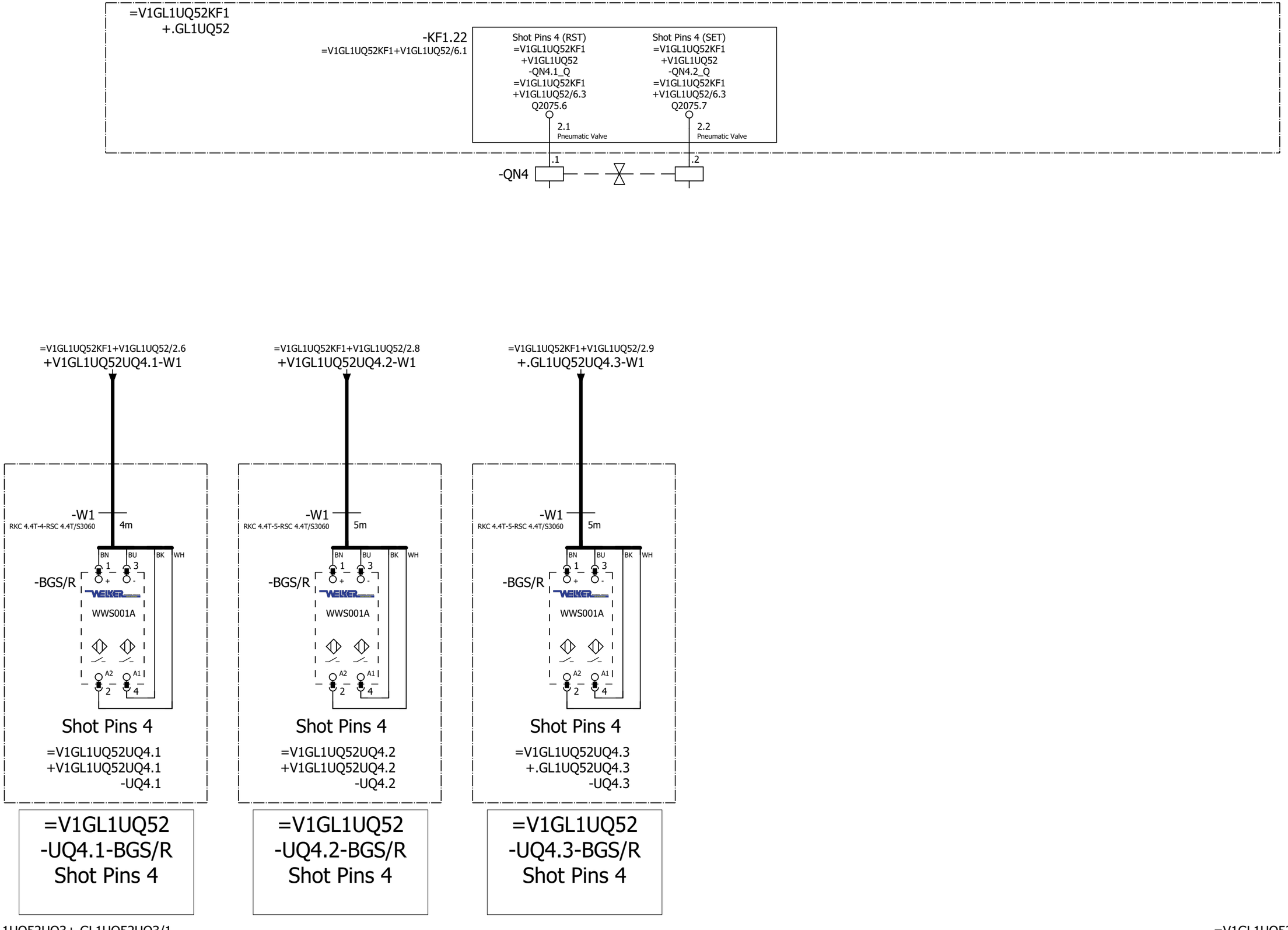

=V1GL1UQ52UQ3+.GL1UQ52UQ3/1

=V1GL1UQ52UQ5+.GL1UQ52UQ5/1

			Date	1/11/2023	Volvo Trucks North America		Valiant TMS	FESTO DQ CONNECTION QN4	Drawing name: =2V10&EFS-EL	= V1GL1UQ52UQ4	
			Ed.	MKLEPADLO						+ V1GL1UQ52UQ4	
			Appr		P6700 Bodyside RH - Robot Cell 2V10				Document type: EFS	Project nr: 22-16150	Page 1
Modification	Date	Name	Original		Replacement of	Replaced by	Scale 1:1				1579

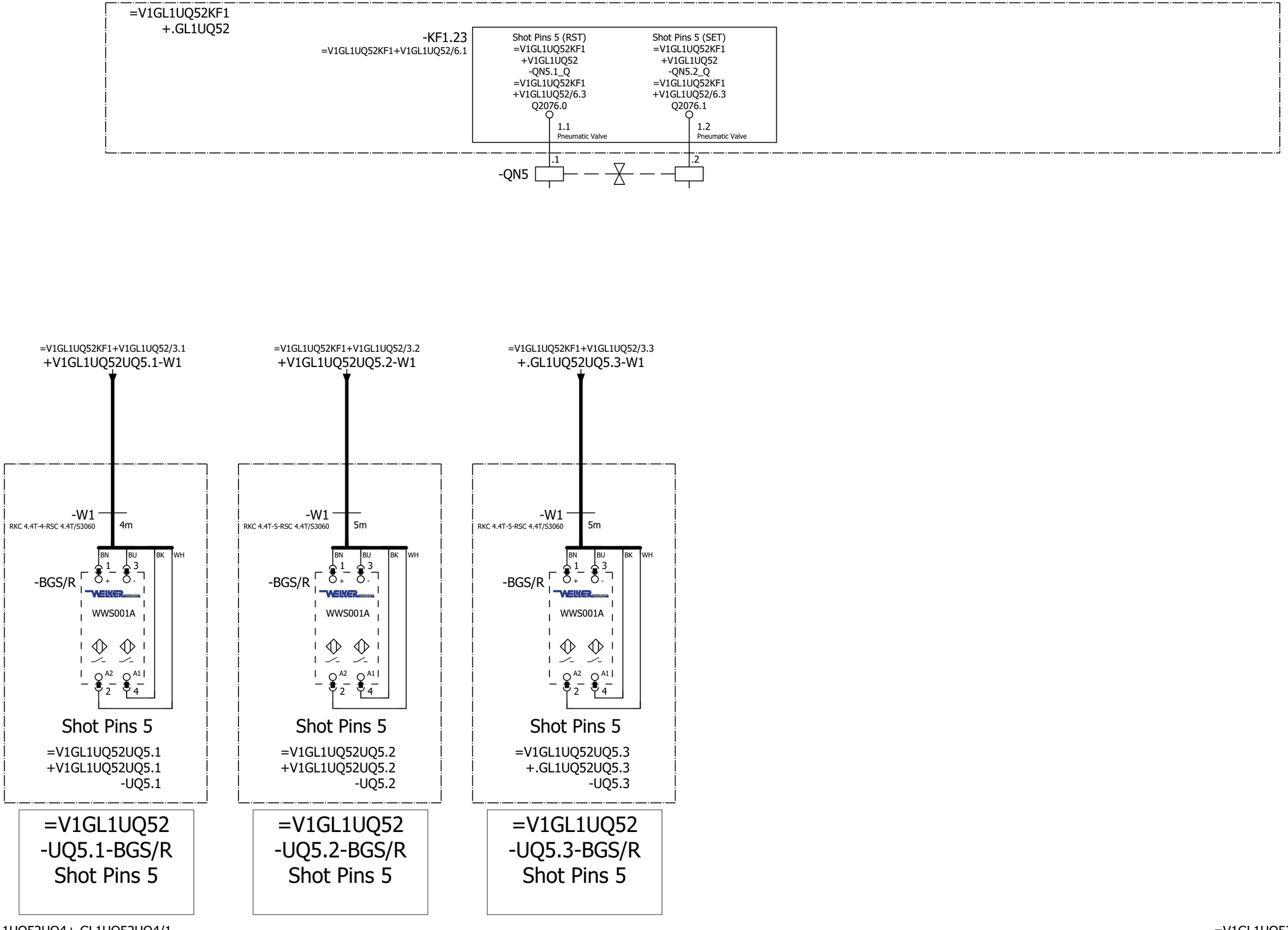

=V1GL1UQ52UQ4+.GL1UQ52UQ4/1

=V1GL1UQ52UQ6+.GL1UQ52UQ6/1

			Date	1/11/2023	Volvo Trucks North America	Valiant TMS	FESTO DQ CONNECTION QN5	Drawing name: =2V10&EFS-EL	= V1GL1UQ52UQ5		
			Ed.	MKLEPADLO					+ V1GL1UQ52UQ5		
			Appr		P6700 Bodyside RH - Robot Cell 2V10			Document type: EFS	Project nr: 22-16150	Page	1
Modification	Date	Name	Original		Replacement of / Replaced by	Scale 1:1					1579

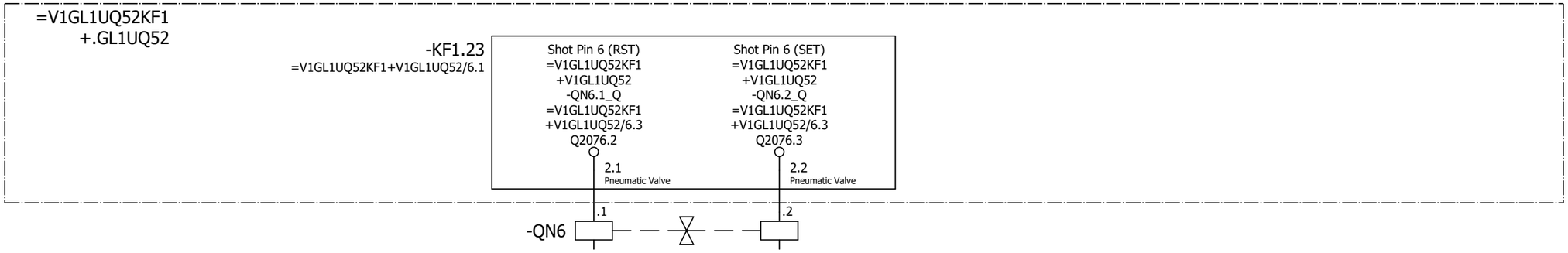

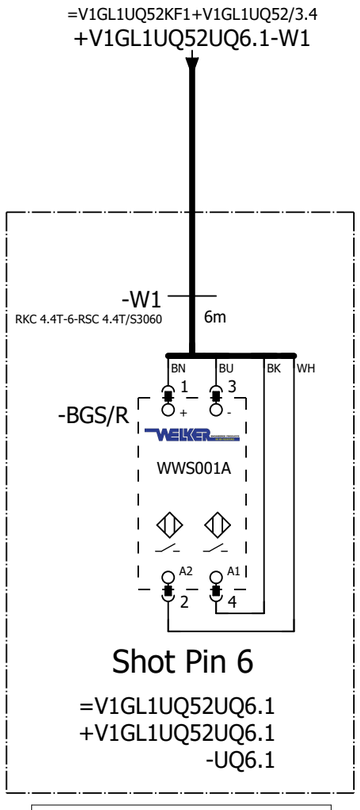

=V1GL1UQ52
-UQ6.1-BGS/R
Shot Pin 6

=V1GL1UQ52UQ5+.GL1UQ52UQ5/1

=V1GL1UQ52UQ7+.GL1UQ52UQ7/1

			Date	1/11/2023	Volvo Trucks North America		Valiant TMS	FESTO DQ CONNECTION QN6	Drawing name: =2V10&EFS-EL	= V1GL1UQ52UQ6	
			Ed.	MKLEPADLO						+ V1GL1UQ52UQ6	
			Appr		P6700 Bodyside RH - Robot Cell 2V10				Document type: EFS	Project nr: 22-16150	Page 1
Modification	Date	Name	Original		Replacement of	Replaced by	Scale 1:1				1579

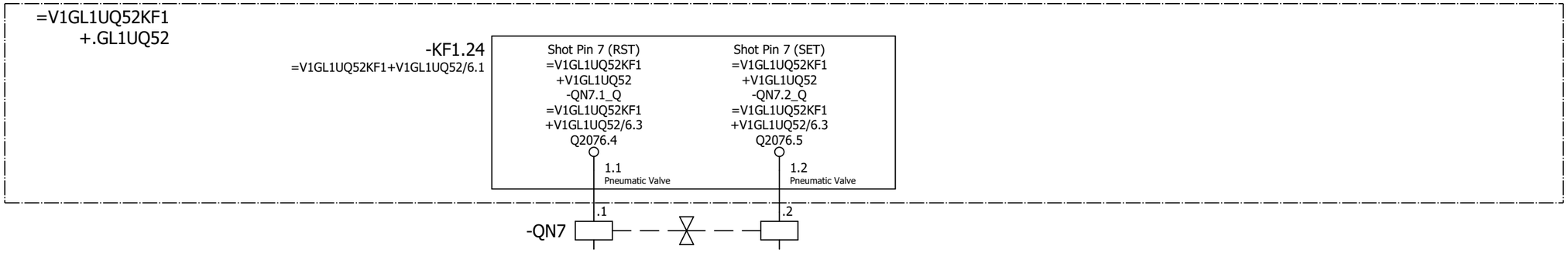

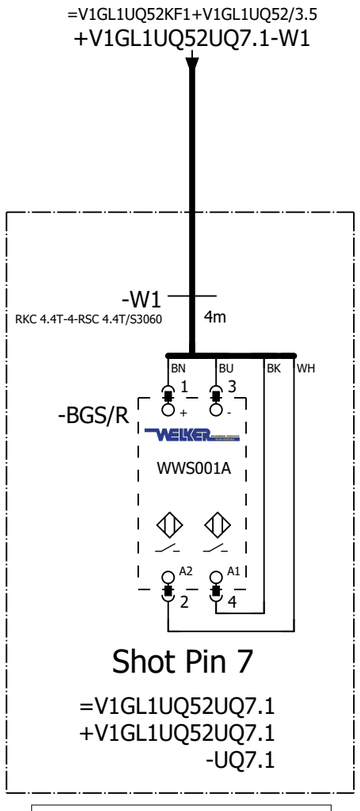

=V1GL1UQ52
-UQ7.1-BGS/R
Shot Pin 7

=V1GL1UQ52UQ6+.GL1UQ52UQ6/1

=V1GL1UQ52UQ8+.GL1UQ52UQ8/1

			Date	1/11/2023	Volvo Trucks North America		Valiant TMS	FESTO DQ CONNECTION QN7	Drawing name: =2V10&EFS-EL	= V1GL1UQ52UQ7	
			Ed.	MKLEPADLO						+ V1GL1UQ52UQ7	
			Appr		P6700 Bodyside RH - Robot Cell 2V10				Document type: EFS	Project nr: 22-16150	Page 1
Modification	Date	Name	Original		Replacement of	Replaced by	Scale 1:1				1579

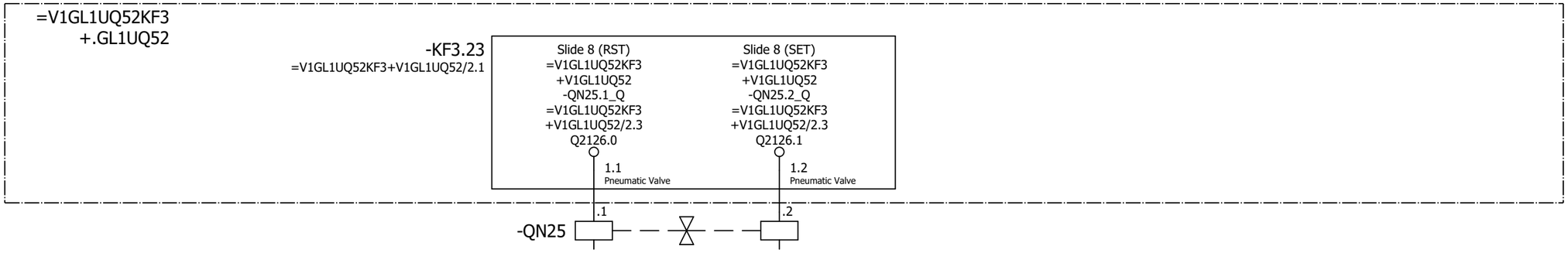

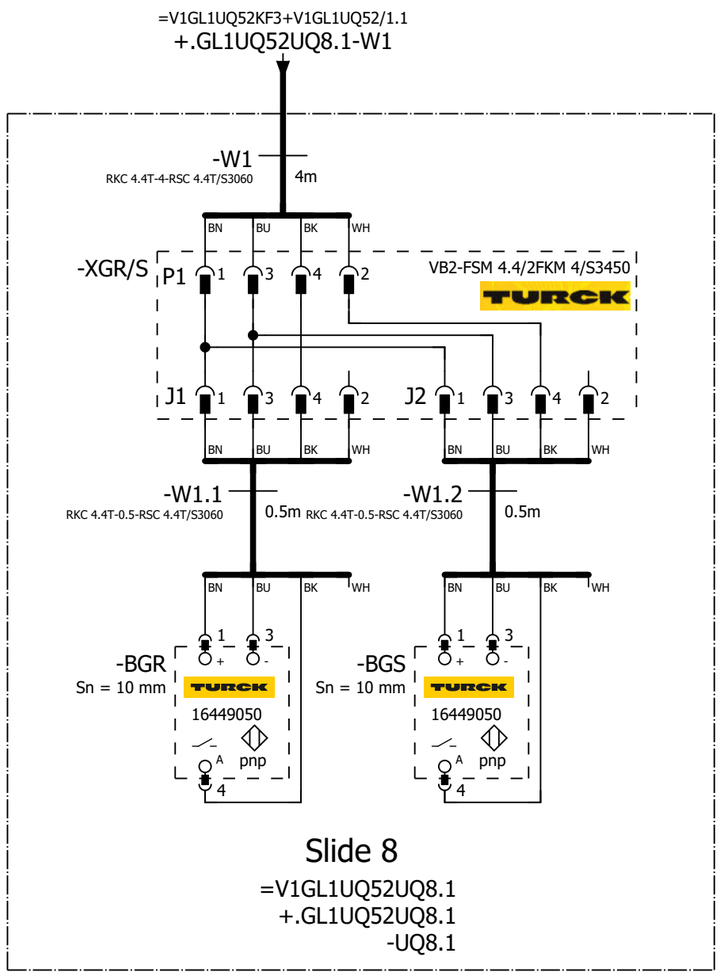

=V1GL1UQ52
-UQ8.1-BGR
Slide 8

=V1GL1UQ52
-UQ8.1-BGS
Slide 8

=V1GL1UQ52UQ7+.GL1UQ52UQ7/1

=V1GL1UQ52UQ9+.GL1UQ52UQ9/1

			Date	1/11/2023	Volvo Trucks North America	Valiant TMS	FESTO DQ CONNECTION QN25	Drawing name: =2V10&EFS-EL	= V1GL1UQ52UQ8		
			Ed.	MKLEPADLO					+ V1GL1UQ52UQ8		
			Appr		P6700 Bodyside RH - Robot Cell 2V10			Document type: EFS	Project nr: 22-16150	Page	1
Modification	Date	Name	Original		Replacement of / Replaced by	Scale 1:1					1579

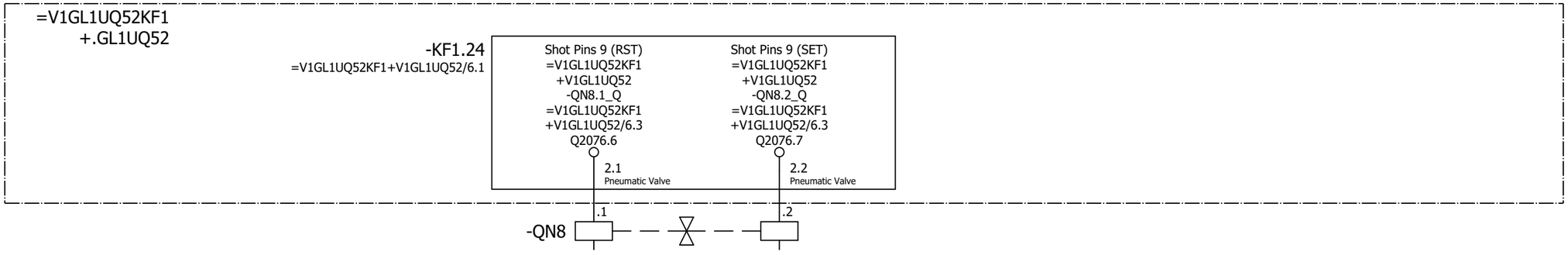

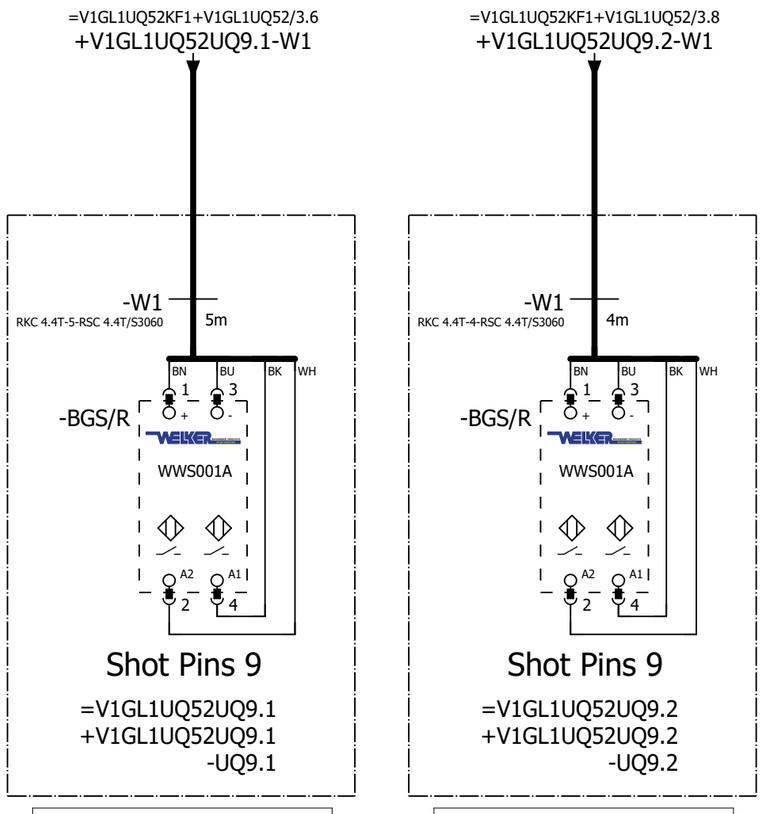

=V1GL1UQ52
-UQ9.1-BGS/R
Shot Pins 9

=V1GL1UQ52
-UQ9.2-BGS/R
Shot Pins 9

=V1GL1UQ52UQ8+.GL1UQ52UQ8/1

=V1GL1UQ52UQ10+.GL1UQ52UQ10/1

			Date	1/11/2023	Volvo Trucks North America	Valiant TMS	FESTO DQ CONNECTION QN8	Drawing name: =2V10&EFS-EL	= V1GL1UQ52UQ9		
			Ed.	MKLEPADLO					+ V1GL1UQ52UQ9		
			Appr		P6700 Bodyside RH - Robot Cell 2V10			Document type: EFS	Project nr: 22-16150	Page	1
Modification	Date	Name	Original		Replacement of / Replaced by	Scale 1:1					1579

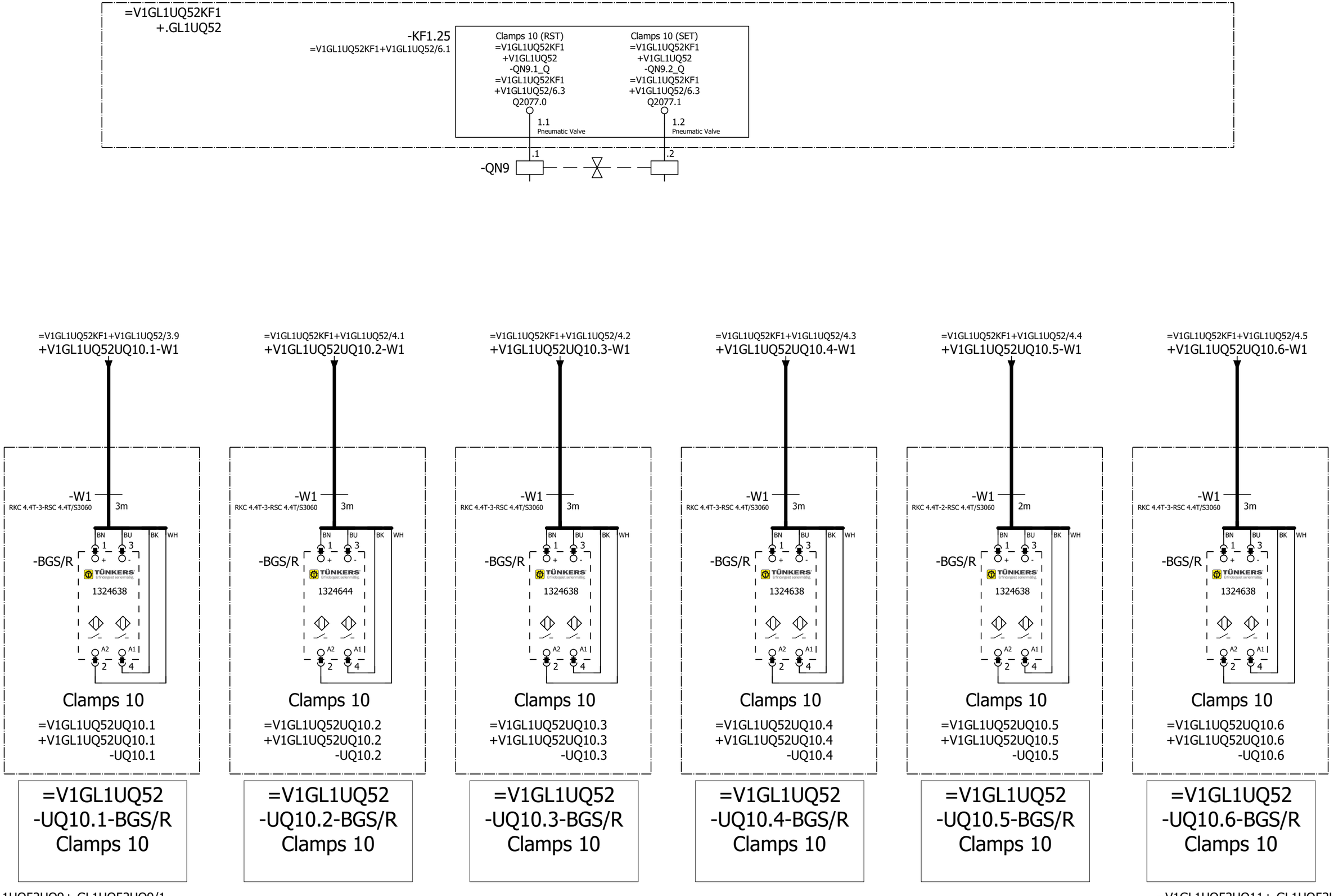

=V1GL1UQ52UQ9+.GL1UQ52UQ9/1

=V1GL1UQ52UQ11+.GL1UQ52UQ11/1

			Date	1/11/2023	Volvo Trucks North America		Valiant TMS	FESTO DQ CONNECTION QN9	Drawing name: =2V10&EFS-EL	= V1GL1UQ52UQ10	
			Ed.	MKLEPADLO						+ V1GL1UQ52UQ10	
			Appr		P6700 Bodyside RH - Robot Cell 2V10				Document type: EFS	Project nr: 22-16150	Page 1
Modification	Date	Name	Original		Replacement of	Replaced by	Scale 1:1				1579

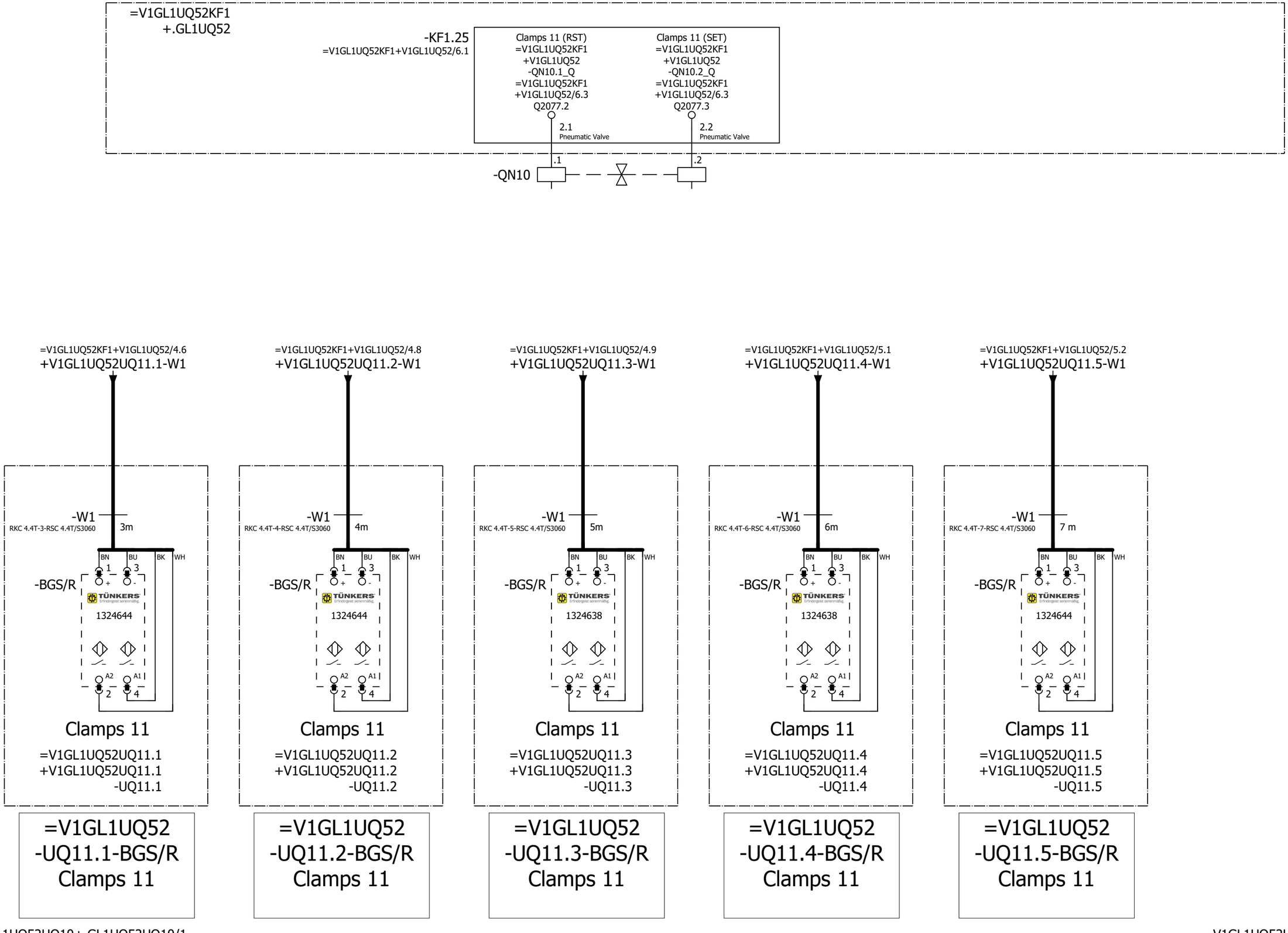

=V1GL1UQ52UQ10+.GL1UQ52UQ10/1

=V1GL1UQ52UQ12+.GL1UQ52UQ12/1

			Date	1/11/2023	Volvo Trucks North America		Valiant TMS	FESTO DQ CONNECTION QN10	Drawing name: =2V10&EFS-EL	= V1GL1UQ52UQ11	
			Ed.	MKLEPADLO						+ V1GL1UQ52UQ11	
			Appr		P6700 Bodyside RH - Robot Cell 2V10				Document type: EFS	Project nr: 22-16150	Page 1
Modification	Date	Name	Original		Replacement of	Replaced by	Scale 1:1				1579

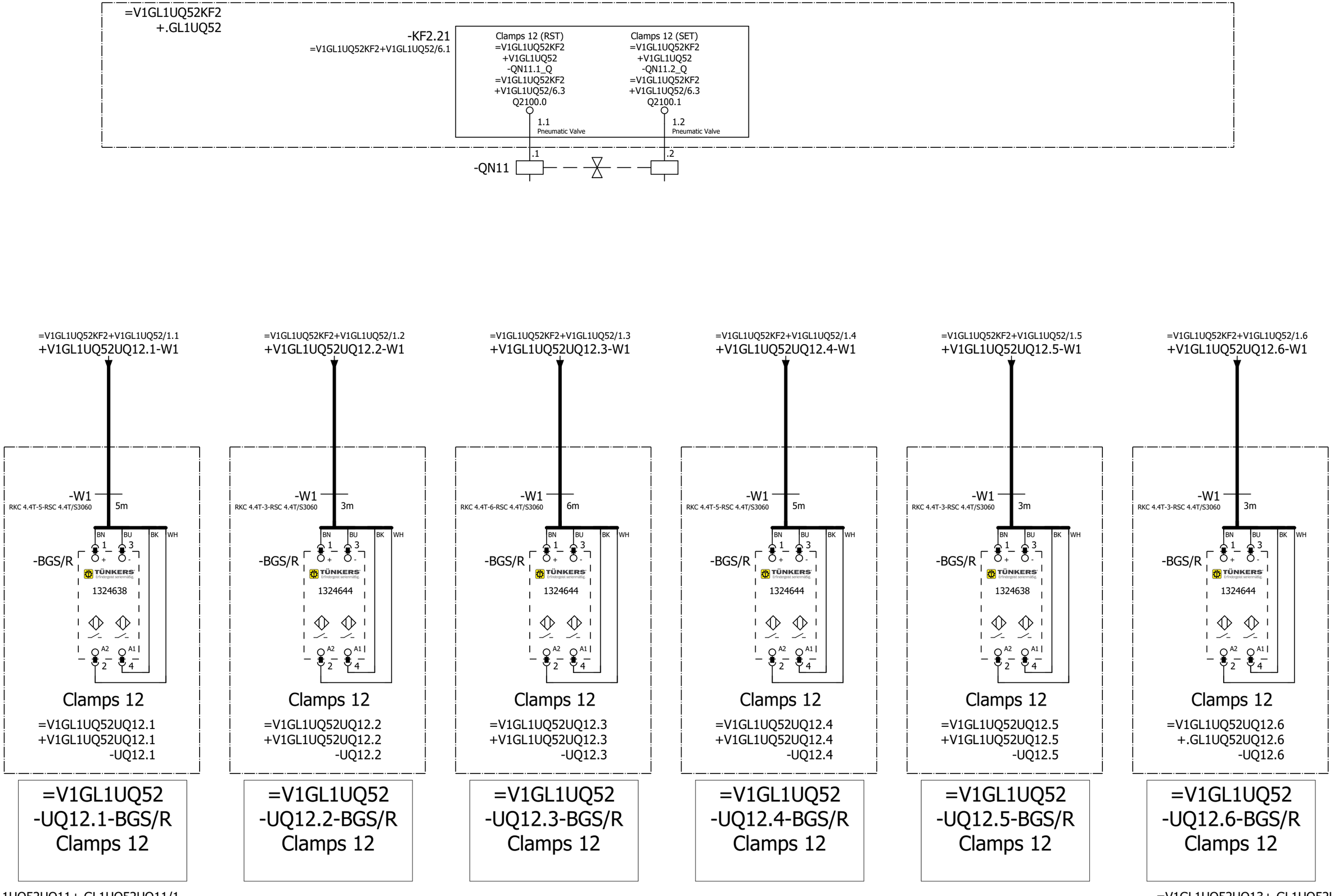

			Date	1/11/2023	Volvo Trucks North America		Valiant TMS	FESTO DQ CONNECTION QN11	Drawing name: =2V10&EFS-EL	= V1GL1UQ52UQ12	
			Ed.	MKLEPADLO						+ V1GL1UQ52UQ12	
			Appr		P6700 Bodyside RH - Robot Cell 2V10				Document type: EFS	Project nr: 22-16150	Page 1
Modification	Date	Name	Original		Replacement of	Replaced by	Scale 1:1				1579

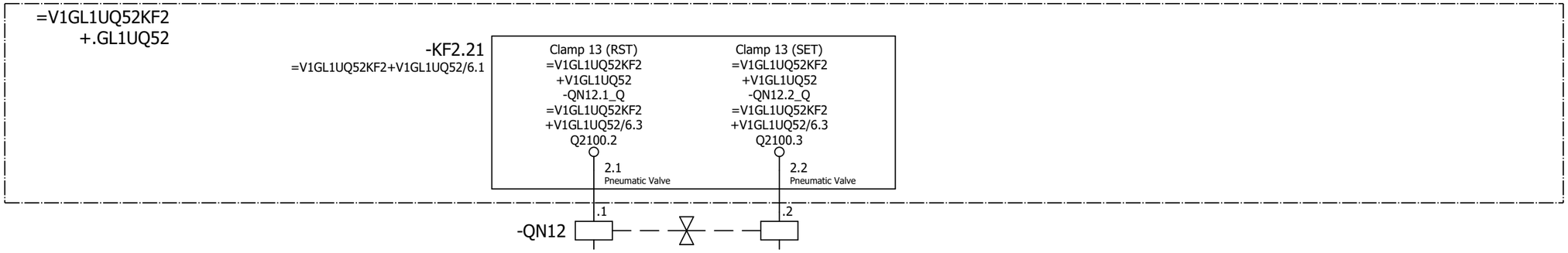

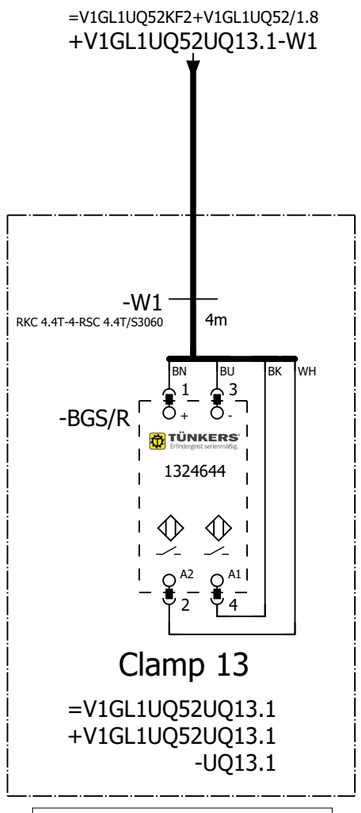

=V1GL1UQ52
-UQ13.1-BGS/R
Clamp 13

=V1GL1UQ52UQ12+.GL1UQ52UQ12/1

=V1GL1UQ52UQ14+.GL1UQ52UQ14/1

			Date	1/11/2023	Volvo Trucks North America		Valiant TMS	FESTO DQ CONNECTION QN12	Drawing name: =2V10&EFS-EL	= V1GL1UQ52UQ13	
			Ed.	MKLEPADLO						+ V1GL1UQ52UQ13	
			Appr		P6700 Bodyside RH - Robot Cell 2V10				Document type: EFS	Project nr: 22-16150	Page 1
Modification	Date	Name	Original		Replacement of	Replaced by	Scale 1:1				1579

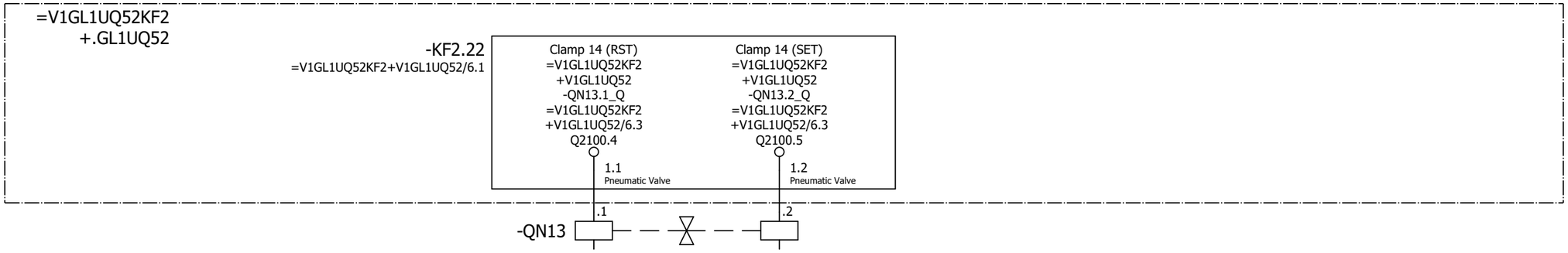

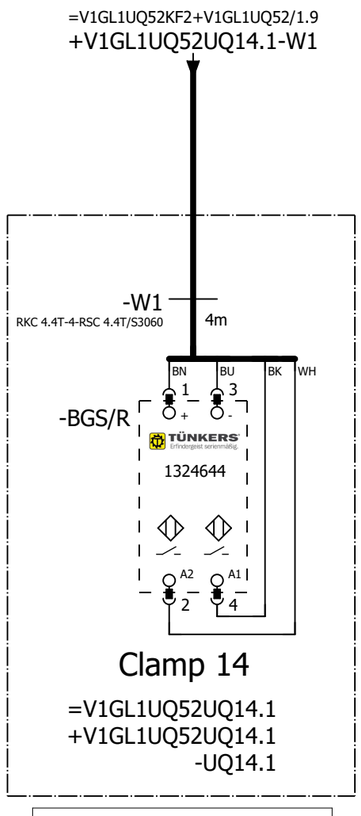

=V1GL1UQ52
-UQ14.1-BGS/R
Clamp 14

=V1GL1UQ52UQ13+.GL1UQ52UQ13/1

=V1GL1UQ52UQ15+.GL1UQ52UQ15/1

			Date	1/11/2023	Volvo Trucks North America		Valiant TMS	FESTO DQ CONNECTION QN13	Drawing name: =2V10&EFS-EL	= V1GL1UQ52UQ14	
			Ed.	MKLEPADLO						+ V1GL1UQ52UQ14	
			Appr		P6700 Bodyside RH - Robot Cell 2V10				Document type: EFS	Project nr: 22-16150	Page 1
Modification	Date	Name	Original		Replacement of	Replaced by	Scale 1:1				1579

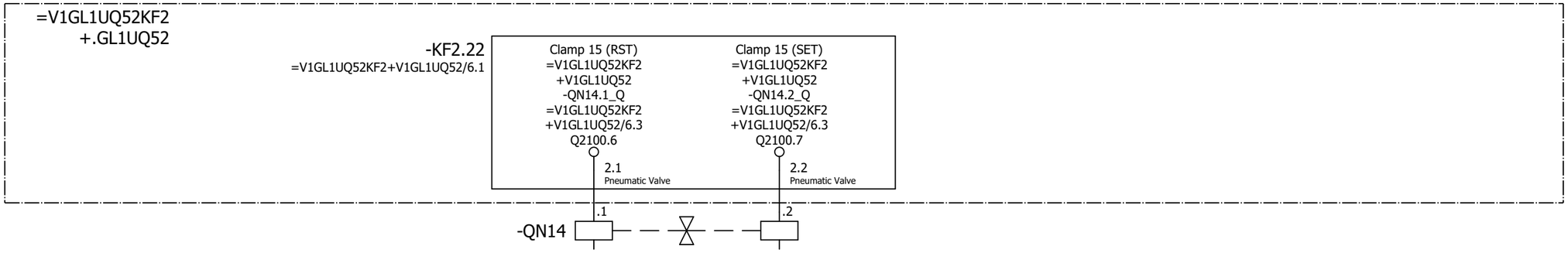

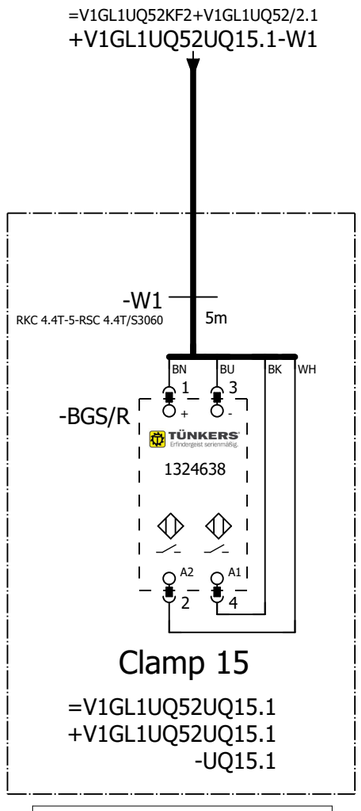

=V1GL1UQ52
-UQ15.1-BGS/R
Clamp 15

=V1GL1UQ52UQ14+.GL1UQ52UQ14/1

=V1GL1UQ52UQ16+.GL1UQ52UQ16/1

			Date	1/11/2023	Volvo Trucks North America		Valiant TMS	FESTO DQ CONNECTION QN14	Drawing name: =2V10&EFS-EL	= V1GL1UQ52UQ15	
			Ed.	MKLEPADLO						+ V1GL1UQ52UQ15	
			Appr		P6700 Bodyside RH - Robot Cell 2V10				Document type: EFS	Project nr: 22-16150	Page 1
Modification	Date	Name	Original		Replacement of	Replaced by	Scale 1:1				1579

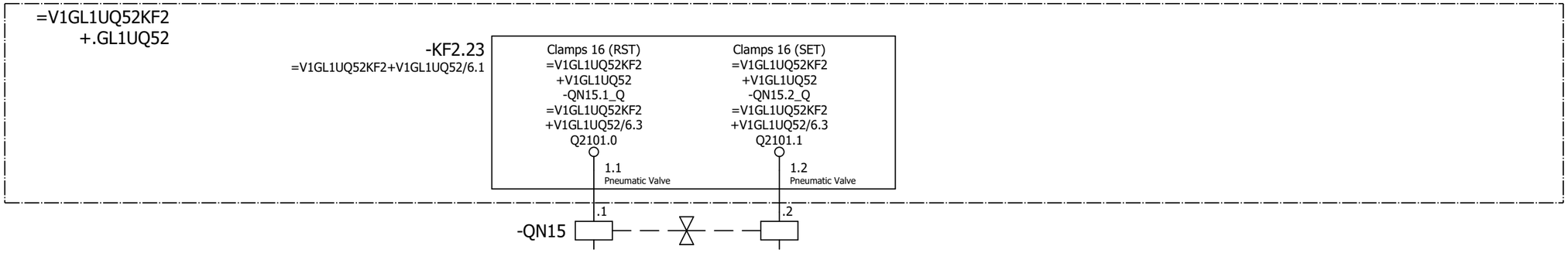

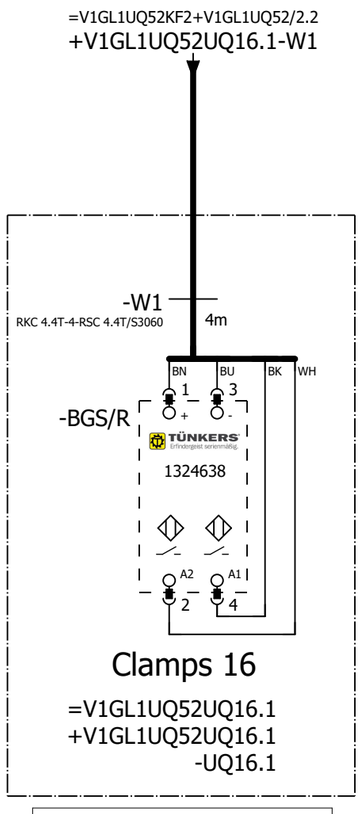

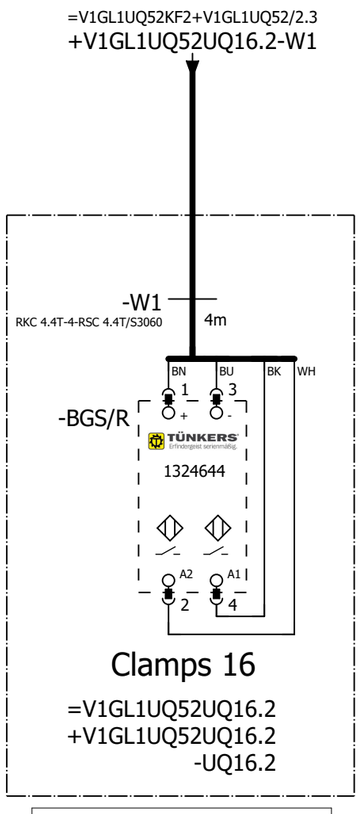

=V1GL1UQ52
-UQ16.1-BGS/R
Clamps 16

=V1GL1UQ52
-UQ16.2-BGS/R
Clamps 16

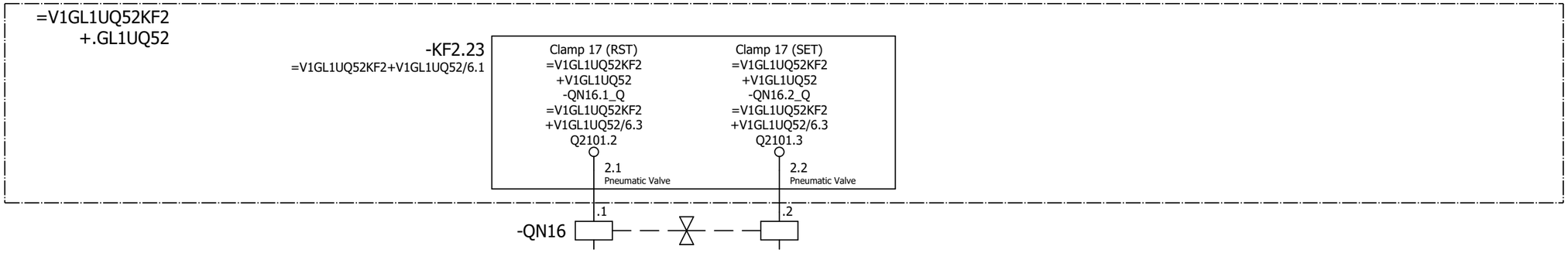

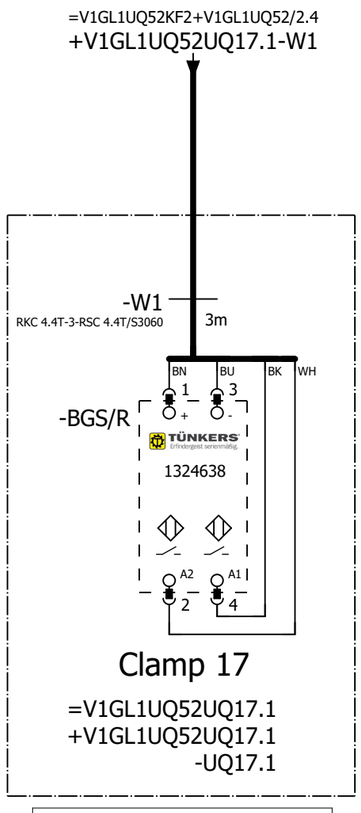

=V1GL1UQ52
-UQ17.1-BGS/R
Clamp 17

=V1GL1UQ52UQ16+.GL1UQ52UQ16/1

=V1GL1UQ52UQ18+.GL1UQ52UQ18/1

			Date	1/11/2023	Volvo Trucks North America		Valiant TMS	FESTO DQ CONNECTION QN16	Drawing name: =2V10&EFS-EL	= V1GL1UQ52UQ17	
			Ed.	MKLEPADLO						+ V1GL1UQ52UQ17	
			Appr		P6700 Bodyside RH - Robot Cell 2V10				Document type: EFS	Project nr: 22-16150	Page 1
Modification	Date	Name	Original		Replacement of	Replaced by	Scale 1:1				1579

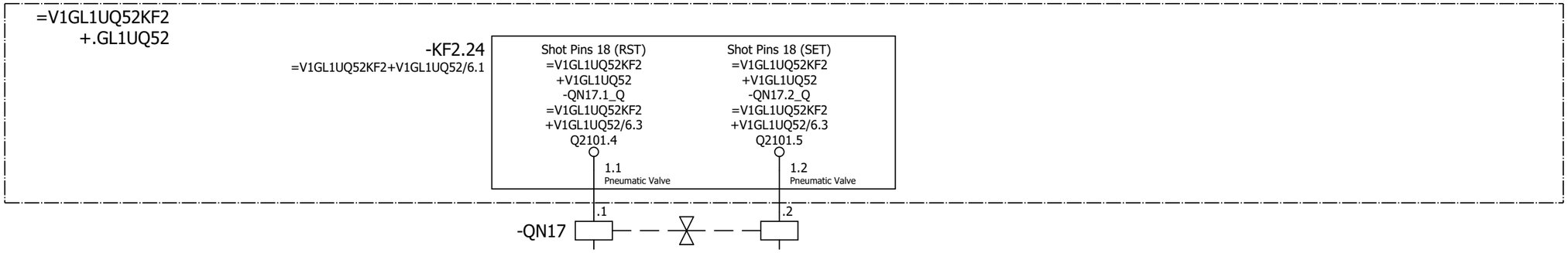

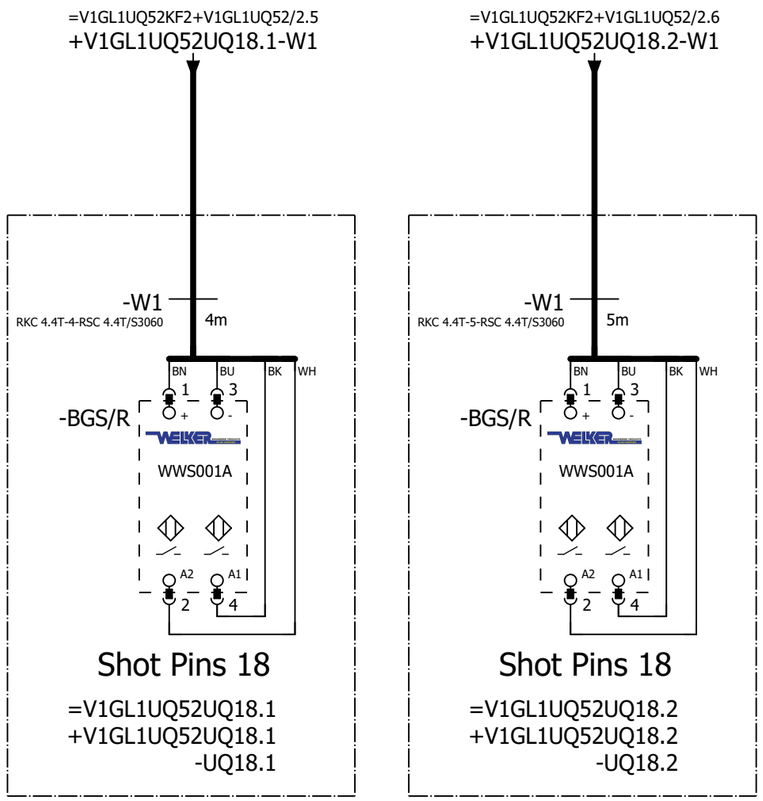

=V1GL1UQ52
-UQ18.1-BGS/R
Shot Pins 18

=V1GL1UQ52
-UQ18.2-BGS/R
Shot Pins 18

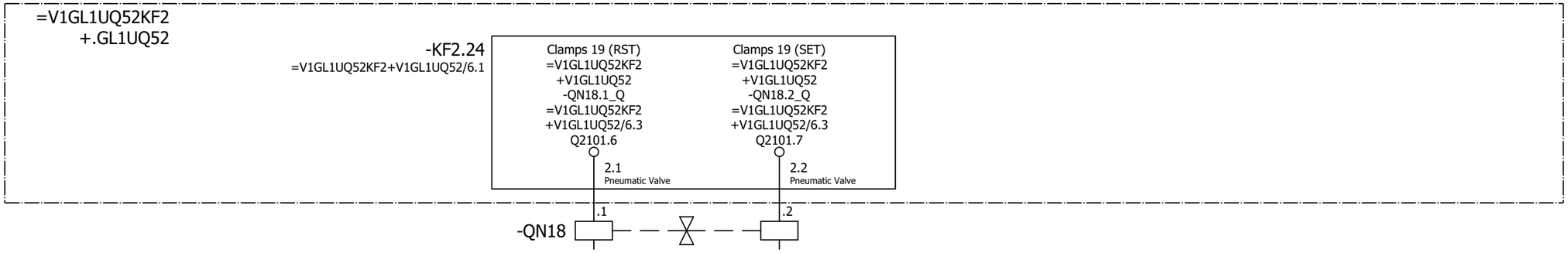

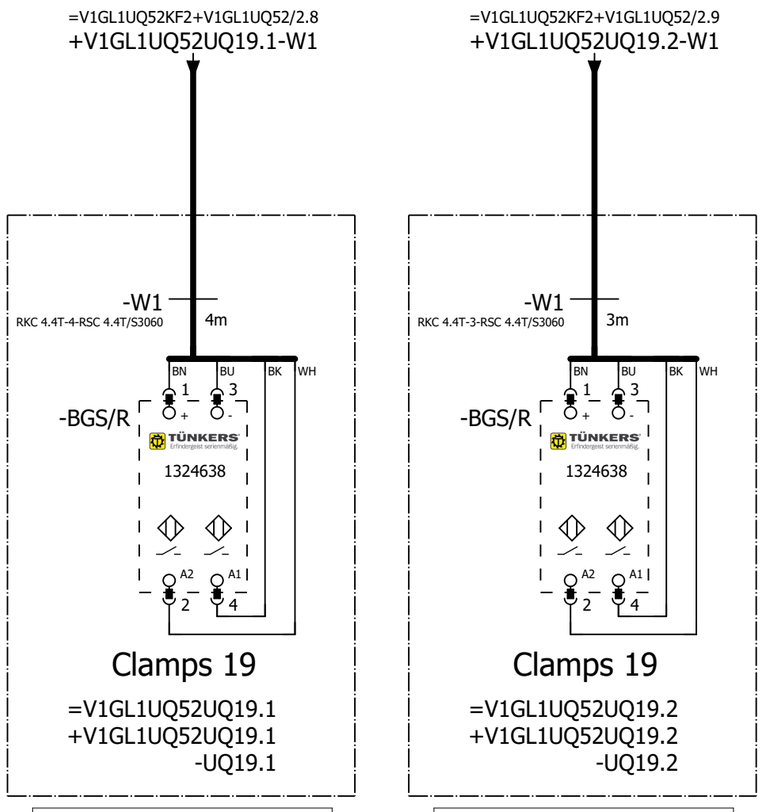

=V1GL1UQ52
-UQ19.1-BGS/R
Clamps 19

=V1GL1UQ52
-UQ19.2-BGS/R
Clamps 19

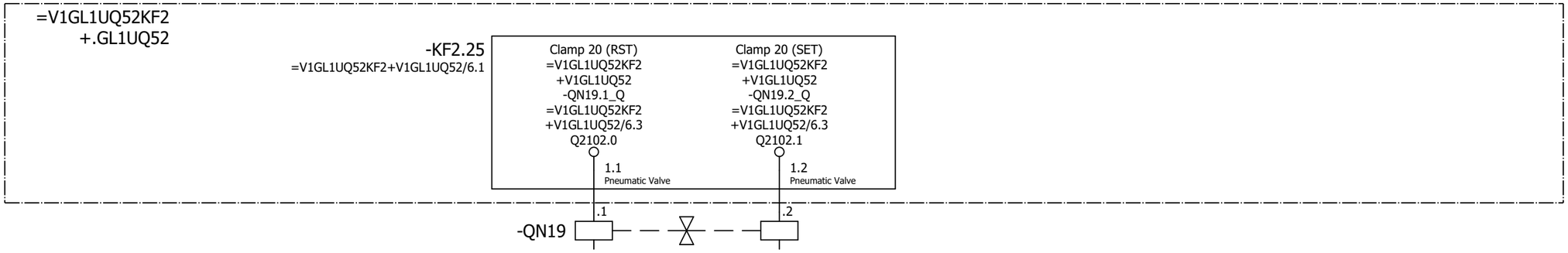

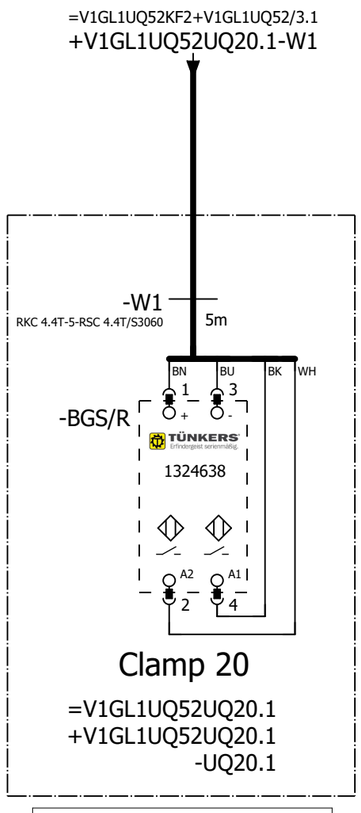

=V1GL1UQ52
-UQ20.1-BGS/R
Clamp 20

=V1GL1UQ52UQ19+.GL1UQ52UQ19/1

=V1GL1UQ52UQ21+.GL1UQ52UQ21/1

			Date	1/11/2023	Volvo Trucks North America		Valiant TMS	FESTO DQ CONNECTION QN19	Drawing name: =2V10&EFS-EL	= V1GL1UQ52UQ20	
			Ed.	MKLEPADLO						+ V1GL1UQ52UQ20	
			Appr		P6700 Bodyside RH - Robot Cell 2V10				Document type: EFS	Project nr: 22-16150	Page 1
Modification	Date	Name	Original		Replacement of	Replaced by	Scale 1:1				1579

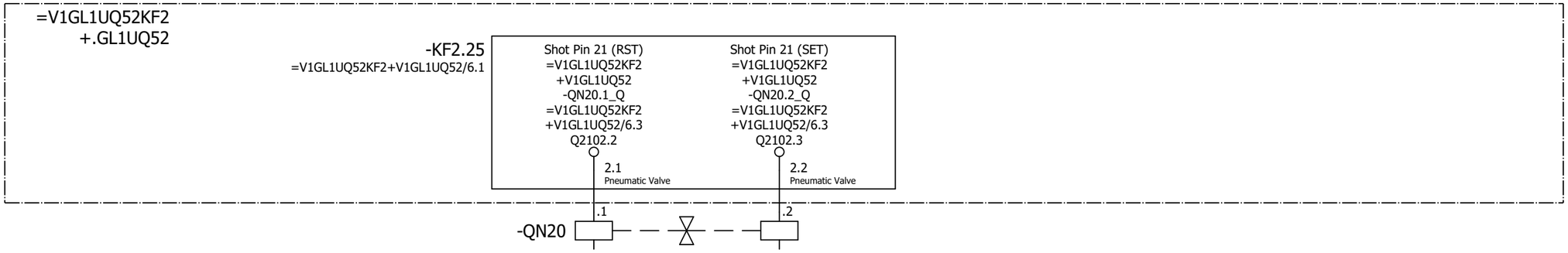

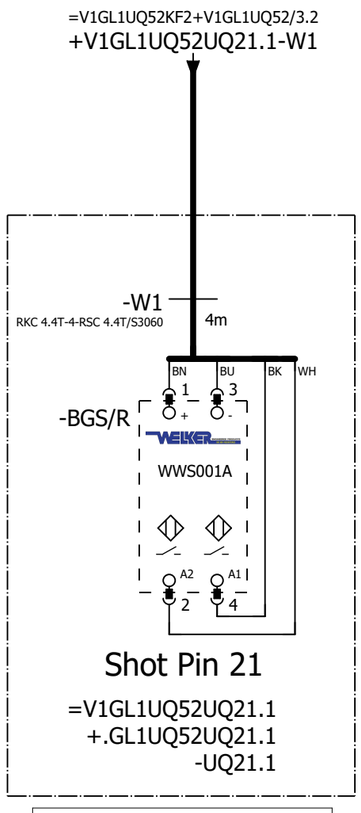

=V1GL1UQ52
-UQ21.1-BGS/R
Shot Pin 21

=V1GL1UQ52UQ20+.GL1UQ52UQ20/1

=V1GL1UQ52UQ22+.GL1UQ52UQ22/1

			Date	1/11/2023	Volvo Trucks North America		Valiant TMS	FESTO DQ CONNECTION QN20	Drawing name: =2V10&EFS-EL	= V1GL1UQ52UQ21	
			Ed.	MKLEPADLO						+ V1GL1UQ52UQ21	
			Appr		P6700 Bodyside RH - Robot Cell 2V10				Document type: EFS	Project nr: 22-16150	Page 1
Modification	Date	Name	Original		Replacement of	Replaced by	Scale 1:1				1579

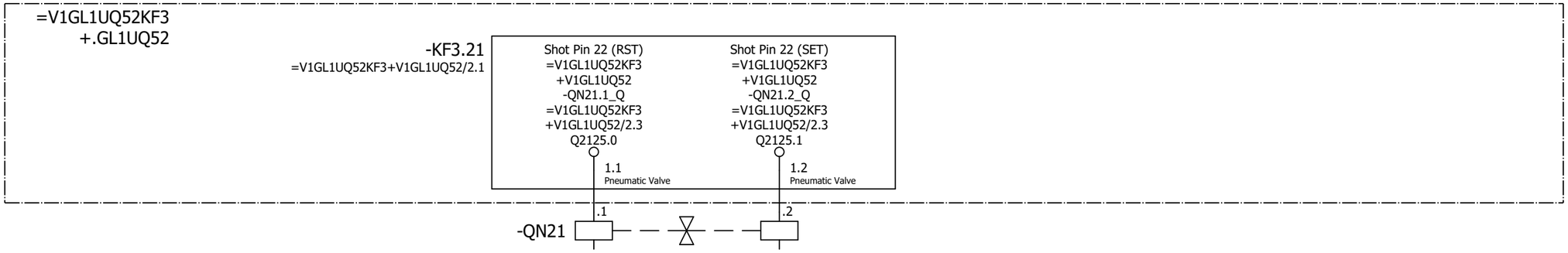

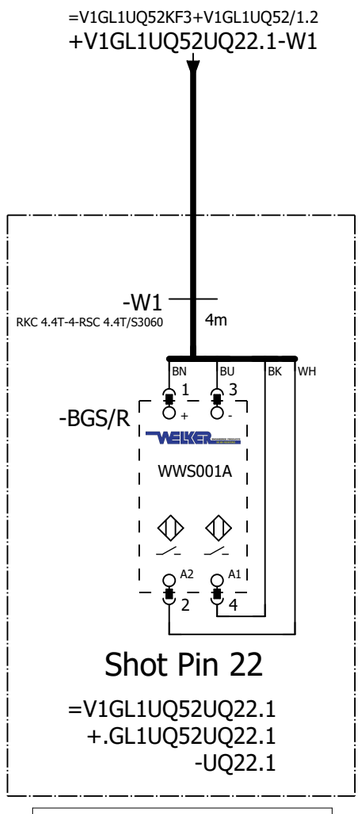

=V1GL1UQ52
-UQ22.1-BGS/R
Shot Pin 22

=V1GL1UQ52UQ21+.GL1UQ52UQ21/1

=V1GL1UQ52UQ23+.GL1UQ52UQ23/1

			Date	1/11/2023	Volvo Trucks North America		Valiant TMS	FESTO DQ CONNECTION QN21	Drawing name: =2V10&EFS-EL	= V1GL1UQ52UQ22	
			Ed.	MKLEPADLO						+ V1GL1UQ52UQ22	
			Appr		P6700 Bodyside RH - Robot Cell 2V10				Document type: EFS	Project nr: 22-16150	Page 1
Modification	Date	Name	Original		Replacement of	Replaced by	Scale 1:1				1579

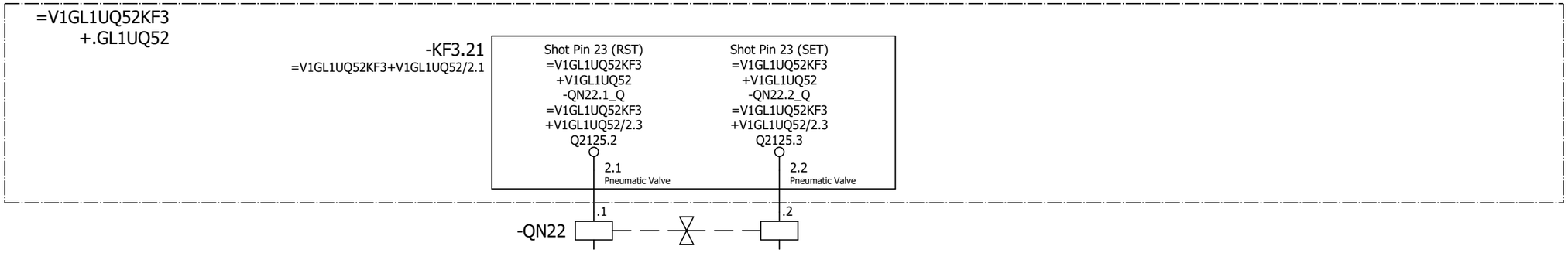

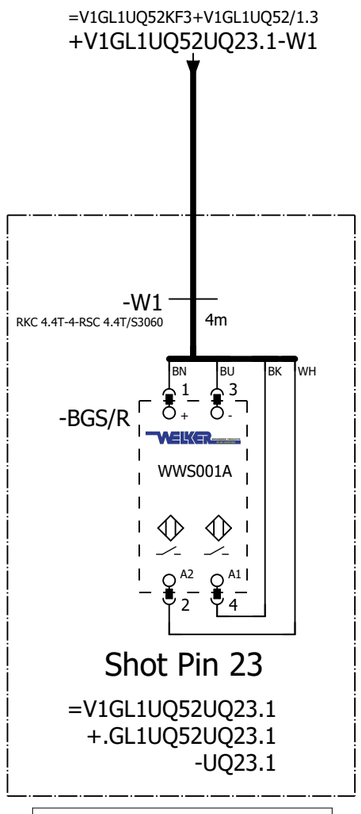

=V1GL1UQ52
-UQ23.1-BGS/R
Shot Pin 23

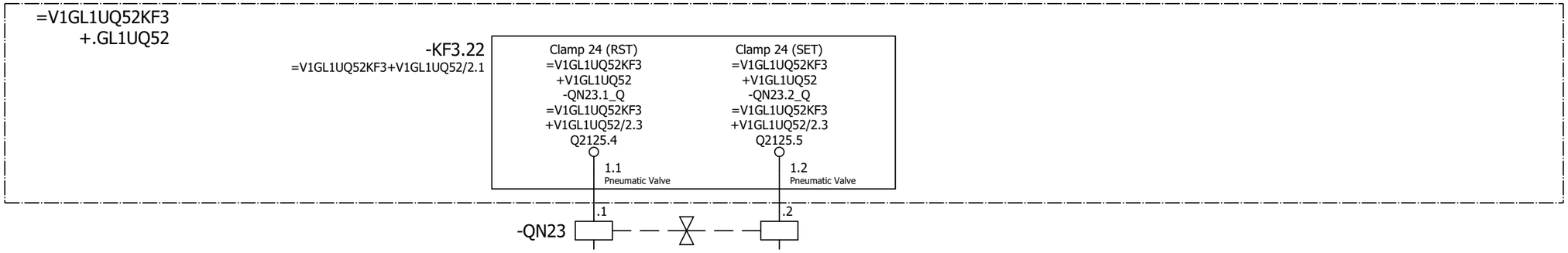

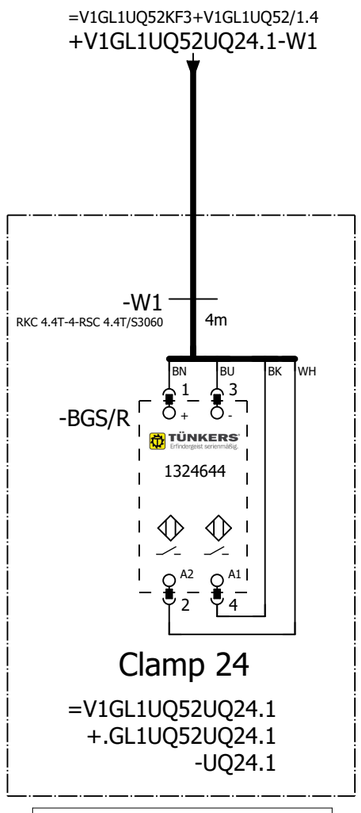

=V1GL1UQ52
-UQ24.1-BGS/R
Clamp 24

=V1GL1UQ52UQ23+.GL1UQ52UQ23/1

=V1GL1UQ52UQ25+.GL1UQ52UQ25/1

			Date	1/11/2023	Volvo Trucks North America		Valiant TMS	FESTO DQ CONNECTION QN23	Drawing name: =2V10&EFS-EL	= V1GL1UQ52UQ24	
			Ed.	MKLEPADLO						+ V1GL1UQ52UQ24	
			Appr		P6700 Bodyside RH - Robot Cell 2V10				Document type: EFS	Project nr: 22-16150	Page 1
Modification	Date	Name	Original		Replacement of	Replaced by	Scale 1:1				1579

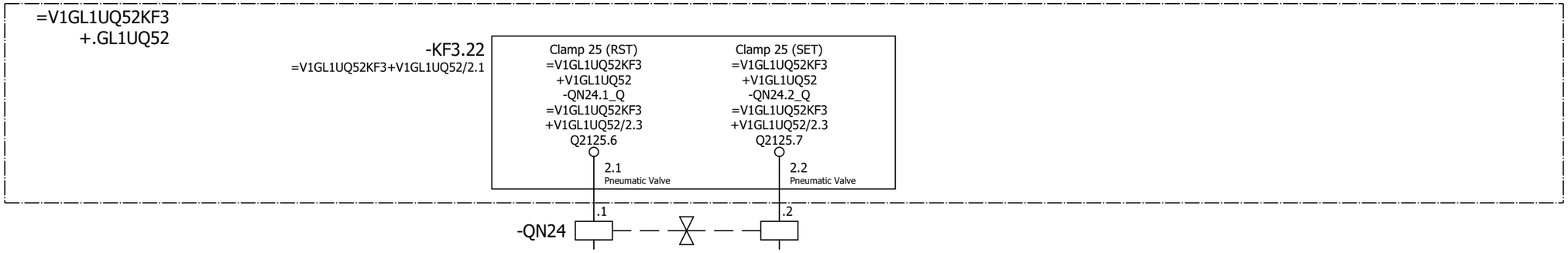

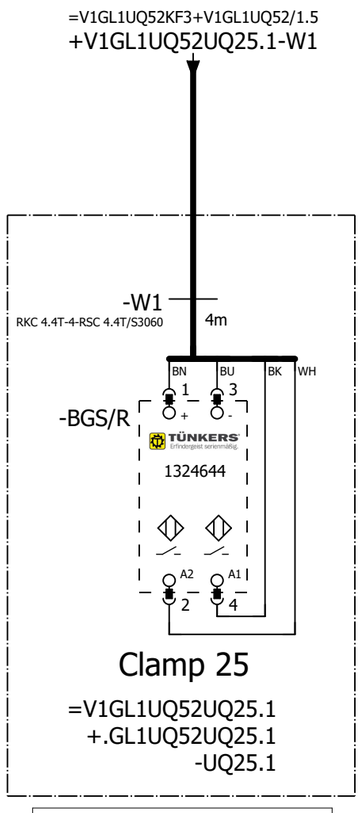

=V1GL1UQ52
-UQ25.1-BGS/R
Clamp 25

=V1GL1UQ52UQ24+.GL1UQ52UQ24/1

=V1GL1UQ52WC4+V1GL1UQ52/1

			Date	1/11/2023	Volvo Trucks North America		Valiant TMS	FESTO DQ CONNECTION QN24	Drawing name: =2V10&EFS-EL	= V1GL1UQ52UQ25	
			Ed.	MKLEPADLO						+ V1GL1UQ52UQ25	
			Appr		P6700 Bodyside RH - Robot Cell 2V10				Document type: EFS	Project nr: 22-16150	Page 1
Modification	Date	Name	Original		Replacement of	Replaced by	Scale 1:1				1579

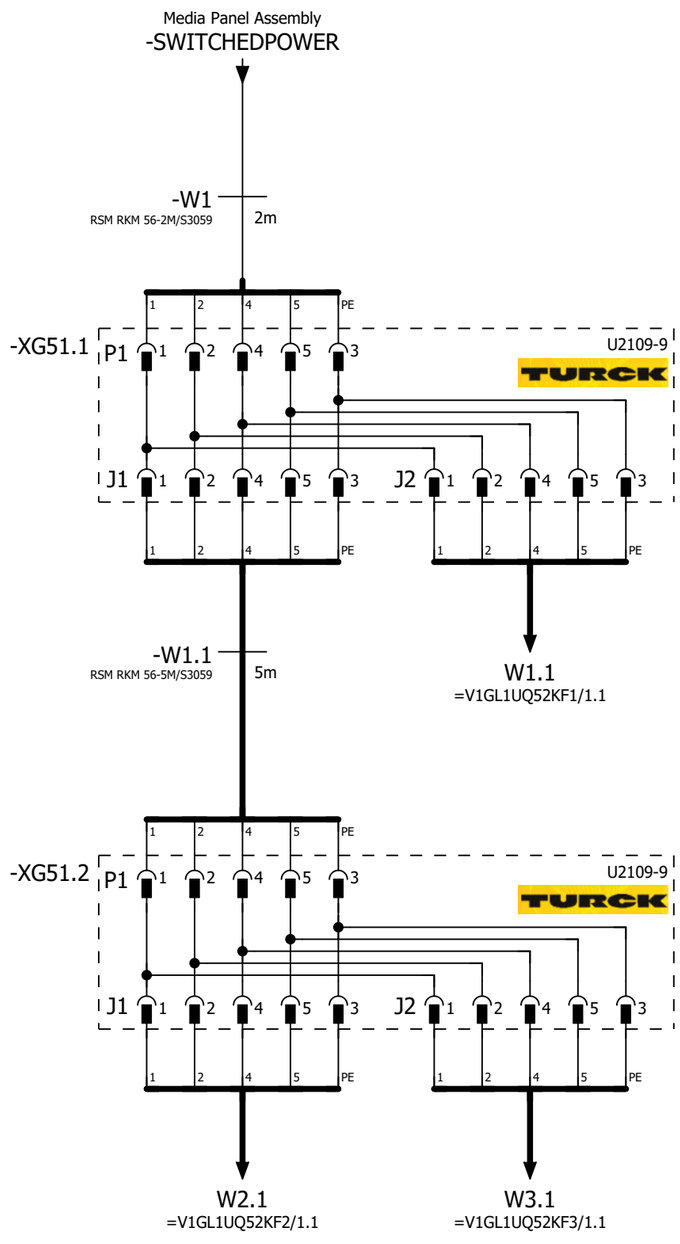

=V1GL1UQ52UQ25+.GL1UQ52UQ25/1

=V1GL1UQ53BG0+.GL1UQ53/1

			Date	1/11/2023	Volvo Trucks North America		Valiant TMS	24VDC	Drawing name: =2V10&EFS-EL	= V1GL1UQ52WC4	
			Ed.	MKLEPADLO	P6700 Bodyside RH - Robot Cell 2V10					+ V1GL1UQ52	
			Appr				Scale 1:1		Document type: EFS	Project nr: 22-16150	Page 1 / 1579
Modification	Date	Name	Original		Replacement of	Replaced by					

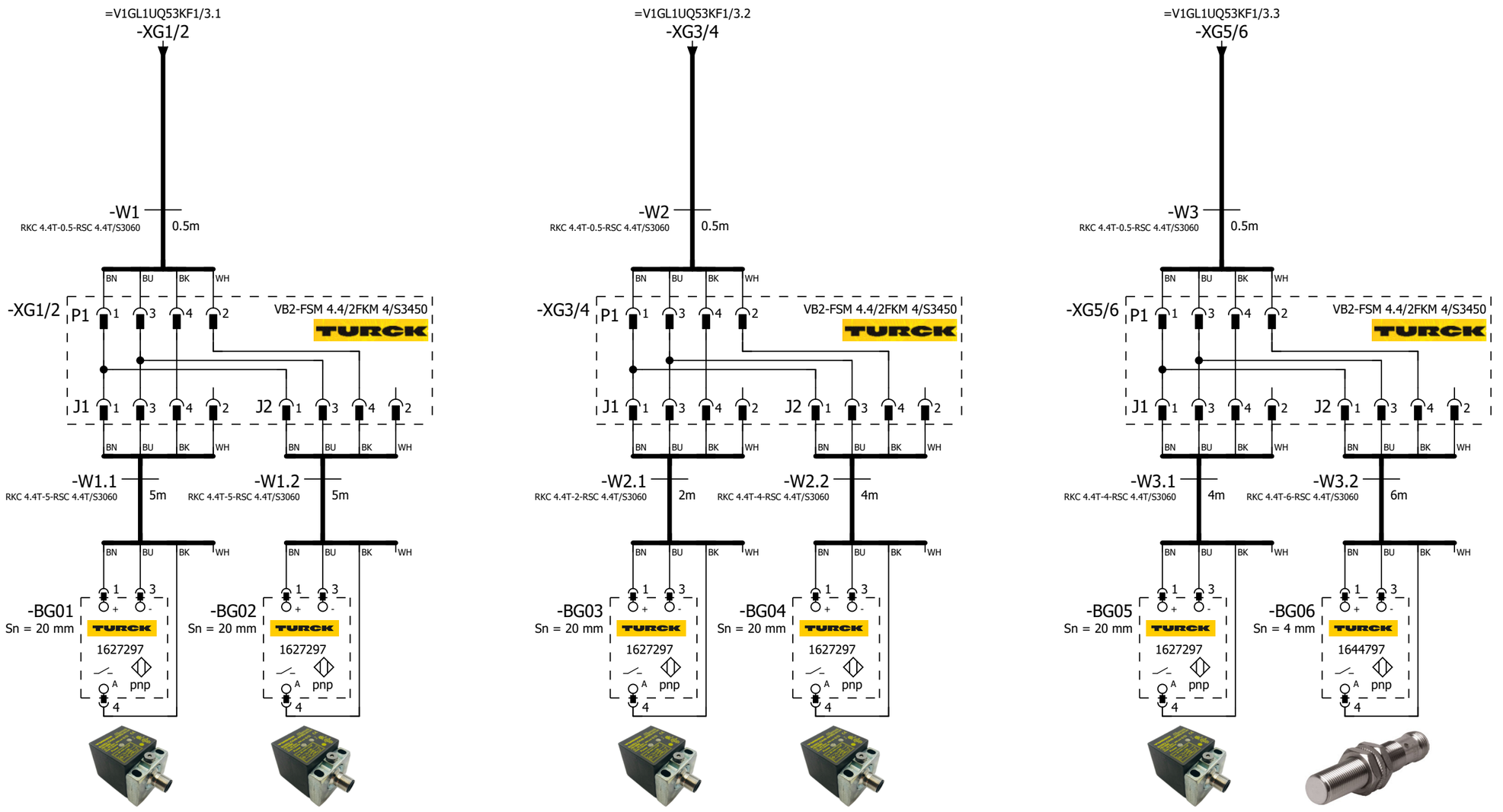

=V1GL1UQ53 -BG01 Header Sub Assembly	=V1GL1UQ53 -BG02 Header Sub Assembly	=V1GL1UQ53 -BG03 Door Frame Assembly	=V1GL1UQ53 -BG04 Outer Sill Member	=V1GL1UQ53 -BG05 Door Frame Assembly	=V1GL1UQ53 -BG06 Outer B-Dent Sill Member

=V1GL1UQ52WC4+.GL1UQ52/1

2

			Date	1/11/2023	Volvo Trucks North America		Valiant TMS	SENSORS	Drawing name: =2V10&EFS-EL	= V1GL1UQ53BG0	
			Ed.	MKLEPADLO						+ V1GL1UQ53	
			Appr		P6700 Bodyside RH - Robot Cell 2V10				Document type: EFS	Project nr: 22-16150	Page 1
Modification	Date	Name	Original		Replacement of	Replaced by	Scale 1:1				1579

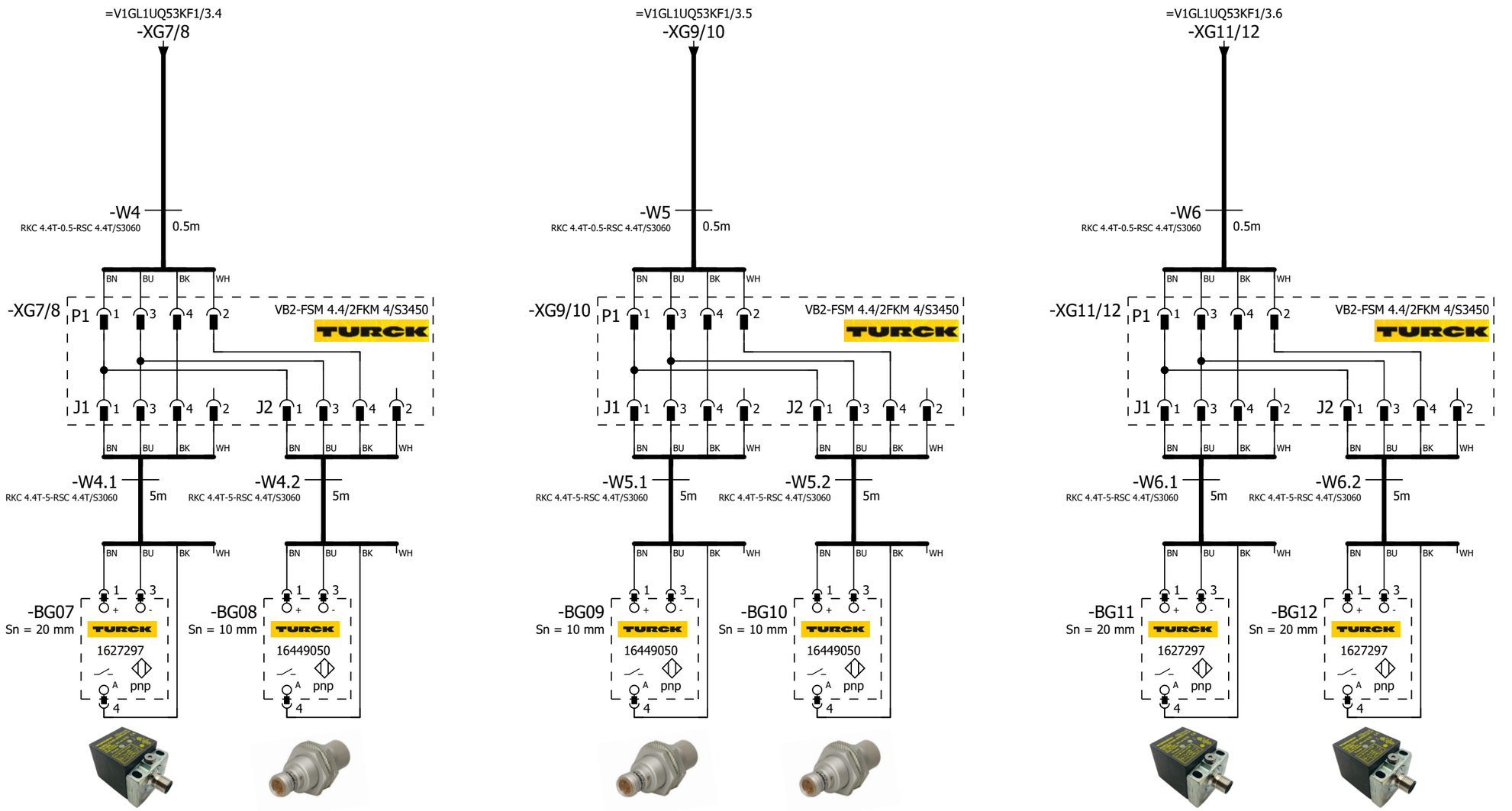

=V1GL1UQ53 -BG07 Outer Sill Member	=V1GL1UQ53 -BG08 Hinge Box	=V1GL1UQ53 -BG09 Hinge Box	=V1GL1UQ53 -BG10 Side Reinforcement	=V1GL1UQ53 -BG11 Bunk Support	=V1GL1UQ53 -BG12 Bunk Support

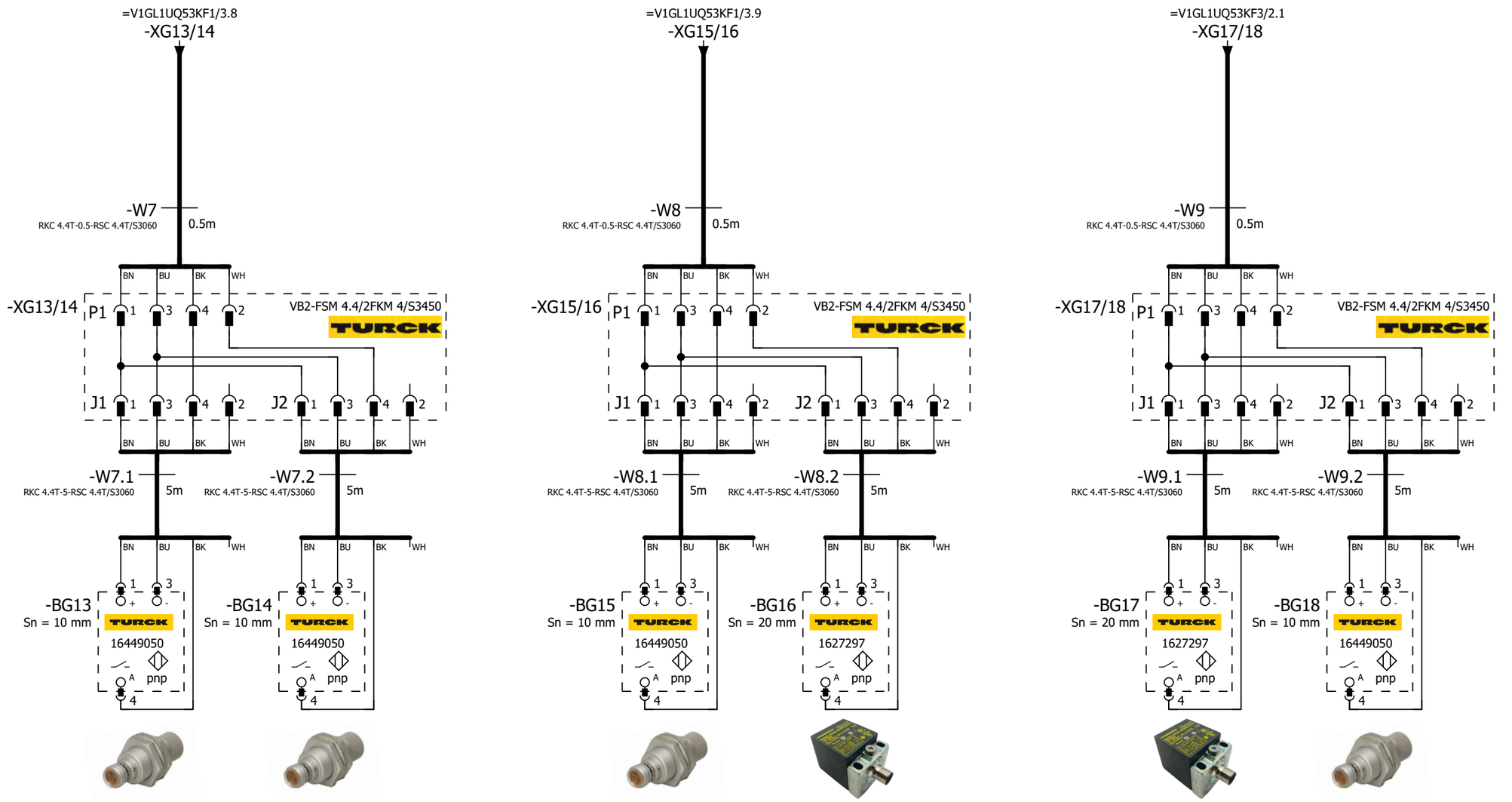

=V1GL1UQ53 -BG13 Bunk Support	=V1GL1UQ53 -BG14 Bridge Member	=V1GL1UQ53 -BG15 Bridge Member	=V1GL1UQ53 -BG16 Horizontal Crash Beam	=V1GL1UQ53 -BG17 Horizontal Crash Beam	=V1GL1UQ53 -BG18 Bridge Horizontal Beam

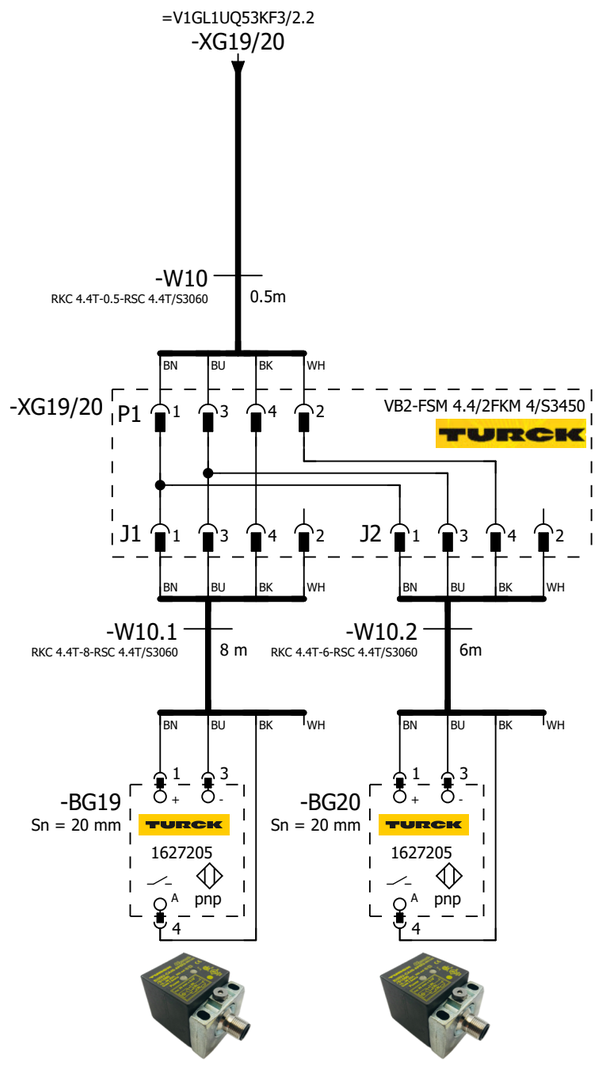

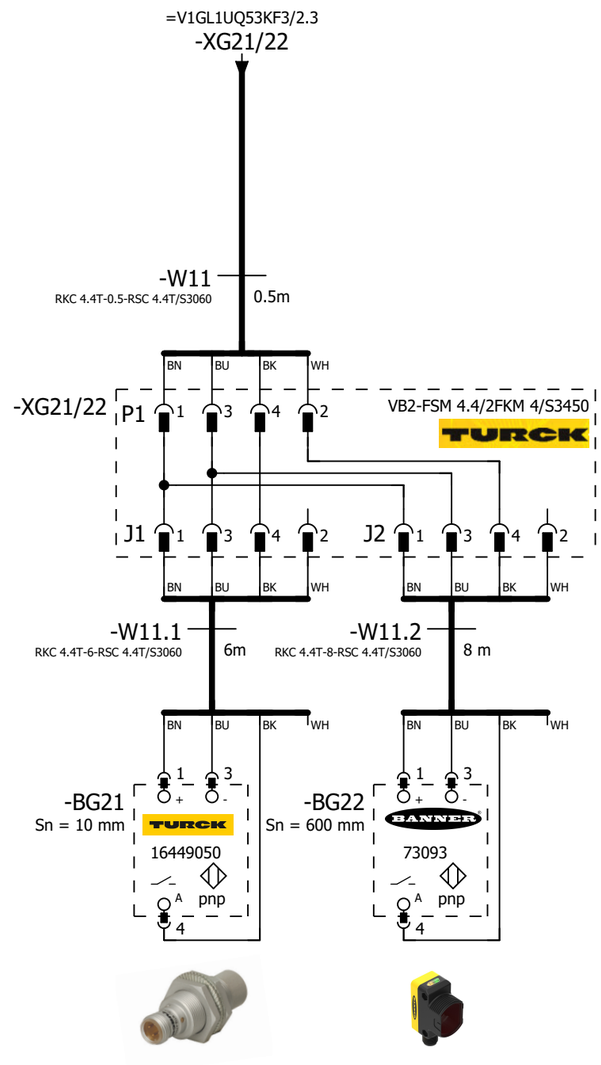

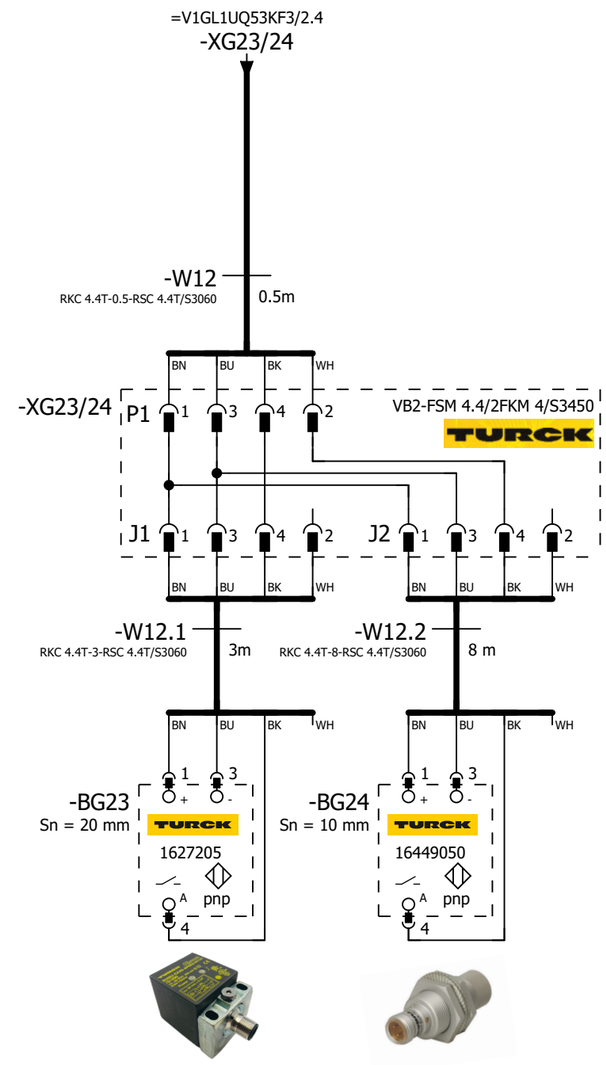

=V1GL1UQ53 -BG19 C-Pillar Assembly	=V1GL1UQ53 -BG20 C-Pillar Assembly	=V1GL1UQ53 -BG21 Head Sub Assembly	=V1GL1UQ53 -BG22 Extruded Seal Sleeper
=V1GL1UQ53 -BG23 Rocker Short Sleeper	=V1GL1UQ53 -BG24 Reinforcement		

0	1	2	3	4	5	6	7	8	9

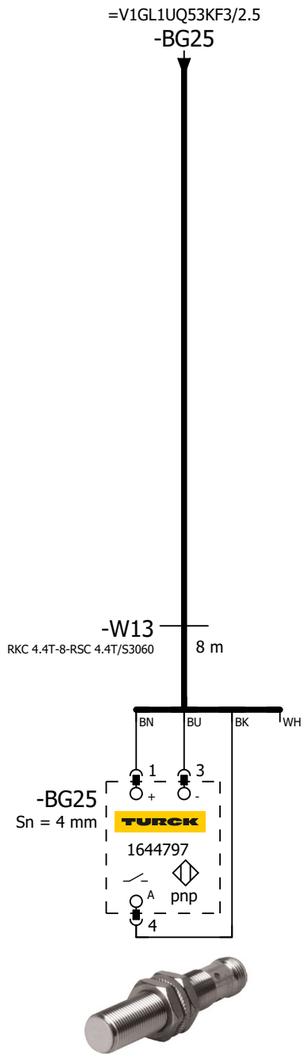

=V1GL1UQ53
-BG25
Reinforcement

4

=V1GL1UQ53KF1/1

			Date	1/11/2023	Volvo Trucks North America	Valiant TMS	SENSORS	Drawing name: =2V10&EFS-EL	= V1GL1UQ53BG0	
			Ed.	MKLEPADLO					+ V1GL1UQ53	
			Appr		P6700 Bodyside RH - Robot Cell 2V10			Document type: EFS	Project nr: 22-16150	Page 5 / 1579
Modification	Date	Name	Original		Replacement of / Replaced by	Scale 1:1				

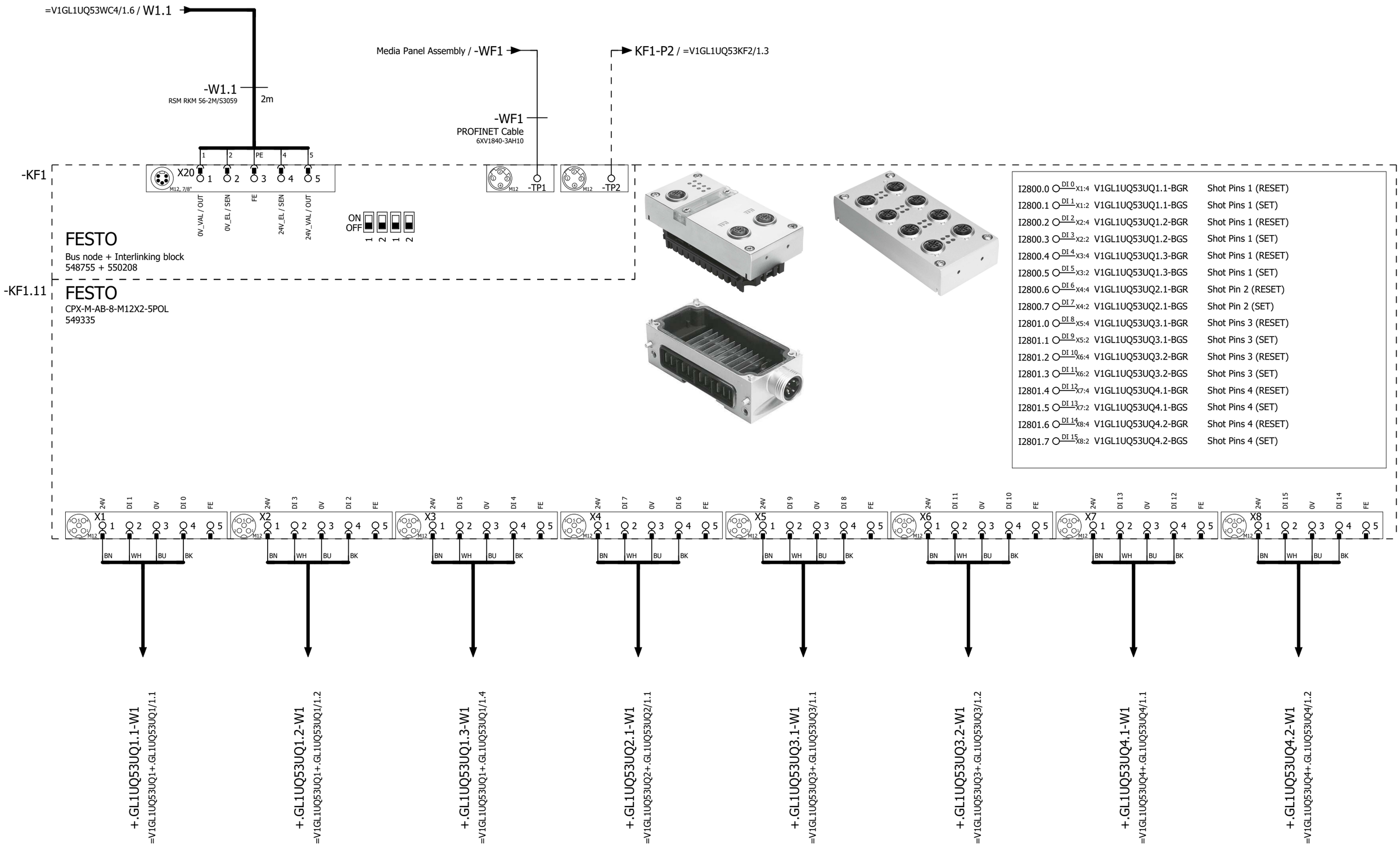

=V1GL1UQ53BG0/5

2

			Date	1/11/2023	Volvo Trucks North America	Valiant TMS	CONNECTING MOD. FOR VTSA MANIFOLD	Drawing name: =2V10&EFS-EL	= V1GL1UQ53KF1		
			Ed.	MKLEPADLO					+ V1GL1UQ53		
			Appr		P6700 Bodyside RH - Robot Cell 2V10			Document type: EFS	Project nr: 22-16150	Page	1
Modification	Date	Name	Original		Replacement of / Replaced by	Scale 1:1					1579

0	1	2	3	4	5	6	7	8	9

I2802.0	DI 0 X1:4	V1GL1UQ53UQ5.1-BGR	Shot Pin 5 (RESET)
I2802.1	DI 1 X1:2	V1GL1UQ53UQ5.1-BGS	Shot Pin 5 (SET)
I2802.2	DI 2 X2:4	V1GL1UQ53UQ6.1-BGR	Shot Pin 6 (RESET)
I2802.3	DI 3 X2:2	V1GL1UQ53UQ6.1-BGS	Shot Pin 6 (SET)
I2802.4	DI 4 X3:4	V1GL1UQ53UQ7.1-BGR	Shot Pin 7 (RESET)
I2802.5	DI 5 X3:2	V1GL1UQ53UQ7.1-BGS	Shot Pin 7 (SET)
I2802.6	DI 6 X4:4	V1GL1UQ53UQ8.1-BGR	Shot Pins 8 (RESET)
I2802.7	DI 7 X4:2	V1GL1UQ53UQ8.1-BGS	Shot Pins 8 (SET)
I2803.0	DI 8 X5:4	V1GL1UQ53UQ8.2-BGR	Shot Pins 8 (RESET)
I2803.1	DI 9 X5:2	V1GL1UQ53UQ8.2-BGS	Shot Pins 8 (SET)
I2803.2	DI 10 X6:4	V1GL1UQ53UQ8.3-BGR	Shot Pins 8 (RESET)
I2803.3	DI 11 X6:2	V1GL1UQ53UQ8.3-BGS	Shot Pins 8 (SET)
I2803.4	DI 12 X7:4	V1GL1UQ53UQ9.1-BGR	Shot Pin 9 (RESET)
I2803.5	DI 13 X7:2	V1GL1UQ53UQ9.1-BGS	Shot Pin 9 (SET)
I2803.6	DI 14 X8:4	V1GL1UQ53UQ10.1-BGR	Shot Pin 10 (RESET)
I2803.7	DI 15 X8:2	V1GL1UQ53UQ10.1-BGS	Shot Pin 10 (SET)

-KF1.12

FESTO
CPX-M-AB-8-M12X2-5POL
549335

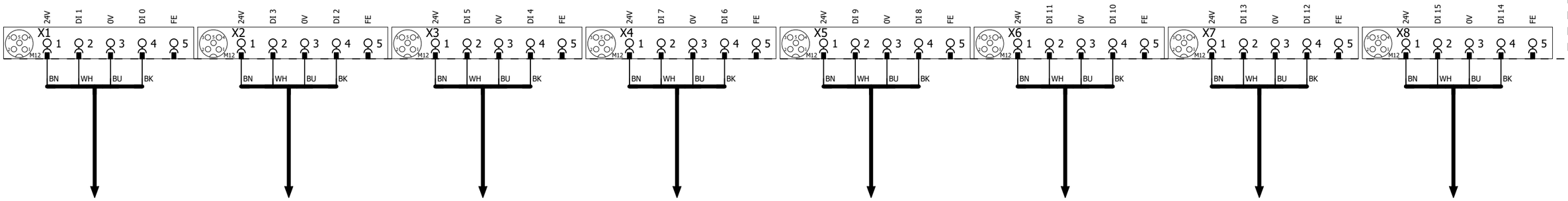

+.GL1UQ53UQ5.1-W1
=V1GL1UQ53UQ5+.GL1UQ53UQ5/1.1

+.GL1UQ53UQ6.1-W1
=V1GL1UQ53UQ6+.GL1UQ53UQ6/1.1

+.GL1UQ53UQ7.1-W1
=V1GL1UQ53UQ7+.GL1UQ53UQ7/1.1

+.GL1UQ53UQ8.1-W1
=V1GL1UQ53UQ8+.GL1UQ53UQ8/1.1

+.GL1UQ53UQ8.2-W1
=V1GL1UQ53UQ8+.GL1UQ53UQ8/1.2

+.GL1UQ53UQ8.3-W1
=V1GL1UQ53UQ8+.GL1UQ53UQ8/1.4

+.GL1UQ53UQ9.1-W1
=V1GL1UQ53UQ9+.GL1UQ53UQ9/1.1

+.GL1UQ53UQ10.1-W1
=V1GL1UQ53UQ10+.GL1UQ53UQ10/1.1

1 3

			Date	1/11/2023	Volvo Trucks North America	Valiant TMS	I/O MOD. DI16 (8 x M12) FOR VTSA-F	Drawing name: =2V10&EFS-EL		= V1GL1UQ53KF1	
			Ed.	MKLEPADLO						+ V1GL1UQ53	
			Appr		P6700 Bodyside RH - Robot Cell 2V10			Document type: EFS	Project nr: 22-16150		Page 2
Modification	Date	Name	Original		Replacement of	Replaced by	Scale 1:1				1579

0	1	2	3	4	5	6	7	8	9

-KF1.13

FESTO
CPX-M-AB-8-M12X2-5POL
549335

I2804.0	DI 0 X1:4	V1GL1UQ53-BG01	Sensor Header Sub Assembly
I2804.1	DI 1 X1:2	V1GL1UQ53-BG02	Sensor Header Sub Assembly
I2804.2	DI 2 X2:4	V1GL1UQ53-BG03	Sensor Door Frame Assembly
I2804.3	DI 3 X2:2	V1GL1UQ53-BG04	Sensor Outer Sill Member
I2804.4	DI 4 X3:4	V1GL1UQ53-BG05	Sensor Door Frame Assembly
I2804.5	DI 5 X3:2	V1GL1UQ53-BG06	Sensor Outer B-Dent Sill Member
I2804.6	DI 6 X4:4	V1GL1UQ53-BG07	Sensor Outer Sill Member
I2804.7	DI 7 X4:2	V1GL1UQ53-BG08	Sensor Hinge Box
I2805.0	DI 8 X5:4	V1GL1UQ53-BG09	Sensor Hinge Box
I2805.1	DI 9 X5:2	V1GL1UQ53-BG10	Sensor Side Reinforcement
I2805.2	DI 10 X6:4	V1GL1UQ53-BG11	Sensor Bunk Support
I2805.3	DI 11 X6:2	V1GL1UQ53-BG12	Sensor Bunk Support
I2805.4	DI 12 X7:4	V1GL1UQ53-BG13	Sensor Bunk Support
I2805.5	DI 13 X7:2	V1GL1UQ53-BG14	Sensor Bridge Member
I2805.6	DI 14 X8:4	V1GL1UQ53-BG15	Sensor Bridge Member
I2805.7	DI 15 X8:2	V1GL1UQ53-BG16	Sensor Horizontal Crash Beam

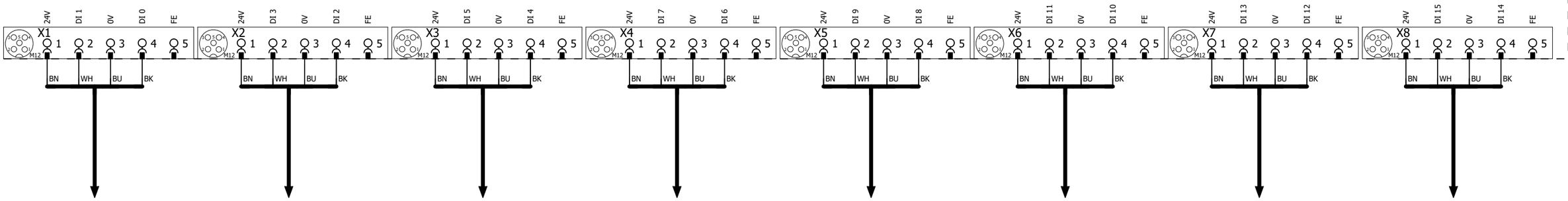

-XG1/2
=V1GL1UQ53BG0/1.1

-XG3/4
=V1GL1UQ53BG0/1.4

-XG5/6
=V1GL1UQ53BG0/1.6

-XG7/8
=V1GL1UQ53BG0/2.1

-XG9/10
=V1GL1UQ53BG0/2.4

-XG11/12
=V1GL1UQ53BG0/2.6

-XG13/14
=V1GL1UQ53BG0/3.1

-XG15/16
=V1GL1UQ53BG0/3.4

2 4

			Date	1/11/2023	Volvo Trucks North America	Valiant TMS	I/O MOD. DI16 (8 x M12) FOR VTSA-F	Drawing name: =2V10&EFS-EL		= V1GL1UQ53KF1	
			Ed.	MKLEPADLO						+ V1GL1UQ53	
			Appr		P6700 Bodyside RH - Robot Cell 2V10			Document type: EFS	Project nr: 22-16150		Page 3
Modification	Date	Name	Original		Replacement of / Replaced by	Scale 1:1					1579

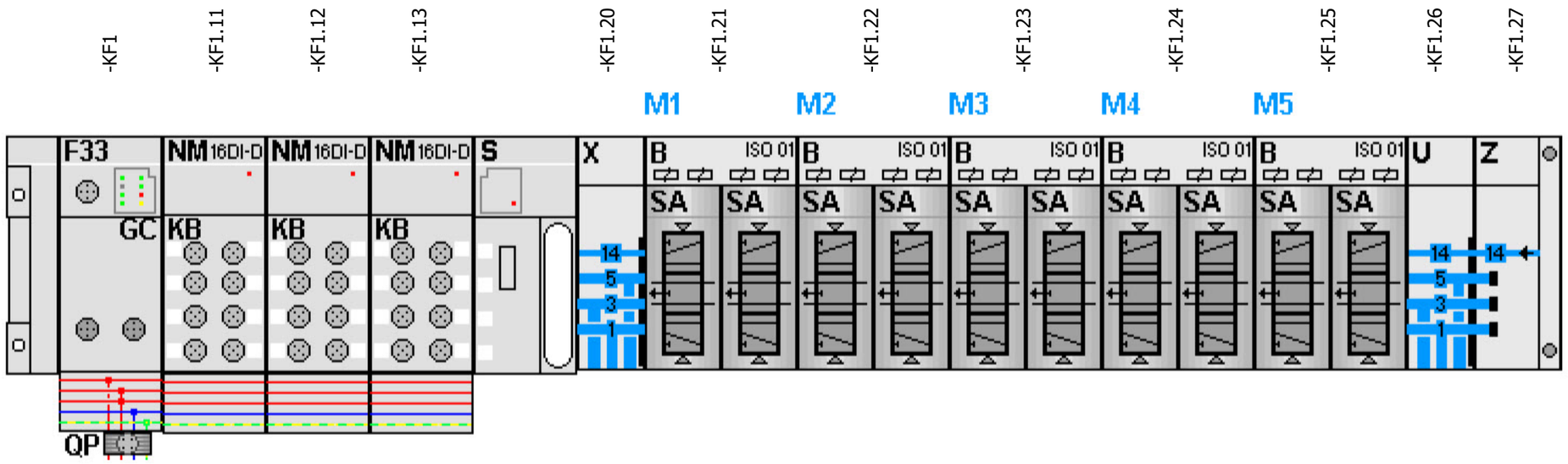

-KF1.21

=V1GL1UQ53UQ1+.GL1UQ53UQ1/1.3
=V1GL1UQ53UQ2+.GL1UQ53UQ2/1.3

FESTO

=V1GL1UQ53UQ1+.GL1UQ53UQ1/1.4	Q2800.0 DO 0 1.1	-QN1.1_Q	Shot Pins 1 (RST)
=V1GL1UQ53UQ1+.GL1UQ53UQ1/1.4	Q2800.1 DO 1 1.2	-QN1.2_Q	Shot Pins 1 (SET)
=V1GL1UQ53UQ2+.GL1UQ53UQ2/1.4	Q2800.2 DO 2 2.1	-QN2.1_Q	Shot Pin 2 (RST)
=V1GL1UQ53UQ2+.GL1UQ53UQ2/1.4	Q2800.3 DO 3 2.2	-QN2.2_Q	Shot Pin 2 (SET)

-KF1.22

=V1GL1UQ53UQ3+.GL1UQ53UQ3/1.3
=V1GL1UQ53UQ4+.GL1UQ53UQ4/1.3

FESTO

=V1GL1UQ53UQ3+.GL1UQ53UQ3/1.4	Q2800.4 DO 0 1.1	-QN3.1_Q	Shot Pins 3 (RST)
=V1GL1UQ53UQ3+.GL1UQ53UQ3/1.4	Q2800.5 DO 1 1.2	-QN3.2_Q	Shot Pins 3 (SET)
=V1GL1UQ53UQ4+.GL1UQ53UQ4/1.4	Q2800.6 DO 2 2.1	-QN4.1_Q	Shot Pins 4 (RST)
=V1GL1UQ53UQ4+.GL1UQ53UQ4/1.4	Q2800.7 DO 3 2.2	-QN4.2_Q	Shot Pins 4 (SET)

-KF1.23

=V1GL1UQ53UQ5+.GL1UQ53UQ5/1.3
=V1GL1UQ53UQ6+.GL1UQ53UQ6/1.3

FESTO

=V1GL1UQ53UQ5+.GL1UQ53UQ5/1.4	Q2801.0 DO 0 1.1	-QN5.1_Q	Shot Pin 5 (RST)
=V1GL1UQ53UQ5+.GL1UQ53UQ5/1.4	Q2801.1 DO 1 1.2	-QN5.2_Q	Shot Pin 5 (SET)
=V1GL1UQ53UQ6+.GL1UQ53UQ6/1.4	Q2801.2 DO 0 2.1	-QN6.1_Q	Shot Pin 6 (RST)
=V1GL1UQ53UQ6+.GL1UQ53UQ6/1.4	Q2801.3 DO 1 2.2	-QN6.2_Q	Shot Pin 6 (SET)

-KF1.24

=V1GL1UQ53UQ7+.GL1UQ53UQ7/1.3
=V1GL1UQ53UQ8+.GL1UQ53UQ8/1.3

FESTO

=V1GL1UQ53UQ7+.GL1UQ53UQ7/1.4	Q2801.4 DO 0 1.1	-QN7.1_Q	Shot Pin 7 (RST)
=V1GL1UQ53UQ7+.GL1UQ53UQ7/1.4	Q2801.5 DO 1 1.2	-QN7.2_Q	Shot Pin 7 (SET)
=V1GL1UQ53UQ8+.GL1UQ53UQ8/1.4	Q2801.6 DO 0 2.1	-QN8.1_Q	Shot Pins 8 (RST)
=V1GL1UQ53UQ8+.GL1UQ53UQ8/1.4	Q2801.7 DO 1 2.2	-QN8.2_Q	Shot Pins 8 (SET)

-KF1.25

=V1GL1UQ53UQ9+.GL1UQ53UQ9/1.3
=V1GL1UQ53UQ10+.GL1UQ53UQ10/1.3

FESTO

=V1GL1UQ53UQ9+.GL1UQ53UQ9/1.4	Q2802.0 DO 0 1.1	-QN9.1_Q	Shot Pin 9 (RST)
=V1GL1UQ53UQ9+.GL1UQ53UQ9/1.4	Q2802.1 DO 1 1.2	-QN9.2_Q	Shot Pin 9 (SET)
=V1GL1UQ53UQ10+.GL1UQ53UQ10/1.4	Q2802.2 DO 0 2.1	-QN10.1_Q	Shot Pin 10 (RST)
=V1GL1UQ53UQ10+.GL1UQ53UQ10/1.4	Q2802.3 DO 1 2.2	-QN10.2_Q	Shot Pin 10 (SET)

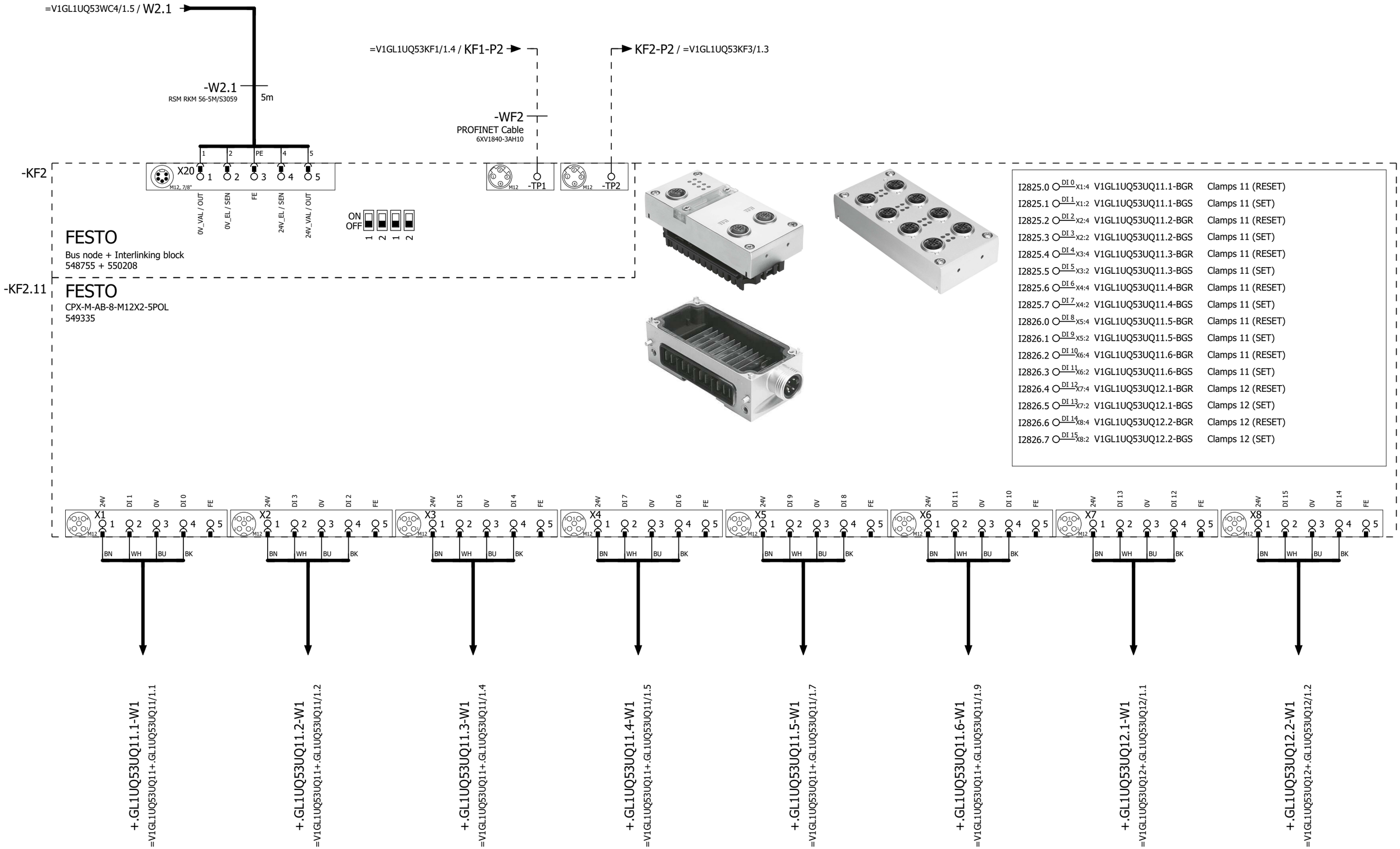

=V1GL1UQ53KF1/4

2

			Date	1/11/2023	Volvo Trucks North America	Valiant TMS	CONNECTING MOD. FOR VTSA MANIFOLD	Drawing name: =2V10&EFS-EL		= V1GL1UQ53KF2	
			Ed.	MKLEPADLO						+ V1GL1UQ53	
			Appr		P6700 Bodyside RH - Robot Cell 2V10			Document type: EFS	Project nr: 22-16150		Page 1
Modification	Date	Name	Original		Replacement of / Replaced by	Scale 1:1					1579

I2827.0	DI 0 X1:4	V1GL1UQ53UQ12.3-BGR	Clamps 12 (RESET)
I2827.1	DI 1 X1:2	V1GL1UQ53UQ12.3-BGS	Clamps 12 (SET)
I2827.2	DI 2 X2:4	V1GL1UQ53UQ12.4-BGR	Clamps 12 (RESET)
I2827.3	DI 3 X2:2	V1GL1UQ53UQ12.4-BGS	Clamps 12 (SET)
I2827.4	DI 4 X3:4	V1GL1UQ53UQ13.1-BGR	Clamps 13 (RESET)
I2827.5	DI 5 X3:2	V1GL1UQ53UQ13.1-BGS	Clamps 13 (SET)
I2827.6	DI 6 X4:4	V1GL1UQ53UQ13.2-BGR	Clamps 13 (RESET)
I2827.7	DI 7 X4:2	V1GL1UQ53UQ13.2-BGS	Clamps 13 (SET)
I2828.0	DI 8 X5:4	V1GL1UQ53UQ14.1-BGR	Clamps 14 (RESET)
I2828.1	DI 9 X5:2	V1GL1UQ53UQ14.1-BGS	Clamps 14 (SET)
I2828.2	DI 10 X6:4	V1GL1UQ53UQ14.2-BGR	Clamps 14 (RESET)
I2828.3	DI 11 X6:2	V1GL1UQ53UQ14.2-BGS	Clamps 14 (SET)
I2828.4	DI 12 X7:4	V1GL1UQ53UQ14.3-BGR	Clamps 14 (RESET)
I2828.5	DI 13 X7:2	V1GL1UQ53UQ14.3-BGS	Clamps 14 (SET)
I2828.6	DI 14 X8:4	V1GL1UQ53UQ14.4-BGR	Clamps 14 (RESET)
I2828.7	DI 15 X8:2	V1GL1UQ53UQ14.4-BGS	Clamps 14 (SET)

-KF2.12

FESTO
CPX-M-AB-8-M12X2-5POL
549335

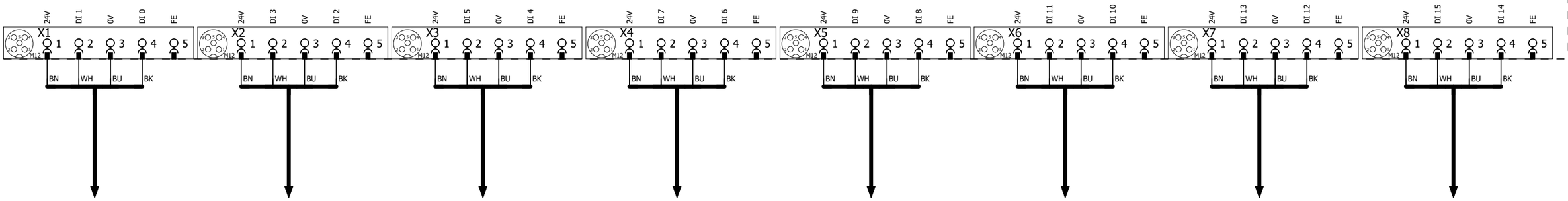

+.GL1UQ53UQ12.3-W1
=V1GL1UQ53UQ12+.GL1UQ53UQ12/1.4

+.GL1UQ53UQ12.4-W1
=V1GL1UQ53UQ12+.GL1UQ53UQ12/1.5

+.GL1UQ53UQ13.1-W1
=V1GL1UQ53UQ13+.GL1UQ53UQ13/1.1

+.GL1UQ53UQ13.2-W1
=V1GL1UQ53UQ13+.GL1UQ53UQ13/1.2

+.GL1UQ53UQ14.1-W1
=V1GL1UQ53UQ14+.GL1UQ53UQ14/1.1

+.GL1UQ53UQ14.2-W1
=V1GL1UQ53UQ14+.GL1UQ53UQ14/1.2

+.GL1UQ53UQ14.3-W1
=V1GL1UQ53UQ14+.GL1UQ53UQ14/1.4

+.GL1UQ53UQ14.4-W1
=V1GL1UQ53UQ14+.GL1UQ53UQ14/1.5

1 3

			Date	1/17/2023	Volvo Trucks North America	Valiant TMS	I/O MOD. DI16 (8 x M12) FOR VTSA-F	Drawing name: =2V10&EFS-EL		= V1GL1UQ53KF2	
			Ed.	MKLEPADLO						+ V1GL1UQ53	
			Appr		P6700 Bodyside RH - Robot Cell 2V10			Document type: EFS	Project nr: 22-16150		Page 2
Modification	Date	Name	Original		Replacement of	Replaced by	Scale 1:1				1579

-KF2.13

FESTO

CPX-M-AB-8-M12X2-5POL

549335

I2829.0	DI 0 X1:4	V1GL1UQ53UQ15.1-BGR	Clamp 15 (RESET)
I2829.1	DI 1 X1:2	V1GL1UQ53UQ15.1-BGS	Clamp 15 (SET)
I2829.2	DI 2 X2:4	V1GL1UQ53UQ16.1-BGR	Clamp 16 (RESET)
I2829.3	DI 3 X2:2	V1GL1UQ53UQ16.1-BGS	Clamp 16 (SET)
I2829.4	DI 4 X3:4	V1GL1UQ53UQ17.1-BGR	Clamp 17 (RESET)
I2829.5	DI 5 X3:2	V1GL1UQ53UQ17.1-BGS	Clamp 17 (SET)
I2829.6	DI 6 X4:4	V1GL1UQ53UQ18.1-BGR	Shot Pin 18 (RESET)
I2829.7	DI 7 X4:2	V1GL1UQ53UQ18.1-BGS	Shot Pin 18 (SET)
I2830.0	DI 8 X5:4	V1GL1UQ53UQ19.1-BGR	Clamp 19 (RESET)
I2830.1	DI 9 X5:2	V1GL1UQ53UQ19.1-BGS	Clamp 19 (SET)
I2830.2	DI 10 X6:4	V1GL1UQ53UQ20.1-BGR	Clamp 20 (RESET)
I2830.3	DI 11 X6:2	V1GL1UQ53UQ20.1-BGS	Clamp 20 (SET)
I2830.4	DI 12 X7:4	I2830.4	Spare
I2830.5	DI 13 X7:2	I2830.5	Spare
I2830.6	DI 14 X8:4	I2830.6	Spare
I2830.7	DI 15 X8:2	I2830.7	Spare

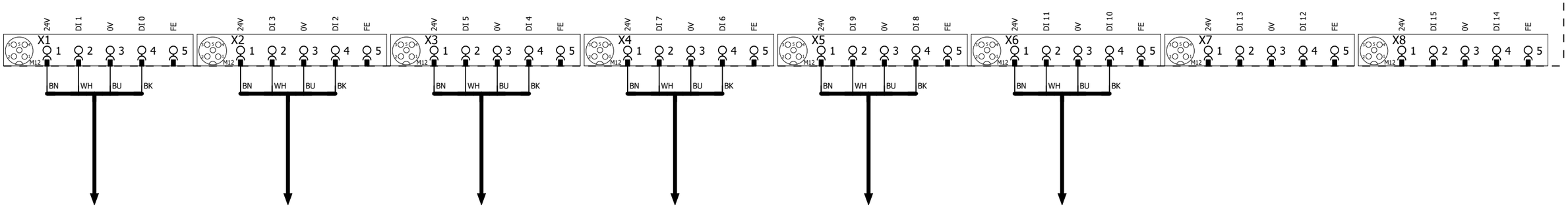

+.GL1UQ53UQ15.1-W1
=V1GL1UQ53UQ15+.GL1UQ53UQ15/1.1

+.GL1UQ53UQ16.1-W1
=V1GL1UQ53UQ16+.GL1UQ53UQ16/1.1

+.GL1UQ53UQ17.1-W1
=V1GL1UQ53UQ17+.GL1UQ53UQ17/1.1

+.GL1UQ53UQ18.1-W1
=V1GL1UQ53UQ18+.GL1UQ53UQ18/1.1

+.GL1UQ53UQ19.1-W1
=V1GL1UQ53UQ19+.GL1UQ53UQ19/1.1

+.GL1UQ53UQ20.1-W1
=V1GL1UQ53UQ20+.GL1UQ53UQ20/1.1

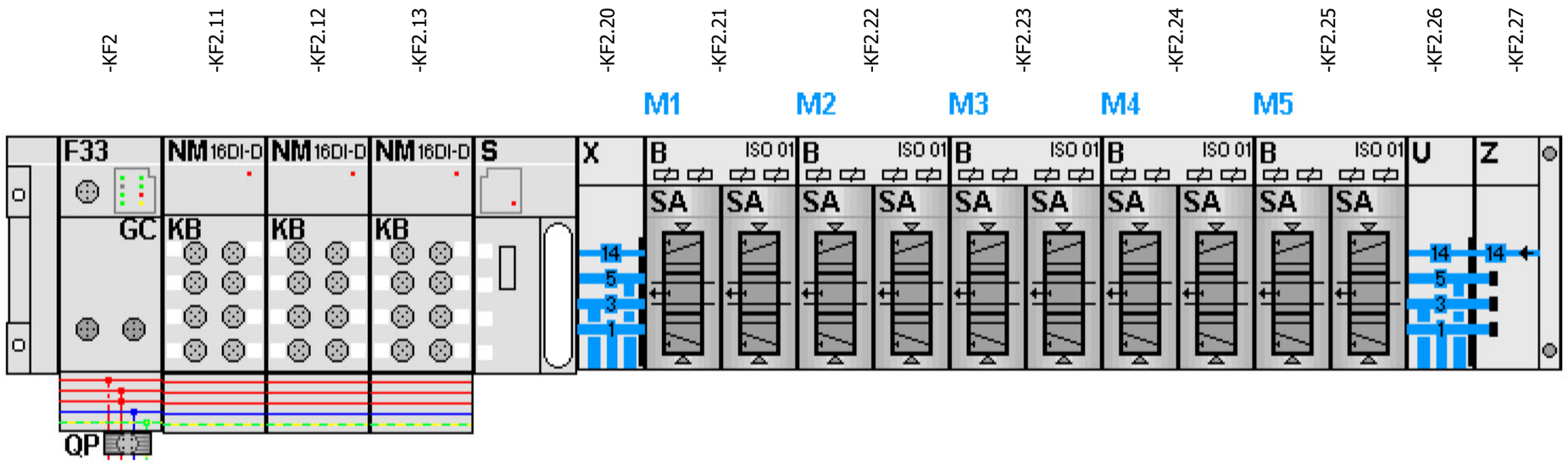

-KF2.21

=V1GL1UQ53UQ11+.GL1UQ53UQ11/1.3
=V1GL1UQ53UQ12+.GL1UQ53UQ12/1.3

FESTO

=V1GL1UQ53UQ11+.GL1UQ53UQ11/1.4	Q2825.0 DO 0 1.1	-QN11.1_Q	Clamps 11 (RST)
=V1GL1UQ53UQ11+.GL1UQ53UQ11/1.4	Q2825.1 DO 1 1.2	-QN11.2_Q	Clamps 11 (SET)
=V1GL1UQ53UQ12+.GL1UQ53UQ12/1.4	Q2825.2 DO 2 2.1	-QN12.1_Q	Clamps 12 (RST)
=V1GL1UQ53UQ12+.GL1UQ53UQ12/1.4	Q2825.3 DO 3 2.2	-QN12.2_Q	Clamps 12 (SET)

-KF2.22

=V1GL1UQ53UQ13+.GL1UQ53UQ13/1.3
=V1GL1UQ53UQ14+.GL1UQ53UQ14/1.3

FESTO

=V1GL1UQ53UQ13+.GL1UQ53UQ13/1.4	Q2825.4 DO 0 1.1	-QN13.1_Q	Clamps 13 (RST)
=V1GL1UQ53UQ13+.GL1UQ53UQ13/1.4	Q2825.5 DO 1 1.2	-QN13.2_Q	Clamps 13 (SET)
=V1GL1UQ53UQ14+.GL1UQ53UQ14/1.4	Q2825.6 DO 2 2.1	-QN14.1_Q	Clamps 14 (RST)
=V1GL1UQ53UQ14+.GL1UQ53UQ14/1.4	Q2825.7 DO 3 2.2	-QN14.2_Q	Clamps 14 (SET)

-KF2.23

=V1GL1UQ53UQ15+.GL1UQ53UQ15/1.3
=V1GL1UQ53UQ16+.GL1UQ53UQ16/1.3

FESTO

=V1GL1UQ53UQ15+.GL1UQ53UQ15/1.4	Q2826.0 DO 0 1.1	-QN15.1_Q	Clamp 15 (RST)
=V1GL1UQ53UQ15+.GL1UQ53UQ15/1.4	Q2826.1 DO 1 1.2	-QN15.2_Q	Clamp 15 (SET)
=V1GL1UQ53UQ16+.GL1UQ53UQ16/1.4	Q2826.2 DO 0 2.1	-QN16.1_Q	Clamp 16 (RST)
=V1GL1UQ53UQ16+.GL1UQ53UQ16/1.4	Q2826.3 DO 1 2.2	-QN16.2_Q	Clamp 16 (SET)

-KF2.24

=V1GL1UQ53UQ17+.GL1UQ53UQ17/1.3
=V1GL1UQ53UQ18+.GL1UQ53UQ18/1.3

FESTO

=V1GL1UQ53UQ17+.GL1UQ53UQ17/1.4	Q2826.4 DO 0 1.1	-QN17.1_Q	Clamp 17 (RST)
=V1GL1UQ53UQ17+.GL1UQ53UQ17/1.4	Q2826.5 DO 1 1.2	-QN17.2_Q	Clamp 17 (SET)
=V1GL1UQ53UQ18+.GL1UQ53UQ18/1.4	Q2826.6 DO 0 2.1	-QN18.1_Q	Shot Pin 18 (RST)
=V1GL1UQ53UQ18+.GL1UQ53UQ18/1.4	Q2826.7 DO 1 2.2	-QN18.2_Q	Shot Pin 18 (SET)

-KF2.25

=V1GL1UQ53UQ19+.GL1UQ53UQ19/1.3
=V1GL1UQ53UQ20+.GL1UQ53UQ20/1.3

FESTO

=V1GL1UQ53UQ19+.GL1UQ53UQ19/1.4	Q2827.0 DO 0 1.1	-QN19.1_Q	Clamp 19 (RST)
=V1GL1UQ53UQ19+.GL1UQ53UQ19/1.4	Q2827.1 DO 1 1.2	-QN19.2_Q	Clamp 19 (SET)
=V1GL1UQ53UQ20+.GL1UQ53UQ20/1.4	Q2827.2 DO 0 2.1	-QN20.1_Q	Clamp 20 (RST)
=V1GL1UQ53UQ20+.GL1UQ53UQ20/1.4	Q2827.3 DO 1 2.2	-QN20.2_Q	Clamp 20 (SET)

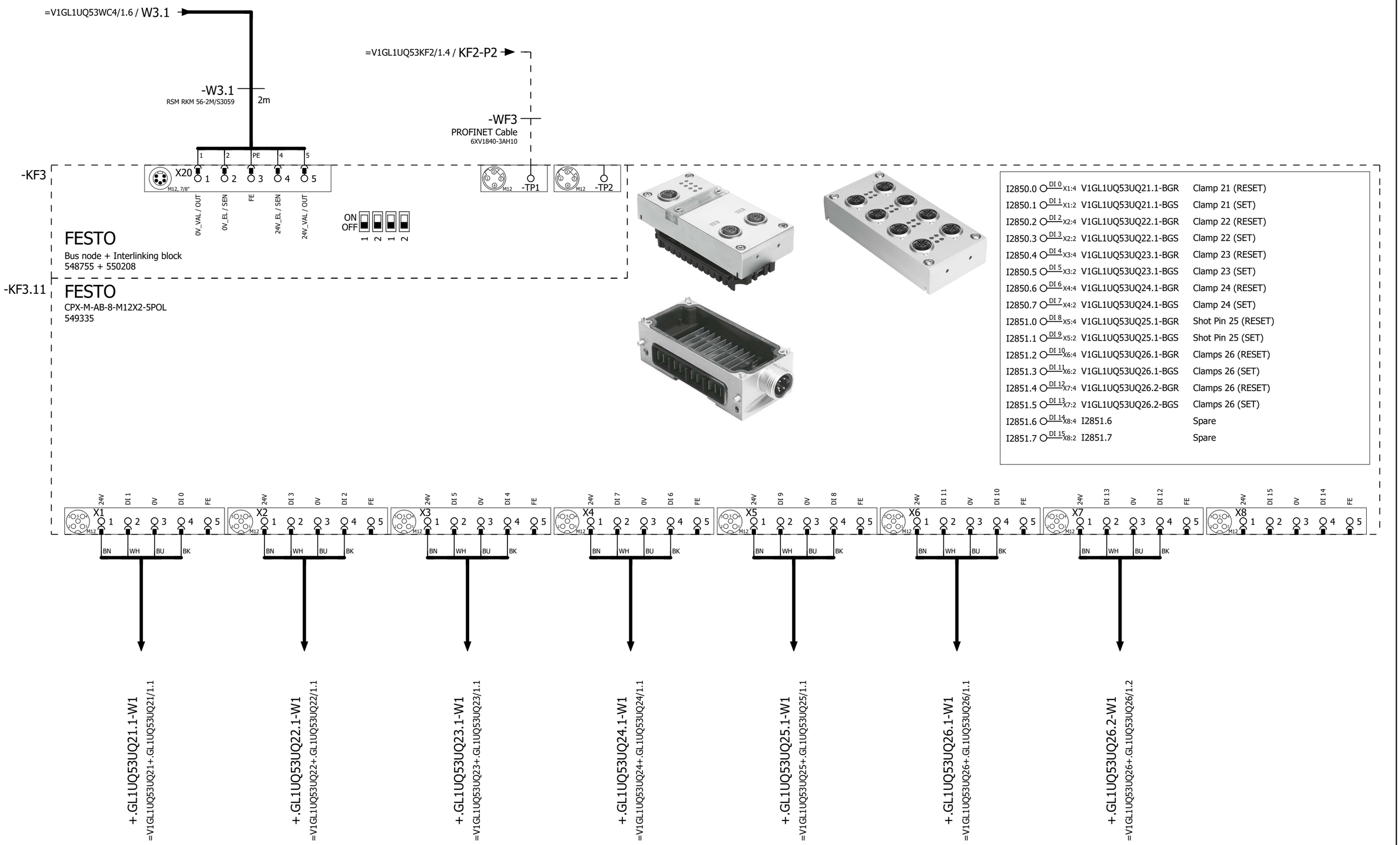

=V1GL1UQ53KF2/4

2

			Date	1/11/2023	Volvo Trucks North America	Valiant TMS	CONNECTING MOD. FOR VTSA MANIFOLD	Drawing name: =2V10&EFS-EL		= V1GL1UQ53KF3	
			Ed.	MKLEPADLO						+ V1GL1UQ53	
			Appr		P6700 Bodyside RH - Robot Cell 2V10			Document type: EFS	Project nr: 22-16150		Page 1
Modification	Date	Name	Original		Replacement of / Replaced by	Scale 1:1					1579

I2852.0	DI 0 X1:4	V1GL1UQ53-BG17	Sensor Horizontal Crash Beam
I2852.1	DI 1 X1:2	V1GL1UQ53-BG18	Sensor Bridge Horizontal Beam
I2852.2	DI 2 X2:4	V1GL1UQ53-BG19	Sensor C-Pillar Assembly
I2852.3	DI 3 X2:2	V1GL1UQ53-BG20	Sensor C-Pillar Assembly
I2852.4	DI 4 X3:4	V1GL1UQ53-BG21	Sensor Head Sub Assembly
I2852.5	DI 5 X3:2	V1GL1UQ53-BG22	Sensor Extruded Seal Sleeper
I2852.6	DI 6 X4:4	V1GL1UQ53-BG23	Sensor Rocker Short Sleeper
I2852.7	DI 7 X4:2	V1GL1UQ53-BG24	Sensor Reinforcement
I2853.0	DI 8 X5:4	V1GL1UQ53-BG25	Sensor Reinforcement
I2853.1	DI 9 X5:2	I2853.1	Spare
I2853.2	DI 10 X6:4	I2853.2	Spare
I2853.3	DI 11 X6:2	I2853.3	Spare
I2853.4	DI 12 X7:4	I2853.4	Spare
I2853.5	DI 13 X7:2	I2853.5	Spare
I2853.6	DI 14 X8:4	I2853.6	Spare
I2853.7	DI 15 X8:2	I2853.7	Spare

-KF3.12

FESTO
CPX-M-AB-8-M12X2-5POL
549335

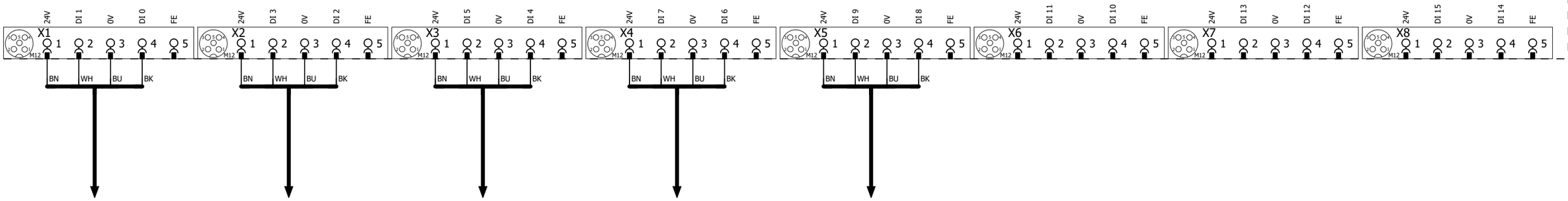

-XG17/18
=V1GL1UQ53BG0/3.6

-XG19/20
=V1GL1UQ53BG0/4.1

-XG21/22
=V1GL1UQ53BG0/4.4

-XG23/24
=V1GL1UQ53BG0/4.6

-BG25
=V1GL1UQ53BG0/5.1

1 3

			Date	1/11/2023	Volvo Trucks North America	Valiant TMS	I/O MOD. DI16 (8 x M12) FOR VTSA-F	Drawing name: =2V10&EFS-EL		= V1GL1UQ53KF3	
			Ed.	MKLEPADLO						+ V1GL1UQ53	
			Appr		P6700 Bodyside RH - Robot Cell 2V10			Document type: EFS	Project nr: 22-16150		Page 2
Modification	Date	Name	Original		Replacement of	Replaced by	Scale 1:1				1579

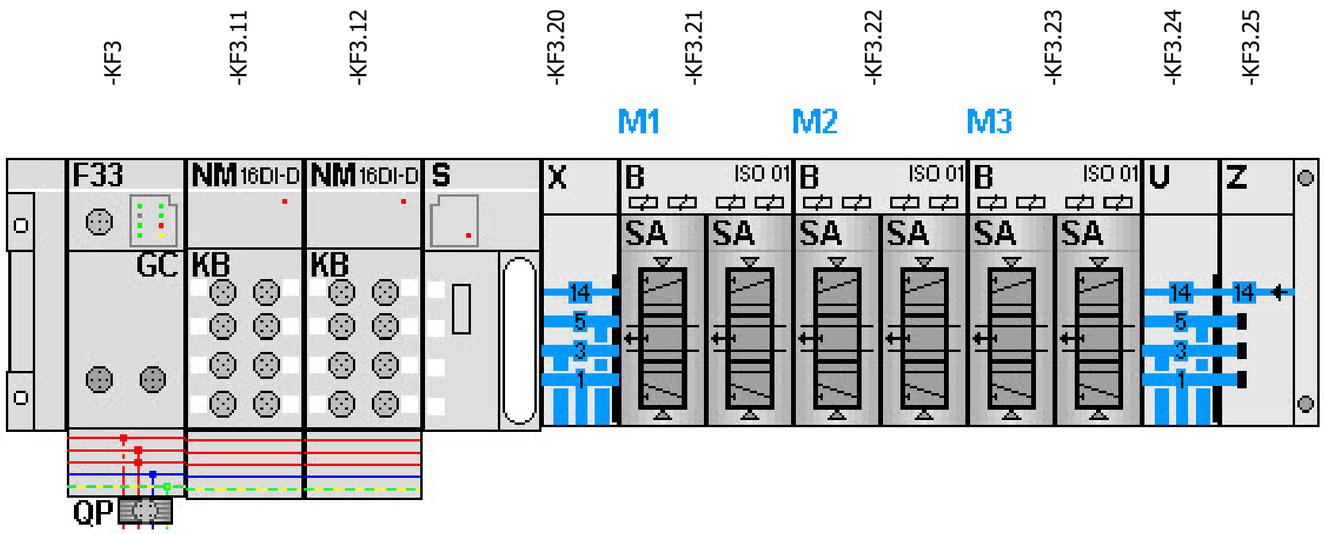

-KF3.21
=V1GL1UQ53UQ21+.GL1UQ53UQ21/1.3
=V1GL1UQ53UQ22+.GL1UQ53UQ22/1.3

FESTO

=V1GL1UQ53UQ21+.GL1UQ53UQ21/1.4	Q2850.0 DO 0 1.1	-QN21.1_Q	Clamp 21 (RST)
=V1GL1UQ53UQ21+.GL1UQ53UQ21/1.4	Q2850.1 DO 1 1.2	-QN21.2_Q	Clamp 21 (SET)
=V1GL1UQ53UQ22+.GL1UQ53UQ22/1.4	Q2850.2 DO 2 2.1	-QN22.1_Q	Clamp 22 (RST)
=V1GL1UQ53UQ22+.GL1UQ53UQ22/1.4	Q2850.3 DO 3 2.2	-QN22.2_Q	Clamp 22 (SET)

-KF3.22
=V1GL1UQ53UQ23+.GL1UQ53UQ23/1.3
=V1GL1UQ53UQ24+.GL1UQ53UQ24/1.3

FESTO

=V1GL1UQ53UQ23+.GL1UQ53UQ23/1.4	Q2850.4 DO 0 1.1	-QN23.1_Q	Clamp 23 (RST)
=V1GL1UQ53UQ23+.GL1UQ53UQ23/1.4	Q2850.5 DO 1 1.2	-QN23.2_Q	Clamp 23 (SET)
=V1GL1UQ53UQ24+.GL1UQ53UQ24/1.4	Q2850.6 DO 2 2.1	-QN24.1_Q	Clamp 24 (RST)
=V1GL1UQ53UQ24+.GL1UQ53UQ24/1.4	Q2850.7 DO 3 2.2	-QN24.2_Q	Clamp 24 (SET)

-KF3.23
=V1GL1UQ53UQ25+.GL1UQ53UQ25/1.3
=V1GL1UQ53UQ26+.GL1UQ53UQ26/1.3

FESTO

=V1GL1UQ53UQ25+.GL1UQ53UQ25/1.4	Q2851.0 DO 0 1.1	-QN25.1_Q	Shot Pin 25 (RST)
=V1GL1UQ53UQ25+.GL1UQ53UQ25/1.4	Q2851.1 DO 1 1.2	-QN25.2_Q	Shot Pin 25 (SET)
=V1GL1UQ53UQ26+.GL1UQ53UQ26/1.4	Q2851.2 DO 2 2.1	-QN26.1_Q	Clamps 26 (RST)
=V1GL1UQ53UQ26+.GL1UQ53UQ26/1.4	Q2851.3 DO 3 2.2	-QN26.2_Q	Clamps 26 (SET)

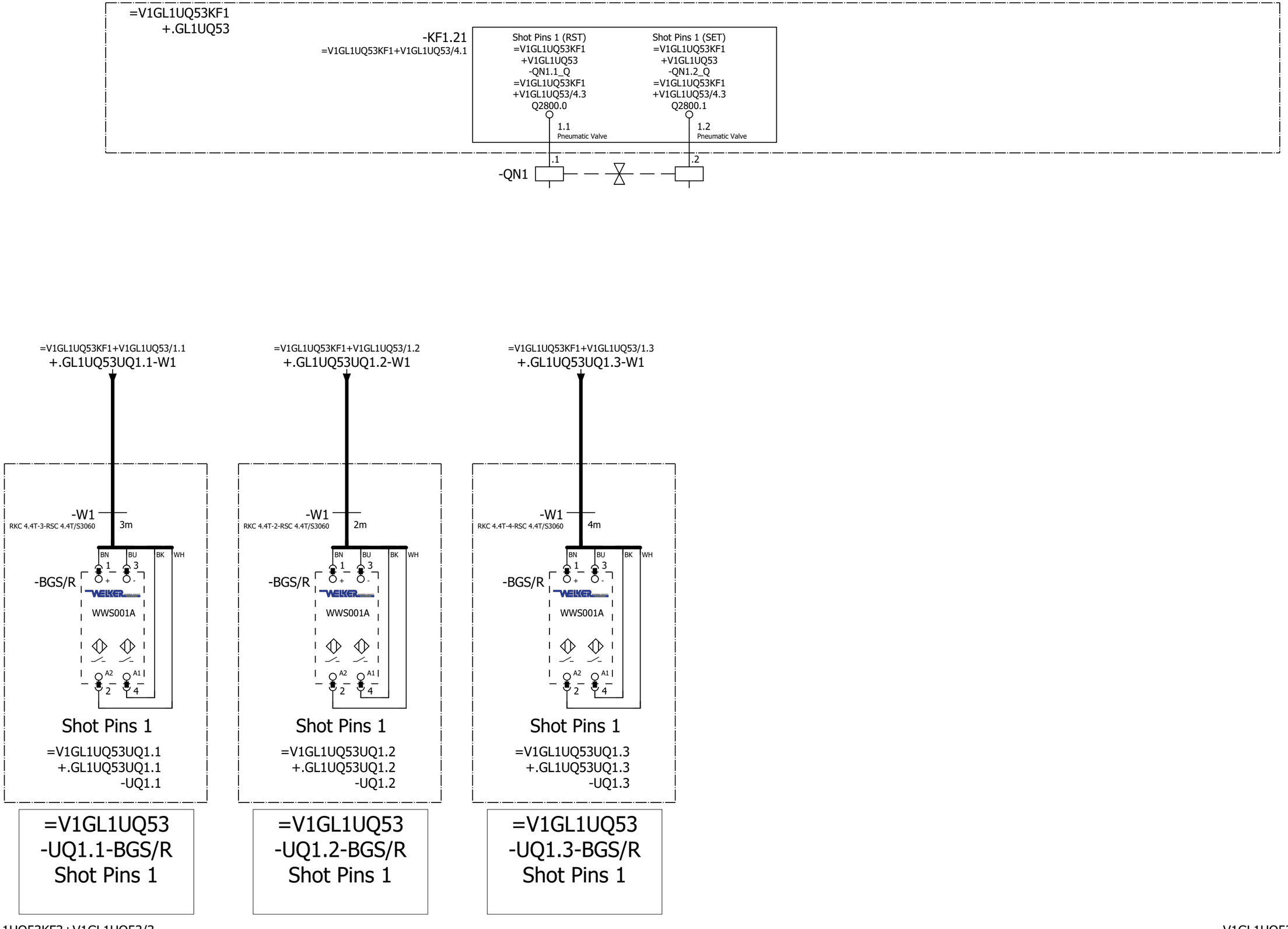

=V1GL1UQ53KF3+V1GL1UQ53/3

=V1GL1UQ53UQ2+.GL1UQ53UQ2/1

			Date	1/11/2023	Volvo Trucks North America		Valiant TMS	FESTO DQ CONNECTION QN1	Drawing name: =2V10&EFS-EL	= V1GL1UQ53UQ1	
			Ed.	MKLEPADLO						+ V1GL1UQ53UQ1	
			Appr		P6700 Bodyside RH - Robot Cell 2V10				Document type: EFS	Project nr: 22-16150	Page 1
Modification	Date	Name	Original		Replacement of	Replaced by	Scale 1:1				1579

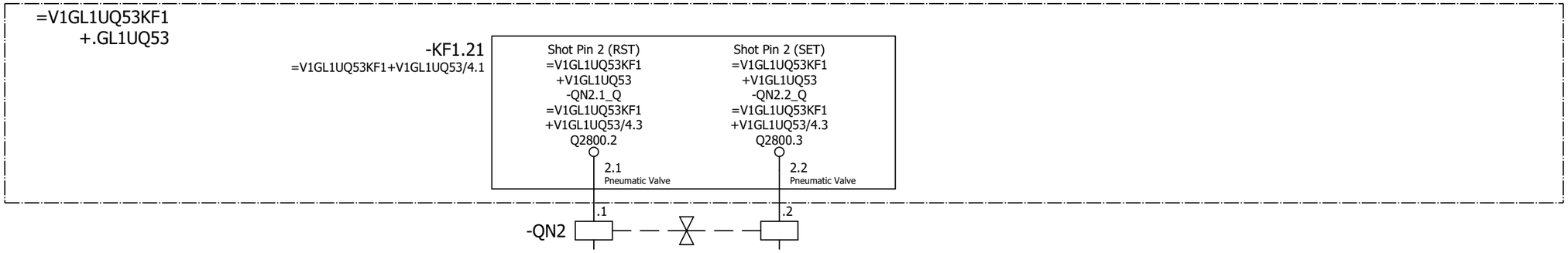

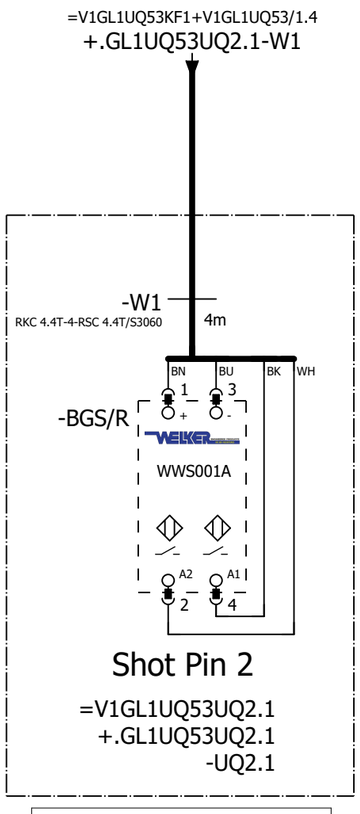

=V1GL1UQ53
-UQ2.1-BGS/R
Shot Pin 2

=V1GL1UQ53UQ1+.GL1UQ53UQ1/1

=V1GL1UQ53UQ3+.GL1UQ53UQ3/1

			Date	1/11/2023	Volvo Trucks North America		Valiant TMS	FESTO DQ CONNECTION QN2	Drawing name: =2V10&EFS-EL	= V1GL1UQ53UQ2	
			Ed.	MKLEPADLO						+ V1GL1UQ53UQ2	
			Appr		P6700 Bodyside RH - Robot Cell 2V10				Document type: EFS	Project nr: 22-16150	Page 1
Modification	Date	Name	Original		Replacement of	Replaced by	Scale 1:1				1579

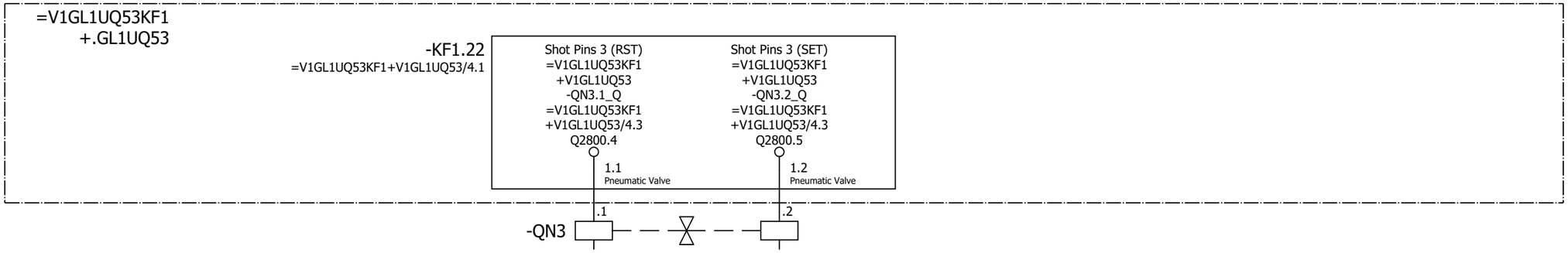

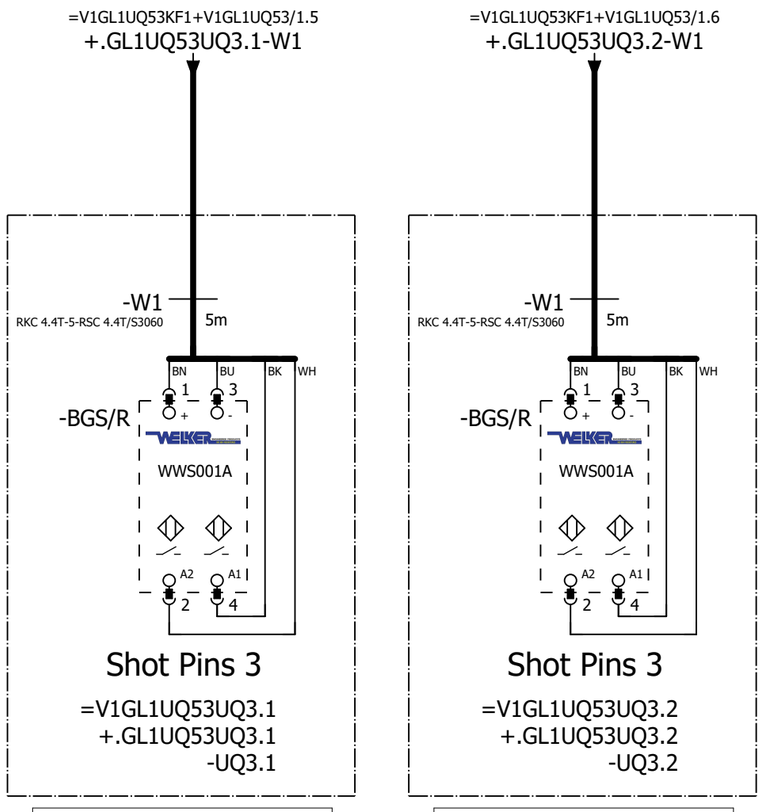

=V1GL1UQ53
-UQ3.1-BGS/R
Shot Pins 3

=V1GL1UQ53
-UQ3.2-BGS/R
Shot Pins 3

=V1GL1UQ53UQ2+.GL1UQ53UQ2/1

=V1GL1UQ53UQ4+.GL1UQ53UQ4/1

			Date	1/11/2023	Volvo Trucks North America	Valiant TMS	FESTO DQ CONNECTION QN3	Drawing name: =2V10&EFS-EL	= V1GL1UQ53UQ3		
			Ed.	MKLEPADLO					+ V1GL1UQ53UQ3		
			Appr		P6700 Bodyside RH - Robot Cell 2V10			Document type: EFS	Project nr: 22-16150	Page	1
Modification	Date	Name	Original		Replacement of / Replaced by	Scale 1:1					1579

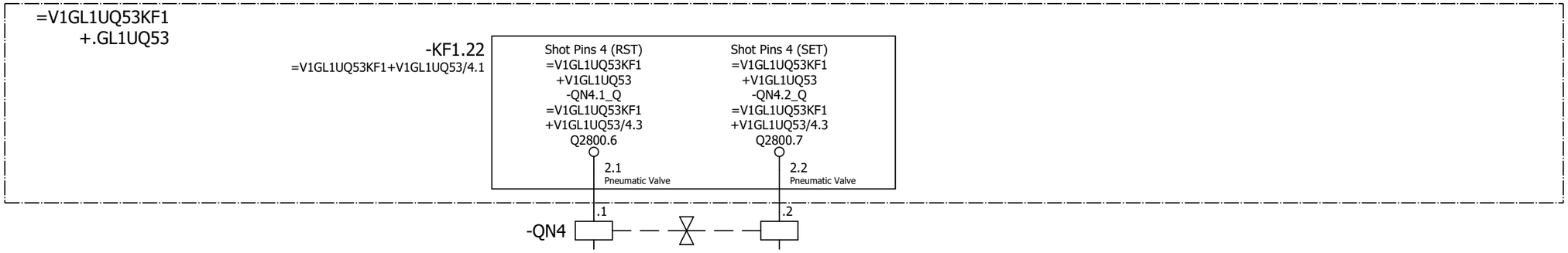

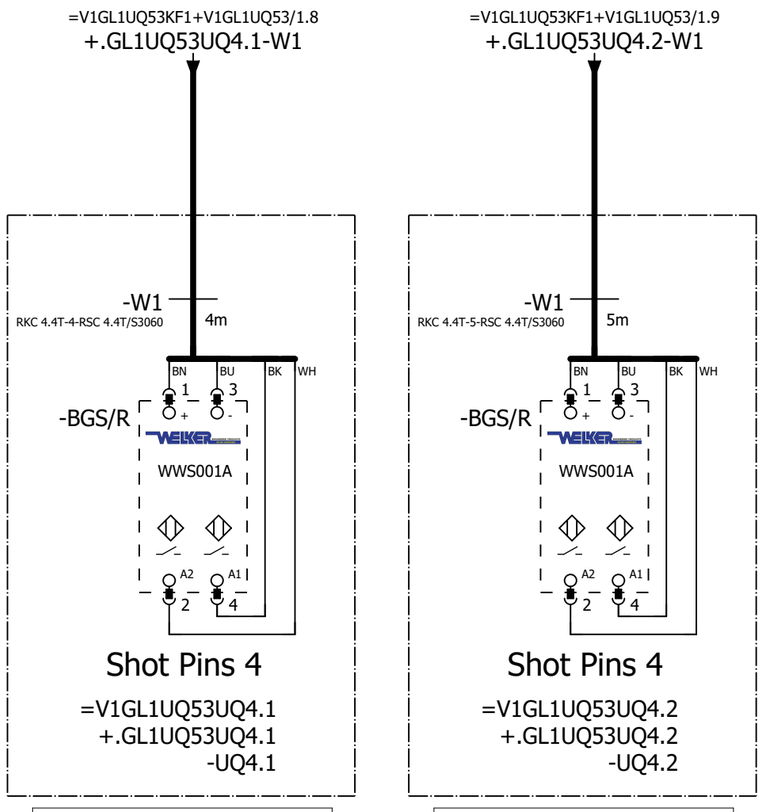

=V1GL1UQ53
-UQ4.1-BGS/R
Shot Pins 4

=V1GL1UQ53
-UQ4.2-BGS/R
Shot Pins 4

=V1GL1UQ53UQ3+.GL1UQ53UQ3/1

=V1GL1UQ53UQ5+.GL1UQ53UQ5/1

			Date	1/11/2023	Volvo Trucks North America		Valiant TMS	FESTO DQ CONNECTION QN4	Drawing name: =2V10&EFS-EL	= V1GL1UQ53UQ4	
			Ed.	MKLEPADLO						+ V1GL1UQ53UQ4	
			Appr		P6700 Bodyside RH - Robot Cell 2V10				Document type: EFS	Project nr: 22-16150	Page 1
Modification	Date	Name	Original		Replacement of	Replaced by	Scale 1:1				1579

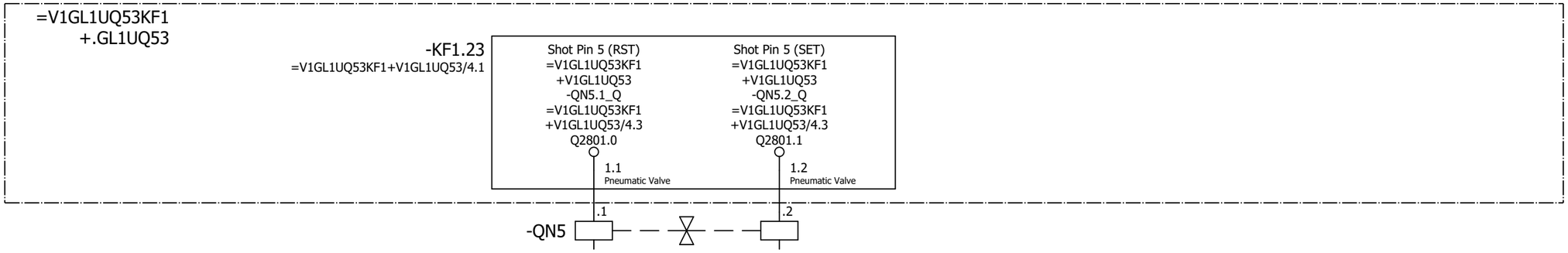

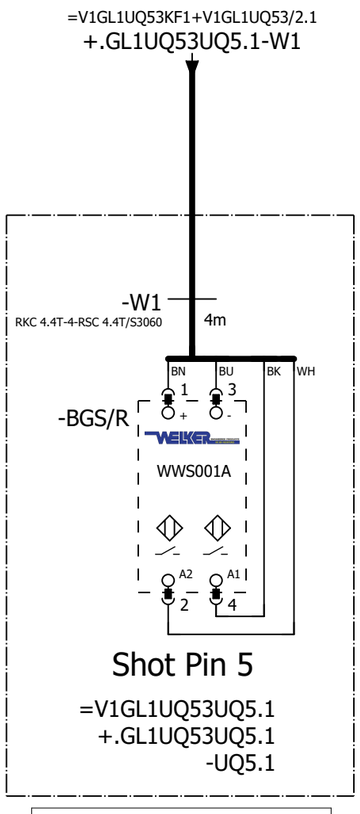

=V1GL1UQ53 -UQ5.1-BGS/R Shot Pin 5

=V1GL1UQ53UQ4+.GL1UQ53UQ4/1

=V1GL1UQ53UQ6+.GL1UQ53UQ6/1

			Date	1/11/2023	Volvo Trucks North America		Valiant TMS	FESTO DQ CONNECTION QN5	Drawing name: =2V10&EFS-EL	= V1GL1UQ53UQ5	
			Ed.	MKLEPADLO						+ V1GL1UQ53UQ5	
			Appr		P6700 Bodyside RH - Robot Cell 2V10				Document type: EFS	Project nr: 22-16150	Page 1
Modification	Date	Name	Original		Replacement of	Replaced by	Scale 1:1				1579

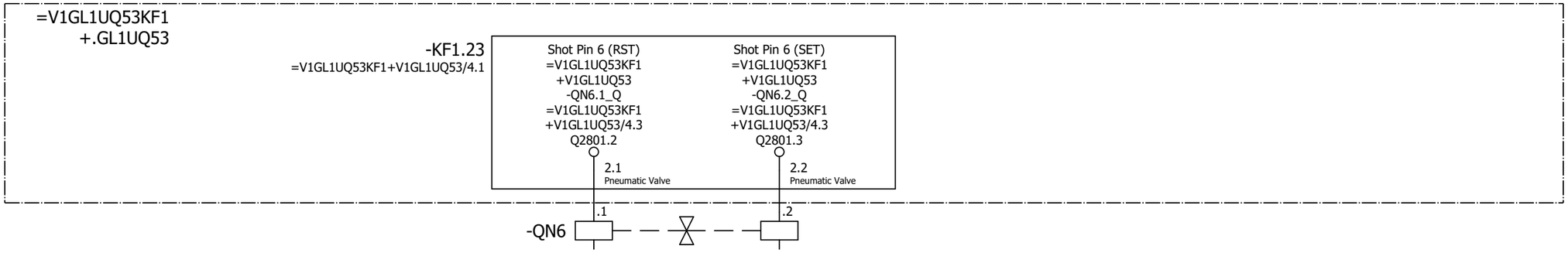

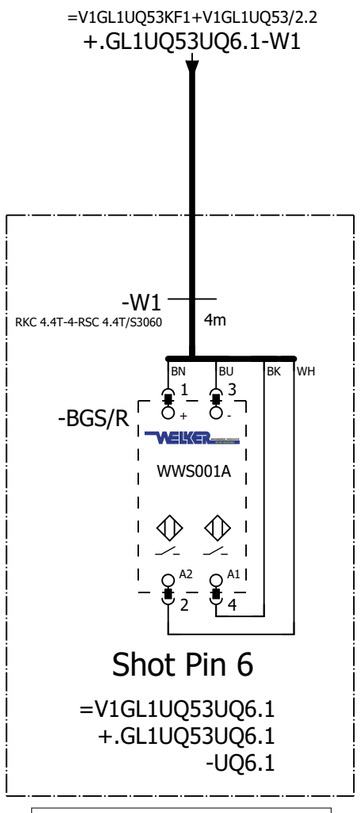

=V1GL1UQ53
-UQ6.1-BGS/R
Shot Pin 6

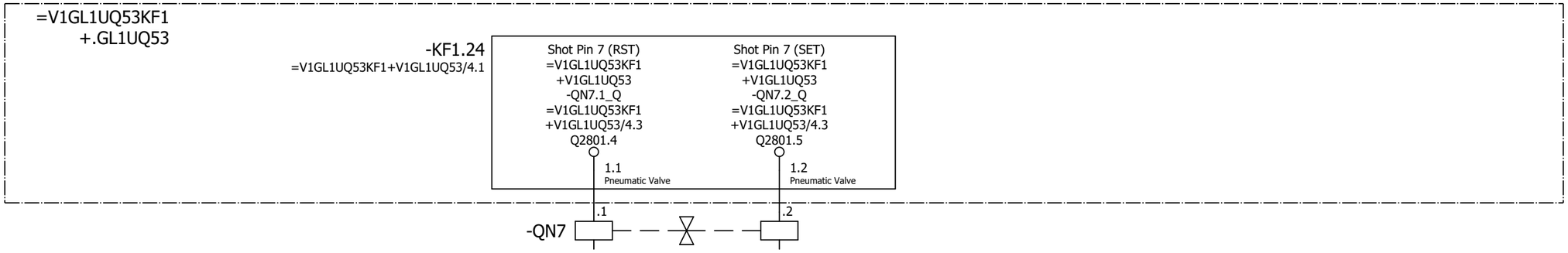

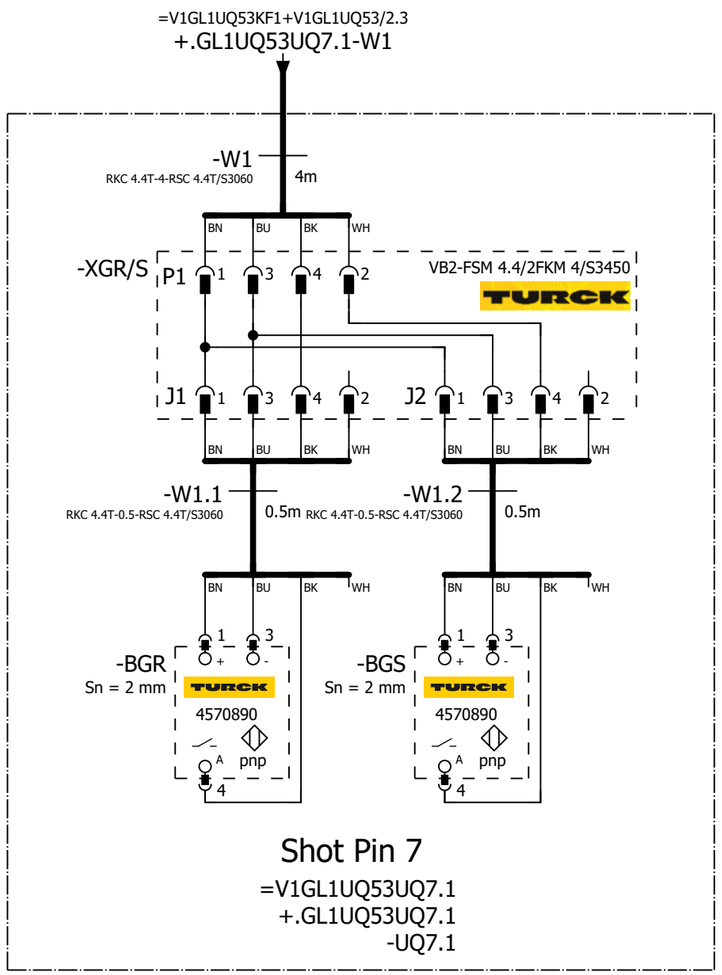

=V1GL1UQ53
-UQ7.1-BGR
Shot Pin 7

=V1GL1UQ53
-UQ7.1-BGS
Shot Pin 7

=V1GL1UQ53UQ6+.GL1UQ53UQ6/1

=V1GL1UQ53UQ8+.GL1UQ53UQ8/1

			Date	1/11/2023	Volvo Trucks North America		Valiant TMS	FESTO DQ CONNECTION QN7	Drawing name: =2V10&EFS-EL	= V1GL1UQ53UQ7	
			Ed.	MKLEPADLO						+ V1GL1UQ53UQ7	
			Appr		P6700 Bodyside RH - Robot Cell 2V10				Document type: EFS	Project nr: 22-16150	Page 1
Modification	Date	Name	Original		Replacement of	Replaced by	Scale 1:1				1579

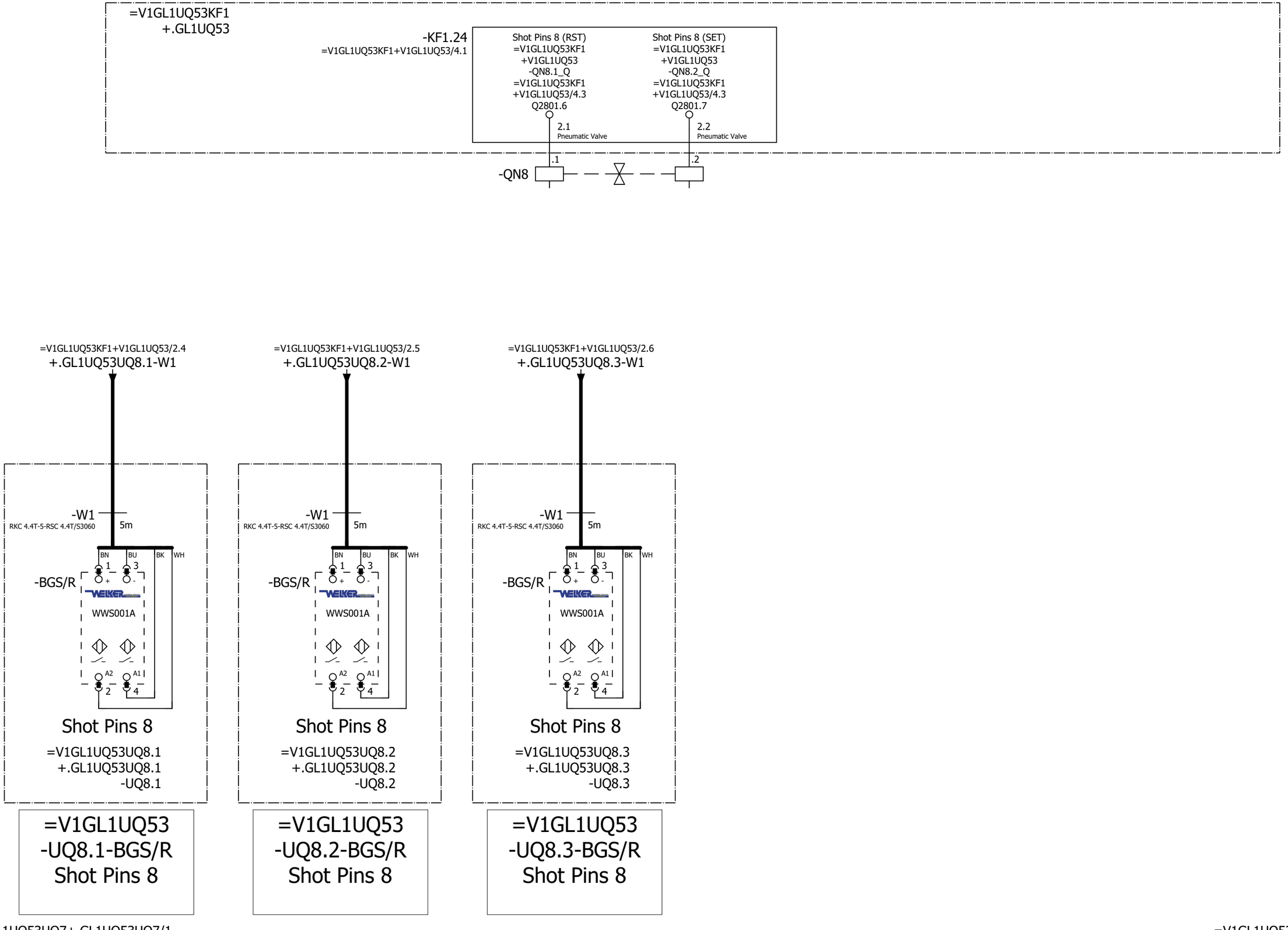

=V1GL1UQ53UQ7+.GL1UQ53UQ7/1

=V1GL1UQ53UQ9+.GL1UQ53UQ9/1

			Date	1/11/2023	Volvo Trucks North America	Valiant TMS	FESTO DQ CONNECTION QN8	Drawing name: =2V10&EFS-EL	= V1GL1UQ53UQ8		
			Ed.	MKLEPADLO					+ V1GL1UQ53UQ8		
			Appr		P6700 Bodyside RH - Robot Cell 2V10			Document type: EFS	Project nr: 22-16150	Page	1
Modification	Date	Name	Original		Replacement of / Replaced by	Scale 1:1					1579

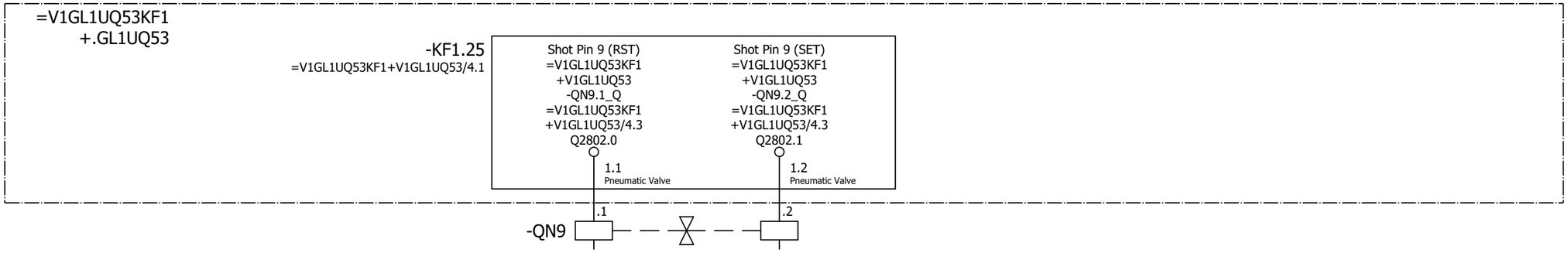

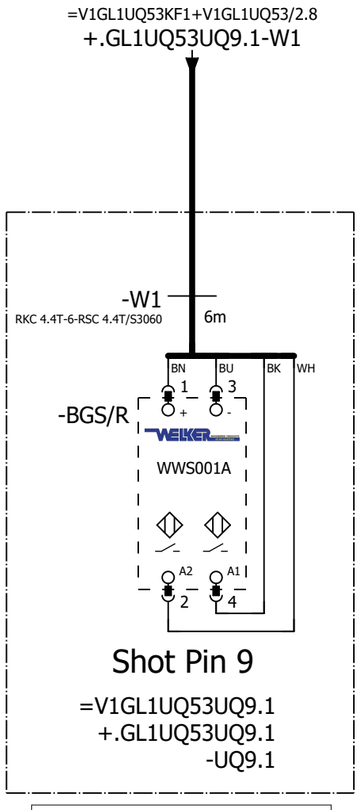

=V1GL1UQ53
-UQ9.1-BGS/R
Shot Pin 9

=V1GL1UQ53UQ8+.GL1UQ53UQ8/1

=V1GL1UQ53UQ10+.GL1UQ53UQ10/1

			Date	1/11/2023	Volvo Trucks North America	Valiant TMS	FESTO DQ CONNECTION QN9	Drawing name: =2V10&EFS-EL		= V1GL1UQ53UQ9	
			Ed.	MKLEPADLO						+ V1GL1UQ53UQ9	
			Appr		P6700 Bodyside RH - Robot Cell 2V10			Document type: EFS	Project nr: 22-16150		Page 1
Modification	Date	Name	Original		Replacement of / Replaced by	Scale 1:1					1579

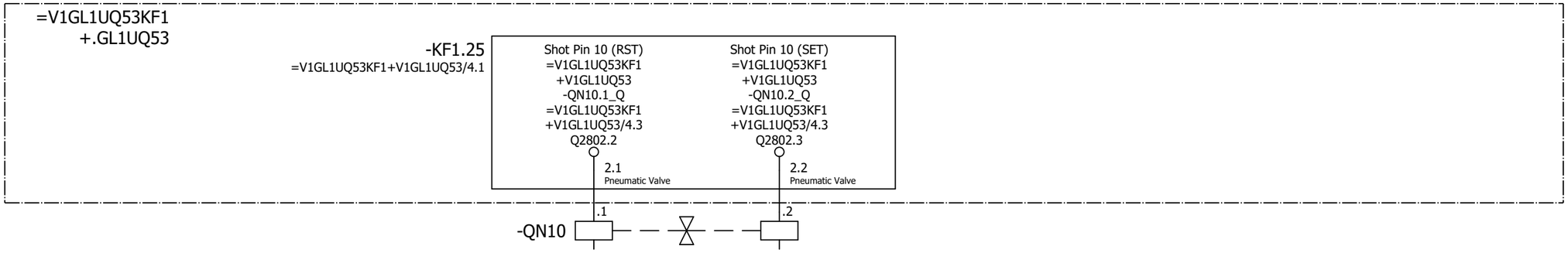

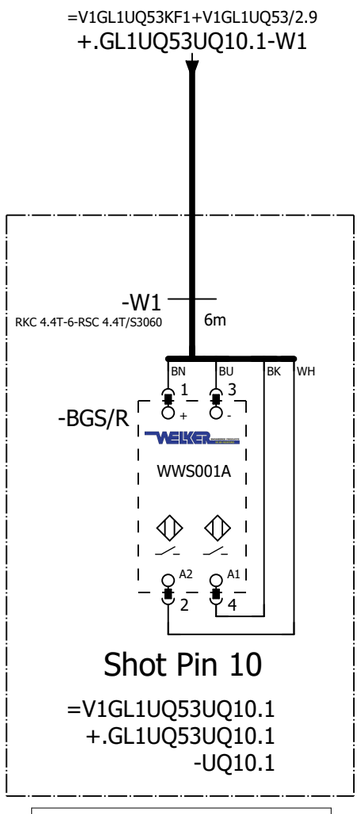

=V1GL1UQ53
-UQ10.1-BGS/R
Shot Pin 10

=V1GL1UQ53UQ9+.GL1UQ53UQ9/1

=V1GL1UQ53UQ11+.GL1UQ53UQ11/1

			Date	1/11/2023	Volvo Trucks North America	Valiant TMS	FESTO DQ CONNECTION QN10	Drawing name: =2V10&EFS-EL		= V1GL1UQ53UQ10	
			Ed.	MKLEPADLO						+ V1GL1UQ53UQ10	
			Appr		P6700 Bodyside RH - Robot Cell 2V10			Document type: EFS	Project nr: 22-16150		Page 1
Modification	Date	Name	Original		Replacement of / Replaced by	Scale 1:1					1579

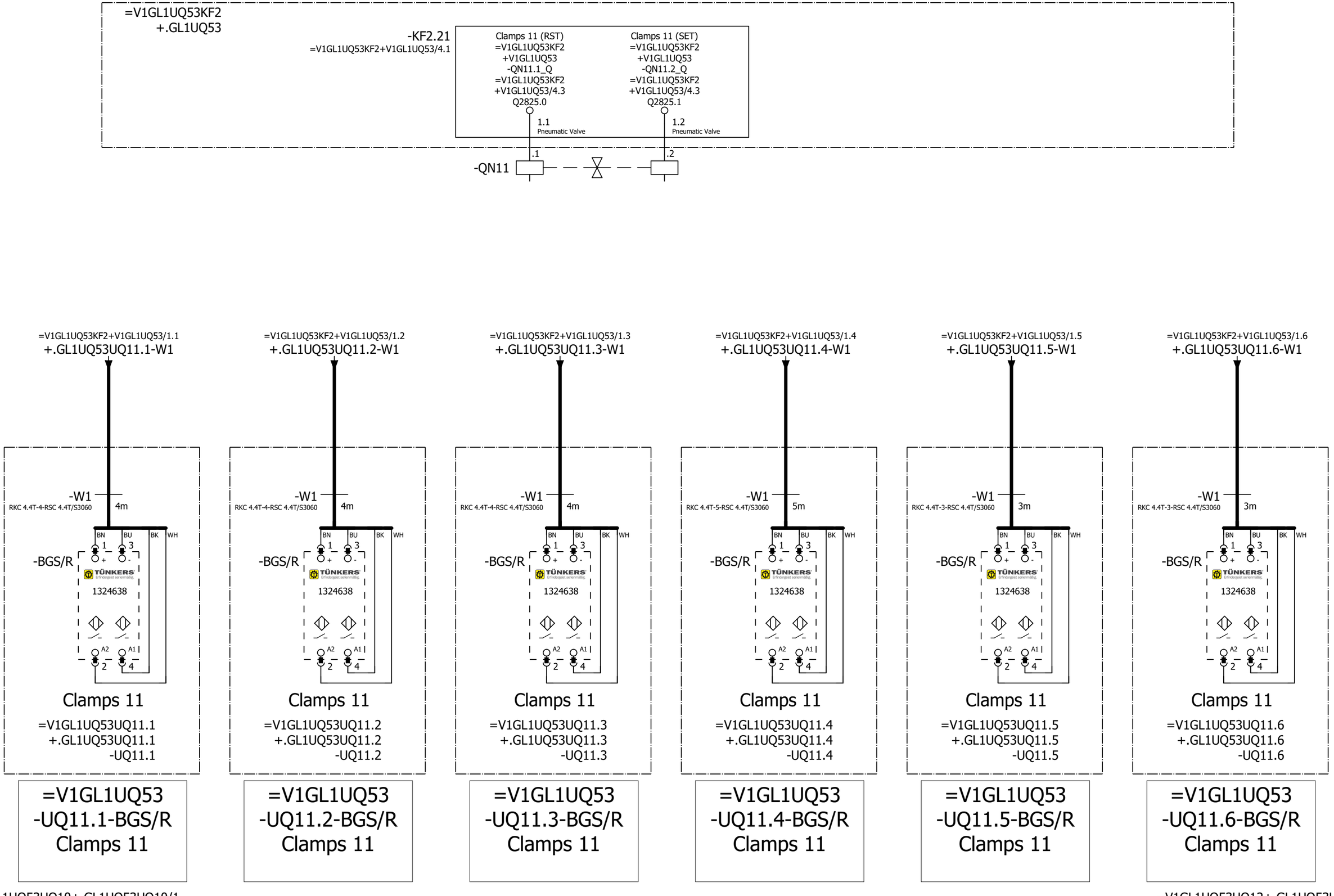

			Date	1/11/2023	Volvo Trucks North America		Valiant TMS	FESTO DQ CONNECTION QN11	Drawing name: =2V10&EFS-EL	= V1GL1UQ53UQ11	
			Ed.	MKLEPADLO						+ V1GL1UQ53UQ11	
			Appr		P6700 Bodyside RH - Robot Cell 2V10				Document type: EFS	Project nr: 22-16150	Page 1
Modification	Date	Name	Original		Replacement of	Replaced by	Scale 1:1				1579

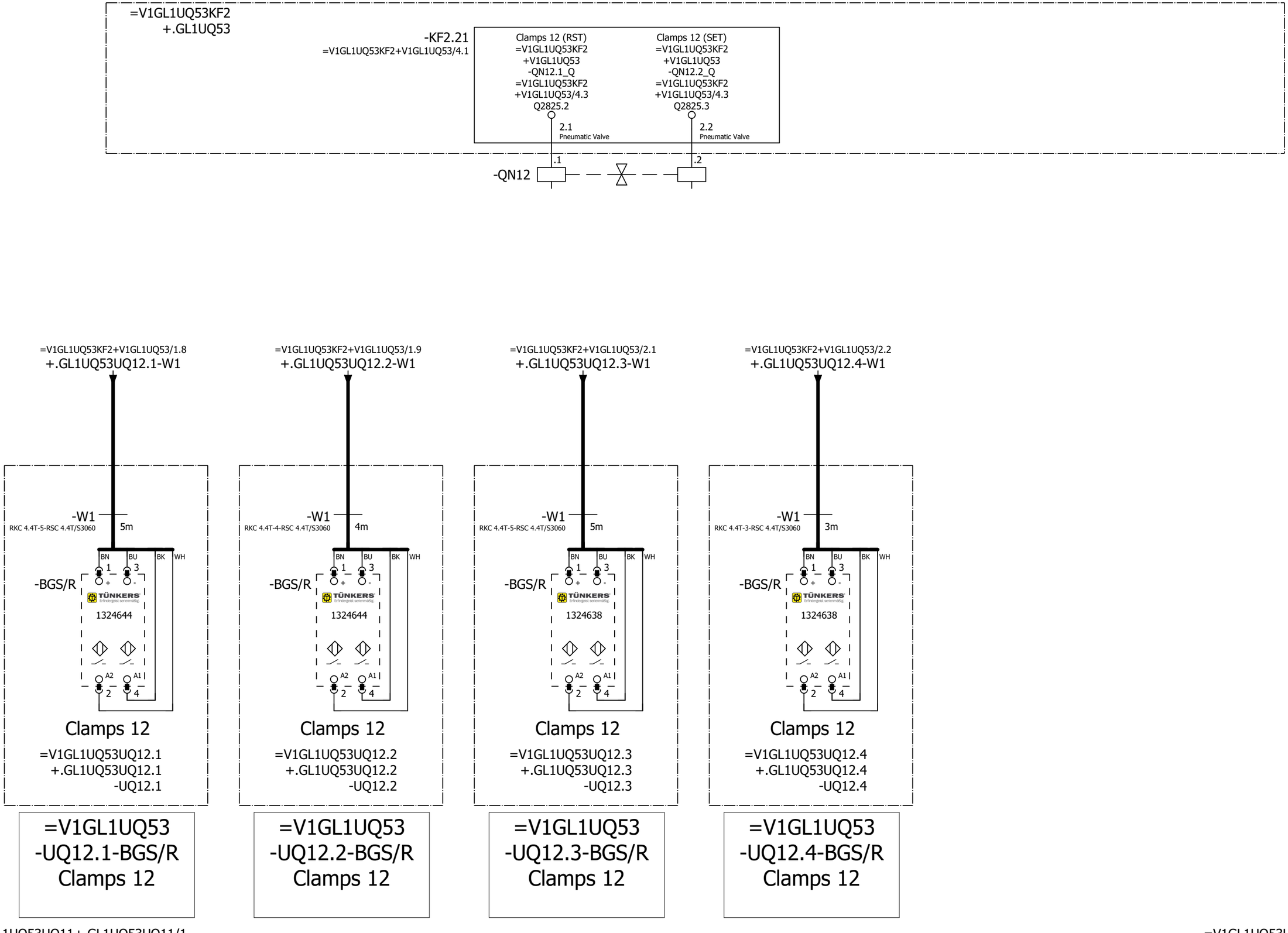

=V1GL1UQ53UQ11+.GL1UQ53UQ11/1

=V1GL1UQ53UQ13+.GL1UQ53UQ13/1

			Date	1/17/2023	Volvo Trucks North America		Valiant TMS	FESTO DQ CONNECTION QN12	Drawing name: =2V10&EFS-EL	= V1GL1UQ53UQ12	
			Ed.	MKLEPADLO						+ V1GL1UQ53UQ12	
			Appr		P6700 Bodyside RH - Robot Cell 2V10				Document type: EFS	Project nr: 22-16150	Page 1
Modification	Date	Name	Original		Replacement of	Replaced by	Scale 1:1				1579

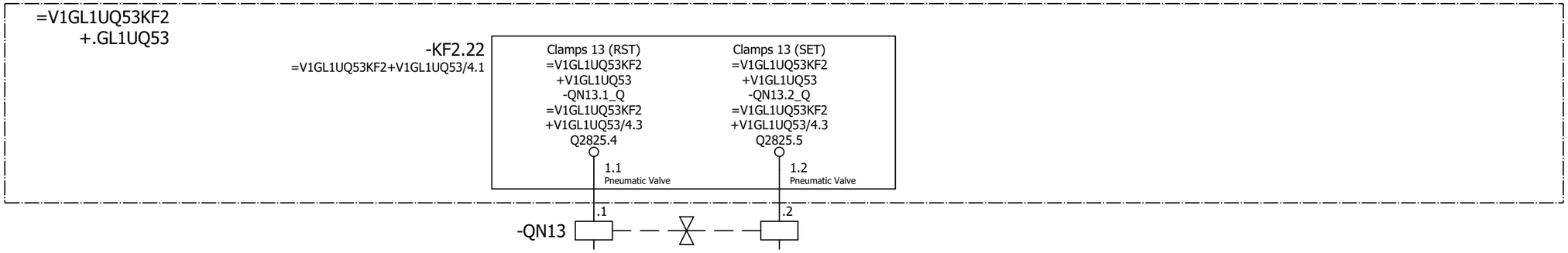

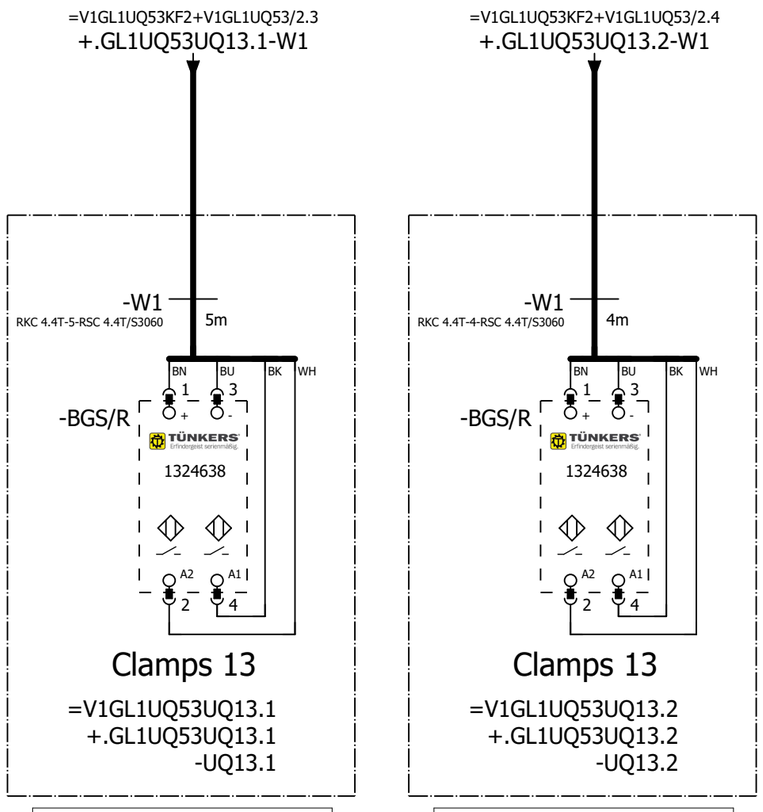

=V1GL1UQ53
-UQ13.1-BGS/R
Clamps 13

=V1GL1UQ53
-UQ13.2-BGS/R
Clamps 13

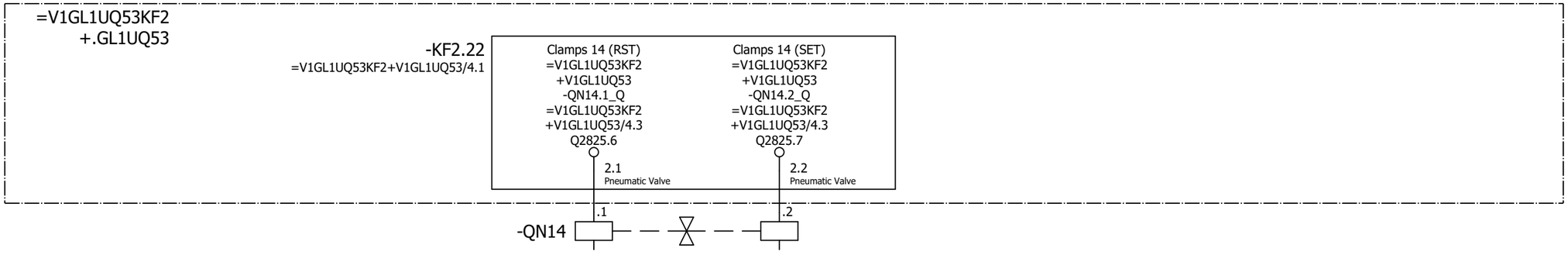

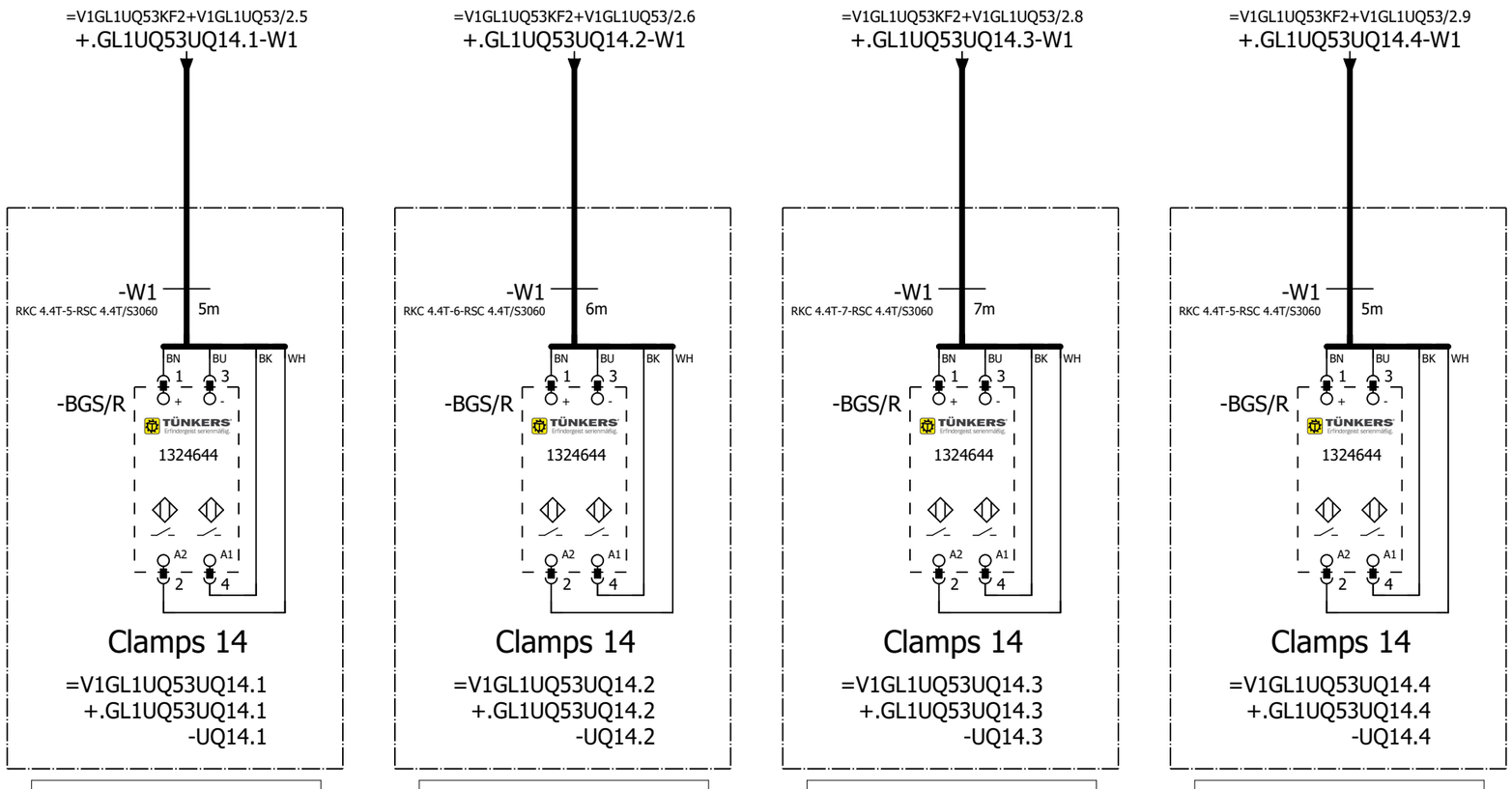

=V1GL1UQ53UQ13+.GL1UQ53UQ13/1

=V1GL1UQ53UQ15+.GL1UQ53UQ15/1

			Date	1/17/2023	Volvo Trucks North America	Valiant TMS	FESTO DQ CONNECTION QN14	Drawing name: =2V10&EFS-EL	= V1GL1UQ53UQ14		
			Ed.	MKLEPADLO					+ V1GL1UQ53UQ14		
			Appr		P6700 Bodyside RH - Robot Cell 2V10			Document type: EFS	Project nr: 22-16150	Page	1
Modification	Date	Name	Original		Replacement of / Replaced by	Scale 1:1					1579

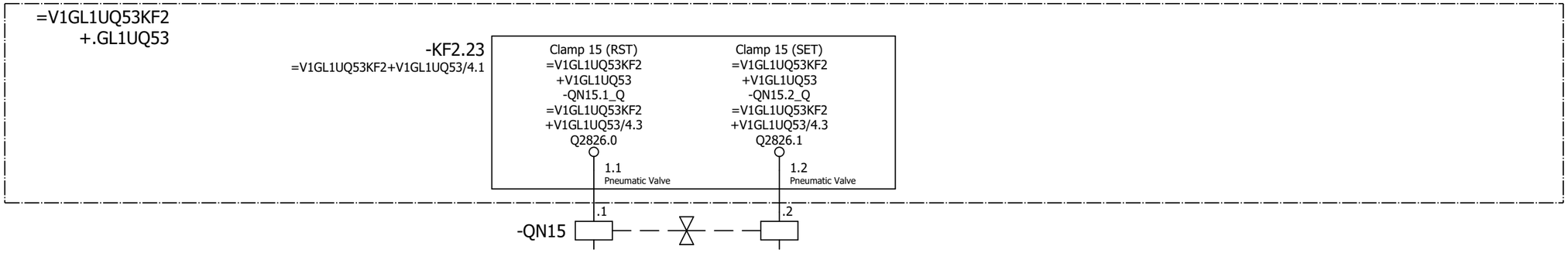

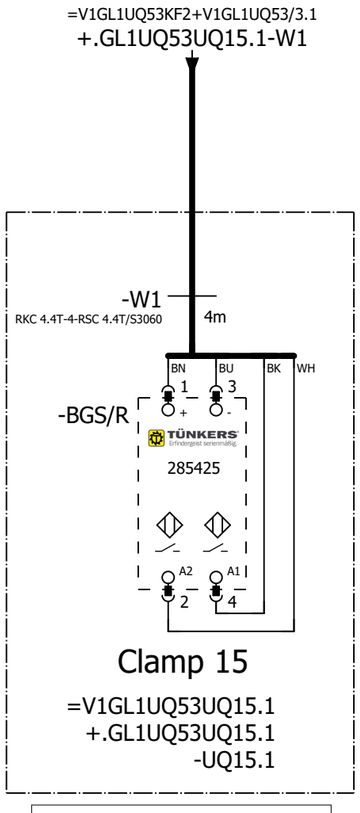

=V1GL1UQ53
-UQ15.1-BGS/R
Clamp 15

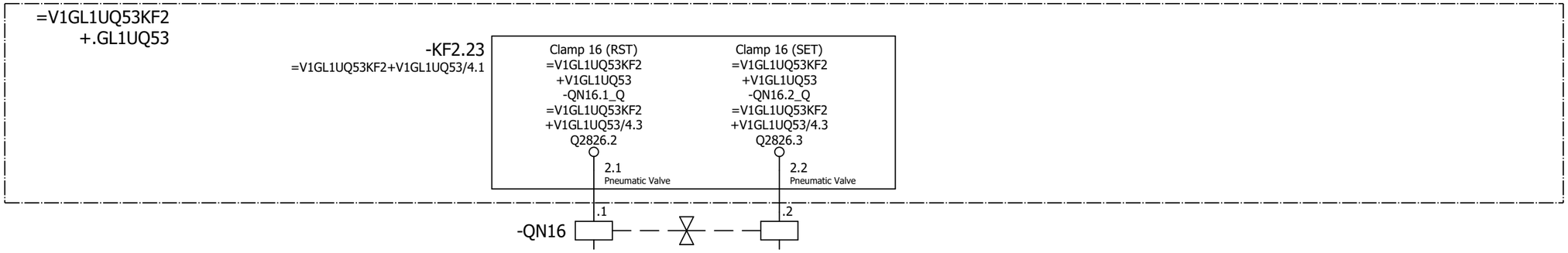

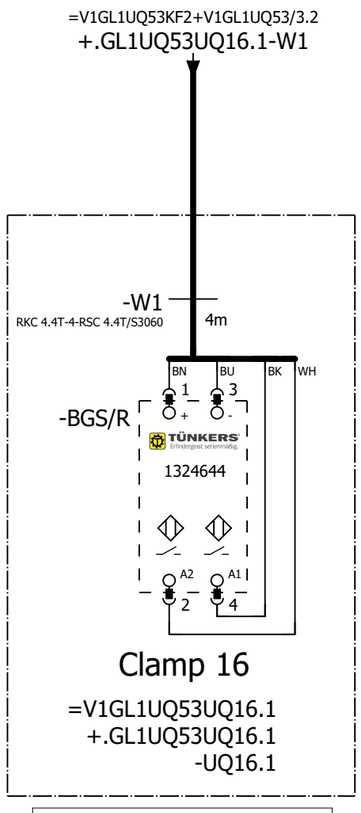

=V1GL1UQ53
-UQ16.1-BGS/R
Clamp 16

=V1GL1UQ53UQ15+.GL1UQ53UQ15/1

=V1GL1UQ53UQ17+.GL1UQ53UQ17/1

			Date	1/17/2023	Volvo Trucks North America	Valiant TMS	FESTO DQ CONNECTION QN16	Drawing name: =2V10&EFS-EL	= V1GL1UQ53UQ16		
			Ed.	MKLEPADLO					+ V1GL1UQ53UQ16		
			Appr		P6700 Bodyside RH - Robot Cell 2V10			Document type: EFS	Project nr: 22-16150	Page	1
Modification	Date	Name	Original		Replacement of / Replaced by	Scale 1:1					1579

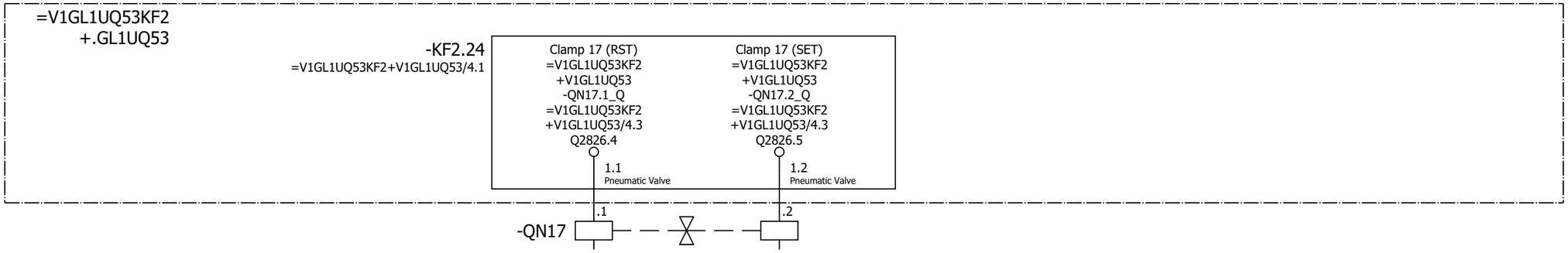

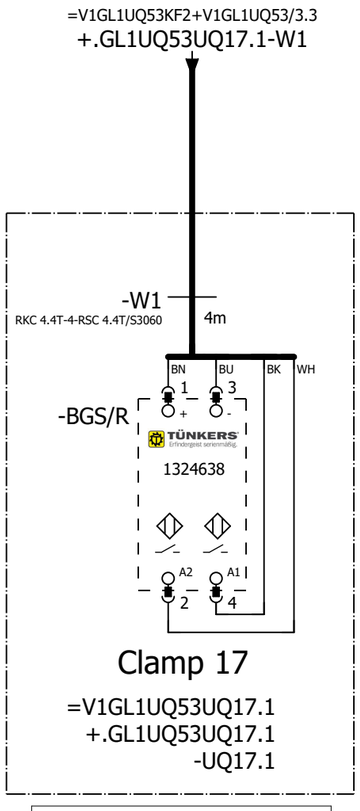

=V1GL1UQ53
-UQ17.1-BGS/R
Clamp 17

=V1GL1UQ53UQ16+.GL1UQ53UQ16/1

=V1GL1UQ53UQ18+.GL1UQ53UQ18/1

			Date	1/17/2023	Volvo Trucks North America		Valiant TMS	FESTO DQ CONNECTION QN17	Drawing name: =2V10&EFS-EL	= V1GL1UQ53UQ17	
			Ed.	MKLEPADLO						+ V1GL1UQ53UQ17	
			Appr		P6700 Bodyside RH - Robot Cell 2V10				Document type: EFS	Project nr: 22-16150	Page 1
Modification	Date	Name	Original		Replacement of	Replaced by	Scale 1:1				1579

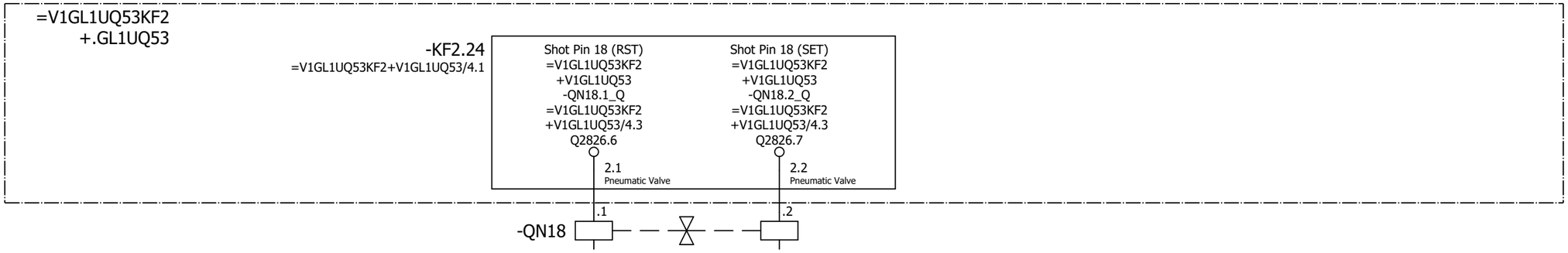

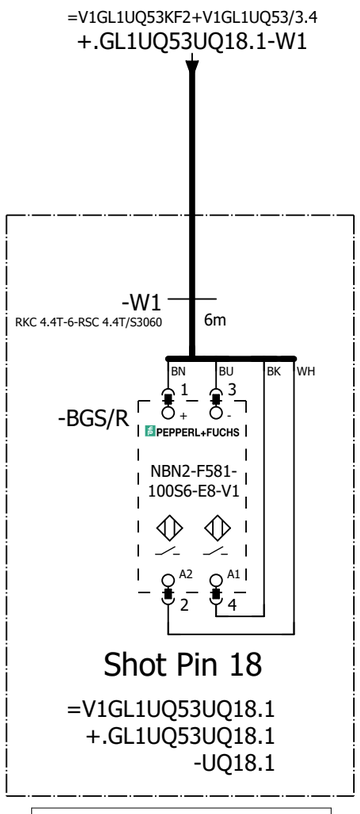

=V1GL1UQ53
-UQ18.1-BGS/R
Shot Pin 18

=V1GL1UQ53UQ17+.GL1UQ53UQ17/1

=V1GL1UQ53UQ19+.GL1UQ53UQ19/1

			Date	1/17/2023	Volvo Trucks North America		Valiant TMS	FESTO DQ CONNECTION QN18	Drawing name: =2V10&EFS-EL	= V1GL1UQ53UQ18	
			Ed.	MKLEPADLO						+ V1GL1UQ53UQ18	
			Appr		P6700 Bodyside RH - Robot Cell 2V10				Document type: EFS	Project nr: 22-16150	Page 1
Modification	Date	Name	Original		Replacement of	Replaced by	Scale 1:1				1579

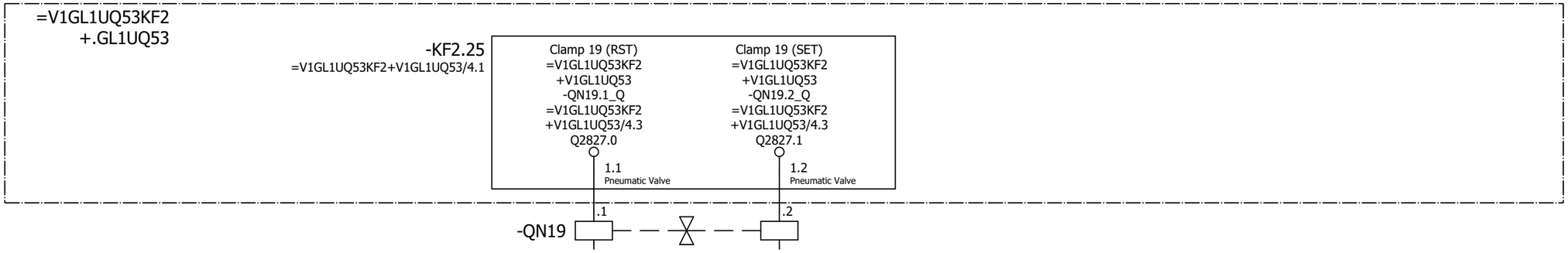

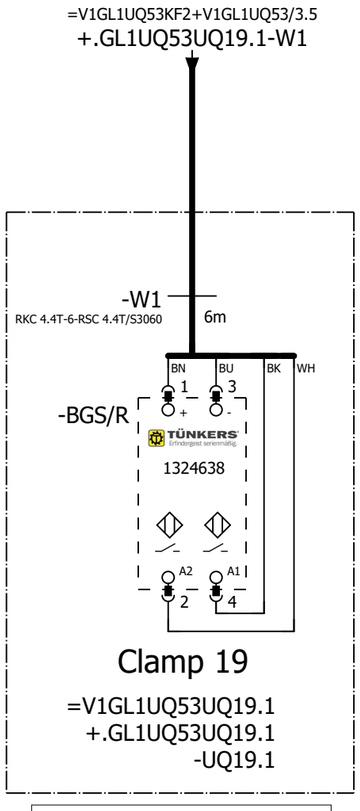

=V1GL1UQ53
-UQ19.1-BGS/R
Clamp 19

=V1GL1UQ53UQ18+.GL1UQ53UQ18/1

=V1GL1UQ53UQ20+.GL1UQ53UQ20/1

			Date	1/17/2023	Volvo Trucks North America		Valiant TMS	FESTO DQ CONNECTION QN19	Drawing name: =2V10&EFS-EL		= V1GL1UQ53UQ19
			Ed.	MKLEPADLO							+ V1GL1UQ53UQ19
			Appr		P6700 Bodyside RH - Robot Cell 2V10				Document type: EFS	Project nr: 22-16150	Page 1
Modification	Date	Name	Original		Replacement of	Replaced by	Scale 1:1				1579

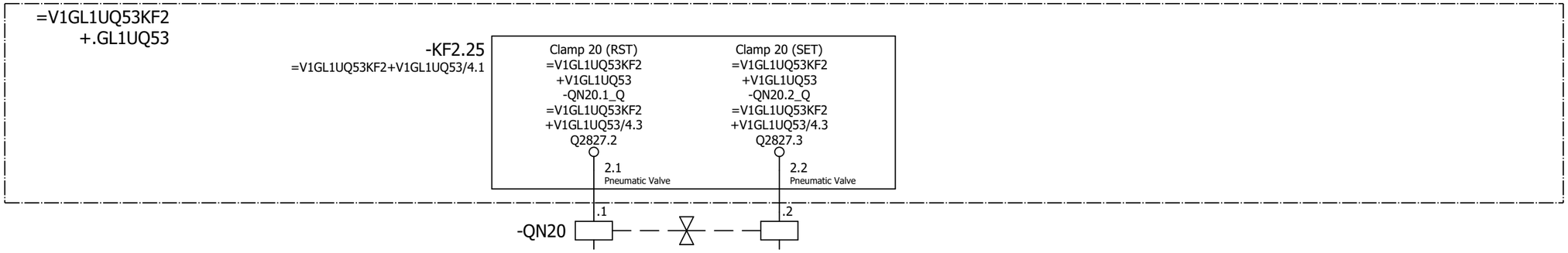

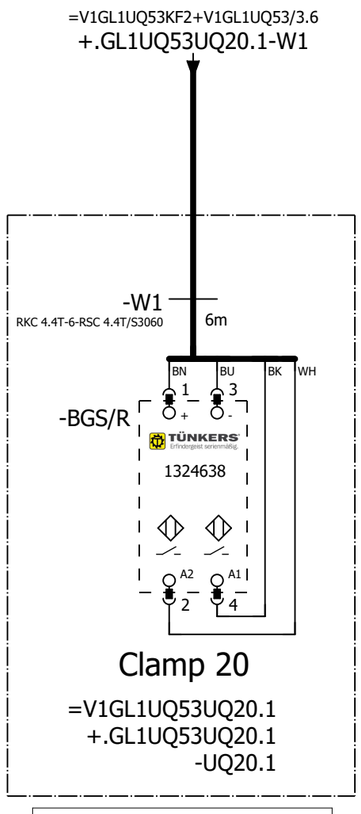

=V1GL1UQ53
-UQ20.1-BGS/R
Clamp 20

=V1GL1UQ53UQ19+.GL1UQ53UQ19/1

=V1GL1UQ53UQ21+.GL1UQ53UQ21/1

			Date	1/17/2023	Volvo Trucks North America		Valiant TMS	FESTO DQ CONNECTION QN20	Drawing name: =2V10&EFS-EL		= V1GL1UQ53UQ20
			Ed.	MKLEPADLO							+ V1GL1UQ53UQ20
			Appr		P6700 Bodyside RH - Robot Cell 2V10				Document type: EFS	Project nr: 22-16150	Page 1
Modification	Date	Name	Original		Replacement of	Replaced by	Scale 1:1				1579

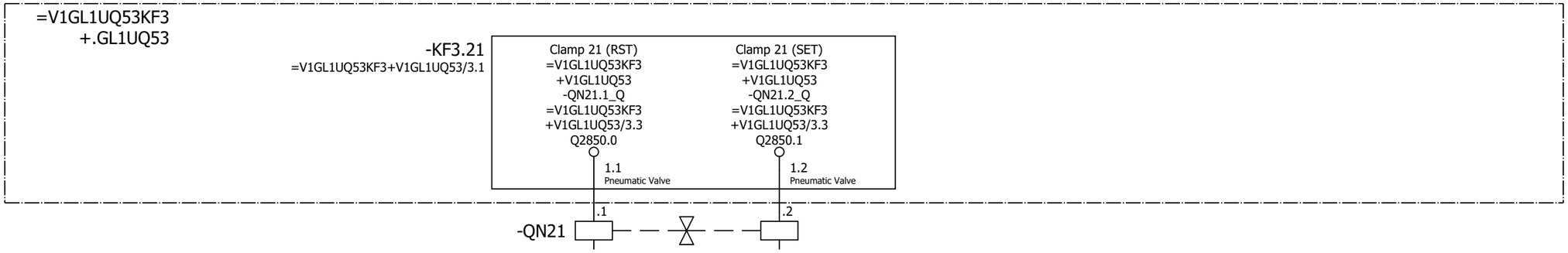

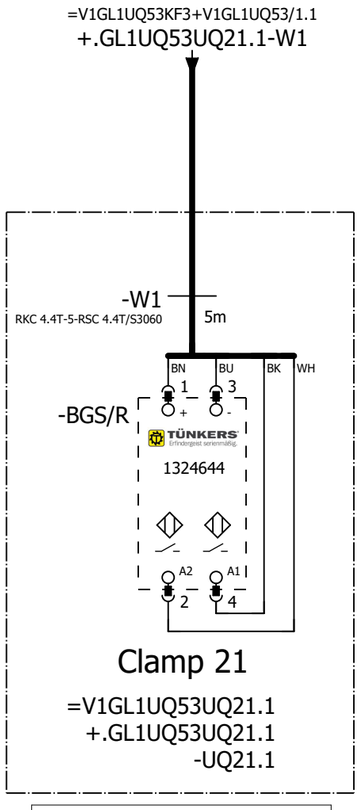

=V1GL1UQ53
-UQ21.1-BGS/R
Clamp 21

=V1GL1UQ53UQ20+.GL1UQ53UQ20/1

=V1GL1UQ53UQ22+.GL1UQ53UQ22/1

			Date	1/11/2023	Volvo Trucks North America		Valiant TMS	FESTO DQ CONNECTION QN21	Drawing name: =2V10&EFS-EL	= V1GL1UQ53UQ21	
			Ed.	MKLEPADLO						+ V1GL1UQ53UQ21	
			Appr		P6700 Bodyside RH - Robot Cell 2V10				Document type: EFS	Project nr: 22-16150	Page 1
Modification	Date	Name	Original		Replacement of	Replaced by	Scale 1:1				1579

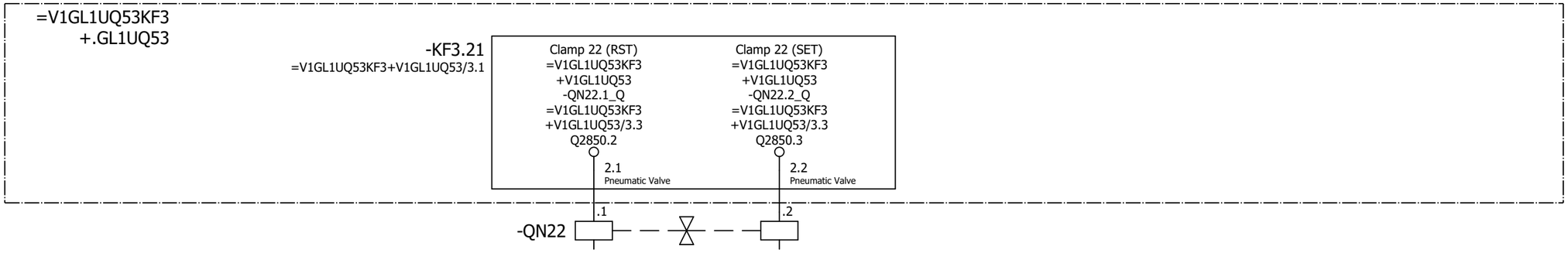

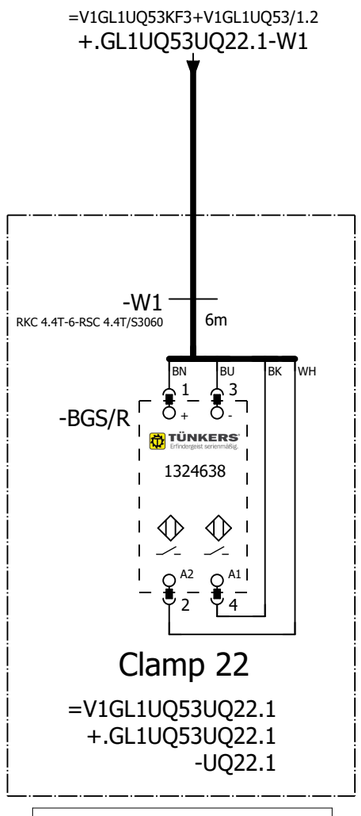

=V1GL1UQ53
-UQ22.1-BGS/R
Clamp 22

=V1GL1UQ53UQ21+.GL1UQ53UQ21/1

=V1GL1UQ53UQ23+.GL1UQ53UQ23/1

			Date	1/11/2023	Volvo Trucks North America		Valiant TMS	FESTO DQ CONNECTION QN22	Drawing name: =2V10&EFS-EL	= V1GL1UQ53UQ22	
			Ed.	MKLEPADLO						+ V1GL1UQ53UQ22	
			Appr		P6700 Bodyside RH - Robot Cell 2V10				Document type: EFS	Project nr: 22-16150	Page 1
Modification	Date	Name	Original		Replacement of	Replaced by	Scale 1:1				1579

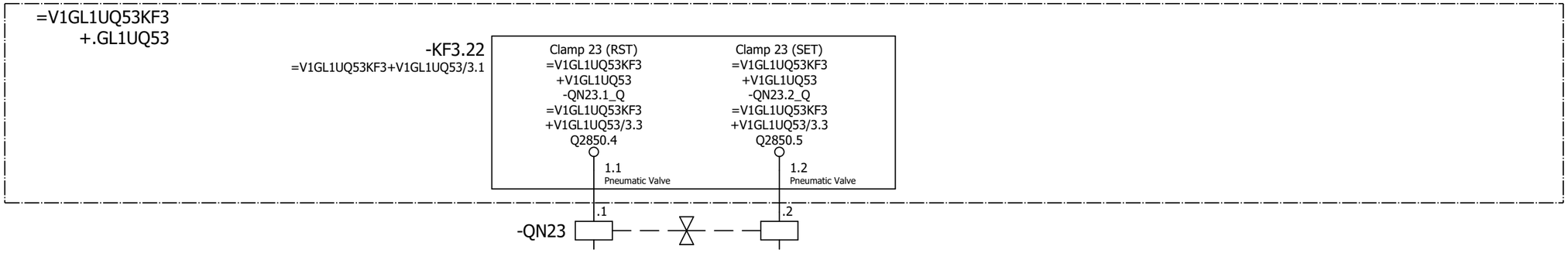

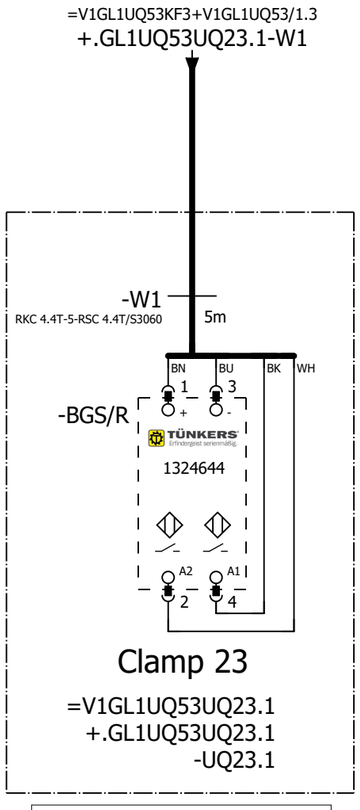

=V1GL1UQ53
-UQ23.1-BGS/R
Clamp 23

=V1GL1UQ53UQ22+.GL1UQ53UQ22/1

=V1GL1UQ53UQ24+.GL1UQ53UQ24/1

			Date	1/11/2023	Volvo Trucks North America		Valiant TMS	FESTO DQ CONNECTION QN23	Drawing name: =2V10&EFS-EL	= V1GL1UQ53UQ23	
			Ed.	MKLEPADLO						+ V1GL1UQ53UQ23	
			Appr		P6700 Bodyside RH - Robot Cell 2V10				Document type: EFS	Project nr: 22-16150	Page 1
Modification	Date	Name	Original		Replacement of	Replaced by	Scale 1:1				1579

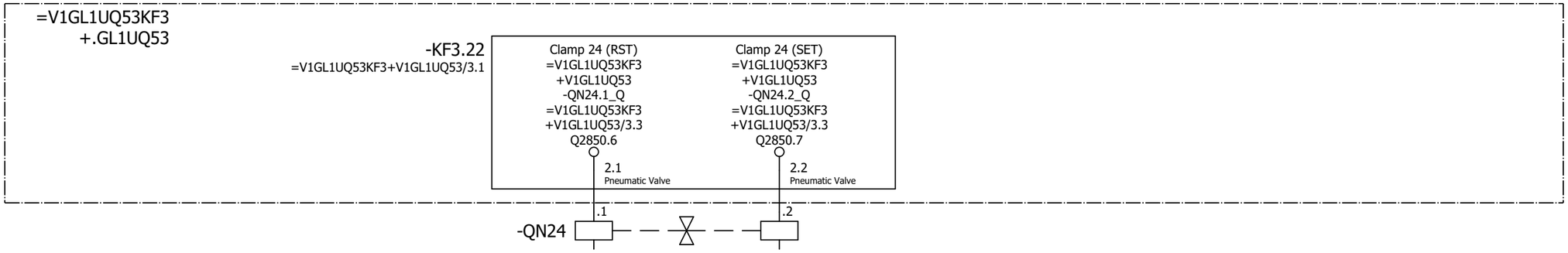

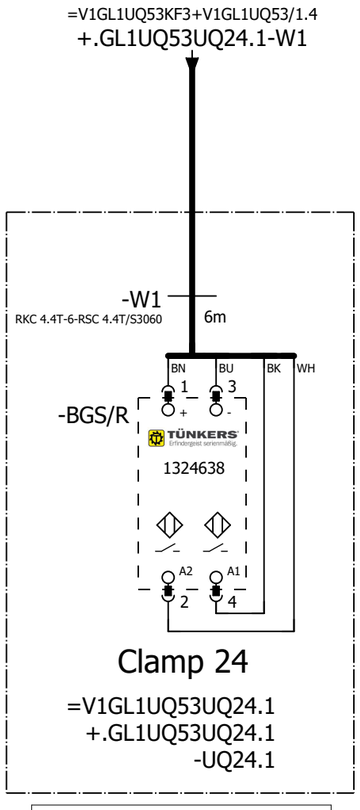

=V1GL1UQ53
-UQ24.1-BGS/R
Clamp 24

=V1GL1UQ53UQ23+.GL1UQ53UQ23/1

=V1GL1UQ53UQ25+.GL1UQ53UQ25/1

			Date	1/11/2023	Volvo Trucks North America		Valiant TMS	FESTO DQ CONNECTION QN24	Drawing name: =2V10&EFS-EL	= V1GL1UQ53UQ24	
			Ed.	MKLEPADLO						+ V1GL1UQ53UQ24	
			Appr		P6700 Bodyside RH - Robot Cell 2V10				Document type: EFS	Project nr: 22-16150	Page 1
Modification	Date	Name	Original		Replacement of	Replaced by	Scale 1:1				1579

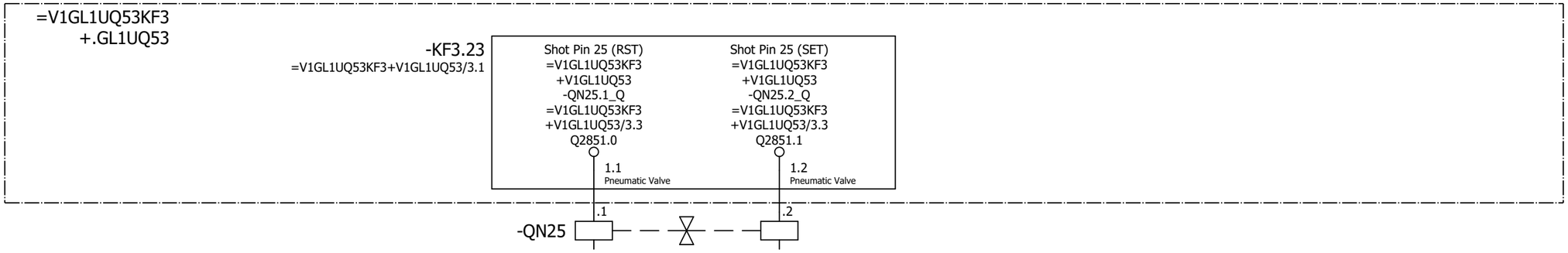

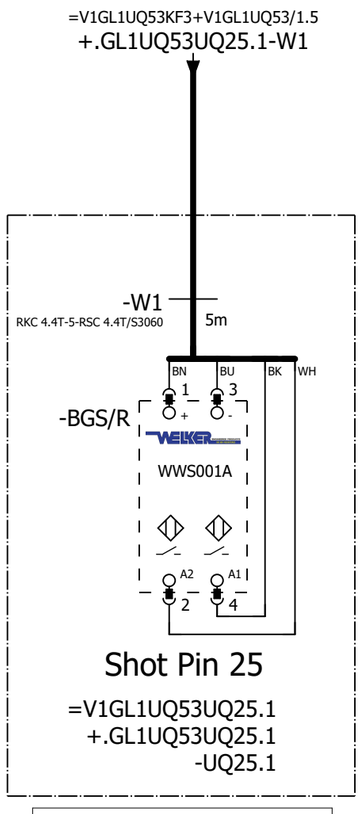

=V1GL1UQ53
-UQ25.1-BGS/R
Shot Pin 25

=V1GL1UQ53UQ24+.GL1UQ53UQ24/1

=V1GL1UQ53UQ26+.GL1UQ53UQ26/1

			Date	1/11/2023	Volvo Trucks North America		Valiant TMS	FESTO DQ CONNECTION QN25	Drawing name: =2V10&EFS-EL		= V1GL1UQ53UQ25
			Ed.	MKLEPADLO							+ V1GL1UQ53UQ25
			Appr		P6700 Bodyside RH - Robot Cell 2V10				Document type: EFS	Project nr: 22-16150	Page 1
Modification	Date	Name	Original		Replacement of	Replaced by	Scale 1:1				1579

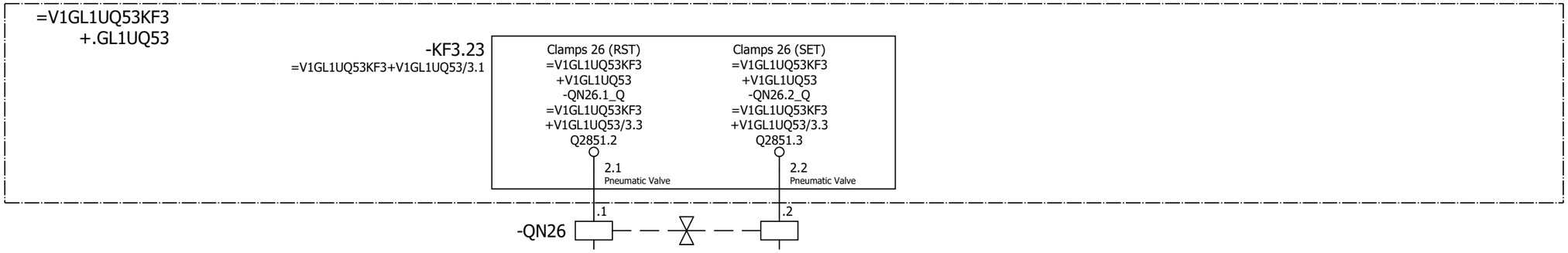

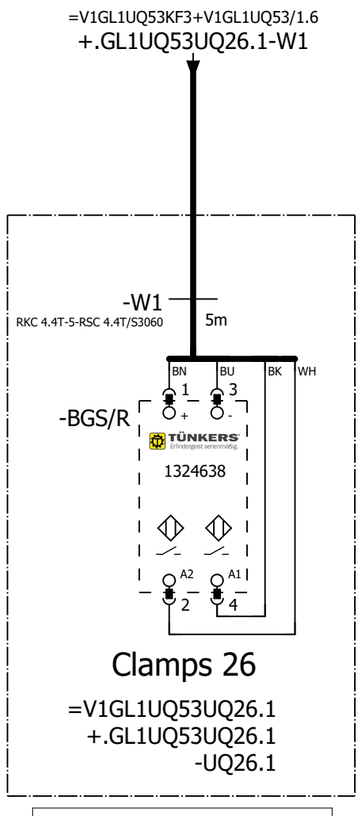

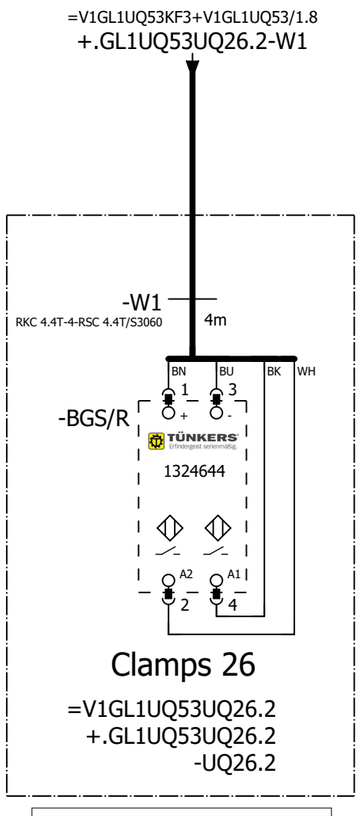

=V1GL1UQ53
-UQ26.1-BGS/R
Clamps 26

=V1GL1UQ53
-UQ26.2-BGS/R
Clamps 26

=V1GL1UQ53UQ25+.GL1UQ53UQ25/1

=V1GL1UQ53WC4+V1GL1UQ53/1

			Date	1/11/2023	Volvo Trucks North America		Valiant TMS	FESTO DQ CONNECTION QN26	Drawing name: =2V10&EFS-EL	= V1GL1UQ53UQ26	
			Ed.	MKLEPADLO						+ V1GL1UQ53UQ26	
			Appr		P6700 Bodyside RH - Robot Cell 2V10				Document type: EFS	Project nr: 22-16150	Page 1
Modification	Date	Name	Original		Replacement of	Replaced by	Scale 1:1				1579

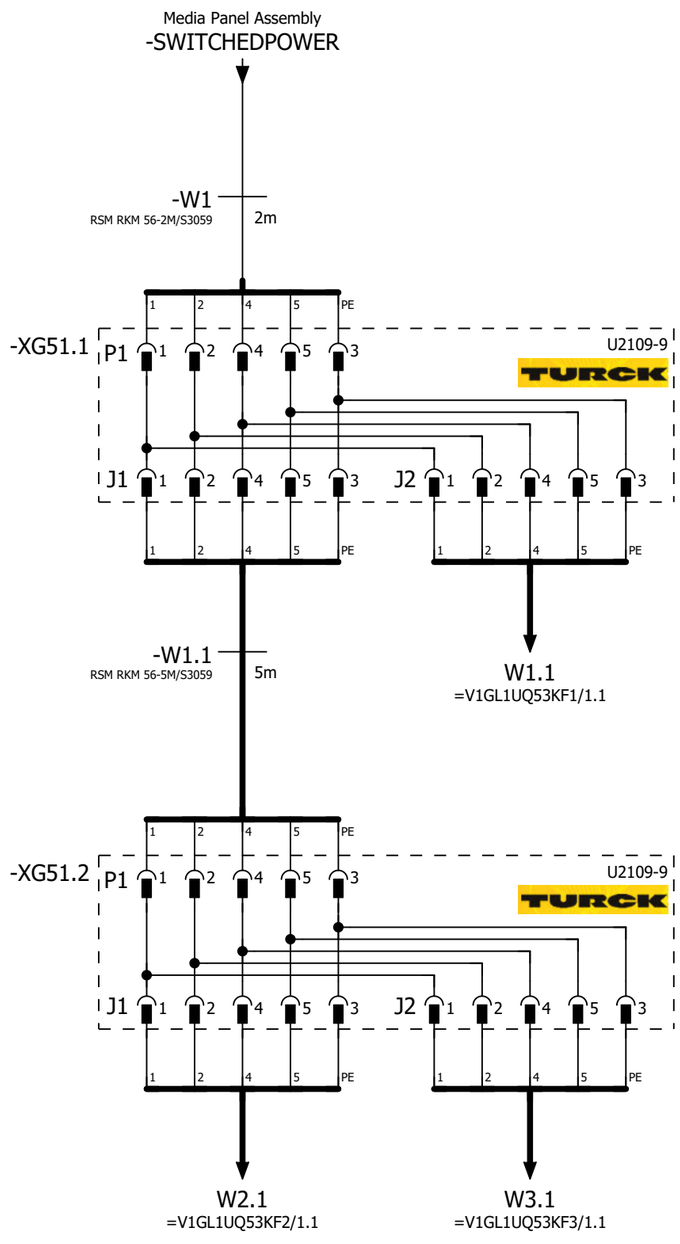

=V1GL1UQ53UQ26+.GL1UQ53UQ26/1

=V1GL1UQ54BG0+.GL1UQ54/1

			Date	1/11/2023	Volvo Trucks North America	Valiant TMS	24VDC	Drawing name: =2V10&EFS-EL		= V1GL1UQ53WC4	
			Ed.	MKLEPADLO	P6700 Bodyside RH - Robot Cell 2V10					+ V1GL1UQ53	
			Appr					Document type: EFS	Project nr: 22-16150		Page 1
Modification	Date	Name	Original		Replacement of	Replaced by	Scale 1:1				1579

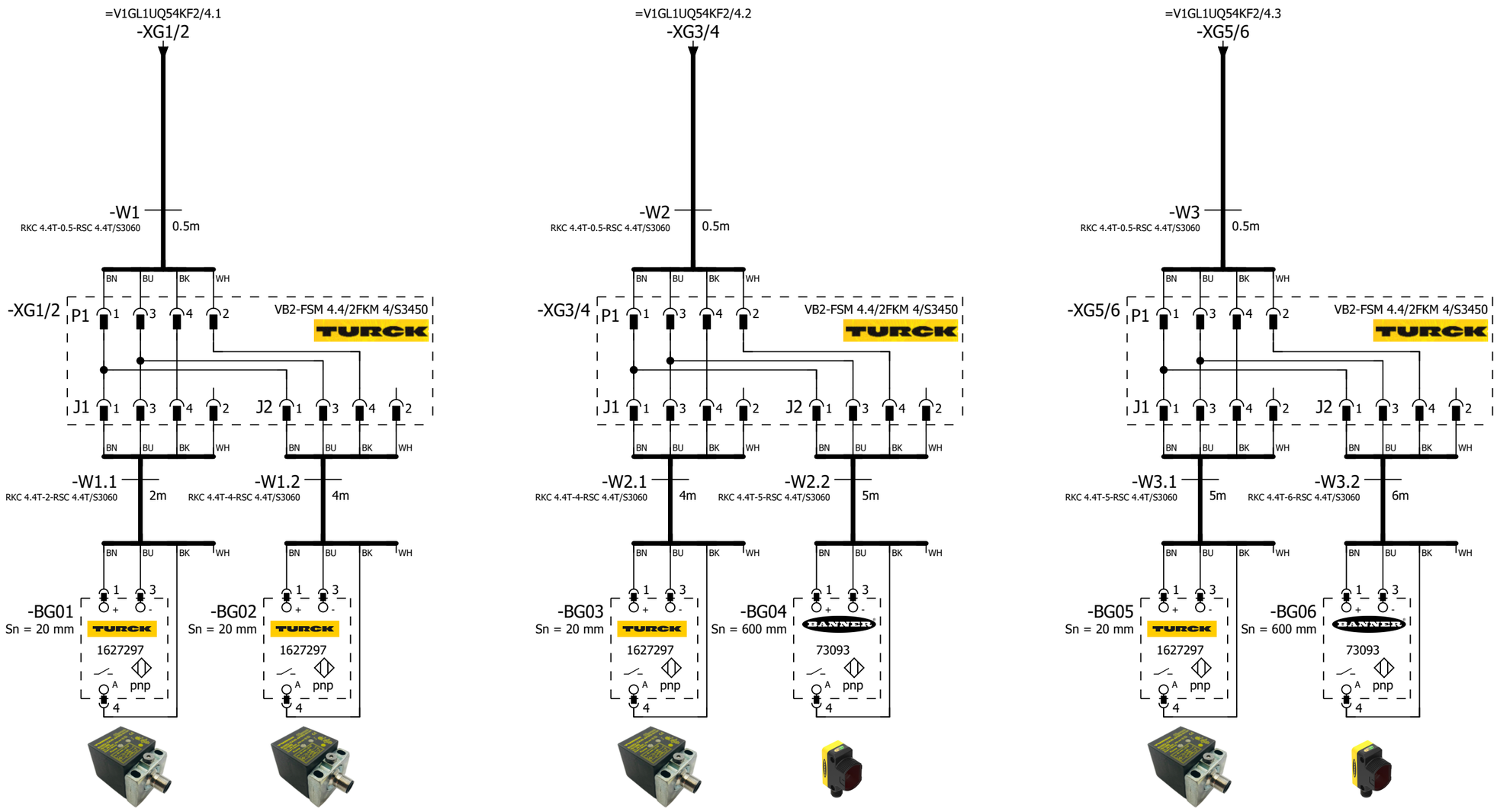

=V1GL1UQ54 -BG01 Door Frame Assembly	=V1GL1UQ54 -BG02 Door Frame Assembly	=V1GL1UQ54 -BG03 Outer Front Sill	=V1GL1UQ54 -BG04 Extruded Seal Front	=V1GL1UQ54 -BG05 Outer Front Sill	=V1GL1UQ54 -BG06 Extruded Seal Rear

=V1GL1UQ53WC4+.GL1UQ53/1

2

			Date	1/11/2023	Volvo Trucks North America	Valiant TMS	SENSORS	Drawing name: =2V10&EFS-EL	= V1GL1UQ54BG0	
			Ed.	MKLEPADLO					+ V1GL1UQ54	
			Appr		P6700 Bodyside RH - Robot Cell 2V10			Document type: EFS	Project nr: 22-16150	Page 1
Modification	Date	Name	Original		Replacement of / Replaced by	Scale 1:1				1579

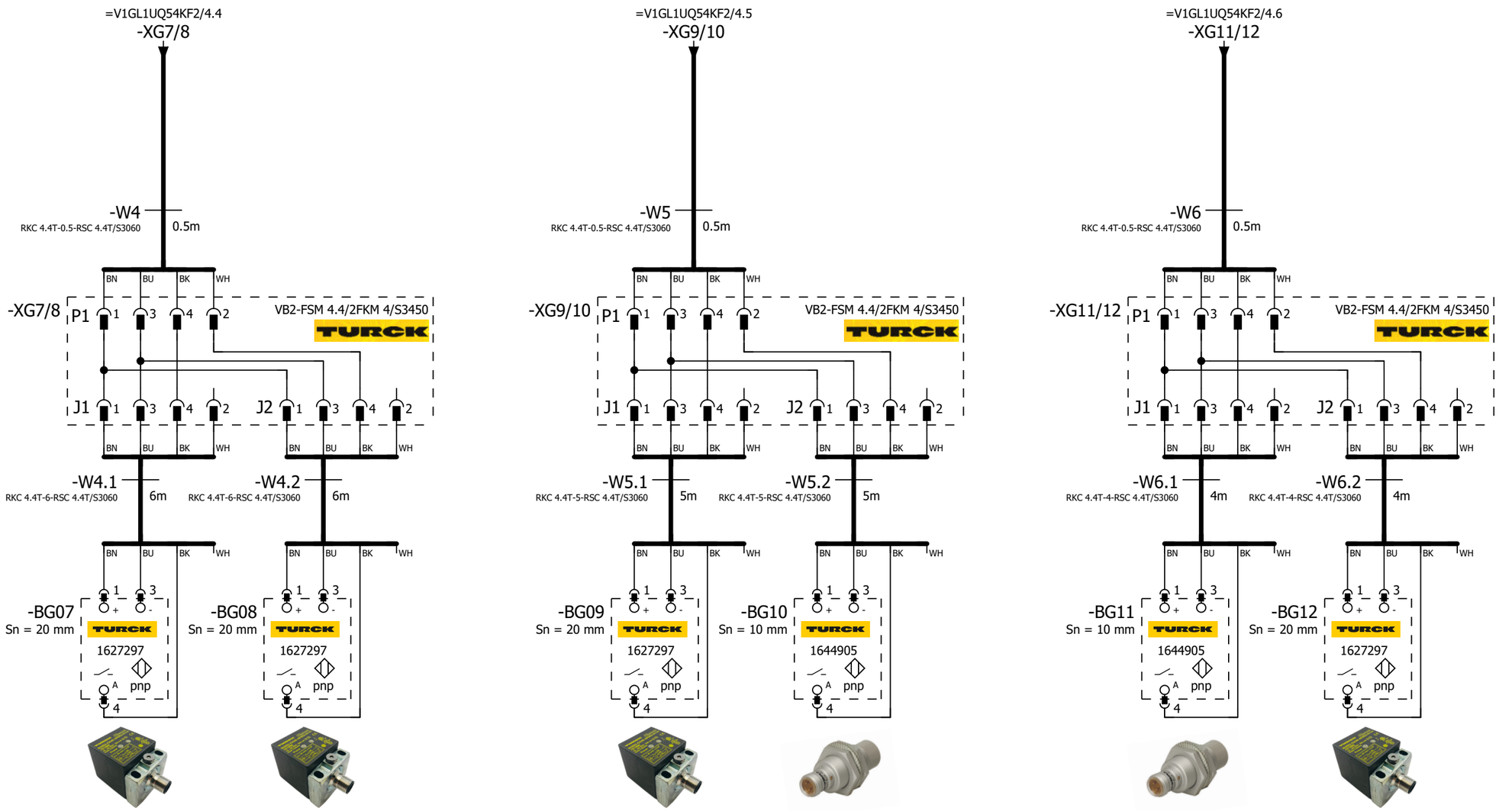

=V1GL1UQ54 -BG07 Rear Sill Sleeper	=V1GL1UQ54 -BG08 Rear Sill Sleeper	=V1GL1UQ54 -BG09 Lug Door Mnt Assembly	=V1GL1UQ54 -BG10 Lug Door Mnt Assembly	=V1GL1UQ54 -BG11 Lwr Cabinet Mnt Assembly	=V1GL1UQ54 -BG12 Header Sub Assembly

1 3

			Date	1/11/2023	Volvo Trucks North America	Valiant TMS	SENSORS	Drawing name: =2V10&EFS-EL	= V1GL1UQ54BG0
			Ed.	MKLEPADLO					+ V1GL1UQ54
			Appr		P6700 Bodyside RH - Robot Cell 2V10			Document type: EFS / Project nr: 22-16150	Page 2 / 1579
Modification	Date	Name	Original		Replacement of / Replaced by	Scale 1:1			

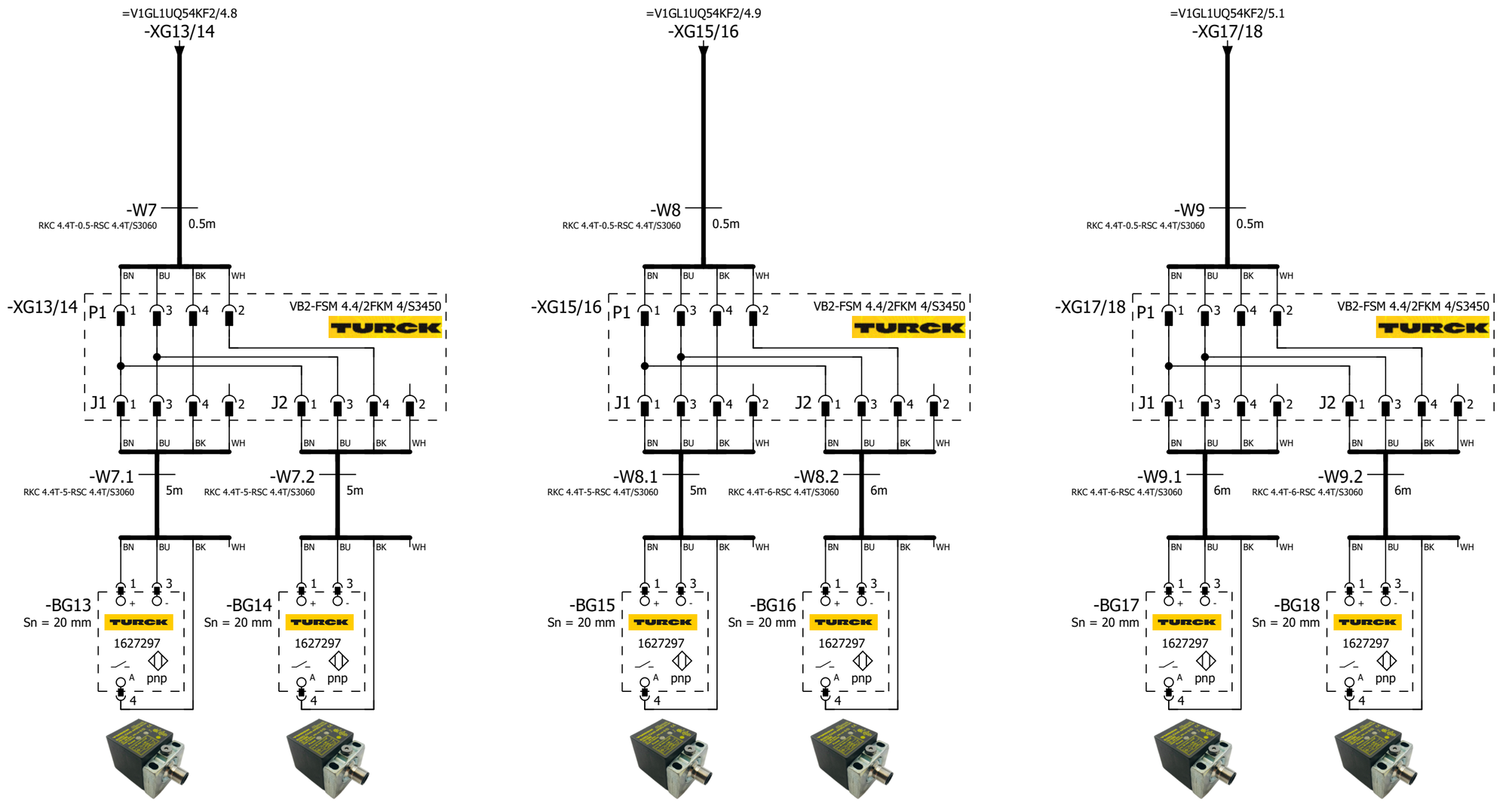

=V1GL1UQ54 -BG13 Header Sub Assembly	=V1GL1UQ54 -BG14 Bunk Support	=V1GL1UQ54 -BG15 Rear Lower Assembly	=V1GL1UQ54 -BG16 Rear Lower Assembly	=V1GL1UQ54 -BG17 Bunk Support	=V1GL1UQ54 -BG18 C-Pillar Assembly

2 4

			Date	1/11/2023	Volvo Trucks North America	Valiant TMS	SENSORS	Drawing name: =2V10&EFS-EL	= V1GL1UQ54BG0	
			Ed.	MKLEPADLO					+ V1GL1UQ54	
			Appr		P6700 Bodyside RH - Robot Cell 2V10			Document type: EFS	Project nr: 22-16150	Page 3
Modification	Date	Name	Original		Replacement of / Replaced by	Scale 1:1				1579

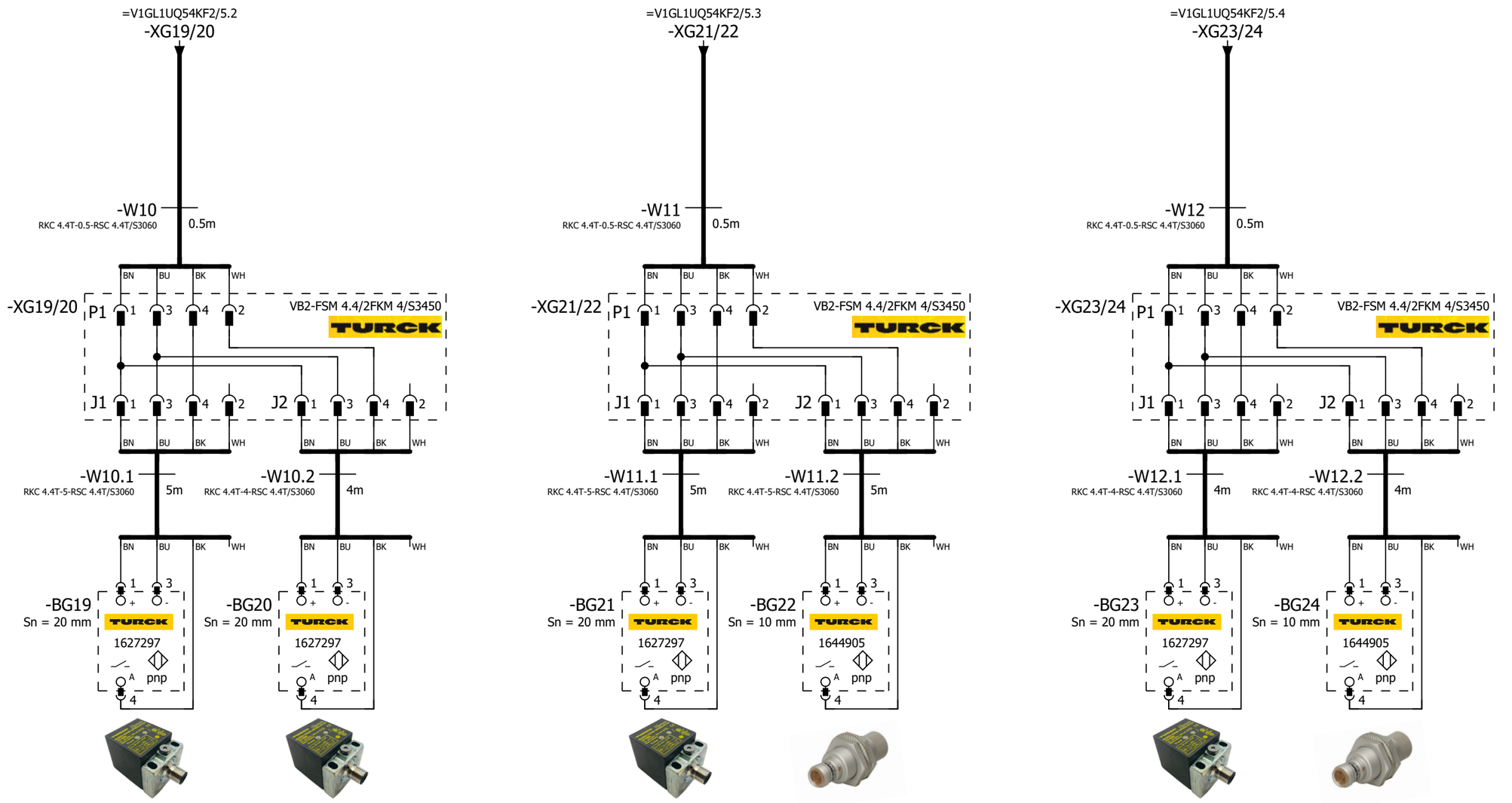

=V1GL1UQ54 -BG19 C-Pillar Assembly	=V1GL1UQ54 -BG20 Blind Lower	=V1GL1UQ54 -BG21 Blind Lower	=V1GL1UQ54 -BG22 Vertical Member	=V1GL1UQ54 -BG23 Vertical Member	=V1GL1UQ54 -BG24 Cabinet Mnt

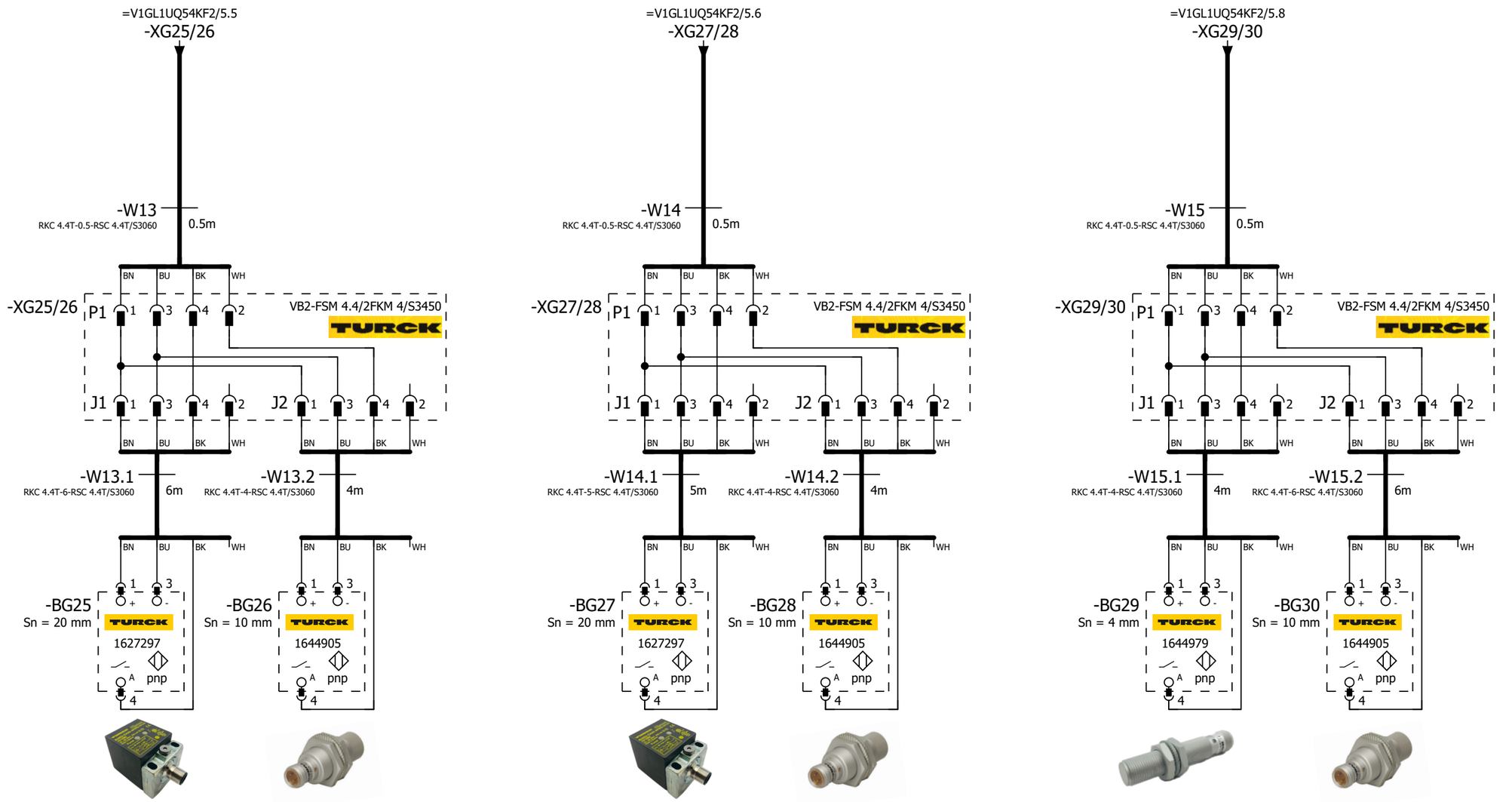

=V1GL1UQ54 -BG25 Header Sub Assembly	=V1GL1UQ54 -BG26 Cabinet Mount	=V1GL1UQ54 -BG27 Lw Cabinet Mnt Assembly LH/RH	=V1GL1UQ54 -BG28 Intermed H R Long
=V1GL1UQ54 -BG29 Cabinet Mount	=V1GL1UQ54 -BG30 Cabinet Mount		

4 6

			Date	1/11/2023	Volvo Trucks North America	Valiant TMS	SENSORS	Drawing name: =2V10&EFS-EL	= V1GL1UQ54BG0	
			Ed.	MKLEPADLO					+ V1GL1UQ54	
			Appr		P6700 Bodyside RH - Robot Cell 2V10			Document type: EFS	Project nr: 22-16150	Page 5
Modification	Date	Name	Original		Replacement of / Replaced by	Scale 1:1				1579

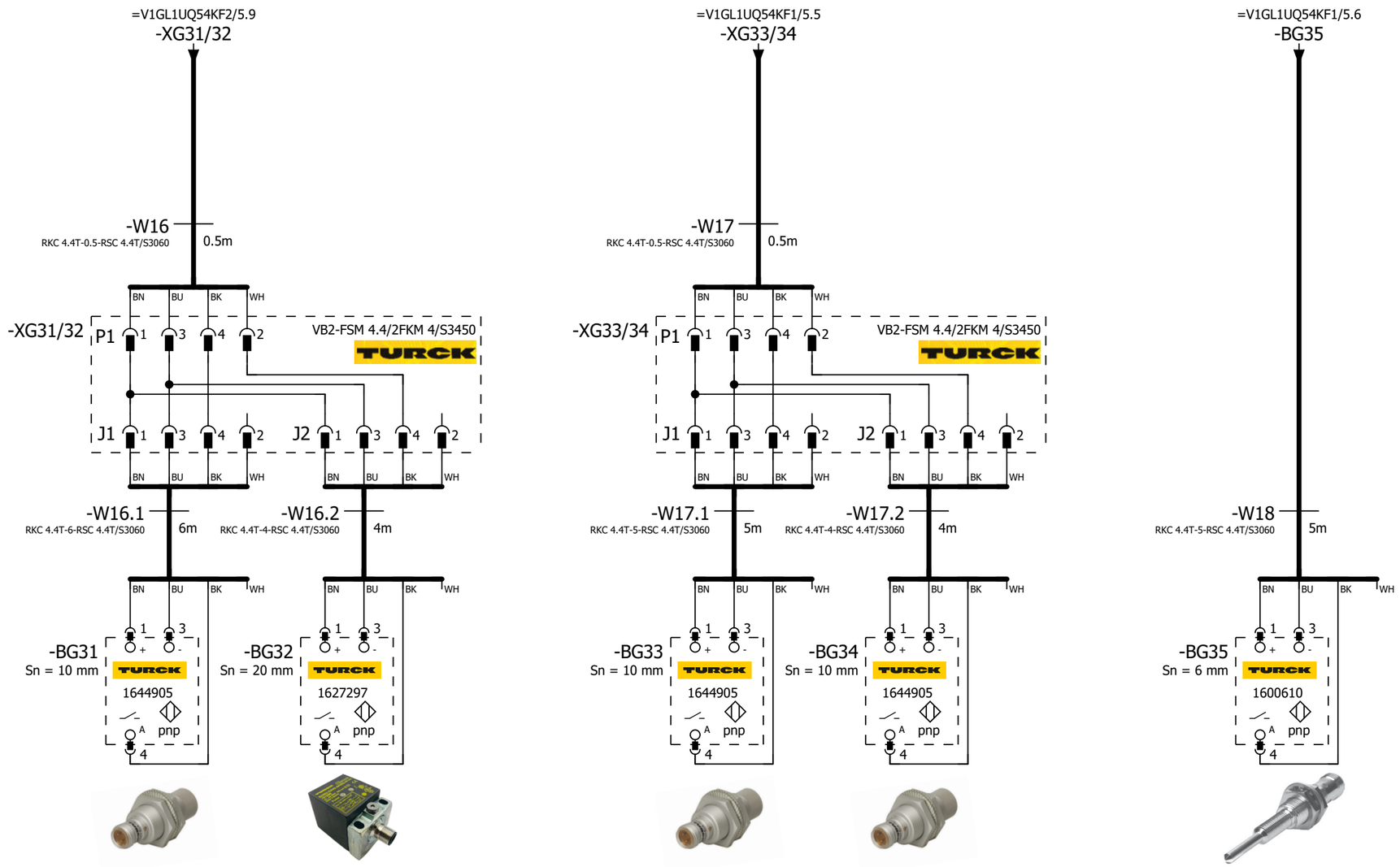

=V1GL1UQ54 -BG31 Cabinet Mount	=V1GL1UQ54 -BG32 Cabinet Mount	=V1GL1UQ54 -BG33 Rear TV Mount Bracket	=V1GL1UQ54 -BG34 Cabinet Mount	=V1GL1UQ54 -BG35 Nut L320 Part

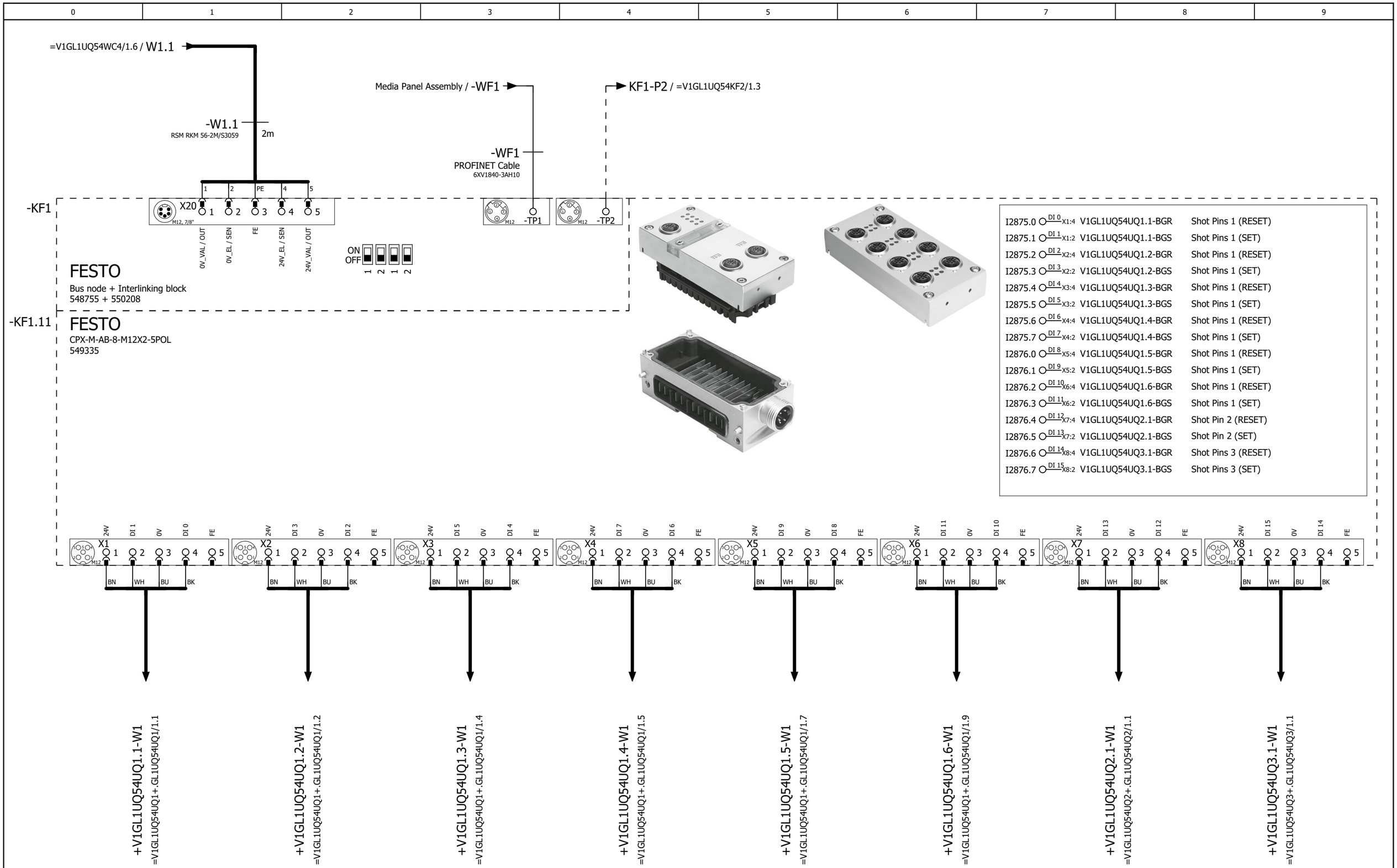

=V1GL1UQ54BG0/6

2

			Date	1/11/2023	Volvo Trucks North America	Valiant TMS	CONNECTING MOD. FOR VTSA MANIFOLD	Drawing name: =2V10&EFS-EL		= V1GL1UQ54KF1	
			Ed.	MKLEPADLO						+ V1GL1UQ54	
			Appr		P6700 Bodyside RH - Robot Cell 2V10			Document type: EFS	Project nr: 22-16150		Page 1
Modification	Date	Name	Original		Replacement of / Replaced by	Scale 1:1					1579

0	1	2	3	4	5	6	7	8	9

I2877.0	DI 0 X1:4	V1GL1UQ54UQ3.2-BGR	Shot Pins 3 (RESET)
I2877.1	DI 1 X1:2	V1GL1UQ54UQ3.2-BGS	Shot Pins 3 (SET)
I2877.2	DI 2 X2:4	V1GL1UQ54UQ3.3-BGR	Shot Pins 3 (RESET)
I2877.3	DI 3 X2:2	V1GL1UQ54UQ3.3-BGS	Shot Pins 3 (SET)
I2877.4	DI 4 X3:4	V1GL1UQ54UQ3.4-BGR	Shot Pins 3 (RESET)
I2877.5	DI 5 X3:2	V1GL1UQ54UQ3.4-BGS	Shot Pins 3 (SET)
I2877.6	DI 6 X4:4	V1GL1UQ54UQ3.5-BGR	Shot Pins 3 (RESET)
I2877.7	DI 7 X4:2	V1GL1UQ54UQ3.5-BGS	Shot Pins 3 (SET)
I2878.0	DI 8 X5:4	V1GL1UQ54UQ3.6-BGR	Shot Pins 3 (RESET)
I2878.1	DI 9 X5:2	V1GL1UQ54UQ3.6-BGS	Shot Pins 3 (SET)
I2878.2	DI 10 X6:4	V1GL1UQ54UQ4.1-BGR	Shot Pins 4 (RESET)
I2878.3	DI 11 X6:2	V1GL1UQ54UQ4.1-BGS	Shot Pins 4 (SET)
I2878.4	DI 12 X7:4	V1GL1UQ54UQ4.2-BGR	Shot Pins 4 (RESET)
I2878.5	DI 13 X7:2	V1GL1UQ54UQ4.2-BGS	Shot Pins 4 (SET)
I2878.6	DI 14 X8:4	V1GL1UQ54UQ4.3-BGR	Shot Pins 4 (RESET)
I2878.7	DI 15 X8:2	V1GL1UQ54UQ4.3-BGS	Shot Pins 4 (SET)

-KF1.12

FESTO

CPX-M-AB-8-M12X2-5POL

549335

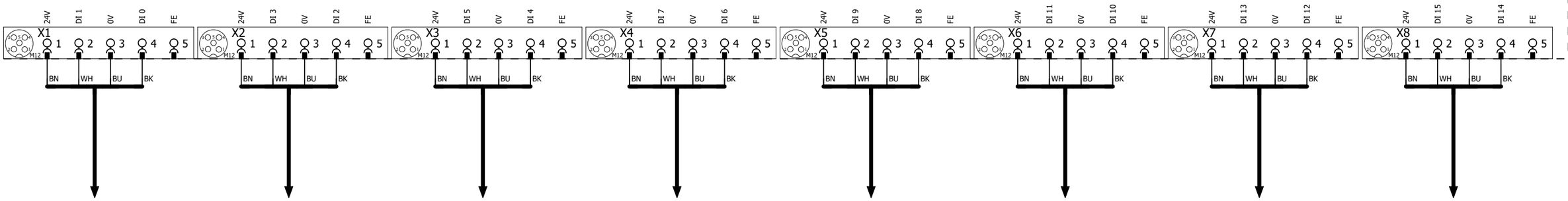

+V1GL1UQ54UQ3.2-W1
=V1GL1UQ54UQ3+.GL1UQ54UQ3/1.2

+V1GL1UQ54UQ3.3-W1
=V1GL1UQ54UQ3+.GL1UQ54UQ3/1.4

+V1GL1UQ54UQ3.4-W1
=V1GL1UQ54UQ3+.GL1UQ54UQ3/1.5

+V1GL1UQ54UQ3.5-W1
=V1GL1UQ54UQ3+.GL1UQ54UQ3/1.7

+.GL1UQ54UQ3.6-W1
=V1GL1UQ54UQ3+.GL1UQ54UQ3/1.9

+.GL1UQ54UQ4.1-W1
=V1GL1UQ54UQ4+.GL1UQ54UQ4/1.1

+.GL1UQ54UQ4.2-W1
=V1GL1UQ54UQ4+.GL1UQ54UQ4/1.2

+.GL1UQ54UQ4.3-W1
=V1GL1UQ54UQ4+.GL1UQ54UQ4/1.4

1 3

			Date	1/11/2023	Volvo Trucks North America	Valiant TMS	I/O MOD. DI16 (8 x M12) FOR VTSA-F	Drawing name: =2V10&EFS-EL		= V1GL1UQ54KF1	
			Ed.	MKLEPADLO						+ V1GL1UQ54	
			Appr		P6700 Bodyside RH - Robot Cell 2V10			Document type: EFS	Project nr: 22-16150		Page 2
Modification	Date	Name	Original		Replacement of	Replaced by	Scale 1:1				1579

-KF1.13

FESTO

CPX-M-AB-8-M12X2-5POL
549335

I2879.0	DI 0 X1:4	V1GL1UQ54UQ5.1-BGR	Shot Pins 5 (RESET)
I2879.1	DI 1 X1:2	V1GL1UQ54UQ5.1-BGS	Shot Pins 5 (SET)
I2879.2	DI 2 X2:4	V1GL1UQ54UQ5.2-BGR	Shot Pins 5 (RESET)
I2879.3	DI 3 X2:2	V1GL1UQ54UQ5.2-BGS	Shot Pins 5 (SET)
I2879.4	DI 4 X3:4	V1GL1UQ54UQ5.3-BGR	Shot Pins 5 (RESET)
I2879.5	DI 5 X3:2	V1GL1UQ54UQ5.3-BGS	Shot Pins 5 (SET)
I2879.6	DI 6 X4:4	V1GL1UQ54UQ6.1-BGR	Shot Pin 6 (RESET)
I2879.7	DI 7 X4:2	V1GL1UQ54UQ6.1-BGS	Shot Pin 6 (SET)
I2880.0	DI 8 X5:4	V1GL1UQ54UQ7.1-BGR	Shot Pin 7 (RESET)
I2880.1	DI 9 X5:2	V1GL1UQ54UQ7.1-BGS	Shot Pin 7 (SET)
I2880.2	DI 10 X6:4	V1GL1UQ54UQ9.1-BGR	Shot Pins 9 (RESET)
I2880.3	DI 11 X6:2	V1GL1UQ54UQ9.1-BGS	Shot Pins 9 (SET)
I2880.4	DI 12 X7:4	V1GL1UQ54UQ9.2-BGR	Shot Pins 9 (RESET)
I2880.5	DI 13 X7:2	V1GL1UQ54UQ9.2-BGS	Shot Pins 9 (SET)
I2880.6	DI 14 X8:4	V1GL1UQ54UQ10.1-BGR	Clamps 10 (RESET)
I2880.7	DI 15 X8:2	V1GL1UQ54UQ10.1-BGS	Clamps 10 (SET)

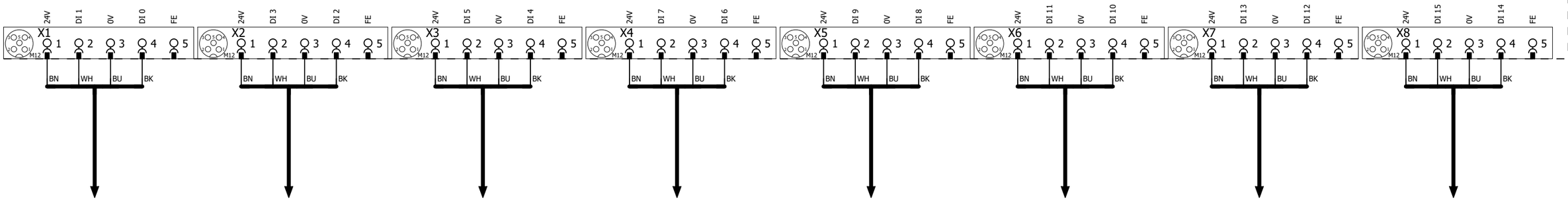

+.GL1UQ54UQ5.1-W1
=V1GL1UQ54UQ5+.GL1UQ54UQ5/1.1

+.GL1UQ54UQ5.2-W1
=V1GL1UQ54UQ5+.GL1UQ54UQ5/1.2

+.GL1UQ54UQ5.3-W1
=V1GL1UQ54UQ5+.GL1UQ54UQ5/1.4

+.GL1UQ54UQ6.1-W1
=V1GL1UQ54UQ6+.GL1UQ54UQ6/1.1

+.GL1UQ54UQ7.1-W1
=V1GL1UQ54UQ7+.GL1UQ54UQ7/1.1

+.GL1UQ54UQ9.1-W1
=V1GL1UQ54UQ9+.GL1UQ54UQ9/1.1

+.GL1UQ54UQ9.2-W1
=V1GL1UQ54UQ9+.GL1UQ54UQ9/1.2

+.GL1UQ54UQ10.1-W1
=V1GL1UQ54UQ10+.GL1UQ54UQ10/1.1

0	1	2	3	4	5	6	7	8	9

I2881.0	DI 0 X1:4	V1GL1UQ54UQ10.2-BGR	Clamps 10 (RESET)
I2881.1	DI 1 X1:2	V1GL1UQ54UQ10.2-BGS	Clamps 10 (SET)
I2881.2	DI 2 X2:4	V1GL1UQ54UQ10.3-BGR	Clamps 10 (RESET)
I2881.3	DI 3 X2:2	V1GL1UQ54UQ10.3-BGS	Clamps 10 (SET)
I2881.4	DI 4 X3:4	V1GL1UQ54UQ10.4-BGR	Clamps 10 (RESET)
I2881.5	DI 5 X3:2	V1GL1UQ54UQ10.4-BGS	Clamps 10 (SET)
I2881.6	DI 6 X4:4	V1GL1UQ54UQ10.5-BGR	Clamps 10 (RESET)
I2881.7	DI 7 X4:2	V1GL1UQ54UQ10.5-BGS	Clamps 10 (SET)
I2882.0	DI 8 X5:4	V1GL1UQ54UQ10.6-BGR	Clamps 10 (RESET)
I2882.1	DI 9 X5:2	V1GL1UQ54UQ10.6-BGS	Clamps 10 (SET)
I2882.2	DI 10 X6:4	V1GL1UQ54UQ11.1-BGR	Clamps 11 (RESET)
I2882.3	DI 11 X6:2	V1GL1UQ54UQ11.1-BGS	Clamps 11 (SET)
I2882.4	DI 12 X7:4	V1GL1UQ54UQ11.2-BGR	Clamps 11 (RESET)
I2882.5	DI 13 X7:2	V1GL1UQ54UQ11.2-BGS	Clamps 11 (SET)
I2882.6	DI 14 X8:4	V1GL1UQ54UQ11.3-BGR	Clamps 11 (RESET)
I2882.7	DI 15 X8:2	V1GL1UQ54UQ11.3-BGS	Clamps 11 (SET)

-KF1.14

FESTO
CPX-M-AB-8-M12X2-5POL
549335

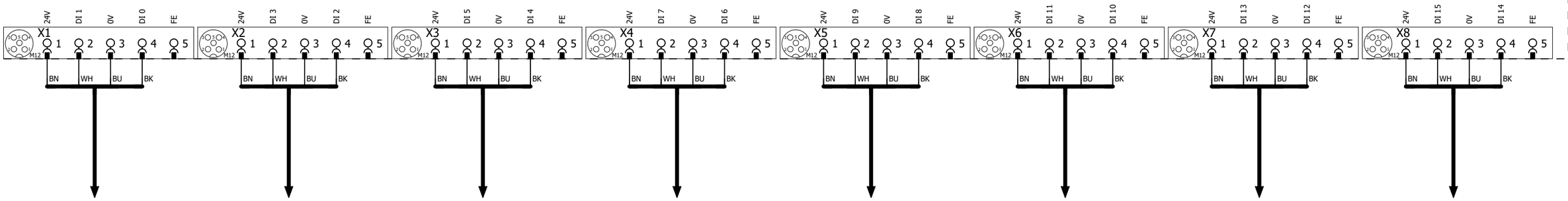

+.GL1UQ54UQ10.2-W1
=V1GL1UQ54UQ10+.GL1UQ54UQ10/1.2

+.GL1UQ54UQ10.3-W1
=V1GL1UQ54UQ10+.GL1UQ54UQ10/1.4

+.GL1UQ54UQ10.4-W1
=V1GL1UQ54UQ10+.GL1UQ54UQ10/1.5

+.GL1UQ54UQ10.5-W1
=V1GL1UQ54UQ10+.GL1UQ54UQ10/1.7

+.GL1UQ54UQ10.6-W1
=V1GL1UQ54UQ10+.GL1UQ54UQ10/1.9

+.GL1UQ54UQ11.1-W1
=V1GL1UQ54UQ11+.GL1UQ54UQ11/1.1

+.GL1UQ54UQ11.2-W1
=V1GL1UQ54UQ11+.GL1UQ54UQ11/1.2

+.GL1UQ54UQ11.3-W1
=V1GL1UQ54UQ11+.GL1UQ54UQ11/1.4

0	1	2	3	4	5	6	7	8	9

I2883.0	DI 0 X1:4	V1GL1UQ54UQ11.4-BGR	Clamps 11 (RESET)
I2883.1	DI 1 X1:2	V1GL1UQ54UQ11.4-BGS	Clamps 11 (SET)
I2883.2	DI 2 X2:4	V1GL1UQ54UQ11.5-BGR	Clamps 11 (RESET)
I2883.3	DI 3 X2:2	V1GL1UQ54UQ11.5-BGS	Clamps 11 (SET)
I2883.4	DI 4 X3:4	I2883.4	Spare
I2883.5	DI 5 X3:2	I2883.5	Spare
I2883.6	DI 6 X4:4	I2883.6	Spare
I2883.7	DI 7 X4:2	I2883.7	Spare
I2884.0	DI 8 X5:4	V1GL1UQ54-BG33	Sensor Rear TV Mount Bracket
I2884.1	DI 9 X5:2	V1GL1UQ54-BG34	Sensor Cabinet Mount
I2884.2	DI 10 X6:4	V1GL1UQ54-BG35	Sensor Nut L320 Part
I2884.3	DI 11 X6:2	I2884.3	Spare
I2884.4	DI 12 X7:4	I2884.4	Spare
I2884.5	DI 13 X7:2	I2884.5	Spare
I2884.6	DI 14 X8:4	I2884.6	Spare
I2884.7	DI 15 X8:2	I2884.7	Spare

-KF1.15

FESTO
CPX-M-AB-8-M12X2-5POL
549335

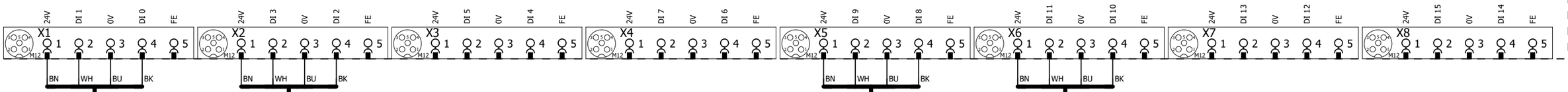

+.GL1UQ54UQ11.4-W1
=V1GL1UQ54UQ11+.GL1UQ54UQ11/1.5

+.GL1UQ54UQ11.5-W1
=V1GL1UQ54UQ11+.GL1UQ54UQ11/1.7

-XG33/34
=V1GL1UQ54BG0/6.4

-BG35
=V1GL1UQ54BG0/6.6

4 6

			Date	1/11/2023	Volvo Trucks North America	Valiant TMS	I/O MOD. DI16 (8 x M12) FOR VTSA-F	Drawing name: =2V10&EFS-EL	= V1GL1UQ54KF1		
			Ed.	MKLEPADLO					+ V1GL1UQ54		
			Appr		P6700 Bodyside RH - Robot Cell 2V10			Document type: EFS	Project nr: 22-16150	Page	5
Modification	Date	Name	Original		Replacement of / Replaced by	Scale 1:1					1579

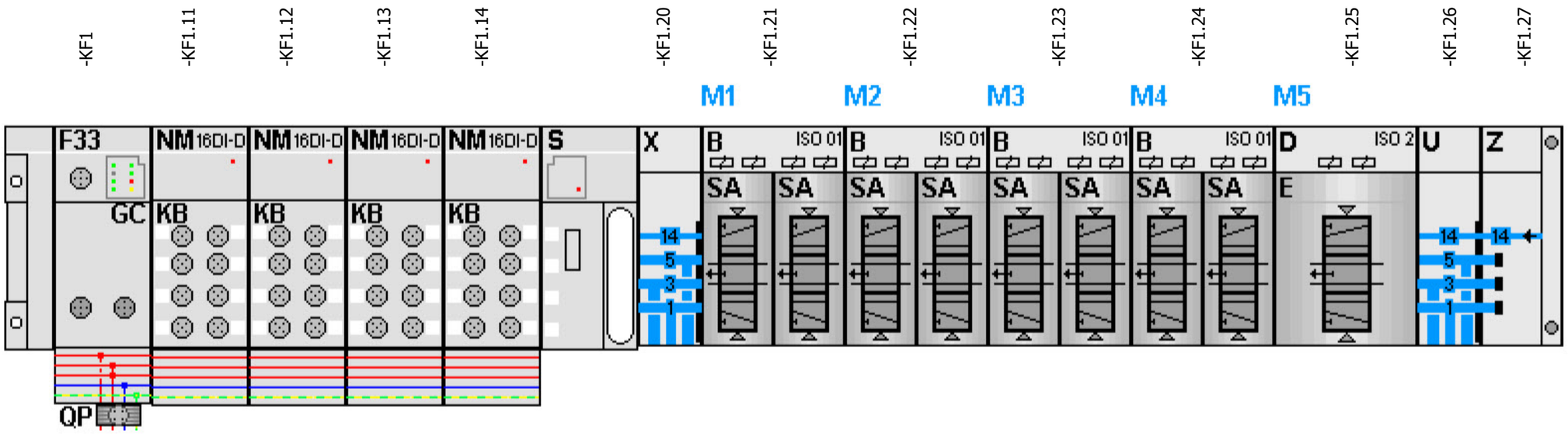

-KF1.21
=V1GL1UQ54UQ1+.GL1UQ54UQ1/1.3
=V1GL1UQ54UQ2+.GL1UQ54UQ2/1.3

FESTO

=V1GL1UQ54UQ1+.GL1UQ54UQ1/1.4	Q2875.0 DO 0 1.1	-QN1.1_Q	Shot Pins 1 (RST)
=V1GL1UQ54UQ1+.GL1UQ54UQ1/1.4	Q2875.1 DO 1 1.2	-QN1.2_Q	Shot Pins 1 (SET)
=V1GL1UQ54UQ2+.GL1UQ54UQ2/1.4	Q2875.2 DO 2 2.1	-QN2.1_Q	Shot Pin 2 (RST)
=V1GL1UQ54UQ2+.GL1UQ54UQ2/1.4	Q2875.3 DO 3 2.2	-QN2.2_Q	Shot Pin 2 (SET)

-KF1.22
=V1GL1UQ54UQ3+.GL1UQ54UQ3/1.3
=V1GL1UQ54UQ4+.GL1UQ54UQ4/1.3

FESTO

=V1GL1UQ54UQ3+.GL1UQ54UQ3/1.4	Q2875.4 DO 0 1.1	-QN3.1_Q	Shot Pins 3 (RST)
=V1GL1UQ54UQ3+.GL1UQ54UQ3/1.4	Q2875.5 DO 1 1.2	-QN3.2_Q	Shot Pins 3 (SET)
=V1GL1UQ54UQ4+.GL1UQ54UQ4/1.4	Q2875.6 DO 2 2.1	-QN4.1_Q	Shot Pins 4 (RST)
=V1GL1UQ54UQ4+.GL1UQ54UQ4/1.4	Q2875.7 DO 3 2.2	-QN4.2_Q	Shot Pins 4 (SET)

-KF1.23
=V1GL1UQ54UQ5+.GL1UQ54UQ5/1.3
=V1GL1UQ54UQ6+.GL1UQ54UQ6/1.3

FESTO

=V1GL1UQ54UQ5+.GL1UQ54UQ5/1.4	Q2876.0 DO 0 1.1	-QN5.1_Q	Shot Pins 5 (RST)
=V1GL1UQ54UQ5+.GL1UQ54UQ5/1.4	Q2876.1 DO 1 1.2	-QN5.2_Q	Shot Pins 5 (SET)
=V1GL1UQ54UQ6+.GL1UQ54UQ6/1.4	Q2876.2 DO 0 2.1	-QN6.1_Q	Shot Pin 6 (RST)
=V1GL1UQ54UQ6+.GL1UQ54UQ6/1.4	Q2876.3 DO 1 2.2	-QN6.2_Q	Shot Pin 6 (SET)

-KF1.24
=V1GL1UQ54UQ7+.GL1UQ54UQ7/1.3
=V1GL1UQ54UQ9+.GL1UQ54UQ9/1.3

FESTO

=V1GL1UQ54UQ7+.GL1UQ54UQ7/1.4	Q2876.4 DO 0 1.1	-QN7.1_Q	Shot Pin 7 (RST)
=V1GL1UQ54UQ7+.GL1UQ54UQ7/1.4	Q2876.5 DO 1 1.2	-QN7.2_Q	Shot Pin 7 (SET)
=V1GL1UQ54UQ9+.GL1UQ54UQ9/1.4	Q2876.6 DO 0 2.1	-QN8.1_Q	Shot Pins 9 (RST)
=V1GL1UQ54UQ9+.GL1UQ54UQ9/1.4	Q2876.7 DO 1 2.2	-QN8.2_Q	Shot Pins 9 (SET)

-KF1.25
=V1GL1UQ54UQ10+.GL1UQ54UQ10/1.3
=V1GL1UQ54UQ11+.GL1UQ54UQ11/1.3

FESTO

=V1GL1UQ54UQ10+.GL1UQ54UQ10/1.4	Q2877.0 DO 0 1.1	-QN9.1_Q	Clamps 10 (RST)
=V1GL1UQ54UQ10+.GL1UQ54UQ10/1.4	Q2877.1 DO 1 1.2	-QN9.2_Q	Clamps 10 (SET)
=V1GL1UQ54UQ11+.GL1UQ54UQ11/1.4	Q2877.2 DO 0 2.1	-QN10.1_Q	Clamps 11 (RST)
=V1GL1UQ54UQ11+.GL1UQ54UQ11/1.4	Q2877.3 DO 1 2.2	-QN10.2_Q	Clamps 11 (SET)

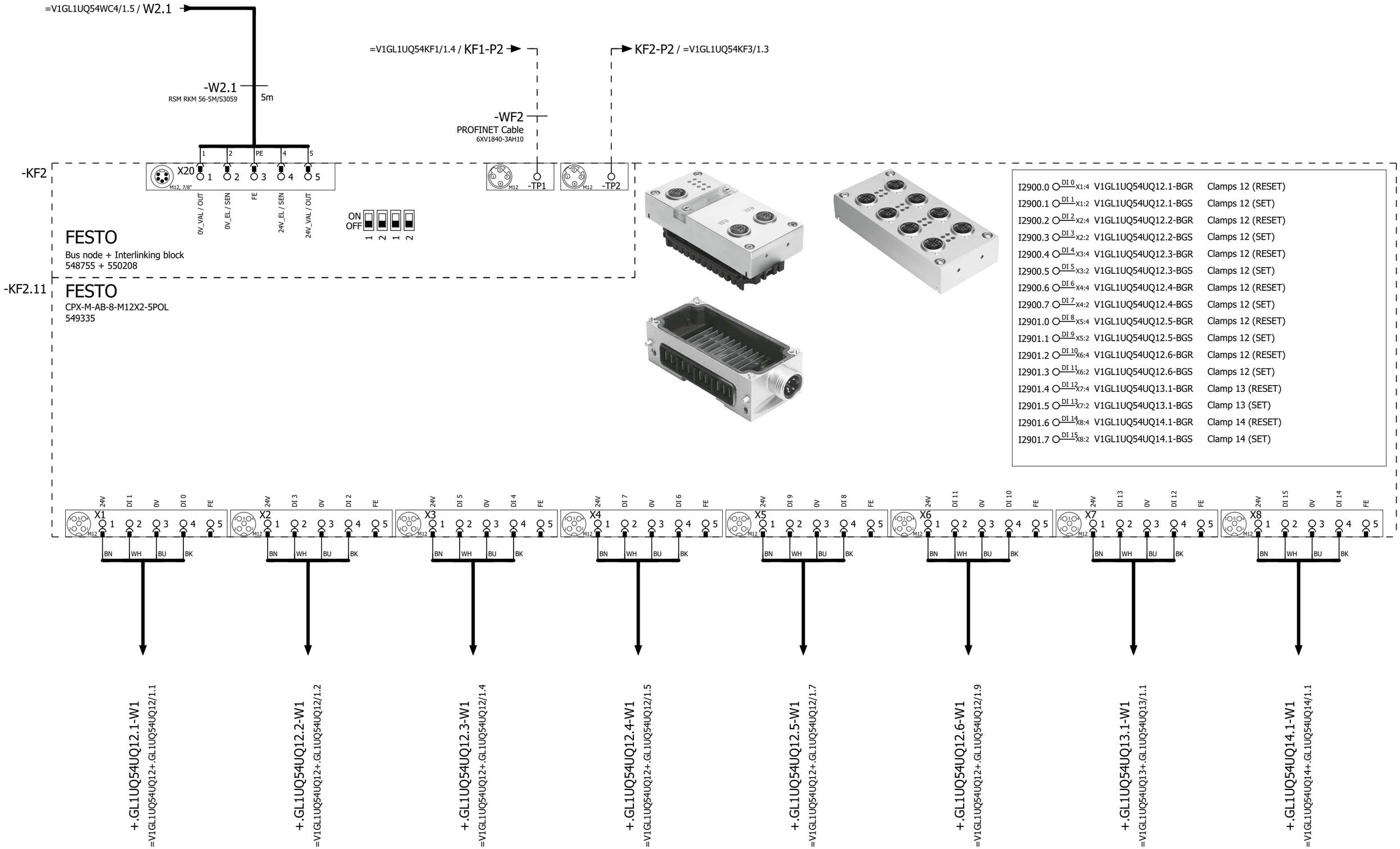

=V1GL1UQ54KF1/6

2

			Date	1/11/2023	Volvo Trucks North America	Valiant TMS	CONNECTING MOD. FOR VTSA MANIFOLD	Drawing name: =2V10&EFS-EL		= V1GL1UQ54KF2	
			Ed.	MKLEPADLO						+ V1GL1UQ54	
			Appr		P6700 Bodyside RH - Robot Cell 2V10			Document type: EFS	Project nr: 22-16150		Page 1
Modification	Date	Name	Original		Replacement of / Replaced by	Scale 1:1					1579

I2902.0	DI 0 X1:4	V1GL1UQ54UQ15.1-BGR	Clamp 15 (RESET)
I2902.1	DI 1 X1:2	V1GL1UQ54UQ15.1-BGS	Clamp 15 (SET)
I2902.2	DI 2 X2:4	V1GL1UQ54UQ16.1-BGR	Clamps 16 (RESET)
I2902.3	DI 3 X2:2	V1GL1UQ54UQ16.1-BGS	Clamps 16 (SET)
I2902.4	DI 4 X3:4	V1GL1UQ54UQ16.2-BGR	Clamps 16 (RESET)
I2902.5	DI 5 X3:2	V1GL1UQ54UQ16.2-BGS	Clamps 16 (SET)
I2902.6	DI 6 X4:4	V1GL1UQ54UQ17.1-BGR	Clamp 17 (RESET)
I2902.7	DI 7 X4:2	V1GL1UQ54UQ17.1-BGS	Clamp 17 (SET)
I2903.0	DI 8 X5:4	V1GL1UQ54UQ18.1-BGR	Shot Pins 18 (RESET)
I2903.1	DI 9 X5:2	V1GL1UQ54UQ18.1-BGS	Shot Pins 18 (SET)
I2903.2	DI 10 X6:4	V1GL1UQ54UQ18.2-BGR	Shot Pins 18 (RESET)
I2903.3	DI 11 X6:2	V1GL1UQ54UQ18.2-BGS	Shot Pins 18 (SET)
I2903.4	DI 12 X7:4	V1GL1UQ54UQ19.1-BGR	Clamps 19 (RESET)
I2903.5	DI 13 X7:2	V1GL1UQ54UQ19.1-BGS	Clamps 19 (SET)
I2903.6	DI 14 X8:4	V1GL1UQ54UQ19.2-BGR	Clamps 19 (RESET)
I2903.7	DI 15 X8:2	V1GL1UQ54UQ19.2-BGS	Clamps 19 (SET)

-KF2.12

FESTO
CPX-M-AB-8-M12X2-5POL
549335

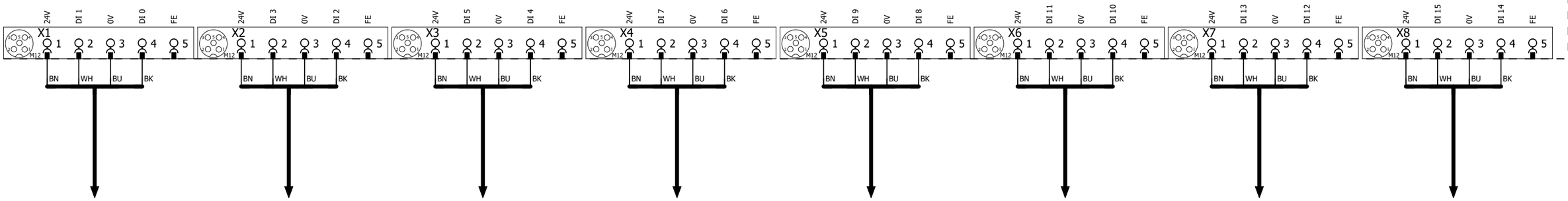

+.GL1UQ54UQ15.1-W1
=V1GL1UQ54UQ15+.GL1UQ54UQ15/1.1

+.GL1UQ54UQ16.1-W1
=V1GL1UQ54UQ16+.GL1UQ54UQ16/1.1

+.GL1UQ54UQ16.2-W1
=V1GL1UQ54UQ16+.GL1UQ54UQ16/1.2

+.GL1UQ54UQ17.1-W1
=V1GL1UQ54UQ17+.GL1UQ54UQ17/1.1

+.GL1UQ54UQ18.1-W1
=V1GL1UQ54UQ18+.GL1UQ54UQ18/1.1

+.GL1UQ54UQ18.2-W1
=V1GL1UQ54UQ18+.GL1UQ54UQ18/1.2

+.GL1UQ54UQ19.1-W1
=V1GL1UQ54UQ19+.GL1UQ54UQ19/1.1

+.GL1UQ54UQ19.2-W1
=V1GL1UQ54UQ19+.GL1UQ54UQ19/1.2

-KF2.13

FESTO

CPX-M-AB-8-M12X2-5POL
549335

I2904.0	DI 0 X1:4	V1GL1UQ54UQ20.1-BGR	Clamp 20 (RESET)
I2904.1	DI 1 X1:2	V1GL1UQ54UQ20.1-BGS	Clamp 20 (SET)
I2904.2	DI 2 X2:4	V1GL1UQ54UQ21.1-BGR	Shot Pin 21 (RESET)
I2904.3	DI 3 X2:2	V1GL1UQ54UQ21.1-BGS	Shot Pin 21 (SET)
I2904.4	DI 4 X3:4	I2904.4	Spare
I2904.5	DI 5 X3:2	I2904.5	Spare
I2904.6	DI 6 X4:4	I2904.6	Spare
I2904.7	DI 7 X4:2	I2904.7	Spare
I2905.0	DI 8 X5:4	I2905.0	Spare
I2905.1	DI 9 X5:2	I2905.1	Spare
I2905.2	DI 10 X6:4	I2905.2	Spare
I2905.3	DI 11 X6:2	I2905.3	Spare
I2905.4	DI 12 X7:4	I2905.4	Spare
I2905.5	DI 13 X7:2	I2905.5	Spare
I2905.6	DI 14 X8:4	I2905.6	Spare
I2905.7	DI 15 X8:2	I2905.7	Spare

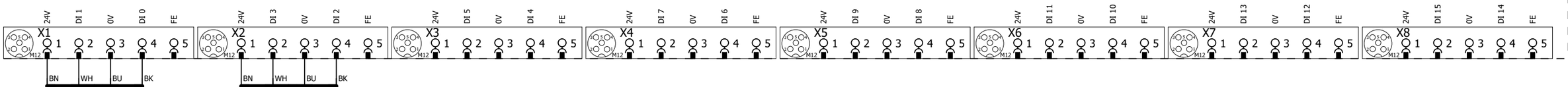

+.GL1UQ54UQ20.1-W1
=V1GL1UQ54UQ20+.GL1UQ54UQ20/1.1

+.GL1UQ54UQ21.1-W1
=V1GL1UQ54UQ21+.GL1UQ54UQ21/1.1

I2906.0	DI 0 X1:4	V1GL1UQ54-BG01	Sensor Door Frame Assembly
I2906.1	DI 1 X1:2	V1GL1UQ54-BG02	Sensor Door Frame Assembly
I2906.2	DI 2 X2:4	V1GL1UQ54-BG03	Sensor Outer Front Sill
I2906.3	DI 3 X2:2	V1GL1UQ54-BG04	Sensor Extruded Seal Front
I2906.4	DI 4 X3:4	V1GL1UQ54-BG05	Sensor Outer Front Sill
I2906.5	DI 5 X3:2	V1GL1UQ54-BG06	Sensor Extruded Seal Rear
I2906.6	DI 6 X4:4	V1GL1UQ54-BG07	Sensor Rear Sill Sleeper
I2906.7	DI 7 X4:2	V1GL1UQ54-BG08	Sensor Rear Sill Sleeper
I2907.0	DI 8 X5:4	V1GL1UQ54-BG09	Sensor Lug Door Mnt Assembly
I2907.1	DI 9 X5:2	V1GL1UQ54-BG10	Sensor Lug Door Mnt Assembly
I2907.2	DI 10 X6:4	V1GL1UQ54-BG11	Sensor Lower Cabinet Mnt Assembly
I2907.3	DI 11 X6:2	V1GL1UQ54-BG12	Sensor Header Sub Assembly
I2907.4	DI 12 X7:4	V1GL1UQ54-BG13	Sensor Header Sub Assembly
I2907.5	DI 13 X7:2	V1GL1UQ54-BG14	Sensor Bunk Support
I2907.6	DI 14 X8:4	V1GL1UQ54-BG15	Sensor Rear Lower Assembly
I2907.7	DI 15 X8:2	V1GL1UQ54-BG16	Sensor Rear Lower Assembly

-KF2.14

FESTO
CPX-M-AB-8-M12X2-5POL
549335

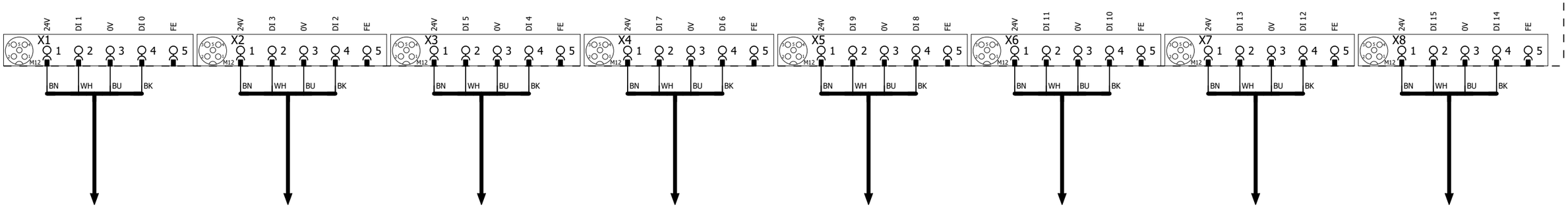

-XG1/2
=V1GL1UQ54BG0/1.1

-XG3/4
=V1GL1UQ54BG0/1.4

-XG5/6
=V1GL1UQ54BG0/1.6

-XG7/8
=V1GL1UQ54BG0/2.1

-XG9/10
=V1GL1UQ54BG0/2.4

-XG11/12
=V1GL1UQ54BG0/2.6

-XG13/14
=V1GL1UQ54BG0/3.1

-XG15/16
=V1GL1UQ54BG0/3.4

I2908.0	DI 0 X1:4	V1GL1UQ54-BG17	Sensor Bunk Support
I2908.1	DI 1 X1:2	V1GL1UQ54-BG18	Sensor C-Pillar Assembly
I2908.2	DI 2 X2:4	V1GL1UQ54-BG19	Sensor C-Pillar Assembly
I2908.3	DI 3 X2:2	V1GL1UQ54-BG20	Sensor Blind Lower
I2908.4	DI 4 X3:4	V1GL1UQ54-BG21	Sensor Blind Lower
I2908.5	DI 5 X3:2	V1GL1UQ54-BG22	Sensor Vertical Member
I2908.6	DI 6 X4:4	V1GL1UQ54-BG23	Sensor Vertical Member
I2908.7	DI 7 X4:2	V1GL1UQ54-BG24	Sensor Cabinet Mount
I2909.0	DI 8 X5:4	V1GL1UQ54-BG25	Sensor Header Sub Assembly
I2909.1	DI 9 X5:2	V1GL1UQ54-BG26	Sensor Cabinet Mount
I2909.2	DI 10 X6:4	V1GL1UQ54-BG27	Sensor Lower Cabinet Mnt Assembly
I2909.3	DI 11 X6:2	V1GL1UQ54-BG28	Sensor Intermed H R Long
I2909.4	DI 12 X7:4	V1GL1UQ54-BG29	Sensor Cabinet Mount
I2909.5	DI 13 X7:2	V1GL1UQ54-BG30	Sensor Cabinet Mount
I2909.6	DI 14 X8:4	V1GL1UQ54-BG31	Sensor Cabinet Mount
I2909.7	DI 15 X8:2	V1GL1UQ54-BG32	Sensor Cabinet Mount

-KF2.15

FESTO
CPX-M-AB-8-M12X2-5POL
549335

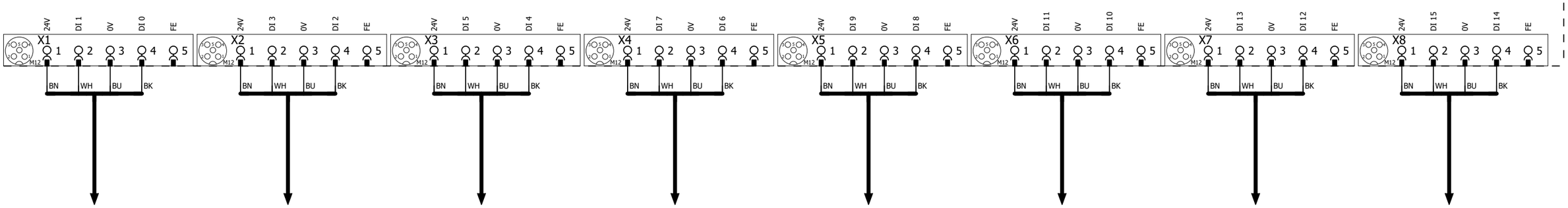

-XG17/18
=V1GL1UQ54BG0/3.6

-XG19/20
=V1GL1UQ54BG0/4.1

-XG21/22
=V1GL1UQ54BG0/4.4

-XG23/24
=V1GL1UQ54BG0/4.6

-XG25/26
=V1GL1UQ54BG0/5.1

-XG27/28
=V1GL1UQ54BG0/5.4

-XG29/30
=V1GL1UQ54BG0/5.6

-XG31/32
=V1GL1UQ54BG0/6.1

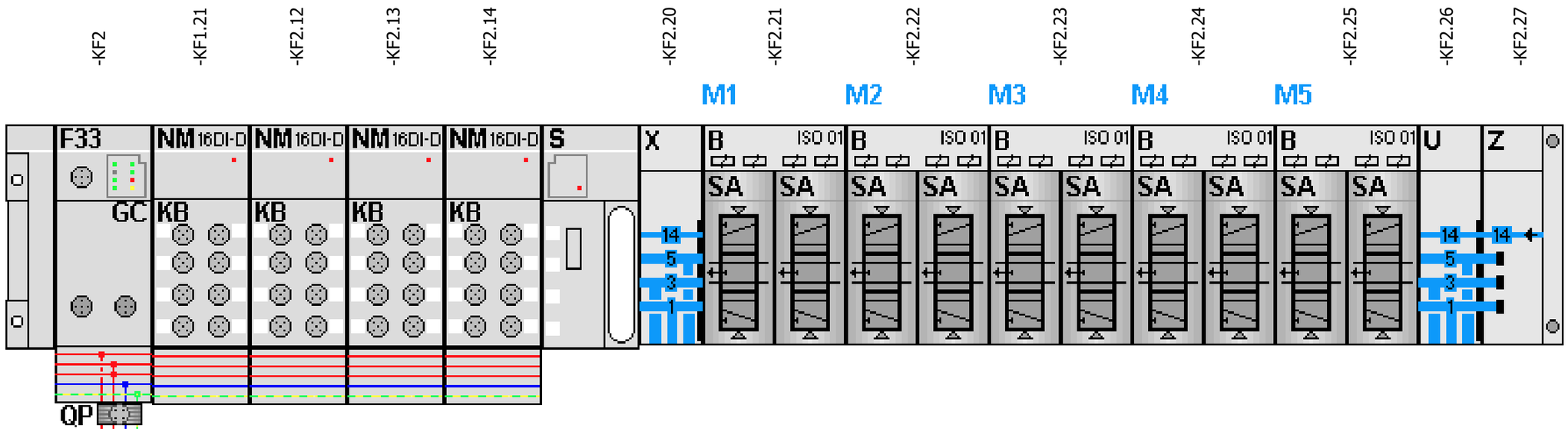

-KF2.21

=V1GL1UQ54UQ12+.GL1UQ54UQ12/1.3
=V1GL1UQ54UQ13+.GL1UQ54UQ13/1.3

FESTO

=V1GL1UQ54UQ12+.GL1UQ54UQ12/1.4	Q2900.0 DO 0 1.1	-QN11.1_Q	Clamps 12 (RST)
=V1GL1UQ54UQ12+.GL1UQ54UQ12/1.4	Q2900.1 DO 1 1.2	-QN11.2_Q	Clamps 12 (SET)
=V1GL1UQ54UQ13+.GL1UQ54UQ13/1.4	Q2900.2 DO 2 2.1	-QN12.1_Q	Clamp 13 (RST)
=V1GL1UQ54UQ13+.GL1UQ54UQ13/1.4	Q2900.3 DO 3 2.2	-QN12.2_Q	Clamp 13 (SET)

-KF2.22

=V1GL1UQ54UQ14+.GL1UQ54UQ14/1.3
=V1GL1UQ54UQ15+.GL1UQ54UQ15/1.3

FESTO

=V1GL1UQ54UQ14+.GL1UQ54UQ14/1.4	Q2900.4 DO 0 1.1	-QN13.1_Q	Clamp 14 (RST)
=V1GL1UQ54UQ14+.GL1UQ54UQ14/1.4	Q2900.5 DO 1 1.2	-QN13.2_Q	Clamp 14 (SET)
=V1GL1UQ54UQ15+.GL1UQ54UQ15/1.4	Q2900.6 DO 2 2.1	-QN14.1_Q	Clamp 15 (RST)
=V1GL1UQ54UQ15+.GL1UQ54UQ15/1.4	Q2900.7 DO 3 2.2	-QN14.2_Q	Clamp 15 (SET)

-KF2.23

=V1GL1UQ54UQ16+.GL1UQ54UQ16/1.3
=V1GL1UQ54UQ17+.GL1UQ54UQ17/1.3

FESTO

=V1GL1UQ54UQ16+.GL1UQ54UQ16/1.4	Q2901.0 DO 0 1.1	-QN15.1_Q	Clamps 16 (RST)
=V1GL1UQ54UQ16+.GL1UQ54UQ16/1.4	Q2901.1 DO 1 1.2	-QN15.2_Q	Clamps 16 (SET)
=V1GL1UQ54UQ17+.GL1UQ54UQ17/1.4	Q2901.2 DO 0 2.1	-QN16.1_Q	Clamp 17 (RST)
=V1GL1UQ54UQ17+.GL1UQ54UQ17/1.4	Q2901.3 DO 1 2.2	-QN16.2_Q	Clamp 17 (SET)

-KF2.24

=V1GL1UQ54UQ18+.GL1UQ54UQ18/1.3
=V1GL1UQ54UQ19+.GL1UQ54UQ19/1.3

FESTO

=V1GL1UQ54UQ18+.GL1UQ54UQ18/1.4	Q2901.4 DO 0 1.1	-QN17.1_Q	Shot Pins 18 (RST)
=V1GL1UQ54UQ18+.GL1UQ54UQ18/1.4	Q2901.5 DO 1 1.2	-QN17.2_Q	Shot Pins 18 (SET)
=V1GL1UQ54UQ19+.GL1UQ54UQ19/1.4	Q2901.6 DO 0 2.1	-QN18.1_Q	Clamps 19 (RST)
=V1GL1UQ54UQ19+.GL1UQ54UQ19/1.4	Q2901.7 DO 1 2.2	-QN18.2_Q	Clamps 19 (SET)

-KF2.25

=V1GL1UQ54UQ20+.GL1UQ54UQ20/1.3
=V1GL1UQ54UQ21+.GL1UQ54UQ21/1.3

FESTO

=V1GL1UQ54UQ20+.GL1UQ54UQ20/1.4	Q2902.0 DO 0 1.1	-QN19.1_Q	Clamp 20 (RST)
=V1GL1UQ54UQ20+.GL1UQ54UQ20/1.4	Q2902.1 DO 1 1.2	-QN19.2_Q	Clamp 20 (SET)
=V1GL1UQ54UQ21+.GL1UQ54UQ21/1.4	Q2902.2 DO 0 2.1	-QN20.1_Q	Shot Pin 21 (RST)
=V1GL1UQ54UQ21+.GL1UQ54UQ21/1.4	Q2902.3 DO 1 2.2	-QN20.2_Q	Shot Pin 21 (SET)

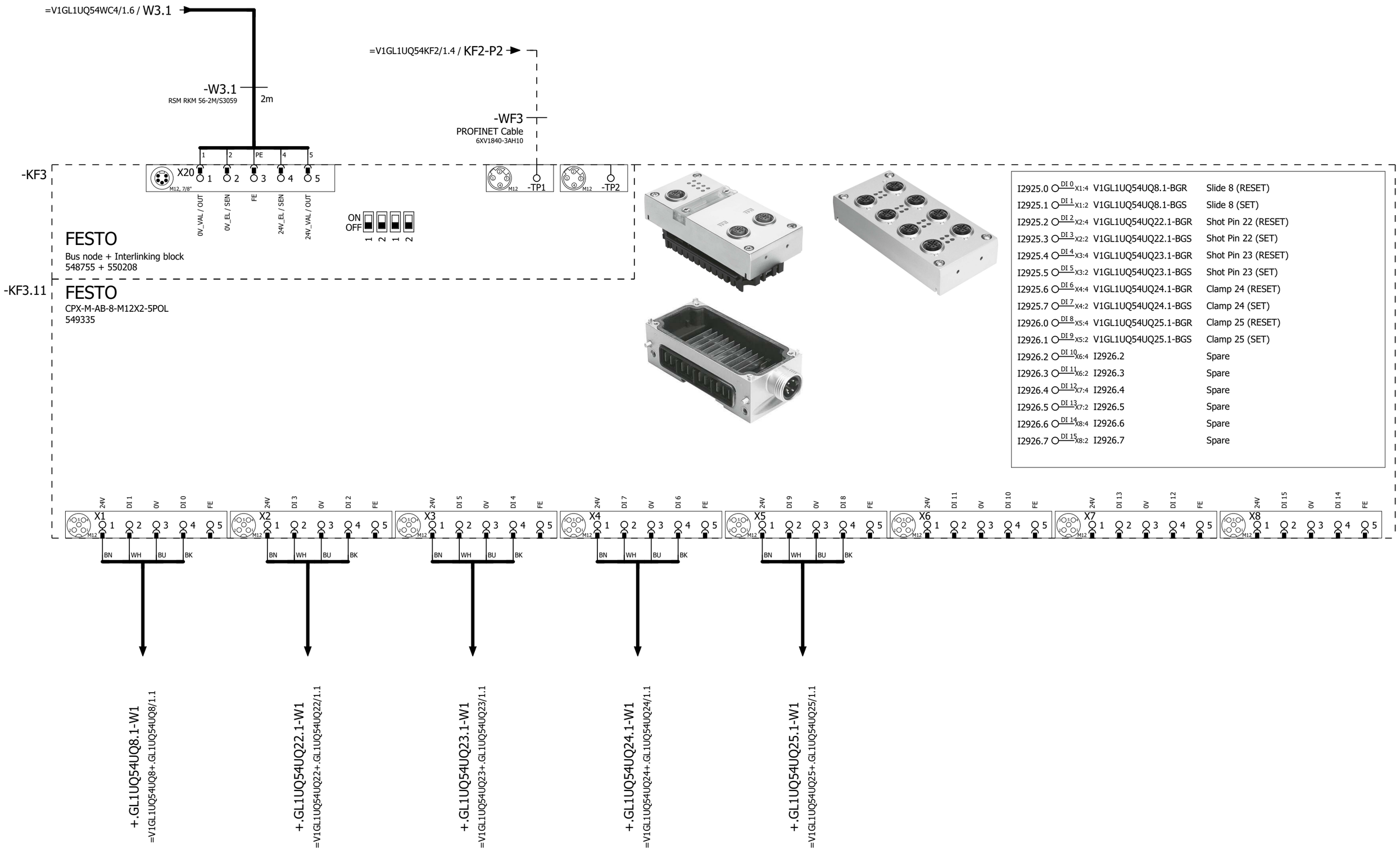

=V1GL1UQ54KF2/6

2

			Date	1/11/2023	Volvo Trucks North America	Valiant TMS	CONNECTING MOD. FOR VTSA MANIFOLD	Drawing name: =2V10&EFS-EL		= V1GL1UQ54KF3	
			Ed.	MKLEPADLO						+ V1GL1UQ54	
			Appr		P6700 Bodyside RH - Robot Cell 2V10			Document type: EFS	Project nr: 22-16150		Page 1
Modification	Date	Name	Original		Replacement of / Replaced by	Scale 1:1					1579

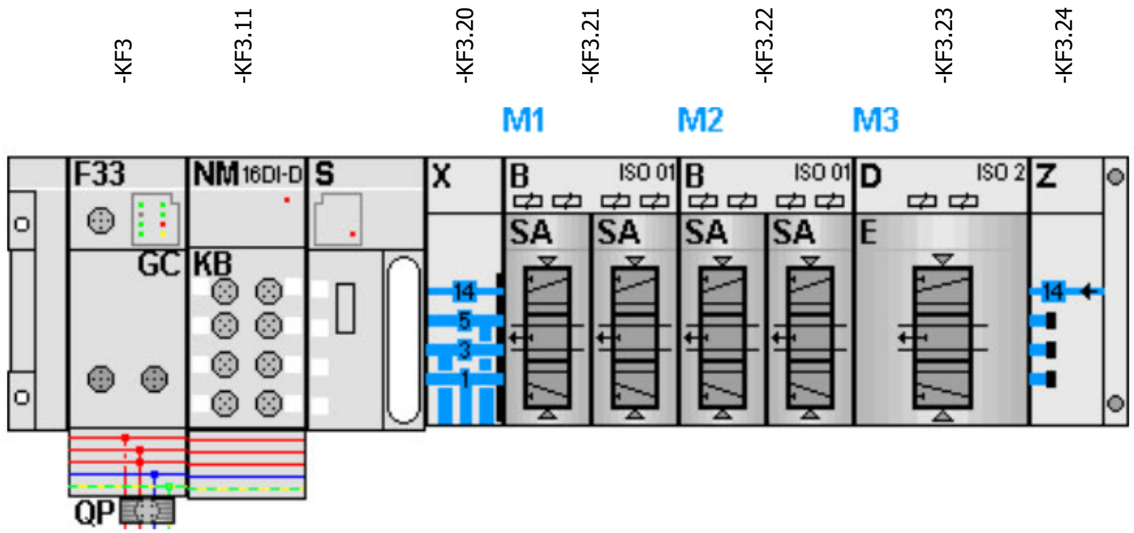

-KF3.21
=V1GL1UQ54UQ22+.GL1UQ54UQ22/1.3
=V1GL1UQ54UQ23+.GL1UQ54UQ23/1.3

FESTO

=V1GL1UQ54UQ22+.GL1UQ54UQ22/1.4	Q2925.0 DO 0 1.1	-QN21.1_Q	Shot Pin 22 (RST)
=V1GL1UQ54UQ22+.GL1UQ54UQ22/1.4	Q2925.1 DO 1 1.2	-QN21.2_Q	Shot Pin 22 (SET)
=V1GL1UQ54UQ23+.GL1UQ54UQ23/1.4	Q2925.2 DO 2 2.1	-QN22.1_Q	Shot Pin 23 (RST)
=V1GL1UQ54UQ23+.GL1UQ54UQ23/1.4	Q2925.3 DO 3 2.2	-QN22.2_Q	Shot Pin 23 (SET)

-KF3.22
=V1GL1UQ54UQ24+.GL1UQ54UQ24/1.3
=V1GL1UQ54UQ25+.GL1UQ54UQ25/1.3

FESTO

=V1GL1UQ54UQ24+.GL1UQ54UQ24/1.4	Q2925.4 DO 0 1.1	-QN23.1_Q	Clamp 24 (RST)
=V1GL1UQ54UQ24+.GL1UQ54UQ24/1.4	Q2925.5 DO 1 1.2	-QN23.2_Q	Clamp 24 (SET)
=V1GL1UQ54UQ25+.GL1UQ54UQ25/1.4	Q2925.6 DO 2 2.1	-QN24.1_Q	Clamp 25 (RST)
=V1GL1UQ54UQ25+.GL1UQ54UQ25/1.4	Q2925.7 DO 3 2.2	-QN24.2_Q	Clamp 25 (SET)

-KF3.23
=V1GL1UQ54UQ8+.GL1UQ54UQ8/1.3

FESTO

=V1GL1UQ54UQ8+.GL1UQ54UQ8/1.4	Q2926.0 DO 0 1.1	-QN25.1_Q	Slide 8 (RST)
=V1GL1UQ54UQ8+.GL1UQ54UQ8/1.4	Q2926.1 DO 1 1.2	-QN25.2_Q	Slide 8 (SET)

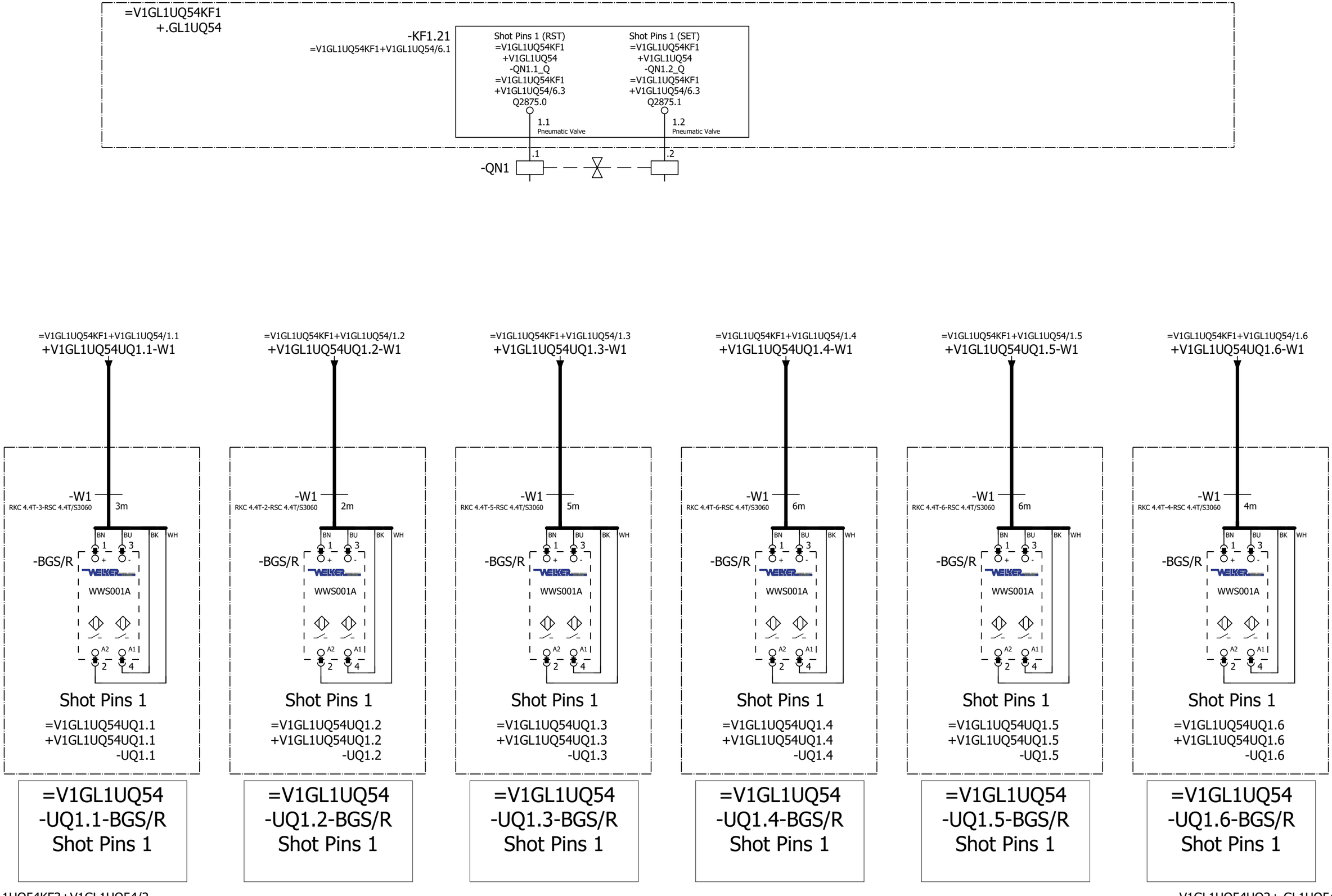

			Date	1/11/2023	Volvo Trucks North America		Valiant TMS	FESTO DQ CONNECTION QN1	Drawing name: =2V10&EFS-EL	= V1GL1UQ54UQ1	
			Ed.	MKLEPADLO						+ V1GL1UQ54UQ1	
			Appr		P6700 Bodyside RH - Robot Cell 2V10				Document type: EFS	Project nr: 22-16150	Page 1
Modification	Date	Name	Original		Replacement of	Replaced by	Scale 1:1				1579

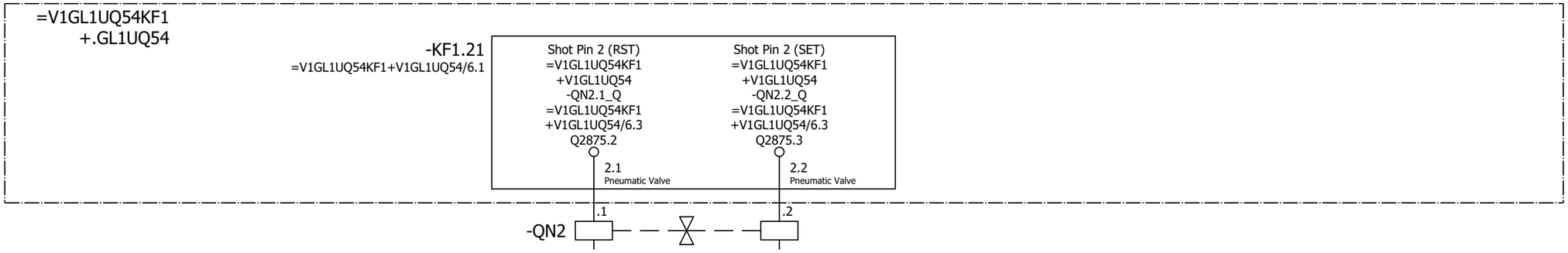

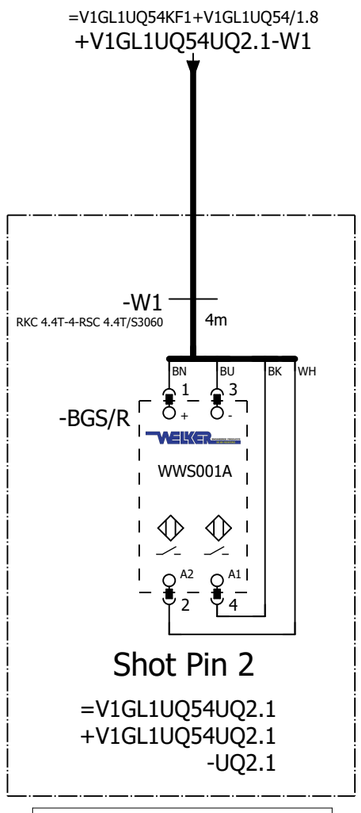

=V1GL1UQ54
-UQ2.1-BGS/R
Shot Pin 2

=V1GL1UQ54UQ1+.GL1UQ54UQ1/1

=V1GL1UQ54UQ3+.GL1UQ54UQ3/1

			Date	1/11/2023	Volvo Trucks North America		Valiant TMS	FESTO DQ CONNECTION QN2	Drawing name: =2V10&EFS-EL	= V1GL1UQ54UQ2	
			Ed.	MKLEPADLO						+ V1GL1UQ54UQ2	
			Appr		P6700 Bodyside RH - Robot Cell 2V10				Document type: EFS	Project nr: 22-16150	Page 1
Modification	Date	Name	Original		Replacement of	Replaced by	Scale 1:1				1579

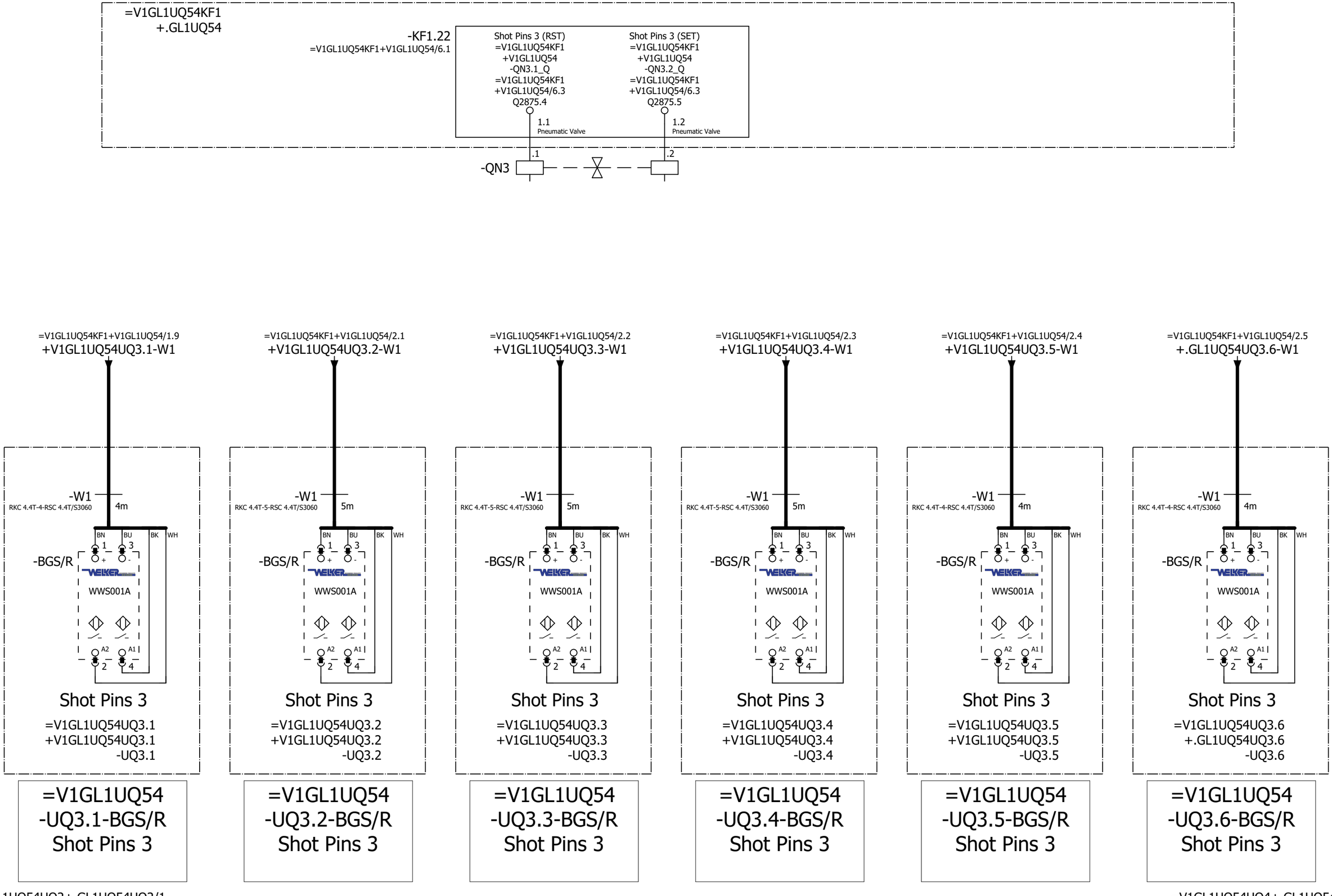

			Date	1/11/2023	Volvo Trucks North America		Valiant TMS	FESTO DQ CONNECTION QN3	Drawing name: =2V10&EFS-EL	= V1GL1UQ54UQ3	
			Ed.	MKLEPADLO						+ V1GL1UQ54UQ3	
			Appr		P6700 Bodyside RH - Robot Cell 2V10				Document type: EFS	Project nr: 22-16150	Page 1
Modification	Date	Name	Original		Replacement of	Replaced by	Scale 1:1				1579

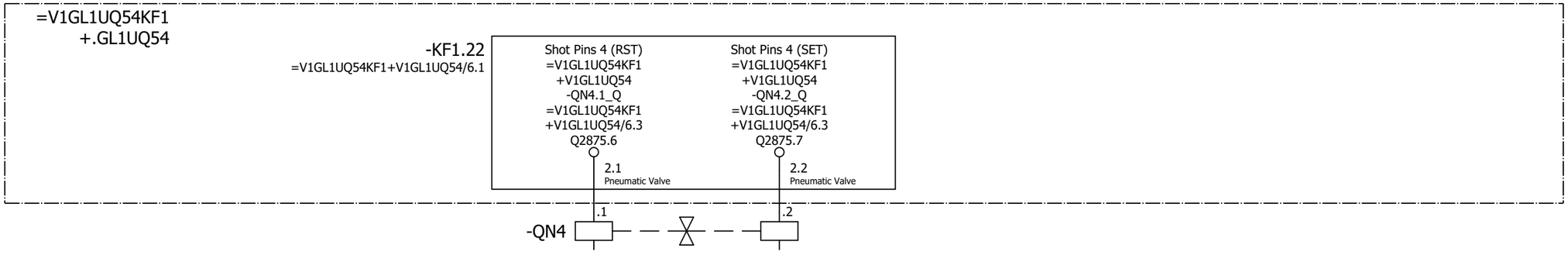

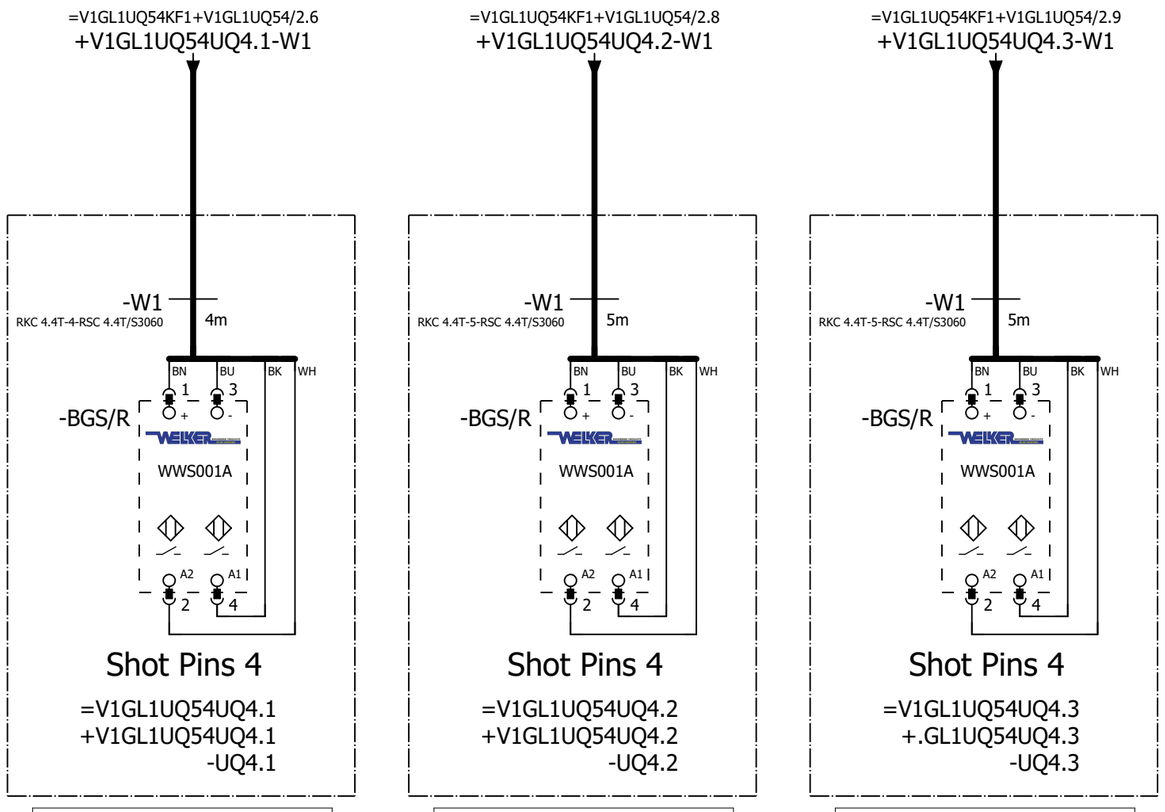

=V1GL1UQ54
-UQ4.1-BGS/R
Shot Pins 4

=V1GL1UQ54
-UQ4.2-BGS/R
Shot Pins 4

=V1GL1UQ54
-UQ4.3-BGS/R
Shot Pins 4

=V1GL1UQ54UQ3+.GL1UQ54UQ3/1

=V1GL1UQ54UQ5+.GL1UQ54UQ5/1

			Date	1/11/2023	Volvo Trucks North America		Valiant TMS	FESTO DQ CONNECTION QN4	Drawing name: =2V10&EFS-EL	= V1GL1UQ54UQ4	
			Ed.	MKLEPADLO						+ V1GL1UQ54UQ4	
			Appr		P6700 Bodyside RH - Robot Cell 2V10				Document type: EFS	Project nr: 22-16150	Page 1
Modification	Date	Name	Original		Replacement of	Replaced by	Scale 1:1				1579

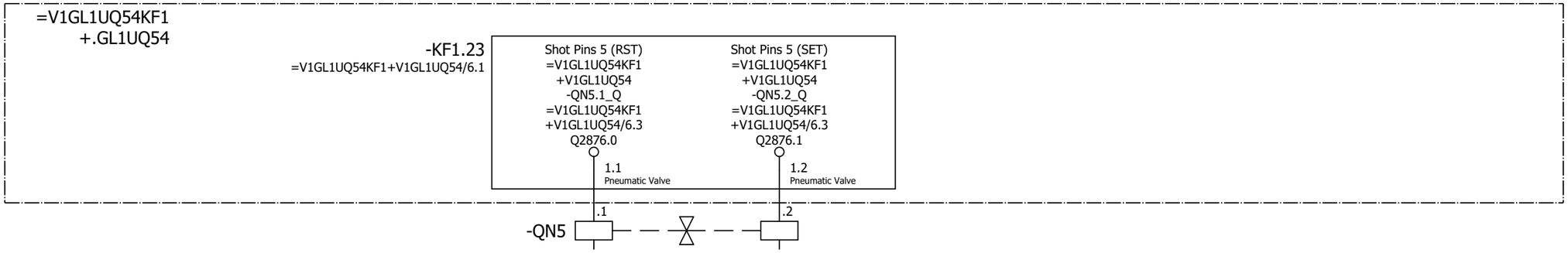

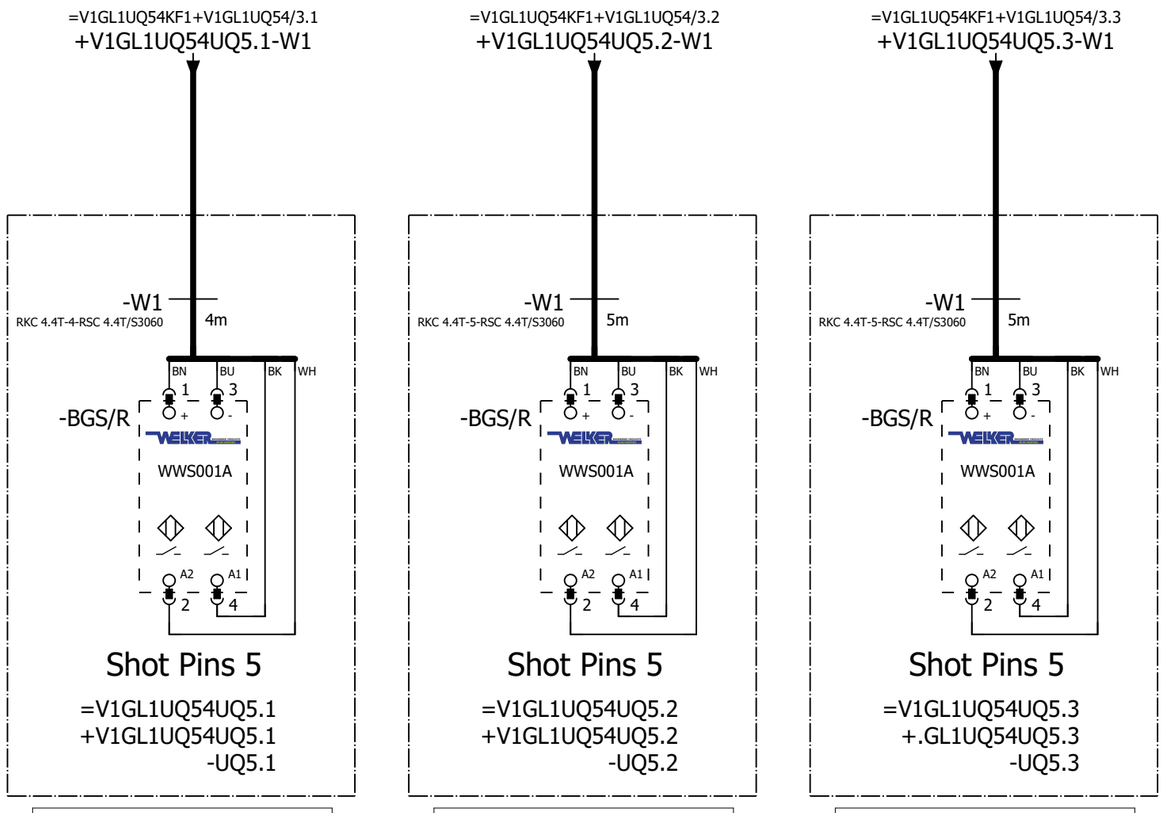

=V1GL1UQ54
-UQ5.1-BGS/R
Shot Pins 5

=V1GL1UQ54
-UQ5.2-BGS/R
Shot Pins 5

=V1GL1UQ54
-UQ5.3-BGS/R
Shot Pins 5

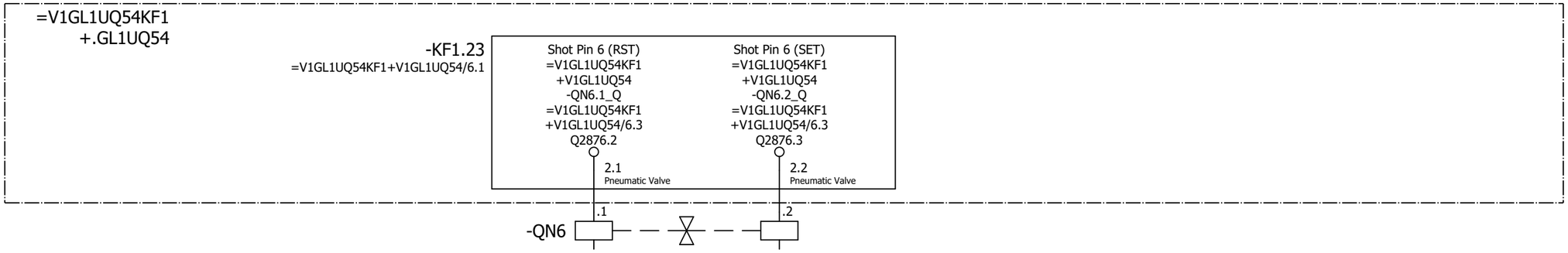

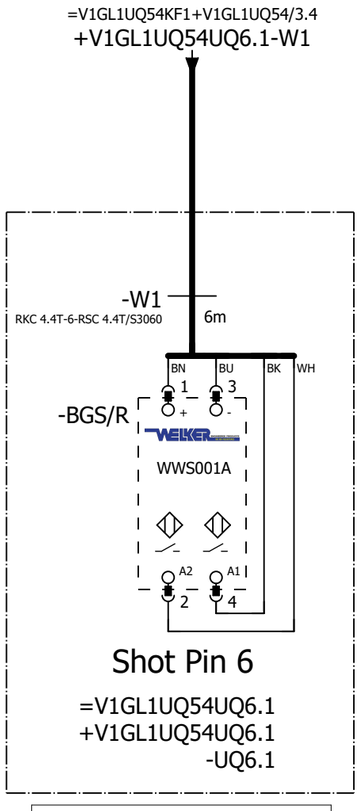

=V1GL1UQ54
-UQ6.1-BGS/R
Shot Pin 6

=V1GL1UQ54UQ5+.GL1UQ54UQ5/1

=V1GL1UQ54UQ7+.GL1UQ54UQ7/1

			Date	1/11/2023	Volvo Trucks North America	Valiant TMS	FESTO DQ CONNECTION QN6	Drawing name: =2V10&EFS-EL	= V1GL1UQ54UQ6	
			Ed.	MKLEPADLO					+ V1GL1UQ54UQ6	
			Appr		P6700 Bodyside RH - Robot Cell 2V10			Document type: EFS	Project nr: 22-16150	Page 1
Modification	Date	Name	Original		Replacement of	Replaced by	Scale 1:1			1579

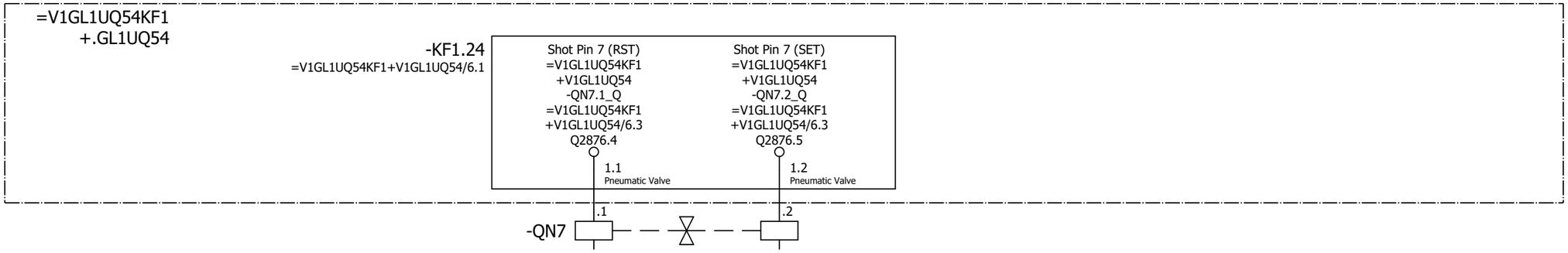

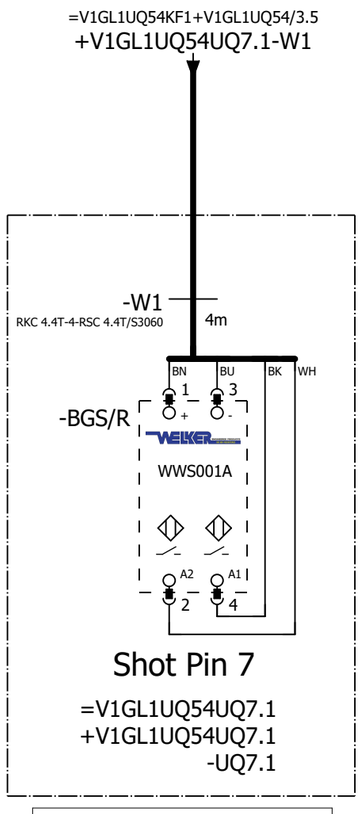

=V1GL1UQ54
-UQ7.1-BGS/R
Shot Pin 7

=V1GL1UQ54UQ6+.GL1UQ54UQ6/1

=V1GL1UQ54UQ8+.GL1UQ54UQ8/1

			Date	1/11/2023	Volvo Trucks North America		Valiant TMS	FESTO DQ CONNECTION QN7	Drawing name: =2V10&EFS-EL	= V1GL1UQ54UQ7	
			Ed.	MKLEPADLO						+ V1GL1UQ54UQ7	
			Appr		P6700 Bodyside RH - Robot Cell 2V10				Document type: EFS	Project nr: 22-16150	Page 1
Modification	Date	Name	Original		Replacement of	Replaced by	Scale 1:1				1579

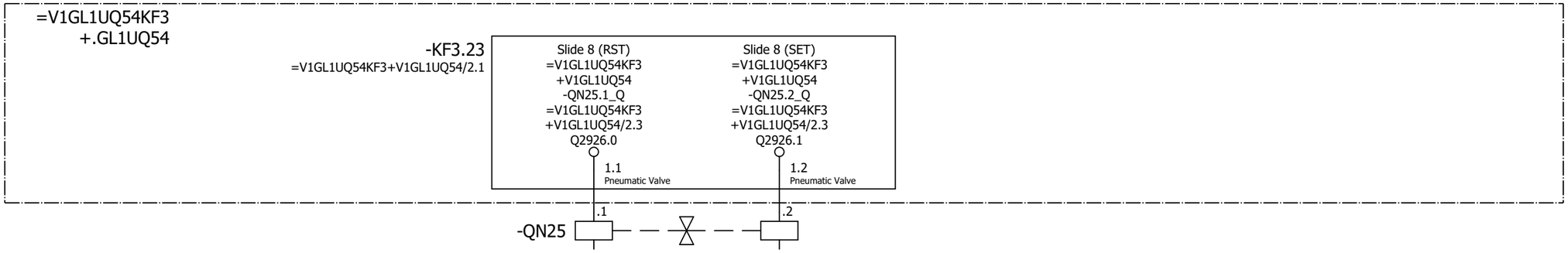

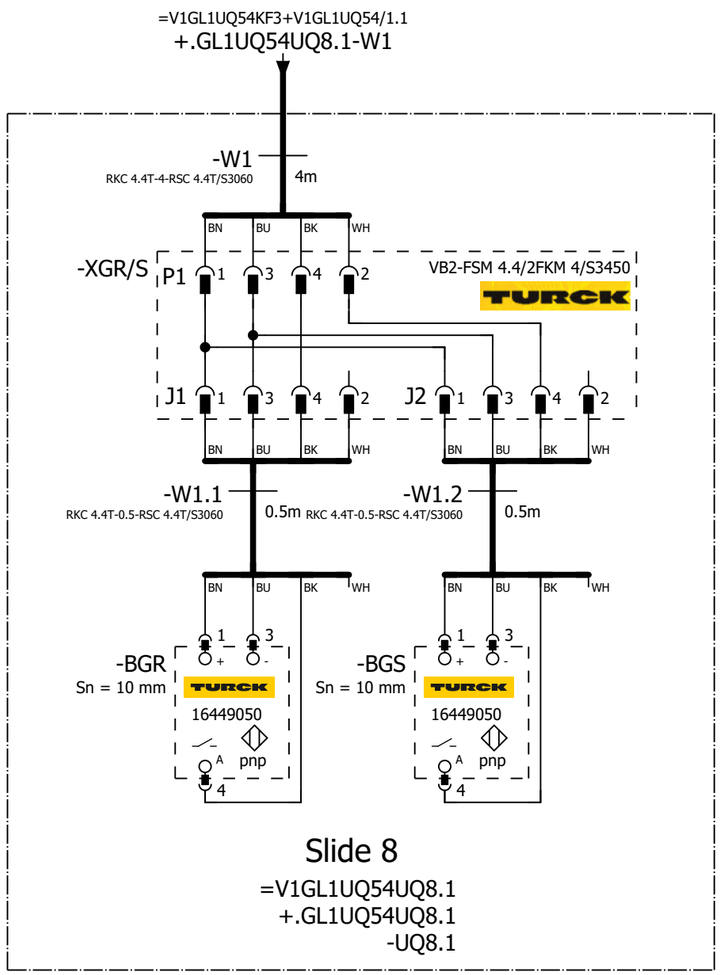

=V1GL1UQ54 -UQ8.1-BGR Slide 8	=V1GL1UQ54 -UQ8.1-BGS Slide 8

=V1GL1UQ54UQ7+.GL1UQ54UQ7/1

=V1GL1UQ54UQ9+.GL1UQ54UQ9/1

			Date	1/11/2023	Volvo Trucks North America	Valiant TMS	FESTO DQ CONNECTION QN25	Drawing name: =2V10&EFS-EL		= V1GL1UQ54UQ8	
			Ed.	MKLEPADLO						+ V1GL1UQ54UQ8	
			Appr		P6700 Bodyside RH - Robot Cell 2V10			Document type: EFS	Project nr: 22-16150		Page 1
Modification	Date	Name	Original		Replacement of / Replaced by	Scale 1:1					1579

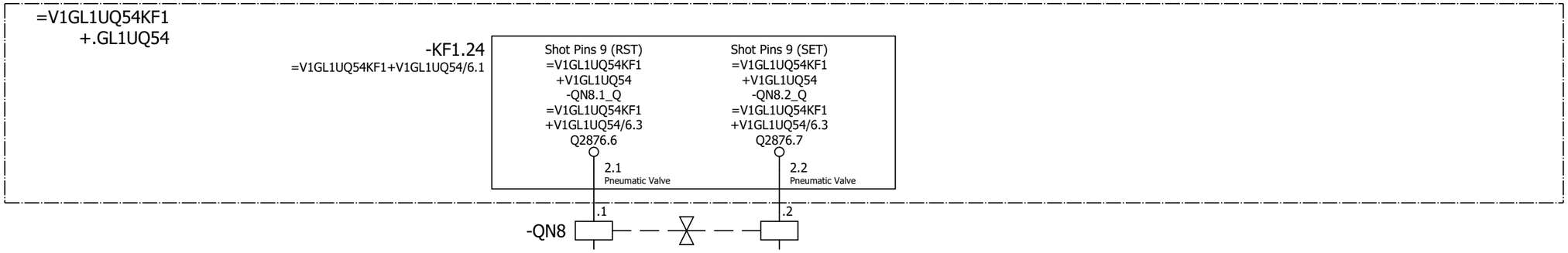

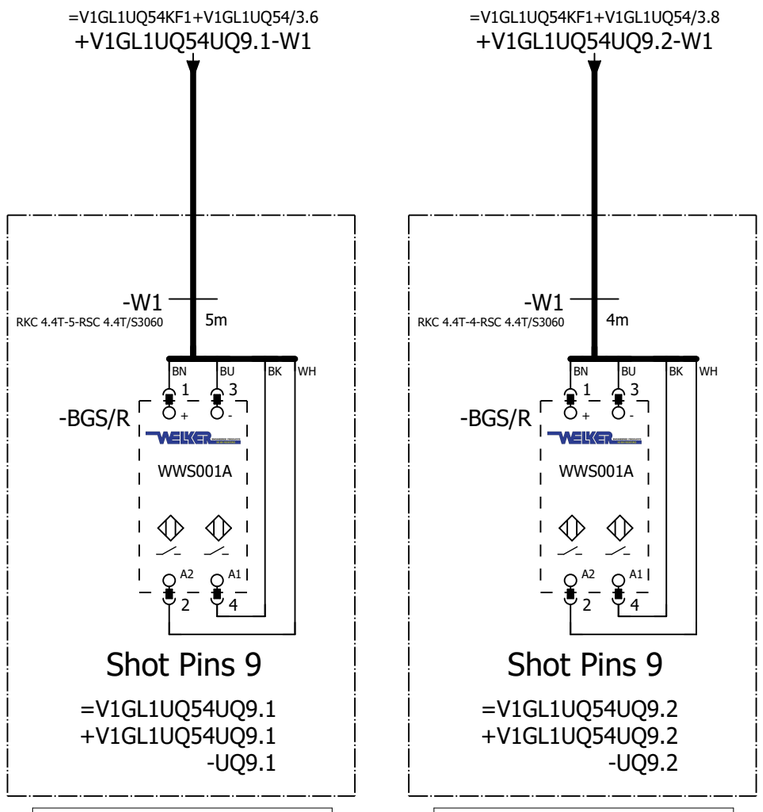

=V1GL1UQ54
-UQ9.1-BGS/R
Shot Pins 9

=V1GL1UQ54
-UQ9.2-BGS/R
Shot Pins 9

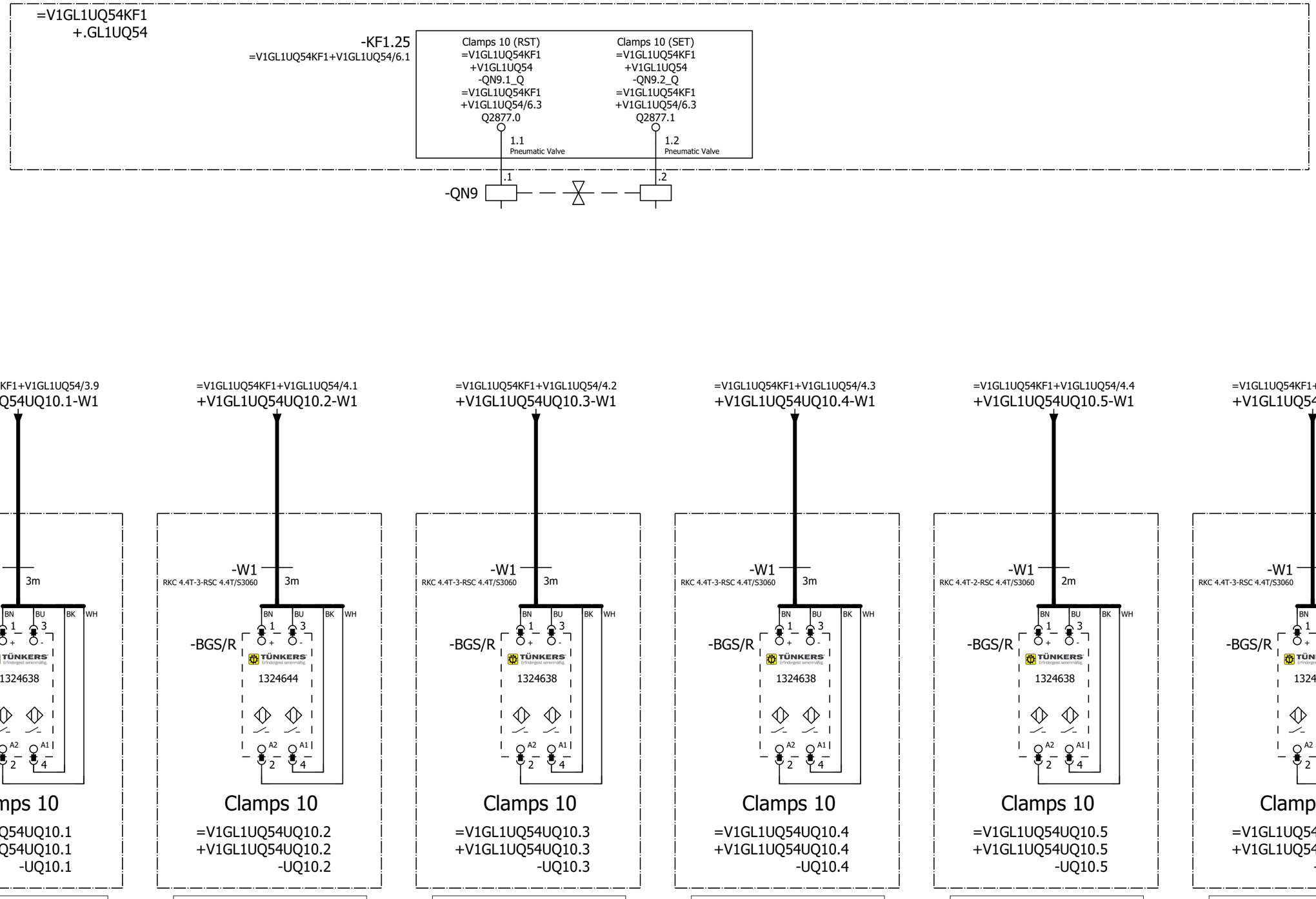

=V1GL1UQ54UQ9+.GL1UQ54UQ9/1

=V1GL1UQ54UQ11+.GL1UQ54UQ11/1

			Date	1/11/2023	Volvo Trucks North America		Valiant TMS	FESTO DQ CONNECTION QN9	Drawing name: =2V10&EFS-EL	= V1GL1UQ54UQ10	
			Ed.	MKLEPADLO						+ V1GL1UQ54UQ10	
			Appr		P6700 Bodyside RH - Robot Cell 2V10				Document type: EFS	Project nr: 22-16150	Page 1
Modification	Date	Name	Original		Replacement of	Replaced by	Scale 1:1				1579

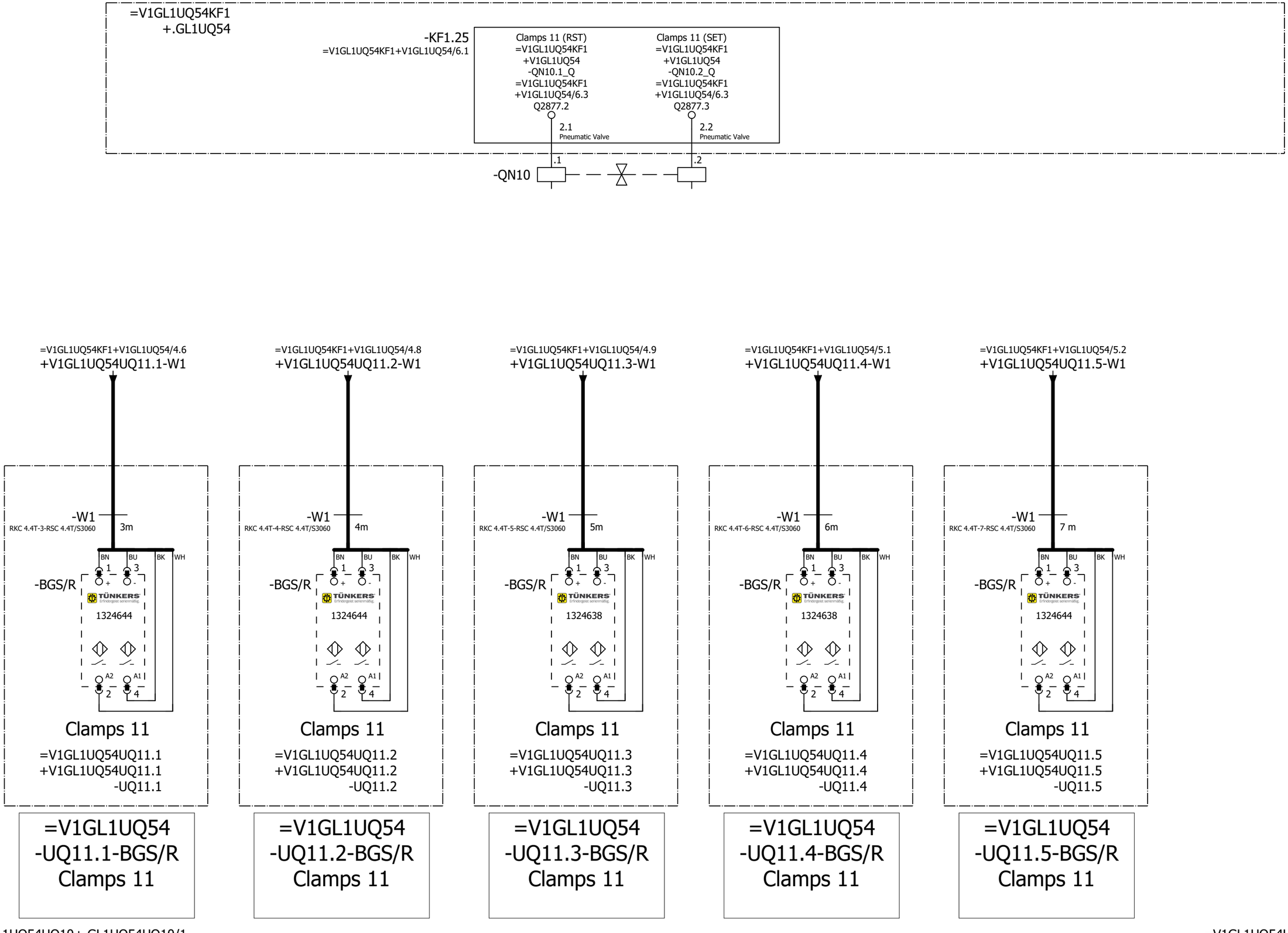

=V1GL1UQ54UQ10+.GL1UQ54UQ10/1

=V1GL1UQ54UQ12+.GL1UQ54UQ12/1

			Date	1/11/2023	Volvo Trucks North America		Valiant TMS	FESTO DQ CONNECTION QN10	Drawing name: =2V10&EFS-EL	= V1GL1UQ54UQ11	
			Ed.	MKLEPADLO						+ V1GL1UQ54UQ11	
			Appr		P6700 Bodyside RH - Robot Cell 2V10				Document type: EFS	Project nr: 22-16150	Page 1
Modification	Date	Name	Original		Replacement of	Replaced by	Scale 1:1				1579

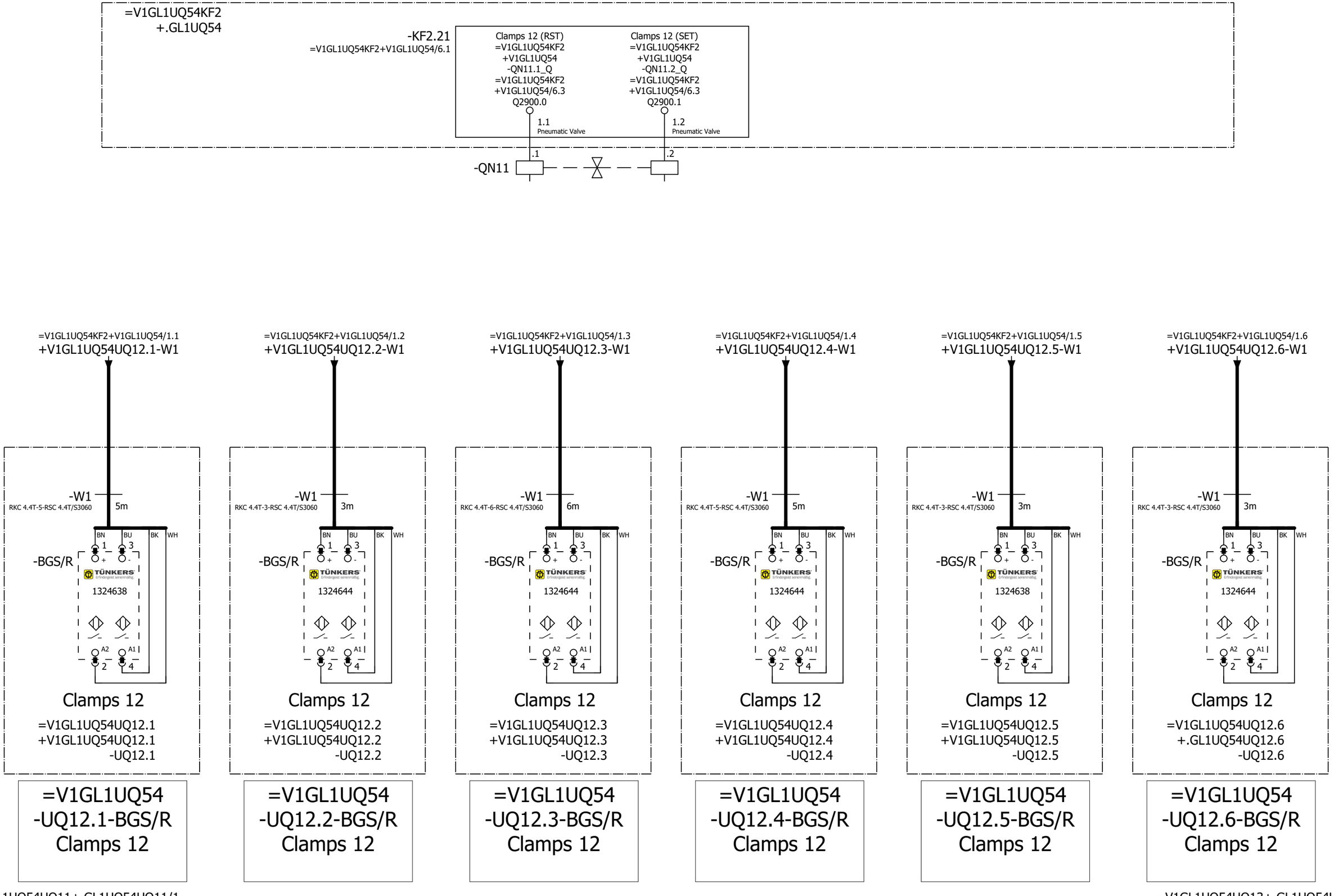

			Date	1/11/2023	Volvo Trucks North America		Valiant TMS	FESTO DQ CONNECTION QN11	Drawing name: =2V10&EFS-EL	= V1GL1UQ54UQ12	
			Ed.	MKLEPADLO						+ V1GL1UQ54UQ12	
			Appr		P6700 Bodyside RH - Robot Cell 2V10				Document type: EFS	Project nr: 22-16150	Page 1
Modification	Date	Name	Original		Replacement of	Replaced by	Scale 1:1				1579

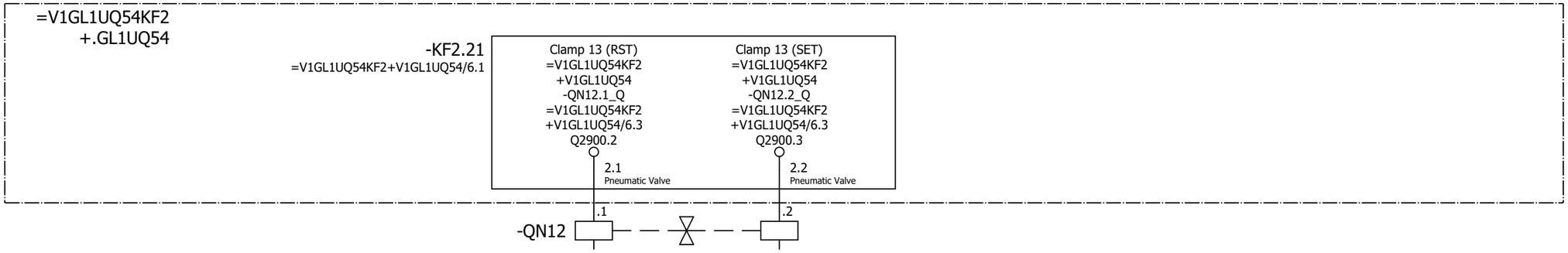

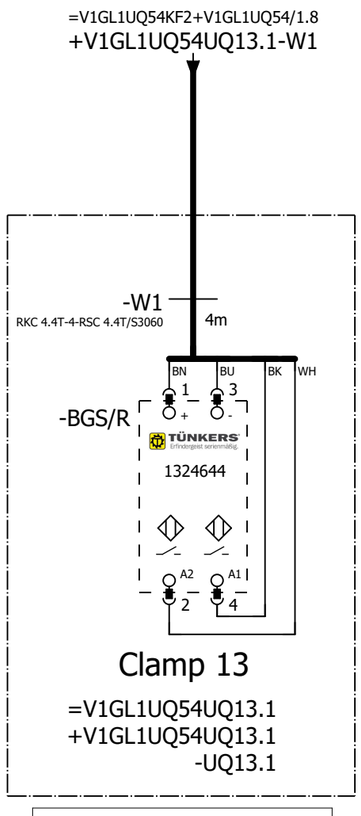

=V1GL1UQ54
-UQ13.1-BGS/R
Clamp 13

=V1GL1UQ54UQ12+.GL1UQ54UQ12/1

=V1GL1UQ54UQ14+.GL1UQ54UQ14/1

			Date	1/11/2023	Volvo Trucks North America		Valiant TMS	FESTO DQ CONNECTION QN12	Drawing name: =2V10&EFS-EL	= V1GL1UQ54UQ13	
			Ed.	MKLEPADLO						+ V1GL1UQ54UQ13	
			Appr		P6700 Bodyside RH - Robot Cell 2V10				Document type: EFS	Project nr: 22-16150	Page 1
Modification	Date	Name	Original		Replacement of	Replaced by	Scale 1:1				1579

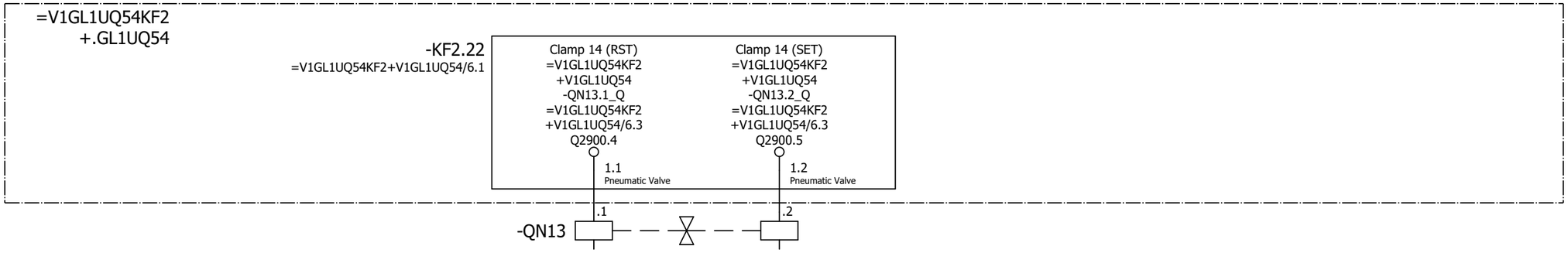

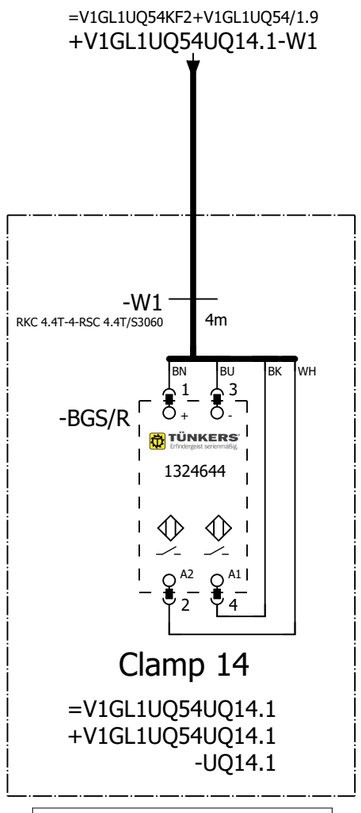

=V1GL1UQ54
-UQ14.1-BGS/R
Clamp 14

=V1GL1UQ54UQ13+.GL1UQ54UQ13/1

=V1GL1UQ54UQ15+.GL1UQ54UQ15/1

			Date	1/11/2023	Volvo Trucks North America		Valiant TMS	FESTO DQ CONNECTION QN13	Drawing name: =2V10&EFS-EL	= V1GL1UQ54UQ14	
			Ed.	MKLEPADLO						+ V1GL1UQ54UQ14	
			Appr		P6700 Bodyside RH - Robot Cell 2V10				Document type: EFS	Project nr: 22-16150	Page 1
Modification	Date	Name	Original		Replacement of	Replaced by	Scale 1:1				1579

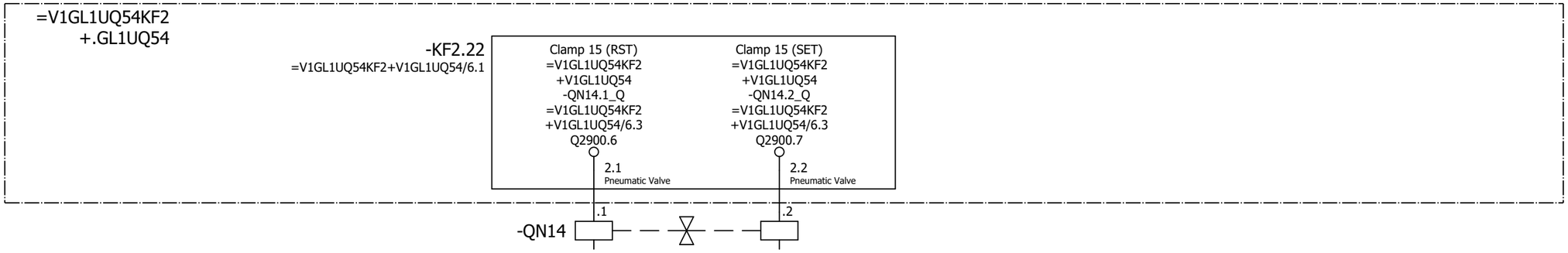

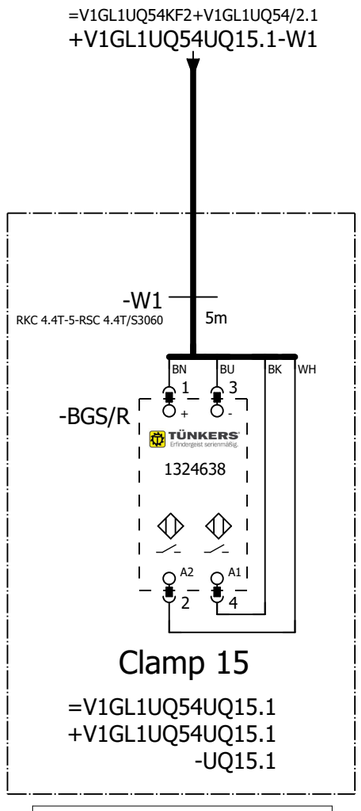

=V1GL1UQ54
-UQ15.1-BGS/R
Clamp 15

=V1GL1UQ54UQ14+.GL1UQ54UQ14/1

=V1GL1UQ54UQ16+.GL1UQ54UQ16/1

			Date	1/11/2023	Volvo Trucks North America		Valiant TMS	FESTO DQ CONNECTION QN14	Drawing name: =2V10&EFS-EL	= V1GL1UQ54UQ15	
			Ed.	MKLEPADLO						+ V1GL1UQ54UQ15	
			Appr		P6700 Bodyside RH - Robot Cell 2V10				Document type: EFS	Project nr: 22-16150	Page 1
Modification	Date	Name	Original		Replacement of	Replaced by	Scale 1:1				1579

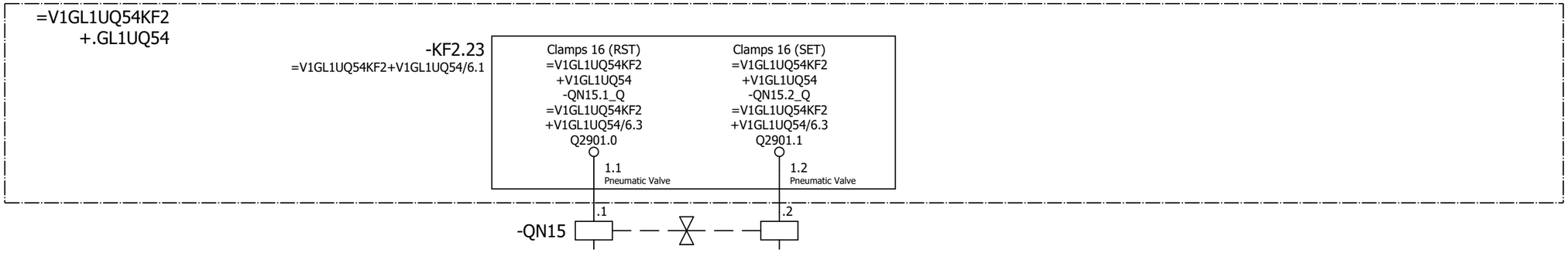

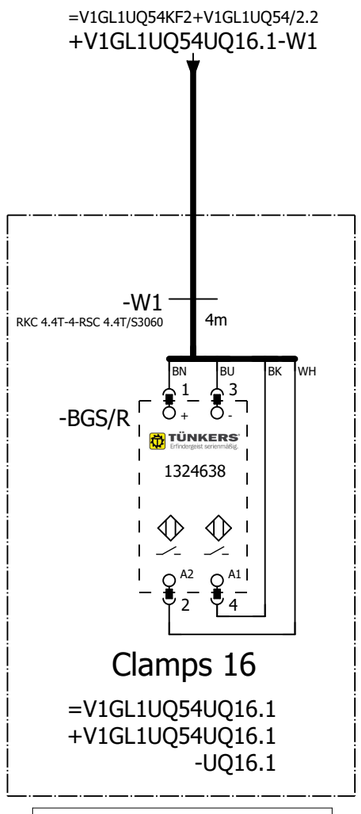

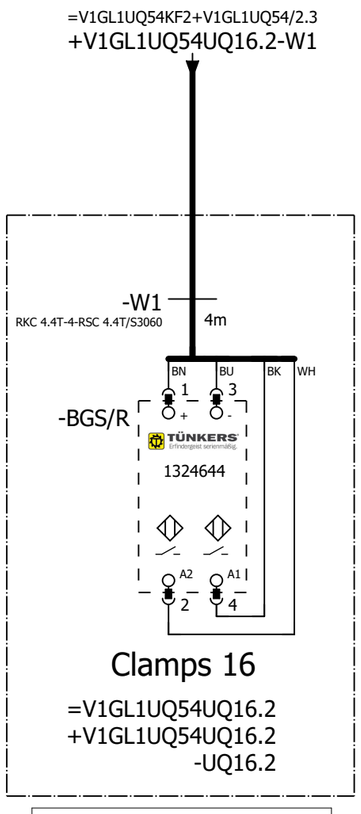

=V1GL1UQ54
-UQ16.1-BGS/R
Clamps 16

=V1GL1UQ54
-UQ16.2-BGS/R
Clamps 16

=V1GL1UQ54UQ15+.GL1UQ54UQ15/1

=V1GL1UQ54UQ17+.GL1UQ54UQ17/1

			Date	1/11/2023	Volvo Trucks North America		Valiant TMS	FESTO DQ CONNECTION QN15	Drawing name: =2V10&EFS-EL	= V1GL1UQ54UQ16	
			Ed.	MKLEPADLO						+ V1GL1UQ54UQ16	
			Appr		P6700 Bodyside RH - Robot Cell 2V10				Document type: EFS	Project nr: 22-16150	Page 1
Modification	Date	Name	Original		Replacement of	Replaced by	Scale 1:1				1579

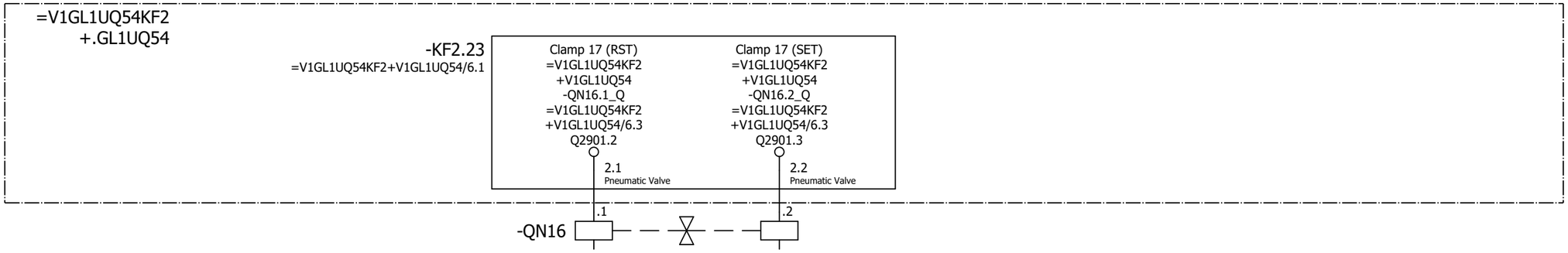

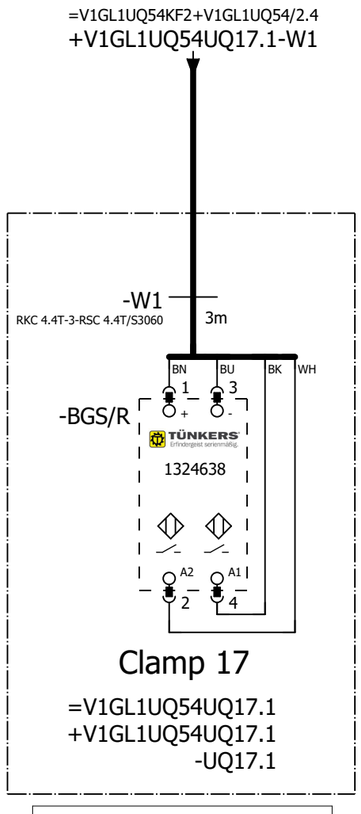

=V1GL1UQ54
-UQ17.1-BGS/R
Clamp 17

=V1GL1UQ54UQ16+.GL1UQ54UQ16/1

=V1GL1UQ54UQ18+.GL1UQ54UQ18/1

			Date	1/11/2023	Volvo Trucks North America		Valiant TMS	FESTO DQ CONNECTION QN16	Drawing name: =2V10&EFS-EL	= V1GL1UQ54UQ17	
			Ed.	MKLEPADLO						+ V1GL1UQ54UQ17	
			Appr		P6700 Bodyside RH - Robot Cell 2V10				Document type: EFS	Project nr: 22-16150	Page 1
Modification	Date	Name	Original		Replacement of	Replaced by	Scale 1:1				1579

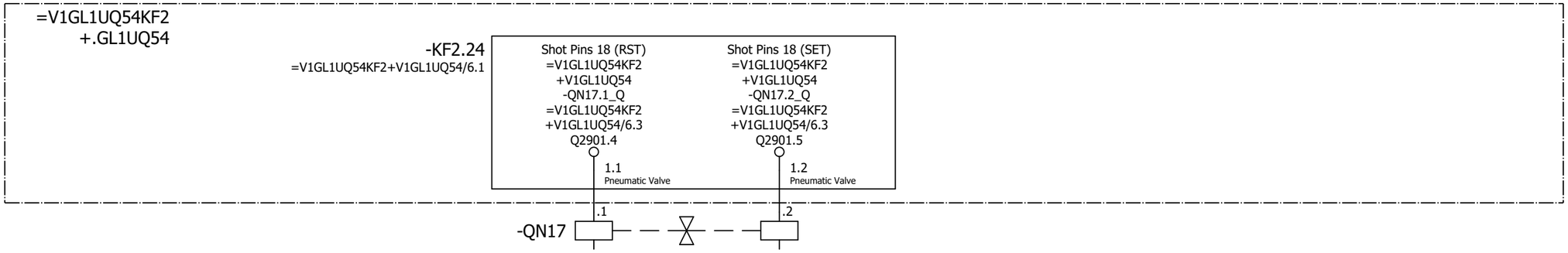

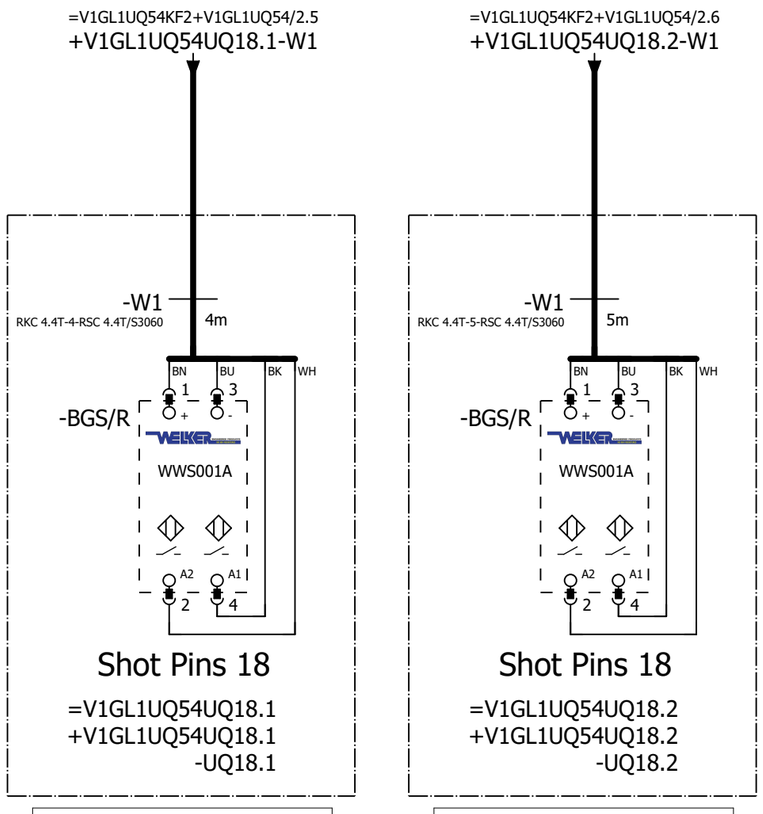

=V1GL1UQ54
-UQ18.1-BGS/R
Shot Pins 18

=V1GL1UQ54
-UQ18.2-BGS/R
Shot Pins 18

=V1GL1UQ54UQ17+.GL1UQ54UQ17/1

=V1GL1UQ54UQ19+.GL1UQ54UQ19/1

			Date	1/11/2023	Volvo Trucks North America	Valiant TMS	FESTO DQ CONNECTION QN17	Drawing name: =2V10&EFS-EL		= V1GL1UQ54UQ18	
			Ed.	MKLEPADLO						+ V1GL1UQ54UQ18	
			Appr		P6700 Bodyside RH - Robot Cell 2V10			Document type: EFS	Project nr: 22-16150		Page 1
Modification	Date	Name	Original		Replacement of	Replaced by	Scale 1:1				1579

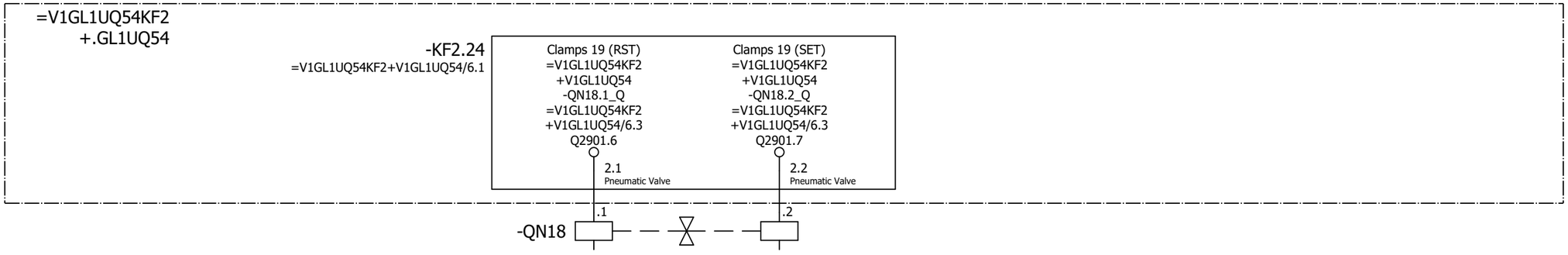

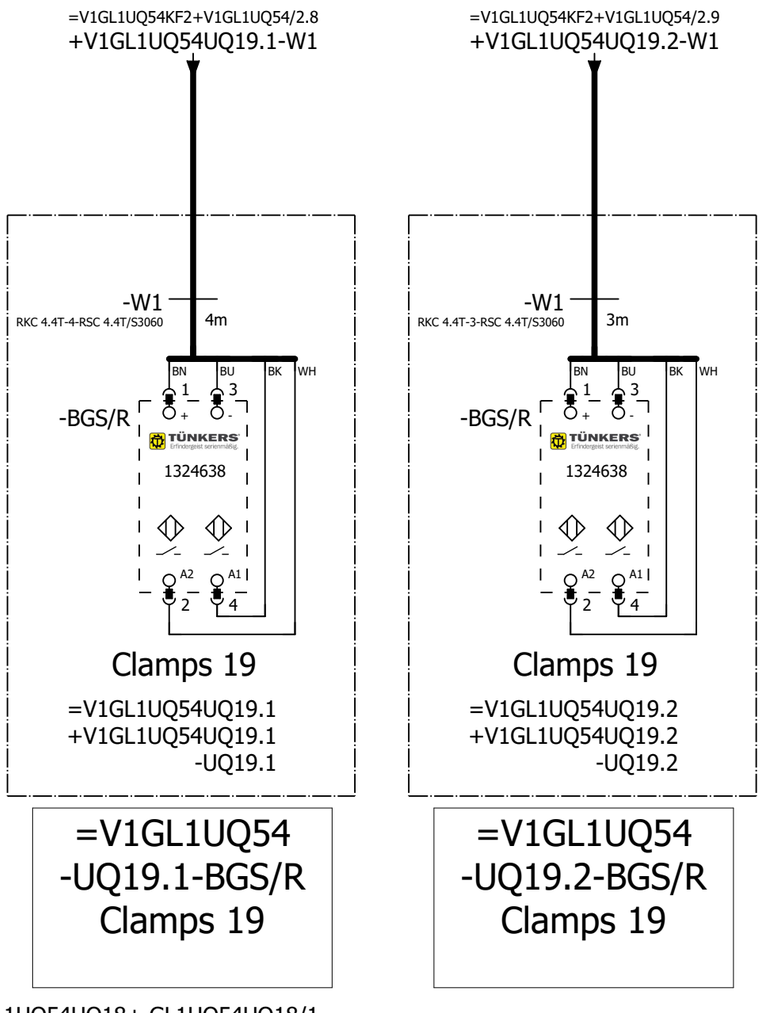

=V1GL1UQ54
-UQ19.1-BGS/R
Clamps 19

=V1GL1UQ54
-UQ19.2-BGS/R
Clamps 19

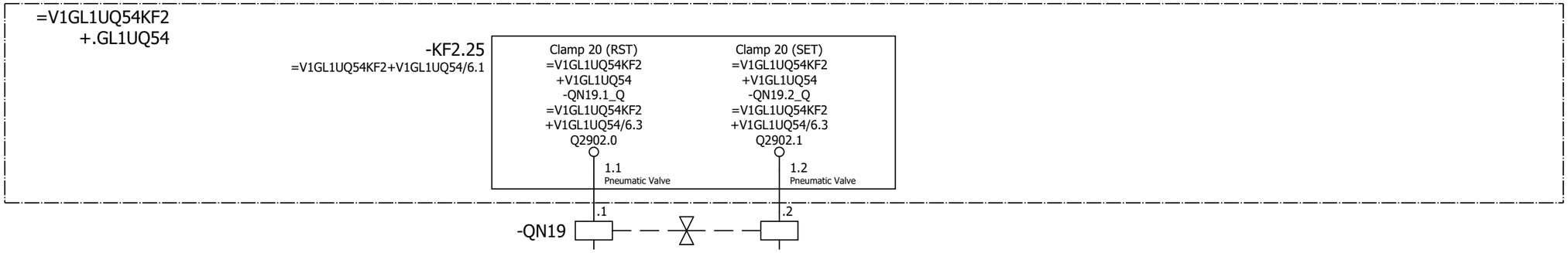

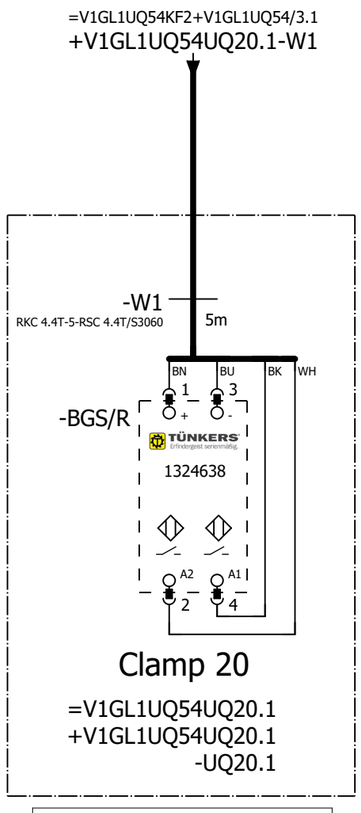

=V1GL1UQ54
-UQ20.1-BGS/R
Clamp 20

=V1GL1UQ54UQ19+.GL1UQ54UQ19/1

=V1GL1UQ54UQ21+.GL1UQ54UQ21/1

			Date	1/11/2023	Volvo Trucks North America		Valiant TMS	FESTO DQ CONNECTION QN19	Drawing name: =2V10&EFS-EL	= V1GL1UQ54UQ20	
			Ed.	MKLEPADLO						+ V1GL1UQ54UQ20	
			Appr		P6700 Bodyside RH - Robot Cell 2V10				Document type: EFS	Project nr: 22-16150	Page 1
Modification	Date	Name	Original		Replacement of	Replaced by	Scale 1:1				1579

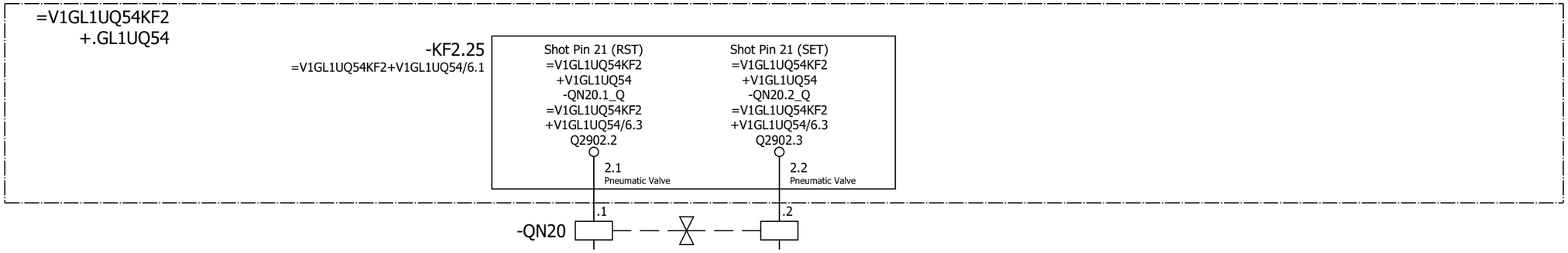

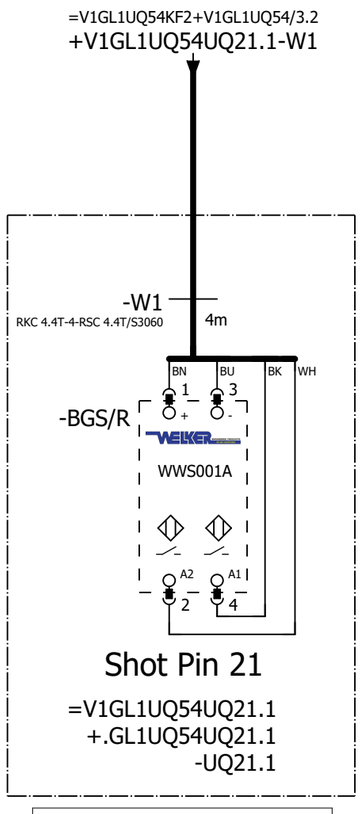

=V1GL1UQ54
-UQ21.1-BGS/R
Shot Pin 21

=V1GL1UQ54UQ20+.GL1UQ54UQ20/1

=V1GL1UQ54UQ22+.GL1UQ54UQ22/1

			Date	1/11/2023	Volvo Trucks North America		Valiant TMS	FESTO DQ CONNECTION QN20	Drawing name: =2V10&EFS-EL	= V1GL1UQ54UQ21	
			Ed.	MKLEPADLO						+ V1GL1UQ54UQ21	
			Appr		P6700 Bodyside RH - Robot Cell 2V10				Document type: EFS	Project nr: 22-16150	Page 1
Modification	Date	Name	Original		Replacement of	Replaced by	Scale 1:1				1579

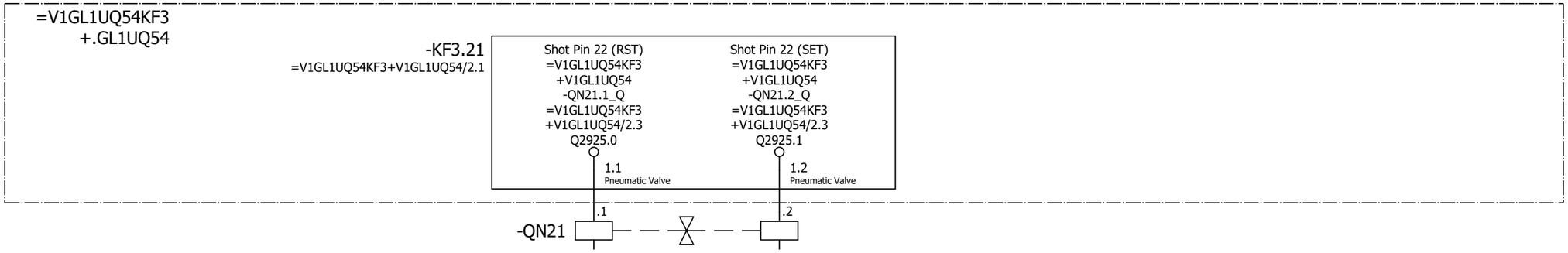

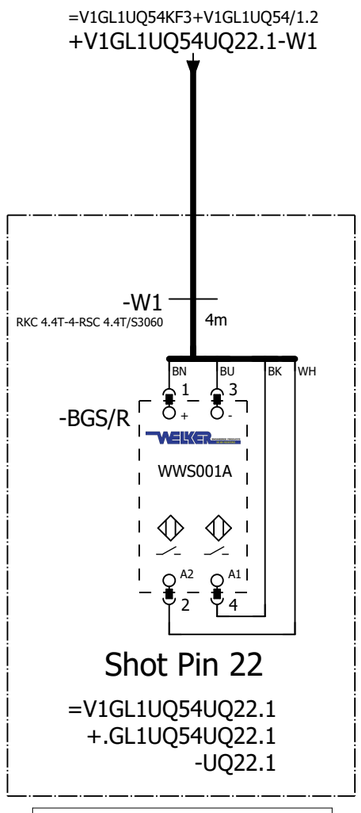

=V1GL1UQ54
-UQ22.1-BGS/R
Shot Pin 22

=V1GL1UQ54UQ21+.GL1UQ54UQ21/1

=V1GL1UQ54UQ23+.GL1UQ54UQ23/1

			Date	1/11/2023	Volvo Trucks North America		Valiant TMS	FESTO DQ CONNECTION QN21	Drawing name: =2V10&EFS-EL	= V1GL1UQ54UQ22	
			Ed.	MKLEPADLO						+ V1GL1UQ54UQ22	
			Appr		P6700 Bodyside RH - Robot Cell 2V10				Document type: EFS	Project nr: 22-16150	Page 1
Modification	Date	Name	Original		Replacement of	Replaced by	Scale 1:1				1579

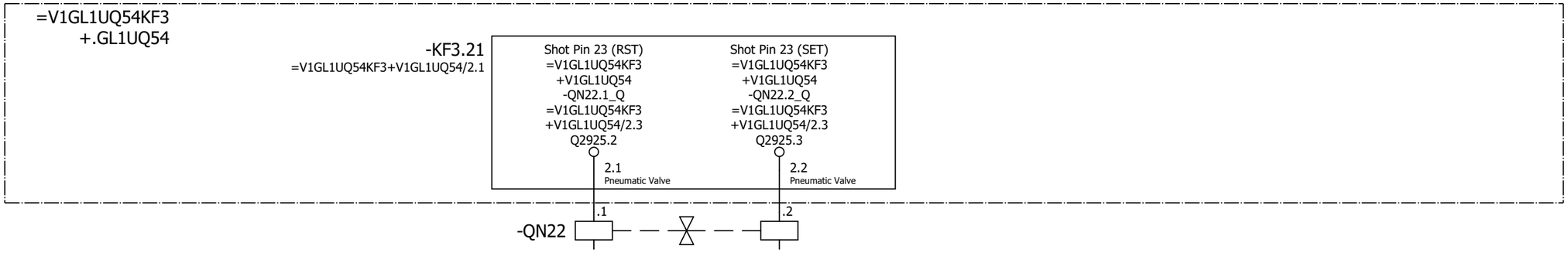

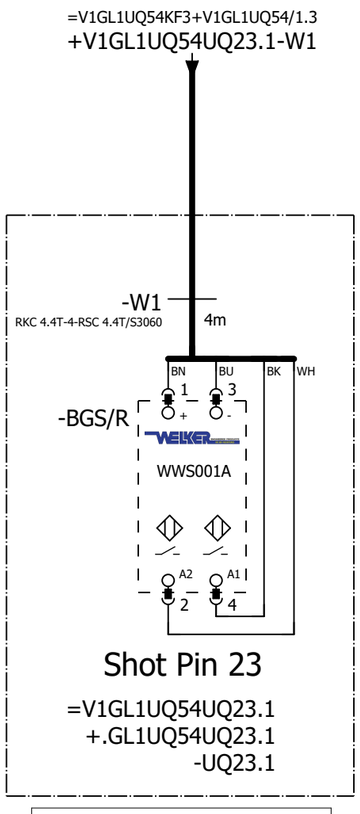

=V1GL1UQ54
-UQ23.1-BGS/R
Shot Pin 23

=V1GL1UQ54UQ22+.GL1UQ54UQ22/1

=V1GL1UQ54UQ24+.GL1UQ54UQ24/1

			Date	1/11/2023	Volvo Trucks North America	Valiant TMS	FESTO DQ CONNECTION QN22	Drawing name: =2V10&EFS-EL		= V1GL1UQ54UQ23	
			Ed.	MKLEPADLO						+ V1GL1UQ54UQ23	
			Appr		P6700 Bodyside RH - Robot Cell 2V10			Document type: EFS	Project nr: 22-16150		Page 1
Modification	Date	Name	Original		Replacement of / Replaced by	Scale 1:1					1579

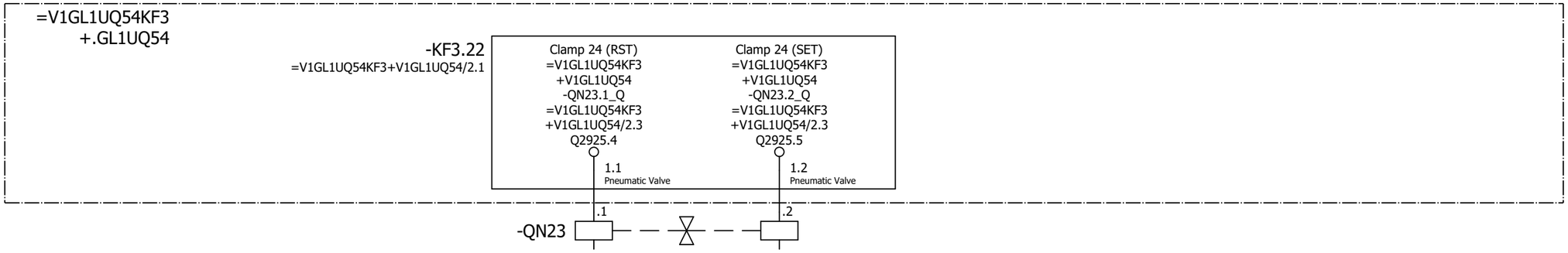

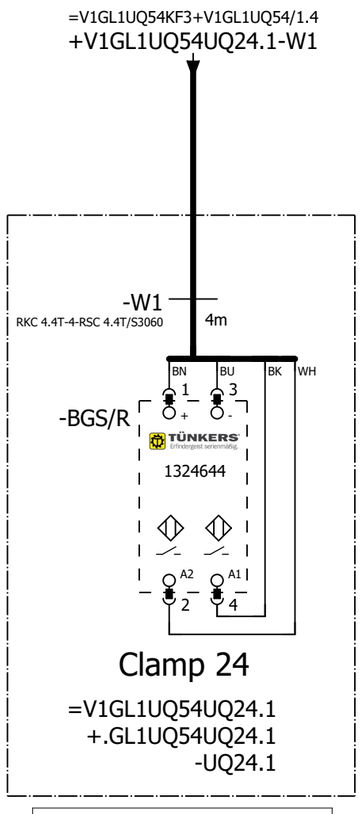

=V1GL1UQ54
-UQ24.1-BGS/R
Clamp 24

=V1GL1UQ54UQ23+.GL1UQ54UQ23/1

=V1GL1UQ54UQ25+.GL1UQ54UQ25/1

			Date	1/11/2023	Volvo Trucks North America		Valiant TMS	FESTO DQ CONNECTION QN23	Drawing name: =2V10&EFS-EL	= V1GL1UQ54UQ24	
			Ed.	MKLEPADLO						+ V1GL1UQ54UQ24	
			Appr		P6700 Bodyside RH - Robot Cell 2V10				Document type: EFS	Project nr: 22-16150	Page 1
Modification	Date	Name	Original		Replacement of	Replaced by	Scale 1:1				1579

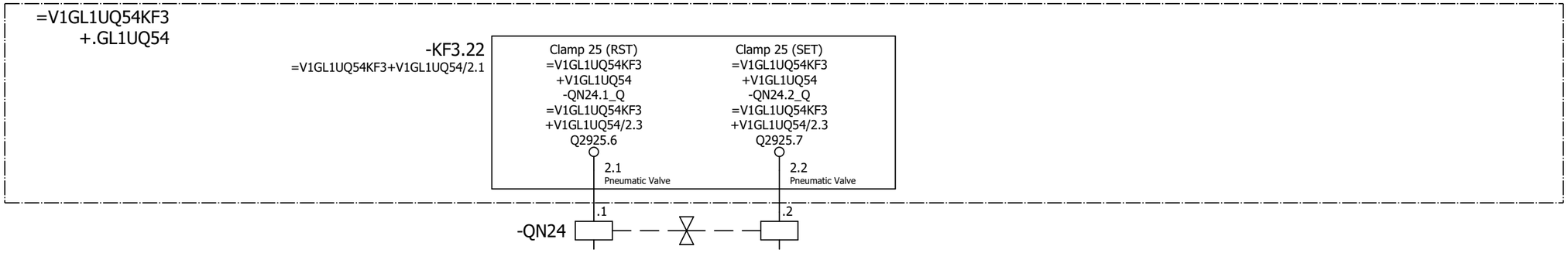

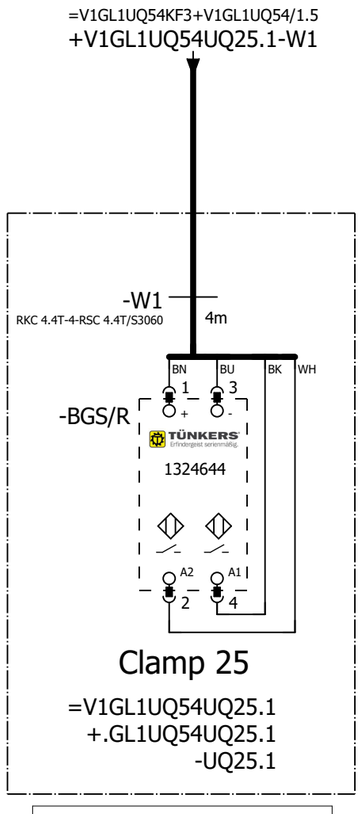

=V1GL1UQ54
-UQ25.1-BGS/R
Clamp 25

=V1GL1UQ54UQ24+.GL1UQ54UQ24/1

=V1GL1UQ54WC4+V1GL1UQ54/1

			Date	1/11/2023	Volvo Trucks North America		Valiant TMS	FESTO DQ CONNECTION QN24	Drawing name: =2V10&EFS-EL	= V1GL1UQ54UQ25	
			Ed.	MKLEPADLO						+ V1GL1UQ54UQ25	
			Appr		P6700 Bodyside RH - Robot Cell 2V10				Document type: EFS	Project nr: 22-16150	Page 1
Modification	Date	Name	Original		Replacement of	Replaced by	Scale 1:1				1579

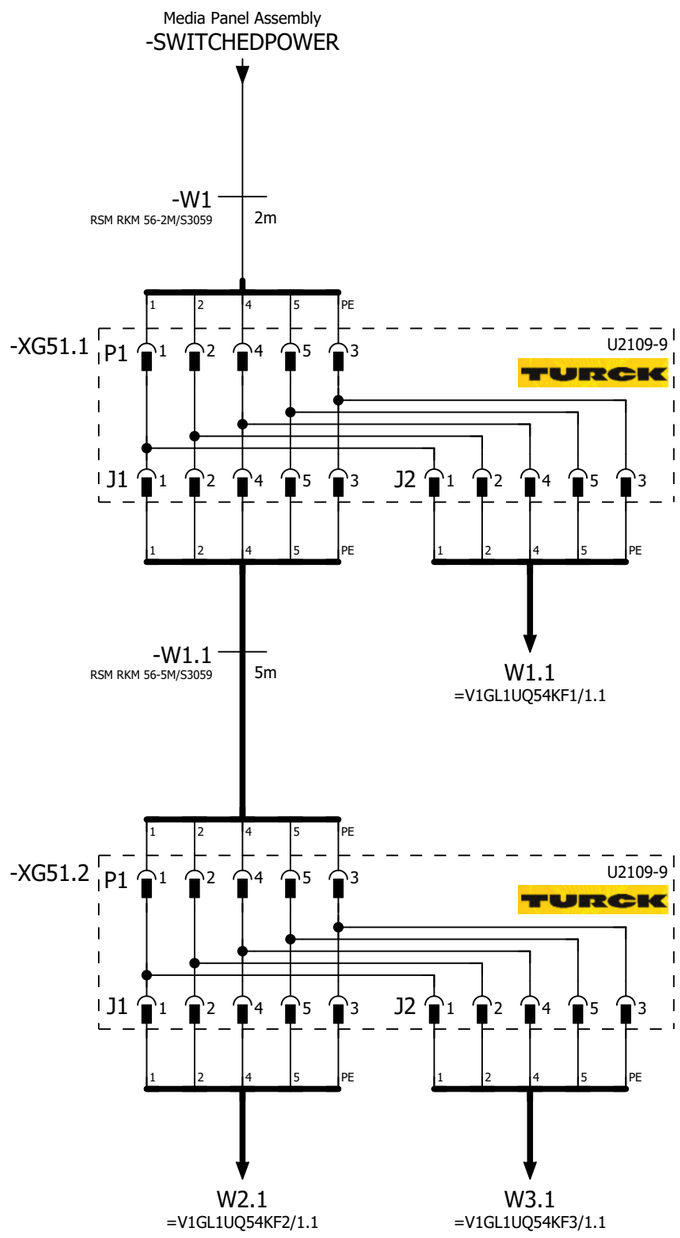

=V1GL1UQ54UQ25+.GL1UQ54UQ25/1

=V1GL1UQ56KF1+.GL1UQ56/1

			Date	1/11/2023	Volvo Trucks North America	Valiant TMS	24VDC	Drawing name: =2V10&EFS-EL		= V1GL1UQ54WC4	
			Ed.	MKLEPADLO	P6700 Bodyside RH - Robot Cell 2V10					+ V1GL1UQ54	
			Appr					Document type: EFS	Project nr: 22-16150		Page 1
Modification	Date	Name	Original		Replacement of	Replaced by	Scale 1:1				1579

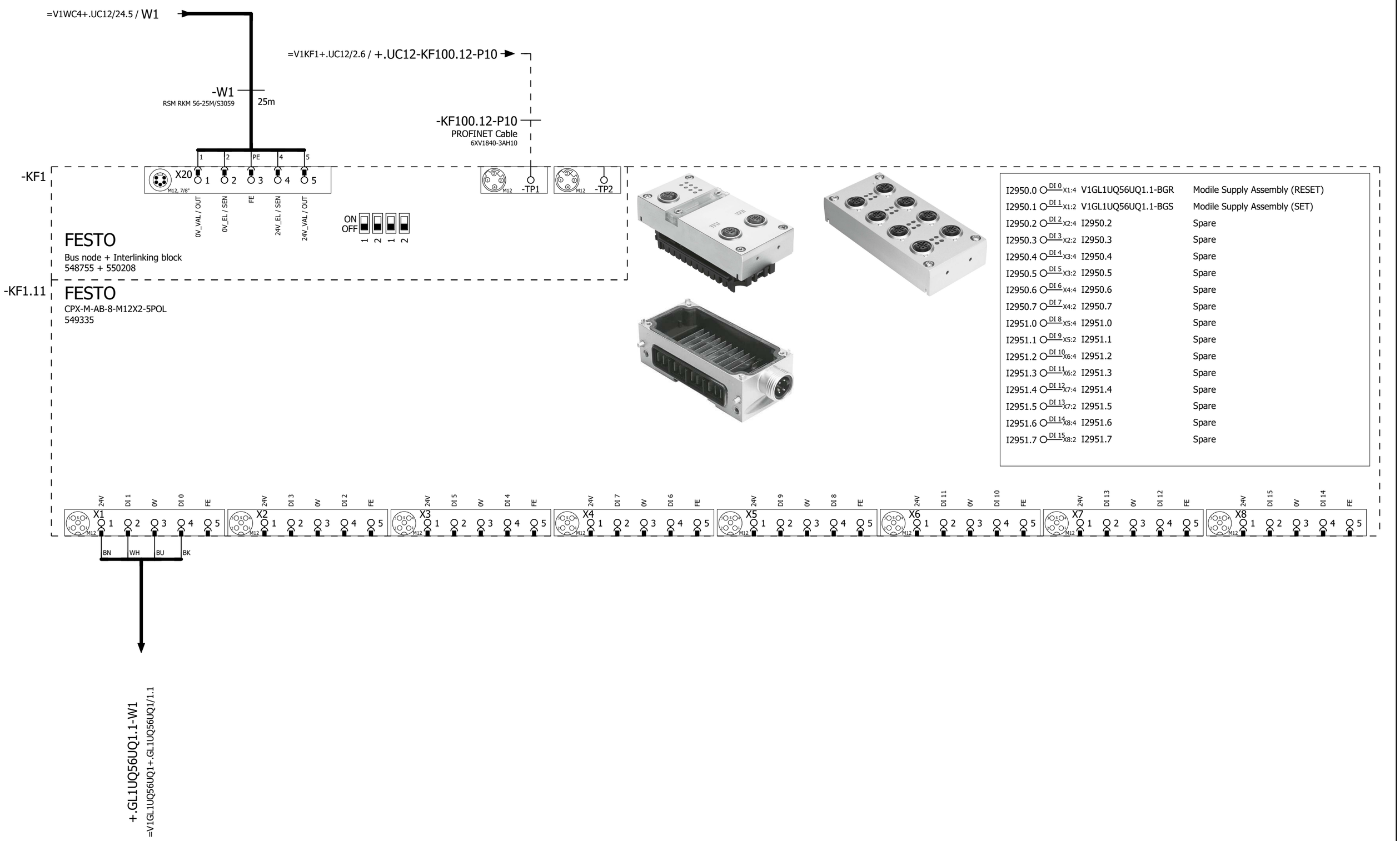

=V1GL1UQ54WC4+.GL1UQ54/1

2

			Date	1/11/2023	Volvo Trucks North America	Valiant TMS	CONNECTING MOD. FOR VTSA MANIFOLD	Drawing name: =2V10&EFS-EL		= V1GL1UQ56KF1	
			Ed.	MKLEPADLO						+ V1GL1UQ56	
			Appr		P6700 Bodyside RH - Robot Cell 2V10			Document type: EFS	Project nr: 22-16150		Page 1
Modification	Date	Name	Original		Replacement of	Replaced by	Scale 1:1				1579

-KF1 -KF1.11 -KF1.20 -KF1.21 -KF1.22 -KF1.23

M1

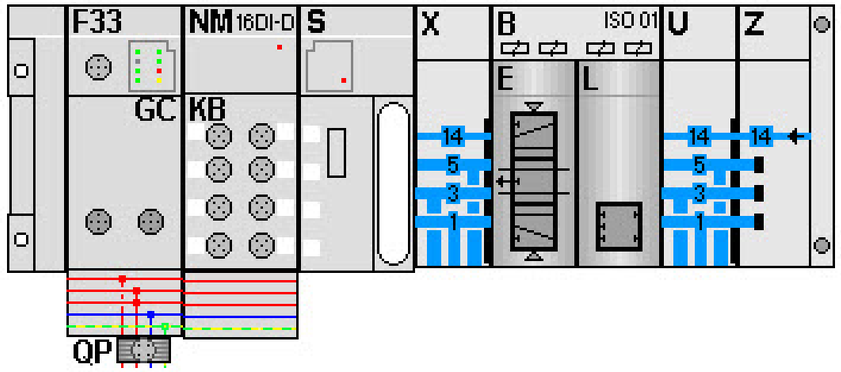

-KF1.21
=V1GL1UQ56UQ1+.GL1UQ56UQ1/1.3

FESTO

=V1GL1UQ56UQ1+.GL1UQ56UQ1/1.4	Q2950.0 DO 0 1.1	-QN1.1_Q	Mobile Supply Assembly (RST)
=V1GL1UQ56UQ1+.GL1UQ56UQ1/1.4	Q2950.1 DO 1 1.2	-QN1.2_Q	Mobile Supply Assembly (SET)
	Q2950.2 DO 2 2.1	-QN2.1_Q	Spare
	Q2950.3 DO 3 2.2	-QN2.2_Q	Spare

			Date	1/11/2023	Volvo Trucks North America	Valiant TMS	CONNECTING MOD. FOR FESTO DQ	Drawing name: =2V10&EFS-EL		= V1GL1UQ56KF1	
			Ed.	MKLEPADLO						+ V1GL1UQ56	
			Appr		P6700 Bodyside RH - Robot Cell 2V10			Document type: EFS	Project nr: 22-16150		Page 2
Modification	Date	Name	Original		Replacement of	Replaced by	Scale 1:1				1579

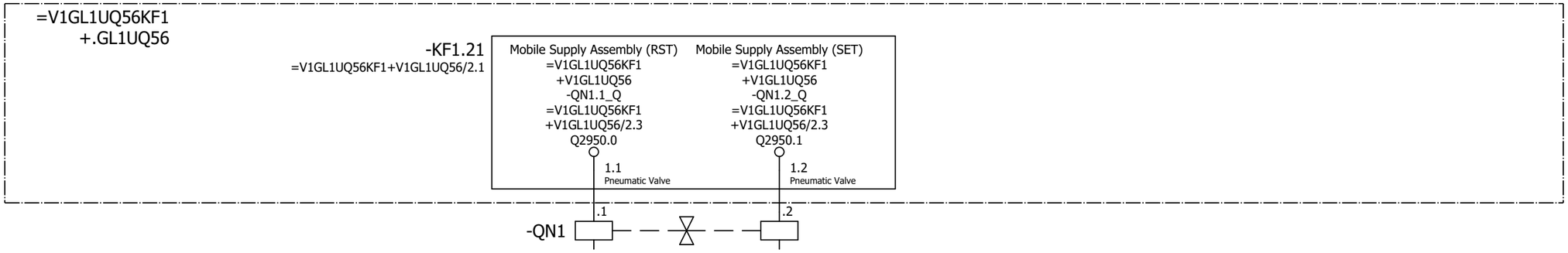

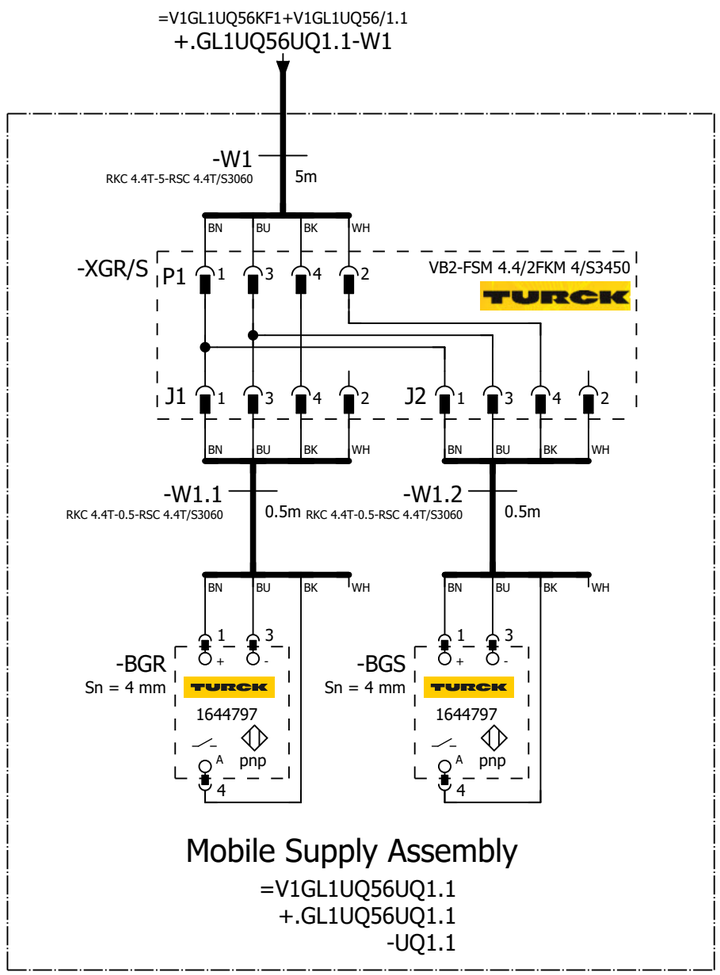

=V1GL1UQ56
-UQ1.1-BGR
Mobile Supply
Assembly

=V1GL1UQ56
-UQ1.1-BGS
Mobile Supply
Assembly

=V1GL1UQ56KF1+V1GL1UQ56/2

=V1GL1UQ57KF1+.GL1UQ57/1

			Date	1/11/2023	Volvo Trucks North America	Valiant TMS	FESTO DQ CONNECTION QN1	Drawing name: =2V10&EFS-EL	= V1GL1UQ56UQ1		
			Ed.	MKLEPADLO					+ V1GL1UQ56UQ1		
			Appr		P6700 Bodyside RH - Robot Cell 2V10			Document type: EFS	Project nr: 22-16150	Page	1
Modification	Date	Name	Original		Replacement of / Replaced by	Scale 1:1					1579

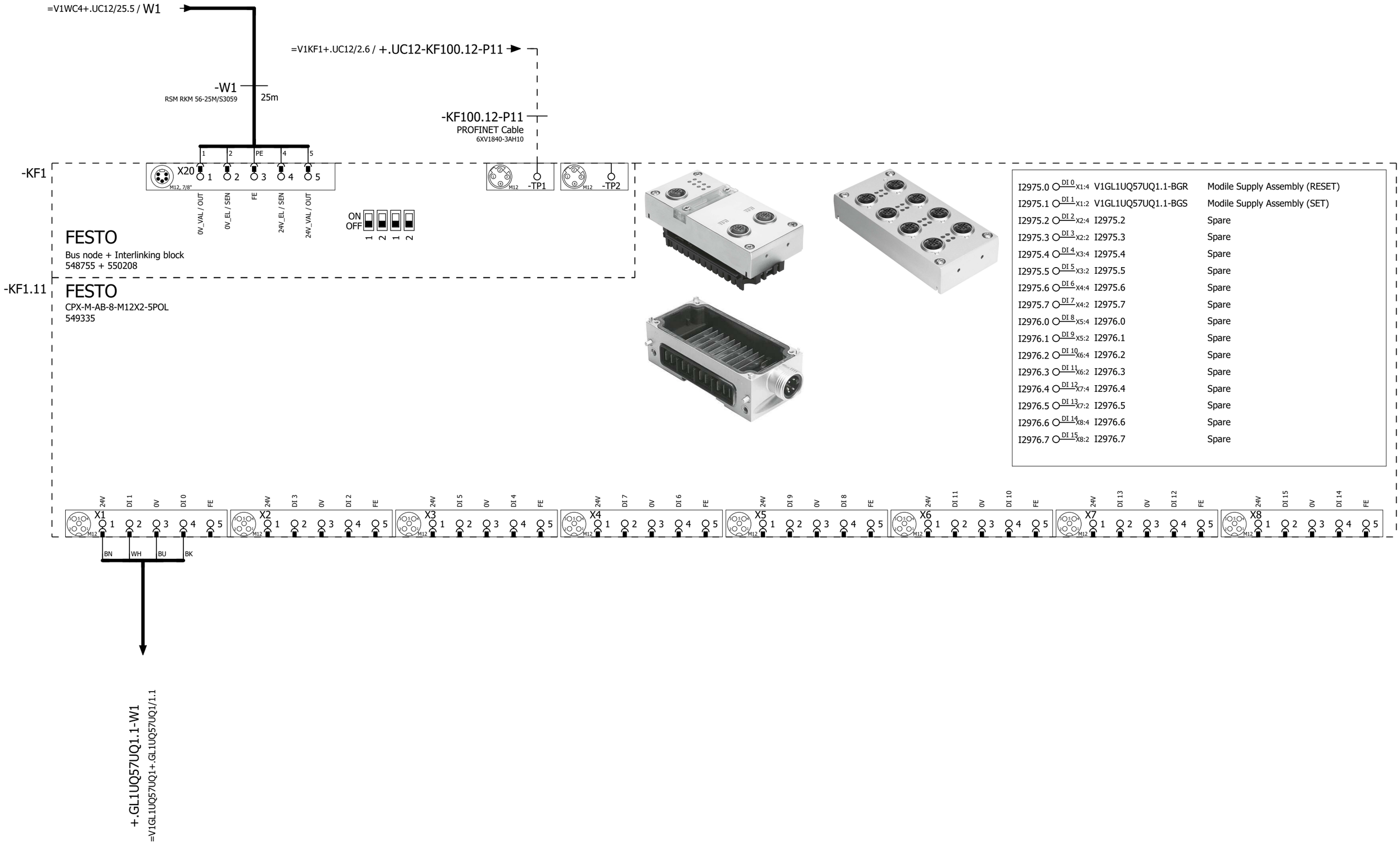

=V1GL1UQ56UQ1+.GL1UQ56UQ1/1

2

			Date	1/11/2023	Volvo Trucks North America	Valiant TMS	CONNECTING MOD. FOR VTSA MANIFOLD	Drawing name: =2V10&EFS-EL		= V1GL1UQ57KF1	
			Ed.	MKLEPADLO						+ V1GL1UQ57	
			Appr		P6700 Bodyside RH - Robot Cell 2V10			Document type: EFS	Project nr: 22-16150		Page 1
Modification	Date	Name	Original		Replacement of	Replaced by	Scale 1:1				1579

0	1	2	3	4	5	6	7	8	9

-KF1 -KF1.11 -KF1.20 -KF1.21 -KF1.22 -KF1.23

M1

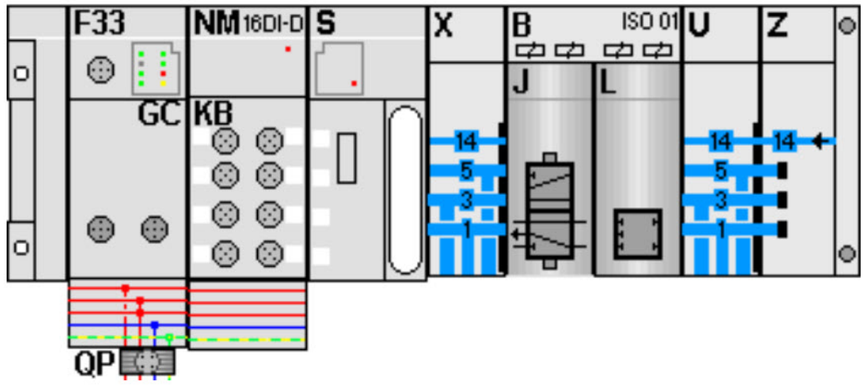

-KF1.21
=V1GL1UQ57UQ1+.GL1UQ57UQ1/1.3

FESTO

=V1GL1UQ57UQ1+.GL1UQ57UQ1/1.4	Q2975.0 DO 0 1.1	-QN1.1_Q	Mobile Supply Assembly (RST)
=V1GL1UQ57UQ1+.GL1UQ57UQ1/1.4	Q2975.1 DO 1 1.2	-QN1.2_Q	Mobile Supply Assembly (SET)
	Q2975.2 DO 2 2.1	-QN2.1_Q	Spare
	Q2975.3 DO 3 2.2	-QN2.2_Q	Spare

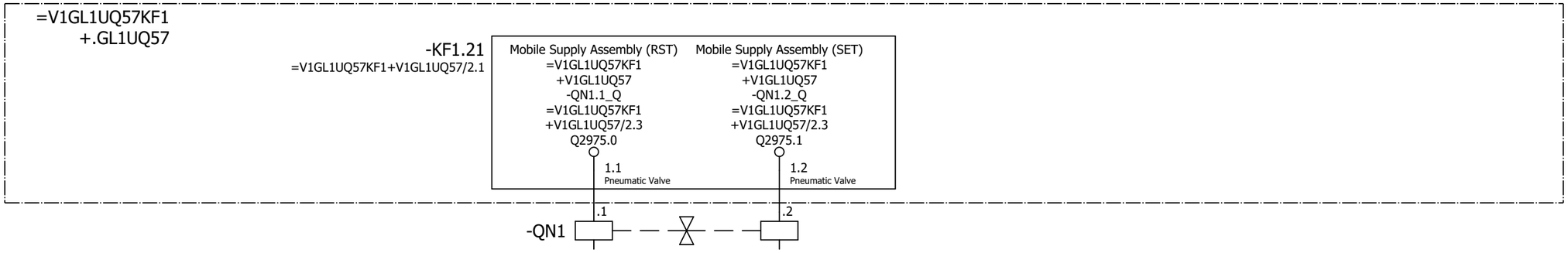

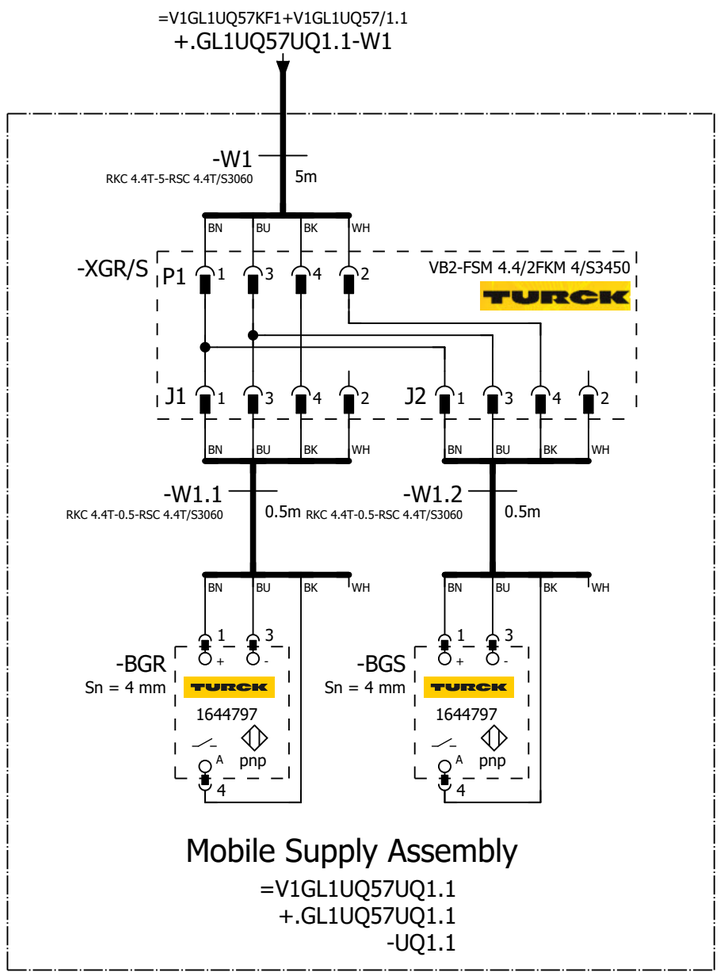

=V1GL1UQ57
-UQ1.1-BGR
Mobile Supply
Assembly

=V1GL1UQ57
-UQ1.1-BGS
Mobile Supply
Assembly

=V1GL1UQ57KF1+V1GL1UQ57/2

=V1GL1WC1+.GL1UC01/1

			Date	1/11/2023	Volvo Trucks North America	Valiant TMS	FESTO DQ CONNECTION QN1	Drawing name: =2V10&EFS-EL		= V1GL1UQ57UQ1	
			Ed.	MKLEPADLO						+ V1GL1UQ57UQ1	
			Appr		P6700 Bodyside RH - Robot Cell 2V10			Document type: EFS	Project nr: 22-16150		Page 1
Modification	Date	Name	Original		Replacement of / Replaced by	Scale 1:1					1579

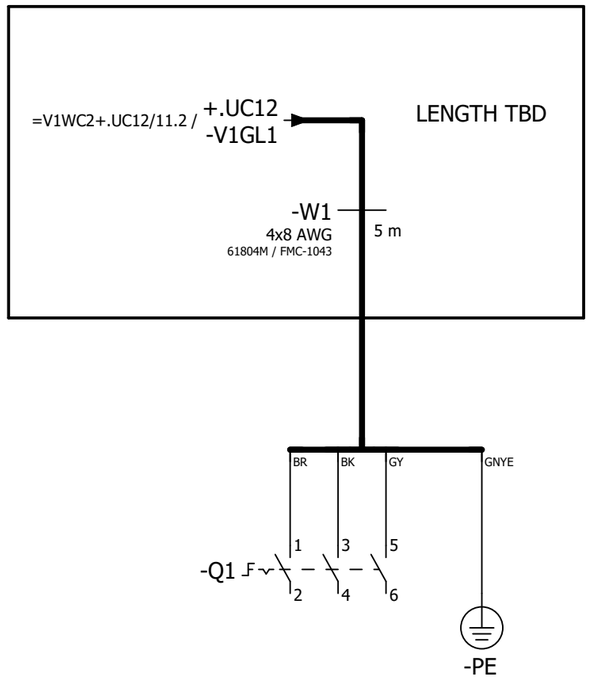

=V1GL1UQ57UQ1+.GL1UQ57UQ1/1

=V1GL2KF1+.GL2/1

			Date	1/11/2023	Volvo Trucks North America	Valiant TMS	Incoming power	Drawing name: =2V10&EFS-EL	= V1GL1WC1	
			Ed.	MKLEPADLO					+ V1GL1UC01	
			Appr		P6700 Bodyside RH - Robot Cell 2V10			Document type: EFS	Project nr: 22-16150	Page 1 / 1579
Modification	Date	Name	Original		Replacement of	Replaced by	Scale 1:1			

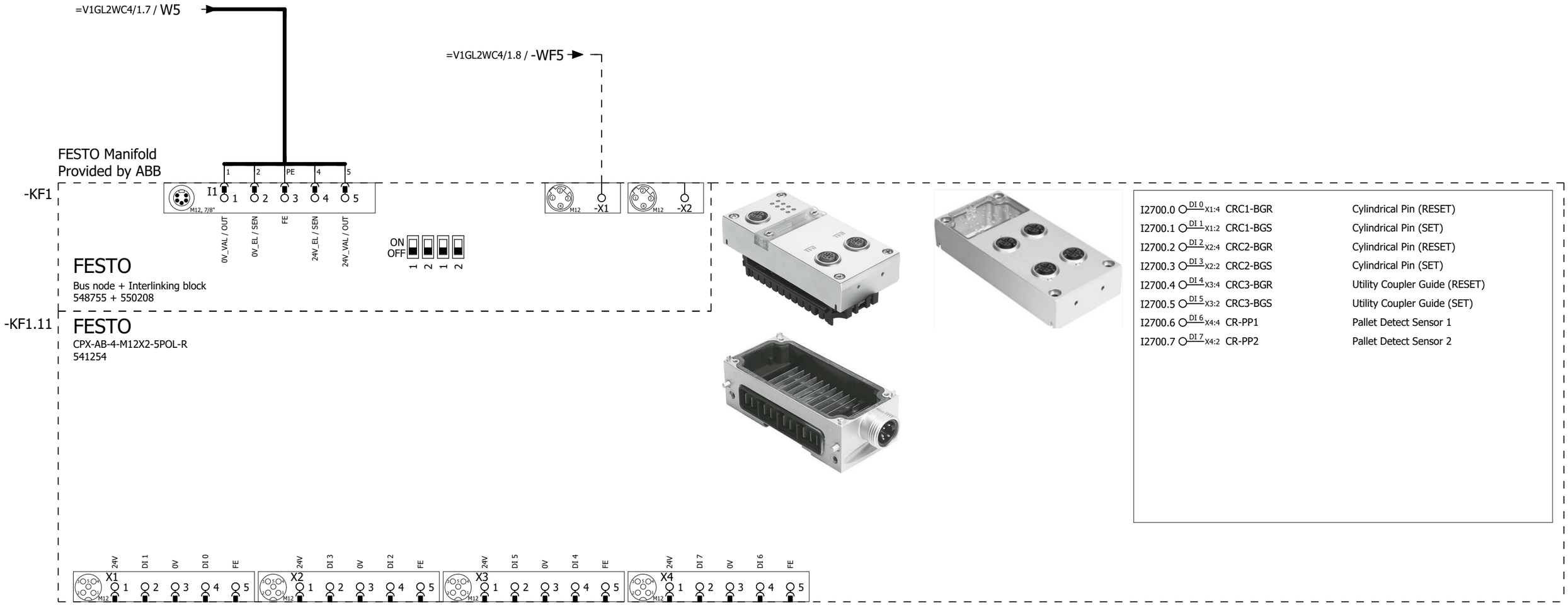

I2700.0	DI 0 X1:4	CRC1-BGR	Cylindrical Pin (RESET)
I2700.1	DI 1 X1:2	CRC1-BGS	Cylindrical Pin (SET)
I2700.2	DI 2 X2:4	CRC2-BGR	Cylindrical Pin (RESET)
I2700.3	DI 3 X2:2	CRC2-BGS	Cylindrical Pin (SET)
I2700.4	DI 4 X3:4	CRC3-BGR	Utility Coupler Guide (RESET)
I2700.5	DI 5 X3:2	CRC3-BGS	Utility Coupler Guide (SET)
I2700.6	DI 6 X4:4	CR-PP1	Pallet Detect Sensor 1
I2700.7	DI 7 X4:2	CR-PP2	Pallet Detect Sensor 2

See ABB 3HAW050043350 Package for details.

I2701.0	DI 0 X1:4	CR-PT1	Pallet Identifier Sensor 1
I2701.1	DI 1 X1:2	CR-PT2	Pallet Identifier Sensor 2
I2701.2	DI 2 X2:4	CR-PT3	Pallet Identifier Sensor 3
I2701.3	DI 3 X2:2	I2701.3	Spare
I2701.4	DI 4 X3:4	I2701.4	Spare
I2701.5	DI 5 X3:2	I2701.5	Spare
I2701.6	DI 6 X4:4	I2701.6	Spare
I2701.7	DI 7 X4:2	I2701.7	Spare

-KF1.12

FESTO

CPX-AB-4-M12X2-5POL-R

541254

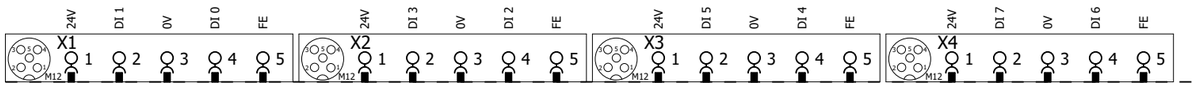

See ABB 3HAW050043350 Package for details.

Q2705.0	DO 0 X1:4	Q2705.0	Spare
Q2705.1	DO 1 X1:2	Q2705.1	Spare
Q2705.2	DO 2 X2:4	Q2705.2	Spare
Q2705.3	DO 3 X2:2	Q2705.3	Spare
Q2705.4	DO 4 X3:4	Q2705.4	Spare
Q2705.5	DO 5 X3:2	Q2705.5	Spare
Q2705.6	DO 6 X4:4	Q2705.6	Spare
Q2705.7	DO 7 X4:2	Q2705.7	Spare

-KF1.13

FESTO

CPX-AB-4-M12X2-5POL-R

541254

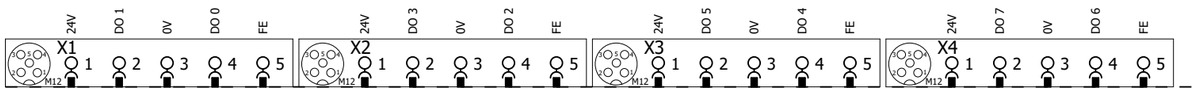

See ABB 3HAW050043350 Package for details.

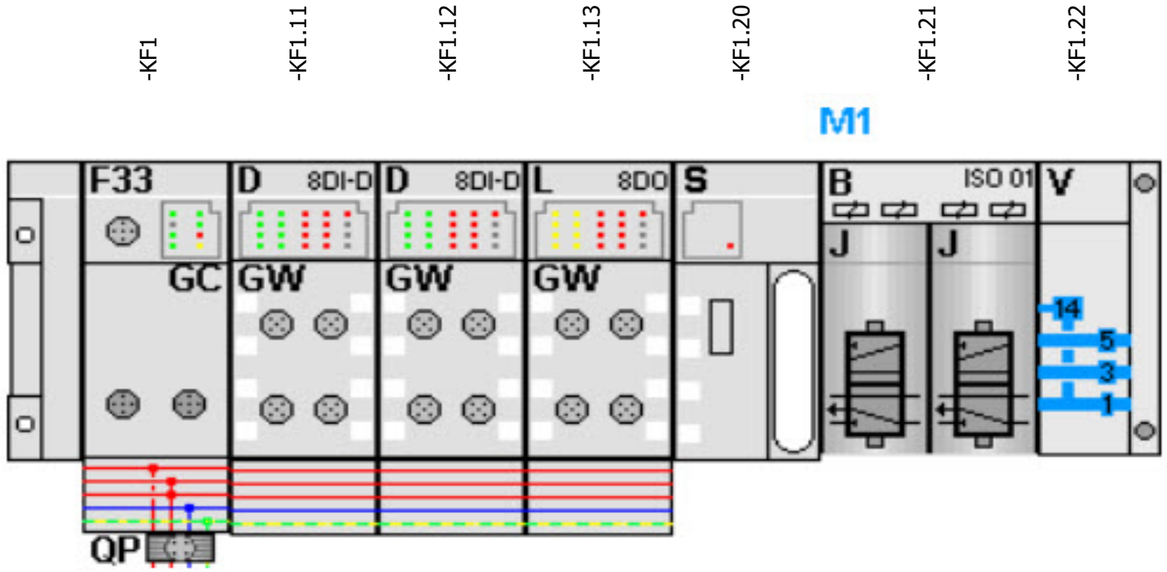

-KF1.21

FESTO

Q2700.0 DO 0 1.1	-QN1.1_Q	Pin Cylinder (RESET)
Q2700.1 DO 1 1.2	-QN1.2_Q	Pin Cylinder (SET)
Q2700.2 DO 2 2.1	-QN2.1_Q	Utility Coupler Guide Cylinder (RESET)
Q2700.3 DO 3 2.2	-QN2.2_Q	Utility Coupler Guide Cylinder (SET)

See ABB 3HAW050043350 Package for details.

			Date	1/11/2023	Volvo Trucks North America	Valiant TMS	CONNECTING MOD. FOR FESTO DQ	Drawing name: =2V10&EFS-EL		= V1GL2KF1	
			Ed.	MKLEPADLO						+ V1GL2	
			Appr		P6700 Bodyside RH - Robot Cell 2V10			Document type: EFS	Project nr: 22-16150		Page 4
Modification	Date	Name	Original		Replacement of / Replaced by	Scale 1:1					1579

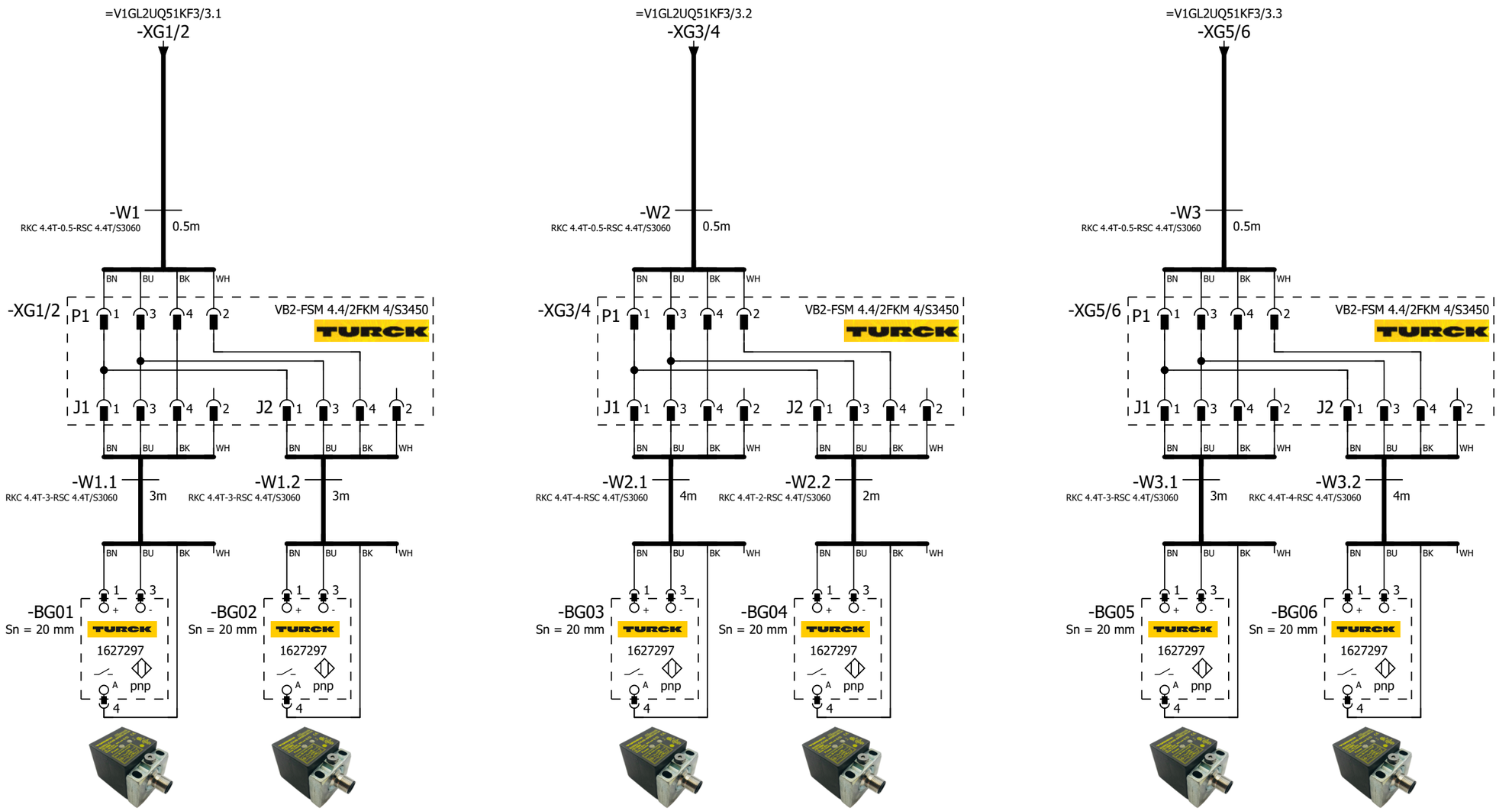

=V1GL2UQ51 -BG01 B-Pillar Inner Assembly	=V1GL2UQ51 -BG02 B-Pillar Inner Assembly	=V1GL2UQ51 -BG03 B-Pillar Inner Assembly	=V1GL2UQ51 -BG04 A-Pillar Inner Assembly	=V1GL2UQ51 -BG05 A-Pillar Inner Assembly	=V1GL2UQ51 -BG06 Header Inner Assembly

=V1GL2KF1+V1GL2/4

2

			Date	1/11/2023	Volvo Trucks North America		Valiant TMS	SENSORS	Drawing name: =2V10&EFS-EL	= V1GL2UQ51BG0	
			Ed.	MKLEPADLO						+ V1GL2UQ51	
			Appr		P6700 Bodyside RH - Robot Cell 2V10				Document type: EFS	Project nr: 22-16150	Page 1
Modification	Date	Name	Original		Replacement of	Replaced by	Scale 1:1				1579

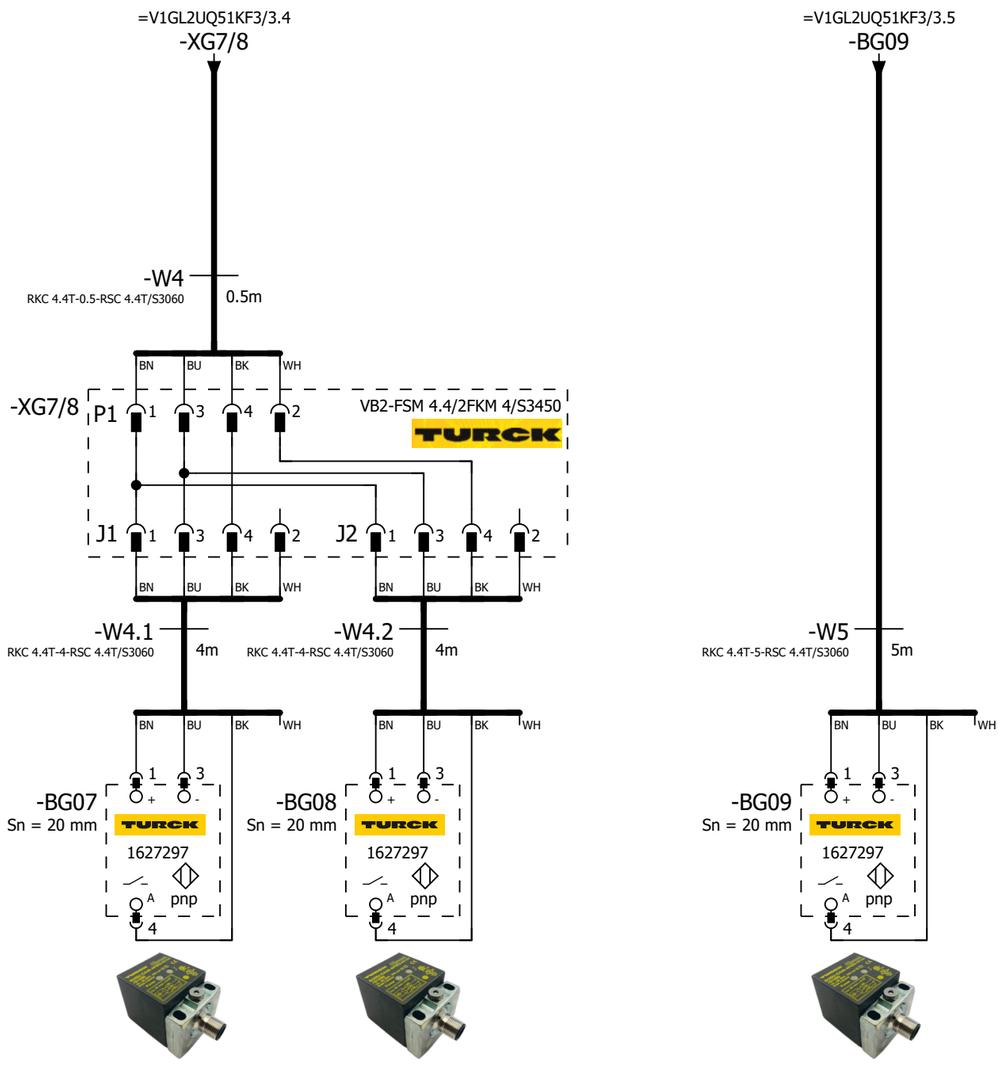

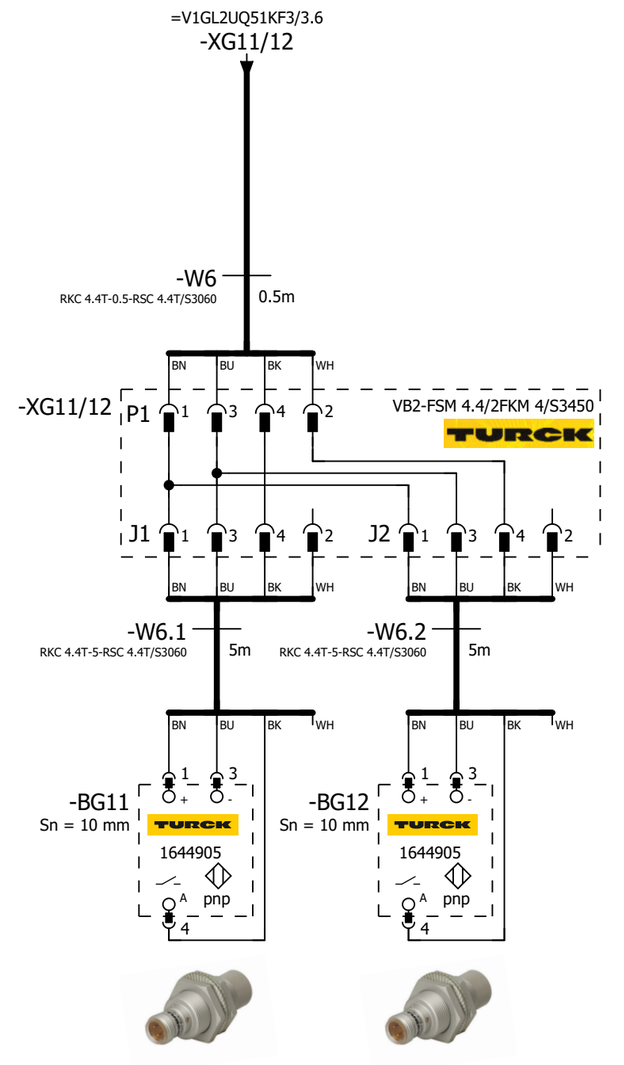

1

3

			Date	1/11/2023	Volvo Trucks North America		Valiant TMS	SENSORS	Drawing name: =2V10&EFS-EL	= V1GL2UQ51BG0	
			Ed.	MKLEPADLO						+ V1GL2UQ51	
			Appr		P6700 Bodyside RH - Robot Cell 2V10				Document type: EFS	Project nr: 22-16150	Page 2
Modification	Date	Name	Original		Replacement of	Replaced by	Scale 1:1				1579

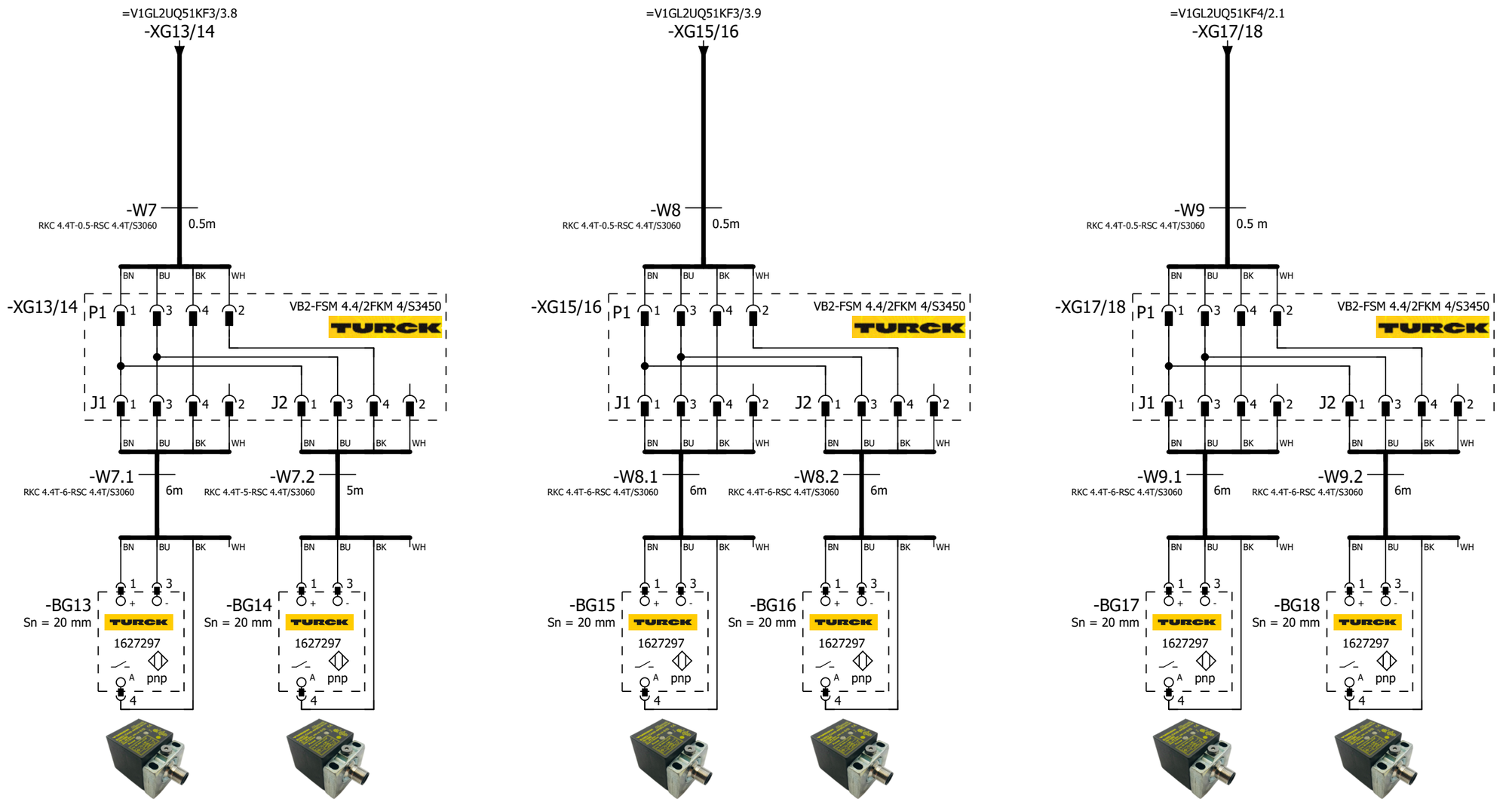

=V1GL2UQ51 -BG13 Side Inner Header Asm/L230	=V1GL2UQ51 -BG14 Header Inner Rear/L290	=V1GL2UQ51 -BG15 Window Blind Mnt/L290	=V1GL2UQ51 -BG16 Window Blind Mnt/L290	=V1GL2UQ51 -BG17 Header Inner Mid/L320	=V1GL2UQ51 -BG18 Salem Vent Reinf/L320

2 4

			Date	1/11/2023	Volvo Trucks North America	Valiant TMS	SENSORS	Drawing name: =2V10&EFS-EL	= V1GL2UQ51BG0	
			Ed.	MKLEPADLO					+ V1GL2UQ51	
			Appr		P6700 Bodyside RH - Robot Cell 2V10			Document type: EFS	Project nr: 22-16150	Page 3
Modification	Date	Name	Original		Replacement of / Replaced by	Scale 1:1				1579

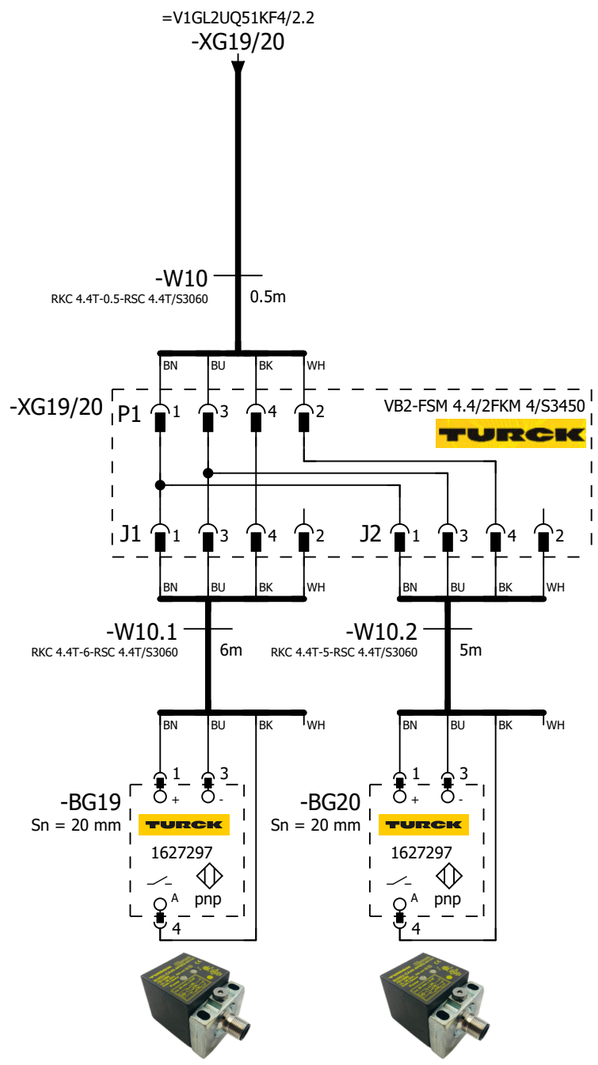

=V1GL2UQ51
-BG19
TV Mount Rear
Brkt/L320

=V1GL2UQ51
-BG20
TV Mount Rear
Brkt/L320

3

=V1GL2UQ51KF1/1

			Date	1/11/2023	Volvo Trucks North America	Valiant TMS	SENSORS	Drawing name: =2V10&EFS-EL		= V1GL2UQ51BG0	
			Ed.	MKLEPADLO						+ V1GL2UQ51	
			Appr		P6700 Bodyside RH - Robot Cell 2V10			Document type: EFS	Project nr: 22-16150		Page 4
Modification	Date	Name	Original		Replacement of / Replaced by	Scale 1:1					1579

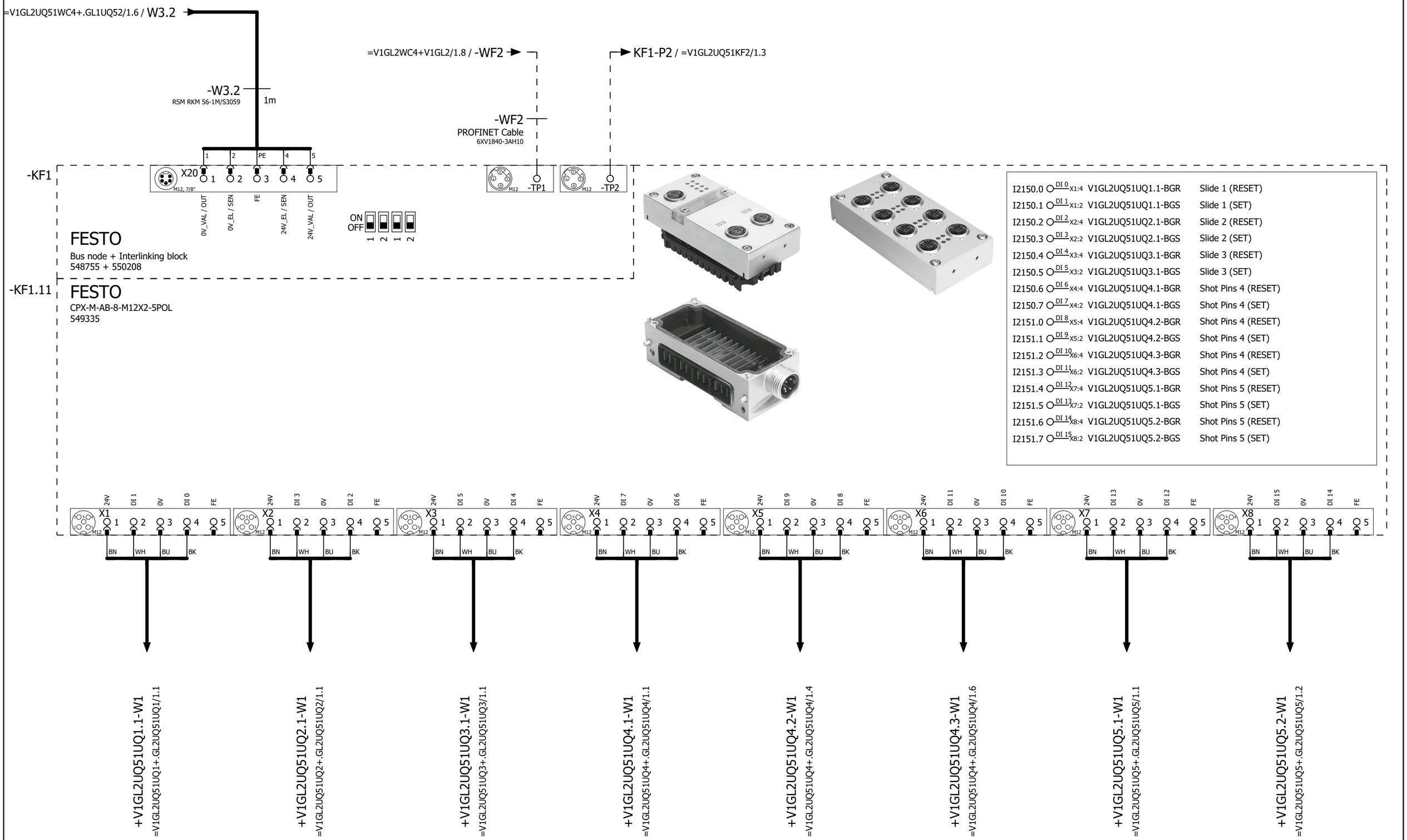

=V1GL2UQ51BG0/4

2

			Date	1/11/2023	Volvo Trucks North America	Valiant TMS	CONNECTING MOD. FOR VTSA MANIFOLD	Drawing name: =2V10&EFS-EL		= V1GL2UQ51KF1	
			Ed.	MKLEPADLO						+ V1GL2UQ51	
			Appr		P6700 Bodyside RH - Robot Cell 2V10			Document type: EFS	Project nr: 22-16150		Page 1
Modification	Date	Name	Original		Replacement of / Replaced by	Scale 1:1					1579

0	1	2	3	4	5	6	7	8	9

I2152.0	DI 0 X1:4	V1GL2UQ51UQ5.3-BGR	Shot Pins 5 (RESET)
I2152.1	DI 1 X1:2	V1GL2UQ51UQ5.3-BGS	Shot Pins 5 (SET)
I2152.2	DI 2 X2:4	V1GL2UQ51UQ6.1-BGR	Shot Pins 6 (RESET)
I2152.3	DI 3 X2:2	V1GL2UQ51UQ6.1-BGS	Shot Pins 6 (SET)
I2152.4	DI 4 X3:4	V1GL2UQ51UQ6.2-BGR	Shot Pins 6 (RESET)
I2152.5	DI 5 X3:2	V1GL2UQ51UQ6.2-BGS	Shot Pins 6 (SET)
I2152.6	DI 6 X4:4	V1GL2UQ51UQ7.1-BGR	Shot Pins 7 (RESET)
I2152.7	DI 7 X4:2	V1GL2UQ51UQ7.1-BGS	Shot Pins 7 (SET)
I2153.0	DI 8 X5:4	V1GL2UQ51UQ7.2-BGR	Shot Pins 7 (RESET)
I2153.1	DI 9 X5:2	V1GL2UQ51UQ7.2-BGS	Shot Pins 7 (SET)
I2153.2	DI 10 X6:4	V1GL2UQ51UQ8.1-BGR	Shot Pins 8 (RESET)
I2153.3	DI 11 X6:2	V1GL2UQ51UQ8.1-BGS	Shot Pins 8 (SET)
I2153.4	DI 12 X7:4	V1GL2UQ51UQ8.2-BGR	Shot Pins 8 (RESET)
I2153.5	DI 13 X7:2	V1GL2UQ51UQ8.2-BGS	Shot Pins 8 (SET)
I2153.6	DI 14 X8:4	V1GL2UQ51UQ8.3-BGR	Shot Pins 8 (RESET)
I2153.7	DI 15 X8:2	V1GL2UQ51UQ8.3-BGS	Shot Pins 8 (SET)

-KF1.12

FESTO
CPX-M-AB-8-M12X2-5POL
549335

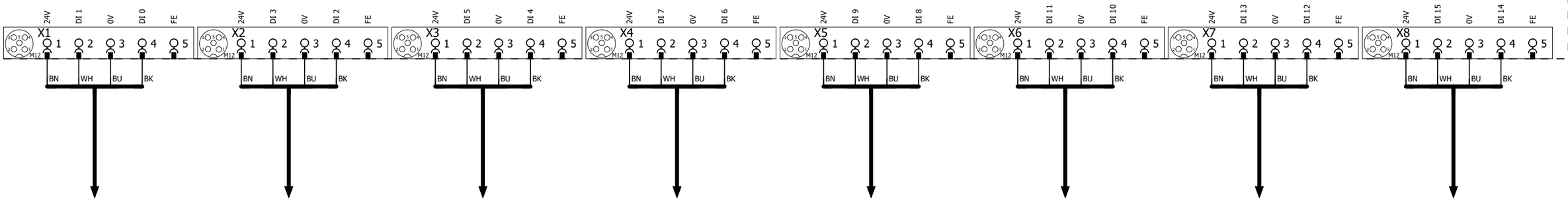

+V1GL2UQ51UQ5.3-W1
=V1GL2UQ51UQ5+.GL2UQ51UQ5/1.4

+V1GL2UQ51UQ6.1-W1
=V1GL2UQ51UQ6+.GL2UQ51UQ6/1.1

+V1GL2UQ51UQ6.2-W1
=V1GL2UQ51UQ6+.GL2UQ51UQ6/1.4

+V1GL2UQ51UQ7.1-W1
=V1GL2UQ51UQ7+.GL2UQ51UQ7/1.1

+.GL2UQ51UQ7.2-W1
=V1GL2UQ51UQ7+.GL2UQ51UQ7/1.4

+.GL2UQ51UQ8.1-W1
=V1GL2UQ51UQ8+.GL2UQ51UQ8/1.1

+.GL2UQ51UQ8.2-W1
=V1GL2UQ51UQ8+.GL2UQ51UQ8/1.2

+.GL2UQ51UQ8.3-W1
=V1GL2UQ51UQ8+.GL2UQ51UQ8/1.4

1 3

			Date	1/11/2023	Volvo Trucks North America	Valiant TMS	I/O MOD. DI16 (8 x M12) FOR VTSA-F	Drawing name: =2V10&EFS-EL		= V1GL2UQ51KF1	
			Ed.	MKLEPADLO						+ V1GL2UQ51	
			Appr		P6700 Bodyside RH - Robot Cell 2V10			Document type: EFS	Project nr: 22-16150		Page 2
Modification	Date	Name	Original		Replacement of	Replaced by	Scale 1:1				1579

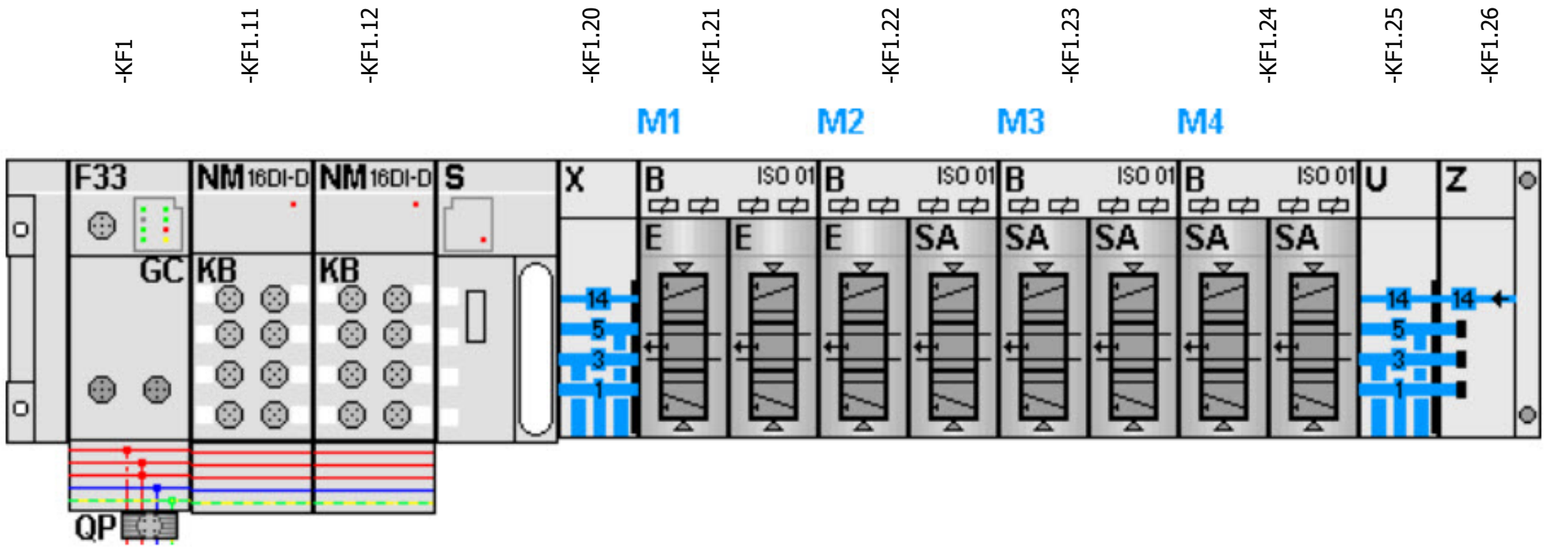

-KF1.21

=V1GL2UQ51UQ1+.GL2UQ51UQ1/1.3
=V1GL2UQ51UQ2+.GL2UQ51UQ2/1.3

FESTO

=V1GL2UQ51UQ1+.GL2UQ51UQ1/1.4	Q2150.0 DO 0 1.1	-QN1.1_Q	Slide 1 (RST)
=V1GL2UQ51UQ1+.GL2UQ51UQ1/1.4	Q2150.1 DO 1 1.2	-QN1.2_Q	Slide 1 (SET)
=V1GL2UQ51UQ2+.GL2UQ51UQ2/1.4	Q2150.2 DO 2 2.1	-QN2.1_Q	Slide 2 (RST)
=V1GL2UQ51UQ2+.GL2UQ51UQ2/1.4	Q2150.3 DO 3 2.2	-QN2.2_Q	Slide 2 (SET)

-KF1.22

=V1GL2UQ51UQ3+.GL2UQ51UQ3/1.3
=V1GL2UQ51UQ4+.GL2UQ51UQ4/1.3

FESTO

=V1GL2UQ51UQ3+.GL2UQ51UQ3/1.4	Q2150.4 DO 0 1.1	-QN3.1_Q	Slide 3 (RST)
=V1GL2UQ51UQ3+.GL2UQ51UQ3/1.4	Q2150.5 DO 1 1.2	-QN3.2_Q	Slide 3 (SET)
=V1GL2UQ51UQ4+.GL2UQ51UQ4/1.4	Q2150.6 DO 2 2.1	-QN4.1_Q	Shot Pins 4 (RST)
=V1GL2UQ51UQ4+.GL2UQ51UQ4/1.4	Q2150.7 DO 3 2.2	-QN4.2_Q	Shot Pins 4 (SET)

-KF1.23

=V1GL2UQ51UQ5+.GL2UQ51UQ5/1.3
=V1GL2UQ51UQ6+.GL2UQ51UQ6/1.3

FESTO

=V1GL2UQ51UQ5+.GL2UQ51UQ5/1.4	Q2151.0 DO 0 1.1	-QN5.1_Q	Shot Pins 5 (RST)
=V1GL2UQ51UQ5+.GL2UQ51UQ5/1.4	Q2151.1 DO 1 1.2	-QN5.2_Q	Shot Pins 5 (SET)
=V1GL2UQ51UQ6+.GL2UQ51UQ6/1.4	Q2151.2 DO 0 2.1	-QN6.1_Q	Shot Pins 6 (RST)
=V1GL2UQ51UQ6+.GL2UQ51UQ6/1.4	Q2151.3 DO 1 2.2	-QN6.2_Q	Shot Pins 6 (SET)

-KF1.24

=V1GL2UQ51UQ7+.GL2UQ51UQ7/1.3
=V1GL2UQ51UQ8+.GL2UQ51UQ8/1.3

FESTO

=V1GL2UQ51UQ7+.GL2UQ51UQ7/1.4	Q2151.4 DO 0 1.1	-QN7.1_Q	Shot Pins 7 (RST)
=V1GL2UQ51UQ7+.GL2UQ51UQ7/1.4	Q2151.5 DO 1 1.2	-QN7.2_Q	Shot Pins 7 (SET)
=V1GL2UQ51UQ8+.GL2UQ51UQ8/1.4	Q2151.6 DO 0 2.1	-QN8.1_Q	Shot Pins 8 (RST)
=V1GL2UQ51UQ8+.GL2UQ51UQ8/1.4	Q2151.7 DO 1 2.2	-QN8.2_Q	Shot Pins 8 (SET)

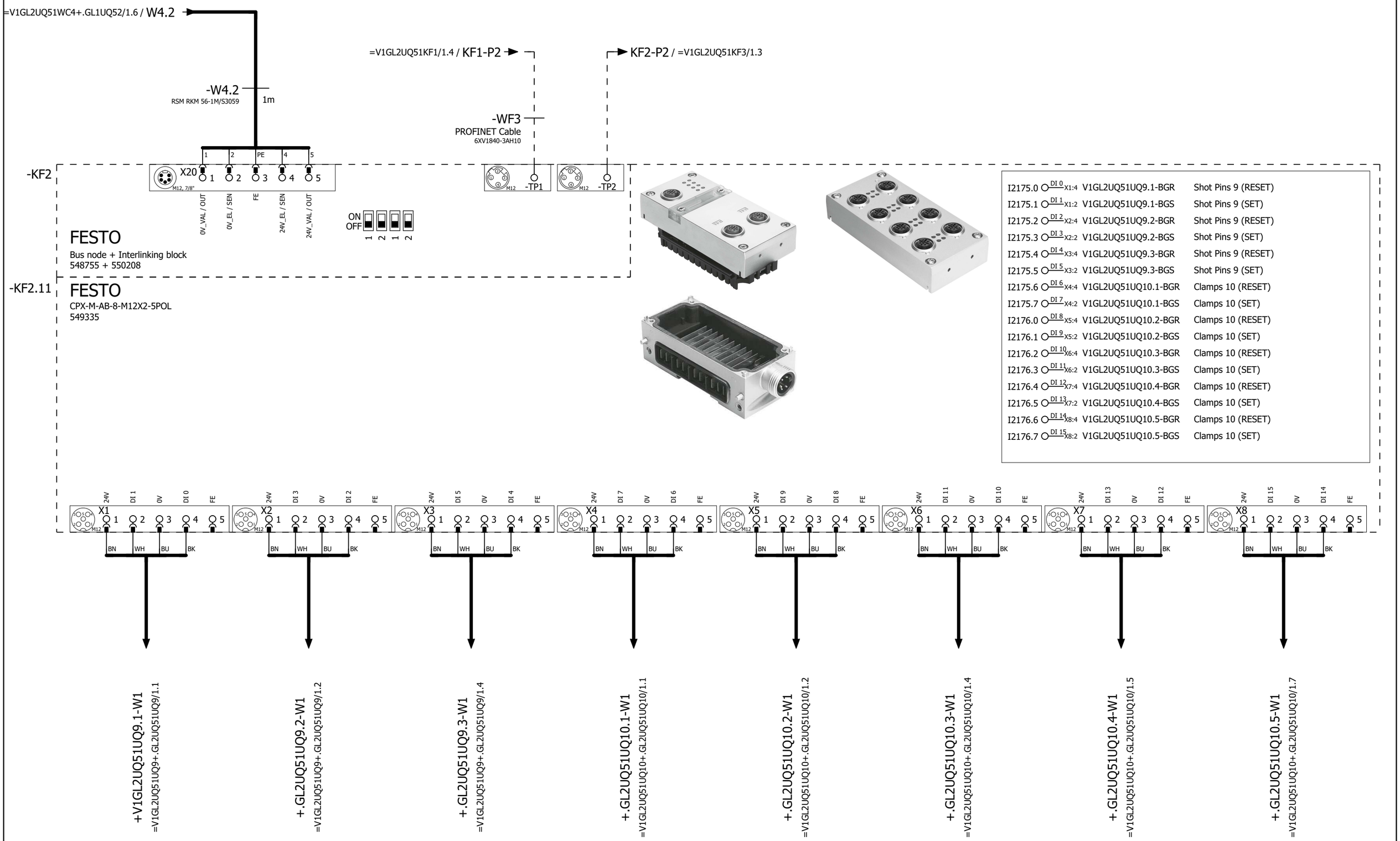

=V1GL2UQ51KF1/3

2

			Date	1/11/2023	Volvo Trucks North America		Valiant TMS	CONNECTING MOD. FOR VTSA MANIFOLD	Drawing name: =2V10&EFS-EL	= V1GL2UQ51KF2	
			Ed.	MKLEPADLO						+ V1GL2UQ51	
			Appr		P6700 Bodyside RH - Robot Cell 2V10				Document type: EFS	Project nr: 22-16150	Page 1
Modification	Date	Name	Original		Replacement of	Replaced by	Scale 1:1				1579

I2177.0	DI 0 X1:4	V1GL2UQ51UQ10.6-BGR	Clamps 10 (RESET)
I2177.1	DI 1 X1:2	V1GL2UQ51UQ10.6-BGS	Clamps 10 (SET)
I2177.2	DI 2 X2:4	V1GL2UQ51UQ11.1-BGR	Clamp 11 (RESET)
I2177.3	DI 3 X2:2	V1GL2UQ51UQ11.1-BGS	Clamp 11 (SET)
I2177.4	DI 4 X3:4	V1GL2UQ51UQ12.1-BGR	Clamp 12 (RESET)
I2177.5	DI 5 X3:2	V1GL2UQ51UQ12.1-BGS	Clamp 12 (SET)
I2177.6	DI 6 X4:4	V1GL2UQ51UQ13.1-BGR	Clamp 13 (RESET)
I2177.7	DI 7 X4:2	V1GL2UQ51UQ13.1-BGS	Clamp 13 (SET)
I2178.0	DI 8 X5:4	V1GL2UQ51UQ14.1-BGR	Clamp 14 (RESET)
I2178.1	DI 9 X5:2	V1GL2UQ51UQ14.1-BGS	Clamp 14 (SET)
I2178.2	DI 10 X6:4	V1GL2UQ51UQ15.1-BGR	Clamp 15 (RESET)
I2178.3	DI 11 X6:2	V1GL2UQ51UQ15.1-BGS	Clamp 15 (SET)
I2178.4	DI 12 X7:4	V1GL2UQ51UQ16.1-BGR	Clamp 16 (RESET)
I2178.5	DI 13 X7:2	V1GL2UQ51UQ16.1-BGS	Clamp 16 (SET)
I2178.6	DI 14 X8:4	V1GL2UQ51UQ17.1-BGR	Clamps 17 (RESET)
I2178.7	DI 15 X8:2	V1GL2UQ51UQ17.1-BGS	Clamps 17 (SET)

-KF2.12

FESTO
CPX-M-AB-8-M12X2-5POL
549335

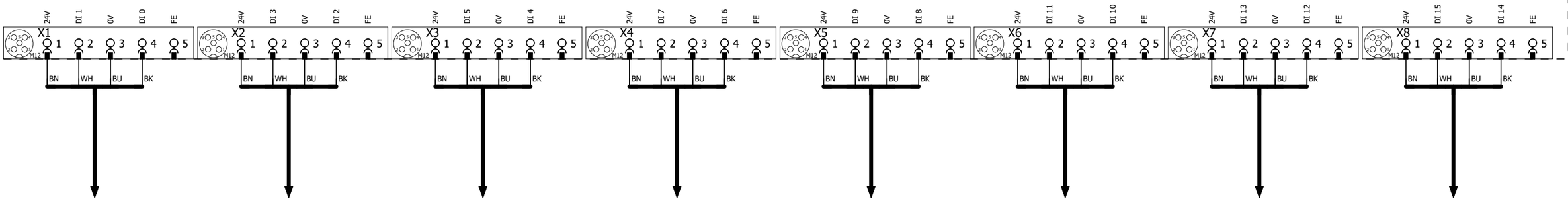

+.GL2UQ51UQ10.6-W1
=V1GL2UQ51UQ10+.GL2UQ51UQ10/1.9

+.GL2UQ51UQ11.1-W1
=V1GL2UQ51UQ11+.GL2UQ51UQ11/1.1

+.GL2UQ51UQ12.1-W1
=V1GL2UQ51UQ12+.GL2UQ51UQ12/1.1

+.GL2UQ51UQ13.1-W1
=V1GL2UQ51UQ13+.GL2UQ51UQ13/1.1

+.GL2UQ51UQ14.1-W1
=V1GL2UQ51UQ14+.GL2UQ51UQ14/1.1

+.GL2UQ51UQ15.1-W1
=V1GL2UQ51UQ15+.GL2UQ51UQ15/1.1

+.GL2UQ51UQ16.1-W1
=V1GL2UQ51UQ16+.GL2UQ51UQ16/1.1

+.GL2UQ51UQ17.1-W1
=V1GL2UQ51UQ17+.GL2UQ51UQ17/1.1

-KF2.13

FESTO
CPX-M-AB-8-M12X2-5POL
549335

I2179.0	DI 0 X1:4	V1GL2UQ51UQ17.2-BGR	Clamps 17 (RESET)
I2179.1	DI 1 X1:2	V1GL2UQ51UQ17.2-BGS	Clamps 17 (SET)
I2179.2	DI 2 X2:4	V1GL2UQ51UQ17.3-BGR	Clamps 17 (RESET)
I2179.3	DI 3 X2:2	V1GL2UQ51UQ17.3-BGS	Clamps 17 (SET)
I2179.4	DI 4 X3:4	V1GL2UQ51UQ17.4-BGR	Clamps 17 (RESET)
I2179.5	DI 5 X3:2	V1GL2UQ51UQ17.4-BGS	Clamps 17 (SET)
I2179.6	DI 6 X4:4	V1GL2UQ51UQ18.1-BGR	Clamps 18 (RESET)
I2179.7	DI 7 X4:2	V1GL2UQ51UQ18.1-BGS	Clamps 18 (SET)
I2180.0	DI 8 X5:4	V1GL2UQ51UQ18.2-BGR	Clamps 18 (RESET)
I2180.1	DI 9 X5:2	V1GL2UQ51UQ18.2-BGS	Clamps 18 (SET)
I2180.2	DI 10 X6:4	I2180.2	Spare
I2180.3	DI 11 X6:2	I2180.3	Spare
I2180.4	DI 12 X7:4	I2180.4	Spare
I2180.5	DI 13 X7:2	I2180.5	Spare
I2180.6	DI 14 X8:4	I2180.6	Spare
I2180.7	DI 15 X8:2	I2180.7	Spare

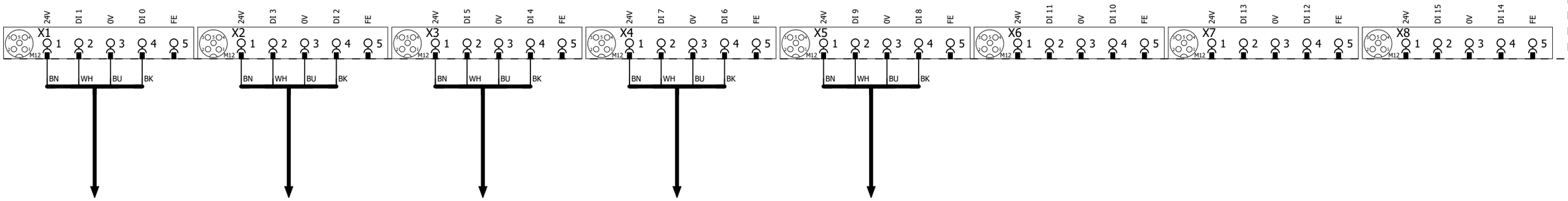

+.GL2UQ51UQ17.2-W1
=V1GL2UQ51UQ17+.GL2UQ51UQ17/1.2

+.GL2UQ51UQ17.3-W1
=V1GL2UQ51UQ17+.GL2UQ51UQ17/1.4

+.GL2UQ51UQ17.4-W1
=V1GL2UQ51UQ17+.GL2UQ51UQ17/1.5

+.GL2UQ51UQ18.1-W1
=V1GL2UQ51UQ18+.GL2UQ51UQ18/1.1

+.GL2UQ51UQ18.2-W1
=V1GL2UQ51UQ18+.GL2UQ51UQ18/1.2

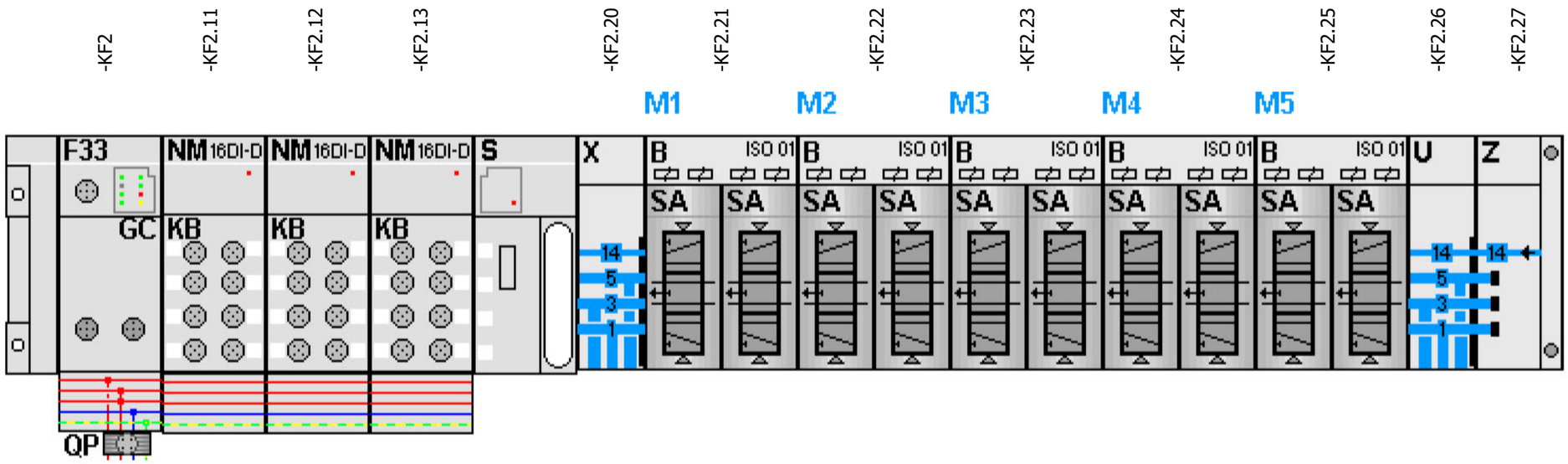

-KF2.21

=V1GL2UQ51UQ9+.GL2UQ51UQ9/1.3
=V1GL2UQ51UQ10+.GL2UQ51UQ10/1.3

FESTO

=V1GL2UQ51UQ9+.GL2UQ51UQ9/1.4	Q2175.0 DO 0 1.1	-QN9.1_Q	Shot Pins 9 (RST)
=V1GL2UQ51UQ9+.GL2UQ51UQ9/1.4	Q2175.1 DO 1 1.2	-QN9.2_Q	Shot Pins 9 (SET)
=V1GL2UQ51UQ10+.GL2UQ51UQ10/1.4	Q2175.2 DO 2 2.1	-QN10.1_Q	Clamps 10 (RST)
=V1GL2UQ51UQ10+.GL2UQ51UQ10/1.4	Q2175.3 DO 3 2.2	-QN10.2_Q	Clamps 10 (SET)

-KF2.22

=V1GL2UQ51UQ11+.GL2UQ51UQ11/1.3
=V1GL2UQ51UQ12+.GL2UQ51UQ12/1.3

FESTO

=V1GL2UQ51UQ11+.GL2UQ51UQ11/1.4	Q2175.4 DO 0 1.1	-QN11.1_Q	Clamp 11 (RST)
=V1GL2UQ51UQ11+.GL2UQ51UQ11/1.4	Q2175.5 DO 1 1.2	-QN11.2_Q	Clamp 11 (SET)
=V1GL2UQ51UQ12+.GL2UQ51UQ12/1.4	Q2175.6 DO 2 2.1	-QN12.1_Q	Clamp 12 (RST)
=V1GL2UQ51UQ12+.GL2UQ51UQ12/1.4	Q2175.7 DO 3 2.2	-QN12.2_Q	Clamp 12 (SET)

-KF2.23

=V1GL2UQ51UQ13+.GL2UQ51UQ13/1.3
=V1GL2UQ51UQ14+.GL2UQ51UQ14/1.3

FESTO

=V1GL2UQ51UQ13+.GL2UQ51UQ13/1.4	Q2176.0 DO 0 1.1	-QN13.1_Q	Clamp 13 (RST)
=V1GL2UQ51UQ13+.GL2UQ51UQ13/1.4	Q2176.1 DO 1 1.2	-QN13.2_Q	Clamp 13 (SET)
=V1GL2UQ51UQ14+.GL2UQ51UQ14/1.4	Q2176.2 DO 0 2.1	-QN14.1_Q	Clamp 14 (RST)
=V1GL2UQ51UQ14+.GL2UQ51UQ14/1.4	Q2176.3 DO 1 2.2	-QN14.2_Q	Clamp 14 (SET)

-KF2.24

=V1GL2UQ51UQ15+.GL2UQ51UQ15/1.3
=V1GL2UQ51UQ16+.GL2UQ51UQ16/1.3

FESTO

=V1GL2UQ51UQ15+.GL2UQ51UQ15/1.4	Q2176.4 DO 0 1.1	-QN15.1_Q	Clamp 15 (RST)
=V1GL2UQ51UQ15+.GL2UQ51UQ15/1.4	Q2176.5 DO 1 1.2	-QN15.2_Q	Clamp 15 (SET)
=V1GL2UQ51UQ16+.GL2UQ51UQ16/1.4	Q2176.6 DO 0 2.1	-QN16.1_Q	Clamp 16 (RST)
=V1GL2UQ51UQ16+.GL2UQ51UQ16/1.4	Q2176.7 DO 1 2.2	-QN16.2_Q	Clamp 16 (SET)

-KF2.25

=V1GL2UQ51UQ17+.GL2UQ51UQ17/1.3
=V1GL2UQ51UQ18+.GL2UQ51UQ18/1.3

FESTO

=V1GL2UQ51UQ17+.GL2UQ51UQ17/1.4	Q2177.0 DO 0 1.1	-QN17.1_Q	Clamps 17 (RST)
=V1GL2UQ51UQ17+.GL2UQ51UQ17/1.4	Q2177.1 DO 1 1.2	-QN17.2_Q	Clamps 17 (SET)
=V1GL2UQ51UQ18+.GL2UQ51UQ18/1.4	Q2177.2 DO 0 2.1	-QN18.1_Q	Clamps 18 (RST)
=V1GL2UQ51UQ18+.GL2UQ51UQ18/1.4	Q2177.3 DO 1 2.2	-QN18.2_Q	Clamps 18 (SET)

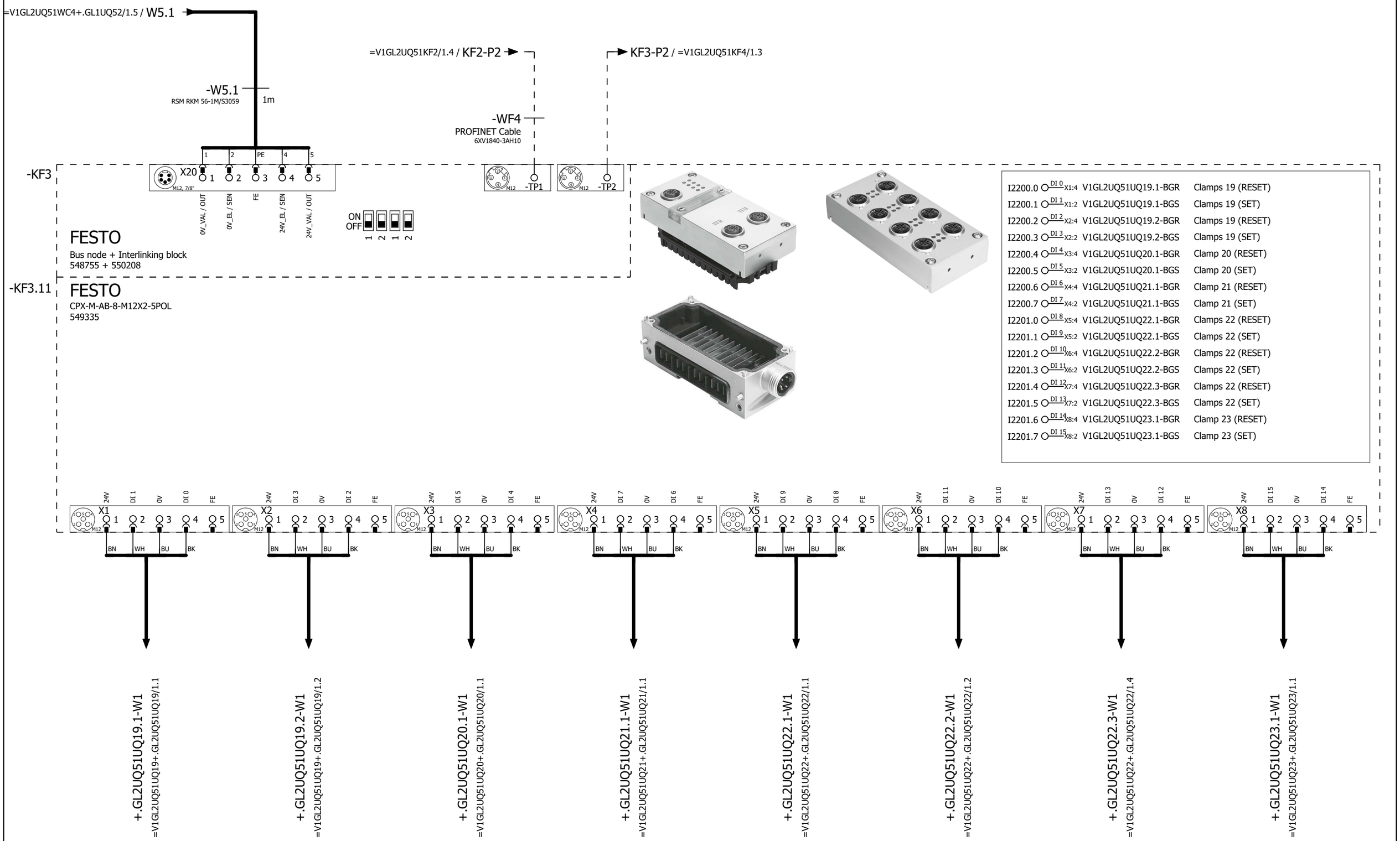

=V1GL2UQ51KF2/4

2

			Date	1/11/2023	Volvo Trucks North America	Valiant TMS	CONNECTING MOD. FOR VTSA MANIFOLD	Drawing name: =2V10&EFS-EL		= V1GL2UQ51KF3	
			Ed.	MKLEPADLO						+ V1GL2UQ51	
			Appr		P6700 Bodyside RH - Robot Cell 2V10			Document type: EFS	Project nr: 22-16150		Page 1
Modification	Date	Name	Original		Replacement of / Replaced by	Scale 1:1					1579

I2202.0	DI 0 X1:4	V1GL2UQ51UQ24.1-BGR	Clamp 24 (RESET)
I2202.1	DI 1 X1:2	V1GL2UQ51UQ24.1-BGS	Clamp 24 (SET)
I2202.2	DI 2 X2:4	V1GL2UQ51UQ25.1-BGR	Clamp 25 (RESET)
I2202.3	DI 3 X2:2	V1GL2UQ51UQ25.1-BGS	Clamp 25 (SET)
I2202.4	DI 4 X3:4	V1GL2UQ51UQ26.1-BGR	Clamp 26 (RESET)
I2202.5	DI 5 X3:2	V1GL2UQ51UQ26.1-BGS	Clamp 26 (SET)
I2202.6	DI 6 X4:4	V1GL2UQ51UQ27.1-BGR	Clamp 27 (RESET)
I2202.7	DI 7 X4:2	V1GL2UQ51UQ27.1-BGS	Clamp 27 (SET)
I2203.0	DI 8 X5:4	V1GL2UQ51UQ28.1-BGR	Clamp 28 (RESET)
I2203.1	DI 9 X5:2	V1GL2UQ51UQ28.1-BGS	Clamp 28 (SET)
I2203.2	DI 10 X6:4	I2203.2	Spare
I2203.3	DI 11 X6:2	I2203.3	Spare
I2203.4	DI 12 X7:4	I2203.4	Spare
I2203.5	DI 13 X7:2	I2203.5	Spare
I2203.6	DI 14 X8:4	I2203.6	Spare
I2203.7	DI 15 X8:2	I2203.7	Spare

-KF3.12

FESTO
CPX-M-AB-8-M12X2-5POL
549335

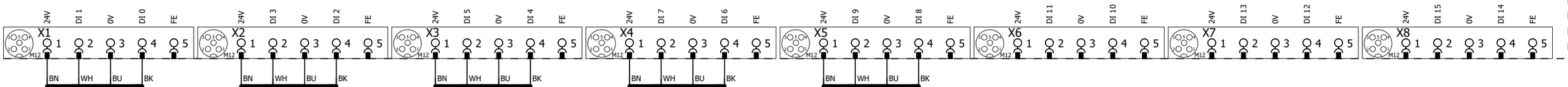

+.GL2UQ51UQ24.1-W1
=V1GL2UQ51UQ24+.GL2UQ51UQ24/1.1

+.GL2UQ51UQ25.1-W1
=V1GL2UQ51UQ25+.GL2UQ51UQ25/1.1

+.GL2UQ51UQ26.1-W1
=V1GL2UQ51UQ26+.GL2UQ51UQ26/1.1

+.GL2UQ51UQ27.1-W1
=V1GL2UQ51UQ27+.GL2UQ51UQ27/1.1

+.GL2UQ51UQ28.1-W1
=V1GL2UQ51UQ28+.GL2UQ51UQ28/1.1

-KF3.13

FESTO

CPX-M-AB-8-M12X2-5POL
549335

I2204.0	DI 0 X1:4	V1GL2UQ51-BG01	Sensor B-Pillar Inner Assembly
I2204.1	DI 1 X1:2	V1GL2UQ51-BG02	Sensor B-Pillar Inner Assembly
I2204.2	DI 2 X2:4	V1GL2UQ51-BG03	Sensor B-Pillar Inner Assembly
I2204.3	DI 3 X2:2	V1GL2UQ51-BG04	Sensor A-Pillar Inner Assembly
I2204.4	DI 4 X3:4	V1GL2UQ51-BG05	Sensor A-Pillar Inner Assembly
I2204.5	DI 5 X3:2	V1GL2UQ51-BG06	Sensor Header Inner Assembly
I2204.6	DI 6 X4:4	V1GL2UQ51-BG07	Sensor Header Inner Assembly
I2204.7	DI 7 X4:2	V1GL2UQ51-BG08	Sensor Salem Vent Reinf/L230
I2205.0	DI 8 X5:4	V1GL2UQ51-BG09	Sensor Salem Vent Reinf/L230
I2205.1	DI 9 X5:2	I2205.1	Spare
I2205.2	DI 10 X6:4	V1GL2UQ51-BG11	Sensor Baffle Inner Header/L230
I2205.3	DI 11 X6:2	V1GL2UQ51-BG12	Sensor Baffle Inner Header/L230
I2205.4	DI 12 X7:4	V1GL2UQ51-BG13	Sensor Side Inner Header Assembly/L230
I2205.5	DI 13 X7:2	V1GL2UQ51-BG14	Sensor Header Inner Rear/L290
I2205.6	DI 14 X8:4	V1GL2UQ51-BG15	Sensor Window Blind Mnt/L290
I2205.7	DI 15 X8:2	V1GL2UQ51-BG16	Sensor Window Blind Mnt/L290

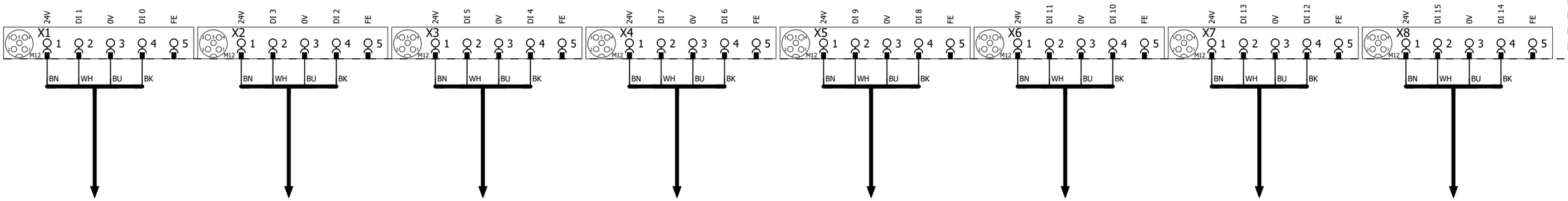

-XG1/2
=V1GL2UQ51BG0/1.1

-XG3/4
=V1GL2UQ51BG0/1.4

-XG5/6
=V1GL2UQ51BG0/1.6

-XG7/8
=V1GL2UQ51BG0/2.1

-BG09
=V1GL2UQ51BG0/2.3

-XG11/12
=V1GL2UQ51BG0/2.6

-XG13/14
=V1GL2UQ51BG0/3.1

-XG15/16
=V1GL2UQ51BG0/3.4

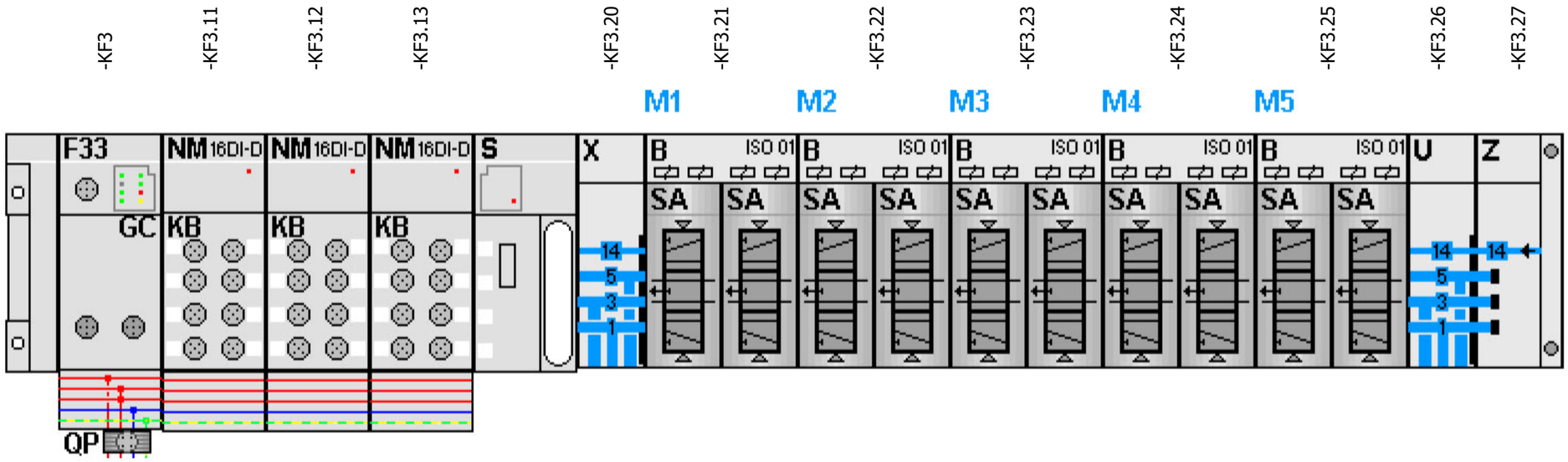

-KF3.21

=V1GL2UQ51UQ19+.GL2UQ51UQ19/1.3
=V1GL2UQ51UQ20+.GL2UQ51UQ20/1.3

FESTO

=V1GL2UQ51UQ19+.GL2UQ51UQ19/1.4	Q2200.0 DO 0 1.1	-QN19.1_Q	Clamps 19 (RST)
=V1GL2UQ51UQ19+.GL2UQ51UQ19/1.4	Q2200.1 DO 1 1.2	-QN19.2_Q	Clamps 19 (SET)
=V1GL2UQ51UQ20+.GL2UQ51UQ20/1.4	Q2200.2 DO 2 2.1	-QN20.1_Q	Clamp 20 (RST)
=V1GL2UQ51UQ20+.GL2UQ51UQ20/1.4	Q2200.3 DO 3 2.2	-QN20.2_Q	Clamp 20 (SET)

-KF3.22

=V1GL2UQ51UQ21+.GL2UQ51UQ21/1.3
=V1GL2UQ51UQ22+.GL2UQ51UQ22/1.3

FESTO

=V1GL2UQ51UQ21+.GL2UQ51UQ21/1.4	Q2200.4 DO 0 1.1	-QN21.1_Q	Clamp 21 (RST)
=V1GL2UQ51UQ21+.GL2UQ51UQ21/1.4	Q2200.5 DO 1 1.2	-QN21.2_Q	Clamp 21 (SET)
=V1GL2UQ51UQ22+.GL2UQ51UQ22/1.4	Q2200.6 DO 0 2.1	-QN22.1_Q	Clamps 22 (RST)
=V1GL2UQ51UQ22+.GL2UQ51UQ22/1.4	Q2200.7 DO 1 2.2	-QN22.2_Q	Clamps 22 (SET)

-KF3.23

=V1GL2UQ51UQ23+.GL2UQ51UQ23/1.3
=V1GL2UQ51UQ24+.GL2UQ51UQ24/1.3

FESTO

=V1GL2UQ51UQ23+.GL2UQ51UQ23/1.4	Q2201.0 DO 0 1.1	-QN23.1_Q	Clamp 23 (RST)
=V1GL2UQ51UQ23+.GL2UQ51UQ23/1.4	Q2201.1 DO 1 1.2	-QN23.2_Q	Clamp 23 (SET)
=V1GL2UQ51UQ24+.GL2UQ51UQ24/1.4	Q2201.2 DO 0 2.1	-QN24.1_Q	Clamp 24 (RST)
=V1GL2UQ51UQ24+.GL2UQ51UQ24/1.4	Q2201.3 DO 1 2.2	-QN24.2_Q	Clamp 24 (SET)

-KF3.24

=V1GL2UQ51UQ25+.GL2UQ51UQ25/1.3
=V1GL2UQ51UQ26+.GL2UQ51UQ26/1.3

FESTO

=V1GL2UQ51UQ25+.GL2UQ51UQ25/1.4	Q2201.4 DO 0 1.1	-QN25.1_Q	Clamp 25 (RST)
=V1GL2UQ51UQ25+.GL2UQ51UQ25/1.4	Q2201.5 DO 1 1.2	-QN25.2_Q	Clamp 25 (SET)
=V1GL2UQ51UQ26+.GL2UQ51UQ26/1.4	Q2201.6 DO 0 2.1	-QN26.1_Q	Clamp 26 (RST)
=V1GL2UQ51UQ26+.GL2UQ51UQ26/1.4	Q2201.7 DO 1 2.2	-QN26.2_Q	Clamp 26 (SET)

-KF3.25

=V1GL2UQ51UQ27+.GL2UQ51UQ27/1.3
=V1GL2UQ51UQ28+.GL2UQ51UQ28/1.3

FESTO

=V1GL2UQ51UQ27+.GL2UQ51UQ27/1.4	Q2202.0 DO 0 1.1	-QN27.1_Q	Clamp 27 (RST)
=V1GL2UQ51UQ27+.GL2UQ51UQ27/1.4	Q2202.1 DO 1 1.2	-QN27.2_Q	Clamp 27 (SET)
=V1GL2UQ51UQ28+.GL2UQ51UQ28/1.4	Q2202.2 DO 0 2.1	-QN28.1_Q	Clamp 28 (RST)
=V1GL2UQ51UQ28+.GL2UQ51UQ28/1.4	Q2202.3 DO 1 2.2	-QN28.2_Q	Clamp 28 (SET)

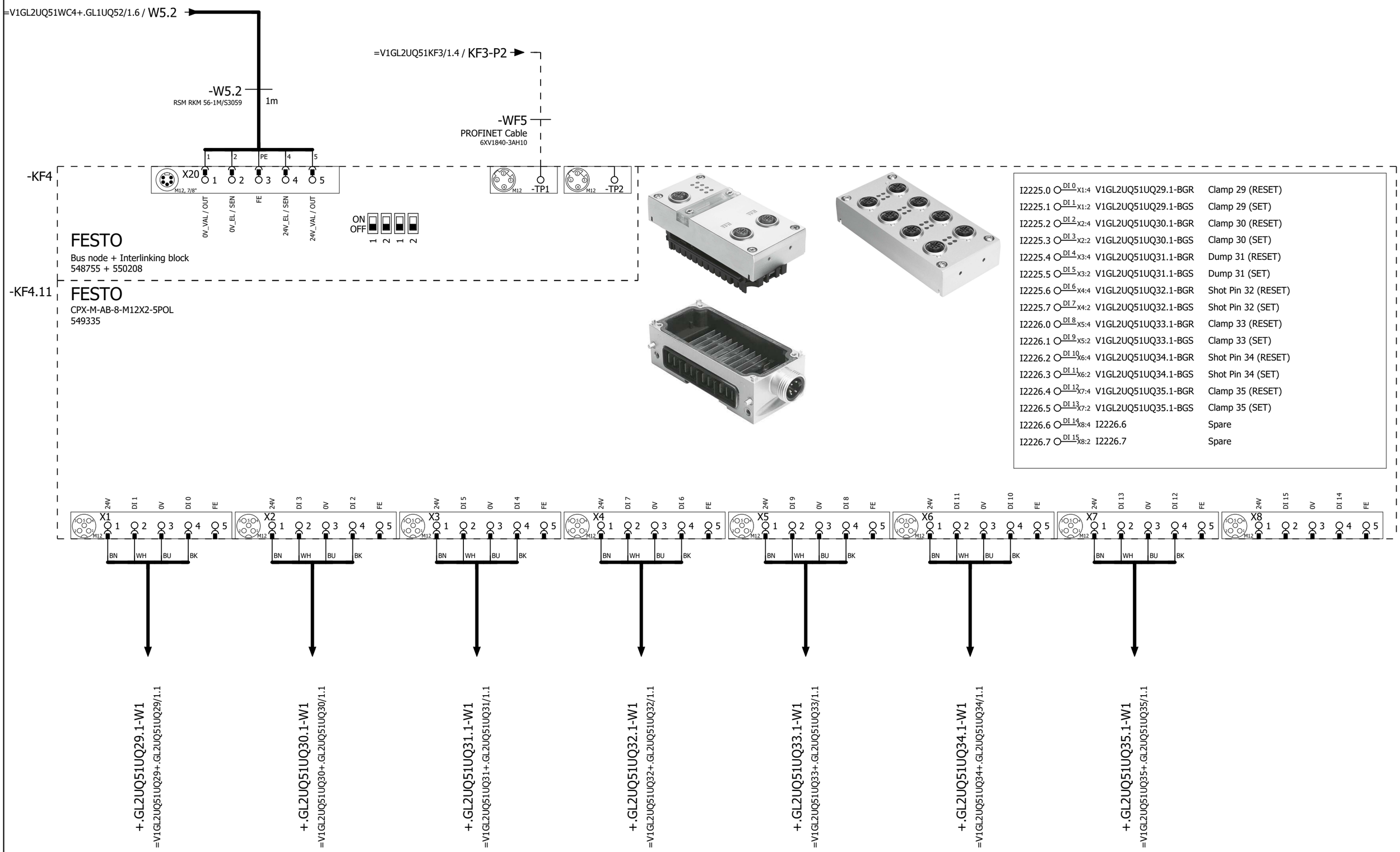

=V1GL2UQ51KF3/4

2

			Date	1/11/2023	Volvo Trucks North America	Valiant TMS	CONNECTING MOD. FOR VTSA MANIFOLD	Drawing name: =2V10&EFS-EL		= V1GL2UQ51KF4	
			Ed.	MKLEPADLO						+ V1GL2UQ51	
			Appr		P6700 Bodyside RH - Robot Cell 2V10			Document type: EFS	Project nr: 22-16150		Page 1
Modification	Date	Name	Original		Replacement of / Replaced by	Scale 1:1					1579

I2227.0	DI 0 X1:4	V1GL2UQ51-BG17	Sensor Header Inner Middle/L320
I2227.1	DI 1 X1:2	V1GL2UQ51-BG18	Sensor Salem Vent Reinf/L230
I2227.2	DI 2 X2:4	V1GL2UQ51-BG19	Sensor TV Mount Rear Bracket/L320
I2227.3	DI 3 X2:2	V1GL2UQ51-BG20	Sensor TV Mount Rear Bracket/L320
I2227.4	DI 4 X3:4	I2227.4	Spare
I2227.5	DI 5 X3:2	I2227.5	Spare
I2227.6	DI 6 X4:4	I2227.6	Spare
I2227.7	DI 7 X4:2	I2227.7	Spare
I2228.0	DI 8 X5:4	I2228.0	Spare
I2228.1	DI 9 X5:2	I2228.1	Spare
I2228.2	DI 10 X6:4	I2228.2	Spare
I2228.3	DI 11 X6:2	I2228.3	Spare
I2228.4	DI 12 X7:4	I2228.4	Spare
I2228.5	DI 13 X7:2	I2228.5	Spare
I2228.6	DI 14 X8:4	I2228.6	Spare
I2228.7	DI 15 X8:2	I2228.7	Spare

-KF4.12

FESTO

CPX-M-AB-8-M12X2-5POL

549335

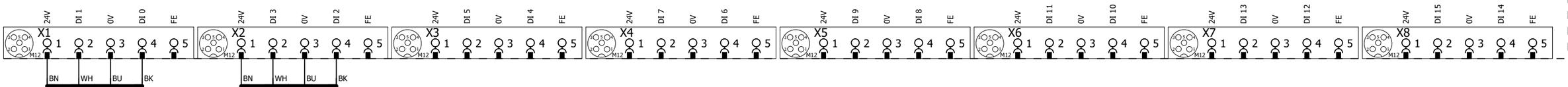

-XG17/18
=V1GL2UQ51BG0/3.6

-XG19/20
=V1GL2UQ51BG0/4.1

1 3

			Date	1/11/2023	Volvo Trucks North America	Valiant TMS	I/O MOD. DI16 (8 x M12) FOR VTSA-F	Drawing name: =2V10&EFS-EL		= V1GL2UQ51KF4	
			Ed.	MKLEPADLO						+ V1GL2UQ51	
			Appr		P6700 Bodyside RH - Robot Cell 2V10			Document type: EFS	Project nr: 22-16150		Page 2
Modification	Date	Name	Original		Replacement of / Replaced by	Scale 1:1					1579

I2229.0	DI 0 X1:4	I2229.0	Spare
I2229.1	DI 1 X1:2	I2229.1	Spare
I2229.2	DI 2 X2:4	I2229.2	Spare
I2229.3	DI 3 X2:2	I2229.3	Spare
I2229.4	DI 4 X3:4	I2229.4	Spare
I2229.5	DI 5 X3:2	I2229.5	Spare
I2229.6	DI 6 X4:4	I2229.6	Spare
I2229.7	DI 7 X4:2	I2229.7	Spare
I2230.0	DI 8 X5:4	I2230.0	Spare
I2230.1	DI 9 X5:2	I2230.1	Spare
I2230.2	DI 10 X6:4	I2230.2	Spare
I2230.3	DI 11 X6:2	I2230.3	Spare
I2230.4	DI 12 X7:4	I2230.4	Spare
I2230.5	DI 13 X7:2	I2230.5	Spare
I2230.6	DI 14 X8:4	I2230.6	Spare
I2230.7	DI 15 X8:2	I2230.7	Spare

-KF4.13

FESTO

CPX-M-AB-8-M12X2-5POL

549335

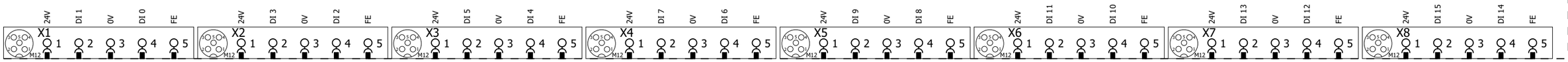

2 4

			Date	1/11/2023	Volvo Trucks North America	Valiant TMS	I/O MOD. DI16 (8 x M12) FOR VTSA-F	Drawing name: =2V10&EFS-EL		= V1GL2UQ51KF4	
			Ed.	MKLEPADLO						+ V1GL2UQ51	
			Appr		P6700 Bodyside RH - Robot Cell 2V10			Document type: EFS	Project nr: 22-16150		Page 3
Modification	Date	Name	Original		Replacement of	Replaced by	Scale 1:1				1579

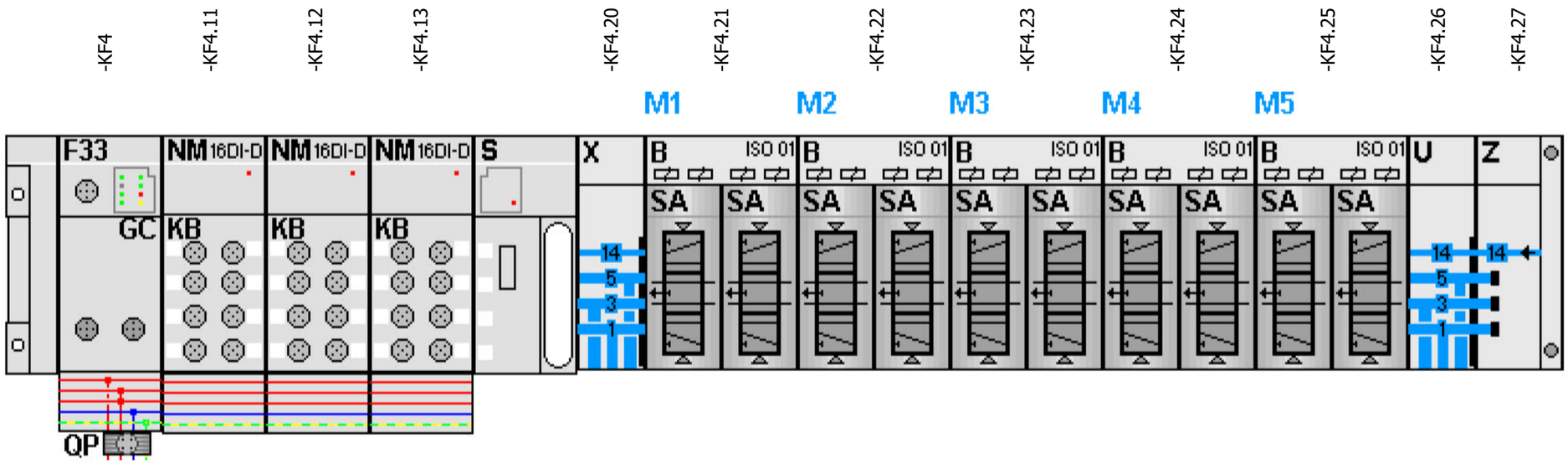

-KF4.21

=V1GL2UQ51UQ29+.GL2UQ51UQ29/1.3
=V1GL2UQ51UQ30+.GL2UQ51UQ30/1.3

FESTO

=V1GL2UQ51UQ29+.GL2UQ51UQ29/1.4	Q2225.0 DO 0 1.1	-QN29.1_Q	Clamp 29 (RST)
=V1GL2UQ51UQ29+.GL2UQ51UQ29/1.4	Q2225.1 DO 1 1.2	-QN29.2_Q	Clamp 29 (SET)
=V1GL2UQ51UQ30+.GL2UQ51UQ30/1.4	Q2225.2 DO 0 2.1	-QN30.1_Q	Clamp 30 (RST)
=V1GL2UQ51UQ30+.GL2UQ51UQ30/1.4	Q2225.3 DO 1 2.2	-QN30.2_Q	Clamp 30 (SET)

-KF4.22

=V1GL2UQ51UQ31+.GL2UQ51UQ31/1.3
=V1GL2UQ51UQ32+.GL2UQ51UQ32/1.3

FESTO

=V1GL2UQ51UQ31+.GL2UQ51UQ31/1.4	Q2225.4 DO 0 1.1	-QN31.1_Q	Dump 31 (RST)
=V1GL2UQ51UQ31+.GL2UQ51UQ31/1.4	Q2225.5 DO 1 1.2	-QN31.2_Q	Dump 31 (SET)
=V1GL2UQ51UQ32+.GL2UQ51UQ32/1.4	Q2225.6 DO 0 2.1	-QN32.1_Q	Shot Pin 32 (RST)
=V1GL2UQ51UQ32+.GL2UQ51UQ32/1.4	Q2225.7 DO 1 2.2	-QN32.2_Q	Shot Pin 32 (SET)

-KF4.23

=V1GL2UQ51UQ33+.GL2UQ51UQ33/1.3
=V1GL2UQ51UQ34+.GL2UQ51UQ34/1.3

FESTO

=V1GL2UQ51UQ33+.GL2UQ51UQ33/1.4	Q2226.0 DO 0 1.1	-QN33.1_Q	Clamp 33 (RST)
=V1GL2UQ51UQ33+.GL2UQ51UQ33/1.4	Q2226.1 DO 1 1.2	-QN33.2_Q	Clamp 33 (SET)
=V1GL2UQ51UQ34+.GL2UQ51UQ34/1.4	Q2226.2 DO 0 2.1	-QN34.1_Q	Shot Pin 34 (RST)
=V1GL2UQ51UQ34+.GL2UQ51UQ34/1.4	Q2226.3 DO 1 2.2	-QN34.2_Q	Shot Pin 34 (SET)

-KF4.24

=V1GL2UQ51UQ35+.GL2UQ51UQ35/1.3
=V1GL2UQ51UQ36+.GL2UQ51UQ36/1.3

FESTO

=V1GL2UQ51UQ35+.GL2UQ51UQ35/1.4	Q2226.4 DO 0 1.1	-QN35.1_Q	Clamp 35 (RST)
=V1GL2UQ51UQ35+.GL2UQ51UQ35/1.4	Q2226.5 DO 1 1.2	-QN35.2_Q	Clamp 35 (SET)
=V1GL2UQ51UQ36+.GL2UQ51UQ36/1.4	Q2226.6 DO 0 2.1	-QN36.1_Q	Spare (RST)
=V1GL2UQ51UQ36+.GL2UQ51UQ36/1.4	Q2226.7 DO 1 2.2	-QN36.2_Q	Spare (SET)

-KF4.25

=V1GL2UQ51UQ37+.GL2UQ51UQ37/1.3
=V1GL2UQ51UQ38+.GL2UQ51UQ38/1.3

FESTO

=V1GL2UQ51UQ37+.GL2UQ51UQ37/1.4	Q2227.0 DO 0 1.1	-QN37.1_Q	Spare (RST)
=V1GL2UQ51UQ37+.GL2UQ51UQ37/1.4	Q2227.1 DO 1 1.2	-QN37.2_Q	Spare (SET)
=V1GL2UQ51UQ38+.GL2UQ51UQ38/1.4	Q2227.2 DO 0 2.1	-QN38.1_Q	Spare (RST)
=V1GL2UQ51UQ38+.GL2UQ51UQ38/1.4	Q2227.3 DO 1 2.2	-QN38.2_Q	Spare (SET)

=V1GL2UQ51UQ1+.GL2UQ51UQ1/1

			Date	1/11/2023	Volvo Trucks North America		Valiant TMS	CONNECTING MOD. FOR FESTO DQ	Drawing name: =2V10&EFS-EL	= V1GL2UQ51KF4	
			Ed.	MKLEPADLO						+ V1GL2UQ51	
			Appr		P6700 Bodyside RH - Robot Cell 2V10				Document type: EFS	Project nr: 22-16150	Page 4
Modification	Date	Name	Original		Replacement of	Replaced by	Scale 1:1				1579

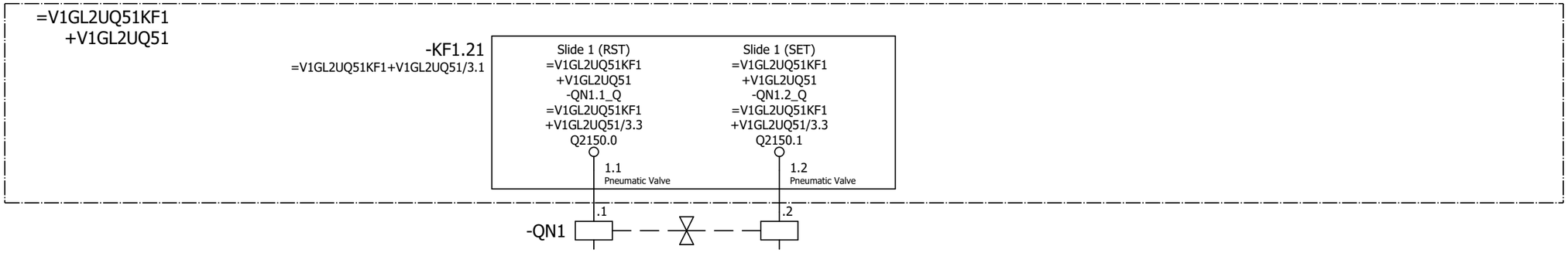

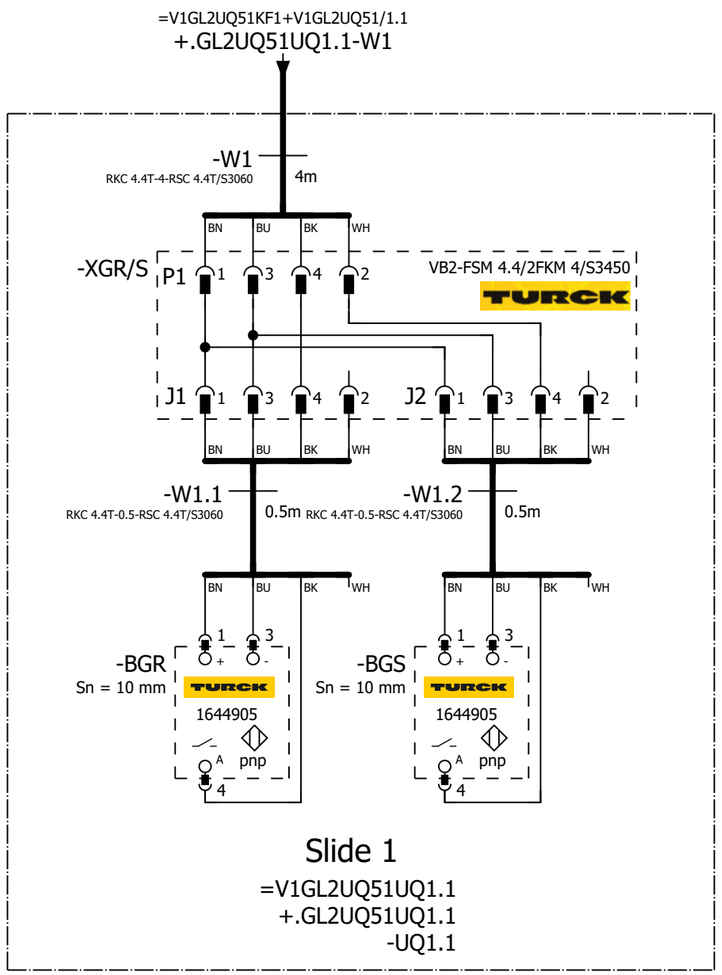

=V1GL2UQ51
-UQ1.1-BGR
Slide 1

=V1GL2UQ51
-UQ1.1-BGS
Slide 1

=V1GL2UQ51KF4+V1GL2UQ51/4

=V1GL2UQ51UQ2+.GL2UQ51UQ2/1

			Date	1/11/2023	Volvo Trucks North America	Valiant TMS	FESTO DQ CONNECTION QN1	Drawing name: =2V10&EFS-EL	= V1GL2UQ51UQ1		
			Ed.	MKLEPADLO					+ V1GL2UQ51UQ1		
			Appr		P6700 Bodyside RH - Robot Cell 2V10			Document type: EFS	Project nr: 22-16150	Page	1
Modification	Date	Name	Original		Replacement of / Replaced by	Scale 1:1					1579

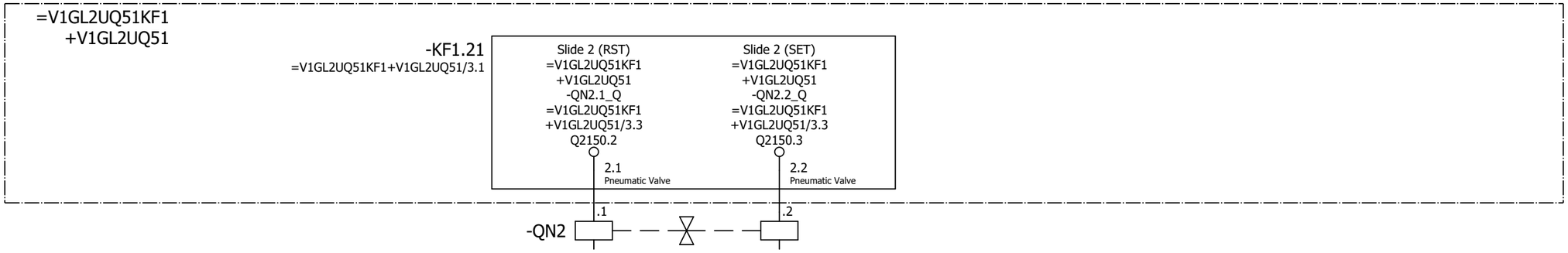

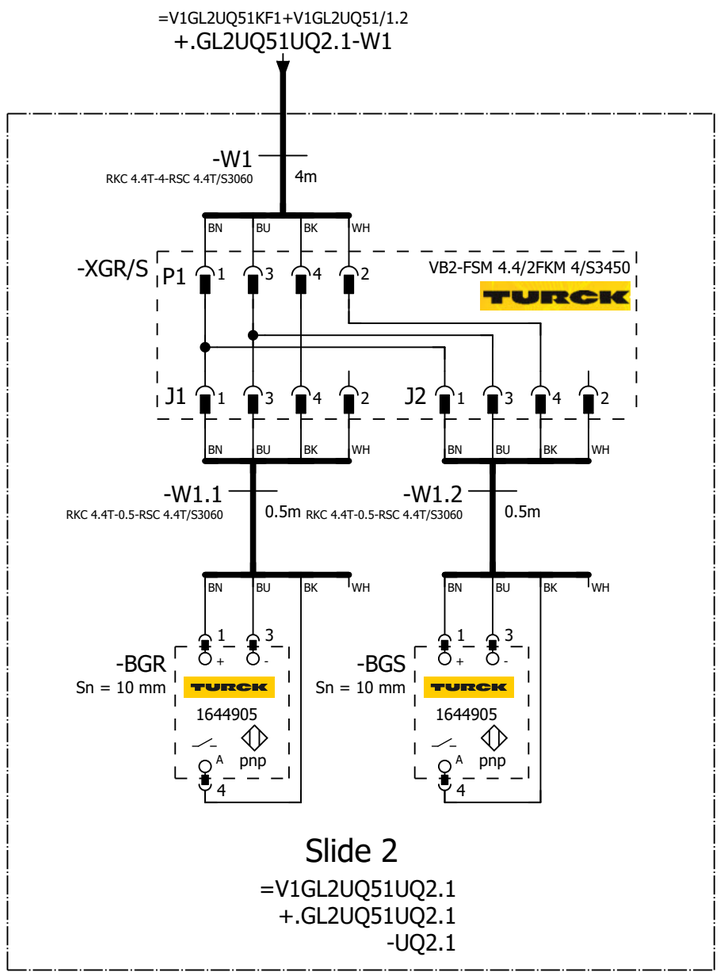

=V1GL2UQ51
-UQ2.1-BGR
Slide 2

=V1GL2UQ51
-UQ2.1-BGS
Slide 2

=V1GL2UQ51UQ1+.GL2UQ51UQ1/1

=V1GL2UQ51UQ3+.GL2UQ51UQ3/1

			Date	1/11/2023	Volvo Trucks North America		Valiant TMS	FESTO DQ CONNECTION QN2	Drawing name: =2V10&EFS-EL	= V1GL2UQ51UQ2	
			Ed.	MKLEPADLO						+ V1GL2UQ51UQ2	
			Appr		P6700 Bodyside RH - Robot Cell 2V10				Document type: EFS	Project nr: 22-16150	Page 1
Modification	Date	Name	Original		Replacement of	Replaced by	Scale 1:1				1579

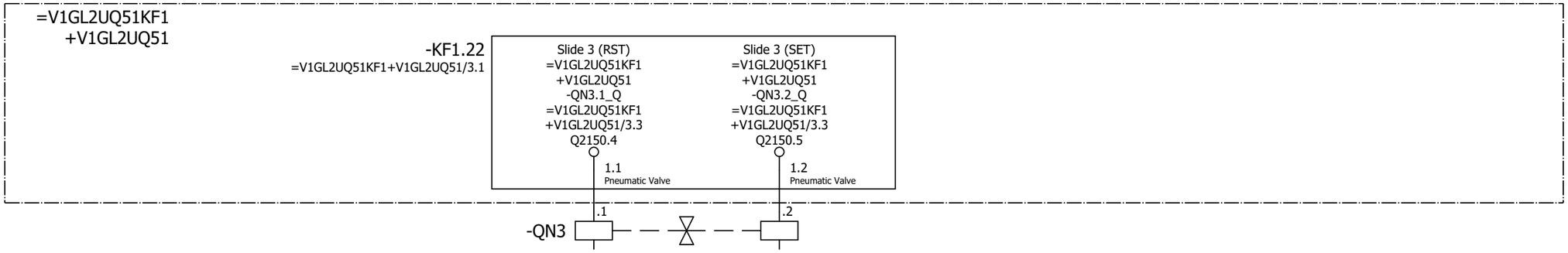

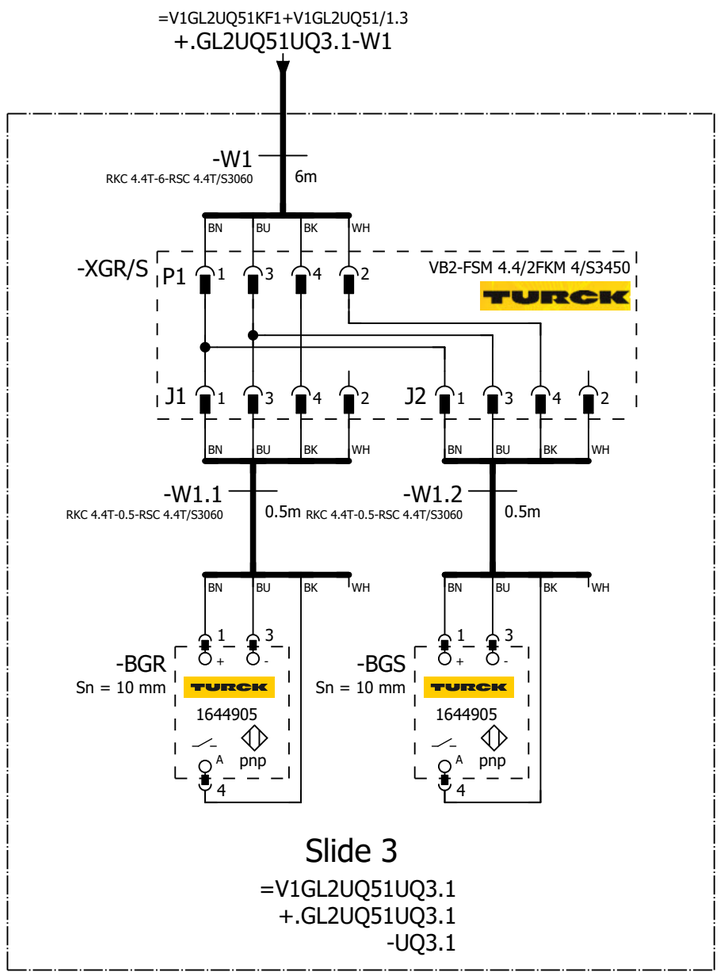

=V1GL2UQ51
-UQ3.1-BGR
Slide 3

=V1GL2UQ51
-UQ3.1-BGS
Slide 3

=V1GL2UQ51UQ2+.GL2UQ51UQ2/1

=V1GL2UQ51UQ4+.GL2UQ51UQ4/1

			Date	1/11/2023	Volvo Trucks North America	Valiant TMS	FESTO DQ CONNECTION QN3	Drawing name: =2V10&EFS-EL		= V1GL2UQ51UQ3	
			Ed.	MKLEPADLO						+ V1GL2UQ51UQ3	
			Appr		P6700 Bodyside RH - Robot Cell 2V10			Document type: EFS	Project nr: 22-16150		Page 1
Modification	Date	Name	Original		Replacement of / Replaced by	Scale 1:1					1579

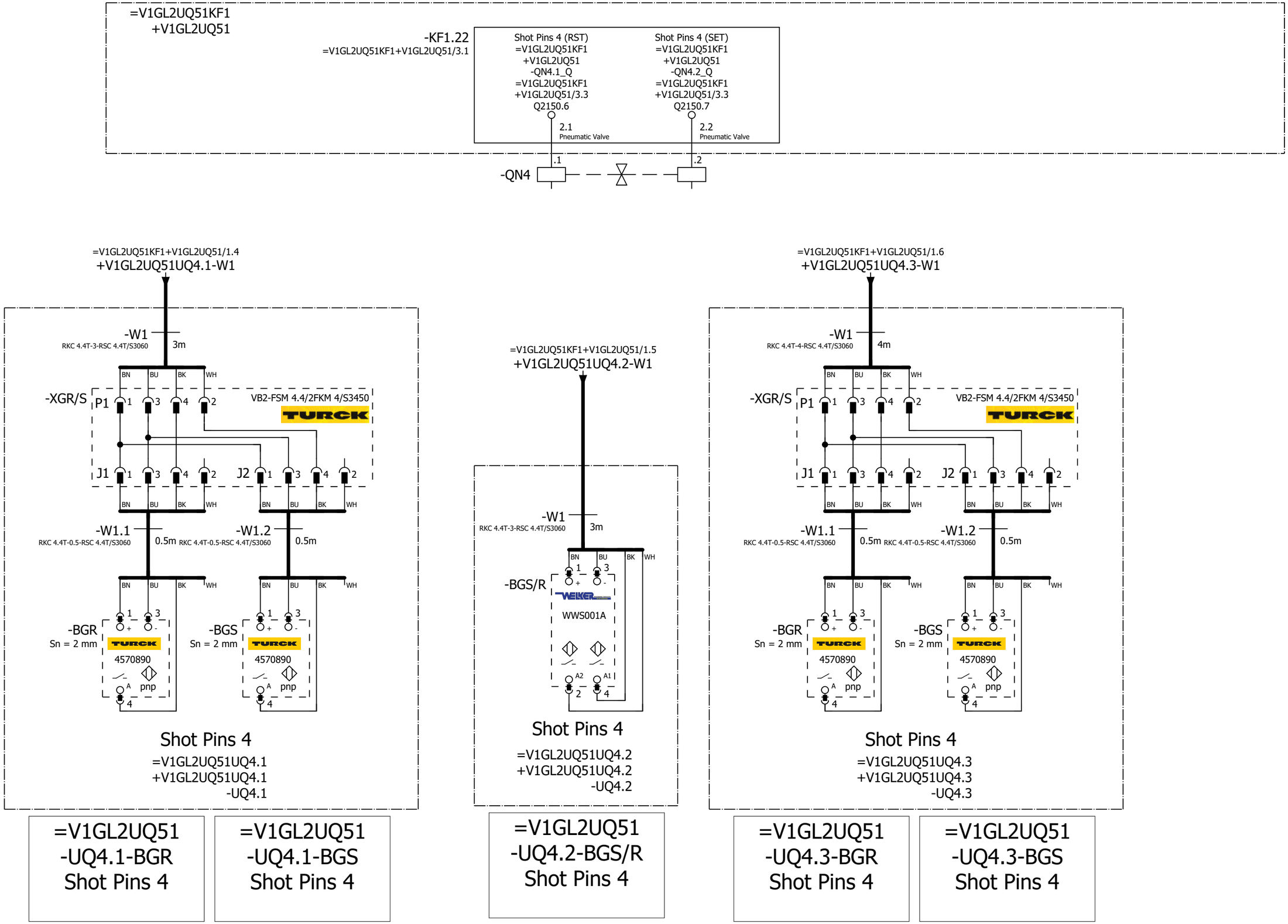

=V1GL2UQ51UQ3+.GL2UQ51UQ3/1

=V1GL2UQ51UQ5+.GL2UQ51UQ5/1

			Date	1/11/2023	Volvo Trucks North America	Valiant TMS	FESTO DQ CONNECTION QN4	Drawing name: =2V10&EFS-EL	= V1GL2UQ51UQ4		
			Ed.	MKLEPADLO					+ V1GL2UQ51UQ4		
			Appr		P6700 Bodyside RH - Robot Cell 2V10			Document type: EFS	Project nr: 22-16150	Page	1
Modification	Date	Name	Original		Replacement of / Replaced by	Scale 1:1					1579

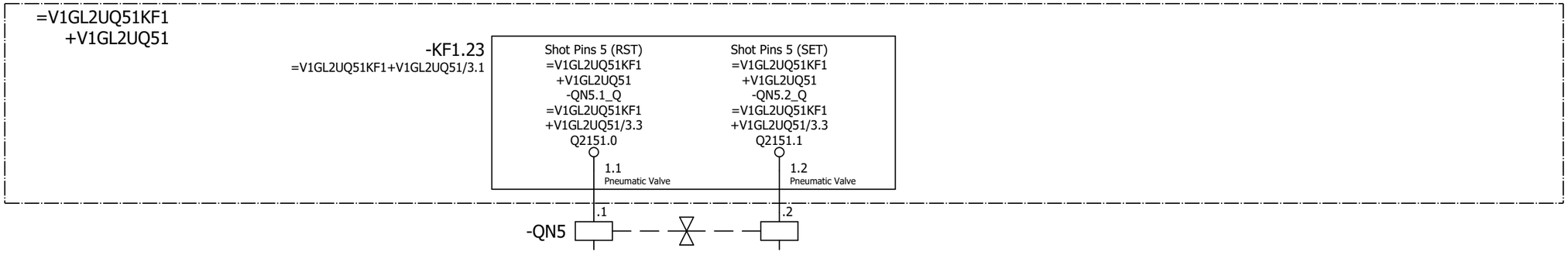

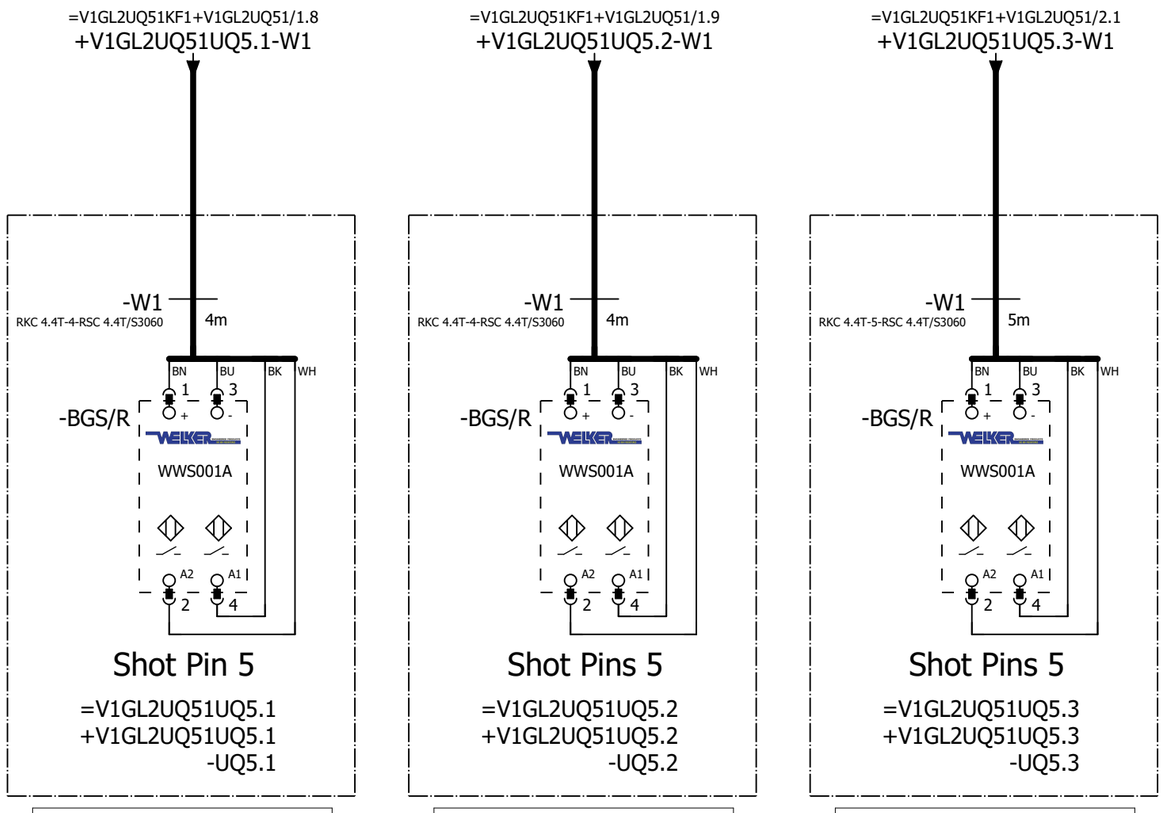

=V1GL2UQ51
-UQ5.1-BGS/R
Shot Pin 5

=V1GL2UQ51
-UQ5.2-BGS/R
Shot Pins 5

=V1GL2UQ51
-UQ5.3-BGS/R
Shot Pins 5

=V1GL2UQ51UQ4+.GL2UQ51UQ4/1

=V1GL2UQ51UQ6+.GL2UQ51UQ6/1

			Date	1/11/2023	Volvo Trucks North America		Valiant TMS	FESTO DQ CONNECTION QN5	Drawing name: =2V10&EFS-EL	= V1GL2UQ51UQ5	
			Ed.	MKLEPADLO						+ V1GL2UQ51UQ5	
			Appr		P6700 Bodyside RH - Robot Cell 2V10				Document type: EFS	Project nr: 22-16150	Page 1
Modification	Date	Name	Original		Replacement of	Replaced by	Scale 1:1				1579

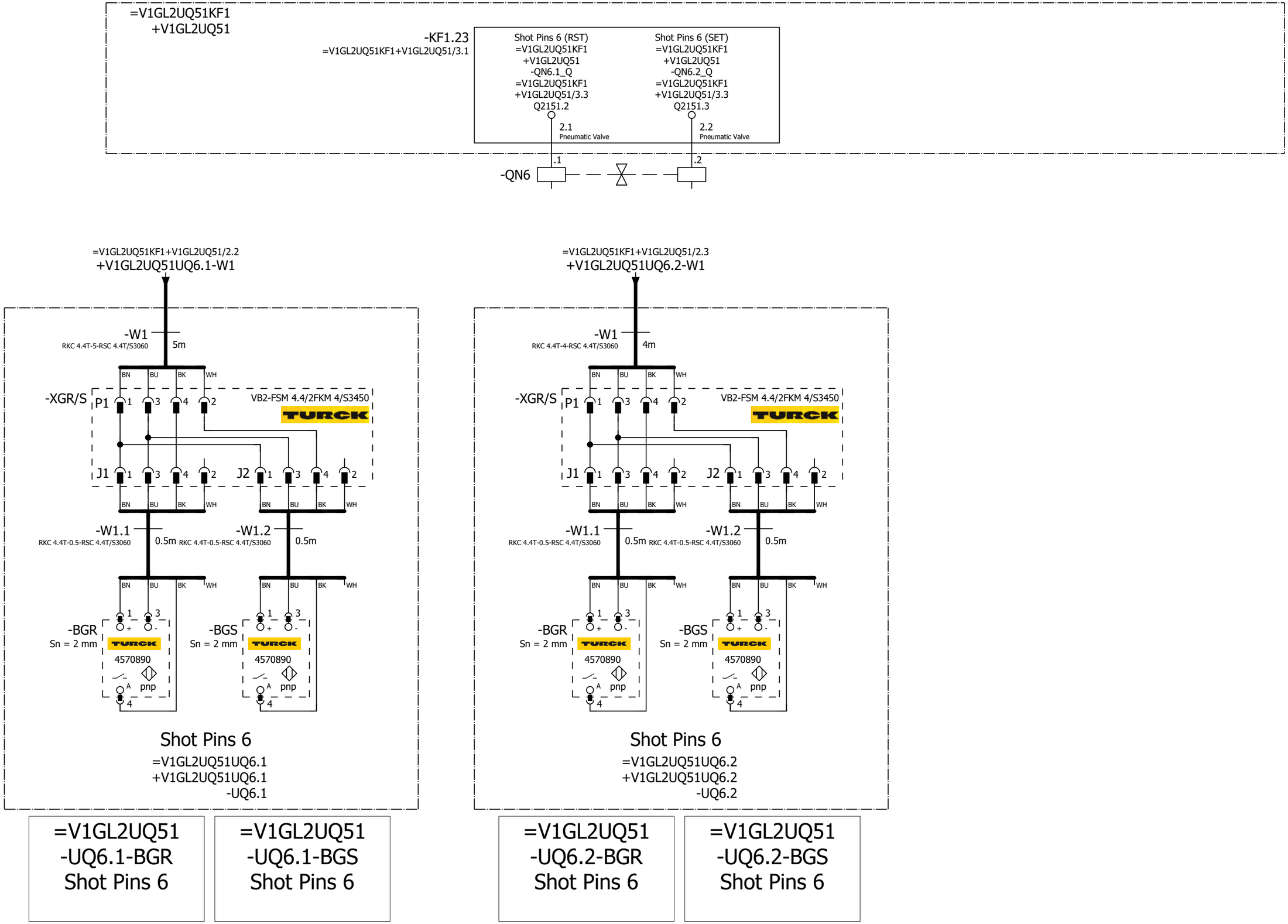

=V1GL2UQ51UQ5+.GL2UQ51UQ5/1

=V1GL2UQ51UQ7+.GL2UQ51UQ7/1

			Date	1/11/2023	Volvo Trucks North America	Valiant TMS	FESTO DQ CONNECTION QN6	Drawing name: =2V10&EFS-EL	= V1GL2UQ51UQ6		
			Ed.	MKLEPADLO					+ V1GL2UQ51UQ6		
			Appr		P6700 Bodyside RH - Robot Cell 2V10			Document type: EFS	Project nr: 22-16150	Page	1
Modification	Date	Name	Original		Replacement of / Replaced by	Scale 1:1					1579

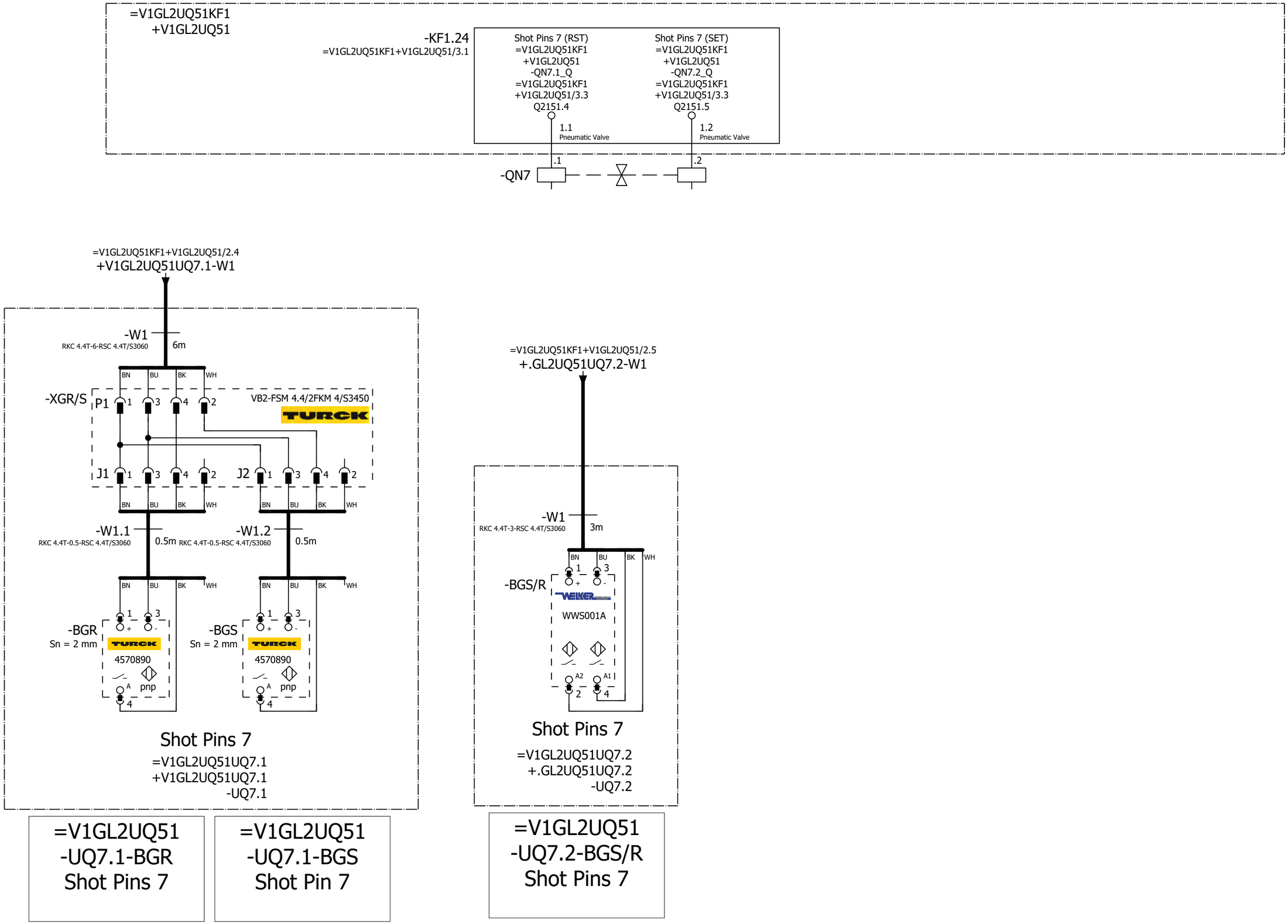

=V1GL2UQ51UQ6+.GL2UQ51UQ6/1

=V1GL2UQ51UQ8+.GL2UQ51UQ8/1

			Date	1/11/2023	Volvo Trucks North America	Valiant TMS	FESTO DQ CONNECTION QN7	Drawing name: =2V10&EFS-EL	= V1GL2UQ51UQ7		
			Ed.	MKLEPADLO					+ V1GL2UQ51UQ7		
			Appr		P6700 Bodyside RH - Robot Cell 2V10			Document type: EFS	Project nr: 22-16150	Page	1
Modification	Date	Name	Original		Replacement of / Replaced by	Scale 1:1					1579

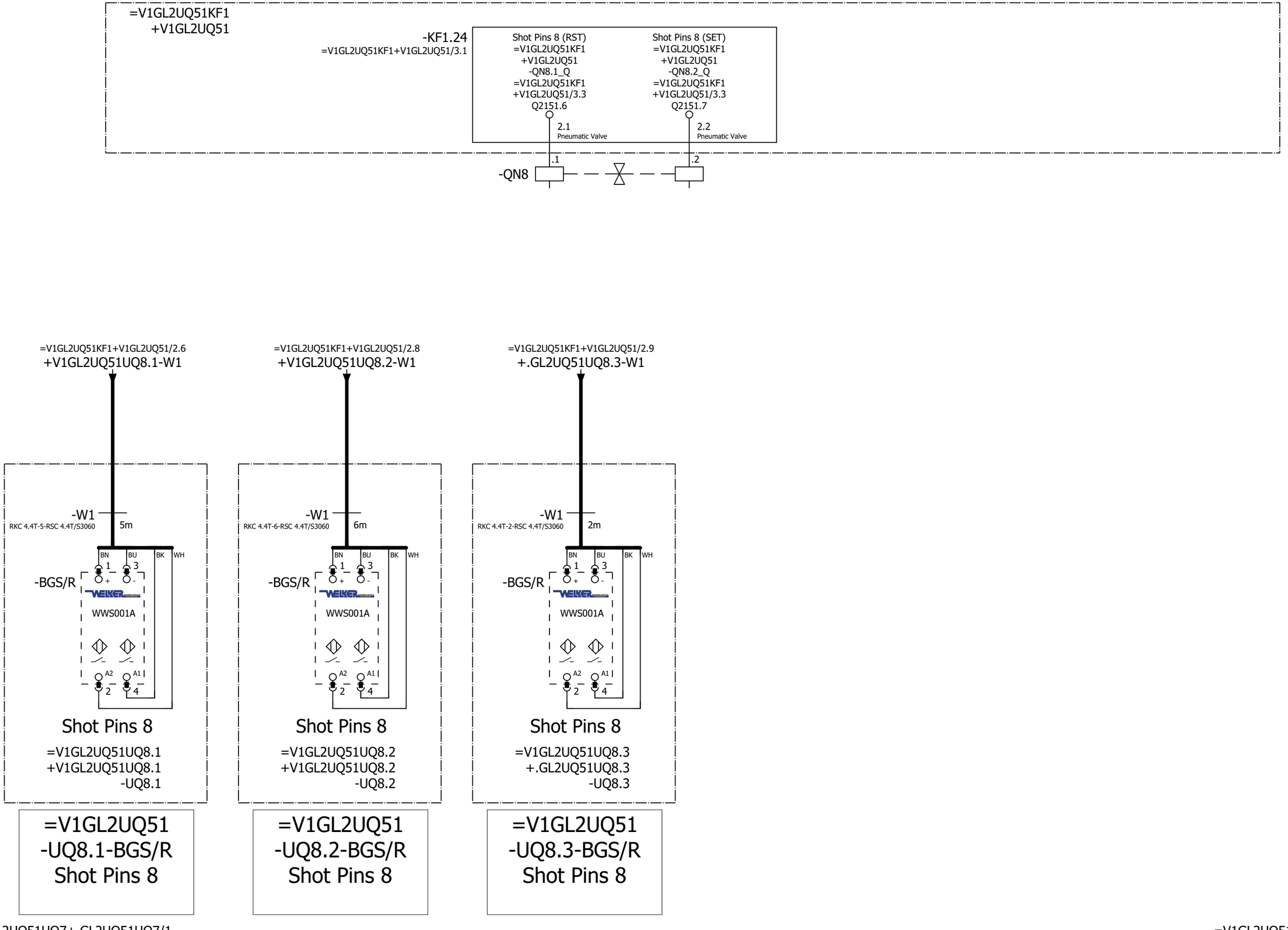

=V1GL2UQ51UQ7+.GL2UQ51UQ7/1

=V1GL2UQ51UQ9+.GL2UQ51UQ9/1

			Date	1/11/2023	Volvo Trucks North America		Valiant TMS	FESTO DQ CONNECTION QN8	Drawing name: =2V10&EFS-EL	= V1GL2UQ51UQ8	
			Ed.	MKLEPADLO						+ V1GL2UQ51UQ8	
			Appr		P6700 Bodyside RH - Robot Cell 2V10				Document type: EFS	Project nr: 22-16150	Page 1
Modification	Date	Name	Original		Replacement of	Replaced by	Scale 1:1				1579

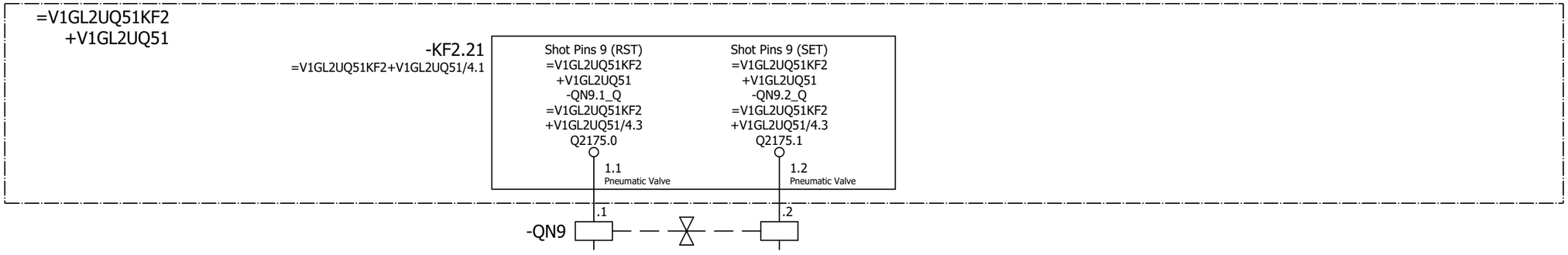

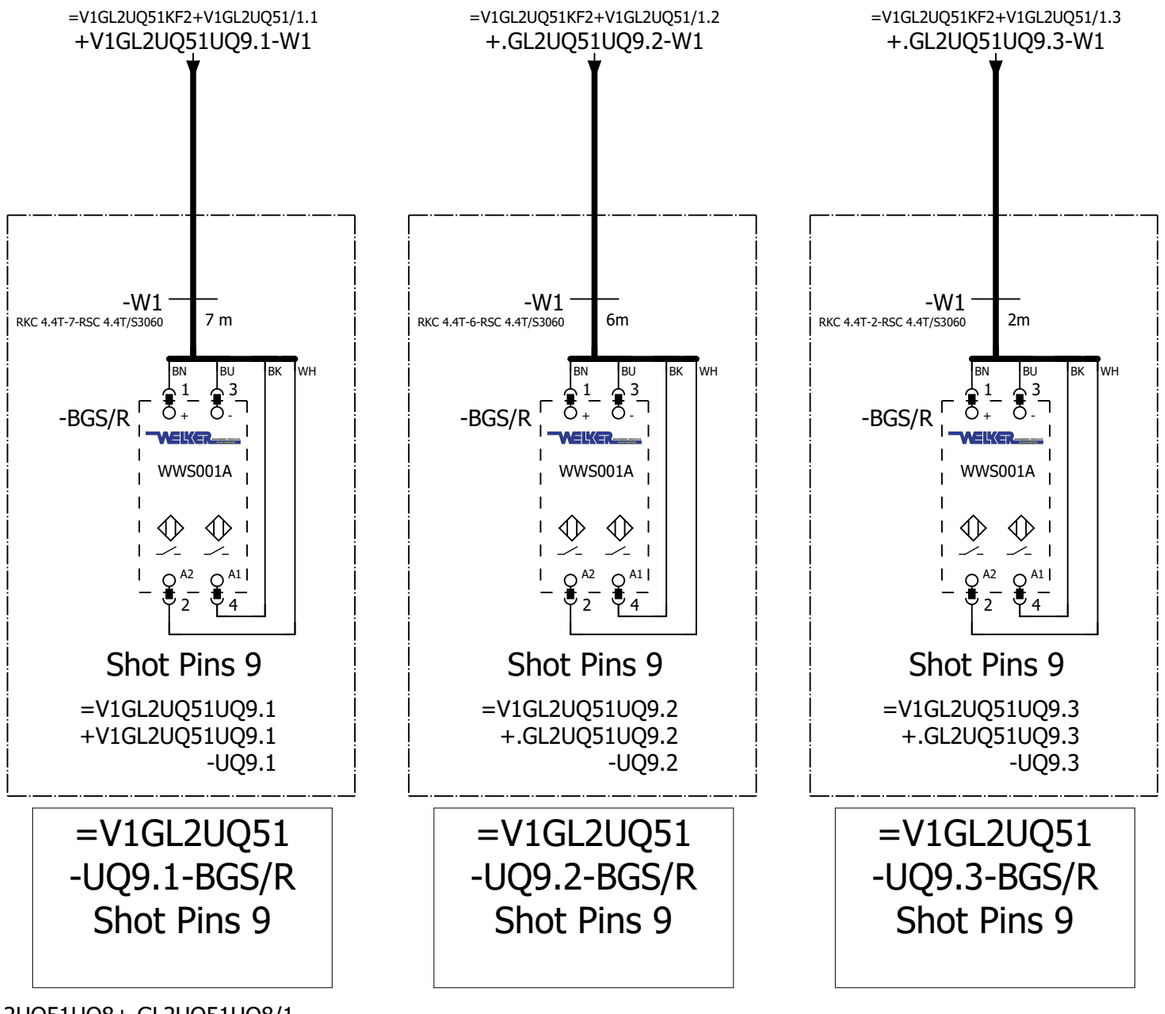

=V1GL2UQ51UQ8+.GL2UQ51UQ8/1

=V1GL2UQ51UQ10+.GL2UQ51UQ10/1

			Date	1/11/2023	Volvo Trucks North America		Valiant TMS	FESTO DQ CONNECTION QN9	Drawing name: =2V10&EFS-EL	= V1GL2UQ51UQ9	
			Ed.	MKLEPADLO						+ V1GL2UQ51UQ9	
			Appr		P6700 Bodyside RH - Robot Cell 2V10				Document type: EFS	Project nr: 22-16150	Page 1
Modification	Date	Name	Original		Replacement of	Replaced by	Scale 1:1				1579

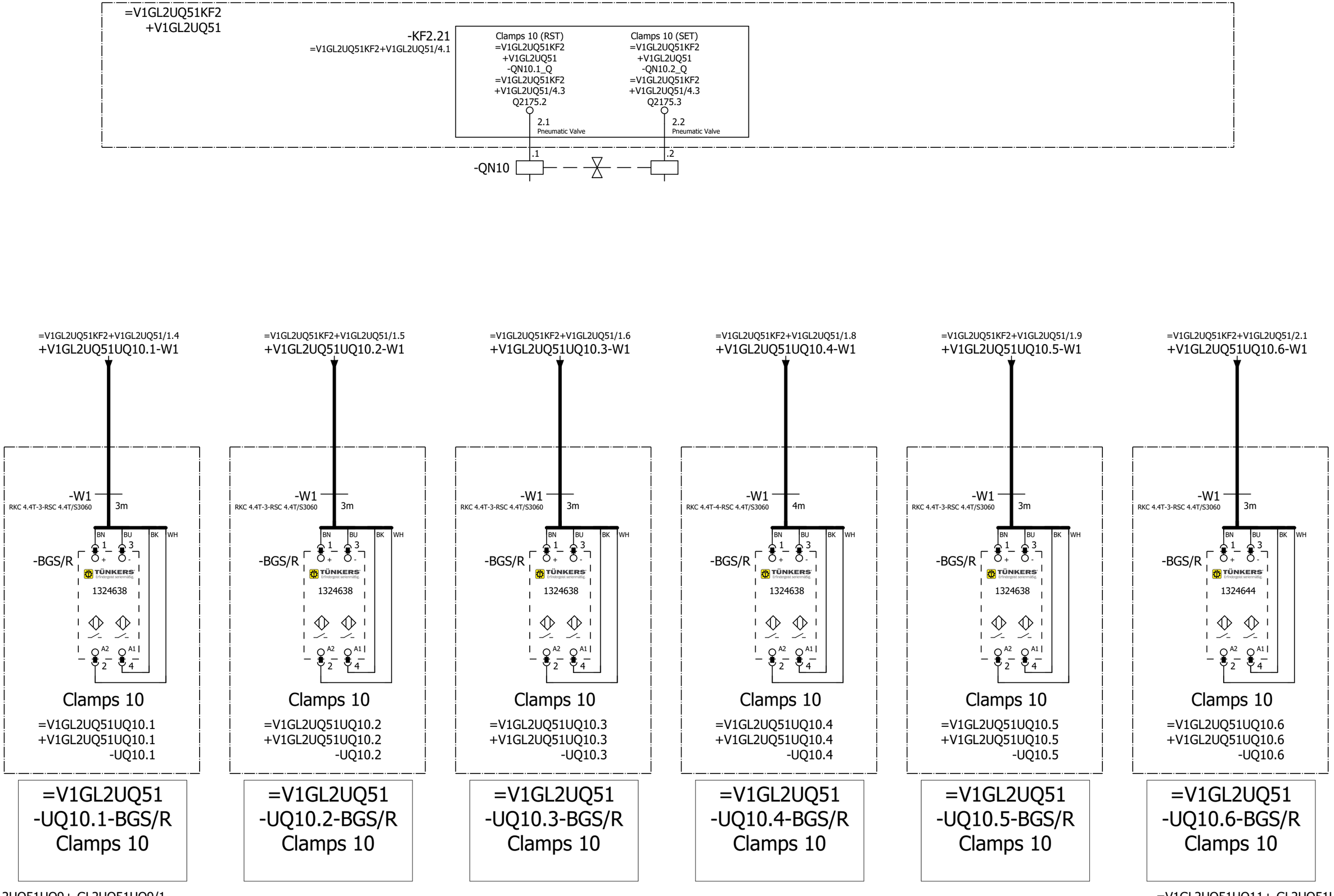

=V1GL2UQ51UQ9+.GL2UQ51UQ9/1

=V1GL2UQ51UQ11+.GL2UQ51UQ11/1

			Date	1/11/2023	Volvo Trucks North America		Valiant TMS	FESTO DQ CONNECTION QN10	Drawing name: =2V10&EFS-EL	= V1GL2UQ51UQ10	
			Ed.	MKLEPADLO						+ V1GL2UQ51UQ10	
			Appr		P6700 Bodyside RH - Robot Cell 2V10				Document type: EFS	Project nr: 22-16150	Page 1
Modification	Date	Name	Original		Replacement of	Replaced by	Scale 1:1				1579

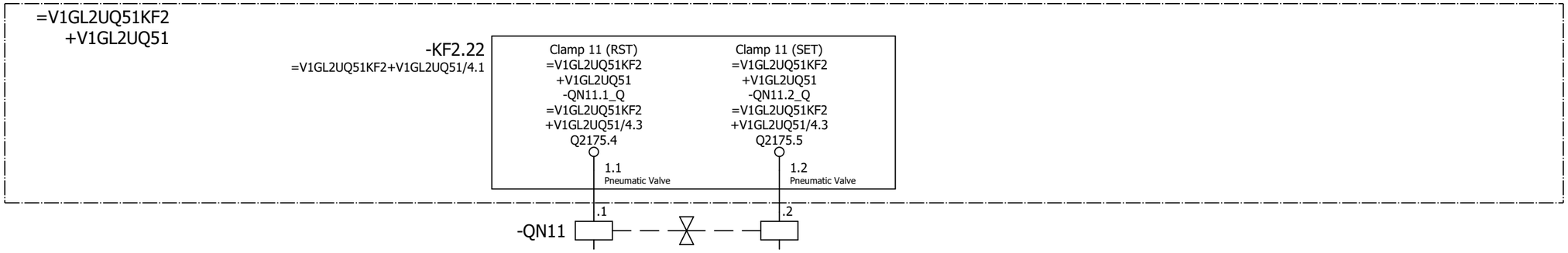

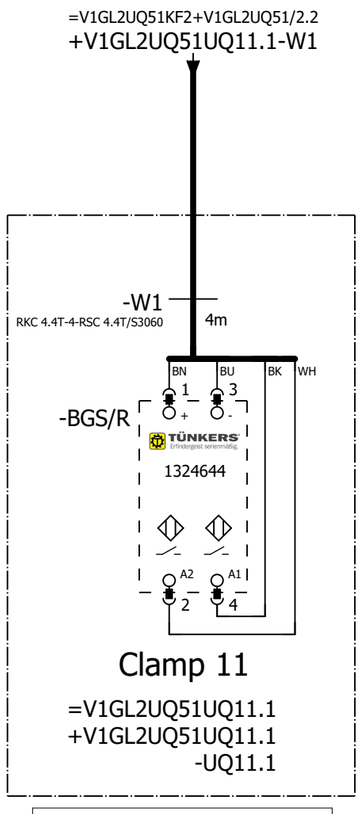

=V1GL2UQ51
-UQ11.1-BGS/R
Clamp 11

=V1GL2UQ51UQ10+.GL2UQ51UQ10/1

=V1GL2UQ51UQ12+.GL2UQ51UQ12/1

			Date	1/11/2023	Volvo Trucks North America		Valiant TMS	FESTO DQ CONNECTION QN11	Drawing name: =2V10&EFS-EL	= V1GL2UQ51UQ11	
			Ed.	MKLEPADLO						+ V1GL2UQ51UQ11	
			Appr		P6700 Bodyside RH - Robot Cell 2V10				Document type: EFS	Project nr: 22-16150	Page 1
Modification	Date	Name	Original		Replacement of	Replaced by	Scale 1:1				1579

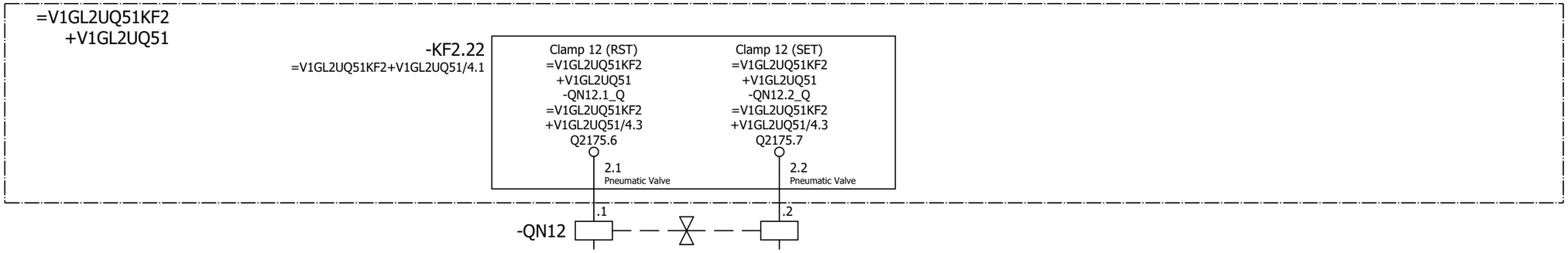

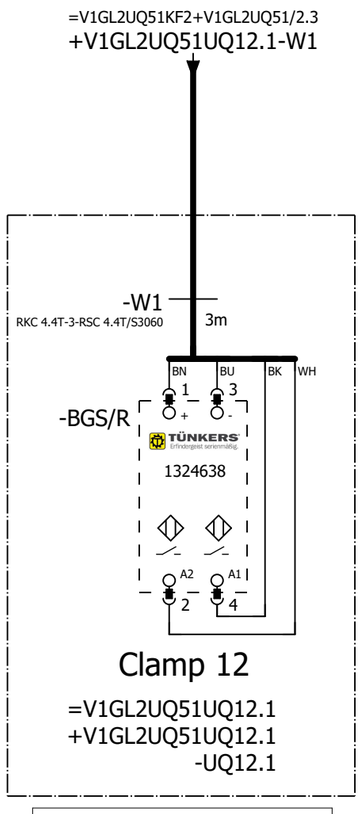

=V1GL2UQ51
-UQ12.1-BGS/R
Clamp 12

=V1GL2UQ51UQ11+.GL2UQ51UQ11/1

=V1GL2UQ51UQ13+.GL2UQ51UQ13/1

			Date	1/11/2023	Volvo Trucks North America		Valiant TMS	FESTO DQ CONNECTION QN12	Drawing name: =2V10&EFS-EL	= V1GL2UQ51UQ12	
			Ed.	MKLEPADLO						+ V1GL2UQ51UQ12	
			Appr		P6700 Bodyside RH - Robot Cell 2V10				Document type: EFS	Project nr: 22-16150	Page 1
Modification	Date	Name	Original		Replacement of	Replaced by	Scale 1:1				1579

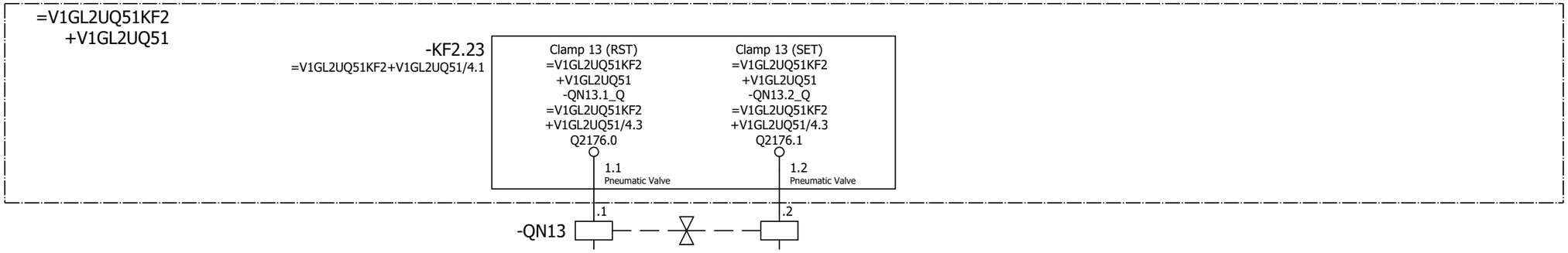

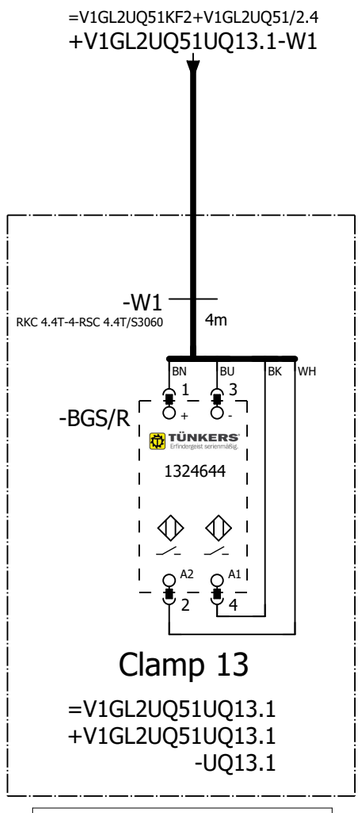

=V1GL2UQ51
-UQ13.1-BGS/R
Clamp 13

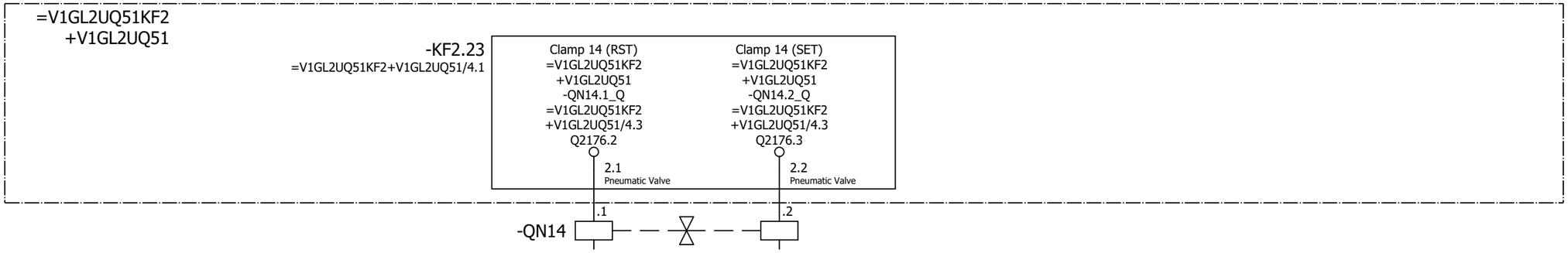

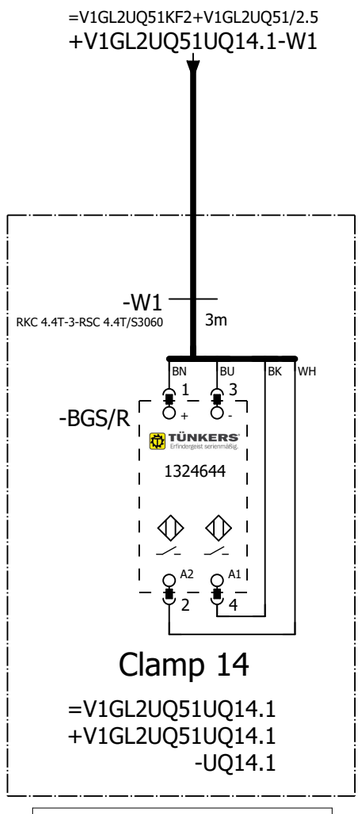

=V1GL2UQ51 -UQ14.1-BGS/R Clamp 14

=V1GL2UQ51UQ13+.GL2UQ51UQ13/1

=V1GL2UQ51UQ15+.GL2UQ51UQ15/1

			Date	1/11/2023	Volvo Trucks North America	Valiant TMS	FESTO DQ CONNECTION QN14	Drawing name: =2V10&EFS-EL	= V1GL2UQ51UQ14		
			Ed.	MKLEPADLO					+ V1GL2UQ51UQ14		
			Appr		P6700 Bodyside RH - Robot Cell 2V10			Document type: EFS	Project nr: 22-16150	Page	1
Modification	Date	Name	Original		Replacement of / Replaced by	Scale 1:1					1579

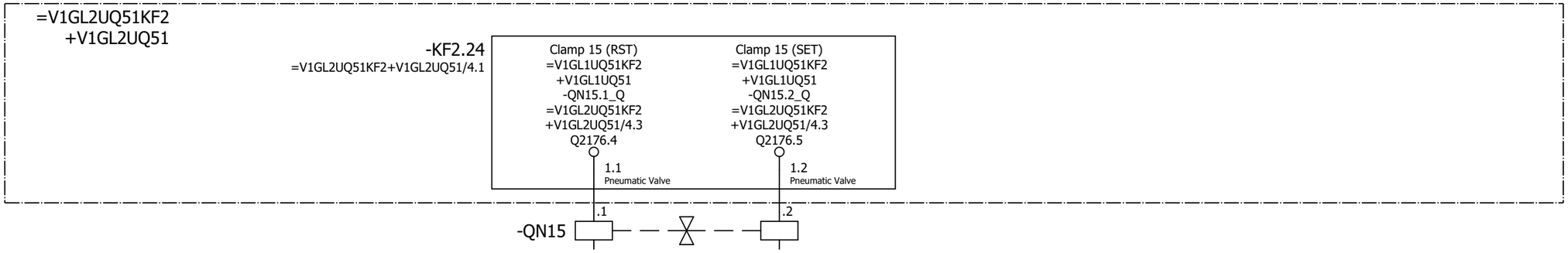

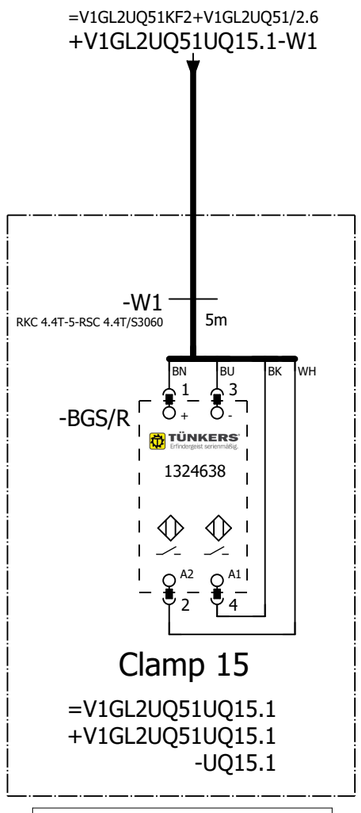

=V1GL2UQ51
-UQ15.1-BGS/R
Clamp 15

=V1GL2UQ51UQ14+.GL2UQ51UQ14/1

=V1GL2UQ51UQ16+.GL2UQ51UQ16/1

			Date	1/11/2023	Volvo Trucks North America		Valiant TMS	FESTO DQ CONNECTION QN15	Drawing name: =2V10&EFS-EL	= V1GL2UQ51UQ15	
			Ed.	MKLEPADLO						+ V1GL2UQ51UQ15	
			Appr		P6700 Bodyside RH - Robot Cell 2V10				Document type: EFS	Project nr: 22-16150	Page 1
Modification	Date	Name	Original		Replacement of	Replaced by	Scale 1:1				1579

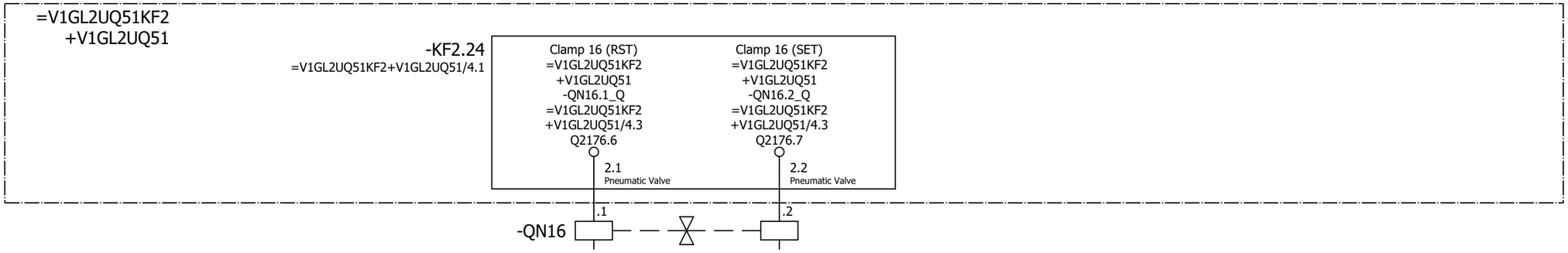

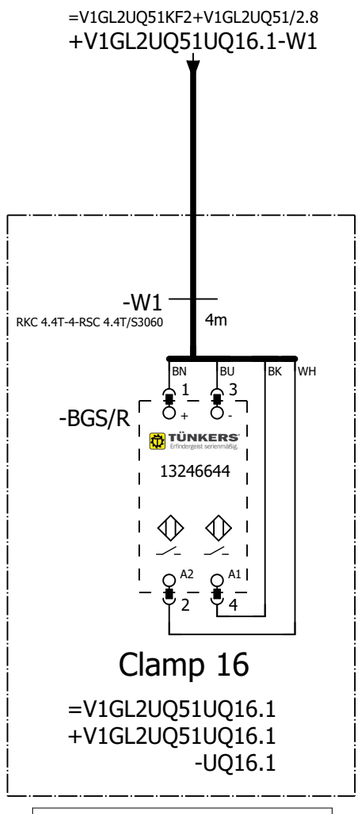

=V1GL2UQ51
-UQ16.1-BGS/R
Clamp 16

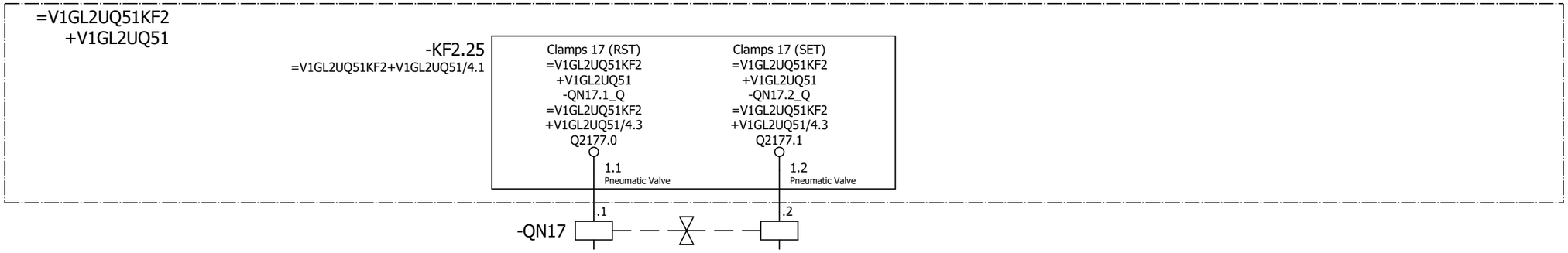

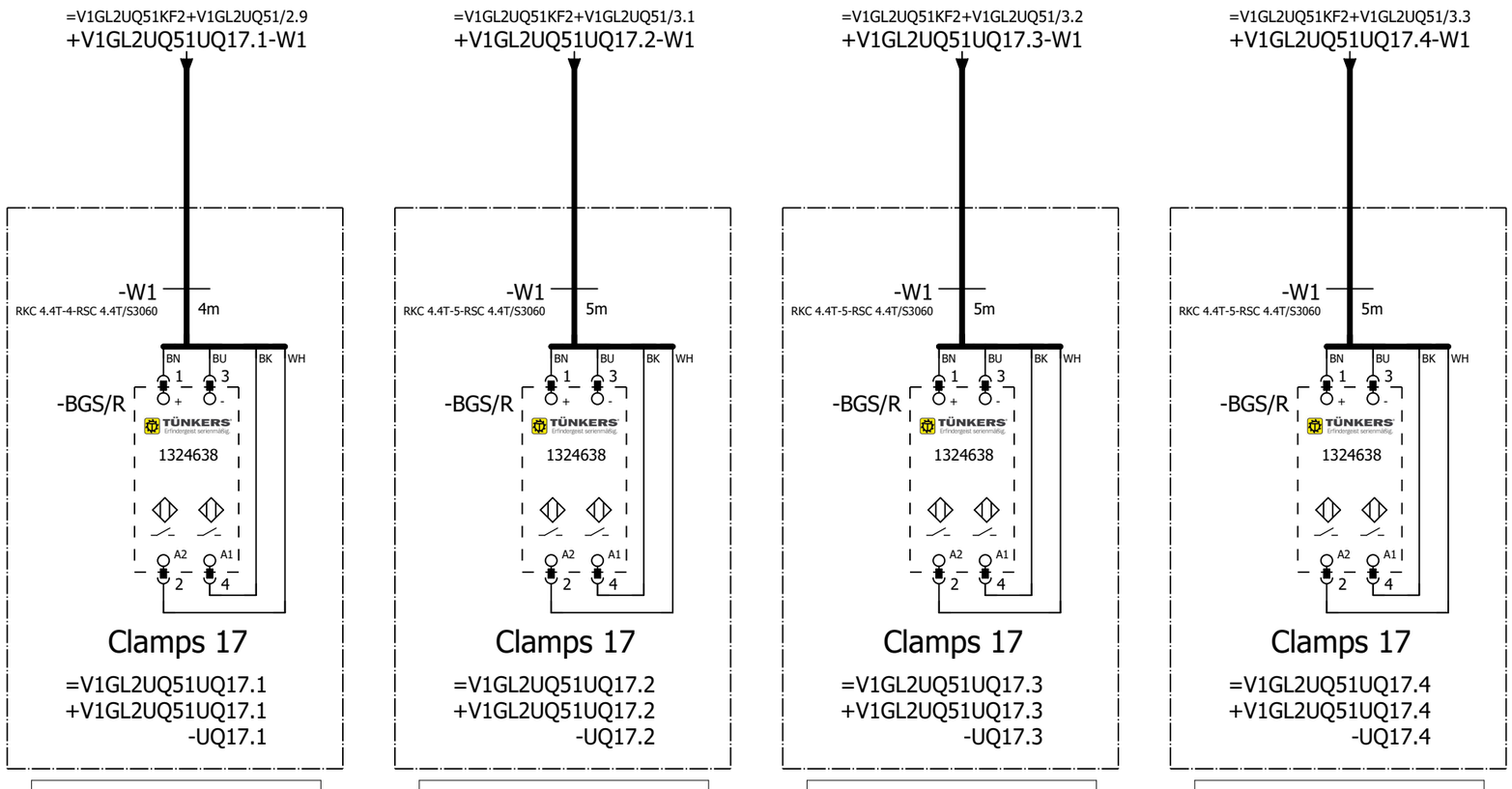

=V1GL2UQ51UQ16+.GL2UQ51UQ16/1

=V1GL2UQ51UQ18+.GL2UQ51UQ18/1

			Date	1/11/2023	Volvo Trucks North America		Valiant TMS	FESTO DQ CONNECTION QN17	Drawing name: =2V10&EFS-EL	= V1GL2UQ51UQ17	
			Ed.	MKLEPADLO						+ V1GL2UQ51UQ17	
			Appr		P6700 Bodyside RH - Robot Cell 2V10				Document type: EFS	Project nr: 22-16150	Page 1
Modification	Date	Name	Original		Replacement of	Replaced by	Scale 1:1				1579

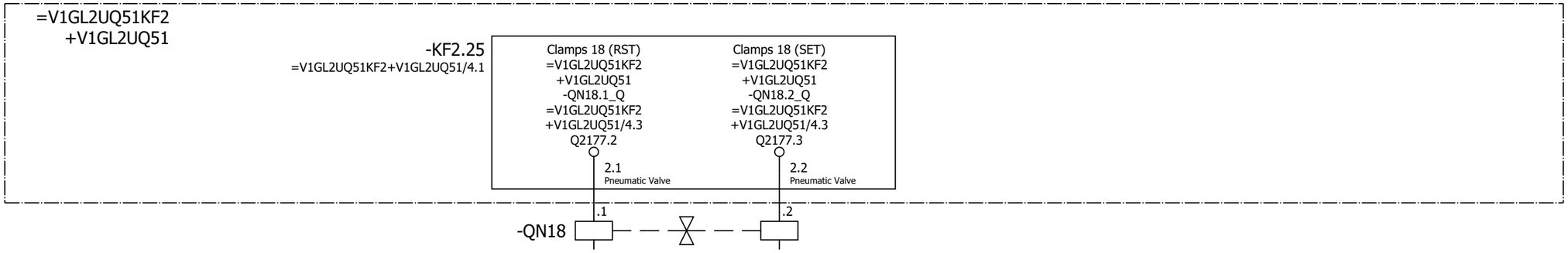

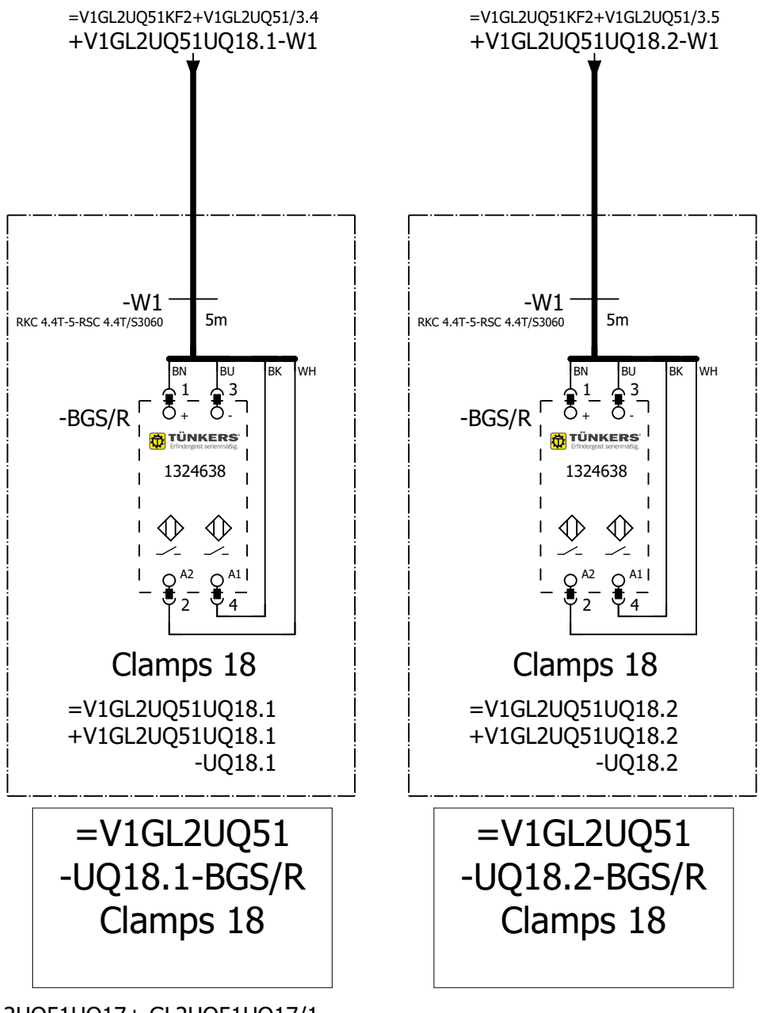

=V1GL2UQ51
-UQ18.1-BGS/R
Clamps 18

=V1GL2UQ51
-UQ18.2-BGS/R
Clamps 18

=V1GL2UQ51UQ17+.GL2UQ51UQ17/1

=V1GL2UQ51UQ19+.GL2UQ51UQ19/1

			Date	1/11/2023	Volvo Trucks North America		Valiant TMS	FESTO DQ CONNECTION QN18	Drawing name: =2V10&EFS-EL	= V1GL2UQ51UQ18	
			Ed.	MKLEPADLO						+ V1GL2UQ51UQ18	
			Appr		P6700 Bodyside RH - Robot Cell 2V10				Document type: EFS	Project nr: 22-16150	Page 1
Modification	Date	Name	Original		Replacement of	Replaced by	Scale 1:1				1579

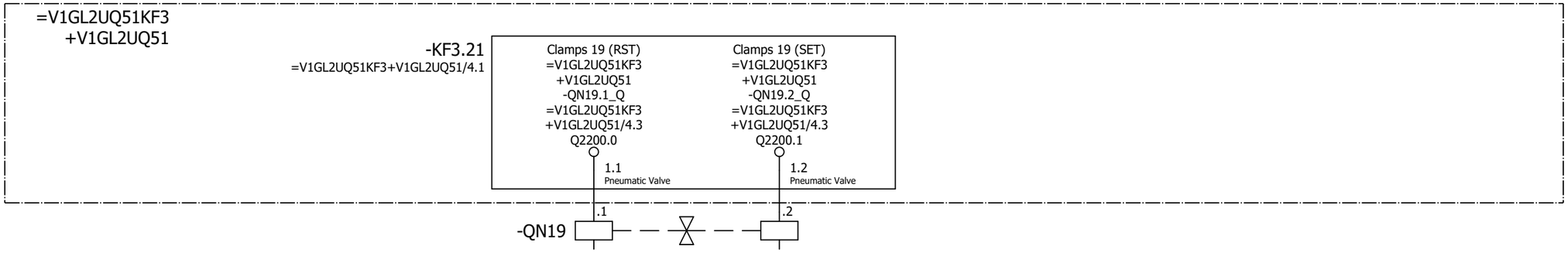

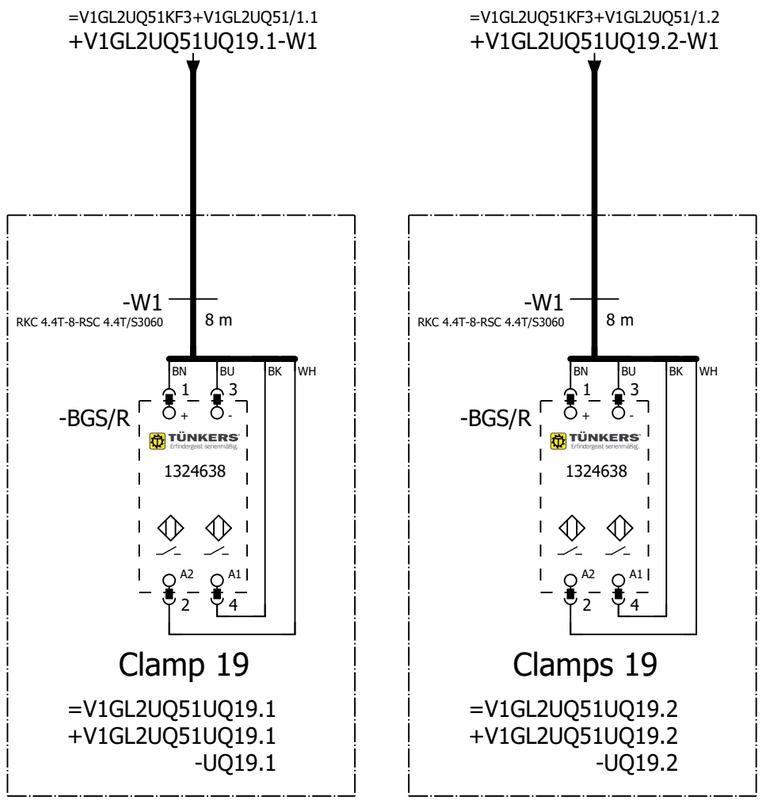

=V1GL2UQ51
-UQ19.1-BGS/R
Clamp 19

=V1GL2UQ51
-UQ19.2-BGS/R
Clamps 19

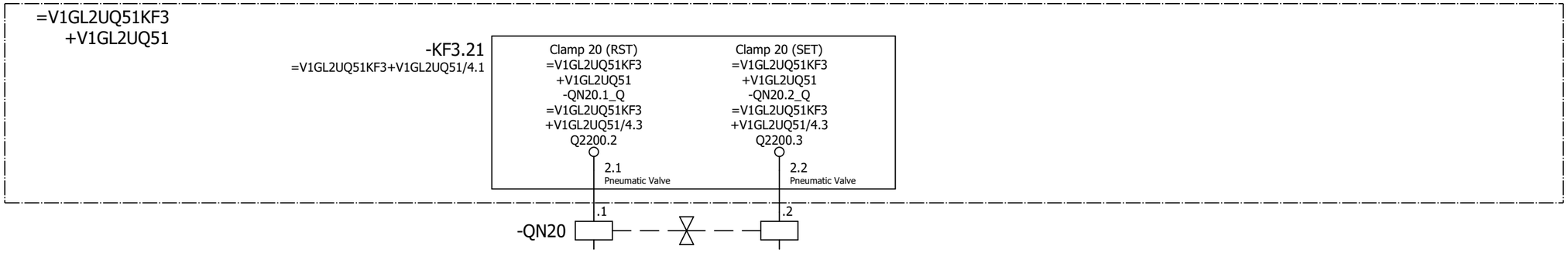

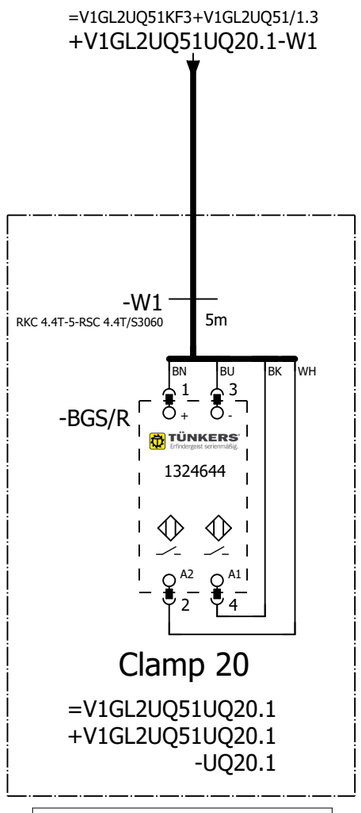

=V1GL2UQ51
-UQ20.1-BGS/R
Clamp 20

=V1GL2UQ51UQ19+.GL2UQ51UQ19/1

=V1GL2UQ51UQ21+.GL2UQ51UQ21/1

			Date	1/11/2023	Volvo Trucks North America		Valiant TMS	FESTO DQ CONNECTION QN20	Drawing name: =2V10&EFS-EL	= V1GL2UQ51UQ20	
			Ed.	MKLEPADLO						+ V1GL2UQ51UQ20	
			Appr		P6700 Bodyside RH - Robot Cell 2V10				Document type: EFS	Project nr: 22-16150	Page 1
Modification	Date	Name	Original		Replacement of	Replaced by	Scale 1:1				1579

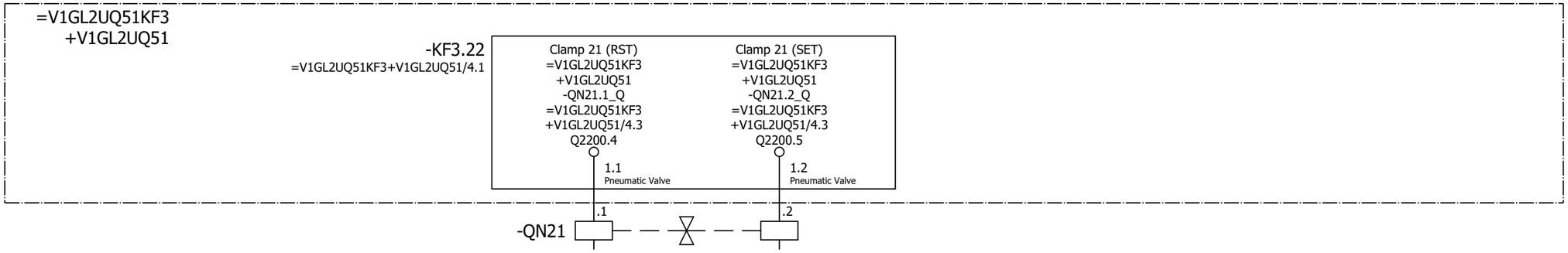

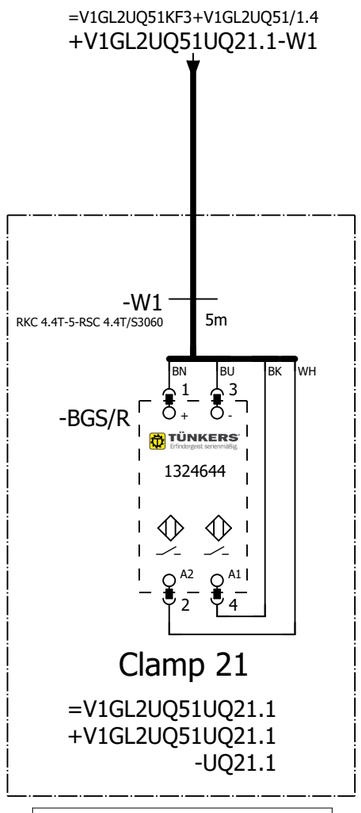

=V1GL2UQ51
-UQ21.1-BGS/R
Clamp 21

=V1GL2UQ51UQ20+.GL2UQ51UQ20/1

=V1GL2UQ51UQ22+.GL2UQ51UQ22/1

			Date	1/11/2023	Volvo Trucks North America		Valiant TMS	FESTO DQ CONNECTION QN21	Drawing name: =2V10&EFS-EL	= V1GL2UQ51UQ21	
			Ed.	MKLEPADLO						+ V1GL2UQ51UQ21	
			Appr		P6700 Bodyside RH - Robot Cell 2V10				Document type: EFS	Project nr: 22-16150	Page 1
Modification	Date	Name	Original		Replacement of	Replaced by	Scale 1:1				1579

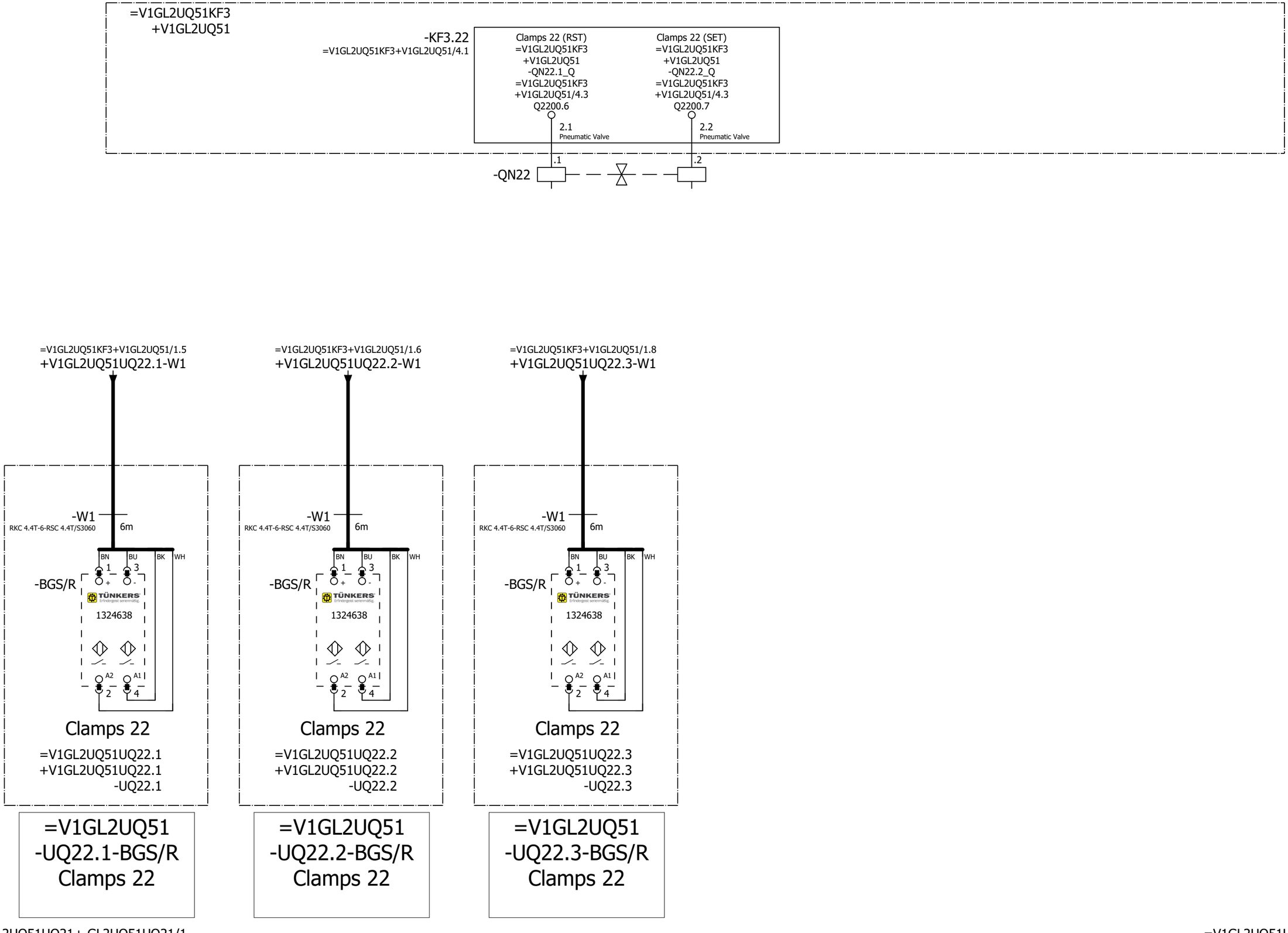

=V1GL2UQ51UQ21+.GL2UQ51UQ21/1

=V1GL2UQ51UQ23+.GL2UQ51UQ23/1

			Date	1/11/2023	Volvo Trucks North America		Valiant TMS	FESTO DQ CONNECTION QN22	Drawing name: =2V10&EFS-EL	= V1GL2UQ51UQ22	
			Ed.	MKLEPADLO						+ V1GL2UQ51UQ22	
			Appr		P6700 Bodyside RH - Robot Cell 2V10				Document type: EFS	Project nr: 22-16150	Page 1
Modification	Date	Name	Original		Replacement of	Replaced by	Scale 1:1				1579

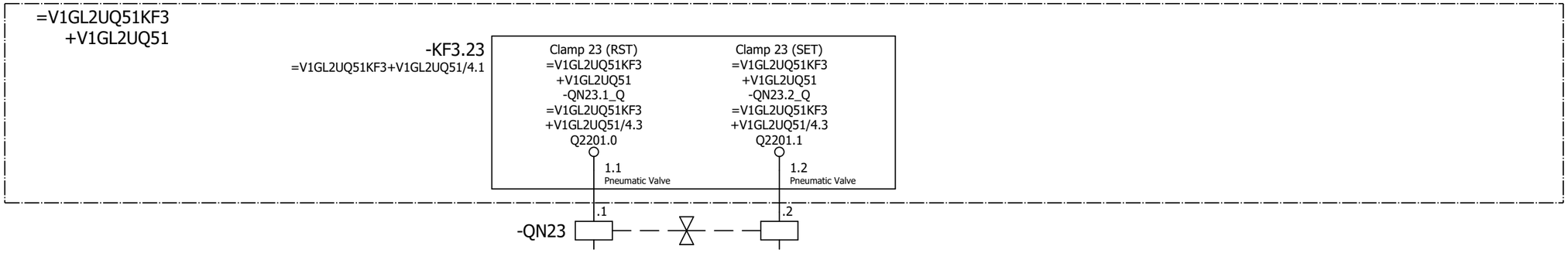

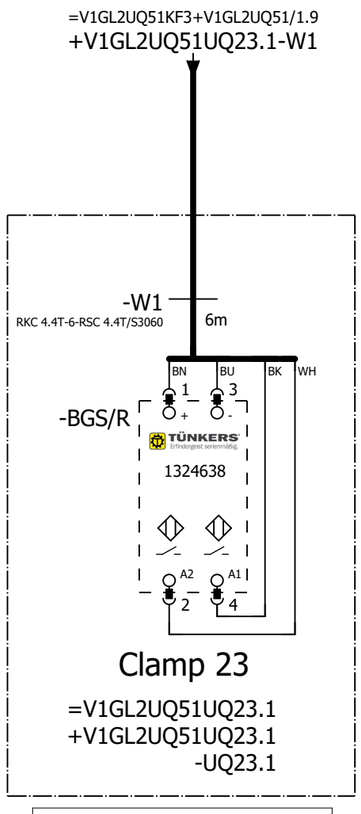

=V1GL2UQ51
-UQ23.1-BGS/R
Clamp 23

=V1GL2UQ51UQ22+.GL2UQ51UQ22/1

=V1GL2UQ51UQ24+.GL2UQ51UQ24/1

			Date	1/11/2023	Volvo Trucks North America		Valiant TMS	FESTO DQ CONNECTION QN23	Drawing name: =2V10&EFS-EL	= V1GL2UQ51UQ23	
			Ed.	MKLEPADLO						+ V1GL2UQ51UQ23	
			Appr		P6700 Bodyside RH - Robot Cell 2V10				Document type: EFS	Project nr: 22-16150	Page 1
Modification	Date	Name	Original		Replacement of	Replaced by	Scale 1:1				1579

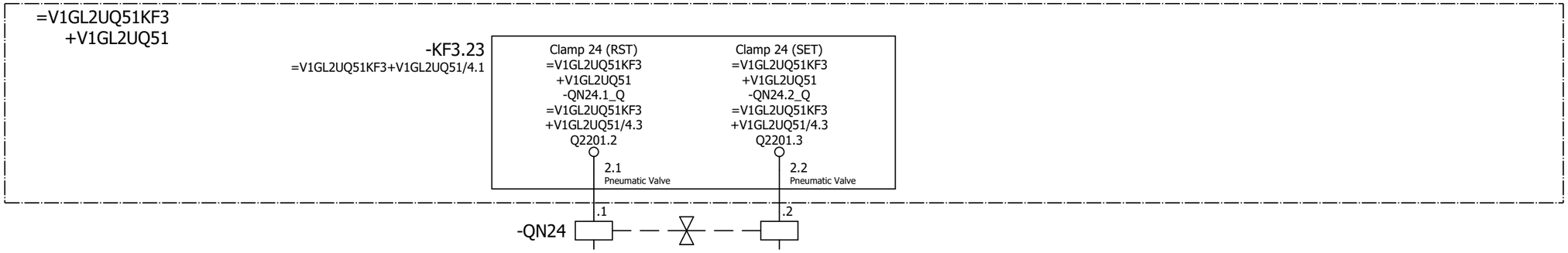

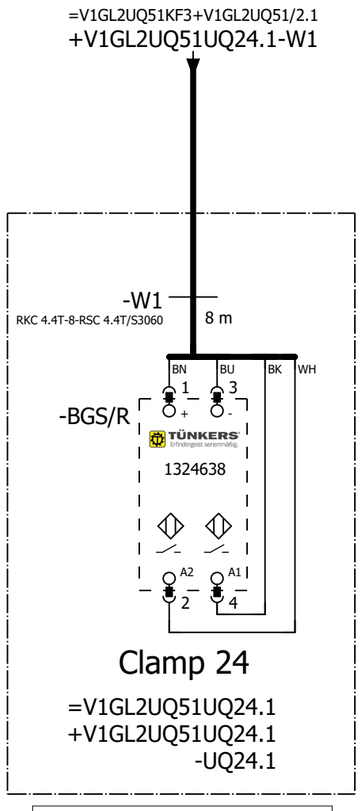

=V1GL2UQ51
-UQ24.1-BGS/R
Clamp 24

=V1GL2UQ51UQ23+.GL2UQ51UQ23/1

=V1GL2UQ51UQ25+.GL2UQ51UQ25/1

			Date	1/11/2023	Volvo Trucks North America		Valiant TMS	FESTO DQ CONNECTION QN24	Drawing name: =2V10&EFS-EL	= V1GL2UQ51UQ24	
			Ed.	MKLEPADLO						+ V1GL2UQ51UQ24	
			Appr		P6700 Bodyside RH - Robot Cell 2V10				Document type: EFS	Project nr: 22-16150	Page 1
Modification	Date	Name	Original		Replacement of	Replaced by	Scale 1:1				1579

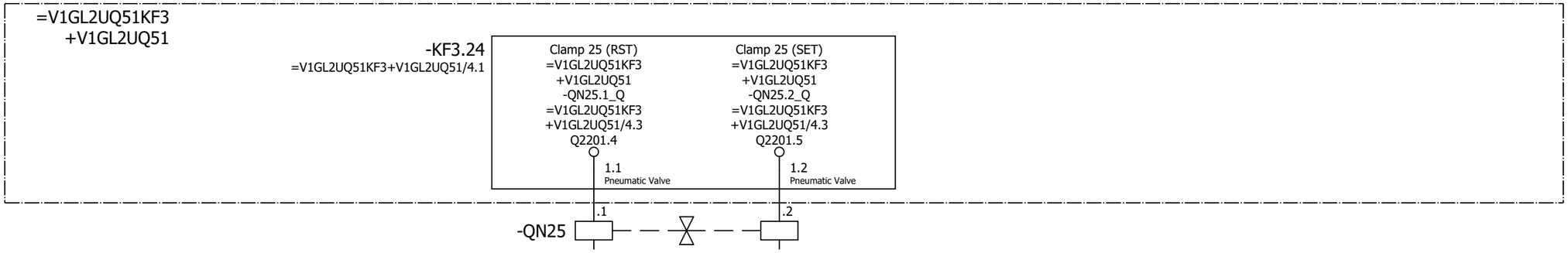

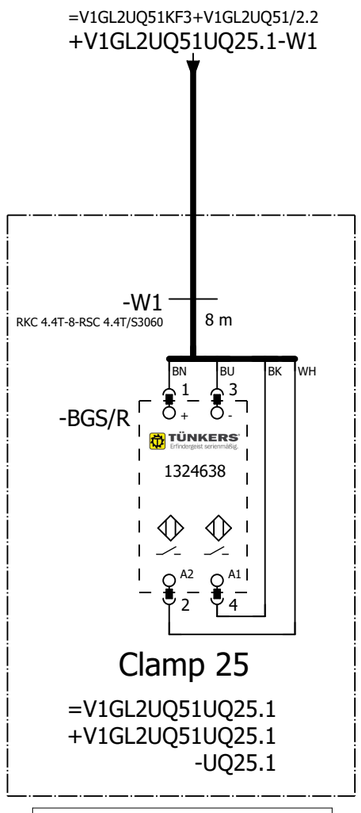

=V1GL2UQ51 -UQ25.1-BGS/R Clamp 25

=V1GL2UQ51UQ24+.GL2UQ51UQ24/1

=V1GL2UQ51UQ26+.GL2UQ51UQ26/1

			Date	1/11/2023	Volvo Trucks North America		Valiant TMS	FESTO DQ CONNECTION QN25	Drawing name: =2V10&EFS-EL	= V1GL2UQ51UQ25	
			Ed.	MKLEPADLO						+ V1GL2UQ51UQ25	
			Appr		P6700 Bodyside RH - Robot Cell 2V10				Document type: EFS	Project nr: 22-16150	Page 1
Modification	Date	Name	Original		Replacement of	Replaced by	Scale 1:1				1579

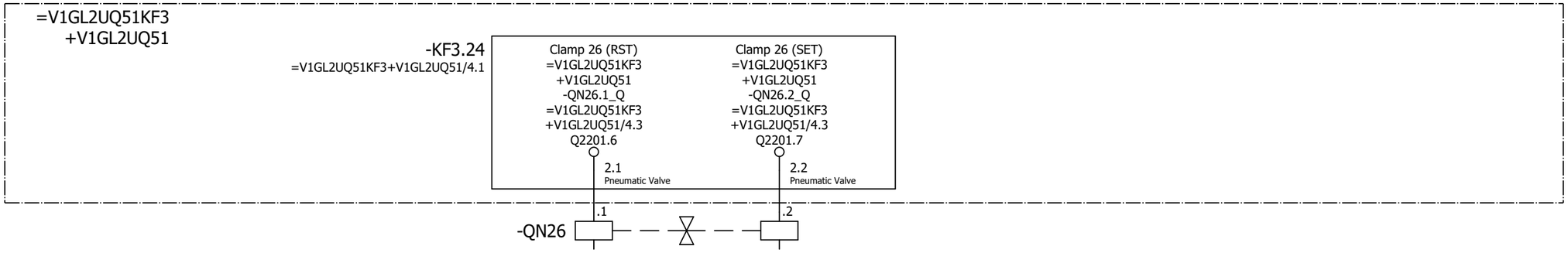

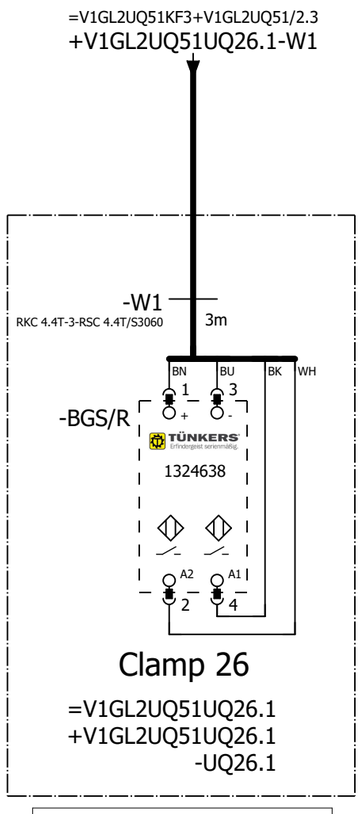

=V1GL2UQ51
-UQ26.1-BGS/R
Clamp 26

=V1GL2UQ51UQ25+.GL2UQ51UQ25/1

=V1GL2UQ51UQ27+.GL2UQ51UQ27/1

			Date	1/11/2023	Volvo Trucks North America		Valiant TMS	FESTO DQ CONNECTION QN26	Drawing name: =2V10&EFS-EL	= V1GL2UQ51UQ26	
			Ed.	MKLEPADLO						+ V1GL2UQ51UQ26	
			Appr		P6700 Bodyside RH - Robot Cell 2V10				Document type: EFS	Project nr: 22-16150	Page 1
Modification	Date	Name	Original		Replacement of	Replaced by	Scale 1:1				1579

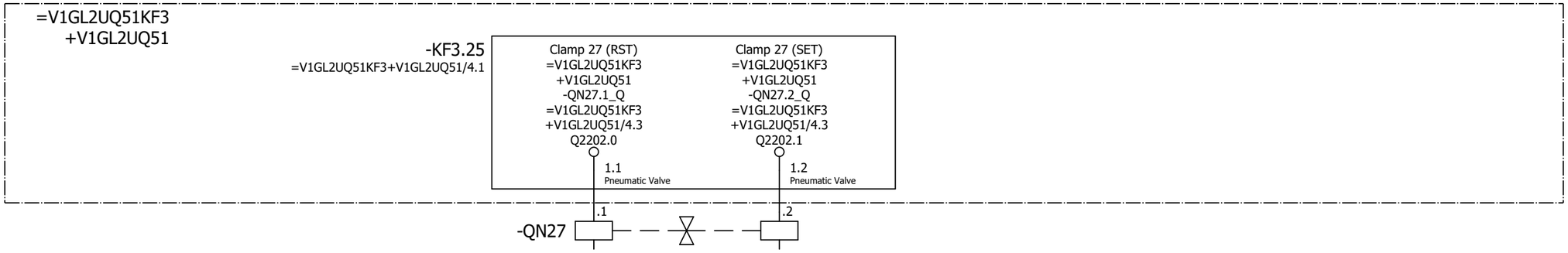

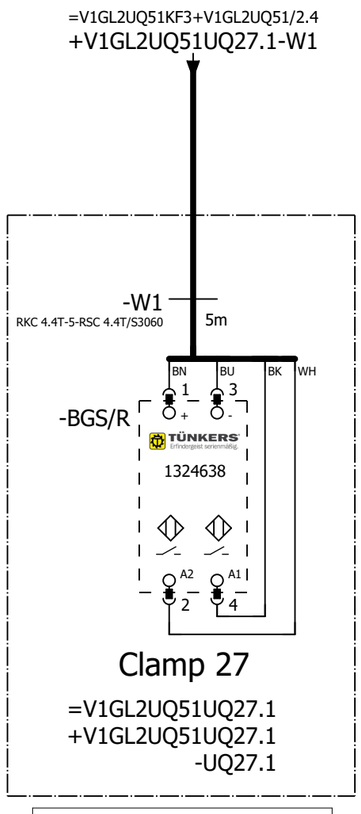

=V1GL2UQ51
-UQ27.1-BGS/R
Clamp 27

=V1GL2UQ51UQ26+.GL2UQ51UQ26/1

=V1GL2UQ51UQ28+.GL2UQ51UQ28/1

			Date	1/11/2023	Volvo Trucks North America		Valiant TMS	FESTO DQ CONNECTION QN27	Drawing name: =2V10&EFS-EL	= V1GL2UQ51UQ27	
			Ed.	MKLEPADLO						+ V1GL2UQ51UQ27	
			Appr		P6700 Bodyside RH - Robot Cell 2V10				Document type: EFS	Project nr: 22-16150	Page 1
Modification	Date	Name	Original		Replacement of	Replaced by	Scale 1:1				1579

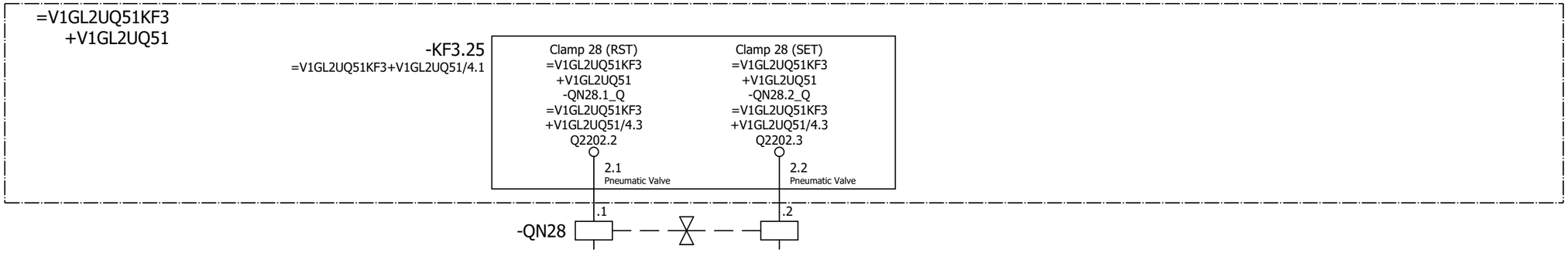

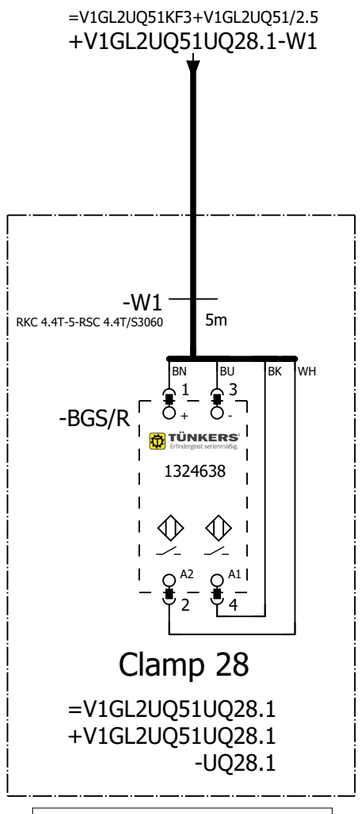

=V1GL2UQ51
-UQ28.1-BGS/R
Clamp 28

=V1GL2UQ51UQ27+.GL2UQ51UQ27/1

=V1GL2UQ51UQ29+.GL2UQ51UQ29/1

			Date	1/11/2023	Volvo Trucks North America		Valiant TMS	FESTO DQ CONNECTION QN28	Drawing name: =2V10&EFS-EL	= V1GL2UQ51UQ28	
			Ed.	MKLEPADLO						+ V1GL2UQ51UQ28	
			Appr		P6700 Bodyside RH - Robot Cell 2V10				Document type: EFS	Project nr: 22-16150	Page 1
Modification	Date	Name	Original		Replacement of	Replaced by	Scale 1:1				1579

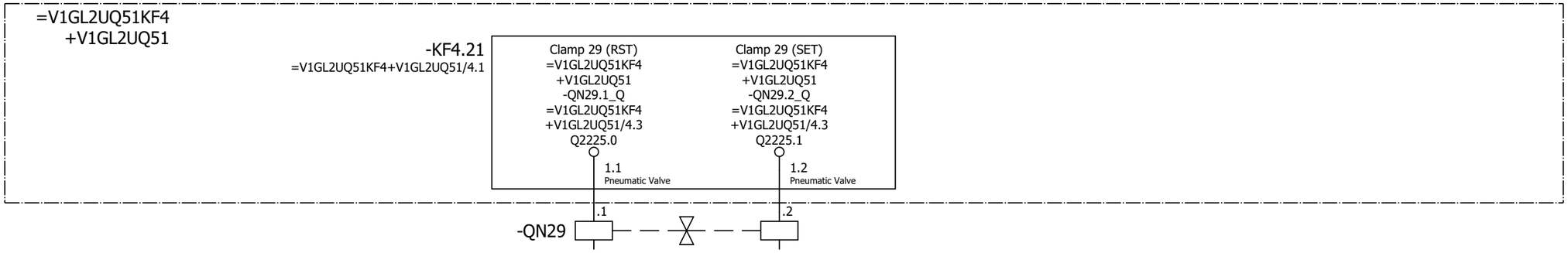

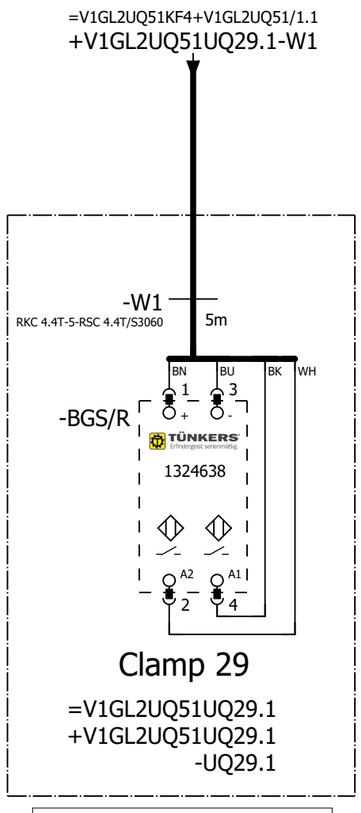

=V1GL2UQ51
-UQ29.1-BGS/R
Clamp 29

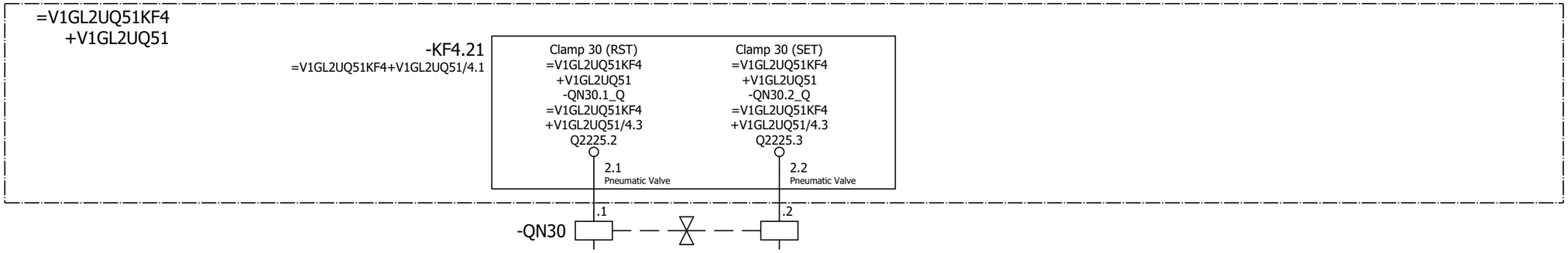

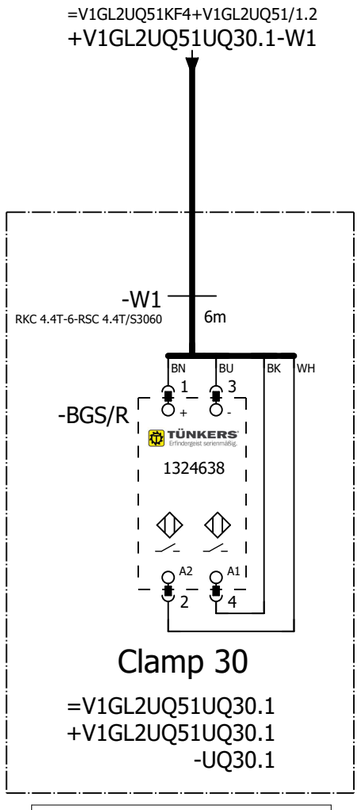

=V1GL2UQ51
-UQ30.1-BGS/R
Clamp 30

=V1GL2UQ51UQ29+.GL2UQ51UQ29/1

=V1GL2UQ51UQ31+.GL2UQ51UQ31/1

			Date	1/11/2023	Volvo Trucks North America		Valiant TMS	FESTO DQ CONNECTION QN30	Drawing name: =2V10&EFS-EL	= V1GL2UQ51UQ30	
			Ed.	MKLEPADLO						+ V1GL2UQ51UQ30	
			Appr		P6700 Bodyside RH - Robot Cell 2V10				Document type: EFS	Project nr: 22-16150	Page 1
Modification	Date	Name	Original		Replacement of	Replaced by	Scale 1:1				1579

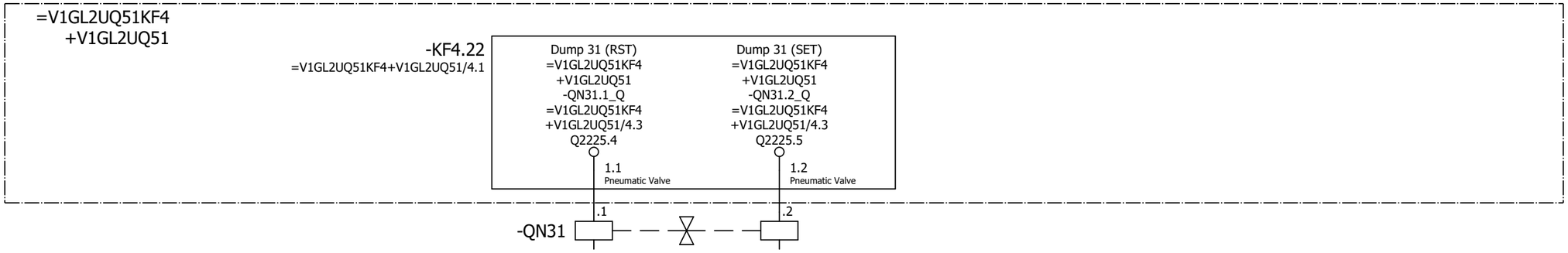

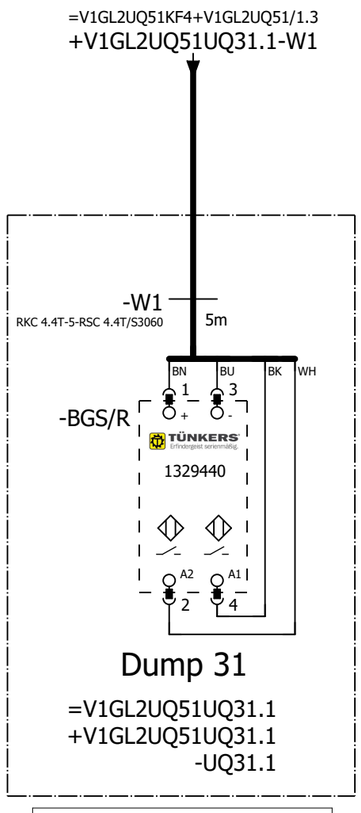

=V1GL2UQ51
-UQ31.1-BGS/R
Dump 31

=V1GL2UQ51UQ30+.GL2UQ51UQ30/1

=V1GL2UQ51UQ32+.GL2UQ51UQ32/1

			Date	1/11/2023	Volvo Trucks North America	Valiant TMS	FESTO DQ CONNECTION QN31	Drawing name: =2V10&EFS-EL	= V1GL2UQ51UQ31	
			Ed.	MKLEPADLO					+ V1GL2UQ51UQ31	
			Appr		P6700 Bodyside RH - Robot Cell 2V10			Document type: EFS	Project nr: 22-16150	Page 1
Modification	Date	Name	Original		Replacement of / Replaced by	Scale 1:1				1579

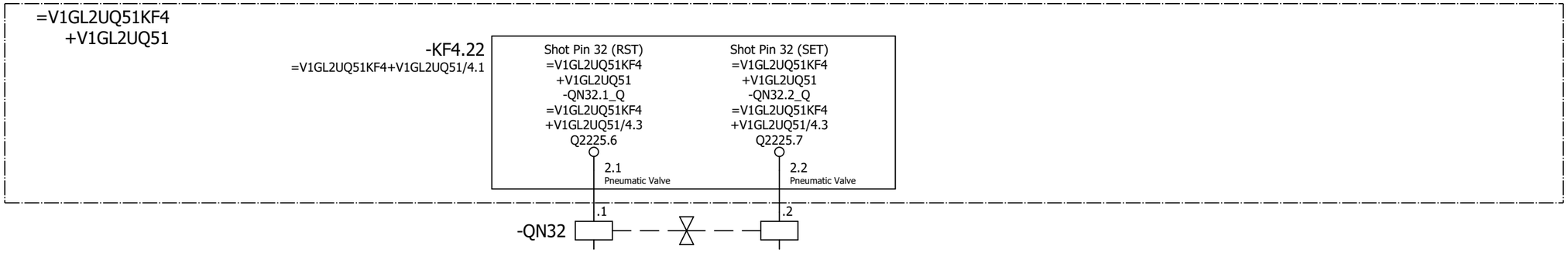

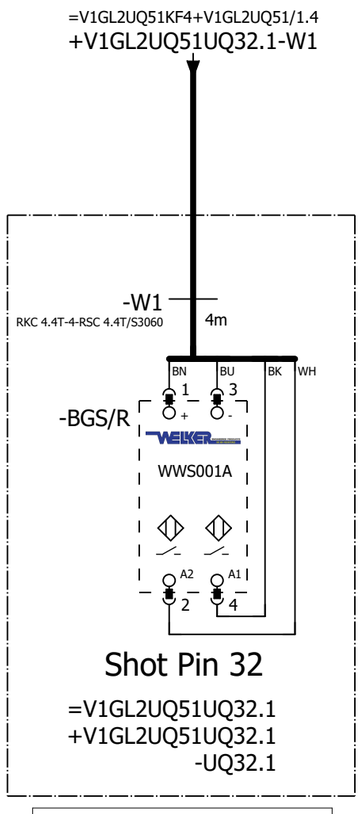

=V1GL2UQ51
-UQ32.1-BGS/R
Shot Pin 32

=V1GL2UQ51UQ31+.GL2UQ51UQ31/1

=V1GL2UQ51UQ33+.GL2UQ51UQ33/1

			Date	1/11/2023	Volvo Trucks North America		Valiant TMS	FESTO DQ CONNECTION QN32	Drawing name: =2V10&EFS-EL	= V1GL2UQ51UQ32	
			Ed.	MKLEPADLO						+ V1GL2UQ51UQ32	
			Appr		P6700 Bodyside RH - Robot Cell 2V10				Document type: EFS	Project nr: 22-16150	Page 1
Modification	Date	Name	Original		Replacement of	Replaced by	Scale 1:1				1579

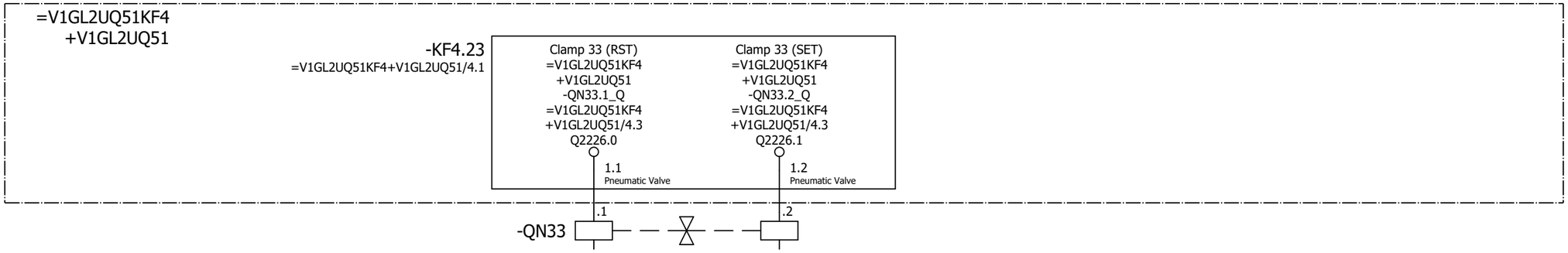

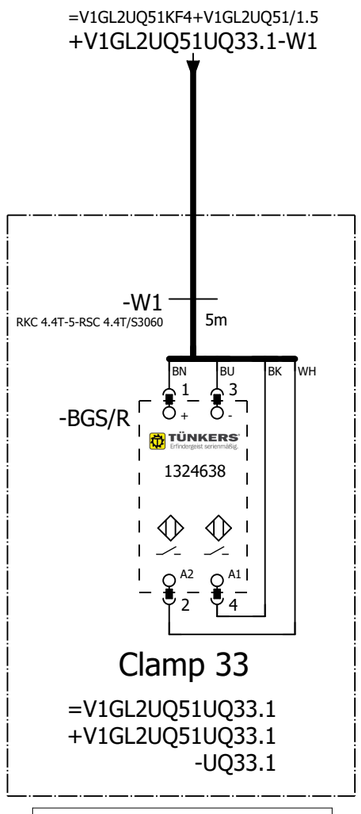

=V1GL2UQ51
-UQ33.1-BGS/R
Clamp 33

=V1GL2UQ51UQ32+.GL2UQ51UQ32/1

=V1GL2UQ51UQ34+.GL2UQ51UQ34/1

			Date	1/11/2023	Volvo Trucks North America		Valiant TMS	FESTO DQ CONNECTION QN33	Drawing name: =2V10&EFS-EL		= V1GL2UQ51UQ33
			Ed.	MKLEPADLO							+ V1GL2UQ51UQ33
			Appr		P6700 Bodyside RH - Robot Cell 2V10				Document type: EFS	Project nr: 22-16150	Page 1
Modification	Date	Name	Original		Replacement of	Replaced by	Scale 1:1				1579

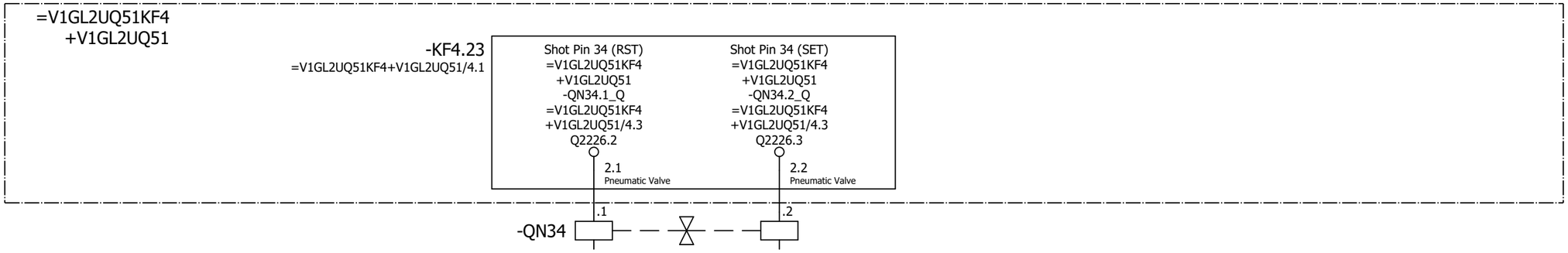

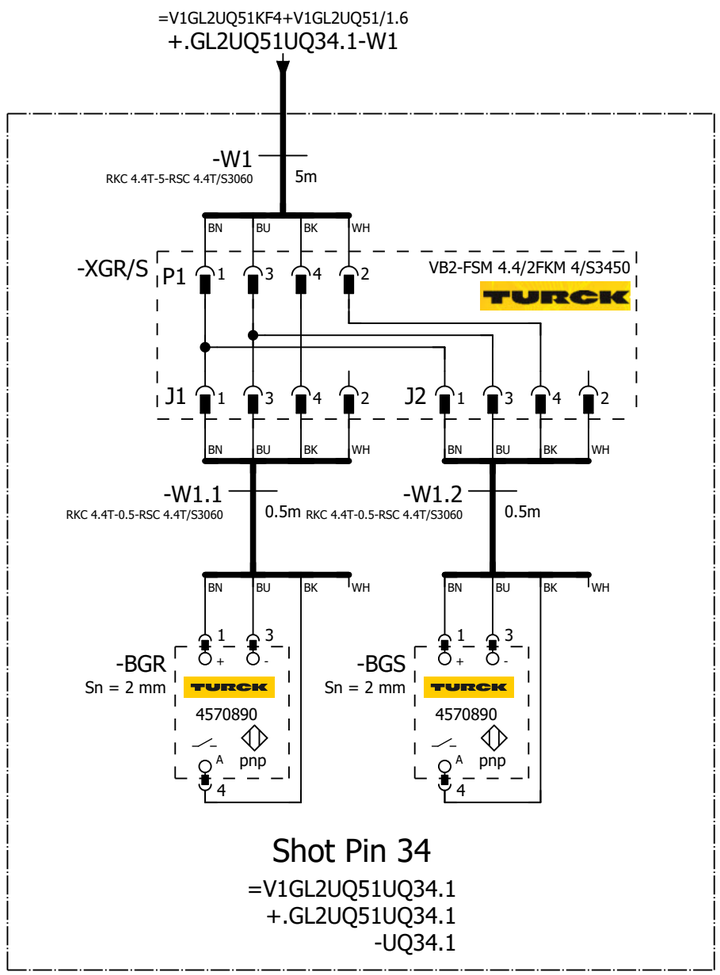

=V1GL2UQ51
-UQ34.1-BGR
Shot Pin 34

=V1GL2UQ51
-UQ34.1-BGS
Shot Pin 34

=V1GL2UQ51UQ33+.GL2UQ51UQ33/1

=V1GL2UQ51UQ35+.GL2UQ51UQ35/1

			Date	1/11/2023	Volvo Trucks North America	Valiant TMS	FESTO DQ CONNECTION QN34	Drawing name: =2V10&EFS-EL		= V1GL2UQ51UQ34	
			Ed.	MKLEPADLO						+ V1GL2UQ51UQ34	
			Appr		P6700 Bodyside RH - Robot Cell 2V10			Document type: EFS	Project nr: 22-16150		Page 1
Modification	Date	Name	Original		Replacement of / Replaced by	Scale 1:1					1579

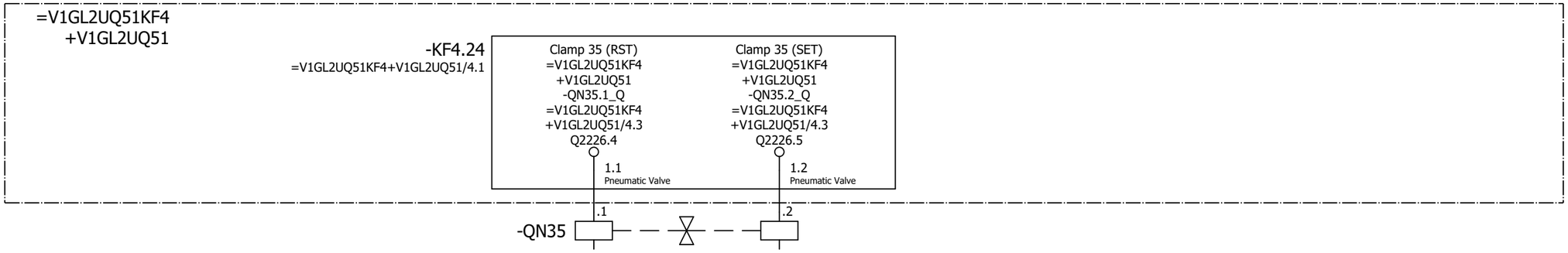

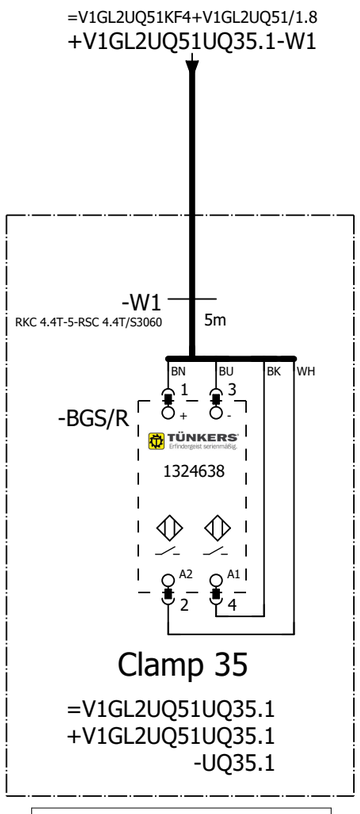

=V1GL2UQ51
-UQ35.1-BGS/R
Clamp 35

=V1GL2UQ51UQ34+.GL2UQ51UQ34/1

=V1GL2UQ51UQ36+.GL2UQ51UQ36/1

			Date	1/11/2023	Volvo Trucks North America	Valiant TMS	FESTO DQ CONNECTION QN35	Drawing name: =2V10&EFS-EL		= V1GL2UQ51UQ35	
			Ed.	MKLEPADLO						+ V1GL2UQ51UQ35	
			Appr		P6700 Bodyside RH - Robot Cell 2V10			Document type: EFS	Project nr: 22-16150		Page 1
Modification	Date	Name	Original		Replacement of / Replaced by	Scale 1:1					1579

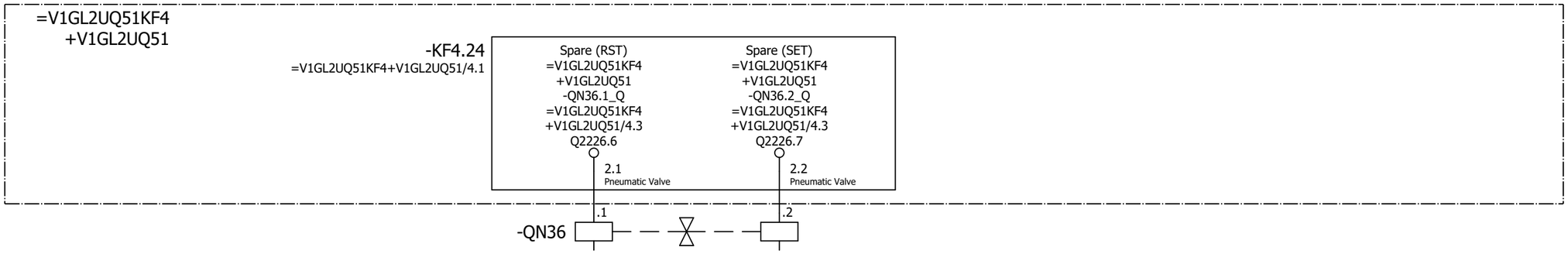

=V1GL2UQ51UQ35+.GL2UQ51UQ35/1

=V1GL2UQ51UQ37+.GL2UQ51UQ37/1

			Date	1/11/2023	Volvo Trucks North America	Valiant TMS	FESTO DQ CONNECTION QN36	Drawing name: =2V10&EFS-EL		= V1GL2UQ51UQ36	
			Ed.	MKLEPADLO						+ V1GL2UQ51UQ36	
			Appr		P6700 Bodyside RH - Robot Cell 2V10			Document type: EFS	Project nr: 22-16150		Page 1
Modification	Date	Name	Original		Replacement of / Replaced by	Scale 1:1					1579

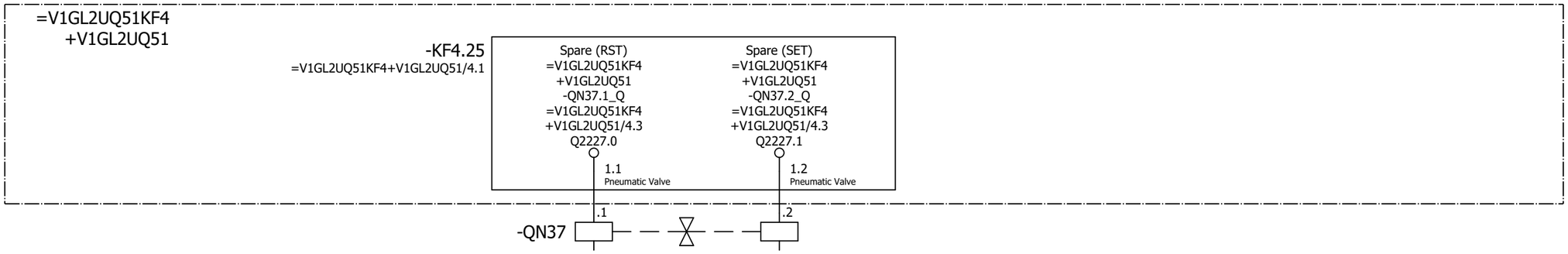

=V1GL2UQ51UQ36+.GL2UQ51UQ36/1

=V1GL2UQ51UQ38+.GL2UQ51UQ38/1

			Date	1/11/2023	Volvo Trucks North America		Valiant TMS	FESTO DQ CONNECTION QN37	Drawing name: =2V10&EFS-EL		= V1GL2UQ51UQ37
			Ed.	MKLEPADLO							+ V1GL2UQ51UQ37
			Appr		P6700 Bodyside RH - Robot Cell 2V10				Document type: EFS	Project nr: 22-16150	Page 1 / 1579
Modification	Date	Name	Original		Replacement of	Replaced by	Scale 1:1				

=V1GL2UQ51KF4
+V1GL2UQ51

-KF4.25
=V1GL2UQ51KF4+V1GL2UQ51/4.1

Spare (RST)	Spare (SET)
=V1GL2UQ51KF4	=V1GL2UQ51KF4
+V1GL2UQ51	+V1GL2UQ51
-QN38.1_Q	-QN38.2_Q
=V1GL2UQ51KF4	=V1GL2UQ51KF4
+V1GL2UQ51/4.3	+V1GL2UQ51/4.3
Q2227.2	Q2227.3
2.1 Pneumatic Valve	2.2 Pneumatic Valve

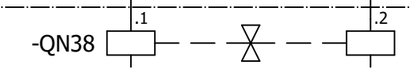

			Date	1/11/2023	Volvo Trucks North America	Valiant TMS	FESTO DQ CONNECTION QN38	Drawing name: =2V10&EFS-EL		= V1GL2UQ51UQ38	
			Ed.	MKLEPADLO						+ V1GL2UQ51UQ38	
			Appr		P6700 Bodyside RH - Robot Cell 2V10			Document type: EFS	Project nr: 22-16150		Page 1
Modification	Date	Name	Original		Replacement of / Replaced by	Scale 1:1					1579

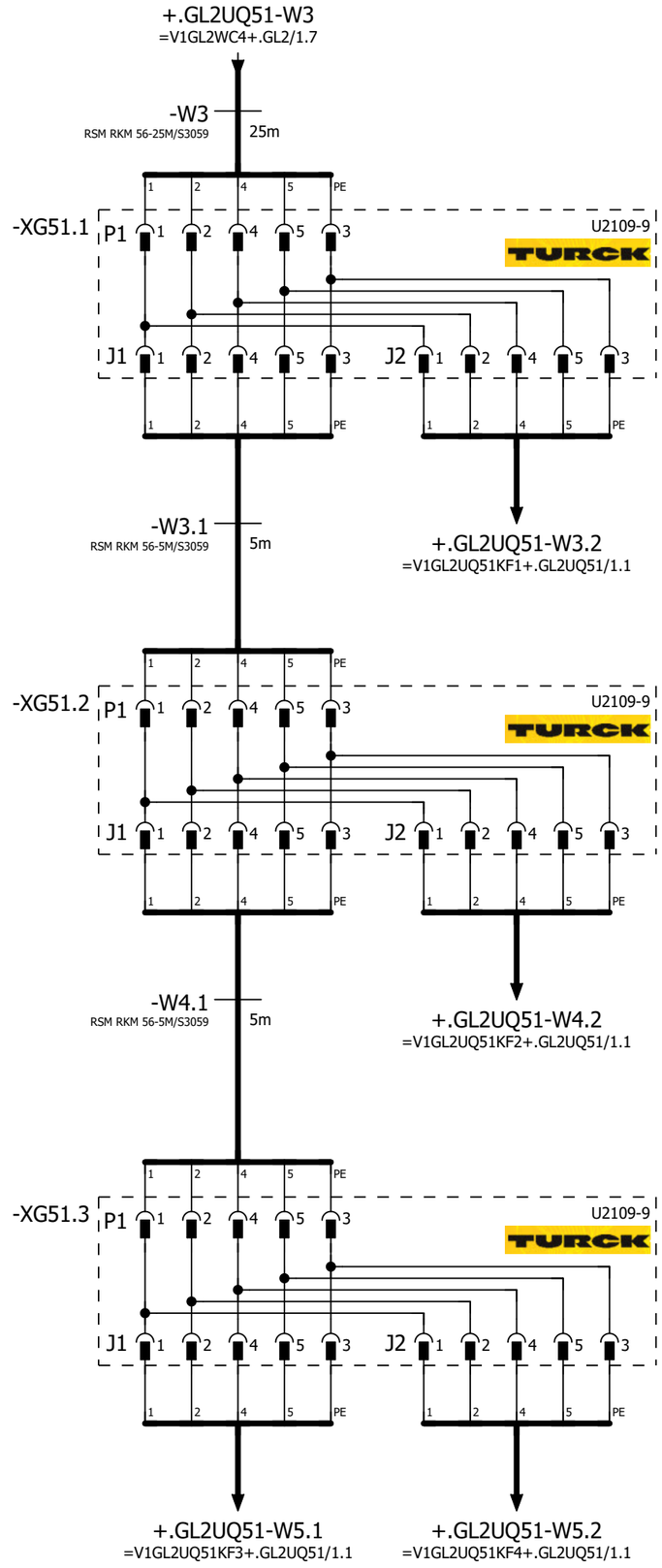

=V1GL2UQ51UQ38+.GL2UQ51UQ38/1

=V1GL2WC1+.GL2UC01/1

			Date	1/11/2023	Volvo Trucks North America	Valiant TMS	24VDC	Drawing name: =2V10&EFS-EL		= V1GL2UQ51WC4	
			Ed.	MKLEPADLO	P6700 Bodyside RH - Robot Cell 2V10					+ V1GL1UQ52	
			Appr					Document type: EFS	Project nr: 22-16150		Page 1
Modification	Date	Name	Original		Replacement of	Replaced by	Scale 1:1				1579

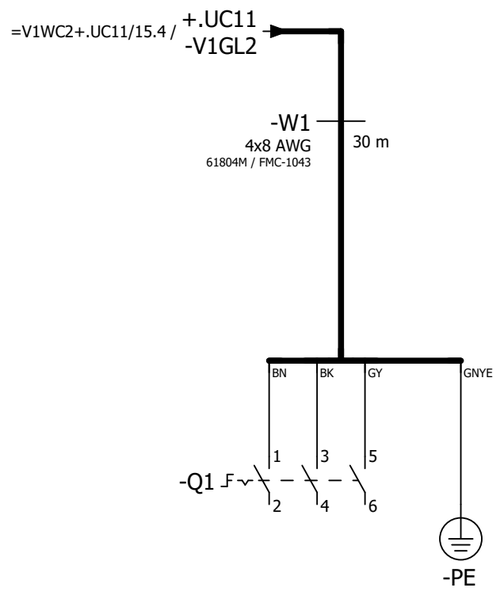

=V1GL2UQ51WC4+.GL1UQ52/1

=V1GL2WC4+V1GL2/1

			Date	1/11/2023	Volvo Trucks North America	Valiant TMS	Incoming power	Drawing name: =2V10&EFS-EL	= V1GL2WC1	
			Ed.	MKLEPADLO					+ V1GL2UC01	
			Appr		P6700 Bodyside RH - Robot Cell 2V10			Document type: EFS	Project nr: 22-16150	Page 1
Modification	Date	Name	Original		Replacement of	Replaced by	Scale 1:1			1579

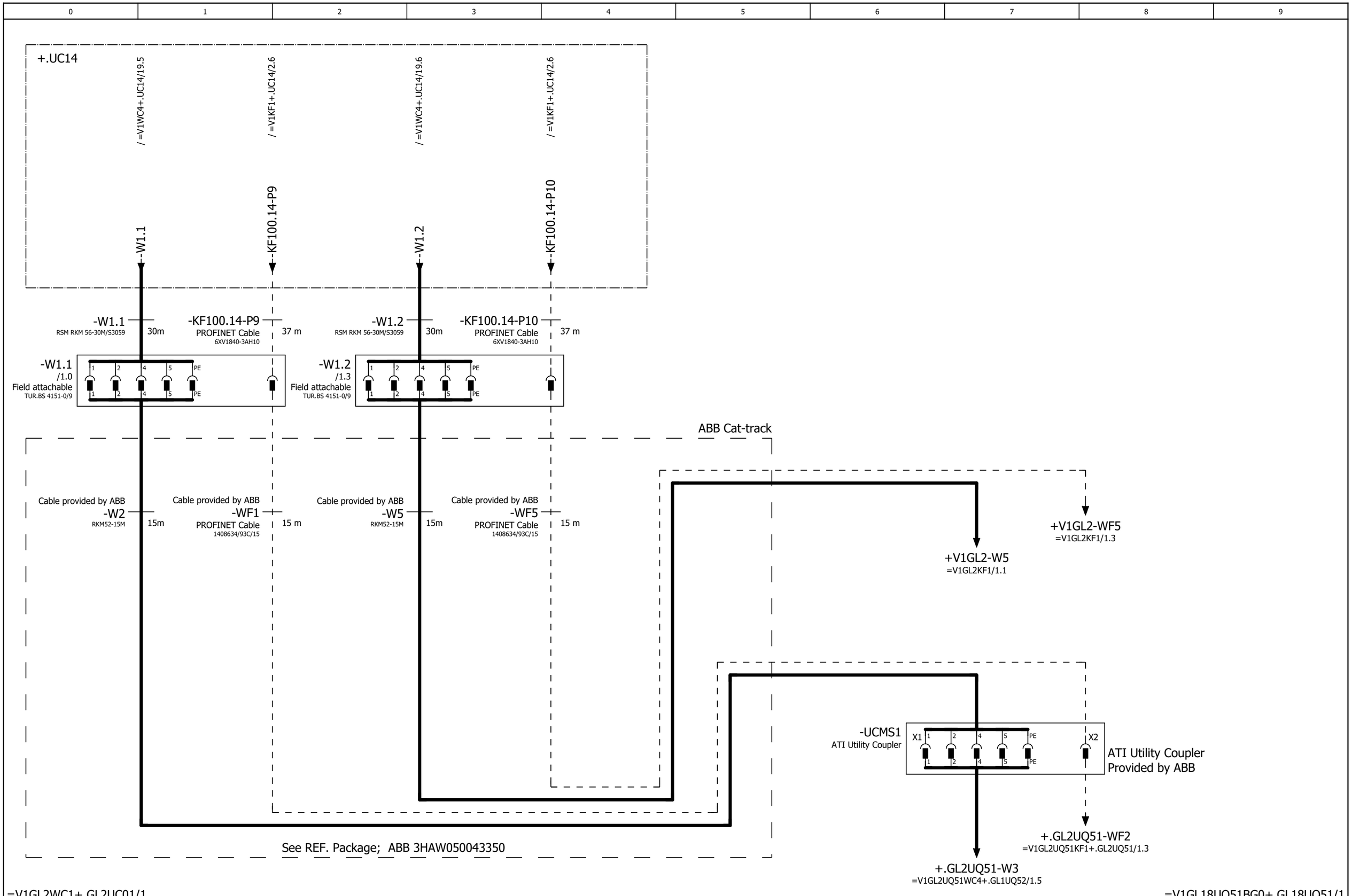

			Date	1/11/2023	Volvo Trucks North America	Valiant TMS	24VDC	Drawing name: =2V10&EFS-EL		= V1GL2WC4	
			Ed.	MKLEPADLO	P6700 Bodyside RH - Robot Cell 2V10					+ V1GL2	
			Appr					Document type: EFS	Project nr: 22-16150		Page 1
Modification	Date	Name	Original		Replacement of	Replaced by	Scale 1:1				1579

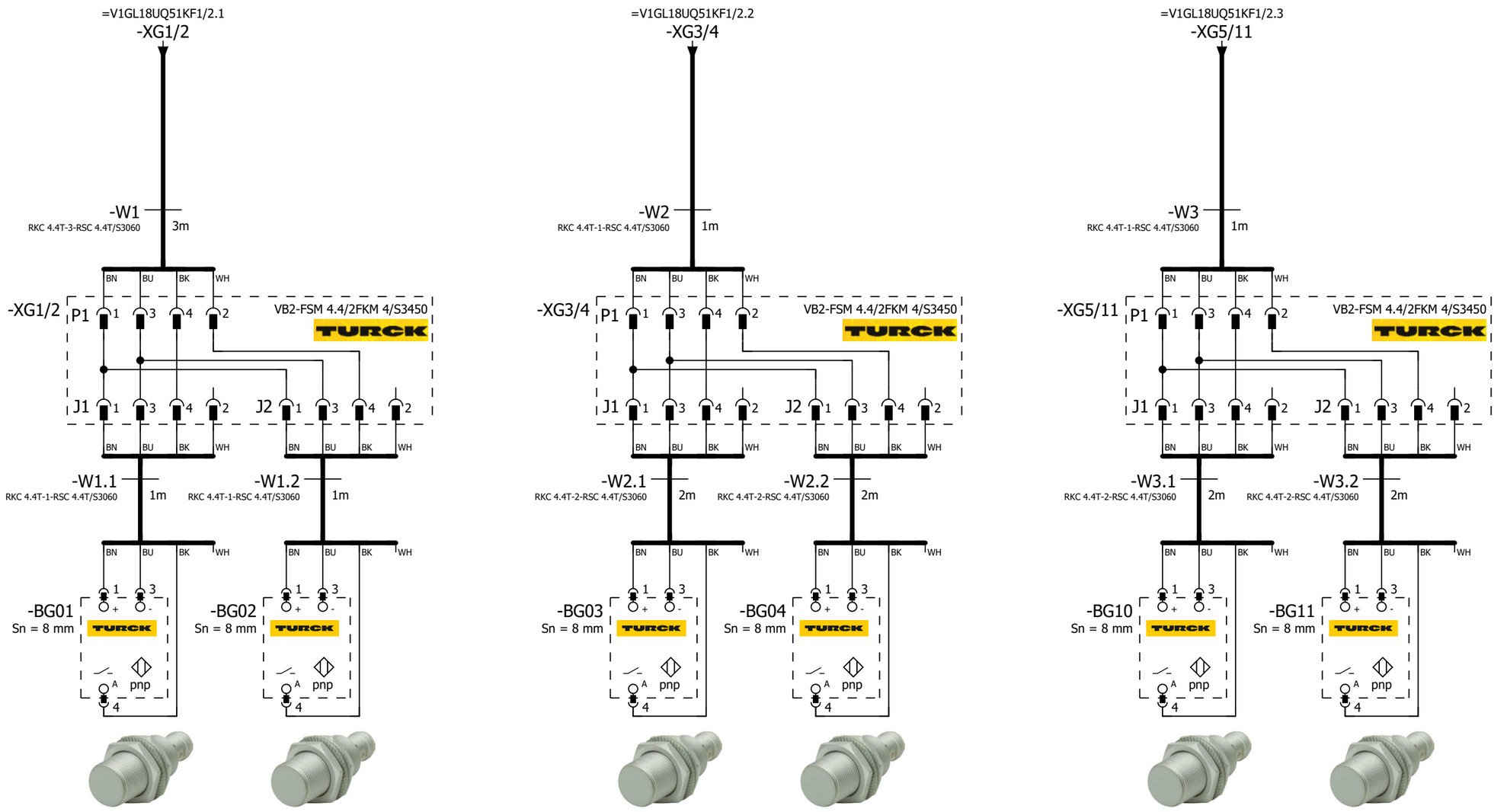

=V1GL18UQ51 -BG01 Pallet Present at Load Sta #1	=V1GL18UQ51 -BG02 Pallet Present at Accum Zone 1-2	=V1GL18UQ51 -BG03 Pallet Present at Mid-Stop Sta #2	=V1GL18UQ51 -BG04 Pallet Present at Accum Zone 2-3	=V1GL18UQ51 -BG10 Pallet Present at Pre-Load Sta #6	=V1GL18UQ51 -BG11 Good Pallet Detected at Load

=V1GL2WC4+.GL2/1

=V1GL18UQ51KF1/1

			Date	1/11/2023	Volvo Trucks North America	Valiant TMS	SENSORS	Drawing name: =2V10&EFS-EL	= V1GL18UQ51BG0
			Ed.	MKLEPADLO					+ V1GL18UQ51
			Appr		P6700 Bodyside RH - Robot Cell 2V10			Document type: EFS / Project nr: 22-16150	Page 1 / 1579
Modification	Date	Name	Original		Replacement of / Replaced by	Scale 1:1			

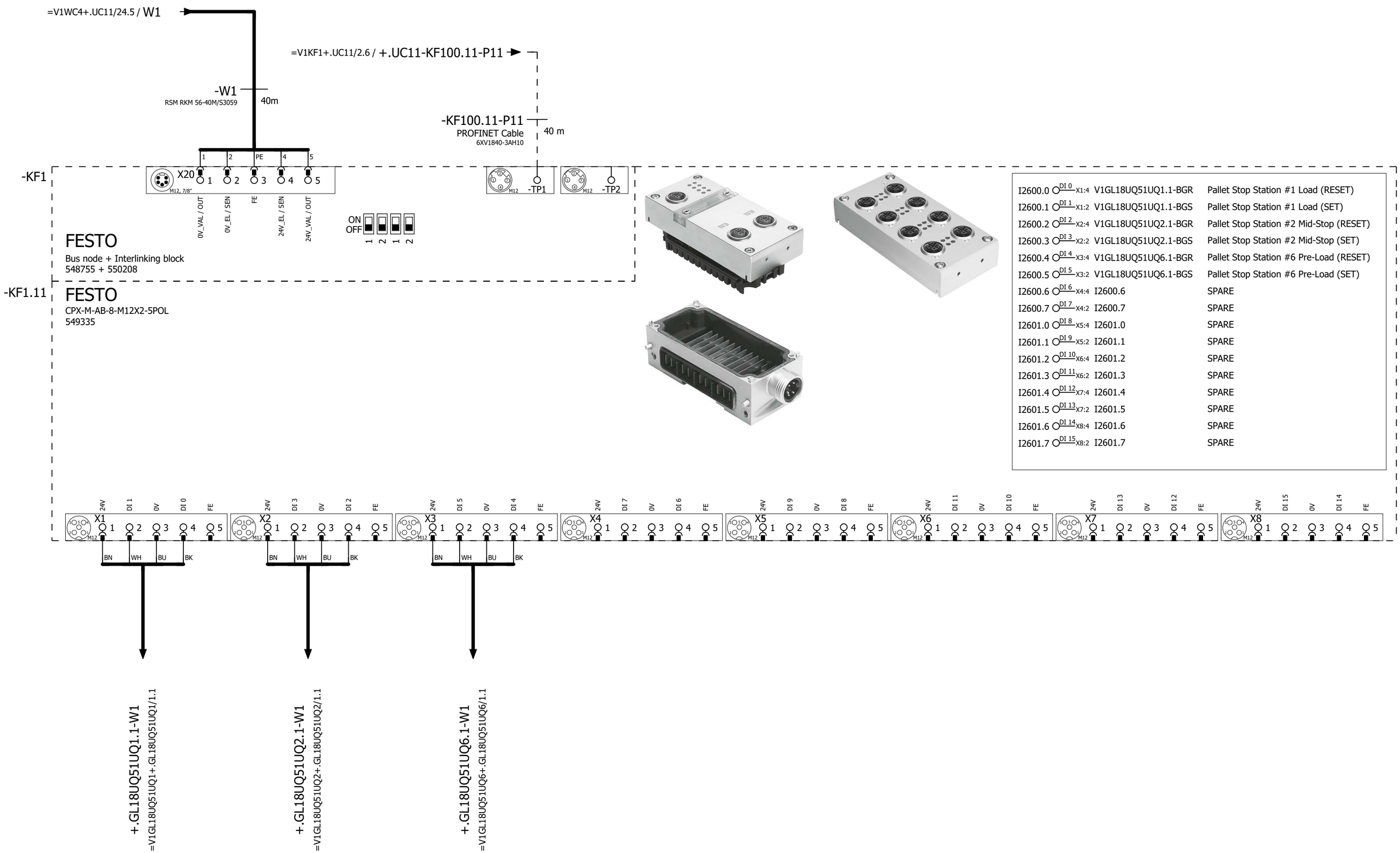

=V1GL18UQ51BG0/1

2

			Date	1/11/2023	Volvo Trucks North America	Valiant TMS	CONNECTING MOD. FOR VTSA MANIFOLD	Drawing name: =2V10&EFS-EL		= V1GL18UQ51KF1	
			Ed.	MKLEPADLO						+ V1GL18UQ51	
			Appr		P6700 Bodyside RH - Robot Cell 2V10			Document type: EFS	Project nr: 22-16150		Page 1
Modification	Date	Name	Original		Replacement of	Replaced by	Scale 1:1				1579

I2602.0	DI 0 X1:4	V1GL18UQ51-BG01	Sensor Pallet Present at Load Sta #1
I2602.1	DI 1 X1:2	V1GL18UQ51-BG02	Sensor Pallet Present at Accum Zone 1-2
I2602.2	DI 2 X2:4	V1GL18UQ51-BG03	Sensor Pallet Present at Mid-Stop Sta #2
I2602.3	DI 3 X2:2	V1GL18UQ51-BG04	Sensor Pallet Present at Accum Zone 2-3
I2602.4	DI 4 X3:4	V1GL18UQ51-BG10	Sensor Pallet Present at Pre-Load Sta #6
I2602.5	DI 5 X3:2	V1GL18UQ51-BG11	Sensor Good Pallet Detected at Load
I2602.6	DI 6 X4:4	I2602.6	SPARE
I2602.7	DI 7 X4:2	I2602.7	SPARE
I2603.0	DI 8 X5:4	I2603.0	SPARE
I2603.1	DI 9 X5:2	I2603.1	SPARE
I2603.2	DI 10 X6:4	I2603.2	SPARE
I2603.3	DI 11 X6:2	I2603.3	SPARE
I2603.4	DI 12 X7:4	I2603.4	SPARE
I2603.5	DI 13 X7:2	I2603.5	SPARE
I2603.6	DI 14 X8:4	I2603.6	SPARE
I2603.7	DI 15 X8:2	I2603.7	SPARE

-KF1.12

FESTO
CPX-M-AB-8-M12X2-5POL
549335

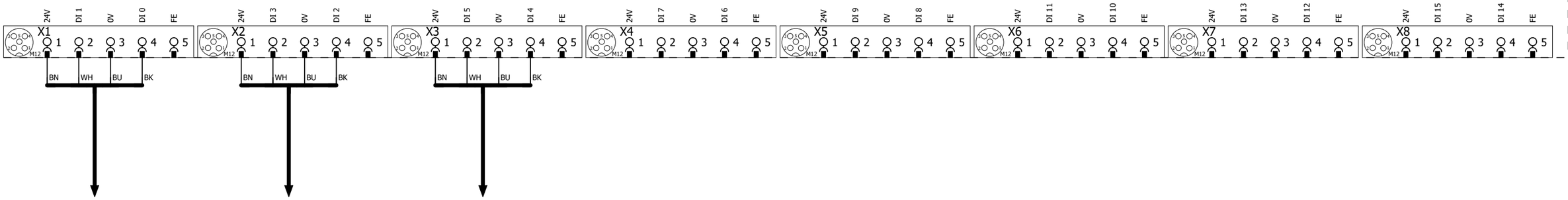

-XG1/2
=V1GL18UQ51BG0/1.1

-XG3/4
=V1GL18UQ51BG0/1.4

-XG5/11
=V1GL18UQ51BG0/1.6

1 3

			Date	1/11/2023	Volvo Trucks North America	Valiant TMS	I/O MOD. DI16 (8 x M12) FOR VTSA-F	Drawing name: =2V10&EFS-EL		= V1GL18UQ51KF1	
			Ed.	MKLEPADLO						+ V1GL18UQ51	
			Appr		P6700 Bodyside RH - Robot Cell 2V10			Document type: EFS	Project nr: 22-16150		Page 2
Modification	Date	Name	Original		Replacement of / Replaced by	Scale 1:1					1579

0	1	2	3	4	5	6	7	8	9

I2604.0	DI 0 X1:4	I2604.0	SPARE
I2604.1	DI 1 X1:2	I2604.1	SPARE
I2604.2	DI 2 X2:4	I2604.2	SPARE
I2604.3	DI 3 X2:2	I2604.3	SPARE
I2604.4	DI 4 X3:4	I2604.4	SPARE
I2604.5	DI 5 X3:2	I2604.5	SPARE
I2604.6	DI 6 X4:4	I2604.6	SPARE
I2604.7	DI 7 X4:2	I2604.7	SPARE
I2605.0	DI 8 X5:4	I2605.0	SPARE
I2605.1	DI 9 X5:2	I2605.1	SPARE
I2605.2	DI 10 X6:4	I2605.2	SPARE
I2605.3	DI 11 X6:2	I2605.3	SPARE
I2605.4	DI 12 X7:4	I2605.4	SPARE
I2605.5	DI 13 X7:2	I2605.5	SPARE
I2605.6	DI 14 X8:4	I2605.6	SPARE
I2605.7	DI 15 X8:2	I2605.7	SPARE

-KF1.13

FESTO

CPX-M-AB-8-M12X2-5POL

549335

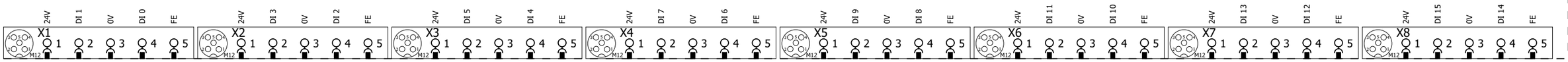

2 4

			Date	1/11/2023	Volvo Trucks North America	Valiant TMS	I/O MOD. DI16 (8 x M12) FOR VTSA-F	Drawing name: =2V10&EFS-EL	= V1GL18UQ51KF1		
			Ed.	MKLEPADLO					+ V1GL18UQ51		
			Appr		P6700 Bodyside RH - Robot Cell 2V10			Document type: EFS	Project nr: 22-16150	Page	3
Modification	Date	Name	Original		Replacement of	Replaced by	Scale 1:1				1579

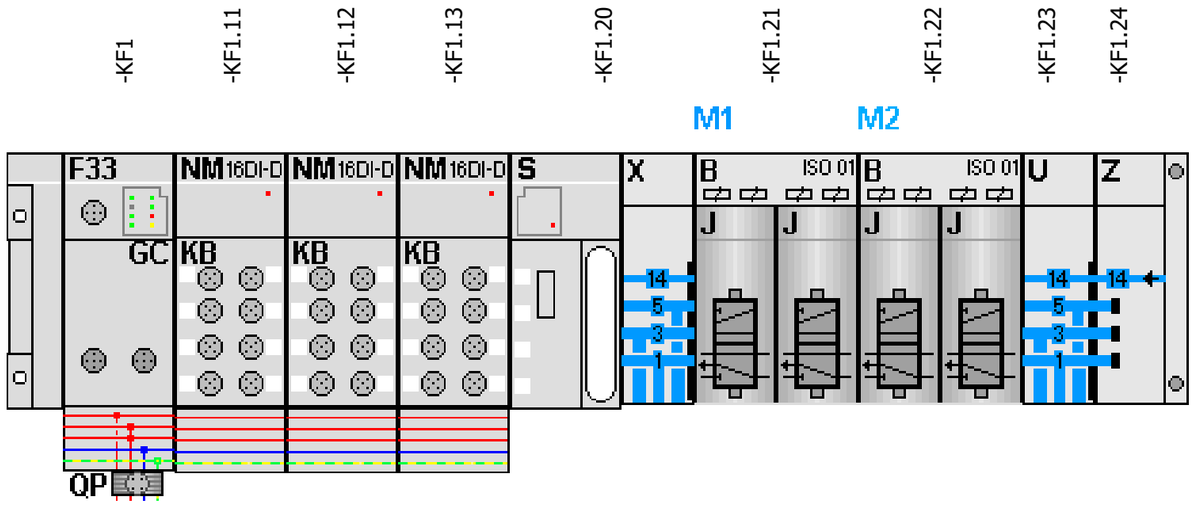

-KF1.21
=V1GL18UQ51UQ1+.GL18UQ51UQ1/1.3
=V1GL18UQ51UQ2+.GL18UQ51UQ2/1.3

FESTO

=V1GL18UQ51UQ1+.GL18UQ51UQ1/1.4	Q2600.0 DO 0 1.1	-QN1.1_Q	Pallet Stop Station #1 Load (RST)
=V1GL18UQ51UQ1+.GL18UQ51UQ1/1.4	Q2600.1 DO 1 1.2	-QN1.2_Q	Pallet Stop Station #1 Load (SET)
=V1GL18UQ51UQ2+.GL18UQ51UQ2/1.4	Q2600.2 DO 2 2.1	-QN2.1_Q	Pallet Stop Station #2 Mid-Stop (RST)
=V1GL18UQ51UQ2+.GL18UQ51UQ2/1.4	Q2600.3 DO 3 2.2	-QN2.2_Q	Pallet Stop Station #2 Mid-Stop (SET)

-KF1.22
=V1GL18UQ51UQ6+.GL18UQ51UQ6/1.3
=V1GL18UQ51UQx+.GL18UQ51UQx/1.3

FESTO

=V1GL18UQ51UQ6+.GL18UQ51UQ6/1.4	Q2600.4 DO 0 1.1	-QN3.1_Q	Pallet Stop Station #6 Pre-Load (RST)
=V1GL18UQ51UQ6+.GL18UQ51UQ6/1.4	Q2600.5 DO 1 1.2	-QN3.2_Q	Pallet Stop Station #6 Pre-Load (SET)
=V1GL18UQ51UQx+.GL18UQ51UQx/1.4	Q2600.6 DO 2 2.1	-QN4.1_Q	Spare (RST)
=V1GL18UQ51UQx+.GL18UQ51UQx/1.4	Q2600.7 DO 3 2.2	-QN4.2_Q	Spare (SET)

			Date	1/11/2023	Volvo Trucks North America		Valiant TMS	CONNECTING MOD. FOR FESTO DQ	Drawing name: =2V10&EFS-EL	= V1GL18UQ51KF1	
			Ed.	MKLEPADLO						+ V1GL18UQ51	
			Appr		P6700 Bodyside RH - Robot Cell 2V10				Document type: EFS	Project nr: 22-16150	Page 4
Modification	Date	Name	Original		Replacement of	Replaced by	Scale 1:1				1579

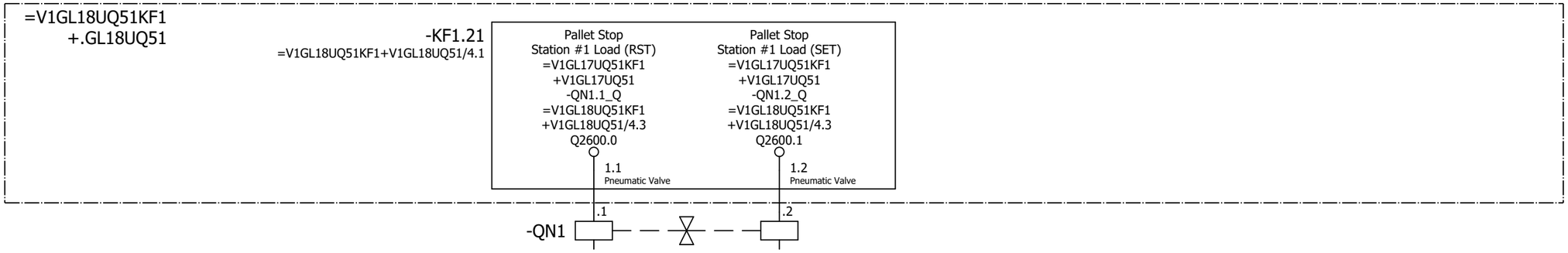

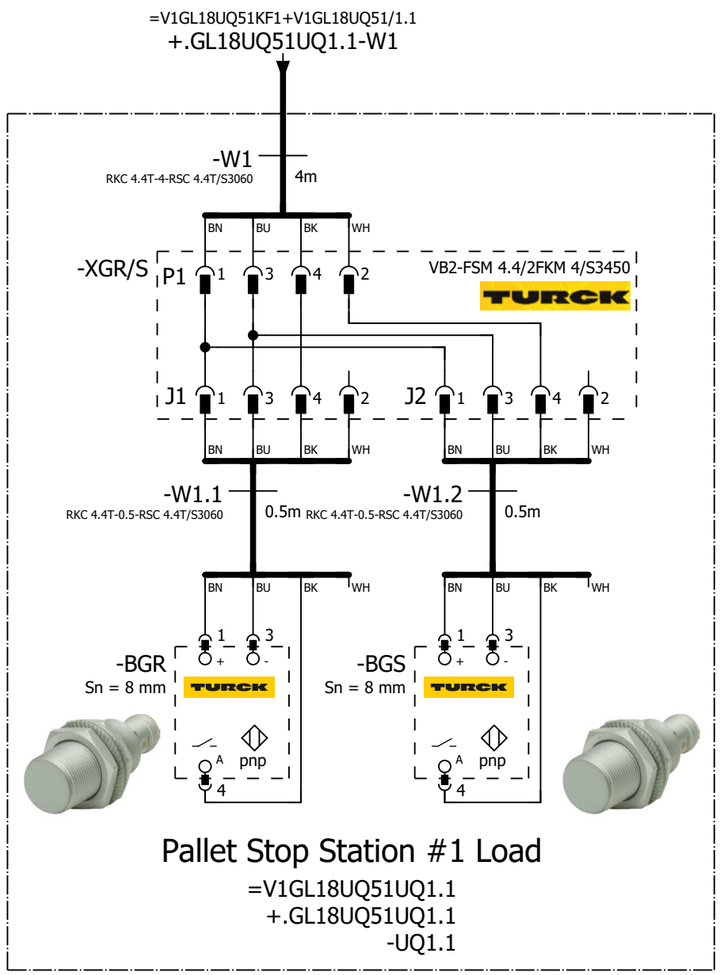

=V1GL18UQ51 -UQ1.1-BGR Pallet Stop Station #1 Load	=V1GL18UQ51 -UQ1.1-BGS Pallet Stop Station #1 Load

=V1GL18UQ51KF1+V1GL18UQ51/4

=V1GL18UQ51UQ2+.GL18UQ51UQ2/1

			Date	1/11/2023	Volvo Trucks North America	Valiant TMS	FESTO DQ CONNECTION QN1	Drawing name: =2V10&EFS-EL		= V1GL18UQ51UQ1	
			Ed.	MKLEPADLO						+ V1GL18UQ51UQ1	
			Appr		P6700 Bodyside RH - Robot Cell 2V10			Document type: EFS	Project nr: 22-16150		Page 1
Modification	Date	Name	Original		Replacement of / Replaced by	Scale 1:1					1579

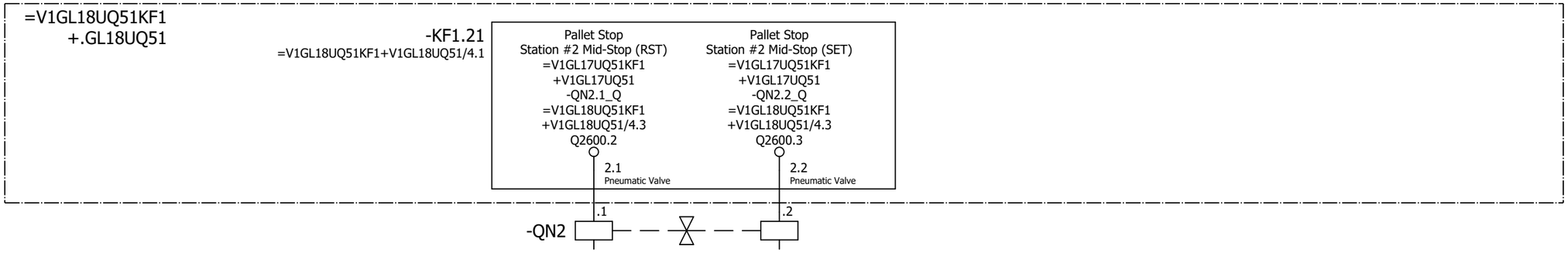

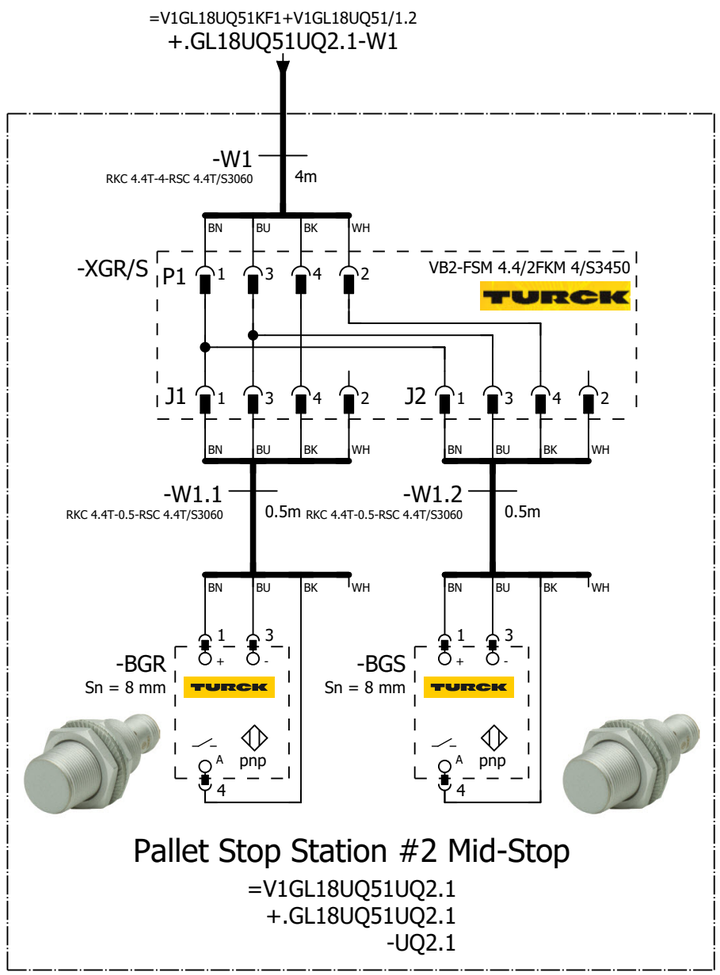

=V1GL18UQ51 -UQ2.1-BGR Pallet Stop Station #2 Mid-Stop	=V1GL18UQ51 -UQ2.1-BGS Pallet Stop Station #2 Mid-Stop

=V1GL18UQ51UQ1+.GL18UQ51UQ1/1

=V1GL18UQ51UQ6+.GL18UQ51UQ6/1

			Date	1/11/2023	Volvo Trucks North America	Valiant TMS	FESTO DQ CONNECTION QN2	Drawing name: =2V10&EFS-EL		= V1GL18UQ51UQ2	
			Ed.	MKLEPADLO						+ V1GL18UQ51UQ2	
			Appr		P6700 Bodyside RH - Robot Cell 2V10			Document type: EFS	Project nr: 22-16150		Page 1
Modification	Date	Name	Original		Replacement of / Replaced by	Scale 1:1					1579

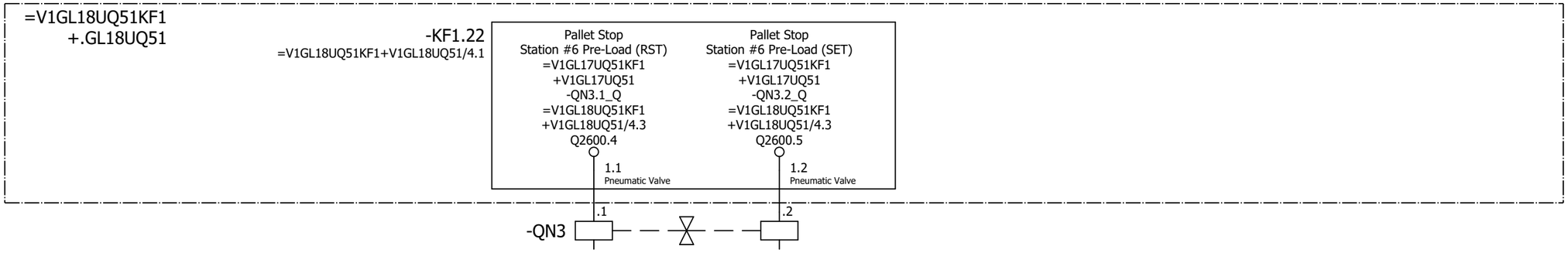

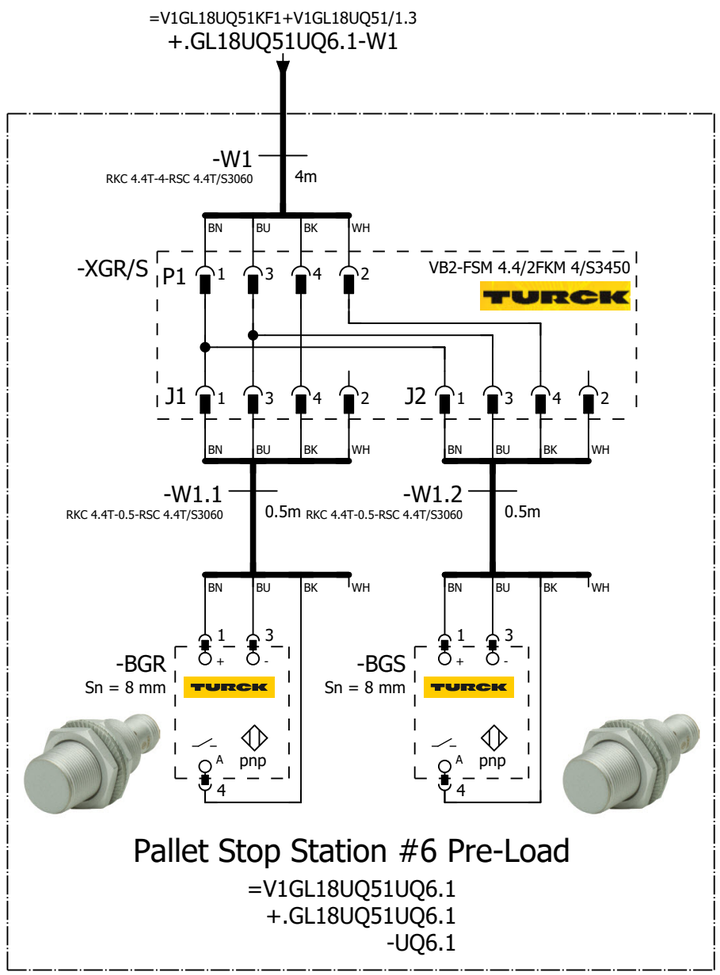

=V1GL18UQ51 -UQ6.1-BGR Pallet Stop Station #6 Pre-Load	=V1GL18UQ51 -UQ6.1-BGS Pallet Stop Station #6 Pre-Load

=V1GL18UQ51UQ2+.GL18UQ51UQ2/1

=V1GL18UQ51UQx+.GL18UQ51UQx/1

			Date	1/11/2023	Volvo Trucks North America	Valiant TMS	FESTO DQ CONNECTION QN3	Drawing name: =2V10&EFS-EL		= V1GL18UQ51UQ6	
			Ed.	MKLEPADLO						+ V1GL18UQ51UQ6	
			Appr		P6700 Bodyside RH - Robot Cell 2V10			Document type: EFS	Project nr: 22-16150		Page 1
Modification	Date	Name	Original		Replacement of	Replaced by	Scale 1:1				1579

=V1GL18UQ51KF1
+.GL18UQ51

-KF1.22
=V1GL18UQ51KF1+V1GL18UQ51/4.1

Spare (RST)	Spare (SET)
=V1GL17UQ51KF1	=V1GL17UQ51KF1
+V1GL17UQ51	+V1GL17UQ51
-QN4.1_Q	-QN4.2_Q
=V1GL18UQ51KF1	=V1GL18UQ51KF1
+V1GL18UQ51/4.3	+V1GL18UQ51/4.3
Q2600.6	Q2600.7
2.1 Pneumatic Valve	2.2 Pneumatic Valve

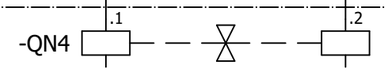

			Date	1/11/2023	Volvo Trucks North America	Valiant TMS	FESTO DQ CONNECTION QN4	Drawing name: =2V10&EFS-EL	= V1GL18UQ51UQx	
			Ed.	MKLEPADLO					+ V1GL18UQ51UQx	
			Appr		P6700 Bodyside RH - Robot Cell 2V10			Document type: EFS	Project nr: 22-16150	Page 1 / 1579
Modification	Date	Name	Original		Replacement of / Replaced by	Scale 1:1				

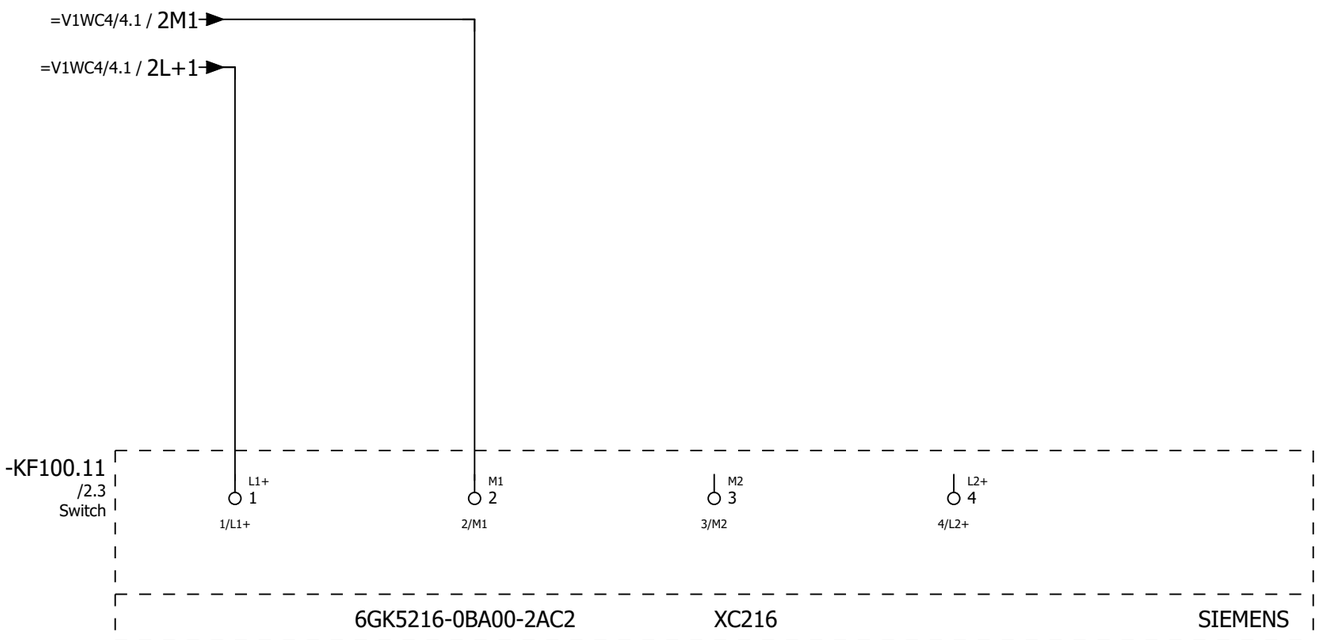

=V1GL18UQ51UQx+.GL18UQ51UQx/1

2

			Date	1/11/2023	Volvo Trucks North America		Valiant TMS	Switch, Scalance X216	Drawing name: =2V10&EFS-EL	= V1KF1	
			Ed.	MKLEPADLO						+ V1UC11	
			Appr		P6700 Bodyside RH - Robot Cell 2V10				Document type: EFS	Project nr: 22-16150	Page 1
Modification	Date	Name	Original		Replacement of	Replaced by	Scale 1:1				1579

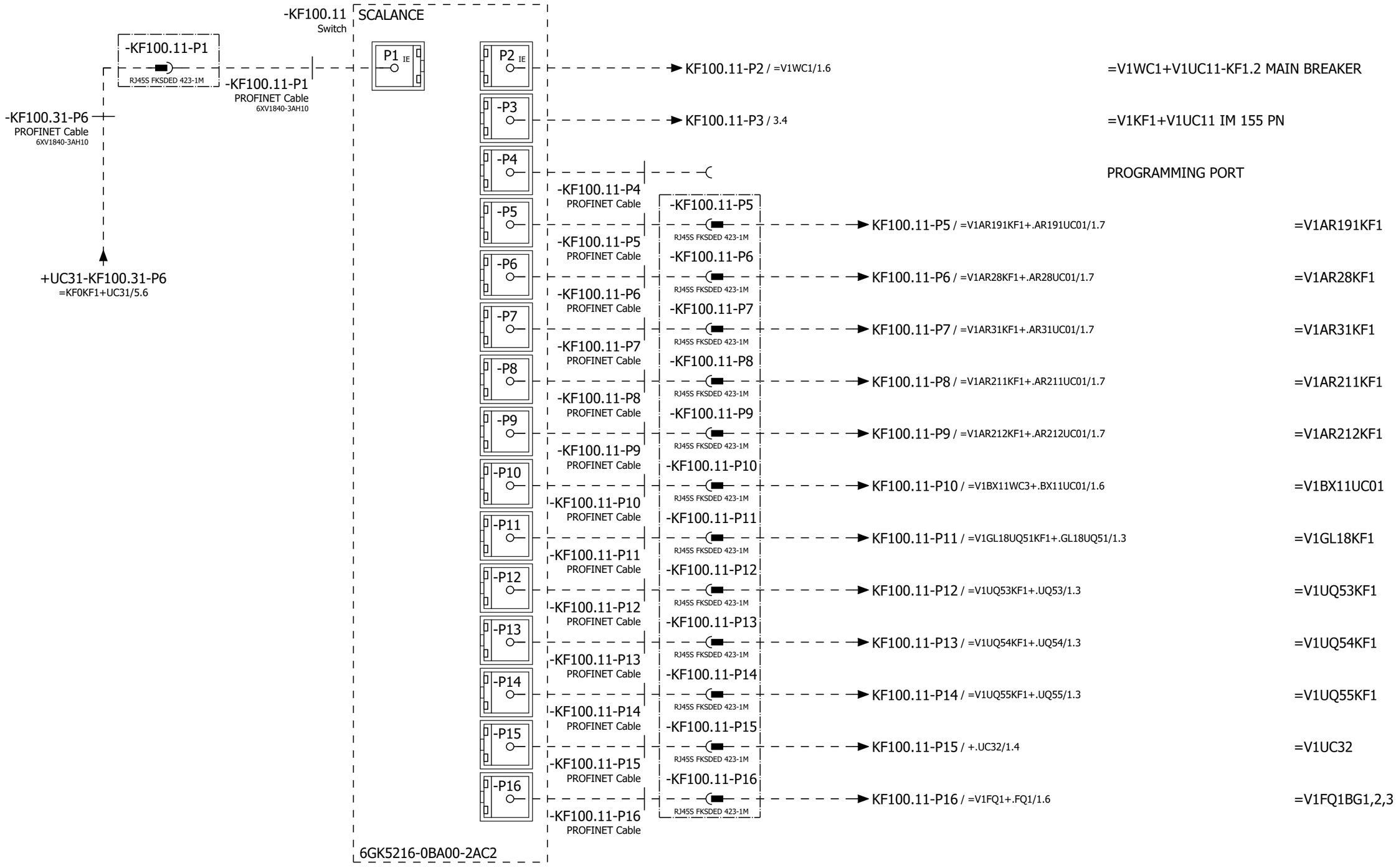

			Date	1/11/2023	Volvo Trucks North America		Valiant TMS	Network Overview	Drawing name: =2V10&EFS-EL	= V1KF1	
			Ed.	MKLEPADLO						+ V1UC11	
			Appr		P6700 Bodyside RH - Robot Cell 2V10				Document type: EFS	Project nr: 22-16150	Page 2
Modification	Date	Name	Original		Replacement of	Replaced by	Scale 1:1				1579

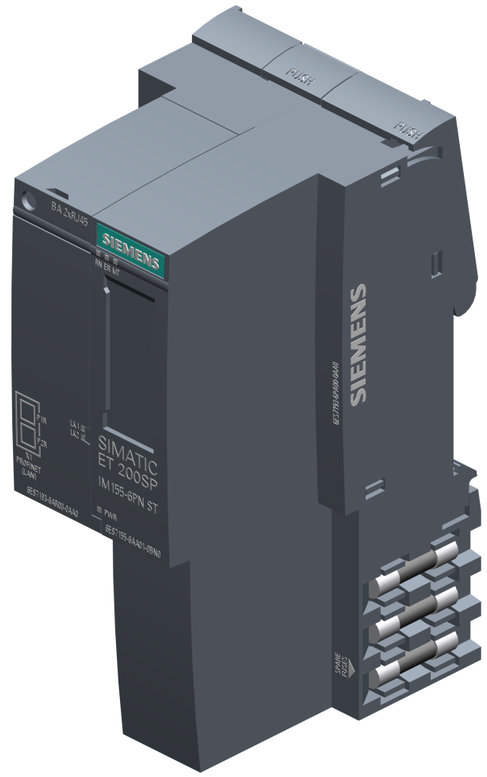

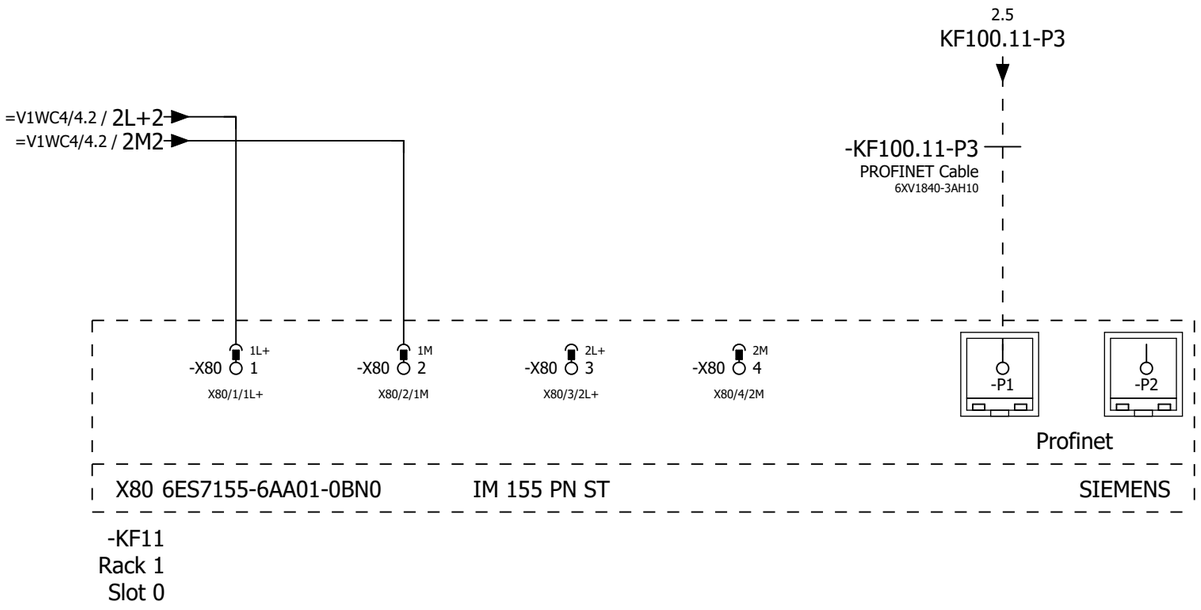

2

4

			Date	1/11/2023	Volvo Trucks North America	Valiant TMS	IM 155 PN	Drawing name: =2V10&EFS-EL	= V1KF1	
			Ed.	MKLEPADLO					+ V1UC11	
			Appr		P6700 Bodyside RH - Robot Cell 2V10			Document type: EFS	Project nr: 22-16150	Page 3 / 1579
Modification	Date	Name	Original		Replacement of	Replaced by	Scale 1:1			

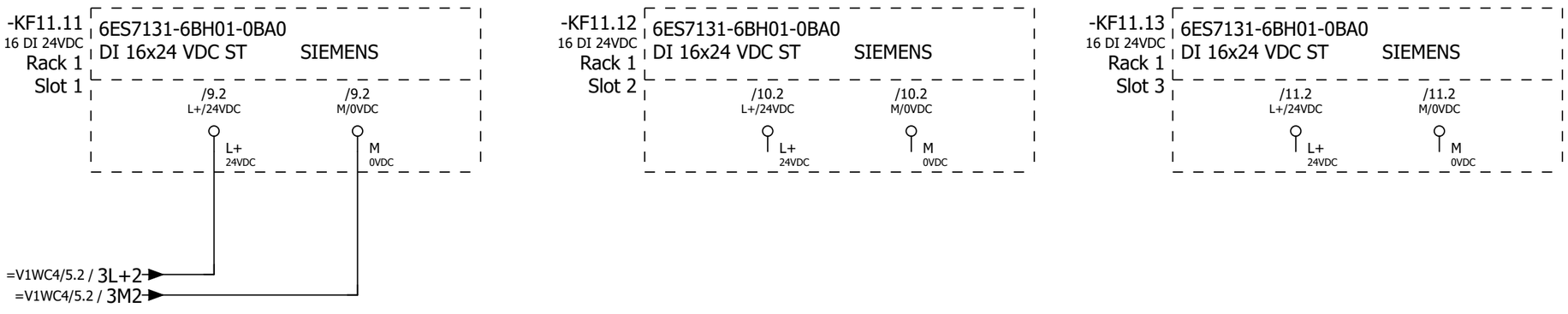

			Date	1/11/2023	Volvo Trucks North America		Valiant TMS	ET200S Wiring DI	Drawing name: =2V10&EFS-EL		= V1KF1
			Ed.	MKLEPADLO							+ V1UC11
			Appr		P6700 Bodyside RH - Robot Cell 2V10				Document type: EFS	Project nr: 22-16150	Page 4
Modification	Date	Name	Original		Replacement of	Replaced by	Scale 1:1				1579

-KF11.14
16 DI 24VDC
Rack 1
Slot 4

6ES7131-6BH01-0BA0
DI 16x24 VDC ST SIEMENS

/12.2	/12.2
L+/24VDC	M/0VDC
L+ 24VDC	M 0VDC

4 6

			Date	1/11/2023	Volvo Trucks North America	Valiant TMS	ET200S Wiring DI	Drawing name: =2V10&EFS-EL		= V1KF1	
			Ed.	MKLEPADLO						+ V1UC11	
			Appr		P6700 Bodyside RH - Robot Cell 2V10			Document type: EFS	Project nr: 22-16150		Page 5
Modification	Date	Name	Original		Replacement of	Replaced by	Scale 1:1				1579

-KF11.31
FDI 8 24VDC
Rack 1
Slot 5

6ES7136-6BA00-0CA0
F-DI 8x24VDC HF SIEMENS

/14.2 L+ 24VDC
/14.2 M 0VDC

-KF11.32
FDI 8 24VDC
Rack 1
Slot 6

6ES7136-6BA00-0CA0
F-DI 8x24VDC HF SIEMENS

/15.2 L+ 24VDC
/15.2 M 0VDC

			Date	1/11/2023	Volvo Trucks North America		Valiant TMS	ET200S Wiring F-DI	Drawing name: =2V10&EFS-EL	= V1KF1	
			Ed.	MKLEPADLO						+ V1UC11	
			Appr		P6700 Bodyside RH - Robot Cell 2V10				Document type: EFS	Project nr: 22-16150	Page 6
Modification	Date	Name	Original		Replacement of	Replaced by	Scale 1:1				1579

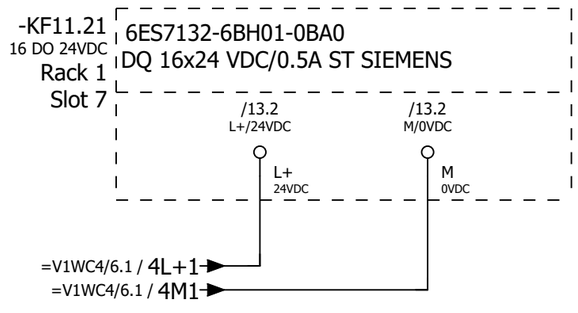

			Date	1/11/2023	Volvo Trucks North America	Valiant TMS	ET200S Wiring DQ	Drawing name: =2V10&EFS-EL		= V1KF1	
			Ed.	MKLEPADLO	P6700 Bodyside RH - Robot Cell 2V10					+ V1UC11	
			Appr			Scale 1:1		Document type: EFS	Project nr: 22-16150		Page 7 / 1579
Modification	Date	Name	Original		Replacement of	Replaced by					

Update PLC Structure Data!

-KF11.41
=V1FQ1/1.0
=V1FQ1/2.0
=V1FQ1/3.0
=V1FQ1/4.0
/16.1
FDO 4 24VDC
Rack 1
Slot 8

6ES7136-6DB00-0CA0 + BU15-P16+A0+2B F-DQ 4X24VDC/2A PM HF SIEMENS

/16.2 L+ 24VDC

/16.2 M 0VDC

-KF11.42
/17.1
FDO 4 24VDC
Rack 1
Slot 9

6ES7136-6DB00-0CA0 + BU15-P16+A0+2B F-DQ 4X24VDC/2A PM HF SIEMENS

/17.2 L+ 24VDC

/17.2 M 0VDC

			Date	1/11/2023	Volvo Trucks North America	Valiant TMS	ET200S Wiring F-DQ	Drawing name: =2V10&EFS-EL		= V1KF1	
			Ed.	MKLEPADLO	P6700 Bodyside RH - Robot Cell 2V10					+ V1UC11	
			Appr					Document type: EFS	Project nr: 22-16150		Page 8
Modification	Date	Name	Original		Replacement of	Replaced by	Scale 1:1				1579

-KF11.11
/4.0

ET 200SP SIEMENS
DI 16x24 VDC ST

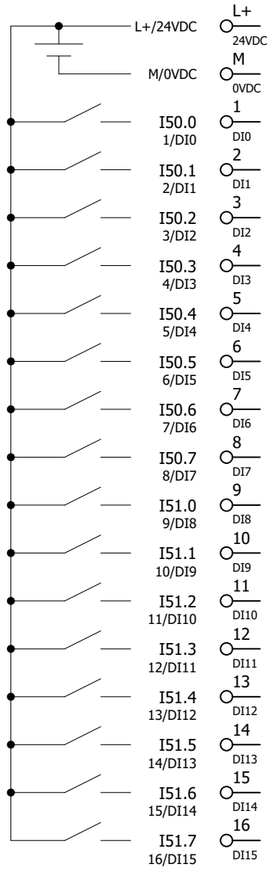

/4.1			
/4.2			
=V1WC2/41.2	I50.0	Spare	
=V1WC2/41.3	=V1UC11-FC1	Monitoring 480 VAC	
=V1WC4/1.4	=V1WC4+V1UC11-TA1_I	Monitoring 24VDC	
=V1WC4/11.4	=V1WC4+V1UC11-TA2_I	Monitoring 24VDC	
=V1WC4/1.0	=V1WC4+V1UC11-FC11_I	Monitoring 24VDC	
=V1WC4/11.0	=V1WC4+V1UC11-FC12_I	Monitoring 24VDC	
=V1WC2/41.7	I50.6	Spare	
=V1WC2/41.8	I50.7	Spare	
=V1WC2/41.2	I51.0	Spare	
=V1WC2/41.3	I51.1	Spare	
=V1WC2/41.4	I51.2	Spare	
=V1WC2/41.4	I51.3	Spare	
=V1WC2/41.5	I51.4	Spare	
=V1WC2/41.6	I51.5	Spare	
=V1WC2/41.7	I51.6	Spare	
=V1WC2/41.8	I51.7	Spare	

6ES7131-6BH01-0BA0

-KF11.12
/4.3

ET 200SP SIEMENS
DI 16x24 VDC ST

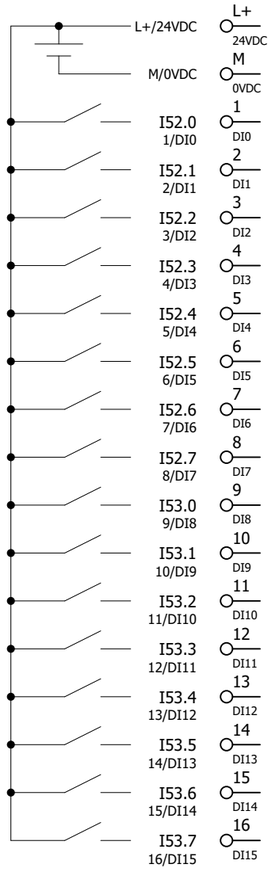

/4.3		
/4.4		
=V1WC2/42.2	=V1AR22-FC1	Monitoring 480 VAC
=V1WC2/42.3	=V1AR21-FC1	Monitoring 480 VAC
=V1WC2/42.4	=V1AR11-FC1	Monitoring 480 VAC
=V1WC2/42.4	=V1AR31-FC1	Monitoring 480 VAC
=V1WC2/42.5	=V1AR23-FC1	Monitoring 480 VAC
=V1WC2/42.6	=V1AR24-FC1	Monitoring 480 VAC
=V1WC2/42.7	=V1AR25-FC1	Monitoring 480 VAC
=V1WC2/42.8	=V1AR26-FC1	Monitoring 480 VAC
=V1WC2/42.2	=V1AR28-FC1	Monitoring 480 VAC
=V1WC2/42.3	=V1AR29-FC1	Monitoring 480 VAC
=V1WC2/42.4	=V1AR211-FC1	Monitoring 480 VAC
=V1WC2/42.4	=V1AR81-FC1	Monitoring 480 VAC
=V1WC2/42.5	=V1AR191-FC1	Monitoring 480 VAC
=V1WC2/42.6	=V1AR212-FC1	Monitoring 480 VAC
=V1WC2/42.7	=V1AR81XQ51-FC1	Monitoring 480 VAC
=V1WC2/42.8	=V1AR81XQ52-FC1	Monitoring 480 VAC

6ES7131-6BH01-0BA0

-KF11.13
/4.5

ET 200SP SIEMENS
DI 16x24 VDC ST

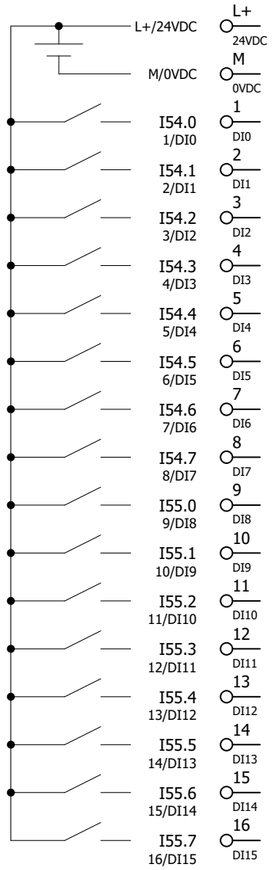

/4.6			
/4.7			
=V1WC2/43.2	=V1AR31XQ41-FC1	Monitoring 480 VAC	
=V1WC2/43.3	=V1GL2-FC1	Monitoring 480 VAC	
=V1WC2/43.4	=V1AR27-FC1	Monitoring 480 VAC	
=V1WC2/43.4	I54.3	Spare	
=V1WC2/43.5	I54.4	Spare	
=V1WC2/43.6	I54.5	Spare	
=V1WC2/43.7	I54.6	Spare	
=V1WC2/43.8	I54.7	Spare	
=V1WC3/4.2	=V1WC3+V1UC11-FC2	Monitoring 120 VAC	
=V1WC3/4.3	=V1WC3+V1UC11-FC3	Monitoring 120 VAC	
=V1WC3/4.4	=V1WC3+V1UC11-FC4	Monitoring 120 VAC	
=V1WC3/4.4	=V1WC3+V1UC11-FC6	Monitoring 120 VAC	
=V1WC3/4.5	=V1WC3+V1UC11-FC7	Monitoring 120 VAC	
=V1WC3/4.6	=V1WC3+V1UC11-FC8	Monitoring 120 VAC	
=V1WC3/4.7	=V1WC3+V1UC11-FC9	Monitoring 120 VAC	
=V1WC3/4.8	=V1WC3+V1UC11-FC10	Monitoring 120 VAC	

6ES7131-6BH01-0BA0

-KF11.14
/5.0

ET 200SP SIEMENS
DI 16x24 VDC ST

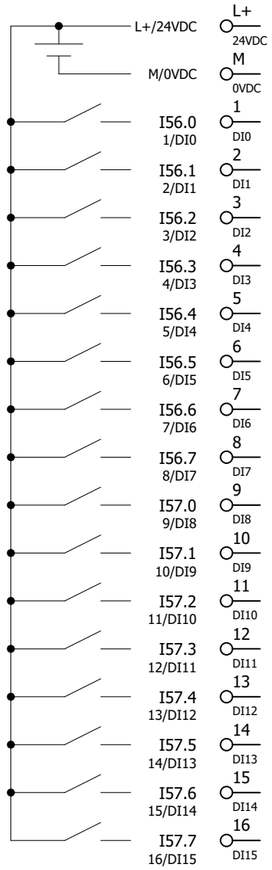

/5.1		
/5.2		
=V1FQ1/1.8	-KF11.51RQ	Monitoring Safety contactors 11.1L+
=V1FQ1/2.8	-KF11.52RQ	Monitoring Safety contactors 12.1L+
=V1FQ1/3.8	-KF11.53RQ	Monitoring Safety contactors 13.1L+
=V1FQ1/4.8	-KF11.54RQ	Monitoring Safety contactors 14.1L+
	I56.4	Spare
	I56.5	Spare
=KH3+KH3/1.6	=KH3-BF1_I	Monitoring Main Water Filter Dirty
=KH3+KH3/2.6	=KH3-BF2_I	Monitoring Main Water On
=V1WC3/4.2	=V1WC3+V1UC11-FC11	Monitoring 120 VAC
=KH0+KH0/1.6	=KH0-BP1_I	Monitoring Main AIR On
=KH0+KH0/5.6	=KH0-BP5_I	Monitoring S040 Fixture AIR On
=KH0+KH0/6.6	=KH0-BP6_I	Monitoring S050 Fixture AIR On
=KH0+KH0/7.6	=KH0-BP7_I	Monitoring S055 Fixture AIR On
=KH0+KH0/8.6	=KH0-BP8_I	Monitoring S060 Fixture AIR On
=KH0+KH0/9.6	=KH0-BP9_I	Monitoring S080 Conveyor Load AIR On
	I57.7	Spare

6ES7131-6BH01-0BA0

-KF11.21
/7.1
16 DO 24VDC

ET 200SP SIEMENS
DQ 16x24 VDC/0.5A ST

L+/24VDC	L+ 24VDC	/7.1		
M/0VDC	M 0VDC	/7.2		
Q50.0 1/DQ0	1 DQ0		Q50.0	Spare
Q50.1 2/DQ1	2 DQ1		Q50.1	Spare
Q50.2 3/DQ2	3 DQ2		Q50.2	Spare
Q50.3 4/DQ3	4 DQ3		Q50.3	Spare
Q50.4 5/DQ4	5 DQ4		Q50.4	Spare
Q50.5 6/DQ5	6 DQ5		Q50.5	Spare
Q50.6 7/DQ6	7 DQ6		Q50.6	Spare
Q50.7 8/DQ7	8 DQ7		Q50.7	Spare
Q51.0 9/DQ8	9 DQ8		Q51.0	Spare
Q51.1 10/DQ9	10 DQ9		Q51.1	Spare
Q51.2 11/DQ10	11 DQ10		Q51.2	Spare
Q51.3 12/DQ11	12 DQ11		Q51.3	Spare
Q51.4 13/DQ12	13 DQ12		Q51.4	Spare
Q51.5 14/DQ13	14 DQ13		Q51.5	Spare
Q51.6 15/DQ14	15 DQ14		Q51.6	Spare
Q51.7 16/DQ15	16 DQ15		Q51.7	Spare

6ES7132-6BH01-0BA0

			Date	1/11/2023	Volvo Trucks North America	Valiant TMS	ET200S DQ Overview KF11.21	Drawing name: =2V10&EFS-EL		= V1KF1	
			Ed.	MKLEPADLO						+ V1UC11	
			Appr		P6700 Bodyside RH - Robot Cell 2V10			Document type: EFS	Project nr: 22-16150	Page	13
Modification	Date	Name	Original		Replacement of / Replaced by	Scale 1:1					1579

-KF11.31
/6.0

ET 200SP SIEMENS
F-DI 8x24VDC HF

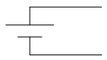

	L+ 24VDC	/6.1		
	M 0VDC	/6.2		
I5050.0	1 DI0		I5050.0	Spare
	9 VS0			
I5050.1	2 DI1		I5050.1	Spare
	10 VS1			
I5050.2	3 DI2		I5050.2	Spare
	11 VS2			
I5050.3	4 DI3		I5050.3	Spare
	12 VS3			
I5050.4	5 DI4		I5050.4	Spare
	13 VS4			
I5050.5	6 DI5		I5050.5	Spare
	14 VS5			
I5050.6	7 DI6		I5050.6	Spare
	15 VS6			
I5050.7	8 DI7		I5050.7	Spare
	16 VS7			

6ES7136-6BA00-0CA0

-KF11.32
/6.3

ET 200SP SIEMENS
F-DI 8x24VDC HF

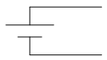

	L+ 24VDC	/6.3	
	M 0VDC	/6.4	
I5056.0	1 DI0	I5056.0	Spare
	9 VS0		
I5056.1	2 DI1	I5056.1	Spare
	10 VS1		
I5056.2	3 DI2	I5056.2	Spare
	11 VS2		
I5056.3	4 DI3	I5056.3	Spare
	12 VS3		
I5056.4	5 DI4	I5056.4	Spare
	13 VS4		
I5056.5	6 DI5	I5056.5	Spare
	14 VS5		
I5056.6	7 DI6	I5056.6	Spare
	15 VS6		
I5056.7	8 DI7	I5056.7	Spare
	16 VS7		

6ES7136-6BA00-0CA0

			Date	1/11/2023	Volvo Trucks North America	Valiant TMS	ET200S F-DI Overview KF11.32	Drawing name: =2V10&EFS-EL		= V1KF1	
			Ed.	MKLEPADLO						+ V1UC11	
			Appr		P6700 Bodyside RH - Robot Cell 2V10			Document type: EFS	Project nr: 22-16150	Page	15
Modification	Date	Name	Original		Replacement of / Replaced by	Scale 1:1					1579

-KF11.41
/8.0

ET 200SP SIEMENS
F-DQ 4X24VDC/2A PM HF

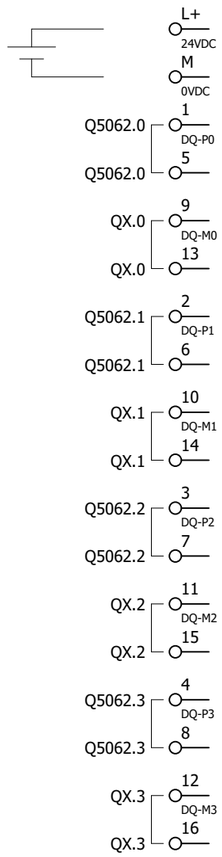

/8.1			
/8.2			
=V1FQ1/1.1	-KF11.51	Switched Power 1 11.1L+	
=V1FQ1/1.1			
=V1FQ1/2.1	-KF11.52	Switched Power 2 12.1L+	
=V1FQ1/2.1			
=V1FQ1/3.1	-KF11.53	Switched Power 3 13.1L+	
=V1FQ1/3.1			
=V1FQ1/4.1	-KF11.54	Switched Power 4 14.1L+	
=V1FQ1/4.1			

6ES7136-6DB00-0CA0 + BU15-P16+A0+2B

-KF11.42
/8.5

ET 200SP SIEMENS
F-DQ 4X24VDC/2A PM HF

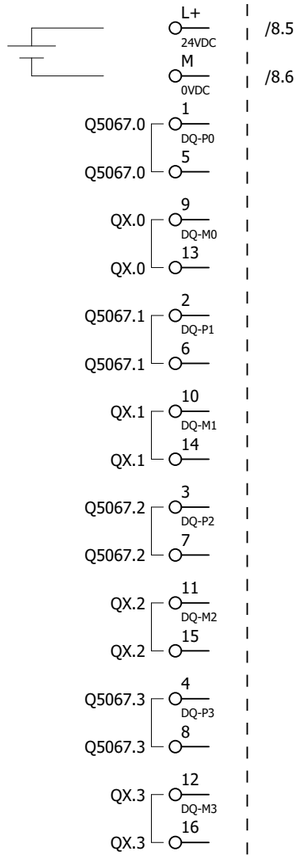

Q5067.0	Q5067.0	Spare
Q5067.1	Q5067.1	Spare
Q5067.2	Q5067.2	Spare
Q5067.3	Q5067.3	Spare

6ES7136-6DB00-0CA0 + BU15-P16+A0+2B

-KF11.51
=V1FQ1/1.2
=V1WC4/12.1

ET 200SP SIEMENS
F-RQ 1x24VDC/24..230VAC/5A

1 RQ01+	=V1WC4/12.2	11L+
2 RQ01-	=V1WC4/12.2	11.1L+
3 RQ02+	=V1WC4/12.3	11L+
4 RQ02-	=V1WC4/12.4	11.1L+
9 IN P	=V1FQ1/1.3	Switched Power 1 11.1L+P
10 OUT P	=V1FQ1/1.4	Spare
11 IN M	=V1FQ1/1.4	Switched Power 1 11.1L+M
12 OUT M	=V1FQ1/1.5	Spare
1A AUX		
2A AUX		
3A AUX		
4A AUX		

6ES7136-6RA00-0BF0 + BU20-P8+A4+0B

			Date	1/11/2023	Volvo Trucks North America		Valiant TMS	ET200S F-RQ Overview KF11.51	Drawing name: =2V10&EFS-EL		= V1KF1
			Ed.	MKLEPADLO							+ V1UC11
			Appr		P6700 Bodyside RH - Robot Cell 2V10				Document type: EFS	Project nr: 22-16150	Page 18
Modification	Date	Name	Original		Replacement of	Replaced by	Scale 1:1				1579

-KF11.52
=V1FQ1/2.2
=V1WC4/13.1

ET 200SP SIEMENS
F-RQ 1x24VDC/24..230VAC/5A

1 RQ01+	=V1WC4/13.2	12L+
2 RQ01-	=V1WC4/13.2	12.1L+
3 RQ02+	=V1WC4/13.3	12L+
4 RQ02-	=V1WC4/13.4	12.1L+
9 IN P	=V1FQ1/2.3	Switched Power 2 12.1L+P
10 OUT P	=V1FQ1/2.4	Spare
11 IN M	=V1FQ1/2.4	Switched Power 2 12.1L+M
12 OUT M	=V1FQ1/2.5	Spare
1A AUX		
2A AUX		
3A AUX		
4A AUX		

6ES7136-6RA00-0BF0 + BU20-P8+A4+0B

			Date	1/11/2023	Volvo Trucks North America	Valiant TMS	ET200S F-RQ Overview KF11.52	Drawing name: =2V10&EFS-EL		= V1KF1	
			Ed.	MKLEPADLO						+ V1UC11	
			Appr		P6700 Bodyside RH - Robot Cell 2V10			Document type: EFS	Project nr: 22-16150	Page	19
Modification	Date	Name	Original		Replacement of / Replaced by	Scale 1:1					1579

-KF11.53
=V1FQ1/3.2
=V1WC4/14.1

ET 200SP SIEMENS
F-RQ 1x24VDC/24..230VAC/5A

1 RQ01+	=V1WC4/14.2	13L+
2 RQ01-	=V1WC4/14.2	13.1L+
3 RQ02+	=V1WC4/14.3	13L+
4 RQ02-	=V1WC4/14.4	13.1L+
9 IN P	=V1FQ1/3.3	Switched Power 3 13.1L+P
10 OUT P	=V1FQ1/3.4	Spare
11 IN M	=V1FQ1/3.4	Switched Power 3 13.1L+M
12 OUT M	=V1FQ1/3.5	Spare
1A AUX		
2A AUX		
3A AUX		
4A AUX		

6ES7136-6RA00-0BF0 + BU20-P8+A4+0B

			Date	1/11/2023	Volvo Trucks North America	Valiant TMS	ET200S F-RQ Overview KF11.53	Drawing name: =2V10&EFS-EL		= V1KF1	
			Ed.	MKLEPADLO						+ V1UC11	
			Appr		P6700 Bodyside RH - Robot Cell 2V10			Document type: EFS	Project nr: 22-16150	Page	20
Modification	Date	Name	Original		Replacement of / Replaced by	Scale 1:1					1579

-KF11.54
=V1FQ1/4.2
=V1WC4/15.1

ET 200SP SIEMENS
F-RQ 1x24VDC/24..230VAC/5A

1 RQ01+	=V1WC4/15.2	14L+
2 RQ01-	=V1WC4/15.2	14.1L+
3 RQ02+	=V1WC4/15.3	14L+
4 RQ02-	=V1WC4/15.4	14.1L+
9 IN P	=V1FQ1/4.3	Switched Power 4 14.1L+P
10 OUT P	=V1FQ1/4.4	Spare
11 IN M	=V1FQ1/4.4	Switched Power 4 14.1L+M
12 OUT M	=V1FQ1/4.5	Spare
1A AUX		
2A AUX		
3A AUX		
4A AUX		

6ES7136-6RA00-0BF0 + BU20-P8+A4+0B

			Date	1/11/2023	Volvo Trucks North America	Valiant TMS	ET200S F-RQ Overview KF11.54	Drawing name: =2V10&EFS-EL		= V1KF1	
			Ed.	MKLEPADLO						+ V1UC11	
			Appr		P6700 Bodyside RH - Robot Cell 2V10			Document type: EFS	Project nr: 22-16150	Page	21
Modification	Date	Name	Original		Replacement of / Replaced by	Scale 1:1					1579

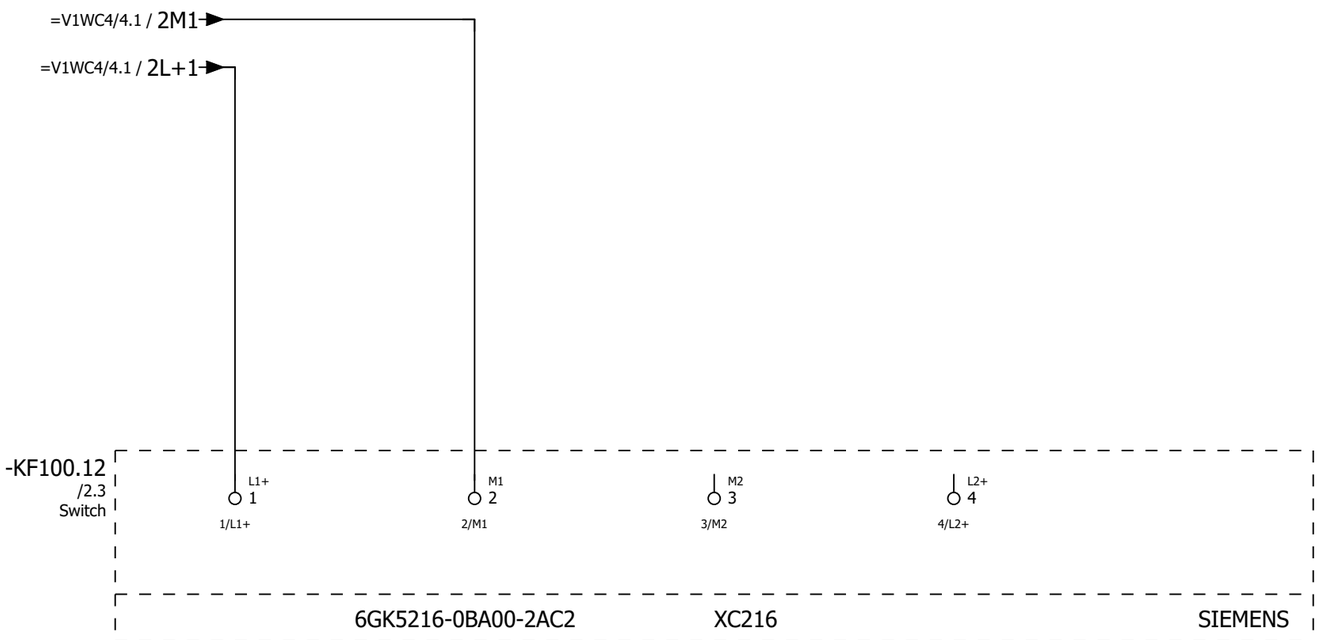

+.UC11/21

2

			Date	1/11/2023	Volvo Trucks North America		Valiant TMS	Switch, Scalance XC216	Drawing name: =2V10&EFS-EL	= V1KF1	
			Ed.	MKLEPADLO						+ V1UC12	
			Appr		P6700 Bodyside RH - Robot Cell 2V10				Document type: EFS	Project nr: 22-16150	Page 1
Modification	Date	Name	Original		Replacement of	Replaced by	Scale 1:1				1579

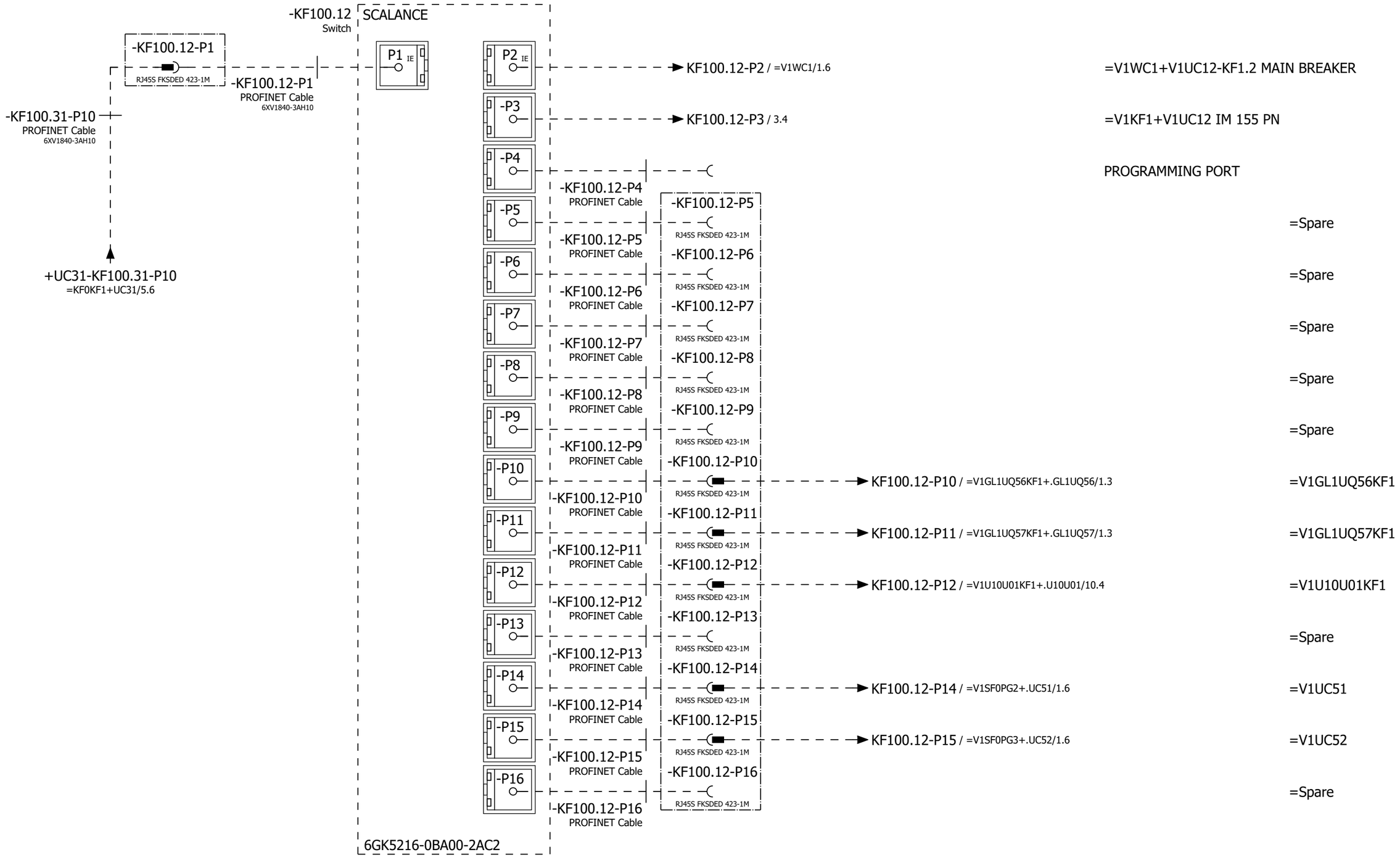

			Date	1/11/2023	Volvo Trucks North America		Valiant TMS	Network Overview	Drawing name: =2V10&EFS-EL	= V1KF1	
			Ed.	MKLEPADLO						+ V1UC12	
			Appr		P6700 Bodyside RH - Robot Cell 2V10				Document type: EFS	Project nr: 22-16150	Page 2
Modification	Date	Name	Original		Replacement of	Replaced by	Scale 1:1				1579

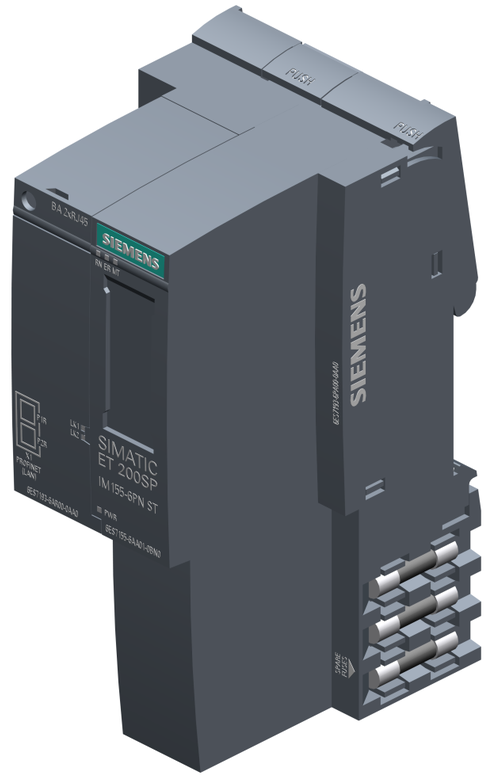

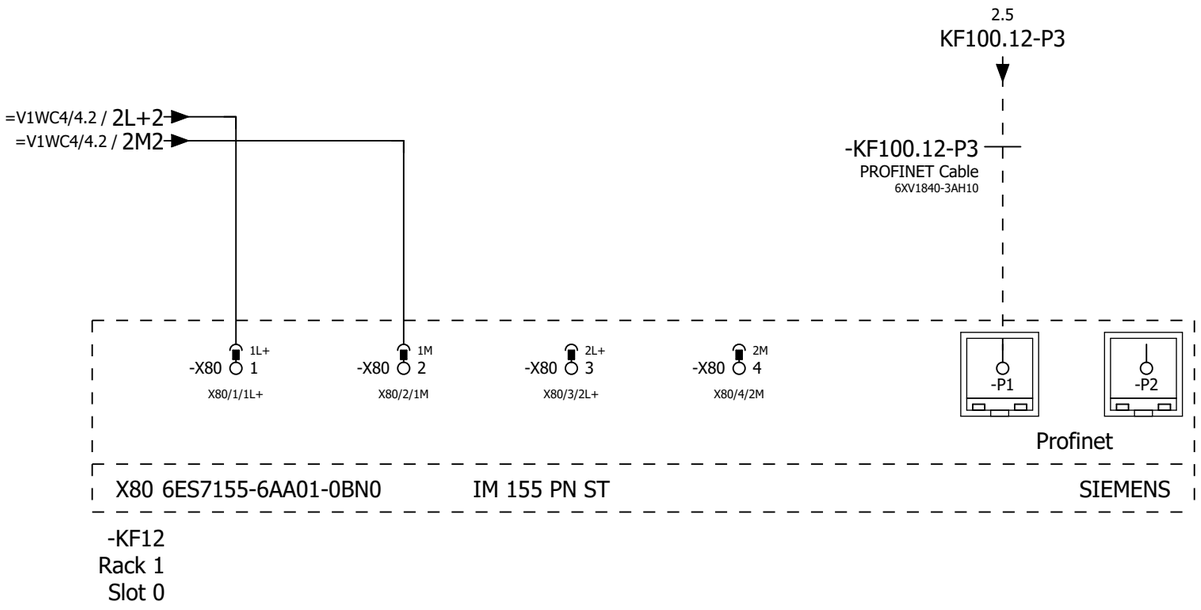

2 4

			Date	1/11/2023	Volvo Trucks North America	Valiant TMS	IM 155 PN	Drawing name: =2V10&EFS-EL		= V1KF1	
			Ed.	MKLEPADLO						+ V1UC12	
			Appr		P6700 Bodyside RH - Robot Cell 2V10			Document type: EFS	Project nr: 22-16150		Page 3
Modification	Date	Name	Original		Replacement of	Replaced by	Scale 1:1				1579

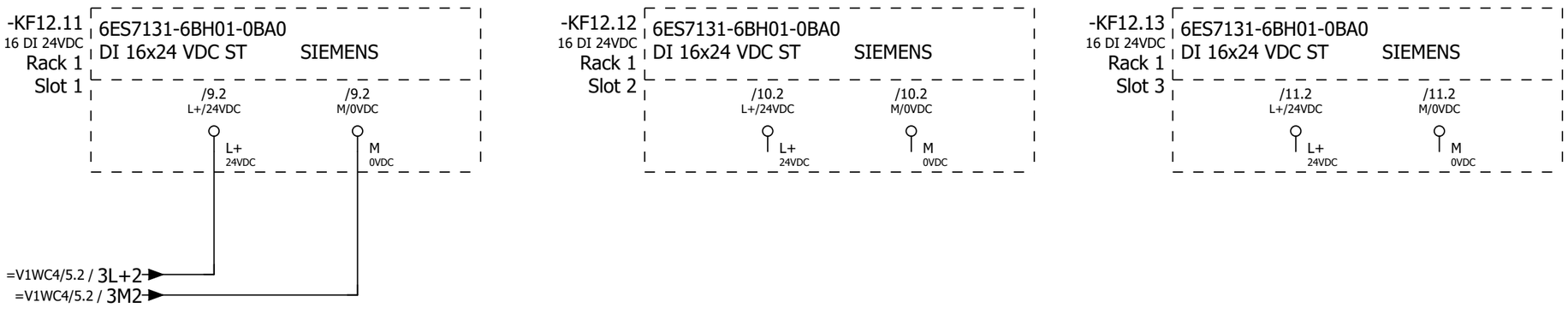
-KF12.11
16 DI 24VDC
Rack 1
Slot 1
6ES7131-6BH01-0BA0
DI 16x24 VDC ST
SIEMENS
/9.2
L+/24VDC
/9.2
M/0VDC
L+
24VDC
M
0VDC
=V1WC4/5.2 / 3L+2
=V1WC4/5.2 / 3M2
-KF12.12
16 DI 24VDC
Rack 1
Slot 2
6ES7131-6BH01-0BA0
DI 16x24 VDC ST
SIEMENS
/10.2
L+/24VDC
/10.2
M/0VDC
L+
24VDC
M
0VDC
-KF12.13
16 DI 24VDC
Rack 1
Slot 3
6ES7131-6BH01-0BA0
DI 16x24 VDC ST
SIEMENS
/11.2
L+/24VDC
/11.2
M/0VDC
L+
24VDC
M
0VDC

-KF12.14
16 DI 24VDC
Rack 1
Slot 4

6ES7131-6BH01-0BA0
DI 16x24 VDC ST SIEMENS

/12.2	/12.2
L+/24VDC	M/0VDC
L+ 24VDC	M 0VDC

4

6

			Date	1/11/2023	Volvo Trucks North America	Valiant TMS	ET200S Wiring DI	Drawing name: =2V10&EFS-EL		= V1KF1	
			Ed.	MKLEPADLO						+ V1UC12	
			Appr		P6700 Bodyside RH - Robot Cell 2V10			Document type: EFS	Project nr: 22-16150		Page 5
Modification	Date	Name	Original		Replacement of	Replaced by	Scale 1:1				1579

-KF12.31
FDI 8 24VDC
Rack 1
Slot 5

6ES7136-6BA00-0CA0
F-DI 8x24VDC HF SIEMENS

/14.2 L+ 24VDC
/14.2 M 0VDC

-KF12.32
FDI 8 24VDC
Rack 1
Slot 6

6ES7136-6BA00-0CA0
F-DI 8x24VDC HF SIEMENS

/15.2 L+ 24VDC
/15.2 M 0VDC

5 7

			Date	1/11/2023	Volvo Trucks North America	Valiant TMS	ET200S Wiring F-DI	Drawing name: =2V10&EFS-EL		= V1KF1	
			Ed.	MKLEPADLO						+ V1UC12	
			Appr		P6700 Bodyside RH - Robot Cell 2V10			Document type: EFS	Project nr: 22-16150		Page 6
Modification	Date	Name	Original		Replacement of / Replaced by	Scale 1:1					1579

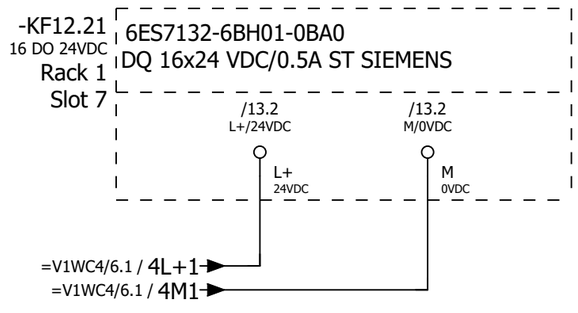

			Date	1/11/2023	Volvo Trucks North America	Valiant TMS	ET200S Wiring DQ	Drawing name: =2V10&EFS-EL		= V1KF1	
			Ed.	MKLEPADLO	P6700 Bodyside RH - Robot Cell 2V10					+ V1UC12	
			Appr			Scale 1:1		Document type: EFS	Project nr: 22-16150		Page 7 / 1579
Modification	Date	Name	Original		Replacement of	Replaced by					

-KF12.41
=V1FQ1/1.0
=V1FQ1/2.0
=V1FQ1/3.0
=V1FQ1/4.0
/16.1
FDO 4 24VDC
Rack 1
Slot 8

6ES7136-6DB00-0CA0 + BU15-P16+A0+2B F-DQ 4X24VDC/2A PM HF SIEMENS

/16.2 L+ 24VDC

/16.2 M 0VDC

-KF12.42
/17.1
FDO 4 24VDC
Rack 1
Slot 9

6ES7136-6DB00-0CA0 + BU15-P16+A0+2B F-DQ 4X24VDC/2A PM HF SIEMENS

/17.2 L+ 24VDC

/17.2 M 0VDC

			Date	1/11/2023	Volvo Trucks North America	Valiant TMS	ET200S Wiring F-DQ	Drawing name: =2V10&EFS-EL	= V1KF1	
			Ed.	MKLEPADLO	P6700 Bodyside RH - Robot Cell 2V10				+ V1UC12	
			Appr					Document type: EFS	Project nr: 22-16150	Page 8
Modification	Date	Name	Original		Replacement of	Replaced by	Scale 1:1			1579

-KF12.11
/4.0

ET 200SP SIEMENS
DI 16x24 VDC ST

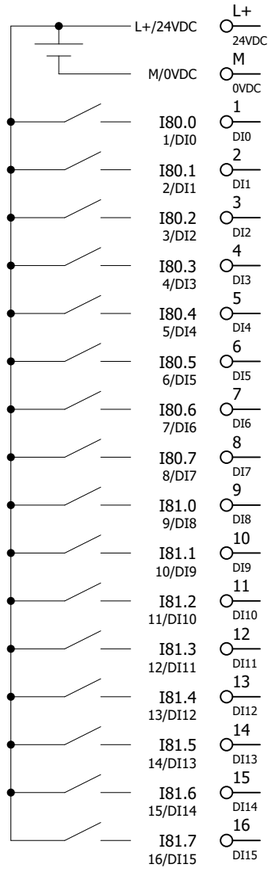

/4.1			
/4.2			
=V1WC2/41.2	I80.0	Spare	
=V1WC2/41.3	=V1UC12-FC1	Monitoring 480 VAC	
=V1WC4/1.4	=V1WC4+V1UC12-TA1_I	Monitoring 24VDC	
=V1WC4/11.4	=V1WC4+V1UC12-TA2_I	Monitoring 24VDC	
=V1WC4/1.0	=V1WC4+V1UC12-FC11_I	Monitoring 24VDC	
=V1WC4/11.0	=V1WC4+V1UC12-FC12_I	Monitoring 24VDC	
=V1WC2/41.7	I80.6	Spare	
=V1WC2/41.8	I80.7	Spare	
=V1WC2/41.2	I81.0	Spare	
=V1WC2/41.3	I81.1	Spare	
=V1WC2/41.4	I81.2	Spare	
=V1WC2/41.4	I81.3	Spare	
=V1WC2/41.5	I81.4	Spare	
=V1WC2/41.6	I81.5	Spare	
=V1WC2/41.7	I81.6	Spare	
=V1WC2/41.8	I81.7	Spare	

6ES7131-6BH01-0BA0

-KF12.12
/4.3

ET 200SP SIEMENS
DI 16x24 VDC ST

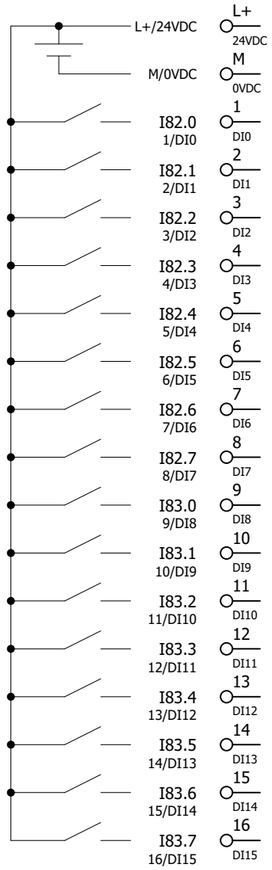

/4.3		
/4.4		
=V1WC2/42.2	=V1AR141-FC1	Monitoring 480 VAC
=V1WC2/42.3	=V1AR12-FC1	Monitoring 480 VAC
=V1WC2/42.4	=V1AR22-FC1	Monitoring 480 VAC
=V1WC2/42.4	=V1AR24-FC1	Monitoring 480 VAC
=V1WC2/42.5	=V1AR13-FC1	Monitoring 480 VAC
=V1WC2/42.6	=V1AR14-FC1	Monitoring 480 VAC
=V1WC2/42.7	=V1AR25-FC1	Monitoring 480 VAC
=V1WC2/42.8	=V1AR27-FC1	Monitoring 480 VAC
=V1WC2/42.2	=V1AR29-FC1	Monitoring 480 VAC
=V1WC2/42.3	=V1AR212-FC1	Monitoring 480 VAC
=V1WC2/42.4	=V1AR51-FC1	Monitoring 480 VAC
=V1WC2/42.4	=V1AR51XQ21-FC1	Monitoring 480 VAC
=V1WC2/42.5	=V1AR53-FC1	Monitoring 480 VAC
=V1WC2/42.6	=V1AR53XQ21-FC1	Monitoring 480 VAC
=V1WC2/42.7	=V1AR191-FC1	Monitoring 480 VAC
=V1WC2/42.8	=V1AR192-FC1	Monitoring 480 VAC

6ES7131-6BH01-0BA0

-KF12.13
/4.5

ET 200SP SIEMENS
DI 16x24 VDC ST

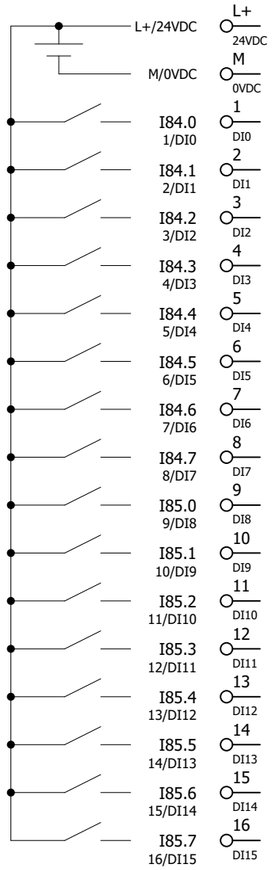

/4.6		
/4.7		
=V1WC2/43.2	I84.0	Spare
=V1WC2/43.3	I84.1	Spare
=V1WC2/43.4	I84.2	Spare
=V1WC2/43.4	I84.3	Spare
=V1WC2/43.5	I84.4	Spare
=V1WC2/43.6	I84.5	Spare
=V1WC2/43.7	I84.6	Spare
=V1WC2/43.8	I84.7	Spare
=V1WC3/4.2	=V1WC3+V1UC12-FC2	Monitoring 120 VAC
=V1WC3/4.3	=V1WC3+V1UC12-FC3	Monitoring 120 VAC
=V1WC3/4.4	=V1WC3+V1UC12-FC4	Monitoring 120 VAC
=V1WC3/4.4	=V1WC3+V1UC12-FC6	Monitoring 120 VAC
=V1WC3/4.5	=V1WC3+V1UC12-FC7	Monitoring 120 VAC
=V1WC3/4.6	=V1WC3+V1UC12-FC8	Monitoring 120 VAC
=V1WC3/4.7	=V1WC3+V1UC12-FC9	Monitoring 120 VAC
=V1WC3/4.8	I85.7	Spare

6ES7131-6BH01-0BA0

-KF12.14
/5.0

ET 200SP SIEMENS
DI 16x24 VDC ST

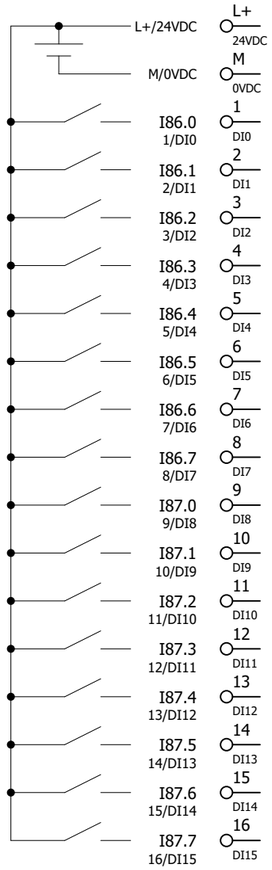

L+	/5.1		
M	/5.2		
I86.0	=V1FQ1/1.8	-KF12.51RQ	Monitoring Safety contactors 11.1L+
I86.1	=V1FQ1/2.8	-KF12.52RQ	Monitoring Safety contactors 12.1L+
I86.2	=V1FQ1/3.8	-KF12.53RQ	Monitoring Safety contactors 13.1L+
I86.3	=V1FQ1/4.8	-KF12.54RQ	Monitoring Safety contactors 14.1L+
I86.4	=V1SF0SF1+.UC71/1.1	=V1SF0SF1+V1UC71-SF1.1	S010 Operator Run Button 1
I86.5	=V1SF0SF2+.UC72/1.1	=V1SF0SF2+V1UC72-SF1.1	S010 Operator Run Button 2
I86.6		I86.6	Spare
I86.7		I86.7	Spare
I87.0	=KH0+KH0/2.6	=KH0-BP2_I	Monitoring S010 Shuttle AIR On
I87.1		I87.1	Spare
I87.2		I87.2	Spare
I87.3		I87.3	Spare
I87.4		I87.4	Spare
I87.5		I87.5	Spare
I87.6		I87.6	Spare
I87.7		I87.7	Spare

6ES7131-6BH01-0BA0

-KF12.21
/7.1
16 DO 24VDC

ET 200SP SIEMENS
DQ 16x24 VDC/0.5A ST

L+/24VDC	L+ 24VDC	/7.1		
M/0VDC	M 0VDC	/7.2		
Q80.0 1/DQ0	1 DQ0	=V1PZ1PF1+.UC61/1.3	=V1PZ1PF1+UC61-PF1_1	S010 Indication column 1 Blue
Q80.1 2/DQ1	2 DQ1	=V1PZ1PF1+.UC61/1.4	=V1PZ1PF1+UC61-PF1_2	S010 Indication column 1 Green
Q80.2 3/DQ2	3 DQ2	=V1PZ1PF1+.UC61/1.4	=V1PZ1PF1+UC61-PF1_3	S010 Indication column 1 Yellow
Q80.3 4/DQ3	4 DQ3	=V1PZ1PF1+.UC61/1.5	=V1PZ1PF1+UC61-PF1_4	S010 Indication column 1 Red
Q80.4 5/DQ4	5 DQ4	=V1PZ1PF1+.UC61/1.6	=V1PZ1PF1+UC61-PF1_5	S010 Indication column 1 Siren
Q80.5 6/DQ5	6 DQ5	=V1PZ1PF2+.UC62/1.3	=V1PZ1PF2+UC62-PF1_1	S010 Indication column 2 Blue
Q80.6 7/DQ6	7 DQ6	=V1PZ1PF2+.UC62/1.4	=V1PZ1PF2+UC62-PF1_2	S010 Indication column 2 Green
Q80.7 8/DQ7	8 DQ7	=V1PZ1PF2+.UC62/1.4	=V1PZ1PF2+UC62-PF1_3	S010 Indication column 2 Yellow
Q81.0 9/DQ8	9 DQ8	=V1PZ1PF2+.UC62/1.5	=V1PZ1PF2+UC62-PF1_4	S010 Indication column 2 Red
Q81.1 10/DQ9	10 DQ9	=V1PZ1PF2+.UC62/1.6	=V1PZ1PF2+UC62-PF1_5	S010 Indication column 2 Siren
Q81.2 11/DQ10	11 DQ10		Q81.2	Spare
Q81.3 12/DQ11	12 DQ11		Q81.3	Spare
Q81.4 13/DQ12	13 DQ12		Q81.4	Spare
Q81.5 14/DQ13	14 DQ13		Q81.5	Spare
Q81.6 15/DQ14	15 DQ14		Q81.6	Spare
Q81.7 16/DQ15	16 DQ15		Q81.7	Spare

6ES7132-6BH01-0BA0

-KF12.31
/6.0

ET 200SP SIEMENS
F-DI 8x24VDC HF

	L+ 24VDC	/6.1		
	M 0VDC	/6.2		
I5080.0	1 DI0	=V1FQ1+.FQ1/8.3	=V1FQ1-BR11.1	S010 Light Curtain 1&2 Ch1
	9 VS0	=V1FQ1+.FQ1/8.3		
I5080.1	2 DI1	=V1FQ1+.FQ1/9.3	=V1FQ1-BR13.1	S010 Light Curtain 3&4 Ch1
	10 VS1	=V1FQ1+.FQ1/9.3		
I5080.2	3 DI2	=V1FQ1+.FQ1/10.3	=V1FQ1-BR15.1	S010 Light Curtain 5 Ch1
	11 VS2	=V1FQ1+.FQ1/10.3		
I5080.3	4 DI3		I5080.3	Spare
	12 VS3			
I5080.4	5 DI4	=V1FQ1+.FQ1/8.4	=V1FQ1-BR11.2	S010 Light Curtain 1&2 Ch2
	13 VS4	=V1FQ1+.FQ1/8.5		
I5080.5	6 DI5	=V1FQ1+.FQ1/9.4	=V1FQ1-BR13.2	S010 Light Curtain 3&4 Ch2
	14 VS5	=V1FQ1+.FQ1/9.5		
I5080.6	7 DI6	=V1FQ1+.FQ1/10.4	=V1FQ1-BR15.2	S010 Light Curtain 5 Ch2
	15 VS6	=V1FQ1+.FQ1/10.5		
I5080.7	8 DI7		I5080.7	Spare
	16 VS7			

6ES7136-6BA00-0CA0

			Date	1/11/2023	Volvo Trucks North America	Valiant TMS	ET200S F-DI Overview KF12.31	Drawing name: =2V10&EFS-EL	= V1KF1	
			Ed.	MKLEPADLO					+ V1UC12	
			Appr		P6700 Bodyside RH - Robot Cell 2V10			Document type: EFS	Project nr: 22-16150	Page 14
Modification	Date	Name	Original		Replacement of / Replaced by	Scale 1:1				1579

-KF12.32
/6.3

ET 200SP SIEMENS
F-DI 8x24VDC HF

	L+ 24VDC	/6.3		
	M 0VDC	/6.4		
I5086.0	1 DI0	=V1SF0SF1+.UC71/1.5	=V1SF0SF1+V1UC71-SF1.4	S010 Operator Emergency Stop 1 Ch1
	9 VS0	=V1SF0SF1+.UC71/1.5		
I5086.1	2 DI1	=V1SF0SF2+.UC72/1.5	=V1SF0SF2+V1UC72-SF1.4	S010 Operator Emergency Stop 2 Ch1
	10 VS1	=V1SF0SF2+.UC72/1.5		
I5086.2	3 DI2	=V1U10FQ1+.U10/1.3	=V1U10FQ1-BG01	S010 Lift Assist Clear Ch1
	11 VS2	=V1U10FQ1+.U10/1.3		
I5086.3	4 DI3		I5086.3	Spare
	12 VS3			
I5086.4	5 DI4	=V1SF0SF1+.UC71/1.6	=V1SF0SF1+V1UC71-SF1.6	S010 Operator Emergency Stop 1 Ch2
	13 VS4	=V1SF0SF1+.UC71/1.6		
I5086.5	6 DI5	=V1SF0SF2+.UC72/1.6	=V1SF0SF2+V1UC72-SF1.6	S010 Operator Emergency Stop 2 Ch2
	14 VS5	=V1SF0SF2+.UC72/1.6		
I5086.6	7 DI6	=V1U10FQ1+.U10/1.4	=V1U10FQ1-BG01	S010 Lift Assist Clear Ch2
	15 VS6	=V1U10FQ1+.U10/1.5		
I5086.7	8 DI7		I5086.7	Spare
	16 VS7			

6ES7136-6BA00-0CA0

			Date	1/11/2023	Volvo Trucks North America	Valiant TMS	ET200S F-DI Overview KF12.32	Drawing name: =2V10&EFS-EL		= V1KF1	
			Ed.	MKLEPADLO						+ V1UC12	
			Appr		P6700 Bodyside RH - Robot Cell 2V10			Document type: EFS	Project nr: 22-16150	Page	15
Modification	Date	Name	Original		Replacement of / Replaced by	Scale 1:1					1579

-KF12.41
/8.0

ET 200SP SIEMENS
F-DQ 4X24VDC/2A PM HF

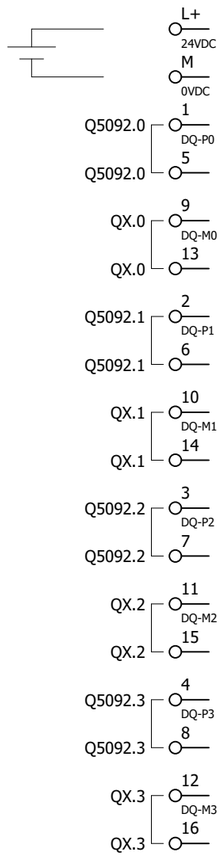

/8.1		
/8.2		
=V1FQ1/1.1	-KF12.51	Switched Power 1 11.1L+
=V1FQ1/2.1	-KF12.52	Switched Power 2 12.1L+
=V1FQ1/3.1	-KF12.53	Switched Power 3 13.1L+
=V1FQ1/4.1	-KF12.54	Switched Power 4 14.1L+

6ES7136-6DB00-0CA0 + BU15-P16+A0+2B

-KF12.42
/8.5

ET 200SP SIEMENS
F-DQ 4X24VDC/2A PM HF

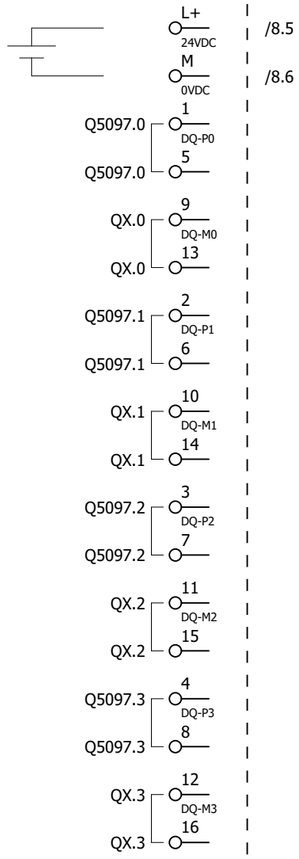

Q5097.0	Q5097.0	Spare
Q5097.1	Q5097.1	Spare
Q5097.2	Q5097.2	Spare
Q5097.3	Q5097.3	Spare

6ES7136-6DB00-0CA0 + BU15-P16+A0+2B

-KF12.51
=V1FQ1/1.2
=V1WC4/12.1

ET 200SP SIEMENS
F-RQ 1x24VDC/24..230VAC/5A

1 RQ01+	=V1WC4/12.2	11L+
2 RQ01-	=V1WC4/12.2	11.1L+
3 RQ02+	=V1WC4/12.3	11L+
4 RQ02-	=V1WC4/12.4	11.1L+
9 IN P	=V1FQ1/1.3	Switched Power 1 11.1L+P
10 OUT P	=V1FQ1/1.4	SPARE
11 IN M	=V1FQ1/1.4	Switched Power 1 11.1L+M
12 OUT M	=V1FQ1/1.5	SPARE
1A AUX		
2A AUX		
3A AUX		
4A AUX		

6ES7136-6RA00-0BF0 + BU20-P8+A4+0B

			Date	1/11/2023	Volvo Trucks North America		Valiant TMS	ET200S F-RQ Overview KF12.51	Drawing name: =2V10&EFS-EL	= V1KF1	
			Ed.	MKLEPADLO						+ V1UC12	
			Appr		P6700 Bodyside RH - Robot Cell 2V10				Document type: EFS	Project nr: 22-16150	Page 18
Modification	Date	Name	Original		Replacement of	Replaced by	Scale 1:1				1579

-KF12.52
=V1FQ1/2.2
=V1WC4/13.1

ET 200SP SIEMENS
F-RQ 1x24VDC/24..230VAC/5A

1 RQ01+	=V1WC4/13.2	12L+
2 RQ01-	=V1WC4/13.2	12.1L+
3 RQ02+	=V1WC4/13.3	12L+
4 RQ02-	=V1WC4/13.4	12.1L+
9 IN P	=V1FQ1/2.3	Switched Power 2 12.1L+P
10 OUT P	=V1FQ1/2.4	SPARE
11 IN M	=V1FQ1/2.4	Switched Power 2 12.1L+M
12 OUT M	=V1FQ1/2.5	SPARE
1A AUX		
2A AUX		
3A AUX		
4A AUX		

6ES7136-6RA00-0BF0 + BU20-P8+A4+0B

			Date	1/11/2023	Volvo Trucks North America	Valiant TMS	ET200S F-RQ Overview KF12.52	Drawing name: =2V10&EFS-EL		= V1KF1	
			Ed.	MKLEPADLO						+ V1UC12	
			Appr		P6700 Bodyside RH - Robot Cell 2V10			Document type: EFS	Project nr: 22-16150	Page	19
Modification	Date	Name	Original		Replacement of / Replaced by	Scale 1:1					1579

-KF12.53
=V1FQ1/3.2
=V1WC4/14.1

ET 200SP SIEMENS
F-RQ 1x24VDC/24..230VAC/5A

1 RQ01+	=V1WC4/14.2	13L+
2 RQ01-	=V1WC4/14.2	13.1L+
3 RQ02+	=V1WC4/14.3	13L+
4 RQ02-	=V1WC4/14.4	13.1L+
9 IN P	=V1FQ1/3.3	Switched Power 3 13.1L+P
10 OUT P	=V1FQ1/3.4	SPARE
11 IN M	=V1FQ1/3.4	Switched Power 3 13.1L+M
12 OUT M	=V1FQ1/3.5	SPARE
1A AUX		
2A AUX		
3A AUX		
4A AUX		

6ES7136-6RA00-0BF0 + BU20-P8+A4+0B

			Date	1/11/2023	Volvo Trucks North America		Valiant TMS	ET200S F-RQ Overview KF12.53	Drawing name: =2V10&EFS-EL	= V1KF1	
			Ed.	MKLEPADLO						+ V1UC12	
			Appr		P6700 Bodyside RH - Robot Cell 2V10				Document type: EFS	Project nr: 22-16150	Page 20
Modification	Date	Name	Original		Replacement of	Replaced by	Scale 1:1				1579

-KF12.54
=V1FQ1/4.2
=V1WC4/15.1

ET 200SP SIEMENS
F-RQ 1x24VDC/24..230VAC/5A

1 RQ01+	=V1WC4/15.2	14L+
2 RQ01-	=V1WC4/15.2	14.1L+
3 RQ02+	=V1WC4/15.3	14L+
4 RQ02-	=V1WC4/15.4	14.1L+
9 IN P	=V1FQ1/4.3	Switched Power 4 14.1L+P
10 OUT P	=V1FQ1/4.4	SPARE
11 IN M	=V1FQ1/4.4	Switched Power 4 14.1L+M
12 OUT M	=V1FQ1/4.5	SPARE
1A AUX		
2A AUX		
3A AUX		
4A AUX		

6ES7136-6RA00-0BF0 + BU20-P8+A4+0B

			Date	1/11/2023	Volvo Trucks North America	Valiant TMS	ET200S F-RQ Overview KF12.54	Drawing name: =2V10&EFS-EL		= V1KF1	
			Ed.	MKLEPADLO						+ V1UC12	
			Appr		P6700 Bodyside RH - Robot Cell 2V10			Document type: EFS	Project nr: 22-16150	Page	21
Modification	Date	Name	Original		Replacement of / Replaced by	Scale 1:1					1579

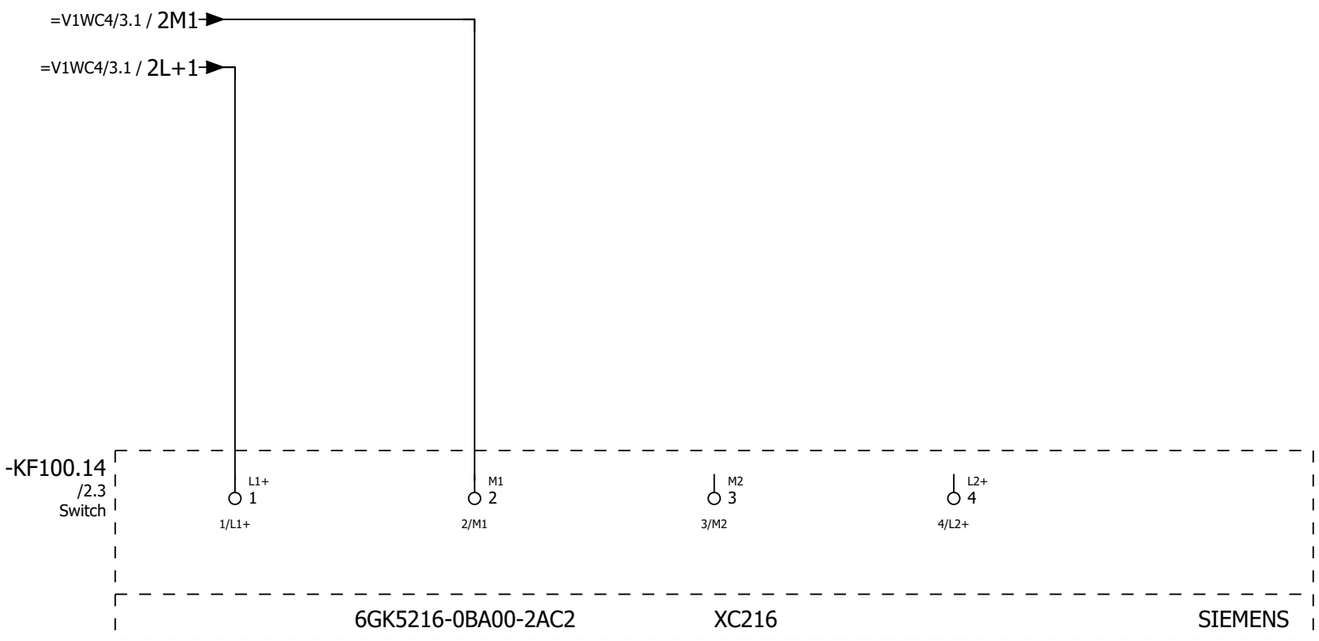

+.UC12/21

2

			Date	1/11/2023	Volvo Trucks North America		Valiant TMS	Switch, Scalance XC216	Drawing name: =2V10&EFS-EL	= V1KF1	
			Ed.	MKLEPADLO						+ V1UC14	
			Appr		P6700 Bodyside RH - Robot Cell 2V10				Document type: EFS	Project nr: 22-16150	Page 1
Modification	Date	Name	Original		Replacement of	Replaced by	Scale 1:1				1579

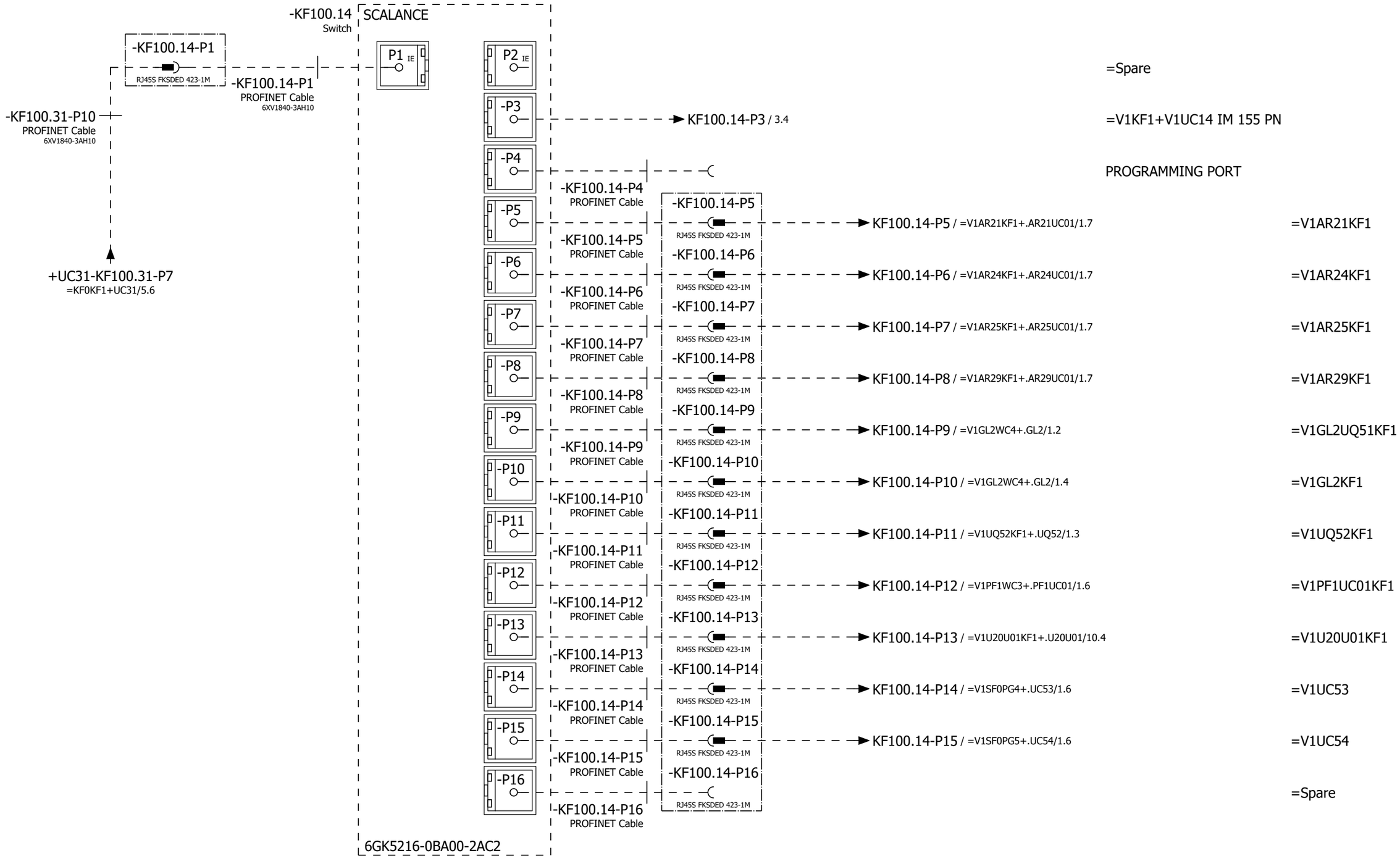

			Date	1/11/2023	Volvo Trucks North America		Valiant TMS	Network Overview	Drawing name: =2V10&EFS-EL	= V1KF1	
			Ed.	MKLEPADLO						+ V1UC14	
			Appr		P6700 Bodyside RH - Robot Cell 2V10				Document type: EFS	Project nr: 22-16150	Page 2
Modification	Date	Name	Original		Replacement of	Replaced by	Scale 1:1				1579

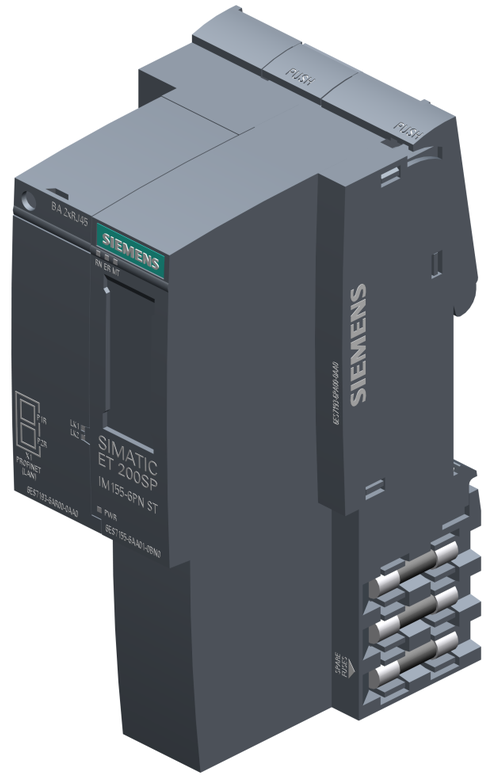

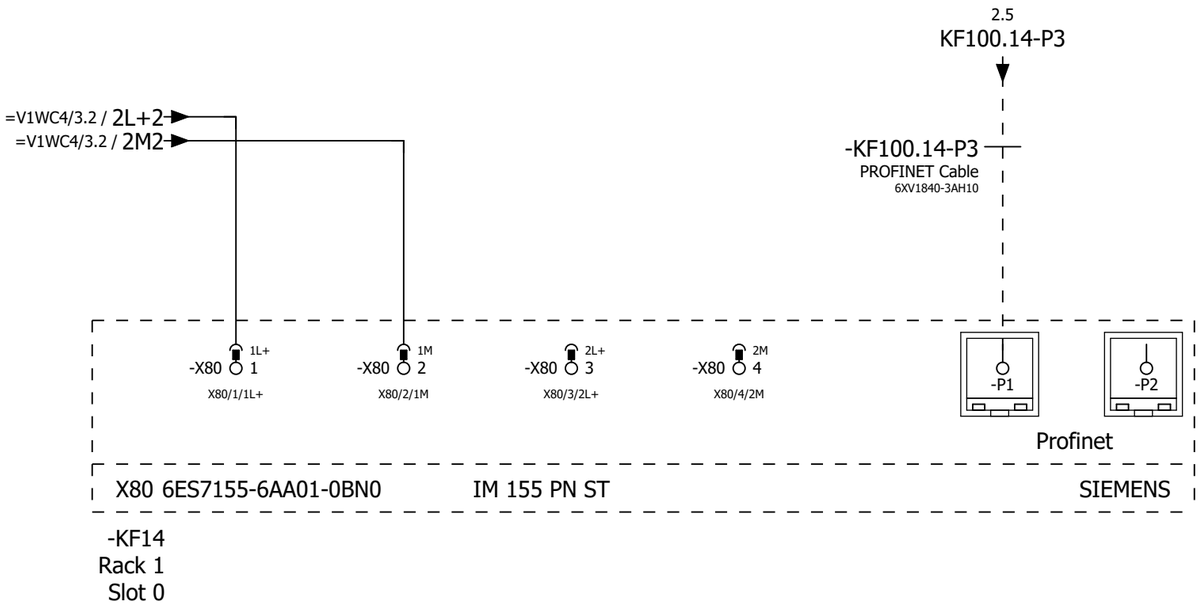

2

4

			Date	1/11/2023	Volvo Trucks North America	Valiant TMS	IM 155 PN	Drawing name: =2V10&EFS-EL	= V1KF1	
			Ed.	MKLEPADLO					+ V1UC14	
			Appr		P6700 Bodyside RH - Robot Cell 2V10			Document type: EFS	Project nr: 22-16150	Page 3 / 1579
Modification	Date	Name	Original		Replacement of	Replaced by	Scale 1:1			

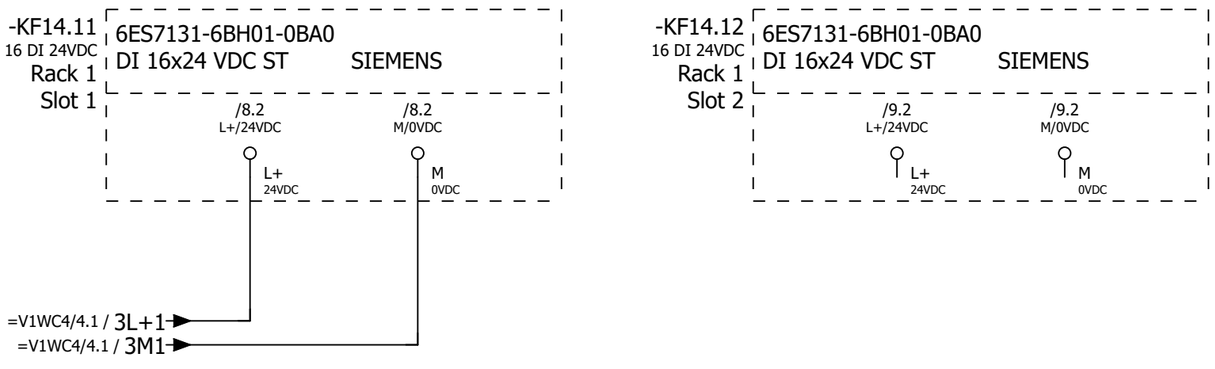

3

5

			Date	1/11/2023	Volvo Trucks North America	Valiant TMS	ET200S Wiring DI	Drawing name: =2V10&EFS-EL		= V1KF1	
			Ed.	MKLEPADLO						+ V1UC14	
			Appr		P6700 Bodyside RH - Robot Cell 2V10			Document type: EFS	Project nr: 22-16150		Page 4
Modification	Date	Name	Original		Replacement of / Replaced by	Scale 1:1					1579

-KF14.31
FDI 8 24VDC
Rack 1
Slot 3

6ES7136-6BA00-0CA0
F-DI 8x24VDC HF SIEMENS

/11.2 L+ 24VDC
/11.2 M 0VDC

-KF14.32
FDI 8 24VDC
Rack 1
Slot 4

6ES7136-6BA00-0CA0
F-DI 8x24VDC HF SIEMENS

/12.2 L+ 24VDC
/12.2 M 0VDC

			Date	1/11/2023	Volvo Trucks North America	Valiant TMS	ET200S Wiring F-DI	Drawing name: =2V10&EFS-EL		= V1KF1	
			Ed.	MKLEPADLO						+ V1UC14	
			Appr		P6700 Bodyside RH - Robot Cell 2V10			Document type: EFS	Project nr: 22-16150		Page 5
Modification	Date	Name	Original		Replacement of / Replaced by	Scale 1:1					1579

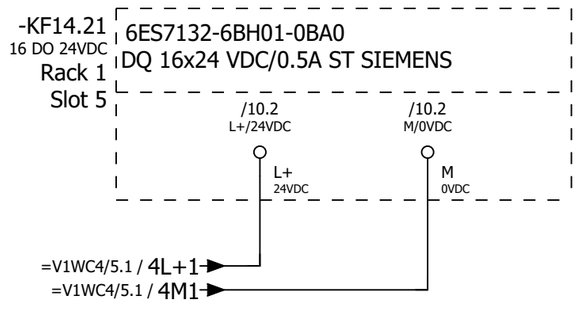

			Date	1/11/2023	Volvo Trucks North America	Valiant TMS	ET200S Wiring DQ	Drawing name: =2V10&EFS-EL		= V1KF1	
			Ed.	MKLEPADLO	P6700 Bodyside RH - Robot Cell 2V10					+ V1UC14	
			Appr			Scale 1:1		Document type: EFS	Project nr: 22-16150		Page 6 / 1579
Modification	Date	Name	Original		Replacement of	Replaced by					

-KF14.41
=V1FQ1/1.0
=V1FQ1/2.0
=V1FQ1/3.0
=V1FQ1/4.0
/13.1
FDO 4 24VDC
Rack 1
Slot 6

6ES7136-6DB00-0CA0 + BU15-P16+A0+2B F-DQ 4X24VDC/2A PM HF SIEMENS

/13.2 L+ 24VDC

/13.2 M 0VDC

-KF14.42
/14.1
FDO 4 24VDC
Rack 1
Slot 7

6ES7136-6DB00-0CA0 + BU15-P16+A0+2B F-DQ 4X24VDC/2A PM HF SIEMENS

/14.2 L+ 24VDC

/14.2 M 0VDC

			Date	1/11/2023	Volvo Trucks North America	Valiant TMS	ET200S Wiring F-DQ	Drawing name: =2V10&EFS-EL		= V1KF1	
			Ed.	MKLEPADLO	P6700 Bodyside RH - Robot Cell 2V10					+ V1UC14	
			Appr			Scale 1:1		Document type: EFS	Project nr: 22-16150	Page	7
Modification	Date	Name	Original		Replacement of	Replaced by					1579

-KF14.11
/4.0

ET 200SP SIEMENS
DI 16x24 VDC ST

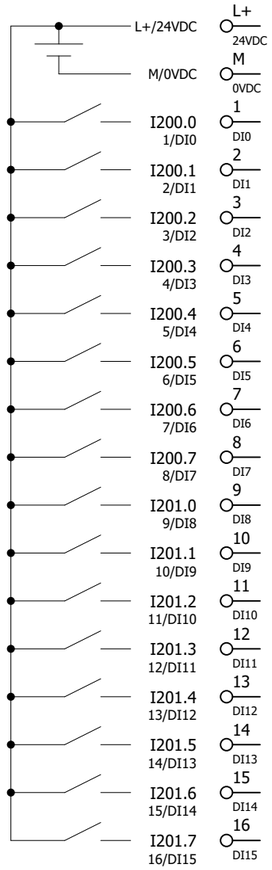

/4.1			
/4.2			
=V1WC3/2.2	=V1WC3+V1UC14-FC1	Monitoring 120 VAC	
=V1WC3/2.3	=V1WC3+V1UC14-FC2	Monitoring 120 VAC	
=V1WC4/1.4	=V1WC4+V1UC14-TA1_I	Monitoring 24VDC	
	I200.3	Spare	
=V1WC4/1.0	=V1WC4+V1UC14-FC11_I	Monitoring 24VDC	
=V1WC4/10.0	=V1WC4+V1UC14-FC12_I	Monitoring 24VDC	
	I200.6	Spare	
	I200.7	Spare	
	I201.0	Spare	
	I201.1	Spare	
	I201.2	Spare	
	I201.3	Spare	
	I201.4	Spare	
	I201.5	Spare	
	I201.6	Spare	
	I201.7	Spare	

6ES7131-6BH01-0BA0

-KF14.12
/4.3

ET 200SP SIEMENS
DI 16x24 VDC ST

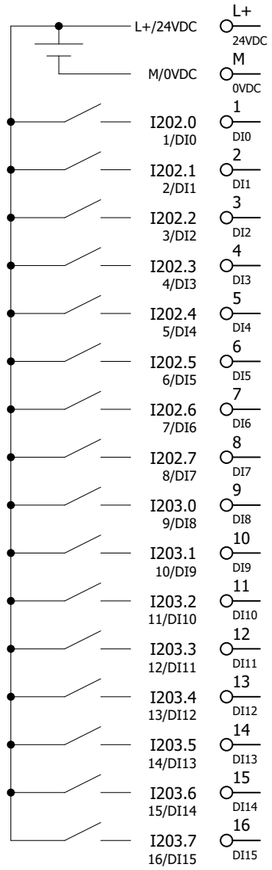

/4.3		
/4.4		
=V1FQ1/1.8	-KF14.51RQ	Monitoring Safety contactors 11.1L+
=V1FQ1/2.8	-KF14.52RQ	Monitoring Safety contactors 12.1L+
=V1FQ1/3.8	-KF14.53RQ	Monitoring Safety contactors 13.1L+
=V1FQ1/4.8	-KF14.54RQ	Monitoring Safety contactors 14.1L+
=V1SF0SF3+.UC73/1.1	=V1SF0SF3+V1UC73-SF1.1	S020 Operator Run Button 1
=V1SF0SF4+.UC74/1.1	=V1SF0SF4+V1UC74-SF1.1	S020 Operator Run Button 2
	I202.6	Spare
	I202.7	Spare
=KH0+KH0/3.6	=KH0-BP3_I	Monitoring S020 Shuttle AIR On
	I203.1	Spare
	I203.2	Spare
	I203.3	Spare
	I203.4	Spare
	I203.5	Spare
	I203.6	Spare
	I203.7	Spare

6ES7131-6BH01-0BA0

-KF14.21
/6.1
16 DO 24VDC

ET 200SP SIEMENS
DQ 16x24 VDC/0.5A ST

L+/24VDC	L+ 24VDC	/6.1		
M/0VDC	M 0VDC	/6.2		
Q200.0 1/DQ0	1 DQ0	=V1PZ1PF3+.UC63/1.3	=V1PZ1PF3+UC63-PF1_1	S020 Indication column 1 Blue
Q200.1 2/DQ1	2 DQ1	=V1PZ1PF3+.UC63/1.4	=V1PZ1PF3+UC63-PF1_2	S020 Indication column 1 Green
Q200.2 3/DQ2	3 DQ2	=V1PZ1PF3+.UC63/1.4	=V1PZ1PF3+UC63-PF1_3	S020 Indication column 1 Yellow
Q200.3 4/DQ3	4 DQ3	=V1PZ1PF3+.UC63/1.5	=V1PZ1PF3+UC63-PF1_4	S020 Indication column 1 Red
Q200.4 5/DQ4	5 DQ4	=V1PZ1PF3+.UC63/1.6	=V1PZ1PF3+UC63-PF1_5	S020 Indication column 1 Siren
Q200.5 6/DQ5	6 DQ5	=V1PZ1PF4+.UC64/1.3	=V1PZ1PF4+UC64-PF1_1	S020 Indication column 2 Blue
Q200.6 7/DQ6	7 DQ6	=V1PZ1PF4+.UC64/1.4	=V1PZ1PF4+UC64-PF1_2	S020 Indication column 2 Green
Q200.7 8/DQ7	8 DQ7	=V1PZ1PF4+.UC64/1.4	=V1PZ1PF4+UC64-PF1_3	S020 Indication column 2 Yellow
Q201.0 9/DQ8	9 DQ8	=V1PZ1PF4+.UC64/1.5	=V1PZ1PF4+UC64-PF1_4	S020 Indication column 2 Red
Q201.1 10/DQ9	10 DQ9	=V1PZ1PF4+.UC64/1.6	=V1PZ1PF4+UC64-PF1_5	S020 Indication column 2 Siren
Q201.2 11/DQ10	11 DQ10		Q201.2	Spare
Q201.3 12/DQ11	12 DQ11		Q201.3	Spare
Q201.4 13/DQ12	13 DQ12		Q201.4	Spare
Q201.5 14/DQ13	14 DQ13		Q201.5	Spare
Q201.6 15/DQ14	15 DQ14		Q201.6	Spare
Q201.7 16/DQ15	16 DQ15		Q201.7	Spare

6ES7132-6BH01-0BA0

-KF14.31
/5.0

ET 200SP SIEMENS
F-DI 8x24VDC HF

	L+ 24VDC	/5.1		
	M 0VDC	/5.2		
I5200.0	1 DI0	=V1FQ1+.FQ1/11.3	=V1FQ1-BR16.1	S020 Light Curtain 1&2 Ch1
	9 VS0	=V1FQ1+.FQ1/11.3		
I5200.1	2 DI1	=V1FQ1+.FQ1/12.3	=V1FQ1-BR18.1	S020 Light Curtain 3&4 Ch1
	10 VS1	=V1FQ1+.FQ1/12.3		
I5200.2	3 DI2	=V1FQ1+.FQ1/13.3	=V1FQ1-BR20.1	S020 Light Curtain 5 Ch1
	11 VS2	=V1FQ1+.FQ1/13.3		
I5200.3	4 DI3		I5200.3	Spare
	12 VS3			
I5200.4	5 DI4	=V1FQ1+.FQ1/11.4	=V1FQ1-BR16.2	S020 Light Curtain 1&2 Ch2
	13 VS4	=V1FQ1+.FQ1/11.5		
I5200.5	6 DI5	=V1FQ1+.FQ1/12.4	=V1FQ1-BR18.2	S020 Light Curtain 3&4 Ch2
	14 VS5	=V1FQ1+.FQ1/12.5		
I5200.6	7 DI6	=V1FQ1+.FQ1/13.4	=V1FQ1-BR20.2	S020 Light Curtain 5 Ch2
	15 VS6	=V1FQ1+.FQ1/13.5		
I5200.7	8 DI7		I5200.7	Spare
	16 VS7			

6ES7136-6BA00-0CA0

			Date	1/11/2023	Volvo Trucks North America	Valiant TMS	ET200S F-DI Overview KF14.31	Drawing name: =2V10&EFS-EL	= V1KF1	
			Ed.	MKLEPADLO					+ V1UC14	
			Appr		P6700 Bodyside RH - Robot Cell 2V10			Document type: EFS	Project nr: 22-16150	Page 11
Modification	Date	Name	Original		Replacement of / Replaced by	Scale 1:1				1579

-KF14.32
/5.3

ET 200SP SIEMENS
F-DI 8x24VDC HF

	L+ 24VDC	/5.3		
	M 0VDC	/5.4		
I5206.0	1 DI0	=V1SF0SF3+.UC73/1.5	=V1SF0SF3+V1UC73-SF1.4	S020 Operator Emergency Stop 1 Ch1
	9 VS0	=V1SF0SF3+.UC73/1.5		
I5206.1	2 DI1	=V1SF0SF4+.UC74/1.5	=V1SF0SF4+V1UC74-SF1.4	S020 Operator Emergency Stop 2 Ch1
	10 VS1	=V1SF0SF4+.UC74/1.5		
I5206.2	3 DI2		I5206.2	Spare
	11 VS2			
I5206.3	4 DI3		I5206.3	Spare
	12 VS3			
I5206.4	5 DI4	=V1SF0SF3+.UC73/1.6	=V1SF0SF3+V1UC73-SF1.6	S020 Operator Emergency Stop 1 Ch2
	13 VS4	=V1SF0SF3+.UC73/1.6		
I5206.5	6 DI5	=V1SF0SF4+.UC74/1.6	=V1SF0SF4+V1UC74-SF1.6	S020 Operator Emergency Stop 2 Ch2
	14 VS5	=V1SF0SF4+.UC74/1.6		
I5206.6	7 DI6		I5206.6	Spare
	15 VS6			
I5206.7	8 DI7		I5206.7	Spare
	16 VS7			

6ES7136-6BA00-0CA0

-KF14.41
/7.0

ET 200SP SIEMENS
F-DQ 4X24VDC/2A PM HF

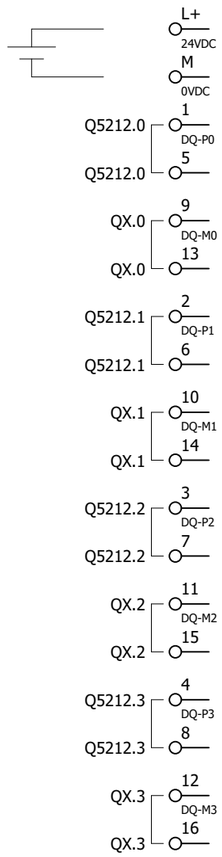

/7.1		
/7.2		
=V1FQ1/1.1	-KF14.51	Switched Power 1 11.1L+
=V1FQ1/1.1		
=V1FQ1/2.1	-KF14.52	Switched Power 2 12.1L+
=V1FQ1/2.1		
=V1FQ1/3.1	-KF14.53	Switched Power 3 13.1L+
=V1FQ1/3.1		
=V1FQ1/4.1	-KF14.54	Switched Power 4 14.1L+
=V1FQ1/4.1		

6ES7136-6DB00-0CA0 + BU15-P16+A0+2B

-KF14.42
/7.5

ET 200SP SIEMENS
F-DQ 4X24VDC/2A PM HF

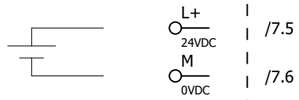

Q5217.0	Spare
Q5217.1	Spare
Q5217.2	Spare
Q5217.3	Spare

6ES7136-6DB00-0CA0 + BU15-P16+A0+2B

			Date	1/11/2023	Volvo Trucks North America	Valiant TMS	ET200S F-DQ Overview KF14.42	Drawing name: =2V10&EFS-EL		= V1KF1	
			Ed.	MKLEPADLO						+ V1UC14	
			Appr		P6700 Bodyside RH - Robot Cell 2V10			Document type: EFS	Project nr: 22-16150		Page 14
Modification	Date	Name	Original		Replacement of	Replaced by	Scale 1:1				1579

-KF14.51
=V1FQ1/1.2
=V1WC4/11.1

ET 200SP SIEMENS
F-RQ 1x24VDC/24..230VAC/5A

1 RQ01+	=V1WC4/11.2	11L+
2 RQ01-	=V1WC4/11.2	11.1L+
3 RQ02+	=V1WC4/11.3	11L+
4 RQ02-	=V1WC4/11.4	11.1L+
9 IN P	=V1FQ1/1.3	Switched Power 1 11.1L+P
10 OUT P	=V1FQ1/1.4	Spare
11 IN M	=V1FQ1/1.4	Switched Power 1 11.1L+M
12 OUT M	=V1FQ1/1.5	Spare
1A AUX		
2A AUX		
3A AUX		
4A AUX		

6ES7136-6RA00-0BF0 + BU20-P8+A4+0B

			Date	1/11/2023	Volvo Trucks North America		Valiant TMS	ET200S F-RQ Overview KF14.51	Drawing name: =2V10&EFS-EL	= V1KF1	
			Ed.	MKLEPADLO						+ V1UC14	
			Appr		P6700 Bodyside RH - Robot Cell 2V10				Document type: EFS	Project nr: 22-16150	Page 15
Modification	Date	Name	Original		Replacement of	Replaced by	Scale 1:1				1579

-KF14.52
=V1FQ1/2.2
=V1WC4/12.1

ET 200SP SIEMENS
F-RQ 1x24VDC/24..230VAC/5A

1 RQ01+	=V1WC4/12.2	12L+
2 RQ01-	=V1WC4/12.2	12.1L+
3 RQ02+	=V1WC4/12.3	12L+
4 RQ02-	=V1WC4/12.4	12.1L+
9 IN P	=V1FQ1/2.3	Switched Power 2 12.1L+P
10 OUT P	=V1FQ1/2.4	Spare
11 IN M	=V1FQ1/2.4	Switched Power 2 12.1L+M
12 OUT M	=V1FQ1/2.5	Spare
1A AUX		
2A AUX		
3A AUX		
4A AUX		

6ES7136-6RA00-0BF0 + BU20-P8+A4+0B

			Date	1/11/2023	Volvo Trucks North America	Valiant TMS	ET200S F-RQ Overview KF14.52	Drawing name: =2V10&EFS-EL		= V1KF1	
			Ed.	MKLEPADLO						+ V1UC14	
			Appr		P6700 Bodyside RH - Robot Cell 2V10			Document type: EFS	Project nr: 22-16150	Page	16
Modification	Date	Name	Original		Replacement of / Replaced by	Scale 1:1					1579

-KF14.53
=V1FQ1/3.2
=V1WC4/13.1

ET 200SP SIEMENS
F-RQ 1x24VDC/24..230VAC/5A

1 RQ01+	=V1WC4/13.2	13L+
2 RQ01-	=V1WC4/13.2	13.1L+
3 RQ02+	=V1WC4/13.3	13L+
4 RQ02-	=V1WC4/13.4	13.1L+
9 IN P	=V1FQ1/3.3	Switched Power 3 13.1L+P
10 OUT P	=V1FQ1/3.4	Spare
11 IN M	=V1FQ1/3.4	Switched Power 3 13.1L+M
12 OUT M	=V1FQ1/3.5	Spare
1A AUX		
2A AUX		
3A AUX		
4A AUX		

6ES7136-6RA00-0BF0 + BU20-P8+A4+0B

			Date	1/11/2023	Volvo Trucks North America	Valiant TMS	ET200S F-RQ Overview KF14.53	Drawing name: =2V10&EFS-EL		= V1KF1	
			Ed.	MKLEPADLO						+ V1UC14	
			Appr		P6700 Bodyside RH - Robot Cell 2V10			Document type: EFS	Project nr: 22-16150	Page	17
Modification	Date	Name	Original		Replacement of / Replaced by	Scale 1:1					1579

-KF14.54
=V1FQ1/4.2
=V1WC4/14.1

ET 200SP SIEMENS
F-RQ 1x24VDC/24..230VAC/5A

1 RQ01+	=V1WC4/14.2	14L+
2 RQ01-	=V1WC4/14.2	14.1L+
3 RQ02+	=V1WC4/14.3	14L+
4 RQ02-	=V1WC4/14.4	14.1L+
9 IN P	=V1FQ1/4.3	Switched Power 4 14.1L+P
10 OUT P	=V1FQ1/4.4	Spare
11 IN M	=V1FQ1/4.4	Switched Power 4 14.1L+M
12 OUT M	=V1FQ1/4.5	Spare
1A AUX		
2A AUX		
3A AUX		
4A AUX		

6ES7136-6RA00-0BF0 + BU20-P8+A4+0B

			Date	1/11/2023	Volvo Trucks North America	Valiant TMS	ET200S F-RQ Overview KF14.54	Drawing name: =2V10&EFS-EL		= V1KF1	
			Ed.	MKLEPADLO						+ V1UC14	
			Appr		P6700 Bodyside RH - Robot Cell 2V10			Document type: EFS	Project nr: 22-16150	Page	18
Modification	Date	Name	Original		Replacement of / Replaced by	Scale 1:1					1579

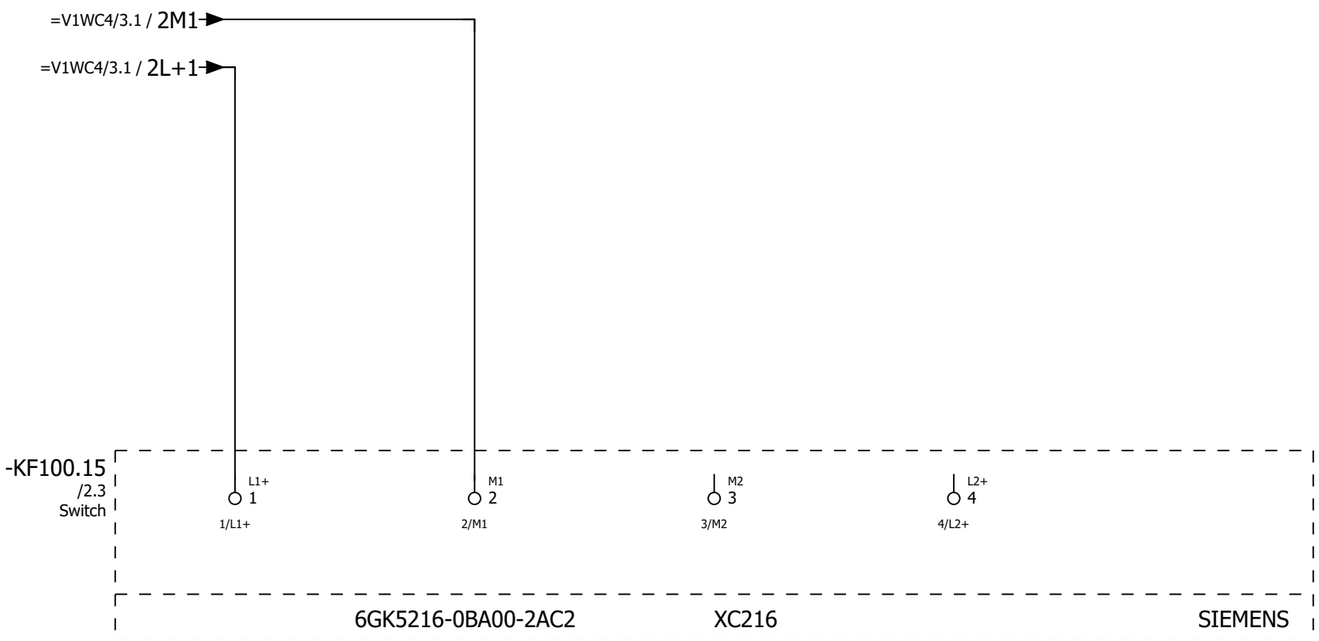

+.UC14/18

2

			Date	1/11/2023	Volvo Trucks North America		Valiant TMS	Switch, Scalance XC216	Drawing name: =2V10&EFS-EL	= V1KF1	
			Ed.	MKLEPADLO						+ V1UC15	
			Appr		P6700 Bodyside RH - Robot Cell 2V10				Document type: EFS	Project nr: 22-16150	Page 1
Modification	Date	Name	Original		Replacement of	Replaced by	Scale 1:1				1579

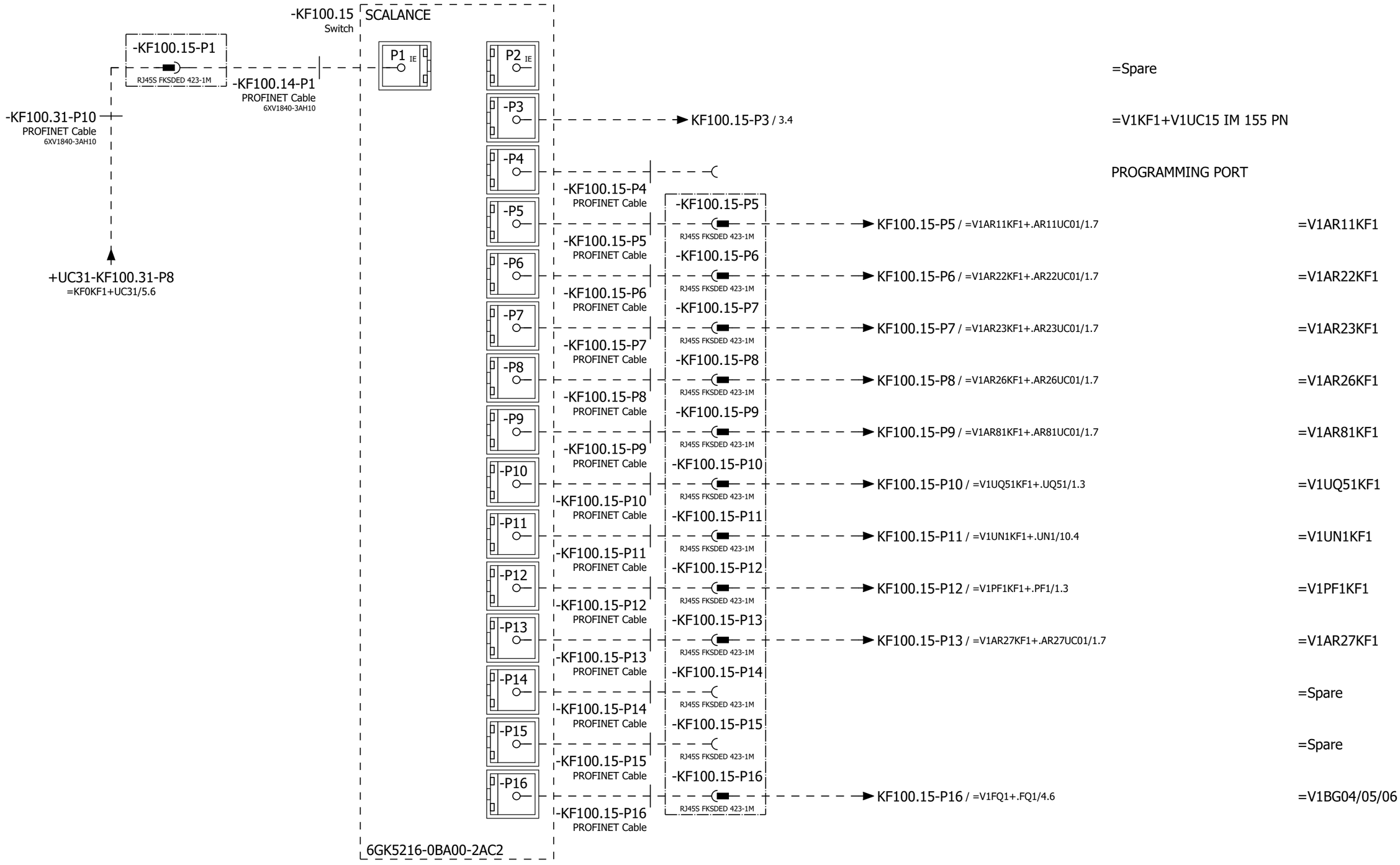

			Date	1/11/2023	Volvo Trucks North America		Valiant TMS	Network Overview	Drawing name: =2V10&EFS-EL	= V1KF1	
			Ed.	MKLEPADLO						+ V1UC15	
			Appr		P6700 Bodyside RH - Robot Cell 2V10				Document type: EFS	Project nr: 22-16150	Page 2
Modification	Date	Name	Original		Replacement of	Replaced by	Scale 1:1				1579

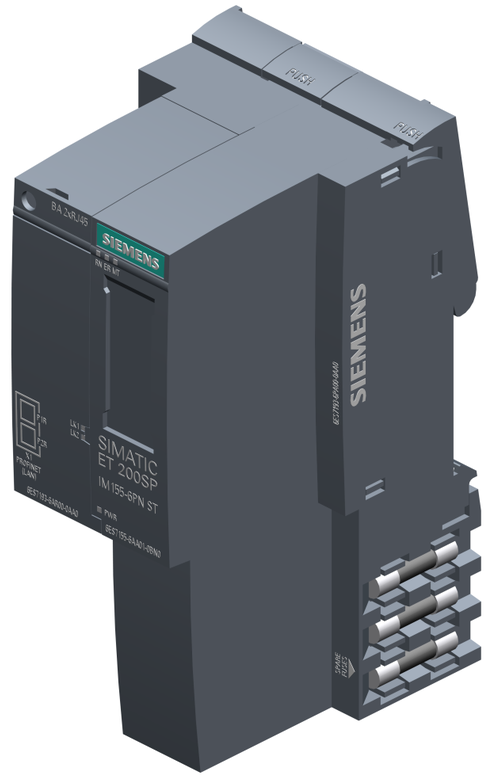

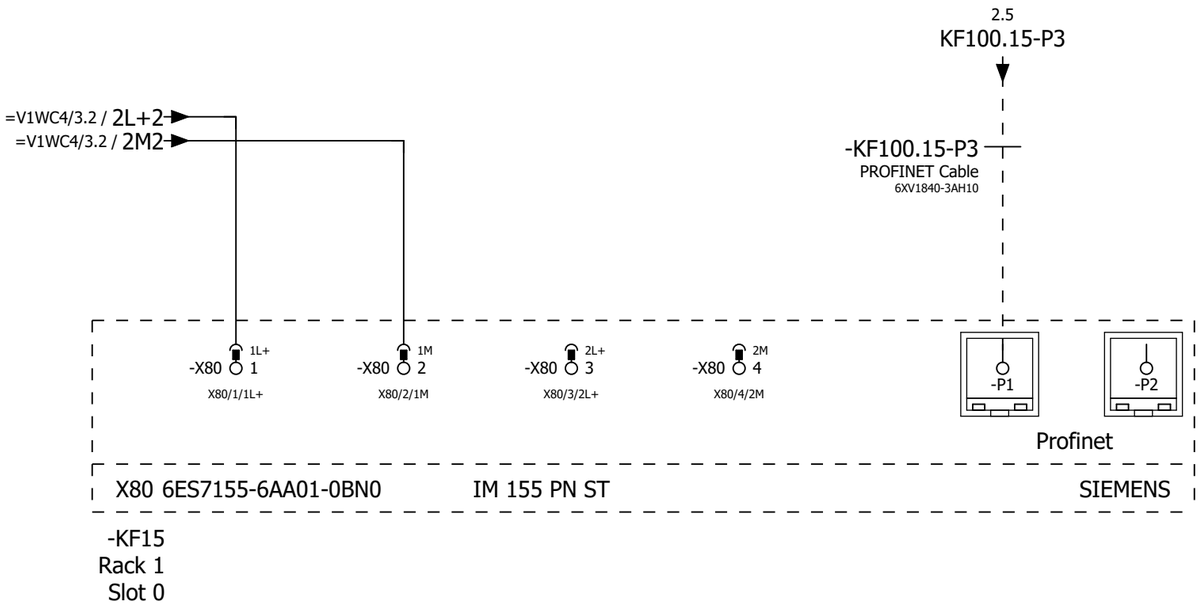

2 4

			Date	1/11/2023	Volvo Trucks North America		Valiant TMS	IM 155 PN	Drawing name: =2V10&EFS-EL		= V1KF1
			Ed.	MKLEPADLO							+ V1UC15
			Appr		P6700 Bodyside RH - Robot Cell 2V10				Document type: EFS	Project nr: 22-16150	Page 3
Modification	Date	Name	Original		Replacement of	Replaced by	Scale 1:1				1579

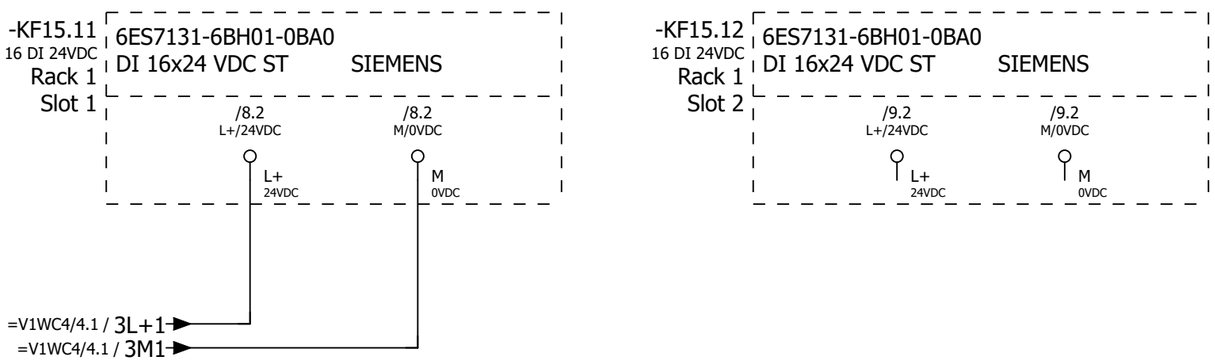

			Date	1/11/2023	Volvo Trucks North America		Valiant TMS	ET200S Wiring DI	Drawing name: =2V10&EFS-EL		= V1KF1
			Ed.	MKLEPADLO							+ V1UC15
			Appr		P6700 Bodyside RH - Robot Cell 2V10				Document type: EFS	Project nr: 22-16150	Page 4
Modification	Date	Name	Original		Replacement of	Replaced by	Scale 1:1				1579

-KF15.31
FDI 8 24VDC
Rack 1
Slot 3

6ES7136-6BA00-0CA0
F-DI 8x24VDC HF SIEMENS

/11.2 L+ 24VDC
/11.2 M 0VDC

-KF15.32
FDI 8 24VDC
Rack 1
Slot 4

6ES7136-6BA00-0CA0
F-DI 8x24VDC HF SIEMENS

/12.2 L+ 24VDC
/12.2 M 0VDC

			Date	1/11/2023	Volvo Trucks North America	Valiant TMS	ET200S Wiring F-DI	Drawing name: =2V10&EFS-EL		= V1KF1	
			Ed.	MKLEPADLO						+ V1UC15	
			Appr		P6700 Bodyside RH - Robot Cell 2V10			Document type: EFS	Project nr: 22-16150		Page 5
Modification	Date	Name	Original		Replacement of / Replaced by	Scale 1:1					1579

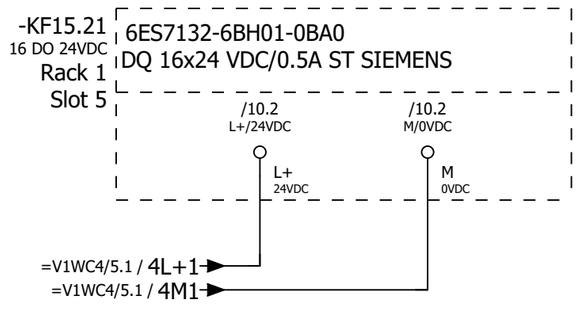
-KF15.21
16 DO 24VDC
Rack 1
Slot 5
6ES7132-6BH01-0BA0
DQ 16x24 VDC/0.5A ST SIEMENS
/10.2
L+/24VDC
/10.2
M/0VDC
L+
24VDC
M
0VDC
=V1WC4/5.1 / 4L+1
=V1WC4/5.1 / 4M1

-KF15.41
=V1FQ1/1.0
=V1FQ1/2.0
=V1FQ1/3.0
=V1FQ1/4.0
/13.1
FDO 4 24VDC
Rack 1
Slot 6

6ES7136-6DB00-0CA0 + BU15-P16+A0+2B F-DQ 4X24VDC/2A PM HF SIEMENS

/13.2 L+ 24VDC

/13.2 M 0VDC

-KF15.42
/14.1
FDO 4 24VDC
Rack 1
Slot 7

6ES7136-6DB00-0CA0 + BU15-P16+A0+2B F-DQ 4X24VDC/2A PM HF SIEMENS

/14.2 L+ 24VDC

/14.2 M 0VDC

			Date	1/11/2023	Volvo Trucks North America	Valiant TMS	ET200S Wiring F-DQ	Drawing name: =2V10&EFS-EL		= V1KF1	
			Ed.	MKLEPADLO	P6700 Bodyside RH - Robot Cell 2V10					+ V1UC15	
			Appr			Scale 1:1		Document type: EFS	Project nr: 22-16150	Page	7
Modification	Date	Name	Original		Replacement of / Replaced by						1579

-KF15.11
/4.0

ET 200SP SIEMENS
DI 16x24 VDC ST

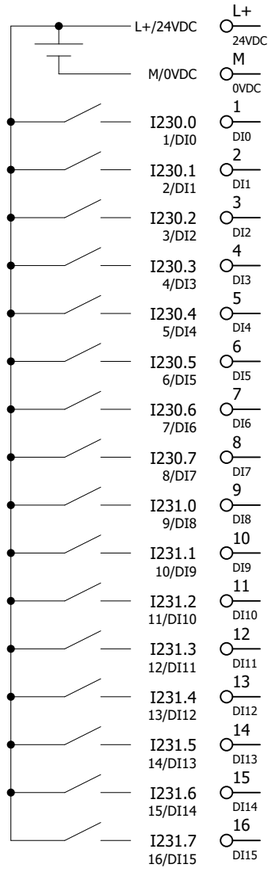

/4.1			
/4.2			
=V1WC3/2.2	=V1WC3+V1UC15-FC1	Monitoring 120 VAC	
=V1WC3/2.3	=V1WC3+V1UC15-FC2	Monitoring 120 VAC	
=V1WC4/1.4	=V1WC4+V1UC15-TA1_I	Monitoring 24VDC	
	I230.3	Spare	
=V1WC4/1.0	=V1WC4+V1UC15-FC11_I	Monitoring 24VDC	
=V1WC4/10.0	=V1WC4+V1UC15-FC12_I	Monitoring 24VDC	
	I230.6	Spare	
	I230.7	Spare	
	I231.0	Spare	
	I231.1	Spare	
	I231.2	Spare	
	I231.3	Spare	
	I231.4	Spare	
	I231.5	Spare	
	I231.6	Spare	
	I231.7	Spare	

6ES7131-6BH01-0BA0

-KF15.12
/4.3

ET 200SP SIEMENS
DI 16x24 VDC ST

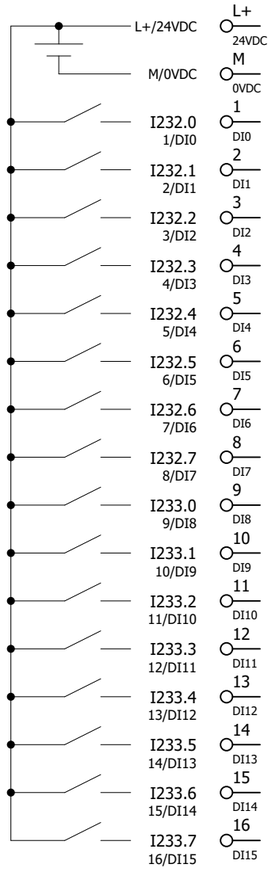

/4.3			
/4.4			
=V1FQ1/1.8	-KF15.51RQ	Monitoring Safety contactors 11.1L+	
=V1FQ1/2.8	-KF15.52RQ	Monitoring Safety contactors 12.1L+	
=V1FQ1/3.8	-KF15.53RQ	Monitoring Safety contactors 13.1L+	
=V1FQ1/4.8	-KF15.54RQ	Monitoring Safety contactors 14.1L+	
	I232.4	Spare	
	I232.5	Spare	
	I232.6	Spare	
	I232.7	Spare	
=KH0+KH0/4.6	=KH0-BP4_I	Monitoring S030 Fixture AIR On	
	I233.1	Spare	
	I233.2	Spare	
	I233.3	Spare	
	I233.4	Spare	
	I233.5	Spare	
	I233.6	Spare	
	I233.7	Spare	

6ES7131-6BH01-0BA0

-KF15.21
/6.1
16 DO 24VDC

ET 200SP SIEMENS
DQ 16x24 VDC/0.5A ST

L+/24VDC	L+ 24VDC	/6.1		
M/0VDC	M 0VDC	/6.2		
Q230.0 1/DQ0	1 DQ0		Q230.0	Spare
Q230.1 2/DQ1	2 DQ1		Q230.1	Spare
Q230.2 3/DQ2	3 DQ2		Q230.2	Spare
Q230.3 4/DQ3	4 DQ3		Q230.3	Spare
Q230.4 5/DQ4	5 DQ4		Q230.4	Spare
Q230.5 6/DQ5	6 DQ5		Q230.5	Spare
Q230.6 7/DQ6	7 DQ6		Q230.6	Spare
Q230.7 8/DQ7	8 DQ7		Q230.7	Spare
Q231.0 9/DQ8	9 DQ8		Q231.0	Spare
Q231.1 10/DQ9	10 DQ9		Q231.1	Spare
Q231.2 11/DQ10	11 DQ10		Q231.2	Spare
Q231.3 12/DQ11	12 DQ11		Q231.3	Spare
Q231.4 13/DQ12	13 DQ12		Q231.4	Spare
Q231.5 14/DQ13	14 DQ13		Q231.5	Spare
Q231.6 15/DQ14	15 DQ14		Q231.6	Spare
Q231.7 16/DQ15	16 DQ15		Q231.7	Spare

6ES7132-6BH01-0BA0

			Date	1/11/2023	Volvo Trucks North America	Valiant TMS	ET200S DQ Overview KF15.21	Drawing name: =2V10&EFS-EL		= V1KF1	
			Ed.	MKLEPADLO						+ V1UC15	
			Appr		P6700 Bodyside RH - Robot Cell 2V10			Document type: EFS	Project nr: 22-16150	Page	10
Modification	Date	Name	Original		Replacement of / Replaced by	Scale 1:1					1579

-KF15.31
/5.0

ET 200SP SIEMENS
F-DI 8x24VDC HF

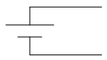

	L+ (24VDC)	/5.1		
	M (0VDC)	/5.2		
I5230.0	1 (DI0)	=V1UN1FQ1+.UN1/1.3	=V1UN1FQ1-BG01	S070 Lift Assist Clear Ch1
	9 (VS0)	=V1UN1FQ1+.UN1/1.3		
I5230.1	2 (DI1)		I5230.1	Spare
	10 (VS1)			
I5230.2	3 (DI2)		I5230.2	Spare
	11 (VS2)			
I5230.3	4 (DI3)		I5230.3	Spare
	12 (VS3)			
I5230.4	5 (DI4)	=V1UN1FQ1+.UN1/1.4	=V1UN1FQ1-BG01	S070 Lift Assist Clear Ch2
	13 (VS4)	=V1UN1FQ1+.UN1/1.5		
I5230.5	6 (DI5)		I5230.5	Spare
	14 (VS5)			
I5230.6	7 (DI6)		I5230.6	Spare
	15 (VS6)			
I5230.7	8 (DI7)		I5230.7	Spare
	16 (VS7)			

6ES7136-6BA00-0CA0

-KF15.32
/5.3

ET 200SP SIEMENS
F-DI 8x24VDC HF

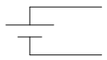

	L+ 24VDC	/5.3	
	M 0VDC	/5.4	
I5236.0	1 DI0	I5236.0	Spare
	9 VS0		
I5236.1	2 DI1	I5236.1	Spare
	10 VS1		
I5236.2	3 DI2	I5236.2	Spare
	11 VS2		
I5236.3	4 DI3	I5236.3	Spare
	12 VS3		
I5236.4	5 DI4	I5236.4	Spare
	13 VS4		
I5236.5	6 DI5	I5236.5	Spare
	14 VS5		
I5236.6	7 DI6	I5236.6	Spare
	15 VS6		
I5236.7	8 DI7	I5236.7	Spare
	16 VS7		

6ES7136-6BA00-0CA0

-KF15.41
/7.0

ET 200SP SIEMENS
F-DQ 4X24VDC/2A PM HF

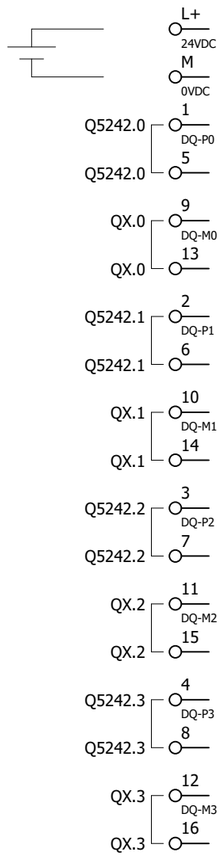

6ES7136-6DB00-0CA0 + BU15-P16+A0+2B

-KF15.42
/7.5

ET 200SP SIEMENS
F-DQ 4X24VDC/2A PM HF

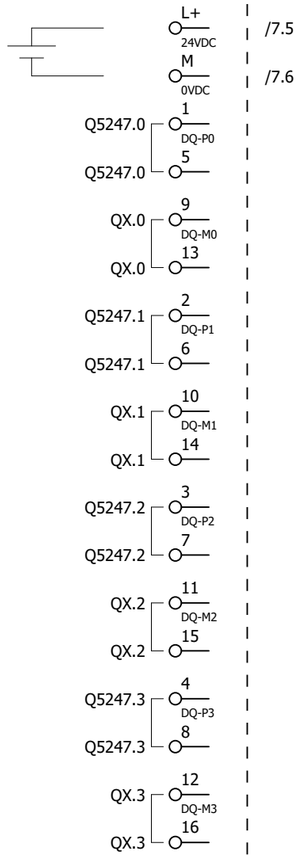

Q5247.0	Q5247.0	Spare
Q5247.1	Q5247.1	Spare
Q5247.2	Q5247.2	Spare
Q5247.3	Q5247.3	Spare

6ES7136-6DB00-0CA0 + BU15-P16+A0+2B

-KF15.51
=V1FQ1/1.2
=V1WC4/11.1

ET 200SP SIEMENS
F-RQ 1x24VDC/24..230VAC/5A

1 RQ01+	=V1WC4/11.2	11L+
2 RQ01-	=V1WC4/11.2	11.1L+
3 RQ02+	=V1WC4/11.3	11L+
4 RQ02-	=V1WC4/11.4	11.1L+
9 IN P	=V1FQ1/1.3	Switched Power 1 11.1L+P
10 OUT P	=V1FQ1/1.4	Spare
11 IN M	=V1FQ1/1.4	Switched Power 1 11.1L+M
12 OUT M	=V1FQ1/1.5	Spare
1A AUX		
2A AUX		
3A AUX		
4A AUX		

6ES7136-6RA00-0BF0 + BU20-P8+A4+0B

			Date	1/11/2023	Volvo Trucks North America		Valiant TMS	ET200S F-RQ Overview KF15.51	Drawing name: =2V10&EFS-EL		= V1KF1
			Ed.	MKLEPADLO							+ V1UC15
			Appr		P6700 Bodyside RH - Robot Cell 2V10				Document type: EFS	Project nr: 22-16150	Page 15
Modification	Date	Name	Original		Replacement of	Replaced by	Scale 1:1				1579

-KF15.52
=V1FQ1/2.2
=V1WC4/12.1

ET 200SP SIEMENS
F-RQ 1x24VDC/24..230VAC/5A

1 RQ01+	=V1WC4/12.2	12L+
2 RQ01-	=V1WC4/12.2	12.1L+
3 RQ02+	=V1WC4/12.3	12L+
4 RQ02-	=V1WC4/12.4	12.1L+
9 IN P	=V1FQ1/2.3	Switched Power 2 12.1L+P
10 OUT P	=V1FQ1/2.4	Spare
11 IN M	=V1FQ1/2.4	Switched Power 2 12.1L+M
12 OUT M	=V1FQ1/2.5	Spare
1A AUX		
2A AUX		
3A AUX		
4A AUX		

6ES7136-6RA00-0BF0 + BU20-P8+A4+0B

			Date	1/11/2023	Volvo Trucks North America	Valiant TMS	ET200S F-RQ Overview KF15.52	Drawing name: =2V10&EFS-EL	= V1KF1		
			Ed.	MKLEPADLO					+ V1UC15		
			Appr		P6700 Bodyside RH - Robot Cell 2V10			Document type: EFS	Project nr: 22-16150	Page	16
Modification	Date	Name	Original		Replacement of / Replaced by	Scale 1:1					1579

-KF15.53
=V1FQ1/3.2
=V1WC4/13.1

ET 200SP SIEMENS
F-RQ 1x24VDC/24..230VAC/5A

1 RQ01+	=V1WC4/13.2	13L+
2 RQ01-	=V1WC4/13.2	13.1L+
3 RQ02+	=V1WC4/13.3	13L+
4 RQ02-	=V1WC4/13.4	13.1L+
9 IN P	=V1FQ1/3.3	Switched Power 3 13.1L+P
10 OUT P	=V1FQ1/3.4	Spare
11 IN M	=V1FQ1/3.4	Switched Power 3 13.1L+M
12 OUT M	=V1FQ1/3.5	Spare
1A AUX		
2A AUX		
3A AUX		
4A AUX		

6ES7136-6RA00-0BF0 + BU20-P8+A4+0B

			Date	1/11/2023	Volvo Trucks North America	Valiant TMS	ET200S F-RQ Overview KF15.53	Drawing name: =2V10&EFS-EL		= V1KF1	
			Ed.	MKLEPADLO						+ V1UC15	
			Appr		P6700 Bodyside RH - Robot Cell 2V10			Document type: EFS	Project nr: 22-16150	Page	17
Modification	Date	Name	Original		Replacement of / Replaced by	Scale 1:1					1579

-KF15.54
=V1FQ1/4.2
=V1WC4/14.1

ET 200SP SIEMENS
F-RQ 1x24VDC/24..230VAC/5A

1 RQ01+	=V1WC4/14.2	14L+
2 RQ01-	=V1WC4/14.2	14.1L+
3 RQ02+	=V1WC4/14.3	14L+
4 RQ02-	=V1WC4/14.4	14.1L+
9 IN P	=V1FQ1/4.3	Switched Power 4 14.1L+P
10 OUT P	=V1FQ1/4.4	Spare
11 IN M	=V1FQ1/4.4	Switched Power 4 14.1L+M
12 OUT M	=V1FQ1/4.5	Spare
1A AUX		
2A AUX		
3A AUX		
4A AUX		

6ES7136-6RA00-0BF0 + BU20-P8+A4+0B

			Date	1/11/2023	Volvo Trucks North America	Valiant TMS	ET200S F-RQ Overview KF15.54	Drawing name: =2V10&EFS-EL		= V1KF1	
			Ed.	MKLEPADLO						+ V1UC15	
			Appr		P6700 Bodyside RH - Robot Cell 2V10			Document type: EFS	Project nr: 22-16150	Page	18
Modification	Date	Name	Original		Replacement of / Replaced by	Scale 1:1					1579

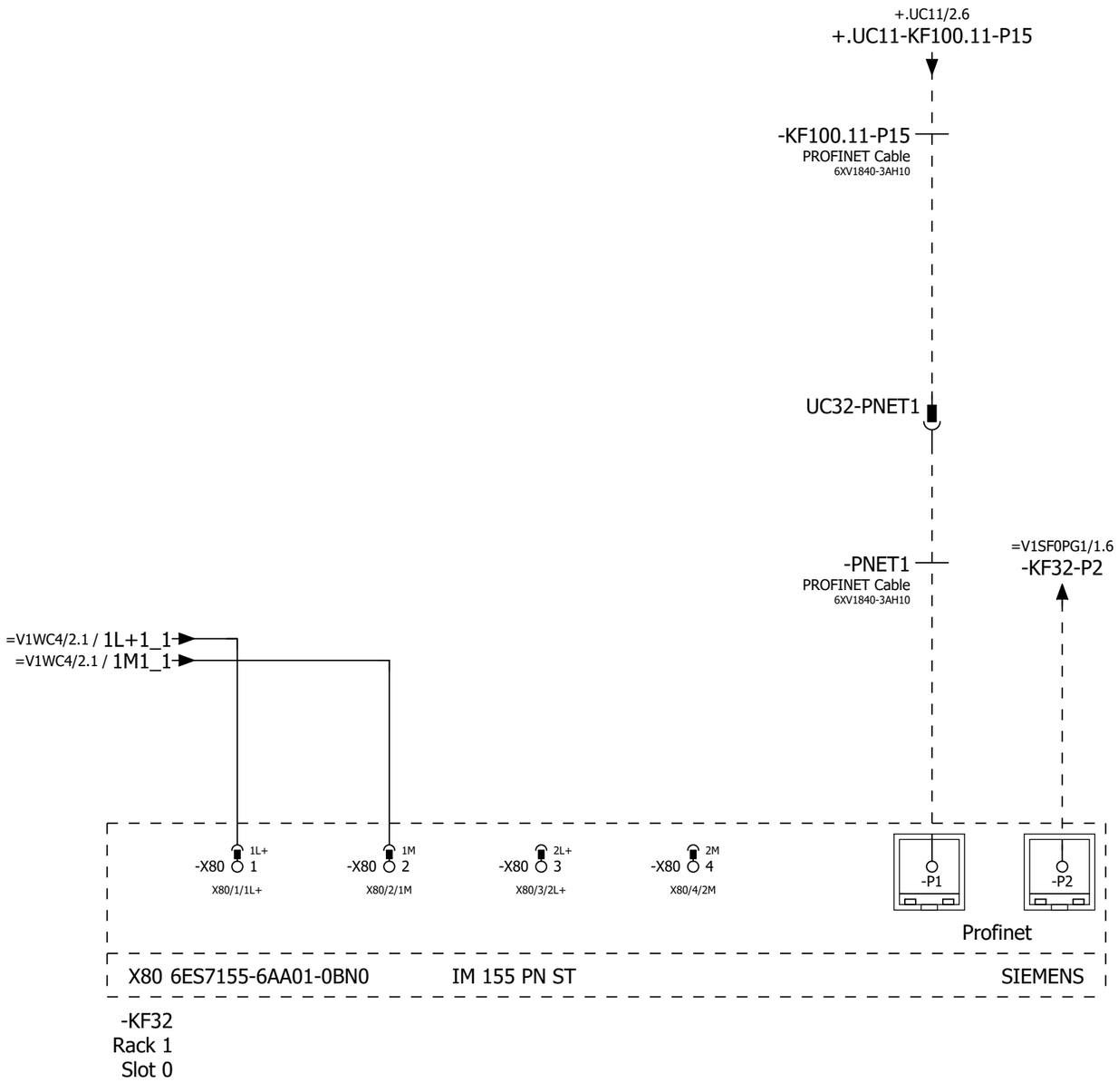

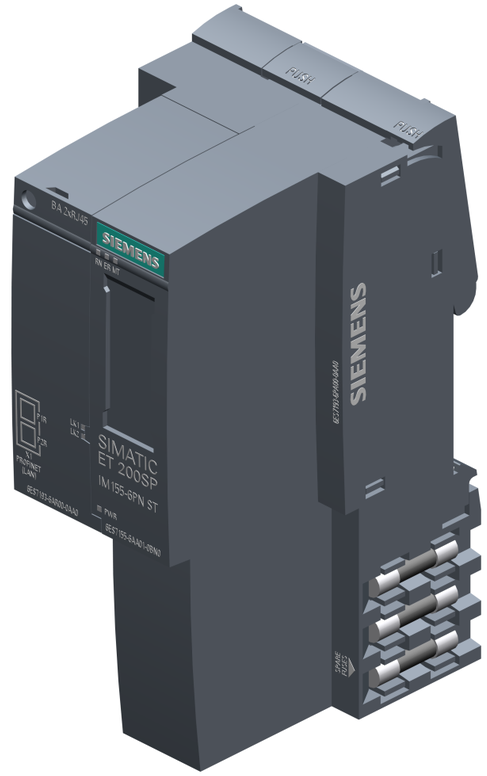

+.UC15/18

2

			Date	1/11/2023	Volvo Trucks North America	Valiant TMS	IM 155 PN	Drawing name: =2V10&EFS-EL		= V1KF1	
			Ed.	MKLEPADLO						+ V1UC32	
			Appr		P6700 Bodyside RH - Robot Cell 2V10			Document type: EFS	Project nr: 22-16150	Page	1
Modification	Date	Name	Original		Replacement of	Replaced by	Scale 1:1				1579

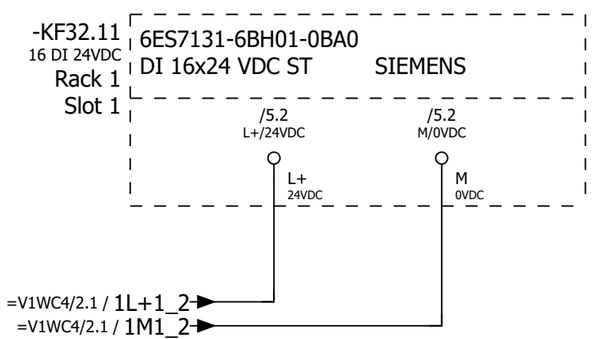

1 3

			Date	1/11/2023	Volvo Trucks North America	Valiant TMS	ET200S Wiring DI	Drawing name: =2V10&EFS-EL		= V1KF1	
			Ed.	MKLEPADLO						+ V1UC32	
			Appr		P6700 Bodyside RH - Robot Cell 2V10			Document type: EFS	Project nr: 22-16150		Page 2
Modification	Date	Name	Original		Replacement of / Replaced by	Scale 1:1					1579

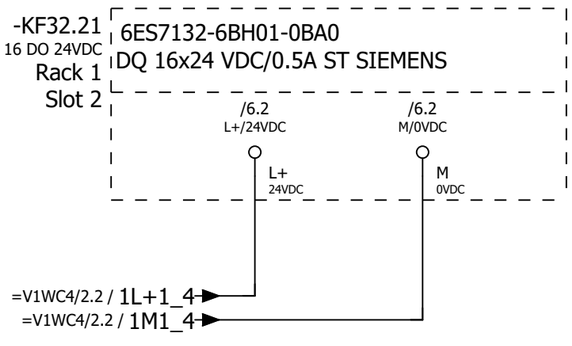
-KF32.21
16 DO 24VDC
Rack 1
Slot 2
6ES7132-6BH01-0BA0
DQ 16x24 VDC/0.5A ST SIEMENS
/6.2
L+/24VDC
/6.2
M/0VDC
L+
24VDC
M
0VDC
=V1WC4/2.2 / 1L+1_4
=V1WC4/2.2 / 1M1_4

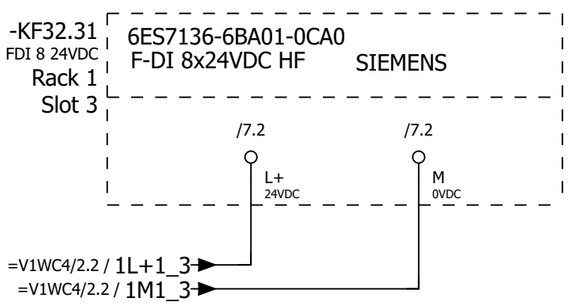

3

5

			Date	1/11/2023	Volvo Trucks North America	Valiant TMS	ET200S Wiring F-DI	Drawing name: =2V10&EFS-EL		= V1KF1	
			Ed.	MKLEPADLO						+ V1UC32	
			Appr		P6700 Bodyside RH - Robot Cell 2V10	Scale 1:1		Document type: EFS	Project nr: 22-16150		Page 4 / 1579
Modification	Date	Name	Original		Replacement of	Replaced by					

-KF32.11

ET 200SP SIEMENS
DI 16x24 VDC ST

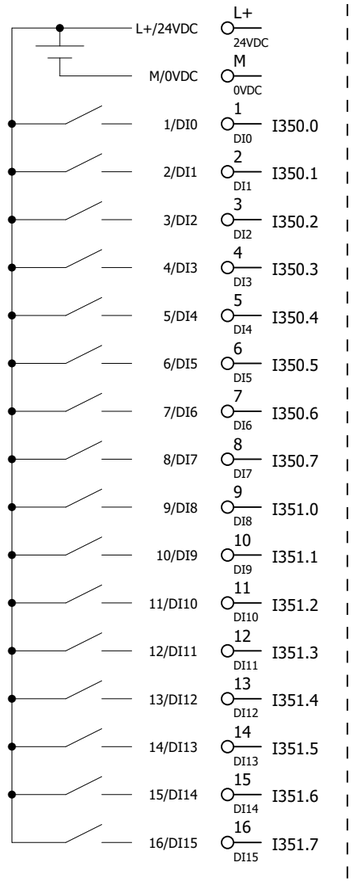

6ES7131-6BH01-0BA0

/2.1		
/2.2		
	I350.0	Spare
	I350.1	Spare
=V1SF0PG1/2.7	=V1SF0PG1+V1UC32-SF3_4	Start auto PB
	I350.3	Spare
=V1SF0PG1/2.5	=V1SF0PG1+V1UC32-SF1_4	Set PB
=V1SF0PG1/2.2	=V1SF0PG1+V1UC32-SF2_4	Reset PB
	I350.6	Spare
	I350.7	Spare
=V1WC4/3.2	=V1WC4+V1UC32-FC1	Monitoring 24 VDC
=V1WC4/3.4	=V1WC4+V1UC32-FC2	Monitoring 24 VDC
	I351.2	Spare
	I351.3	Spare
	I351.4	Spare
	I351.5	Spare
	I351.6	Spare
	I351.7	Spare

-KF32.21

ET 200SP SIEMENS
DQ 16x24 VDC/0.5A ST

L+/24VDC	L+ 24VDC		/3.1		
M/0VDC	M 0VDC		/3.2		
1/DQ0	1 DQ0	Q350.0		Q350.0	Spare
2/DQ1	2 DQ1	Q350.1	=V1SF0PG1/2.8	=V1SF0PG1+V1UC32-PF3_Q	Start auto LT
3/DQ2	3 DQ2	Q350.2		Q350.2	Spare
4/DQ3	4 DQ3	Q350.3		Q350.3	Spare
5/DQ4	5 DQ4	Q350.4		Q350.4	Spare
6/DQ5	6 DQ5	Q350.5		Q350.5	Spare
7/DQ6	7 DQ6	Q350.6		Q350.6	Spare
8/DQ7	8 DQ7	Q350.7		Q350.7	Spare
9/DQ8	9 DQ8	Q351.0		Q351.0	Spare
10/DQ9	10 DQ9	Q351.1		Q351.1	Spare
11/DQ10	11 DQ10	Q351.2		Q351.2	Spare
12/DQ11	12 DQ11	Q351.3		Q351.3	Spare
13/DQ12	13 DQ12	Q351.4		Q351.4	Spare
14/DQ13	14 DQ13	Q351.5		Q351.5	Spare
15/DQ14	15 DQ14	Q351.6		Q351.6	Spare
16/DQ15	16 DQ15	Q351.7		Q351.7	Spare

6ES7132-6BH01-0BA0

-KF32.31
/4.0

ET 200SP SIEMENS
F-DI 8x24VDC HF

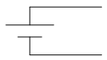

	L+ 24VDC	/4.1		
	M 0VDC	/4.2		
I5350.0	1 DI0	=FQ0V1SF1S01/1.3	=FQ0V1SF1S01+UC32-SF1.1	Emergency stop Ch1
	9 VS0	=FQ0V1SF1S01/1.3		
I5350.1	2 DI1		I5350.1	Spare
	10 VS1			
I5350.2	3 DI2		I5350.2	Spare
	11 VS2			
I5350.3	4 DI3		I5350.3	Spare
	12 VS3			
I5350.4	5 DI4	=FQ0V1SF1S01/1.4	=FQ0V1SF1S01+UC32-SF1.11	Emergency stop Ch2
	13 VS4	=FQ0V1SF1S01/1.4		
I5350.5	6 DI5		I5350.5	Spare
	14 VS5			
I5350.6	7 DI6		I5350.6	Spare
	15 VS6			
I5350.7	8 DI7		I5350.7	Spare
	16 VS7			

6ES7136-6BA01-0CA0

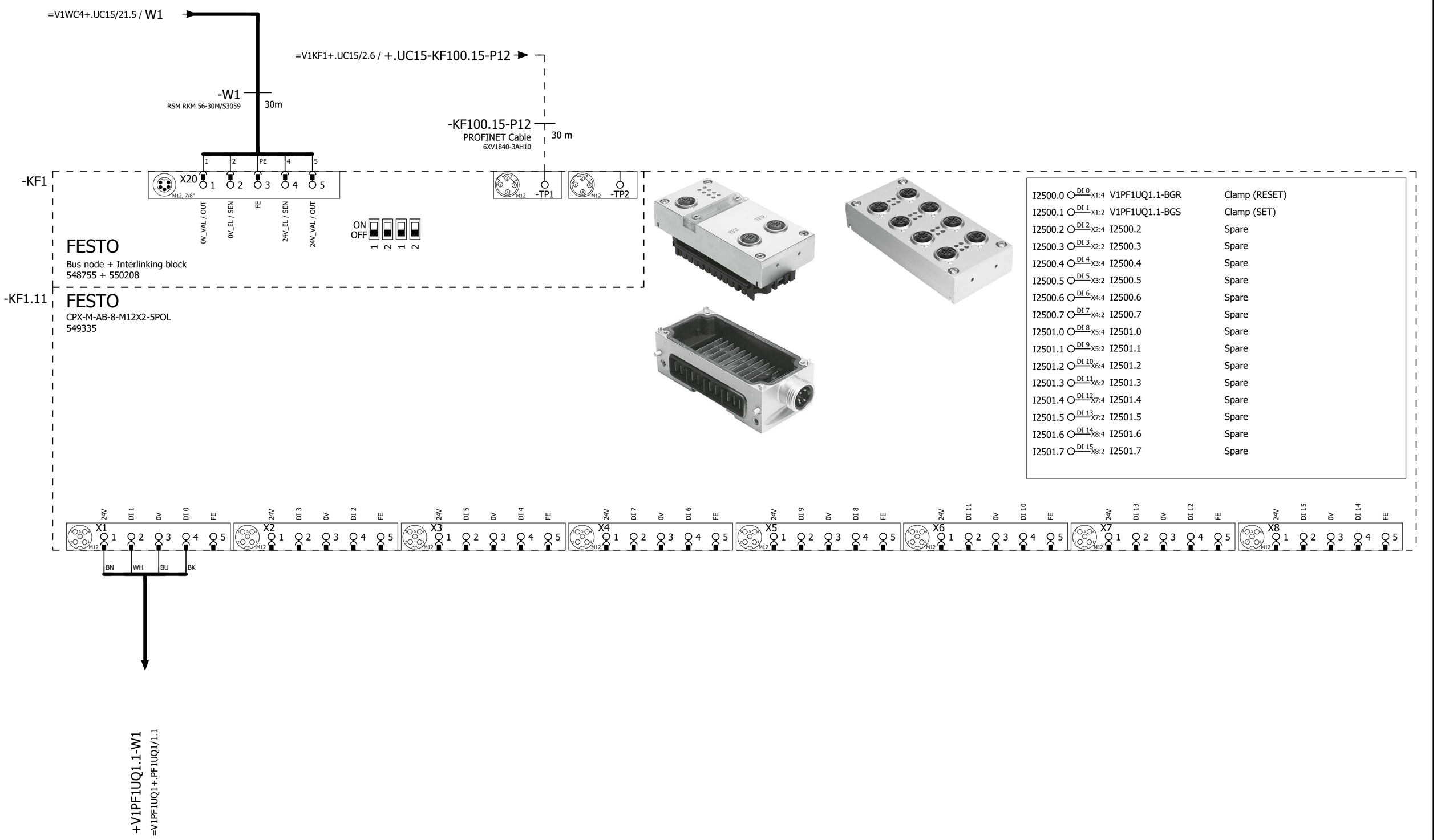

=V1KF1+.UC32/7

2

			Date	1/11/2023	Volvo Trucks North America	Valiant TMS	CONNECTING MOD. FOR VTSA MANIFOLD	Drawing name: =2V10&EFS-EL		= V1PF1KF1	
			Ed.	MKLEPADLO						+ V1PF1	
			Appr		P6700 Bodyside RH - Robot Cell 2V10			Document type: EFS	Project nr: 22-16150		Page 1
Modification	Date	Name	Original		Replacement of	Replaced by	Scale 1:1				1579

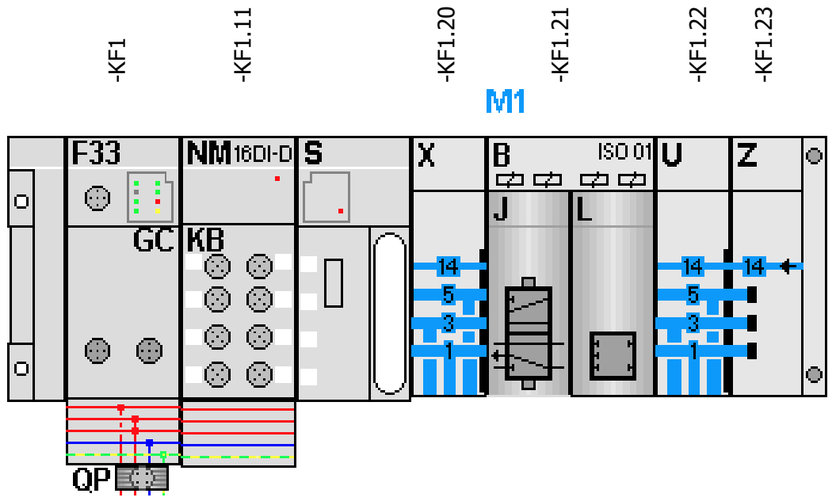

-KF1.21
=V1PF1UQ1+.PF1UQ1/1.3

FESTO

=V1PF1UQ1+.PF1UQ1/1.4	Q2500.0 DO 0 1.1	-QN1.1_Q	Clamp (RST)
=V1PF1UQ1+.PF1UQ1/1.4	Q2500.1 DO 1 1.2	-QN1.2_Q	Clamps (SET)
	Q2500.2 DO 2 2.1	-QN2.1_Q	Spare
	Q2500.3 DO 3 2.2	-QN2.2_Q	Spare

=V1PF1UQ1+.PF1UQ1/1

			Date	1/11/2023	Volvo Trucks North America	Valiant TMS	CONNECTING MOD. FOR FESTO DQ	Drawing name: =2V10&EFS-EL		= V1PF1KF1	
			Ed.	MKLEPADLO						+ V1PF1	
			Appr		P6700 Bodyside RH - Robot Cell 2V10			Document type: EFS	Project nr: 22-16150		Page 2
Modification	Date	Name	Original		Replacement of	Replaced by	Scale 1:1				1579

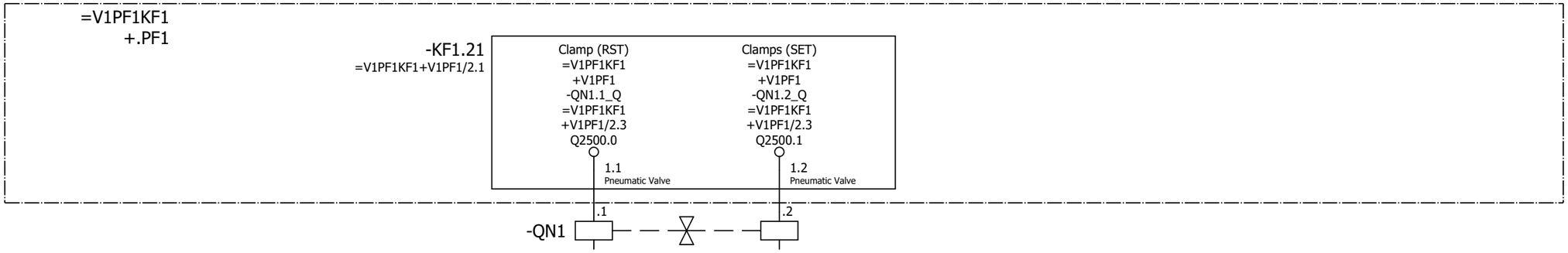

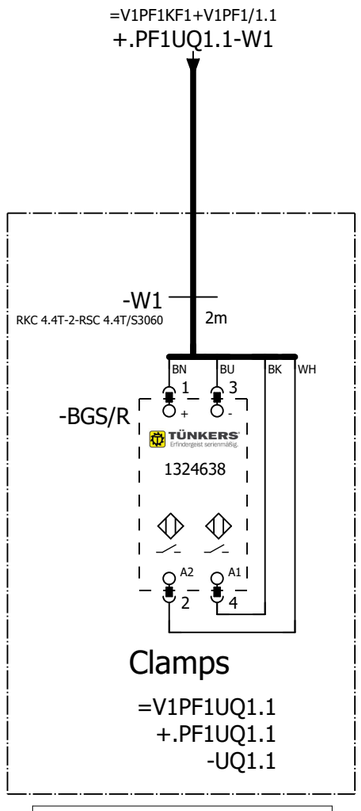

=V1PF1
-UQ1.1-BGS/R
Clamps

=V1PF1KF1+V1PF1/2

=V1PF1WC3+.PF1UC01/1

			Date	1/11/2023	Volvo Trucks North America		Valiant TMS	FESTO DQ CONNECTION QN1	Drawing name: =2V10&EFS-EL	= V1PF1UQ1	
			Ed.	MKLEPADLO						+ V1PF1UQ1	
			Appr		P6700 Bodyside RH - Robot Cell 2V10				Document type: EFS	Project nr: 22-16150	Page 1
Modification	Date	Name	Original		Replacement of	Replaced by	Scale 1:1				1579

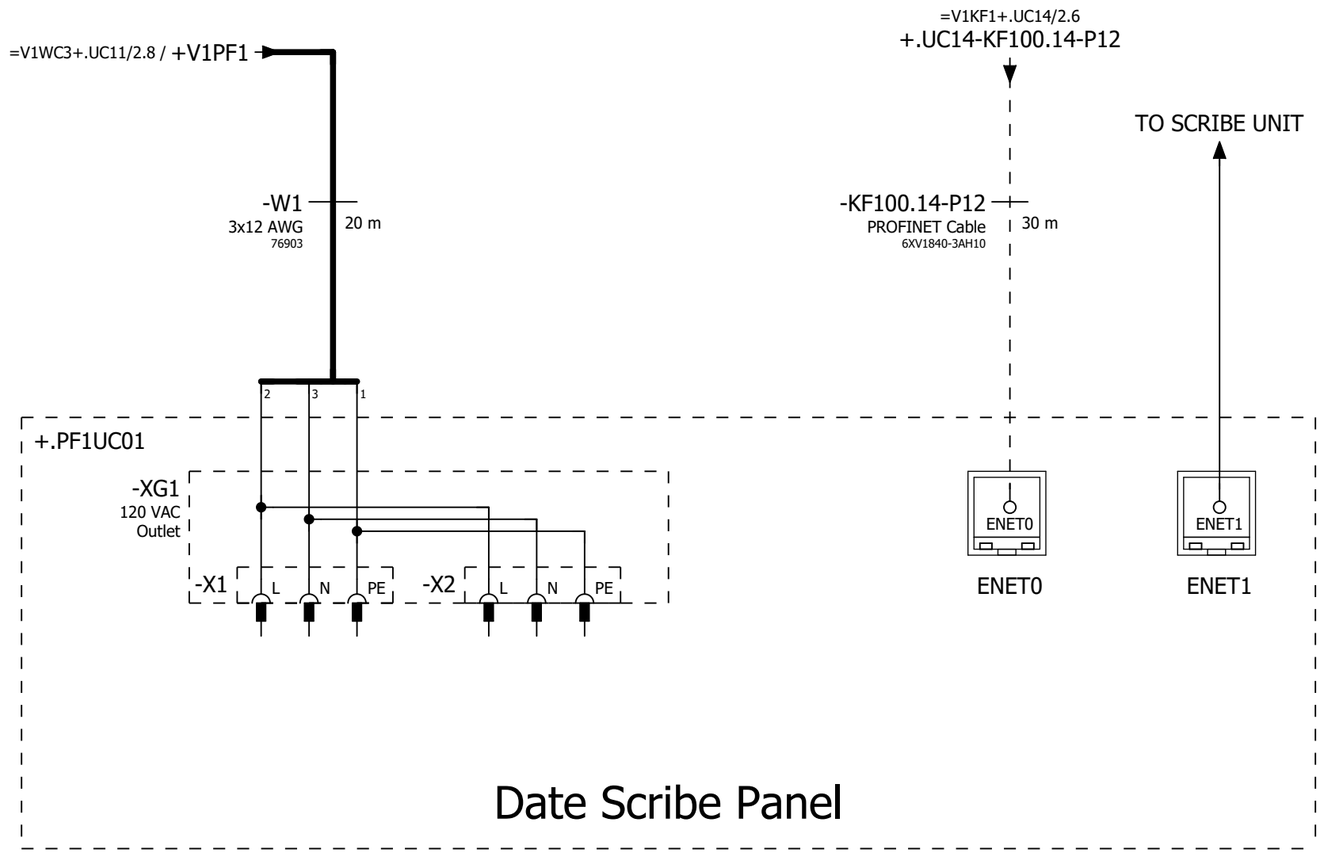

=V1PF1UQ1+.PF1UQ1/1

=V1PZ1PF1+.UC61/1

			Date	1/11/2023	Volvo Trucks North America		Valiant TMS	Incoming power & profinet	Drawing name: =2V10&EFS-EL	= V1PF1WC3	
			Ed.	MKLEPADLO						+ V1PF1UC01	
			Appr		P6700 Bodyside RH - Robot Cell 2V10				Document type: EFS	Project nr: 22-16150	Page 1
Modification	Date	Name	Original		Replacement of	Replaced by	Scale 1:1				1579

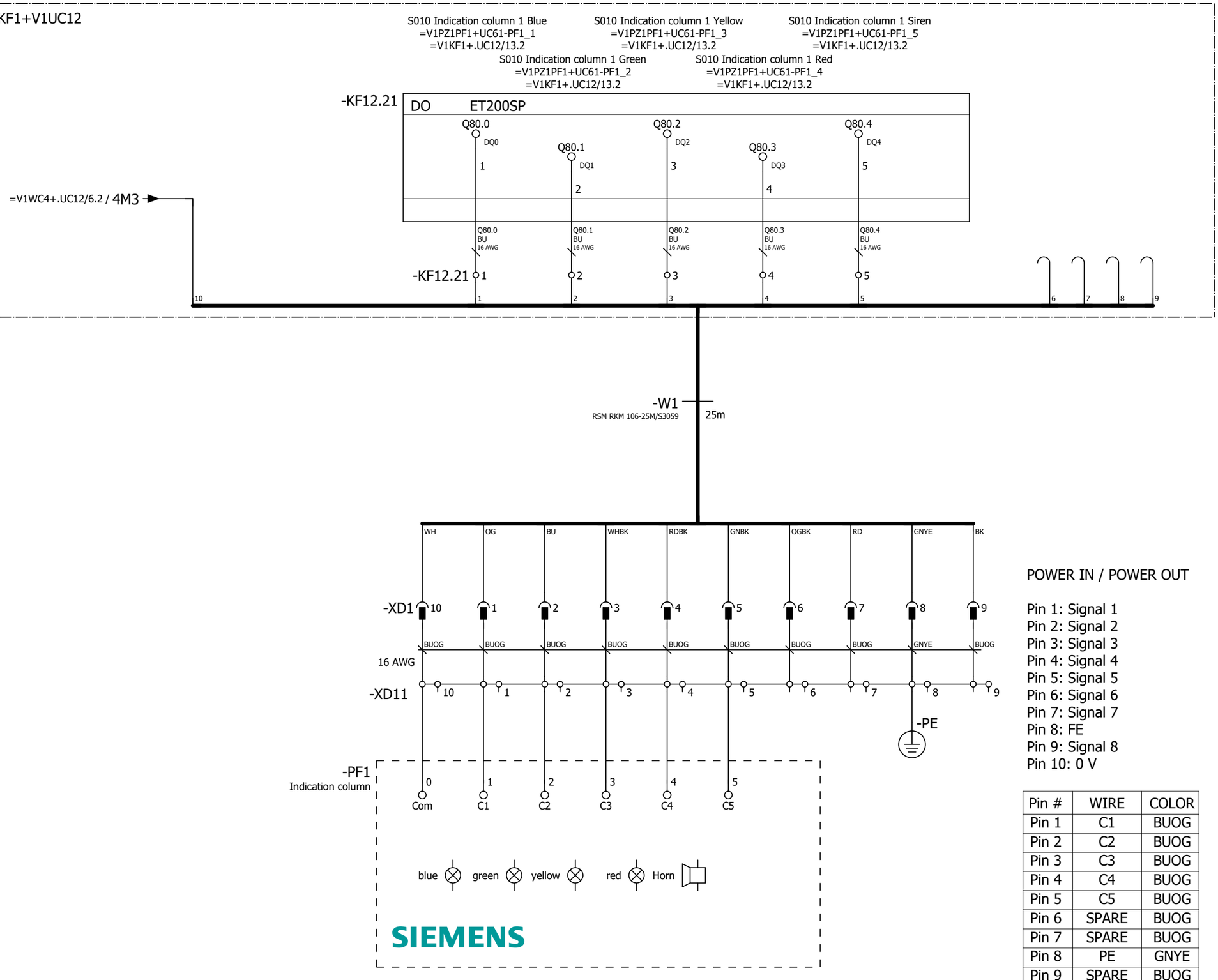

POWER IN / POWER OUT

Pin 1: Signal 1
Pin 2: Signal 2
Pin 3: Signal 3
Pin 4: Signal 4
Pin 5: Signal 5
Pin 6: Signal 6
Pin 7: Signal 7
Pin 8: FE
Pin 9: Signal 8
Pin 10: 0 V

Pin #	WIRE	COLOR
Pin 1	C1	BUOG
Pin 2	C2	BUOG
Pin 3	C3	BUOG
Pin 4	C4	BUOG
Pin 5	C5	BUOG
Pin 6	SPARE	BUOG
Pin 7	SPARE	BUOG
Pin 8	PE	GNYE
Pin 9	SPARE	BUOG
Pin 10	COM	BUOG

=V1PF1WC3+.PF1UC01/1

=V1PZ1PF2+.UC62/1

			Date	1/11/2023	Volvo Trucks North America	Valiant TMS	S010 Indication column 1	Drawing name: =2V10&EFS-EL	= V1PZ1PF1
			Ed.	MKLEPADLO					+ V1UC61
			Appr		P6700 Bodyside RH - Robot Cell 2V10			Document type: EFS	Project nr: 22-16150
Modification	Date	Name	Original		Replacement of / Replaced by	Scale 1:1			Page 1 / 1579

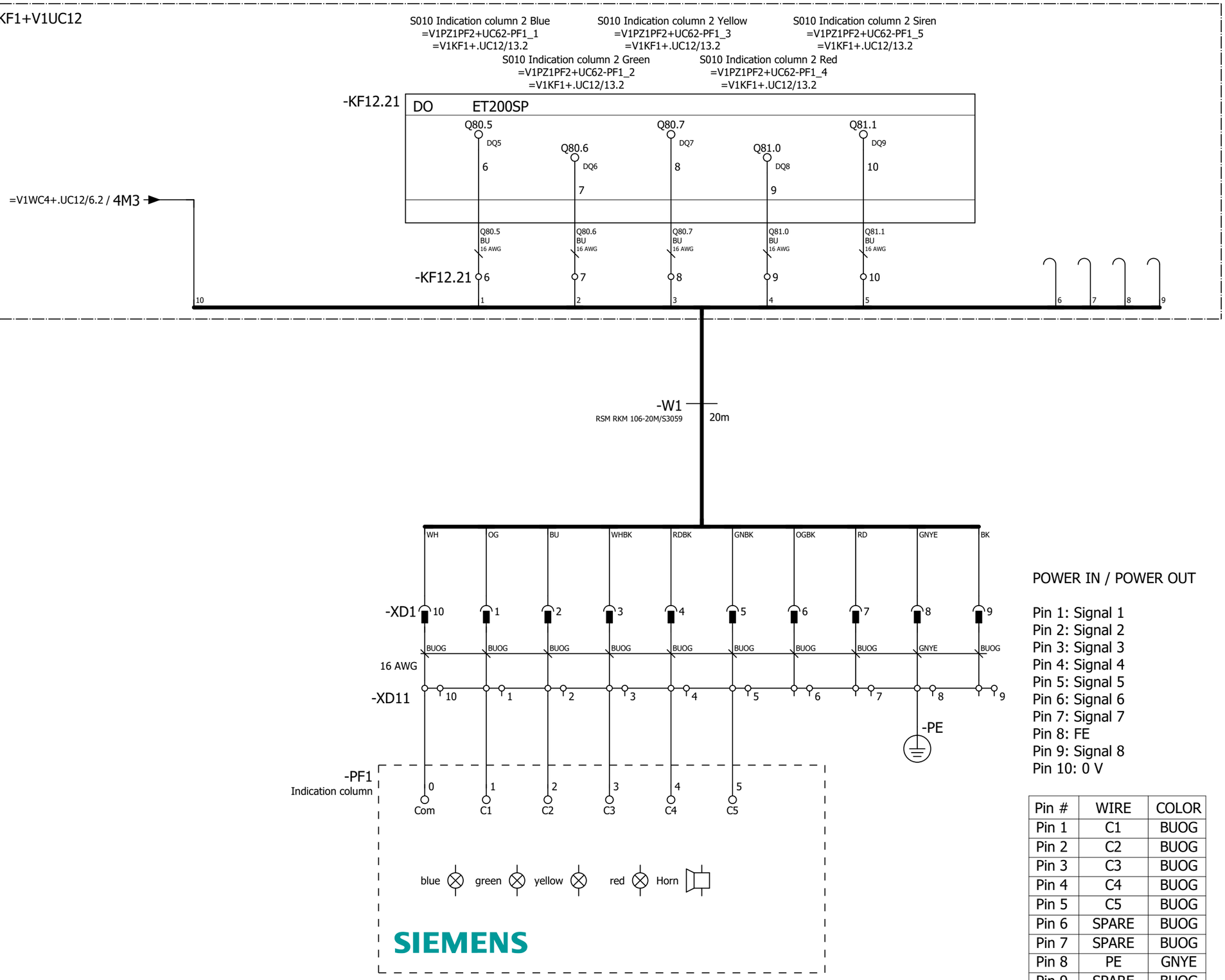

POWER IN / POWER OUT

Pin 1: Signal 1
Pin 2: Signal 2
Pin 3: Signal 3
Pin 4: Signal 4
Pin 5: Signal 5
Pin 6: Signal 6
Pin 7: Signal 7
Pin 8: FE
Pin 9: Signal 8
Pin 10: 0 V

Pin #	WIRE	COLOR
Pin 1	C1	BUOG
Pin 2	C2	BUOG
Pin 3	C3	BUOG
Pin 4	C4	BUOG
Pin 5	C5	BUOG
Pin 6	SPARE	BUOG
Pin 7	SPARE	BUOG
Pin 8	PE	GNYE
Pin 9	SPARE	BUOG
Pin 10	COM	BUOG

=V1PZ1PF1+.UC61/1

=V1PZ1PF3+.UC63/1

			Date	1/11/2023	Volvo Trucks North America	Valiant TMS	S010 Indication column 2	Drawing name: =2V10&EFS-EL	= V1PZ1PF2
			Ed.	MKLEPADLO					+ V1UC62
			Appr		P6700 Bodyside RH - Robot Cell 2V10	Scale 1:1		Document type: EFS / Project nr: 22-16150	Page 1 / 1579
Modification	Date	Name	Original		Replacement of / Replaced by				

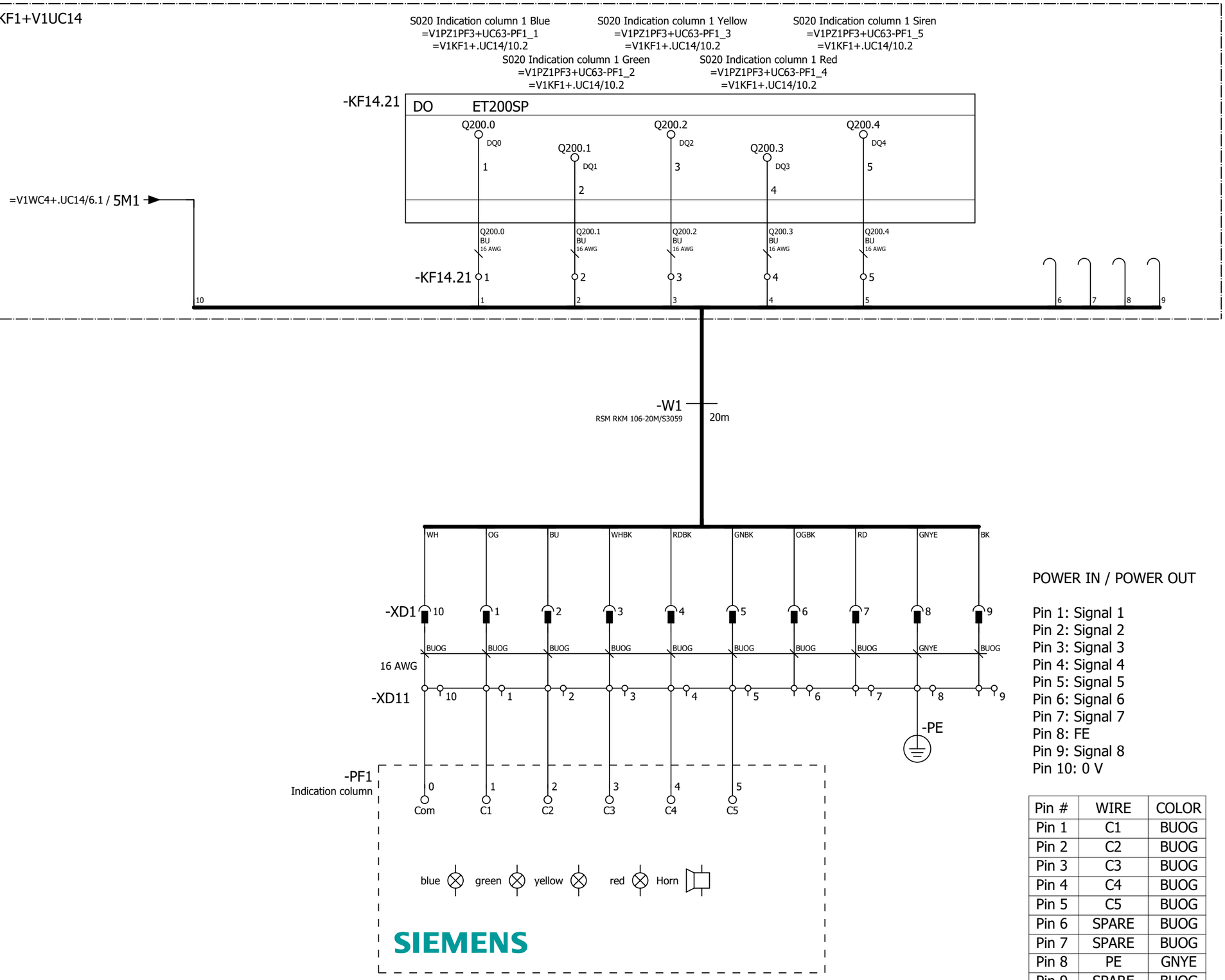

POWER IN / POWER OUT

Pin 1: Signal 1
Pin 2: Signal 2
Pin 3: Signal 3
Pin 4: Signal 4
Pin 5: Signal 5
Pin 6: Signal 6
Pin 7: Signal 7
Pin 8: FE
Pin 9: Signal 8
Pin 10: 0 V

Pin #	WIRE	COLOR
Pin 1	C1	BUOG
Pin 2	C2	BUOG
Pin 3	C3	BUOG
Pin 4	C4	BUOG
Pin 5	C5	BUOG
Pin 6	SPARE	BUOG
Pin 7	SPARE	BUOG
Pin 8	PE	GNYE
Pin 9	SPARE	BUOG
Pin 10	COM	BUOG

=V1PZ1PF2+.UC62/1

=V1PZ1PF4+.UC64/1

			Date	1/11/2023	Volvo Trucks North America	Valiant TMS	S020 Indication column 1	Drawing name: =2V10&EFS-EL	= V1PZ1PF3
			Ed.	MKLEPADLO					+ V1UC63
			Appr		P6700 Bodyside RH - Robot Cell 2V10	Scale 1:1		Document type: EFS / Project nr: 22-16150	Page 1 / 1579
Modification	Date	Name	Original		Replacement of / Replaced by				

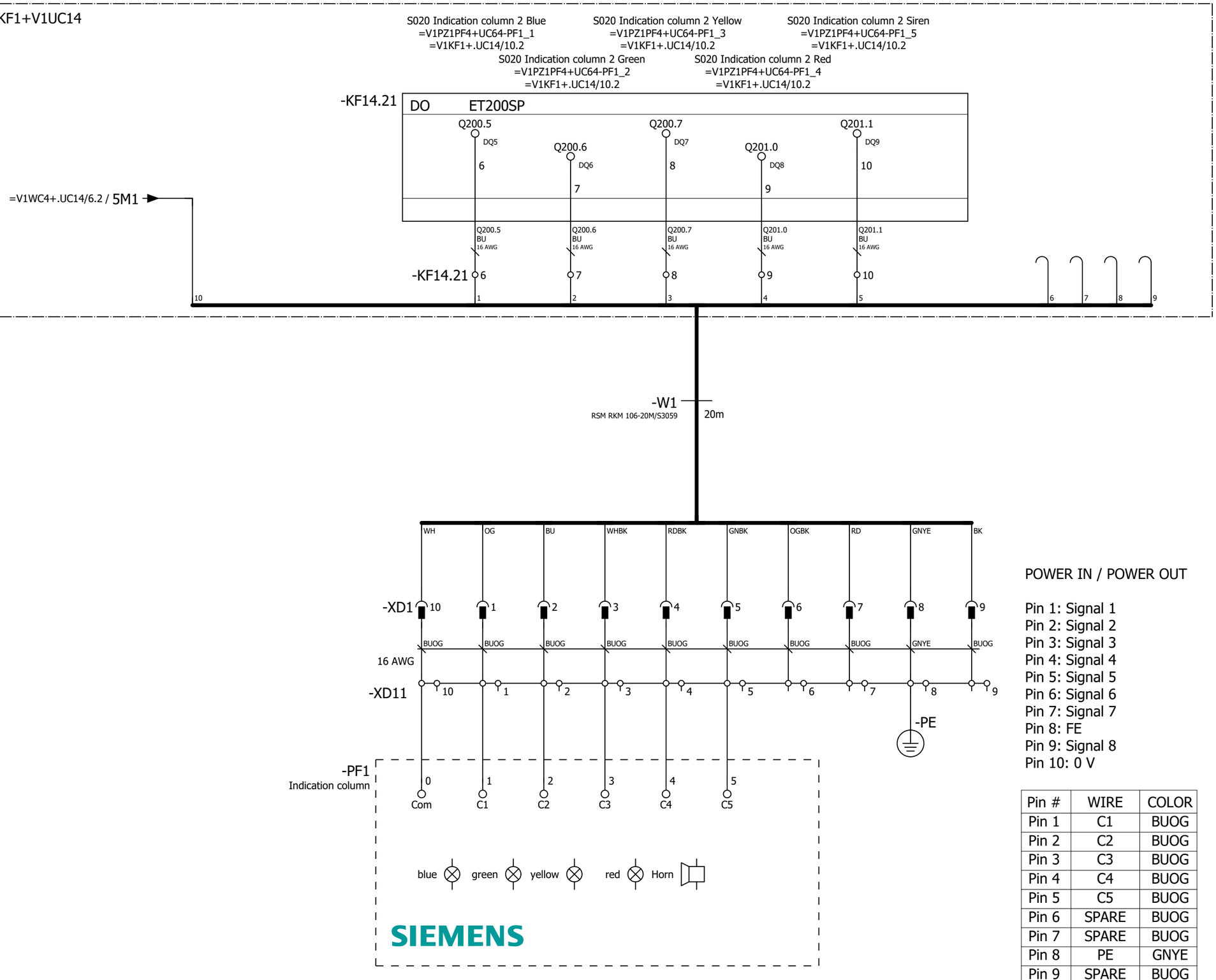

POWER IN / POWER OUT

Pin 1: Signal 1
Pin 2: Signal 2
Pin 3: Signal 3
Pin 4: Signal 4
Pin 5: Signal 5
Pin 6: Signal 6
Pin 7: Signal 7
Pin 8: FE
Pin 9: Signal 8
Pin 10: 0 V

Pin #	WIRE	COLOR
Pin 1	C1	BUOG
Pin 2	C2	BUOG
Pin 3	C3	BUOG
Pin 4	C4	BUOG
Pin 5	C5	BUOG
Pin 6	SPARE	BUOG
Pin 7	SPARE	BUOG
Pin 8	PE	GNYE
Pin 9	SPARE	BUOG
Pin 10	COM	BUOG

=V1PZ1PF3+.UC63/1

=V1SF0PG1+.UC32/1

			Date	1/11/2023	Volvo Trucks North America	Valiant TMS	S020 Indication column 2	Drawing name: =2V10&EFS-EL	= V1PZ1PF4
			Ed.	MKLEPADLO					+ V1UC64
			Appr		P6700 Bodyside RH - Robot Cell 2V10	Scale 1:1		Document type: EFS / Project nr: 22-16150	Page 1 / 1579
Modification	Date	Name	Original		Replacement of / Replaced by				

0	1	2	3	4	5	6	7	8	9

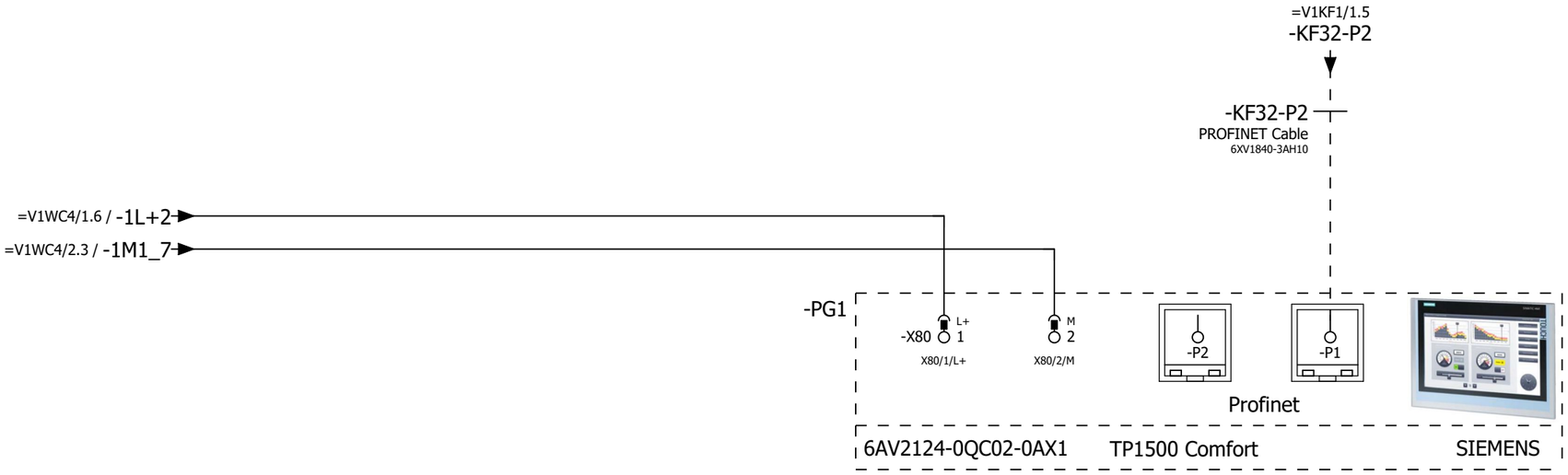

=V1PZ1PF4+.UC64/1

2

			Date	1/11/2023	Volvo Trucks North America	Valiant TMS	TP1500: SOP Display	Drawing name: =2V10&EFS-EL	= V1SF0PG1	
			Ed.	MKLEPADLO					+ V1UC32	
			Appr		P6700 Bodyside RH - Robot Cell 2V10			Document type: EFS	Project nr: 22-16150	Page 1 / 1579
Modification	Date	Name	Original		Replacement of	Replaced by	Scale 1:1			

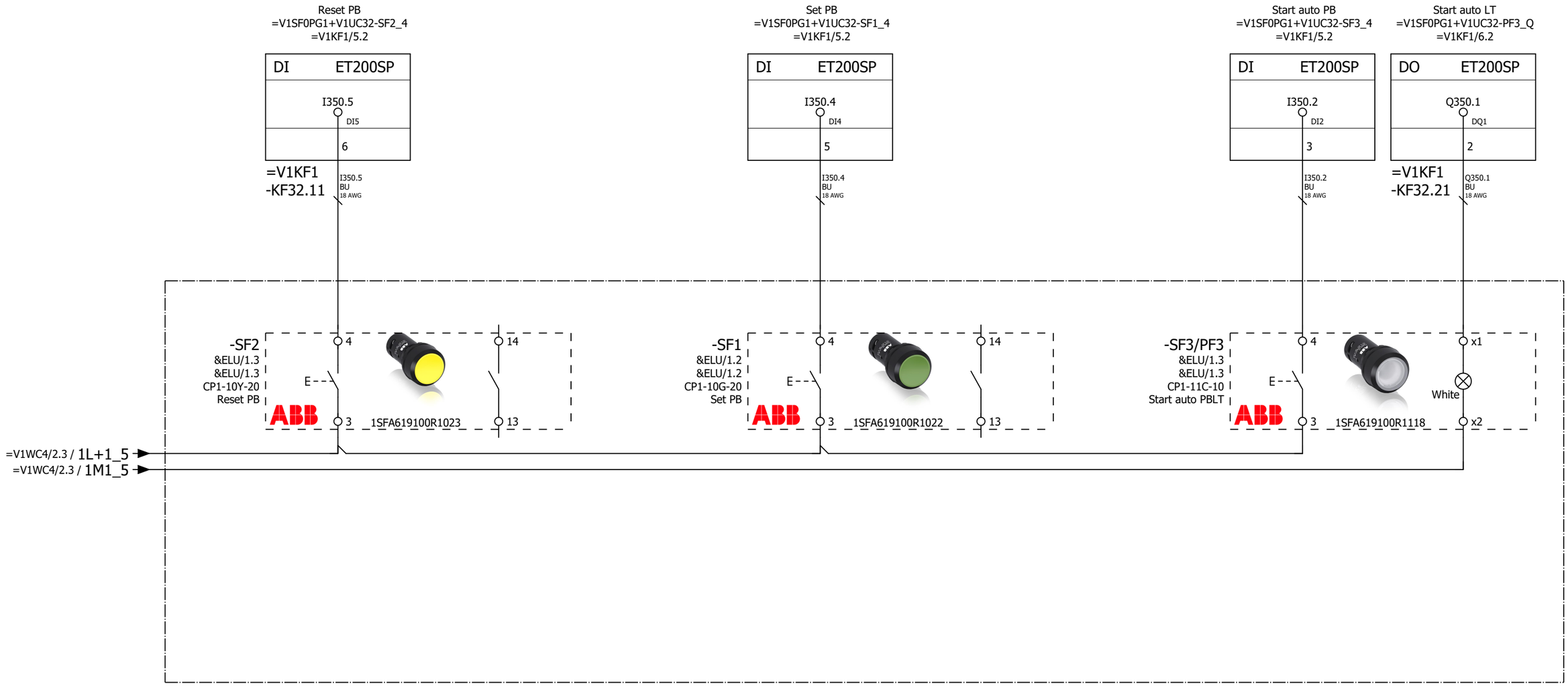

1

=V1SF0PG2+.UC51/1

			Date	1/11/2023	Volvo Trucks North America	Valiant TMS	Operating box SOP	Drawing name: =2V10&EFS-EL	= V1SF0PG1	
			Ed.	MKLEPADLO					+ V1UC32	
			Appr		P6700 Bodyside RH - Robot Cell 2V10			Document type: EFS	Project nr: 22-16150	Page 2
Modification	Date	Name	Original		Replacement of	Replaced by	Scale 1:1			1579

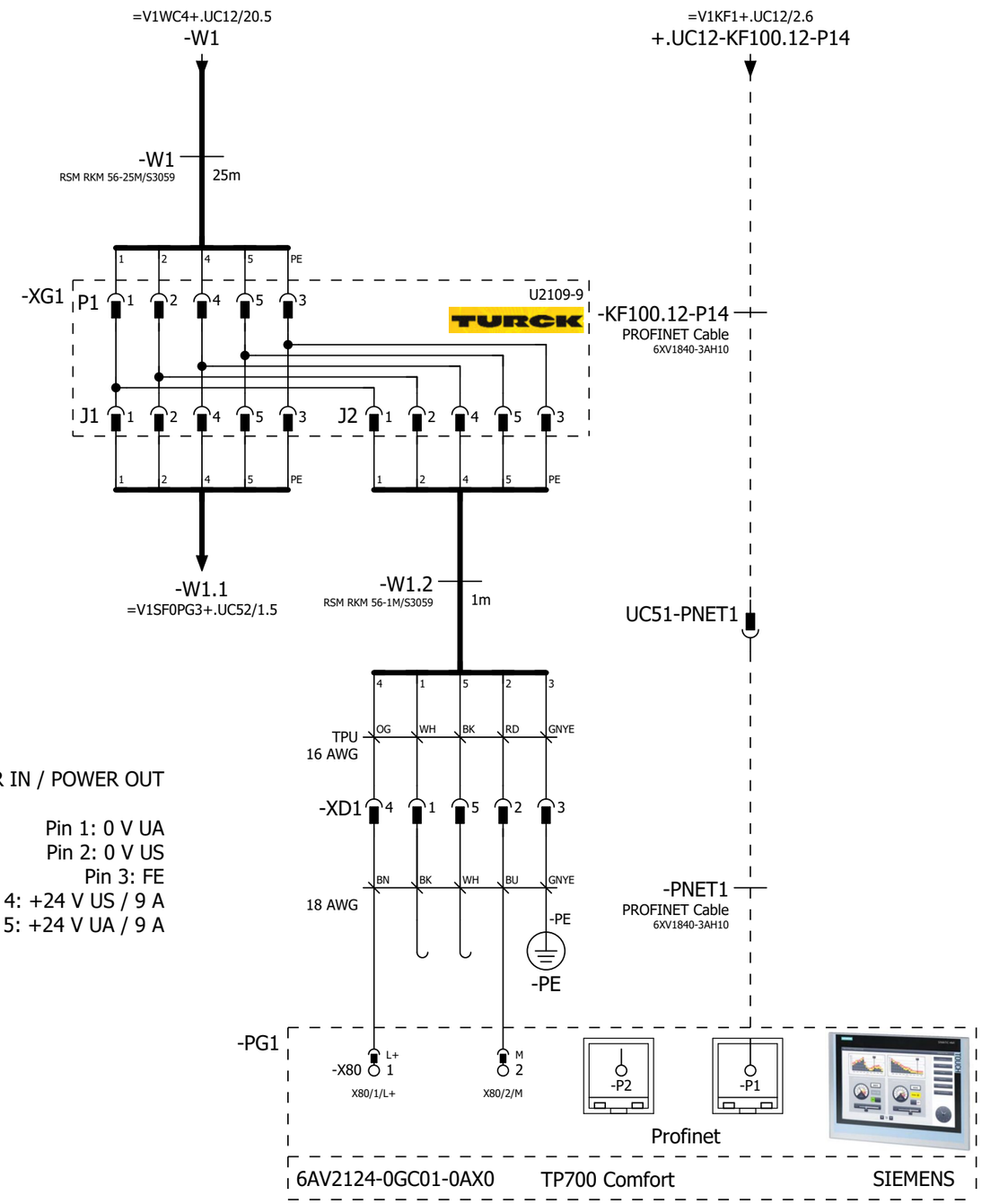

Pin #	WIRE	COLOR
Pin 1	N/C	BK
Pin 2	M	BU
Pin 3	PE	GNYE
Pin 4	L+	BN
Pin 5	N/C	WH

POWER IN / POWER OUT

Pin 1: 0 V UA
Pin 2: 0 V US
Pin 3: FE
Pin 4: +24 V US / 9 A
Pin 5: +24 V UA / 9 A

=V1SF0PG1+.UC32/2

=V1SF0PG3+.UC52/1

			Date	1/11/2023	Volvo Trucks North America	Valiant TMS	TP700: S010 Display 1	Drawing name: =2V10&EFS-EL		= V1SF0PG2	
			Ed.	MKLEPADLO						+ V1UC51	
			Appr		P6700 Bodyside RH - Robot Cell 2V10			Document type: EFS	Project nr: 22-16150		Page 1
Modification	Date	Name	Original		Replacement of	Replaced by	Scale 1:1				1579

Pin #	WIRE	COLOR
Pin 1	N/C	BK
Pin 2	M	BU
Pin 3	PE	GNYE
Pin 4	L+	BN
Pin 5	N/C	WH

POWER IN / POWER OUT

Pin 1: 0 V UA
Pin 2: 0 V US
Pin 3: FE
Pin 4: +24 V US / 9 A
Pin 5: +24 V UA / 9 A

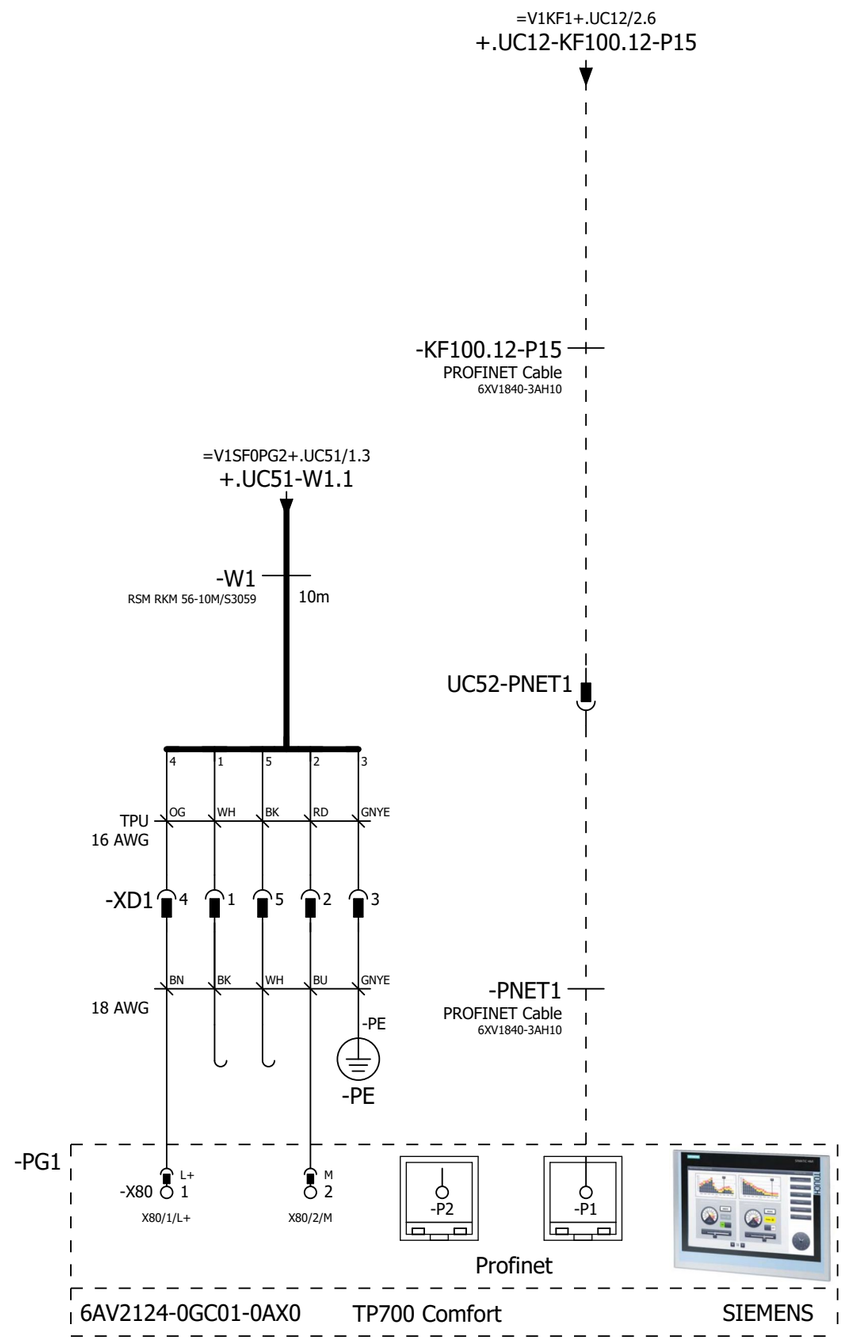

=V1SF0PG2+.UC51/1

=V1SF0PG4+.UC53/1

			Date	1/11/2023	Volvo Trucks North America	Valiant TMS	TP700: S010 Display 2	Drawing name: =2V10&EFS-EL		= V1SF0PG3	
			Ed.	MKLEPADLO						+ V1UC52	
			Appr		P6700 Bodyside RH - Robot Cell 2V10			Document type: EFS	Project nr: 22-16150		Page 1
Modification	Date	Name	Original		Replacement of	Replaced by	Scale 1:1				1579

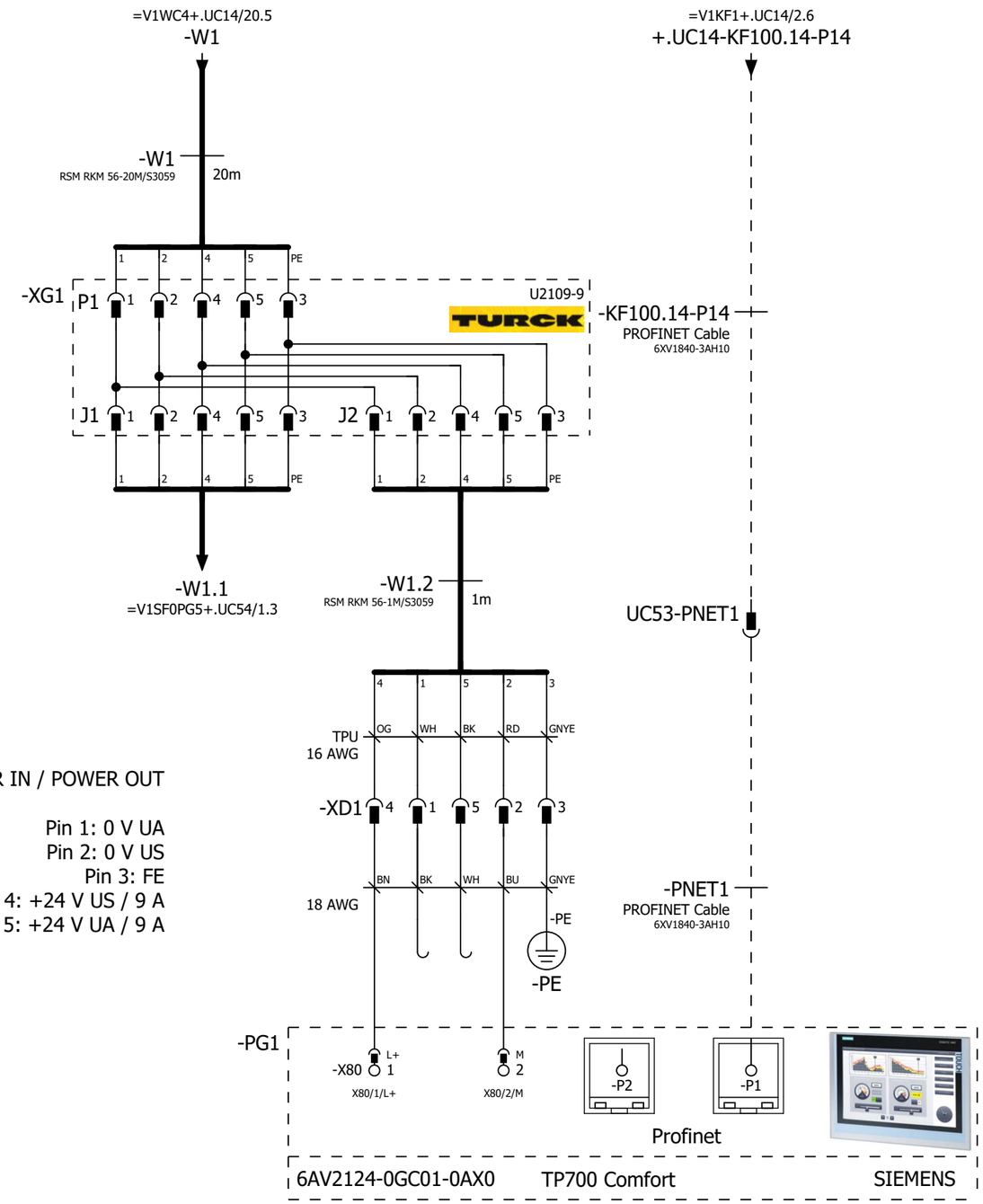

Pin #	WIRE	COLOR
Pin 1	N/C	BK
Pin 2	M	BU
Pin 3	PE	GNYE
Pin 4	L+	BN
Pin 5	N/C	WH

POWER IN / POWER OUT

Pin 1: 0 V UA
Pin 2: 0 V US
Pin 3: FE
Pin 4: +24 V US / 9 A
Pin 5: +24 V UA / 9 A

=V1SF0PG3+.UC52/1

=V1SF0PG5+.UC54/1

			Date	1/11/2023	Volvo Trucks North America	Valiant TMS	TP700: S020 Display 1	Drawing name: =2V10&EFS-EL		= V1SF0PG4	
			Ed.	MKLEPADLO						+ V1UC53	
			Appr		P6700 Bodyside RH - Robot Cell 2V10			Document type: EFS	Project nr: 22-16150		Page 1
Modification	Date	Name	Original		Replacement of	Replaced by	Scale 1:1				1579

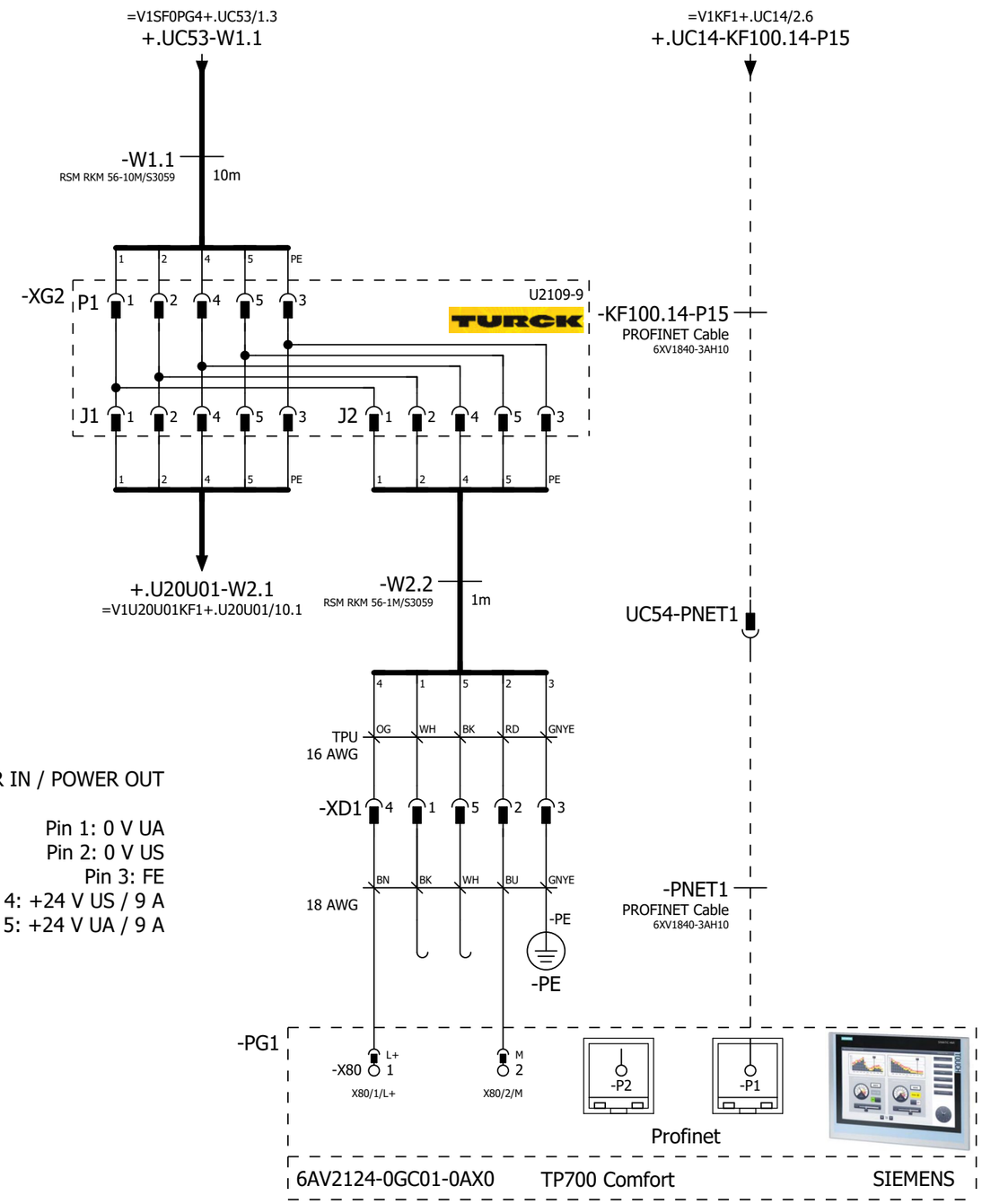

Pin #	WIRE	COLOR
Pin 1	N/C	BK
Pin 2	M	BU
Pin 3	PE	GNYE
Pin 4	L+	BN
Pin 5	N/C	WH

POWER IN / POWER OUT

Pin 1: 0 V UA
Pin 2: 0 V US
Pin 3: FE
Pin 4: +24 V US / 9 A
Pin 5: +24 V UA / 9 A

=V1SF0PG4+.UC53/1

=V1SF0SF1+.UC71/1

			Date	1/11/2023	Volvo Trucks North America	Valiant TMS	TP700: S020 Display 2	Drawing name: =2V10&EFS-EL	= V1SF0PG5	
			Ed.	MKLEPADLO					+ V1UC54	
			Appr		P6700 Bodyside RH - Robot Cell 2V10			Document type: EFS	Project nr: 22-16150	Page 1
Modification	Date	Name	Original		Replacement of / Replaced by	Scale 1:1				1579

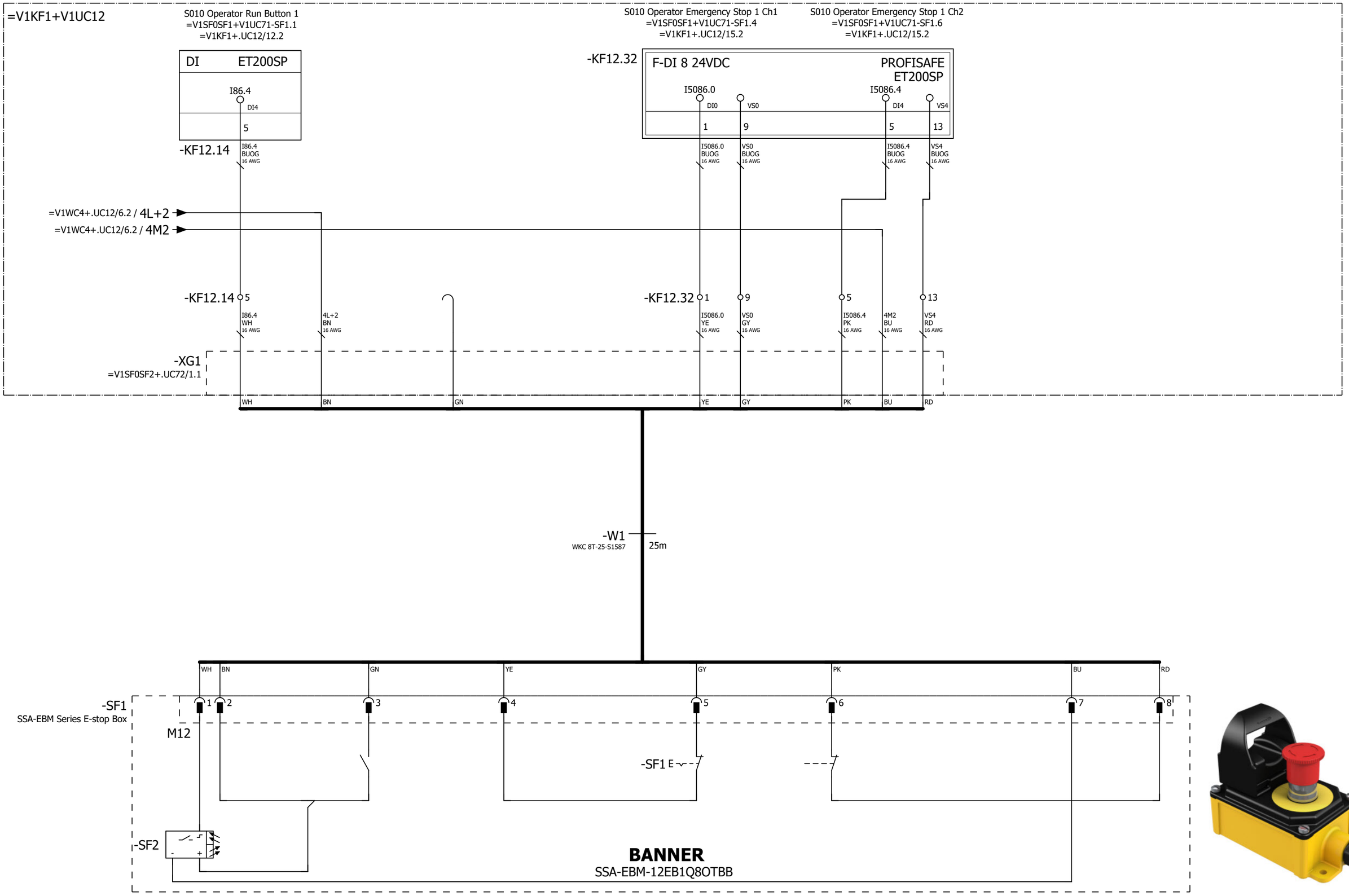

=V1SF0PG5+.UC54/1

=V1SF0SF2+.UC72/1

			Date	1/11/2023	Volvo Trucks North America	Valiant TMS	S010 Operating box RB1	Drawing name: =2V10&EFS-EL	= V1SF0SF1		
			Ed.	MKLEPADLO					+ V1UC71		
			Appr		P6700 Bodyside RH - Robot Cell 2V10			Document type: EFS	Project nr: 22-16150	Page	1
Modification	Date	Name	Original		Replacement of	Replaced by	Scale 1:1				1579

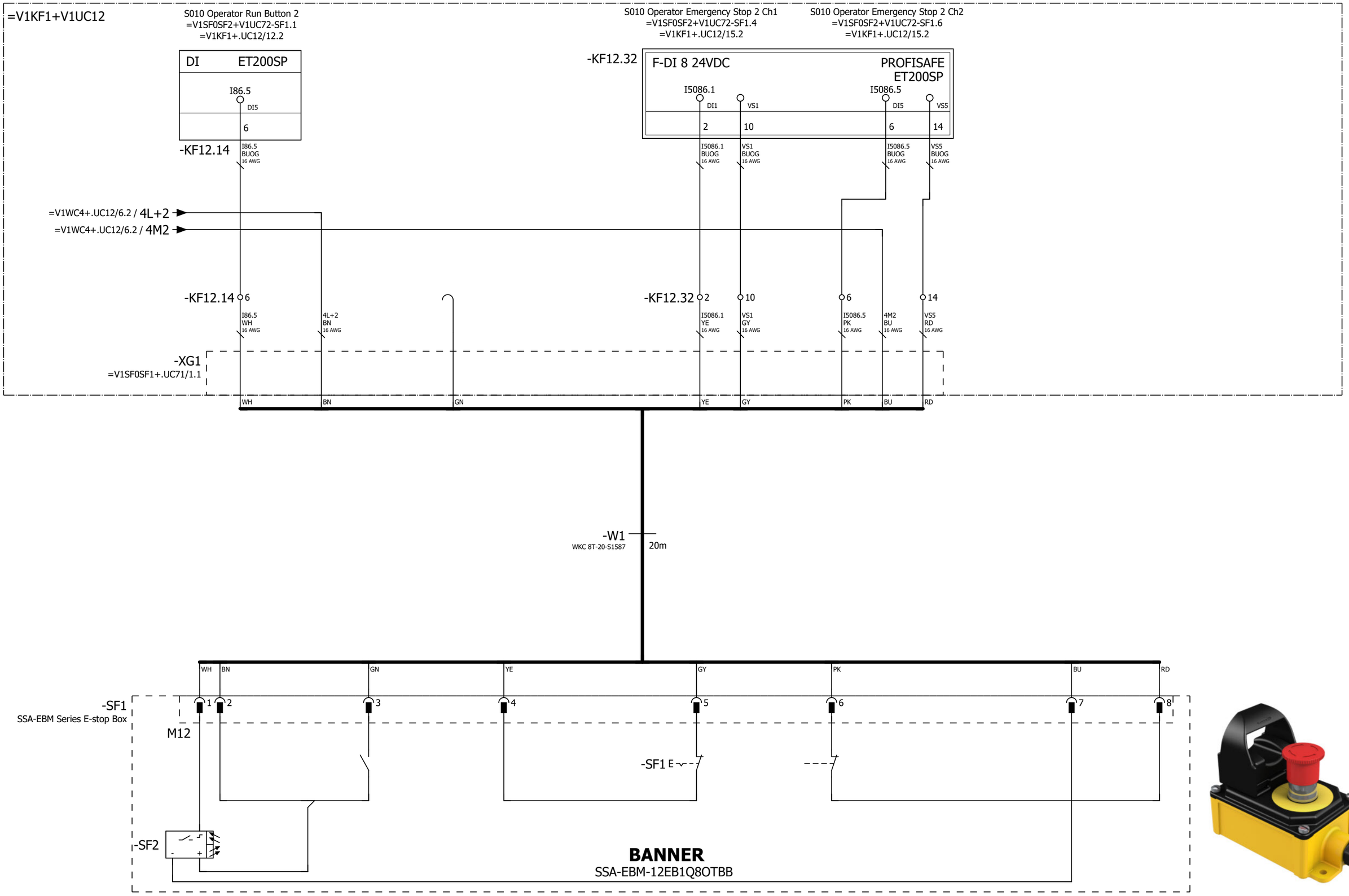

=V1SF0SF1+.UC71/1

=V1SF0SF3+.UC73/1

			Date	1/11/2023	Volvo Trucks North America	Valiant TMS	S010 Operating box RB2	Drawing name: =2V10&EFS-EL		= V1SF0SF2	
			Ed.	MKLEPADLO						+ V1UC72	
			Appr		P6700 Bodyside RH - Robot Cell 2V10			Document type: EFS	Project nr: 22-16150		Page 1
Modification	Date	Name	Original		Replacement of	Replaced by	Scale 1:1				1579

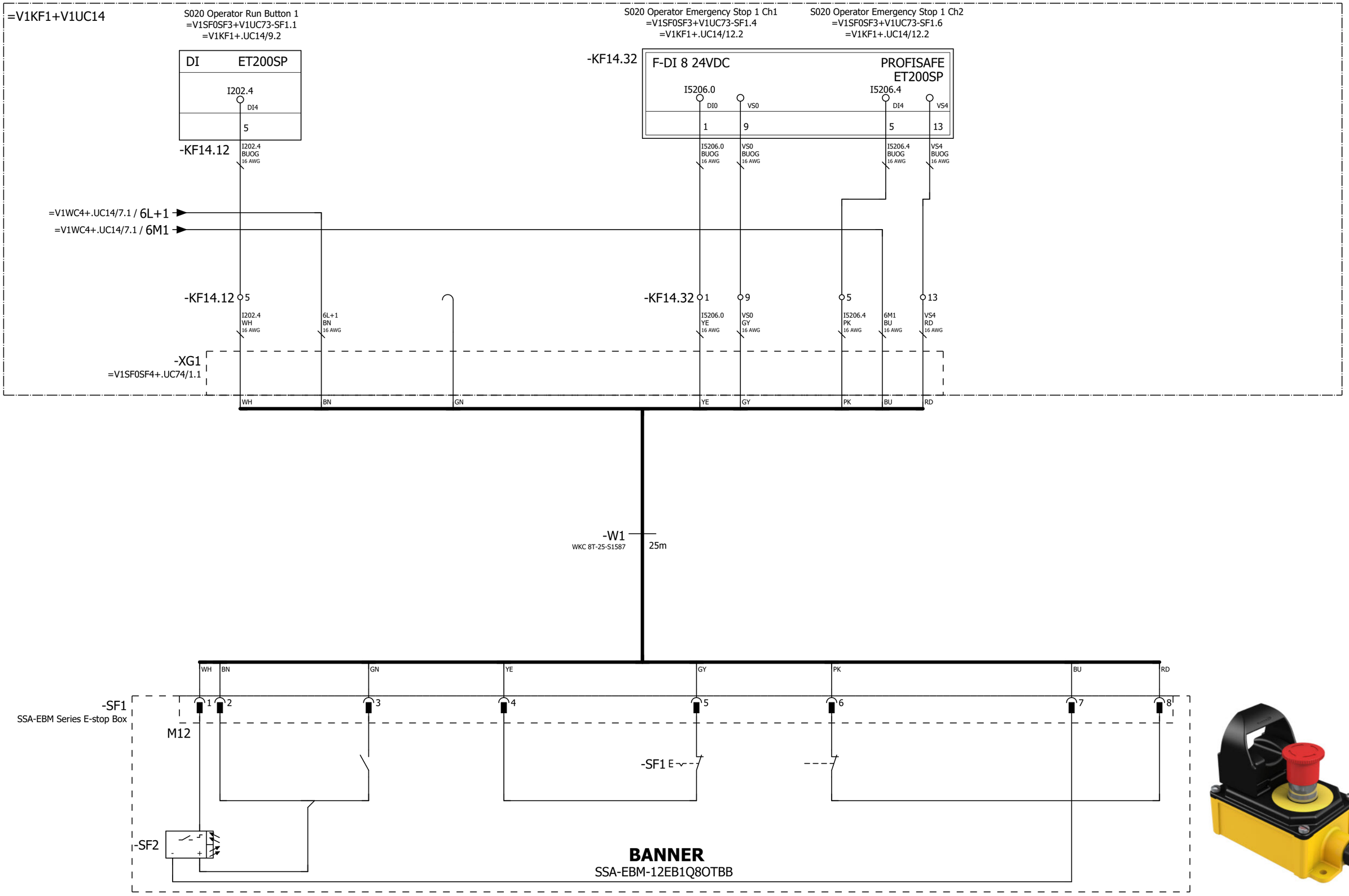

=V1SF0SF2+.UC72/1

=V1SF0SF4+.UC74/1

			Date	1/11/2023	Volvo Trucks North America		Valiant TMS	S020 Operating box RB1	Drawing name: =2V10&EFS-EL	= V1SF0SF3	
			Ed.	MKLEPADLO						+ V1UC73	
			Appr		P6700 Bodyside RH - Robot Cell 2V10				Document type: EFS	Project nr: 22-16150	Page 1
Modification	Date	Name	Original		Replacement of	Replaced by	Scale 1:1				1579

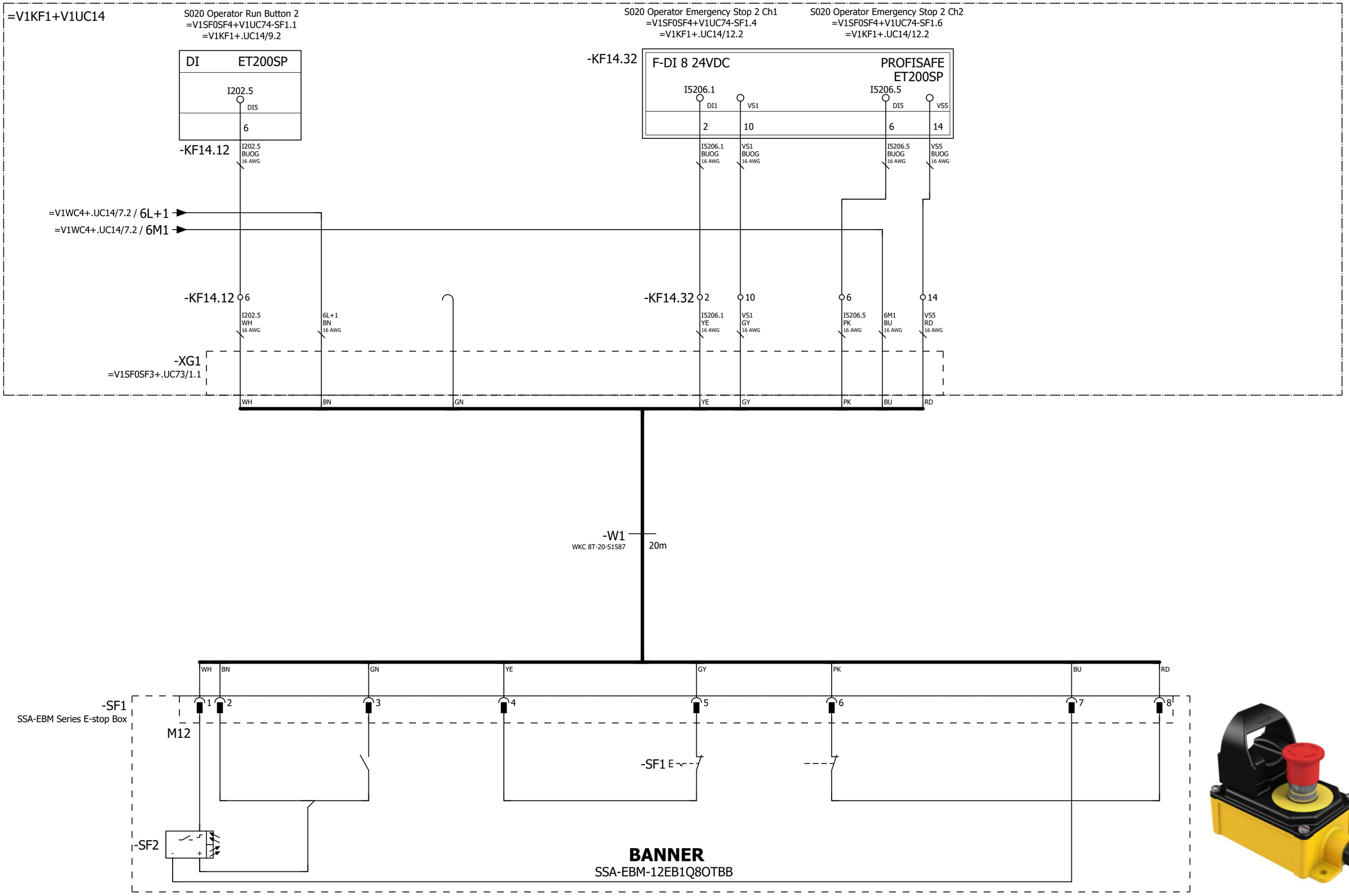

=V1SF0SF3+.UC73/1

=V1U10FQ1+.U10/1

			Date	1/11/2023	Volvo Trucks North America		Valiant TMS	S020 Operating box RB2	Drawing name: =2V10&EFS-EL	= V1SF0SF4	
			Ed.	MKLEPADLO						+ V1UC74	
			Appr		P6700 Bodyside RH - Robot Cell 2V10				Document type: EFS	Project nr: 22-16150	Page 1
Modification	Date	Name	Original		Replacement of	Replaced by	Scale 1:1				1579

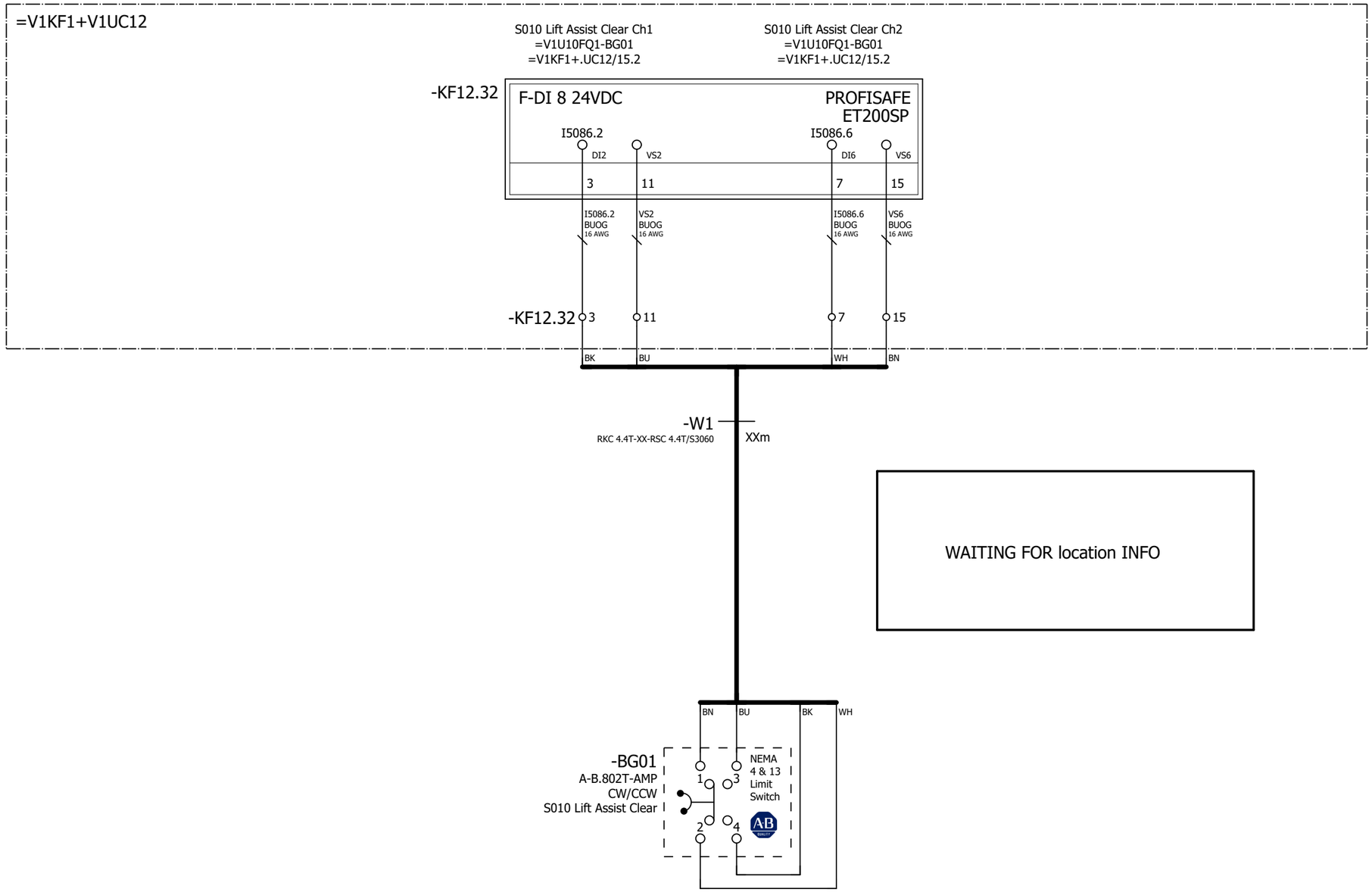

=V1SF0SF4+.UC74/1

=V1U10U01KF1+.U10U01/10

			Date	1/11/2023	Volvo Trucks North America		Valiant TMS	S010 Lift Assist Safety Switch	Drawing name: =2V10&EFS-EL	= V1U10FQ1	
			Ed.	MKLEPADLO						+ V1U10	
			Appr		P6700 Bodyside RH - Robot Cell 2V10				Document type: EFS	Project nr: 22-16150	Page 1
Modification	Date	Name	Original		Replacement of	Replaced by	Scale 1:1				1579

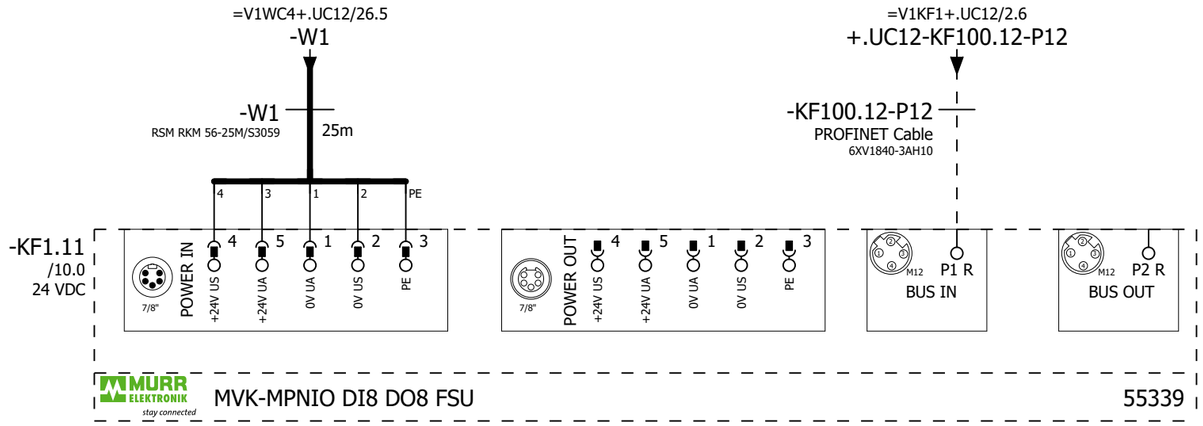

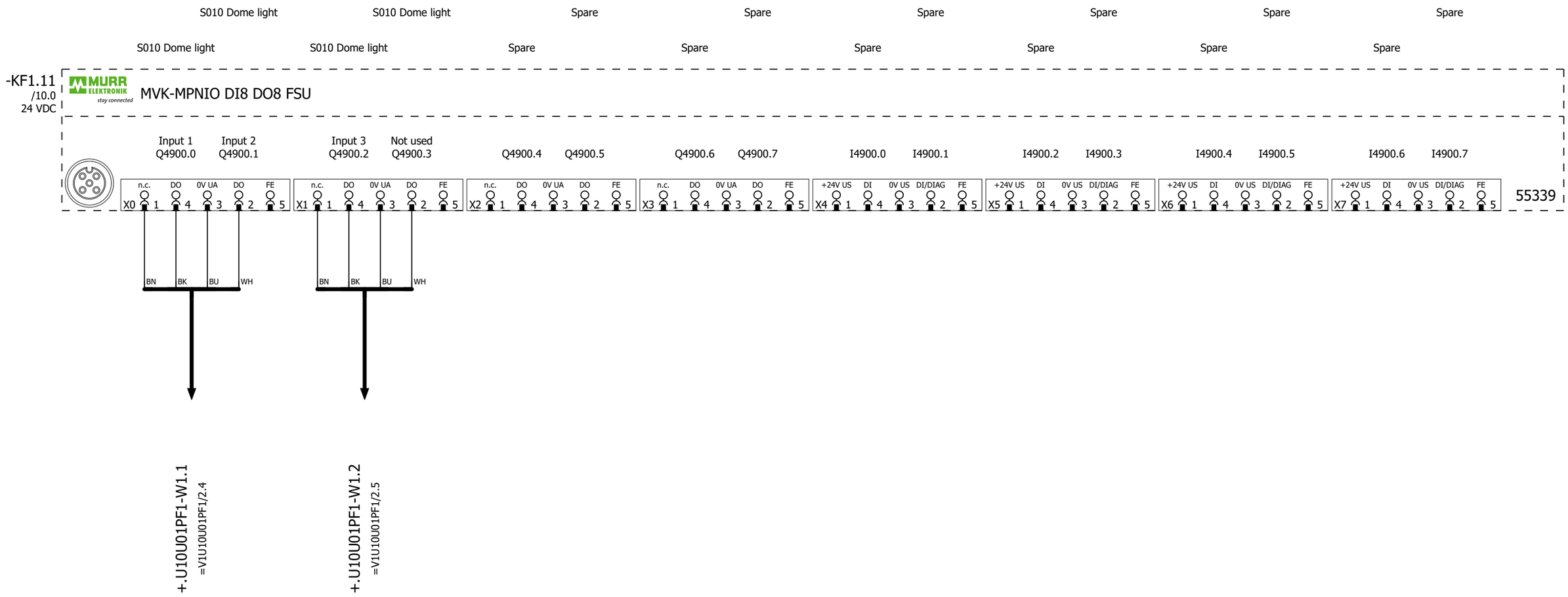

=V1U10FQ1+V1U10/1

=V1U10U01PF1/2

			Date	1/11/2023	Volvo Trucks North America	Valiant TMS	MURR MODULE 8 IN/ 8 OUT	Drawing name: =2V10&EFS-EL		= V1U10U01KF1		
			Ed.	MKLEPADLO						+ V1U10U01		
			Appr		P6700 Bodyside RH - Robot Cell 2V10			Document type: EFS	Project nr: 22-16150		Page	10
Modification	Date	Name	Original		Replacement of / Replaced by	Scale 1:1						1579

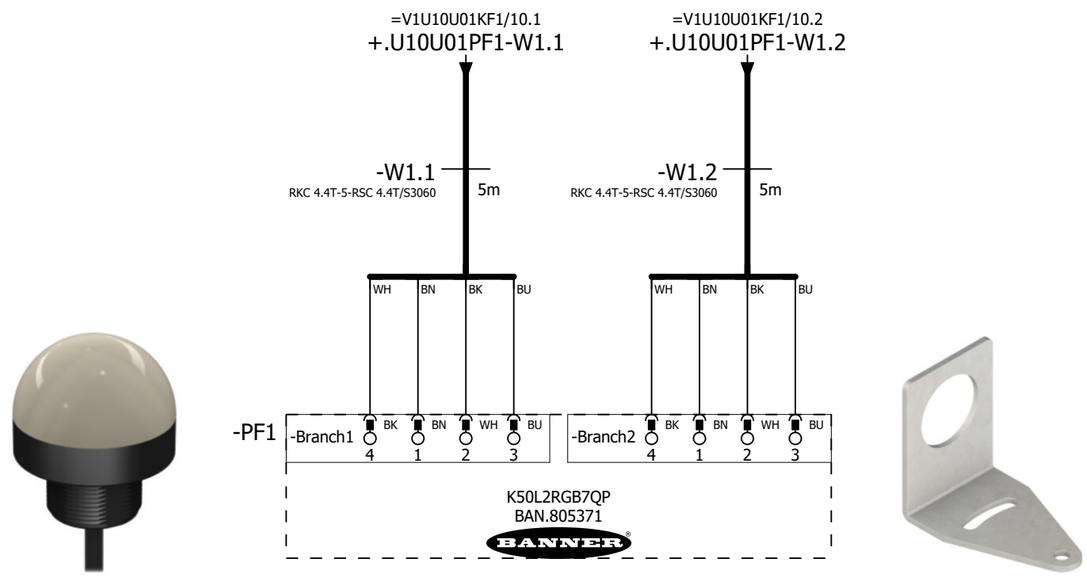

Table 1: Default Color Definition

	Red	Yellow	Green	Cyan	Blue	Magenta	White
Input 1	X	X				X	X
Input 2		X	X	X			X
Input 3				X	X	X	X

=V1U10U01KF1/10

=V1U20U01KF1+.U20U01/10

			Date	1/11/2023	Volvo Trucks North America	Valiant TMS	Station Dome Light	Drawing name: =2V10&EFS-EL	= V1U10U01PF1
			Ed.	MKLEPADLO					+ V1U10U01
			Appr		P6700 Bodyside RH - Robot Cell 2V10			Document type: EFS / Project nr: 22-16150	Page 2 / 1579
Modification	Date	Name	Original		Replacement of / Replaced by	Scale 1:1			

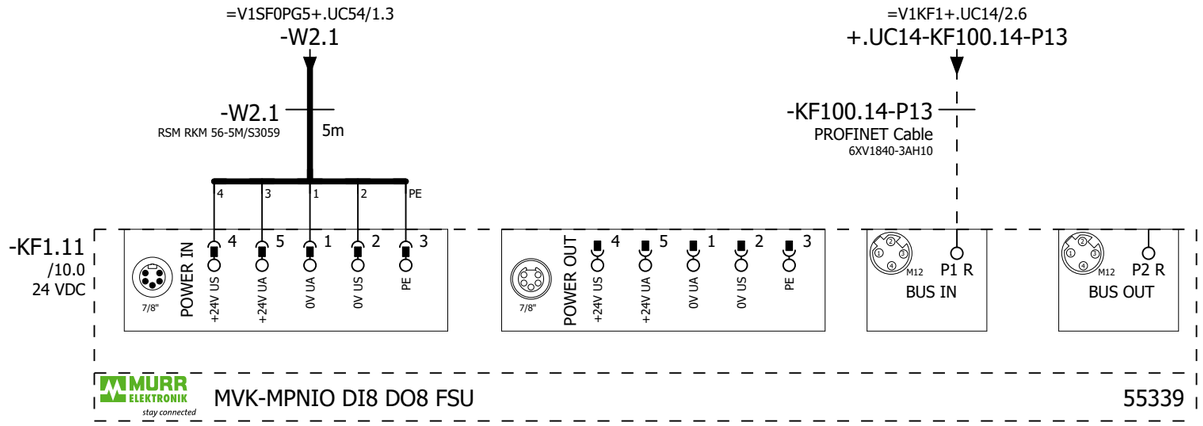

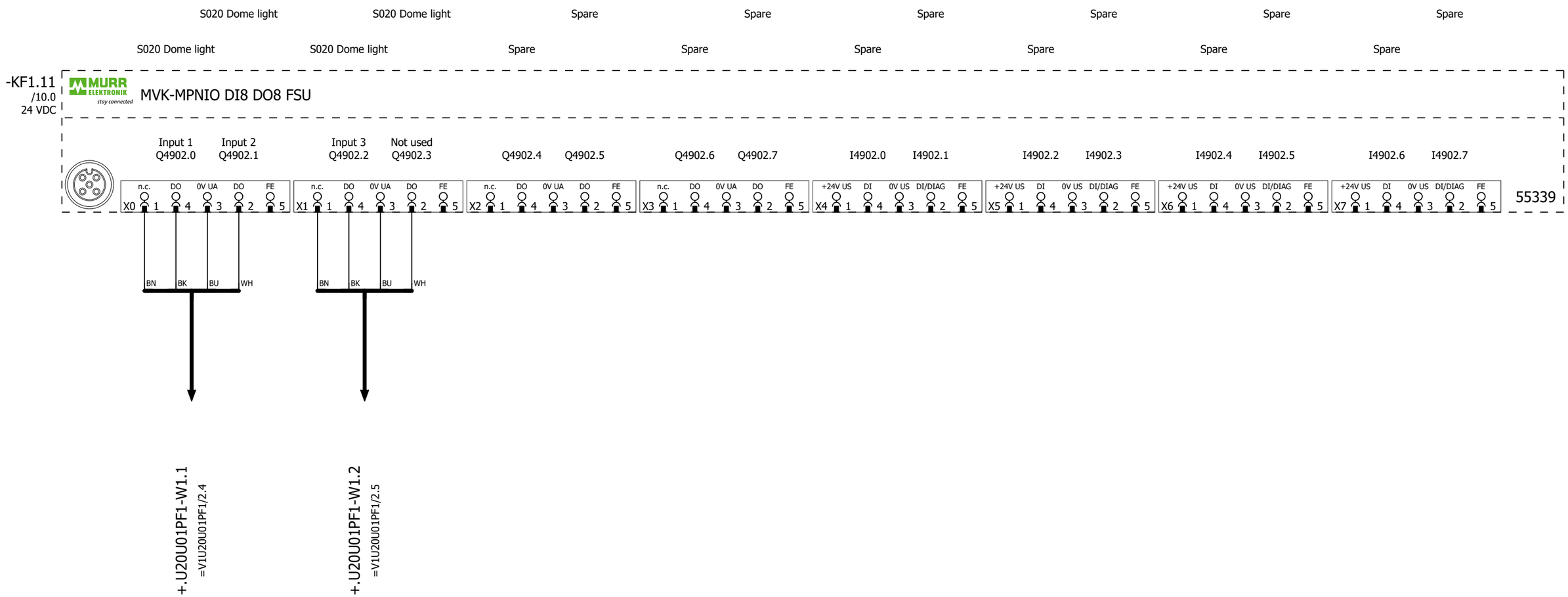

=V1U10U01PF1+.U10U01/2

=V1U20U01PF1/2

			Date	1/11/2023	Volvo Trucks North America	Valiant TMS	MURR MODULE 8 IN/ 8 OUT	Drawing name: =2V10&EFS-EL		= V1U20U01KF1		
			Ed.	MKLEPADLO						+ V1U20U01		
			Appr		P6700 Bodyside RH - Robot Cell 2V10			Document type: EFS	Project nr: 22-16150		Page	10
Modification	Date	Name	Original		Replacement of / Replaced by	Scale 1:1						1579

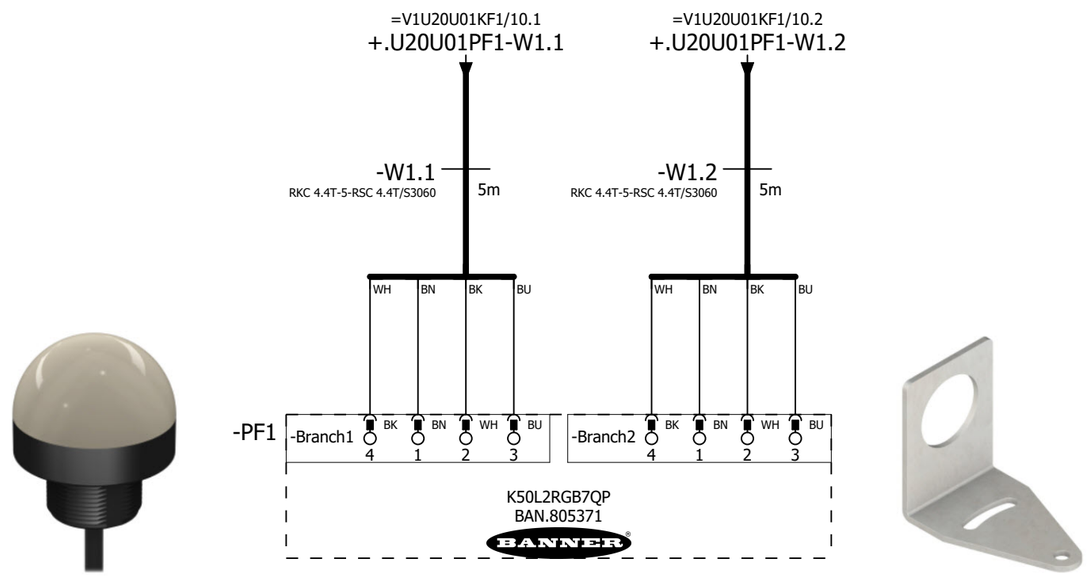

Table 1: Default Color Definition

	Red	Yellow	Green	Cyan	Blue	Magenta	White
Input 1	X	X				X	X
Input 2		X	X	X			X
Input 3				X	X	X	X

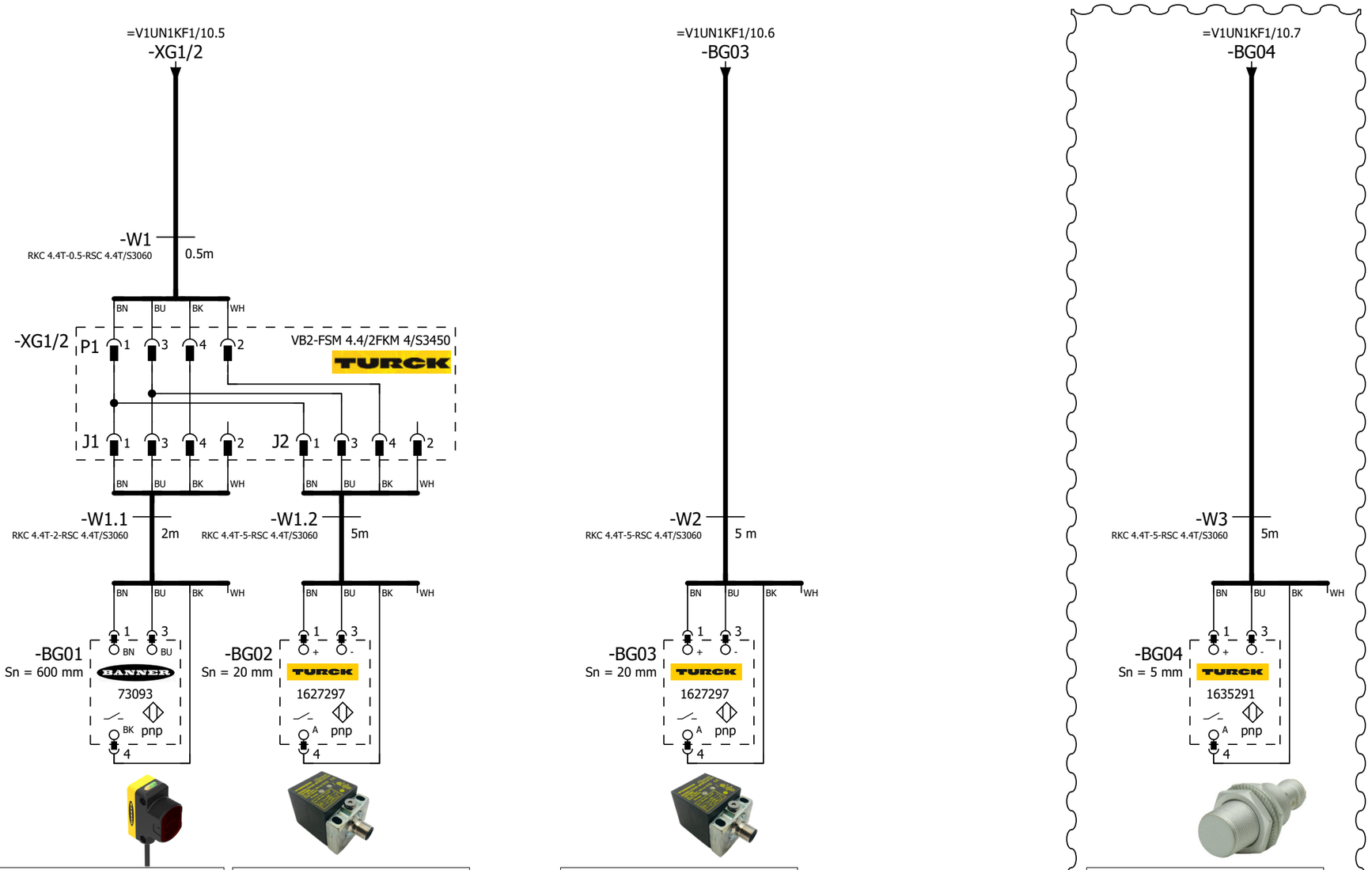

=V1UN1 -BG01 Common Part Present	=V1UN1 -BG02 Close Position Pull Out Cart Switch	=V1UN1 -BG03 Close Position Pull Out Cart Switch	=V1UN1 -BG04 Pullout Cart Lock Pin In Position

=V1U20U01PF1+.U20U01/2

=V1UN1FQ1/1

			Date	1/17/2023	Volvo Trucks North America	Valiant TMS	SENSORS	Drawing name: =2V10&EFS-EL	= V1UN1BG0
			Ed.	MKLEPADLO					+ V1UN1
			Appr		P6700 Bodyside RH - Robot Cell 2V10			Document type: EFS / Project nr: 22-16150	Page 1
Modification	Date	Name	Original		Replacement of / Replaced by	Scale 1:1			1579

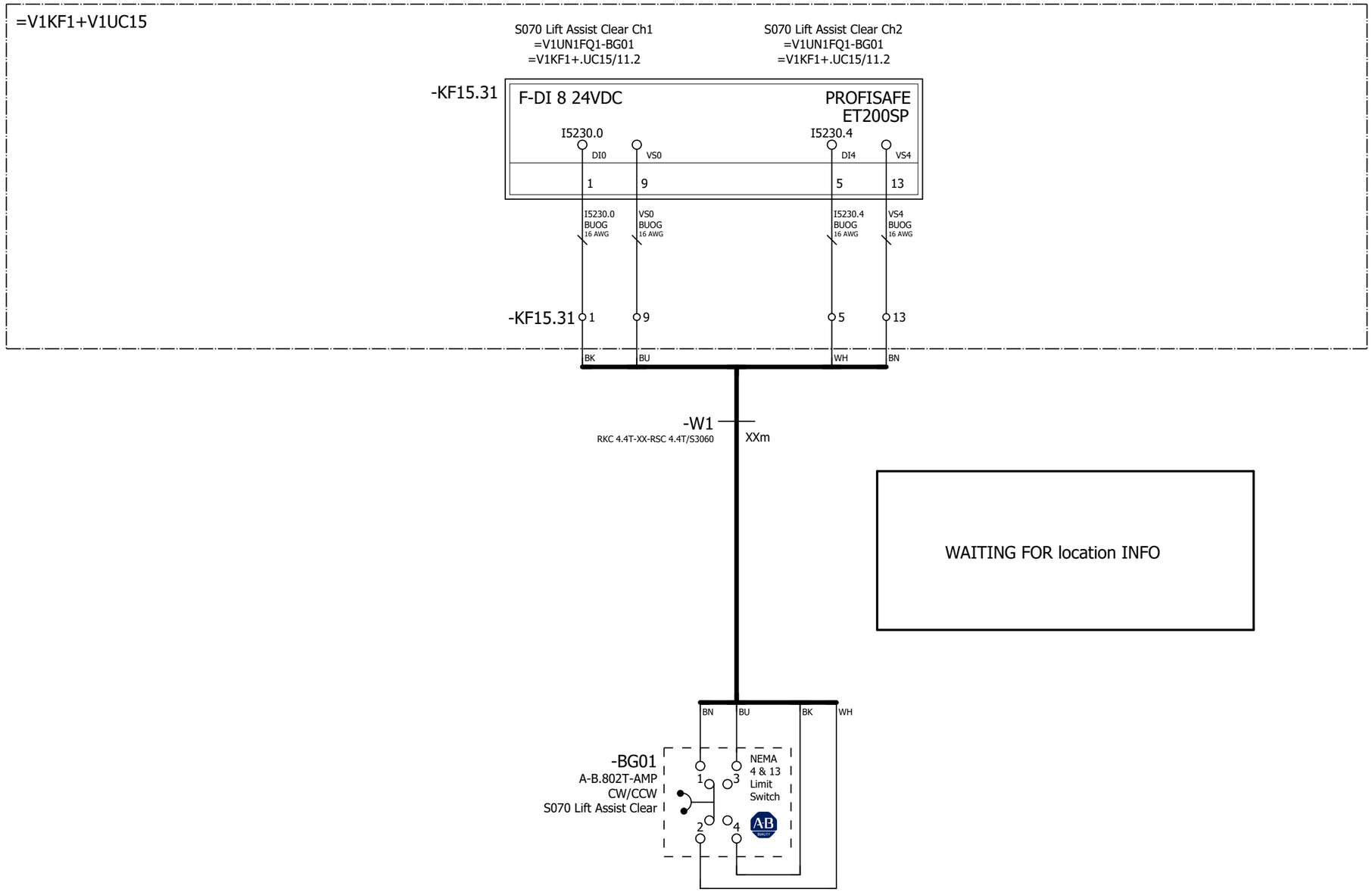

=V1UN1BG0/1

=V1UN1KF1/10

			Date	1/11/2023	Volvo Trucks North America	Valiant TMS	S070 Lift Assist Safety Switch	Drawing name: =2V10&EFS-EL		= V1UN1FQ1	
			Ed.	MKLEPADLO						+ V1UN1	
			Appr		P6700 Bodyside RH - Robot Cell 2V10			Document type: EFS	Project nr: 22-16150		Page 1
Modification	Date	Name	Original		Replacement of	Replaced by	Scale 1:1				1579

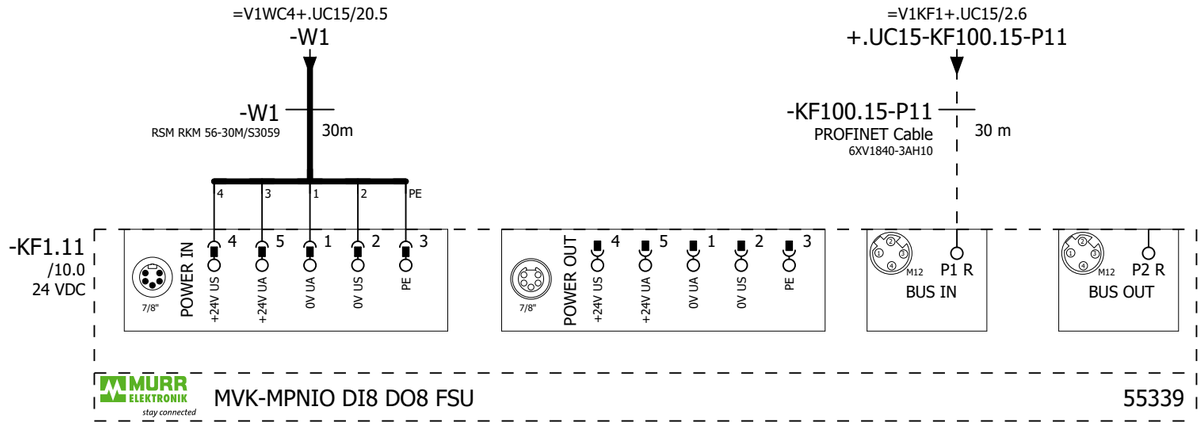

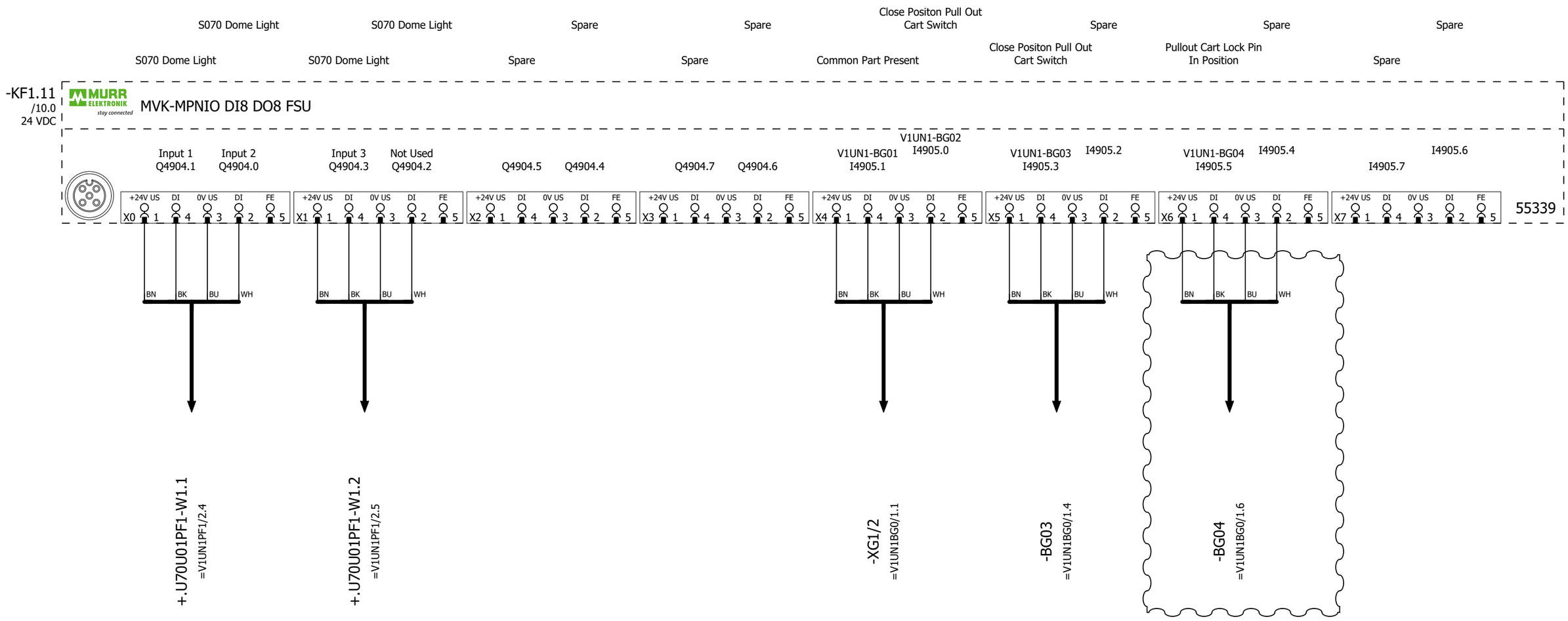

=V1UN1FQ1/1

=V1UN1PF1/2

			Date	1/17/2023	Volvo Trucks North America	Valiant TMS	MURR MODULE 8 IN/ 8 OUT	Drawing name: =2V10&EFS-EL		= V1UN1KF1	
			Ed.	MKLEPADLO						+ V1UN1	
			Appr		P6700 Bodyside RH - Robot Cell 2V10			Document type: EFS	Project nr: 22-16150	Page	10
Modification	Date	Name	Original		Replacement of / Replaced by	Scale 1:1					1579

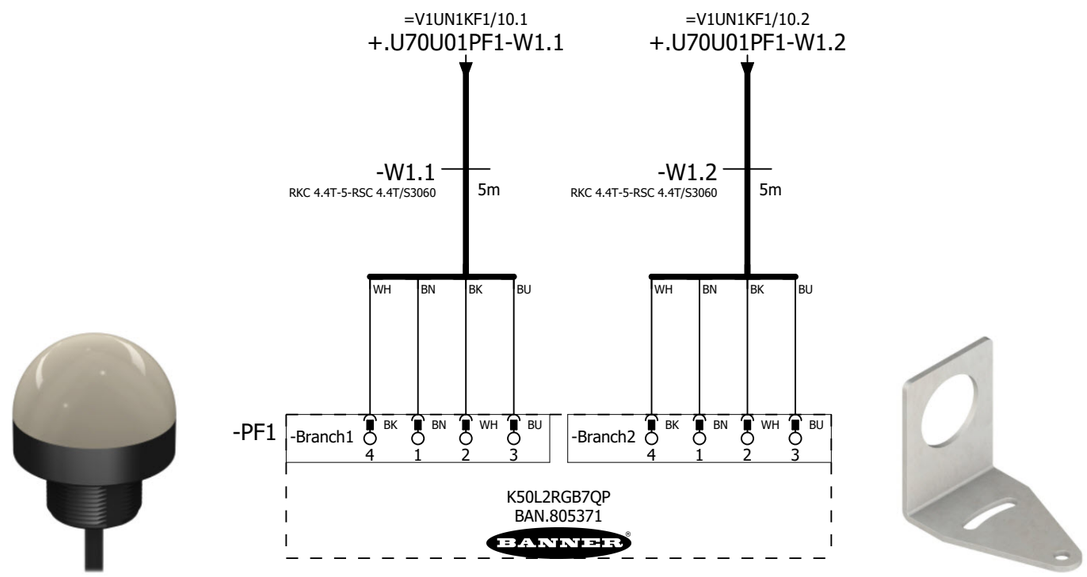

Table 1: Default Color Definition

	Red	Yellow	Green	Cyan	Blue	Magenta	White
Input 1	X	X				X	X
Input 2		X	X	X			X
Input 3				X	X	X	X

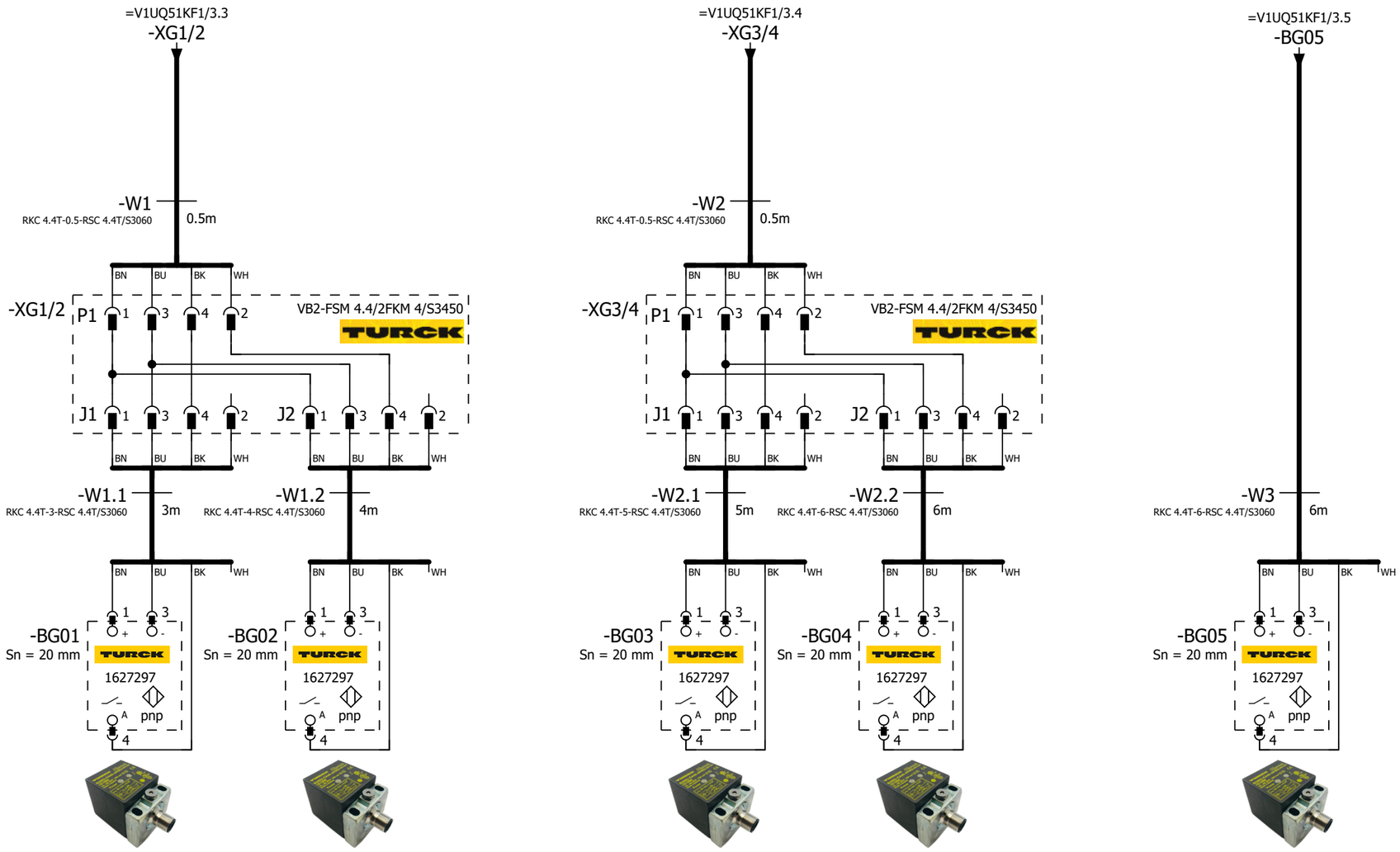

=V1UQ51 -BG01 Day Cab 78522975	=V1UQ51 -BG02 Day Cab 78522975	=V1UQ51 -BG03 Sleeper L230 78521360	=V1UQ51 -BG04 Sleeper L290 78522139

=V1UQ51 -BG05 Sleeper L320 78519674	

=V1UN1PF1+.UN1/2

=V1UQ51KF1/1

			Date	1/11/2023	Volvo Trucks North America		Valiant TMS	SENSORS	Drawing name: =2V10&EFS-EL	= V1UQ51BG0	
			Ed.	MKLEPADLO						+ V1UQ51	
			Appr		P6700 Bodyside RH - Robot Cell 2V10				Document type: EFS	Project nr: 22-16150	Page 1
Modification	Date	Name	Original		Replacement of	Replaced by	Scale 1:1				1579

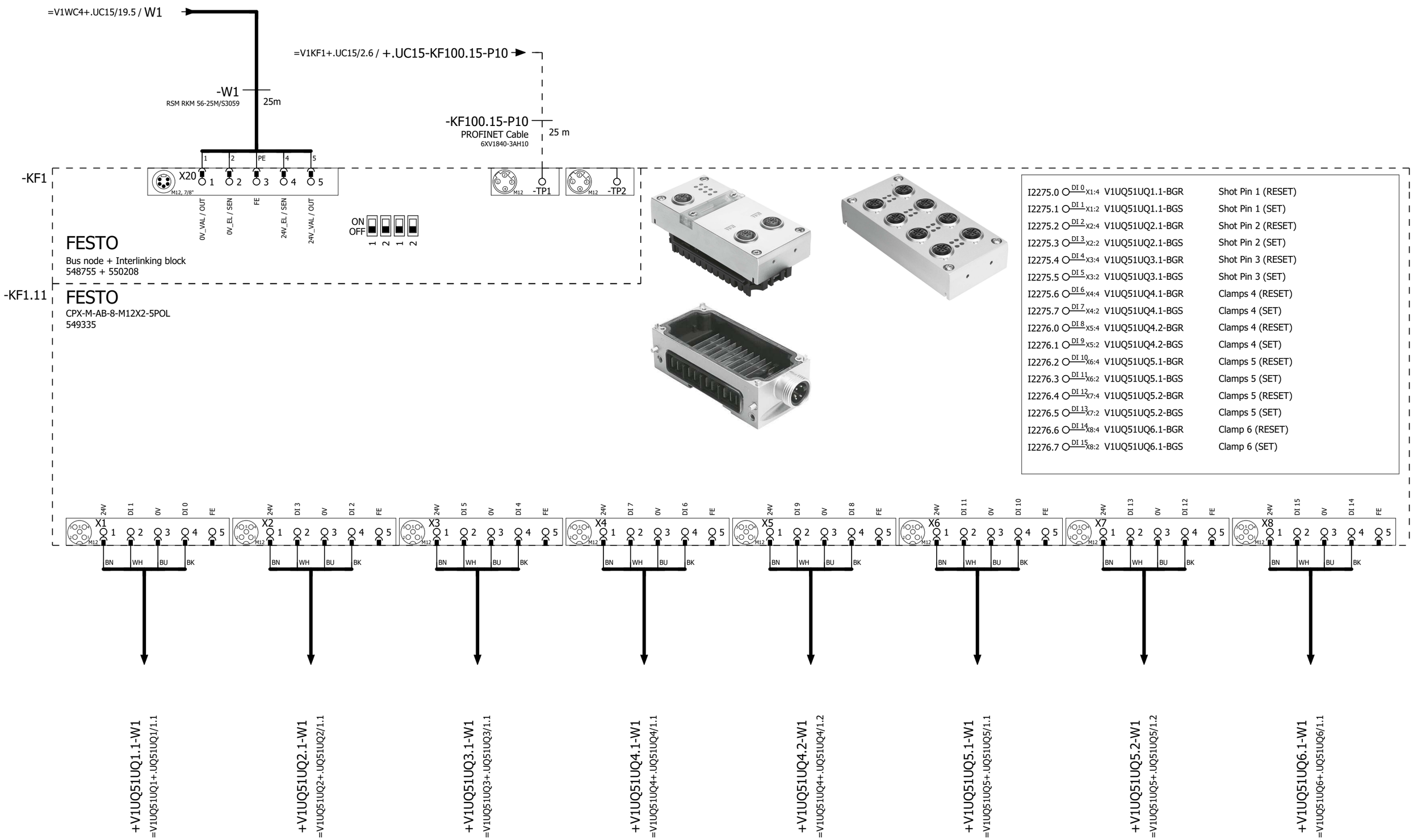

=V1UQ51BG0/1

2

			Date	1/11/2023	Volvo Trucks North America	Valiant TMS	CONNECTING MOD. FOR VTSA MANIFOLD	Drawing name: =2V10&EFS-EL		= V1UQ51KF1	
			Ed.	MKLEPADLO						+ V1UQ51	
			Appr		P6700 Bodyside RH - Robot Cell 2V10			Document type: EFS	Project nr: 22-16150		Page 1
Modification	Date	Name	Original		Replacement of	Replaced by	Scale 1:1				1579

I2277.0	DI 0 X1:4	V1UQ51UQ7.1-BGR	Clamps 7 (RESET)
I2277.1	DI 1 X1:2	V1UQ51UQ7.1-BGS	Clamps 7 (SET)
I2277.2	DI 2 X2:4	V1UQ51UQ7.2-BGR	Clamps 7 (RESET)
I2277.3	DI 3 X2:2	V1UQ51UQ7.2-BGS	Clamps 7 (SET)
I2277.4	DI 4 X3:4	V1UQ51UQ7.3-BGR	Clamps 7 (RESET)
I2277.5	DI 5 X3:2	V1UQ51UQ7.3-BGS	Clamps 7 (SET)
I2277.6	DI 6 X4:4	V1UQ51UQ7.4-BGR	Clamps 7 (RESET)
I2277.7	DI 7 X4:2	V1UQ51UQ7.4-BGS	Clamps 7 (SET)
I2278.0	DI 8 X5:4	V1UQ51UQ7.5-BGR	Clamps 7 (RESET)
I2278.1	DI 9 X5:2	V1UQ51UQ7.5-BGS	Clamps 7 (SET)
I2278.2	DI 10 X6:4	V1UQ51UQ8.1-BGR	Clamp 8 (RESET)
I2278.3	DI 11 X6:2	V1UQ51UQ8.1-BGS	Clamp 8 (SET)
I2278.4	DI 12 X7:4	V1UQ51UQ9.1-BGR	Clamps 9 (RESET)
I2278.5	DI 13 X7:2	V1UQ51UQ9.1-BGS	Clamps 9 (SET)
I2278.6	DI 14 X8:4	V1UQ51UQ9.2-BGR	Clamps 9 (RESET)
I2278.7	DI 15 X8:2	V1UQ51UQ9.2-BGS	Clamps 9 (SET)

-KF1.12

FESTO

CPX-M-AB-8-M12X2-5POL

549335

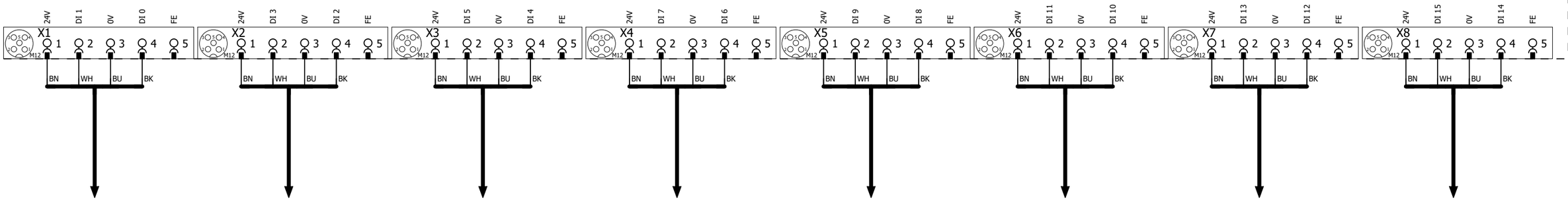

+V1UQ51UQ7.1-W1
=V1UQ51UQ7+.UQ51UQ7/1.1

+V1UQ51UQ7.2-W1
=V1UQ51UQ7+.UQ51UQ7/1.2

+V1UQ51UQ7.3-W1
=V1UQ51UQ7+.UQ51UQ7/1.4

+V1UQ51UQ7.4-W1
=V1UQ51UQ7+.UQ51UQ7/1.5

+V1UQ51UQ7.5-W1
=V1UQ51UQ7+.UQ51UQ7/1.7

+V1UQ51UQ8.1-W1
=V1UQ51UQ8+.UQ51UQ8/1.1

+V1UQ51UQ9.1-W1
=V1UQ51UQ9+.UQ51UQ9/1.1

+V1UQ51UQ9.2-W1
=V1UQ51UQ9+.UQ51UQ9/1.2

I2279.0	DI 0 X1:4	V1UQ51UQ10.1-BGR	Clamps 10 (RESET)
I2279.1	DI 1 X1:2	V1UQ51UQ10.1-BGS	Clamps 10 (SET)
I2279.2	DI 2 X2:4	V1UQ51UQ10.2-BGR	Clamps 10 (RESET)
I2279.3	DI 3 X2:2	V1UQ51UQ10.2-BGS	Clamps 10 (SET)
I2279.4	DI 4 X3:4	V1UQ51-BG01	Sensor Day Cab 78522975
I2279.5	DI 5 X3:2	V1UQ51-BG02	Sensor Day Cab 78522975
I2279.6	DI 6 X4:4	V1UQ51-BG03	Sensor Sleeper L230 78521360
I2279.7	DI 7 X4:2	V1UQ51-BG04	Sensor Sleeper L290 78522139
I2280.0	DI 8 X5:4	V1UQ51-BG05	Sensor Sleeper L320 78519674
I2280.1	DI 9 X5:2	I2280.1	Spare
I2280.2	DI 10 X6:4	I2280.2	Spare
I2280.3	DI 11 X6:2	I2280.3	Spare
I2280.4	DI 12 X7:4	I2280.4	Spare
I2280.5	DI 13 X7:2	I2280.5	Spare
I2280.6	DI 14 X8:4	I2280.6	Spare
I2280.7	DI 15 X8:2	I2280.7	Spare

-KF1.13

FESTO
CPX-M-AB-8-M12X2-5POL
549335

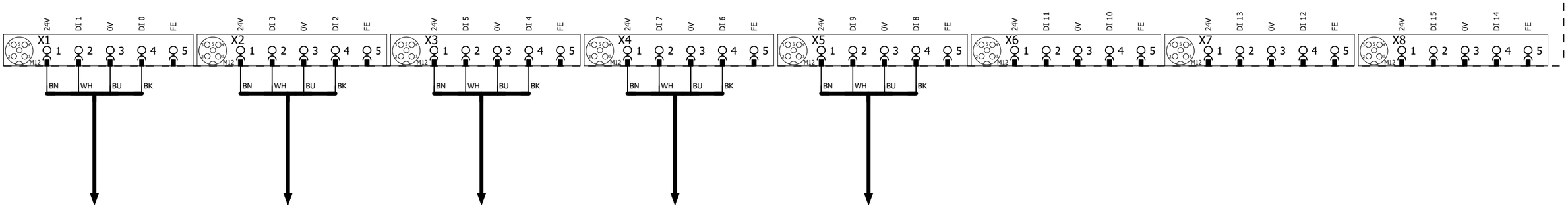

+V1UQ51UQ10.1-W1
=V1UQ51UQ10+.UQ51UQ10/1.1

+V1UQ51UQ10.2-W1
=V1UQ51UQ10+.UQ51UQ10/1.2

-XG1/2
=V1UQ51BG0/1.1

-XG3/4
=V1UQ51BG0/1.4

-BG05
=V1UQ51BG0/1.6

2 4

			Date	1/11/2023	Volvo Trucks North America	Valiant TMS	I/O MOD. DI16 (8 x M12) FOR VTSA-F	Drawing name: =2V10&EFS-EL		= V1UQ51KF1	
			Ed.	MKLEPADLO						+ V1UQ51	
			Appr		P6700 Bodyside RH - Robot Cell 2V10			Document type: EFS	Project nr: 22-16150		Page 3
Modification	Date	Name	Original		Replacement of / Replaced by	Scale 1:1					1579

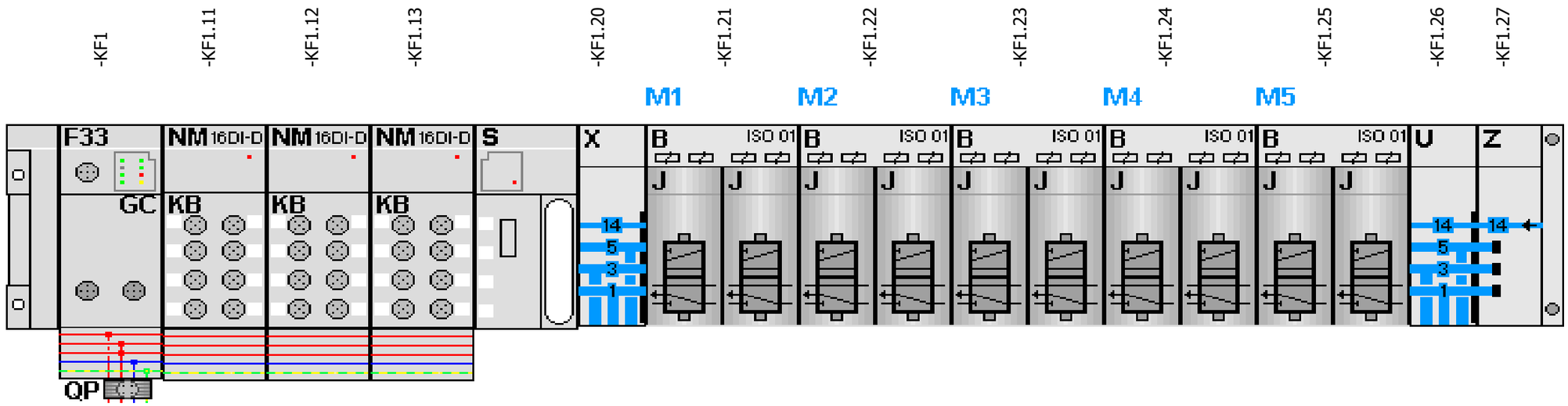

-KF1.21

=V1UQ51UQ1+.UQ51UQ1/1.3
=V1UQ51UQ2+.UQ51UQ2/1.3

FESTO

=V1UQ51UQ1+.UQ51UQ1/1.4	Q2275.0 DO 0 1.1	-QN1.1_Q	Shot Pin 1 (RST)
=V1UQ51UQ1+.UQ51UQ1/1.4	Q2275.1 DO 1 1.2	-QN1.2_Q	Shot Pin 1 (SET)
=V1UQ51UQ2+.UQ51UQ2/1.4	Q2275.2 DO 2 2.1	-QN2.1_Q	Shot Pin 2 (RST)
=V1UQ51UQ2+.UQ51UQ2/1.4	Q2275.3 DO 3 2.2	-QN2.2_Q	Shot Pin 2 (SET)

-KF1.22

=V1UQ51UQ3+.UQ51UQ3/1.3
=V1UQ51UQ4+.UQ51UQ4/1.3

FESTO

=V1UQ51UQ3+.UQ51UQ3/1.4	Q2275.4 DO 0 1.1	-QN3.1_Q	Shot Pin 3 (RST)
=V1UQ51UQ3+.UQ51UQ3/1.4	Q2275.5 DO 1 1.2	-QN3.2_Q	Shot Pin 3 (SET)
=V1UQ51UQ4+.UQ51UQ4/1.4	Q2275.6 DO 2 2.1	-QN4.1_Q	Clamps 4 (RST)
=V1UQ51UQ4+.UQ51UQ4/1.4	Q2275.7 DO 3 2.2	-QN4.2_Q	Clamps 4 (SET)

-KF1.23

=V1UQ51UQ5+.UQ51UQ5/1.3
=V1UQ51UQ6+.UQ51UQ6/1.3

FESTO

=V1UQ51UQ5+.UQ51UQ5/1.4	Q2276.0 DO 0 1.1	-QN5.1_Q	Clamps 5 (RST)
=V1UQ51UQ5+.UQ51UQ5/1.4	Q2276.1 DO 1 1.2	-QN5.2_Q	Clamps 5 (SET)
=V1UQ51UQ6+.UQ51UQ6/1.4	Q2276.2 DO 2 2.1	-QN6.1_Q	Clamp 6 (RST)
=V1UQ51UQ6+.UQ51UQ6/1.4	Q2276.3 DO 3 2.2	-QN6.2_Q	Clamp 6 (SET)

-KF1.24

=V1UQ51UQ7+.UQ51UQ7/1.3
=V1UQ51UQ8+.UQ51UQ8/1.3

FESTO

=V1UQ51UQ7+.UQ51UQ7/1.4	Q2276.4 DO 0 1.1	-QN7.1_Q	Clamp 7 (RST)
=V1UQ51UQ7+.UQ51UQ7/1.4	Q2276.5 DO 1 1.2	-QN7.2_Q	Clamps 7 (SET)
=V1UQ51UQ8+.UQ51UQ8/1.4	Q2276.6 DO 2 2.1	-QN8.1_Q	Clamp 8 (RST)
=V1UQ51UQ8+.UQ51UQ8/1.4	Q2276.7 DO 3 2.2	-QN8.2_Q	Clamp 8 (SET)

-KF1.25

=V1UQ51UQ9+.UQ51UQ9/1.3
=V1UQ51UQ10+.UQ51UQ10/1.3

FESTO

=V1UQ51UQ9+.UQ51UQ9/1.4	Q2277.0 DO 0 1.1	-QN9.1_Q	Clamps 9 (RST)
=V1UQ51UQ9+.UQ51UQ9/1.4	Q2277.1 DO 1 1.2	-QN9.2_Q	Clamps 9 (SET)
=V1UQ51UQ10+.UQ51UQ10/1.4	Q2277.2 DO 2 2.1	-QN10.1_Q	Clamps 10 (RST)
=V1UQ51UQ10+.UQ51UQ10/1.4	Q2277.3 DO 3 2.2	-QN10.2_Q	Clamps 10 (SET)

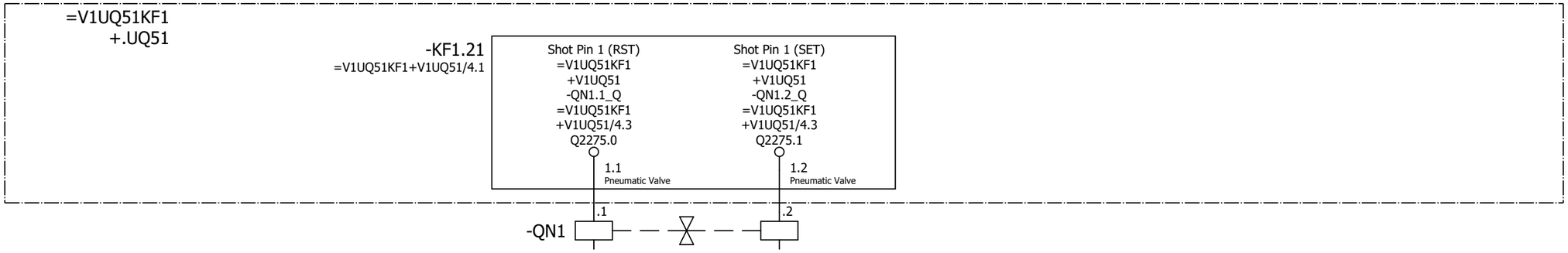

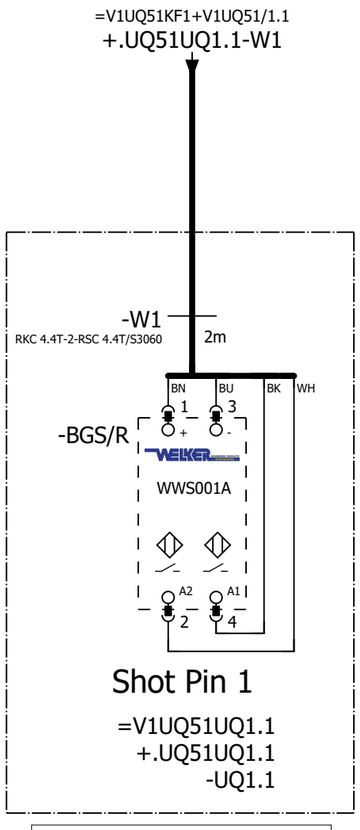

=V1UQ51
-UQ1.1-BGS/R
Shot Pin 1

=V1UQ51KF1+V1UQ51/4

=V1UQ51UQ2+.UQ51UQ2/1

			Date	1/11/2023	Volvo Trucks North America		Valiant TMS	FESTO DQ CONNECTION QN1	Drawing name: =2V10&EFS-EL	= V1UQ51UQ1	
			Ed.	MKLEPADLO						+ V1UQ51UQ1	
			Appr		P6700 Bodyside RH - Robot Cell 2V10				Document type: EFS	Project nr: 22-16150	Page 1
Modification	Date	Name	Original		Replacement of	Replaced by	Scale 1:1				1579

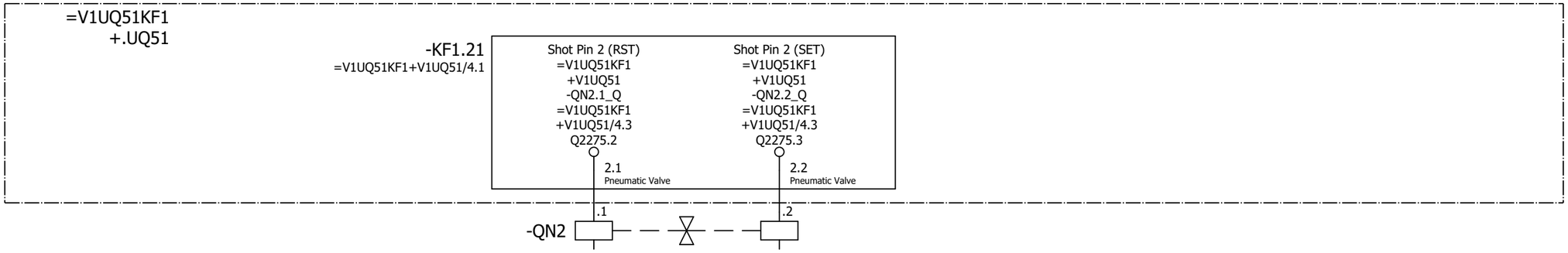

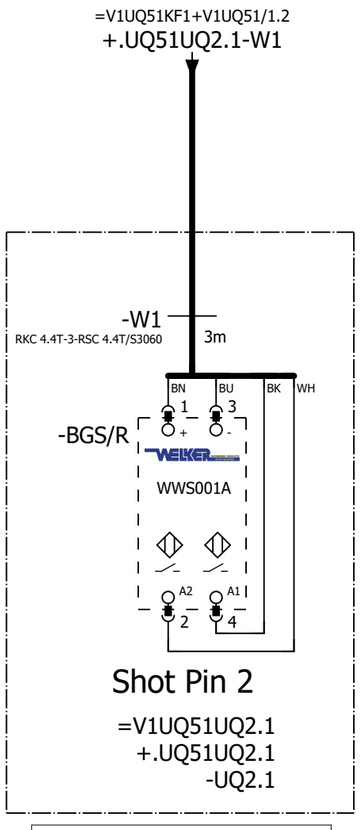

=V1UQ51
-UQ2.1-BGS/R
Shot Pin 2

=V1UQ51UQ1+.UQ51UQ1/1

=V1UQ51UQ3+.UQ51UQ3/1

			Date	1/11/2023	Volvo Trucks North America		Valiant TMS	FESTO DQ CONNECTION QN2	Drawing name: =2V10&EFS-EL	= V1UQ51UQ2	
			Ed.	MKLEPADLO						+ V1UQ51UQ2	
			Appr		P6700 Bodyside RH - Robot Cell 2V10				Document type: EFS	Project nr: 22-16150	Page 1
Modification	Date	Name	Original		Replacement of	Replaced by	Scale 1:1				1579

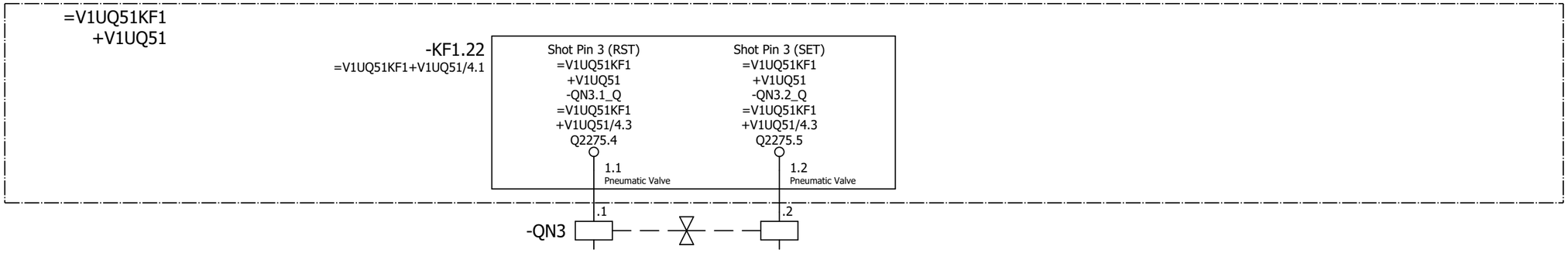

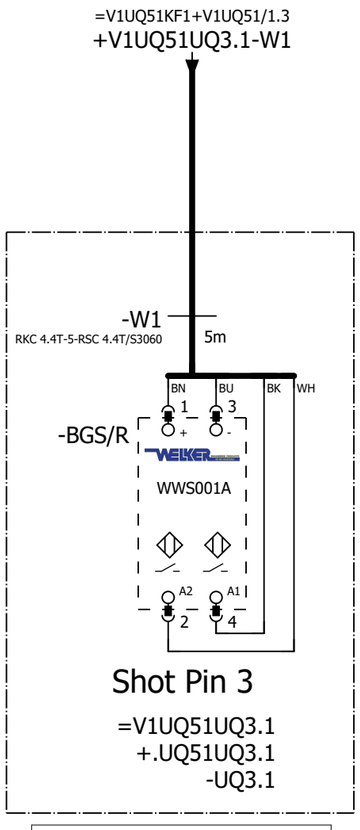

=V1UQ51
-UQ3.1-BGS/R
Shot Pin 3

=V1UQ51UQ2+.UQ51UQ2/1

=V1UQ51UQ4+.UQ51UQ4/1

			Date	1/11/2023	Volvo Trucks North America		Valiant TMS	FESTO DQ CONNECTION QN3	Drawing name: =2V10&EFS-EL	= V1UQ51UQ3	
			Ed.	MKLEPADLO						+ V1UQ51UQ3	
			Appr		P6700 Bodyside RH - Robot Cell 2V10				Document type: EFS	Project nr: 22-16150	Page 1
Modification	Date	Name	Original		Replacement of	Replaced by	Scale 1:1				1579

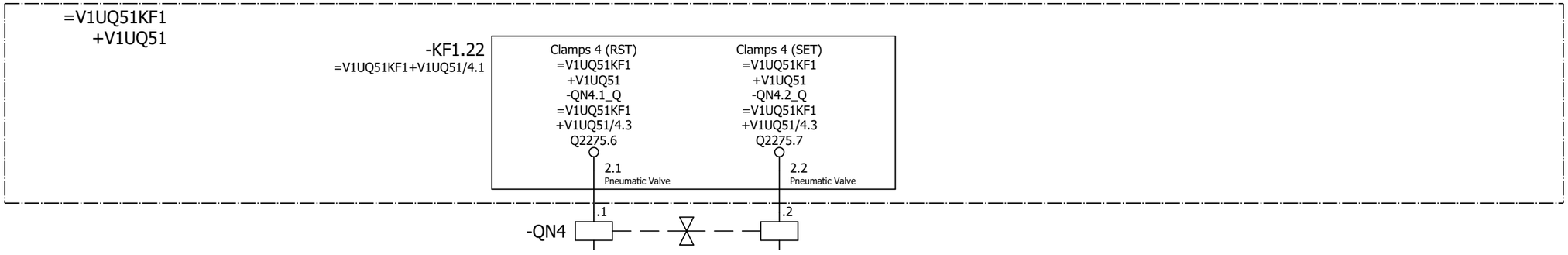

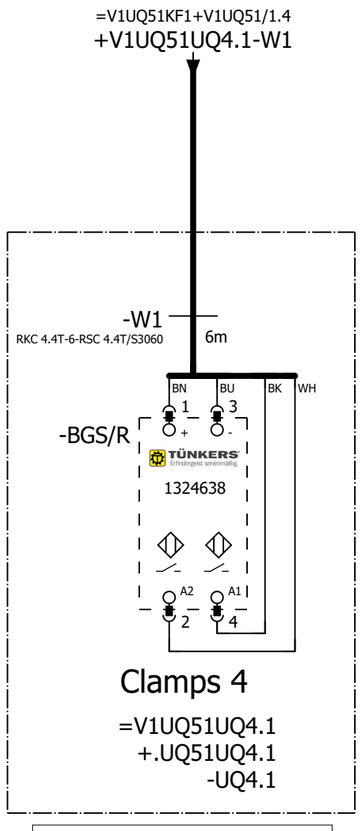

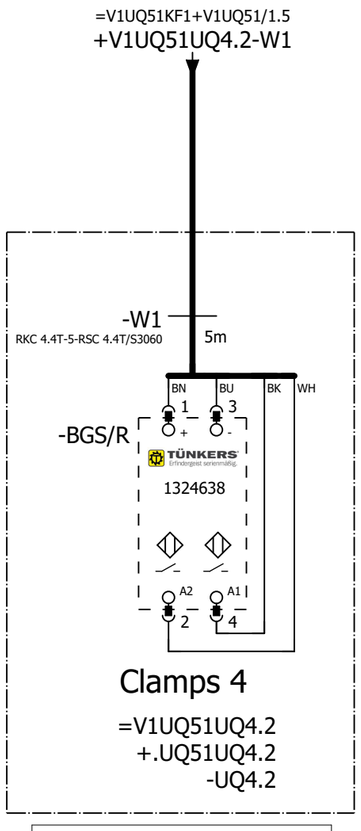

=V1UQ51
-UQ4.1-BGS/R
Clamps 4

=V1UQ51
-UQ4.2-BGS/R
Clamps 4

=V1UQ51UQ3+.UQ51UQ3/1

=V1UQ51UQ5+.UQ51UQ5/1

			Date	1/11/2023	Volvo Trucks North America		Valiant TMS	FESTO DQ CONNECTION QN4	Drawing name: =2V10&EFS-EL	= V1UQ51UQ4	
			Ed.	MKLEPADLO						+ V1UQ51UQ4	
			Appr		P6700 Bodyside RH - Robot Cell 2V10				Document type: EFS	Project nr: 22-16150	Page 1
Modification	Date	Name	Original		Replacement of	Replaced by	Scale 1:1				1579

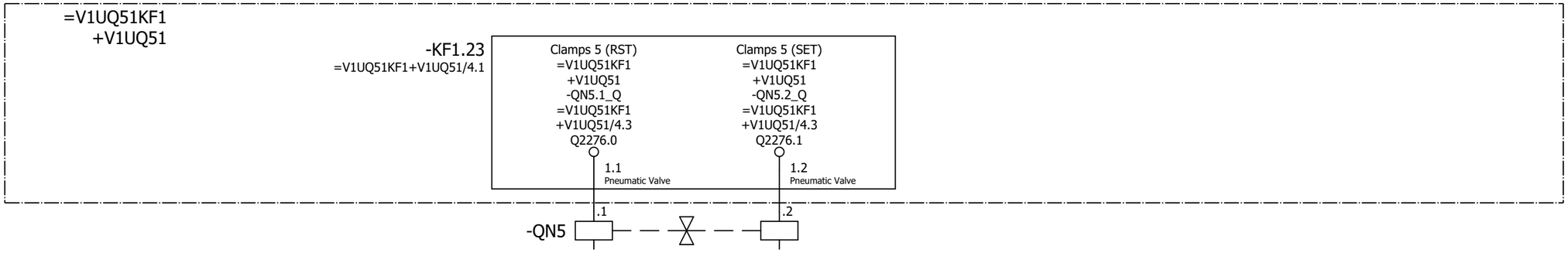

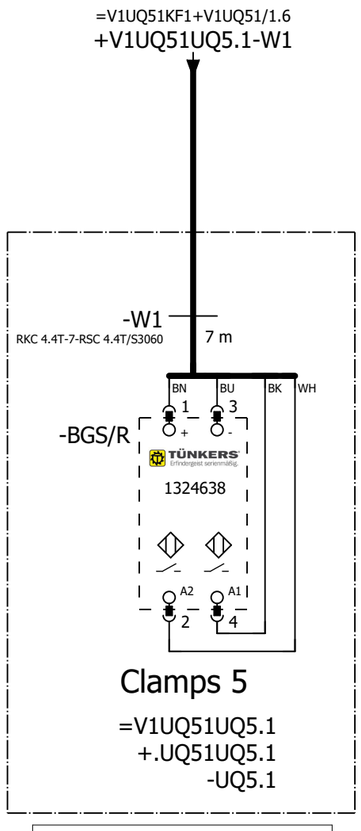

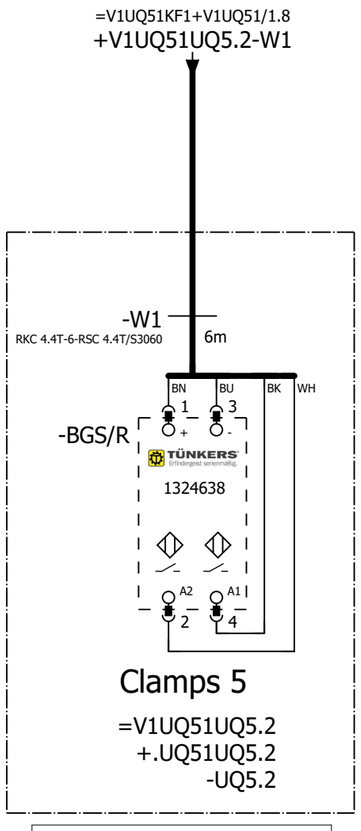

=V1UQ51
-UQ5.1-BGS/R
Clamps 5

=V1UQ51
-UQ5.2-BGS/R
Clamps 5

=V1UQ51UQ4+.UQ51UQ4/1

=V1UQ51UQ6+.UQ51UQ6/1

			Date	1/11/2023	Volvo Trucks North America	Valiant TMS	FESTO DQ CONNECTION QN5	Drawing name: =2V10&EFS-EL	= V1UQ51UQ5		
			Ed.	MKLEPADLO					+ V1UQ51UQ5		
			Appr		P6700 Bodyside RH - Robot Cell 2V10			Document type: EFS	Project nr: 22-16150	Page	1
Modification	Date	Name	Original		Replacement of / Replaced by	Scale 1:1					1579

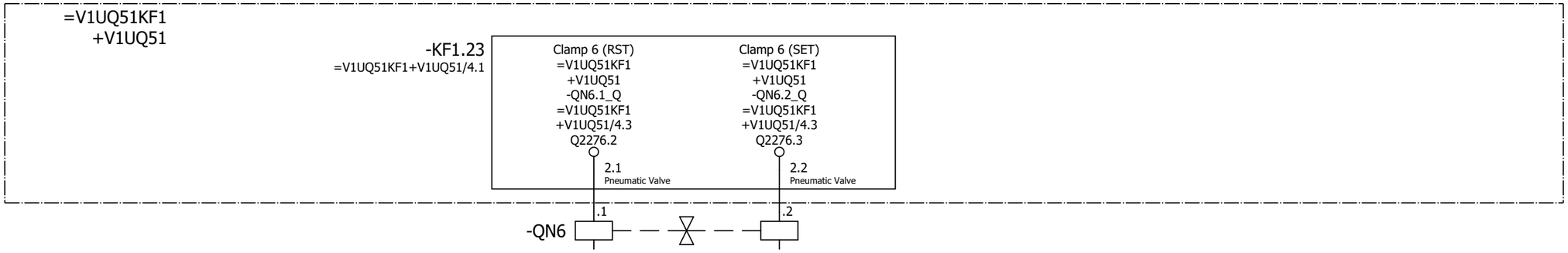

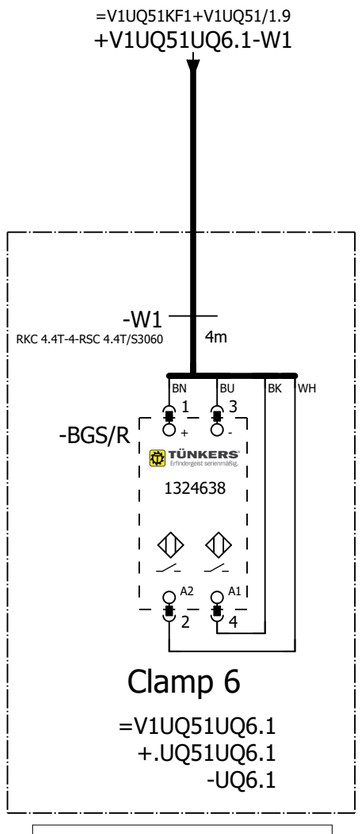

=V1UQ51
-UQ6.1-BGS/R
Clamp 6

=V1UQ51UQ5+.UQ51UQ5/1

=V1UQ51UQ7+.UQ51UQ7/1

			Date	1/11/2023	Volvo Trucks North America		Valiant TMS	FESTO DQ CONNECTION QN6	Drawing name: =2V10&EFS-EL	= V1UQ51UQ6	
			Ed.	MKLEPADLO						+ V1UQ51UQ6	
			Appr		P6700 Bodyside RH - Robot Cell 2V10				Document type: EFS	Project nr: 22-16150	Page 1
Modification	Date	Name	Original		Replacement of	Replaced by	Scale 1:1				1579

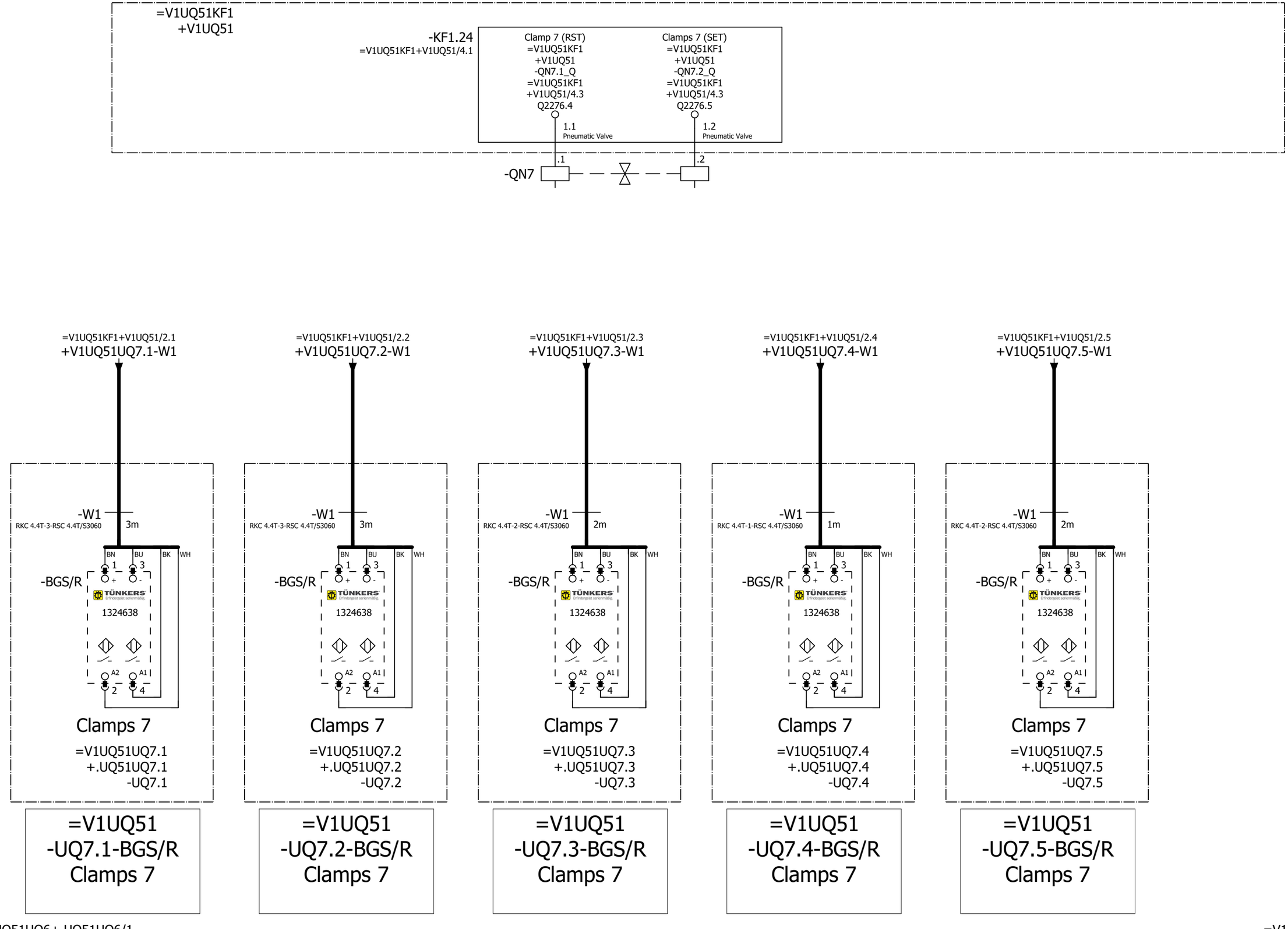

=V1UQ51UQ6+.UQ51UQ6/1

=V1UQ51UQ8+.UQ51UQ8/1

			Date	1/11/2023	Volvo Trucks North America	Valiant TMS	FESTO DQ CONNECTION QN7	Drawing name: =2V10&EFS-EL	= V1UQ51UQ7	
			Ed.	MKLEPADLO					+ V1UQ51UQ7	
			Appr		P6700 Bodyside RH - Robot Cell 2V10			Document type: EFS	Project nr: 22-16150	Page 1 / 1579
Modification	Date	Name	Original		Replacement of / Replaced by	Scale 1:1				

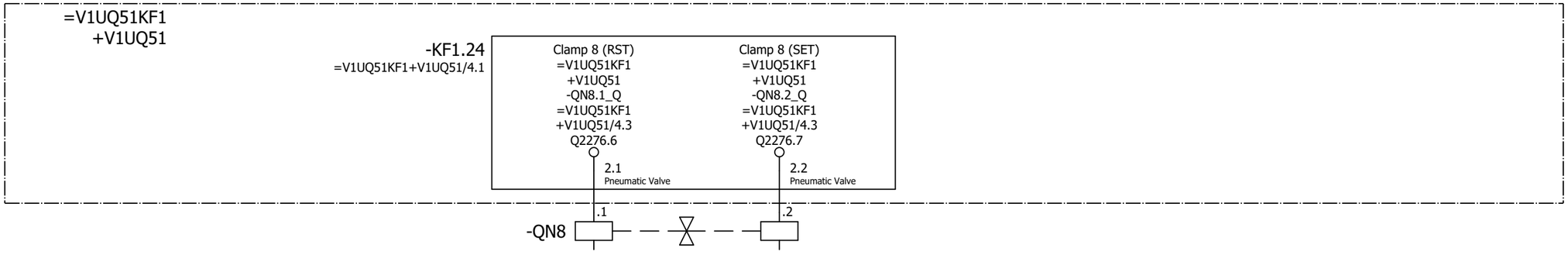

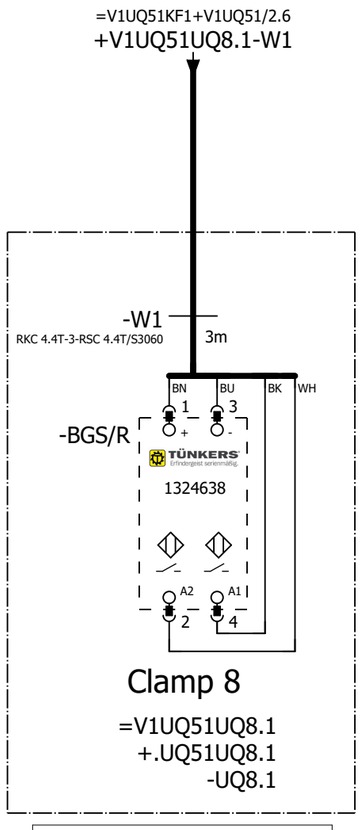

=V1UQ51
-UQ8.1-BGS/R
Clamp 8

=V1UQ51UQ7+.UQ51UQ7/1

=V1UQ51UQ9+.UQ51UQ9/1

			Date	1/11/2023	Volvo Trucks North America		Valiant TMS	FESTO DQ CONNECTION QN8	Drawing name: =2V10&EFS-EL	= V1UQ51UQ8	
			Ed.	MKLEPADLO						+ V1UQ51UQ8	
			Appr		P6700 Bodyside RH - Robot Cell 2V10				Document type: EFS	Project nr: 22-16150	Page 1
Modification	Date	Name	Original		Replacement of	Replaced by	Scale 1:1				1579

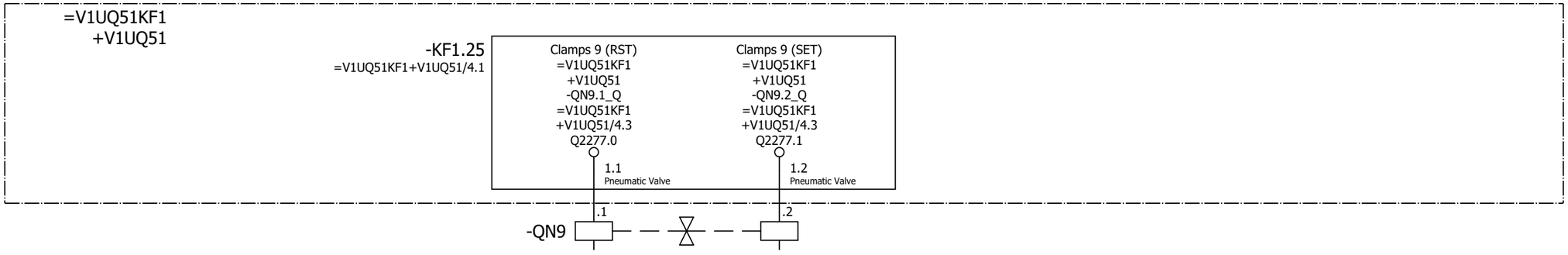

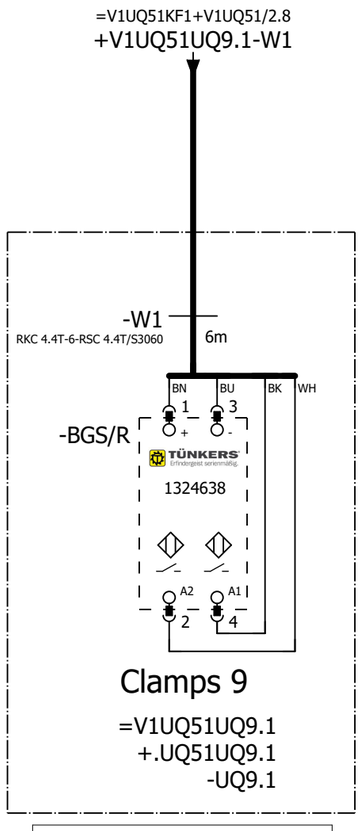

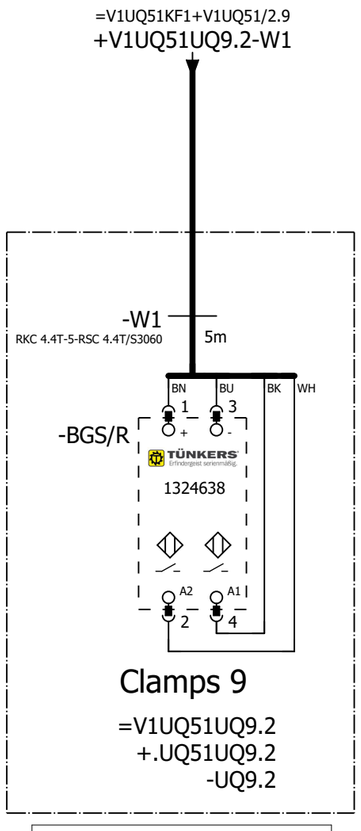

=V1UQ51
-UQ9.1-BGS/R
Clamps 9

=V1UQ51
-UQ9.2-BGS/R
Clamps 9

=V1UQ51UQ8+.UQ51UQ8/1

=V1UQ51UQ10+.UQ51UQ10/1

			Date	1/11/2023	Volvo Trucks North America	Valiant TMS	FESTO DQ CONNECTION QN9	Drawing name: =2V10&EFS-EL	= V1UQ51UQ9		
			Ed.	MKLEPADLO					+ V1UQ51UQ9		
			Appr		P6700 Bodyside RH - Robot Cell 2V10			Document type: EFS	Project nr: 22-16150	Page	1
Modification	Date	Name	Original		Replacement of / Replaced by	Scale 1:1					1579

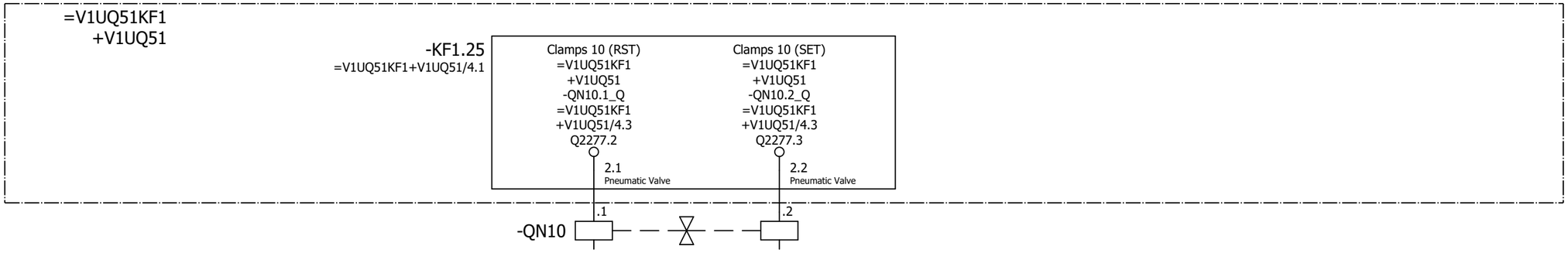

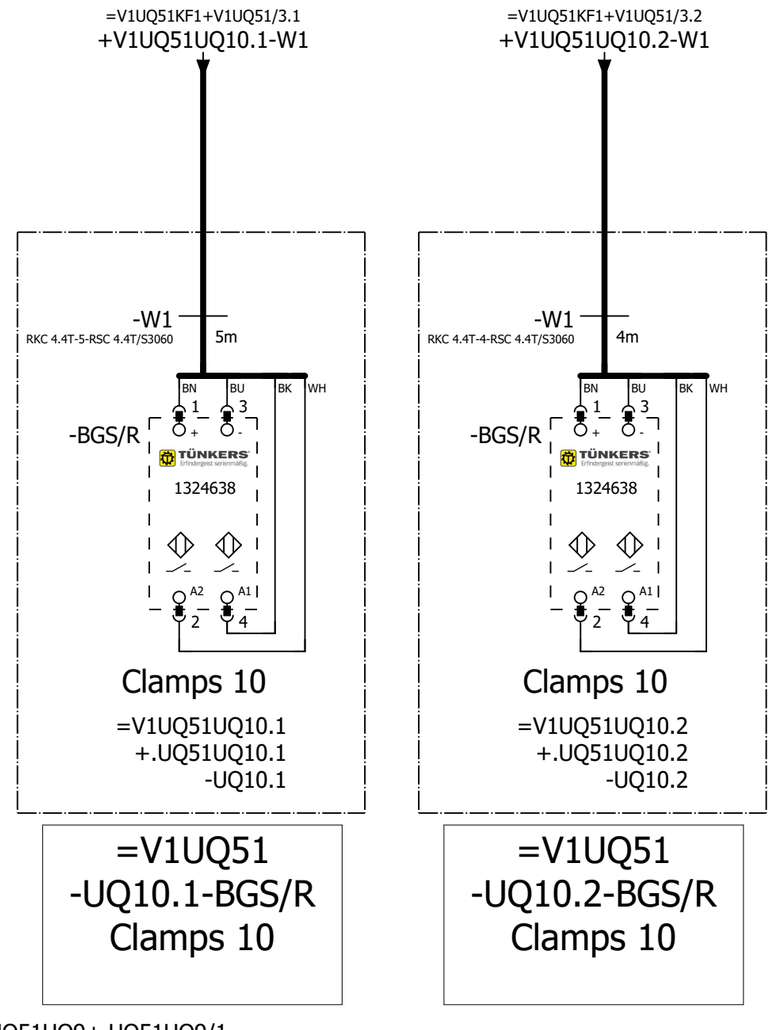

=V1UQ51UQ9+.UQ51UQ9/1

=V1UQ52BG0+.UQ52/1

			Date	1/11/2023	Volvo Trucks North America	Valiant TMS	FESTO DQ CONNECTION QN10	Drawing name: =2V10&EFS-EL	= V1UQ51UQ10		
			Ed.	MKLEPADLO					+ V1UQ51UQ10		
			Appr		P6700 Bodyside RH - Robot Cell 2V10			Document type: EFS	Project nr: 22-16150	Page	1
Modification	Date	Name	Original		Replacement of / Replaced by	Scale 1:1					1579

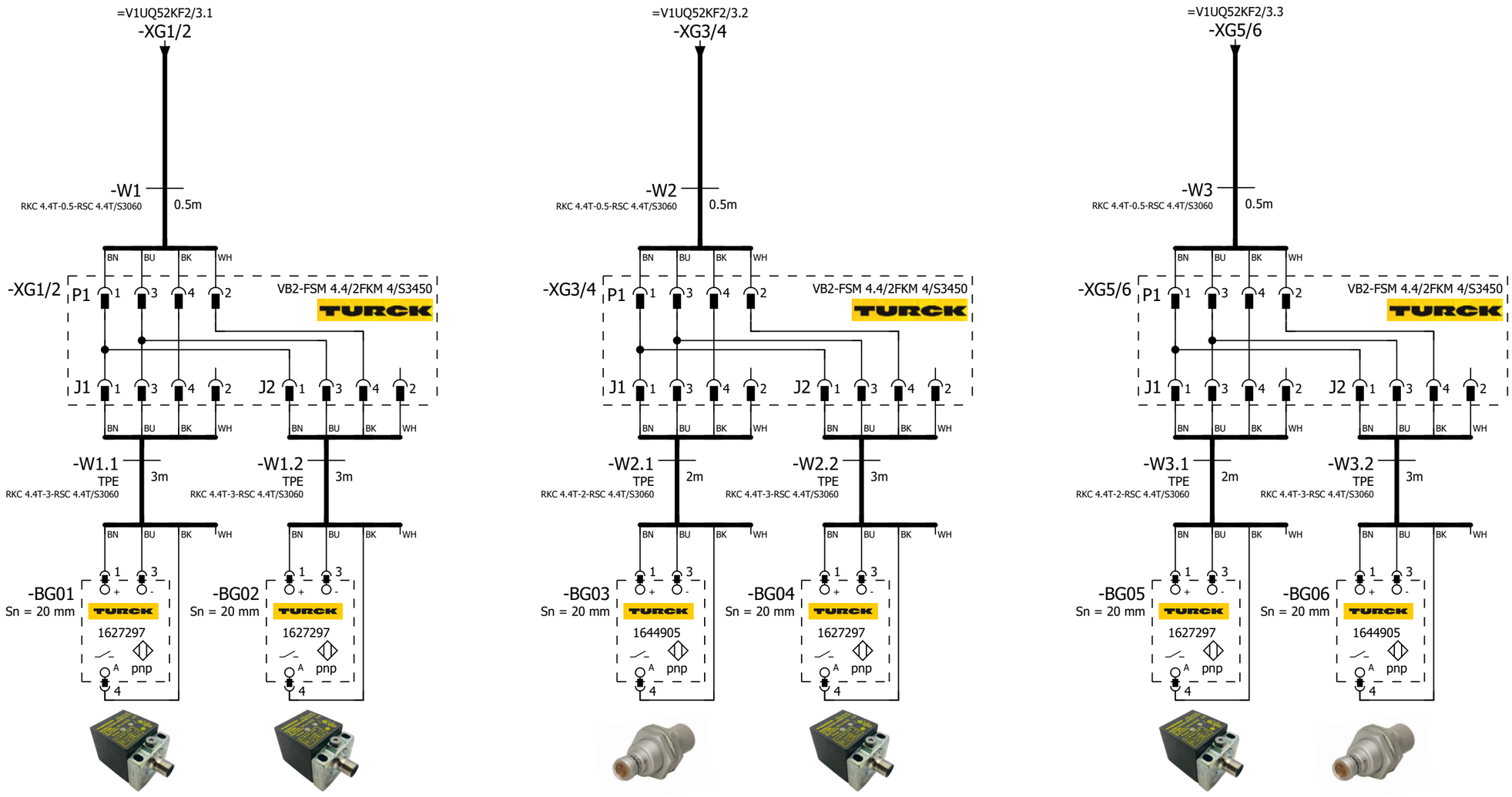

=V1UQ52 -BG01 Common Part Present	=V1UQ52 -BG02 Common Part Present	=V1UQ52 -BG03 Day Cab 78522975	=V1UQ52 -BG04 Day Cab 78522974	=V1UQ52 -BG05 Sleeper L230 78521360	=V1UQ52 -BG06 Sleeper L230 78521359

=V1UQ51UQ10+.UQ51UQ10/1

2

			Date	1/11/2023	Volvo Trucks North America	Valiant TMS	SENSORS	Drawing name: =2V10&EFS-EL	= V1UQ52BG0	
			Ed.	MKLEPADLO					+ V1UQ52	
			Appr		P6700 Bodyside RH - Robot Cell 2V10			Document type: EFS	Project nr: 22-16150	Page 1
Modification	Date	Name	Original		Replacement of / Replaced by	Scale 1:1				1579

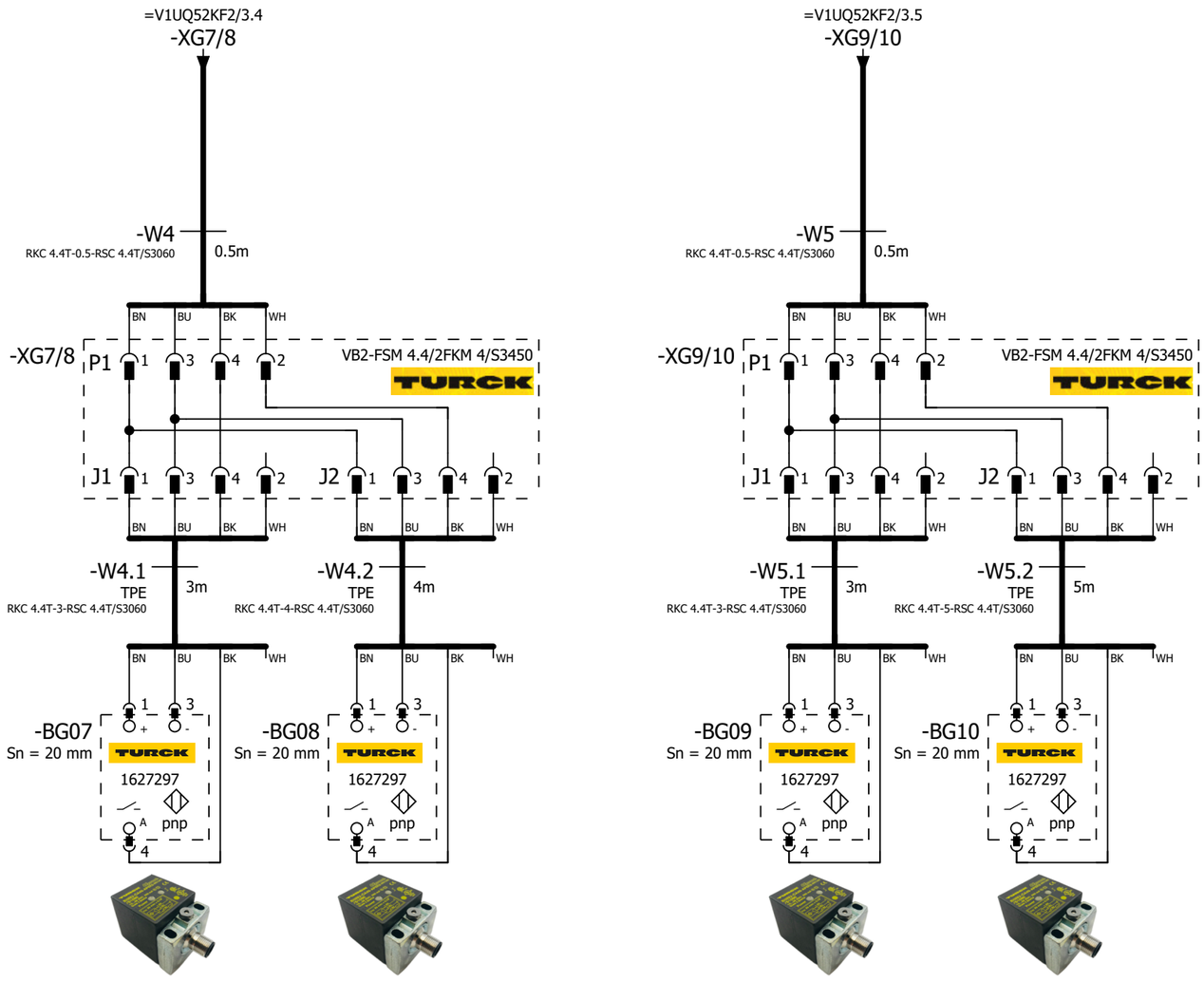

=V1UQ52 -BG07 Sleeper L290 78522139	=V1UQ52 -BG08 Sleeper L290 78522140	=V1UQ52 -BG09 Sleeper L320 78519674	=V1UQ52 -BG10 Sleeper L320 78519675

1

=V1UQ52KF1/1

			Date	1/11/2023	Volvo Trucks North America	Valiant TMS	SENSORS	Drawing name: =2V10&EFS-EL	= V1UQ52BG0	
			Ed.	MKLEPADLO					+ V1UQ52	
			Appr		P6700 Bodyside RH - Robot Cell 2V10			Document type: EFS	Project nr: 22-16150	Page 2
Modification	Date	Name	Original		Replacement of / Replaced by	Scale 1:1				1579

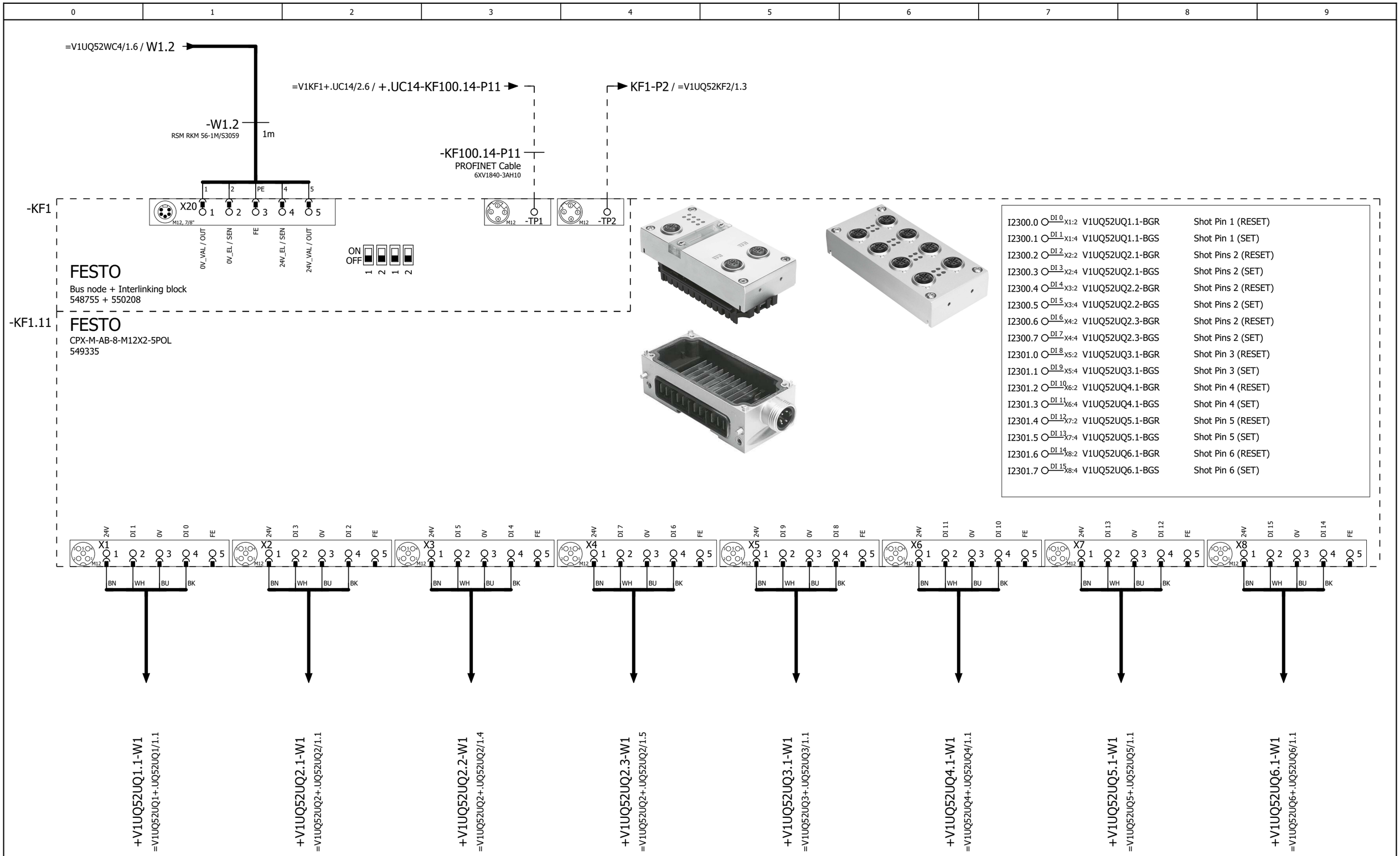

=V1UQ52BG0/2

2

			Date	1/11/2023	Volvo Trucks North America	Valiant TMS	CONNECTING MOD. FOR VTSA MANIFOLD	Drawing name: =2V10&EFS-EL		= V1UQ52KF1	
			Ed.	MKLEPADLO						+ V1UQ52	
			Appr		P6700 Bodyside RH - Robot Cell 2V10			Document type: EFS	Project nr: 22-16150		Page 1
Modification	Date	Name	Original		Replacement of	Replaced by	Scale 1:1				1579

I2302.0	DI 0 X1:4	V1UQ52UQ7.1-BGR	Shot Pin 7 (RESET)
I2302.1	DI 1 X1:2	V1UQ52UQ7.1-BGS	Shot Pin 7 (SET)
I2302.2	DI 2 X2:4	V1UQ52UQ8.1-BGR	Shot Pins 8 (RESET)
I2302.3	DI 3 X2:2	V1UQ52UQ8.1-BGS	Shot Pins 8 (SET)
I2302.4	DI 4 X3:4	V1UQ52UQ8.2-BGR	Shot Pins 8 (RESET)
I2302.5	DI 5 X3:2	V1UQ52UQ8.2-BGS	Shot Pins 8 (SET)
I2302.6	DI 6 X4:4	V1UQ52UQ9.1-BGR	Shot Pin 9 (RESET)
I2302.7	DI 7 X4:2	V1UQ52UQ9.1-BGS	Shot Pin 9 (SET)
I2303.0	DI 8 X5:4	V1UQ52UQ10.1-BGR	Clamps 10 (RESET)
I2303.1	DI 9 X5:2	V1UQ52UQ10.1-BGS	Clamps 10 (SET)
I2303.2	DI 10 X6:4	V1UQ52UQ10.2-BGR	Clamps 10 (RESET)
I2303.3	DI 11 X6:2	V1UQ52UQ10.2-BGS	Clamps 10 (SET)
I2303.4	DI 12 X7:4	V1UQ52UQ10.3-BGR	Clamps 10 (RESET)
I2303.5	DI 13 X7:2	V1UQ52UQ10.3-BGS	Clamps 10 (SET)
I2303.6	DI 14 X8:4	V1UQ52UQ10.4-BGR	Clamps 10 (RESET)
I2303.7	DI 15 X8:2	V1UQ52UQ10.4-BGS	Clamps 10 (SET)

-KF1.12

FESTO
CPX-M-AB-8-M12X2-5POL
549335

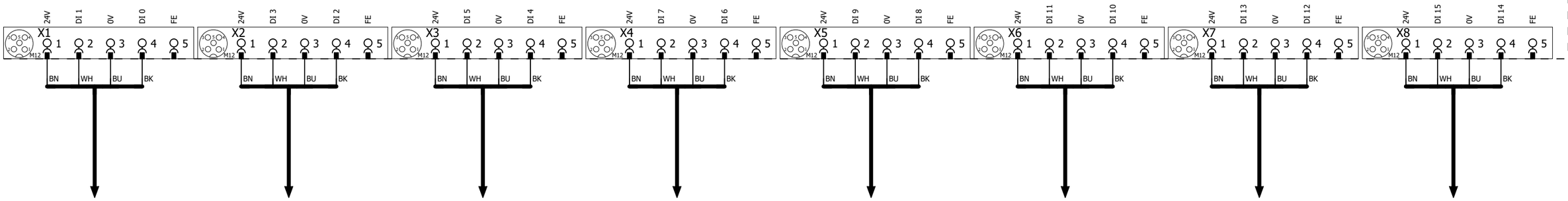

+V1UQ52UQ7.1-W1
=V1UQ52UQ7+.UQ52UQ7/1.1

+V1UQ52UQ8.1-W1
=V1UQ52UQ8+.UQ52UQ8/1.1

+V1UQ52UQ8.2-W1
=V1UQ52UQ8+.UQ52UQ8/1.2

+V1UQ52UQ9.1-W1
=V1UQ52UQ9+.UQ52UQ9/1.1

+V1UQ52UQ10.1-W1
=V1UQ52UQ10+.UQ52UQ10/1.1

+V1UQ52UQ10.2-W1
=V1UQ52UQ10+.UQ52UQ10/1.2

+V1UQ52UQ10.3-W1
=V1UQ52UQ10+.UQ52UQ10/1.4

+V1UQ52UQ10.4-W1
=V1UQ52UQ10+.UQ52UQ10/1.5

-KF1.13

FESTO

CPX-M-AB-8-M12X2-5POL

549335

I2304.0	DI 0 X1:4	V1UQ52UQ10.5-BGR	Clamps 10 (RESET)
I2304.1	DI 1 X1:2	V1UQ52UQ10.5-BGS	Clamps 10 (SET)
I2304.2	DI 2 X2:4	V1UQ52UQ10.6-BGR	Clamps 10 (RESET)
I2304.3	DI 3 X2:2	V1UQ52UQ10.6-BGS	Clamps 10 (SET)
I2304.4	DI 4 X3:4	I2304.4	Spare
I2304.5	DI 5 X3:2	I2304.5	Spare
I2304.6	DI 6 X4:4	I2304.6	Spare
I2304.7	DI 7 X4:2	I2304.7	Spare
I2305.0	DI 8 X5:4	I2305.0	Spare
I2305.1	DI 9 X5:2	I2305.1	Spare
I2305.2	DI 10 X6:4	I2305.2	Spare
I2305.3	DI 11 X6:2	I2305.3	Spare
I2305.4	DI 12 X7:4	I2305.4	Spare
I2305.5	DI 13 X7:2	I2305.5	Spare
I2305.6	DI 14 X8:4	I2305.6	Spare
I2305.7	DI 15 X8:2	I2305.7	Spare

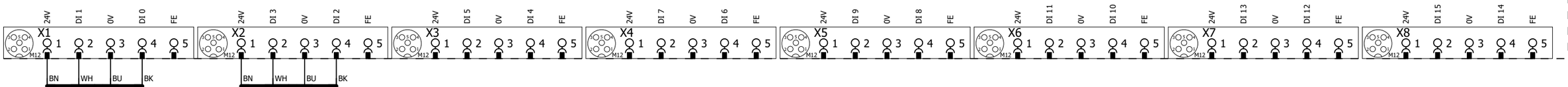

+V1UQ52UQ10.5-W1
=V1UQ52UQ10+.UQ52UQ10/1.7

+V1UQ52UQ10.6-W1
=V1UQ52UQ10+.UQ52UQ10/1.9

2 4

			Date	1/11/2023	Volvo Trucks North America	Valiant TMS	I/O MOD. DI16 (8 x M12) FOR VTSA-F	Drawing name: =2V10&EFS-EL		= V1UQ52KF1	
			Ed.	MKLEPADLO						+ V1UQ52	
			Appr		P6700 Bodyside RH - Robot Cell 2V10			Document type: EFS	Project nr: 22-16150		Page 3
Modification	Date	Name	Original		Replacement of	Replaced by	Scale 1:1				1579

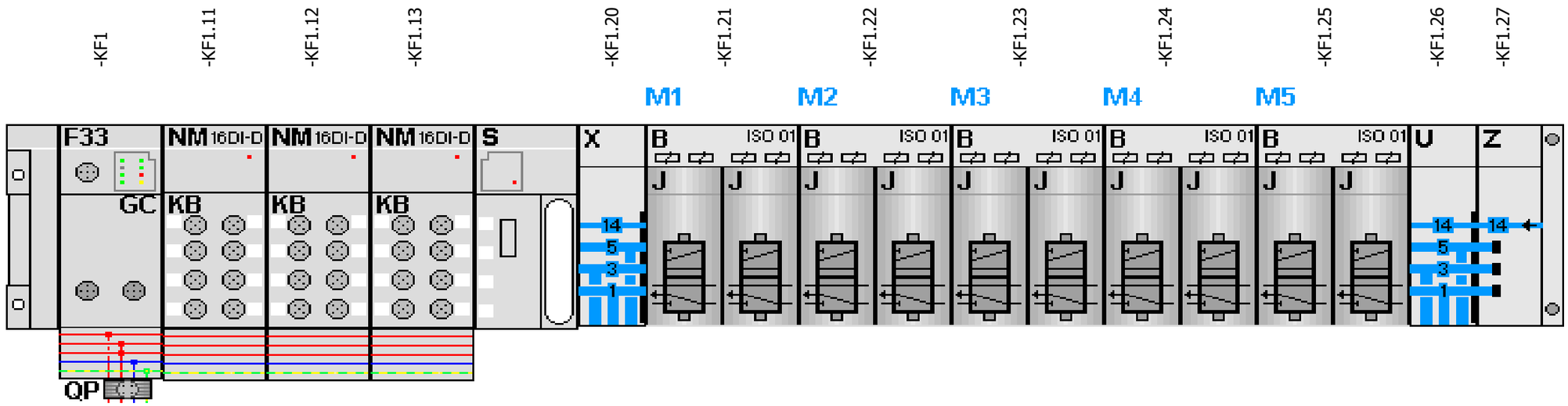

-KF1.21
=V1UQ52UQ1+.UQ52UQ1/1.3
=V1UQ52UQ2+.UQ52UQ2/1.3

FESTO

=V1UQ52UQ1+.UQ52UQ1/1.4	Q2300.0 DO 0 1.1	-QN1.1_Q	Shot Pin 1 (RST)
=V1UQ52UQ1+.UQ52UQ1/1.4	Q2300.1 DO 1 1.2	-QN1.2_Q	Shot Pin 1 (SET)
=V1UQ52UQ2+.UQ52UQ2/1.4	Q2300.2 DO 2 2.1	-QN2.1_Q	Shot Pins 2 (RST)
=V1UQ52UQ2+.UQ52UQ2/1.4	Q2300.3 DO 3 2.2	-QN2.2_Q	Shot Pins 2 (SET)

-KF1.22
=V1UQ52UQ3+.UQ52UQ3/1.3
=V1UQ52UQ4+.UQ52UQ4/1.3

FESTO

=V1UQ52UQ3+.UQ52UQ3/1.4	Q2300.4 DO 0 1.1	-QN3.1_Q	Shot Pin 3 (RST)
=V1UQ52UQ3+.UQ52UQ3/1.4	Q2300.5 DO 1 1.2	-QN3.2_Q	Shot Pin 3 (SET)
=V1UQ52UQ4+.UQ52UQ4/1.4	Q2300.6 DO 2 2.1	-QN4.1_Q	Shot Pin 4 (RST)
=V1UQ52UQ4+.UQ52UQ4/1.4	Q2300.7 DO 3 2.2	-QN4.2_Q	Shot Pin 4 (SET)

-KF1.23
=V1UQ52UQ5+.UQ52UQ5/1.3
=V1UQ52UQ6+.UQ52UQ6/1.3

FESTO

=V1UQ52UQ5+.UQ52UQ5/1.4	Q2301.0 DO 0 1.1	-QN5.1_Q	Shot Pin 5 (RST)
=V1UQ52UQ5+.UQ52UQ5/1.4	Q2301.1 DO 1 1.2	-QN5.2_Q	Shot Pin 5 (SET)
=V1UQ52UQ6+.UQ52UQ6/1.4	Q2301.2 DO 2 2.1	-QN6.1_Q	Shot Pin 6 (RST)
=V1UQ52UQ6+.UQ52UQ6/1.4	Q2301.3 DO 3 2.2	-QN6.2_Q	Shot Pin 6 (SET)

-KF1.24
=V1UQ52UQ7+.UQ52UQ7/1.3
=V1UQ52UQ8+.UQ52UQ8/1.3

FESTO

=V1UQ52UQ7+.UQ52UQ7/1.4	Q2301.4 DO 0 1.1	-QN7.1_Q	Shot Pin 7 (RST)
=V1UQ52UQ7+.UQ52UQ7/1.4	Q2301.5 DO 1 1.2	-QN7.2_Q	Shot Pin 7 (SET)
=V1UQ52UQ8+.UQ52UQ8/1.4	Q2301.6 DO 2 2.1	-QN8.1_Q	Shot Pins 8 (RST)
=V1UQ52UQ8+.UQ52UQ8/1.4	Q2301.7 DO 3 2.2	-QN8.2_Q	Shot Pins 8 (SET)

-KF1.25
=V1UQ52UQ9+.UQ52UQ9/1.3
=V1UQ52UQ10+.UQ52UQ10/1.3

FESTO

=V1UQ52UQ9+.UQ52UQ9/1.4	Q2302.0 DO 0 1.1	-QN9.1_Q	Shot Pin 9 (RST)
=V1UQ52UQ9+.UQ52UQ9/1.4	Q2302.1 DO 1 1.2	-QN9.2_Q	Shot Pin 9 (SET)
=V1UQ52UQ10+.UQ52UQ10/1.4	Q2302.2 DO 2 2.1	-QN10.1_Q	Clamps 10 (RST)
=V1UQ52UQ10+.UQ52UQ10/1.4	Q2302.3 DO 3 2.2	-QN10.2_Q	Clamps 10 (SET)

			Date	1/11/2023	Volvo Trucks North America	Valiant TMS	CONNECTING MOD. FOR FESTO DQ	Drawing name: =2V10&EFS-EL		= V1UQ52KF1	
			Ed.	MKLEPADLO						+ V1UQ52	
			Appr		P6700 Bodyside RH - Robot Cell 2V10			Document type: EFS	Project nr: 22-16150		Page 4
Modification	Date	Name	Original		Replacement of / Replaced by	Scale 1:1					1579

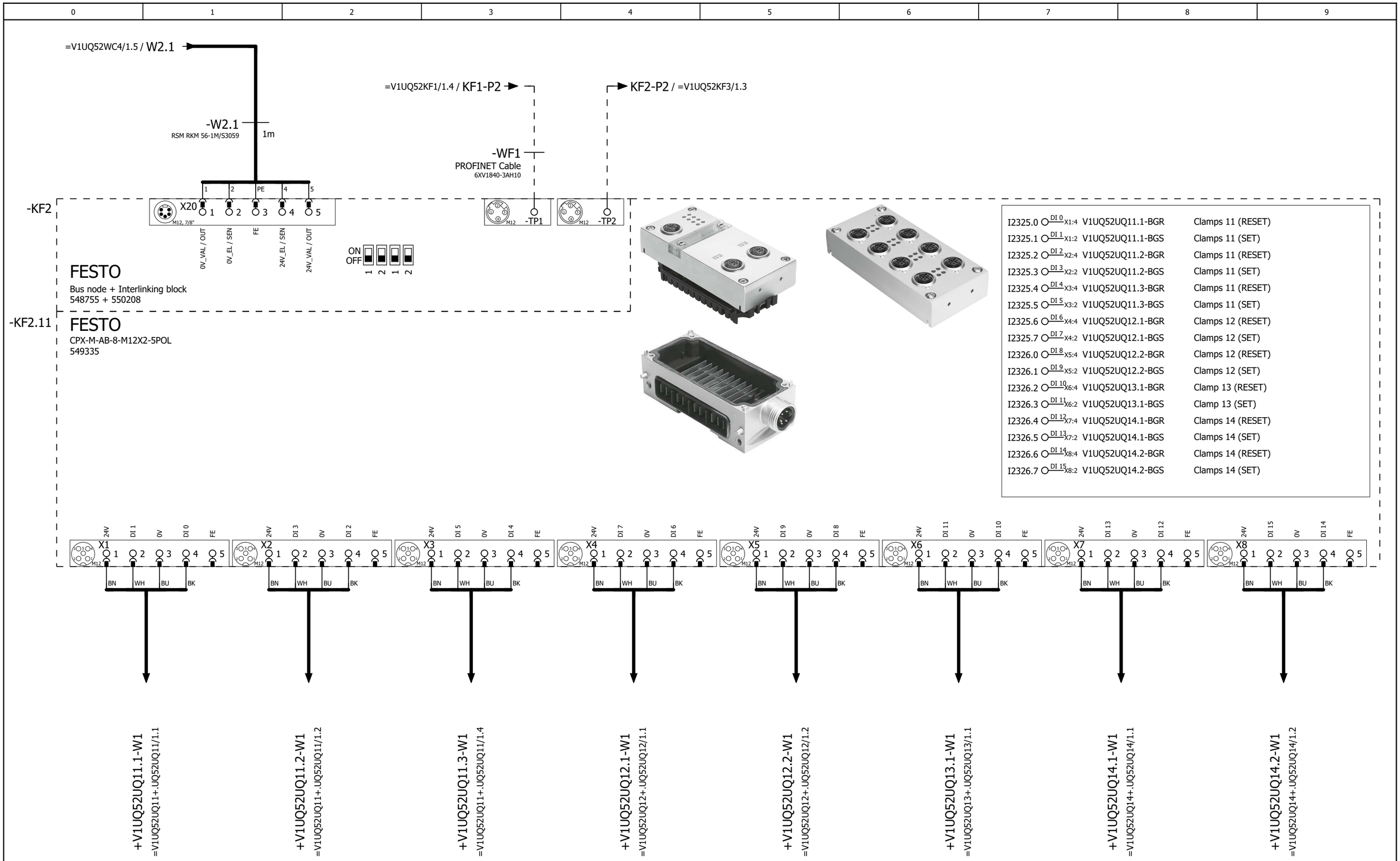

=V1UQ52KF1/4

2

			Date	1/11/2023	Volvo Trucks North America	Valiant TMS	CONNECTING MOD. FOR VTSA MANIFOLD	Drawing name: =2V10&EFS-EL		= V1UQ52KF2	
			Ed.	MKLEPADLO						+ V1UQ52	
			Appr		P6700 Bodyside RH - Robot Cell 2V10			Document type: EFS	Project nr: 22-16150		Page 1
Modification	Date	Name	Original		Replacement of / Replaced by	Scale 1:1					1579

I2327.0	DI 0 X1:4	V1UQ52UQ14.3-BGR	Clamps 14 (RESET)
I2327.1	DI 1 X1:2	V1UQ52UQ14.3-BGS	Clamps 14 (SET)
I2327.2	DI 2 X2:4	V1UQ52UQ15.1-BGR	Clamp 15 (RESET)
I2327.3	DI 3 X2:2	V1UQ52UQ15.1-BGS	Clamp 15 (SET)
I2327.4	DI 4 X3:4	V1UQ52UQ16.1-BGR	Clamp 16 (RESET)
I2327.5	DI 5 X3:2	V1UQ52UQ16.1-BGS	Clamp 16 (SET)
I2327.6	DI 6 X4:4	V1UQ52UQ17.1-BGR	Clamp 17 (RESET)
I2327.7	DI 7 X4:2	V1UQ52UQ17.1-BGS	Clamp 17 (SET)
I2328.0	DI 8 X5:4	V1UQ52UQ18.1-BGR	Clamp 18 (RESET)
I2328.1	DI 9 X5:2	V1UQ52UQ18.1-BGS	Clamp 18 (SET)
I2328.2	DI 10 X6:4	V1UQ52UQ19.1-BGR	Clamp 19 (RESET)
I2328.3	DI 11 X6:2	V1UQ52UQ19.1-BGS	Clamp 19 (SET)
I2328.4	DI 12 X7:4	V1UQ52UQ20.1-BGR	Clamp 20 (RESET)
I2328.5	DI 13 X7:2	V1UQ52UQ20.1-BGS	Clamp 20 (SET)
I2328.6	DI 14 X8:4	I2328.6	Spare
I2328.7	DI 15 X8:2	I2328.7	Spare

-KF2.12

FESTO
CPX-M-AB-8-M12X2-5POL
549335

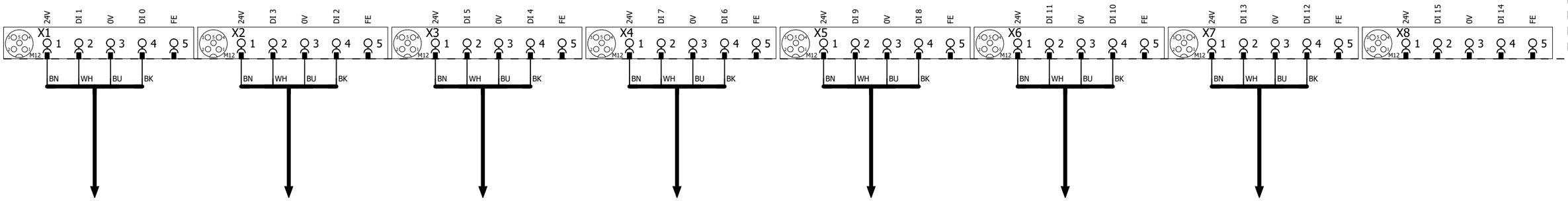

+V1UQ52UQ14.3-W1
=V1UQ52UQ14+.UQ52UQ14/1.4

+V1UQ52UQ15.1-W1
=V1UQ52UQ15+.UQ52UQ15/1.1

+V1UQ52UQ16.1-W1
=V1UQ52UQ16+.UQ52UQ16/1.1

+V1UQ52UQ17.1-W1
=V1UQ52UQ17+.UQ52UQ17/1.1

+V1UQ52UQ18.1-W1
=V1UQ52UQ18+.UQ52UQ18/1.1

+V1UQ52UQ19.1-W1
=V1UQ52UQ19+.UQ52UQ19/1.1

+V1UQ52UQ20.1-W1
=V1UQ52UQ20+.UQ52UQ20/1.1

-KF2.13

FESTO

CPX-M-AB-8-M12X2-5POL
549335

I2329.0	DI 0 X1:4	V1UQ52-BG01	Sensor Common Part Present
I2329.1	DI 1 X1:2	V1UQ52-BG02	Sensor Common Part Present
I2329.2	DI 2 X2:4	V1UQ52-BG03	Sensor Day Cab 78522975
I2329.3	DI 3 X2:2	V1UQ52-BG04	Sensor Day Cab 78522974
I2329.4	DI 4 X3:4	V1UQ52-BG05	Sensor Sleeper L230 78521360
I2329.5	DI 5 X3:2	V1UQ52-BG06	Sensor Sleeper L230 78521359
I2329.6	DI 6 X4:4	V1UQ52-BG07	Sensor Sleeper L290 78522139
I2329.7	DI 7 X4:2	V1UQ52-BG08	Sensor Sleeper L290 78522140
I2330.0	DI 8 X5:4	V1UQ52-BG09	Sensor Sleeper L320 78519674
I2330.1	DI 9 X5:2	V1UQ52-BG10	Sensor Sleeper L320 78519675
I2330.2	DI 10 X6:4	I2330.2	Spare
I2330.3	DI 11 X6:2	I2330.3	Spare
I2330.4	DI 12 X7:4	I2330.4	Spare
I2330.5	DI 13 X7:2	I2330.5	Spare
I2330.6	DI 14 X8:4	I2330.6	Spare
I2330.7	DI 15 X8:2	I2330.7	Spare

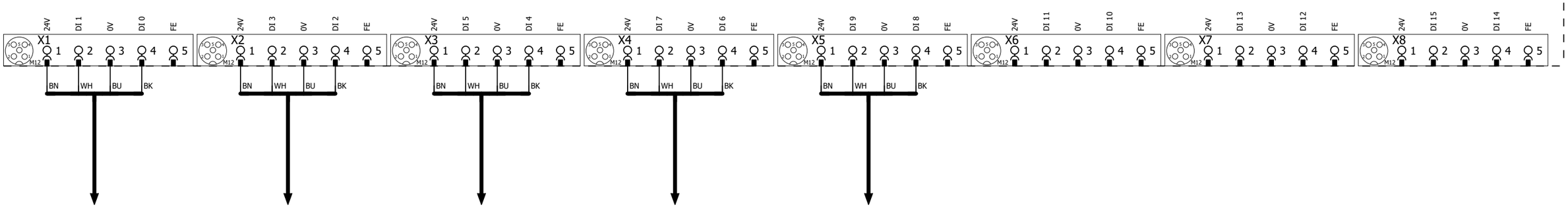

-XG1/2
=V1UQ52BG0/1.1

-XG3/4
=V1UQ52BG0/1.4

-XG5/6
=V1UQ52BG0/1.6

-XG7/8
=V1UQ52BG0/2.1

-XG9/10
=V1UQ52BG0/2.4

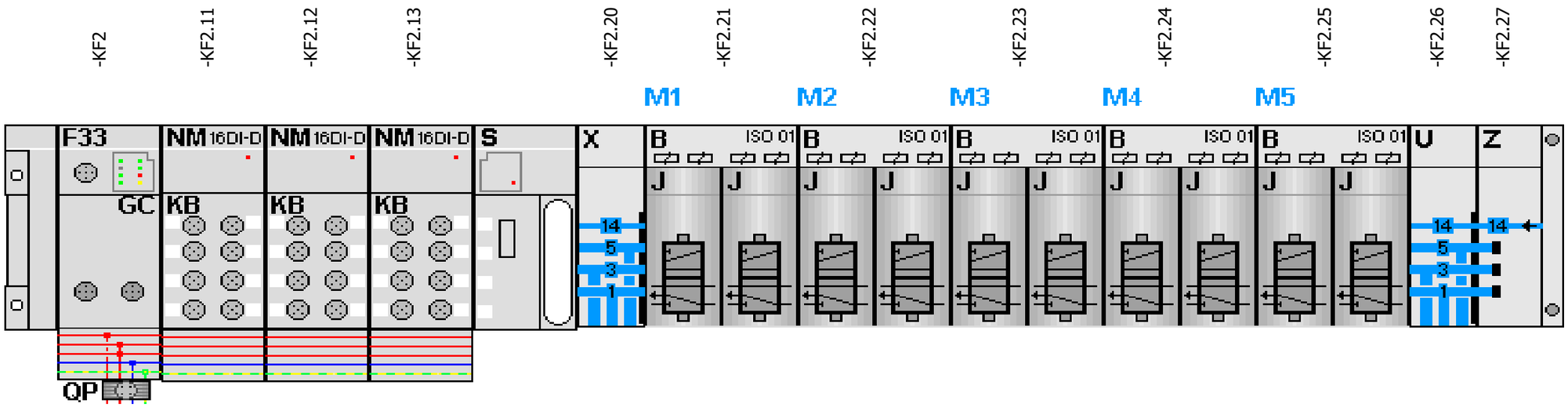

-KF2.21

=V1UQ52UQ11+.UQ52UQ11/1.3
=V1UQ52UQ12+.UQ52UQ12/1.3

FESTO

=V1UQ52UQ11+.UQ52UQ11/1.4	Q2325.0 DO 0 1.1	-QN11.1_Q	Clamps 11 (RST)
=V1UQ52UQ11+.UQ52UQ11/1.4	Q2325.1 DO 1 1.2	-QN11.2_Q	Clamps 11 (SET)
=V1UQ52UQ12+.UQ52UQ12/1.4	Q2325.2 DO 2 2.1	-QN12.1_Q	Clamps 12 (RST)
=V1UQ52UQ12+.UQ52UQ12/1.4	Q2325.3 DO 3 2.2	-QN12.2_Q	Clamps 12 (SET)

-KF2.22

=V1UQ52UQ13+.UQ52UQ13/1.3
=V1UQ52UQ14+.UQ52UQ14/1.3

FESTO

=V1UQ52UQ13+.UQ52UQ13/1.4	Q2325.4 DO 0 1.1	-QN13.1_Q	Clamp 13 (RST)
=V1UQ52UQ13+.UQ52UQ13/1.4	Q2325.5 DO 1 1.2	-QN13.2_Q	Clamp 13 (SET)
=V1UQ52UQ14+.UQ52UQ14/1.4	Q2325.6 DO 2 2.1	-QN14.1_Q	Clamps 14 (RST)
=V1UQ52UQ14+.UQ52UQ14/1.4	Q2325.7 DO 3 2.2	-QN14.2_Q	Clamps 14 (SET)

-KF2.23

=V1UQ52UQ15+.UQ52UQ15/1.3
=V1UQ52UQ16+.UQ52UQ16/1.3

FESTO

=V1UQ52UQ15+.UQ52UQ15/1.4	Q2326.0 DO 0 1.1	-QN15.1_Q	Clamp 15 (RST)
=V1UQ52UQ15+.UQ52UQ15/1.4	Q2326.1 DO 1 1.2	-QN15.2_Q	Clamp 15 (SET)
=V1UQ52UQ16+.UQ52UQ16/1.4	Q2326.2 DO 2 2.1	-QN16.1_Q	Clamp 16 (RST)
=V1UQ52UQ16+.UQ52UQ16/1.4	Q2326.3 DO 3 2.2	-QN16.2_Q	Clamp 16 (SET)

-KF2.24

=V1UQ52UQ17+.UQ52UQ17/1.3
=V1UQ52UQ18+.UQ52UQ18/1.3

FESTO

=V1UQ52UQ17+.UQ52UQ17/1.4	Q2326.4 DO 0 1.1	-QN17.1_Q	Clamp 17 (RST)
=V1UQ52UQ17+.UQ52UQ17/1.4	Q2326.5 DO 1 1.2	-QN17.2_Q	Clamp 17 (SET)
=V1UQ52UQ18+.UQ52UQ18/1.4	Q2326.6 DO 2 2.1	-QN18.1_Q	Clamp 18 (RST)
=V1UQ52UQ18+.UQ52UQ18/1.4	Q2326.7 DO 3 2.2	-QN18.2_Q	Clamp 18 (SET)

-KF2.25

=V1UQ52UQ19+.UQ52UQ19/1.3
=V1UQ52UQ20+.UQ52UQ20/1.3

FESTO

=V1UQ52UQ19+.UQ52UQ19/1.4	Q2327.0 DO 0 1.1	-QN19.1_Q	Clamp 19 (RST)
=V1UQ52UQ19+.UQ52UQ19/1.4	Q2327.1 DO 1 1.2	-QN19.2_Q	Clamp 19 (SET)
=V1UQ52UQ20+.UQ52UQ20/1.4	Q2327.2 DO 2 2.1	-QN20.1_Q	Clamp 20 (RST)
=V1UQ52UQ20+.UQ52UQ20/1.4	Q2327.3 DO 3 2.2	-QN20.2_Q	Clamp 20 (SET)

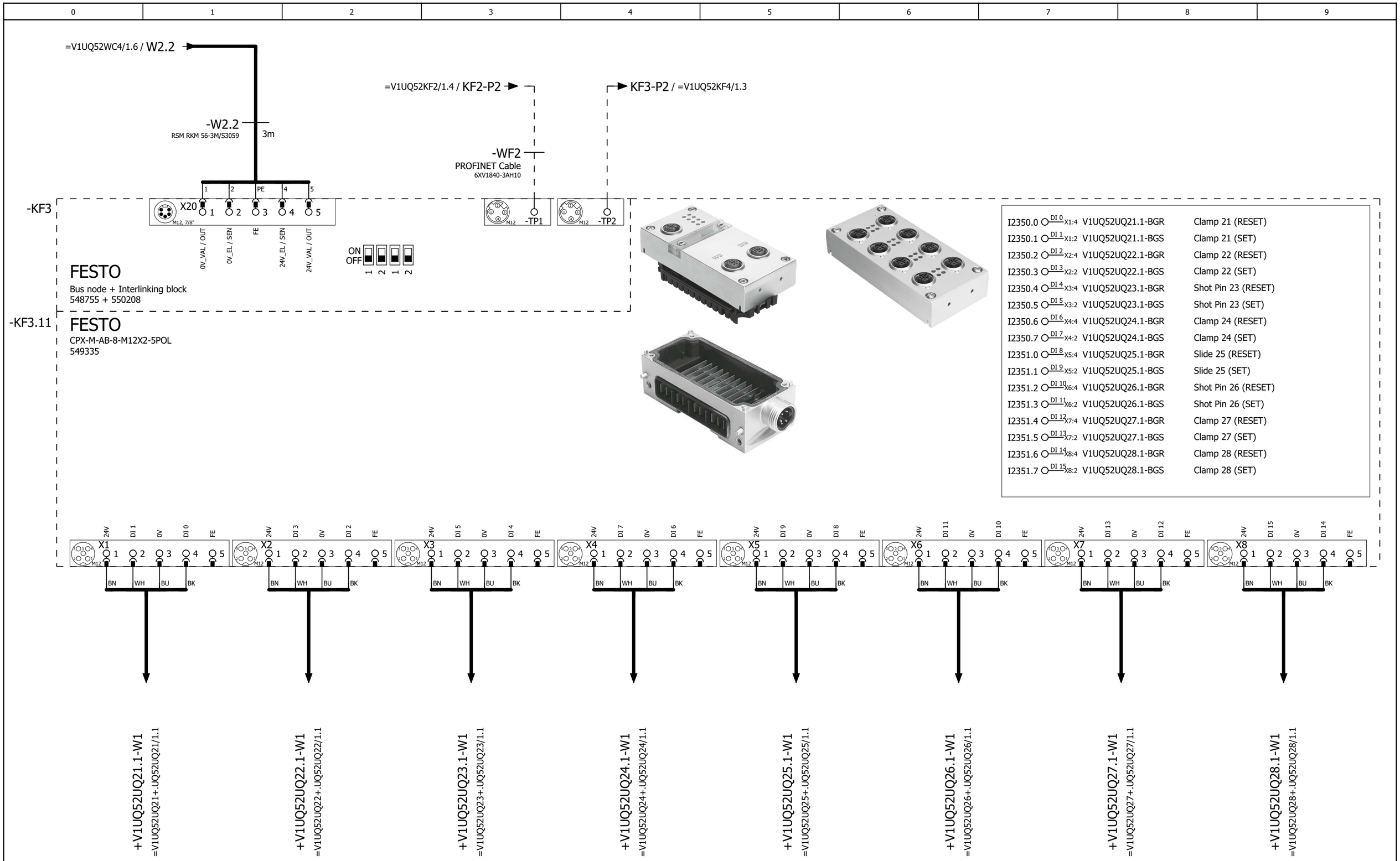

=V1UQ52KF2/4

2

			Date	1/11/2023	Volvo Trucks North America	Valiant TMS	CONNECTING MOD. FOR VTSA MANIFOLD	Drawing name: =2V10&EFS-EL		= V1UQ52KF3	
			Ed.	MKLEPADLO						+ V1UQ52	
			Appr		P6700 Bodyside RH - Robot Cell 2V10			Document type: EFS	Project nr: 22-16150		Page 1
Modification	Date	Name	Original		Replacement of	Replaced by	Scale 1:1				1579

I2352.0	DI 0 X1:4	V1UQ52UQ29.1-BGR	Clamp 29 (RESET)
I2352.1	DI 1 X1:2	V1UQ52UQ29.1-BGS	Clamp 29 (SET)
I2352.2	DI 2 X2:4	V1UQ52UQ30.1-BGR	Clamp 30 (RESET)
I2352.3	DI 3 X2:2	V1UQ52UQ30.1-BGS	Clamp 30 (SET)
I2352.4	DI 4 X3:4	I2352.4	Spare
I2352.5	DI 5 X3:2	I2352.5	Spare
I2352.6	DI 6 X4:4	I2352.6	Spare
I2352.7	DI 7 X4:2	I2352.7	Spare
I2353.0	DI 8 X5:4	I2353.0	Spare
I2353.1	DI 9 X5:2	I2353.1	Spare
I2353.2	DI 10 X6:4	I2353.2	Spare
I2353.3	DI 11 X6:2	I2353.3	Spare
I2353.4	DI 12 X7:4	I2353.4	Spare
I2353.5	DI 13 X7:2	I2353.5	Spare
I2353.6	DI 14 X8:4	I2353.6	Spare
I2353.7	DI 15 X8:2	I2353.7	Spare

-KF3.12

FESTO
CPX-M-AB-8-M12X2-5POL
549335

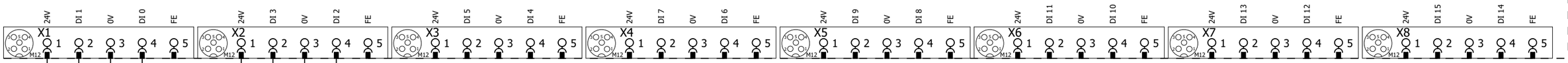

+V1UQ52UQ29.1-W1
=V1UQ52UQ29+.UQ52UQ29/1.1

+V1UQ52UQ30.1-W1
=V1UQ52UQ30+.UQ52UQ30/1.1

1 3

			Date	1/11/2023	Volvo Trucks North America	Valiant TMS	I/O MOD. DI16 (8 x M12) FOR VTSA-F	Drawing name: =2V10&EFS-EL		= V1UQ52KF3	
			Ed.	MKLEPADLO						+ V1UQ52	
			Appr		P6700 Bodyside RH - Robot Cell 2V10			Document type: EFS	Project nr: 22-16150		Page 2
Modification	Date	Name	Original		Replacement of	Replaced by	Scale 1:1				1579

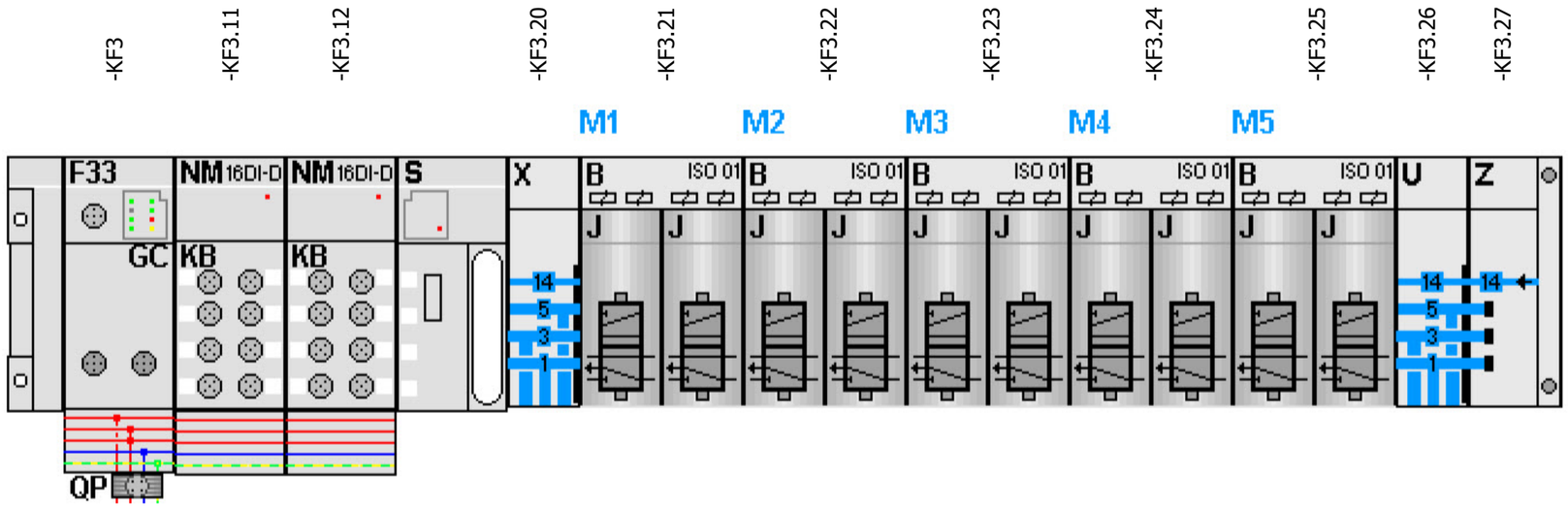

-KF3.21

=V1UQ52UQ21+.UQ52UQ21/1.3
=V1UQ52UQ22+.UQ52UQ22/1.3

FESTO

=V1UQ52UQ21+.UQ52UQ21/1.4	Q2350.0 DO 0 1.1	-QN21.1_Q	Clamp 21 (RST)
=V1UQ52UQ21+.UQ52UQ21/1.4	Q2350.1 DO 1 1.2	-QN21.2_Q	Clamp 21 (SET)
=V1UQ52UQ22+.UQ52UQ22/1.4	Q2350.2 DO 2 2.1	-QN22.1_Q	Clamp 22 (RST)
=V1UQ52UQ22+.UQ52UQ22/1.4	Q2350.3 DO 3 2.2	-QN22.2_Q	Clamp 22 (SET)

-KF3.22

=V1UQ52UQ23+.UQ52UQ23/1.3
=V1UQ52UQ24+.UQ52UQ24/1.3

FESTO

=V1UQ52UQ23+.UQ52UQ23/1.4	Q2350.4 DO 0 1.1	-QN23.1_Q	Shot Pin 23 (RST)
=V1UQ52UQ23+.UQ52UQ23/1.4	Q2350.5 DO 1 1.2	-QN23.2_Q	Shot Pin 23 (SET)
=V1UQ52UQ24+.UQ52UQ24/1.4	Q2350.6 DO 2 2.1	-QN24.1_Q	Clamp 24 (RST)
=V1UQ52UQ24+.UQ52UQ24/1.4	Q2350.7 DO 3 2.2	-QN24.2_Q	Clamp 24 (SET)

-KF3.23

=V1UQ52UQ25+.UQ52UQ25/1.3
=V1UQ52UQ26+.UQ52UQ26/1.3

FESTO

=V1UQ52UQ25+.UQ52UQ25/1.4	Q2351.0 DO 0 1.1	-QN25.1_Q	Slide 25 (RST)
=V1UQ52UQ25+.UQ52UQ25/1.4	Q2351.1 DO 1 1.2	-QN25.2_Q	Slide 25 (SET)
=V1UQ52UQ26+.UQ52UQ26/1.4	Q2351.2 DO 2 2.1	-QN26.1_Q	Shot Pin 26 (RST)
=V1UQ52UQ26+.UQ52UQ26/1.4	Q2351.3 DO 3 2.2	-QN26.2_Q	Shot Pin 26 (SET)

-KF3.24

=V1UQ52UQ27+.UQ52UQ27/1.3
=V1UQ52UQ28+.UQ52UQ28/1.3

FESTO

=V1UQ52UQ27+.UQ52UQ27/1.4	Q2351.4 DO 0 1.1	-QN27.1_Q	Clamp 27 (RST)
=V1UQ52UQ27+.UQ52UQ27/1.4	Q2351.5 DO 1 1.2	-QN27.2_Q	Clamp 27 (SET)
=V1UQ52UQ28+.UQ52UQ28/1.4	Q2351.6 DO 2 2.1	-QN28.1_Q	Clamp 28 (RST)
=V1UQ52UQ28+.UQ52UQ28/1.4	Q2351.7 DO 3 2.2	-QN28.2_Q	Clamp 28 (SET)

-KF3.25

=V1UQ52UQ29+.UQ52UQ29/1.3
=V1UQ52UQ30+.UQ52UQ30/1.3

FESTO

=V1UQ52UQ29+.UQ52UQ29/1.4	Q2352.0 DO 0 1.1	-QN29.1_Q	Clamp 29 (RST)
=V1UQ52UQ29+.UQ52UQ29/1.4	Q2352.1 DO 1 1.2	-QN29.2_Q	Clamp 29 (SET)
=V1UQ52UQ30+.UQ52UQ30/1.4	Q2352.2 DO 2 2.1	-QN30.1_Q	Clamp 30 (RST)
=V1UQ52UQ30+.UQ52UQ30/1.4	Q2352.3 DO 3 2.2	-QN30.2_Q	Clamp 30 (SET)

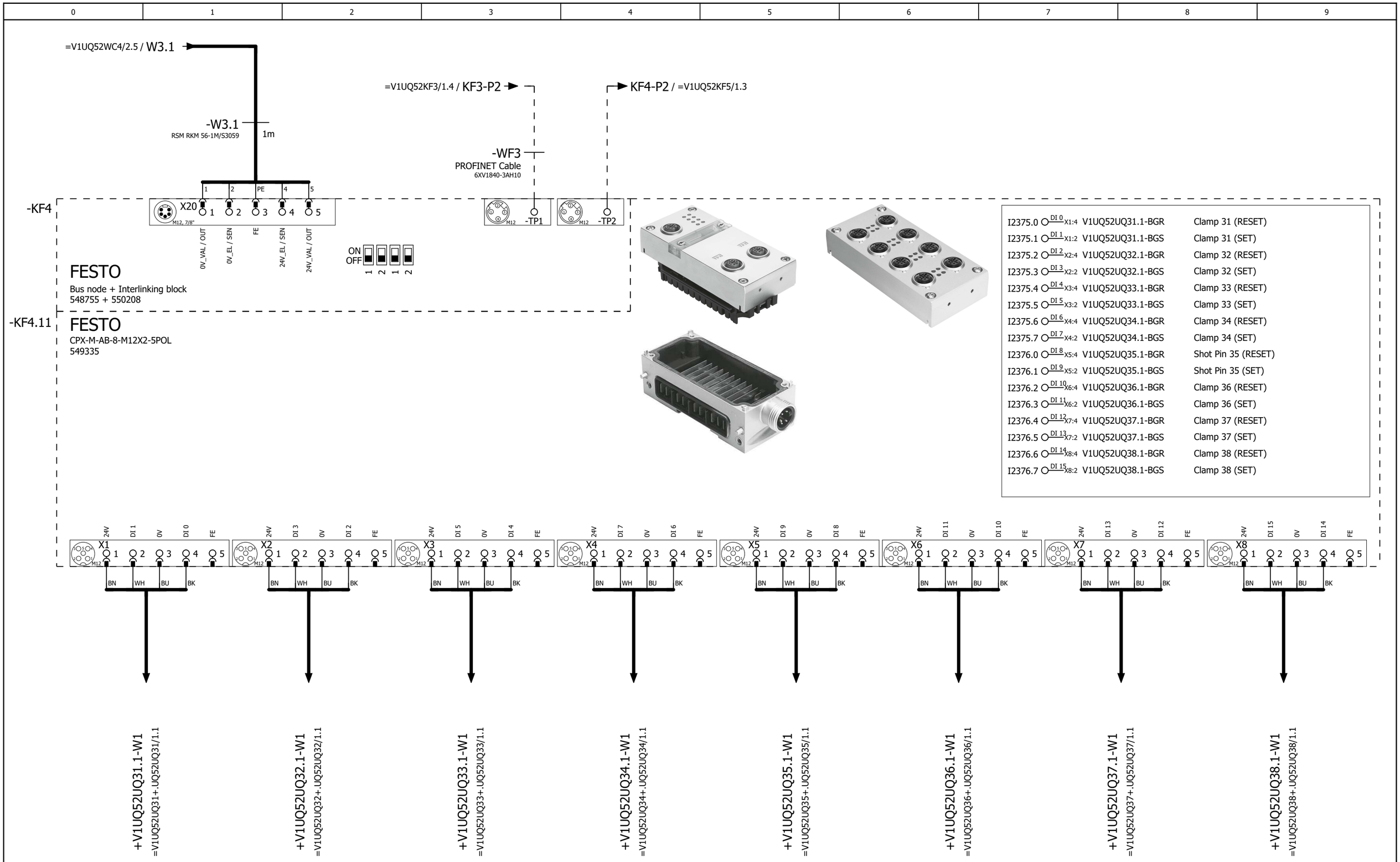

=V1UQ52KF3/3

2

			Date	1/11/2023	Volvo Trucks North America	Valiant TMS	CONNECTING MOD. FOR VTSA MANIFOLD	Drawing name: =2V10&EFS-EL		= V1UQ52KF4	
			Ed.	MKLEPADLO						+ V1UQ52	
			Appr		P6700 Bodyside RH - Robot Cell 2V10			Document type: EFS	Project nr: 22-16150		Page 1
Modification	Date	Name	Original		Replacement of / Replaced by	Scale 1:1					1579

I2377.0	DI 0 X1:4	V1UQ52UQ39.1-BGR	Shot Pin 39 (RESET)
I2377.1	DI 1 X1:2	V1UQ52UQ39.1-BGS	Shot Pin 39 (SET)
I2377.2	DI 2 X2:4	V1UQ52UQ40.1-BGR	Clamp 40 (RESET)
I2377.3	DI 3 X2:2	V1UQ52UQ40.1-BGS	Clamp 40 (SET)
I2377.4	DI 4 X3:4	I2377.4	Spare
I2377.5	DI 5 X3:2	I2377.5	Spare
I2377.6	DI 6 X4:4	I2377.6	Spare
I2377.7	DI 7 X4:2	I2377.7	Spare
I2378.0	DI 8 X5:4	I2378.0	Spare
I2378.1	DI 9 X5:2	I2378.1	Spare
I2378.2	DI 10 X6:4	I2378.2	Spare
I2378.3	DI 11 X6:2	I2378.3	Spare
I2378.4	DI 12 X7:4	I2378.4	Spare
I2378.5	DI 13 X7:2	I2378.5	Spare
I2378.6	DI 14 X8:4	I2378.6	Spare
I2378.7	DI 15 X8:2	I2378.7	Spare

-KF4.12

FESTO

CPX-M-AB-8-M12X2-5POL

549335

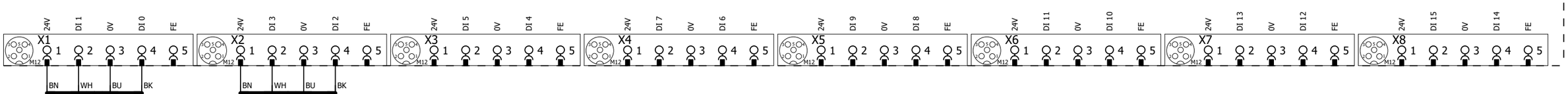

+V1UQ52UQ39.1-W1
=V1UQ52UQ39+.UQ52UQ39/1.1

+V1UQ52UQ40.1-W1
=V1UQ52UQ40+.UQ52UQ40/1.1

1 3

			Date	1/11/2023	Volvo Trucks North America	Valiant TMS	I/O MOD. DI16 (8 x M12) FOR VTSA-F	Drawing name: =2V10&EFS-EL		= V1UQ52KF4	
			Ed.	MKLEPADLO						+ V1UQ52	
			Appr		P6700 Bodyside RH - Robot Cell 2V10			Document type: EFS	Project nr: 22-16150		Page 2
Modification	Date	Name	Original		Replacement of	Replaced by	Scale 1:1				1579

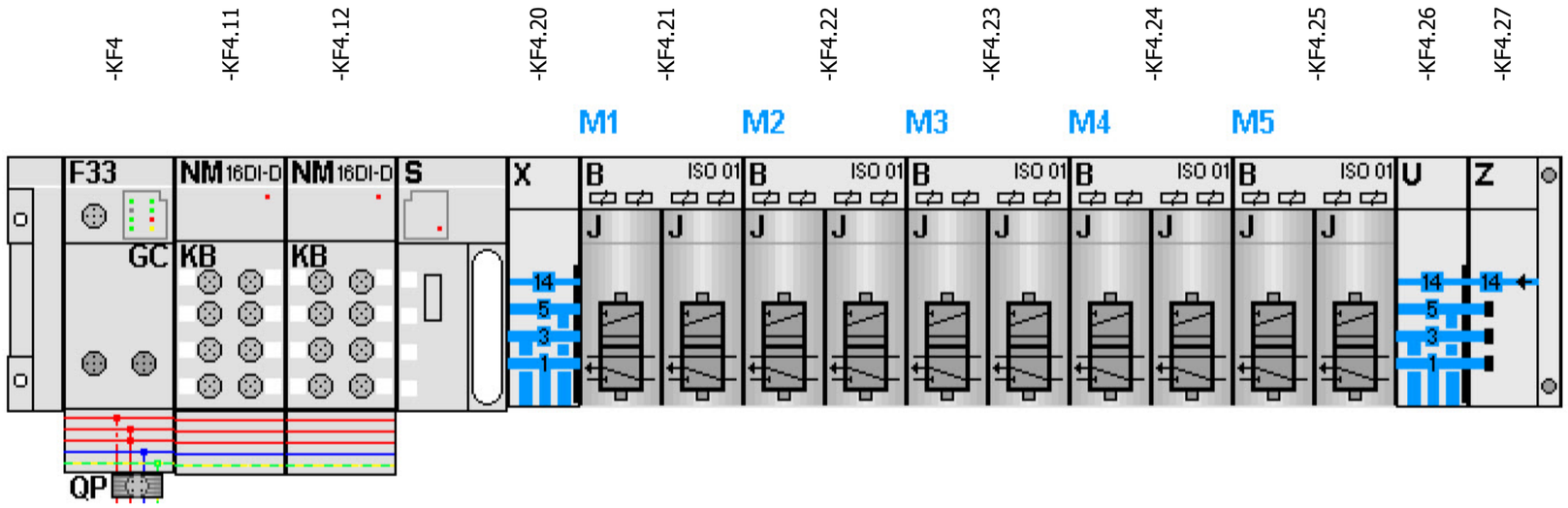

-KF4.21

=V1UQ52UQ31+.UQ52UQ31/1.3
=V1UQ52UQ32+.UQ52UQ32/1.3

FESTO

=V1UQ52UQ31+.UQ52UQ31/1.4	Q2375.0 DO 0 1.1	-QN31.1_Q	Clamp 31 (RST)
=V1UQ52UQ31+.UQ52UQ31/1.4	Q2375.1 DO 1 1.2	-QN31.2_Q	Clamp 31 (SET)
=V1UQ52UQ32+.UQ52UQ32/1.4	Q2375.2 DO 2 2.1	-QN32.1_Q	Clamp 32 (RST)
=V1UQ52UQ32+.UQ52UQ32/1.4	Q2375.3 DO 3 2.2	-QN32.2_Q	Clamp 32 (SET)

-KF4.22

=V1UQ52UQ33+.UQ52UQ33/1.3
=V1UQ52UQ34+.UQ52UQ34/1.3

FESTO

=V1UQ52UQ33+.UQ52UQ33/1.4	Q2375.4 DO 0 1.1	-QN33.1_Q	Clamp 33 (RST)
=V1UQ52UQ33+.UQ52UQ33/1.4	Q2375.5 DO 1 1.2	-QN33.2_Q	Clamp 33 (SET)
=V1UQ52UQ34+.UQ52UQ34/1.4	Q2375.6 DO 2 2.1	-QN34.1_Q	Clamp 34 (RST)
=V1UQ52UQ34+.UQ52UQ34/1.4	Q2375.7 DO 3 2.2	-QN34.2_Q	Clamp 34 (SET)

-KF4.23

=V1UQ52UQ35+.UQ52UQ35/1.3
=V1UQ52UQ36+.UQ52UQ36/1.3

FESTO

=V1UQ52UQ35+.UQ52UQ35/1.4	Q2376.0 DO 0 1.1	-QN35.1_Q	Shot Pin 35 (RST)
=V1UQ52UQ35+.UQ52UQ35/1.4	Q2376.1 DO 1 1.2	-QN35.2_Q	Shot Pin 35 (SET)
=V1UQ52UQ36+.UQ52UQ36/1.4	Q2376.2 DO 2 2.1	-QN36.1_Q	Clamp 36 (RST)
=V1UQ52UQ36+.UQ52UQ36/1.4	Q2376.3 DO 3 2.2	-QN36.2_Q	Clamp 36 (SET)

-KF4.24

=V1UQ52UQ37+.UQ52UQ37/1.3
=V1UQ52UQ38+.UQ52UQ38/1.3

FESTO

=V1UQ52UQ37+.UQ52UQ37/1.4	Q2376.4 DO 0 1.1	-QN37.1_Q	Clamp 37 (RST)
=V1UQ52UQ37+.UQ52UQ37/1.4	Q2376.5 DO 1 1.2	-QN37.2_Q	Clamp 37 (SET)
=V1UQ52UQ38+.UQ52UQ38/1.4	Q2376.6 DO 2 2.1	-QN38.1_Q	Clamp 38 (RST)
=V1UQ52UQ38+.UQ52UQ38/1.4	Q2376.7 DO 3 2.2	-QN38.2_Q	Clamp 38 (SET)

-KF4.25

=V1UQ52UQ39+.UQ52UQ39/1.3
=V1UQ52UQ40+.UQ52UQ40/1.3

FESTO

=V1UQ52UQ39+.UQ52UQ39/1.4	Q2377.0 DO 0 1.1	-QN39.1_Q	Shot Pin 39 (RST)
=V1UQ52UQ39+.UQ52UQ39/1.4	Q2377.1 DO 1 1.2	-QN39.2_Q	Shot Pin 39 (SET)
=V1UQ52UQ40+.UQ52UQ40/1.4	Q2377.2 DO 2 2.1	-QN40.1_Q	Clamp 40 (RST)
=V1UQ52UQ40+.UQ52UQ40/1.4	Q2377.3 DO 3 2.2	-QN40.2_Q	Clamp 40 (SET)

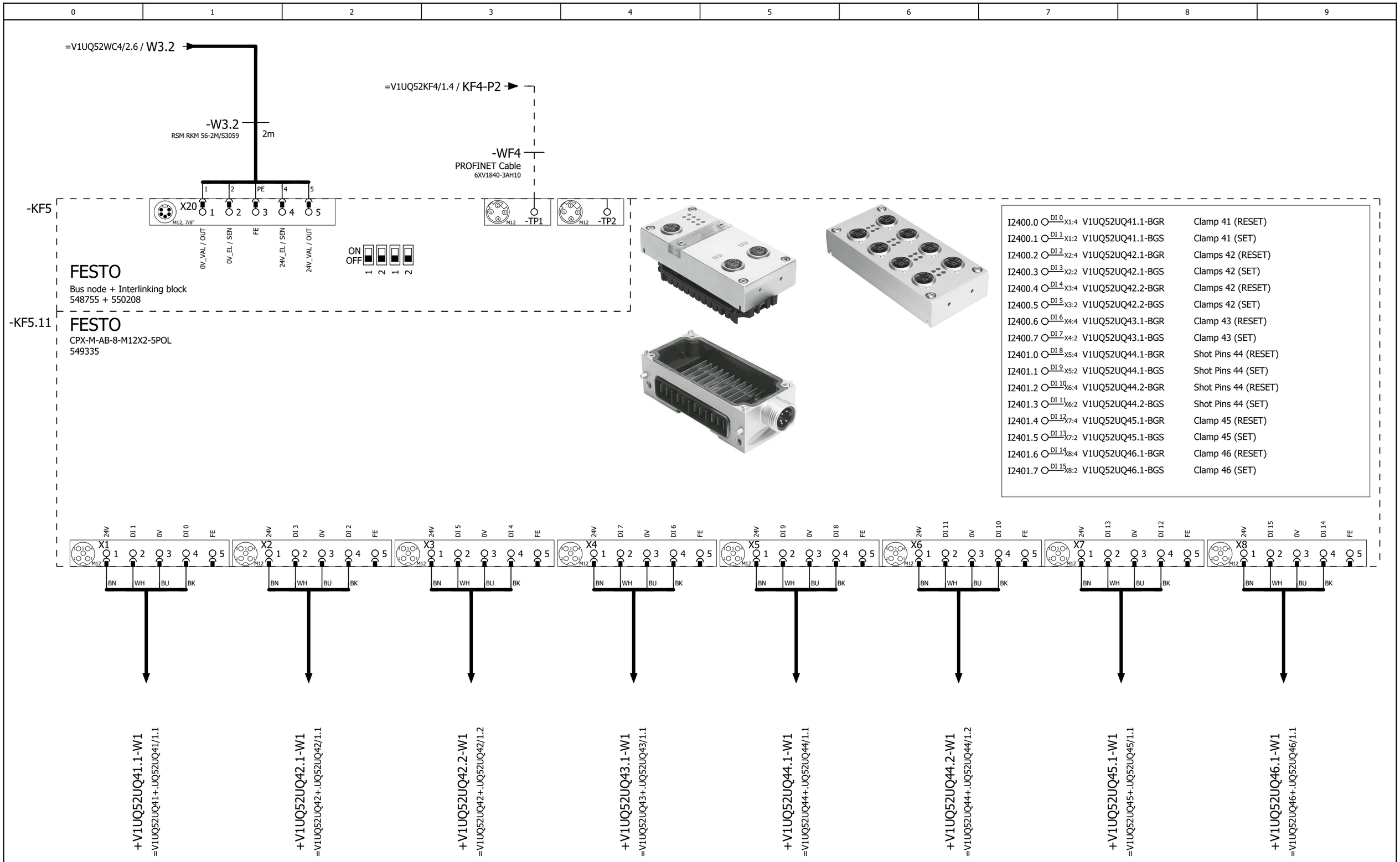

=V1UQ52KF4/3

2

			Date	1/11/2023	Volvo Trucks North America	Valiant TMS	CONNECTING MOD. FOR VTSA MANIFOLD	Drawing name: =2V10&EFS-EL		= V1UQ52KF5	
			Ed.	MKLEPADLO						+ V1UQ52	
			Appr		P6700 Bodyside RH - Robot Cell 2V10			Document type: EFS	Project nr: 22-16150		Page 1
Modification	Date	Name	Original		Replacement of / Replaced by	Scale 1:1					1579

I2402.0	DI 0 X1:4	V1UQ52UQ47.1-BGR	Shot Pin 47 (RESET)
I2402.1	DI 1 X1:2	V1UQ52UQ47.1-BGS	Shot Pin 47 (SET)
I2402.2	DI 2 X2:4	I2402.2	Spare
I2402.3	DI 3 X2:2	I2402.3	Spare
I2402.4	DI 4 X3:4	I2402.4	Spare
I2402.5	DI 5 X3:2	I2402.5	Spare
I2402.6	DI 6 X4:4	I2402.6	Spare
I2402.7	DI 7 X4:2	I2402.7	Spare
I2403.0	DI 8 X5:4	I2403.0	Spare
I2403.1	DI 9 X5:2	I2403.1	Spare
I2403.2	DI 10 X6:4	I2403.2	Spare
I2403.3	DI 11 X6:2	I2403.3	Spare
I2403.4	DI 12 X7:4	I2403.4	Spare
I2403.5	DI 13 X7:2	I2403.5	Spare
I2403.6	DI 14 X8:4	I2403.6	Spare
I2403.7	DI 15 X8:2	I2403.7	Spare

-KF5.12

FESTO

CPX-M-AB-8-M12X2-5POL

549335

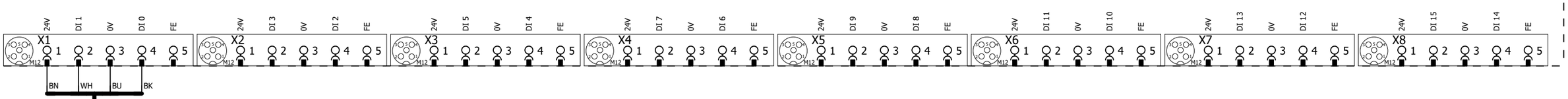

+.UQ52UQ47.1-W1

=V1UQ52UQ47+.UQ52UQ47/1.1

1 3

			Date	1/11/2023	Volvo Trucks North America	Valiant TMS	I/O MOD. DI16 (8 x M12) FOR VTSA-F	Drawing name: =2V10&EFS-EL		= V1UQ52KF5	
			Ed.	MKLEPADLO						+ V1UQ52	
			Appr		P6700 Bodyside RH - Robot Cell 2V10			Document type: EFS	Project nr: 22-16150		Page 2
Modification	Date	Name	Original		Replacement of	Replaced by	Scale 1:1				1579

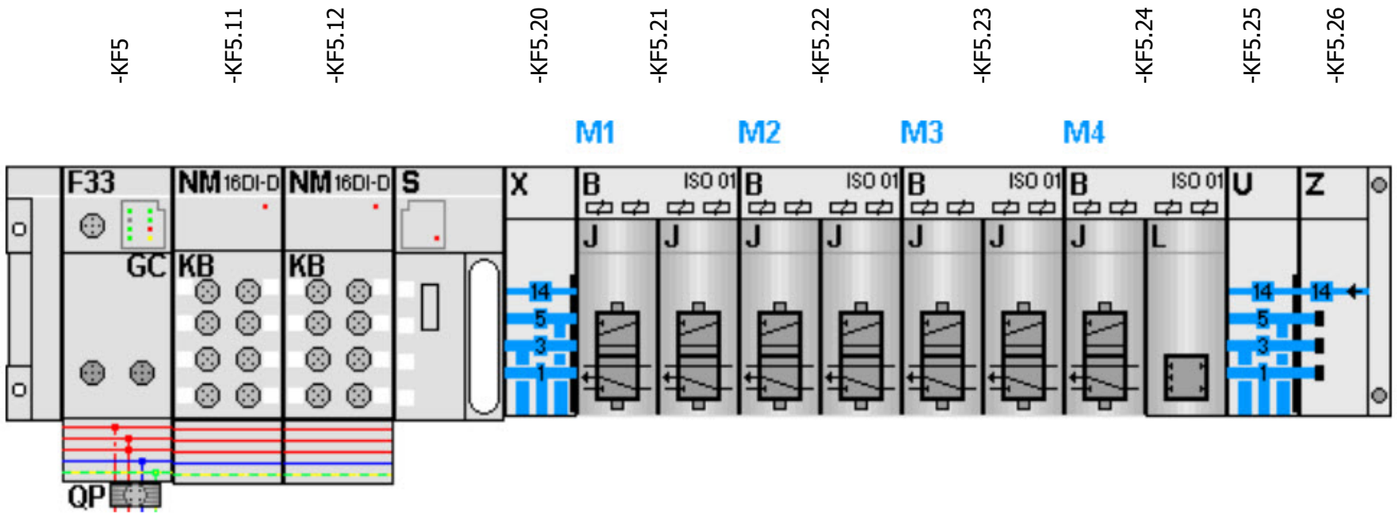

-KF5.21

=V1UQ52UQ41+.UQ52UQ41/1.3
=V1UQ52UQ42+.UQ52UQ42/1.3

FESTO

=V1UQ52UQ41+.UQ52UQ41/1.4	Q2400.0	DO 0 1.1	-QN41.1_Q	Clamp 41 (RST)
=V1UQ52UQ41+.UQ52UQ41/1.4	Q2400.1	DO 1 1.2	-QN41.2_Q	Clamp 41 (SET)
=V1UQ52UQ42+.UQ52UQ42/1.4	Q2400.2	DO 2 2.1	-QN42.1_Q	Clamps 42 (RST)
=V1UQ52UQ42+.UQ52UQ42/1.4	Q2400.3	DO 3 2.2	-QN42.2_Q	Clamps 42 (SET)

-KF5.22

=V1UQ52UQ43+.UQ52UQ43/1.3
=V1UQ52UQ44+.UQ52UQ44/1.3

FESTO

=V1UQ52UQ43+.UQ52UQ43/1.4	Q2400.4	DO 0 1.1	-QN43.1_Q	Clamp 43 (RST)
=V1UQ52UQ43+.UQ52UQ43/1.4	Q2400.5	DO 1 1.2	-QN43.2_Q	Clamp 43 (SET)
=V1UQ52UQ44+.UQ52UQ44/1.4	Q2400.6	DO 2 2.1	-QN44.1_Q	Shot Pins 44 (RST)
=V1UQ52UQ44+.UQ52UQ44/1.4	Q2400.7	DO 3 2.2	-QN44.2_Q	Shot Pins 44 (SET)

-KF5.23

=V1UQ52UQ45+.UQ52UQ45/1.3
=V1UQ52UQ46+.UQ52UQ46/1.3

FESTO

=V1UQ52UQ45+.UQ52UQ45/1.4	Q2401.0	DO 0 1.1	-QN45.1_Q	Clamp 45 (RST)
=V1UQ52UQ45+.UQ52UQ45/1.4	Q2401.1	DO 1 1.2	-QN45.2_Q	Clamp 45 (SET)
=V1UQ52UQ46+.UQ52UQ46/1.4	Q2401.2	DO 2 2.1	-QN46.1_Q	Clamp 46 (RST)
=V1UQ52UQ46+.UQ52UQ46/1.4	Q2401.3	DO 3 2.2	-QN46.2_Q	Clamp 46 (SET)

-KF5.24

=V1UQ52UQ47+.UQ52UQ47/1.3

FESTO

=V1UQ52UQ47+.UQ52UQ47/1.4	Q2401.4	DO 0 1.1	-QN47.1_Q	Shot Pin 47 (RST)
=V1UQ52UQ47+.UQ52UQ47/1.4	Q2401.5	DO 1 1.2	-QN47.2_Q	Shot Pin 47 (SET)
	Q2401.6	DO 2 2.1	-QN48.1_Q	SPARE
	Q2401.7	DO 3 2.2	-QN48.2_Q	SPARE

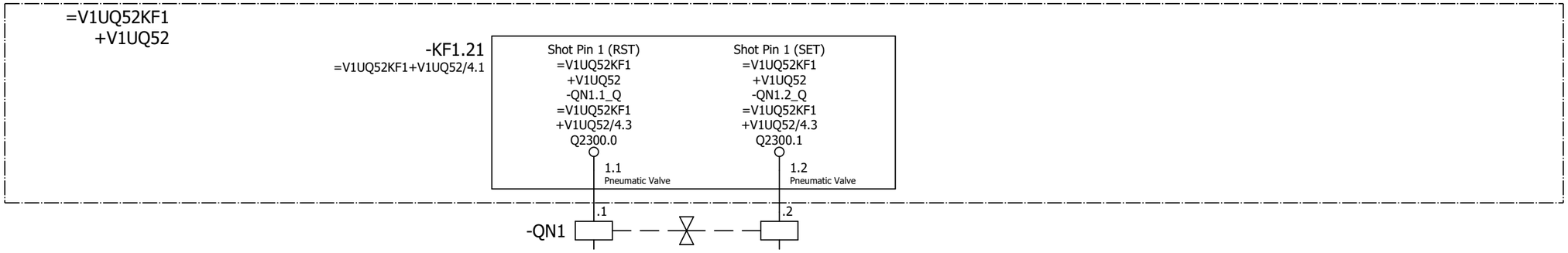

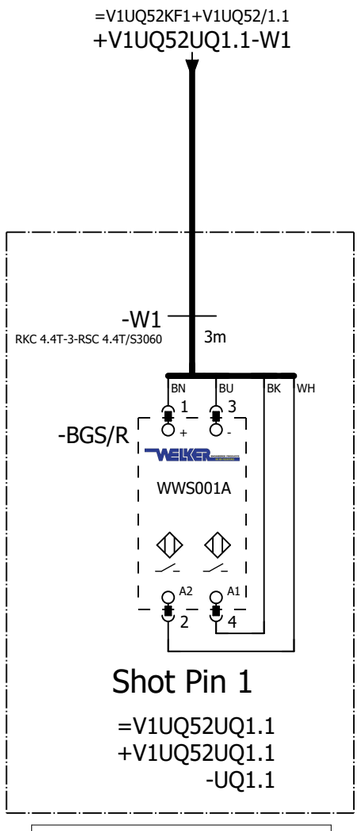

=V1UQ52
-UQ1.1-BGS/R
Shot Pin 1

=V1UQ52KF5+V1UQ52/3

=V1UQ52UQ2+.UQ52UQ2/1

			Date	1/11/2023	Volvo Trucks North America		Valiant TMS	FESTO DQ CONNECTION QN1	Drawing name: =2V10&EFS-EL	= V1UQ52UQ1	
			Ed.	MKLEPADLO						+ V1UQ52UQ1	
			Appr		P6700 Bodyside RH - Robot Cell 2V10				Document type: EFS	Project nr: 22-16150	Page 1
Modification	Date	Name	Original		Replacement of	Replaced by	Scale 1:1				1579

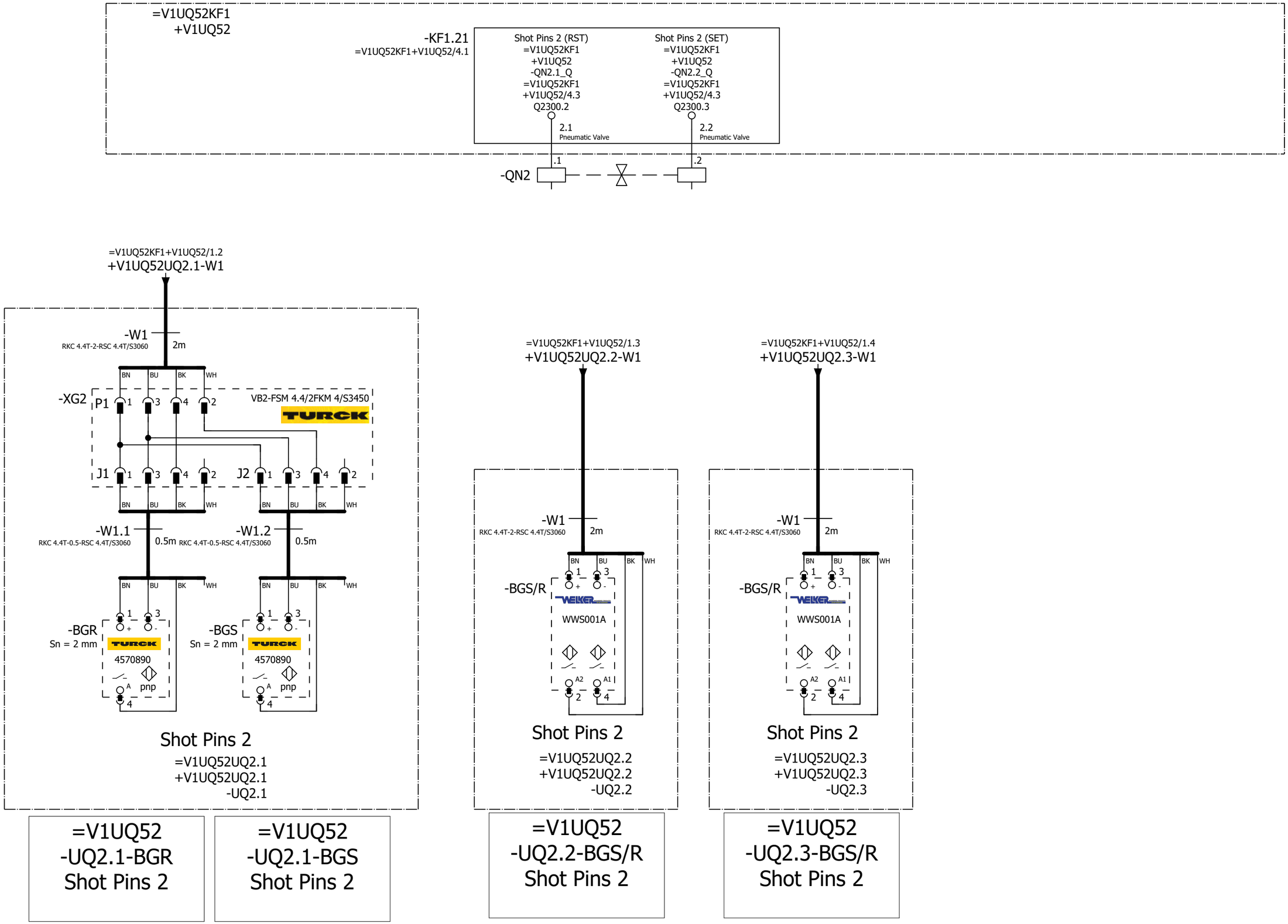

=V1UQ52UQ1+.UQ52UQ1/1

=V1UQ52UQ3+.UQ52UQ3/1

			Date	1/11/2023	Volvo Trucks North America	Valiant TMS	FESTO DQ CONNECTION QN2	Drawing name: =2V10&EFS-EL		= V1UQ52UQ2	
			Ed.	MKLEPADLO						+ V1UQ52UQ2	
			Appr		P6700 Bodyside RH - Robot Cell 2V10			Document type: EFS	Project nr: 22-16150		Page 1
Modification	Date	Name	Original		Replacement of / Replaced by	Scale 1:1					1579

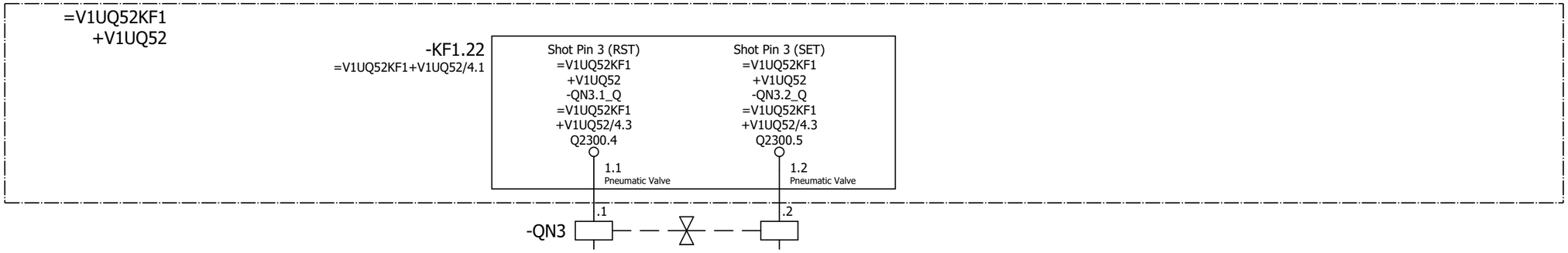

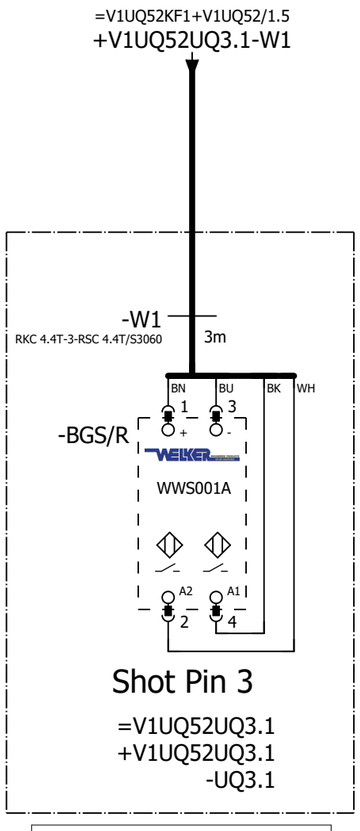

=V1UQ52
-UQ3.1-BGS/R
Shot Pin 3

=V1UQ52UQ2+.UQ52UQ2/1

=V1UQ52UQ4+.UQ52UQ4/1

			Date	1/11/2023	Volvo Trucks North America		Valiant TMS	FESTO DQ CONNECTION QN3	Drawing name: =2V10&EFS-EL	= V1UQ52UQ3	
			Ed.	MKLEPADLO						+ V1UQ52UQ3	
			Appr		P6700 Bodyside RH - Robot Cell 2V10				Document type: EFS	Project nr: 22-16150	Page 1
Modification	Date	Name	Original		Replacement of	Replaced by	Scale 1:1				1579

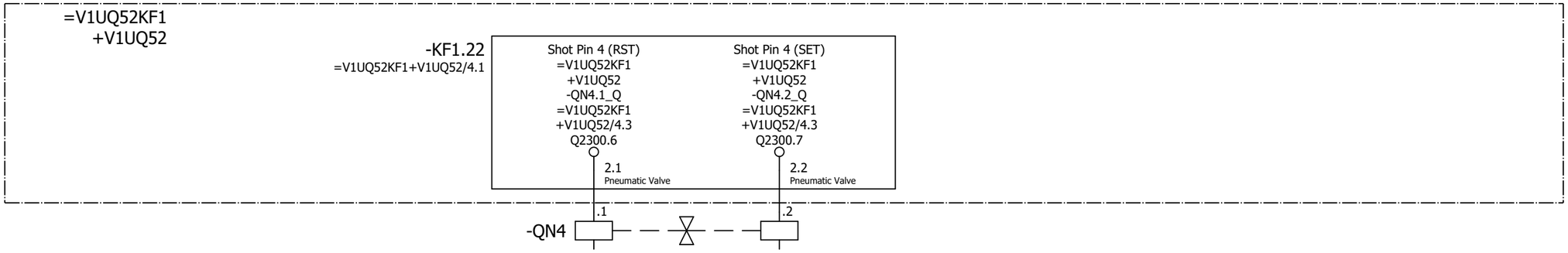

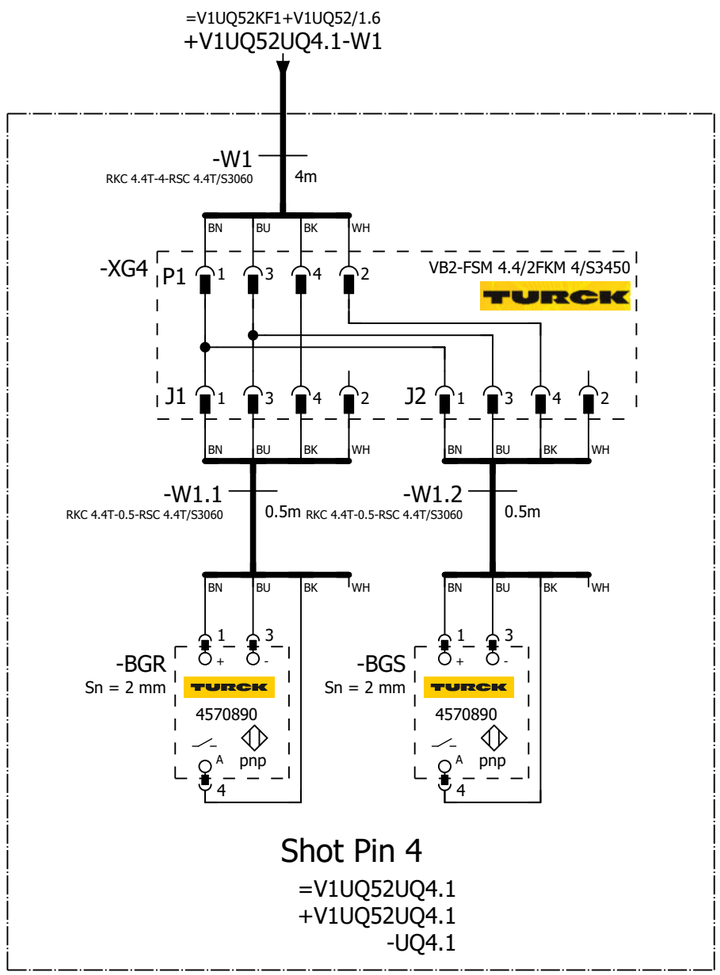

=V1UQ52 -UQ4.1-BGR Shot Pin 4	=V1UQ52 -UQ4.1-BGS Shot Pin 4

=V1UQ52UQ3+.UQ52UQ3/1

=V1UQ52UQ5+.UQ52UQ5/1

			Date	1/11/2023	Volvo Trucks North America	Valiant TMS	FESTO DQ CONNECTION QN4	Drawing name: =2V10&EFS-EL		= V1UQ52UQ4	
			Ed.	MKLEPADLO						+ V1UQ52UQ4	
			Appr		P6700 Bodyside RH - Robot Cell 2V10			Document type: EFS	Project nr: 22-16150		Page 1
Modification	Date	Name	Original		Replacement of / Replaced by	Scale 1:1					1579

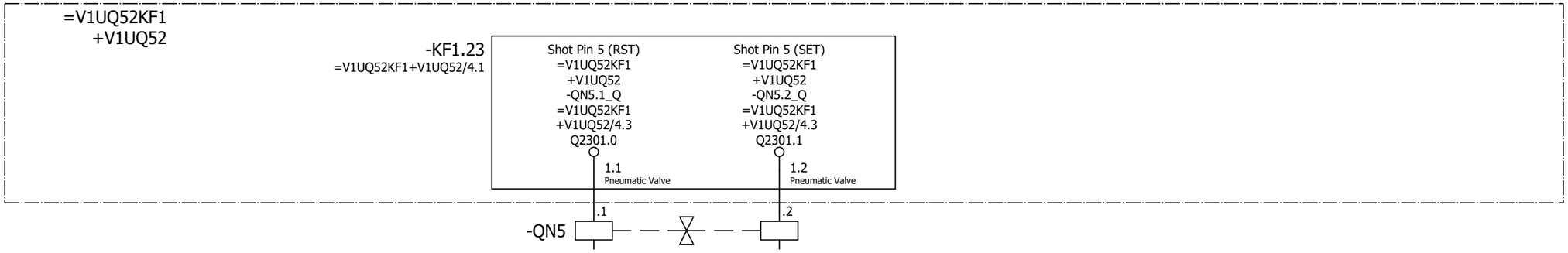

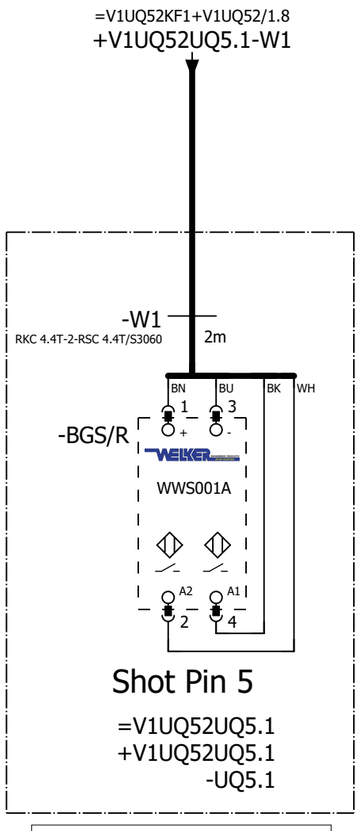

=V1UQ52
-UQ5.1-BGS/R
Shot Pin 5

=V1UQ52UQ4+.UQ52UQ4/1

=V1UQ52UQ6+.UQ52UQ6/1

			Date	1/11/2023	Volvo Trucks North America		Valiant TMS	FESTO DQ CONNECTION QN5	Drawing name: =2V10&EFS-EL	= V1UQ52UQ5	
			Ed.	MKLEPADLO						+ V1UQ52UQ5	
			Appr		P6700 Bodyside RH - Robot Cell 2V10				Document type: EFS	Project nr: 22-16150	Page 1
Modification	Date	Name	Original		Replacement of	Replaced by	Scale 1:1				1579

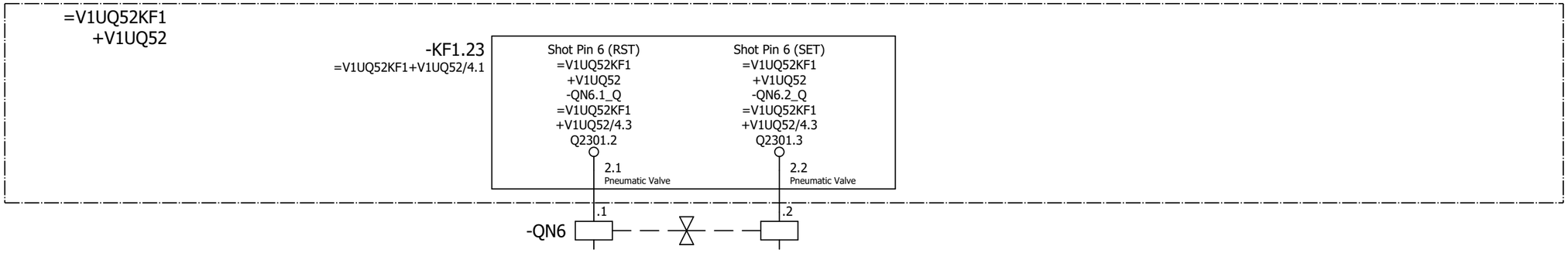

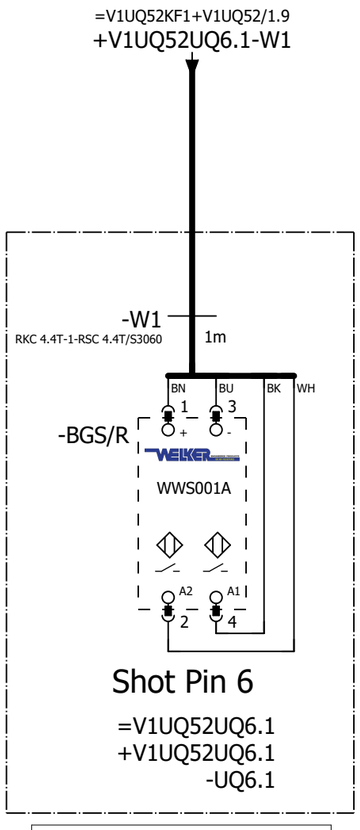

=V1UQ52
-UQ6.1-BGS/R
Shot Pin 6

=V1UQ52UQ5+.UQ52UQ5/1

=V1UQ52UQ7+.UQ52UQ7/1

			Date	1/11/2023	Volvo Trucks North America		Valiant TMS	FESTO DQ CONNECTION QN6	Drawing name: =2V10&EFS-EL	= V1UQ52UQ6	
			Ed.	MKLEPADLO						+ V1UQ52UQ6	
			Appr		P6700 Bodyside RH - Robot Cell 2V10				Document type: EFS	Project nr: 22-16150	Page 1
Modification	Date	Name	Original		Replacement of	Replaced by	Scale 1:1				1579

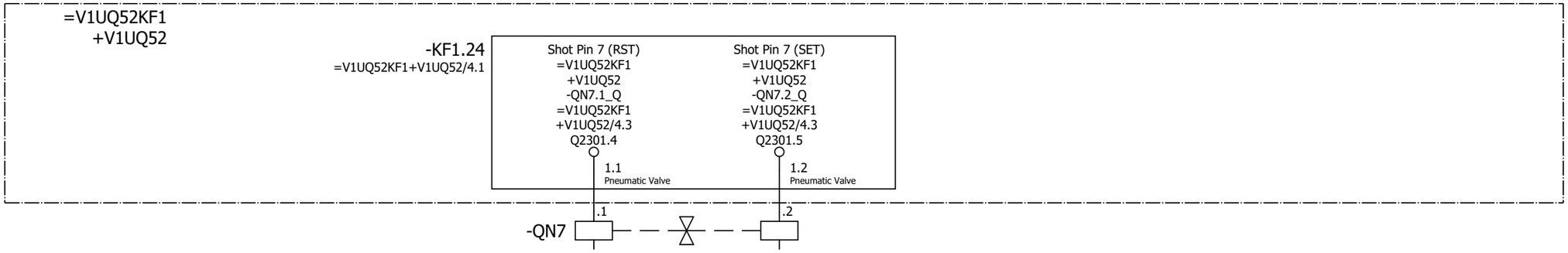

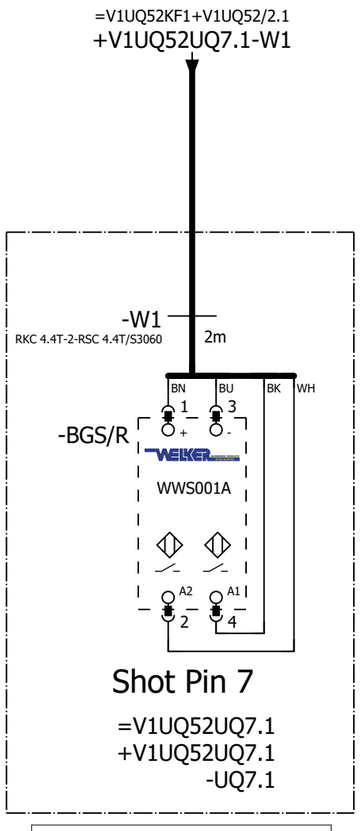

=V1UQ52
-UQ7.1-BGS/R
Shot Pin 7

=V1UQ52UQ6+.UQ52UQ6/1

=V1UQ52UQ8+.UQ52UQ8/1

			Date	1/11/2023	Volvo Trucks North America		Valiant TMS	FESTO DQ CONNECTION QN7	Drawing name: =2V10&EFS-EL	= V1UQ52UQ7	
			Ed.	MKLEPADLO						+ V1UQ52UQ7	
			Appr		P6700 Bodyside RH - Robot Cell 2V10				Document type: EFS	Project nr: 22-16150	Page 1
Modification	Date	Name	Original		Replacement of	Replaced by	Scale 1:1				1579

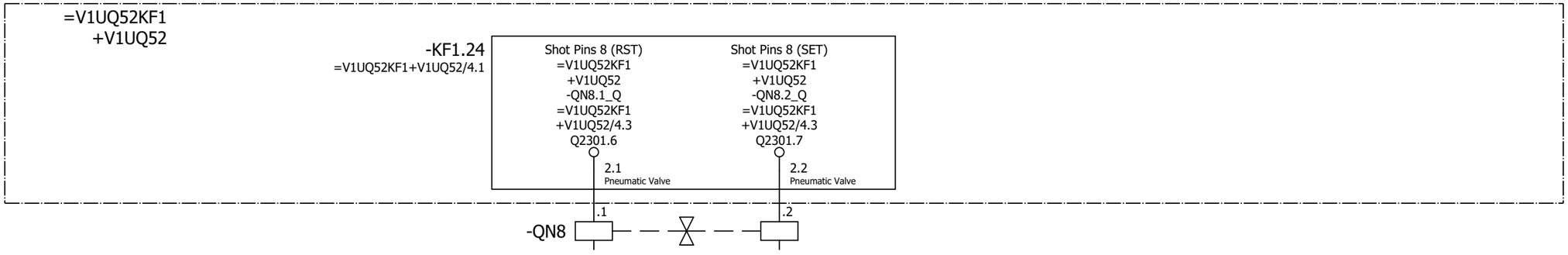

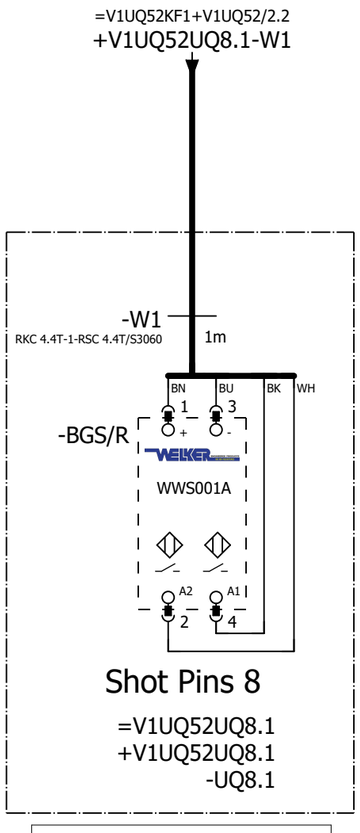

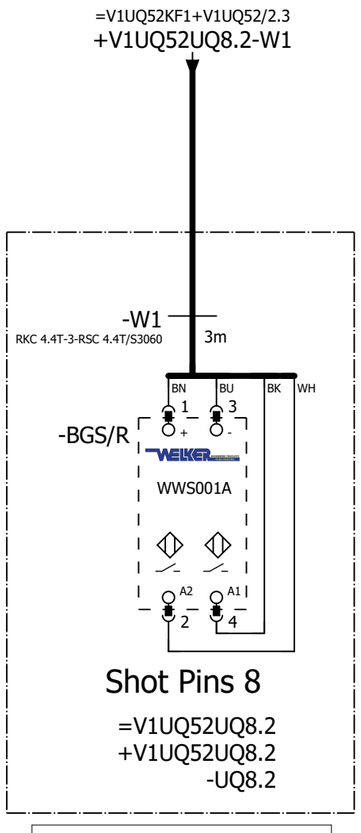

=V1UQ52
-UQ8.1-BGS/R
Shot Pins 8

=V1UQ52
-UQ8.2-BGS/R
Shot Pins 8

=V1UQ52UQ7+.UQ52UQ7/1

=V1UQ52UQ9+.UQ52UQ9/1

			Date	1/11/2023	Volvo Trucks North America	Valiant TMS	FESTO DQ CONNECTION QN8	Drawing name: =2V10&EFS-EL	= V1UQ52UQ8	
			Ed.	MKLEPADLO					+ V1UQ52UQ8	
			Appr		P6700 Bodyside RH - Robot Cell 2V10			Document type: EFS	Project nr: 22-16150	Page 1
Modification	Date	Name	Original		Replacement of / Replaced by	Scale 1:1				1579

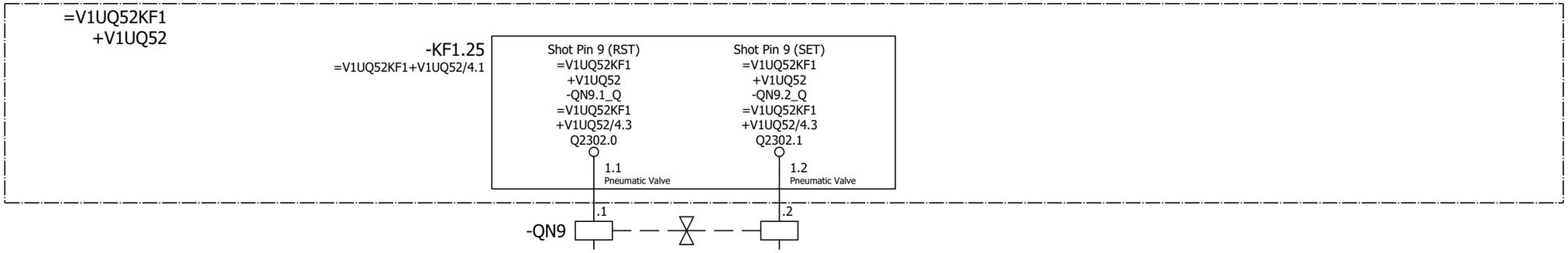

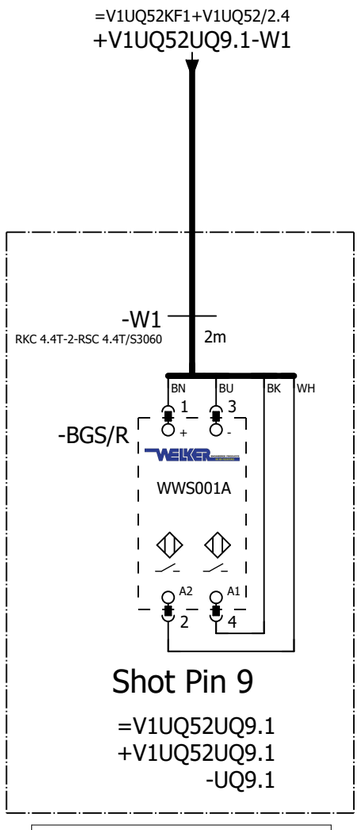

=V1UQ52
-UQ9.1-BGS/R
Shot Pin 9

=V1UQ52UQ8+.UQ52UQ8/1

=V1UQ52UQ10+.UQ52UQ10/1

			Date	1/11/2023	Volvo Trucks North America		Valiant TMS	FESTO DQ CONNECTION QN9	Drawing name: =2V10&EFS-EL	= V1UQ52UQ9	
			Ed.	MKLEPADLO						+ V1UQ52UQ9	
			Appr		P6700 Bodyside RH - Robot Cell 2V10				Document type: EFS	Project nr: 22-16150	Page 1
Modification	Date	Name	Original		Replacement of	Replaced by	Scale 1:1				1579

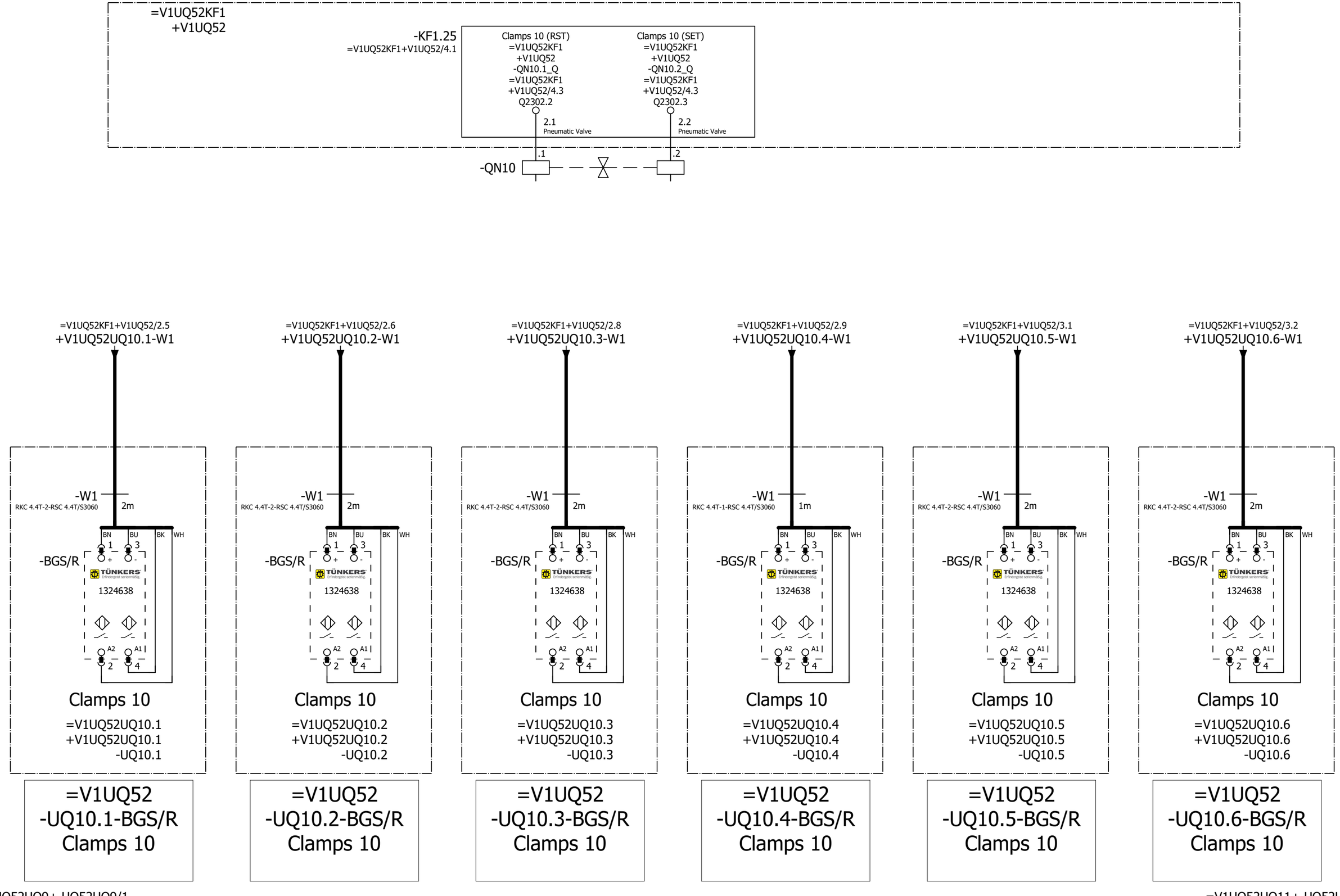

=V1UQ52UQ9+.UQ52UQ9/1

=V1UQ52UQ11+.UQ52UQ11/1

			Date	1/11/2023	Volvo Trucks North America		Valiant TMS	FESTO DQ CONNECTION QN10	Drawing name: =2V10&EFS-EL	= V1UQ52UQ10	
			Ed.	MKLEPADLO						+ V1UQ52UQ10	
			Appr		P6700 Bodyside RH - Robot Cell 2V10				Document type: EFS	Project nr: 22-16150	Page 1
Modification	Date	Name	Original		Replacement of	Replaced by	Scale 1:1				1579

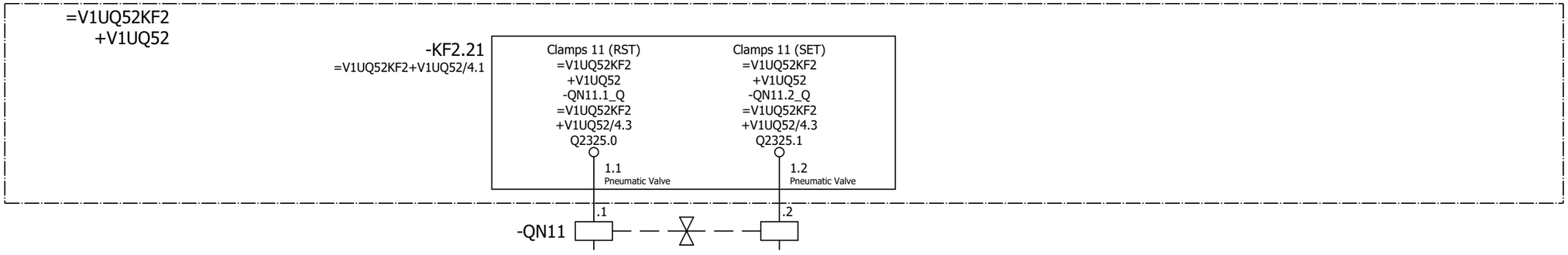

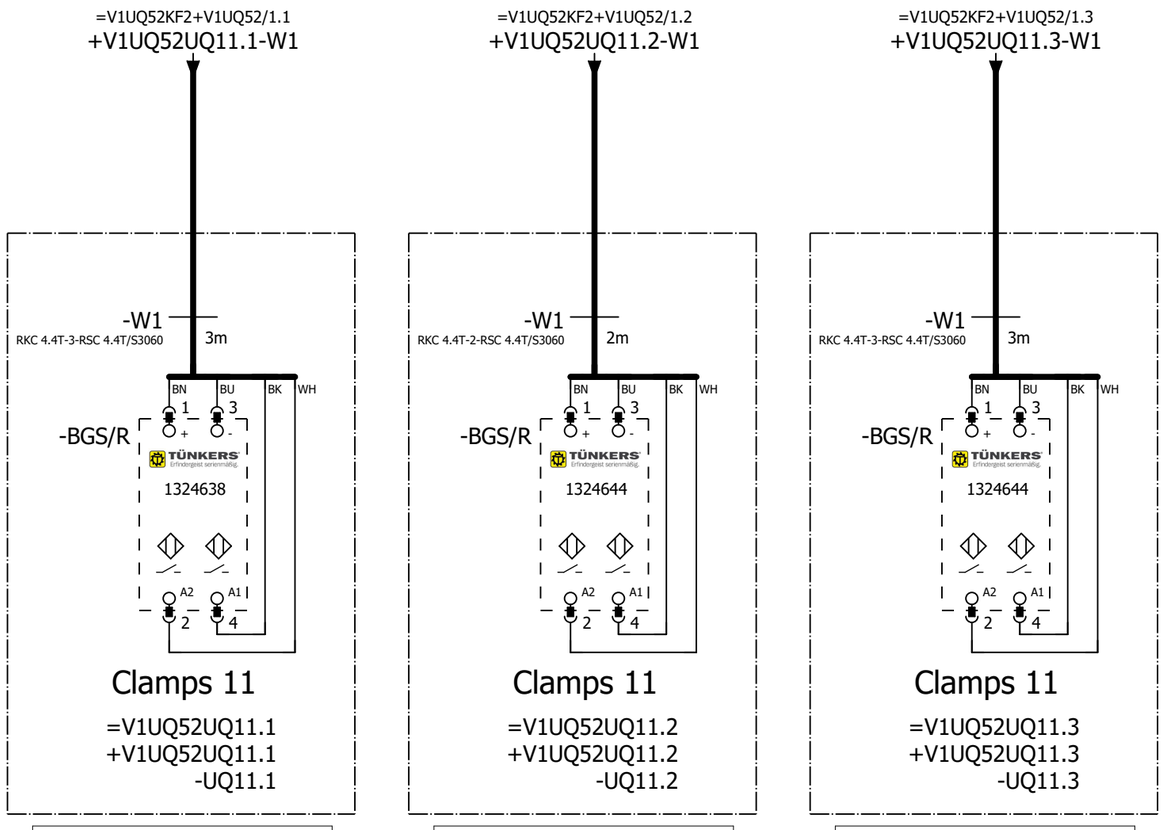

=V1UQ52
-UQ11.1-BGS/R
Clamps 11

=V1UQ52
-UQ11.2-BGS/R
Clamps 11

=V1UQ52
-UQ11.3-BGS/R
Clamps 11

=V1UQ52UQ10+.UQ52UQ10/1

=V1UQ52UQ12+.UQ52UQ12/1

			Date	1/11/2023	Volvo Trucks North America		Valiant TMS	FESTO DQ CONNECTION QN11	Drawing name: =2V10&EFS-EL	= V1UQ52UQ11	
			Ed.	MKLEPADLO						+ V1UQ52UQ11	
			Appr		P6700 Bodyside RH - Robot Cell 2V10				Document type: EFS	Project nr: 22-16150	Page 1
Modification	Date	Name	Original		Replacement of	Replaced by	Scale 1:1				1579

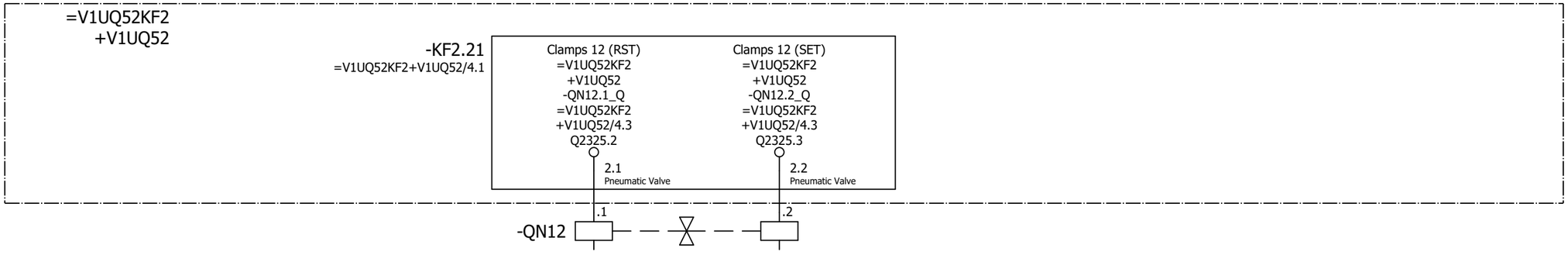

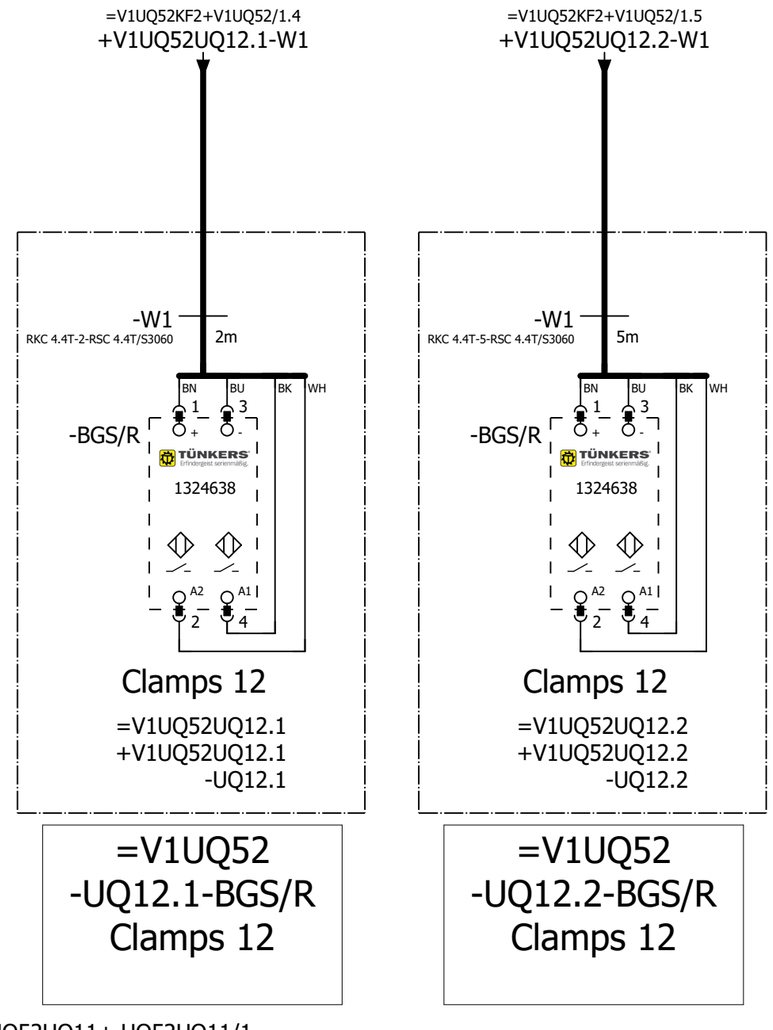

=V1UQ52UQ11+.UQ52UQ11/1

=V1UQ52UQ13+.UQ52UQ13/1

			Date	1/11/2023	Volvo Trucks North America	Valiant TMS	FESTO DQ CONNECTION QN12	Drawing name: =2V10&EFS-EL	= V1UQ52UQ12		
			Ed.	MKLEPADLO					+ V1UQ52UQ12		
			Appr		P6700 Bodyside RH - Robot Cell 2V10			Document type: EFS	Project nr: 22-16150	Page	1
Modification	Date	Name	Original		Replacement of / Replaced by	Scale 1:1					1579

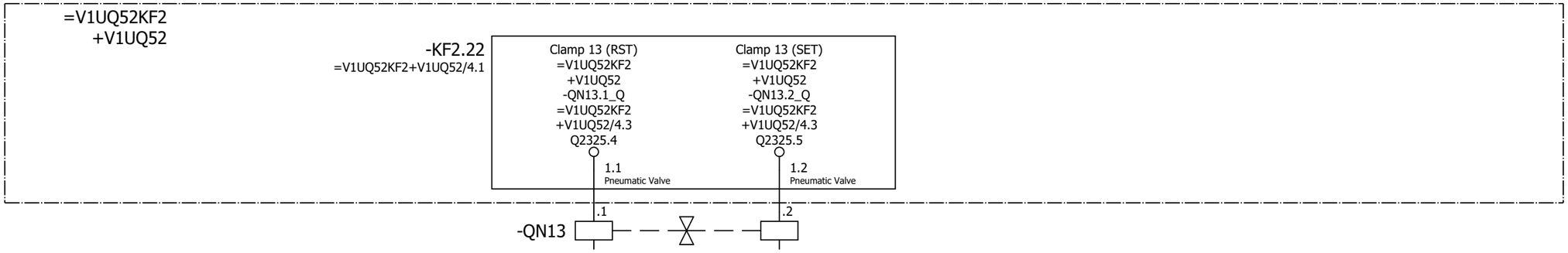

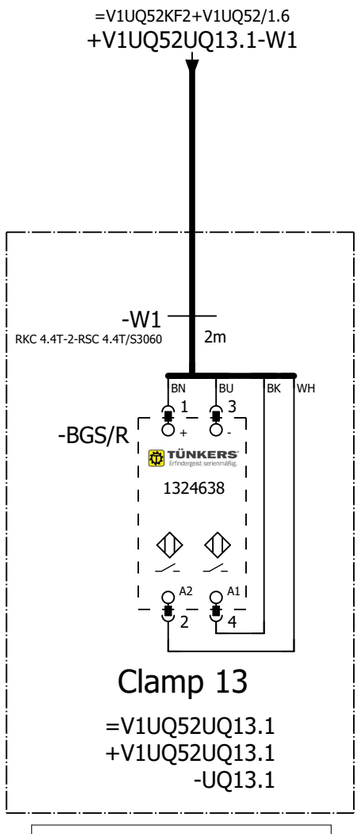

=V1UQ52
-UQ13.1-BGS/R
Clamp 13

=V1UQ52UQ12+.UQ52UQ12/1

=V1UQ52UQ14+.UQ52UQ14/1

			Date	1/11/2023	Volvo Trucks North America	Valiant TMS	FESTO DQ CONNECTION QN13	Drawing name: =2V10&EFS-EL		= V1UQ52UQ13	
			Ed.	MKLEPADLO						+ V1UQ52UQ13	
			Appr		P6700 Bodyside RH - Robot Cell 2V10			Document type: EFS	Project nr: 22-16150		Page 1
Modification	Date	Name	Original		Replacement of / Replaced by	Scale 1:1					1579

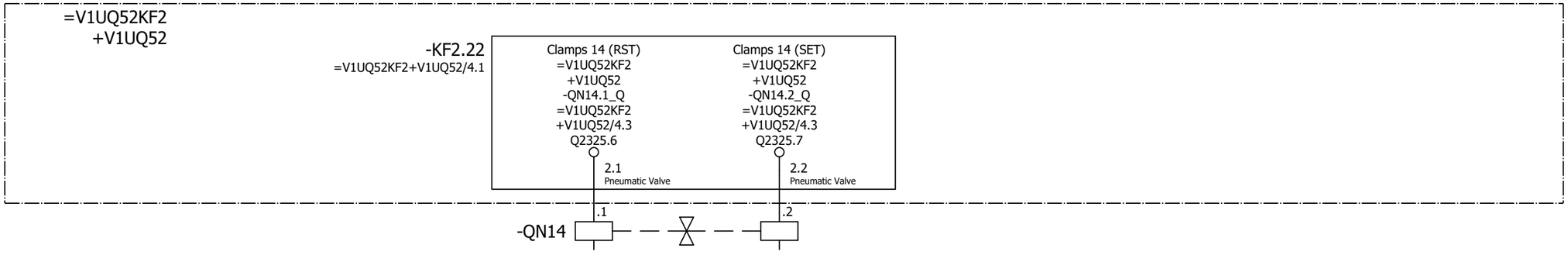

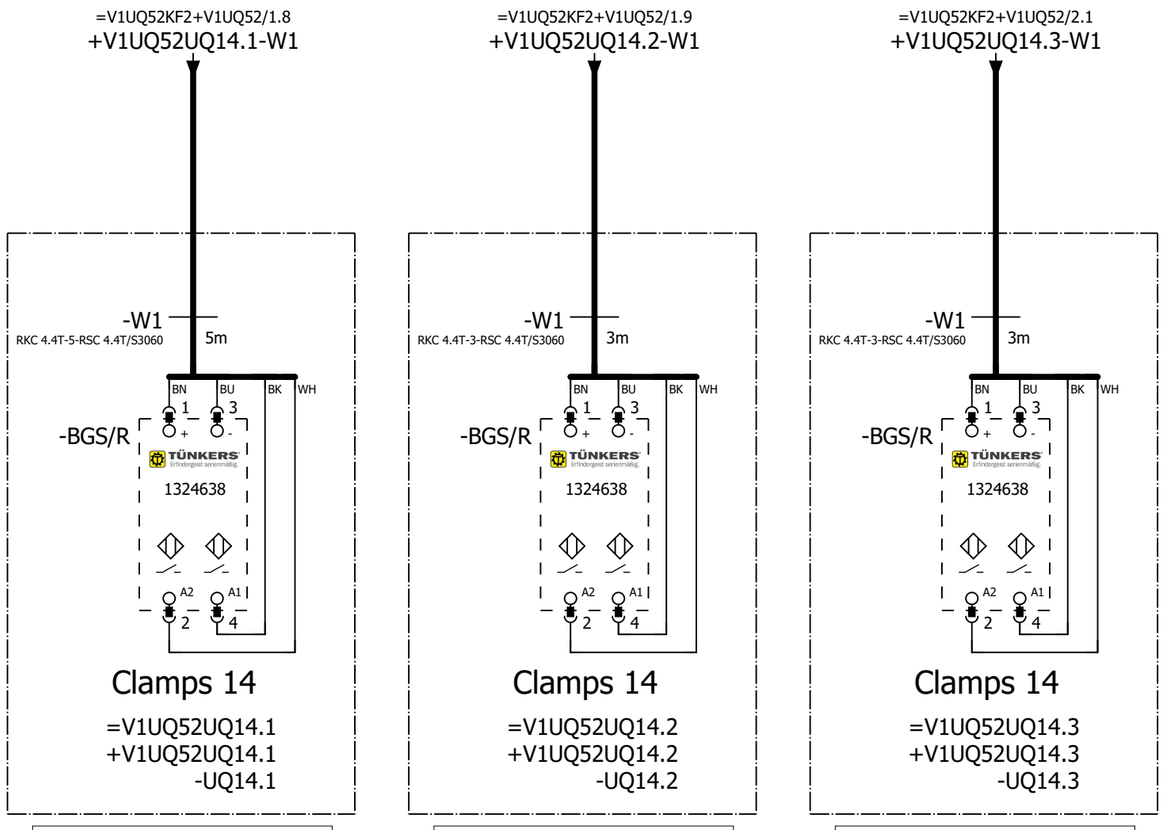

=V1UQ52
-UQ14.1-BGS/R
Clamps 14

=V1UQ52
-UQ14.2-BGS/R
Clamps 14

=V1UQ52
-UQ14.3-BGS/R
Clamps 14

=V1UQ52UQ13+.UQ52UQ13/1

=V1UQ52UQ15+.UQ52UQ15/1

			Date	1/11/2023	Volvo Trucks North America	Valiant TMS	FESTO DQ CONNECTION QN14	Drawing name: =2V10&EFS-EL	= V1UQ52UQ14		
			Ed.	MKLEPADLO					+ V1UQ52UQ14		
			Appr		P6700 Bodyside RH - Robot Cell 2V10			Document type: EFS	Project nr: 22-16150	Page	1
Modification	Date	Name	Original		Replacement of / Replaced by	Scale 1:1					1579

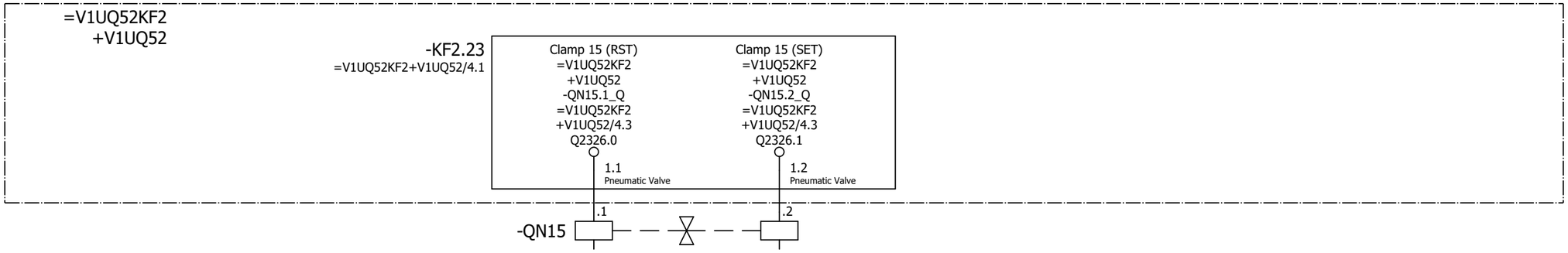

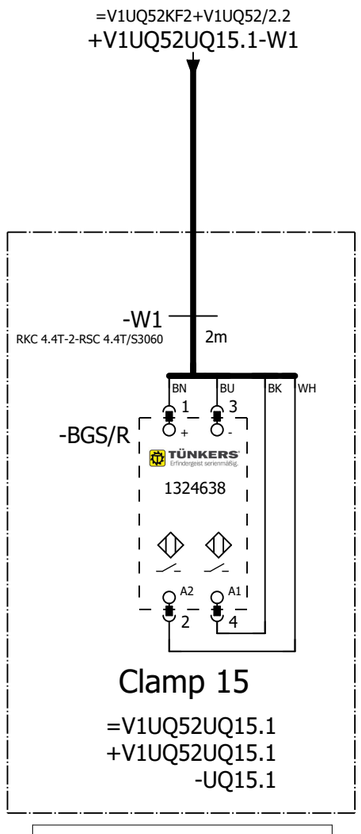

=V1UQ52
-UQ15.1-BGS/R
Clamp 15

=V1UQ52UQ14+.UQ52UQ14/1

=V1UQ52UQ16+.UQ52UQ16/1

			Date	1/11/2023	Volvo Trucks North America		Valiant TMS	FESTO DQ CONNECTION QN15	Drawing name: =2V10&EFS-EL	= V1UQ52UQ15	
			Ed.	MKLEPADLO						+ V1UQ52UQ15	
			Appr		P6700 Bodyside RH - Robot Cell 2V10				Document type: EFS	Project nr: 22-16150	Page 1
Modification	Date	Name	Original		Replacement of	Replaced by	Scale 1:1				1579

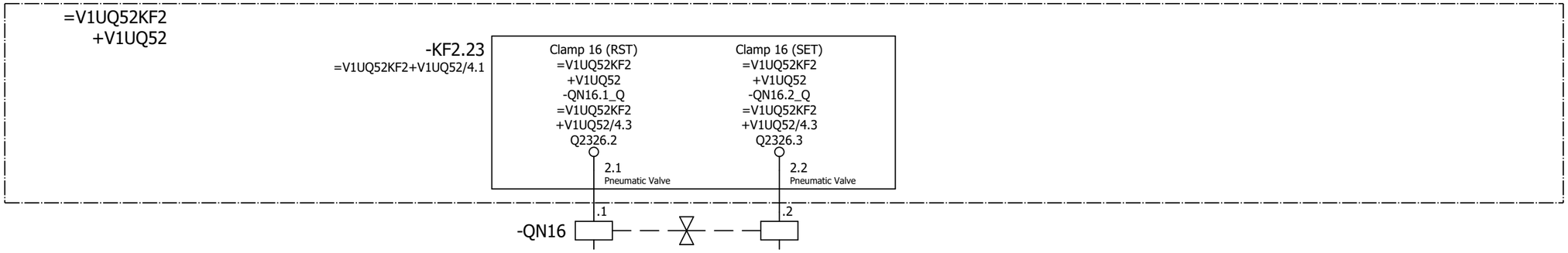

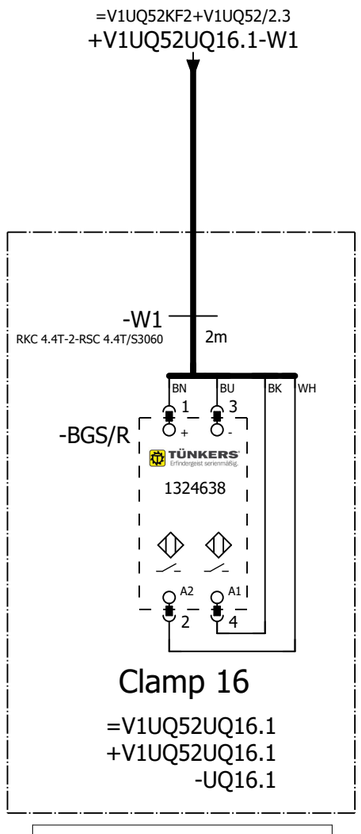

=V1UQ52
-UQ16.1-BGS/R
Clamp 16

=V1UQ52UQ15+.UQ52UQ15/1

=V1UQ52UQ17+.UQ52UQ17/1

			Date	1/11/2023	Volvo Trucks North America		Valiant TMS	FESTO DQ CONNECTION QN16	Drawing name: =2V10&EFS-EL	= V1UQ52UQ16	
			Ed.	MKLEPADLO						+ V1UQ52UQ16	
			Appr		P6700 Bodyside RH - Robot Cell 2V10				Document type: EFS	Project nr: 22-16150	Page 1
Modification	Date	Name	Original		Replacement of	Replaced by	Scale 1:1				1579

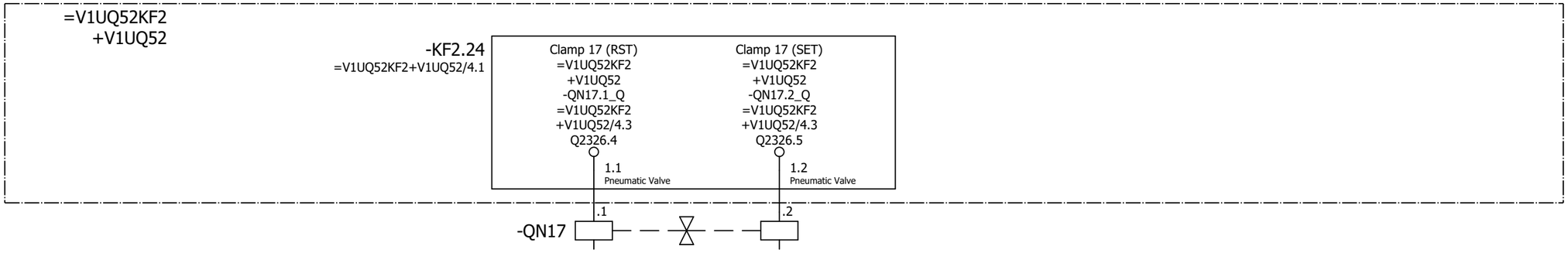

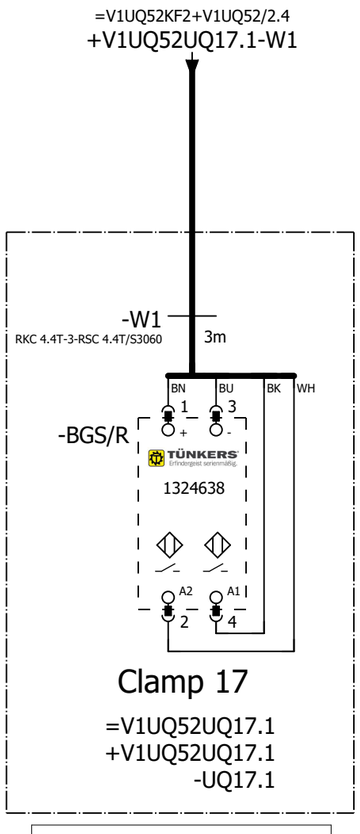

=V1UQ52
-UQ17.1-BGS/R
Clamp 17

=V1UQ52UQ16+.UQ52UQ16/1

=V1UQ52UQ18+.UQ52UQ18/1

			Date	1/11/2023	Volvo Trucks North America		Valiant TMS	FESTO DQ CONNECTION QN17	Drawing name: =2V10&EFS-EL	= V1UQ52UQ17	
			Ed.	MKLEPADLO						+ V1UQ52UQ17	
			Appr		P6700 Bodyside RH - Robot Cell 2V10				Document type: EFS	Project nr: 22-16150	Page 1
Modification	Date	Name	Original		Replacement of	Replaced by	Scale 1:1				1579

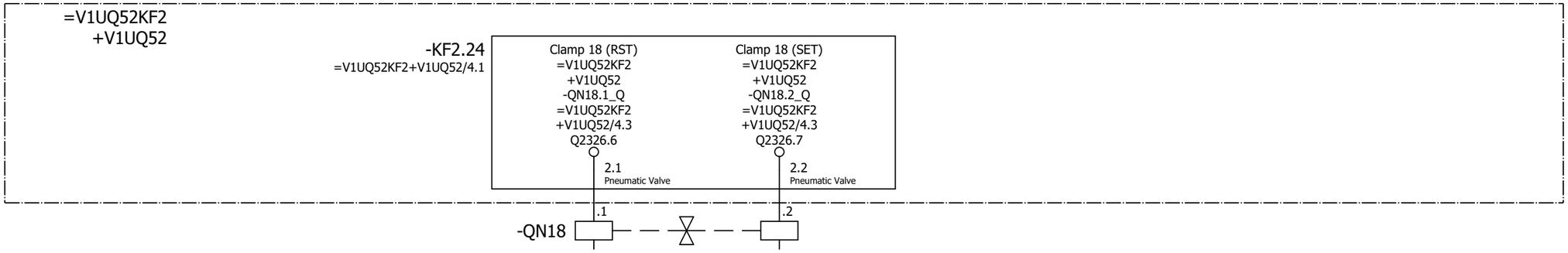

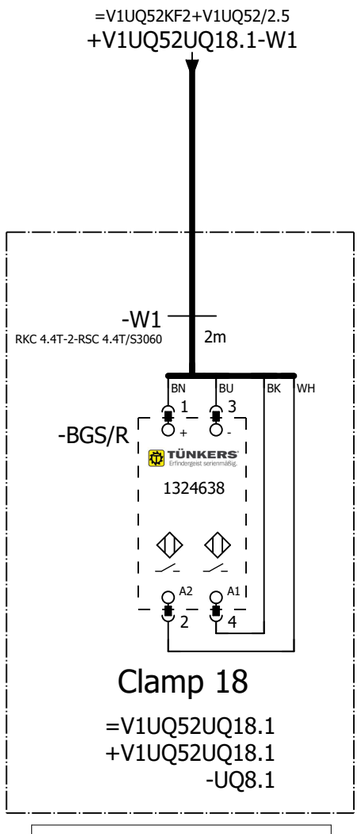

=V1UQ52
-UQ18.1-BGS/R
Clamp 18

=V1UQ52UQ17+.UQ52UQ17/1

=V1UQ52UQ19+.UQ52UQ19/1

			Date	1/11/2023	Volvo Trucks North America		Valiant TMS	FESTO DQ CONNECTION QN18	Drawing name: =2V10&EFS-EL	= V1UQ52UQ18	
			Ed.	MKLEPADLO						+ V1UQ52UQ18	
			Appr		P6700 Bodyside RH - Robot Cell 2V10				Document type: EFS	Project nr: 22-16150	Page 1
Modification	Date	Name	Original		Replacement of	Replaced by	Scale 1:1				1579

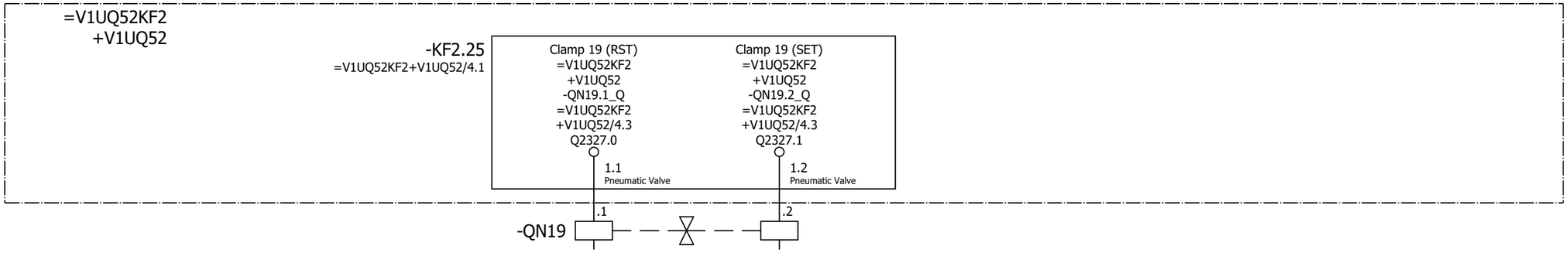

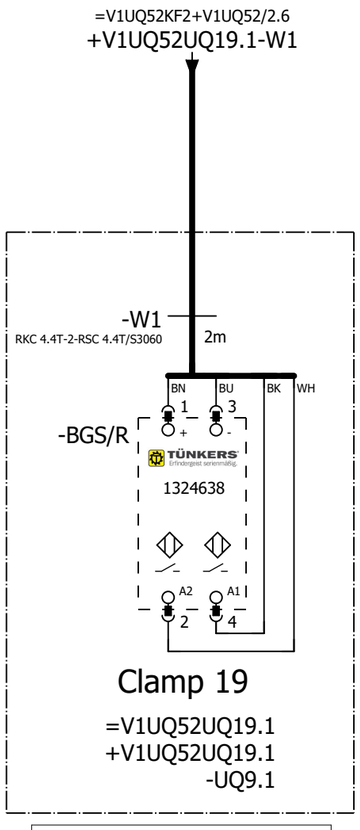

=V1UQ52
-UQ19.1-BGS/R
Clamp 19

=V1UQ52UQ18+.UQ52UQ18/1

=V1UQ52UQ20+.UQ52UQ20/1

			Date	1/11/2023	Volvo Trucks North America		Valiant TMS	FESTO DQ CONNECTION QN19	Drawing name: =2V10&EFS-EL	= V1UQ52UQ19	
			Ed.	MKLEPADLO						+ V1UQ52UQ19	
			Appr		P6700 Bodyside RH - Robot Cell 2V10				Document type: EFS	Project nr: 22-16150	Page 1
Modification	Date	Name	Original		Replacement of	Replaced by	Scale 1:1				1579

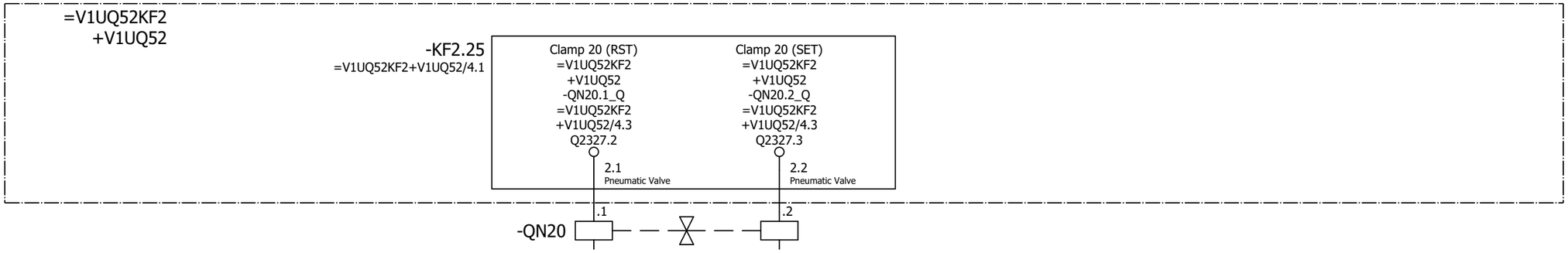

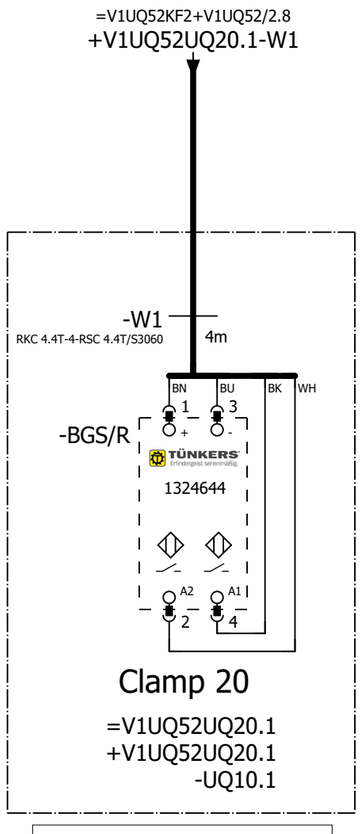

=V1UQ52
-UQ20.1-BGS/R
Clamp 20

=V1UQ52UQ19+.UQ52UQ19/1

=V1UQ52UQ21+.UQ52UQ21/1

			Date	1/11/2023	Volvo Trucks North America	Valiant TMS	FESTO DQ CONNECTION QN20	Drawing name: =2V10&EFS-EL	= V1UQ52UQ20		
			Ed.	MKLEPADLO					+ V1UQ52UQ20		
			Appr		P6700 Bodyside RH - Robot Cell 2V10			Document type: EFS	Project nr: 22-16150	Page	1
Modification	Date	Name	Original		Replacement of / Replaced by	Scale 1:1					1579

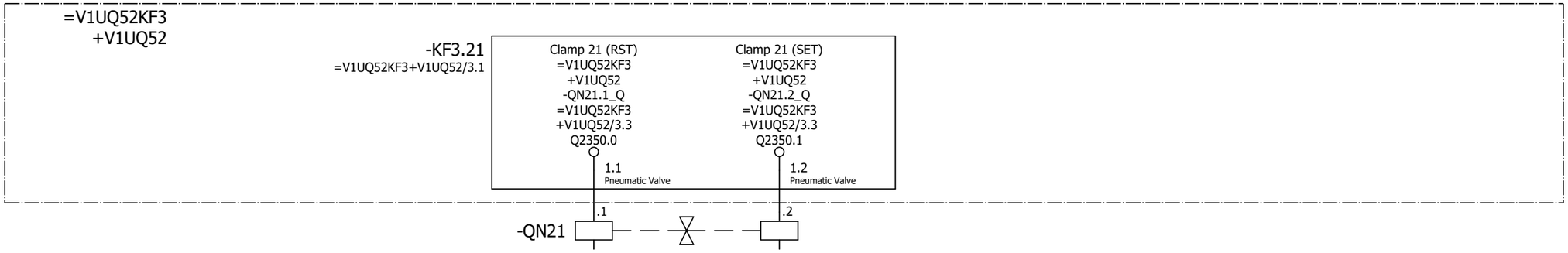

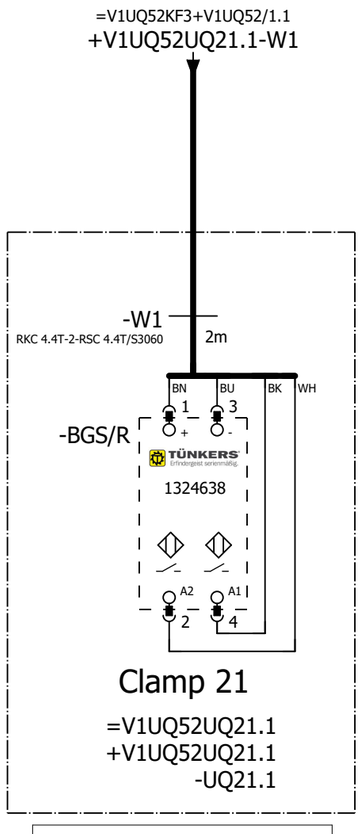

=V1UQ52
-UQ21.1-BGS/R
Clamp 21

=V1UQ52UQ20+.UQ52UQ20/1

=V1UQ52UQ22+.UQ52UQ22/1

			Date	1/11/2023	Volvo Trucks North America		Valiant TMS	FESTO DQ CONNECTION QN21	Drawing name: =2V10&EFS-EL	= V1UQ52UQ21	
			Ed.	MKLEPADLO						+ V1UQ52UQ21	
			Appr		P6700 Bodyside RH - Robot Cell 2V10				Document type: EFS	Project nr: 22-16150	Page 1
Modification	Date	Name	Original		Replacement of	Replaced by	Scale 1:1				1579

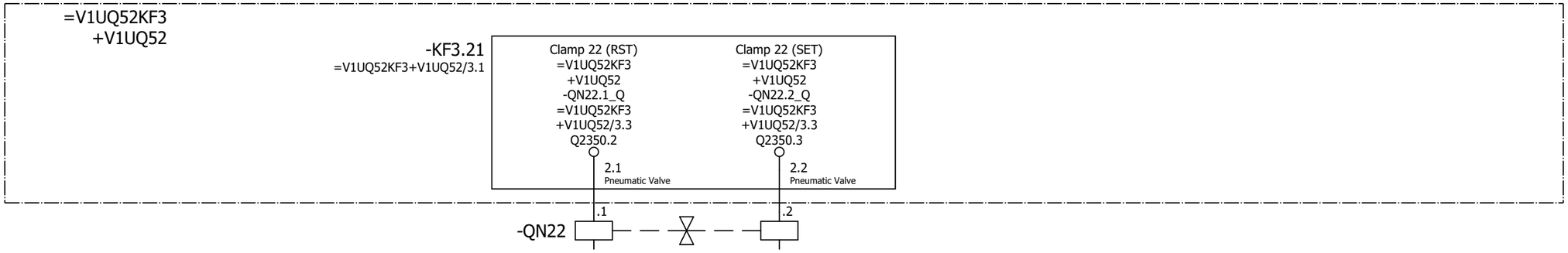

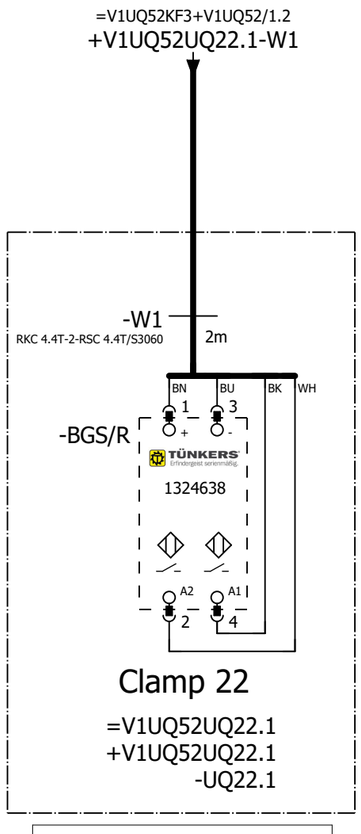

=V1UQ52
-UQ22.1-BGS/R
Clamp 22

=V1UQ52UQ21+.UQ52UQ21/1

=V1UQ52UQ23+.UQ52UQ23/1

			Date	1/11/2023	Volvo Trucks North America	Valiant TMS	FESTO DQ CONNECTION QN22	Drawing name: =2V10&EFS-EL	= V1UQ52UQ22		
			Ed.	MKLEPADLO					+ V1UQ52UQ22		
			Appr		P6700 Bodyside RH - Robot Cell 2V10			Document type: EFS	Project nr: 22-16150	Page	1
Modification	Date	Name	Original		Replacement of / Replaced by	Scale 1:1					1579

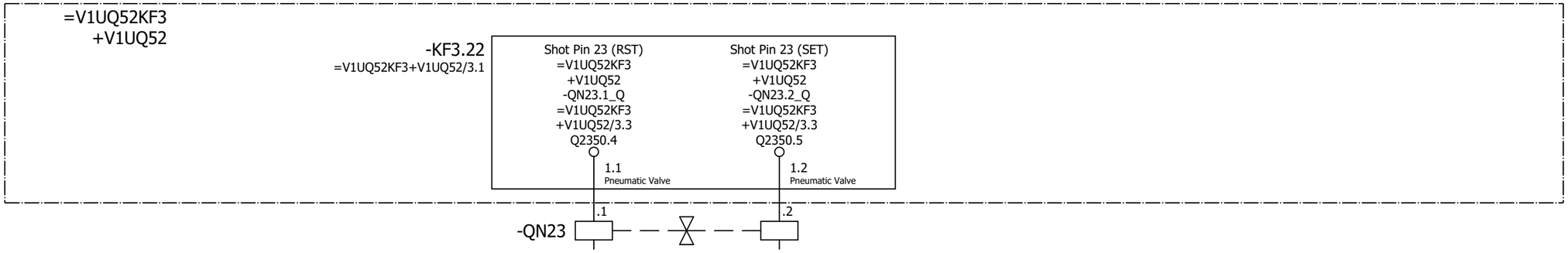

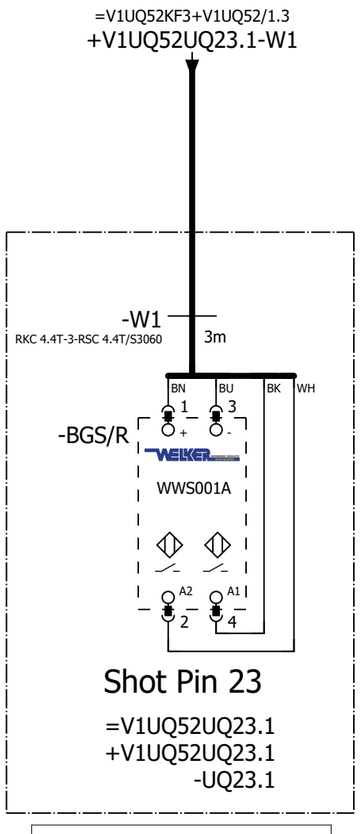

=V1UQ52
-UQ23.1-BGS/R
Shot Pin 23

=V1UQ52UQ22+.UQ52UQ22/1

=V1UQ52UQ24+.UQ52UQ24/1

			Date	1/11/2023	Volvo Trucks North America		Valiant TMS	FESTO DQ CONNECTION QN23	Drawing name: =2V10&EFS-EL	= V1UQ52UQ23	
			Ed.	MKLEPADLO						+ V1UQ52UQ23	
			Appr		P6700 Bodyside RH - Robot Cell 2V10				Document type: EFS	Project nr: 22-16150	Page 1
Modification	Date	Name	Original		Replacement of	Replaced by	Scale 1:1				1579

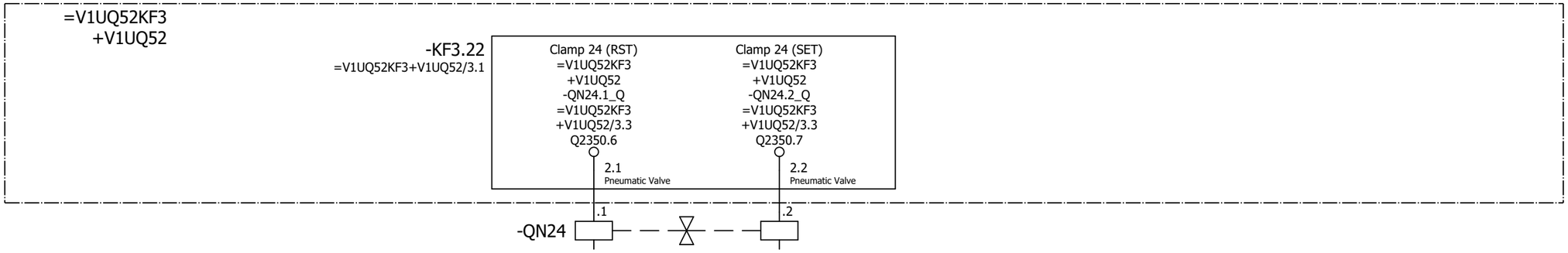

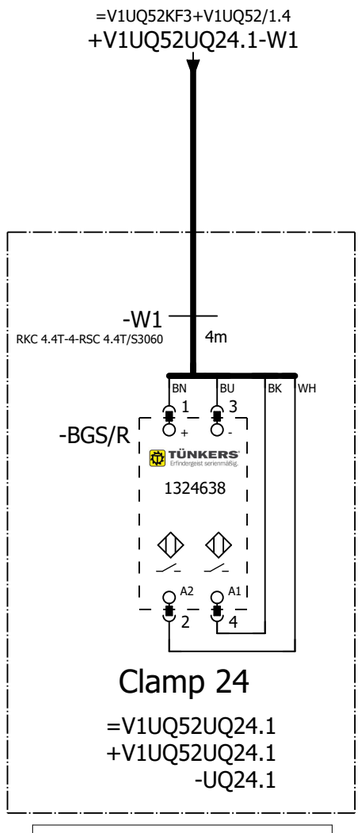

=V1UQ52
-UQ24.1-BGS/R
Clamp 24

=V1UQ52UQ23+.UQ52UQ23/1

=V1UQ52UQ25+.UQ52UQ25/1

			Date	1/11/2023	Volvo Trucks North America		Valiant TMS	FESTO DQ CONNECTION QN24	Drawing name: =2V10&EFS-EL	= V1UQ52UQ24	
			Ed.	MKLEPADLO						+ V1UQ52UQ24	
			Appr		P6700 Bodyside RH - Robot Cell 2V10				Document type: EFS	Project nr: 22-16150	Page 1
Modification	Date	Name	Original		Replacement of	Replaced by	Scale 1:1				1579

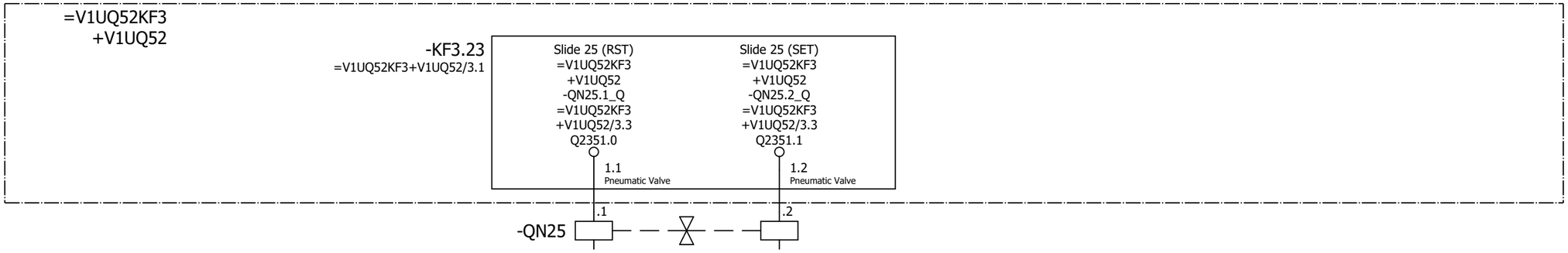

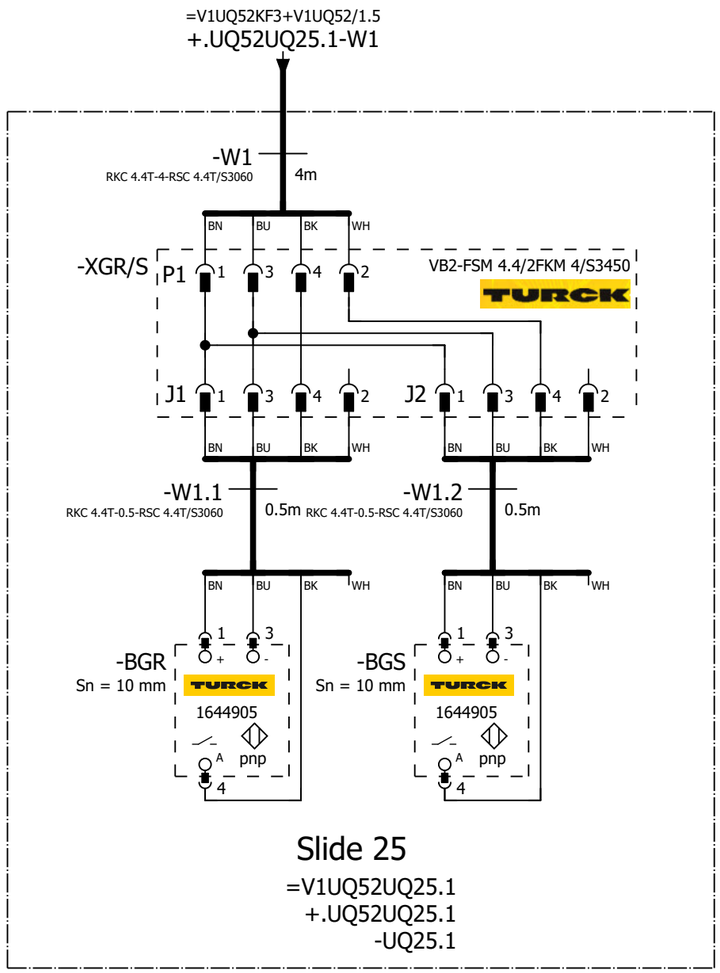

=V1UQ52 -UQ25.1-BGR Slide 25	=V1UQ52 -UQ25.1-BGS Slide 25

=V1UQ52UQ24+.UQ52UQ24/1

=V1UQ52UQ26+.UQ52UQ26/1

			Date	1/11/2023	Volvo Trucks North America	Valiant TMS	FESTO DQ CONNECTION QN25	Drawing name: =2V10&EFS-EL		= V1UQ52UQ25	
			Ed.	MKLEPADLO						+ V1UQ52UQ25	
			Appr		P6700 Bodyside RH - Robot Cell 2V10			Document type: EFS	Project nr: 22-16150		Page 1
Modification	Date	Name	Original		Replacement of / Replaced by	Scale 1:1					1579

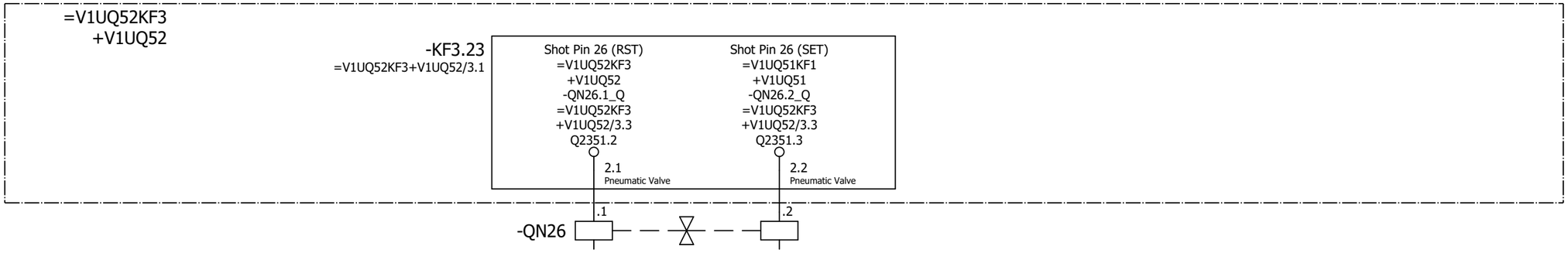

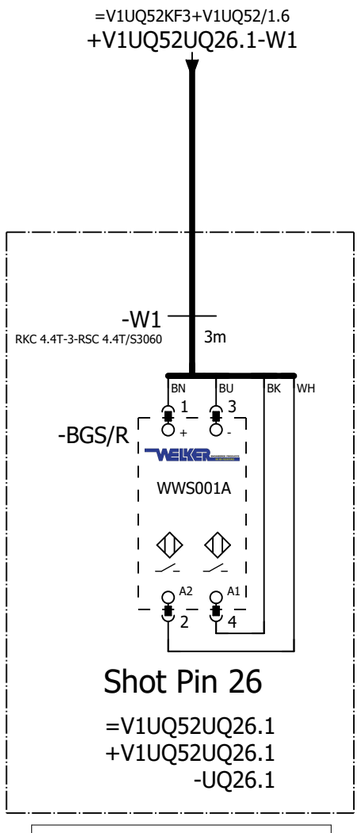

=V1UQ52
-UQ26.1-BGS/R
Shot Pin 26

=V1UQ52UQ25+.UQ52UQ25/1

=V1UQ52UQ27+.UQ52UQ27/1

			Date	1/11/2023	Volvo Trucks North America	Valiant TMS	FESTO DQ CONNECTION QN26	Drawing name: =2V10&EFS-EL	= V1UQ52UQ26	
			Ed.	MKLEPADLO					+ V1UQ52UQ26	
			Appr		P6700 Bodyside RH - Robot Cell 2V10			Document type: EFS	Project nr: 22-16150	Page 1
Modification	Date	Name	Original		Replacement of	Replaced by	Scale 1:1			1579

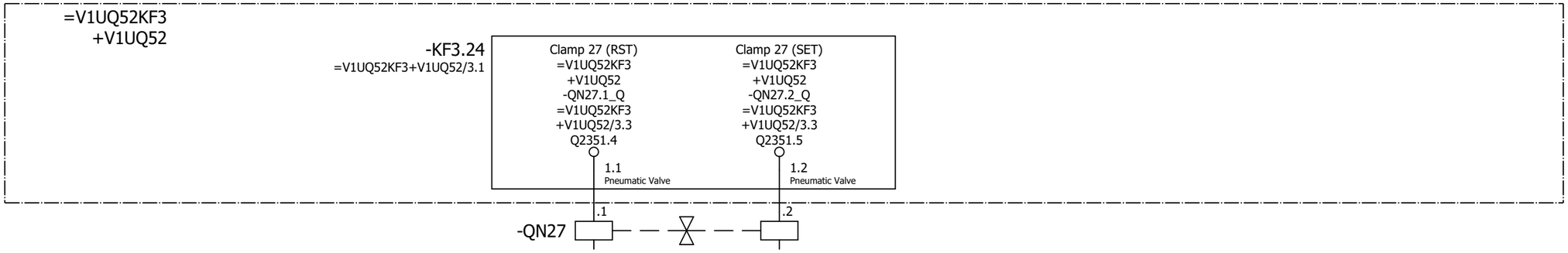

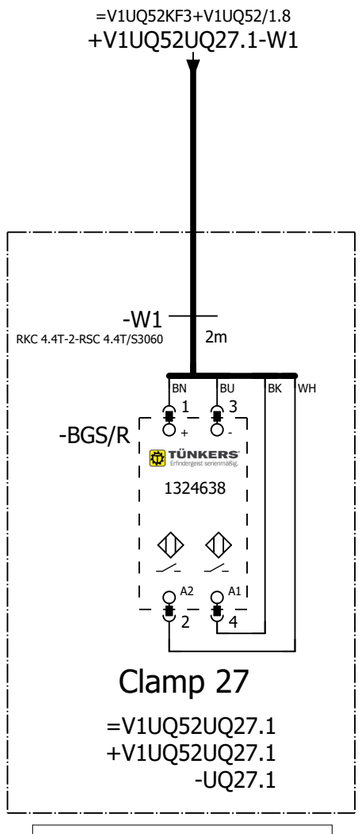

=V1UQ52
-UQ27.1-BGS/R
Clamp 27

=V1UQ52UQ26+.UQ52UQ26/1

=V1UQ52UQ28+.UQ52UQ28/1

			Date	1/11/2023	Volvo Trucks North America	Valiant TMS	FESTO DQ CONNECTION QN27	Drawing name: =2V10&EFS-EL	= V1UQ52UQ27		
			Ed.	MKLEPADLO					+ V1UQ52UQ27		
			Appr		P6700 Bodyside RH - Robot Cell 2V10			Document type: EFS	Project nr: 22-16150	Page	1
Modification	Date	Name	Original		Replacement of / Replaced by	Scale 1:1					1579

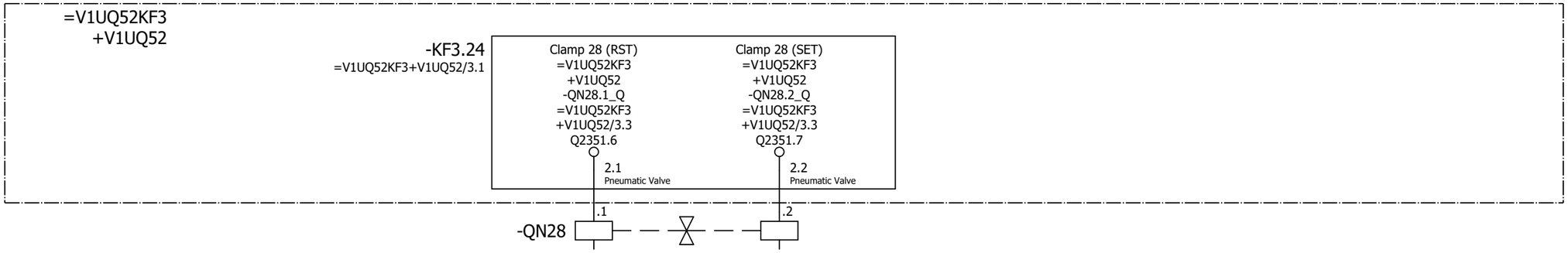

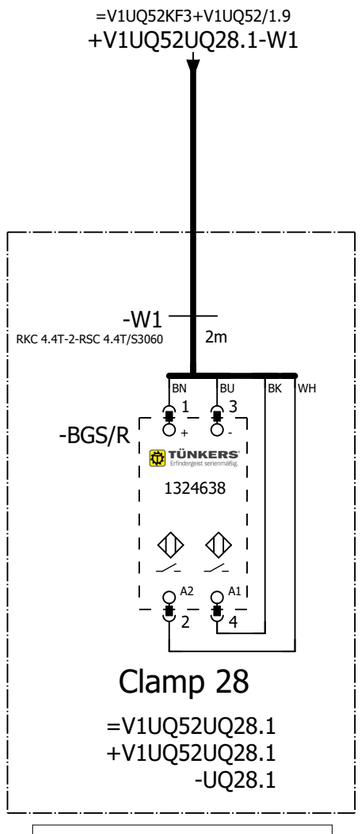

=V1UQ52
-UQ28.1-BGS/R
Clamp 28

=V1UQ52UQ27+.UQ52UQ27/1

=V1UQ52UQ29+.UQ52UQ29/1

			Date	1/11/2023	Volvo Trucks North America	Valiant TMS	FESTO DQ CONNECTION QN28	Drawing name: =2V10&EFS-EL	= V1UQ52UQ28		
			Ed.	MKLEPADLO					+ V1UQ52UQ28		
			Appr		P6700 Bodyside RH - Robot Cell 2V10			Document type: EFS	Project nr: 22-16150	Page	1
Modification	Date	Name	Original		Replacement of / Replaced by	Scale 1:1					1579

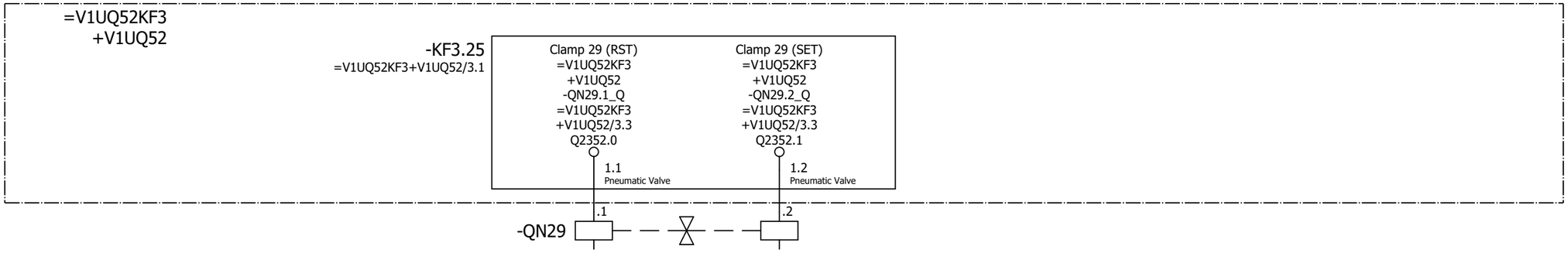

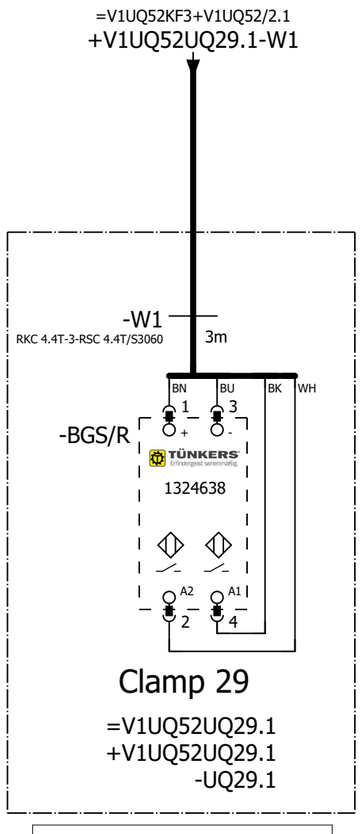

=V1UQ52
-UQ29.1-BGS/R
Clamp 29

=V1UQ52UQ28+.UQ52UQ28/1

=V1UQ52UQ30+.UQ52UQ30/1

			Date	1/11/2023	Volvo Trucks North America		Valiant TMS	FESTO DQ CONNECTION QN29	Drawing name: =2V10&EFS-EL	= V1UQ52UQ29	
			Ed.	MKLEPADLO						+ V1UQ52UQ29	
			Appr		P6700 Bodyside RH - Robot Cell 2V10				Document type: EFS	Project nr: 22-16150	Page 1
Modification	Date	Name	Original		Replacement of	Replaced by	Scale 1:1				1579

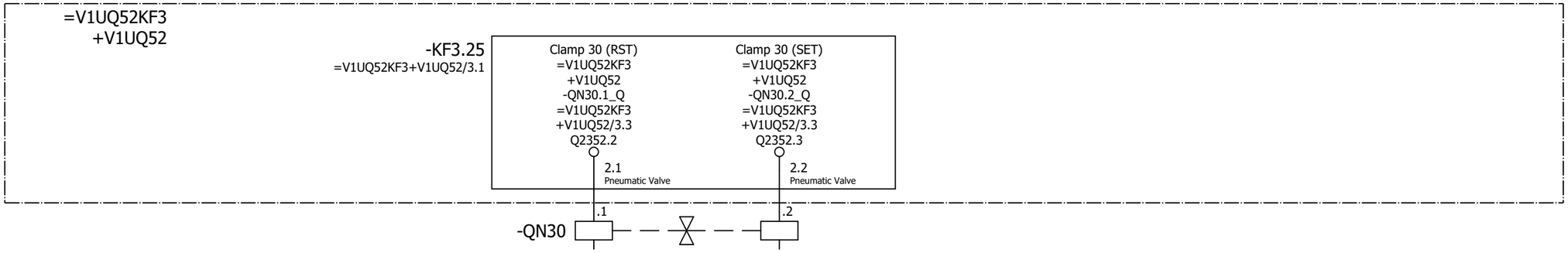

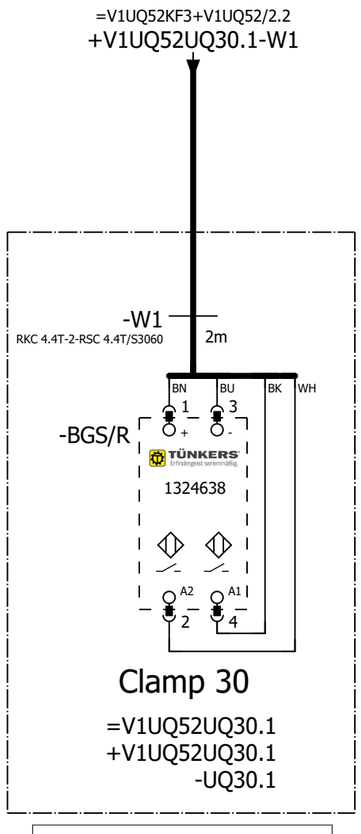

=V1UQ52
-UQ30.1-BGS/R
Clamp 30

=V1UQ52UQ29+.UQ52UQ29/1

=V1UQ52UQ31+.UQ52UQ31/1

			Date	1/11/2023	Volvo Trucks North America		Valiant TMS	FESTO DQ CONNECTION QN30	Drawing name: =2V10&EFS-EL	= V1UQ52UQ30	
			Ed.	MKLEPADLO						+ V1UQ52UQ30	
			Appr		P6700 Bodyside RH - Robot Cell 2V10				Document type: EFS	Project nr: 22-16150	Page 1
Modification	Date	Name	Original		Replacement of	Replaced by	Scale 1:1				1579

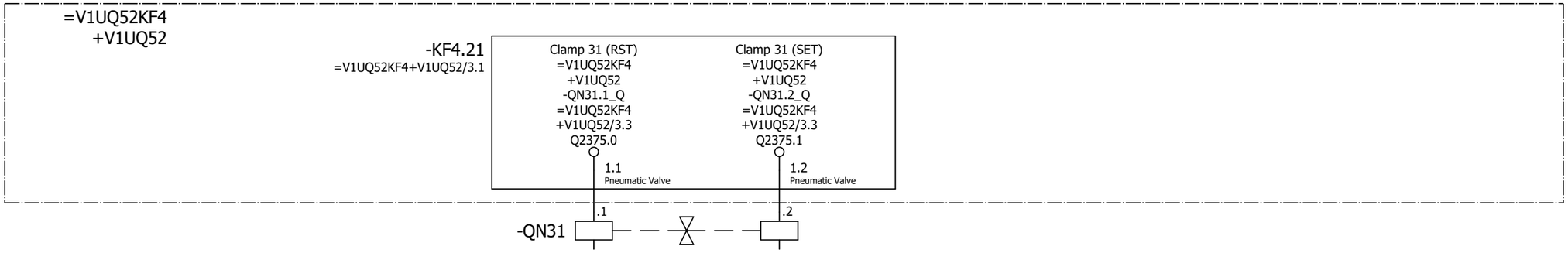

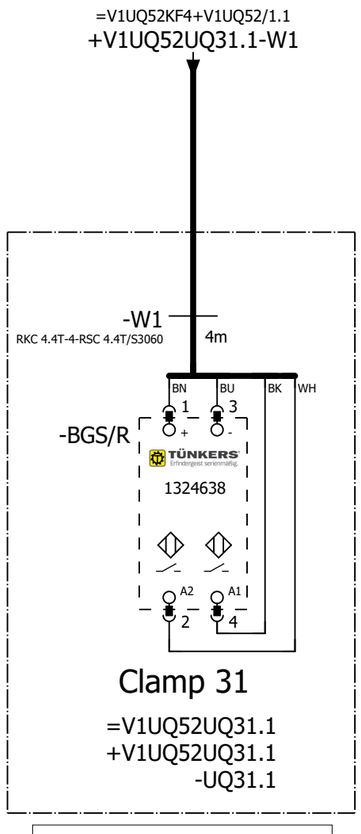

=V1UQ52
-UQ31.1-BGS/R
Clamp 31

=V1UQ52UQ30+.UQ52UQ30/1

=V1UQ52UQ32+.UQ52UQ32/1

			Date	1/11/2023	Volvo Trucks North America	Valiant TMS	FESTO DQ CONNECTION QN31	Drawing name: =2V10&EFS-EL	= V1UQ52UQ31		
			Ed.	MKLEPADLO					+ V1UQ52UQ31		
			Appr		P6700 Bodyside RH - Robot Cell 2V10			Document type: EFS	Project nr: 22-16150	Page	1
Modification	Date	Name	Original		Replacement of / Replaced by	Scale 1:1					1579

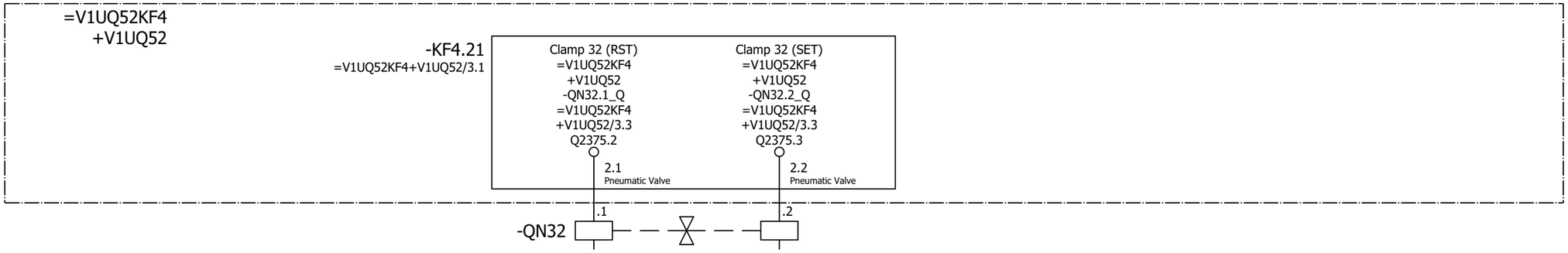

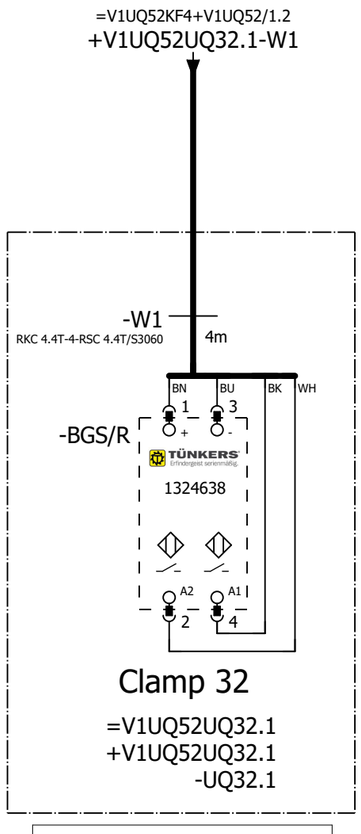

=V1UQ52
-UQ32.1-BGS/R
Clamp 32

=V1UQ52UQ31+.UQ52UQ31/1

=V1UQ52UQ33+.UQ52UQ33/1

			Date	1/11/2023	Volvo Trucks North America		Valiant TMS	FESTO DQ CONNECTION QN32	Drawing name: =2V10&EFS-EL	= V1UQ52UQ32	
			Ed.	MKLEPADLO						+ V1UQ52UQ32	
			Appr		P6700 Bodyside RH - Robot Cell 2V10				Document type: EFS	Project nr: 22-16150	Page 1
Modification	Date	Name	Original		Replacement of	Replaced by	Scale 1:1				1579

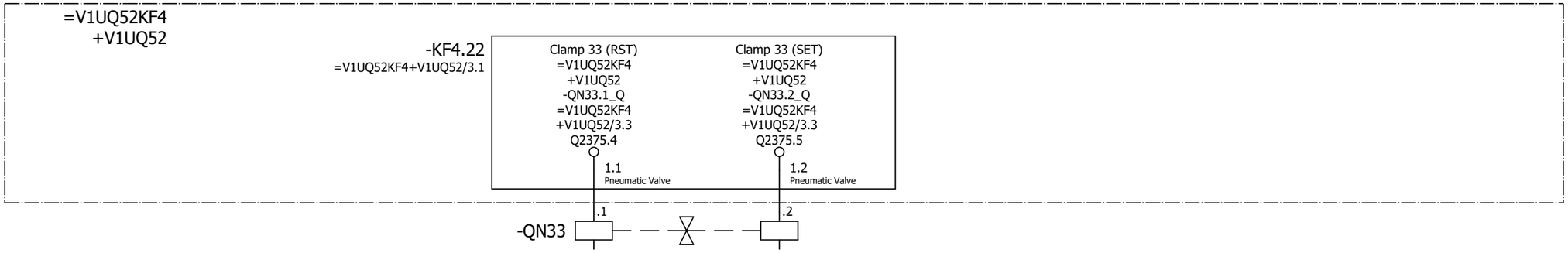

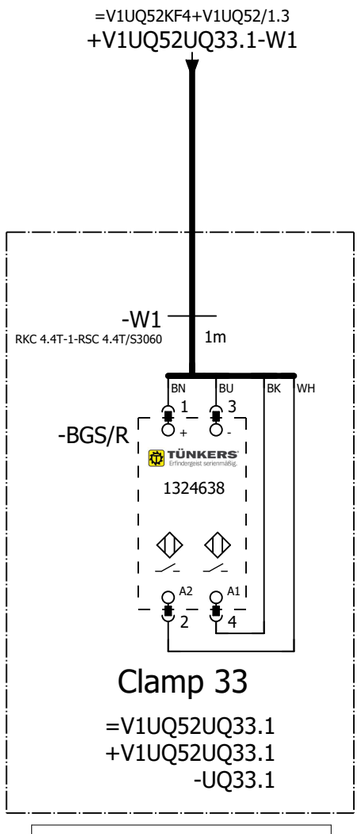

=V1UQ52
-UQ33.1-BGS/R
Clamp 33

=V1UQ52UQ32+.UQ52UQ32/1

=V1UQ52UQ34+.UQ52UQ34/1

			Date	1/11/2023	Volvo Trucks North America		Valiant TMS	FESTO DQ CONNECTION QN34	Drawing name: =2V10&EFS-EL	= V1UQ52UQ33	
			Ed.	MKLEPADLO						+ V1UQ52UQ33	
			Appr		P6700 Bodyside RH - Robot Cell 2V10				Document type: EFS	Project nr: 22-16150	Page 1
Modification	Date	Name	Original		Replacement of	Replaced by	Scale 1:1				1579

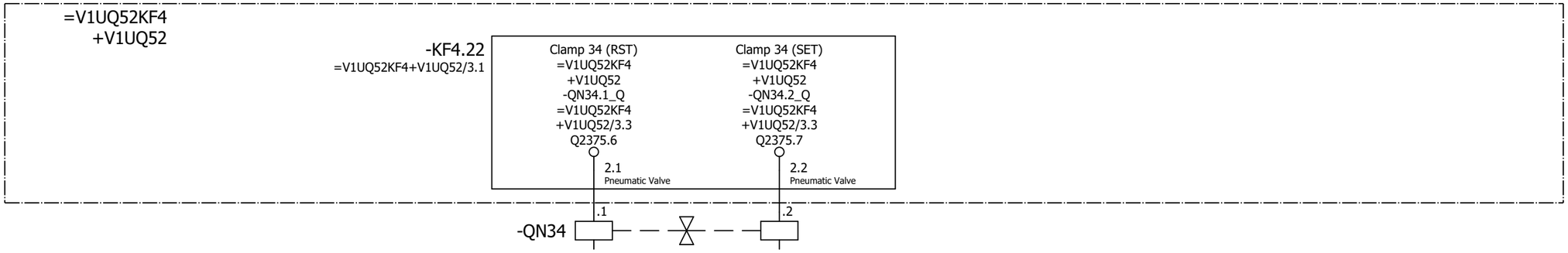

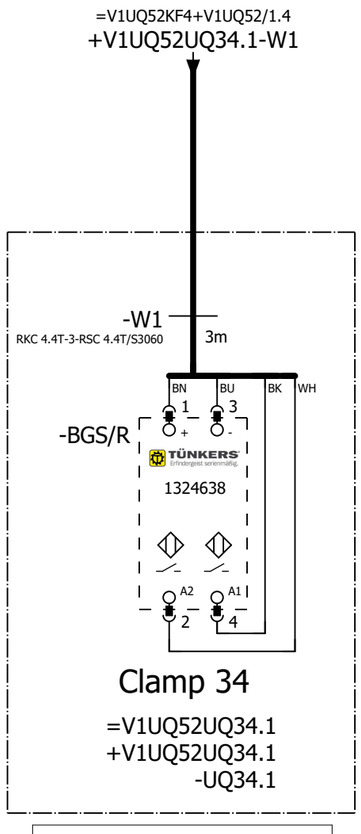

=V1UQ52
-UQ34.1-BGS/R
Clamp 34

=V1UQ52UQ33+.UQ52UQ33/1

=V1UQ52UQ35+.UQ52UQ35/1

			Date	1/11/2023	Volvo Trucks North America		Valiant TMS	FESTO DQ CONNECTION QN34	Drawing name: =2V10&EFS-EL	= V1UQ52UQ34	
			Ed.	MKLEPADLO						+ V1UQ52UQ34	
			Appr		P6700 Bodyside RH - Robot Cell 2V10				Document type: EFS	Project nr: 22-16150	Page 1
Modification	Date	Name	Original		Replacement of	Replaced by	Scale 1:1				1579

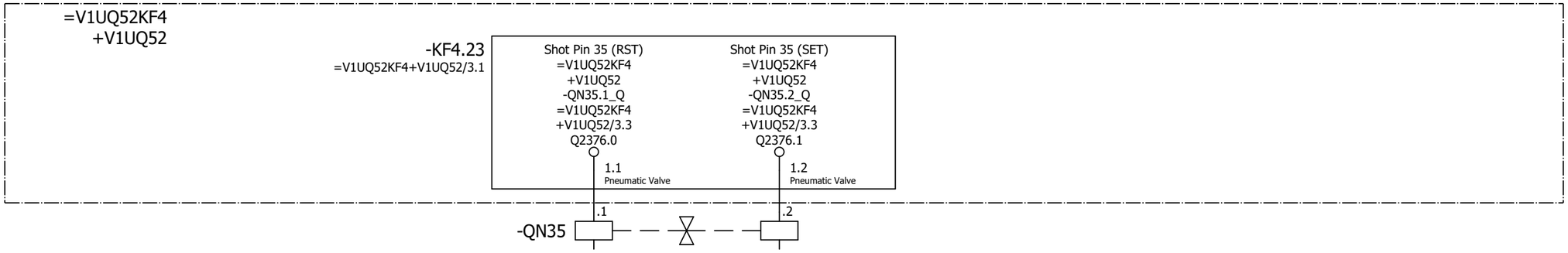

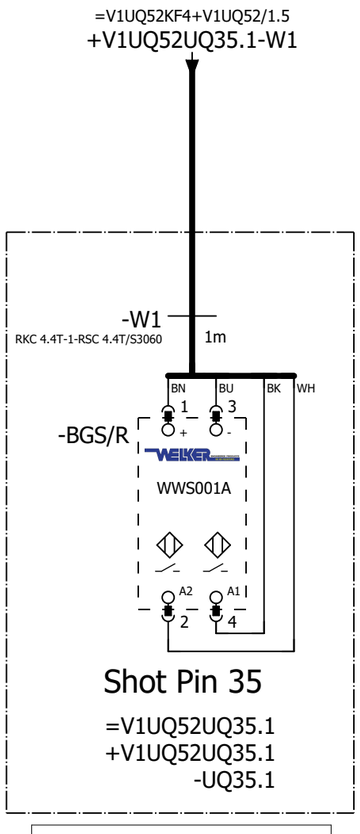

=V1UQ52
-UQ35.1-BGS/R
Shot Pin 35

=V1UQ52UQ34+.UQ52UQ34/1

=V1UQ52UQ36+.UQ52UQ36/1

			Date	1/11/2023	Volvo Trucks North America		Valiant TMS	FESTO DQ CONNECTION QN35	Drawing name: =2V10&EFS-EL	= V1UQ52UQ35	
			Ed.	MKLEPADLO						+ V1UQ52UQ35	
			Appr		P6700 Bodyside RH - Robot Cell 2V10				Document type: EFS	Project nr: 22-16150	Page 1
Modification	Date	Name	Original		Replacement of	Replaced by	Scale 1:1				1579

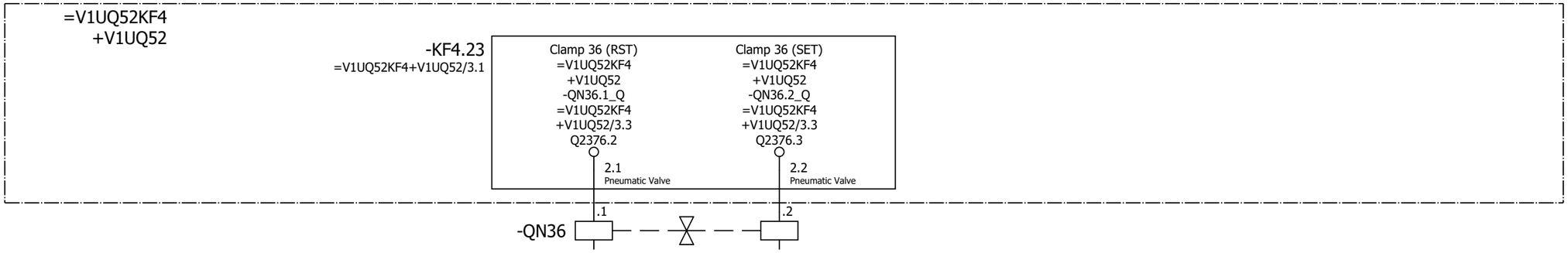

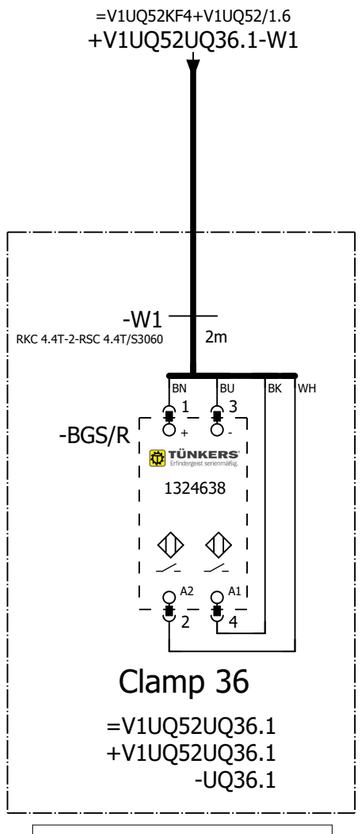

=V1UQ52
-UQ36.1-BGS/R
Clamp 36

=V1UQ52UQ35+.UQ52UQ35/1

=V1UQ52UQ37+.UQ52UQ37/1

			Date	1/11/2023	Volvo Trucks North America		Valiant TMS	FESTO DQ CONNECTION QN36	Drawing name: =2V10&EFS-EL	= V1UQ52UQ36	
			Ed.	MKLEPADLO						+ V1UQ52UQ36	
			Appr		P6700 Bodyside RH - Robot Cell 2V10				Document type: EFS	Project nr: 22-16150	Page 1
Modification	Date	Name	Original		Replacement of	Replaced by	Scale 1:1				1579

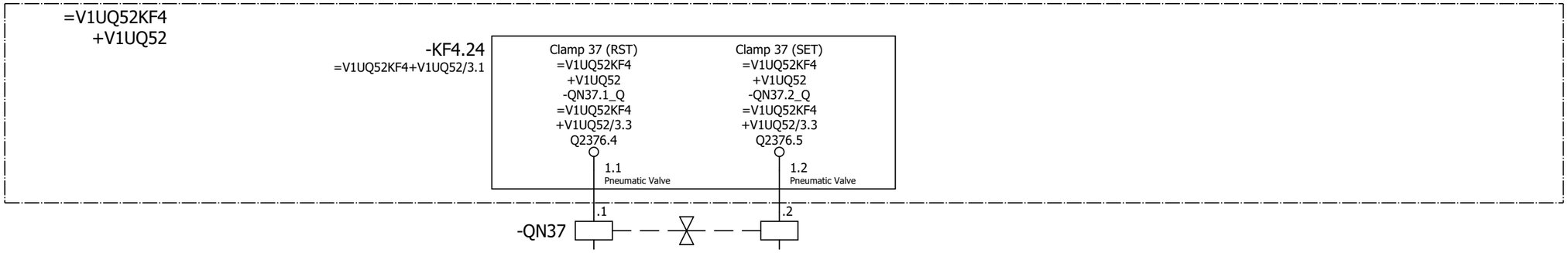

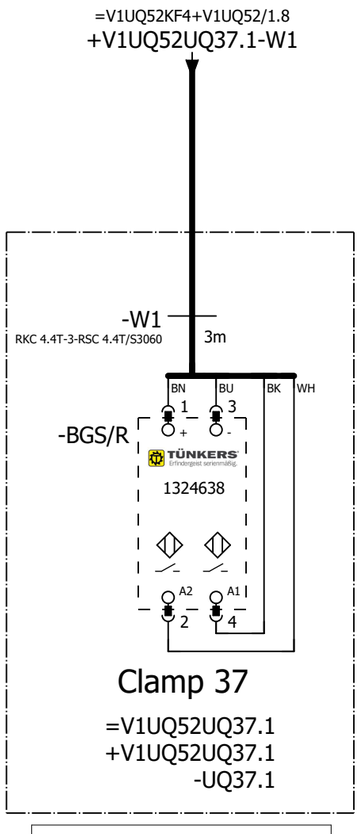

=V1UQ52
-UQ37.1-BGS/R
Clamp 37

=V1UQ52UQ36+.UQ52UQ36/1

=V1UQ52UQ38+.UQ52UQ38/1

			Date	1/11/2023	Volvo Trucks North America		Valiant TMS	FESTO DQ CONNECTION QN37	Drawing name: =2V10&EFS-EL	= V1UQ52UQ37	
			Ed.	MKLEPADLO						+ V1UQ52UQ37	
			Appr		P6700 Bodyside RH - Robot Cell 2V10				Document type: EFS	Project nr: 22-16150	Page 1
Modification	Date	Name	Original		Replacement of	Replaced by	Scale 1:1				1579

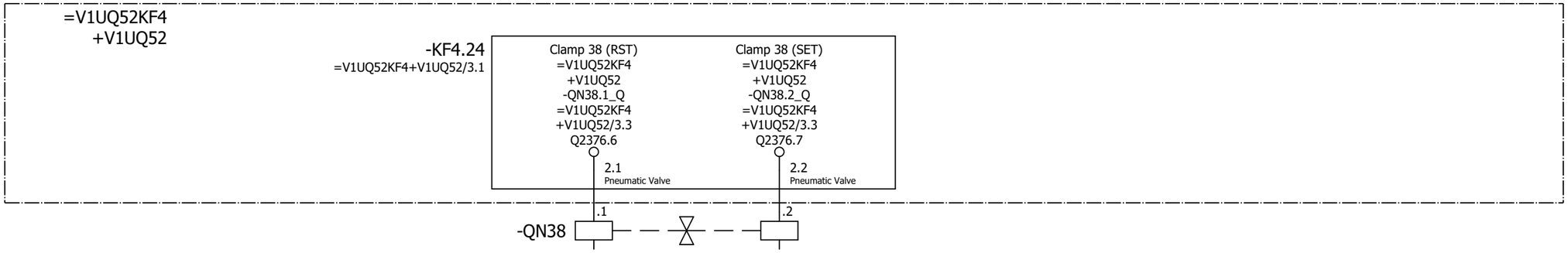

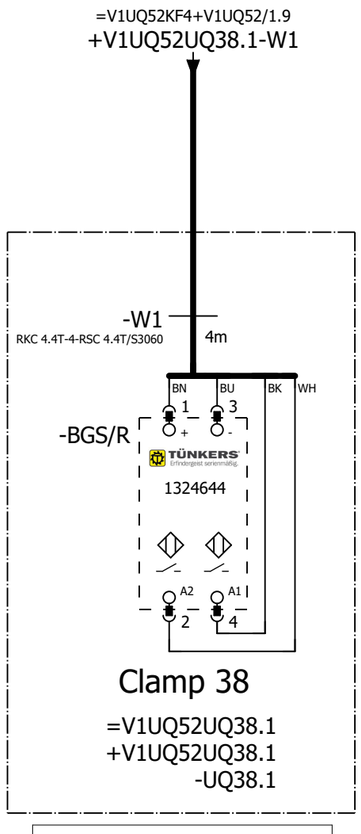

=V1UQ52
-UQ38.1-BGS/R
Clamp 38

=V1UQ52UQ37+.UQ52UQ37/1

=V1UQ52UQ39+.UQ52UQ39/1

			Date	1/11/2023	Volvo Trucks North America		Valiant TMS	FESTO DQ CONNECTION QN38	Drawing name: =2V10&EFS-EL	= V1UQ52UQ38	
			Ed.	MKLEPADLO						+ V1UQ52UQ38	
			Appr		P6700 Bodyside RH - Robot Cell 2V10				Document type: EFS	Project nr: 22-16150	Page 1
Modification	Date	Name	Original		Replacement of	Replaced by	Scale 1:1				1579

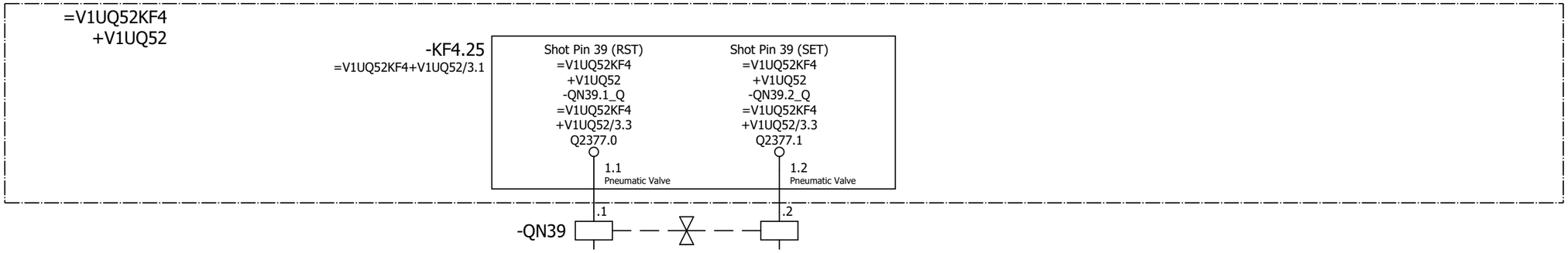

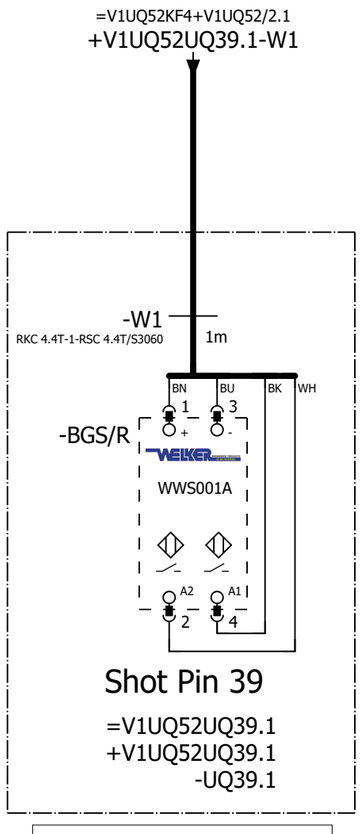

=V1UQ52
-UQ39.1-BGS/R
Shot Pin 39

=V1UQ52UQ38+.UQ52UQ38/1

=V1UQ52UQ40+.UQ52UQ40/1

			Date	1/11/2023	Volvo Trucks North America		Valiant TMS	FESTO DQ CONNECTION QN39	Drawing name: =2V10&EFS-EL	= V1UQ52UQ39	
			Ed.	MKLEPADLO						+ V1UQ52UQ39	
			Appr		P6700 Bodyside RH - Robot Cell 2V10				Document type: EFS	Project nr: 22-16150	Page 1
Modification	Date	Name	Original		Replacement of	Replaced by	Scale 1:1				1579

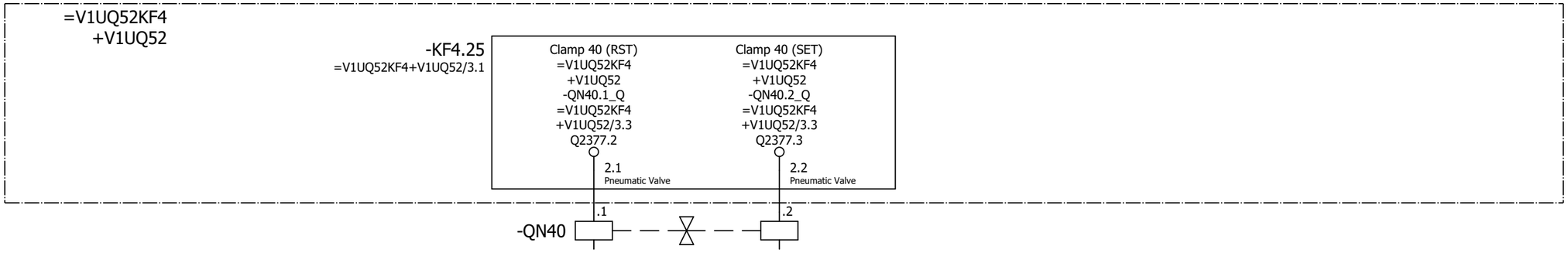

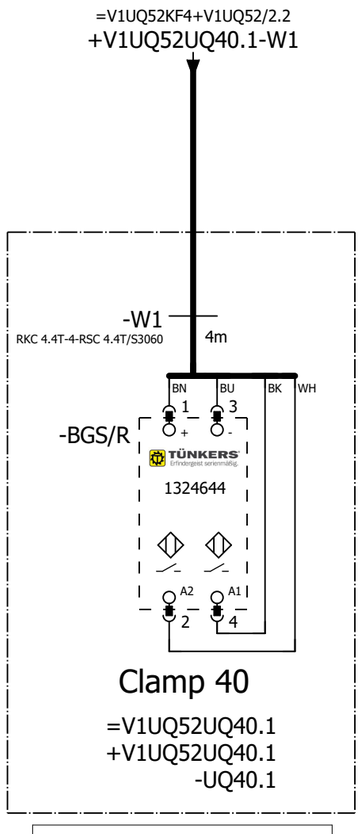

=V1UQ52
-UQ40.1-BGS/R
Clamp 40

=V1UQ52UQ39+.UQ52UQ39/1

=V1UQ52UQ41+.UQ52UQ41/1

			Date	1/11/2023	Volvo Trucks North America	Valiant TMS	FESTO DQ CONNECTION QN40	Drawing name: =2V10&EFS-EL	= V1UQ52UQ40		
			Ed.	MKLEPADLO					+ V1UQ52UQ40		
			Appr		P6700 Bodyside RH - Robot Cell 2V10			Document type: EFS	Project nr: 22-16150	Page	1
Modification	Date	Name	Original		Replacement of / Replaced by	Scale 1:1					1579

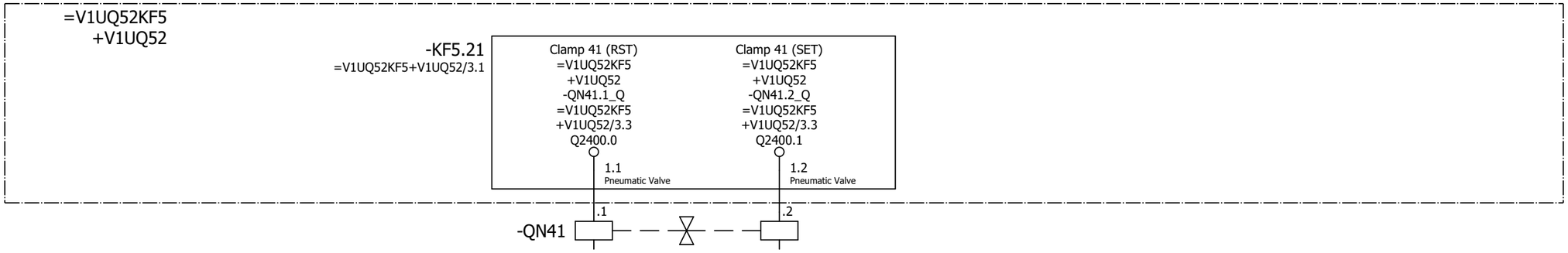

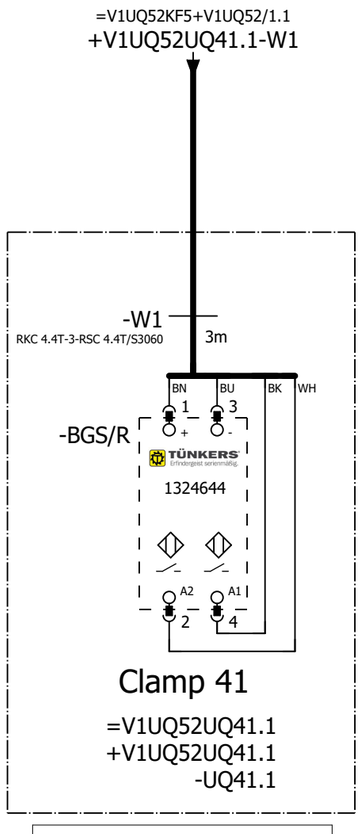

=V1UQ52
-UQ41.1-BGS/R
Clamp 41

=V1UQ52UQ40+.UQ52UQ40/1

=V1UQ52UQ42+.UQ52UQ42/1

			Date	1/11/2023	Volvo Trucks North America	Valiant TMS	FESTO DQ CONNECTION QN41	Drawing name: =2V10&EFS-EL	= V1UQ52UQ41	
			Ed.	MKLEPADLO					+ V1UQ52UQ41	
			Appr		P6700 Bodyside RH - Robot Cell 2V10			Document type: EFS	Project nr: 22-16150	Page 1
Modification	Date	Name	Original		Replacement of	Replaced by	Scale 1:1			1579

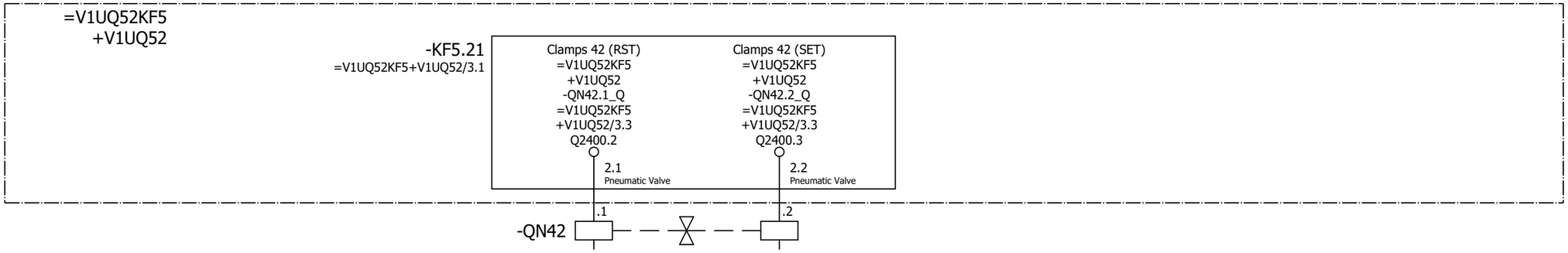

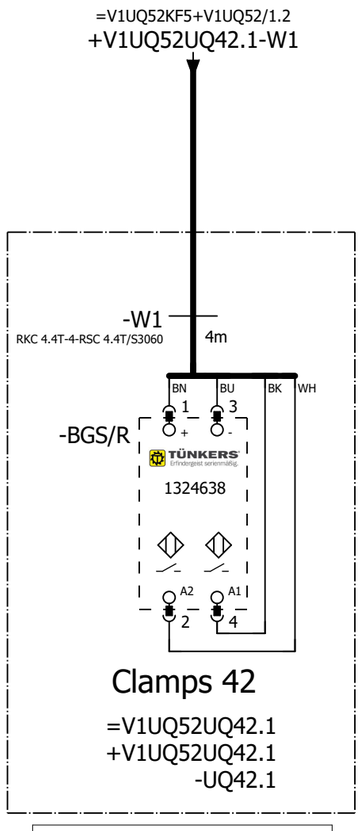

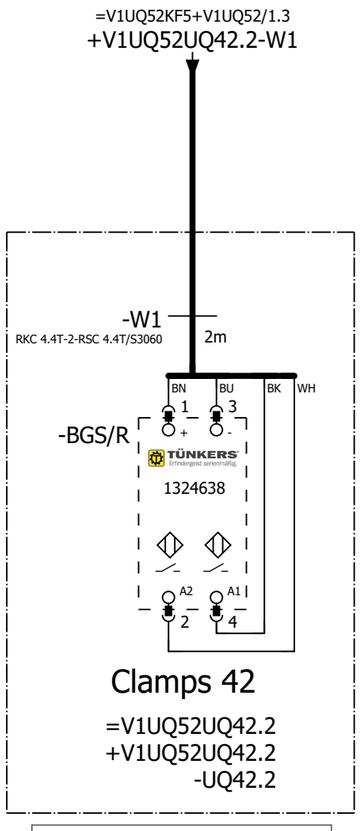

=V1UQ52
-UQ42.1-BGS/R
Clamps 42

=V1UQ52
-UQ42.2-BGS/R
Clamps 42

=V1UQ52UQ41+.UQ52UQ41/1

=V1UQ52UQ43+.UQ52UQ43/1

			Date	1/11/2023	Volvo Trucks North America	Valiant TMS	FESTO DQ CONNECTION QN42	Drawing name: =2V10&EFS-EL	= V1UQ52UQ42		
			Ed.	MKLEPADLO					+ V1UQ52UQ42		
			Appr		P6700 Bodyside RH - Robot Cell 2V10			Document type: EFS	Project nr: 22-16150	Page	1
Modification	Date	Name	Original		Replacement of / Replaced by	Scale 1:1					1579

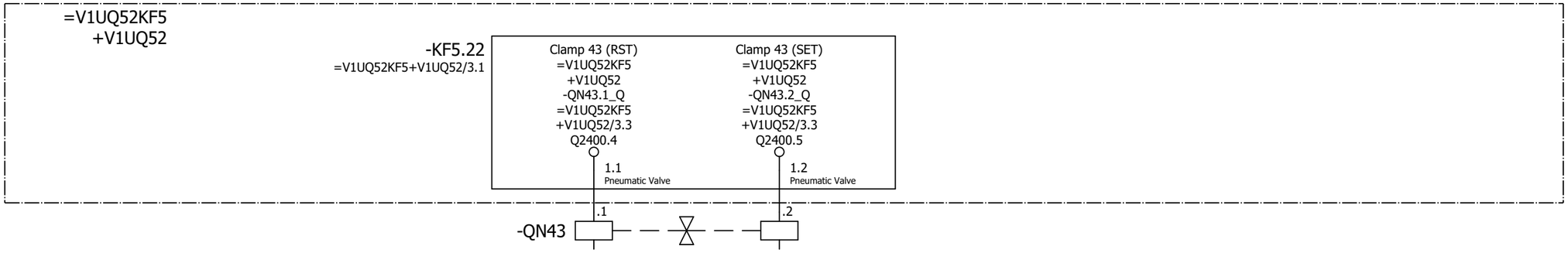

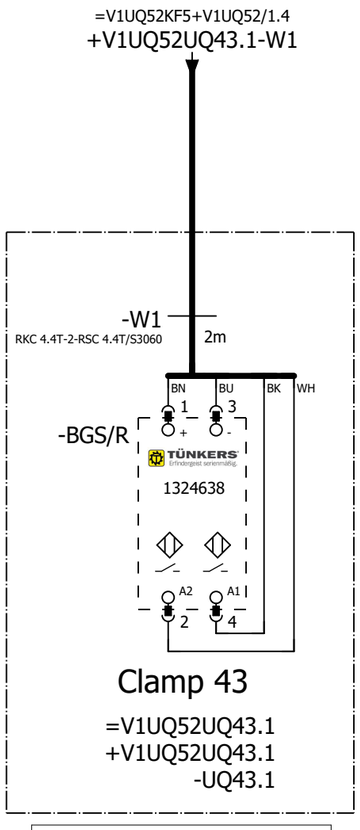

=V1UQ52
-UQ43.1-BGS/R
Clamp 43

=V1UQ52UQ42+.UQ52UQ42/1

=V1UQ52UQ44+.UQ52UQ44/1

			Date	1/11/2023	Volvo Trucks North America		Valiant TMS	FESTO DQ CONNECTION QN43	Drawing name: =2V10&EFS-EL	= V1UQ52UQ43	
			Ed.	MKLEPADLO						+ V1UQ52UQ43	
			Appr		P6700 Bodyside RH - Robot Cell 2V10				Document type: EFS	Project nr: 22-16150	Page 1
Modification	Date	Name	Original		Replacement of	Replaced by	Scale 1:1				1579

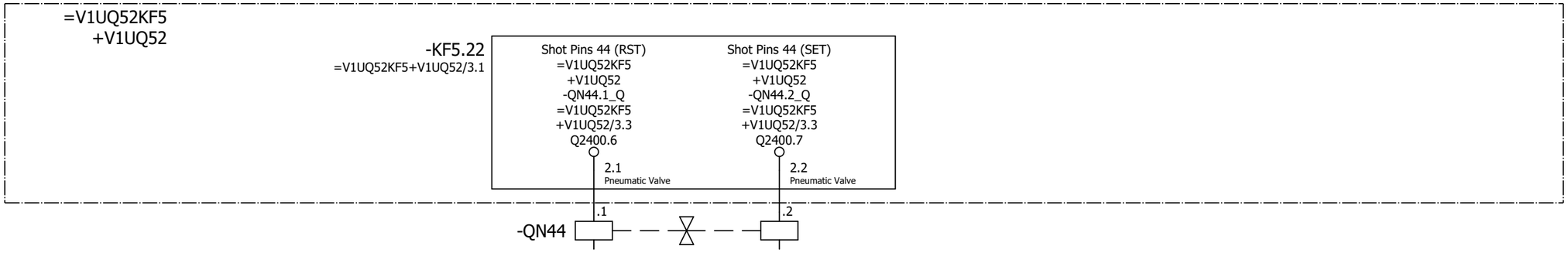

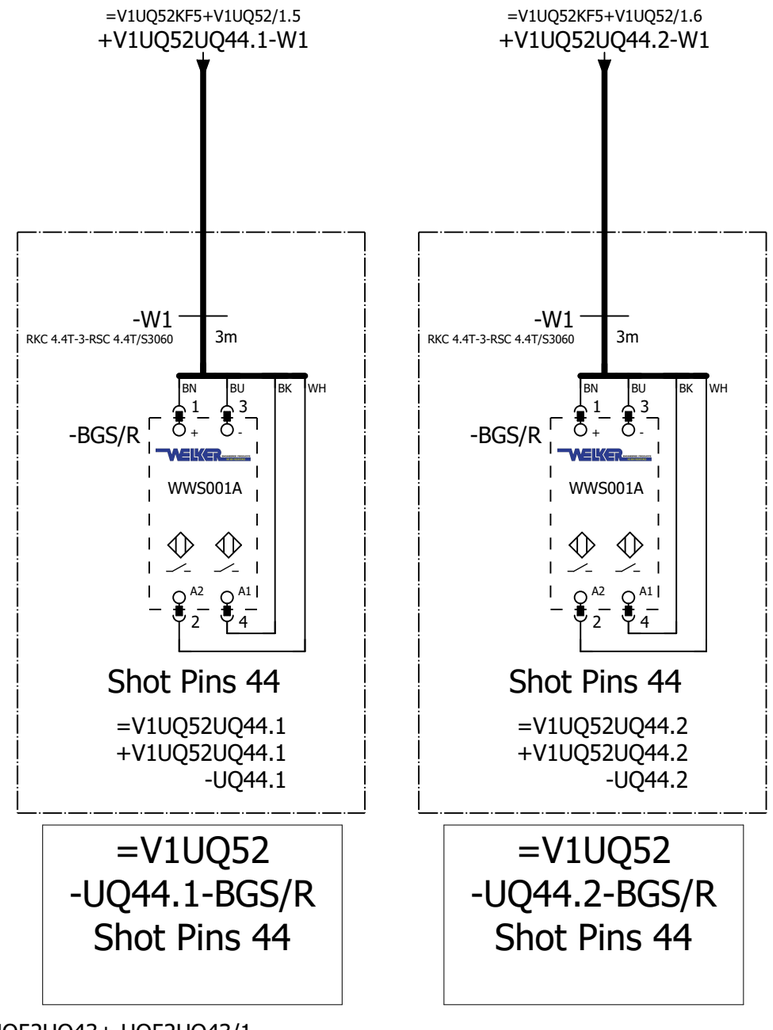

=V1UQ52UQ43+.UQ52UQ43/1

=V1UQ52UQ45+.UQ52UQ45/1

			Date	1/11/2023	Volvo Trucks North America		Valiant TMS	FESTO DQ CONNECTION QN44	Drawing name: =2V10&EFS-EL	= V1UQ52UQ44	
			Ed.	MKLEPADLO						+ V1UQ52UQ44	
			Appr		P6700 Bodyside RH - Robot Cell 2V10				Document type: EFS	Project nr: 22-16150	Page 1
Modification	Date	Name	Original		Replacement of	Replaced by	Scale 1:1				1579

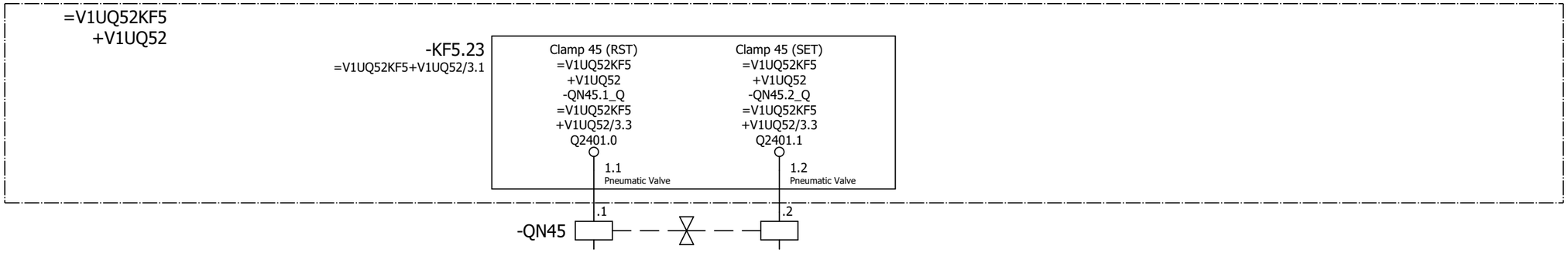

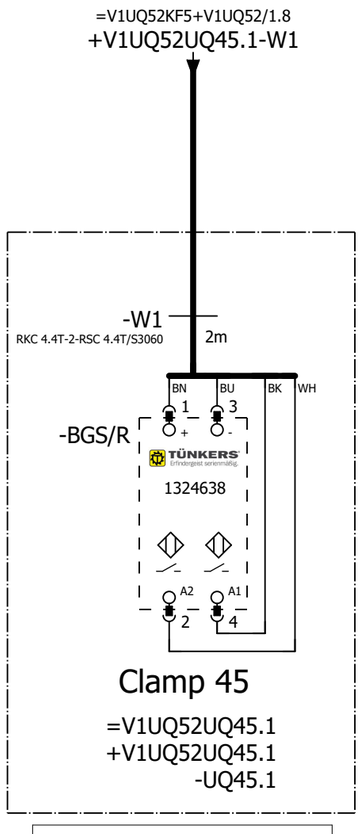

=V1UQ52
-UQ45.1-BGS/R
Clamp 45

=V1UQ52UQ44+.UQ52UQ44/1

=V1UQ52UQ46+.UQ52UQ46/1

			Date	1/11/2023	Volvo Trucks North America	Valiant TMS	FESTO DQ CONNECTION QN45	Drawing name: =2V10&EFS-EL		= V1UQ52UQ45	
			Ed.	MKLEPADLO						+ V1UQ52UQ45	
			Appr		P6700 Bodyside RH - Robot Cell 2V10			Document type: EFS	Project nr: 22-16150		Page 1
Modification	Date	Name	Original		Replacement of / Replaced by	Scale 1:1					1579

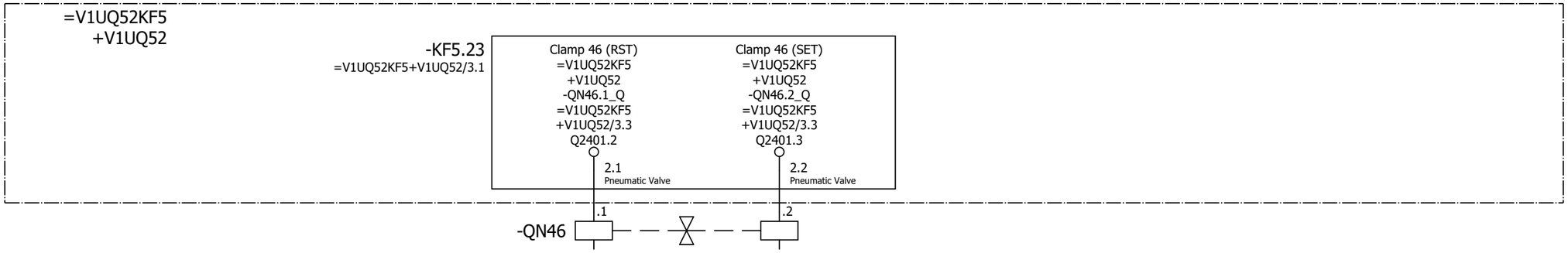

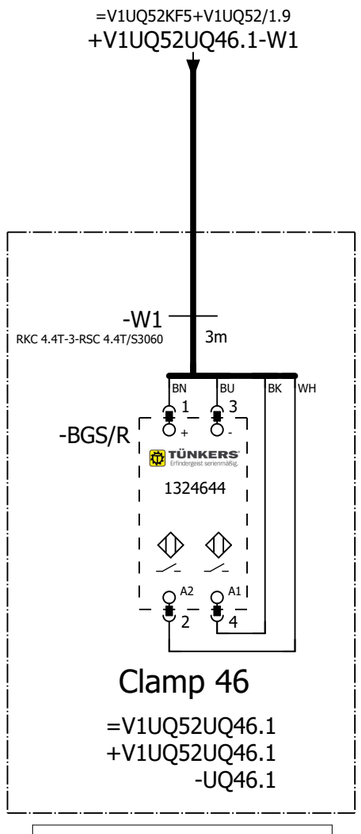

=V1UQ52
-UQ46.1-BGS/R
Clamp 46

=V1UQ52UQ45+.UQ52UQ45/1

=V1UQ52UQ47+.UQ52UQ47/1

			Date	1/11/2023	Volvo Trucks North America		Valiant TMS	FESTO DQ CONNECTION QN46	Drawing name: =2V10&EFS-EL	= V1UQ52UQ46	
			Ed.	MKLEPADLO						+ V1UQ52UQ46	
			Appr		P6700 Bodyside RH - Robot Cell 2V10				Document type: EFS	Project nr: 22-16150	Page 1
Modification	Date	Name	Original		Replacement of	Replaced by	Scale 1:1				1579

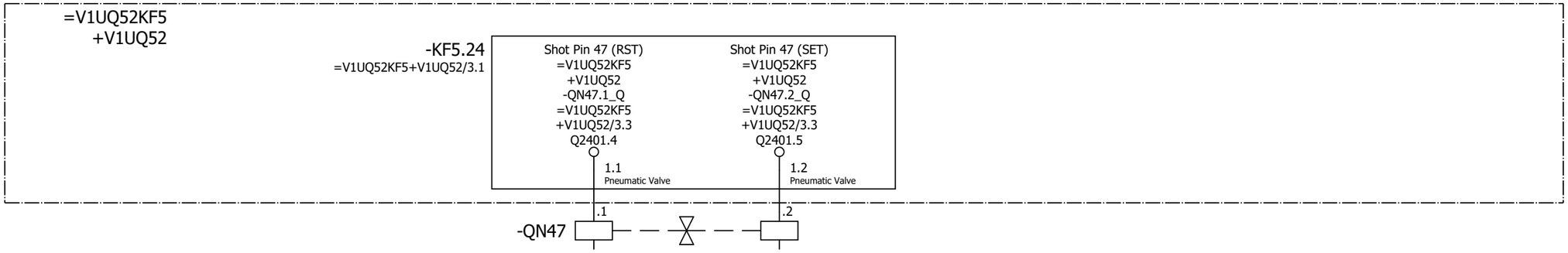

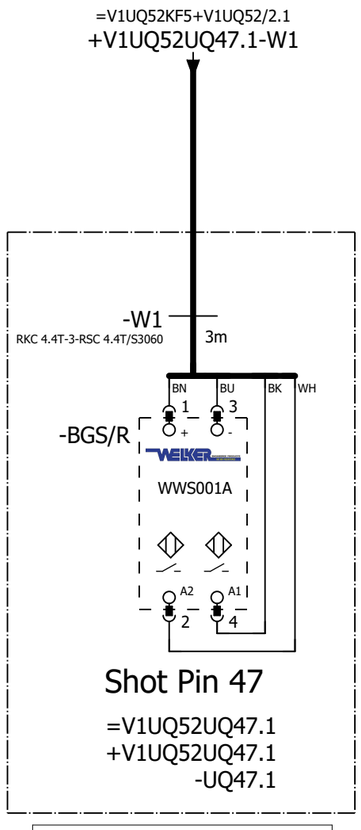

=V1UQ52
-UQ47.1-BGS/R
Shot Pin 47

=V1UQ52UQ46+.UQ52UQ46/1

=V1UQ52WC4+V1UQ52/1

			Date	1/11/2023	Volvo Trucks North America		Valiant TMS	FESTO DQ CONNECTION QN47	Drawing name: =2V10&EFS-EL	= V1UQ52UQ47	
			Ed.	MKLEPADLO						+ V1UQ52UQ47	
			Appr		P6700 Bodyside RH - Robot Cell 2V10				Document type: EFS	Project nr: 22-16150	Page 1
Modification	Date	Name	Original		Replacement of	Replaced by	Scale 1:1				1579

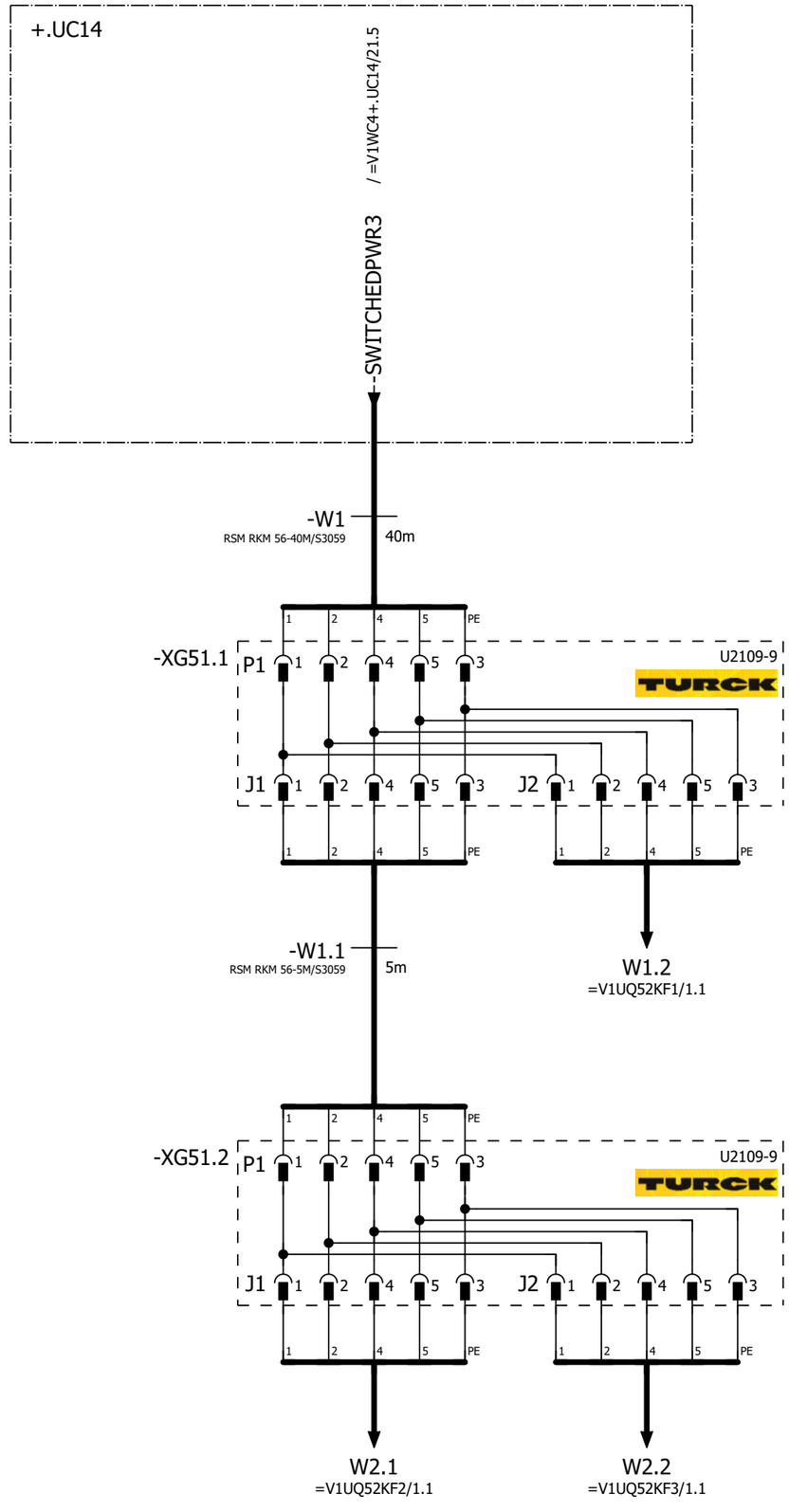

=V1UQ52UQ47+.UQ52UQ47/1

2

			Date	1/11/2023	Volvo Trucks North America	Valiant TMS	24VDC	Drawing name: =2V10&EFS-EL	= V1UQ52WC4	
			Ed.	MKLEPADLO					+ V1UQ52	
			Appr		P6700 Bodyside RH - Robot Cell 2V10			Document type: EFS	Project nr: 22-16150	Page 1
Modification	Date	Name	Original		Replacement of / Replaced by	Scale 1:1				1579

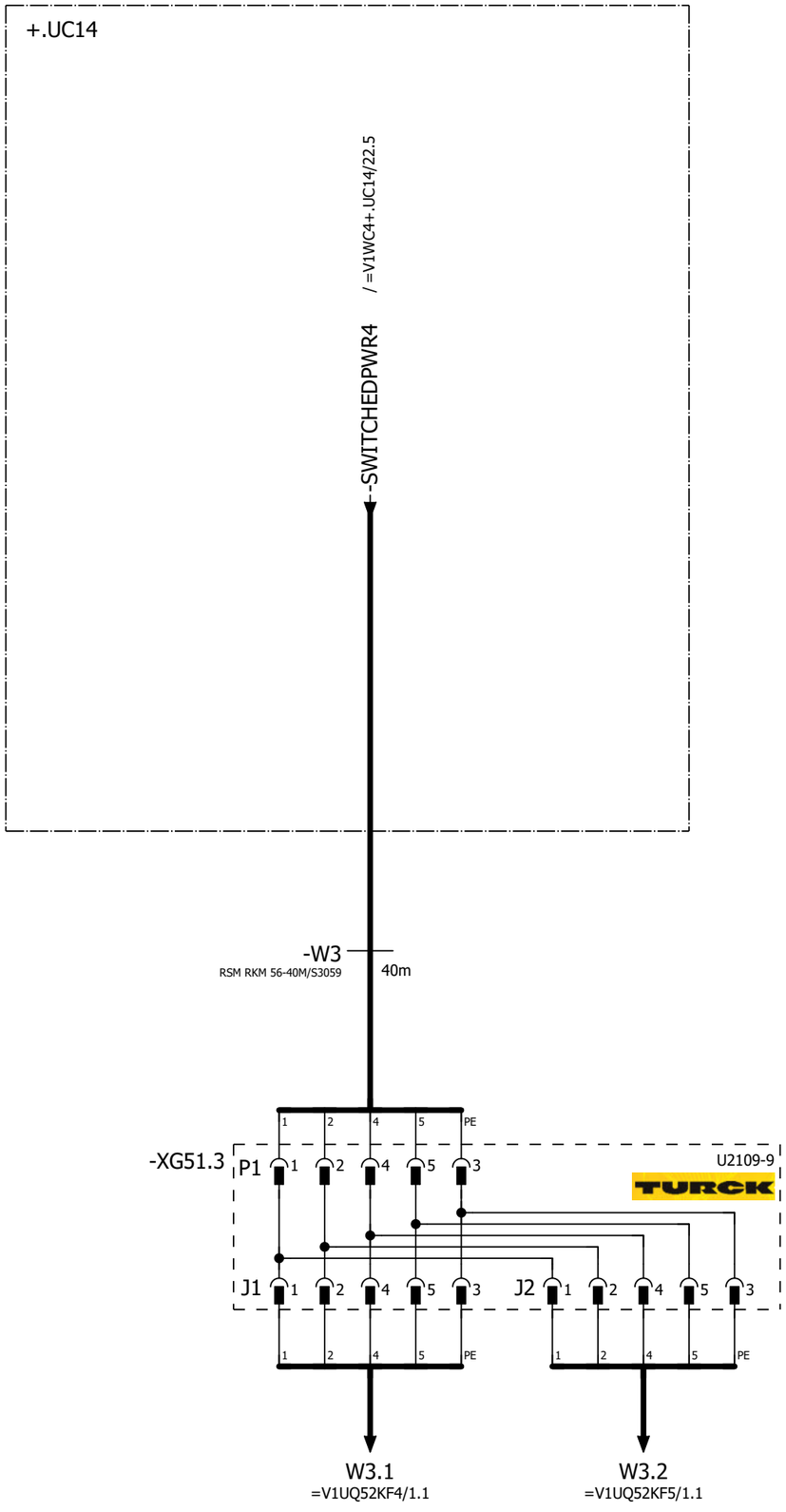

1

=V1UQ53BG0+.UQ53/1

			Date	1/11/2023	Volvo Trucks North America	Valiant TMS	24VDC	Drawing name: =2V10&EFS-EL		= V1UQ52WC4	
			Ed.	MKLEPADLO						+ V1UQ52	
			Appr		P6700 Bodyside RH - Robot Cell 2V10			Document type: EFS	Project nr: 22-16150		Page 2
Modification	Date	Name	Original		Replacement of	Replaced by	Scale 1:1				1579

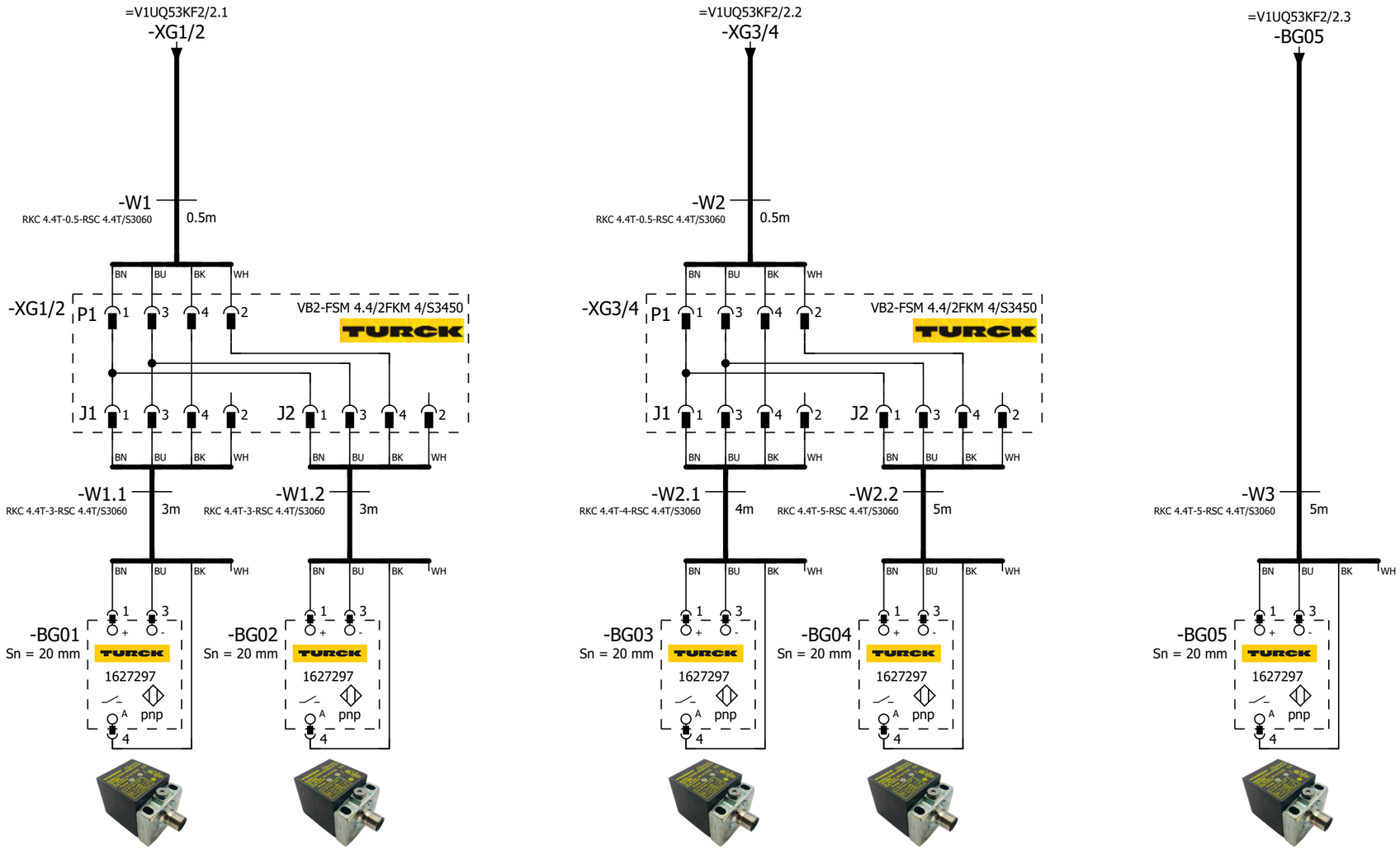

=V1UQ53 -BG01 Common Part Present	=V1UQ53 -BG02 Day Cab Part Present	=V1UQ53 -BG03 Sleeper L230 Part Present	=V1UQ53 -BG04 Sleeper L290 Part Present	=V1UQ53 -BG05 Sleeper L320 Part Present

=V1UQ52WC4+.UQ52/2

=V1UQ53KF1/1

			Date	1/11/2023	Volvo Trucks North America	Valiant TMS	SENSORS	Drawing name: =2V10&EFS-EL	= V1UQ53BG0
			Ed.	MKLEPADLO					+ V1UQ53
			Appr		P6700 Bodyside RH - Robot Cell 2V10			Document type: EFS / Project nr: 22-16150	Page 1
Modification	Date	Name	Original		Replacement of / Replaced by	Scale 1:1			1579

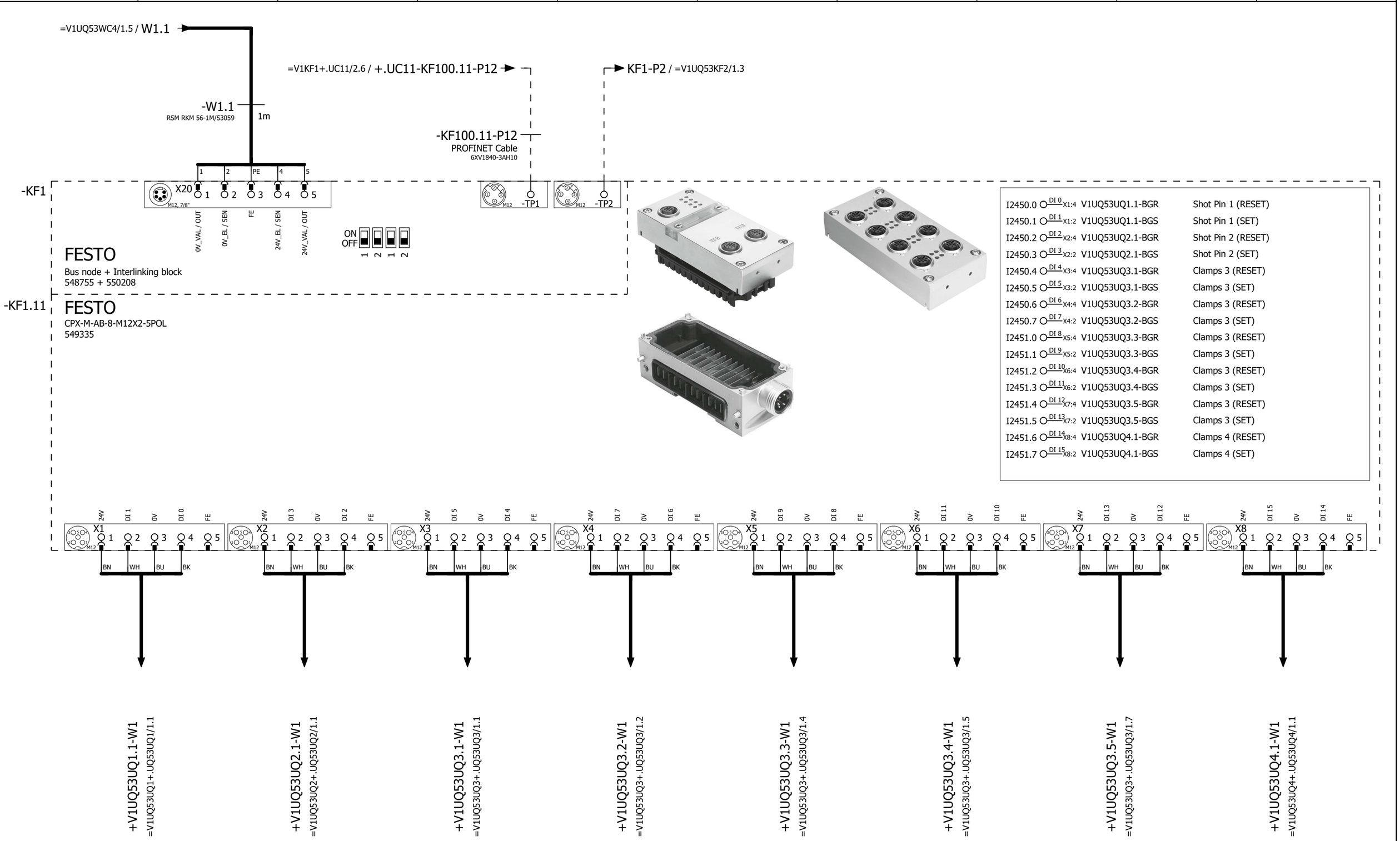

=V1UQ53BG0/1

2

			Date	1/11/2023	Volvo Trucks North America	Valiant TMS	CONNECTING MOD. FOR VTSA MANIFOLD	Drawing name: =2V10&EFS-EL		= V1UQ53KF1	
			Ed.	MKLEPADLO						+ V1UQ53	
			Appr		P6700 Bodyside RH - Robot Cell 2V10			Document type: EFS	Project nr: 22-16150		Page 1
Modification	Date	Name	Original		Replacement of	Replaced by	Scale 1:1				1579

I2452.0	DI 0 X1:4	V1UQ53UQ4.2-BGR	Clamps 4 (RESET)
I2452.1	DI 1 X1:2	V1UQ53UQ4.2-BGS	Clamps 4 (SET)
I2452.2	DI 2 X2:4	V1UQ53UQ4.3-BGR	Clamps 4 (RESET)
I2452.3	DI 3 X2:2	V1UQ53UQ4.3-BGS	Clamps 4 (SET)
I2452.4	DI 4 X3:4	V1UQ53UQ5.1-BGR	Clamps 5 (RESET)
I2452.5	DI 5 X3:2	V1UQ53UQ5.1-BGS	Clamps 5 (SET)
I2452.6	DI 6 X4:4	V1UQ53UQ5.2-BGR	Clamps 5 (RESET)
I2452.7	DI 7 X4:2	V1UQ53UQ5.2-BGS	Clamps 5 (SET)
I2453.0	DI 8 X5:4	V1UQ53UQ5.3-BGR	Clamps 5 (RESET)
I2453.1	DI 9 X5:2	V1UQ53UQ5.3-BGS	Clamps 5 (SET)
I2453.2	DI 10 X6:4	V1UQ53UQ6.1-BGR	Clamp 6 (RESET)
I2453.3	DI 11 X6:2	V1UQ53UQ6.1-BGS	Clamp 6 (SET)
I2453.4	DI 12 X7:4	V1UQ53UQ7.1-BGR	Clamp 7 (RESET)
I2453.5	DI 13 X7:2	V1UQ53UQ7.1-BGS	Clamp 7 (SET)
I2453.6	DI 14 X8:4	V1UQ53UQ8.1-BGR	Clamps 8 (RESET)
I2453.7	DI 15 X8:2	V1UQ53UQ8.1-BGS	Clamps 8 (SET)

-KF1.12

FESTO
CPX-M-AB-8-M12X2-5POL
549335

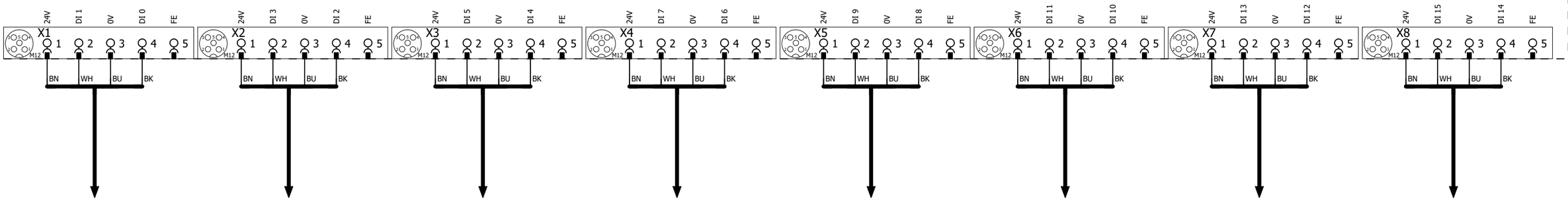

+V1UQ53UQ4.2-W1
=V1UQ53UQ4+.UQ53UQ4/1.2

+V1UQ53UQ4.3-W1
=V1UQ53UQ4+.UQ53UQ4/1.4

+V1UQ53UQ5.1-W1
=V1UQ53UQ5+.UQ53UQ5/1.1

+V1UQ53UQ5.2-W1
=V1UQ53UQ5+.UQ53UQ5/1.2

+V1UQ53UQ5.3-W1
=V1UQ53UQ5+.UQ53UQ5/1.4

+V1UQ53UQ6.1-W1
=V1UQ53UQ6+.UQ53UQ6/1.1

+V1UQ53UQ7.1-W1
=V1UQ53UQ7+.UQ53UQ7/1.1

+V1UQ53UQ8.1-W1
=V1UQ53UQ8+.UQ53UQ8/1.1

I2454.0	DI 0 X1:4	V1UQ53UQ8.2-BGR	Clamps 8 (RESET)
I2454.1	DI 1 X1:2	V1UQ53UQ8.2-BGS	Clamps 8 (SET)
I2454.2	DI 2 X2:4	V1UQ53UQ9.1-BGR	Clamp 9 (RESET)
I2454.3	DI 3 X2:2	V1UQ53UQ9.1-BGS	Clamp 9 (SET)
I2454.4	DI 4 X3:4	V1UQ53UQ10.1-BGR	Clamps 10 (RESET)
I2454.5	DI 5 X3:2	V1UQ53UQ10.1-BGS	Clamps 10 (SET)
I2454.6	DI 6 X4:4	V1UQ53UQ10.2-BGR	Clamps 10 (RESET)
I2454.7	DI 7 X4:2	V1UQ53UQ10.2-BGS	Clamps 10 (SET)
I2455.0	DI 8 X5:4	I2455.0	Spare
I2455.1	DI 9 X5:2	I2455.1	Spare
I2455.2	DI 10 X6:4	I2455.2	Spare
I2455.3	DI 11 X6:2	I2455.3	Spare
I2455.4	DI 12 X7:4	I2455.4	Spare
I2455.5	DI 13 X7:2	I2455.5	Spare
I2455.6	DI 14 X8:4	I2455.6	Spare
I2455.7	DI 15 X8:2	I2455.7	Spare

-KF1.13

FESTO

CPX-M-AB-8-M12X2-5POL

549335

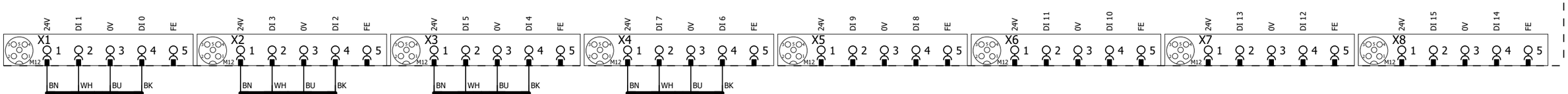

+V1UQ53UQ8.2-W1
=V1UQ53UQ8+.UQ53UQ8/1.2

+V1UQ53UQ9.1-W1
=V1UQ53UQ9+.UQ53UQ9/1.1

+V1UQ53UQ10.1-W1
=V1UQ53UQ10+.UQ53UQ10/1.1

+V1UQ53UQ10.2-W1
=V1UQ53UQ10+.UQ53UQ10/1.2

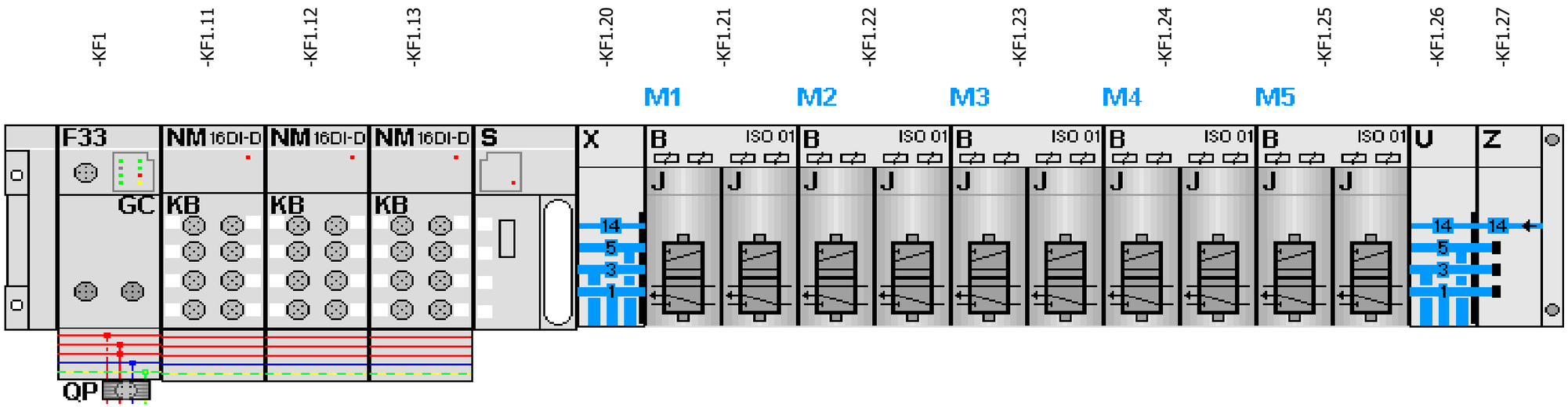

-KF1.21

=V1UQ53UQ1+.UQ53UQ1/1.3
=V1UQ53UQ2+.UQ53UQ2/1.3

FESTO

=V1UQ53UQ1+.UQ53UQ1/1.4	Q2450.0 DO 0 1.1	-QN1.1_Q	Shot Pin 1 (RST)
=V1UQ53UQ1+.UQ53UQ1/1.4	Q2450.1 DO 1 1.2	-QN1.2_Q	Shot Pin 1 (SET)
=V1UQ53UQ2+.UQ53UQ2/1.4	Q2450.2 DO 2 2.1	-QN2.1_Q	Shot Pin 2 (RST)
=V1UQ53UQ2+.UQ53UQ2/1.4	Q2450.3 DO 3 2.2	-QN2.2_Q	Shot Pin 2 (SET)

-KF1.22

=V1UQ53UQ3+.UQ53UQ3/1.3
=V1UQ53UQ4+.UQ53UQ4/1.3

FESTO

=V1UQ53UQ3+.UQ53UQ3/1.4	Q2450.4 DO 0 1.1	-QN3.1_Q	Clamps 3 (RST)
=V1UQ53UQ3+.UQ53UQ3/1.4	Q2450.5 DO 1 1.2	-QN3.2_Q	Clamps 3 (SET)
=V1UQ53UQ4+.UQ53UQ4/1.4	Q2450.6 DO 2 2.1	-QN4.1_Q	Clamps 4 (RST)
=V1UQ53UQ4+.UQ53UQ4/1.4	Q2450.7 DO 3 2.2	-QN4.2_Q	Clamps 4 (SET)

-KF1.23

=V1UQ53UQ5+.UQ53UQ5/1.3
=V1UQ53UQ6+.UQ53UQ6/1.3

FESTO

=V1UQ53UQ5+.UQ53UQ5/1.4	Q2451.0 DO 0 1.1	-QN5.1_Q	Clamps 5 (RST)
=V1UQ53UQ5+.UQ53UQ5/1.4	Q2451.1 DO 1 1.2	-QN5.2_Q	Clamps 5 (SET)
=V1UQ53UQ6+.UQ53UQ6/1.4	Q2451.2 DO 2 2.1	-QN6.1_Q	Clamp 6 (RST)
=V1UQ53UQ6+.UQ53UQ6/1.4	Q2451.3 DO 3 2.2	-QN6.2_Q	Clamp 6 (SET)

-KF1.24

=V1UQ53UQ7+.UQ53UQ7/1.3
=V1UQ53UQ8+.UQ53UQ8/1.3

FESTO

=V1UQ53UQ7+.UQ53UQ7/1.4	Q2451.4 DO 0 1.1	-QN7.1_Q	Clamp 7 (RST)
=V1UQ53UQ7+.UQ53UQ7/1.4	Q2451.5 DO 1 1.2	-QN7.2_Q	Clamp 7 (SET)
=V1UQ53UQ8+.UQ53UQ8/1.4	Q2451.6 DO 2 2.1	-QN8.1_Q	Clamps 8 (RST)
=V1UQ53UQ8+.UQ53UQ8/1.4	Q2451.7 DO 3 2.2	-QN8.2_Q	Clamps 8 (SET)

-KF1.25

=V1UQ53UQ9+.UQ53UQ9/1.3
=V1UQ53UQ10+.UQ53UQ10/1.3

FESTO

=V1UQ53UQ9+.UQ53UQ9/1.4	Q2452.0 DO 0 1.1	-QN9.1_Q	Clamp 9 (RST)
=V1UQ53UQ9+.UQ53UQ9/1.4	Q2452.1 DO 1 1.2	-QN9.2_Q	Clamp 9 (SET)
=V1UQ53UQ10+.UQ53UQ10/1.4	Q2452.2 DO 2 2.1	-QN10.1_Q	Clamps 10 (RST)
=V1UQ53UQ10+.UQ53UQ10/1.4	Q2452.3 DO 3 2.2	-QN10.2_Q	Clamps 10 (SET)

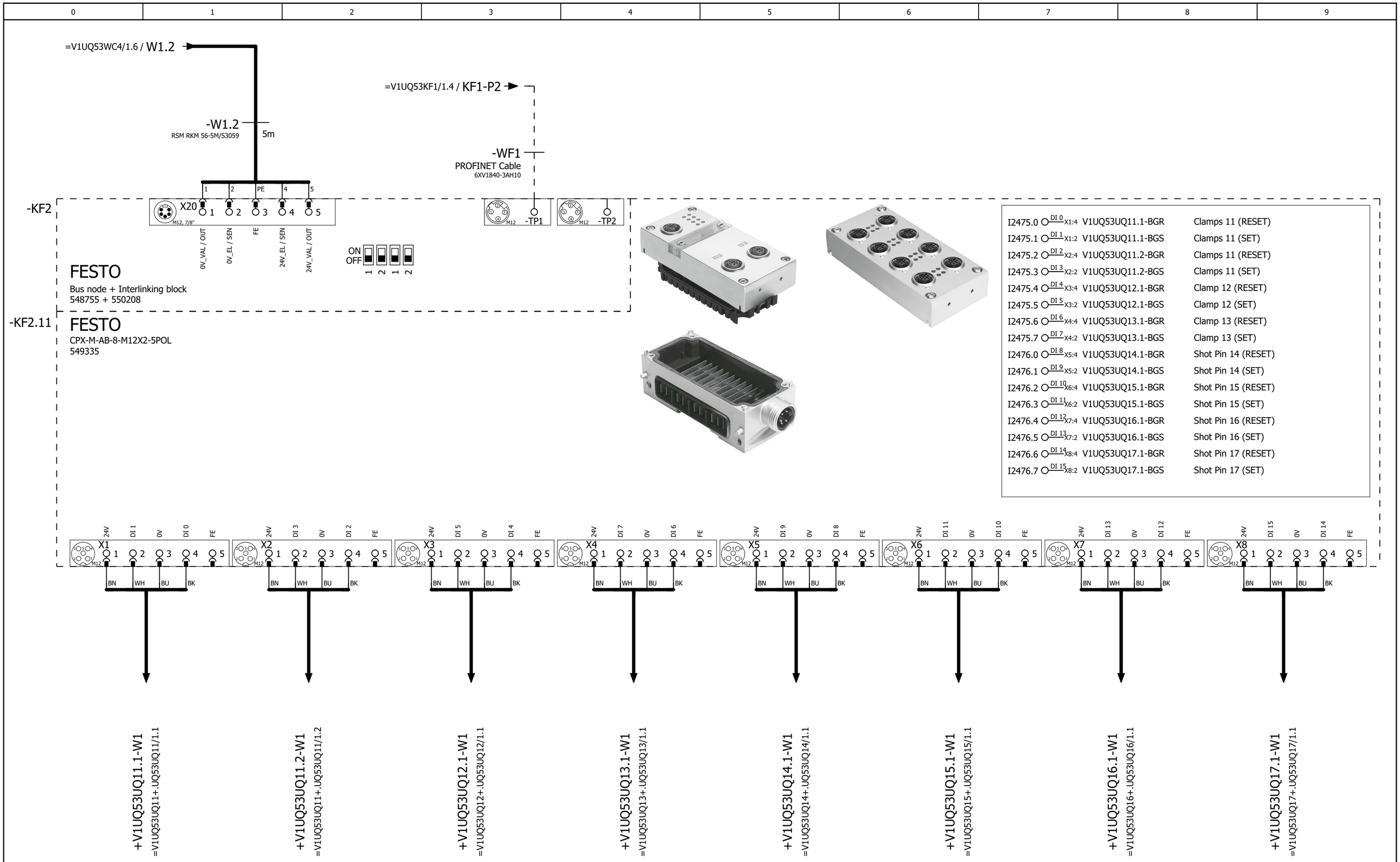

=V1UQ53KF1/4

2

			Date	1/11/2023	Volvo Trucks North America	Valiant TMS	CONNECTING MOD. FOR VTSA MANIFOLD	Drawing name: =2V10&EFS-EL		= V1UQ53KF2	
			Ed.	MKLEPADLO						+ V1UQ53	
			Appr		P6700 Bodyside RH - Robot Cell 2V10			Document type: EFS	Project nr: 22-16150		Page 1
Modification	Date	Name	Original		Replacement of / Replaced by	Scale 1:1					1579

I2477.0	DI 0 X1:4	V1UQ53-BG01	Sensor Common Part Present
I2477.1	DI 1 X1:2	V1UQ53-BG02	Sensor Day Cab 78522975
I2477.2	DI 2 X2:4	V1UQ53-BG03	Sensor Sleeper L230 78521360
I2477.3	DI 3 X2:2	V1UQ53-BG04	Sensor Sleeper L290 78522139
I2477.4	DI 4 X3:4	V1UQ53-BG05	Sensor Sleeper L320 78519674
I2477.5	DI 5 X3:2	I2477.5	Spare
I2477.6	DI 6 X4:4	I2477.6	Spare
I2477.7	DI 7 X4:2	I2477.7	Spare
I2478.0	DI 8 X5:4	I2478.0	Spare
I2478.1	DI 9 X5:2	I2478.1	Spare
I2478.2	DI 10 X6:4	I2478.2	Spare
I2478.3	DI 11 X6:2	I2478.3	Spare
I2478.4	DI 12 X7:4	I2478.4	Spare
I2478.5	DI 13 X7:2	I2478.5	Spare
I2478.6	DI 14 X8:4	I2478.6	Spare
I2478.7	DI 15 X8:2	I2478.7	Spare

-KF2.12

FESTO
CPX-M-AB-8-M12X2-5POL
549335

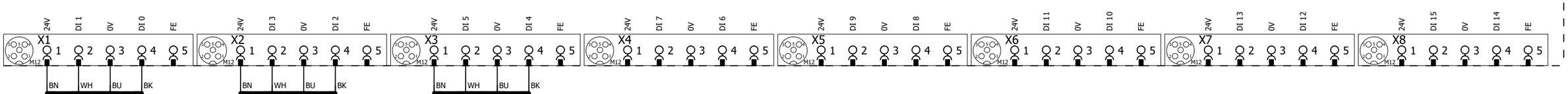

-XG1/2
=V1UQ53BG0/1.1

-XG3/4
=V1UQ53BG0/1.4

-BG05
=V1UQ53BG0/1.6

1 3

			Date	1/11/2023	Volvo Trucks North America	Valiant TMS	I/O MOD. DI16 (8 x M12) FOR VTSA-F	Drawing name: =2V10&EFS-EL		= V1UQ53KF2	
			Ed.	MKLEPADLO						+ V1UQ53	
			Appr		P6700 Bodyside RH - Robot Cell 2V10			Document type: EFS	Project nr: 22-16150		Page 2
Modification	Date	Name	Original		Replacement of / Replaced by	Scale 1:1					1579

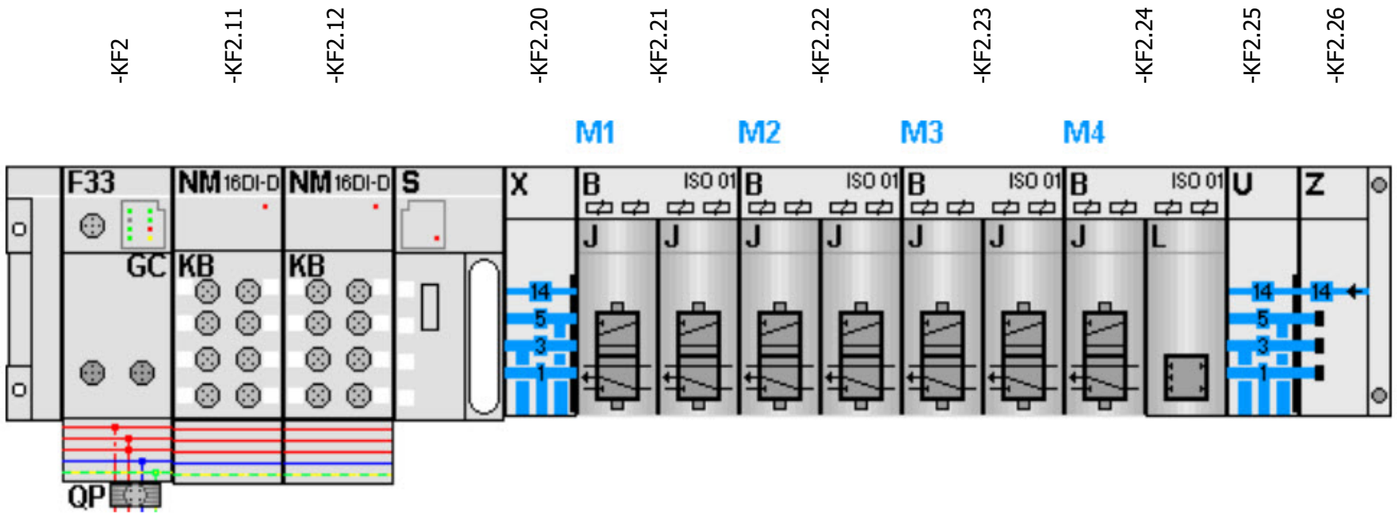

-KF2.21

=V1UQ53UQ11+.UQ53UQ11/1.3
=V1UQ53UQ12+.UQ53UQ12/1.3

FESTO

=V1UQ53UQ11+.UQ53UQ11/1.4	Q2475.0 DO 0 1.1	-QN11.1_Q	Clamps 11 (RST)
=V1UQ53UQ11+.UQ53UQ11/1.4	Q2475.1 DO 1 1.2	-QN11.2_Q	Clamps 11 (SET)
=V1UQ53UQ12+.UQ53UQ12/1.4	Q2475.2 DO 2 2.1	-QN12.1_Q	Clamp 12 (RST)
=V1UQ53UQ12+.UQ53UQ12/1.4	Q2475.3 DO 3 2.2	-QN12.2_Q	Clamp 12 (SET)

-KF2.22

=V1UQ53UQ13+.UQ53UQ13/1.3
=V1UQ53UQ14+.UQ53UQ14/1.3

FESTO

=V1UQ53UQ13+.UQ53UQ13/1.4	Q2475.4 DO 0 1.1	-QN13.1_Q	Clamp 13 (RST)
=V1UQ53UQ13+.UQ53UQ13/1.4	Q2475.5 DO 1 1.2	-QN13.2_Q	Clamp 13 (SET)
=V1UQ53UQ14+.UQ53UQ14/1.4	Q2475.6 DO 2 2.1	-QN14.1_Q	Shot Pin 14 (RST)
=V1UQ53UQ14+.UQ53UQ14/1.4	Q2475.7 DO 3 2.2	-QN14.2_Q	Shot Pin 14 (SET)

-KF2.23

=V1UQ53UQ15+.UQ53UQ15/1.3
=V1UQ53UQ16+.UQ53UQ16/1.3

FESTO

=V1UQ53UQ15+.UQ53UQ15/1.4	Q2476.0 DO 0 1.1	-QN15.1_Q	Shot Pin 15 (RST)
=V1UQ53UQ15+.UQ53UQ15/1.4	Q2476.1 DO 1 1.2	-QN15.2_Q	Shot Pin 15 (SET)
=V1UQ53UQ16+.UQ53UQ16/1.4	Q2476.2 DO 2 2.1	-QN16.1_Q	Shot Pin 16 (RST)
=V1UQ53UQ16+.UQ53UQ16/1.4	Q2476.3 DO 3 2.2	-QN16.2_Q	Shot Pin 16 (SET)

-KF2.24

=V1UQ53UQ17+.UQ53UQ17/1.3

FESTO

=V1UQ53UQ17+.UQ53UQ17/1.4	Q2476.4 DO 0 1.1	-QN17.1_Q	Shot Pin 17 (RST)
=V1UQ53UQ17+.UQ53UQ17/1.4	Q2476.5 DO 1 1.2	-QN17.2_Q	Shot Pin 17 (SET)
	Q2476.6 DO 2 2.1	-QN18.1_Q	Spare
	Q2476.7 DO 3 2.2	-QN18.2_Q	Spare

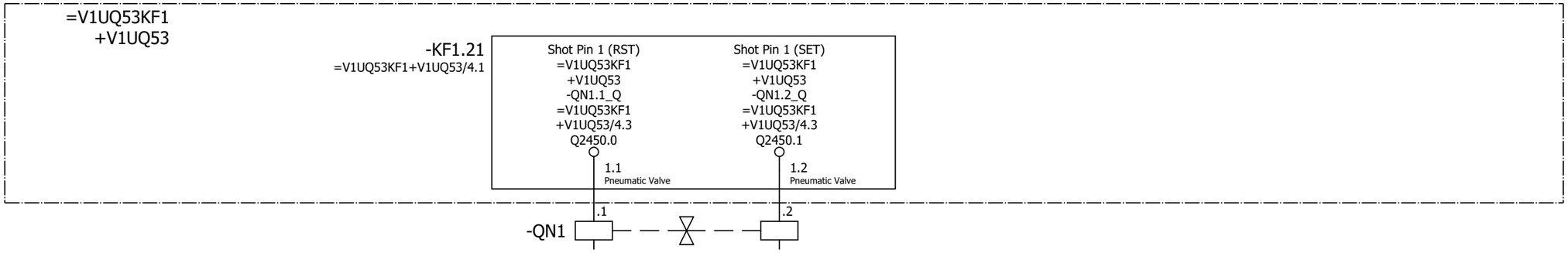

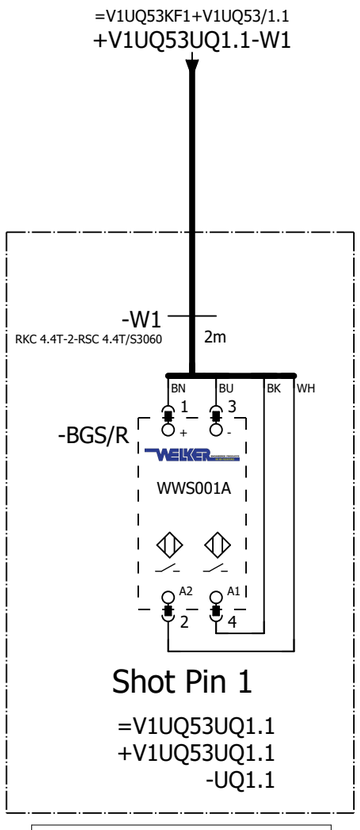

=V1UQ53
-UQ1.1-BGS/R
Shot Pin 1

=V1UQ53KF2+V1UQ53/3

=V1UQ53UQ2+.UQ53UQ2/1

			Date	1/11/2023	Volvo Trucks North America	Valiant TMS	FESTO DQ CONNECTION QN1	Drawing name: =2V10&EFS-EL		= V1UQ53UQ1	
			Ed.	MKLEPADLO						+ V1UQ53UQ1	
			Appr		P6700 Bodyside RH - Robot Cell 2V10			Document type: EFS	Project nr: 22-16150		Page 1
Modification	Date	Name	Original		Replacement of	Replaced by	Scale 1:1				1579

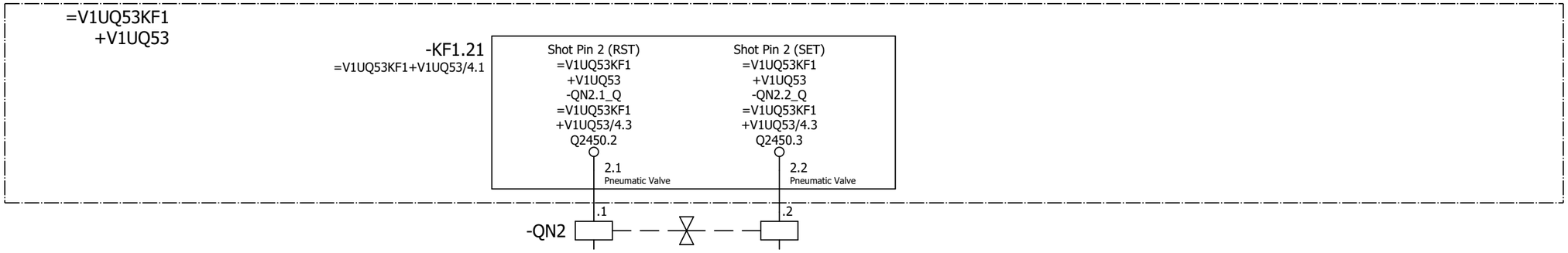

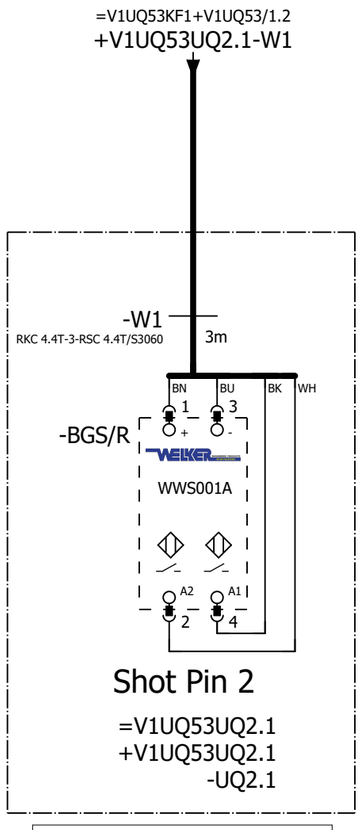

=V1UQ53
-UQ2.1-BGS/R
Shot Pin 2

=V1UQ53UQ1+.UQ53UQ1/1

=V1UQ53UQ3+.UQ53UQ3/1

			Date	1/11/2023	Volvo Trucks North America		Valiant TMS	FESTO DQ CONNECTION QN2	Drawing name: =2V10&EFS-EL	= V1UQ53UQ2	
			Ed.	MKLEPADLO						+ V1UQ53UQ2	
			Appr		P6700 Bodyside RH - Robot Cell 2V10				Document type: EFS	Project nr: 22-16150	Page 1
Modification	Date	Name	Original		Replacement of	Replaced by	Scale 1:1				1579

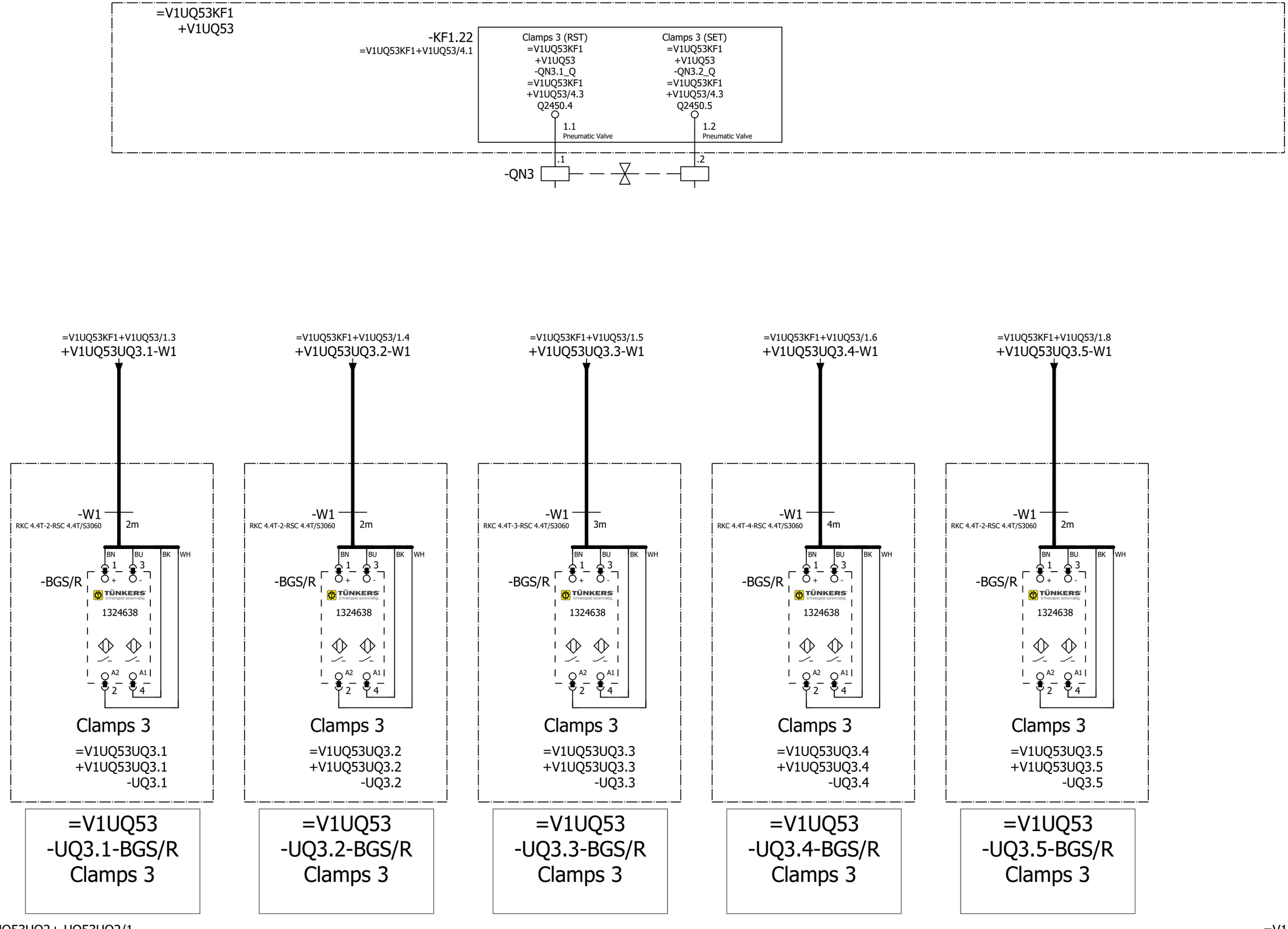

=V1UQ53UQ2+.UQ53UQ2/1

=V1UQ53UQ4+.UQ53UQ4/1

			Date	1/11/2023	Volvo Trucks North America		Valiant TMS	FESTO DQ CONNECTION QN3	Drawing name: =2V10&EFS-EL	= V1UQ53UQ3	
			Ed.	MKLEPADLO						+ V1UQ53UQ3	
			Appr		P6700 Bodyside RH - Robot Cell 2V10				Document type: EFS	Project nr: 22-16150	Page 1
Modification	Date	Name	Original		Replacement of	Replaced by	Scale 1:1				1579

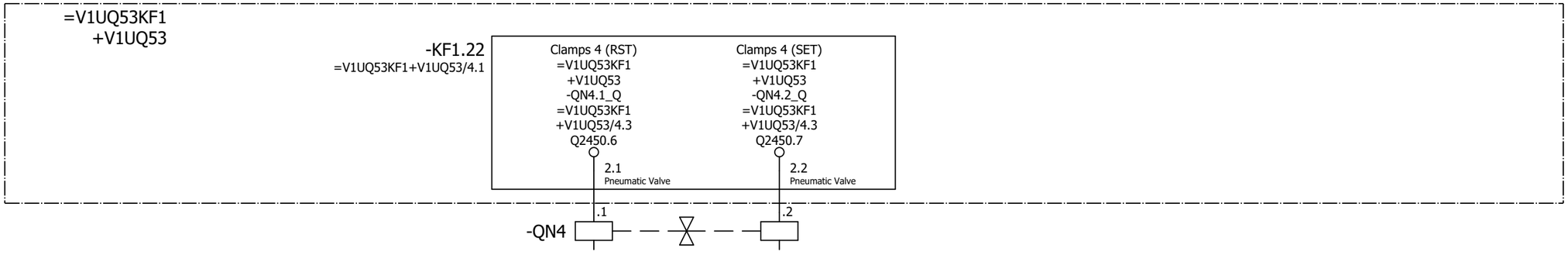

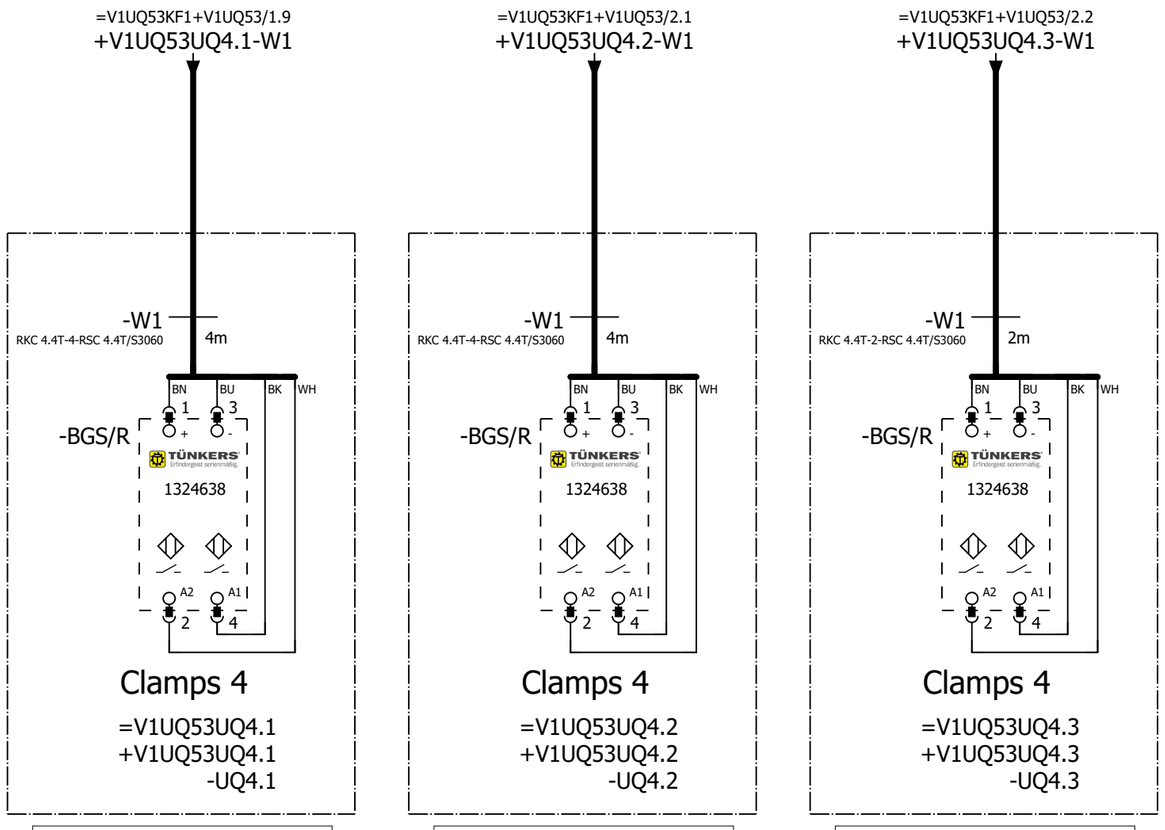

=V1UQ53
-UQ4.1-BGS/R
Clamps 4

=V1UQ53
-UQ4.2-BGS/R
Clamps 4

=V1UQ53
-UQ4.3-BGS/R
Clamps 4

=V1UQ53UQ3+.UQ53UQ3/1

=V1UQ53UQ5+.UQ53UQ5/1

			Date	1/11/2023	Volvo Trucks North America		Valiant TMS	FESTO DQ CONNECTION QN4	Drawing name: =2V10&EFS-EL	= V1UQ53UQ4	
			Ed.	MKLEPADLO						+ V1UQ53UQ4	
			Appr		P6700 Bodyside RH - Robot Cell 2V10				Document type: EFS	Project nr: 22-16150	Page 1
Modification	Date	Name	Original		Replacement of	Replaced by	Scale 1:1				1579

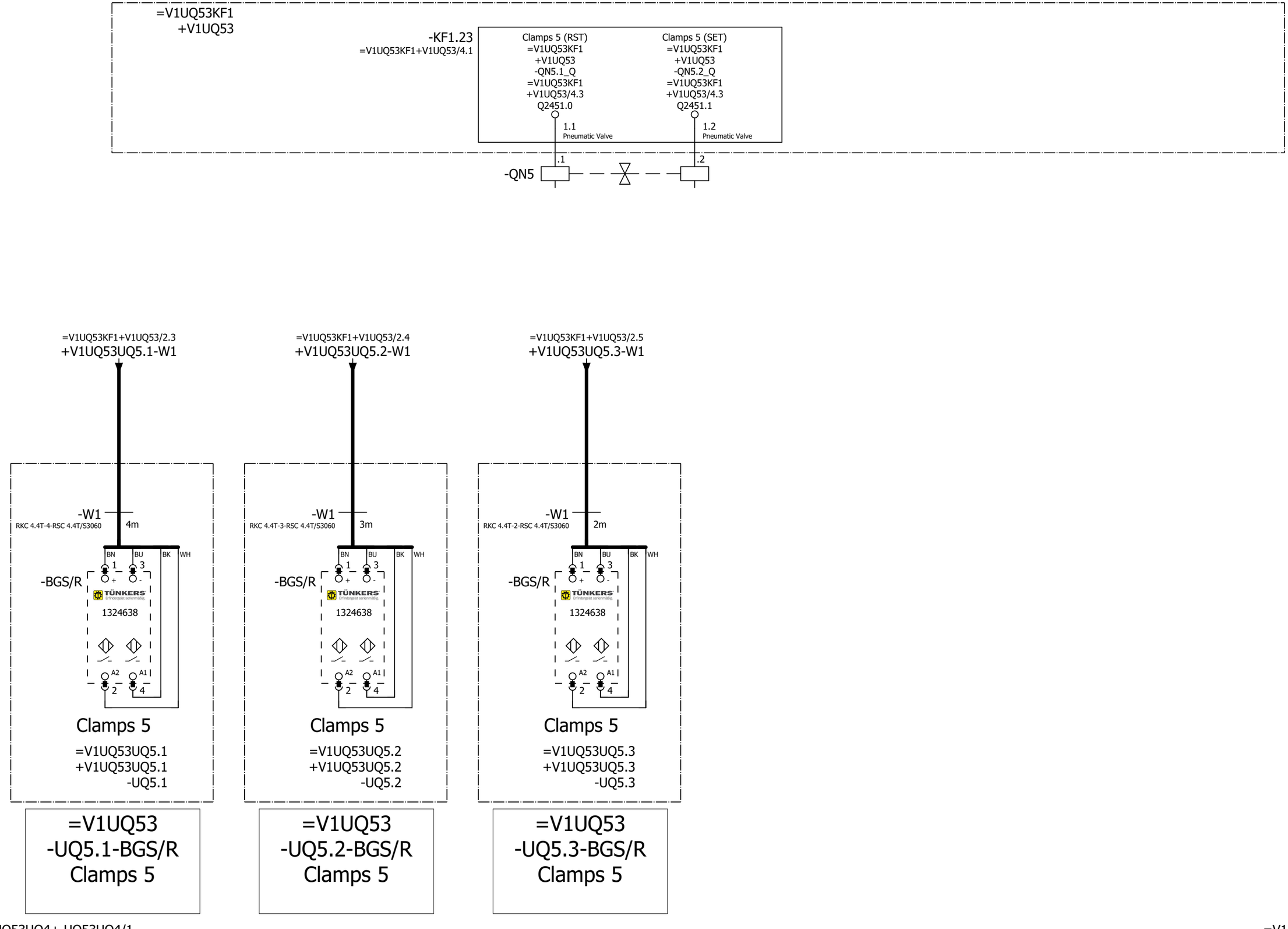

=V1UQ53UQ4+.UQ53UQ4/1

=V1UQ53UQ6+.UQ53UQ6/1

			Date	1/11/2023	Volvo Trucks North America	Valiant TMS	FESTO DQ CONNECTION QN5	Drawing name: =2V10&EFS-EL		= V1UQ53UQ5	
			Ed.	MKLEPADLO						+ V1UQ53UQ5	
			Appr		P6700 Bodyside RH - Robot Cell 2V10			Document type: EFS	Project nr: 22-16150		Page 1
Modification	Date	Name	Original		Replacement of / Replaced by	Scale 1:1					1579

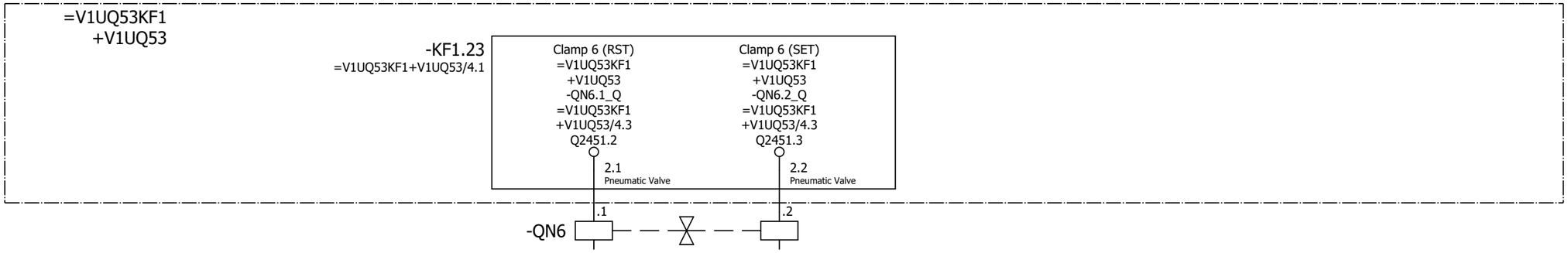

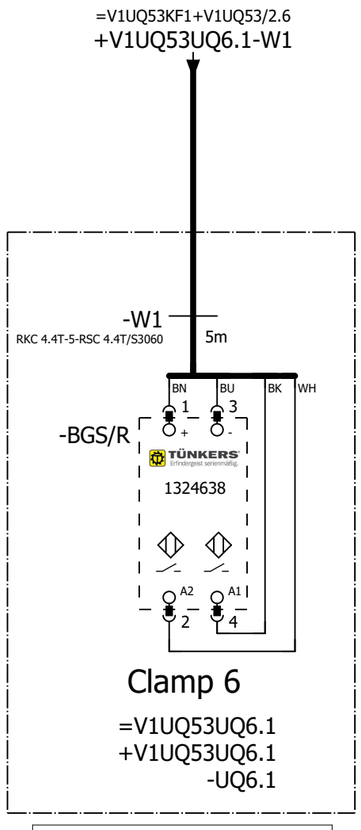

=V1UQ53
-UQ6.1-BGS/R
Clamp 6

=V1UQ53UQ5+.UQ53UQ5/1

=V1UQ53UQ7+.UQ53UQ7/1

			Date	1/11/2023	Volvo Trucks North America	Valiant TMS	FESTO DQ CONNECTION QN6	Drawing name: =2V10&EFS-EL	= V1UQ53UQ6		
			Ed.	MKLEPADLO					+ V1UQ53UQ6		
			Appr		P6700 Bodyside RH - Robot Cell 2V10			Document type: EFS	Project nr: 22-16150	Page	1
Modification	Date	Name	Original		Replacement of / Replaced by	Scale 1:1					1579

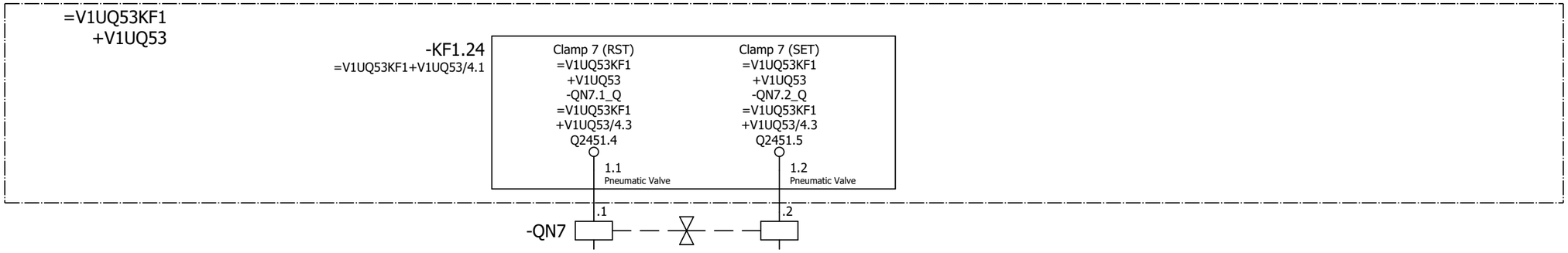

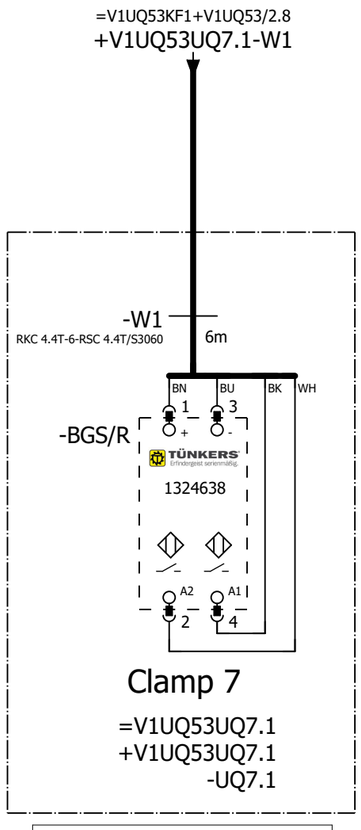

=V1UQ53
-UQ7.1-BGS/R
Clamp 7

=V1UQ53UQ6+.UQ53UQ6/1

=V1UQ53UQ8+.UQ53UQ8/1

			Date	1/11/2023	Volvo Trucks North America	Valiant TMS	FESTO DQ CONNECTION QN7	Drawing name: =2V10&EFS-EL		= V1UQ53UQ7	
			Ed.	MKLEPADLO						+ V1UQ53UQ7	
			Appr		P6700 Bodyside RH - Robot Cell 2V10			Document type: EFS	Project nr: 22-16150		Page 1
Modification	Date	Name	Original		Replacement of / Replaced by	Scale 1:1					1579

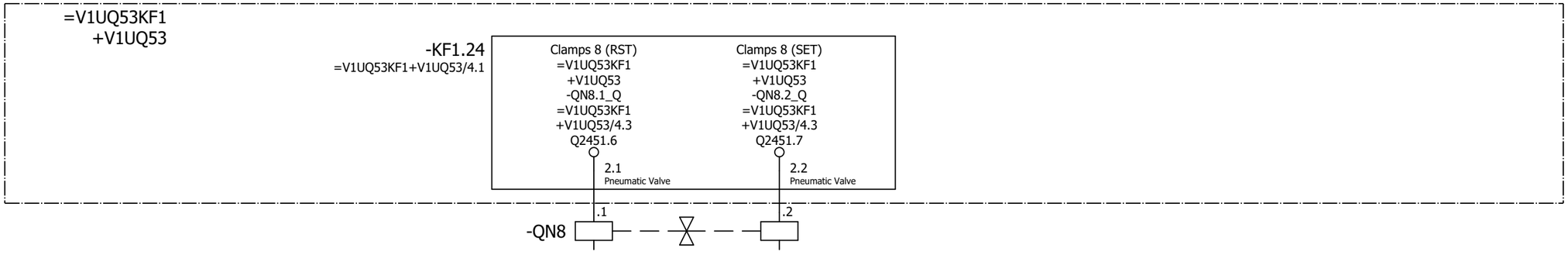

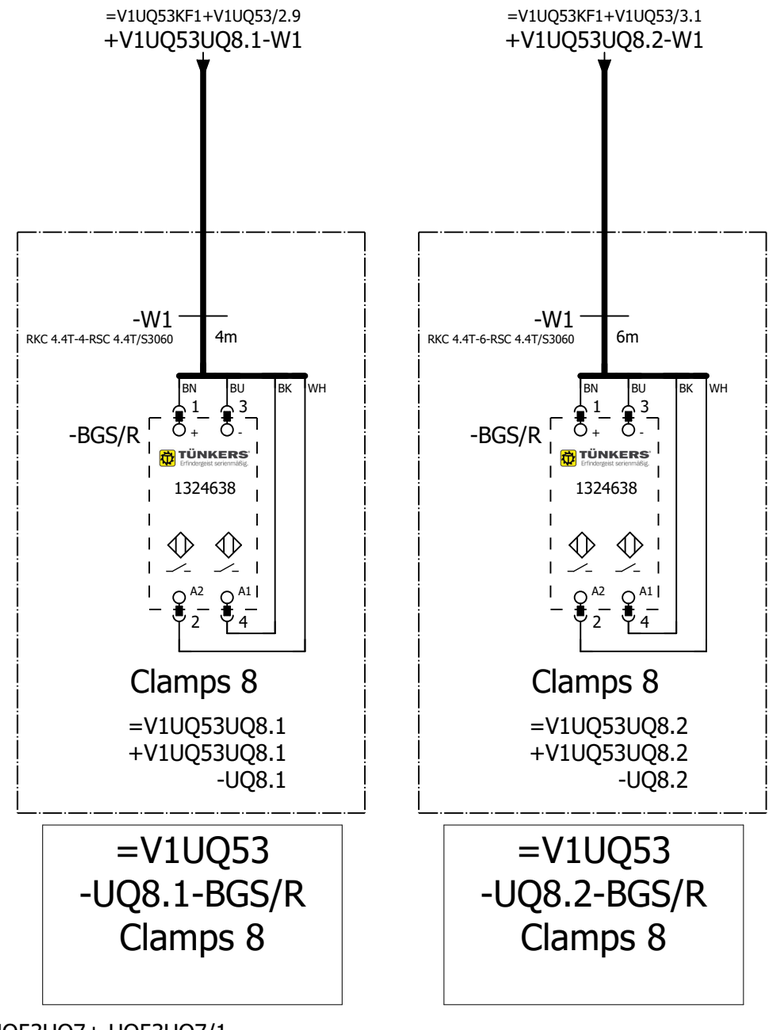

=V1UQ53UQ7+.UQ53UQ7/1

=V1UQ53UQ9+.UQ53UQ9/1

			Date	1/11/2023	Volvo Trucks North America	Valiant TMS	FESTO DQ CONNECTION QN8	Drawing name: =2V10&EFS-EL	= V1UQ53UQ8		
			Ed.	MKLEPADLO					+ V1UQ53UQ8		
			Appr		P6700 Bodyside RH - Robot Cell 2V10			Document type: EFS	Project nr: 22-16150	Page	1
Modification	Date	Name	Original		Replacement of / Replaced by	Scale 1:1					1579

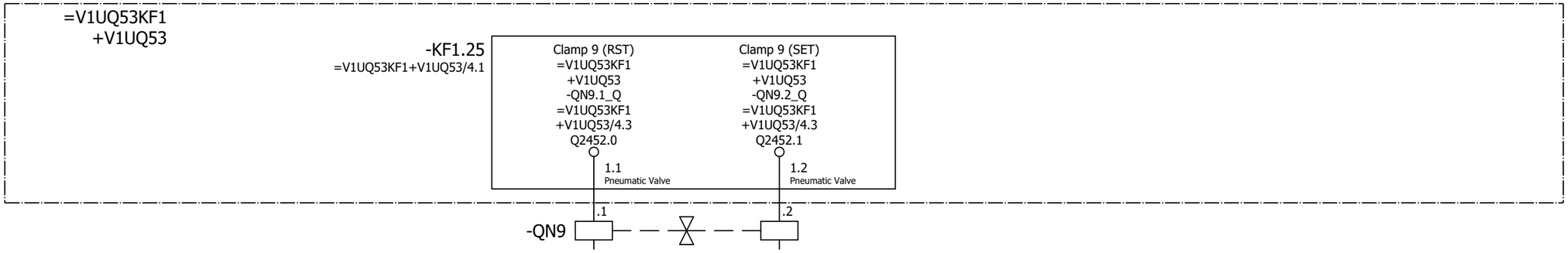

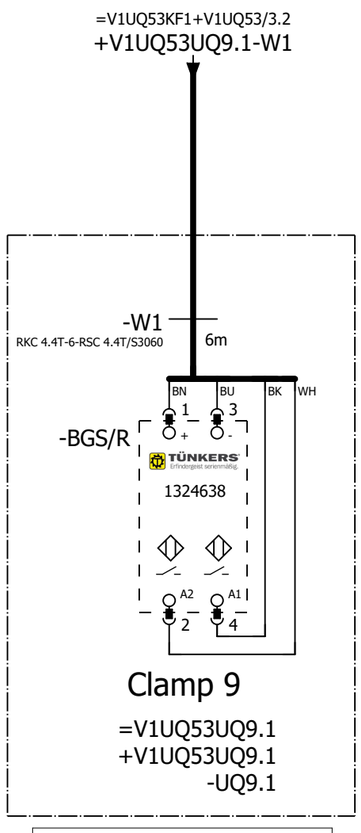

=V1UQ53
-UQ9.1-BGS/R
Clamp 9

=V1UQ53UQ8+.UQ53UQ8/1

=V1UQ53UQ10+.UQ53UQ10/1

			Date	1/11/2023	Volvo Trucks North America	Valiant TMS	FESTO DQ CONNECTION QN9	Drawing name: =2V10&EFS-EL	= V1UQ53UQ9	
			Ed.	MKLEPADLO					+ V1UQ53UQ9	
			Appr		P6700 Bodyside RH - Robot Cell 2V10			Document type: EFS	Project nr: 22-16150	Page 1
Modification	Date	Name	Original		Replacement of	Replaced by	Scale 1:1			1579

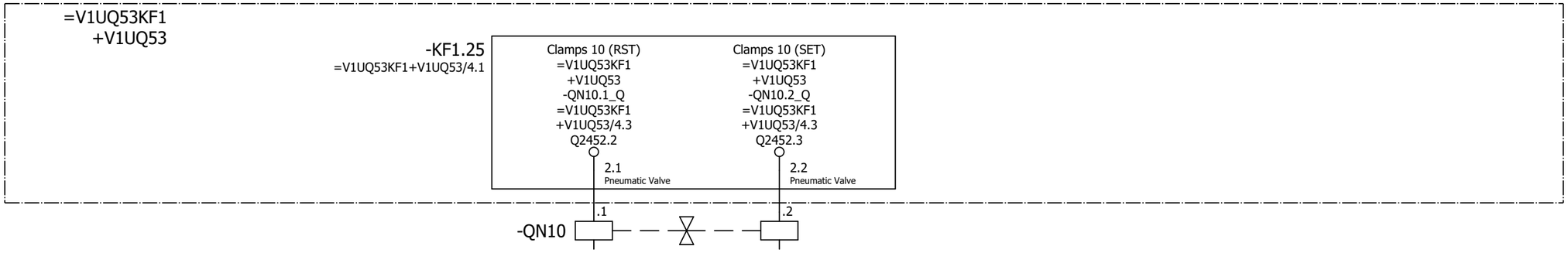

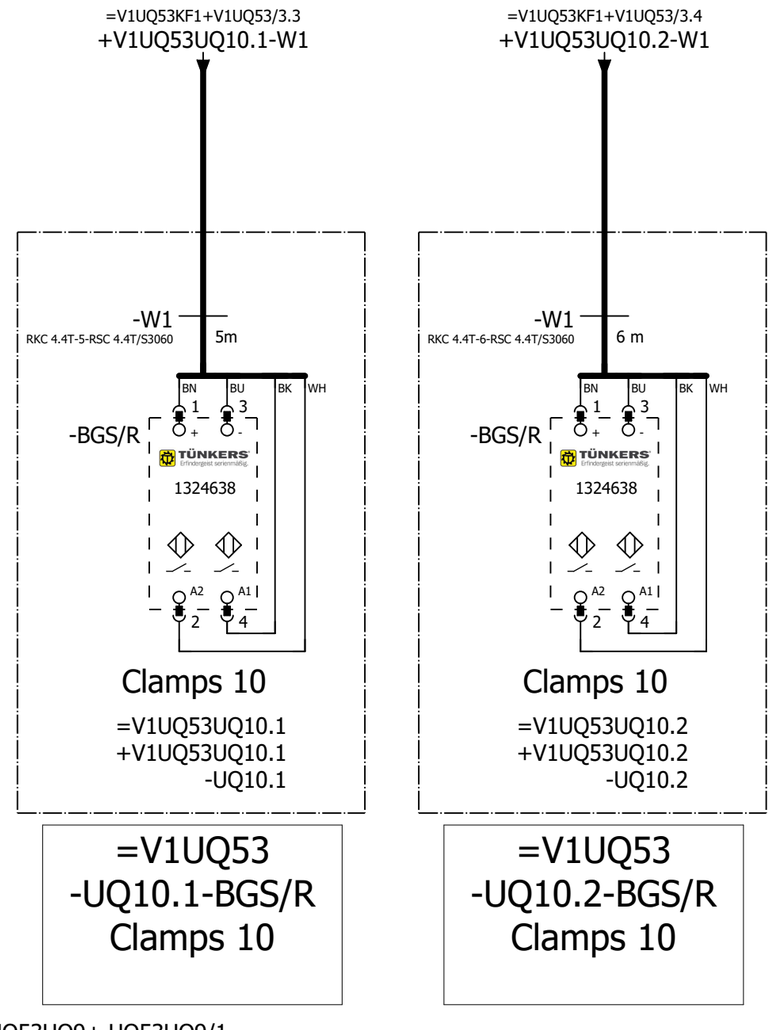

=V1UQ53
-UQ10.1-BGS/R
Clamps 10

=V1UQ53
-UQ10.2-BGS/R
Clamps 10

=V1UQ53UQ9+.UQ53UQ9/1

=V1UQ53UQ11+.UQ53UQ11/1

			Date	1/11/2023	Volvo Trucks North America		Valiant TMS	FESTO DQ CONNECTION QN10	Drawing name: =2V10&EFS-EL	= V1UQ53UQ10	
			Ed.	MKLEPADLO						+ V1UQ53UQ10	
			Appr		P6700 Bodyside RH - Robot Cell 2V10				Document type: EFS	Project nr: 22-16150	Page 1
Modification	Date	Name	Original		Replacement of	Replaced by	Scale 1:1				1579

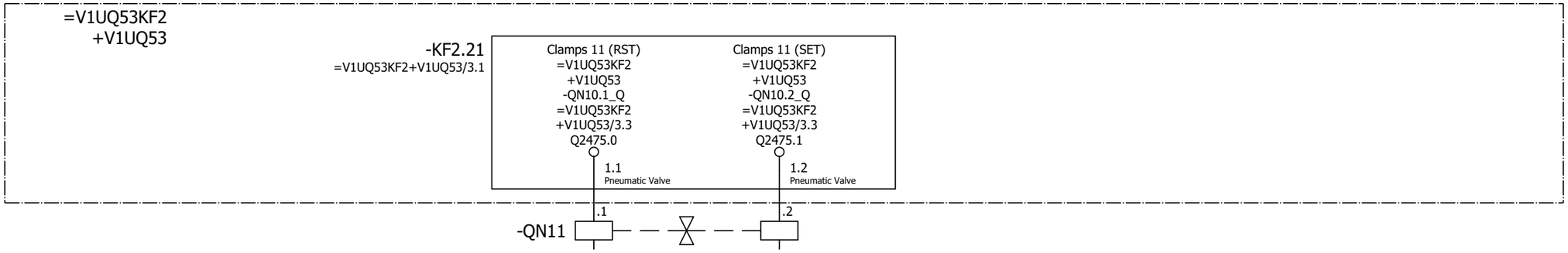

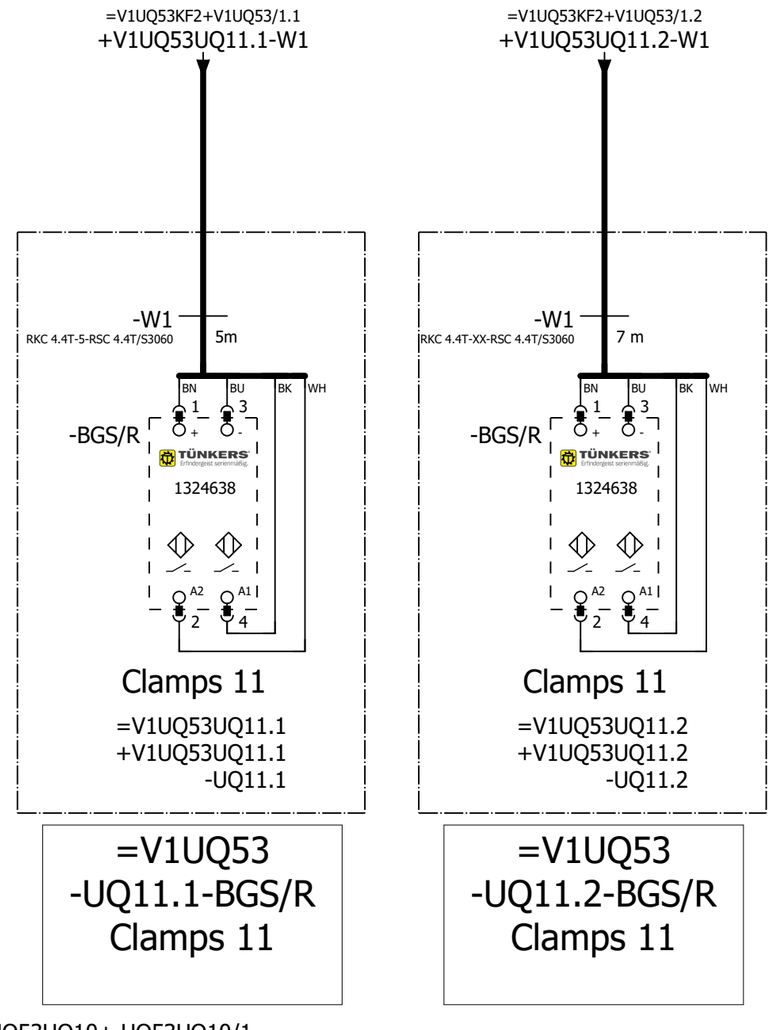

=V1UQ53UQ10+.UQ53UQ10/1

=V1UQ53UQ12+.UQ53UQ12/1

			Date	1/11/2023	Volvo Trucks North America	Valiant TMS	FESTO DQ CONNECTION QN11	Drawing name: =2V10&EFS-EL	= V1UQ53UQ11		
			Ed.	MKLEPADLO					+ V1UQ53UQ11		
			Appr		P6700 Bodyside RH - Robot Cell 2V10			Document type: EFS	Project nr: 22-16150	Page	1
Modification	Date	Name	Original		Replacement of / Replaced by	Scale 1:1					1579

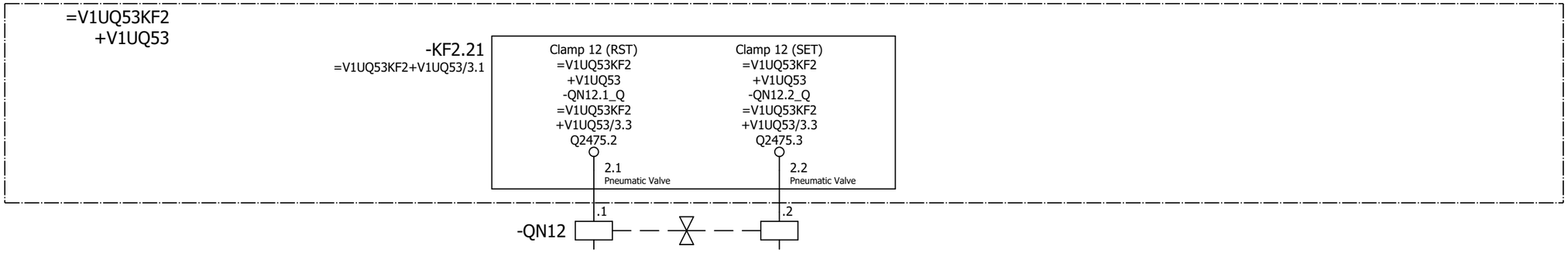

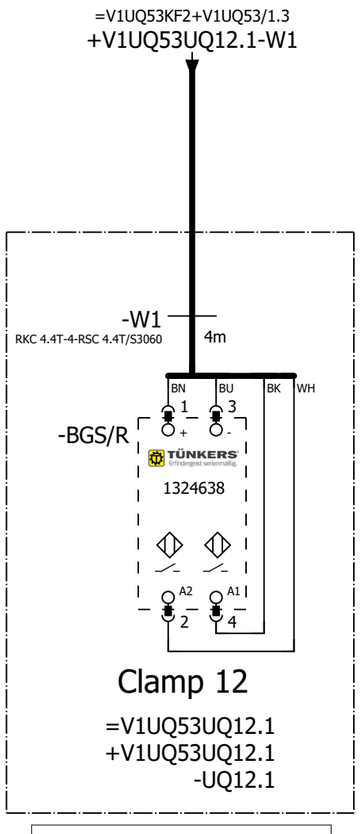

=V1UQ53
-UQ12.1-BGS/R
Clamp 12

=V1UQ53UQ11+.UQ53UQ11/1

=V1UQ53UQ13+.UQ53UQ13/1

			Date	1/11/2023	Volvo Trucks North America		Valiant TMS	FESTO DQ CONNECTION QN12	Drawing name: =2V10&EFS-EL	= V1UQ53UQ12	
			Ed.	MKLEPADLO						+ V1UQ53UQ12	
			Appr		P6700 Bodyside RH - Robot Cell 2V10				Document type: EFS	Project nr: 22-16150	Page 1
Modification	Date	Name	Original		Replacement of	Replaced by	Scale 1:1				1579

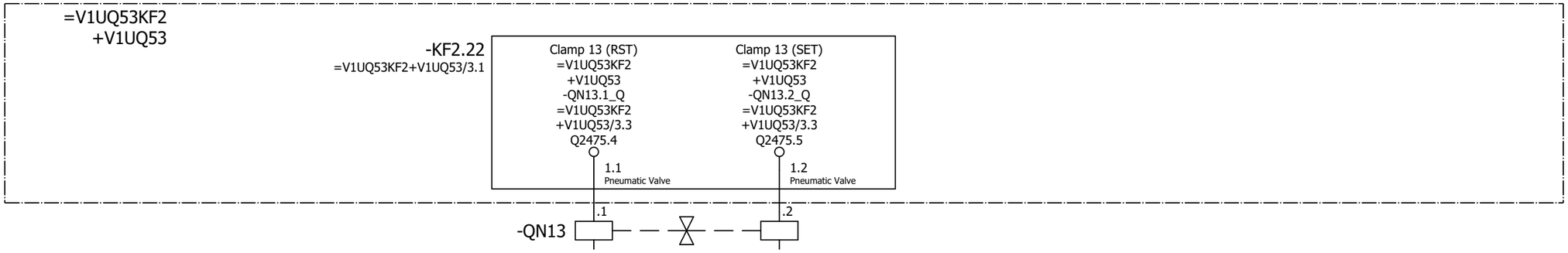

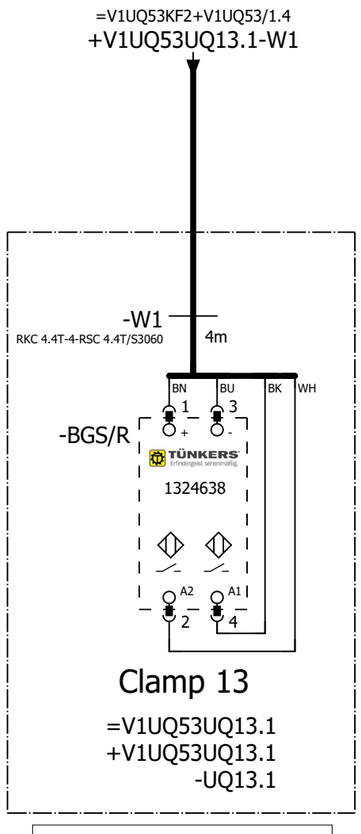

=V1UQ53
-UQ13.1-BGS/R
Clamp 13

=V1UQ53UQ12+.UQ53UQ12/1

=V1UQ53UQ14+.UQ53UQ14/1

			Date	1/11/2023	Volvo Trucks North America		Valiant TMS	FESTO DQ CONNECTION QN13	Drawing name: =2V10&EFS-EL	= V1UQ53UQ13	
			Ed.	MKLEPADLO						+ V1UQ53UQ13	
			Appr		P6700 Bodyside RH - Robot Cell 2V10				Document type: EFS	Project nr: 22-16150	Page 1
Modification	Date	Name	Original		Replacement of	Replaced by	Scale 1:1				1579

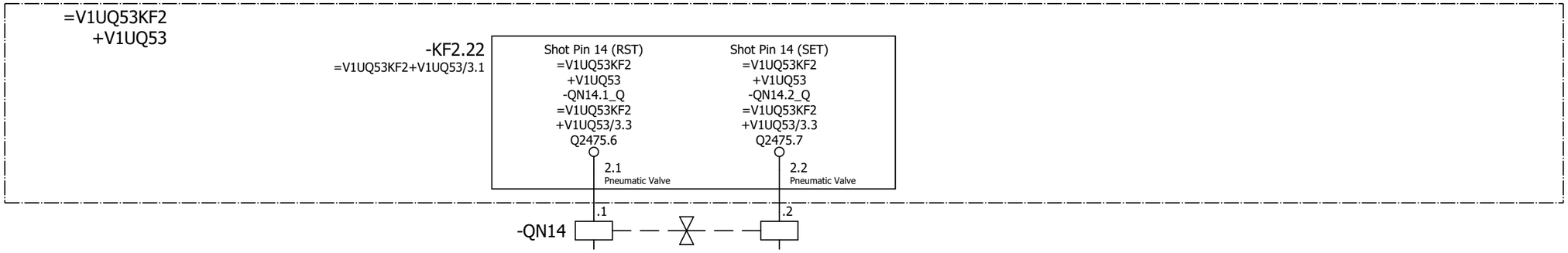

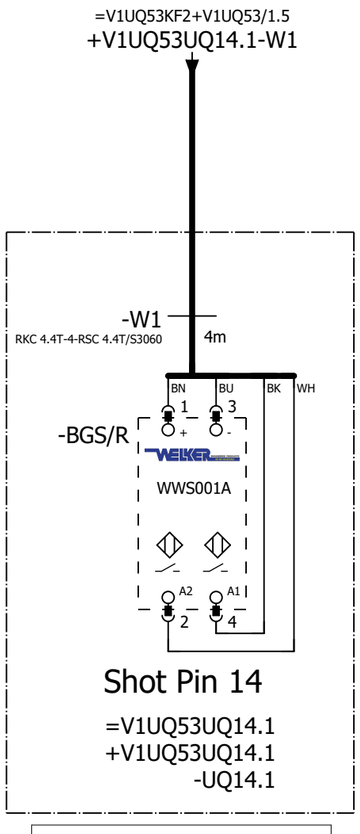

=V1UQ53
-UQ14.1-BGS/R
Shot Pin 14

=V1UQ53UQ13+.UQ53UQ13/1

=V1UQ53UQ15+.UQ53UQ15/1

			Date	1/11/2023	Volvo Trucks North America		Valiant TMS	FESTO DQ CONNECTION QN14	Drawing name: =2V10&EFS-EL	= V1UQ53UQ14	
			Ed.	MKLEPADLO						+ V1UQ53UQ14	
			Appr		P6700 Bodyside RH - Robot Cell 2V10				Document type: EFS	Project nr: 22-16150	Page 1
Modification	Date	Name	Original		Replacement of	Replaced by	Scale 1:1				1579

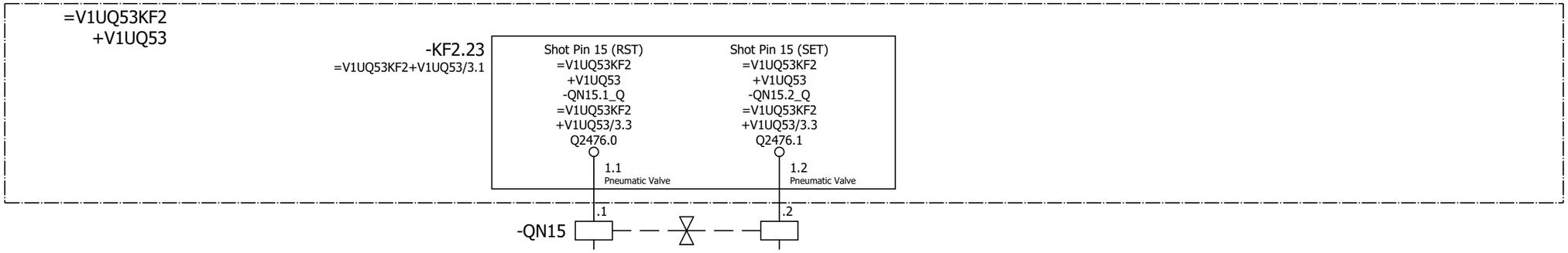

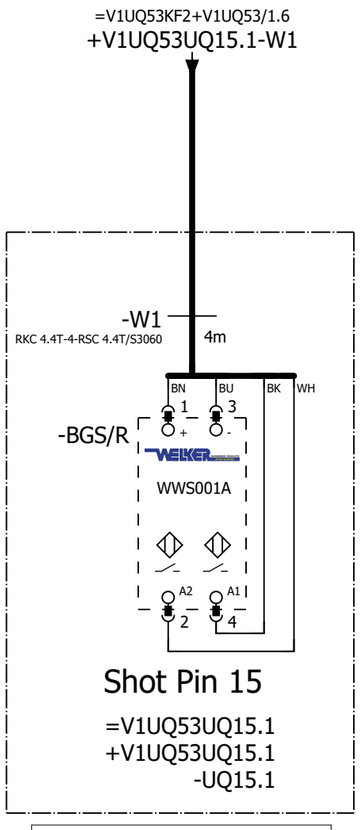

=V1UQ53
-UQ15.1-BGS/R
Shot Pin 15

=V1UQ53UQ14+.UQ53UQ14/1

=V1UQ53UQ16+.UQ53UQ16/1

			Date	1/11/2023	Volvo Trucks North America		Valiant TMS	FESTO DQ CONNECTION QN15	Drawing name: =2V10&EFS-EL	= V1UQ53UQ15	
			Ed.	MKLEPADLO						+ V1UQ53UQ15	
			Appr		P6700 Bodyside RH - Robot Cell 2V10				Document type: EFS	Project nr: 22-16150	Page 1
Modification	Date	Name	Original		Replacement of	Replaced by	Scale 1:1				1579

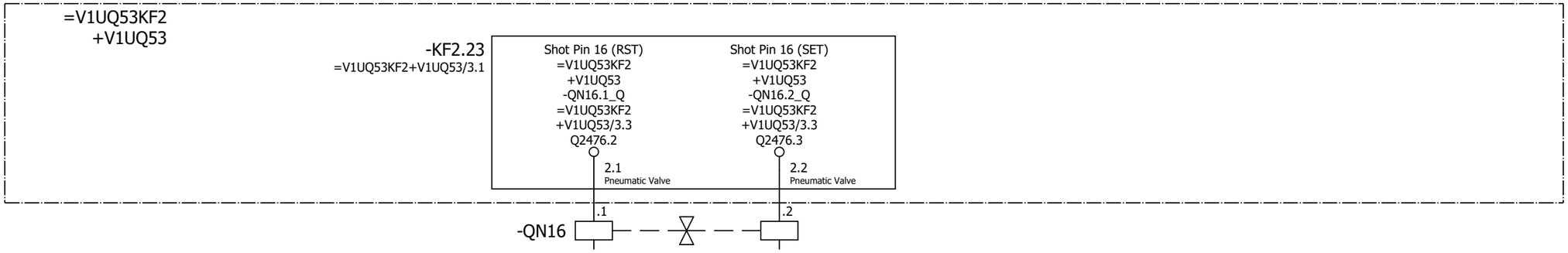

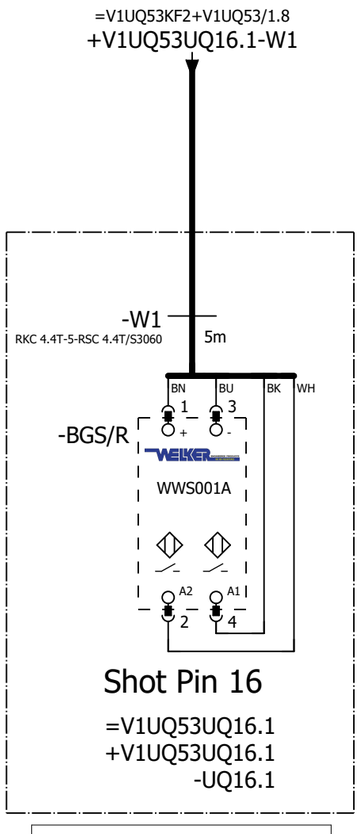

=V1UQ53
-UQ16.1-BGS/R
Shot Pin 16

=V1UQ53UQ15+.UQ53UQ15/1

=V1UQ53UQ17+.UQ53UQ17/1

			Date	1/11/2023	Volvo Trucks North America		Valiant TMS	FESTO DQ CONNECTION QN16	Drawing name: =2V10&EFS-EL	= V1UQ53UQ16	
			Ed.	MKLEPADLO						+ V1UQ53UQ16	
			Appr		P6700 Bodyside RH - Robot Cell 2V10				Document type: EFS	Project nr: 22-16150	Page 1
Modification	Date	Name	Original		Replacement of	Replaced by	Scale 1:1				1579

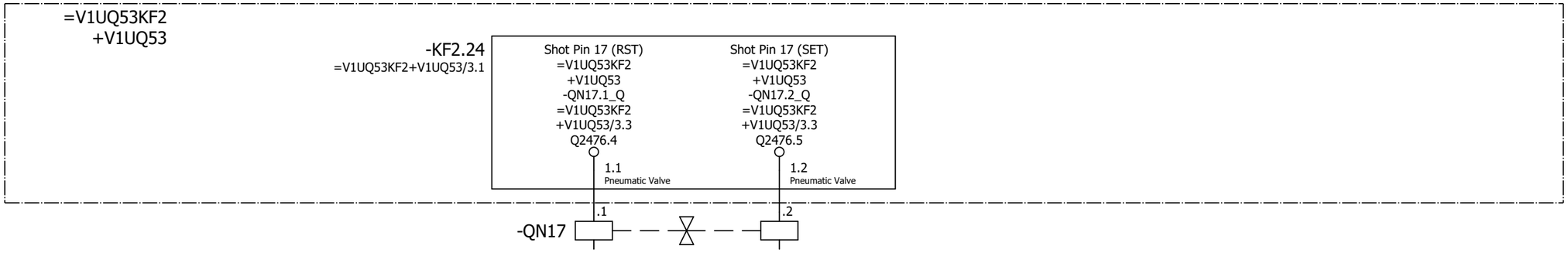

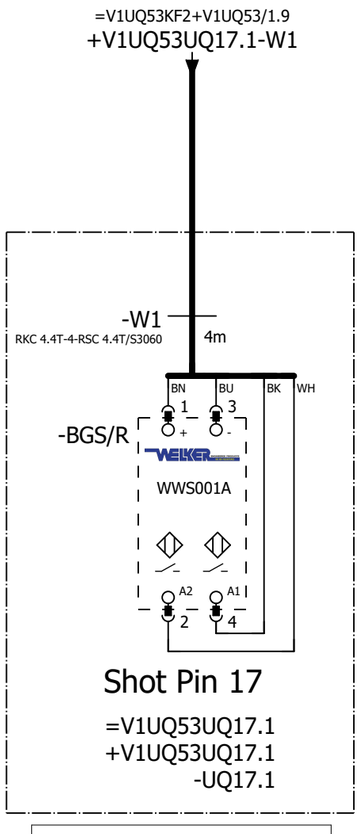

=V1UQ53
-UQ17.1-BGS/R
Shot Pin 17

=V1UQ53UQ16+.UQ53UQ16/1

=V1UQ53WC4+V1UQ53/1

			Date	1/11/2023	Volvo Trucks North America		Valiant TMS	FESTO DQ CONNECTION QN17	Drawing name: =2V10&EFS-EL	= V1UQ53UQ17	
			Ed.	MKLEPADLO						+ V1UQ53UQ17	
			Appr		P6700 Bodyside RH - Robot Cell 2V10				Document type: EFS	Project nr: 22-16150	Page 1
Modification	Date	Name	Original		Replacement of	Replaced by	Scale 1:1				1579

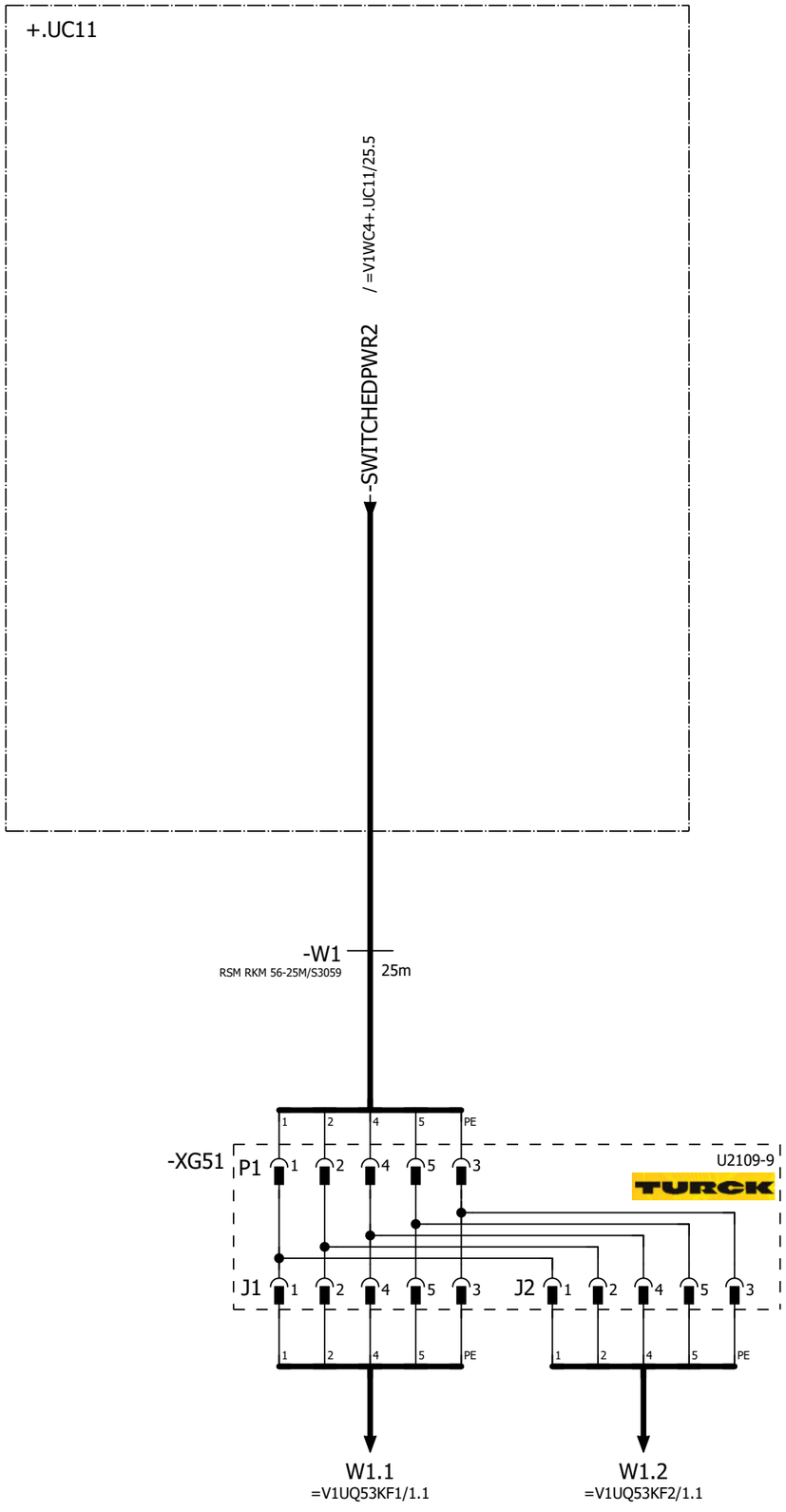

=V1UQ53UQ17+.UQ53UQ17/1

=V1UQ54BG0+.UQ54/1

			Date	1/11/2023	Volvo Trucks North America	Valiant TMS	24VDC	Drawing name: =2V10&EFS-EL	= V1UQ53WC4	
			Ed.	MKLEPADLO					+ V1UQ53	
			Appr		P6700 Bodyside RH - Robot Cell 2V10			Document type: EFS	Project nr: 22-16150	Page 1 / 1579
Modification	Date	Name	Original		Replacement of	Replaced by	Scale 1:1			

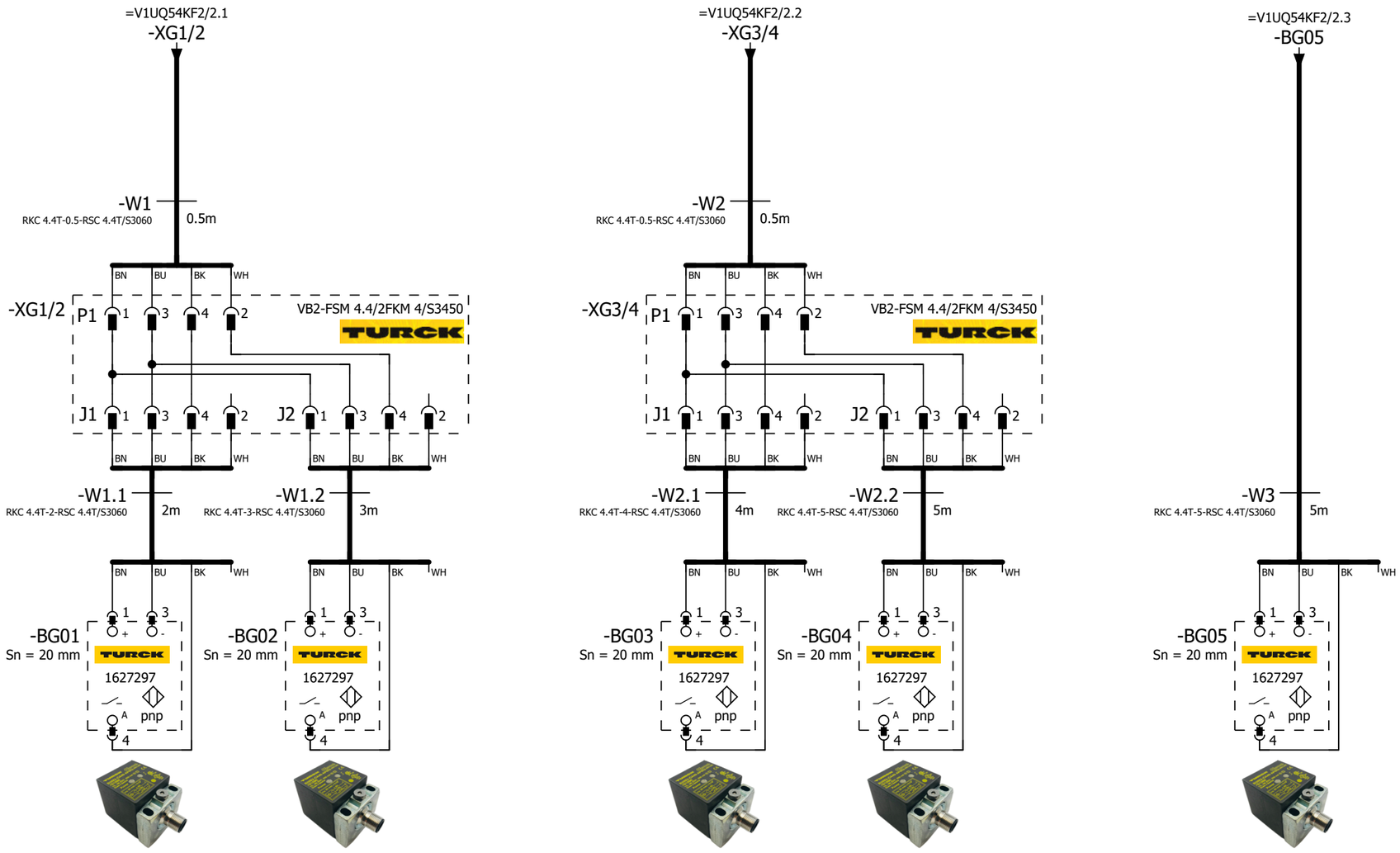

=V1UQ54 -BG01 Common Part Present	=V1UQ54 -BG02 Day Cab Part Present	=V1UQ54 -BG03 Sleeper L230 Part Present	=V1UQ54 -BG04 Sleeper L290 Part Present	=V1UQ54 -BG05 Sleeper L320 Part Present

=V1UQ53WC4+.UQ53/1

=V1UQ54KF1/1

			Date	1/11/2023	Volvo Trucks North America	Valiant TMS	SENSORS	Drawing name: =2V10&EFS-EL	= V1UQ54BG0
			Ed.	MKLEPADLO					+ V1UQ54
			Appr		P6700 Bodyside RH - Robot Cell 2V10			Document type: EFS / Project nr: 22-16150	Page 1 / 1579
Modification	Date	Name	Original		Replacement of / Replaced by	Scale 1:1			

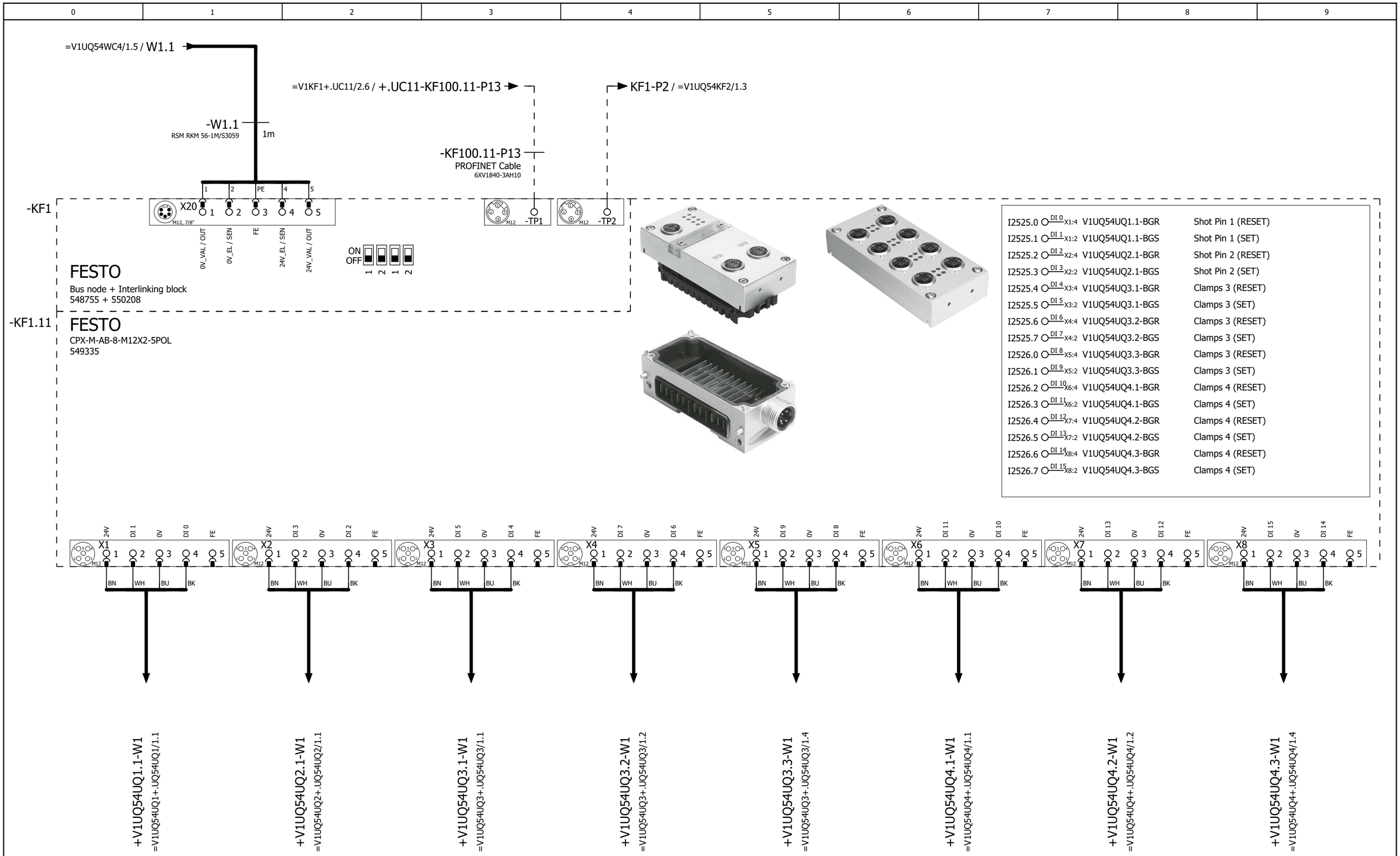

=V1UQ54BG0/1

2

			Date	1/11/2023	Volvo Trucks North America	Valiant TMS	CONNECTING MOD. FOR VTSA MANIFOLD	Drawing name: =2V10&EFS-EL		= V1UQ54KF1	
			Ed.	MKLEPADLO						+ V1UQ54	
			Appr		P6700 Bodyside RH - Robot Cell 2V10			Document type: EFS	Project nr: 22-16150		Page 1
Modification	Date	Name	Original		Replacement of	Replaced by	Scale 1:1				1579

I2527.0	DI 0 X1:4	V1UQ54UQ5.1-BGR	Clamps 5 (RESET)
I2527.1	DI 1 X1:2	V1UQ54UQ5.1-BGS	Clamps 5 (SET)
I2527.2	DI 2 X2:4	V1UQ54UQ5.2-BGR	Clamps 5 (RESET)
I2527.3	DI 3 X2:2	V1UQ54UQ5.2-BGS	Clamps 5 (SET)
I2527.4	DI 4 X3:4	V1UQ54UQ5.3-BGR	Clamps 5 (RESET)
I2527.5	DI 5 X3:2	V1UQ54UQ5.3-BGS	Clamps 5 (SET)
I2527.6	DI 6 X4:4	V1UQ54UQ5.4-BGR	Clamps 5 (RESET)
I2527.7	DI 7 X4:2	V1UQ54UQ5.4-BGS	Clamps 5 (SET)
I2528.0	DI 8 X5:4	V1UQ54UQ6.1-BGR	Clamps 6 (RESET)
I2528.1	DI 9 X5:2	V1UQ54UQ6.1-BGS	Clamps 6 (SET)
I2528.2	DI 10 X6:4	V1UQ54UQ6.2-BGR	Clamps 6 (RESET)
I2528.3	DI 11 X6:2	V1UQ54UQ6.2-BGS	Clamps 6 (SET)
I2528.4	DI 12 X7:4	V1UQ54UQ7.1-BGR	Clamp 7 (RESET)
I2528.5	DI 13 X7:2	V1UQ54UQ7.1-BGS	Clamp 7 (SET)
I2528.6	DI 14 X8:4	V1UQ54UQ8.1-BGR	Clamps 8 (RESET)
I2528.7	DI 15 X8:2	V1UQ54UQ8.1-BGS	Clamps 8 (SET)

-KF1.12

FESTO
CPX-M-AB-8-M12X2-5POL
549335

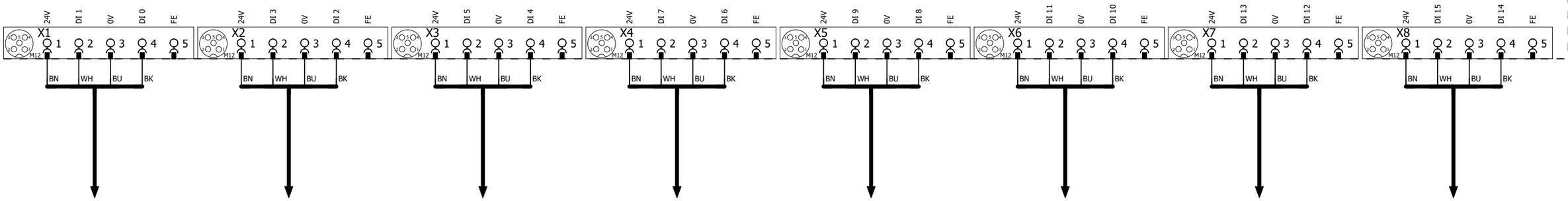

+V1UQ54UQ5.1-W1
=V1UQ54UQ5+.UQ54UQ5/1.1

+V1UQ54UQ5.2-W1
=V1UQ54UQ5+.UQ54UQ5/1.2

+V1UQ54UQ5.3-W1
=V1UQ54UQ5+.UQ54UQ5/1.4

+V1UQ54UQ5.4-W1
=V1UQ54UQ5+.UQ54UQ5/1.5

+V1UQ54UQ6.1-W1
=V1UQ54UQ6+.UQ54UQ6/1.1

+V1UQ54UQ6.2-W1
=V1UQ54UQ6+.UQ54UQ6/1.2

+V1UQ54UQ7.1-W1
=V1UQ54UQ7+.UQ54UQ7/1.1

+V1UQ54UQ8.1-W1
=V1UQ54UQ8+.UQ54UQ8/1.1

I2529.0	DI 0 X1:4	V1UQ54UQ8.2-BGR	Clamps 8 (RESET)
I2529.1	DI 1 X1:2	V1UQ54UQ8.2-BGS	Clamps 8 (SET)
I2529.2	DI 2 X2:4	V1UQ54UQ9.1-BGR	Clamp 9 (RESET)
I2529.3	DI 3 X2:2	V1UQ54UQ9.1-BGS	Clamp 9 (SET)
I2529.4	DI 4 X3:4	V1UQ54UQ10.1-BGR	Clamps 10 (RESET)
I2529.5	DI 5 X3:2	V1UQ54UQ10.1-BGS	Clamps 10 (SET)
I2529.6	DI 6 X4:4	V1UQ54UQ10.2-BGR	Clamps 10 (RESET)
I2529.7	DI 7 X4:2	V1UQ54UQ10.2-BGS	Clamps 10 (SET)
I2530.0	DI 8 X5:4	I2530.0	Spare
I2530.1	DI 9 X5:2	I2530.1	Spare
I2530.2	DI 10 X6:4	I2530.2	Spare
I2530.3	DI 11 X6:2	I2530.3	Spare
I2530.4	DI 12 X7:4	I2530.4	Spare
I2530.5	DI 13 X7:2	I2530.5	Spare
I2530.6	DI 14 X8:4	I2530.6	Spare
I2530.7	DI 15 X8:2	I2530.7	Spare

-KF1.13

FESTO
CPX-M-AB-8-M12X2-5POL
549335

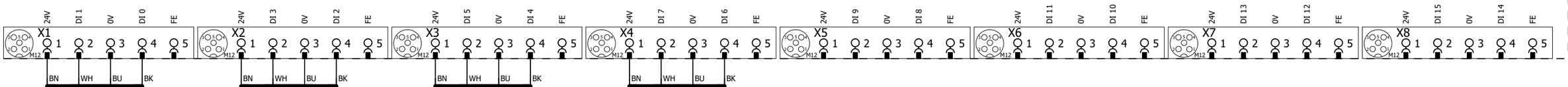

+V1UQ54UQ8.2-W1
=V1UQ54UQ8+.UQ54UQ8/1.2

+V1UQ54UQ9.1-W1
=V1UQ54UQ9+.UQ54UQ9/1.1

+V1UQ54UQ10.1-W1
=V1UQ54UQ10+.UQ54UQ10/1.1

+V1UQ54UQ10.2-W1
=V1UQ54UQ10+.UQ54UQ10/1.2

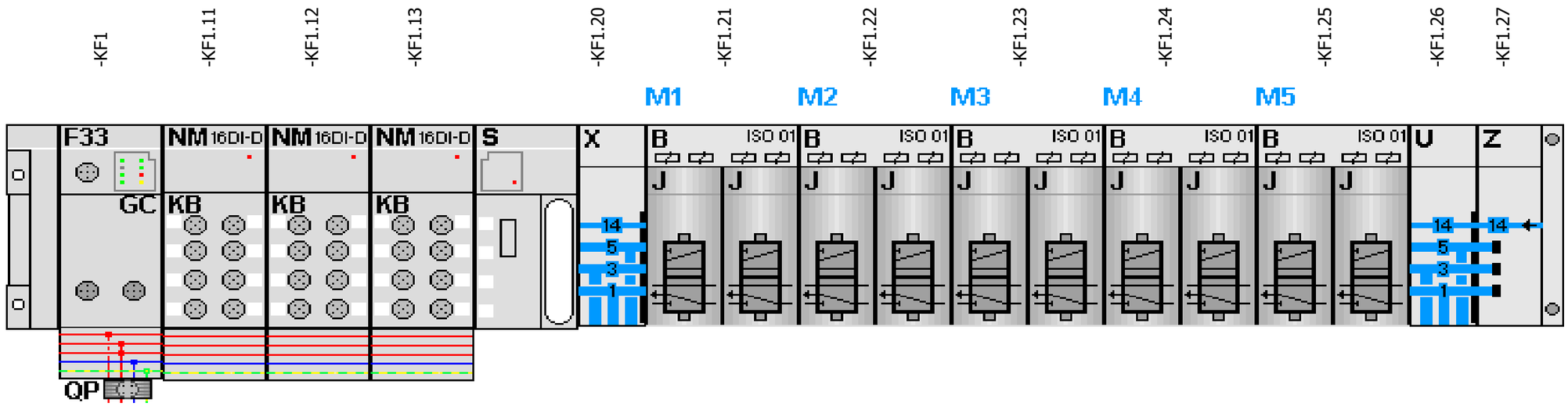

-KF1.21

=V1UQ54UQ1+.UQ54UQ1/1.3
=V1UQ54UQ2+.UQ54UQ2/1.3

FESTO

=V1UQ54UQ1+.UQ54UQ1/1.4	Q2525.0 DO 0 1.1	-QN1.1_Q	Shot Pin 1 (RST)
=V1UQ54UQ1+.UQ54UQ1/1.4	Q2525.1 DO 1 1.2	-QN1.2_Q	Shot Pin 1 (SET)
=V1UQ54UQ2+.UQ54UQ2/1.4	Q2525.2 DO 2 2.1	-QN2.1_Q	Shot Pin 2 (RST)
=V1UQ54UQ2+.UQ54UQ2/1.4	Q2525.3 DO 3 2.2	-QN2.2_Q	Shot Pin 2 (SET)

-KF1.22

=V1UQ54UQ3+.UQ54UQ3/1.3
=V1UQ54UQ4+.UQ54UQ4/1.3

FESTO

=V1UQ54UQ3+.UQ54UQ3/1.4	Q2525.4 DO 0 1.1	-QN3.1_Q	Clamps 3 (RST)
=V1UQ54UQ3+.UQ54UQ3/1.4	Q2525.5 DO 1 1.2	-QN3.2_Q	Clamps 3 (SET)
=V1UQ54UQ4+.UQ54UQ4/1.4	Q2525.6 DO 2 2.1	-QN4.1_Q	Clamps 4 (RST)
=V1UQ54UQ4+.UQ54UQ4/1.4	Q2525.7 DO 3 2.2	-QN4.2_Q	Clamps 4 (SET)

-KF1.23

=V1UQ54UQ5+.UQ54UQ5/1.3
=V1UQ54UQ6+.UQ54UQ6/1.3

FESTO

=V1UQ54UQ5+.UQ54UQ5/1.4	Q2526.0 DO 0 1.1	-QN5.1_Q	Clamps 5 (RST)
=V1UQ54UQ5+.UQ54UQ5/1.4	Q2526.1 DO 1 1.2	-QN5.2_Q	Clamps 5 (SET)
=V1UQ54UQ6+.UQ54UQ6/1.4	Q2526.2 DO 2 2.1	-QN6.1_Q	Clamps 6 (RST)
=V1UQ54UQ6+.UQ54UQ6/1.4	Q2526.3 DO 3 2.2	-QN6.2_Q	Clamps 6 (SET)

-KF1.24

=V1UQ54UQ7+.UQ54UQ7/1.3
=V1UQ54UQ8+.UQ54UQ8/1.3

FESTO

=V1UQ54UQ7+.UQ54UQ7/1.4	Q2526.4 DO 0 1.1	-QN7.1_Q	Clamp 7 (RST)
=V1UQ54UQ7+.UQ54UQ7/1.4	Q2526.5 DO 1 1.2	-QN7.2_Q	Clamp 7 (SET)
=V1UQ54UQ8+.UQ54UQ8/1.4	Q2526.6 DO 2 2.1	-QN8.1_Q	Clamps 8 (RST)
=V1UQ54UQ8+.UQ54UQ8/1.4	Q2526.7 DO 3 2.2	-QN8.2_Q	Clamps 8 (SET)

-KF1.25

=V1UQ54UQ9+.UQ54UQ9/1.3
=V1UQ54UQ10+.UQ54UQ10/1.3

FESTO

=V1UQ54UQ9+.UQ54UQ9/1.4	Q2527.0 DO 0 1.1	-QN9.1_Q	Clamp 9 (RST)
=V1UQ54UQ9+.UQ54UQ9/1.4	Q2527.1 DO 1 1.2	-QN9.2_Q	Clamp 9 (SET)
=V1UQ54UQ10+.UQ54UQ10/1.4	Q2527.2 DO 2 2.1	-QN10.1_Q	Clamps 10 (RST)
=V1UQ54UQ10+.UQ54UQ10/1.4	Q2527.3 DO 3 2.2	-QN10.2_Q	Clamps 10 (SET)

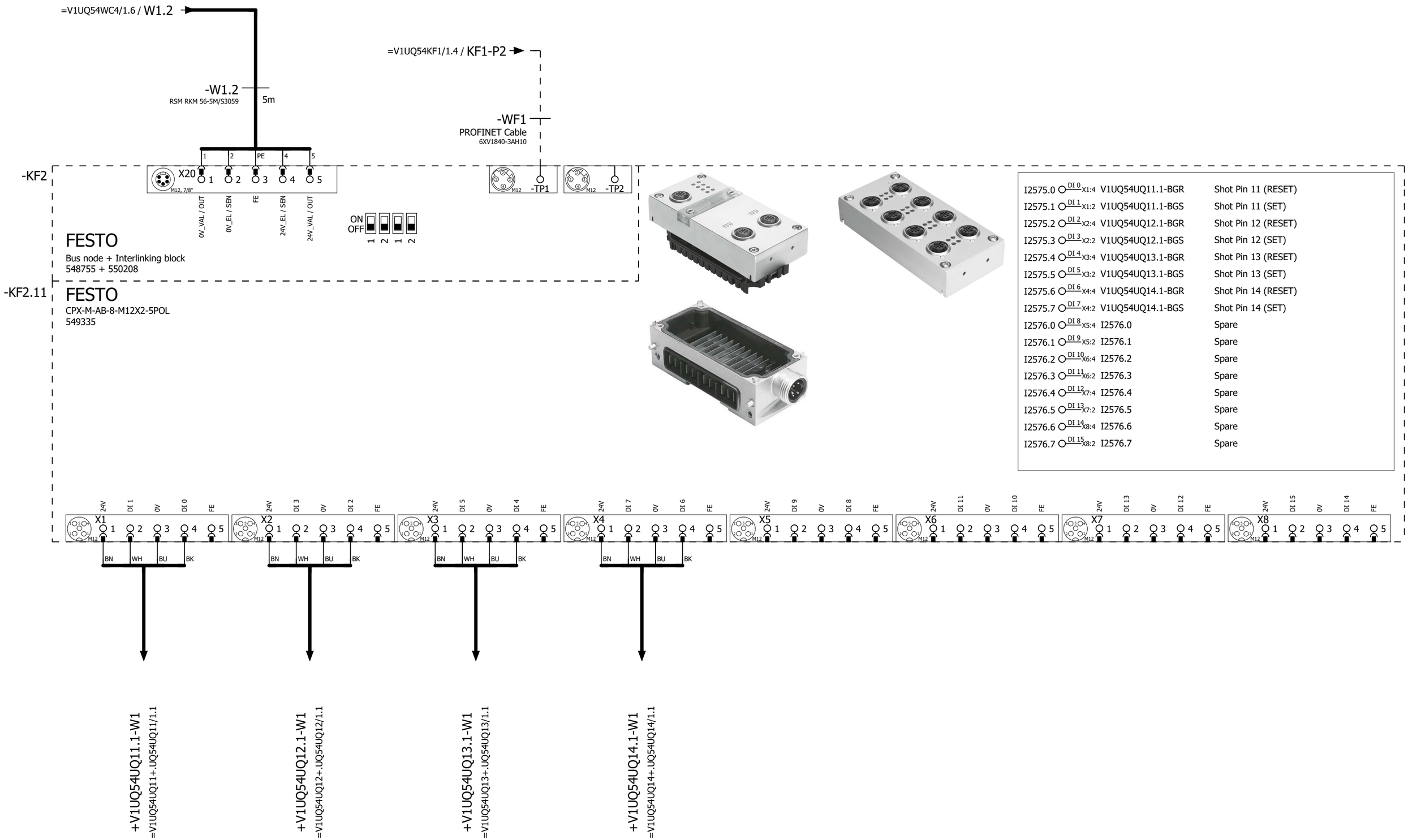

=V1UQ54KF1/4

2

			Date	1/11/2023	Volvo Trucks North America	Valiant TMS	CONNECTING MOD. FOR VTSA MANIFOLD	Drawing name: =2V10&EFS-EL		= V1UQ54KF2	
			Ed.	MKLEPADLO						+ V1UQ54	
			Appr		P6700 Bodyside RH - Robot Cell 2V10			Document type: EFS	Project nr: 22-16150		Page 1
Modification	Date	Name	Original		Replacement of	Replaced by	Scale 1:1				1579

I2577.0	DI 0 X1:4	V1UQ54-BG01	Sensor Common Part Present
I2577.1	DI 1 X1:2	V1UQ54-BG02	Sensor Day Cab Part Present
I2577.2	DI 2 X2:4	V1UQ54-BG03	Sensor Sleeper L230 Part Present
I2577.3	DI 3 X2:2	V1UQ54-BG04	Sensor Sleeper L290 Part Present
I2577.4	DI 4 X3:4	V1UQ54-BG05	Sensor Sleeper L320 Part Present
I2577.5	DI 5 X3:2	I2577.5	Spare
I2577.6	DI 6 X4:4	I2577.6	Spare
I2577.7	DI 7 X4:2	I2577.7	Spare
I2578.0	DI 8 X5:4	I2578.0	Spare
I2578.1	DI 9 X5:2	I2578.1	Spare
I2578.2	DI 10 X6:4	I2578.2	Spare
I2578.3	DI 11 X6:2	I2578.3	Spare
I2578.4	DI 12 X7:4	I2578.4	Spare
I2578.5	DI 13 X7:2	I2578.5	Spare
I2578.6	DI 14 X8:4	I2578.6	Spare
I2578.7	DI 15 X8:2	I2578.7	Spare

-KF2.12

FESTO
CPX-M-AB-8-M12X2-5POL
549335

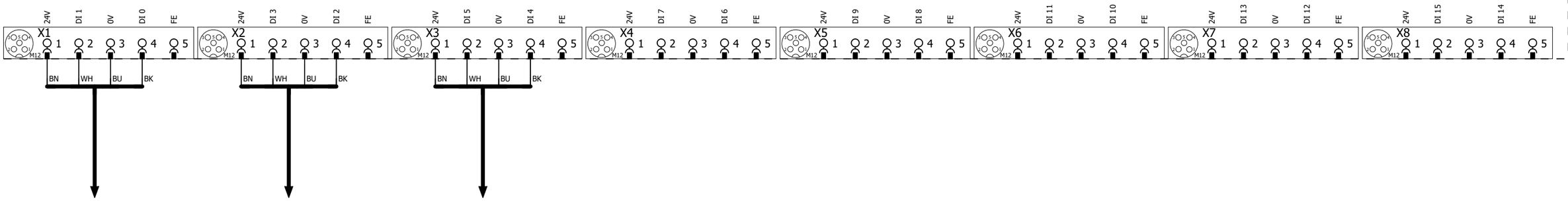

-XG1/2
=V1UQ54BG0/1.1

-XG3/4
=V1UQ54BG0/1.4

-BG05
=V1UQ54BG0/1.6

1 3

			Date	1/11/2023	Volvo Trucks North America	Valiant TMS	I/O MOD. DI16 (8 x M12) FOR VTSA-F	Drawing name: =2V10&EFS-EL		= V1UQ54KF2	
			Ed.	MKLEPADLO						+ V1UQ54	
			Appr		P6700 Bodyside RH - Robot Cell 2V10			Document type: EFS	Project nr: 22-16150		Page 2
Modification	Date	Name	Original		Replacement of / Replaced by	Scale 1:1					1579

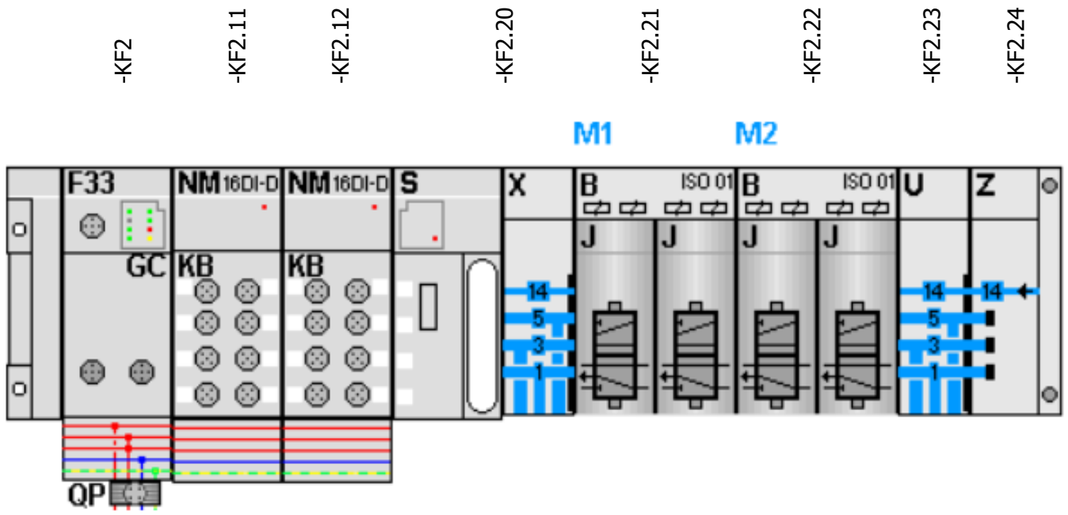

-KF2.21
=V1UQ54UQ11+.UQ54UQ11/1.3
=V1UQ54UQ12+.UQ54UQ12/1.3

FESTO

=V1UQ54UQ11+.UQ54UQ11/1.4	Q2575.0 DO 0 1.1	-QN11.1_Q	Shot Pin 11 (RST)
=V1UQ54UQ11+.UQ54UQ11/1.4	Q2575.1 DO 1 1.2	-QN11.2_Q	Shot Pin 11 (SET)
=V1UQ54UQ12+.UQ54UQ12/1.4	Q2575.2 DO 2 2.1	-QN12.1_Q	Shot Pin 12 (RST)
=V1UQ54UQ12+.UQ54UQ12/1.4	Q2575.3 DO 3 2.2	-QN12.2_Q	Shot Pin 12 (SET)

-KF2.22
=V1UQ54UQ13+.UQ54UQ13/1.3
=V1UQ54UQ14+.UQ54UQ14/1.3

FESTO

=V1UQ54UQ13+.UQ54UQ13/1.4	Q2575.4 DO 0 1.1	-QN13.1_Q	Shot Pin 13 (RST)
=V1UQ54UQ13+.UQ54UQ13/1.4	Q2575.5 DO 1 1.2	-QN13.2_Q	Shot Pin 13 (SET)
=V1UQ54UQ14+.UQ54UQ14/1.4	Q2575.6 DO 2 2.1	-QN14.1_Q	Shot Pin 14 (RST)
=V1UQ54UQ14+.UQ54UQ14/1.4	Q2575.7 DO 3 2.2	-QN14.2_Q	Shot Pin 14 (SET)

			Date	1/11/2023	Volvo Trucks North America	Valiant TMS	CONNECTING MOD. FOR FESTO DQ	Drawing name: =2V10&EFS-EL		= V1UQ54KF2	
			Ed.	MKLEPADLO	P6700 Bodyside RH - Robot Cell 2V10					+ V1UQ54	
			Appr			Scale 1:1		Document type: EFS	Project nr: 22-16150		Page 3
Modification	Date	Name	Original		Replacement of	Replaced by					1579

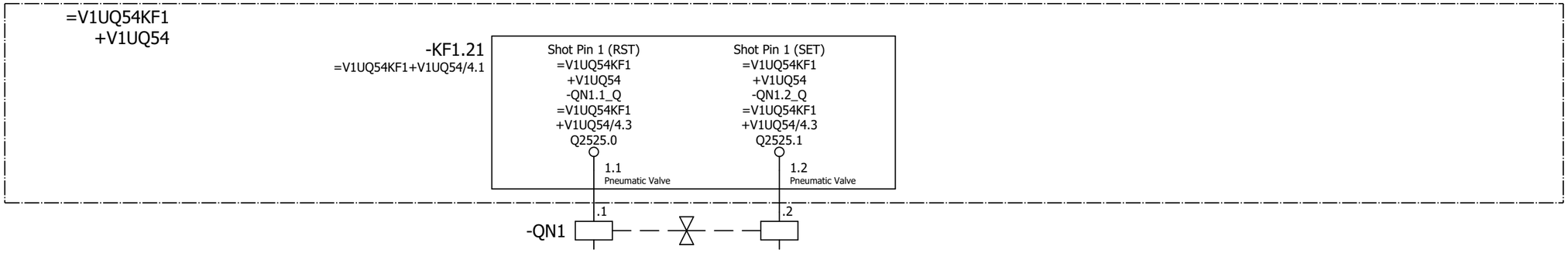

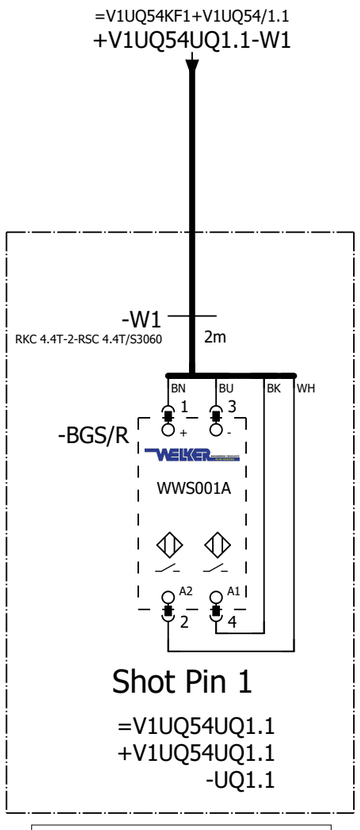

=V1UQ54
-UQ1.1-BGS/R
Shot Pin 1

=V1UQ54KF2+V1UQ54/3

=V1UQ54UQ2+.UQ54UQ2/1

			Date	1/11/2023	Volvo Trucks North America		Valiant TMS	FESTO DQ CONNECTION QN1	Drawing name: =2V10&EFS-EL	= V1UQ54UQ1	
			Ed.	MKLEPADLO						+ V1UQ54UQ1	
			Appr		P6700 Bodyside RH - Robot Cell 2V10				Document type: EFS	Project nr: 22-16150	Page 1
Modification	Date	Name	Original		Replacement of	Replaced by	Scale 1:1				1579

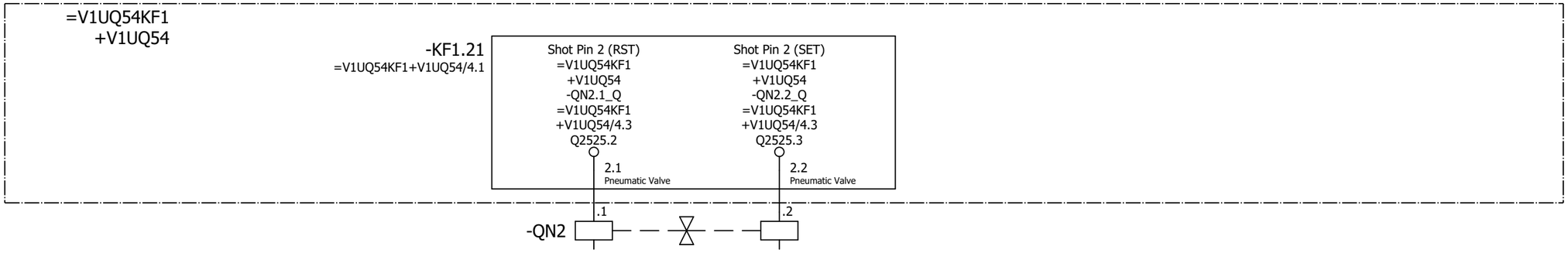

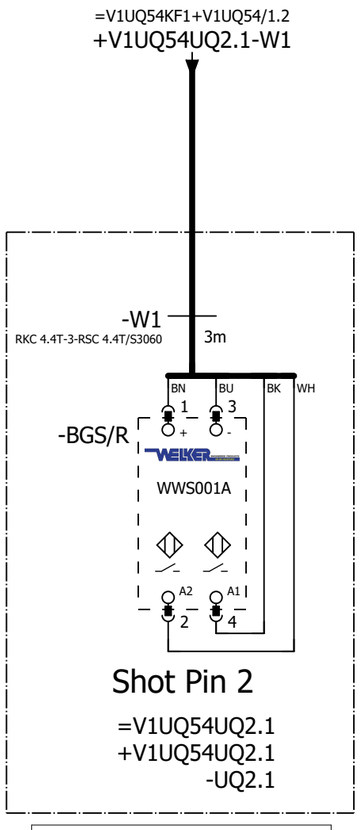

=V1UQ54
-UQ2.1-BGS/R
Shot Pin 2

=V1UQ54UQ1+.UQ54UQ1/1

=V1UQ54UQ3+.UQ54UQ3/1

			Date	1/11/2023	Volvo Trucks North America		Valiant TMS	FESTO DQ CONNECTION QN2	Drawing name: =2V10&EFS-EL	= V1UQ54UQ2	
			Ed.	MKLEPADLO						+ V1UQ54UQ2	
			Appr		P6700 Bodyside RH - Robot Cell 2V10				Document type: EFS	Project nr: 22-16150	Page 1
Modification	Date	Name	Original		Replacement of	Replaced by	Scale 1:1				1579

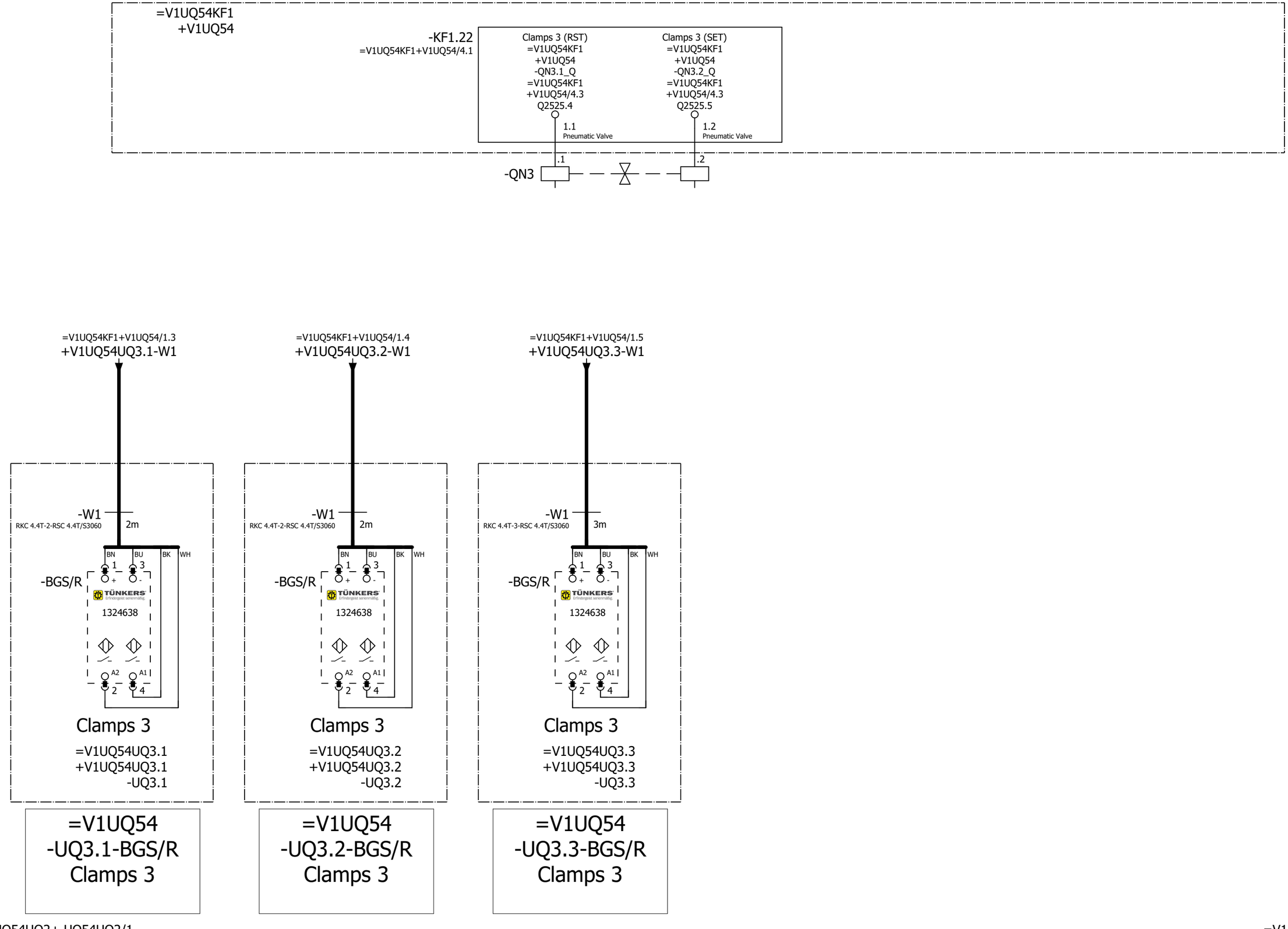

=V1UQ54UQ2+.UQ54UQ2/1

=V1UQ54UQ4+.UQ54UQ4/1

			Date	1/11/2023	Volvo Trucks North America	Valiant TMS	FESTO DQ CONNECTION QN3	Drawing name: =2V10&EFS-EL	= V1UQ54UQ3		
			Ed.	MKLEPADLO					+ V1UQ54UQ3		
			Appr		P6700 Bodyside RH - Robot Cell 2V10			Document type: EFS	Project nr: 22-16150	Page	1
Modification	Date	Name	Original		Replacement of / Replaced by	Scale 1:1					1579

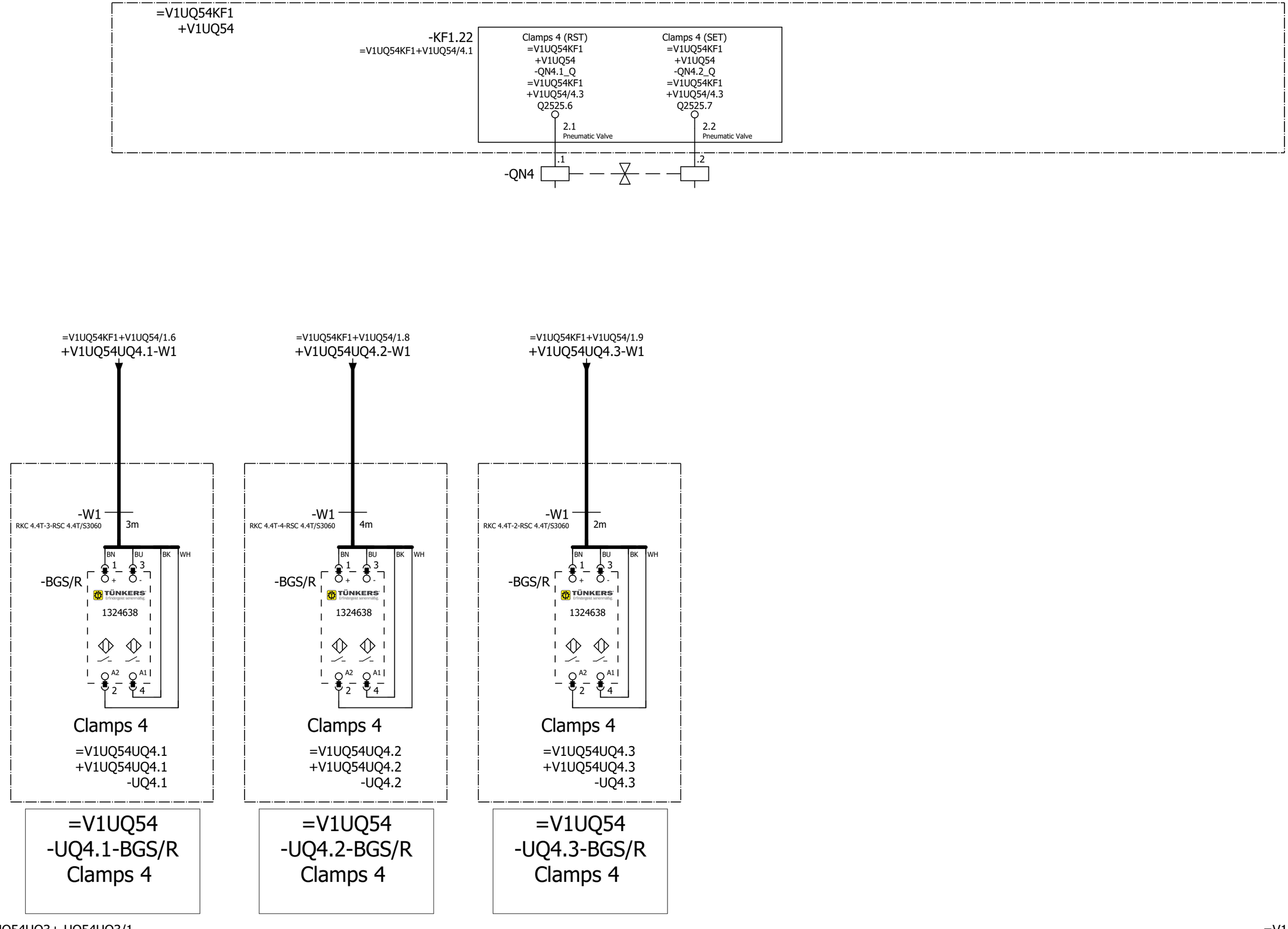

=V1UQ54UQ3+.UQ54UQ3/1

=V1UQ54UQ5+.UQ54UQ5/1

			Date	1/11/2023	Volvo Trucks North America	Valiant TMS	FESTO DQ CONNECTION QN4	Drawing name: =2V10&EFS-EL	= V1UQ54UQ4		
			Ed.	MKLEPADLO					+ V1UQ54UQ4		
			Appr		P6700 Bodyside RH - Robot Cell 2V10			Document type: EFS	Project nr: 22-16150	Page	1
Modification	Date	Name	Original		Replacement of / Replaced by	Scale 1:1					1579

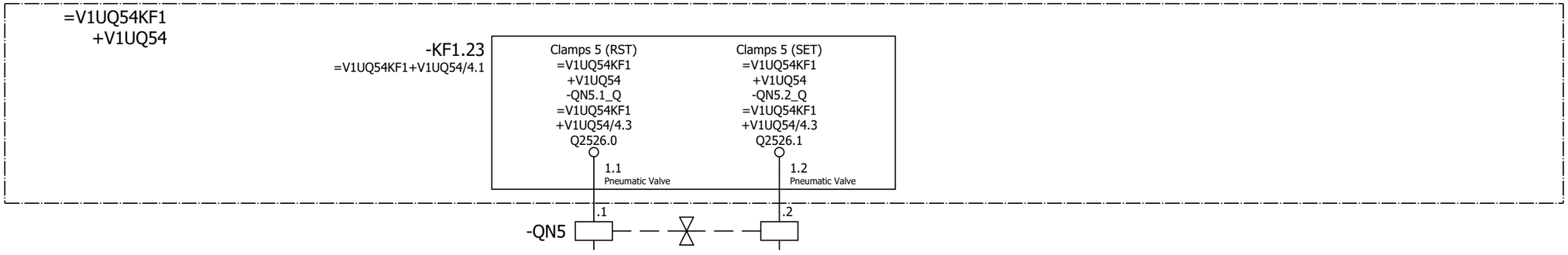

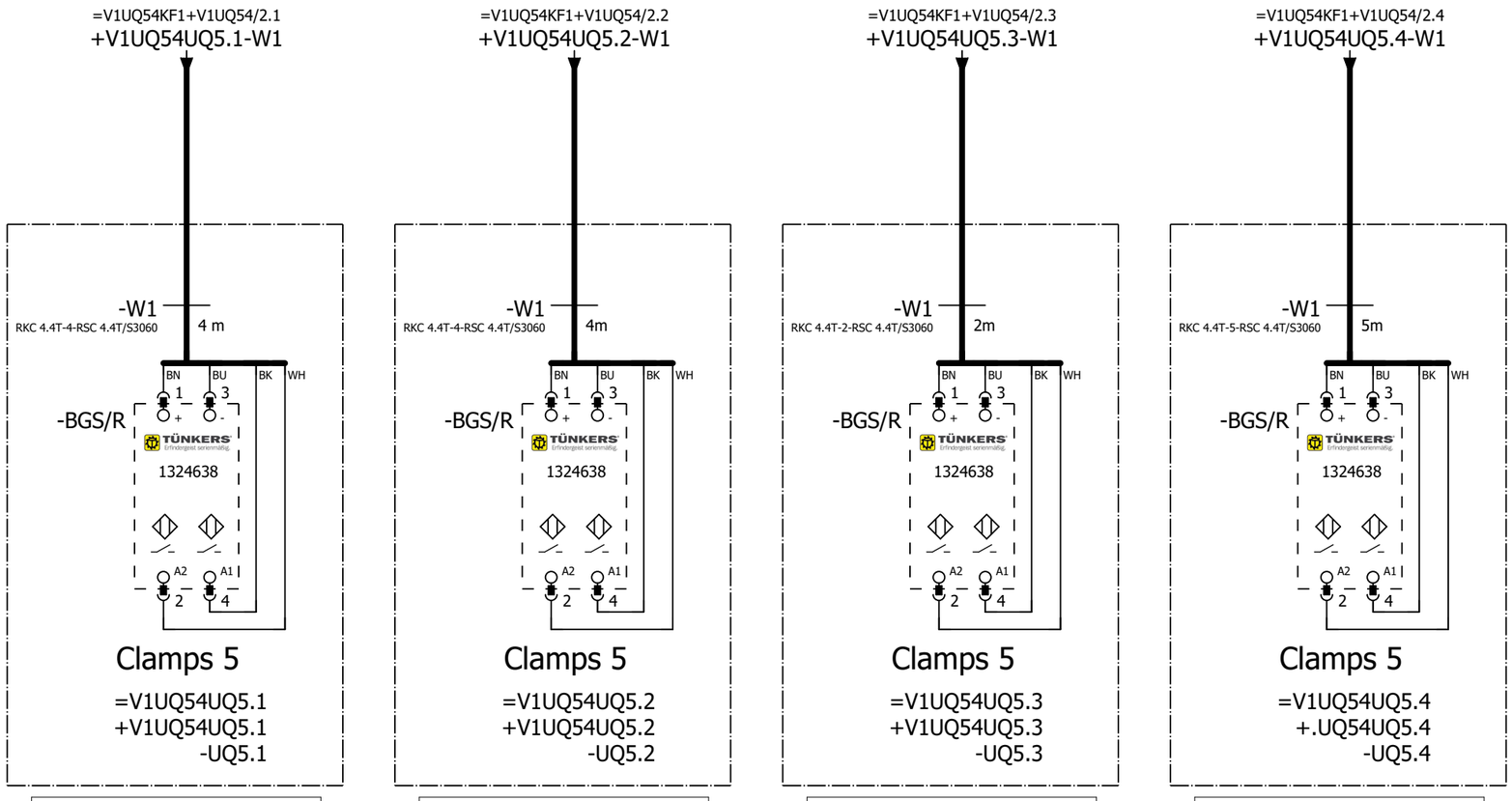

=V1UQ54
-UQ5.1-BGS/R
Clamps 5

=V1UQ54
-UQ5.2-BGS/R
Clamps 5

=V1UQ54
-UQ5.3-BGS/R
Clamps 5

=V1UQ54
-UQ5.4-BGS/R
Clamps 5

=V1UQ54UQ4+.UQ54UQ4/1

=V1UQ54UQ6+.UQ54UQ6/1

			Date	1/11/2023	Volvo Trucks North America		Valiant TMS	FESTO DQ CONNECTION QN5	Drawing name: =2V10&EFS-EL	= V1UQ54UQ5	
			Ed.	MKLEPADLO						+ V1UQ54UQ5	
			Appr		P6700 Bodyside RH - Robot Cell 2V10				Document type: EFS	Project nr: 22-16150	Page 1
Modification	Date	Name	Original		Replacement of	Replaced by	Scale 1:1				1579

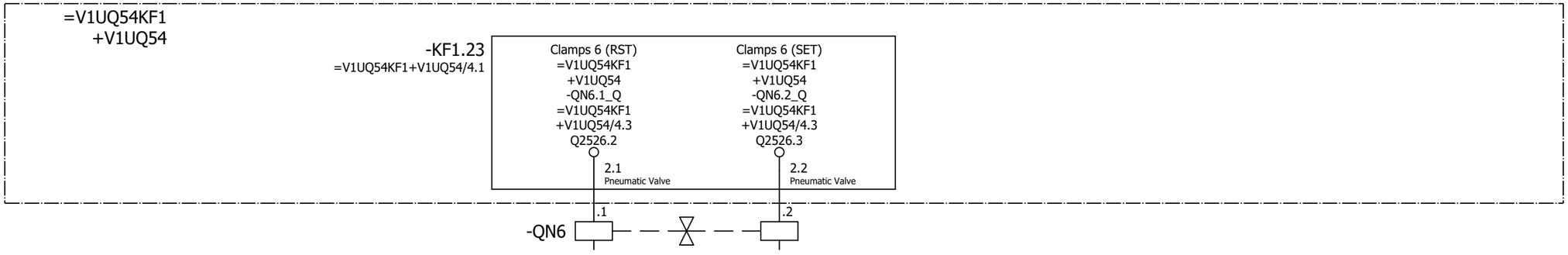

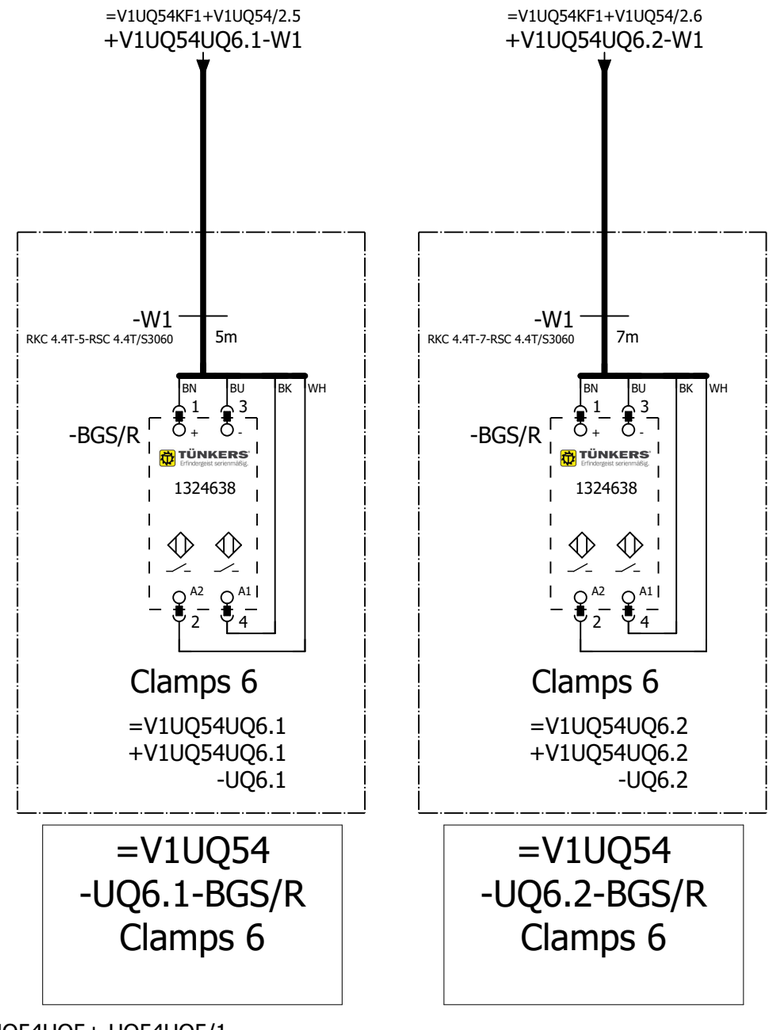

=V1UQ54UQ5+.UQ54UQ5/1

=V1UQ54UQ7+.UQ54UQ7/1

			Date	1/11/2023	Volvo Trucks North America	Valiant TMS	FESTO DQ CONNECTION QN6	Drawing name: =2V10&EFS-EL	= V1UQ54UQ6		
			Ed.	MKLEPADLO					+ V1UQ54UQ6		
			Appr		P6700 Bodyside RH - Robot Cell 2V10			Document type: EFS	Project nr: 22-16150	Page	1
Modification	Date	Name	Original		Replacement of / Replaced by	Scale 1:1					1579

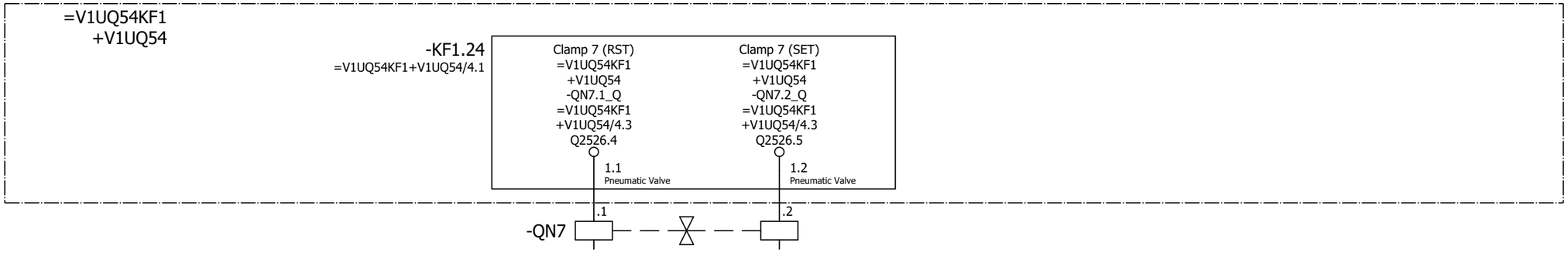

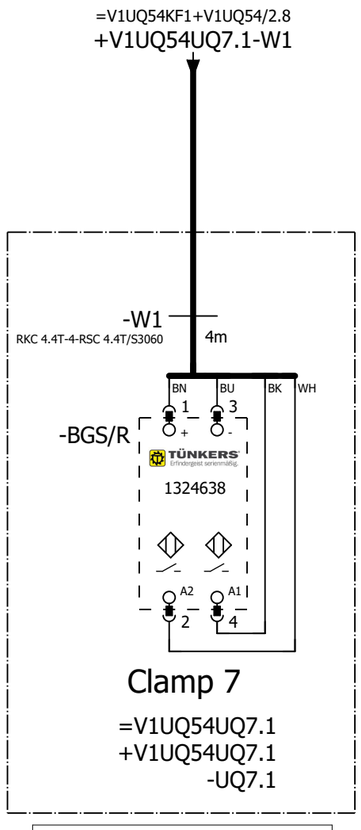

=V1UQ54
-UQ7.1-BGS/R
Clamp 7

=V1UQ54UQ6+.UQ54UQ6/1

=V1UQ54UQ8+.UQ54UQ8/1

			Date	1/11/2023	Volvo Trucks North America	Valiant TMS	FESTO DQ CONNECTION QN7	Drawing name: =2V10&EFS-EL		= V1UQ54UQ7	
			Ed.	MKLEPADLO						+ V1UQ54UQ7	
			Appr		P6700 Bodyside RH - Robot Cell 2V10			Document type: EFS	Project nr: 22-16150		Page 1
Modification	Date	Name	Original		Replacement of	Replaced by	Scale 1:1				1579

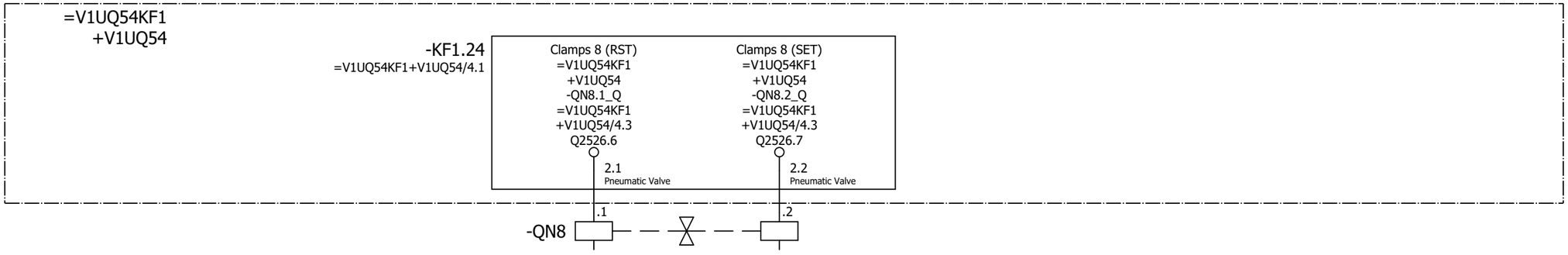

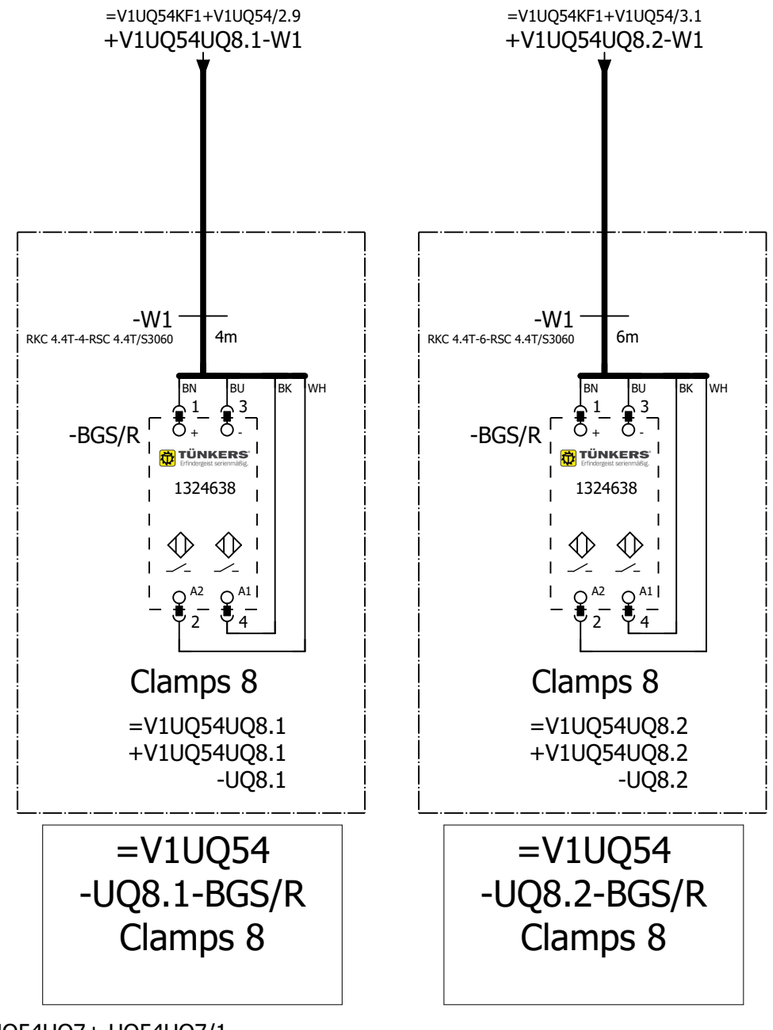

=V1UQ54
-UQ8.1-BGS/R
Clamps 8

=V1UQ54
-UQ8.2-BGS/R
Clamps 8

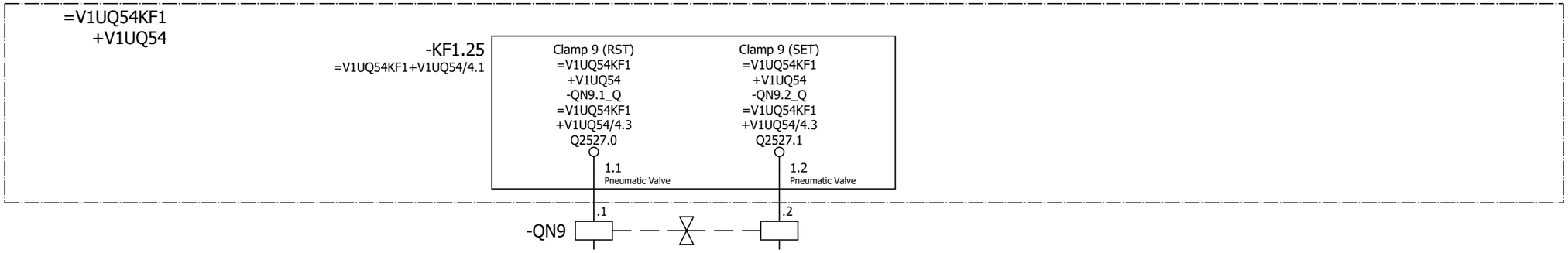

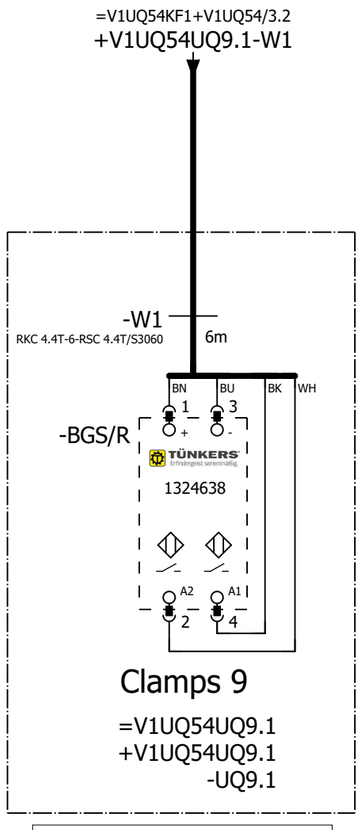

=V1UQ54
-UQ9.1-BGS/R
Clamps 9

=V1UQ54UQ8+.UQ54UQ8/1

=V1UQ54UQ10+.UQ54UQ10/1

			Date	1/11/2023	Volvo Trucks North America		Valiant TMS	FESTO DQ CONNECTION QN9	Drawing name: =2V10&EFS-EL	= V1UQ54UQ9	
			Ed.	MKLEPADLO						+ V1UQ54UQ9	
			Appr		P6700 Bodyside RH - Robot Cell 2V10				Document type: EFS	Project nr: 22-16150	Page 1
Modification	Date	Name	Original		Replacement of	Replaced by	Scale 1:1				1579

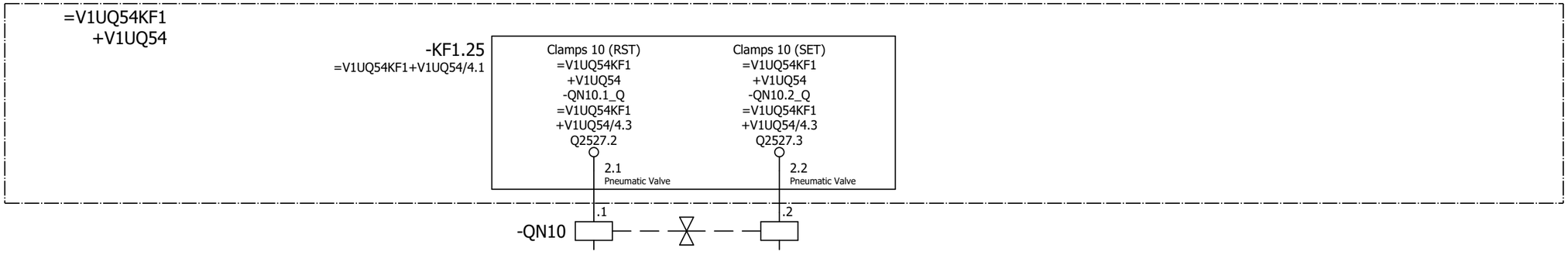

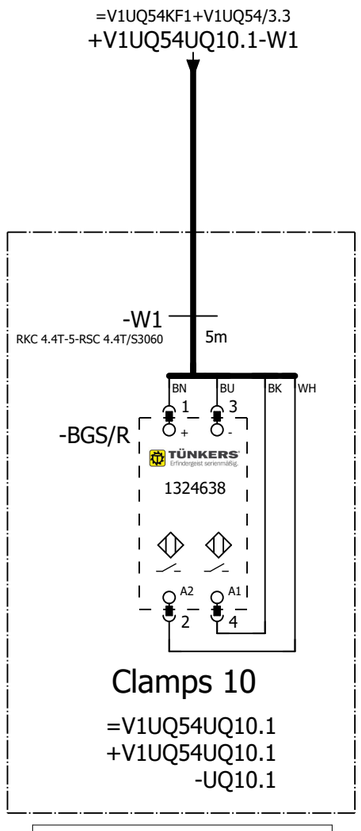

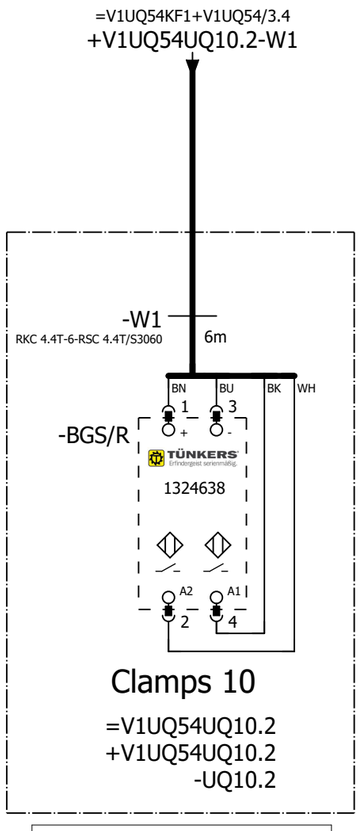

=V1UQ54
-UQ10.1-BGS/R
Clamps 10

=V1UQ54
-UQ10.2-BGS/R
Clamps 10

=V1UQ54UQ9+.UQ54UQ9/1

=V1UQ54UQ11+.UQ54UQ11/1

			Date	1/11/2023	Volvo Trucks North America	Valiant TMS	FESTO DQ CONNECTION QN10	Drawing name: =2V10&EFS-EL	= V1UQ54UQ10		
			Ed.	MKLEPADLO					+ V1UQ54UQ10		
			Appr		P6700 Bodyside RH - Robot Cell 2V10			Document type: EFS	Project nr: 22-16150	Page	1
Modification	Date	Name	Original		Replacement of / Replaced by	Scale 1:1					1579

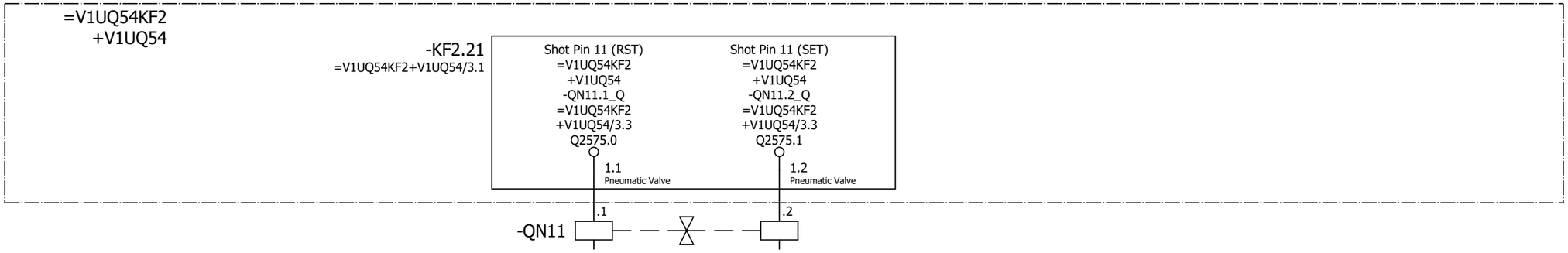

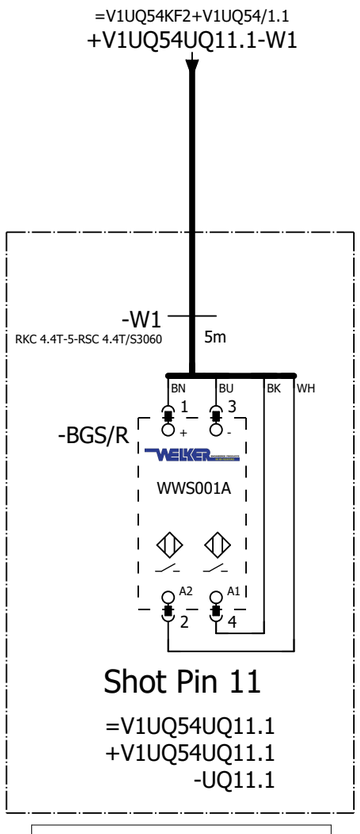

=V1UQ54
-UQ11.1-BGS/R
Shot Pin 11

=V1UQ54UQ10+.UQ54UQ10/1

=V1UQ54UQ12+.UQ54UQ12/1

			Date	1/11/2023	Volvo Trucks North America		Valiant TMS	FESTO DQ CONNECTION QN11	Drawing name: =2V10&EFS-EL	= V1UQ54UQ11	
			Ed.	MKLEPADLO						+ V1UQ54UQ11	
			Appr		P6700 Bodyside RH - Robot Cell 2V10				Document type: EFS	Project nr: 22-16150	Page 1
Modification	Date	Name	Original		Replacement of	Replaced by	Scale 1:1				1579

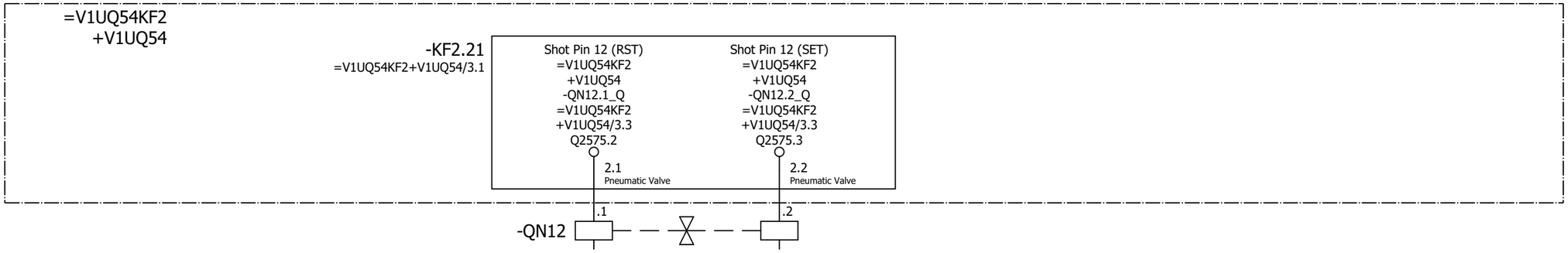

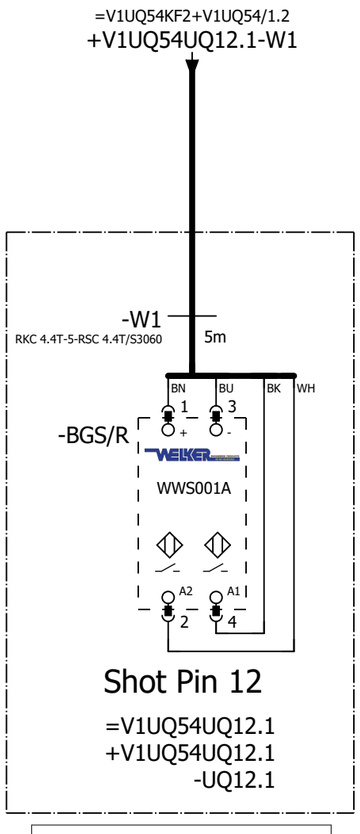

=V1UQ54
-UQ12.1-BGS/R
Shot Pin 12

=V1UQ54UQ11+.UQ54UQ11/1

=V1UQ54UQ13+.UQ54UQ13/1

			Date	1/11/2023	Volvo Trucks North America		Valiant TMS	FESTO DQ CONNECTION QN12	Drawing name: =2V10&EFS-EL	= V1UQ54UQ12	
			Ed.	MKLEPADLO						+ V1UQ54UQ12	
			Appr		P6700 Bodyside RH - Robot Cell 2V10				Document type: EFS	Project nr: 22-16150	Page 1
Modification	Date	Name	Original		Replacement of	Replaced by	Scale 1:1				1579

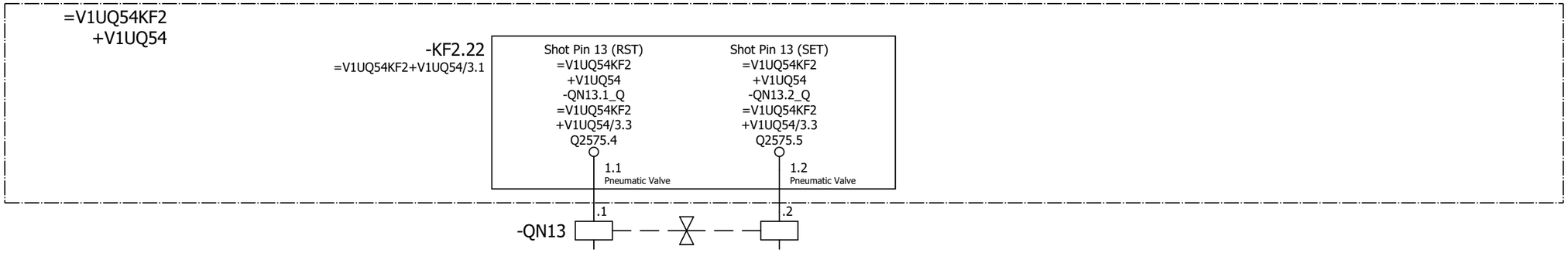

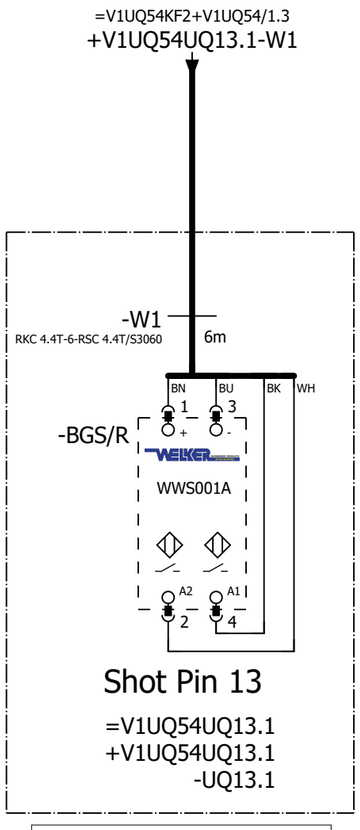

=V1UQ54
-UQ13.1-BGS/R
Shot Pin 13

=V1UQ54UQ12+.UQ54UQ12/1

=V1UQ54UQ14+.UQ54UQ14/1

			Date	1/11/2023	Volvo Trucks North America		Valiant TMS	FESTO DQ CONNECTION QN13	Drawing name: =2V10&EFS-EL	= V1UQ54UQ13	
			Ed.	MKLEPADLO						+ V1UQ54UQ13	
			Appr		P6700 Bodyside RH - Robot Cell 2V10				Document type: EFS	Project nr: 22-16150	Page 1
Modification	Date	Name	Original		Replacement of	Replaced by	Scale 1:1				1579

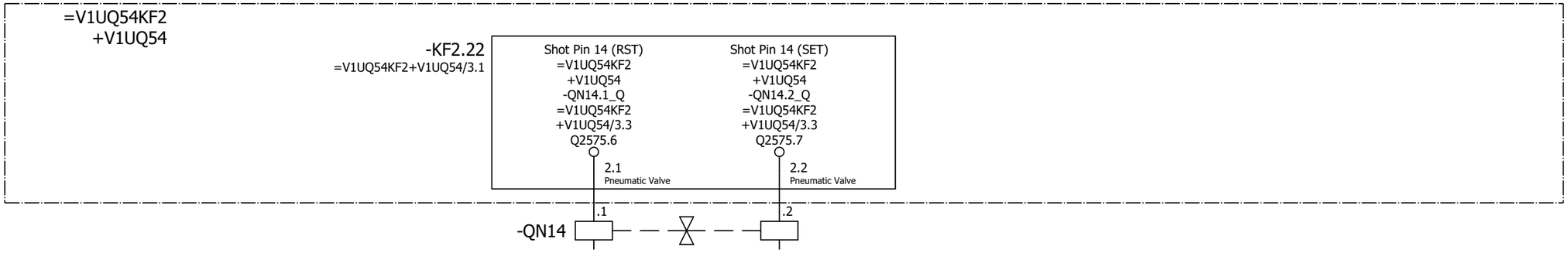

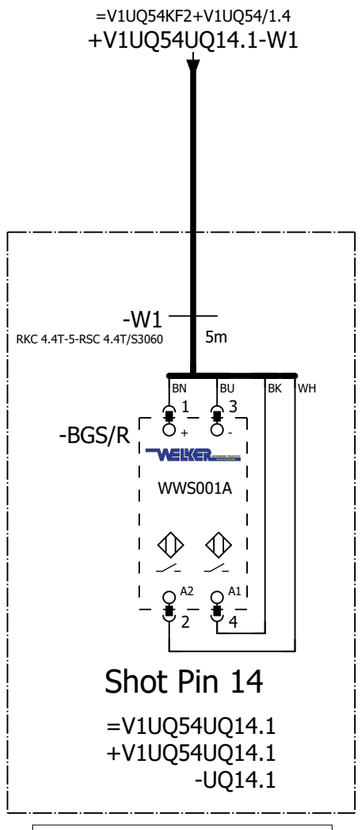

=V1UQ54
-UQ14.1-BGS/R
Shot Pin 14

=V1UQ54UQ13+.UQ54UQ13/1

=V1UQ54WC4+V1UQ54/1

			Date	1/11/2023	Volvo Trucks North America		Valiant TMS	FESTO DQ CONNECTION QN14	Drawing name: =2V10&EFS-EL	= V1UQ54UQ14	
			Ed.	MKLEPADLO						+ V1UQ54UQ14	
			Appr		P6700 Bodyside RH - Robot Cell 2V10				Document type: EFS	Project nr: 22-16150	Page 1
Modification	Date	Name	Original		Replacement of	Replaced by	Scale 1:1				1579

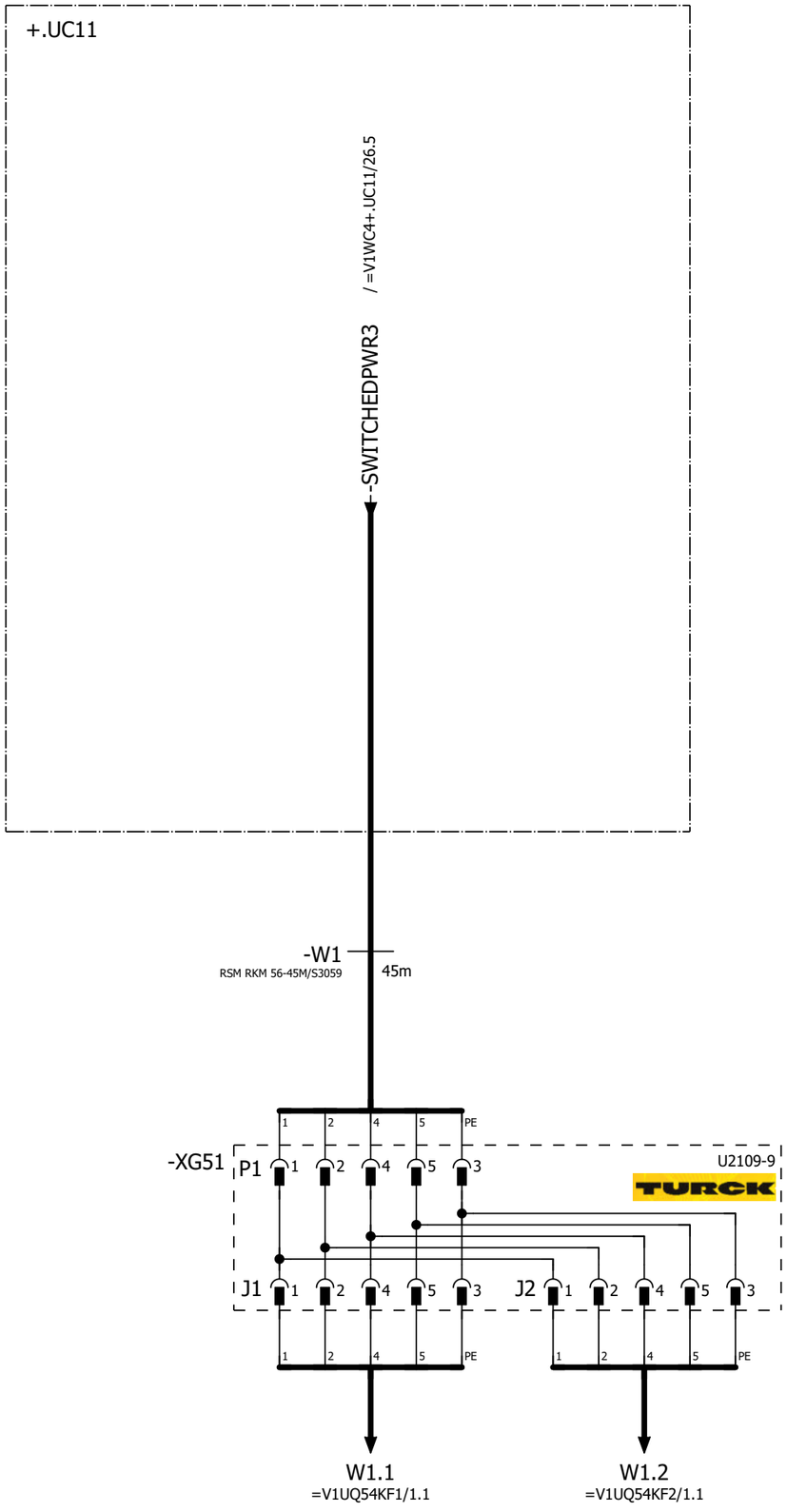

=V1UQ54UQ14+.UQ54UQ14/1

=V1UQ55BG0+.UQ55/1

			Date	1/11/2023	Volvo Trucks North America	Valiant TMS	24VDC	Drawing name: =2V10&EFS-EL	= V1UQ54WC4	
			Ed.	MKLEPADLO					+ V1UQ54	
			Appr		P6700 Bodyside RH - Robot Cell 2V10			Document type: EFS	Project nr: 22-16150	Page 1 / 1579
Modification	Date	Name	Original		Replacement of	Replaced by	Scale 1:1			

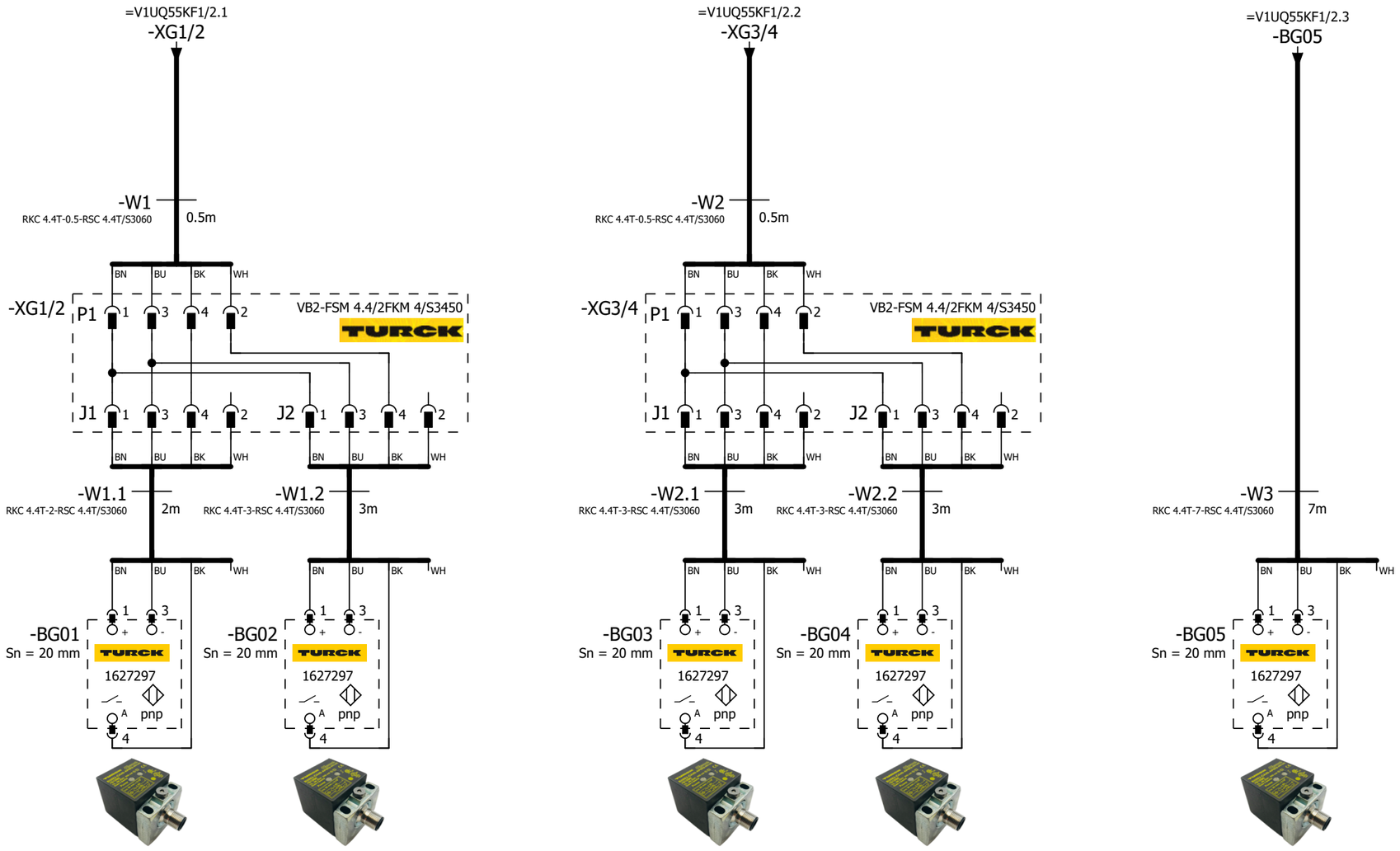

=V1UQ55 -BG01 Common Part Present	=V1UQ55 -BG02 Day Cab Part Present	=V1UQ55 -BG03 Sleeper L230 Part Present	=V1UQ55 -BG04 Sleeper L290 Part Present	=V1UQ55 -BG05 Sleeper L320 Part Present

=V1UQ54WC4+.UQ54/1

=V1UQ55KF1/1

			Date	1/11/2023	Volvo Trucks North America	Valiant TMS	SENSORS	Drawing name: =2V10&EFS-EL	= V1UQ55BG0
			Ed.	MKLEPADLO					+ V1UQ55
			Appr		P6700 Bodyside RH - Robot Cell 2V10			Document type: EFS / Project nr: 22-16150	Page 1 / 1579
Modification	Date	Name	Original		Replacement of / Replaced by	Scale 1:1			

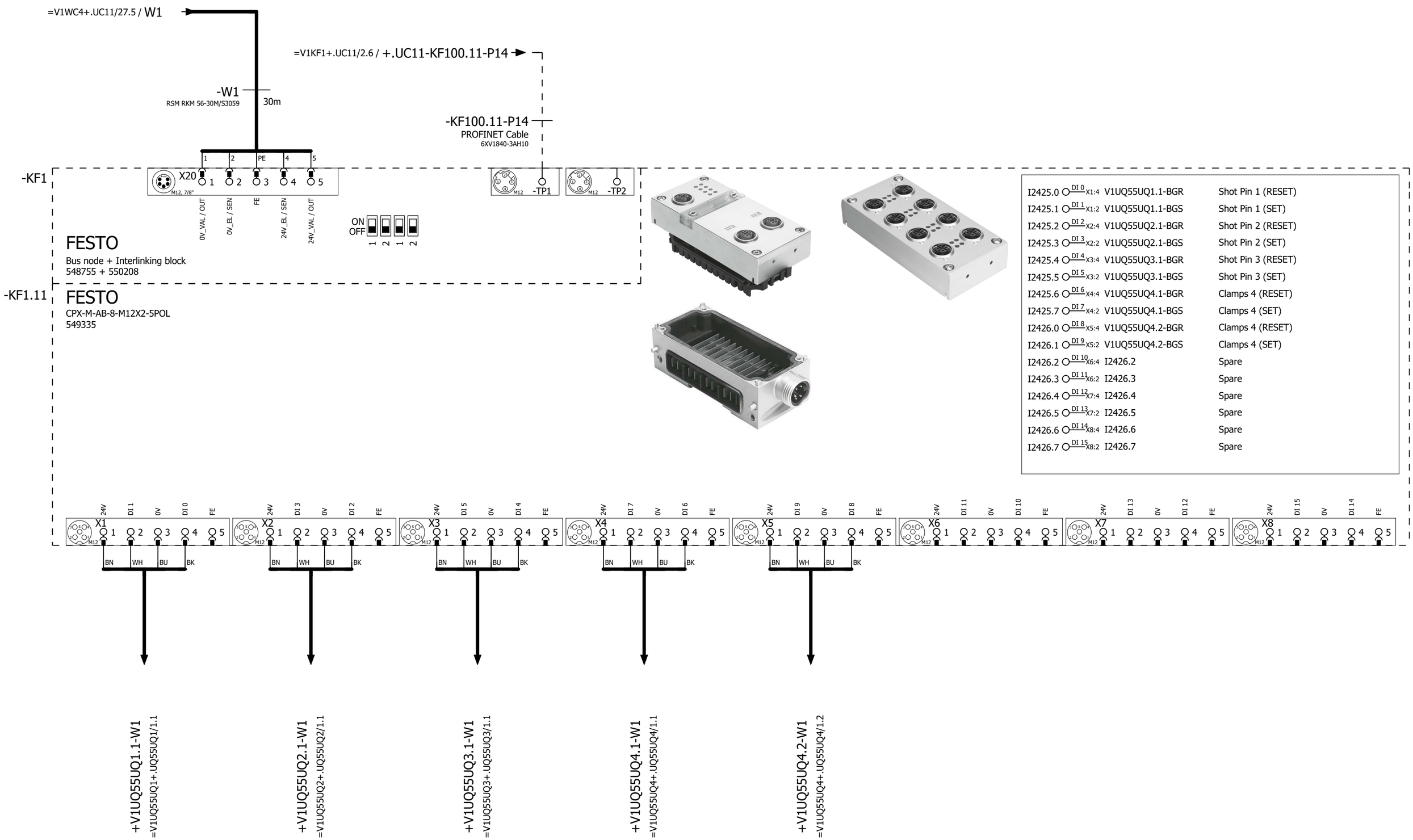

=V1UQ55BG0/1

2

			Date	1/11/2023	Volvo Trucks North America	Valiant TMS	CONNECTING MOD. FOR VTSA MANIFOLD	Drawing name: =2V10&EFS-EL		= V1UQ55KF1	
			Ed.	MKLEPADLO						+ V1UQ55	
			Appr		P6700 Bodyside RH - Robot Cell 2V10			Document type: EFS	Project nr: 22-16150		Page 1
Modification	Date	Name	Original		Replacement of / Replaced by	Scale 1:1					1579

I2427.0	DI 0 X1:4	V1UQ55-BG01	Sensor Common Part Present
I2427.1	DI 1 X1:2	V1UQ55-BG02	Sensor Day Cab Part Present
I2427.2	DI 2 X2:4	V1UQ55-BG03	Sensor Sleeper L230 Part Present
I2427.3	DI 3 X2:2	V1UQ55-BG04	Sensor Sleeper L290 Part Present
I2427.4	DI 4 X3:4	V1UQ55-BG05	Sensor Sleeper L320 Part Present
I2427.5	DI 5 X3:2	I2427.5	Spare
I2427.6	DI 6 X4:4	I2427.6	Spare
I2427.7	DI 7 X4:2	I2427.7	Spare
I2428.0	DI 8 X5:4	I2428.0	Spare
I2428.1	DI 9 X5:2	I2428.1	Spare
I2428.2	DI 10 X6:4	I2428.2	Spare
I2428.3	DI 11 X6:2	I2428.3	Spare
I2428.4	DI 12 X7:4	I2428.4	Spare
I2428.5	DI 13 X7:2	I2428.5	Spare
I2428.6	DI 14 X8:4	I2428.6	Spare
I2428.7	DI 15 X8:2	I2428.7	Spare

-KF1.12

FESTO

CPX-M-AB-8-M12X2-5POL

549335

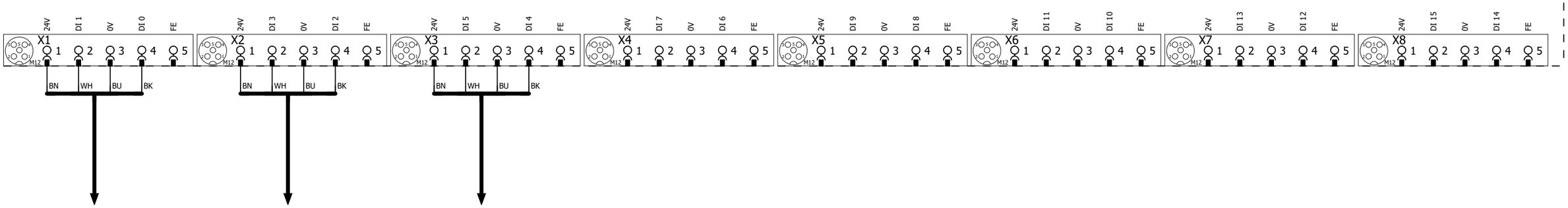

-XG1/2
=V1UQ55BG0/1.1

-XG3/4
=V1UQ55BG0/1.4

-BG05
=V1UQ55BG0/1.6

1 3

			Date	1/11/2023	Volvo Trucks North America	Valiant TMS	I/O MOD. DI16 (8 x M12) FOR VTSA-F	Drawing name: =2V10&EFS-EL		= V1UQ55KF1	
			Ed.	MKLEPADLO						+ V1UQ55	
			Appr		P6700 Bodyside RH - Robot Cell 2V10			Document type: EFS	Project nr: 22-16150		Page 2
Modification	Date	Name	Original		Replacement of / Replaced by	Scale 1:1					1579

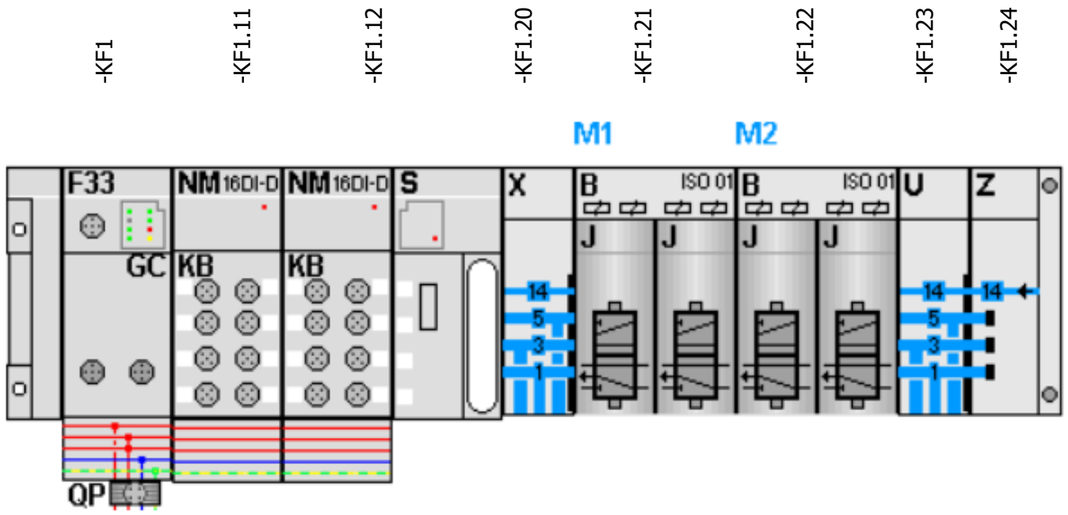

-KF1.21
=V1UQ55UQ1+.UQ55UQ1/1.3
=V1UQ55UQ2+.UQ55UQ2/1.3

FESTO

=V1UQ55UQ1+.UQ55UQ1/1.4	Q2425.0 DO 0 1.1	-QN1.1_Q	Shot Pin 1 (RST)
=V1UQ55UQ1+.UQ55UQ1/1.4	Q2425.1 DO 1 1.2	-QN1.2_Q	Shot Pin 1 (SET)
=V1UQ55UQ2+.UQ55UQ2/1.4	Q2425.2 DO 2 2.1	-QN2.1_Q	Shot Pin 2 (RST)
=V1UQ55UQ2+.UQ55UQ2/1.4	Q2425.3 DO 3 2.2	-QN2.2_Q	Shot Pin 2 (SET)

-KF1.22
=V1UQ55UQ3+.UQ55UQ3/1.3
=V1UQ55UQ4+.UQ55UQ4/1.3

FESTO

=V1UQ55UQ3+.UQ55UQ3/1.4	Q2425.4 DO 0 1.1	-QN3.1_Q	Shot Pin 3 (RST)
=V1UQ55UQ3+.UQ55UQ3/1.4	Q2425.5 DO 1 1.2	-QN3.2_Q	Shot Pin 3 (SET)
=V1UQ55UQ4+.UQ55UQ4/1.4	Q2425.6 DO 2 2.1	-QN4.1_Q	Clamps 4 (RST)
=V1UQ55UQ4+.UQ55UQ4/1.4	Q2425.7 DO 3 2.2	-QN4.2_Q	Clamps 4 (SET)

			Date	1/11/2023	Volvo Trucks North America	Valiant TMS	CONNECTING MOD. FOR FESTO DQ	Drawing name: =2V10&EFS-EL		= V1UQ55KF1	
			Ed.	MKLEPADLO	P6700 Bodyside RH - Robot Cell 2V10					+ V1UQ55	
			Appr			Scale 1:1		Document type: EFS	Project nr: 22-16150		Page 3
Modification	Date	Name	Original		Replacement of / Replaced by						1579

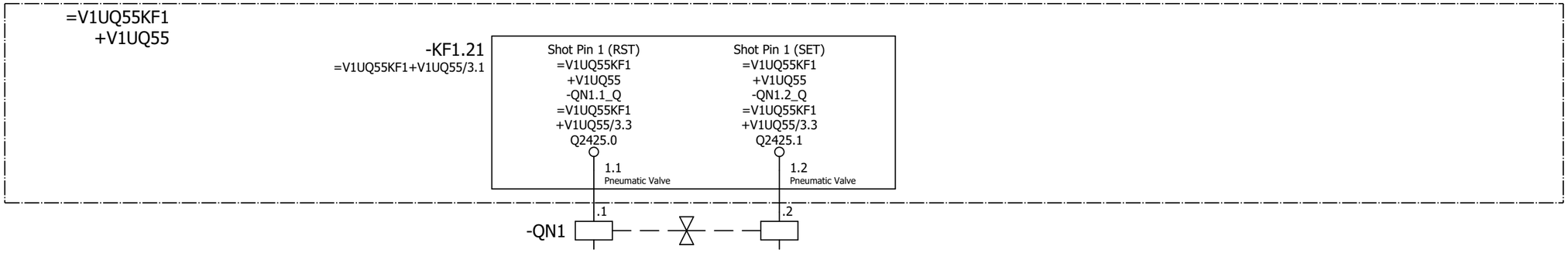

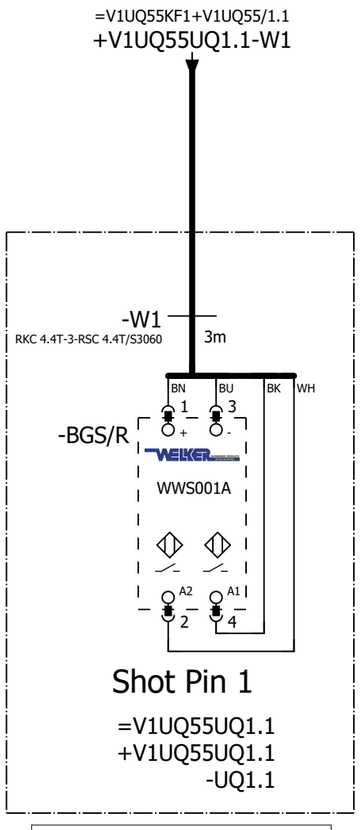

=V1UQ55
-UQ1.1-BGS/R
Shot Pin 1

=V1UQ55KF1+V1UQ55/3

=V1UQ55UQ2+.UQ55UQ2/1

			Date	1/11/2023	Volvo Trucks North America		Valiant TMS	FESTO DQ CONNECTION QN1	Drawing name: =2V10&EFS-EL	= V1UQ55UQ1	
			Ed.	MKLEPADLO						+ V1UQ55UQ1	
			Appr		P6700 Bodyside RH - Robot Cell 2V10				Document type: EFS	Project nr: 22-16150	Page 1
Modification	Date	Name	Original		Replacement of	Replaced by	Scale 1:1				1579

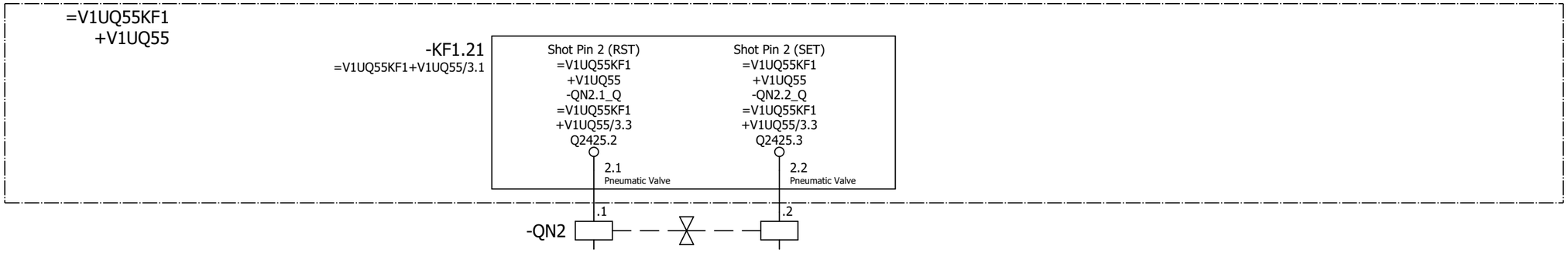

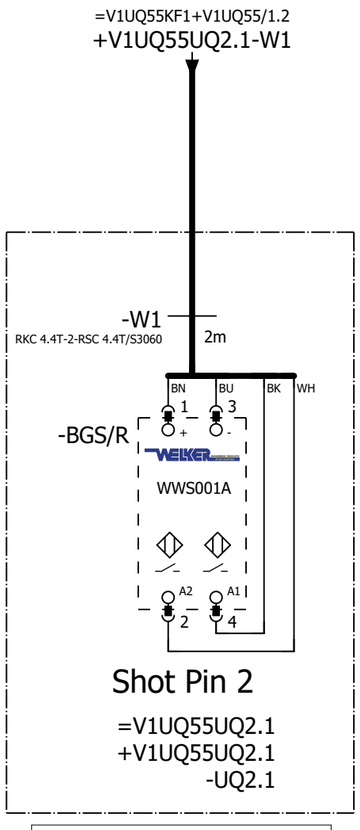

=V1UQ55
-UQ2.1-BGS/R
Shot Pin 2

=V1UQ55UQ1+.UQ55UQ1/1

=V1UQ55UQ3+.UQ55UQ3/1

			Date	1/11/2023	Volvo Trucks North America	Valiant TMS	FESTO DQ CONNECTION QN2	Drawing name: =2V10&EFS-EL	= V1UQ55UQ2	
			Ed.	MKLEPADLO					+ V1UQ55UQ2	
			Appr		P6700 Bodyside RH - Robot Cell 2V10			Document type: EFS	Project nr: 22-16150	Page 1
Modification	Date	Name	Original		Replacement of / Replaced by	Scale 1:1				1579

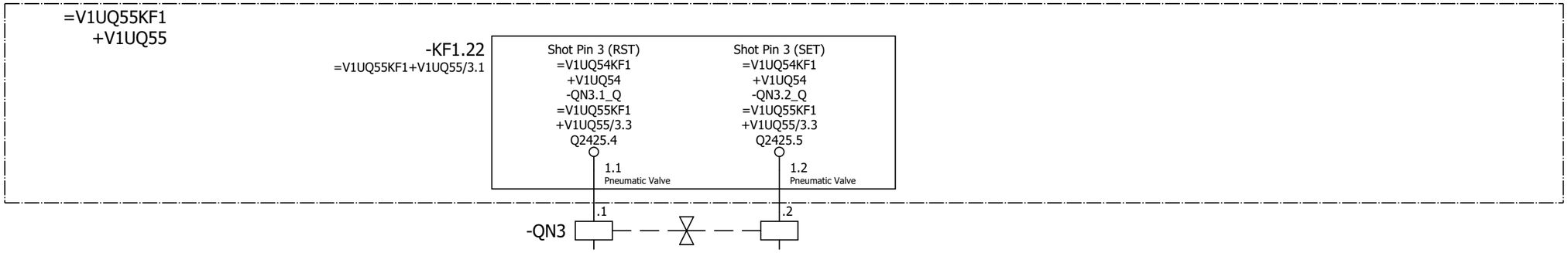

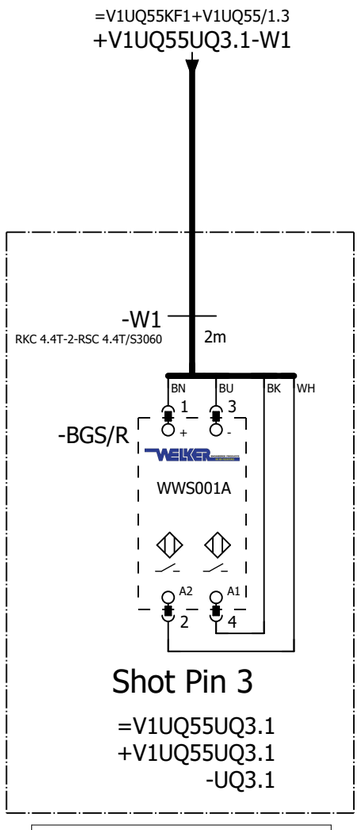

=V1UQ55
-UQ3.1-BGS/R
Shot Pin 3

=V1UQ55UQ2+.UQ55UQ2/1

=V1UQ55UQ4+.UQ55UQ4/1

			Date	1/11/2023	Volvo Trucks North America		Valiant TMS	FESTO DQ CONNECTION QN3	Drawing name: =2V10&EFS-EL	= V1UQ55UQ3	
			Ed.	MKLEPADLO						+ V1UQ55UQ3	
			Appr		P6700 Bodyside RH - Robot Cell 2V10				Document type: EFS	Project nr: 22-16150	Page 1
Modification	Date	Name	Original		Replacement of	Replaced by	Scale 1:1				1579

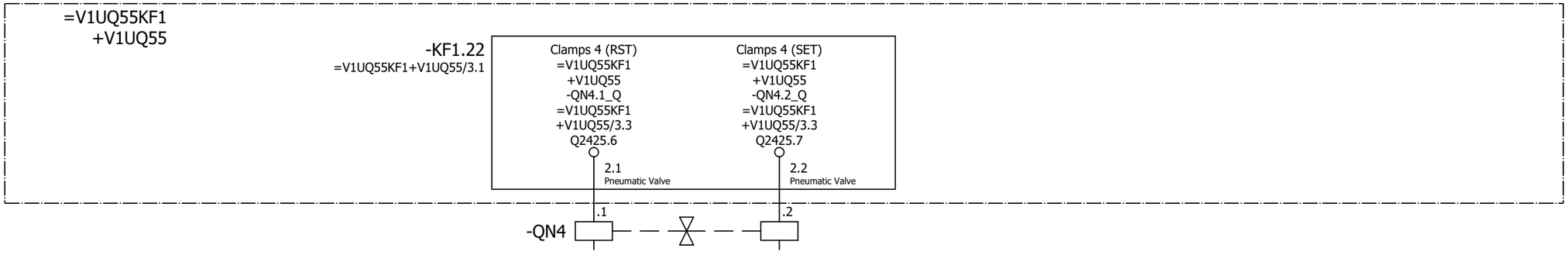

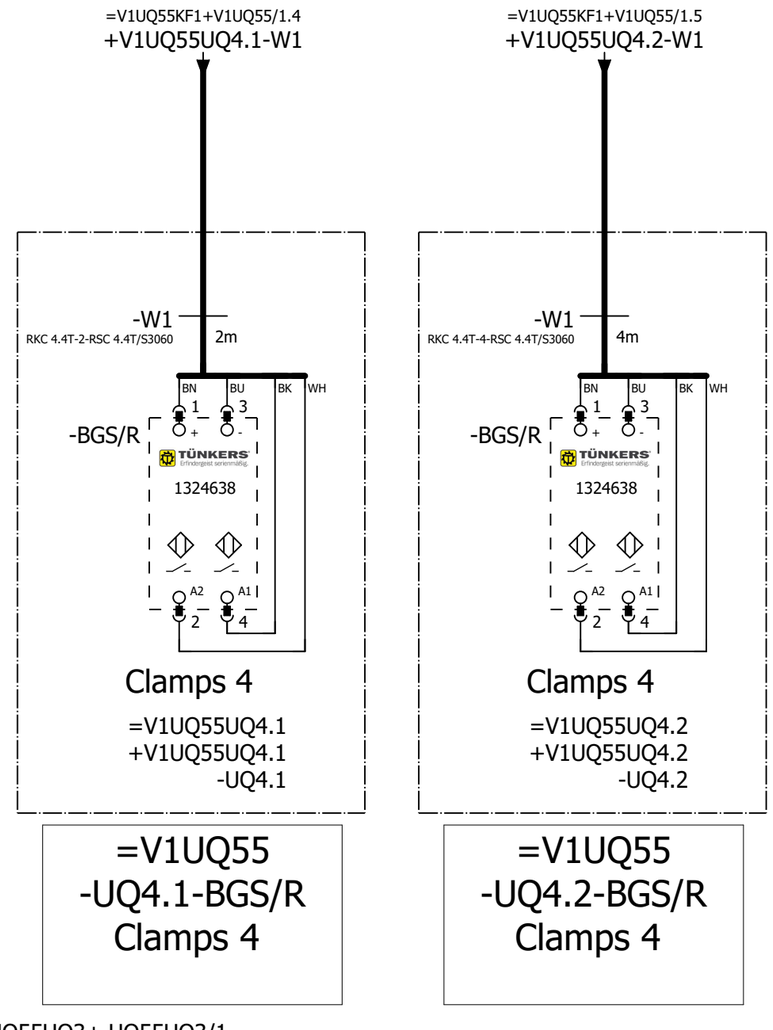

=V1UQ55UQ3+.UQ55UQ3/1

=V1WC1+.UC11/1

			Date	1/11/2023	Volvo Trucks North America		Valiant TMS	FESTO DQ CONNECTION QN4	Drawing name: =2V10&EFS-EL	= V1UQ55UQ4	
			Ed.	MKLEPADLO						+ V1UQ55UQ4	
			Appr		P6700 Bodyside RH - Robot Cell 2V10				Document type: EFS	Project nr: 22-16150	Page 1
Modification	Date	Name	Original		Replacement of	Replaced by	Scale 1:1				1579

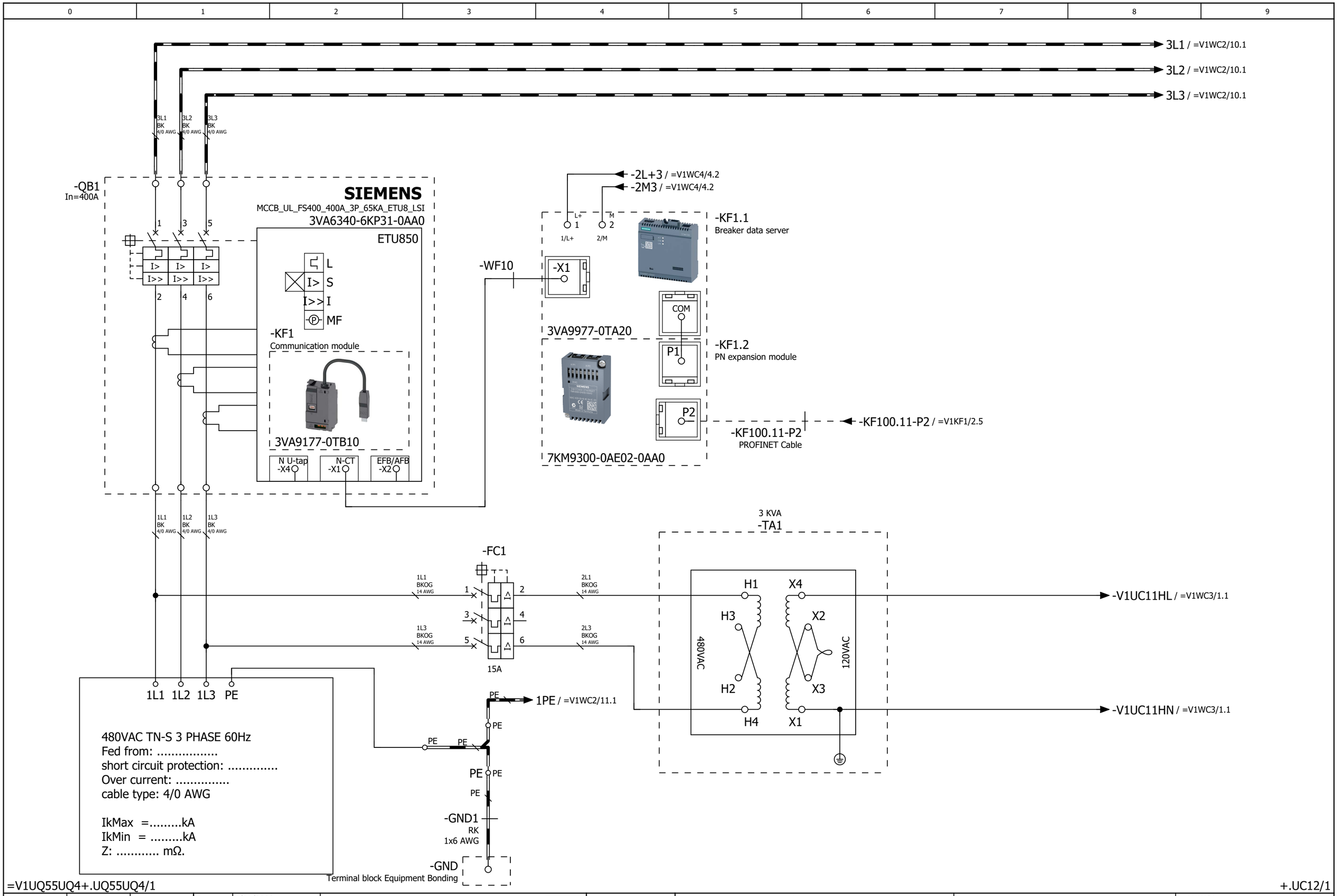

=V1UQ55UQ4+.UQ55UQ4/1

+.UC12/1

			Date	1/11/2023	Volvo Trucks North America		Valiant TMS	Incoming power supply 480 VAC	Drawing name: =2V10&EFS-EL	= V1WC1	
			Ed.	MKLEPADLO						+ V1UC11	
			Appr		P6700 Bodyside RH - Robot Cell 2V10				Document type: EFS	Project nr: 22-16150	Page 1
Modification	Date	Name	Original		Replacement of	Replaced by	Scale 1:1				1579

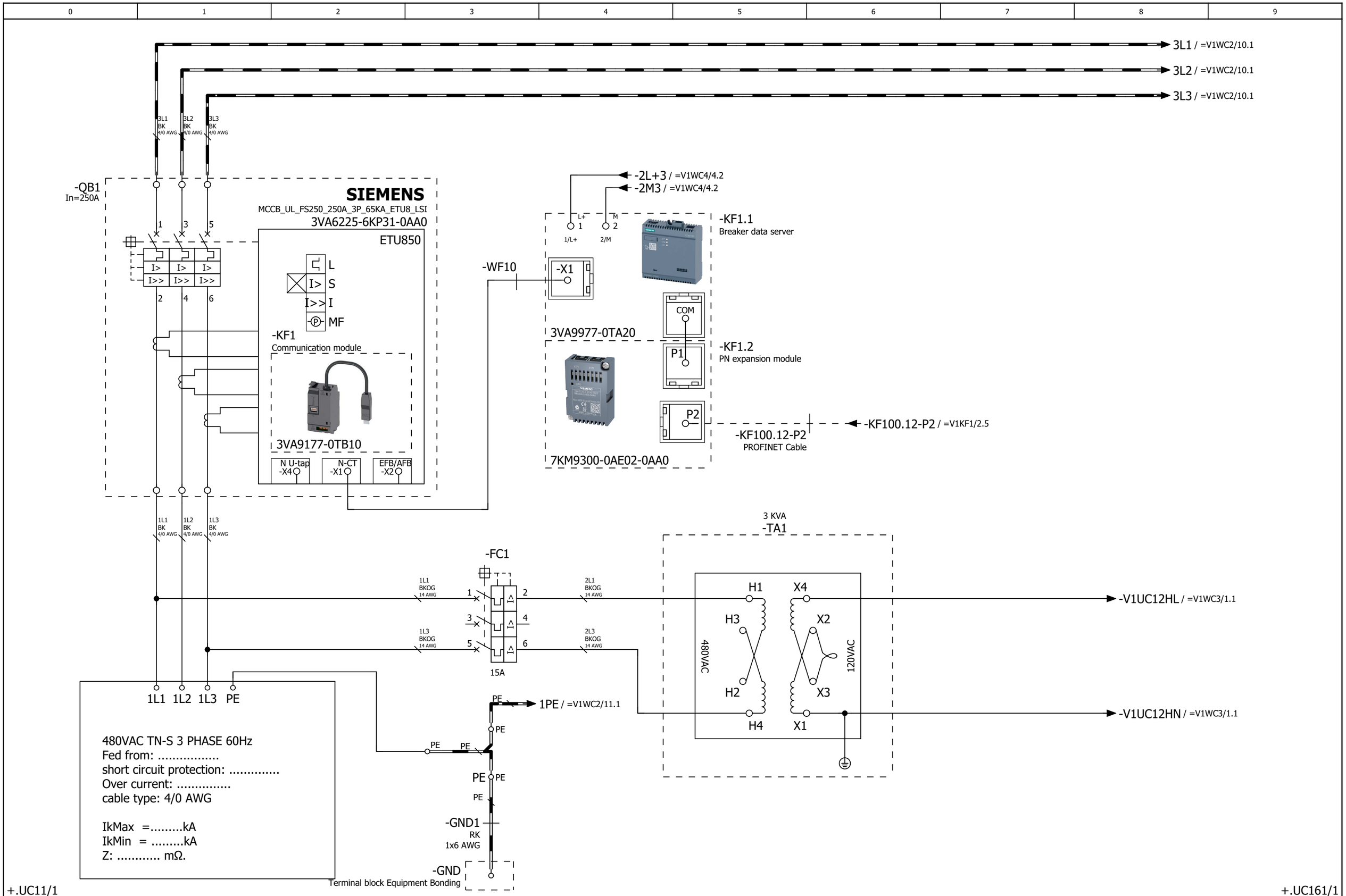

			Date	1/11/2023	Volvo Trucks North America		Valiant TMS	Incoming power supply 480 VAC	Drawing name: =2V10&EFS-EL	= V1WC1	
			Ed.	MKLEPADLO						+ V1UC12	
			Appr		P6700 Bodyside RH - Robot Cell 2V10				Document type: EFS	Project nr: 22-16150	Page 1
Modification	Date	Name	Original		Replacement of	Replaced by	Scale 1:1				1579

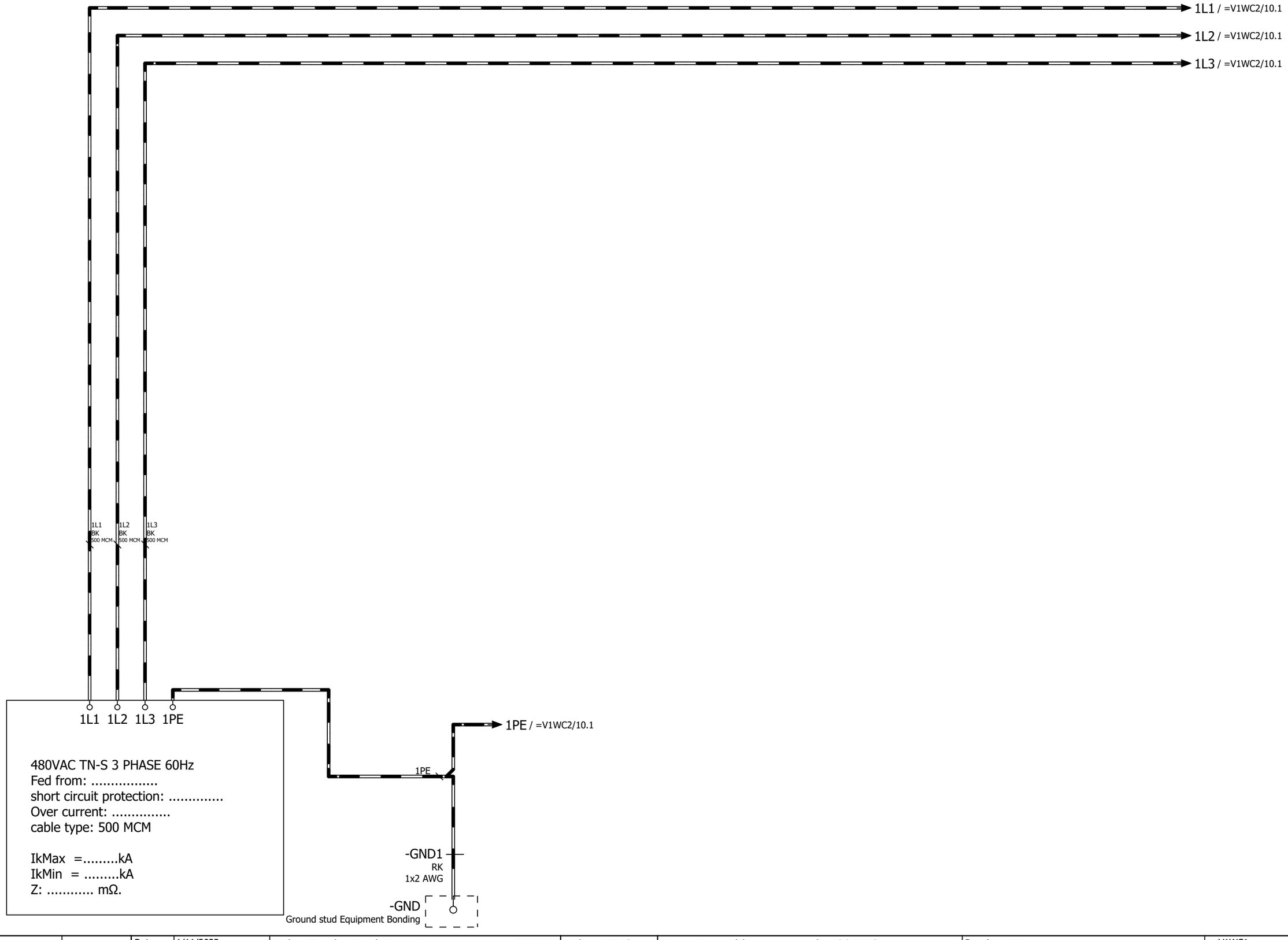

			Date	1/11/2023	Volvo Trucks North America		Valiant TMS	Incoming weld power supply 480 VAC	Drawing name: =2V10&EFS-EL		= V1WC1
			Ed.	MKLEPADLO							+ V1UC161
			Appr		P6700 Bodyside RH - Robot Cell 2V10				Document type: EFS	Project nr: 22-16150	Page 1
Modification	Date	Name	Original		Replacement of	Replaced by	Scale 1:1				1579

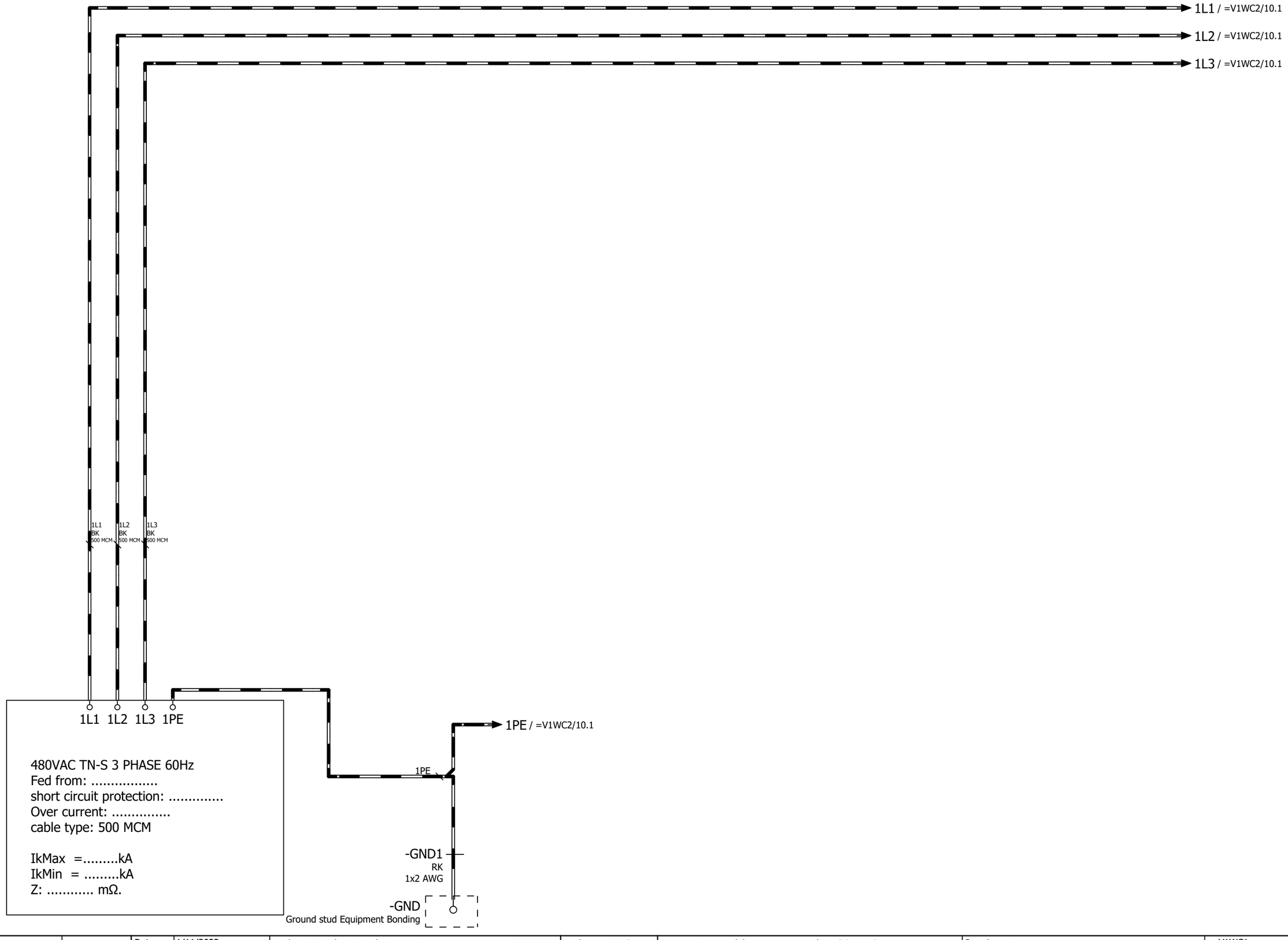

			Date	1/11/2023	Volvo Trucks North America		Valiant TMS	Incoming weld power supply 480 VAC	Drawing name: =2V10&EFS-EL		= V1WC1
			Ed.	MKLEPADLO							+ V1UC162
			Appr		P6700 Bodyside RH - Robot Cell 2V10				Document type: EFS	Project nr: 22-16150	Page 1
Modification	Date	Name	Original		Replacement of	Replaced by	Scale 1:1				1579

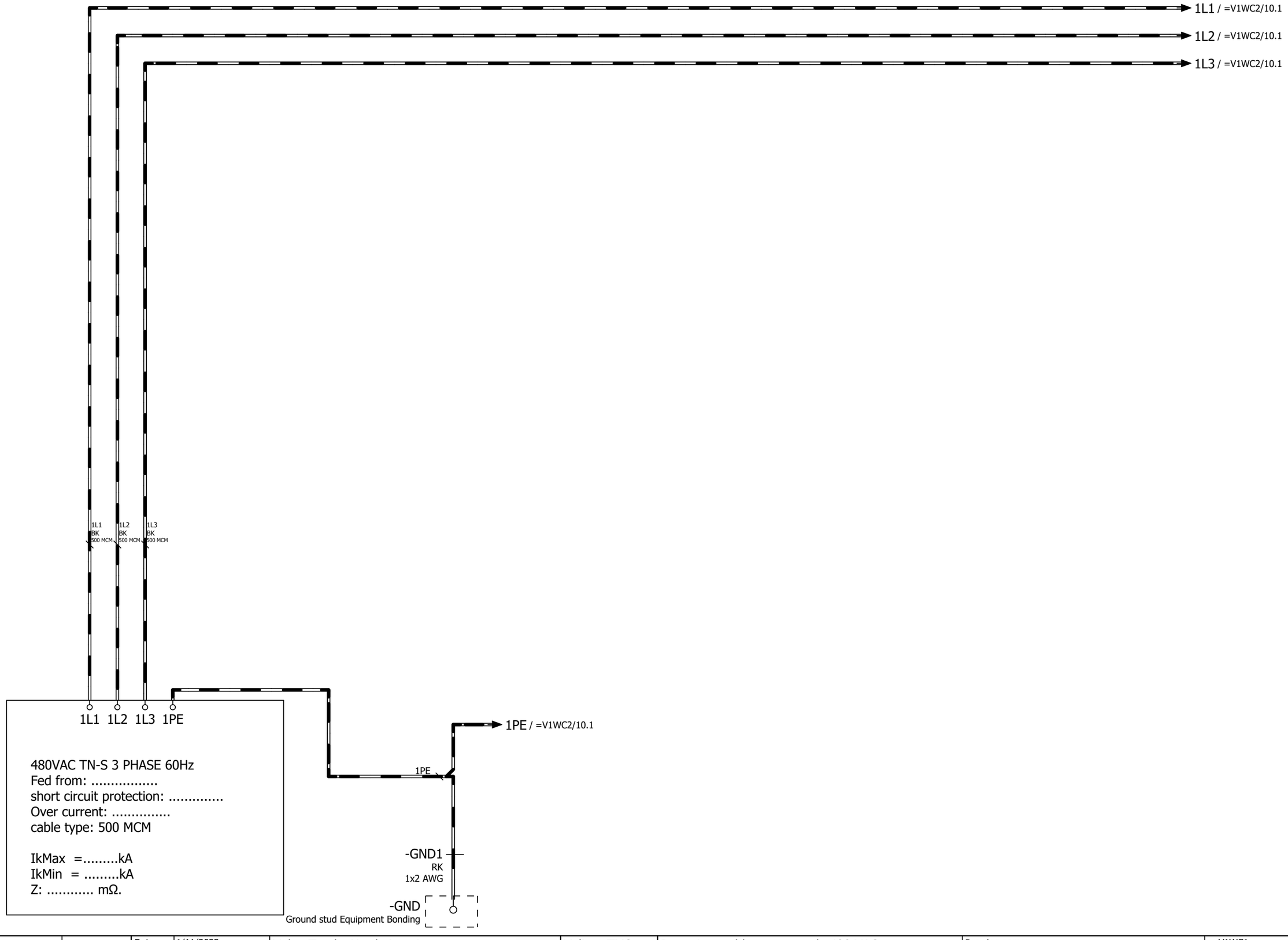

+.UC162/1

+.UC164/1

			Date	1/11/2023	Volvo Trucks North America	Valiant TMS	Incoming weld power supply 480 VAC	Drawing name: =2V10&EFS-EL		= V1WC1	
			Ed.	MKLEPADLO						+ V1UC163	
			Appr		P6700 Bodyside RH - Robot Cell 2V10	Scale 1:1		Document type: EFS	Project nr: 22-16150		Page 1
Modification	Date	Name	Original		Replacement of	Replaced by					1579

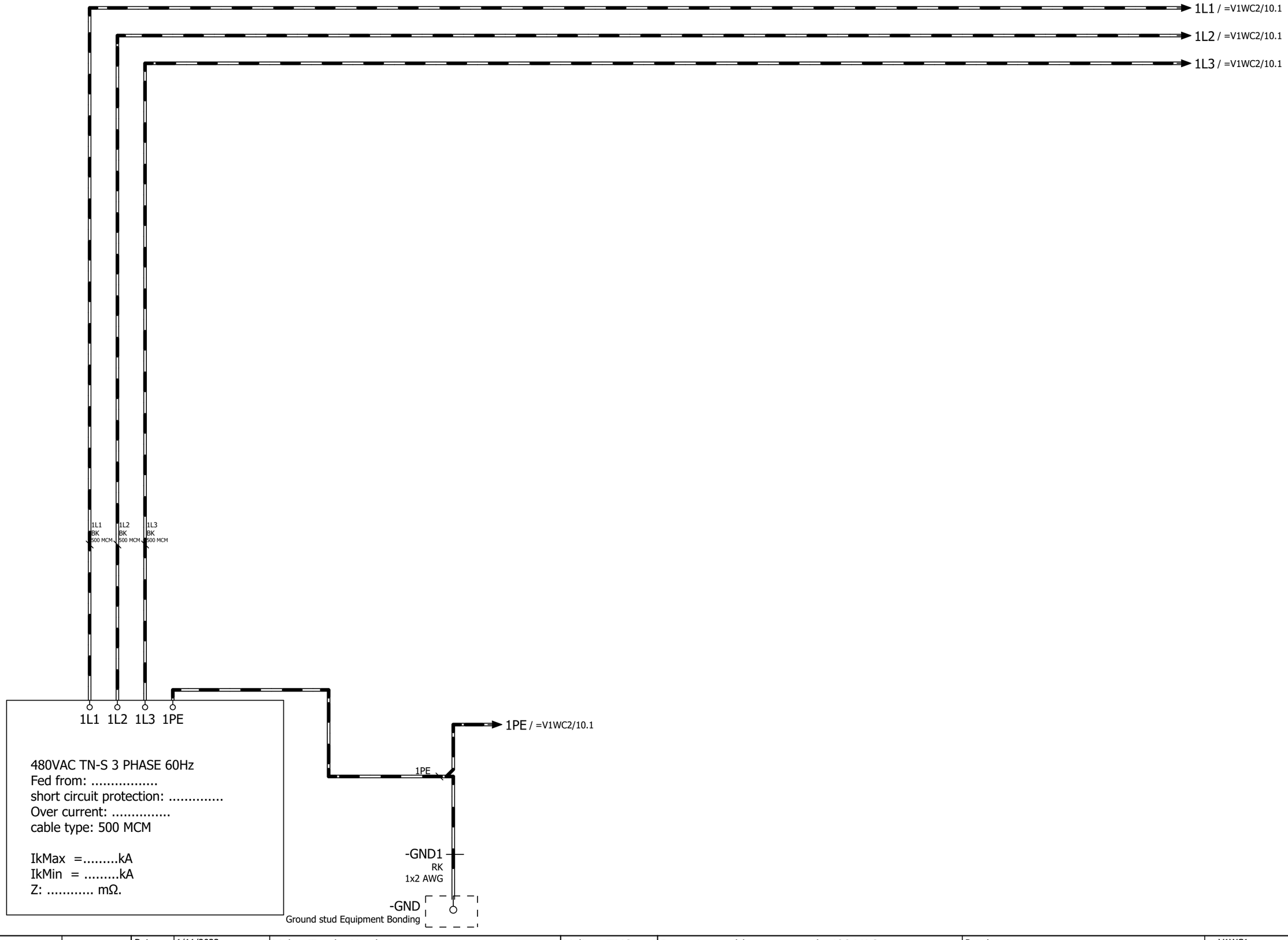

			Date	1/11/2023	Volvo Trucks North America		Valiant TMS	Incoming weld power supply 480 VAC	Drawing name: =2V10&EFS-EL		= V1WC1
			Ed.	MKLEPADLO							+ V1UC164
			Appr		P6700 Bodyside RH - Robot Cell 2V10				Document type: EFS	Project nr: 22-16150	Page 1
Modification	Date	Name	Original		Replacement of	Replaced by	Scale 1:1				1579

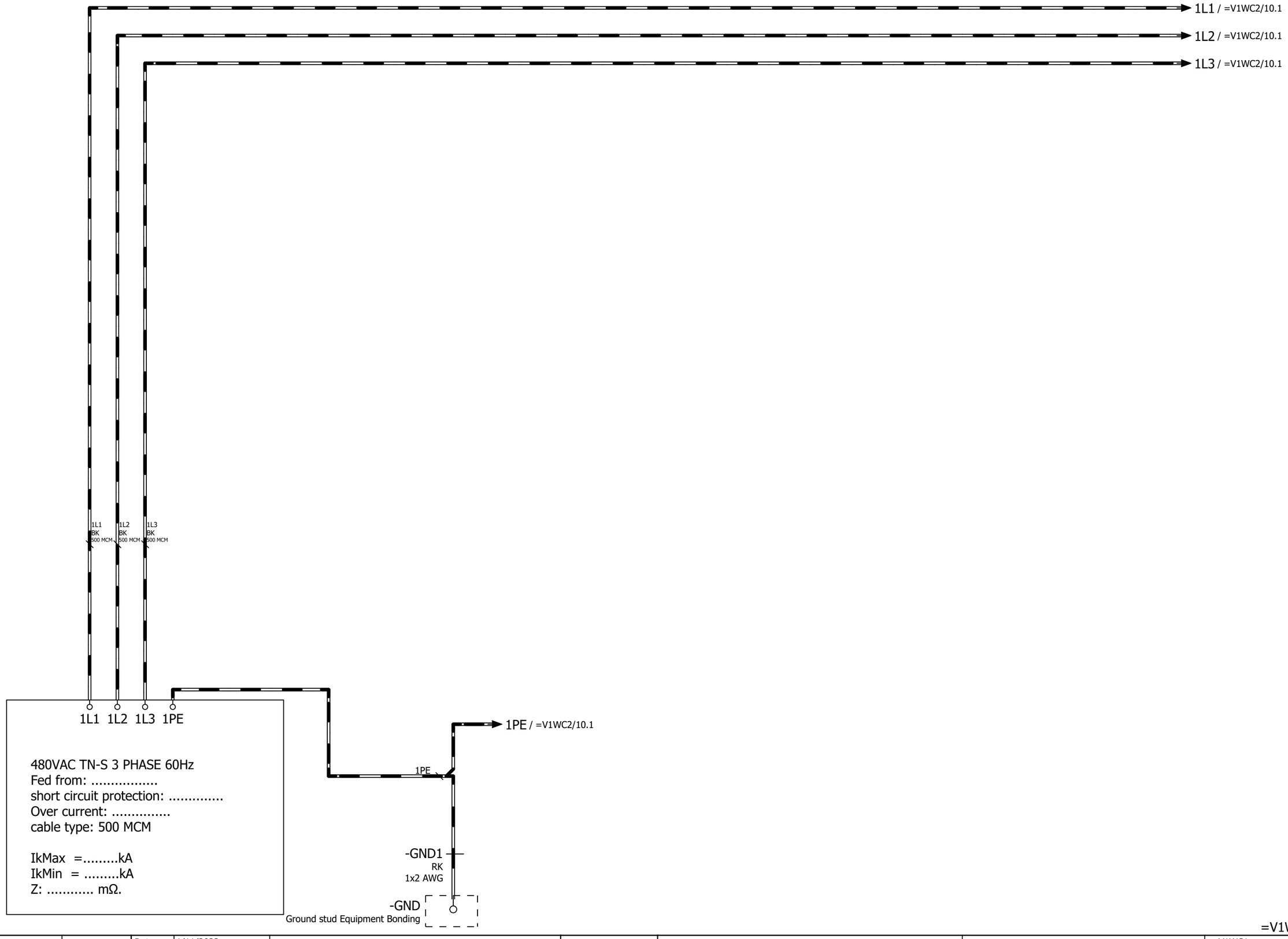

+.UC164/1

=V1WC2+.UC11/10

			Date	1/11/2023	Volvo Trucks North America		Valiant TMS	Incoming weld power supply 480 VAC	Drawing name: =2V10&EFS-EL	= V1WC1	
			Ed.	MKLEPADLO						+ V1UC165	
			Appr		P6700 Bodyside RH - Robot Cell 2V10				Document type: EFS	Project nr: 22-16150	Page 1
Modification	Date	Name	Original		Replacement of	Replaced by	Scale 1:1				1579

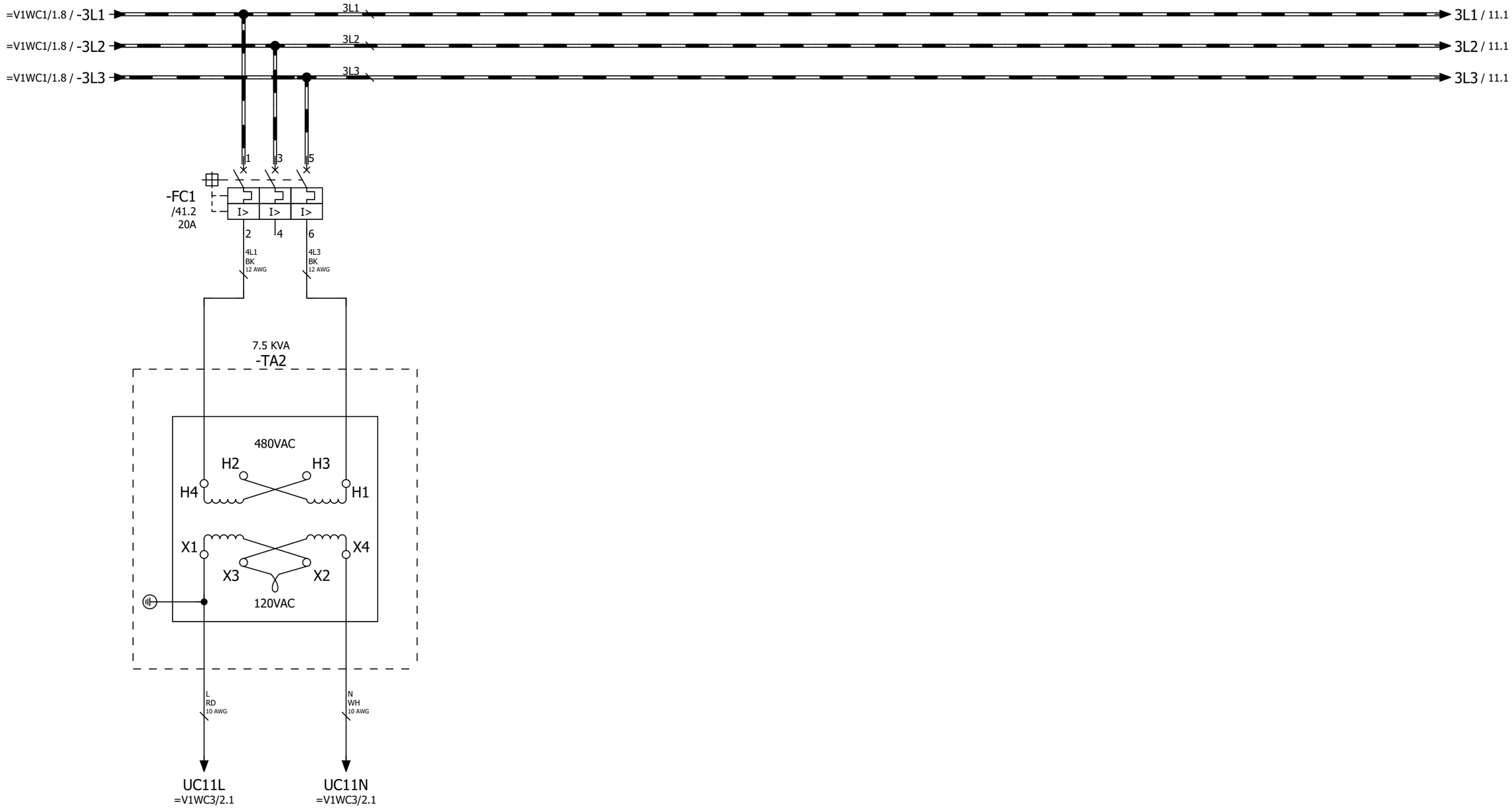

Power
Distribution
=V1UC11

=V1WC1+.UC165/1

11

			Date	1/11/2023	Volvo Trucks North America	Valiant TMS	Power distribution 480 VAC	Drawing name: =2V10&EFS-EL		= V1WC2	
			Ed.	MKLEPADLO						+ V1UC11	
			Appr		P6700 Bodyside RH - Robot Cell 2V10			Document type: EFS	Project nr: 22-16150	Page	10
Modification	Date	Name	Original		Replacement of / Replaced by	Scale 1:1					1579

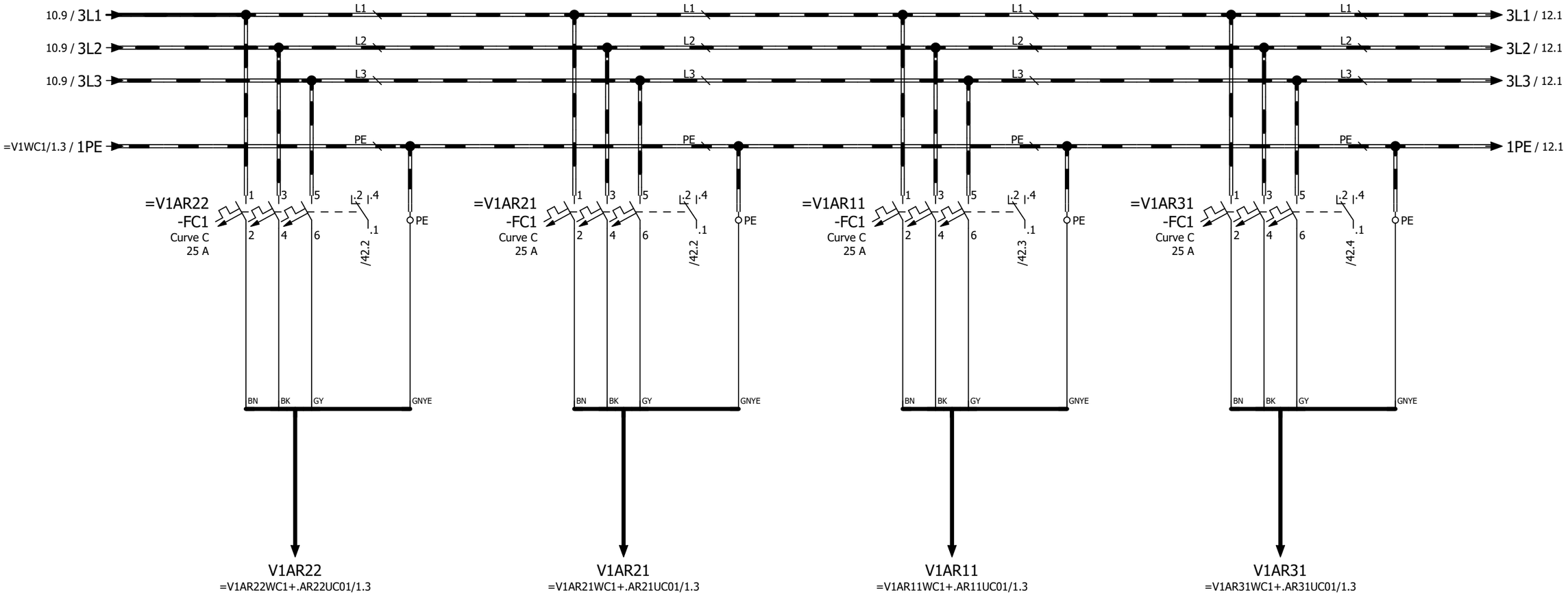

Power Distribution =V1AR22

Power Distribution =V1AR21

Power Distribution =V1AR11

Power Distribution =V1AR31

			Date	1/11/2023	Volvo Trucks North America	Valiant TMS	Power distribution 480 VAC	Drawing name: =2V10&EFS-EL		= V1WC2	
			Ed.	MKLEPADLO						+ V1UC11	
			Appr		P6700 Bodyside RH - Robot Cell 2V10			Document type: EFS	Project nr: 22-16150		Page 11
Modification	Date	Name	Original		Replacement of / Replaced by	Scale 1:1					1579

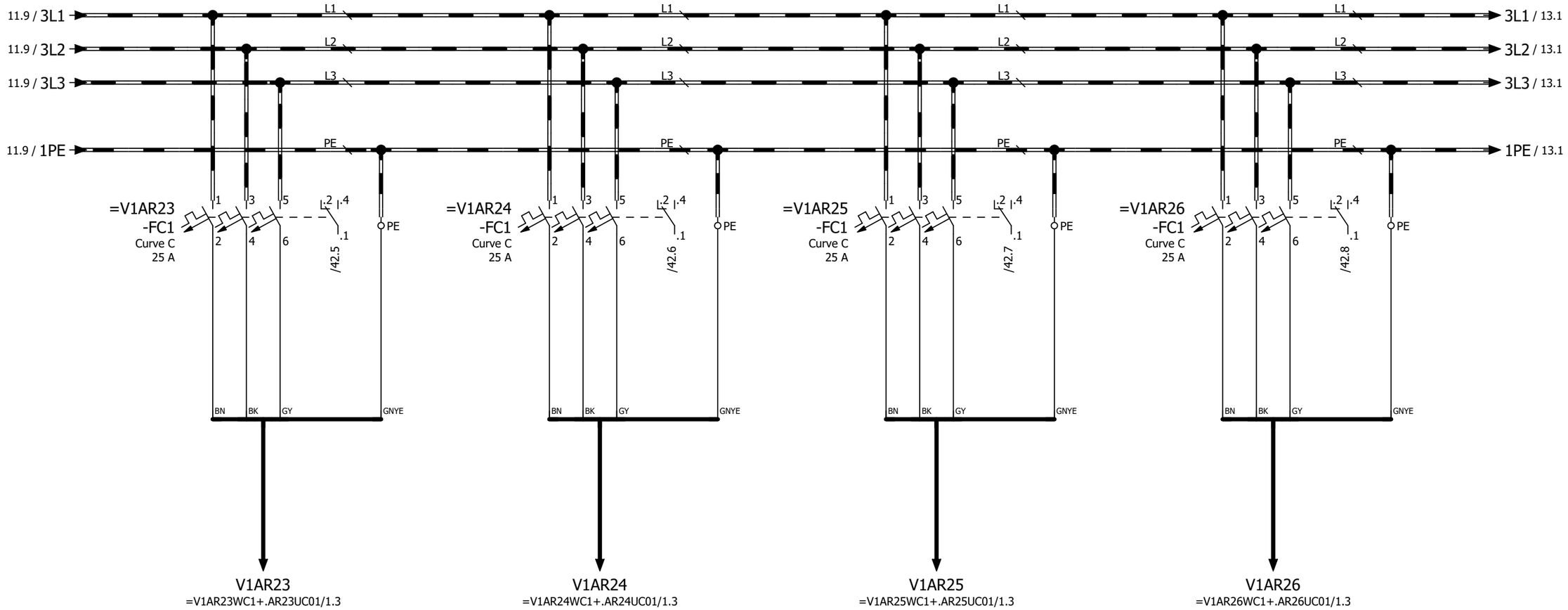

Power Distribution =V1AR23

Power Distribution =V1AR24

Power Distribution =V1AR25

Power Distribution =V1AR26

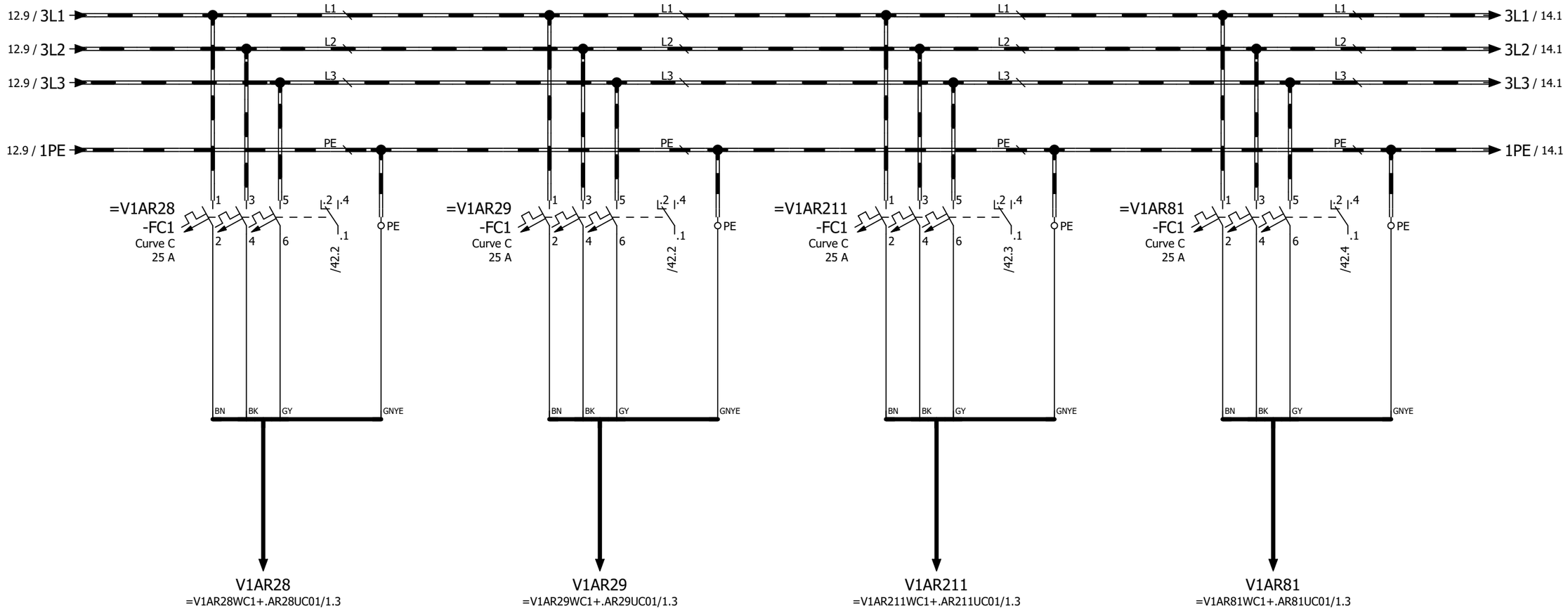

Power Distribution =V1AR28

Power Distribution =V1AR29

Power Distribution =V1AR211

Power Distribution =V1AR81

			Date	1/11/2023	Volvo Trucks North America	Valiant TMS	Power distribution 480 VAC	Drawing name: =2V10&EFS-EL		= V1WC2	
			Ed.	MKLEPADLO						+ V1UC11	
			Appr		P6700 Bodyside RH - Robot Cell 2V10			Document type: EFS	Project nr: 22-16150		Page 13
Modification	Date	Name	Original		Replacement of / Replaced by	Scale 1:1					1579

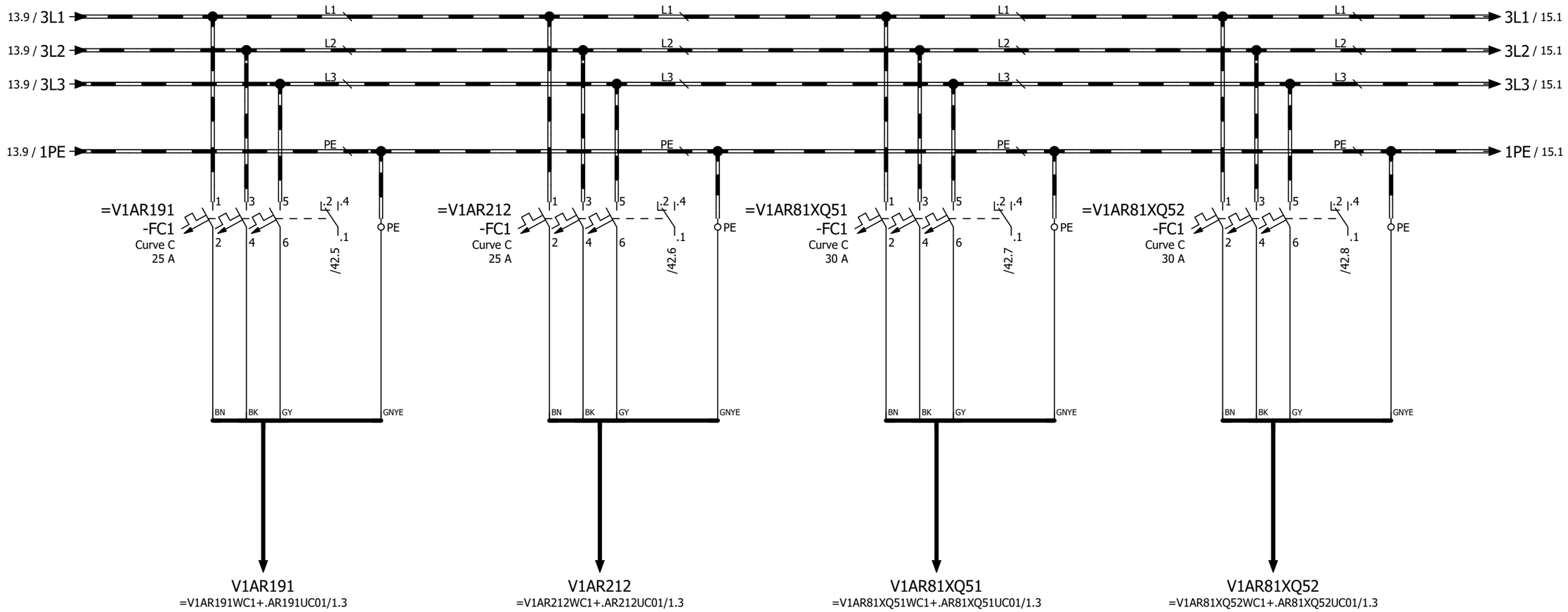

Power Distribution =V1AR191

Power Distribution =V1AR212

Power Distribution =V1AR81XQ51

Power Distribution =V1AR81XQ52

			Date	1/11/2023	Volvo Trucks North America		Valiant TMS	Power distribution 480 VAC	Drawing name: =2V10&EFS-EL	= V1WC2	
			Ed.	MKLEPADLO						+ V1UC11	
			Appr		P6700 Bodyside RH - Robot Cell 2V10				Document type: EFS	Project nr: 22-16150	Page 14
Modification	Date	Name	Original		Replacement of	Replaced by	Scale 1:1				1579

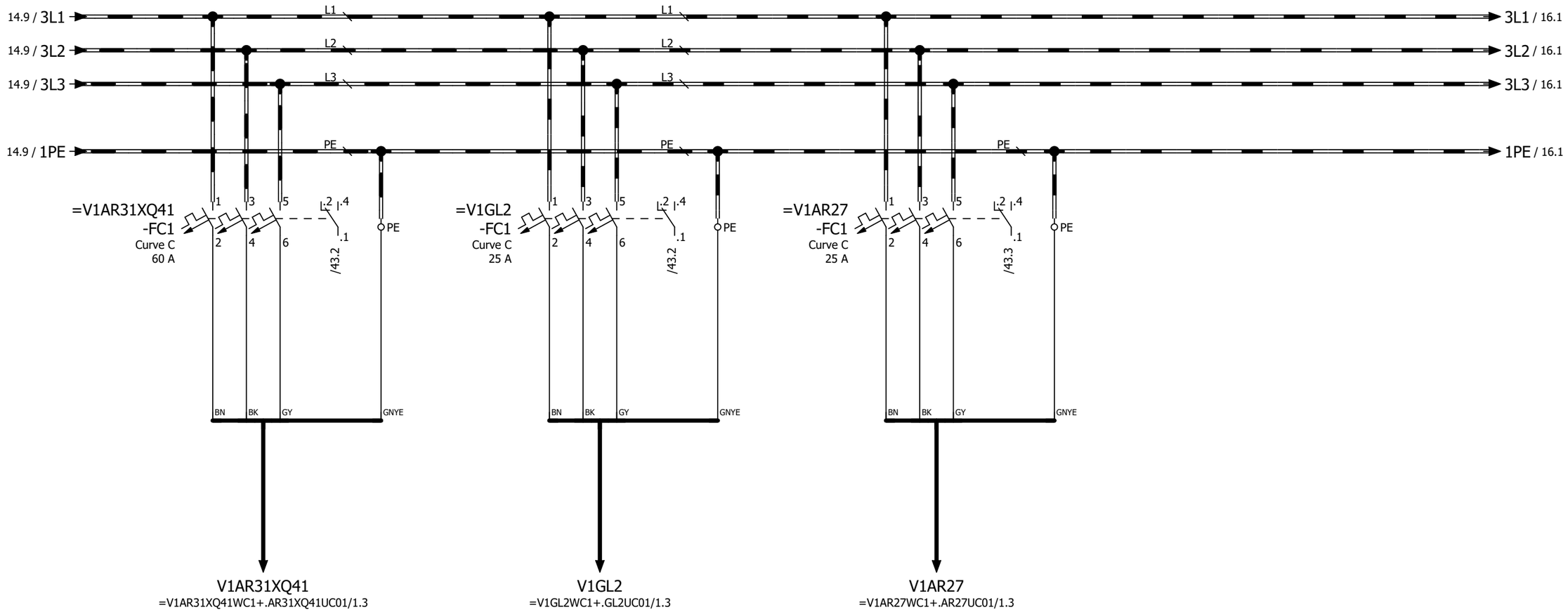

Power Distribution =V1AR31XQ41

Power Distribution =V1GL2

Power Distribution =V1AR27

			Date	1/11/2023	Volvo Trucks North America	Valiant TMS	Power distribution 480 VAC	Drawing name: =2V10&EFS-EL		= V1WC2	
			Ed.	MKLEPADLO						+ V1UC11	
			Appr		P6700 Bodyside RH - Robot Cell 2V10			Document type: EFS	Project nr: 22-16150	Page	15
Modification	Date	Name	Original		Replacement of / Replaced by	Scale 1:1					1579

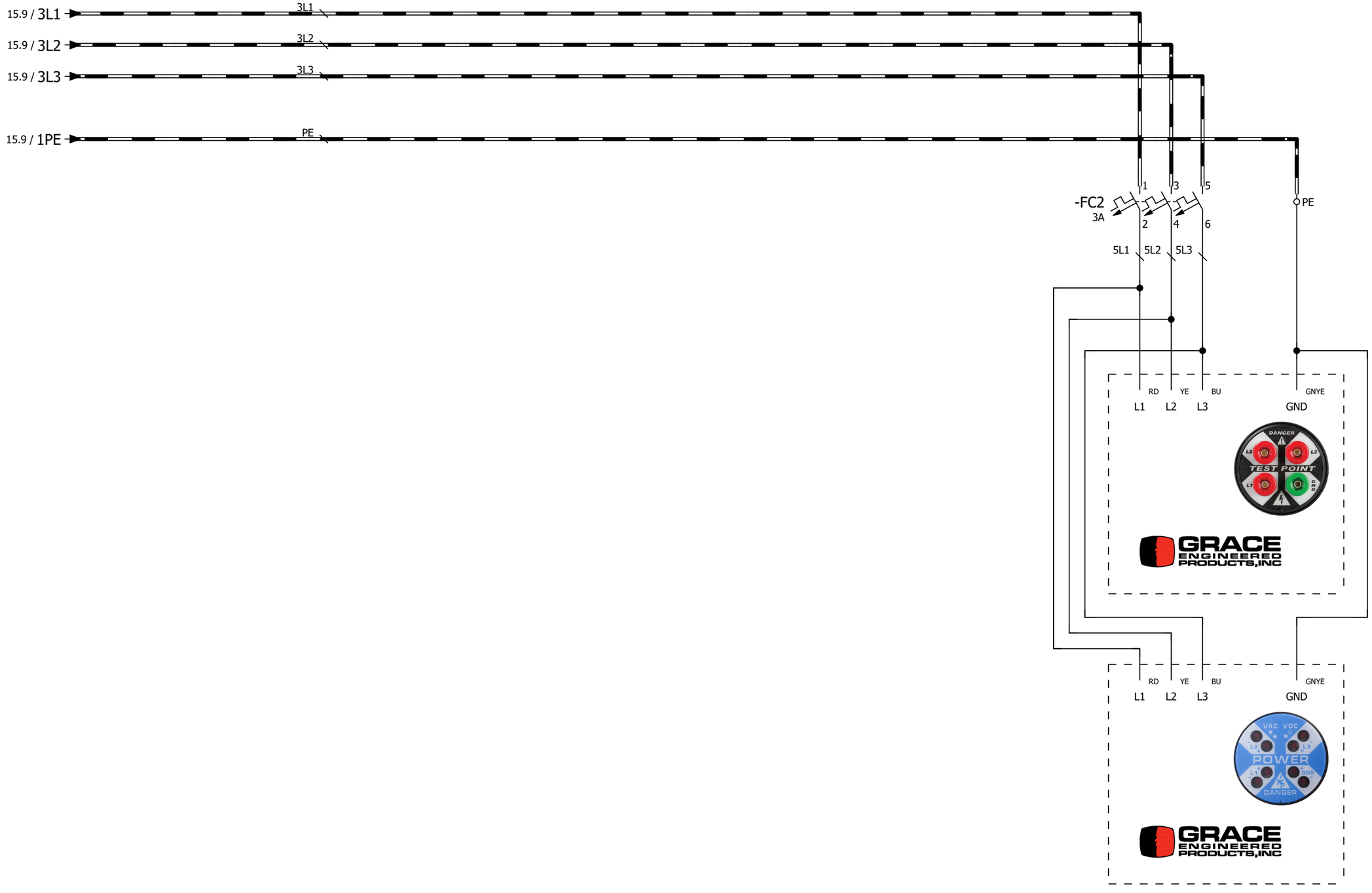

Voltage Test Port /
Indicator Light

15

41

			Date	1/11/2023	Volvo Trucks North America	Valiant TMS	Power distribution 480 VAC	Drawing name: =2V10&EFS-EL		= V1WC2	
			Ed.	MKLEPADLO						+ V1UC11	
			Appr		P6700 Bodyside RH - Robot Cell 2V10			Document type: EFS	Project nr: 22-16150		Page 16
Modification	Date	Name	Original		Replacement of	Replaced by	Scale 1:1				1579

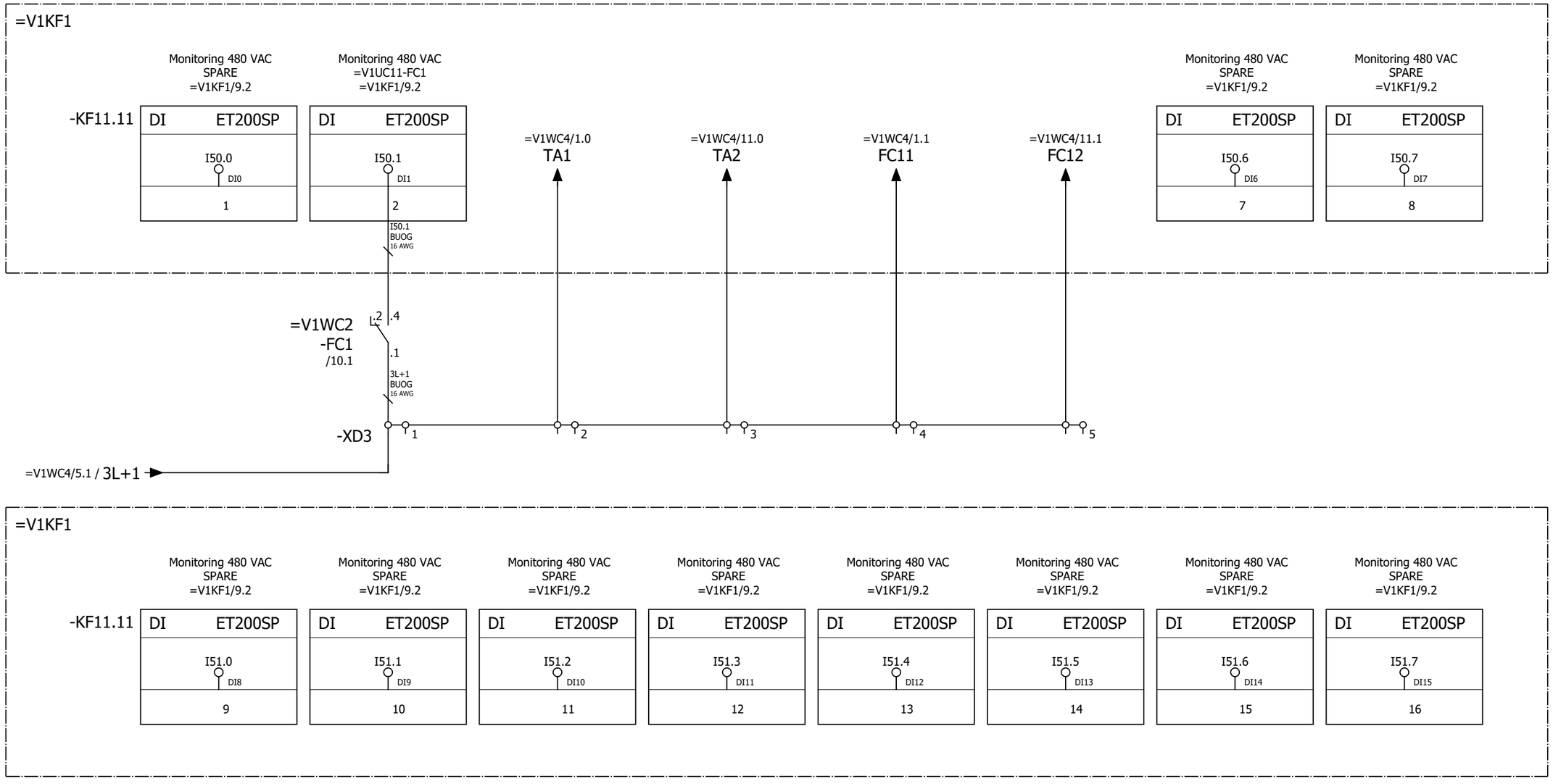

			Date	1/11/2023	Volvo Trucks North America	Valiant TMS	Power distribution 480 VAC monitoring	Drawing name: =2V10&EFS-EL	= V1WC2	
			Ed.	MKLEPADLO	P6700 Bodyside RH - Robot Cell 2V10				+ V1UC11	
			Appr					Document type: EFS	Project nr: 22-16150	Page 41
Modification	Date	Name	Original		Replacement of	Replaced by	Scale 1:1			1579

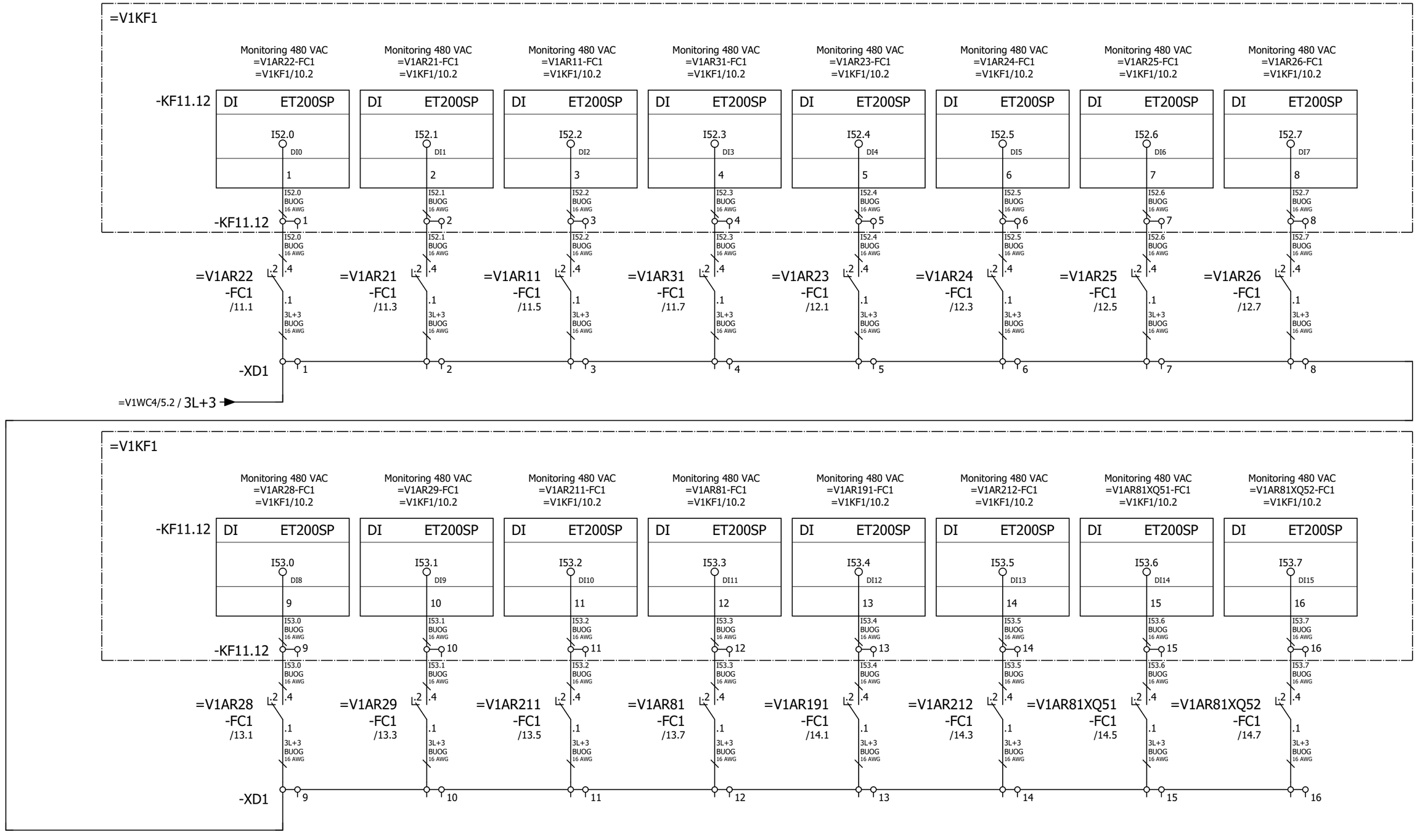

			Date	1/11/2023	Volvo Trucks North America	Valiant TMS	Power distribution 480 VAC monitoring	Drawing name: =2V10&EFS-EL		= V1WC2	
			Ed.	MKLEPADLO						+ V1UC11	
			Appr		P6700 Bodyside RH - Robot Cell 2V10			Document type: EFS	Project nr: 22-16150	Page	42
Modification	Date	Name	Original		Replacement of	Replaced by	Scale 1:1				1579

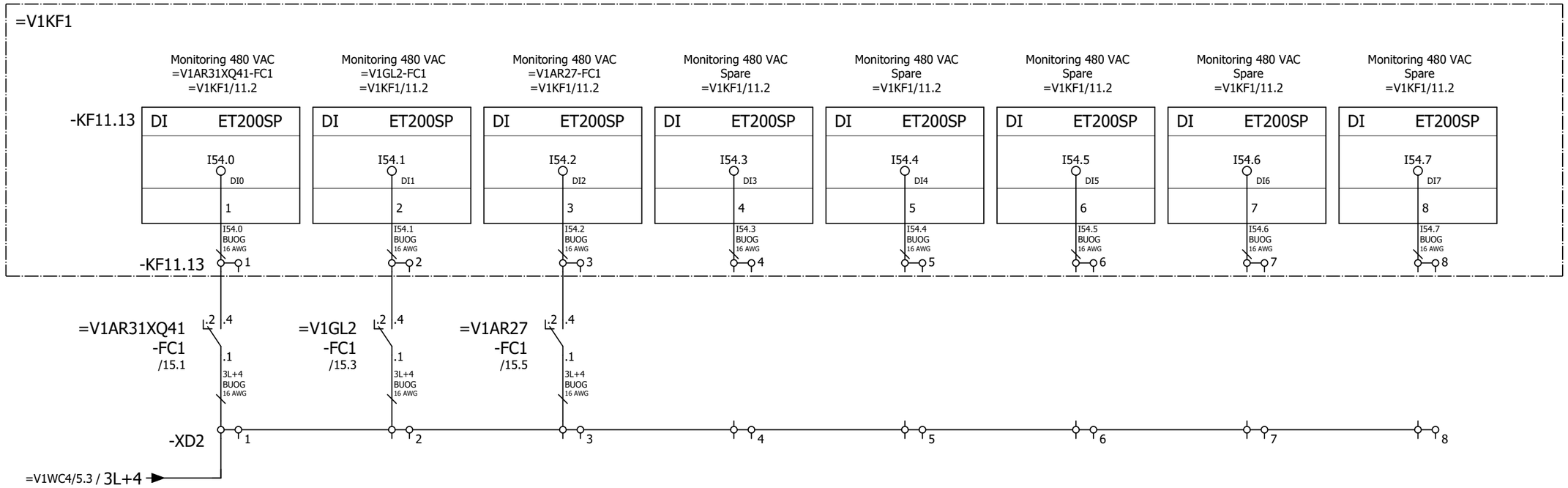

+.UC12/10

			Date	1/11/2023	Volvo Trucks North America	Valiant TMS	Power distribution 480 VAC monitoring	Drawing name: =2V10&EFS-EL		= V1WC2	
			Ed.	MKLEPADLO						+ V1UC11	
			Appr		P6700 Bodyside RH - Robot Cell 2V10			Document type: EFS	Project nr: 22-16150		Page 43
Modification	Date	Name	Original		Replacement of / Replaced by	Scale 1:1					1579

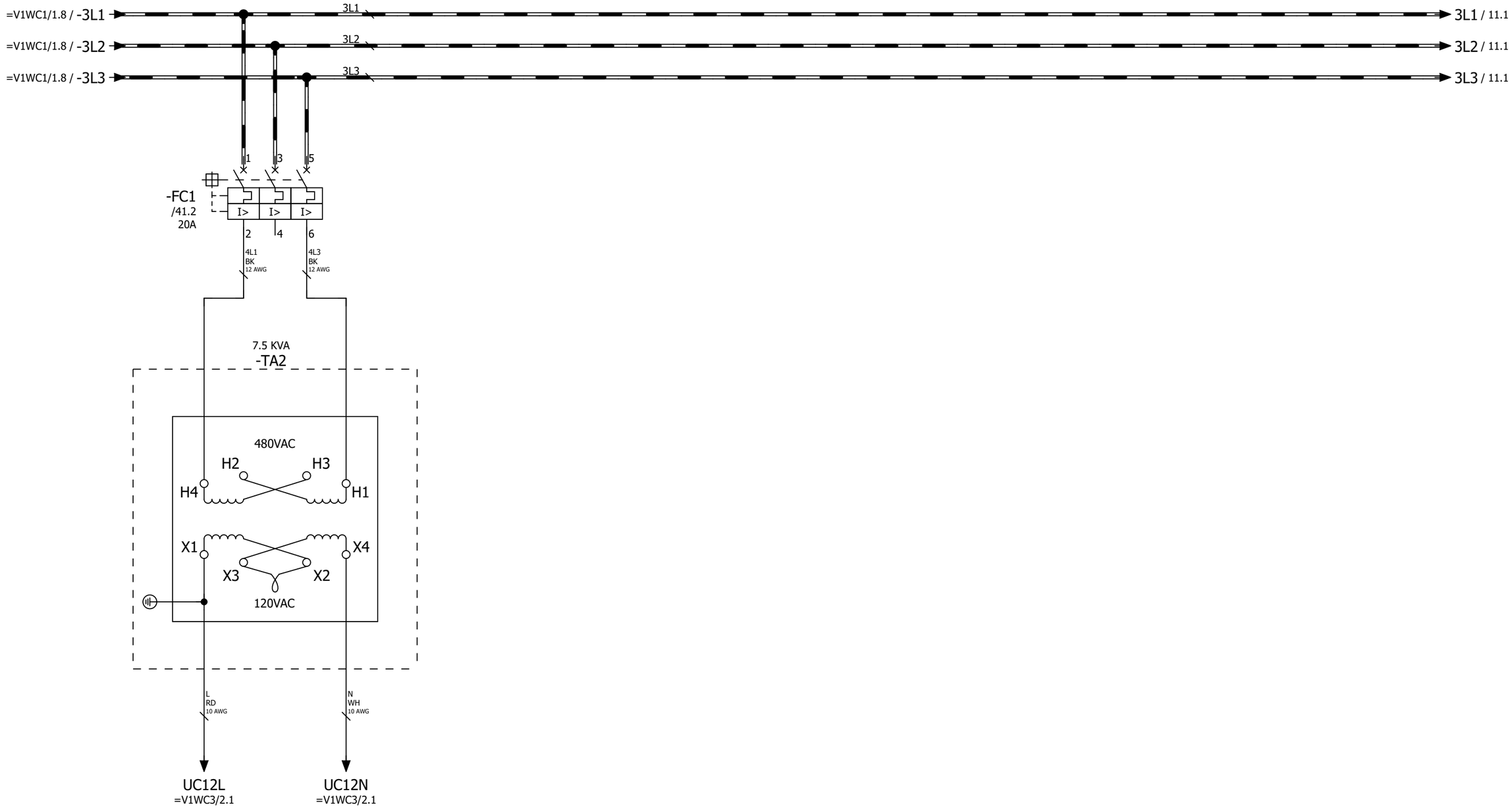

Power
Distribution
=V1UC12

+.UC11/43

11

			Date	1/11/2023	Volvo Trucks North America	Valiant TMS	Power distribution 480 VAC	Drawing name: =2V10&EFS-EL	= V1WC2	
			Ed.	MKLEPADLO					+ V1UC12	
			Appr		P6700 Bodyside RH - Robot Cell 2V10			Document type: EFS	Project nr: 22-16150	Page 10
Modification	Date	Name	Original		Replacement of / Replaced by	Scale 1:1				1579

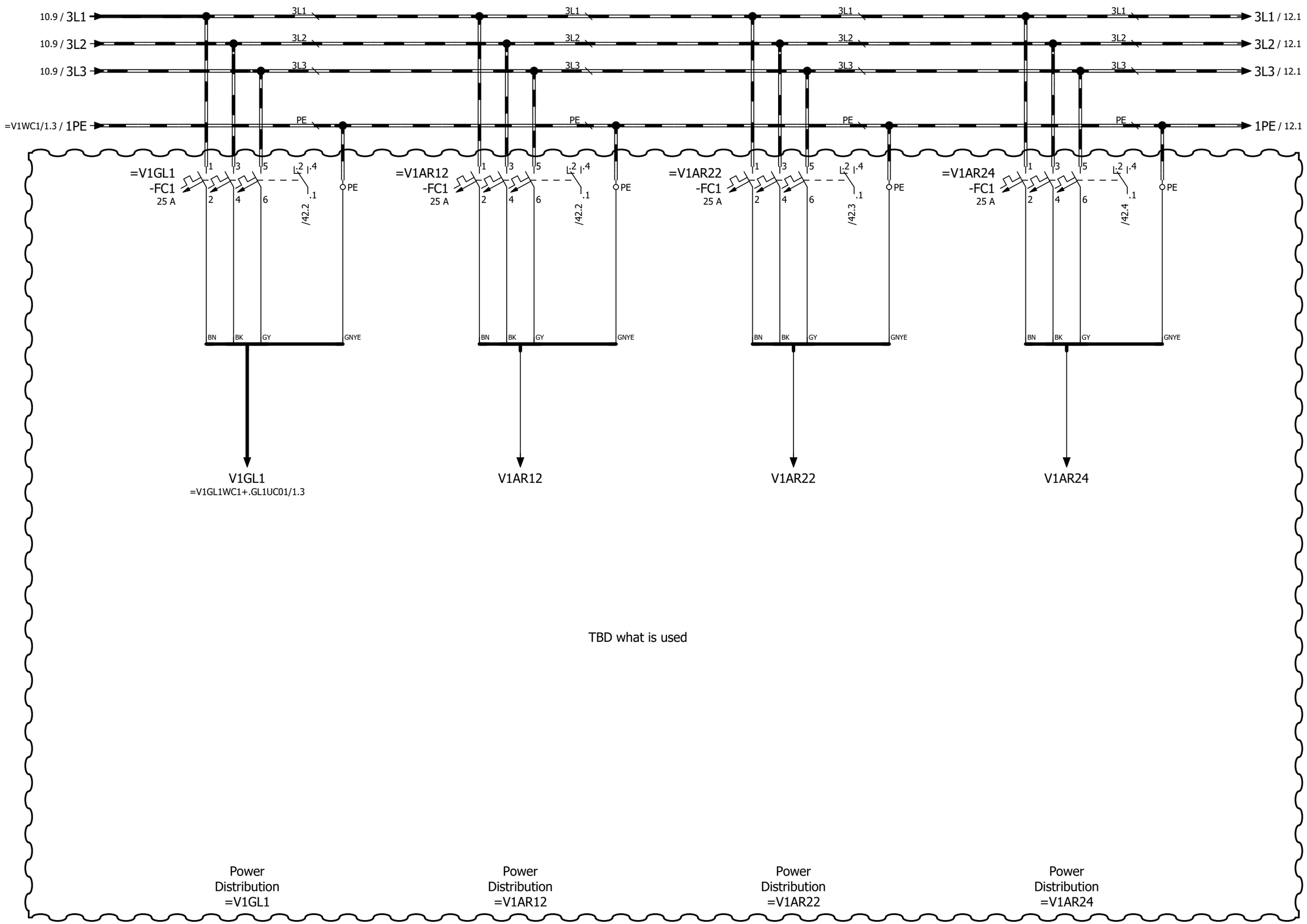

			Date	1/11/2023	Volvo Trucks North America	Valiant TMS	Power distribution 480 VAC	Drawing name: =2V10&EFS-EL		= V1WC2	
			Ed.	MKLEPADLO						+ V1UC12	
			Appr		P6700 Bodyside RH - Robot Cell 2V10			Document type: EFS	Project nr: 22-16150		Page 11
Modification	Date	Name	Original		Replacement of / Replaced by	Scale 1:1					1579

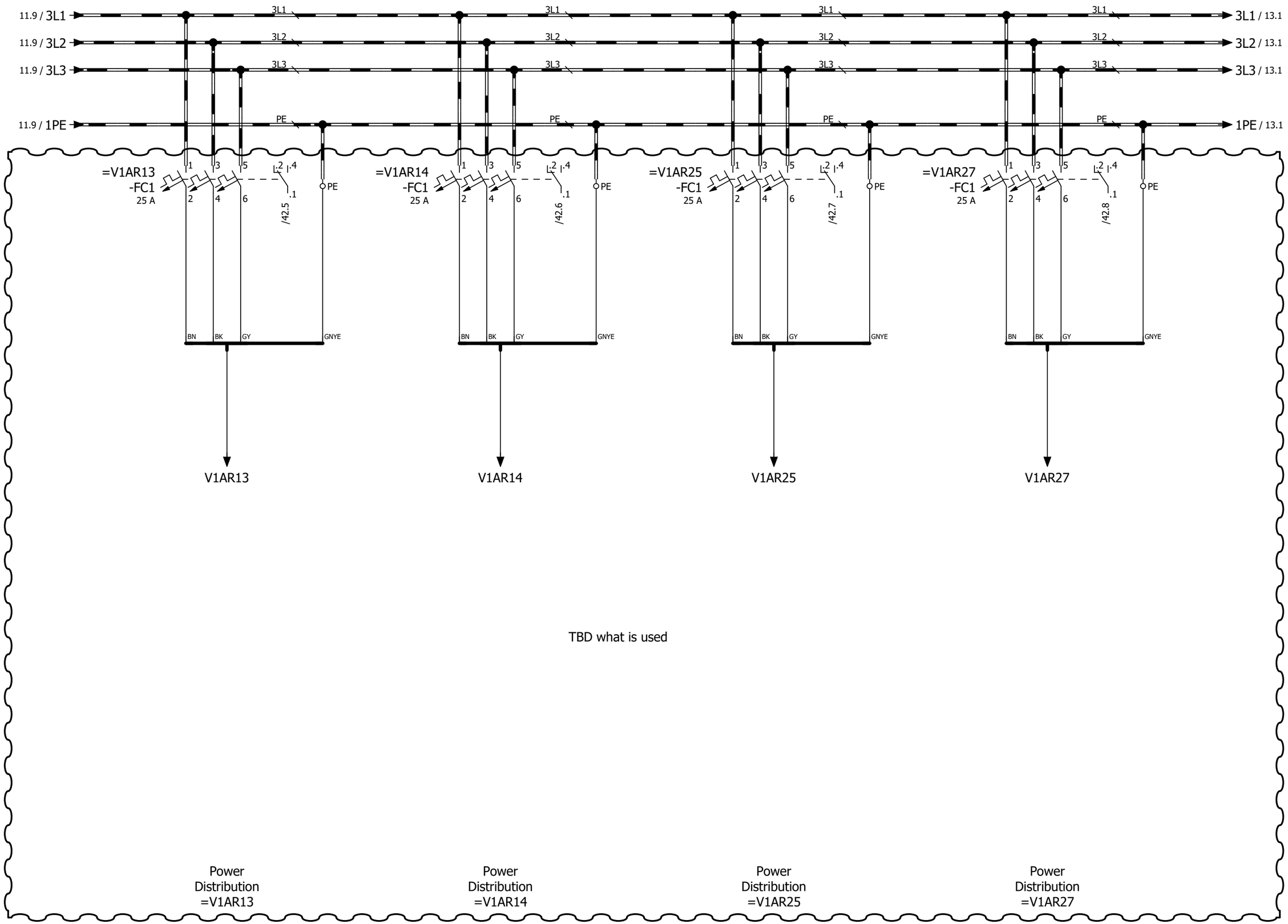

11

13

			Date	1/11/2023	Volvo Trucks North America	Valiant TMS	Power distribution 480 VAC	Drawing name: =2V10&EFS-EL		= V1WC2	
			Ed.	MKLEPADLO						+ V1UC12	
			Appr		P6700 Bodyside RH - Robot Cell 2V10			Document type: EFS	Project nr: 22-16150		Page 12
Modification	Date	Name	Original		Replacement of / Replaced by	Scale 1:1					1579

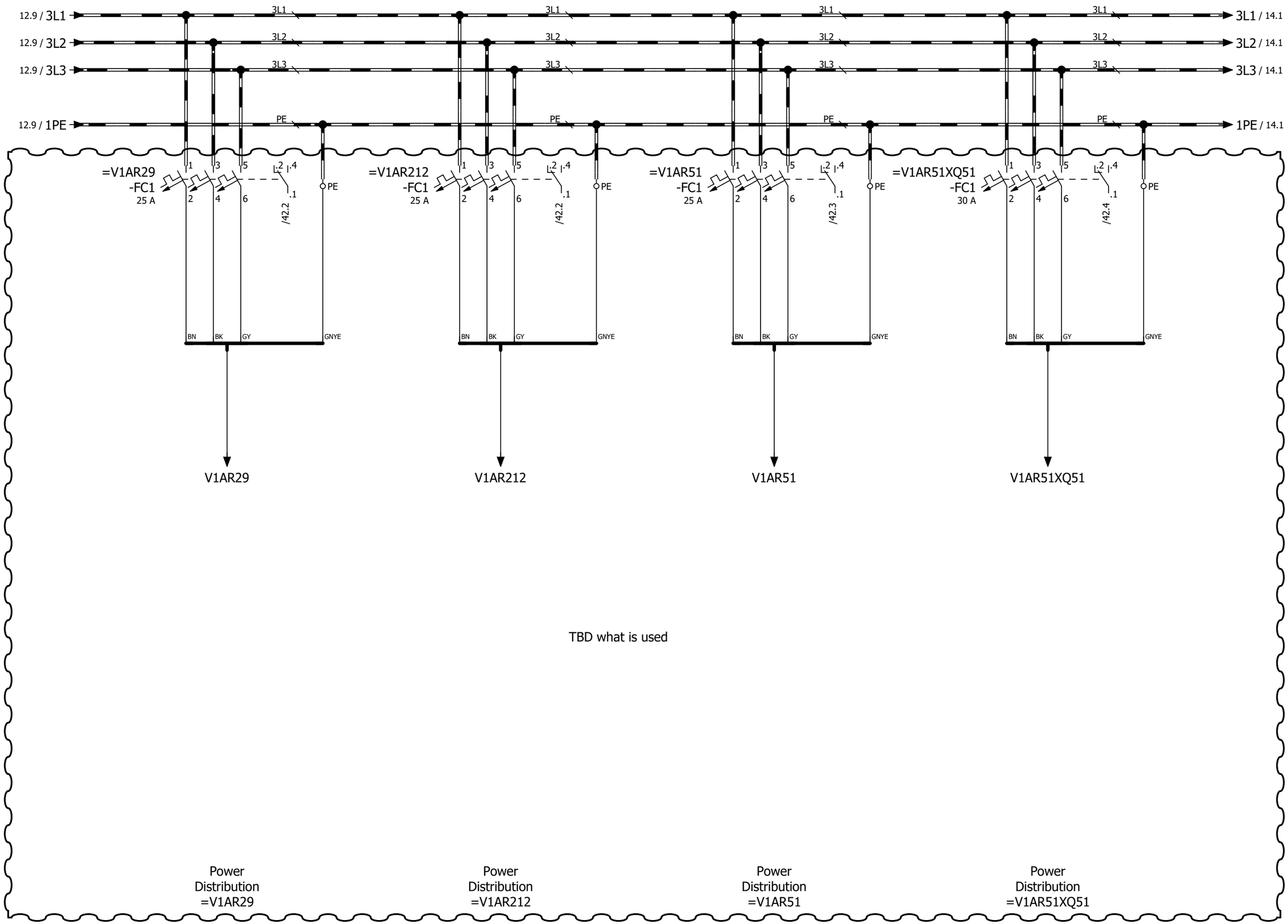

12 14

			Date	1/11/2023	Volvo Trucks North America	Valiant TMS	Power distribution 480 VAC	Drawing name: =2V10&EFS-EL		= V1WC2	
			Ed.	MKLEPADLO						+ V1UC12	
			Appr		P6700 Bodyside RH - Robot Cell 2V10			Document type: EFS	Project nr: 22-16150		Page 13
Modification	Date	Name	Original		Replacement of / Replaced by	Scale 1:1					1579

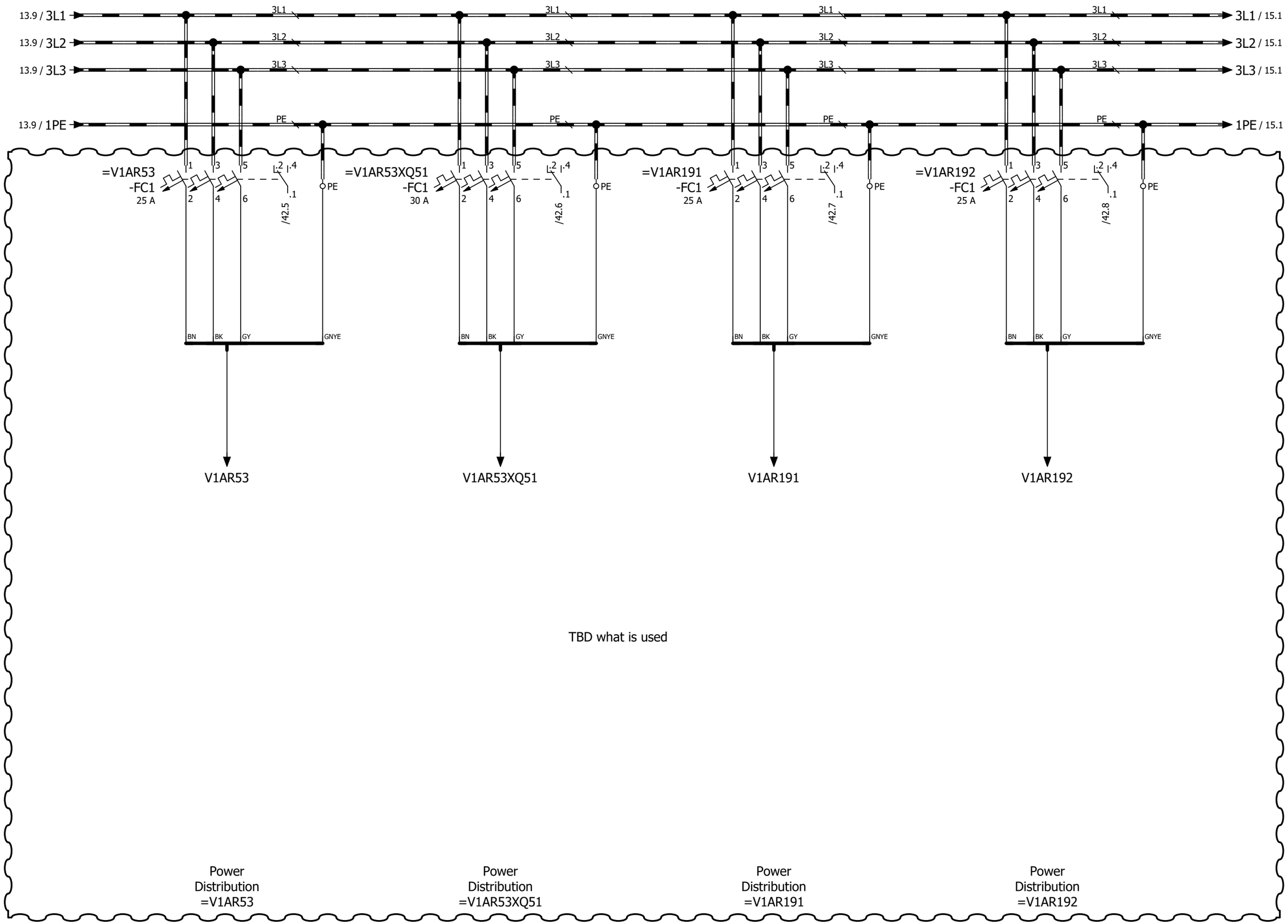

			Date	1/11/2023	Volvo Trucks North America		Valiant TMS	Power distribution 480 VAC	Drawing name: =2V10&EFS-EL	= V1WC2	
			Ed.	MKLEPADLO						+ V1UC12	
			Appr		P6700 Bodyside RH - Robot Cell 2V10				Document type: EFS	Project nr: 22-16150	Page 14
Modification	Date	Name	Original		Replacement of	Replaced by	Scale 1:1				1579

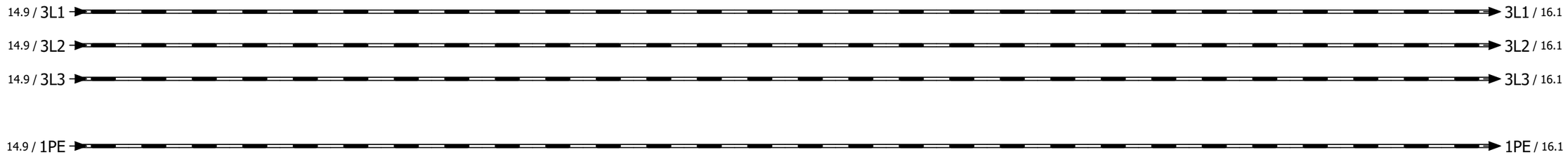

			Date	1/11/2023	Volvo Trucks North America	Valiant TMS	Power distribution 480 VAC	Drawing name: =2V10&EFS-EL		= V1WC2	
			Ed.	MKLEPADLO						+ V1UC12	
			Appr		P6700 Bodyside RH - Robot Cell 2V10			Document type: EFS	Project nr: 22-16150		Page 15 / 1579
Modification	Date	Name	Original		Replacement of / Replaced by	Scale 1:1					

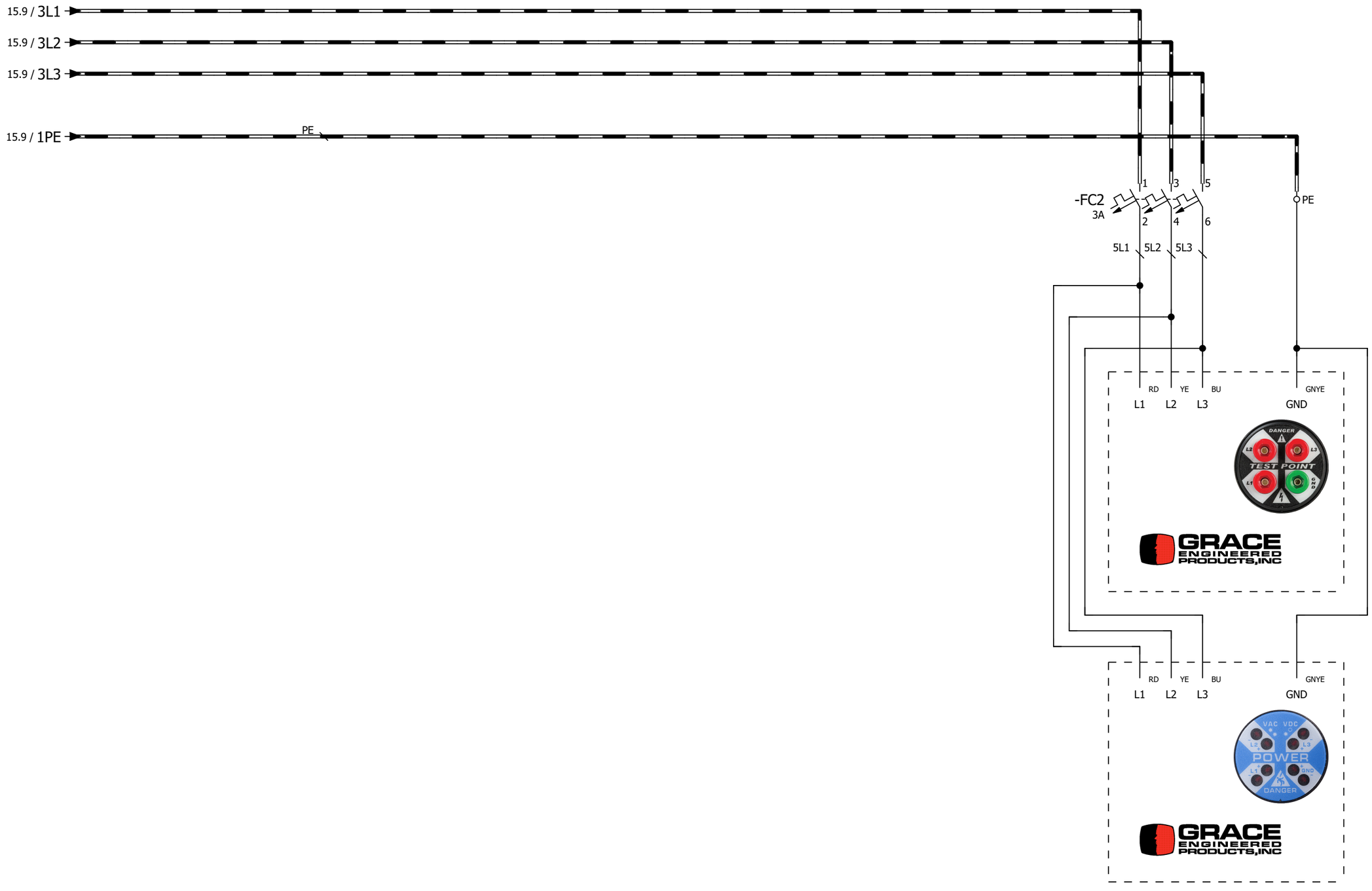

Voltage Test Port /
Indicator Light

			Date	1/11/2023	Volvo Trucks North America	Valiant TMS	Power distribution 480 VAC	Drawing name: =2V10&EFS-EL		= V1WC2	
			Ed.	MKLEPADLO						+ V1UC12	
			Appr		P6700 Bodyside RH - Robot Cell 2V10			Document type: EFS	Project nr: 22-16150		Page 16
Modification	Date	Name	Original		Replacement of	Replaced by	Scale 1:1				1579

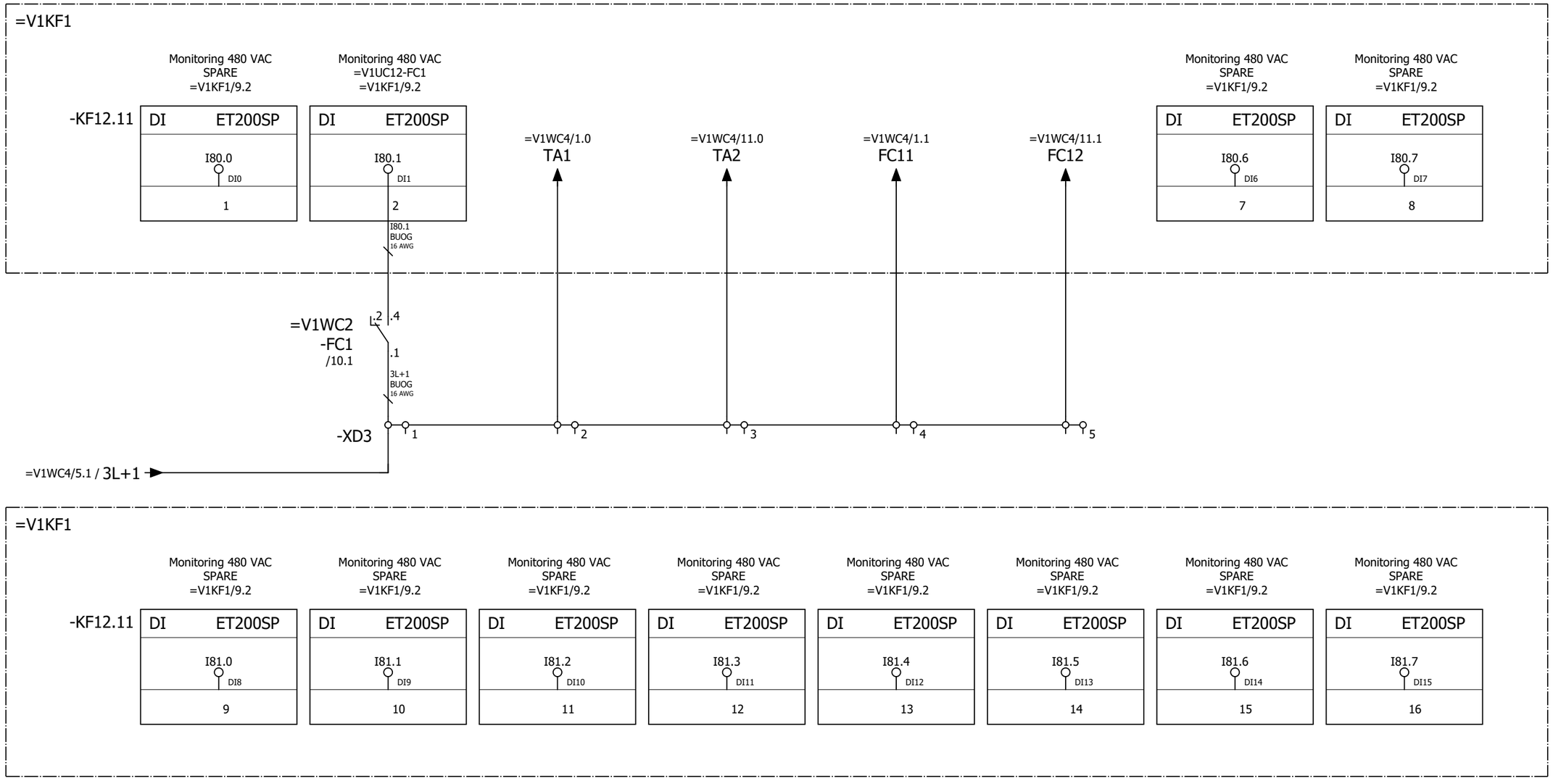

			Date	1/11/2023	Volvo Trucks North America	Valiant TMS	Power distribution 480 VAC monitoring	Drawing name: =2V10&EFS-EL	= V1WC2	
			Ed.	MKLEPADLO	P6700 Bodyside RH - Robot Cell 2V10				+ V1UC12	
			Appr					Document type: EFS	Project nr: 22-16150	Page 41
Modification	Date	Name	Original		Replacement of	Replaced by	Scale 1:1			1579

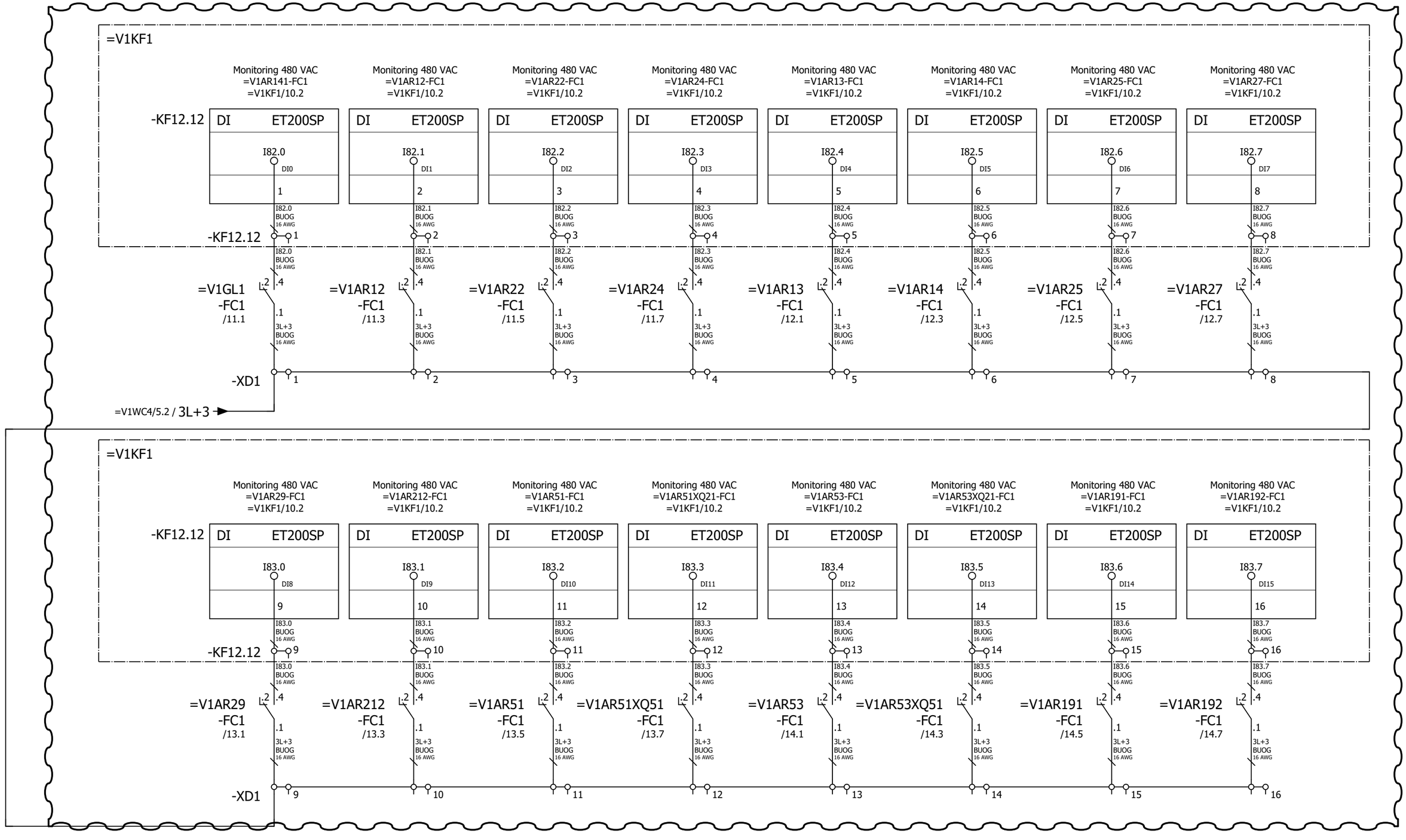

TBD what is used

			Date	1/11/2023	Volvo Trucks North America	Valiant TMS	Power distribution 480 VAC monitoring	Drawing name: =2V10&EFS-EL		= V1WC2	
			Ed.	MKLEPADLO	P6700 Bodyside RH - Robot Cell 2V10					+ V1UC12	
			Appr					Document type: EFS	Project nr: 22-16150	Page	42
Modification	Date	Name	Original		Replacement of	Replaced by	Scale 1:1				1579

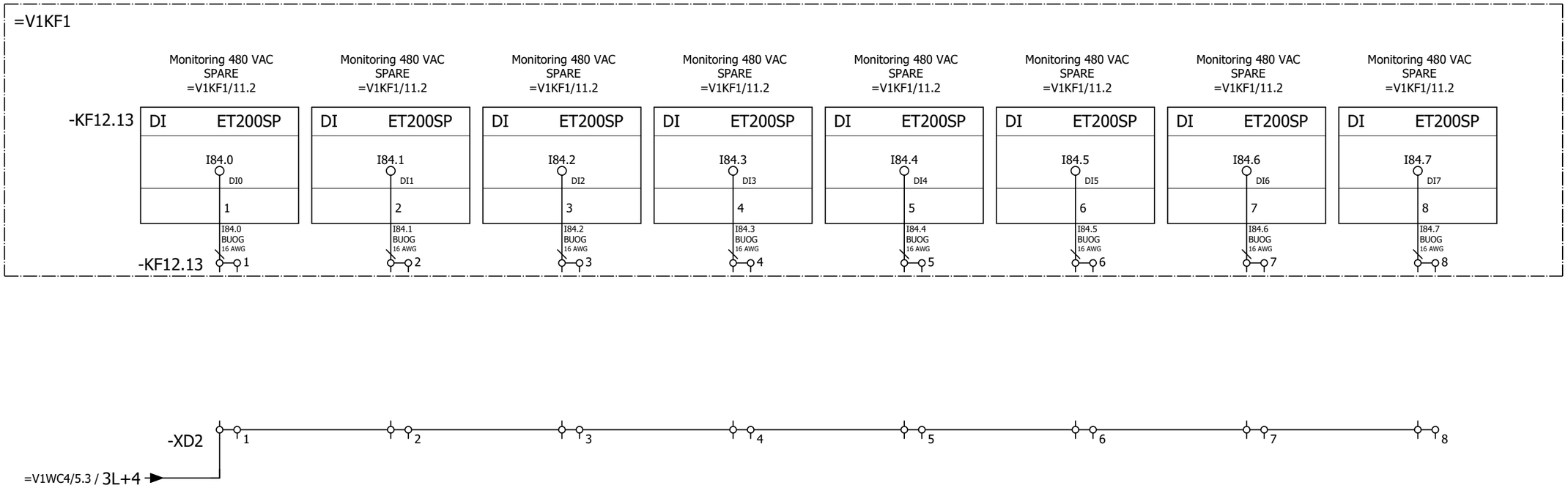

+.UC161/10

			Date	1/11/2023	Volvo Trucks North America	Valiant TMS	Power distribution 480 VAC monitoring	Drawing name: =2V10&EFS-EL		= V1WC2	
			Ed.	MKLEPADLO						+ V1UC12	
			Appr		P6700 Bodyside RH - Robot Cell 2V10			Document type: EFS	Project nr: 22-16150		Page 43
Modification	Date	Name	Original		Replacement of / Replaced by	Scale 1:1					1579

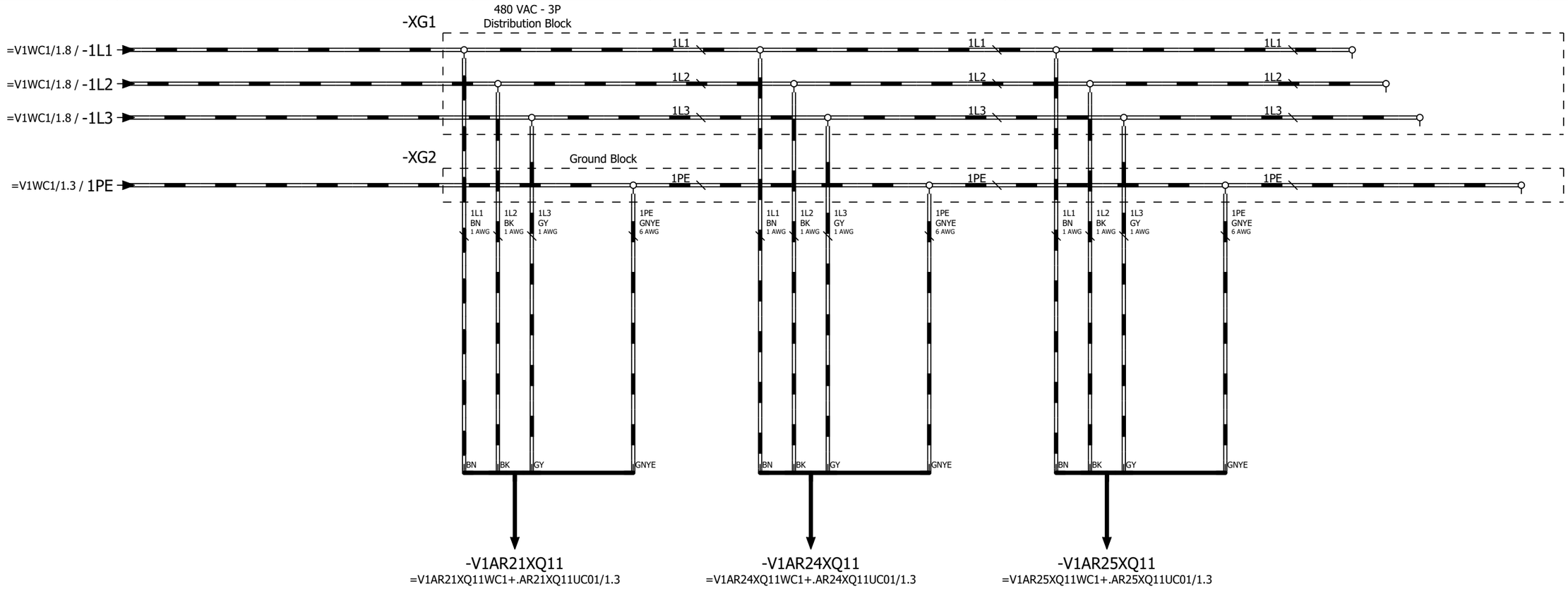

Weld Power Distribution 480 VAC AR21 (Weld Timer) (S010R01)

Weld Power Distribution 480 VAC AR24 (Weld Timer) (S020R01)

Weld Power Distribution 480 VAC AR25 (Weld Timer) (S020R03)

+.UC12/43

+.UC162/10

			Date	1/11/2023	Volvo Trucks North America	Valiant TMS	Weld power distribution 480 VAC	Drawing name: =2V10&EFS-EL		= V1WC2	
			Ed.	MKLEPADLO						+ V1UC161	
			Appr		P6700 Bodyside RH - Robot Cell 2V10			Document type: EFS	Project nr: 22-16150	Page	10
Modification	Date	Name	Original		Replacement of / Replaced by	Scale 1:1					1579

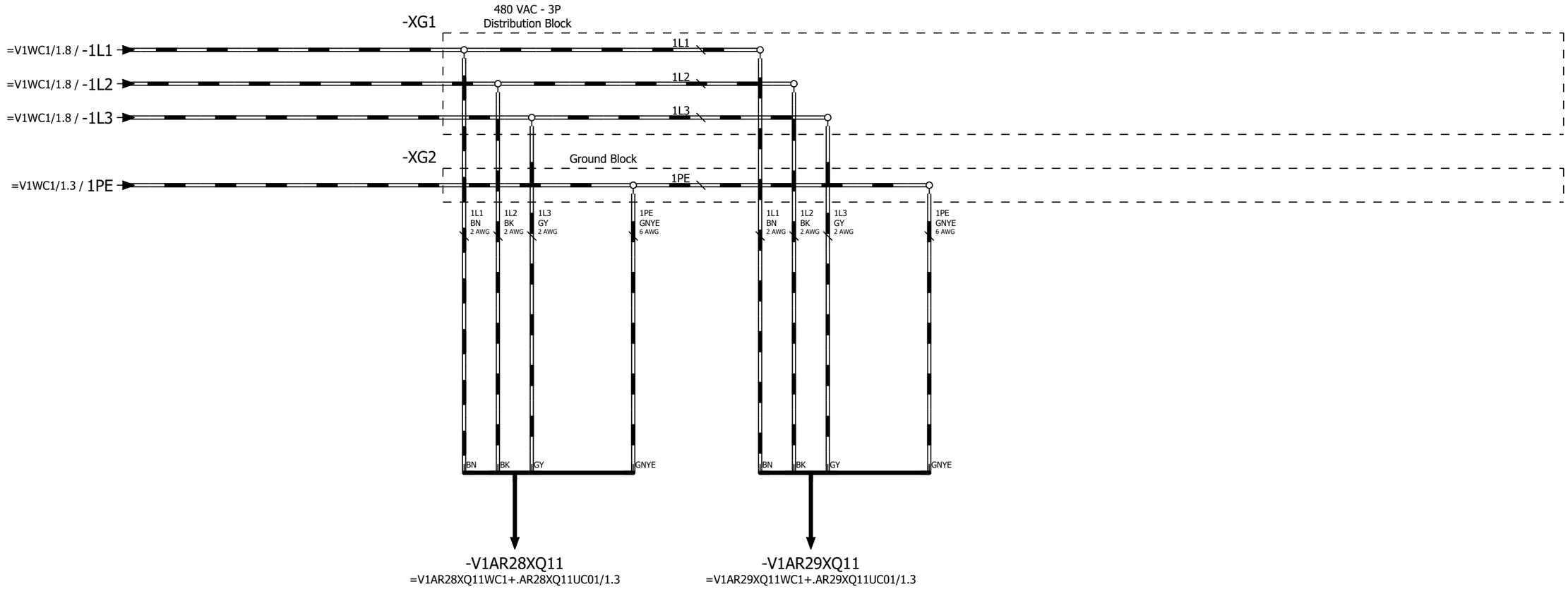

Weld Power
Distribution
480 VAC
AR28 (Weld Timer)
(S040R01)

Weld Power
Distribution
480 VAC
AR29 (Weld Timer)
(S040R03)

+.UC161/10

+.UC163/10

			Date	1/11/2023	Volvo Trucks North America		Valiant TMS	Weld power distribution 480 VAC	Drawing name: =2V10&EFS-EL		= V1WC2
			Ed.	MKLEPADLO							+ V1UC162
			Appr		P6700 Bodyside RH - Robot Cell 2V10				Document type: EFS	Project nr: 22-16150	Page 10 / 1579
Modification	Date	Name	Original		Replacement of	Replaced by	Scale 1:1				

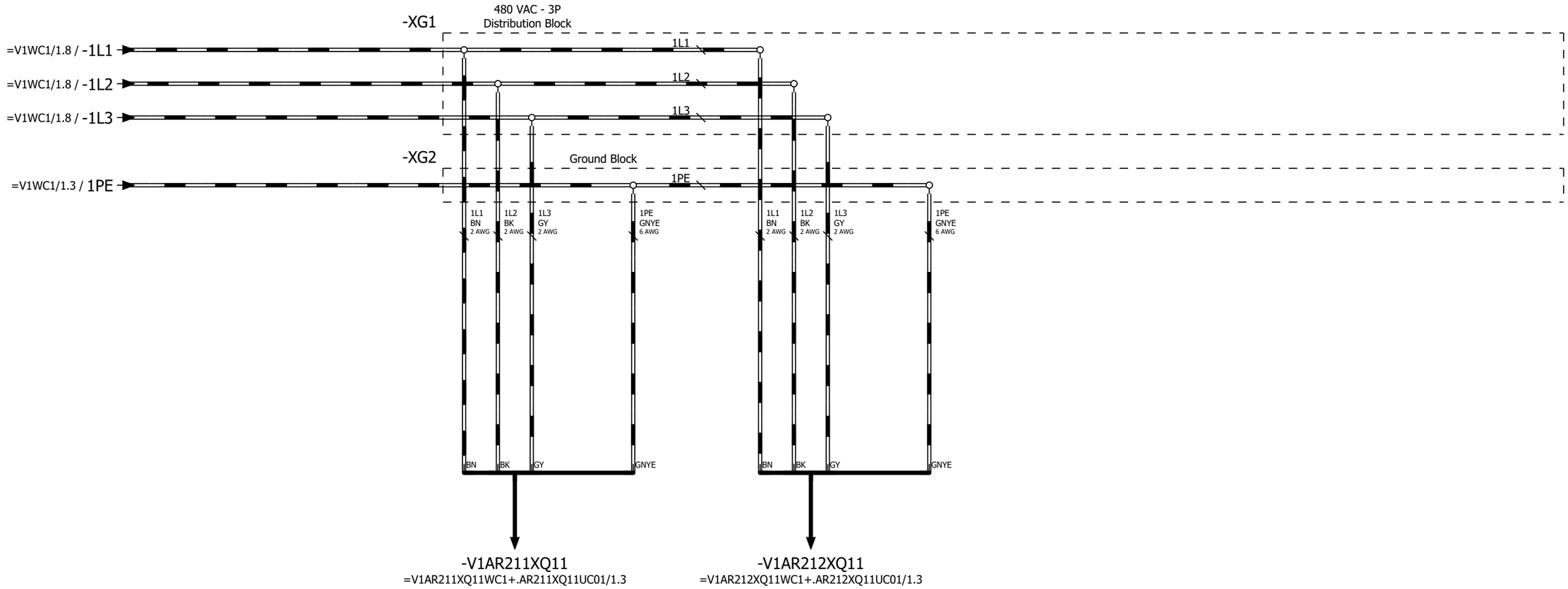

Weld Power
Distribution
480 VAC
AR211 (Weld Timer)
(S050R01)

Weld Power
Distribution
480 VAC
AR212 (Weld Timer)
(S050R03)

+.UC162/10

+.UC164/10

			Date	1/11/2023	Volvo Trucks North America	Valiant TMS	Weld power distribution 480 VAC	Drawing name: =2V10&EFS-EL	= V1WC2	
			Ed.	MKLEPADLO					+ V1UC163	
			Appr		P6700 Bodyside RH - Robot Cell 2V10			Document type: EFS	Project nr: 22-16150	Page 10 / 1579
Modification	Date	Name	Original		Replacement of / Replaced by	Scale 1:1				

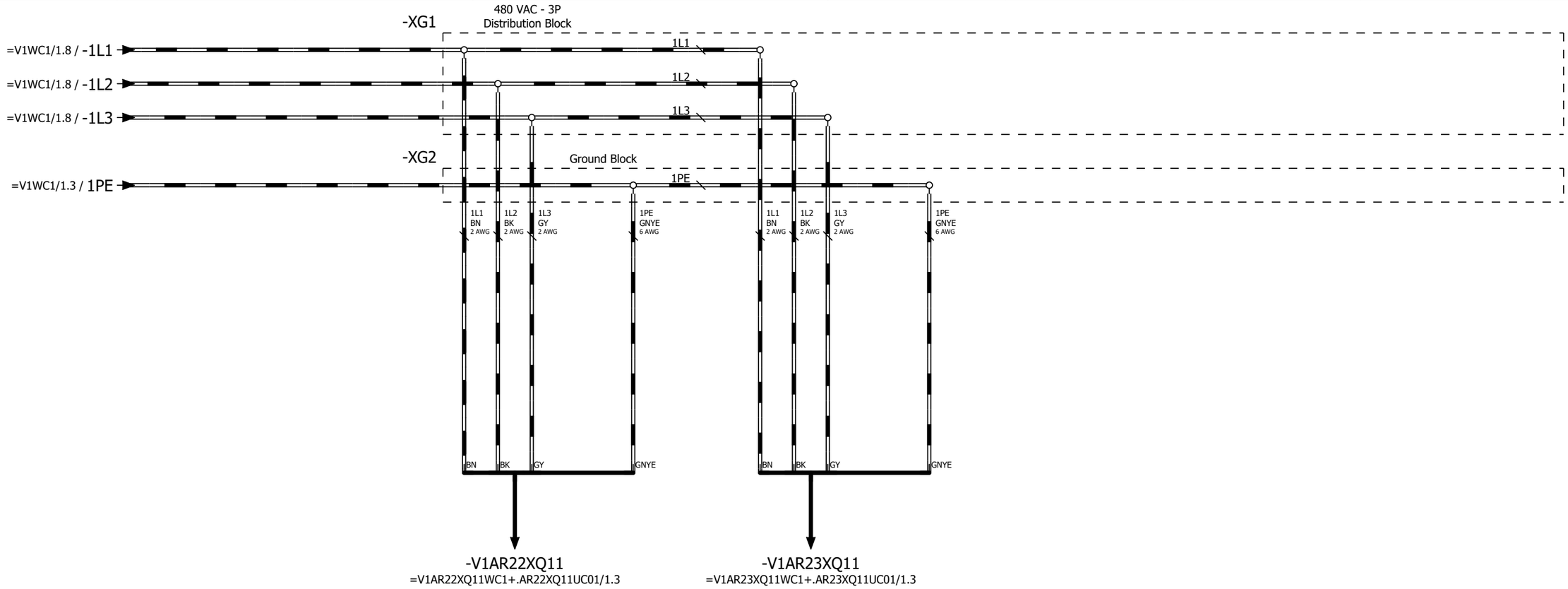

Weld Power
Distribution
480 VAC
AR22 (Weld Timer)
(S010R02)

Weld Power
Distribution
480 VAC
AR23 (Weld Timer)
(S010R04)

+.UC163/10

+.UC165/10

			Date	1/11/2023	Volvo Trucks North America	Valiant TMS	Weld power distribution 480 VAC	Drawing name: =2V10&EFS-EL		= V1WC2	
			Ed.	MKLEPADLO						+ V1UC164	
			Appr		P6700 Bodyside RH - Robot Cell 2V10			Document type: EFS	Project nr: 22-16150		Page 10
Modification	Date	Name	Original		Replacement of / Replaced by	Scale 1:1					1579

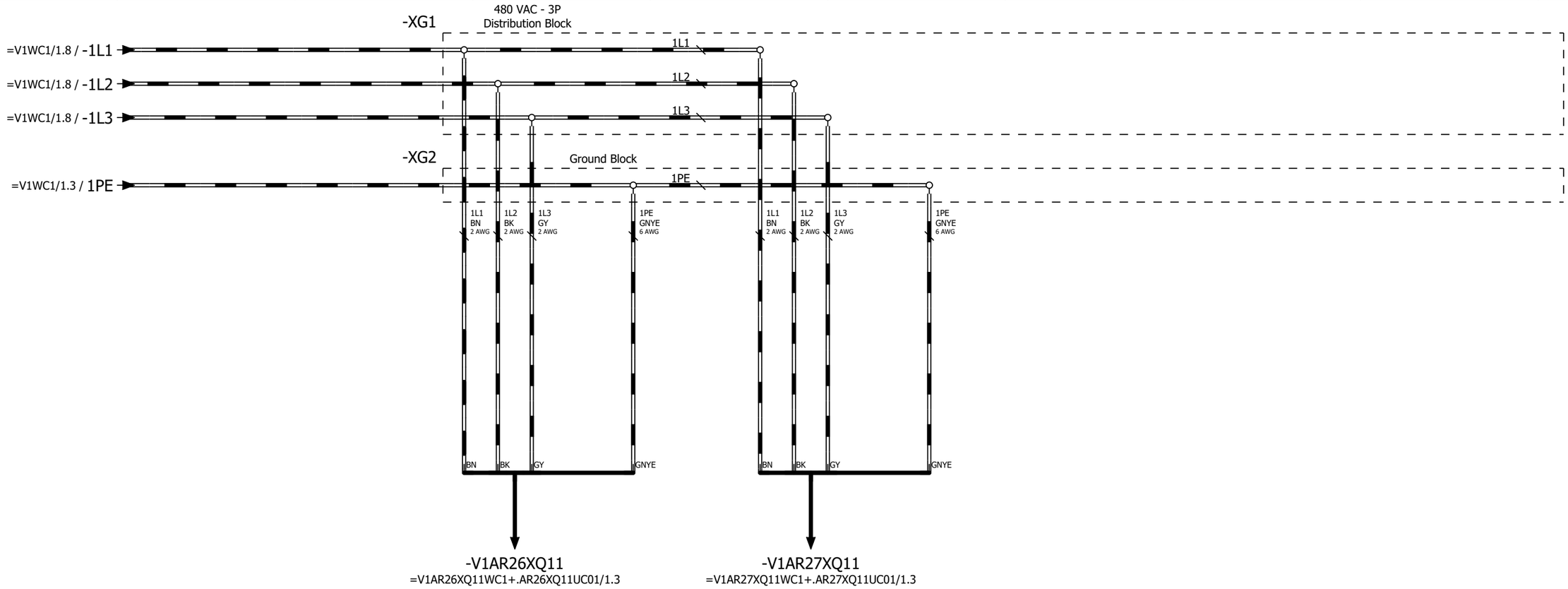

Weld Power
Distribution
480 VAC
AR26 (Weld Timer)
(S030R04)

Weld Power
Distribution
480 VAC
AR27 (Weld Timer)
(S030R02)

+.UC164/10

=V1WC3+.UC11/1

			Date	1/11/2023	Volvo Trucks North America	Valiant TMS	Weld power distribution 480 VAC	Drawing name: =2V10&EFS-EL		= V1WC2	
			Ed.	MKLEPADLO						+ V1UC165	
			Appr		P6700 Bodyside RH - Robot Cell 2V10			Document type: EFS	Project nr: 22-16150		Page 10
Modification	Date	Name	Original		Replacement of / Replaced by	Scale 1:1					1579

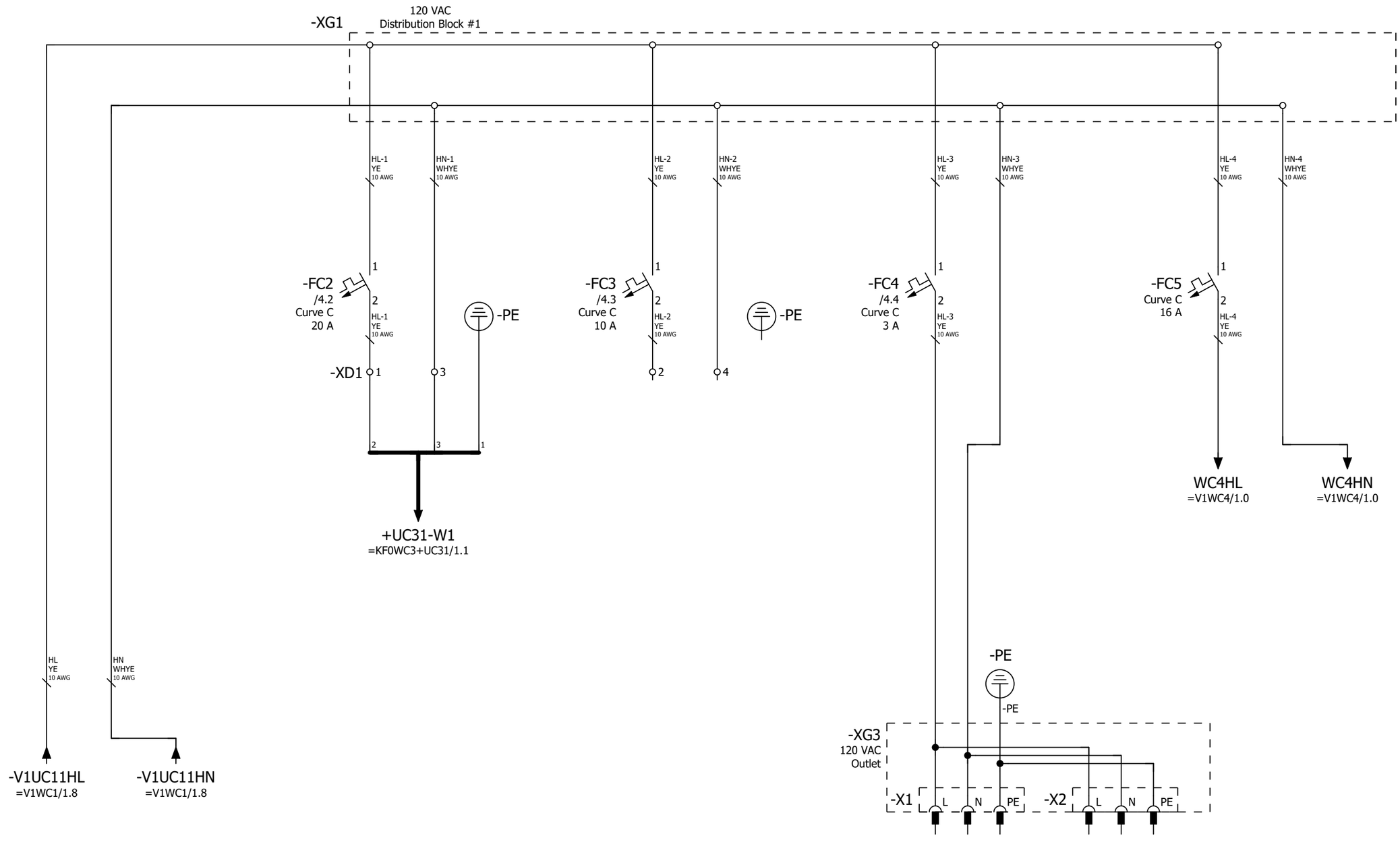

Power Distribution 120 VAC UC31 (MOP)

Power Distribution 120 VAC (SPARE)

Power Distribution 120 VAC Programming Port

Power Distribution 120 VAC To 24VDC Power Supply

=V1WC2+.UC165/10

2

			Date	1/11/2023	Volvo Trucks North America		Valiant TMS	Power Distribution 120 VAC (Above Disconnect)	Drawing name: =2V10&EFS-EL	= V1WC3	
			Ed.	MKLEPADLO						+ V1UC11	
			Appr		P6700 Bodyside RH - Robot Cell 2V10				Document type: EFS	Project nr: 22-16150	Page 1
Modification	Date	Name	Original		Replacement of	Replaced by	Scale 1:1				1579

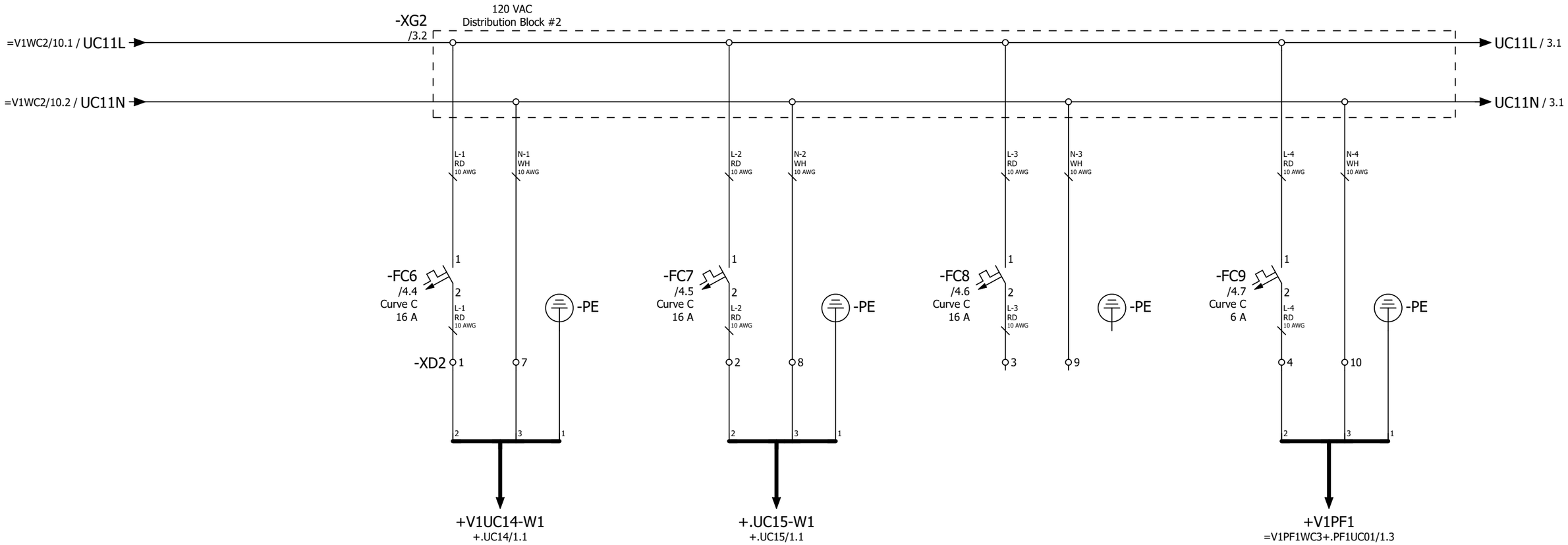

1	2	3	4	5	6	7	8	3
	Power Distribution 120 VAC V1UC14 (RIO1)	Power Distribution 120 VAC UC15 (RIO2)	Power Distribution 120 VAC (SPARE)	Power Distribution 120 VAC V1PF1 (Date Scribe)				

			Date	1/11/2023	Volvo Trucks North America	Valiant TMS	Power Distribution 120 VAC (Below Disconnect)	Drawing name: =2V10&EFS-EL		= V1WC3	
			Ed.	MKLEPADLO						+ V1UC11	
			Appr		P6700 Bodyside RH - Robot Cell 2V10			Document type: EFS	Project nr: 22-16150		Page 2
Modification	Date	Name	Original		Replacement of / Replaced by	Scale 1:1					1579

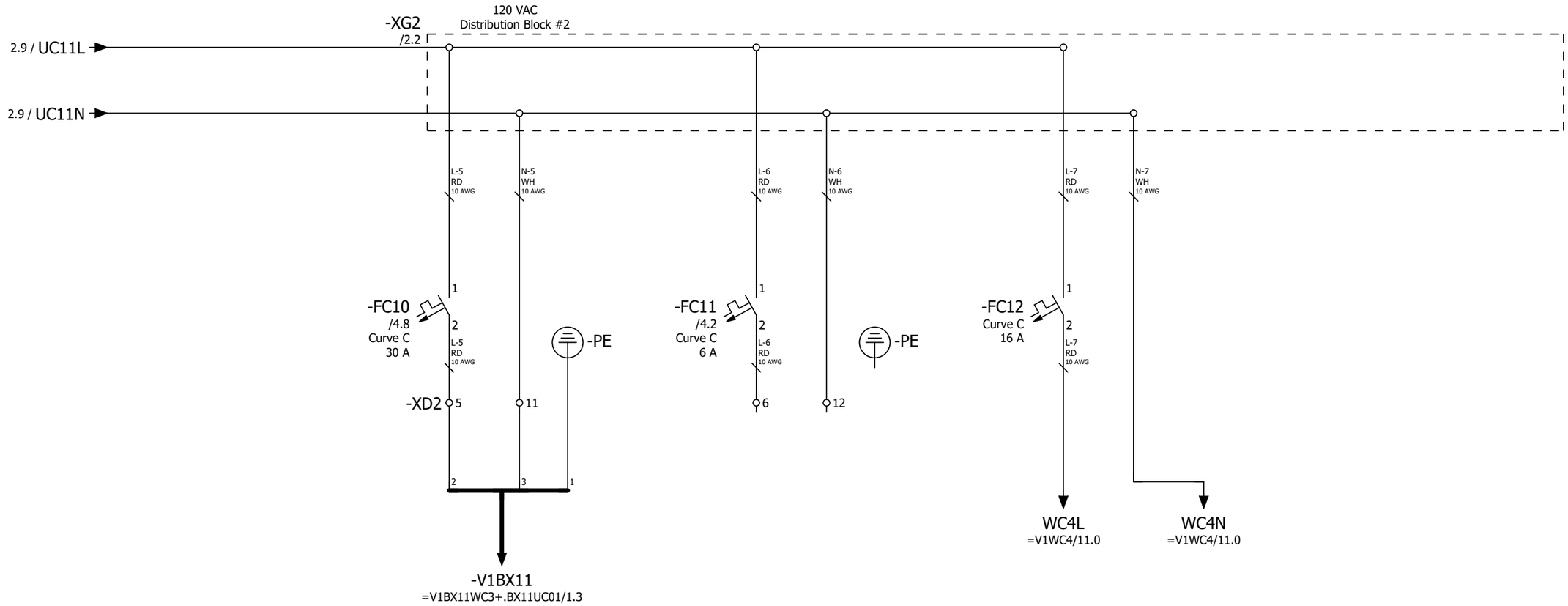

2

Power
Distribution
120 VAC
BX11 (AR191 Vision System)

Power
Distribution
120 VAC
(SPARE)

Power
Distribution
120 VAC
To 24VDC Power Supply

4

			Date	1/11/2023	Volvo Trucks North America	Valiant TMS	Power Distribution 120 VAC (Below Disconnect)	Drawing name: =2V10&EFS-EL		= V1WC3	
			Ed.	MKLEPADLO						+ V1UC11	
			Appr		P6700 Bodyside RH - Robot Cell 2V10			Document type: EFS	Project nr: 22-16150		Page 3
Modification	Date	Name	Original		Replacement of / Replaced by	Scale 1:1					1579

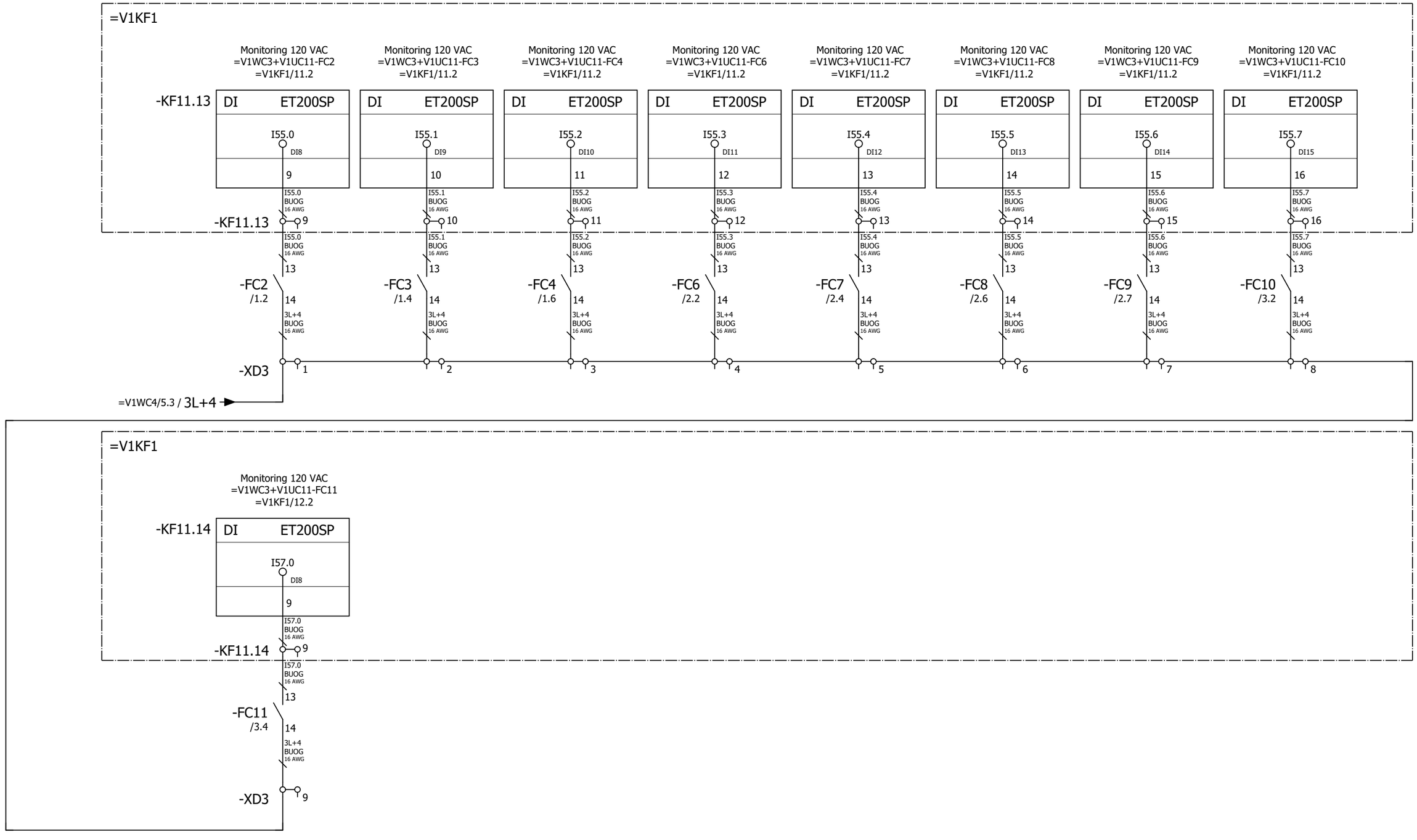

3

+.UC12/1

			Date	1/11/2023	Volvo Trucks North America	Valiant TMS	Power distribution 120 VAC monitoring (Above Disconnect)	Drawing name: =2V10&EFS-EL		= V1WC3	
			Ed.	MKLEPADLO						+ V1UC11	
			Appr		P6700 Bodyside RH - Robot Cell 2V10			Document type: EFS	Project nr: 22-16150		Page 4
Modification	Date	Name	Original		Replacement of	Replaced by	Scale 1:1				1579

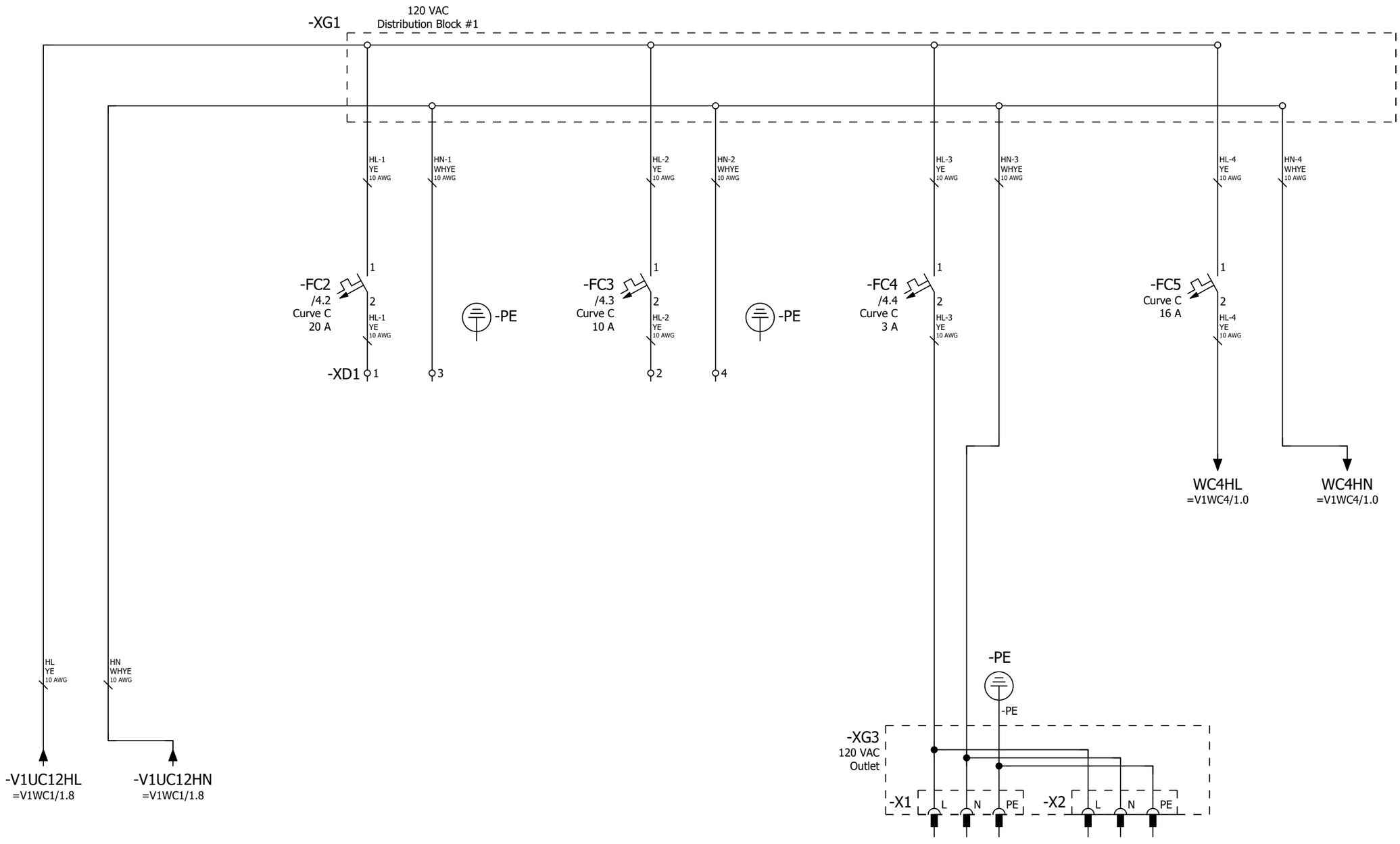

Power Distribution 120 VAC (SPARE)

Power Distribution 120 VAC (SPARE)

Power Distribution 120 VAC Programming Port

Power Distribution 120 VAC To 24VDC Power Supply

+.UC11/4

2

			Date	1/11/2023	Volvo Trucks North America	Valiant TMS	Power Distribution 120 VAC (Above Disconnect)	Drawing name: =2V10&EFS-EL	= V1WC3	
			Ed.	MKLEPADLO					+ V1UC12	
			Appr		P6700 Bodyside RH - Robot Cell 2V10			Document type: EFS	Project nr: 22-16150	Page 1 / 1579
Modification	Date	Name	Original		Replacement of / Replaced by	Scale 1:1				

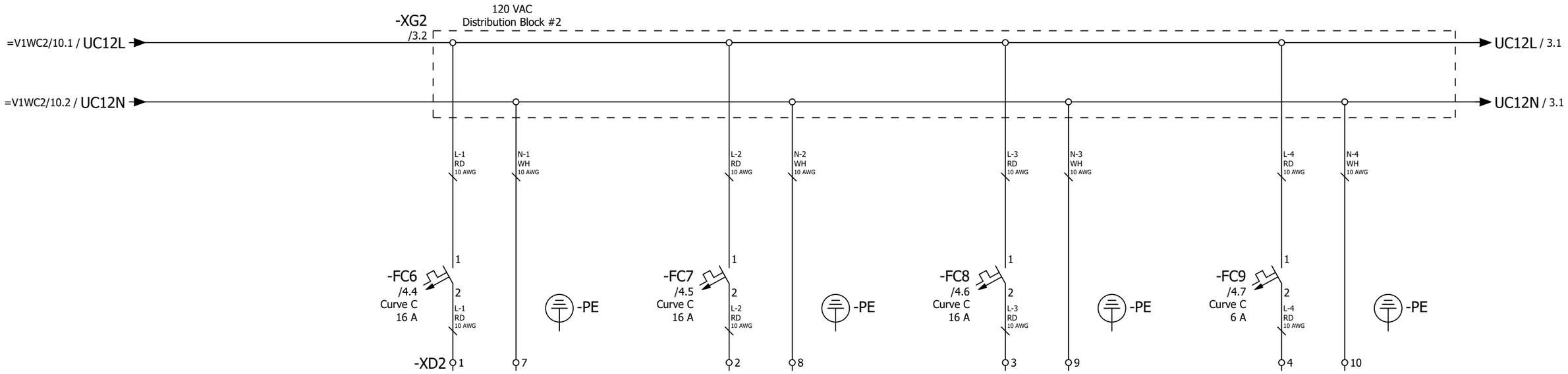

1	2	3	4	5	6	7	8	3
	Power Distribution 120 VAC (SPARE)	Power Distribution 120 VAC (SPARE)	Power Distribution 120 VAC (SPARE)	Power Distribution 120 VAC (SPARE)				

			Date	1/11/2023	Volvo Trucks North America	Valiant TMS	Power Distribution 120 VAC (Below Disconnect)	Drawing name: =2V10&EFS-EL		= V1WC3	
			Ed.	MKLEPADLO						+ V1UC12	
			Appr		P6700 Bodyside RH - Robot Cell 2V10			Document type: EFS	Project nr: 22-16150		Page 2
Modification	Date	Name	Original		Replacement of / Replaced by	Scale 1:1					1579

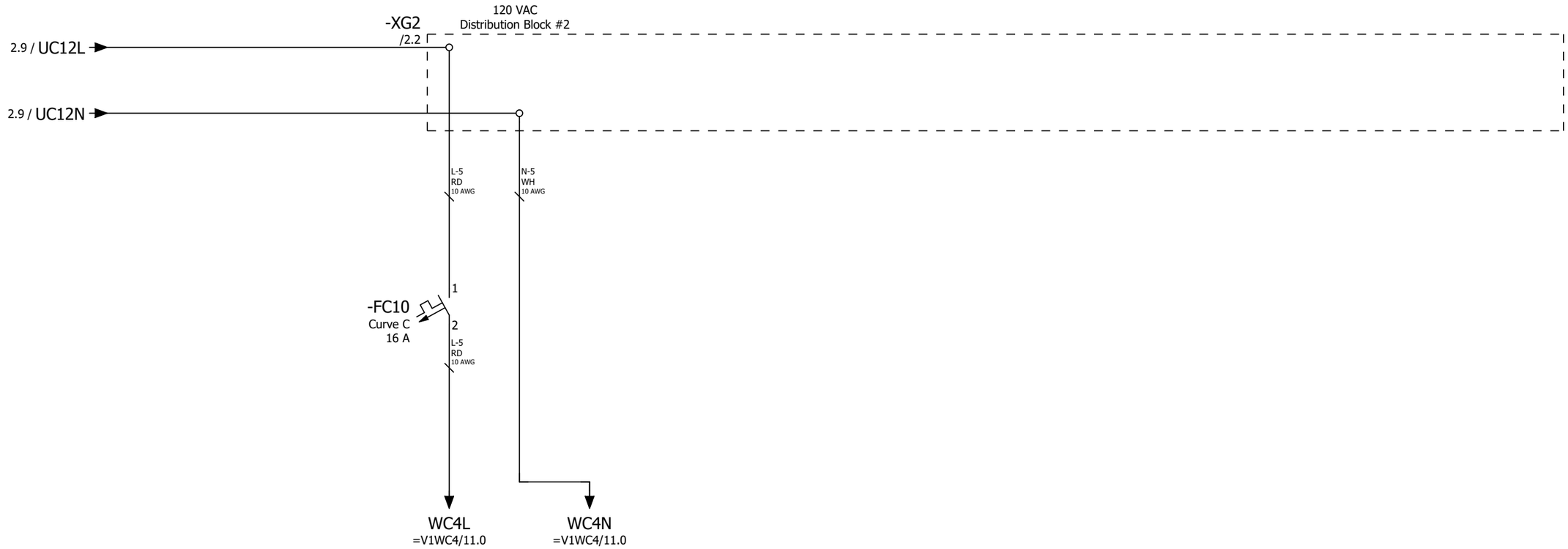

Power
Distribution
120 VAC
To 24VDC Power Supply

			Date	1/11/2023	Volvo Trucks North America	Valiant TMS	Power Distribution 120 VAC (Below Disconnect)	Drawing name: =2V10&EFS-EL		= V1WC3	
			Ed.	MKLEPADLO						+ V1UC12	
			Appr		P6700 Bodyside RH - Robot Cell 2V10			Document type: EFS	Project nr: 22-16150		Page 3
Modification	Date	Name	Original		Replacement of / Replaced by	Scale 1:1					1579

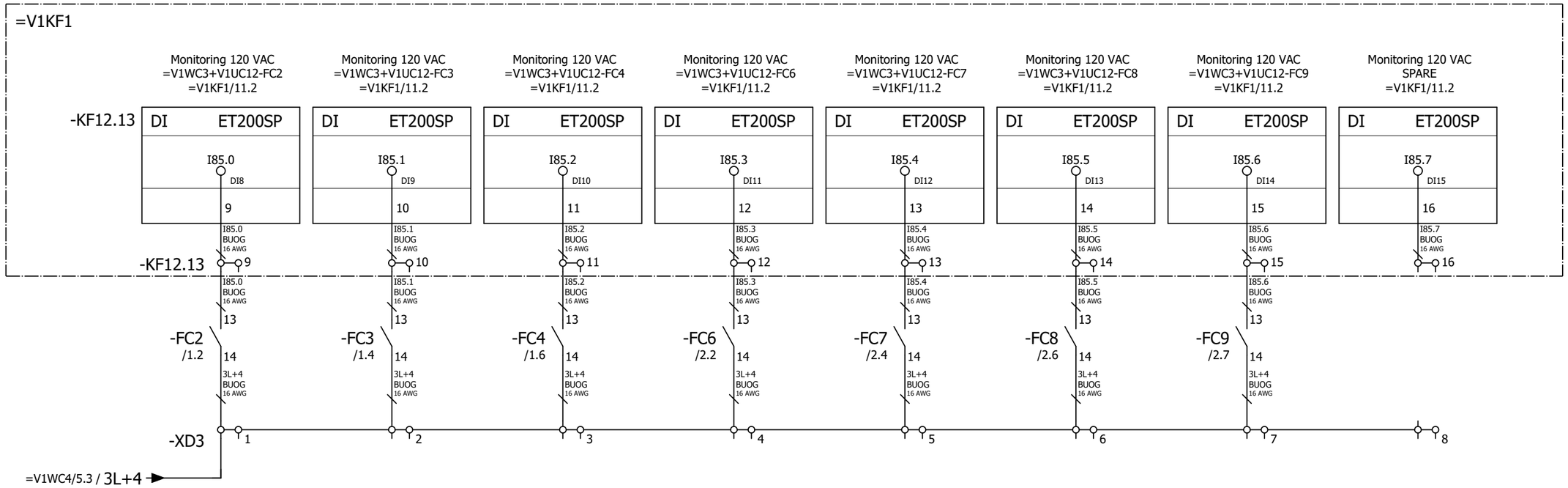

3

+.UC14/1

			Date	1/11/2023	Volvo Trucks North America	Valiant TMS	Power distribution 120 VAC monitoring (Above Disconnect)	Drawing name: =2V10&EFS-EL		= V1WC3	
			Ed.	MKLEPADLO						+ V1UC12	
			Appr		P6700 Bodyside RH - Robot Cell 2V10			Document type: EFS	Project nr: 22-16150		Page 4
Modification	Date	Name	Original		Replacement of / Replaced by	Scale 1:1					1579

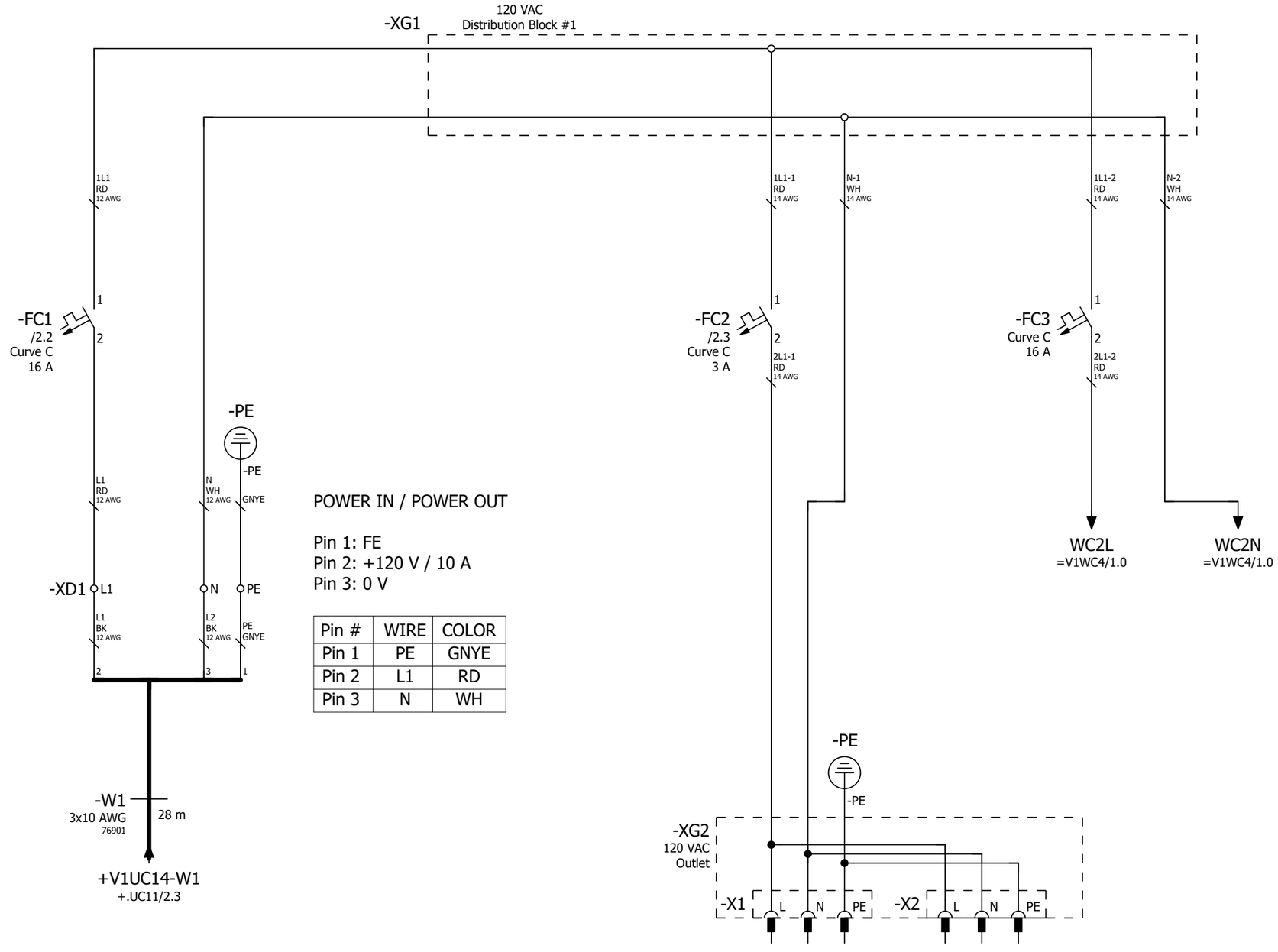

POWER IN / POWER OUT

Pin 1: FE
Pin 2: +120 V / 10 A
Pin 3: 0 V

Pin #	WIRE	COLOR
Pin 1	PE	GNYE
Pin 2	L1	RD
Pin 3	N	WH

Power
Distribution
120 VAC
Programming Port

Power
Distribution
120 VAC
To 24VDC Power Supply

+.UC12/4

2

			Date	1/11/2023	Volvo Trucks North America	Valiant TMS	Power distribution 120 VAC	Drawing name: =2V10&EFS-EL	= V1WC3	
			Ed.	MKLEPADLO					+ V1UC14	
			Appr		P6700 Bodyside RH - Robot Cell 2V10			Document type: EFS	Project nr: 22-16150	Page 1
Modification	Date	Name	Original		Replacement of	Replaced by	Scale 1:1			1579

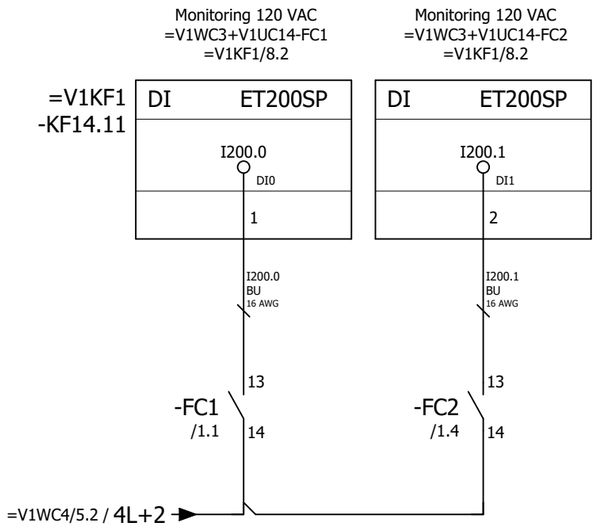

1

+.UC15/1

			Date	1/11/2023	Volvo Trucks North America	Valiant TMS	Monitoring 120VAC	Drawing name: =2V10&EFS-EL		= V1WC3
			Ed.	MKLEPADLO						+ V1UC14
			Appr		P6700 Bodyside RH - Robot Cell 2V10			Document type: EFS	Project nr: 22-16150	Page 2 / 1579
Modification	Date	Name	Original		Replacement of / Replaced by	Scale 1:1				

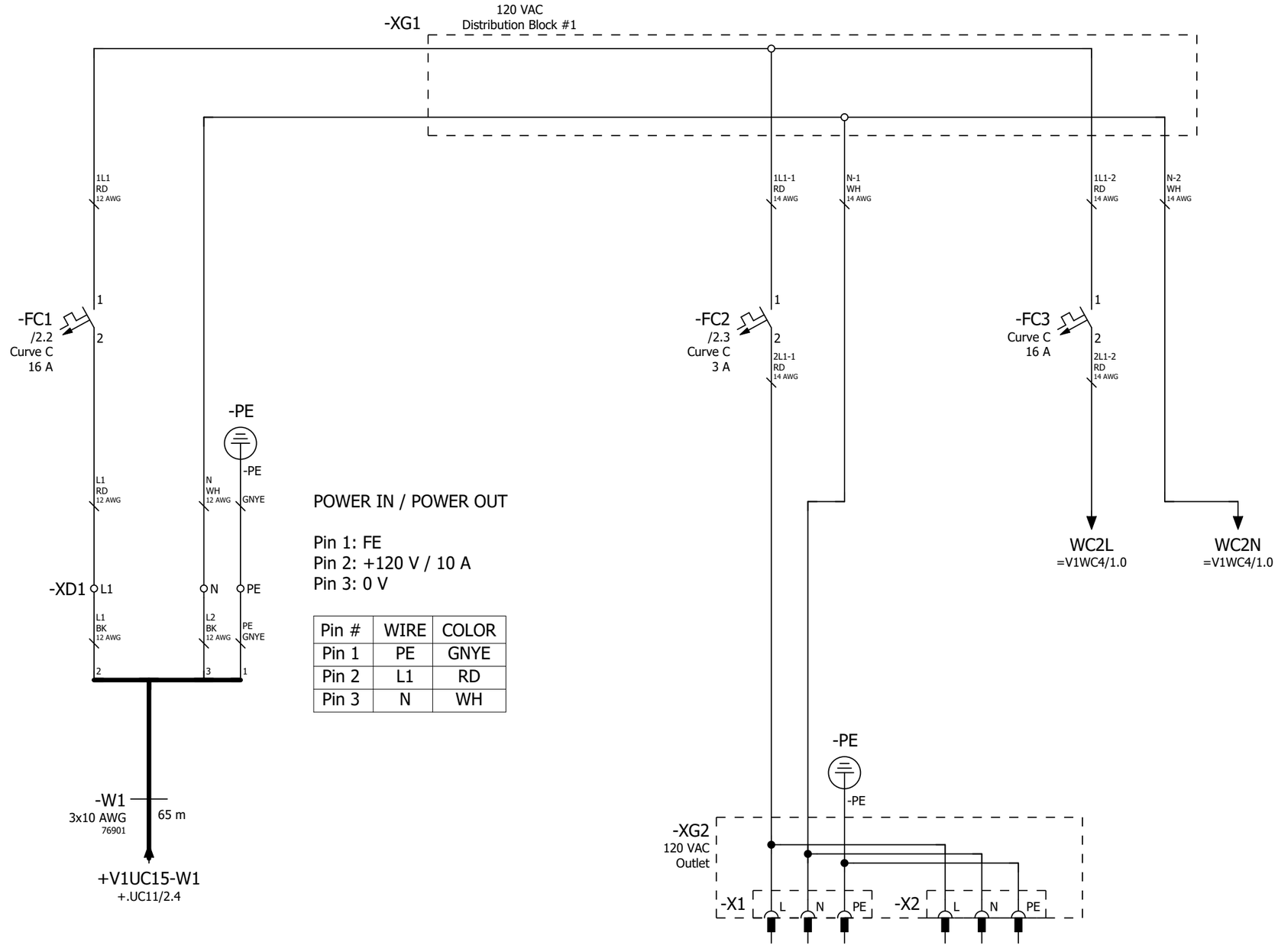

POWER IN / POWER OUT

Pin 1: FE
Pin 2: +120 V / 10 A
Pin 3: 0 V

Pin #	WIRE	COLOR
Pin 1	PE	GNYE
Pin 2	L1	RD
Pin 3	N	WH

Power
Distribution
120 VAC
Programming Port

Power
Distribution
120 VAC
To 24VDC Power Supply

+.UC14/2

2

			Date	1/11/2023	Volvo Trucks North America	Valiant TMS	Power distribution 120 VAC	Drawing name: =2V10&EFS-EL	= V1WC3	
			Ed.	MKLEPADLO					+ V1UC15	
			Appr		P6700 Bodyside RH - Robot Cell 2V10			Document type: EFS	Project nr: 22-16150	Page 1
Modification	Date	Name	Original		Replacement of	Replaced by	Scale 1:1			1579

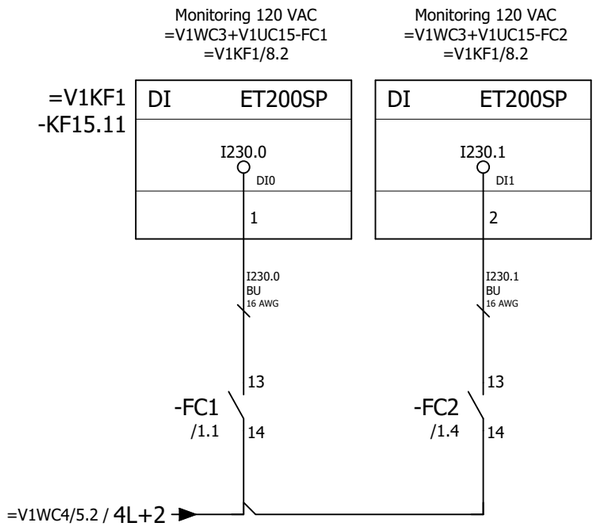

1

=V1WC4+.UC11/1

			Date	1/11/2023	Volvo Trucks North America	Valiant TMS	Monitoring 120VAC	Drawing name: =2V10&EFS-EL	= V1WC3	
			Ed.	MKLEPADLO					+ V1UC15	
			Appr		P6700 Bodyside RH - Robot Cell 2V10			Document type: EFS	Project nr: 22-16150	Page 2 / 1579
Modification	Date	Name	Original		Replacement of / Replaced by	Scale 1:1				

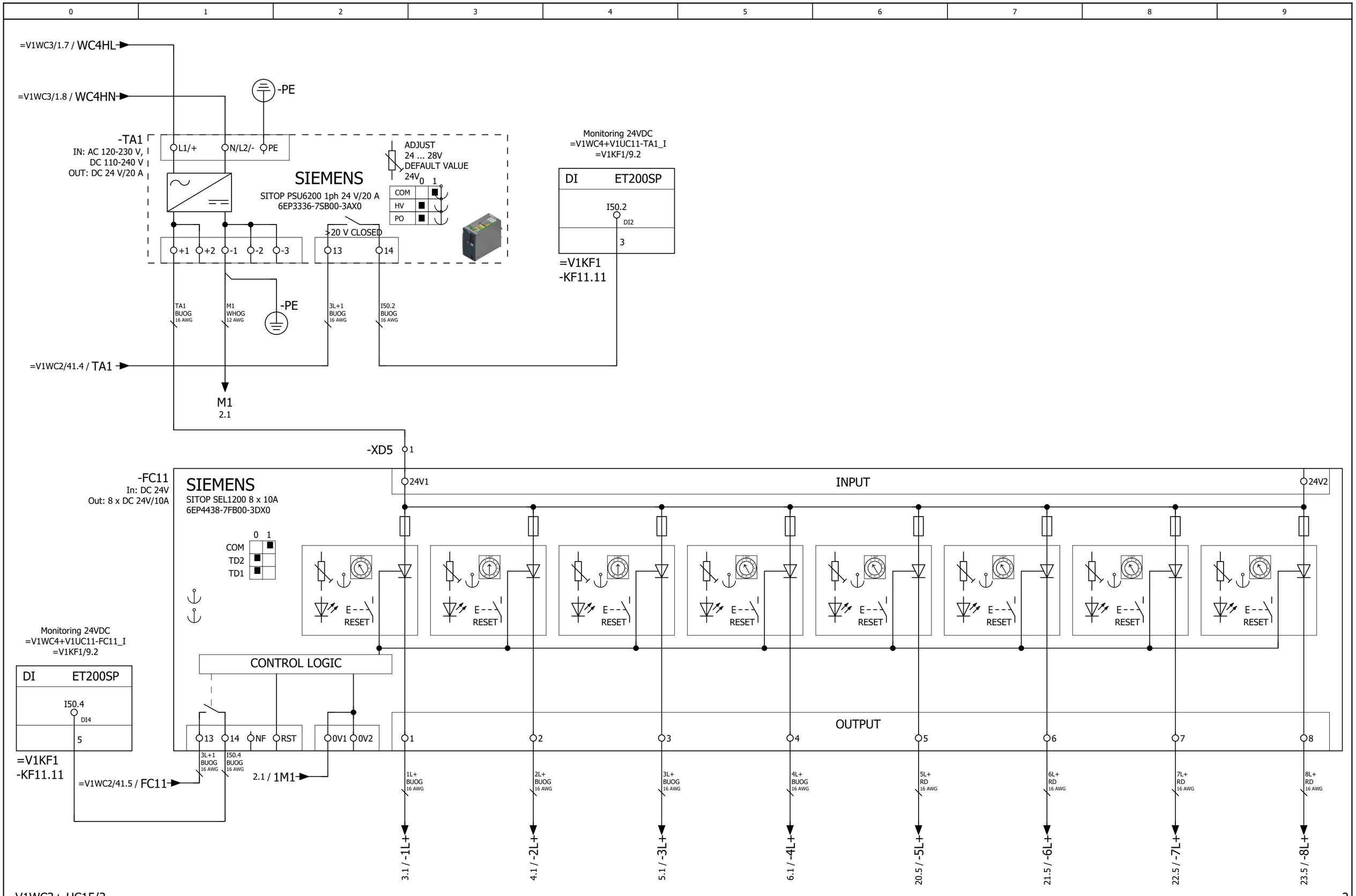

=V1WC3+.UC15/2

2

			Date	1/11/2023	Volvo Trucks North America		Valiant TMS	Power distribution 24VDC (Above Disconnect)	Drawing name: =2V10&EFS-EL	= V1WC4	
			Ed.	MKLEPADLO						+ V1UC11	
			Appr		P6700 Bodyside RH - Robot Cell 2V10				Document type: EFS	Project nr: 22-16150	Page 1
Modification	Date	Name	Original		Replacement of	Replaced by	Scale 1:1				1579

			Date	1/11/2023	Volvo Trucks North America	Valiant TMS	Power distribution 24VDC HL+	Drawing name: =2V10&EFS-EL		= V1WC4	
			Ed.	MKLEPADLO						+ V1UC11	
			Appr		P6700 Bodyside RH - Robot Cell 2V10			Document type: EFS	Project nr: 22-16150		Page 2
Modification	Date	Name	Original		Replacement of / Replaced by	Scale 1:1					1579

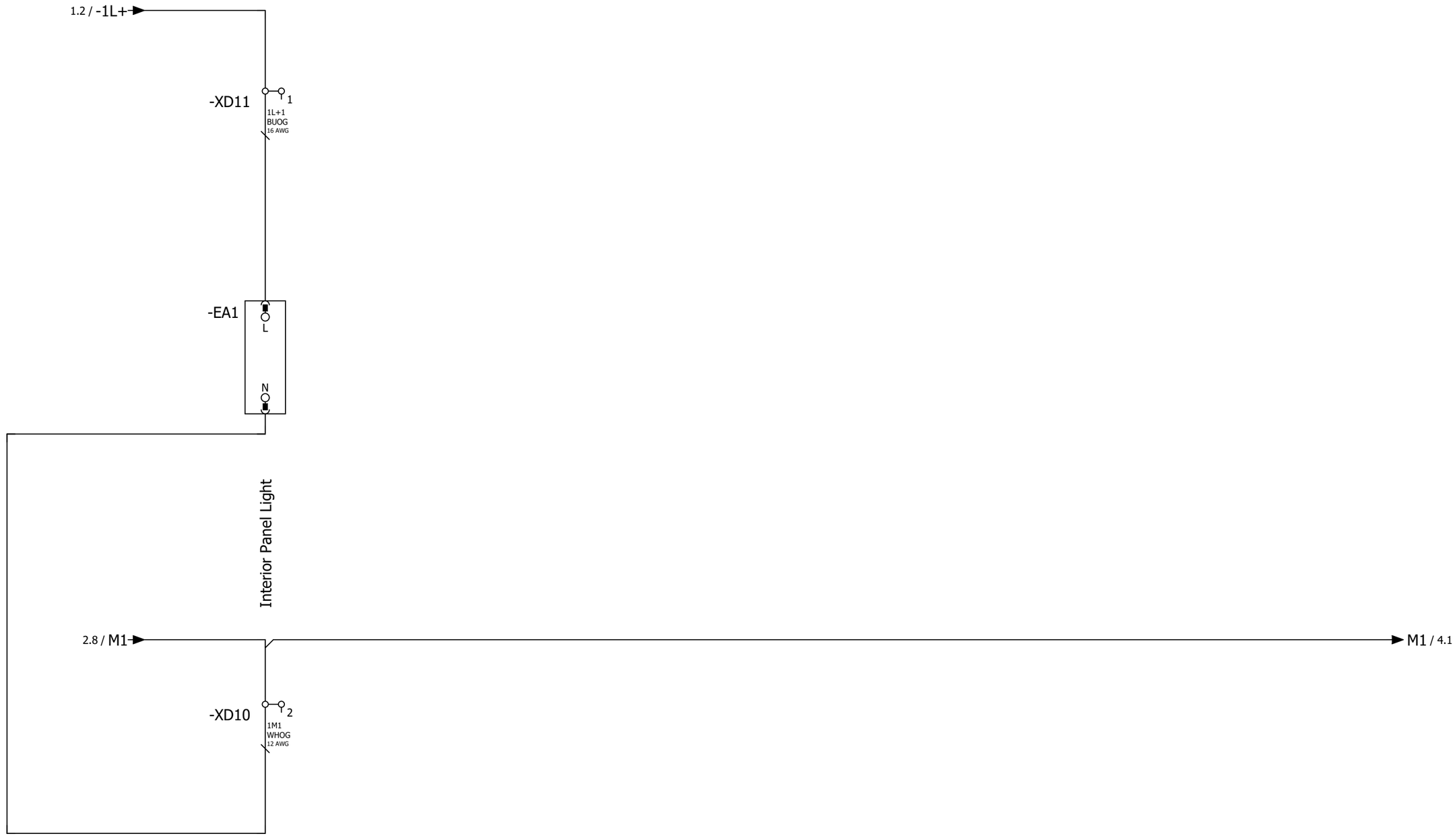

2 4

			Date	1/11/2023	Volvo Trucks North America	Valiant TMS	Power distribution 24VDC 1L+	Drawing name: =2V10&EFS-EL		= V1WC4	
			Ed.	MKLEPADLO						+ V1UC11	
			Appr		P6700 Bodyside RH - Robot Cell 2V10			Document type: EFS	Project nr: 22-16150		Page 3
Modification	Date	Name	Original		Replacement of	Replaced by	Scale 1:1				1579

3 5

			Date	1/11/2023	Volvo Trucks North America	Valiant TMS	Power distribution 24VDC 2L+	Drawing name: =2V10&EFS-EL		= V1WC4	
			Ed.	MKLEPADLO						+ V1UC11	
			Appr		P6700 Bodyside RH - Robot Cell 2V10			Document type: EFS	Project nr: 22-16150		Page 4
Modification	Date	Name	Original		Replacement of / Replaced by	Scale 1:1					1579

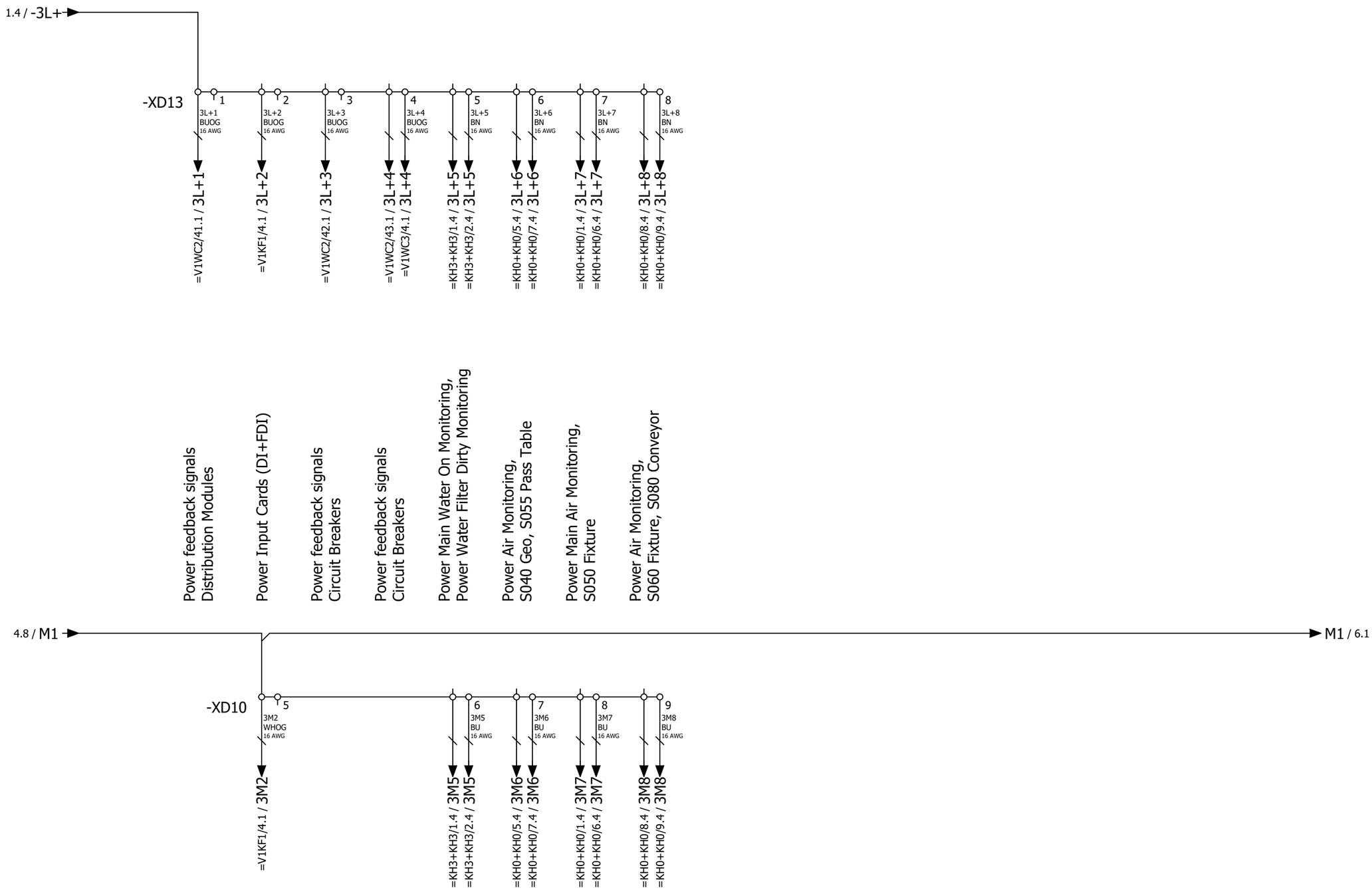

4 6

			Date	1/11/2023	Volvo Trucks North America	Valiant TMS	Power distribution 24VDC 3L+	Drawing name: =2V10&EFS-EL		= V1WC4	
			Ed.	MKLEPADLO						+ V1UC11	
			Appr		P6700 Bodyside RH - Robot Cell 2V10	Scale 1:1		Document type: EFS	Project nr: 22-16150	Page	5
Modification	Date	Name	Original		Replacement of / Replaced by						1579

1.5 / -4L+
-XD14
1
2
4L+1
BUOG
16 AWG
=V1KF1/7.1 / 4L+1
Power Output Cards (DQ+FDQ+FRQ)
Spare
5.8 / M1
M1 / 7.1
-XD10
10
11
4M1
WHOG
16 AWG
=V1KF1/7.1 / 4M1

			Date	1/11/2023	Volvo Trucks North America	Valiant TMS	Power distribution 24VDC 5L+	Drawing name: =2V10&EFS-EL		= V1WC4	
			Ed.	MKLEPADLO						+ V1UC11	
			Appr		P6700 Bodyside RH - Robot Cell 2V10			Document type: EFS	Project nr: 22-16150		Page 7
Modification	Date	Name	Original		Replacement of / Replaced by	Scale 1:1					1579

			Date	1/11/2023	Volvo Trucks North America	Valiant TMS	Power distribution 24VDC 6L+	Drawing name: =2V10&EFS-EL		= V1WC4	
			Ed.	MKLEPADLO						+ V1UC11	
			Appr		P6700 Bodyside RH - Robot Cell 2V10			Document type: EFS	Project nr: 22-16150		Page 8
Modification	Date	Name	Original		Replacement of / Replaced by	Scale 1:1					1579

			Date	1/11/2023	Volvo Trucks North America	Valiant TMS	Power distribution 24VDC 7L+	Drawing name: =2V10&EFS-EL		= V1WC4	
			Ed.	MKLEPADLO						+ V1UC11	
			Appr		P6700 Bodyside RH - Robot Cell 2V10			Document type: EFS	Project nr: 22-16150		Page 9
Modification	Date	Name	Original		Replacement of / Replaced by	Scale 1:1					1579

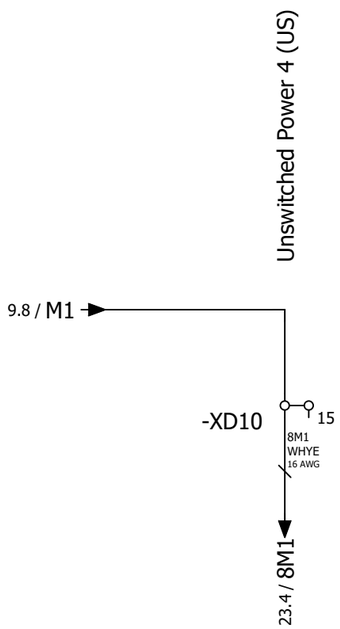

			Date	1/11/2023	Volvo Trucks North America	Valiant TMS	Power distribution 24VDC 8L+	Drawing name: =2V10&EFS-EL		= V1WC4	
			Ed.	MKLEPADLO						+ V1UC11	
			Appr		P6700 Bodyside RH - Robot Cell 2V10			Document type: EFS	Project nr: 22-16150		Page 10
Modification	Date	Name	Original		Replacement of / Replaced by	Scale 1:1					1579

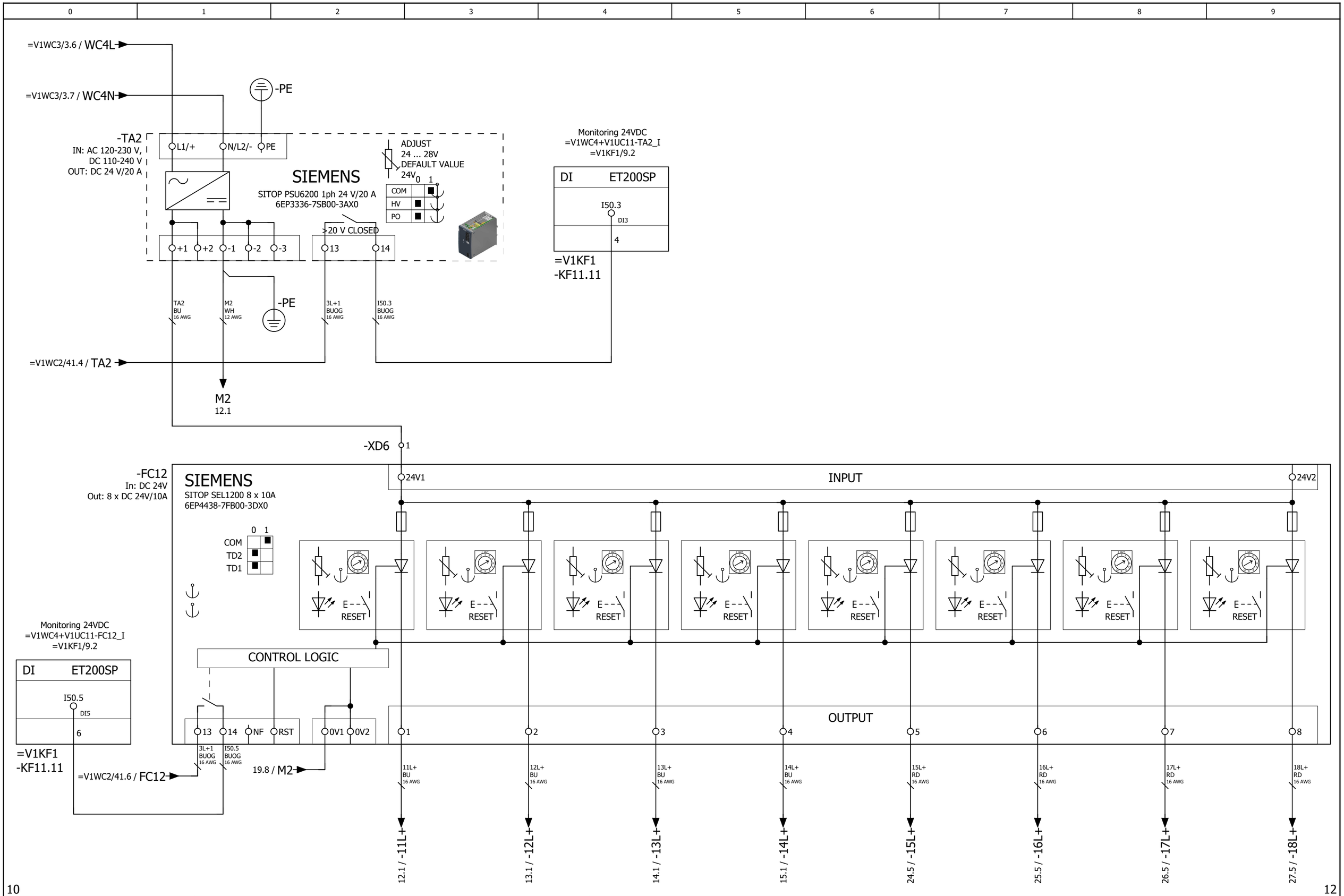

			Date	1/11/2023	Volvo Trucks North America	Valiant TMS	Power distribution 24VDC (Below Disconnect)	Drawing name: =2V10&EFS-EL	= V1WC4		
			Ed.	MKLEPADLO					+ V1UC11		
			Appr		P6700 Bodyside RH - Robot Cell 2V10			Document type: EFS	Project nr: 22-16150	Page	11
Modification	Date	Name	Original		Replacement of	Replaced by	Scale 1:1				1579

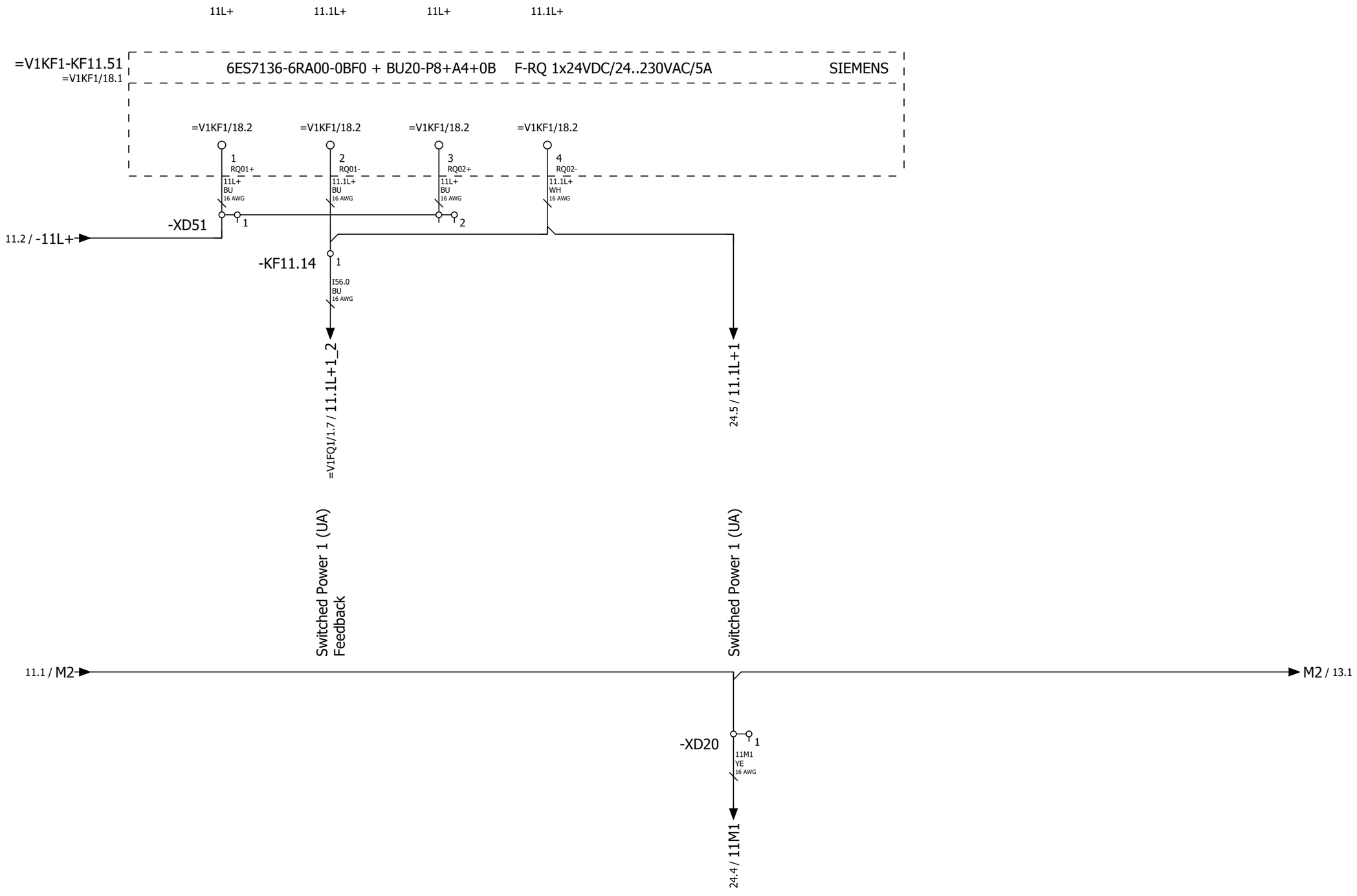

11

13

			Date	1/11/2023	Volvo Trucks North America	Valiant TMS	Power distribution 24VDC 11L+	Drawing name: =2V10&EFS-EL		= V1WC4	
			Ed.	MKLEPADLO						+ V1UC11	
			Appr		P6700 Bodyside RH - Robot Cell 2V10			Document type: EFS	Project nr: 22-16150		Page 12
Modification	Date	Name	Original		Replacement of	Replaced by	Scale 1:1				1579

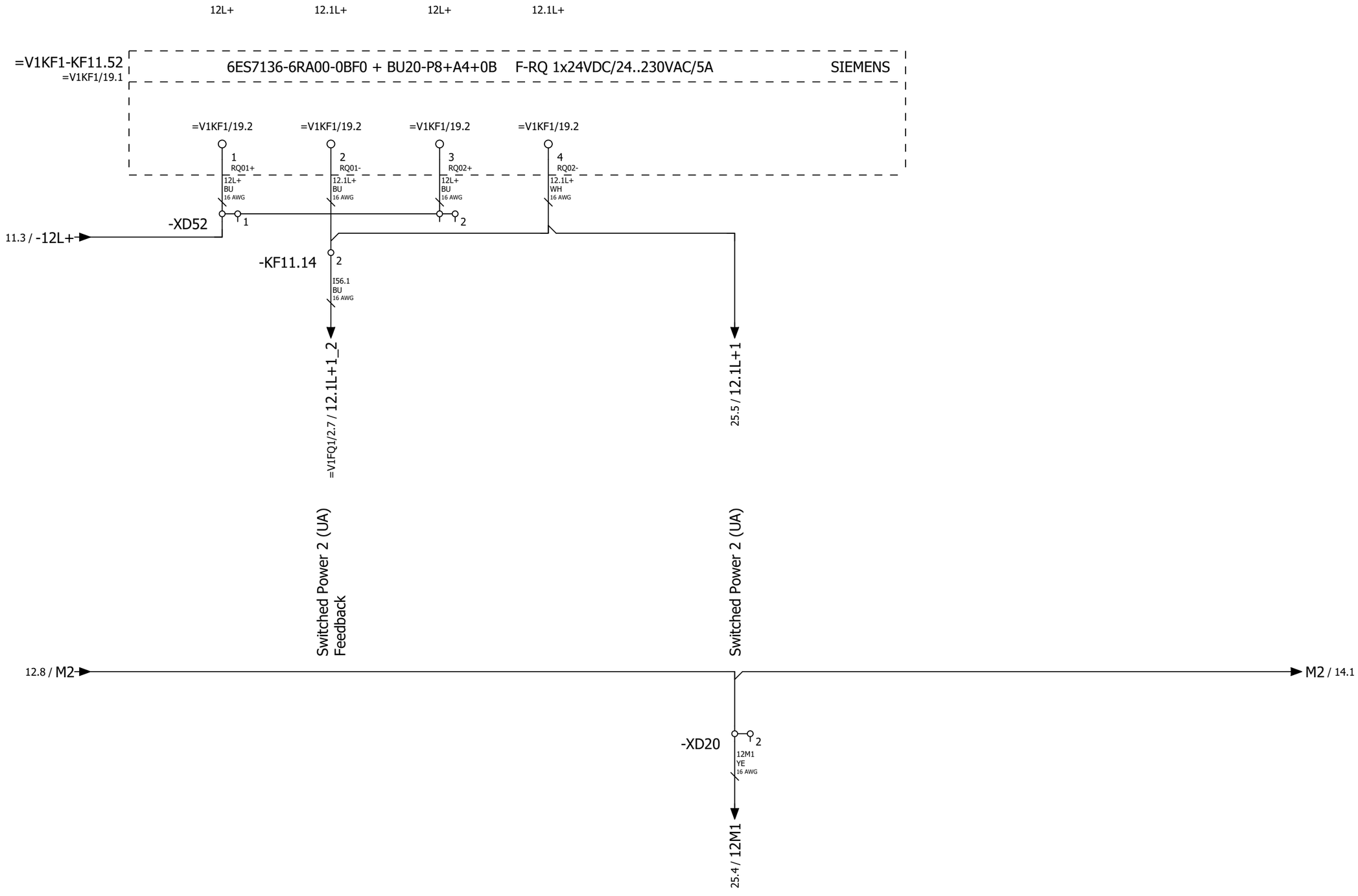

12

14

			Date	1/11/2023	Volvo Trucks North America	Valiant TMS	Power distribution 24VDC 12L+	Drawing name: =2V10&EFS-EL		= V1WC4	
			Ed.	MKLEPADLO						+ V1UC11	
			Appr		P6700 Bodyside RH - Robot Cell 2V10			Document type: EFS	Project nr: 22-16150		Page 13
Modification	Date	Name	Original		Replacement of	Replaced by	Scale 1:1				1579

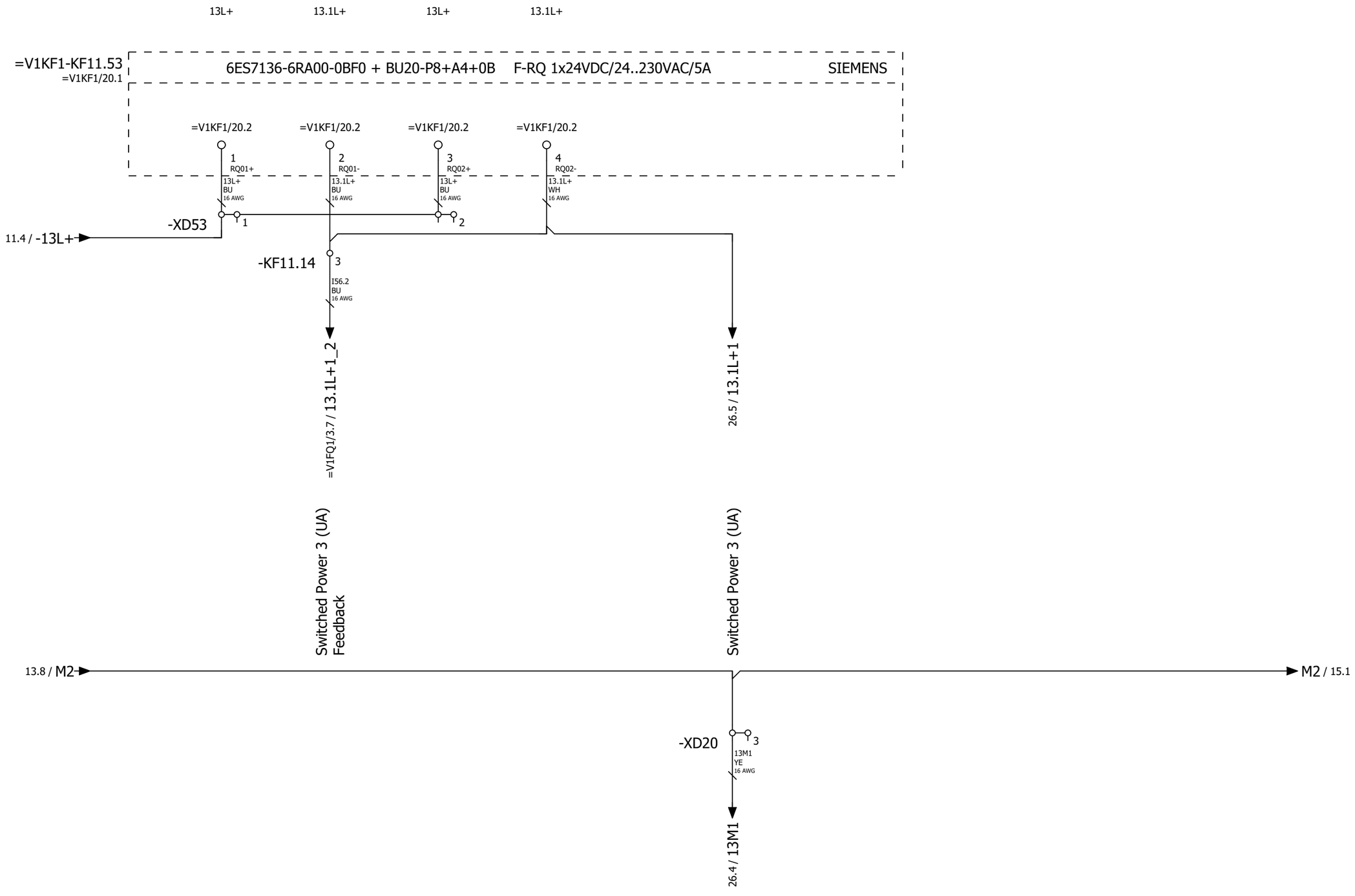

13

15

			Date	1/11/2023	Volvo Trucks North America	Valiant TMS	Power distribution 24VDC 13L+	Drawing name: =2V10&EFS-EL		= V1WC4	
			Ed.	MKLEPADLO						+ V1UC11	
			Appr		P6700 Bodyside RH - Robot Cell 2V10			Document type: EFS	Project nr: 22-16150		Page 14
Modification	Date	Name	Original		Replacement of	Replaced by	Scale 1:1				1579

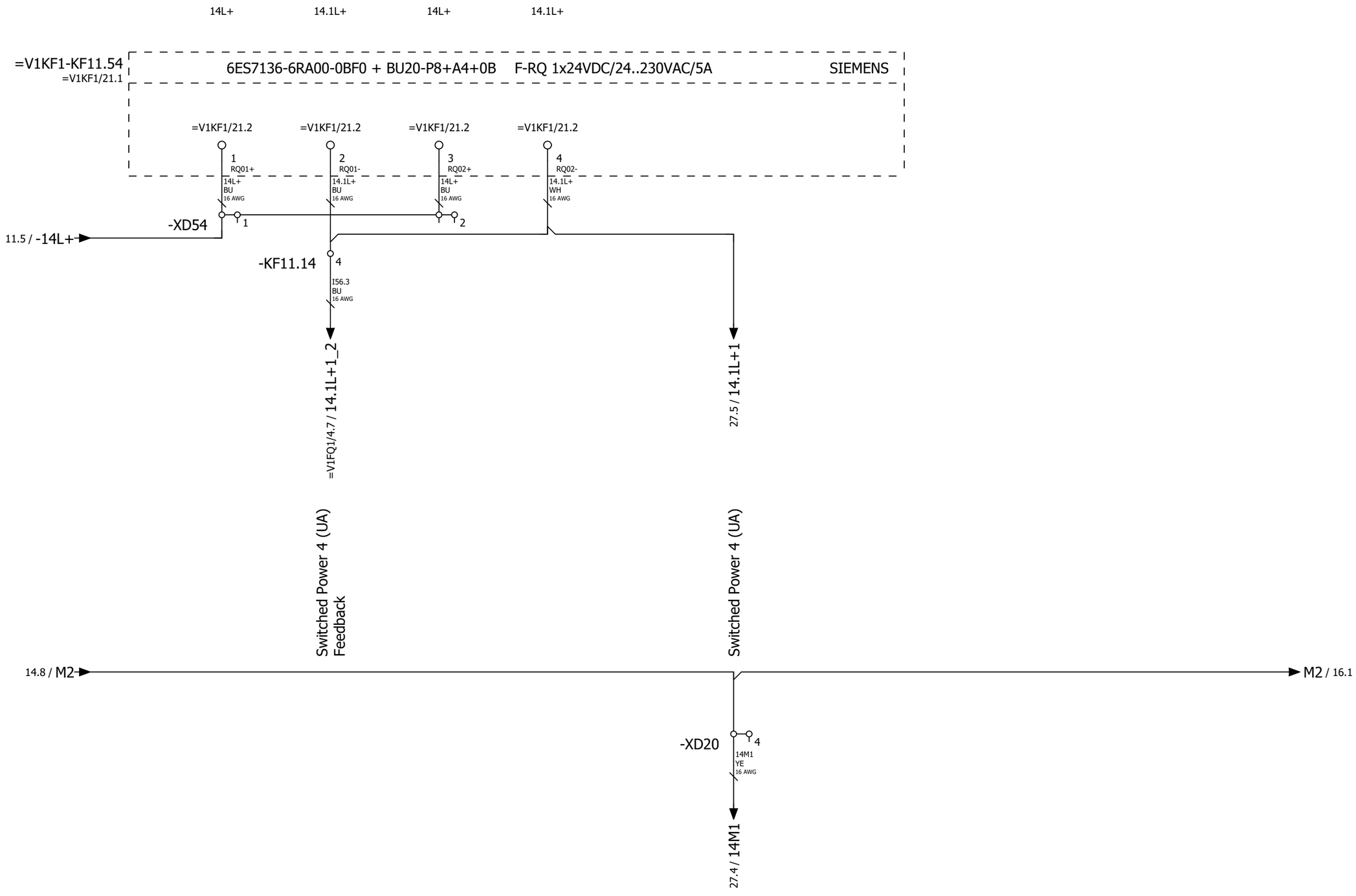

14

16

			Date	1/11/2023	Volvo Trucks North America	Valiant TMS	Power distribution 24VDC 14L+	Drawing name: =2V10&EFS-EL		= V1WC4	
			Ed.	MKLEPADLO						+ V1UC11	
			Appr		P6700 Bodyside RH - Robot Cell 2V10			Document type: EFS	Project nr: 22-16150		Page 15
Modification	Date	Name	Original		Replacement of	Replaced by	Scale 1:1				1579

15

17

			Date	1/11/2023	Volvo Trucks North America	Valiant TMS	Power distribution 24VDC 15L+	Drawing name: =2V10&EFS-EL	= V1WC4	
			Ed.	MKLEPADLO					+ V1UC11	
			Appr		P6700 Bodyside RH - Robot Cell 2V10			Document type: EFS	Project nr: 22-16150	Page 16
Modification	Date	Name	Original		Replacement of / Replaced by	Scale 1:1				1579

16

18

			Date	1/11/2023	Volvo Trucks North America	Valiant TMS	Power distribution 24VDC 16L+	Drawing name: =2V10&EFS-EL		= V1WC4	
			Ed.	MKLEPADLO						+ V1UC11	
			Appr		P6700 Bodyside RH - Robot Cell 2V10			Document type: EFS	Project nr: 22-16150		Page 17
Modification	Date	Name	Original		Replacement of / Replaced by	Scale 1:1					1579

17

19

			Date	1/11/2023	Volvo Trucks North America	Valiant TMS	Power distribution 24VDC 17L+	Drawing name: =2V10&EFS-EL		= V1WC4	
			Ed.	MKLEPADLO						+ V1UC11	
			Appr		P6700 Bodyside RH - Robot Cell 2V10			Document type: EFS	Project nr: 22-16150		Page 18
Modification	Date	Name	Original		Replacement of / Replaced by	Scale 1:1					1579

			Date	1/11/2023	Volvo Trucks North America	Valiant TMS	Power distribution 24VDC 18L+	Drawing name: =2V10&EFS-EL		= V1WC4	
			Ed.	MKLEPADLO						+ V1UC11	
			Appr		P6700 Bodyside RH - Robot Cell 2V10			Document type: EFS	Project nr: 22-16150		Page 19
Modification	Date	Name	Original		Replacement of	Replaced by	Scale 1:1				1579

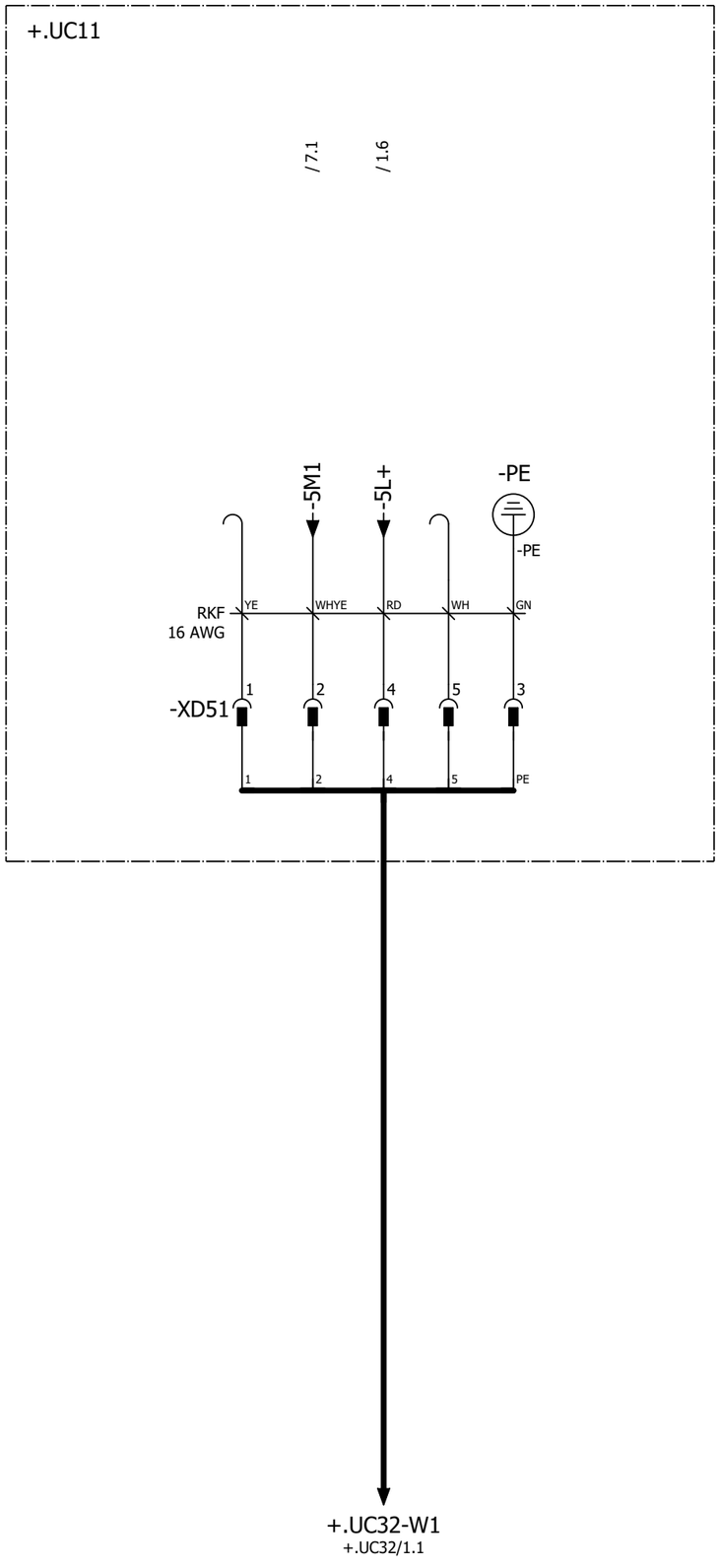

POWER IN / POWER OUT

Pin 1: 0 V UA
Pin 2: 0 V US
Pin 3: FE
Pin 4: +24 V US / 9 A
Pin 5: +24 V UA / 9 A

Pin #	WIRE	COLOR
Pin 1	N/C	YE
Pin 2	5M1	WHYE
Pin 3	GND	GN
Pin 4	5L+	RD
Pin 5	N/C	WH

			Date	1/11/2023	Volvo Trucks North America		Valiant TMS	24VDC Unswitched Power 1	Drawing name: =2V10&EFS-EL		= V1WC4
			Ed.	MKLEPADLO							+ V1UC11
			Appr		P6700 Bodyside RH - Robot Cell 2V10				Document type: EFS	Project nr: 22-16150	Page 20
Modification	Date	Name	Original		Replacement of	Replaced by	Scale 1:1				1579

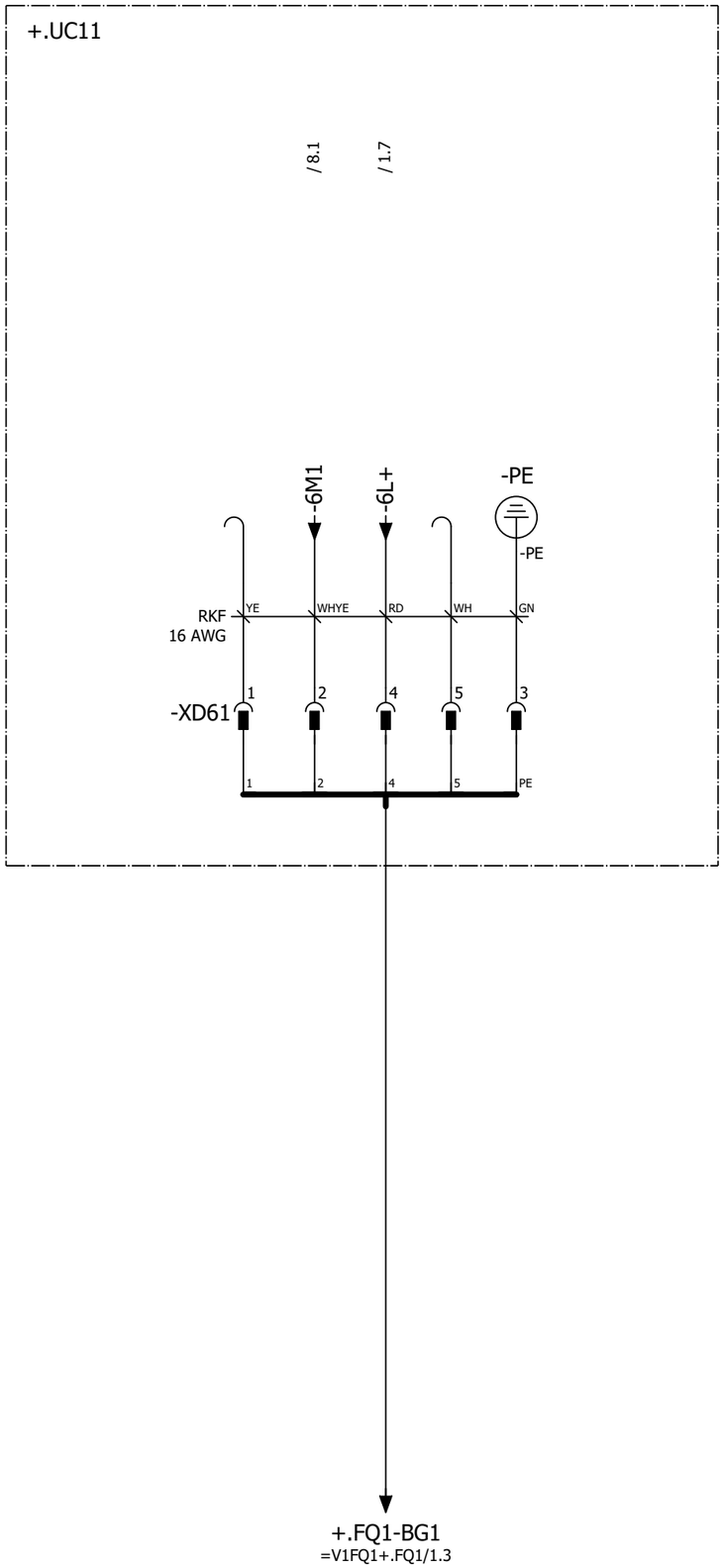

POWER IN / POWER OUT

Pin 1: 0 V UA
Pin 2: 0 V US
Pin 3: FE
Pin 4: +24 V US / 9 A
Pin 5: +24 V UA / 9 A

Pin #	WIRE	COLOR
Pin 1	N/C	YE
Pin 2	6M1	WHYE
Pin 3	GND	GN
Pin 4	6L+	RD
Pin 5	N/C	WH

			Date	1/11/2023	Volvo Trucks North America	Valiant TMS	24VDC Unswitched Power 2	Drawing name: =2V10&EFS-EL		= V1WC4	
			Ed.	MKLEPADLO						+ V1UC11	
			Appr		P6700 Bodyside RH - Robot Cell 2V10			Document type: EFS	Project nr: 22-16150		Page 21
Modification	Date	Name	Original		Replacement of / Replaced by	Scale 1:1					1579

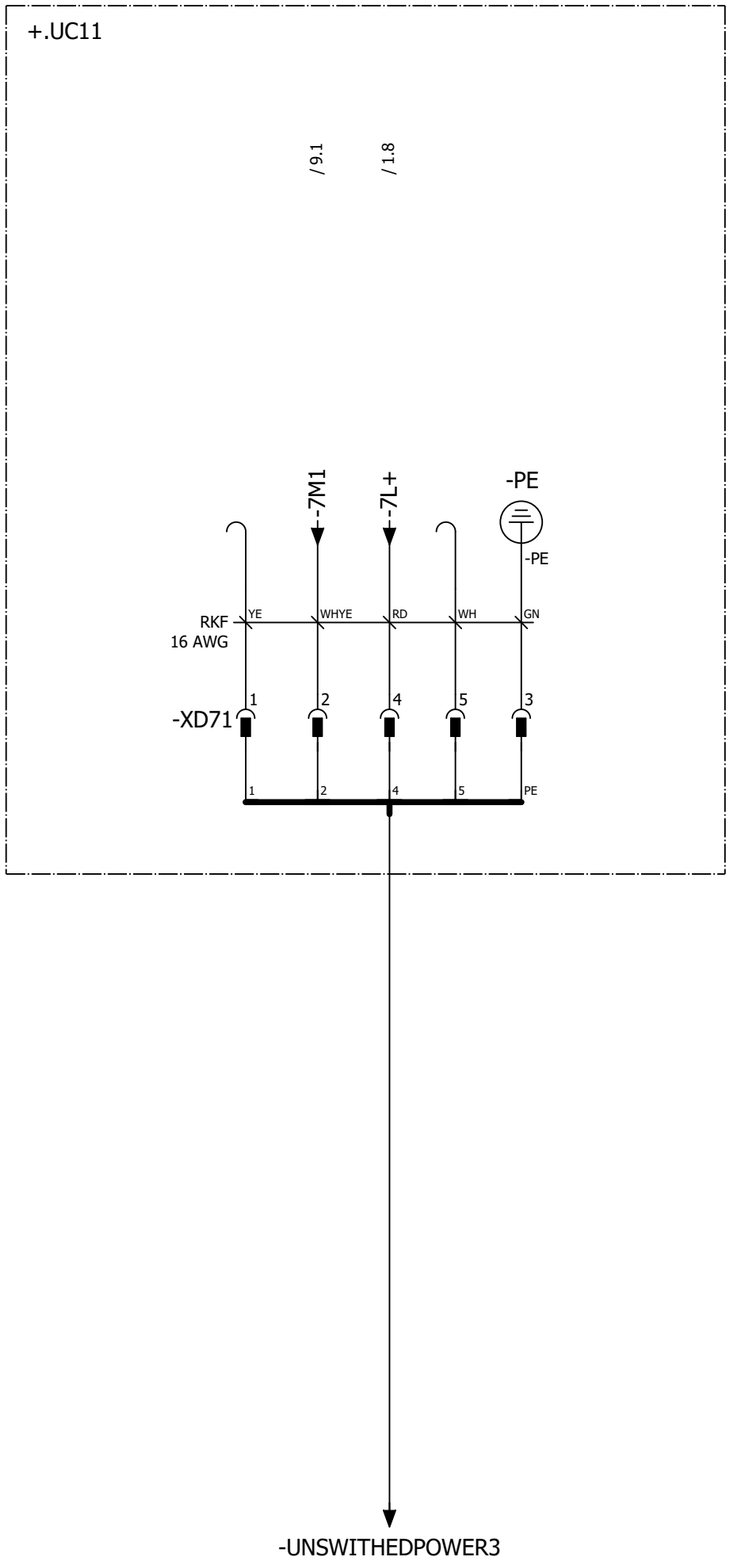

POWER IN / POWER OUT

Pin 1: 0 V UA
Pin 2: 0 V US
Pin 3: FE
Pin 4: +24 V US / 9 A
Pin 5: +24 V UA / 9 A

Pin #	WIRE	COLOR
Pin 1	N/C	YE
Pin 2	7M1	WHYE
Pin 3	GND	GN
Pin 4	7L+	RD
Pin 5	N/C	WH

			Date	1/11/2023	Volvo Trucks North America	Valiant TMS	24VDC Unswitched Power 3	Drawing name: =2V10&EFS-EL		= V1WC4	
			Ed.	MKLEPADLO						+ V1UC11	
			Appr		P6700 Bodyside RH - Robot Cell 2V10			Document type: EFS	Project nr: 22-16150		Page 22
Modification	Date	Name	Original		Replacement of / Replaced by	Scale 1:1					1579

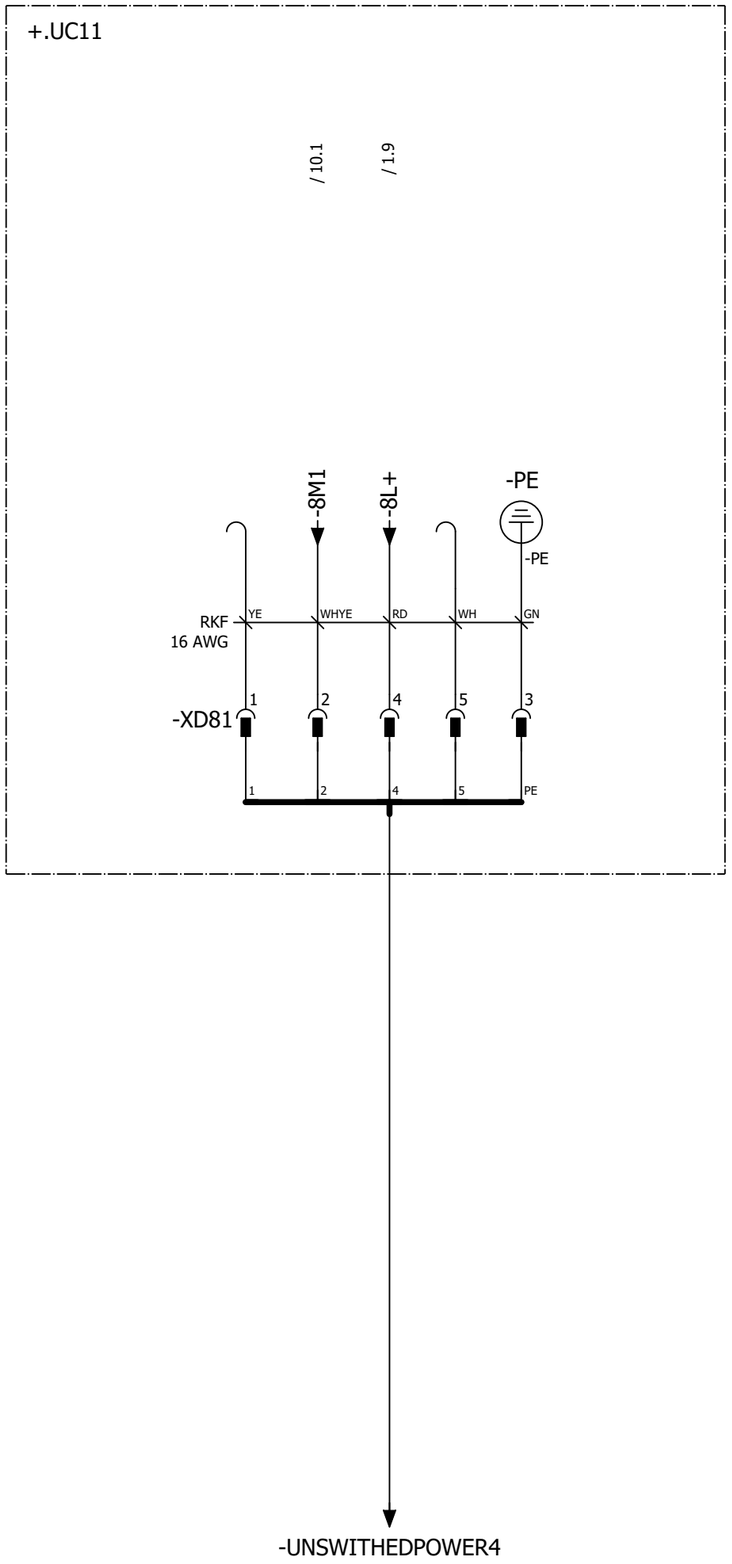

POWER IN / POWER OUT

Pin 1: 0 V UA
Pin 2: 0 V US
Pin 3: FE
Pin 4: +24 V US / 9 A
Pin 5: +24 V UA / 9 A

Pin #	WIRE	COLOR
Pin 1	N/C	YE
Pin 2	8M1	WHYE
Pin 3	GND	GN
Pin 4	8L+	RD
Pin 5	N/C	WH

			Date	1/11/2023	Volvo Trucks North America		Valiant TMS	24VDC Unswitched Power 4	Drawing name: =2V10&EFS-EL	= V1WC4	
			Ed.	MKLEPADLO						+ V1UC11	
			Appr		P6700 Bodyside RH - Robot Cell 2V10				Document type: EFS	Project nr: 22-16150	Page 23 / 1579
Modification	Date	Name	Original		Replacement of	Replaced by	Scale 1:1				

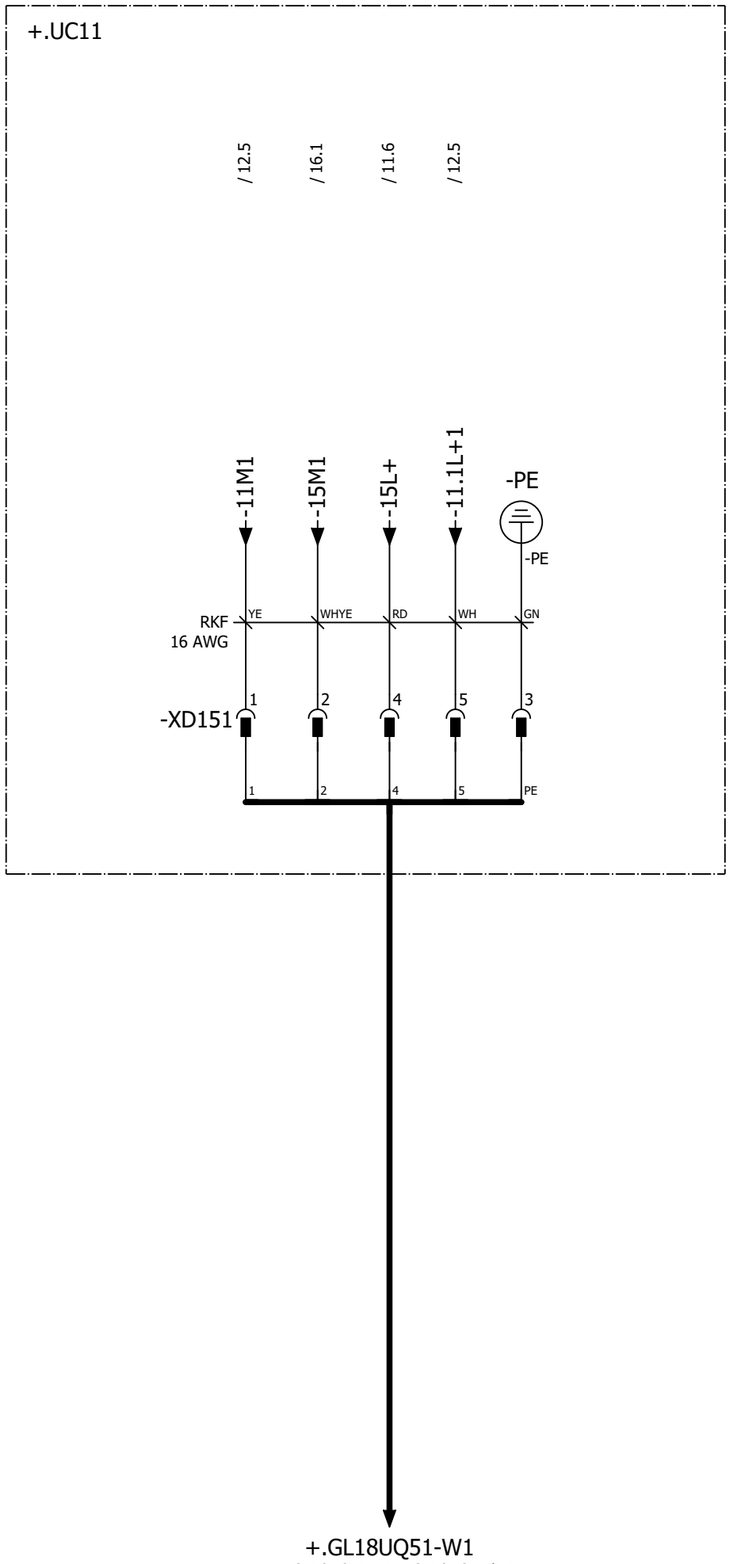

POWER IN / POWER OUT

Pin 1: 0 V UA
Pin 2: 0 V US
Pin 3: FE
Pin 4: +24 V US / 9 A
Pin 5: +24 V UA / 9 A

Pin #	WIRE	COLOR
Pin 1	11M2	YE
Pin 2	15M2	WHYE
Pin 3	GND	GN
Pin 4	15L+	RD
Pin 5	11.1L+	WH

			Date	1/11/2023	Volvo Trucks North America	Valiant TMS	24VDC Switched Power 1	Drawing name: =2V10&EFS-EL	= V1WC4	
			Ed.	MKLEPADLO					+ V1UC11	
			Appr		P6700 Bodyside RH - Robot Cell 2V10			Document type: EFS	Project nr: 22-16150	Page 24 / 1579
Modification	Date	Name	Original		Replacement of / Replaced by	Scale 1:1				

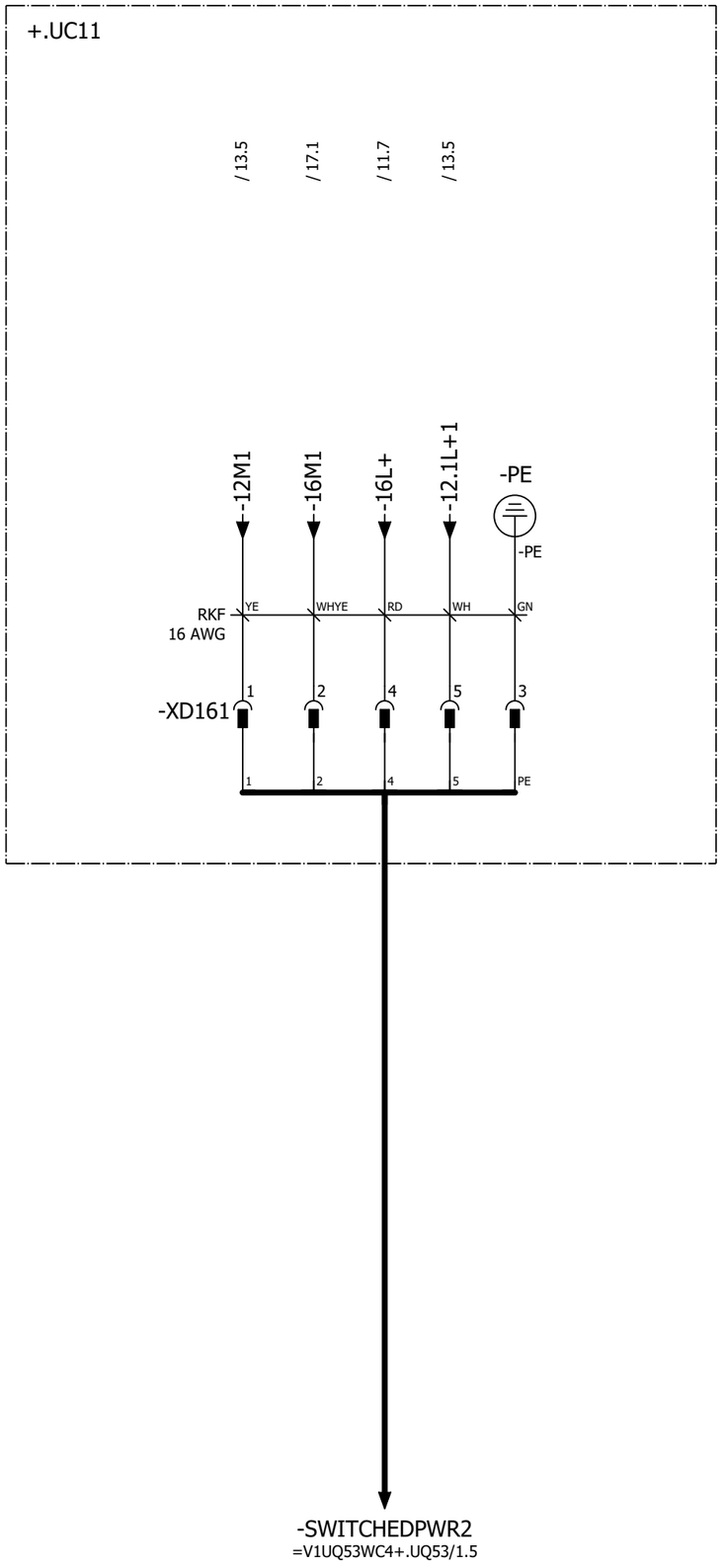

POWER IN / POWER OUT

Pin 1: 0 V UA
Pin 2: 0 V US
Pin 3: FE
Pin 4: +24 V US / 9 A
Pin 5: +24 V UA / 9 A

Pin #	WIRE	COLOR
Pin 1	12M2	YE
Pin 2	16M2	WHYE
Pin 3	GND	GN
Pin 4	16L+	RD
Pin 5	12.1L+	WH

			Date	1/11/2023	Volvo Trucks North America		Valiant TMS	24VDC Switched Power 2	Drawing name: =2V10&EFS-EL		= V1WC4
			Ed.	MKLEPADLO							+ V1UC11
			Appr		P6700 Bodyside RH - Robot Cell 2V10				Document type: EFS	Project nr: 22-16150	Page 25
Modification	Date	Name	Original		Replacement of	Replaced by	Scale 1:1				1579

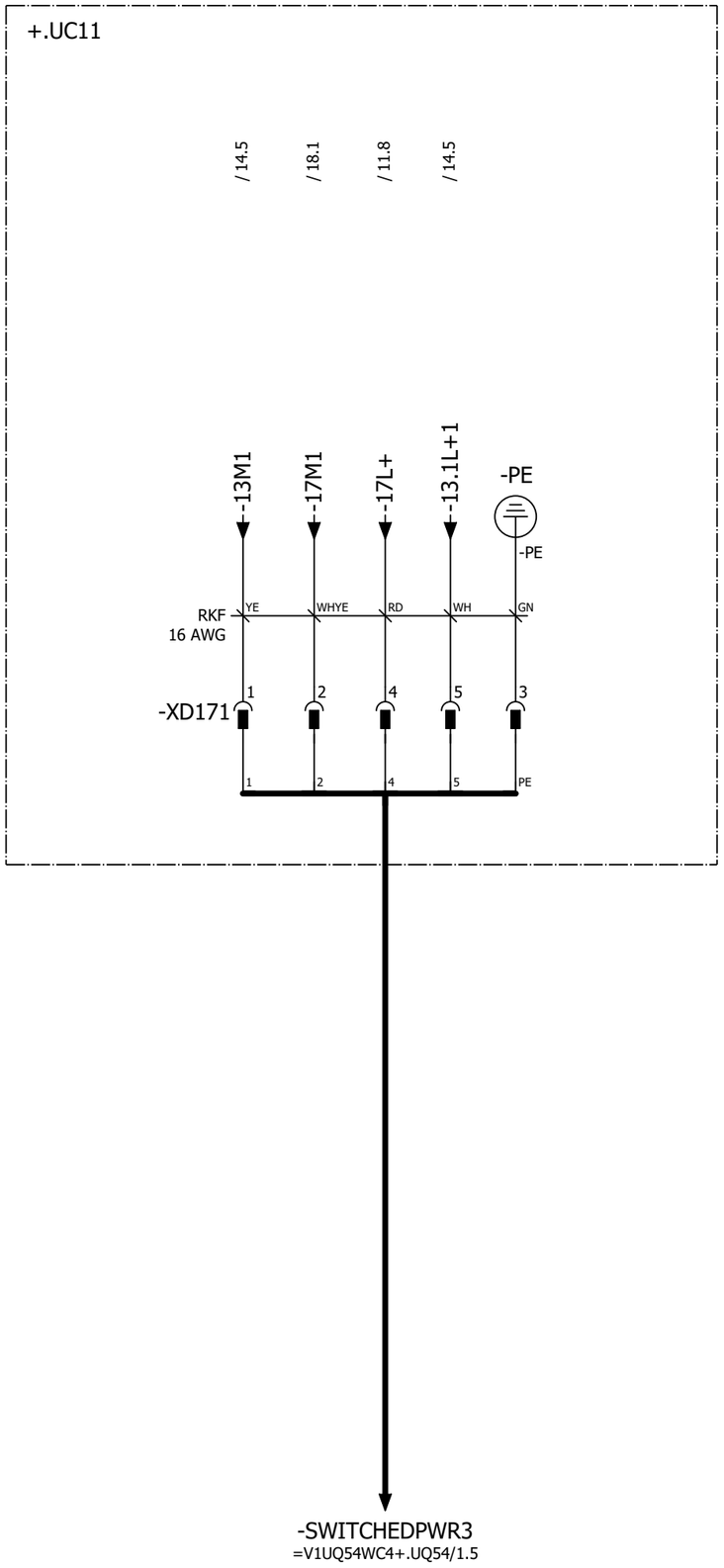

POWER IN / POWER OUT

Pin 1: 0 V UA
Pin 2: 0 V US
Pin 3: FE
Pin 4: +24 V US / 9 A
Pin 5: +24 V UA / 9 A

Pin #	WIRE	COLOR
Pin 1	13M2	YE
Pin 2	17M2	WHYE
Pin 3	GND	GN
Pin 4	17L+	RD
Pin 5	13.1L+	WH

			Date	1/11/2023	Volvo Trucks North America	Valiant TMS	24VDC Switched Power 3	Drawing name: =2V10&EFS-EL		= V1WC4	
			Ed.	MKLEPADLO						+ V1UC11	
			Appr		P6700 Bodyside RH - Robot Cell 2V10			Document type: EFS	Project nr: 22-16150		Page 26
Modification	Date	Name	Original		Replacement of / Replaced by	Scale 1:1					1579

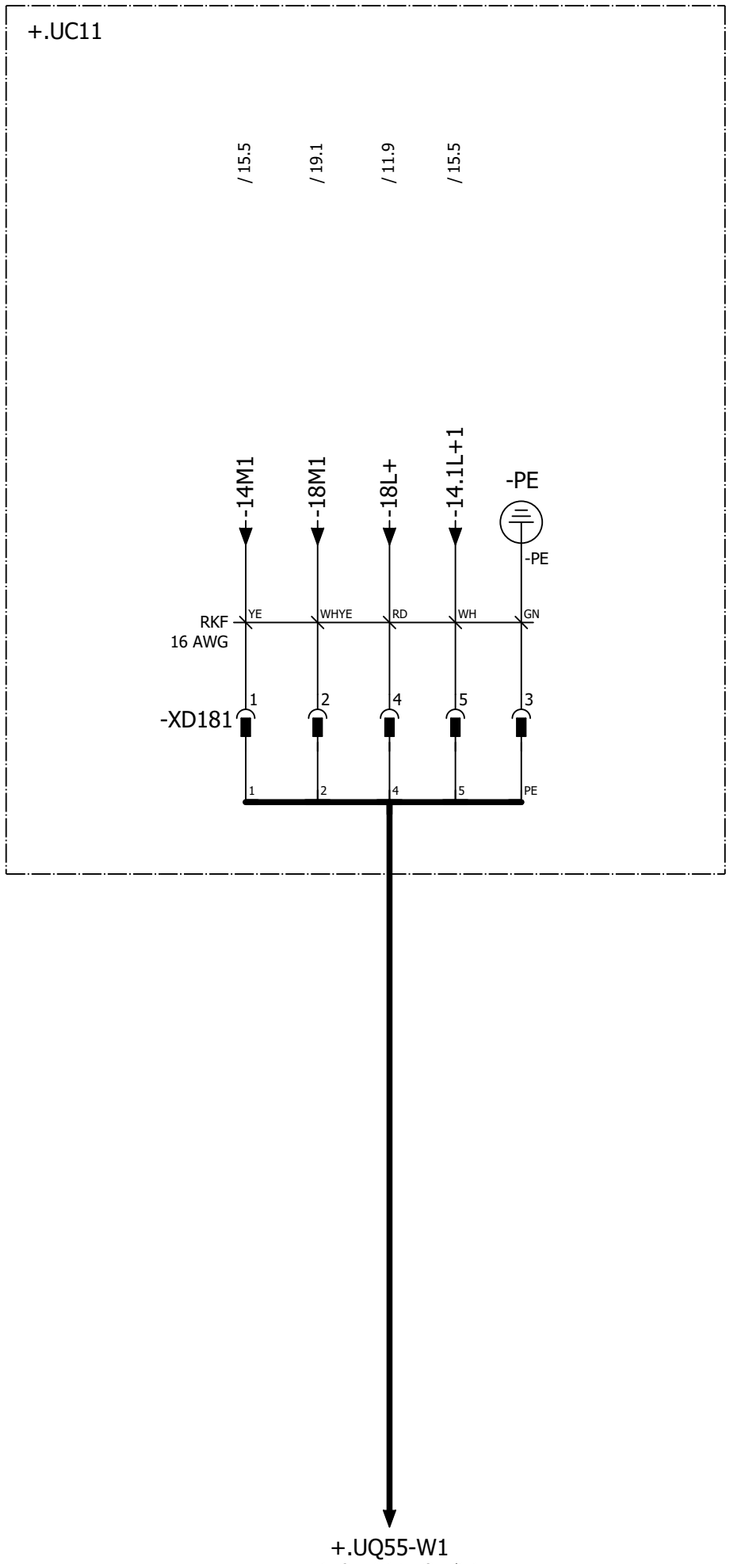

POWER IN / POWER OUT

Pin 1: 0 V UA
Pin 2: 0 V US
Pin 3: FE
Pin 4: +24 V US / 9 A
Pin 5: +24 V UA / 9 A

Pin #	WIRE	COLOR
Pin 1	14M2	YE
Pin 2	18M2	WHYE
Pin 3	GND	GN
Pin 4	15L+	RD
Pin 5	14.1L+	WH

			Date	1/11/2023	Volvo Trucks North America	Valiant TMS	24VDC Switched Power 4	Drawing name: =2V10&EFS-EL	= V1WC4	
			Ed.	MKLEPADLO					+ V1UC11	
			Appr		P6700 Bodyside RH - Robot Cell 2V10			Document type: EFS	Project nr: 22-16150	Page 27 / 1579
Modification	Date	Name	Original		Replacement of / Replaced by	Scale 1:1				

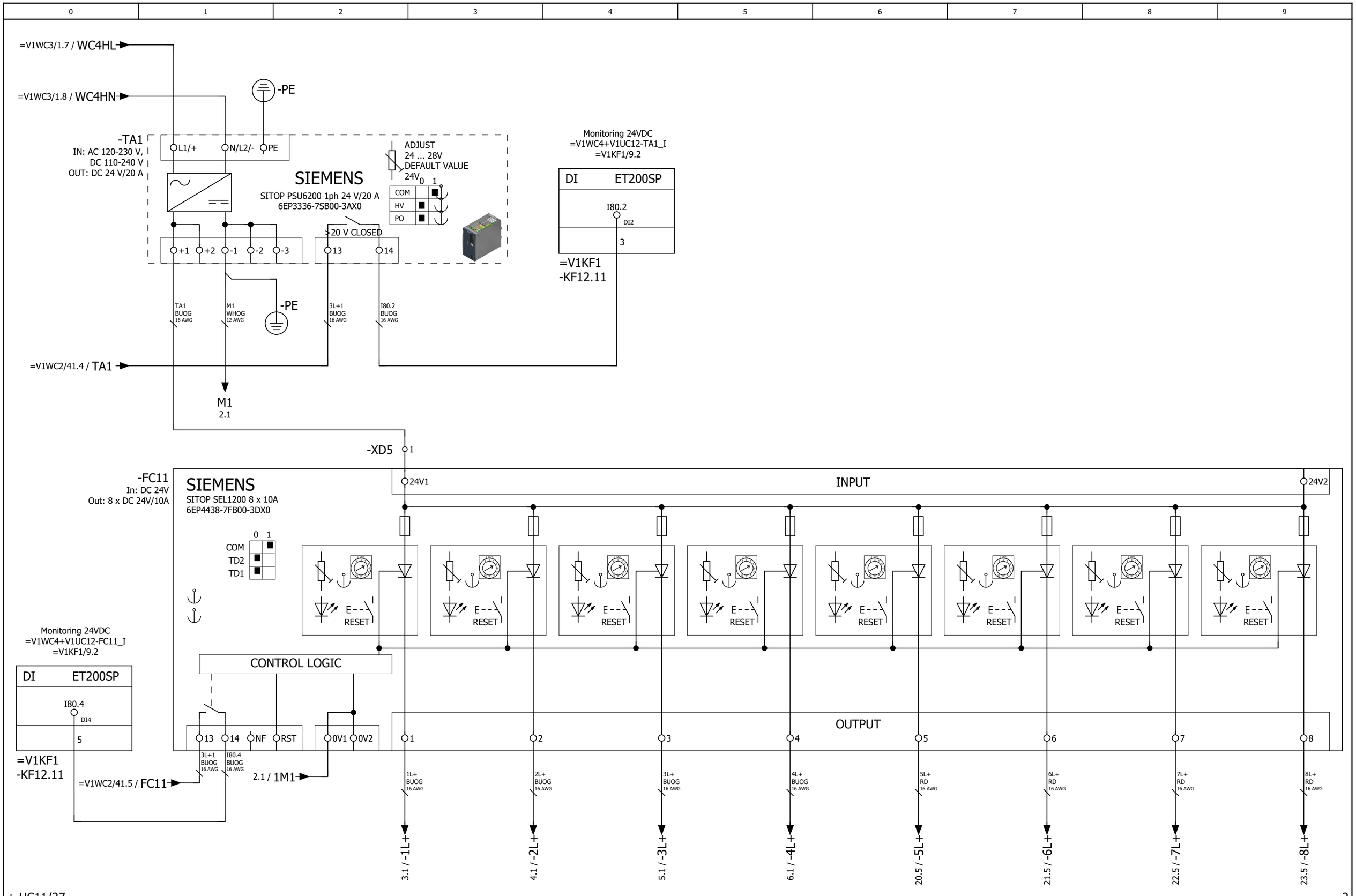

+.UC11/27

2

			Date	1/11/2023	Volvo Trucks North America	Valiant TMS	Power distribution 24VDC (Above Disconnect)	Drawing name: =2V10&EFS-EL	= V1WC4		
			Ed.	MKLEPADLO					+ V1UC12		
			Appr		P6700 Bodyside RH - Robot Cell 2V10			Document type: EFS	Project nr: 22-16150	Page	1
Modification	Date	Name	Original		Replacement of	Replaced by	Scale 1:1				1579

1 3

			Date	1/11/2023	Volvo Trucks North America	Valiant TMS	Power distribution 24VDC HL+	Drawing name: =2V10&EFS-EL	= V1WC4	
			Ed.	MKLEPADLO					+ V1UC12	
			Appr		P6700 Bodyside RH - Robot Cell 2V10			Document type: EFS	Project nr: 22-16150	Page 2
Modification	Date	Name	Original		Replacement of / Replaced by	Scale 1:1				1579

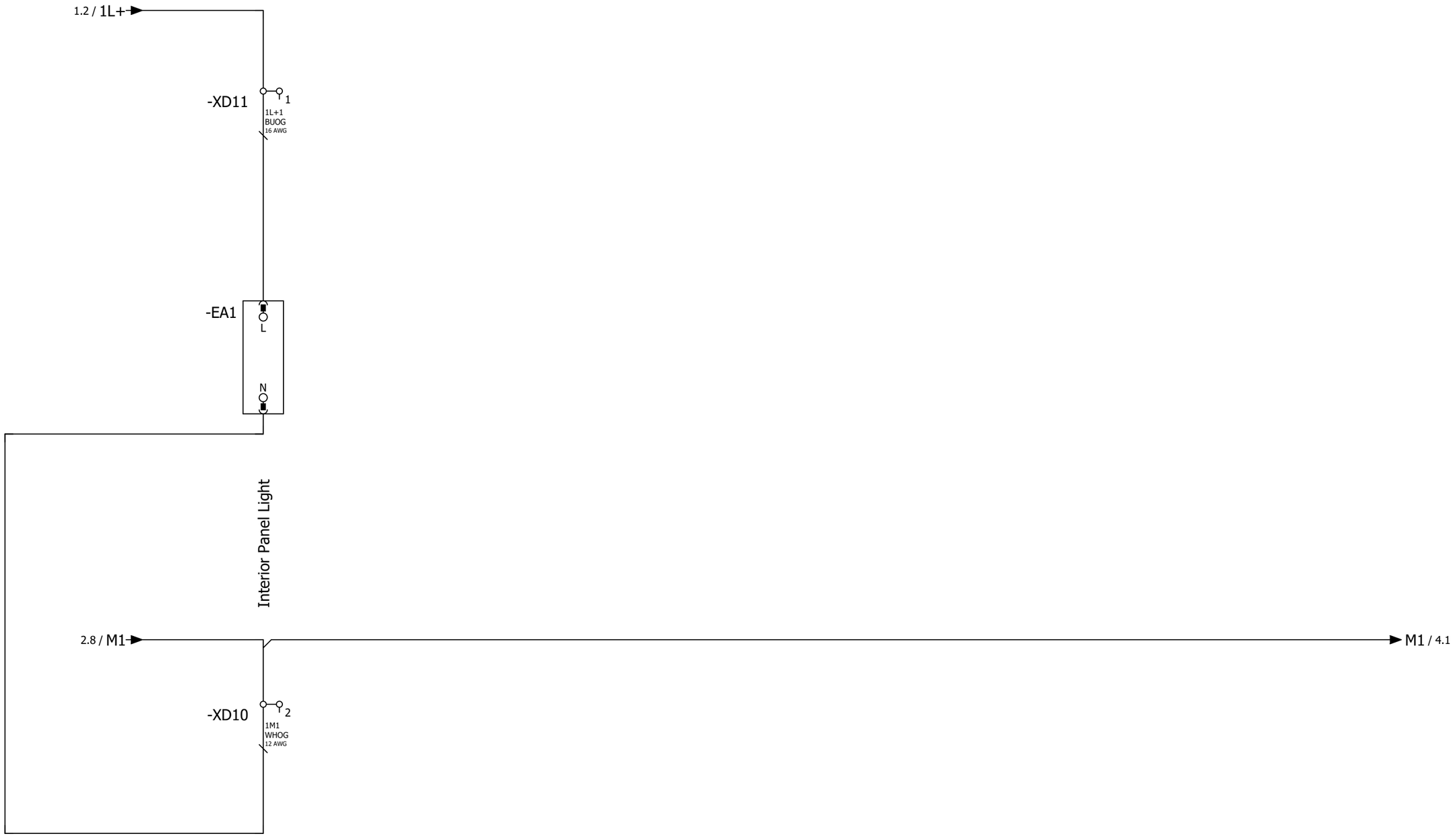

2

4

			Date	1/11/2023	Volvo Trucks North America	Valiant TMS	Power distribution 24VDC 1L+	Drawing name: =2V10&EFS-EL		= V1WC4	
			Ed.	MKLEPADLO						+ V1UC12	
			Appr		P6700 Bodyside RH - Robot Cell 2V10			Document type: EFS	Project nr: 22-16150		Page 3
Modification	Date	Name	Original		Replacement of	Replaced by	Scale 1:1				1579

3 5

			Date	1/11/2023	Volvo Trucks North America	Valiant TMS	Power distribution 24VDC 2L+	Drawing name: =2V10&EFS-EL		= V1WC4	
			Ed.	MKLEPADLO						+ V1UC12	
			Appr		P6700 Bodyside RH - Robot Cell 2V10			Document type: EFS	Project nr: 22-16150		Page 4
Modification	Date	Name	Original		Replacement of / Replaced by	Scale 1:1					1579

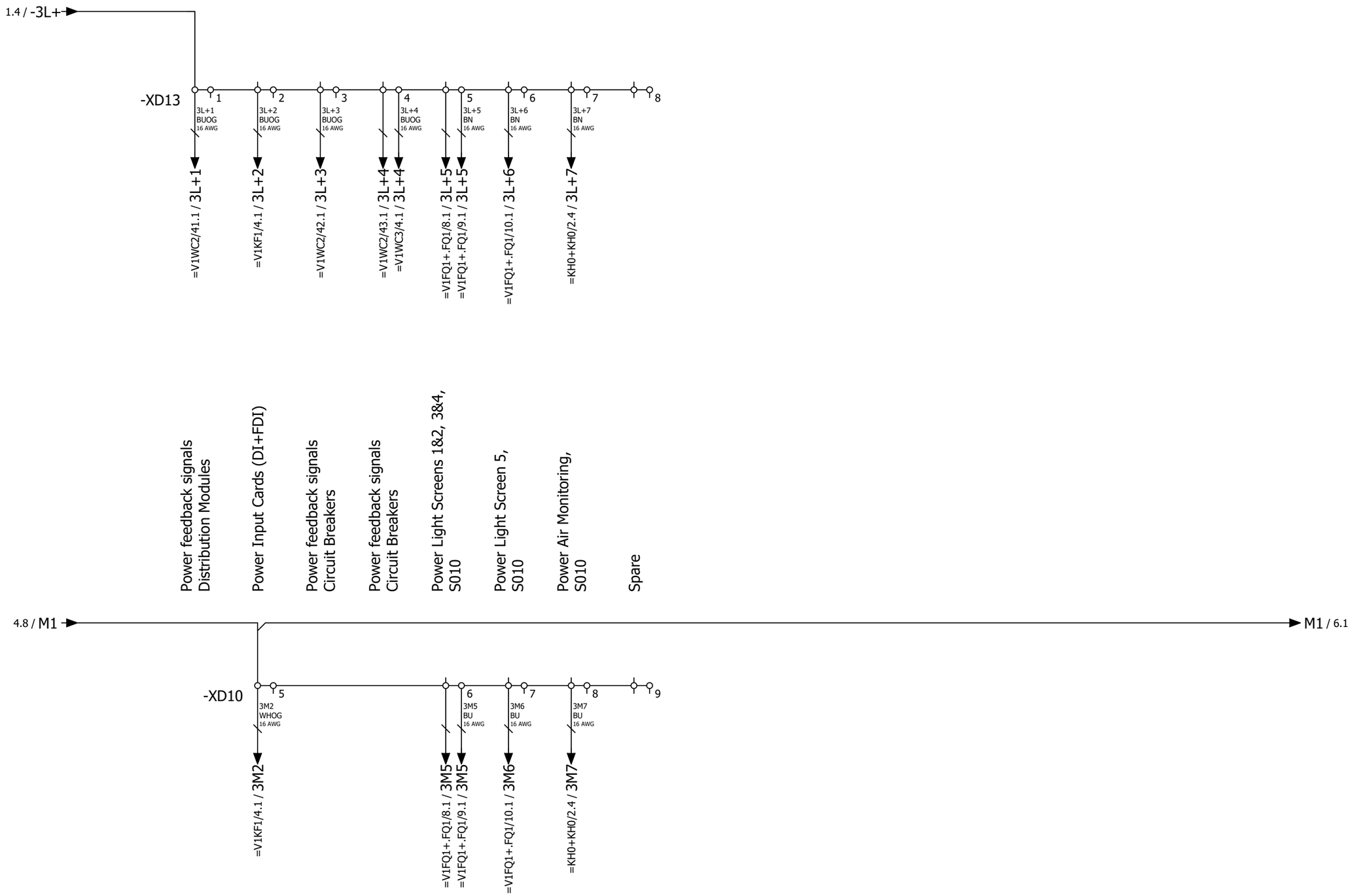

4 6

			Date	1/11/2023	Volvo Trucks North America		Valiant TMS	Power distribution 24VDC 3L+	Drawing name: =2V10&EFS-EL	= V1WC4	
			Ed.	MKLEPADLO						+ V1UC12	
			Appr		P6700 Bodyside RH - Robot Cell 2V10				Document type: EFS	Project nr: 22-16150	Page 5
Modification	Date	Name	Original		Replacement of	Replaced by	Scale 1:1				1579

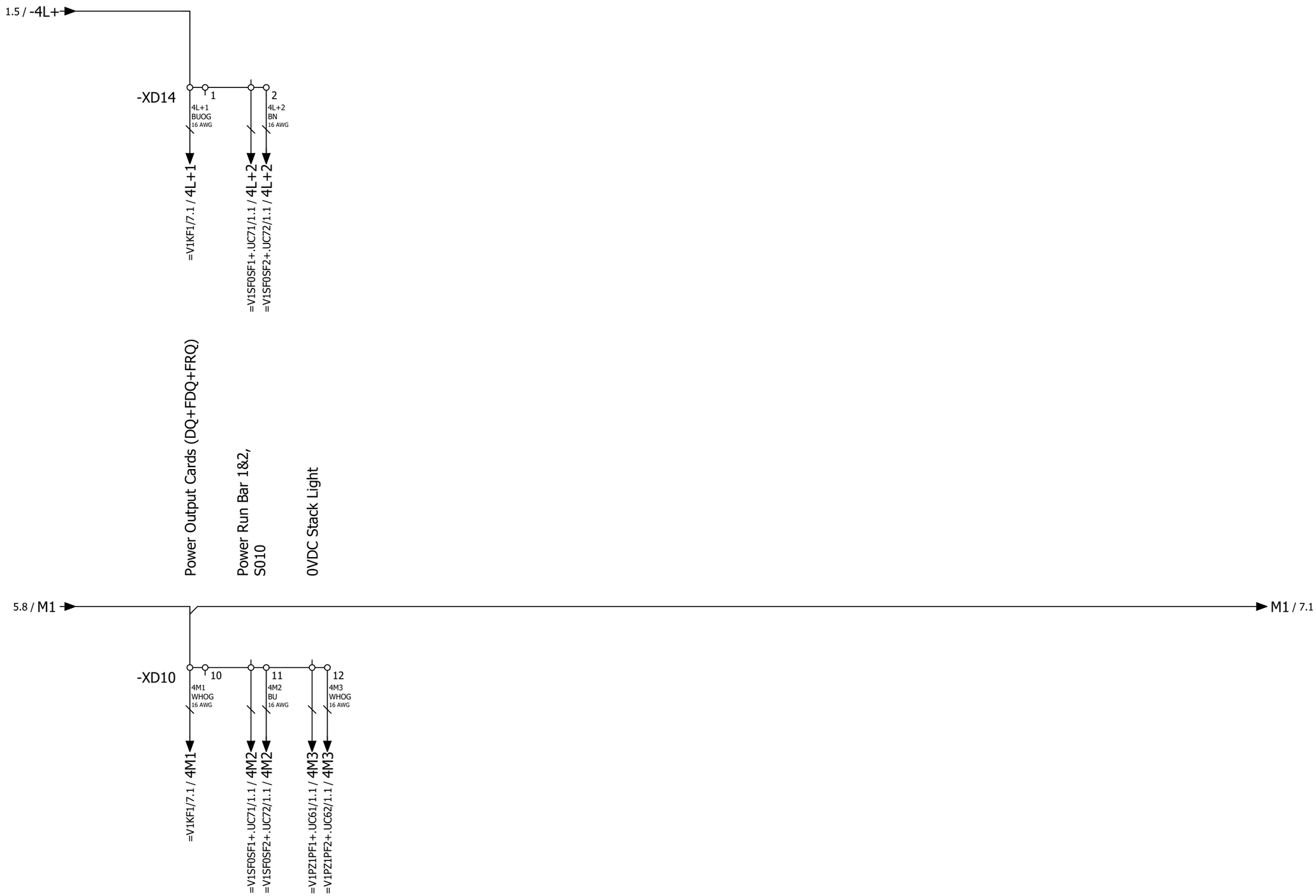
1.5 / -4L+
-XD14
1
2
4L+1
BUOG
16 AWG
4L+2
BN
16 AWG
=V1KF1/7.1 / 4L+1
=V1SF0SF1+.UC71/1.1 / 4L+2
=V1SF0SF2+.UC72/1.1 / 4L+2
Power Output Cards (DQ+FDQ+FRQ)
Power Run Bar 1&2,
S010
0VDC Stack Light
5.8 / M1
M1 / 7.1
-XD10
10
11
12
4M1
WHOG
16 AWG
4M2
BU
16 AWG
4M3
WHOG
16 AWG
=V1KF1/7.1 / 4M1
=V1SF0SF1+.UC71/1.1 / 4M2
=V1SF0SF2+.UC72/1.1 / 4M2
=V1PZ1PF1+.UC61/1.1 / 4M3
=V1PZ1PF2+.UC62/1.1 / 4M3

			Date	1/11/2023	Volvo Trucks North America	Valiant TMS	Power distribution 24VDC 5L+	Drawing name: =2V10&EFS-EL		= V1WC4	
			Ed.	MKLEPADLO						+ V1UC12	
			Appr		P6700 Bodyside RH - Robot Cell 2V10			Document type: EFS	Project nr: 22-16150		Page 7
Modification	Date	Name	Original		Replacement of / Replaced by	Scale 1:1					1579

			Date	1/11/2023	Volvo Trucks North America	Valiant TMS	Power distribution 24VDC 6L+	Drawing name: =2V10&EFS-EL		= V1WC4	
			Ed.	MKLEPADLO						+ V1UC12	
			Appr		P6700 Bodyside RH - Robot Cell 2V10			Document type: EFS	Project nr: 22-16150		Page 8
Modification	Date	Name	Original		Replacement of / Replaced by	Scale 1:1					1579

8

10

			Date	1/11/2023	Volvo Trucks North America	Valiant TMS	Power distribution 24VDC 7L+	Drawing name: =2V10&EFS-EL		= V1WC4	
			Ed.	MKLEPADLO						+ V1UC12	
			Appr		P6700 Bodyside RH - Robot Cell 2V10			Document type: EFS	Project nr: 22-16150		Page 9
Modification	Date	Name	Original		Replacement of / Replaced by	Scale 1:1					1579

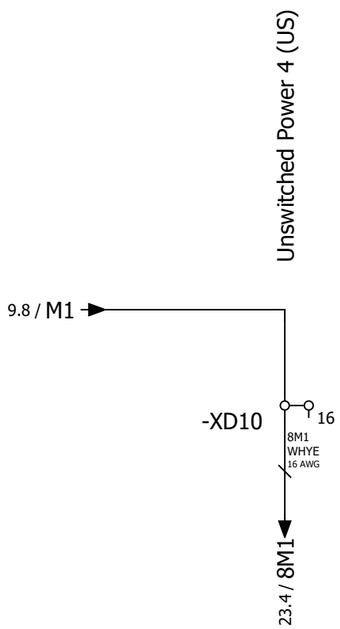

			Date	1/11/2023	Volvo Trucks North America	Valiant TMS	Power distribution 24VDC 8L+	Drawing name: =2V10&EFS-EL		= V1WC4	
			Ed.	MKLEPADLO						+ V1UC12	
			Appr		P6700 Bodyside RH - Robot Cell 2V10			Document type: EFS	Project nr: 22-16150		Page 10
Modification	Date	Name	Original		Replacement of / Replaced by	Scale 1:1					1579

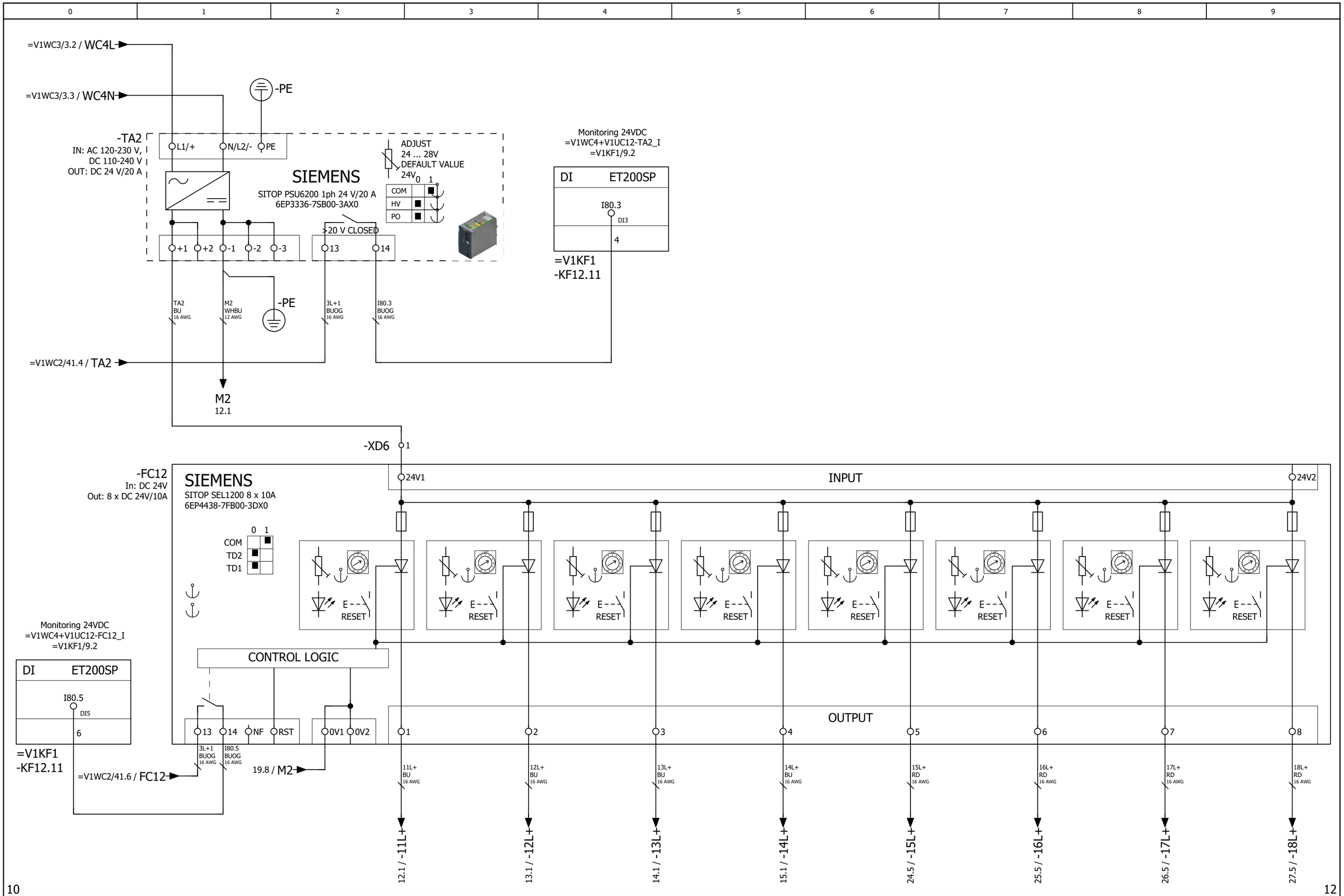

			Date	1/11/2023	Volvo Trucks North America	Valiant TMS	Power distribution 24VDC (Below Disconnect)	Drawing name: =2V10&EFS-EL	= V1WC4		
			Ed.	MKLEPADLO					+ V1UC12		
			Appr		P6700 Bodyside RH - Robot Cell 2V10			Document type: EFS	Project nr: 22-16150	Page	11
Modification	Date	Name	Original		Replacement of	Replaced by	Scale 1:1				1579

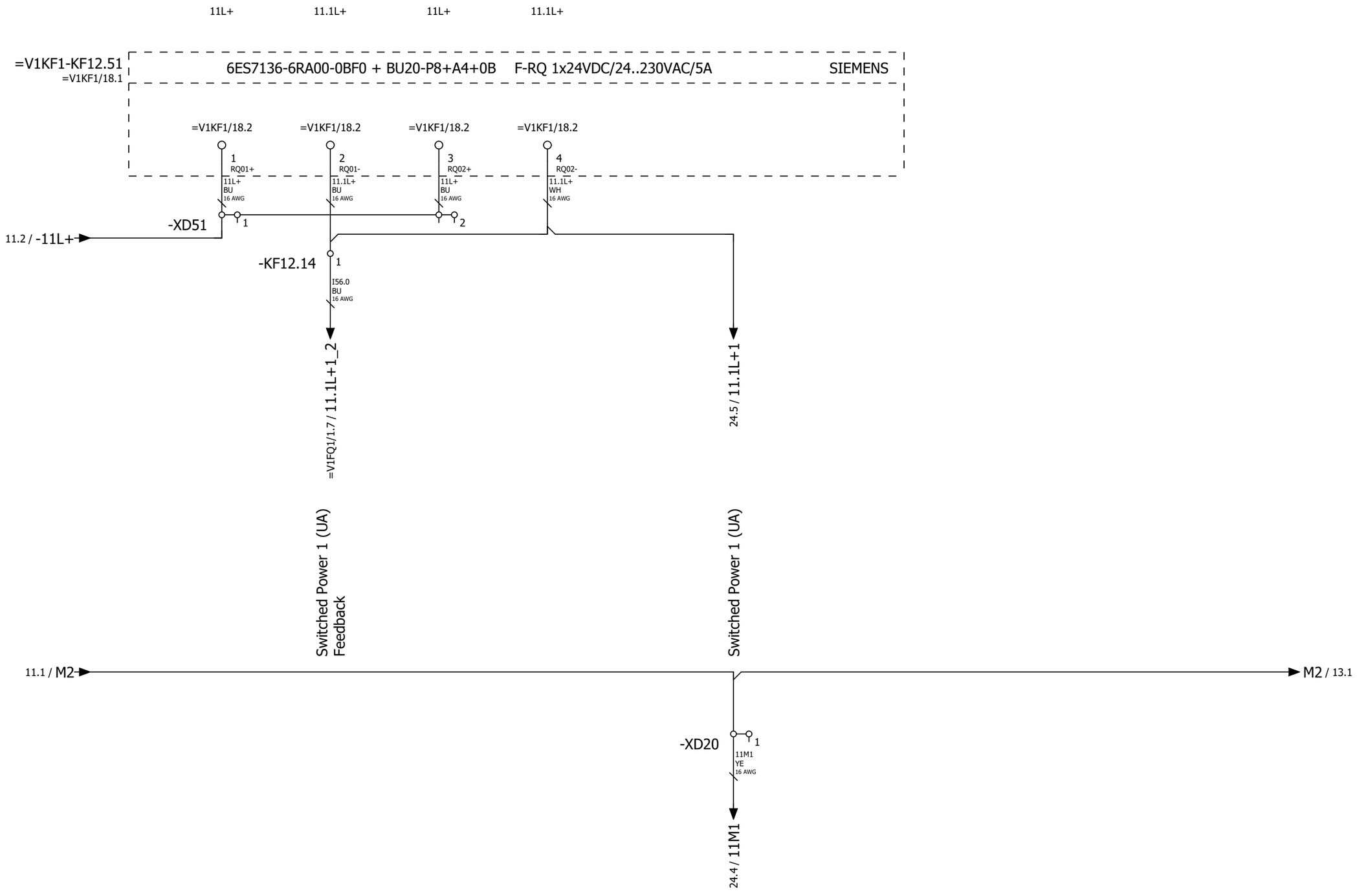

11

13

			Date	1/11/2023	Volvo Trucks North America	Valiant TMS	Power distribution 24VDC 11L+	Drawing name: =2V10&EFS-EL		= V1WC4	
			Ed.	MKLEPADLO						+ V1UC12	
			Appr		P6700 Bodyside RH - Robot Cell 2V10			Document type: EFS	Project nr: 22-16150		Page 12
Modification	Date	Name	Original		Replacement of / Replaced by	Scale 1:1					1579

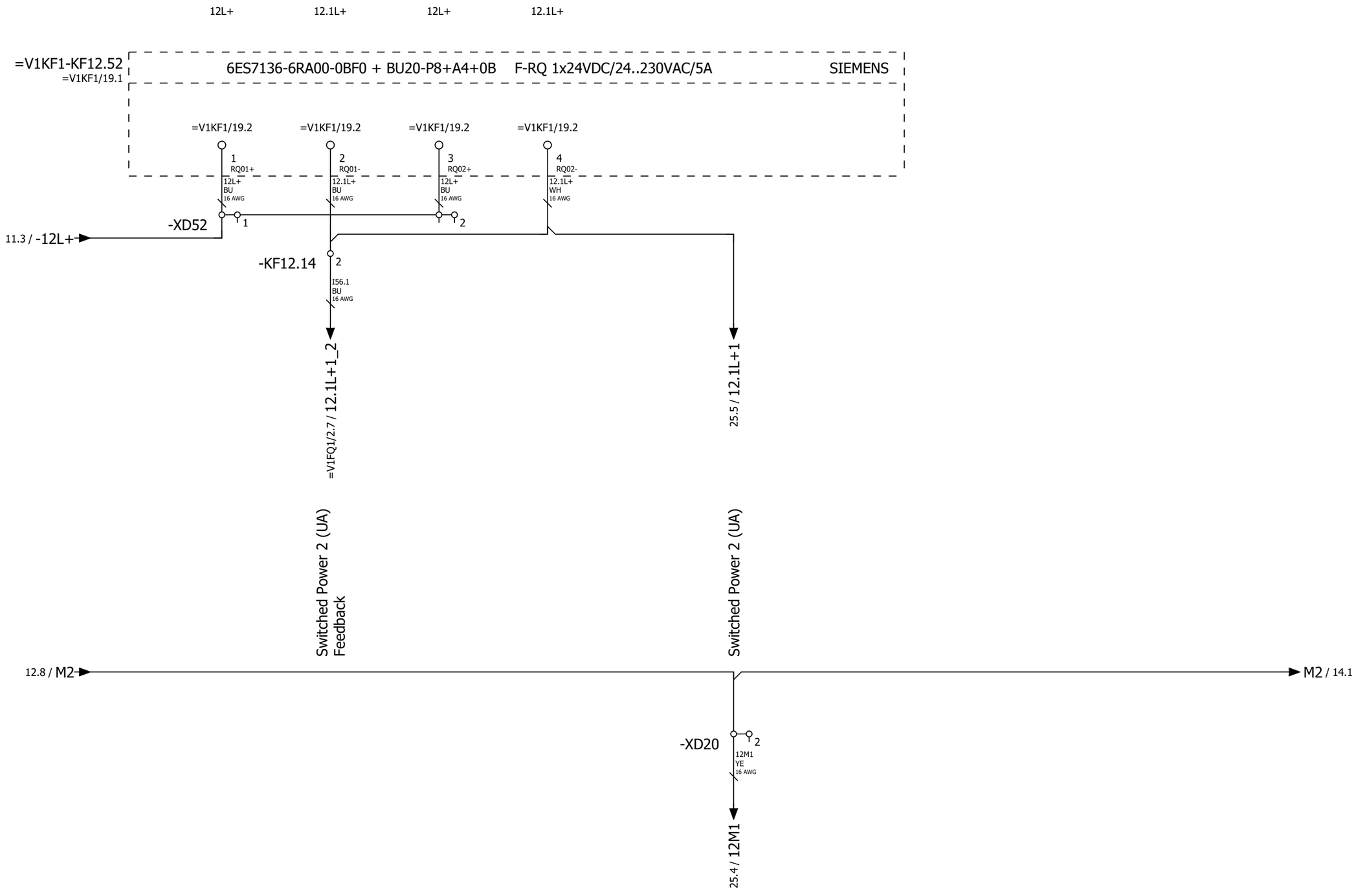

12

14

			Date	1/11/2023	Volvo Trucks North America	Valiant TMS	Power distribution 24VDC 12L+	Drawing name: =2V10&EFS-EL		= V1WC4	
			Ed.	MKLEPADLO						+ V1UC12	
			Appr		P6700 Bodyside RH - Robot Cell 2V10			Document type: EFS	Project nr: 22-16150		Page 13
Modification	Date	Name	Original		Replacement of	Replaced by	Scale 1:1				1579

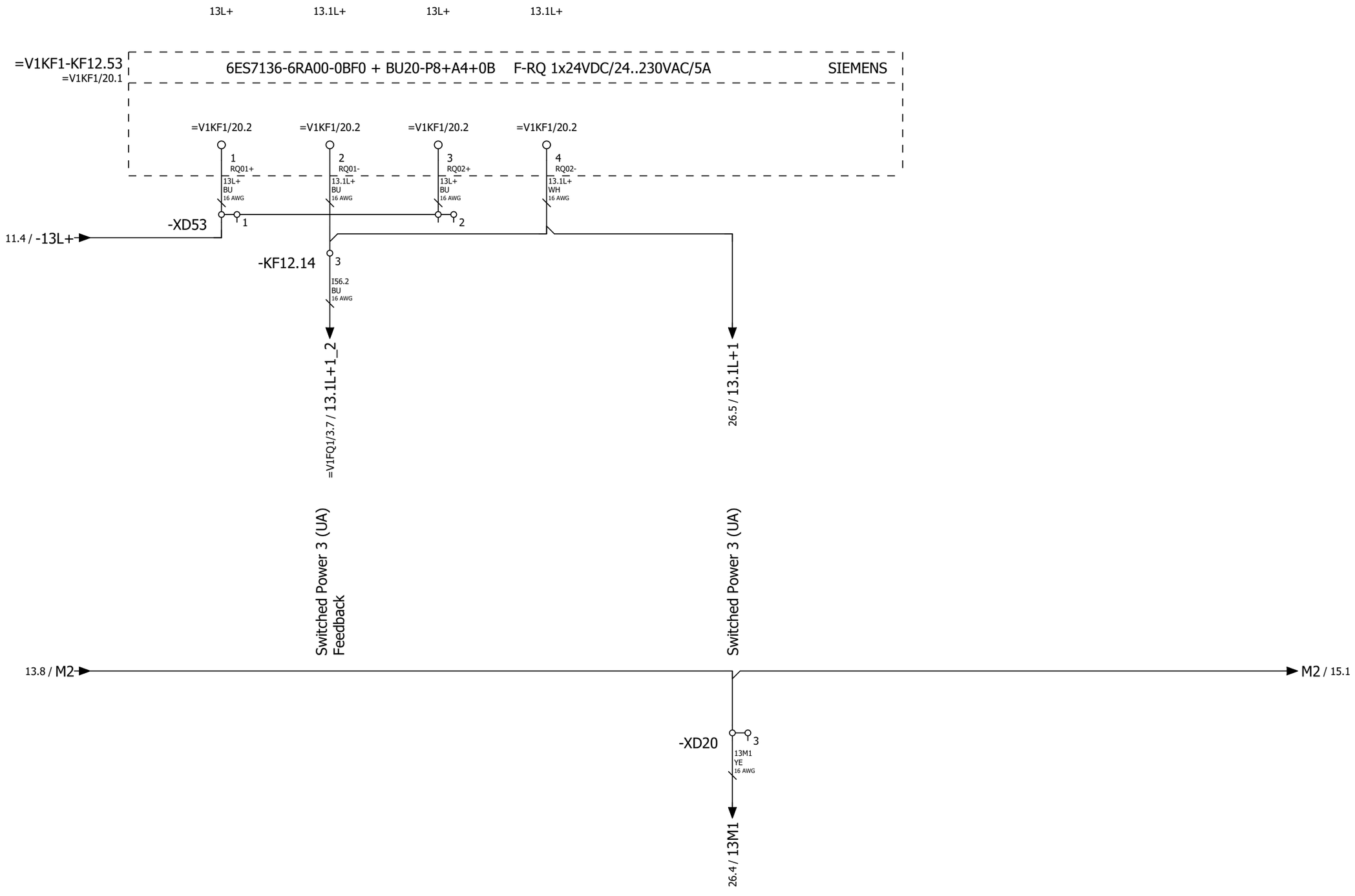

			Date	1/11/2023	Volvo Trucks North America	Valiant TMS	Power distribution 24VDC 13L+	Drawing name: =2V10&EFS-EL		= V1WC4	
			Ed.	MKLEPADLO						+ V1UC12	
			Appr		P6700 Bodyside RH - Robot Cell 2V10			Document type: EFS	Project nr: 22-16150		Page 14
Modification	Date	Name	Original		Replacement of	Replaced by	Scale 1:1				1579

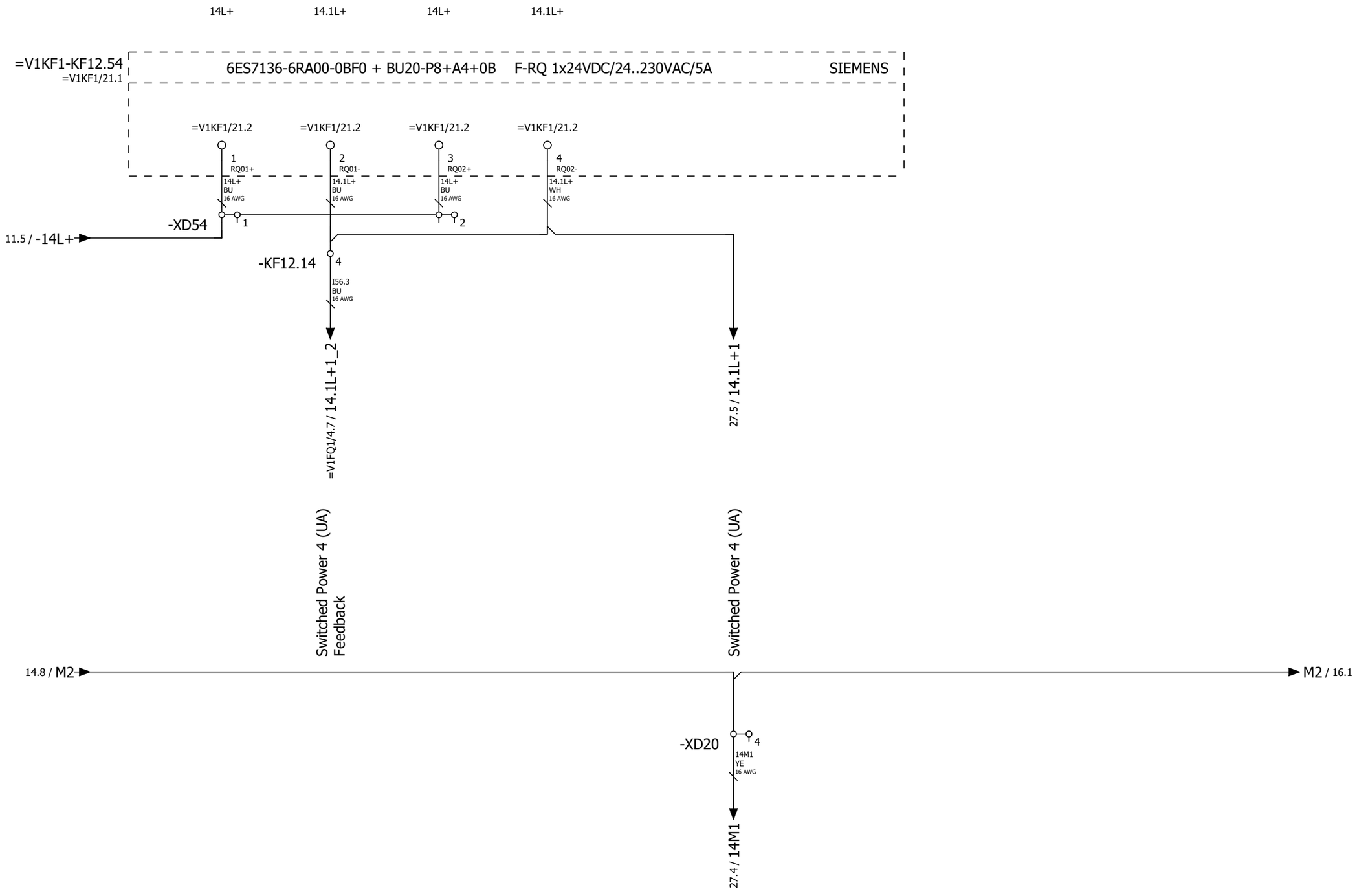

14

16

			Date	1/11/2023	Volvo Trucks North America	Valiant TMS	Power distribution 24VDC 14L+	Drawing name: =2V10&EFS-EL		= V1WC4	
			Ed.	MKLEPADLO						+ V1UC12	
			Appr		P6700 Bodyside RH - Robot Cell 2V10			Document type: EFS	Project nr: 22-16150		Page 15
Modification	Date	Name	Original		Replacement of	Replaced by	Scale 1:1				1579

			Date	1/11/2023	Volvo Trucks North America	Valiant TMS	Power distribution 24VDC 15L+	Drawing name: =2V10&EFS-EL		= V1WC4	
			Ed.	MKLEPADLO						+ V1UC12	
			Appr		P6700 Bodyside RH - Robot Cell 2V10			Document type: EFS	Project nr: 22-16150		Page 16
Modification	Date	Name	Original		Replacement of / Replaced by	Scale 1:1					1579

			Date	1/11/2023	Volvo Trucks North America	Valiant TMS	Power distribution 24VDC 16L+	Drawing name: =2V10&EFS-EL		= V1WC4	
			Ed.	MKLEPADLO						+ V1UC12	
			Appr		P6700 Bodyside RH - Robot Cell 2V10			Document type: EFS	Project nr: 22-16150		Page 17
Modification	Date	Name	Original		Replacement of / Replaced by	Scale 1:1					1579

17

19

			Date	1/11/2023	Volvo Trucks North America	Valiant TMS	Power distribution 24VDC 17L+	Drawing name: =2V10&EFS-EL		= V1WC4	
			Ed.	MKLEPADLO						+ V1UC12	
			Appr		P6700 Bodyside RH - Robot Cell 2V10			Document type: EFS	Project nr: 22-16150		Page 18
Modification	Date	Name	Original		Replacement of / Replaced by	Scale 1:1					1579

18

20

			Date	1/11/2023	Volvo Trucks North America	Valiant TMS	Power distribution 24VDC 18L+	Drawing name: =2V10&EFS-EL		= V1WC4	
			Ed.	MKLEPADLO						+ V1UC12	
			Appr		P6700 Bodyside RH - Robot Cell 2V10			Document type: EFS	Project nr: 22-16150		Page 19
Modification	Date	Name	Original		Replacement of	Replaced by	Scale 1:1				1579

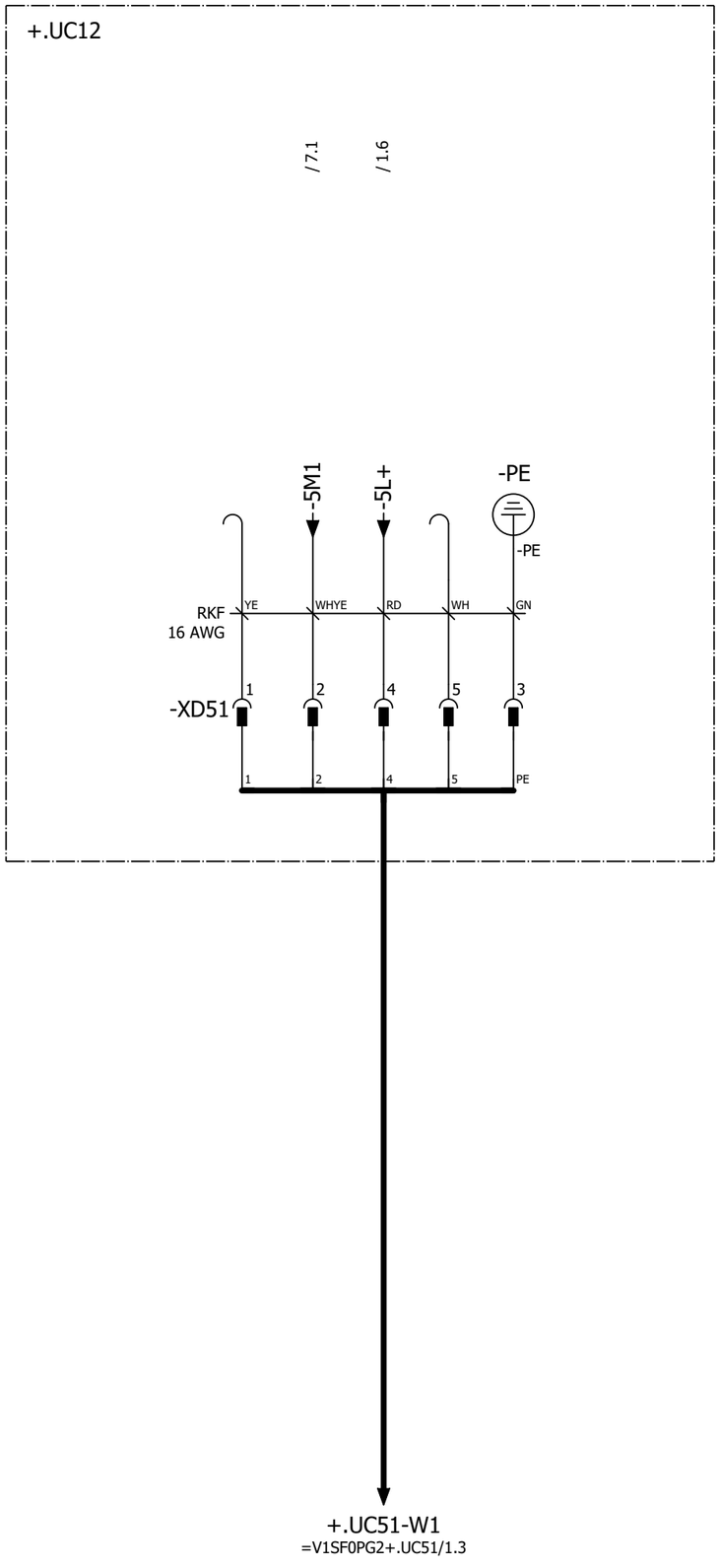

POWER IN / POWER OUT

Pin 1: 0 V UA
Pin 2: 0 V US
Pin 3: FE
Pin 4: +24 V US / 9 A
Pin 5: +24 V UA / 9 A

Pin #	WIRE	COLOR
Pin 1	N/C	YE
Pin 2	-5M1	WHYE
Pin 3	GND	GN
Pin 4	-5L+	RD
Pin 5	N/C	WH

			Date	1/11/2023	Volvo Trucks North America		Valiant TMS	24VDC Unswitched Power 1	Drawing name: =2V10&EFS-EL		= V1WC4
			Ed.	MKLEPADLO							+ V1UC12
			Appr		P6700 Bodyside RH - Robot Cell 2V10				Document type: EFS	Project nr: 22-16150	Page 20
Modification	Date	Name	Original		Replacement of	Replaced by	Scale 1:1				1579

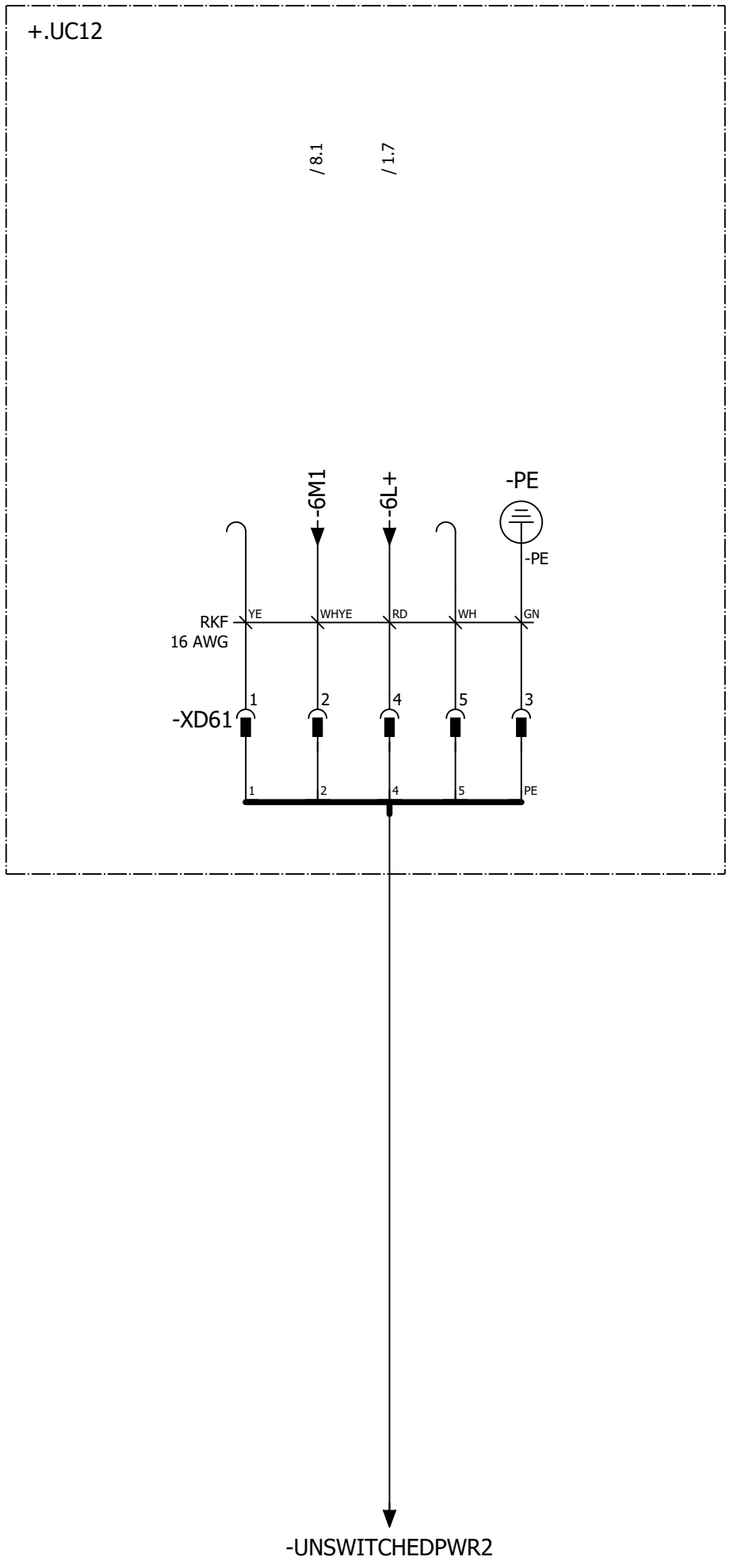

POWER IN / POWER OUT

Pin 1: 0 V UA
Pin 2: 0 V US
Pin 3: FE
Pin 4: +24 V US / 9 A
Pin 5: +24 V UA / 9 A

Pin #	WIRE	COLOR
Pin 1	N/C	YE
Pin 2	-6M1	WHYE
Pin 3	GND	GN
Pin 4	-6L+	RD
Pin 5	N/C	WH

			Date	1/11/2023	Volvo Trucks North America		Valiant TMS	24VDC Unswitched Power 2	Drawing name: =2V10&EFS-EL	= V1WC4	
			Ed.	MKLEPADLO						+ V1UC12	
			Appr		P6700 Bodyside RH - Robot Cell 2V10				Document type: EFS	Project nr: 22-16150	Page 21 / 1579
Modification	Date	Name	Original		Replacement of	Replaced by	Scale 1:1				

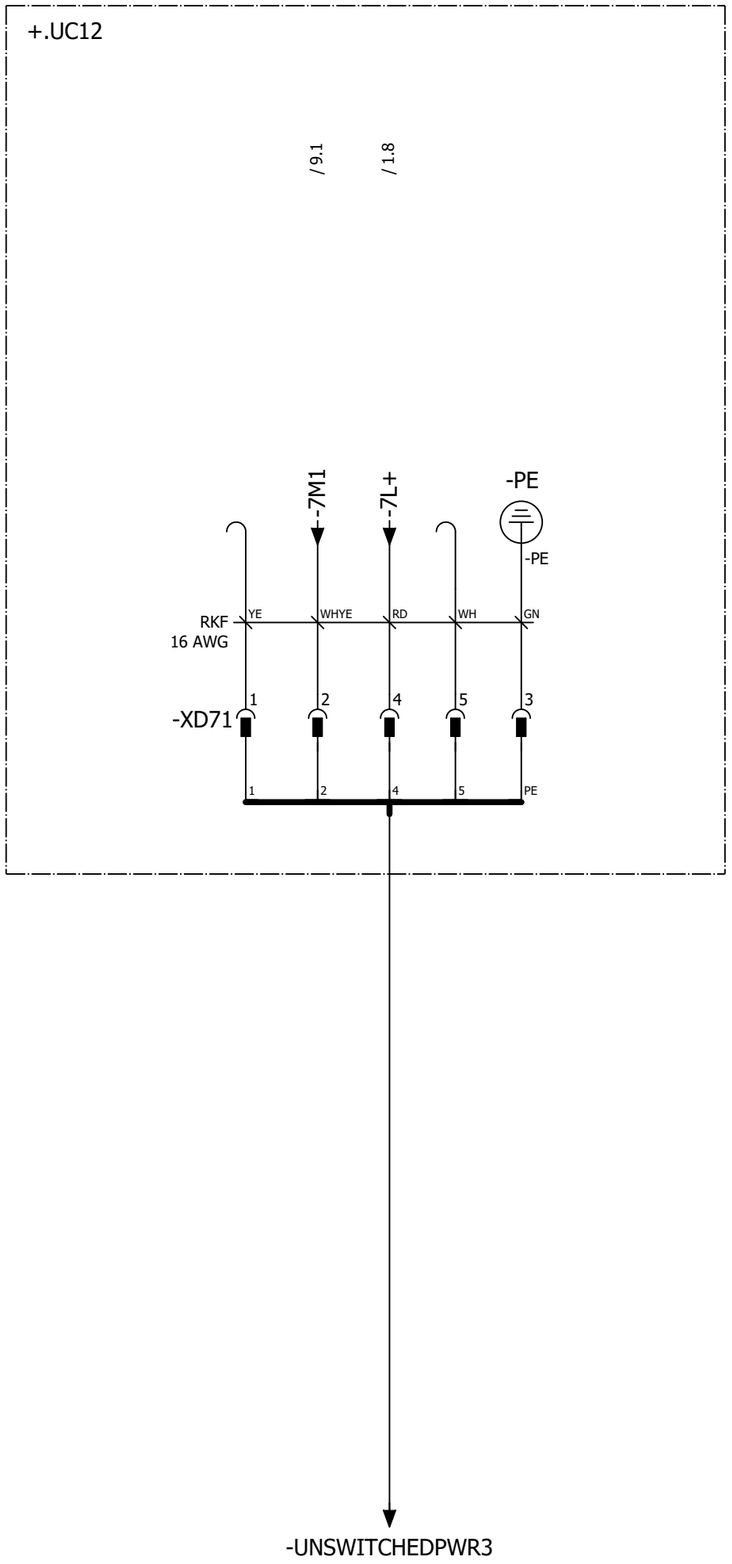

POWER IN / POWER OUT

Pin 1: 0 V UA
Pin 2: 0 V US
Pin 3: FE
Pin 4: +24 V US / 9 A
Pin 5: +24 V UA / 9 A

Pin #	WIRE	COLOR
Pin 1	N/C	YE
Pin 2	-7M1	WHYE
Pin 3	GND	GN
Pin 4	-7L+	RD
Pin 5	N/C	WH

			Date	1/11/2023	Volvo Trucks North America		Valiant TMS	24VDC Unswitched Power 3	Drawing name: =2V10&EFS-EL	= V1WC4	
			Ed.	MKLEPADLO						+ V1UC12	
			Appr		P6700 Bodyside RH - Robot Cell 2V10				Document type: EFS	Project nr: 22-16150	Page 22
Modification	Date	Name	Original		Replacement of	Replaced by	Scale 1:1				1579

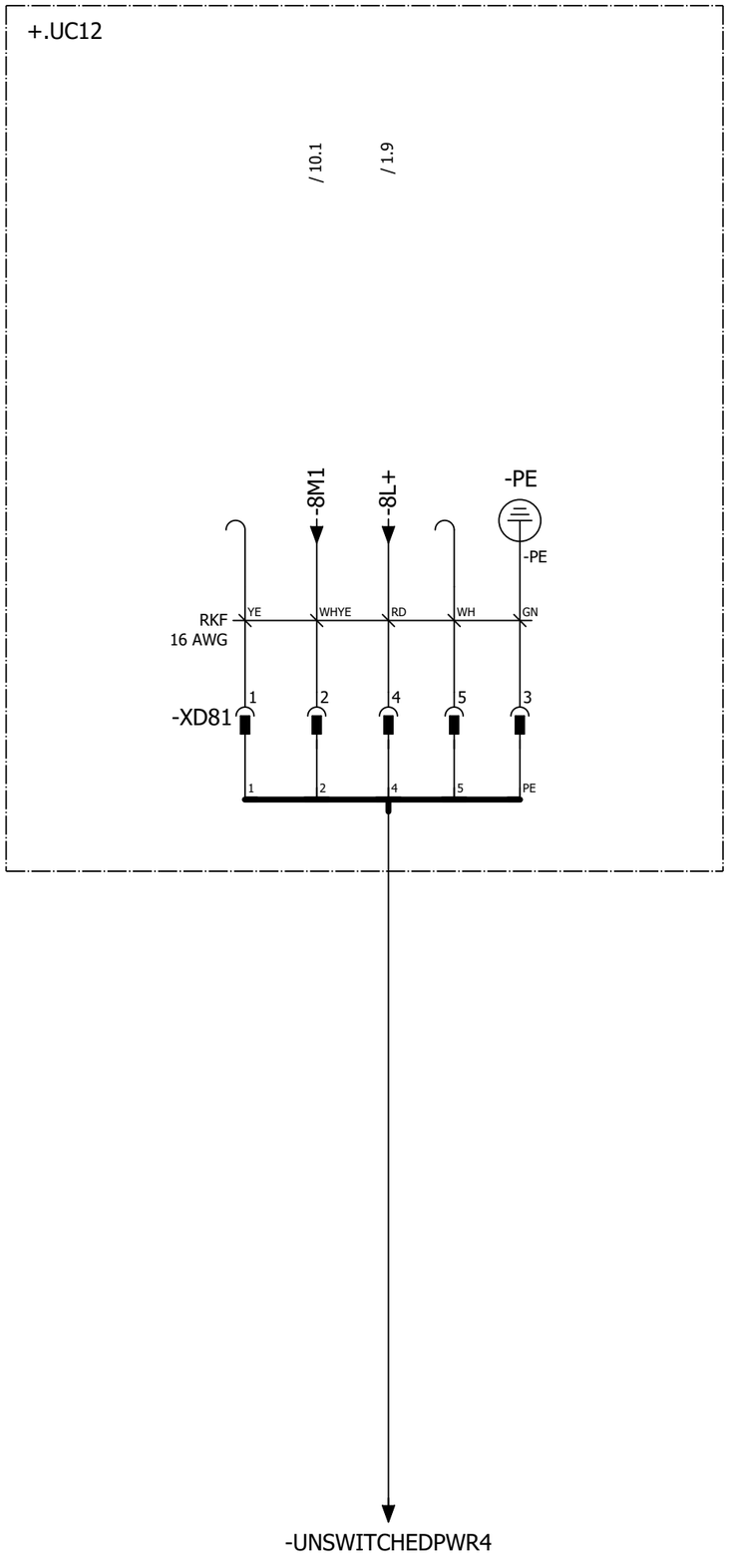

POWER IN / POWER OUT

Pin 1: 0 V UA
Pin 2: 0 V US
Pin 3: FE
Pin 4: +24 V US / 9 A
Pin 5: +24 V UA / 9 A

Pin #	WIRE	COLOR
Pin 1	N/C	YE
Pin 2	-8M1	WHYE
Pin 3	GND	GN
Pin 4	-8L+	RD
Pin 5	N/C	WH

			Date	1/11/2023	Volvo Trucks North America		Valiant TMS	24VDC Unswitched Power 4	Drawing name: =2V10&EFS-EL	= V1WC4	
			Ed.	MKLEPADLO						+ V1UC12	
			Appr		P6700 Bodyside RH - Robot Cell 2V10				Document type: EFS	Project nr: 22-16150	Page 23 / 1579
Modification	Date	Name	Original		Replacement of	Replaced by	Scale 1:1				

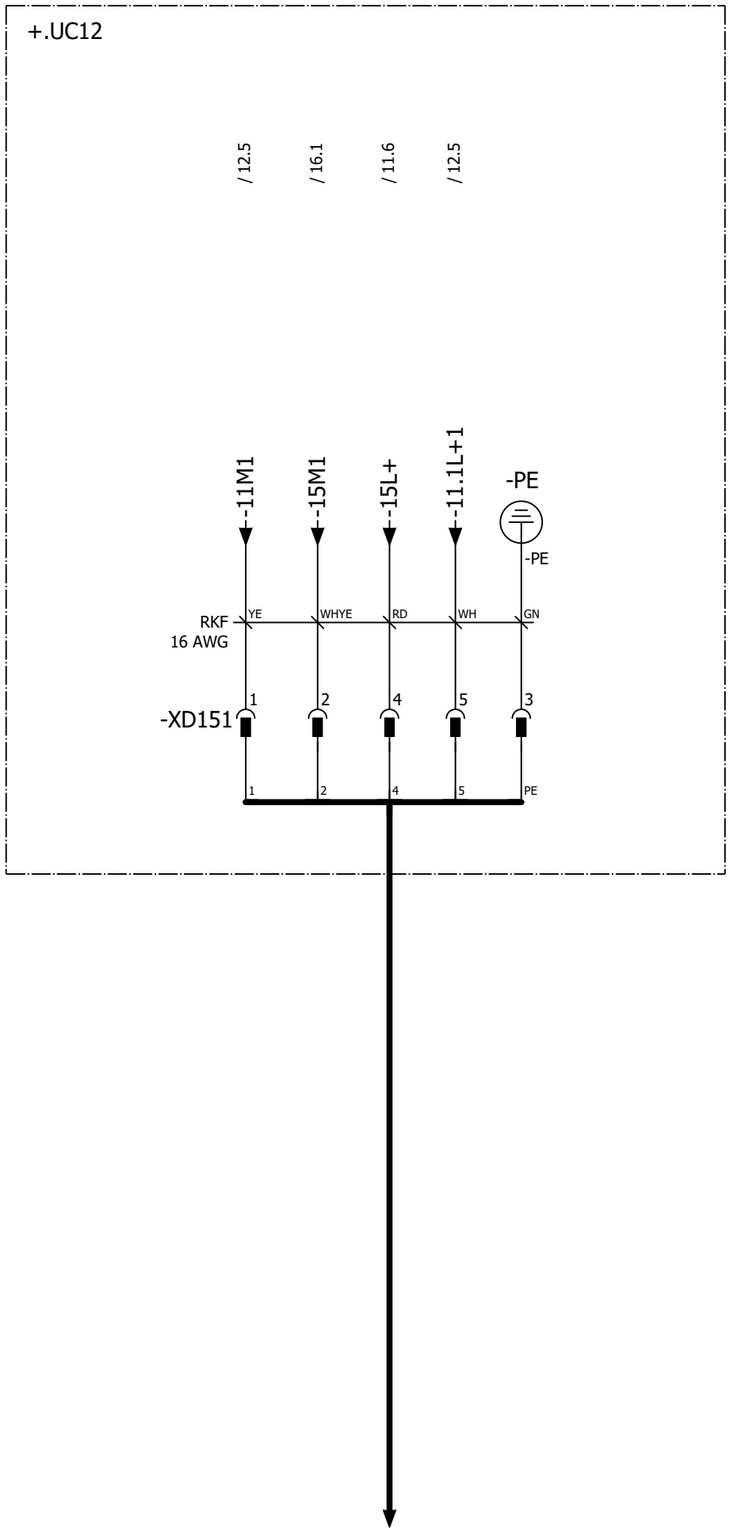

POWER IN / POWER OUT

Pin 1: 0 V UA
Pin 2: 0 V US
Pin 3: FE
Pin 4: +24 V US / 9 A
Pin 5: +24 V UA / 9 A

Pin #	WIRE	COLOR
Pin 1	-11M1	YE
Pin 2	-15M1	WHYE
Pin 3	GND	GN
Pin 4	-15L+	RD
Pin 5	-11.1L+1	WH

			Date	1/11/2023	Volvo Trucks North America	Valiant TMS	24VDC Switched Power 1	Drawing name: =2V10&EFS-EL	= V1WC4	
			Ed.	MKLEPADLO					+ V1UC12	
			Appr		P6700 Bodyside RH - Robot Cell 2V10			Document type: EFS	Project nr: 22-16150	Page 24 / 1579
Modification	Date	Name	Original		Replacement of / Replaced by	Scale 1:1				

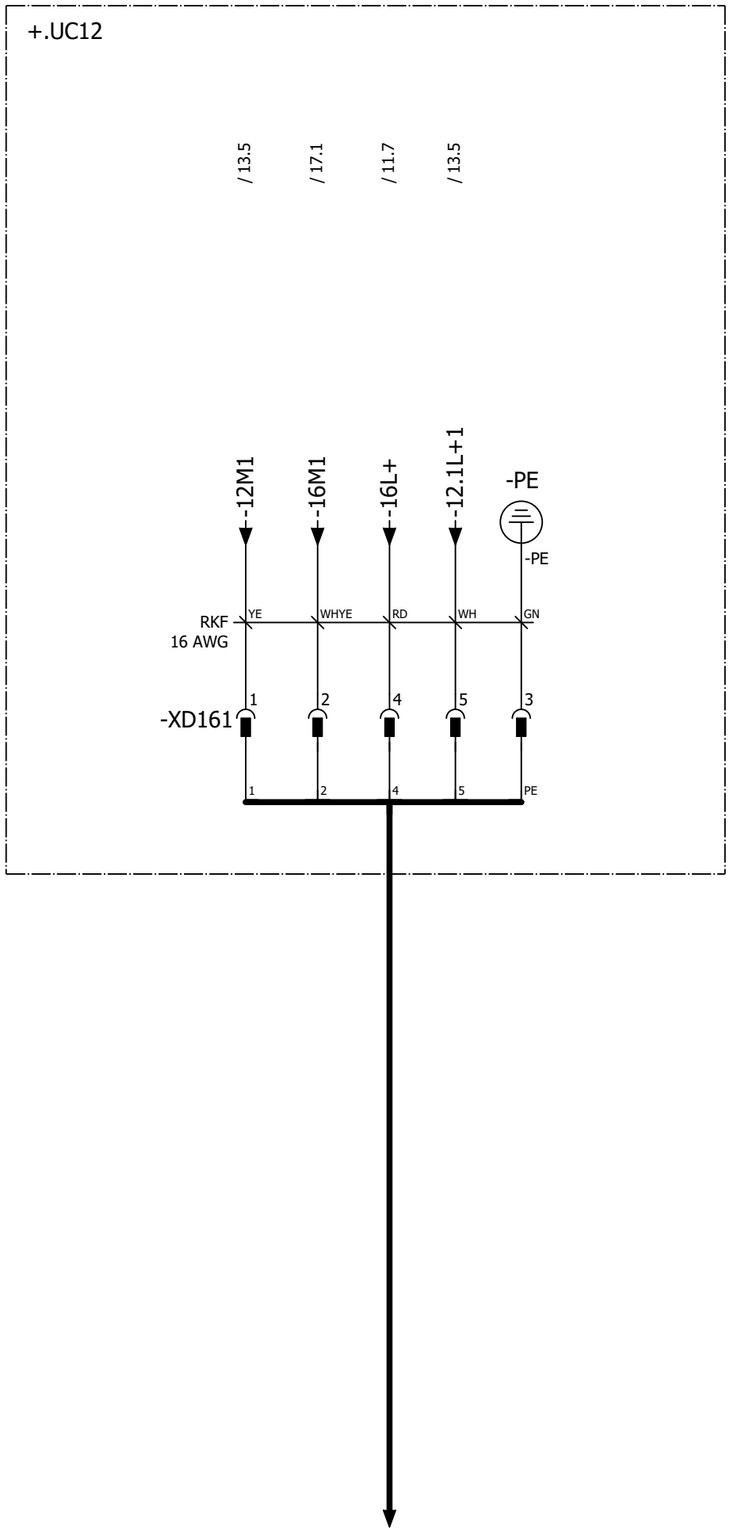

POWER IN / POWER OUT

Pin 1: 0 V UA
Pin 2: 0 V US
Pin 3: FE
Pin 4: +24 V US / 9 A
Pin 5: +24 V UA / 9 A

Pin #	WIRE	COLOR
Pin 1	-12M1	YE
Pin 2	-16M1	WHYE
Pin 3	GND	GN
Pin 4	-16L+	RD
Pin 5	-12.1L+1	WH

			Date	1/11/2023	Volvo Trucks North America	Valiant TMS	24VDC Switched Power 2	Drawing name: =2V10&EFS-EL		= V1WC4	
			Ed.	MKLEPADLO						+ V1UC12	
			Appr		P6700 Bodyside RH - Robot Cell 2V10			Document type: EFS	Project nr: 22-16150		Page 25
Modification	Date	Name	Original		Replacement of / Replaced by	Scale 1:1					1579

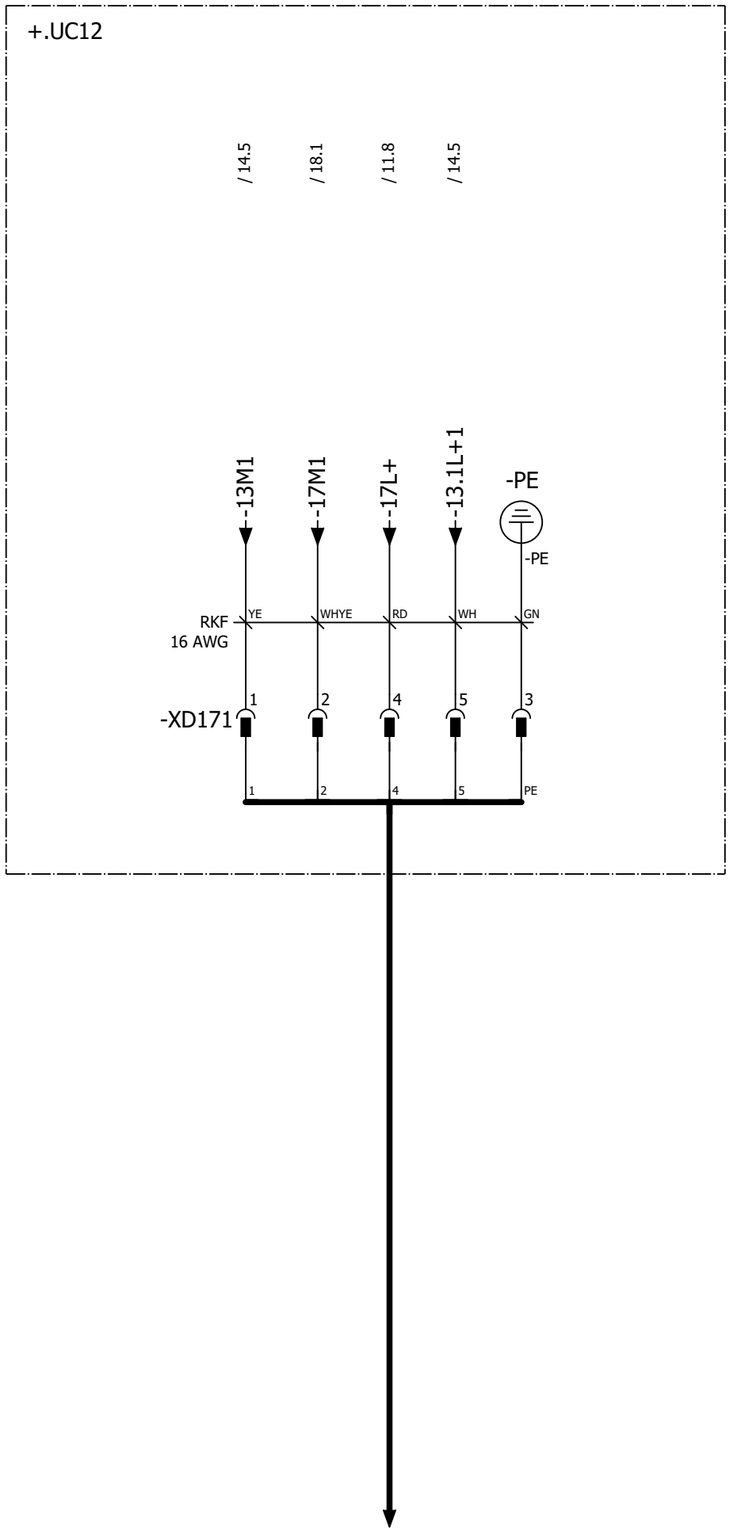

POWER IN / POWER OUT

Pin 1: 0 V UA
Pin 2: 0 V US
Pin 3: FE
Pin 4: +24 V US / 9 A
Pin 5: +24 V UA / 9 A

Pin #	WIRE	COLOR
Pin 1	-13M1	YE
Pin 2	-17M1	WHYE
Pin 3	GND	GN
Pin 4	-17L+	RD
Pin 5	-13.1L+1	WH

			Date	1/11/2023	Volvo Trucks North America		Valiant TMS	24VDC Switched Power 3	Drawing name: =2V10&EFS-EL		= V1WC4
			Ed.	MKLEPADLO							+ V1UC12
			Appr		P6700 Bodyside RH - Robot Cell 2V10				Document type: EFS	Project nr: 22-16150	Page 26
Modification	Date	Name	Original		Replacement of	Replaced by	Scale 1:1				1579

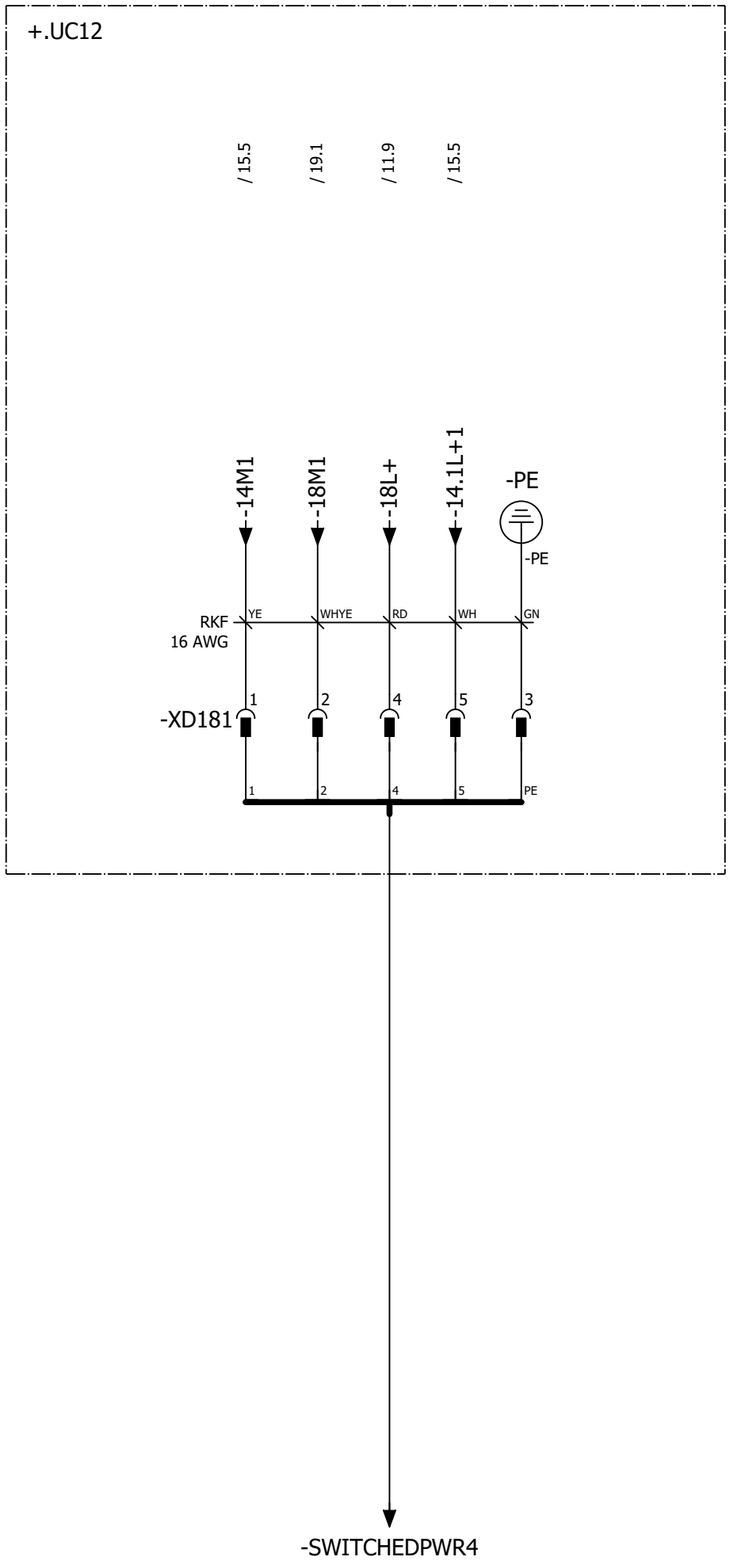

POWER IN / POWER OUT

Pin 1: 0 V UA
Pin 2: 0 V US
Pin 3: FE
Pin 4: +24 V US / 9 A
Pin 5: +24 V UA / 9 A

Pin #	WIRE	COLOR
Pin 1	-14M1	YE
Pin 2	-18M1	WHYE
Pin 3	GND	GN
Pin 4	-18L+	RD
Pin 5	-14.1L+1	WH

			Date	1/11/2023	Volvo Trucks North America	Valiant TMS	24VDC Switched Power 4	Drawing name: =2V10&EFS-EL		= V1WC4	
			Ed.	MKLEPADLO						+ V1UC12	
			Appr		P6700 Bodyside RH - Robot Cell 2V10			Document type: EFS	Project nr: 22-16150		Page 27
Modification	Date	Name	Original		Replacement of / Replaced by	Scale 1:1					1579

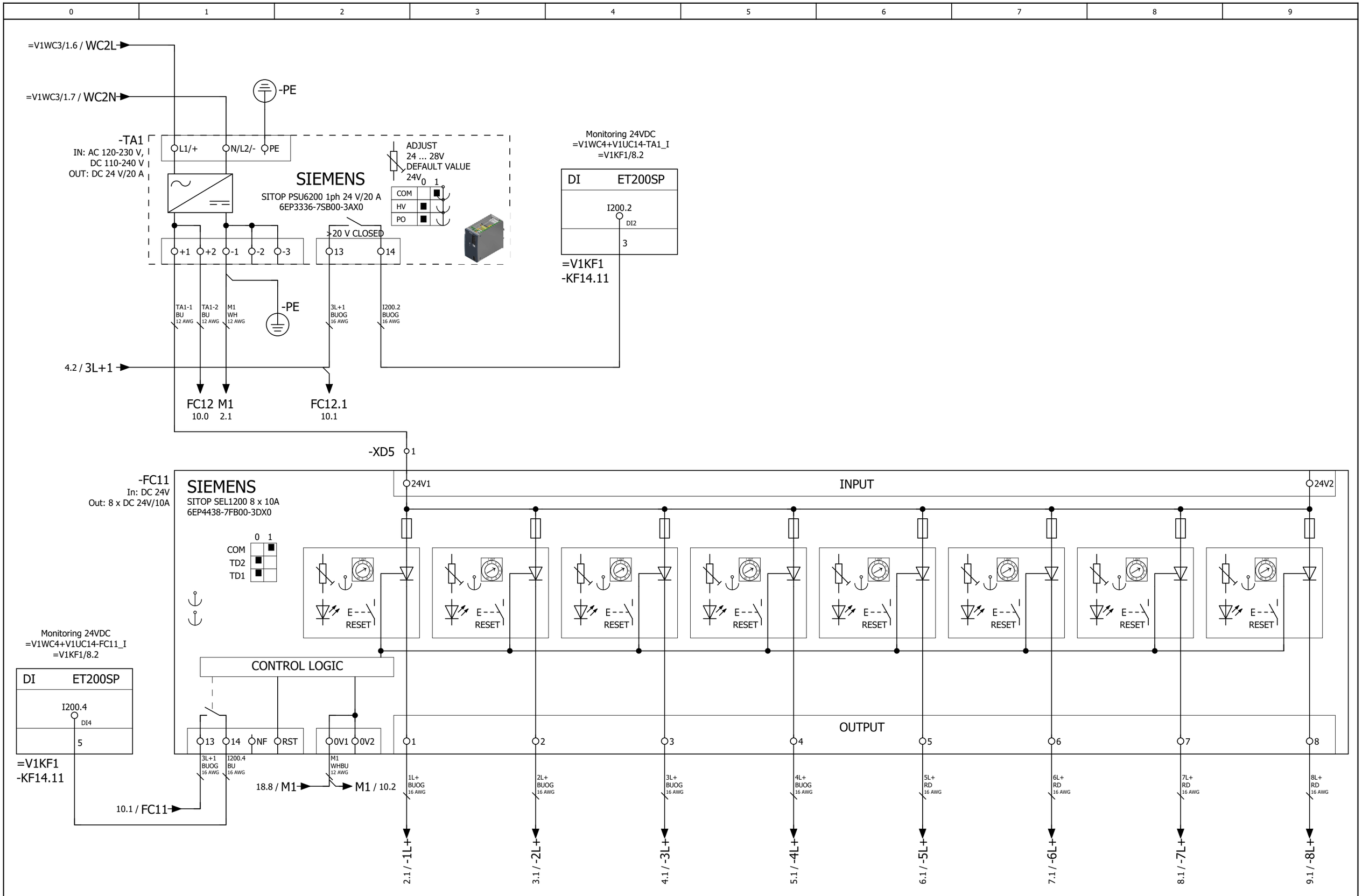

+.UC12/27

2

			Date	1/11/2023	Volvo Trucks North America	Valiant TMS	Power distribution 24VDC for Inputs	Drawing name: =2V10&EFS-EL	= V1WC4	
			Ed.	MKLEPADLO					+ V1UC14	
			Appr		P6700 Bodyside RH - Robot Cell 2V10			Document type: EFS	Project nr: 22-16150	Page 1
Modification	Date	Name	Original		Replacement of / Replaced by	Scale 1:1				1579

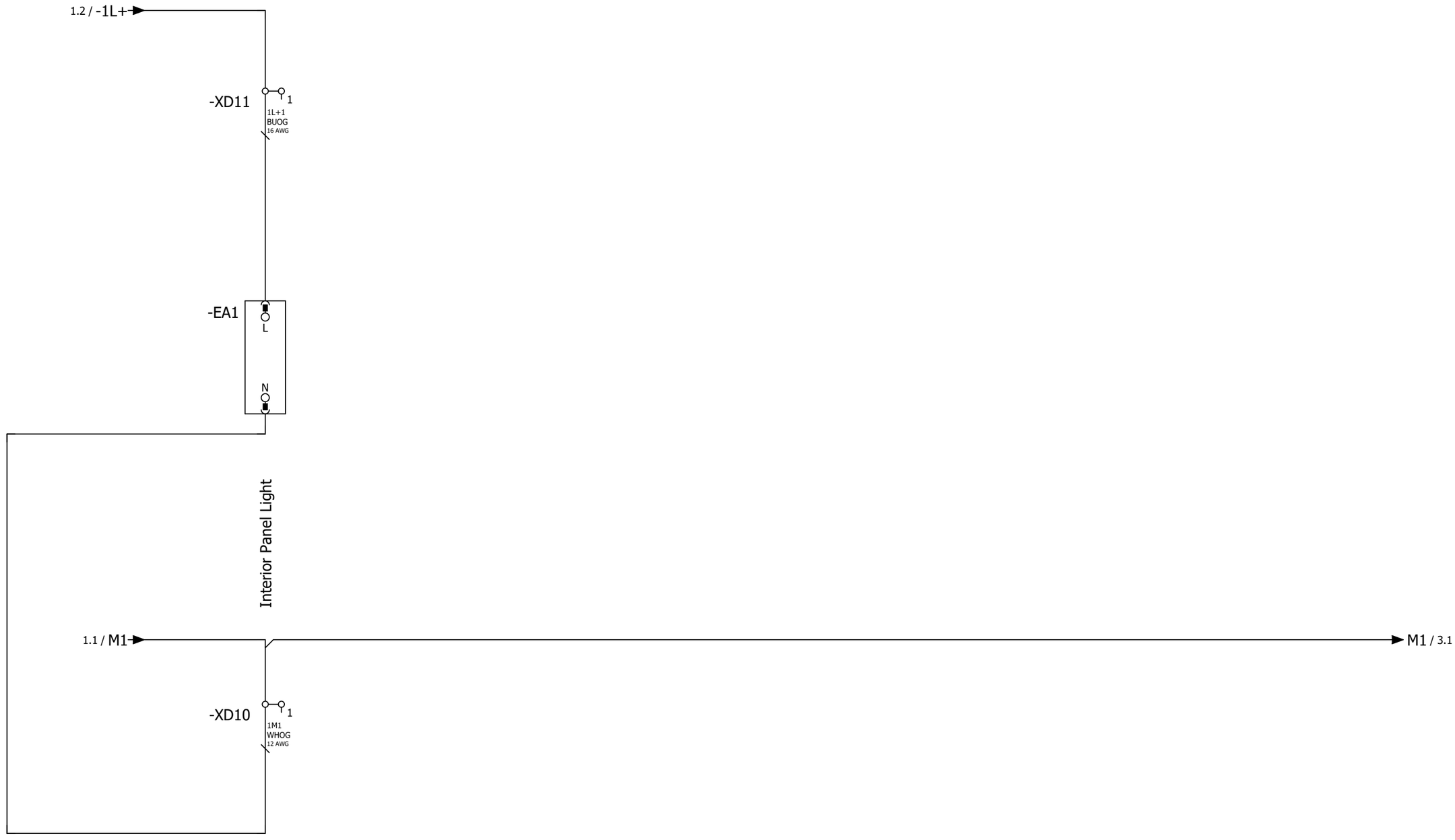

			Date	1/11/2023	Volvo Trucks North America	Valiant TMS	Power distribution 24VDC 1L+	Drawing name: =2V10&EFS-EL		= V1WC4	
			Ed.	MKLEPADLO						+ V1UC14	
			Appr		P6700 Bodyside RH - Robot Cell 2V10			Document type: EFS	Project nr: 22-16150		Page 2
Modification	Date	Name	Original		Replacement of / Replaced by	Scale 1:1					1579

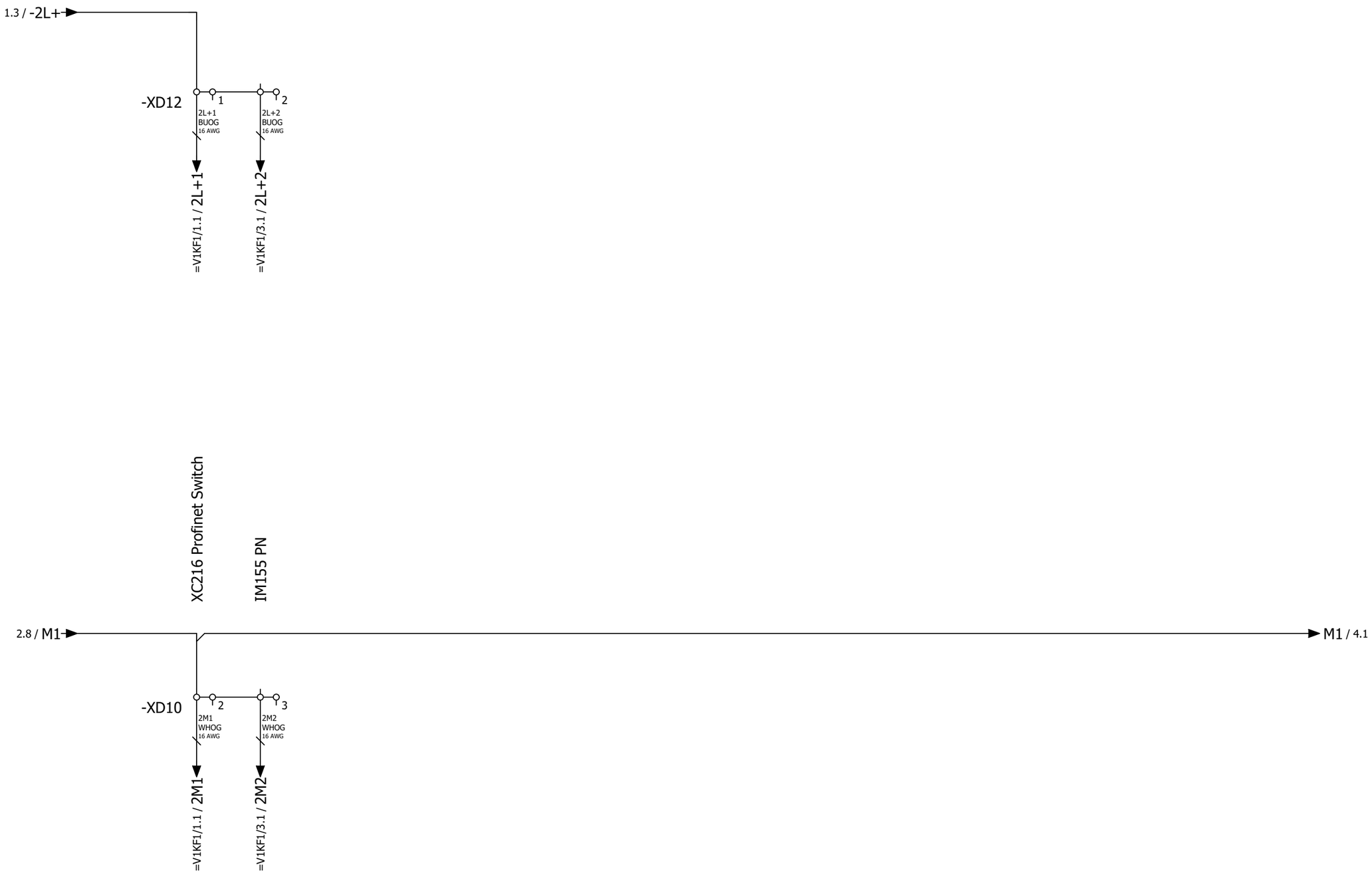

2 4

			Date	1/11/2023	Volvo Trucks North America	Valiant TMS	Power distribution 24VDC 2L+	Drawing name: =2V10&EFS-EL		= V1WC4	
			Ed.	MKLEPADLO						+ V1UC14	
			Appr		P6700 Bodyside RH - Robot Cell 2V10	Scale 1:1		Document type: EFS	Project nr: 22-16150		Page 3
Modification	Date	Name	Original		Replacement of	Replaced by					1579

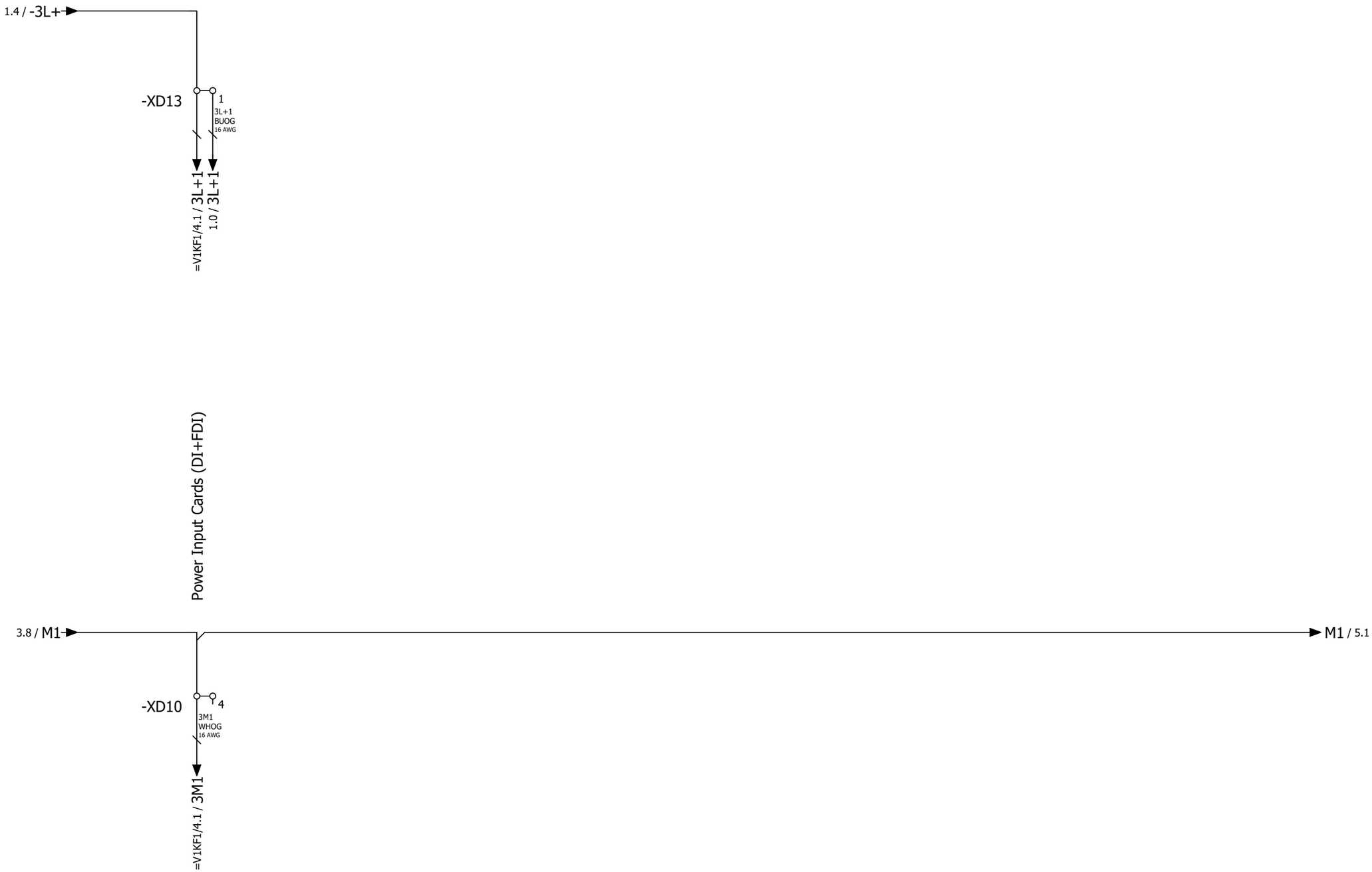

			Date	1/11/2023	Volvo Trucks North America	Valiant TMS	Power distribution 24VDC 3L+	Drawing name: =2V10&EFS-EL		= V1WC4	
			Ed.	MKLEPADLO						+ V1UC14	
			Appr		P6700 Bodyside RH - Robot Cell 2V10			Document type: EFS	Project nr: 22-16150		Page 4
Modification	Date	Name	Original		Replacement of / Replaced by	Scale 1:1					1579

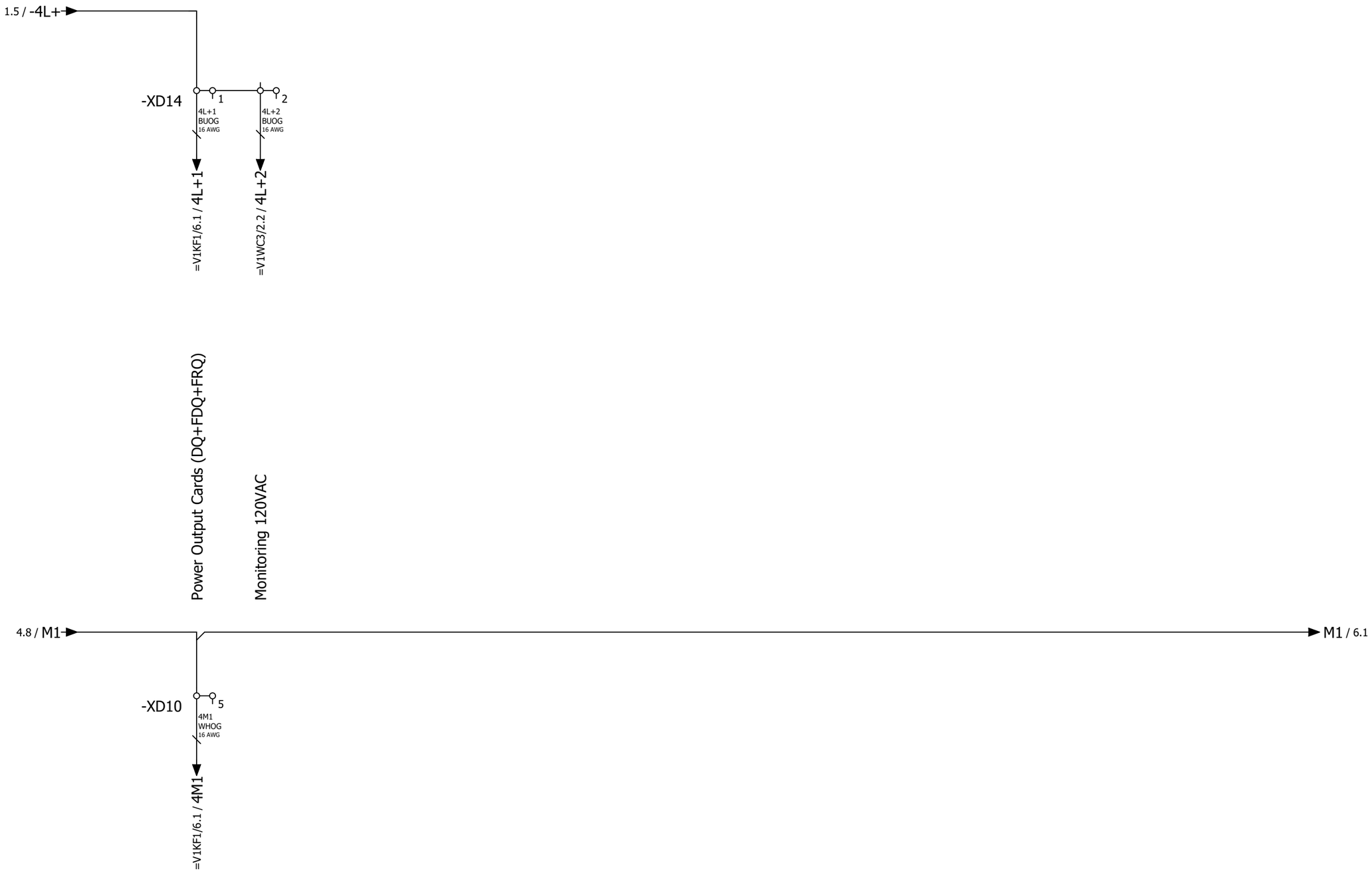

4

6

			Date	1/11/2023	Volvo Trucks North America	Valiant TMS	Power distribution 24VDC 4L+	Drawing name: =2V10&EFS-EL		= V1WC4	
			Ed.	MKLEPADLO						+ V1UC14	
			Appr		P6700 Bodyside RH - Robot Cell 2V10			Document type: EFS	Project nr: 22-16150		Page 5
Modification	Date	Name	Original		Replacement of	Replaced by	Scale 1:1				1579

5 7

			Date	1/11/2023	Volvo Trucks North America		Valiant TMS	Power distribution 24VDC 5L+	Drawing name: =2V10&EFS-EL	= V1WC4	
			Ed.	MKLEPADLO						+ V1UC14	
			Appr		P6700 Bodyside RH - Robot Cell 2V10				Document type: EFS	Project nr: 22-16150	Page 6
Modification	Date	Name	Original		Replacement of	Replaced by	Scale 1:1				1579

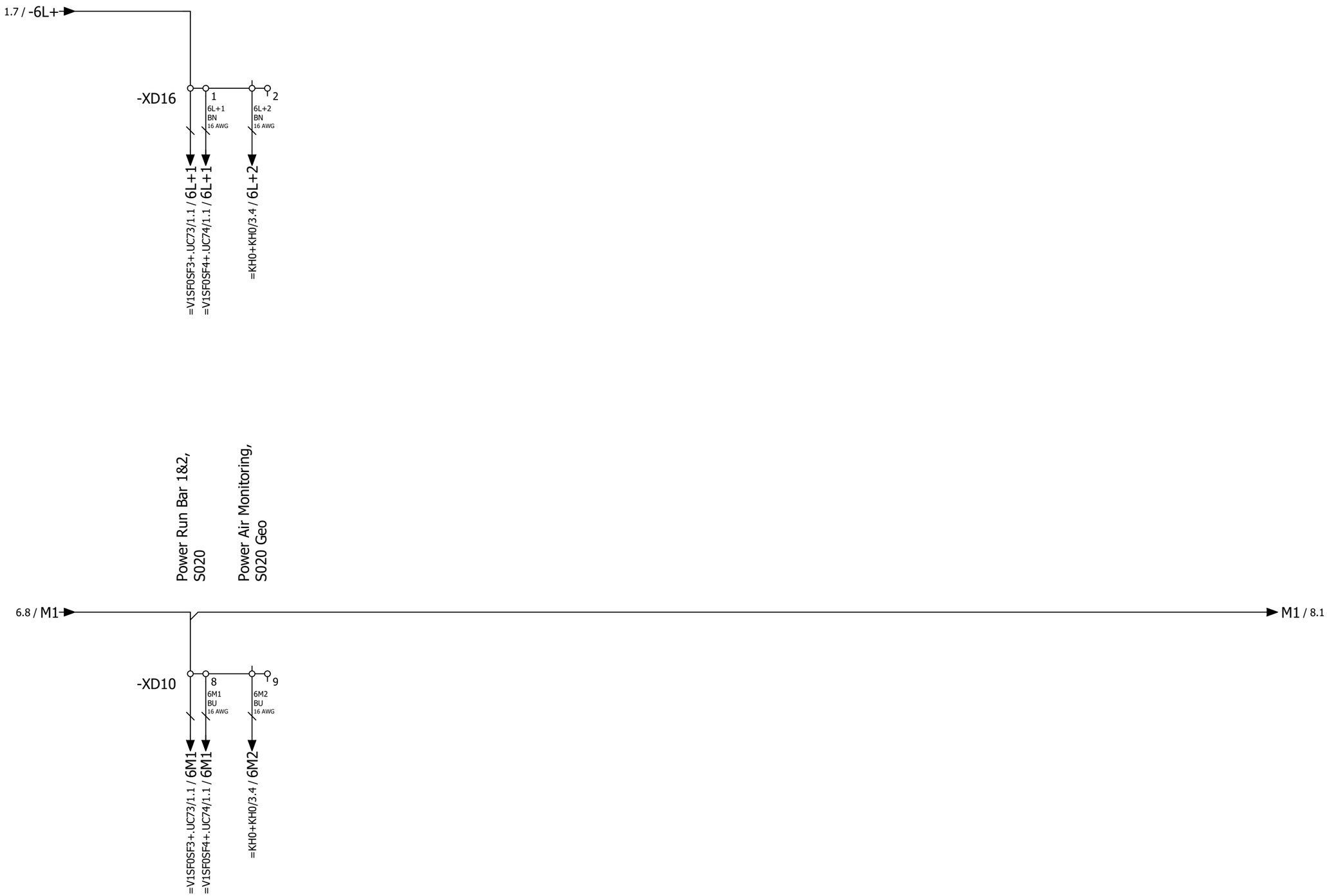

6

8

			Date	1/11/2023	Volvo Trucks North America	Valiant TMS	Power distribution 24VDC 6L+	Drawing name: =2V10&EFS-EL		= V1WC4	
			Ed.	MKLEPADLO						+ V1UC14	
			Appr		P6700 Bodyside RH - Robot Cell 2V10			Document type: EFS	Project nr: 22-16150		Page 7
Modification	Date	Name	Original		Replacement of	Replaced by	Scale 1:1				1579

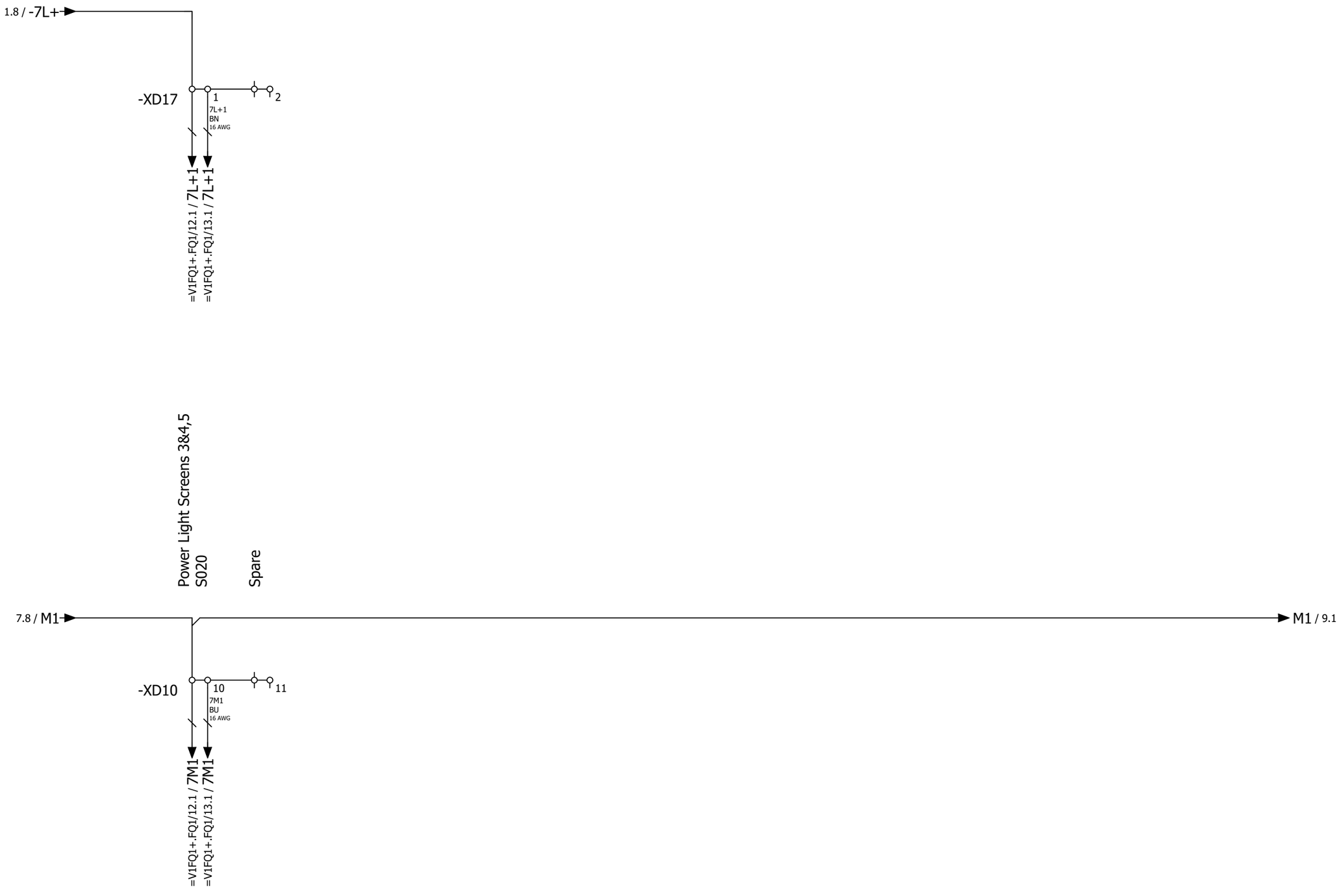

7 9

			Date	1/11/2023	Volvo Trucks North America	Valiant TMS	Power distribution 24VDC 7L+	Drawing name: =2V10&EFS-EL		= V1WC4	
			Ed.	MKLEPADLO						+ V1UC14	
			Appr		P6700 Bodyside RH - Robot Cell 2V10			Document type: EFS	Project nr: 22-16150		Page 8
Modification	Date	Name	Original		Replacement of / Replaced by	Scale 1:1					1579

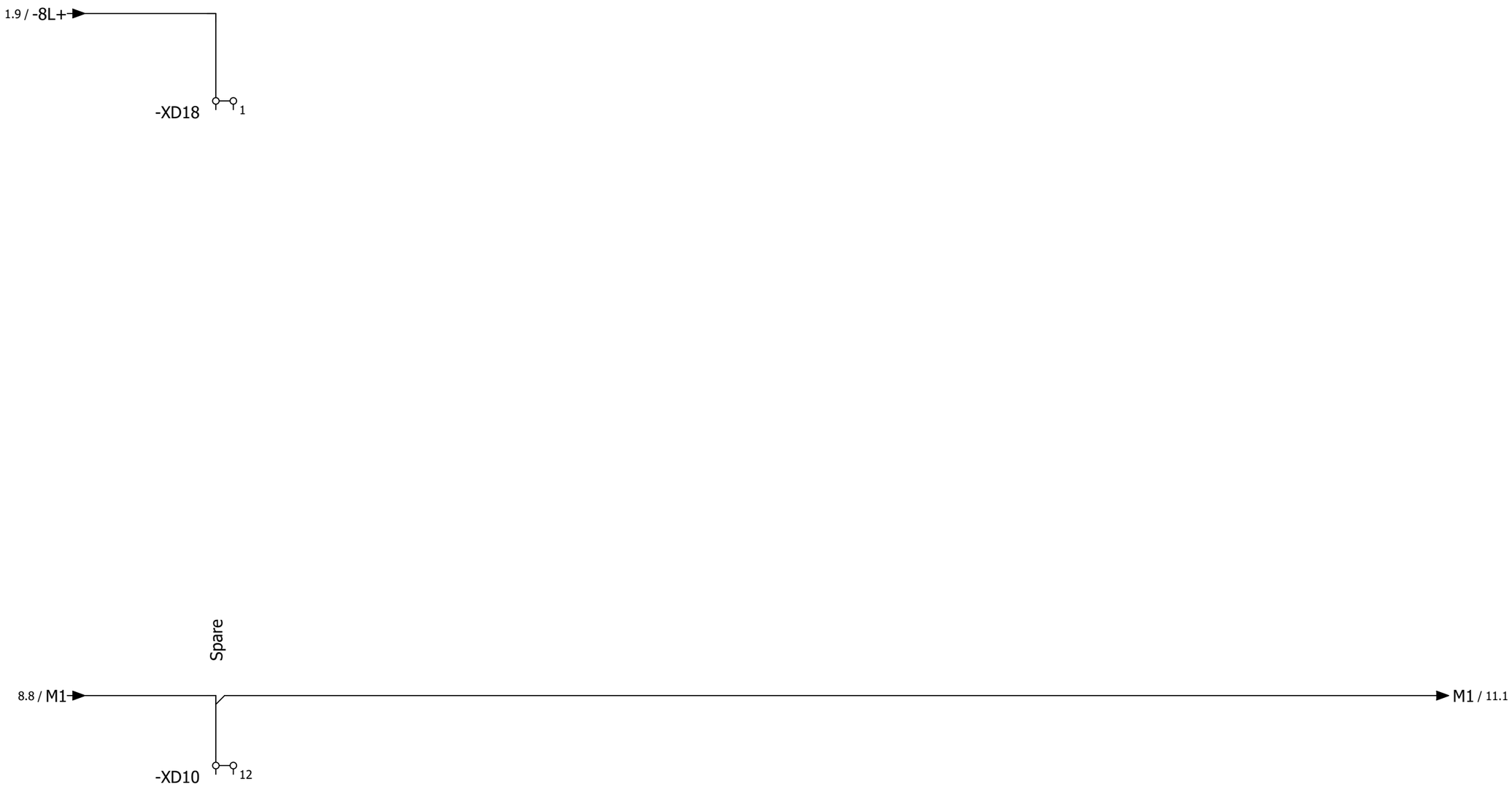

8 10

			Date	1/11/2023	Volvo Trucks North America	Valiant TMS	Power distribution 24VDC 8L+	Drawing name: =2V10&EFS-EL	= V1WC4	
			Ed.	MKLEPADLO					+ V1UC14	
			Appr		P6700 Bodyside RH - Robot Cell 2V10			Document type: EFS	Project nr: 22-16150	Page 9
Modification	Date	Name	Original		Replacement of / Replaced by	Scale 1:1				1579

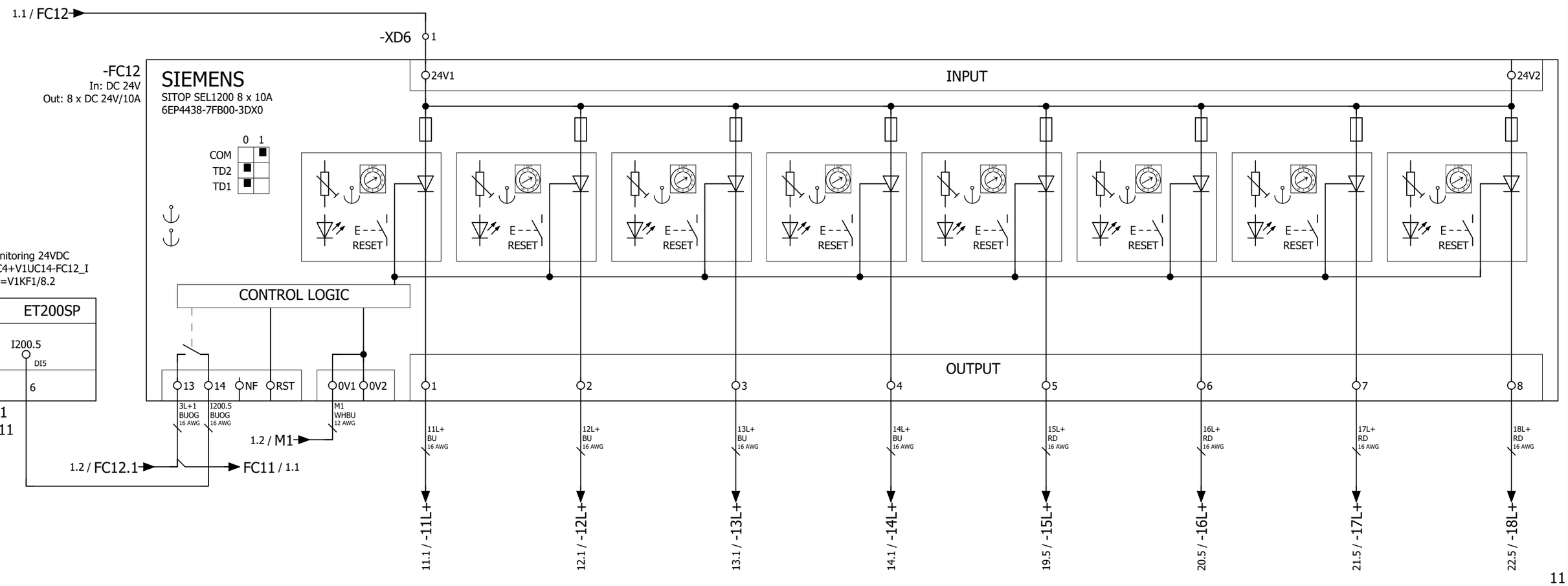

9

11

			Date	1/11/2023	Volvo Trucks North America	Valiant TMS	Power distribution 24VDC (Below Disconnect)	Drawing name: =2V10&EFS-EL	= V1WC4		
			Ed.	MKLEPADLO					+ V1UC14		
			Appr		P6700 Bodyside RH - Robot Cell 2V10			Document type: EFS	Project nr: 22-16150	Page	10
Modification	Date	Name	Original		Replacement of	Replaced by	Scale 1:1				1579

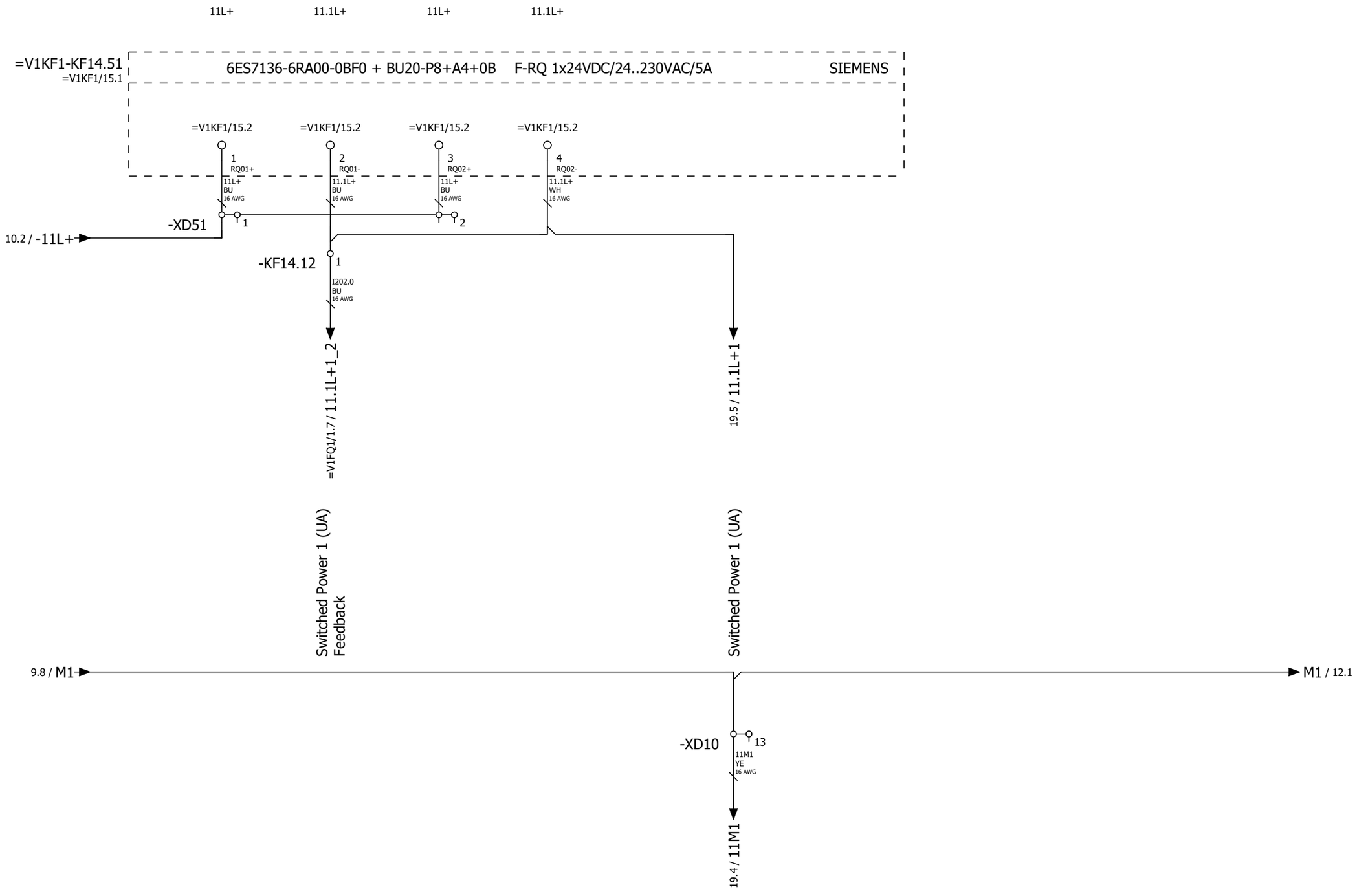

10

12

			Date	1/11/2023	Volvo Trucks North America	Valiant TMS	Power distribution 24VDC 11L+	Drawing name: =2V10&EFS-EL		= V1WC4	
			Ed.	MKLEPADLO						+ V1UC14	
			Appr		P6700 Bodyside RH - Robot Cell 2V10			Document type: EFS	Project nr: 22-16150		Page 11
Modification	Date	Name	Original		Replacement of	Replaced by	Scale 1:1				1579

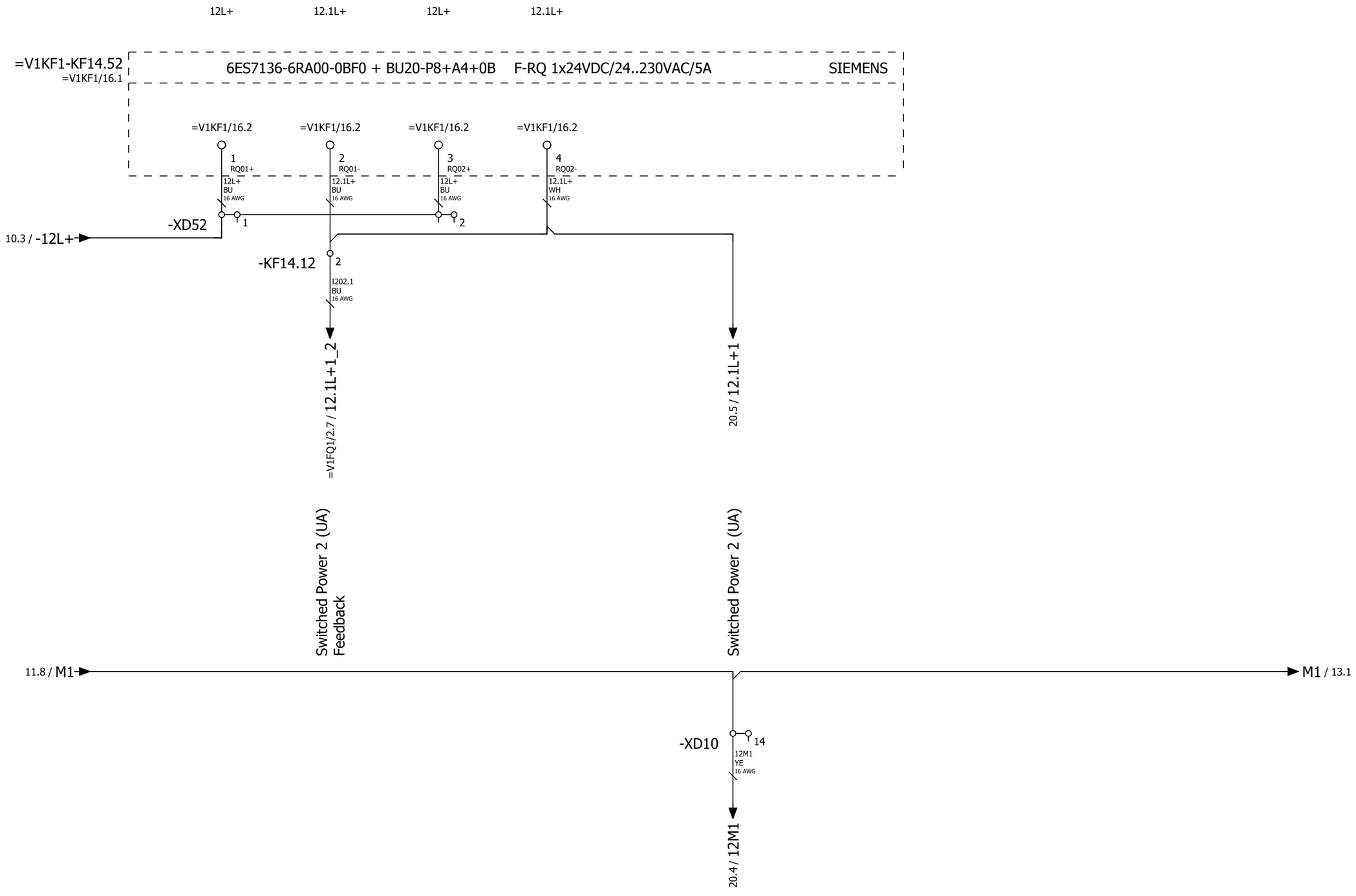

			Date	1/11/2023	Volvo Trucks North America	Valiant TMS	Power distribution 24VDC 12L+	Drawing name: =2V10&EFS-EL		= V1WC4	
			Ed.	MKLEPADLO						+ V1UC14	
			Appr		P6700 Bodyside RH - Robot Cell 2V10			Document type: EFS	Project nr: 22-16150		Page 12
Modification	Date	Name	Original		Replacement of / Replaced by	Scale 1:1					1579

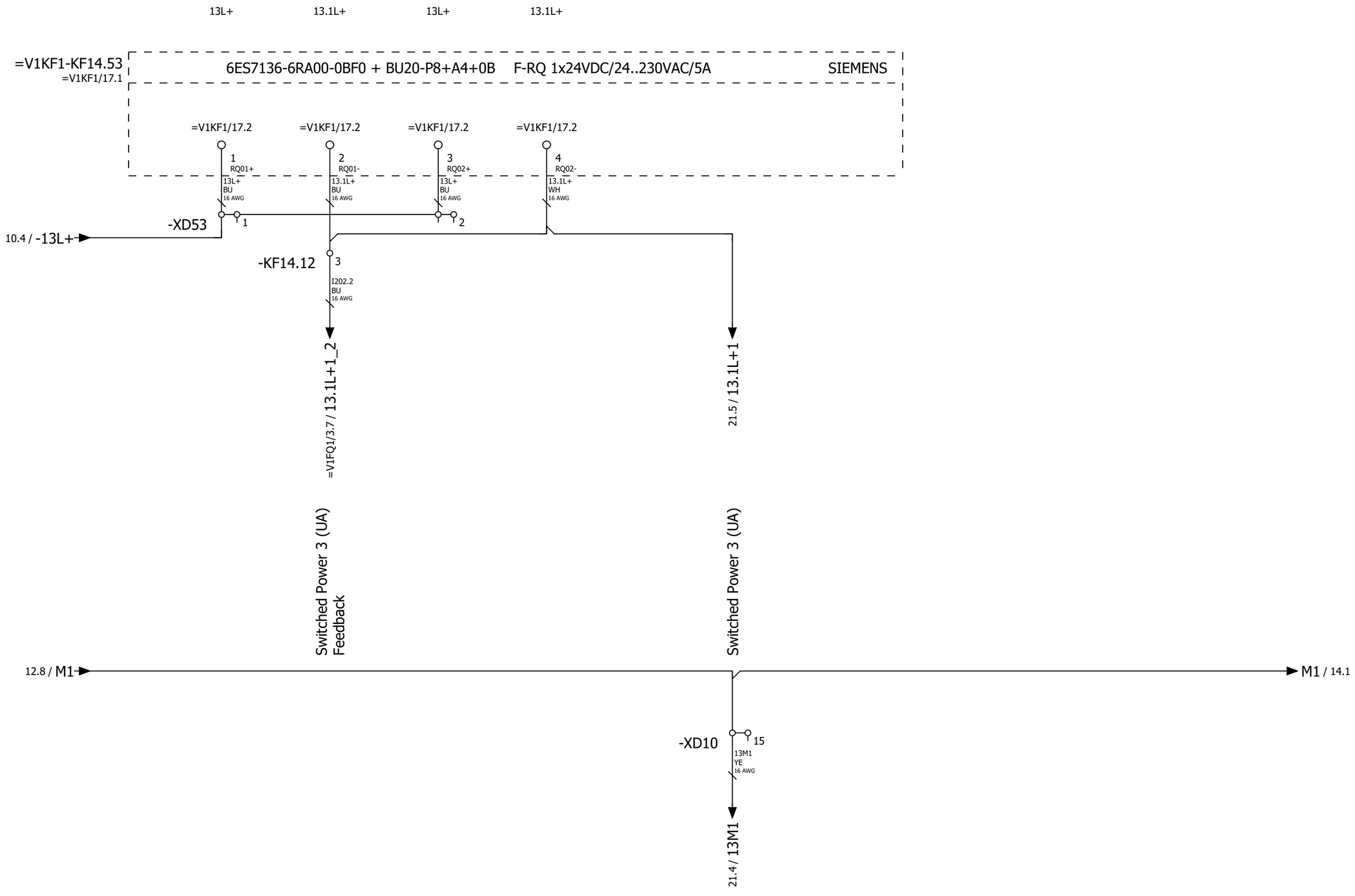

			Date	1/11/2023	Volvo Trucks North America	Valiant TMS	Power distribution 24VDC 13L+	Drawing name: =2V10&EFS-EL		= V1WC4	
			Ed.	MKLEPADLO						+ V1UC14	
			Appr		P6700 Bodyside RH - Robot Cell 2V10			Document type: EFS	Project nr: 22-16150		Page 13
Modification	Date	Name	Original		Replacement of / Replaced by	Scale 1:1					1579

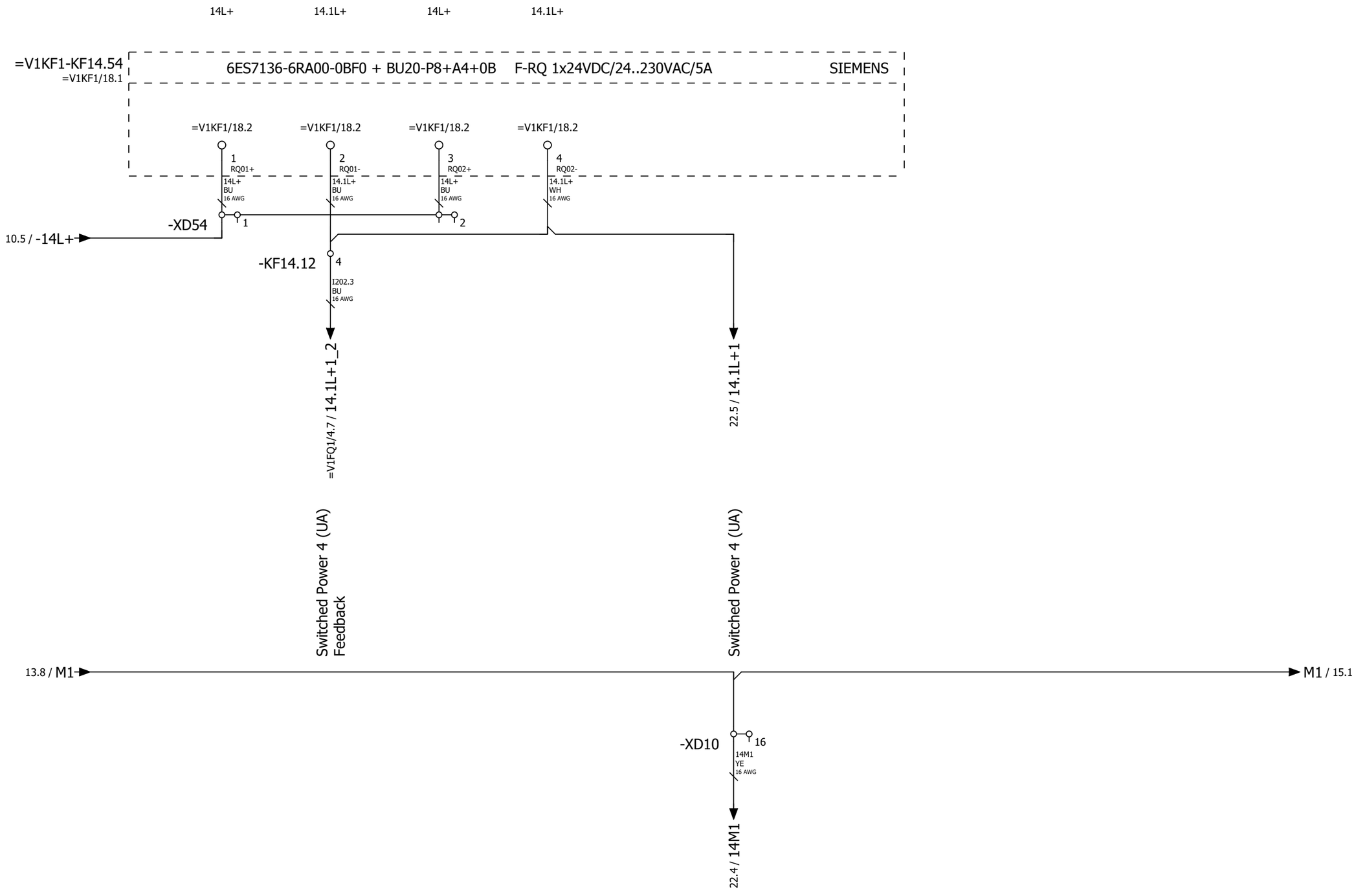

13

15

			Date	1/11/2023	Volvo Trucks North America	Valiant TMS	Power distribution 24VDC 14L+	Drawing name: =2V10&EFS-EL		= V1WC4	
			Ed.	MKLEPADLO						+ V1UC14	
			Appr		P6700 Bodyside RH - Robot Cell 2V10			Document type: EFS	Project nr: 22-16150		Page 14
Modification	Date	Name	Original		Replacement of / Replaced by	Scale 1:1					1579

			Date	1/11/2023	Volvo Trucks North America	Valiant TMS	Power distribution 24VDC 15L+	Drawing name: =2V10&EFS-EL		= V1WC4	
			Ed.	MKLEPADLO						+ V1UC14	
			Appr		P6700 Bodyside RH - Robot Cell 2V10			Document type: EFS	Project nr: 22-16150		Page 15
Modification	Date	Name	Original		Replacement of / Replaced by	Scale 1:1					1579

15

17

			Date	1/11/2023	Volvo Trucks North America	Valiant TMS	Power distribution 24VDC 16L+	Drawing name: =2V10&EFS-EL		= V1WC4	
			Ed.	MKLEPADLO						+ V1UC14	
			Appr		P6700 Bodyside RH - Robot Cell 2V10			Document type: EFS	Project nr: 22-16150		Page 16
Modification	Date	Name	Original		Replacement of / Replaced by	Scale 1:1					1579

			Date	1/11/2023	Volvo Trucks North America	Valiant TMS	Power distribution 24VDC 17L+	Drawing name: =2V10&EFS-EL		= V1WC4	
			Ed.	MKLEPADLO						+ V1UC14	
			Appr		P6700 Bodyside RH - Robot Cell 2V10			Document type: EFS	Project nr: 22-16150		Page 17
Modification	Date	Name	Original		Replacement of / Replaced by	Scale 1:1					1579

17

19

			Date	1/11/2023	Volvo Trucks North America	Valiant TMS	Power distribution 24VDC 18L+	Drawing name: =2V10&EFS-EL		= V1WC4	
			Ed.	MKLEPADLO						+ V1UC14	
			Appr		P6700 Bodyside RH - Robot Cell 2V10			Document type: EFS	Project nr: 22-16150		Page 18
Modification	Date	Name	Original		Replacement of	Replaced by	Scale 1:1				1579

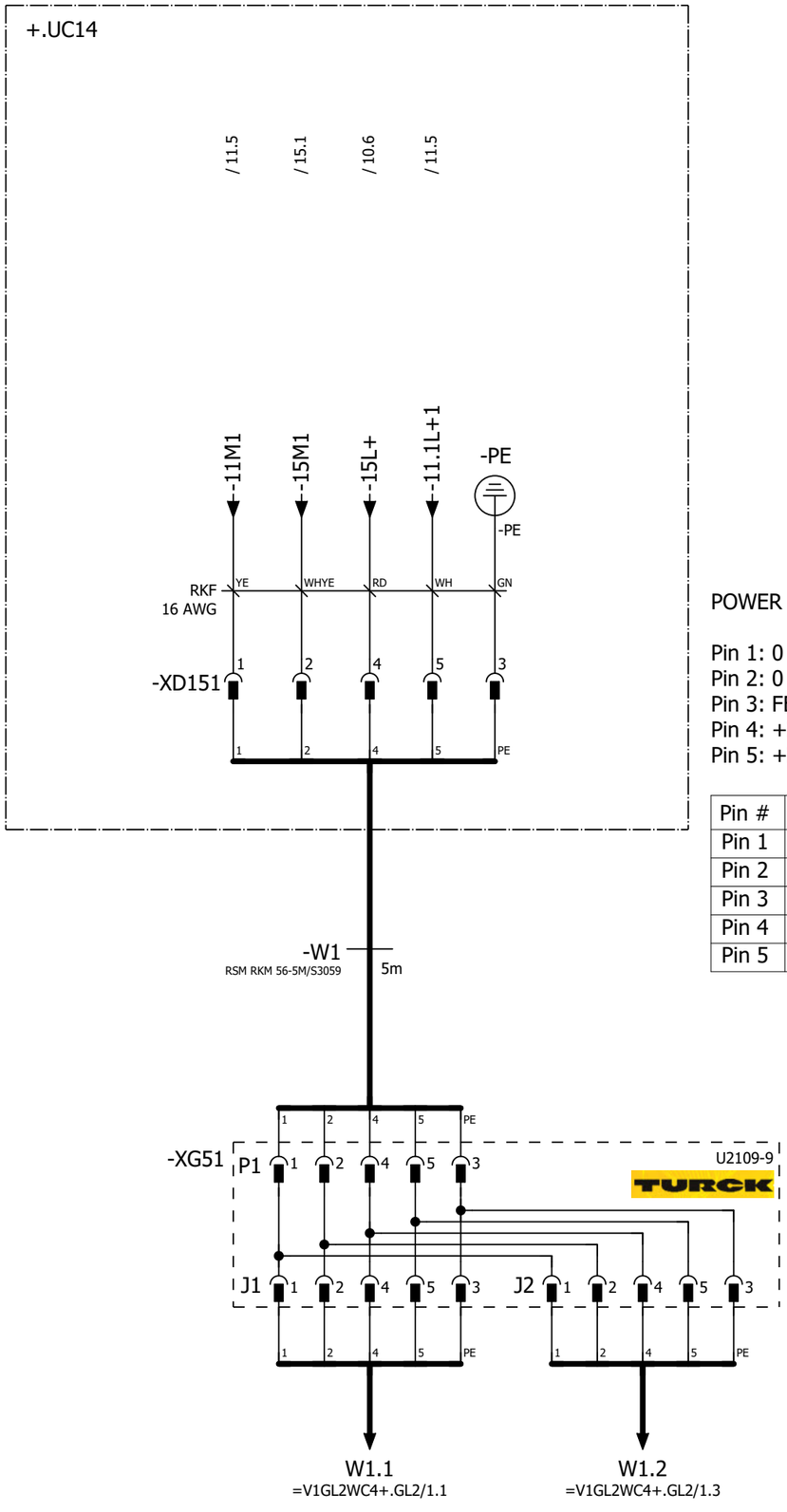

POWER IN / POWER OUT

Pin 1: 0 V UA
Pin 2: 0 V US
Pin 3: FE
Pin 4: +24 V US / 9 A
Pin 5: +24 V UA / 9 A

Pin #	WIRE	COLOR
Pin 1	-11M1	YE
Pin 2	-15M1	WHYE
Pin 3	GND	GN
Pin 4	-15L+	RD
Pin 5	-11.1L+1	WH

			Date	1/11/2023	Volvo Trucks North America	Valiant TMS	24VDC Switched Power 1	Drawing name: =2V10&EFS-EL	= V1WC4	
			Ed.	MKLEPADLO					+ V1UC14	
			Appr		P6700 Bodyside RH - Robot Cell 2V10			Document type: EFS	Project nr: 22-16150	Page 19 / 1579
Modification	Date	Name	Original		Replacement of / Replaced by	Scale 1:1				

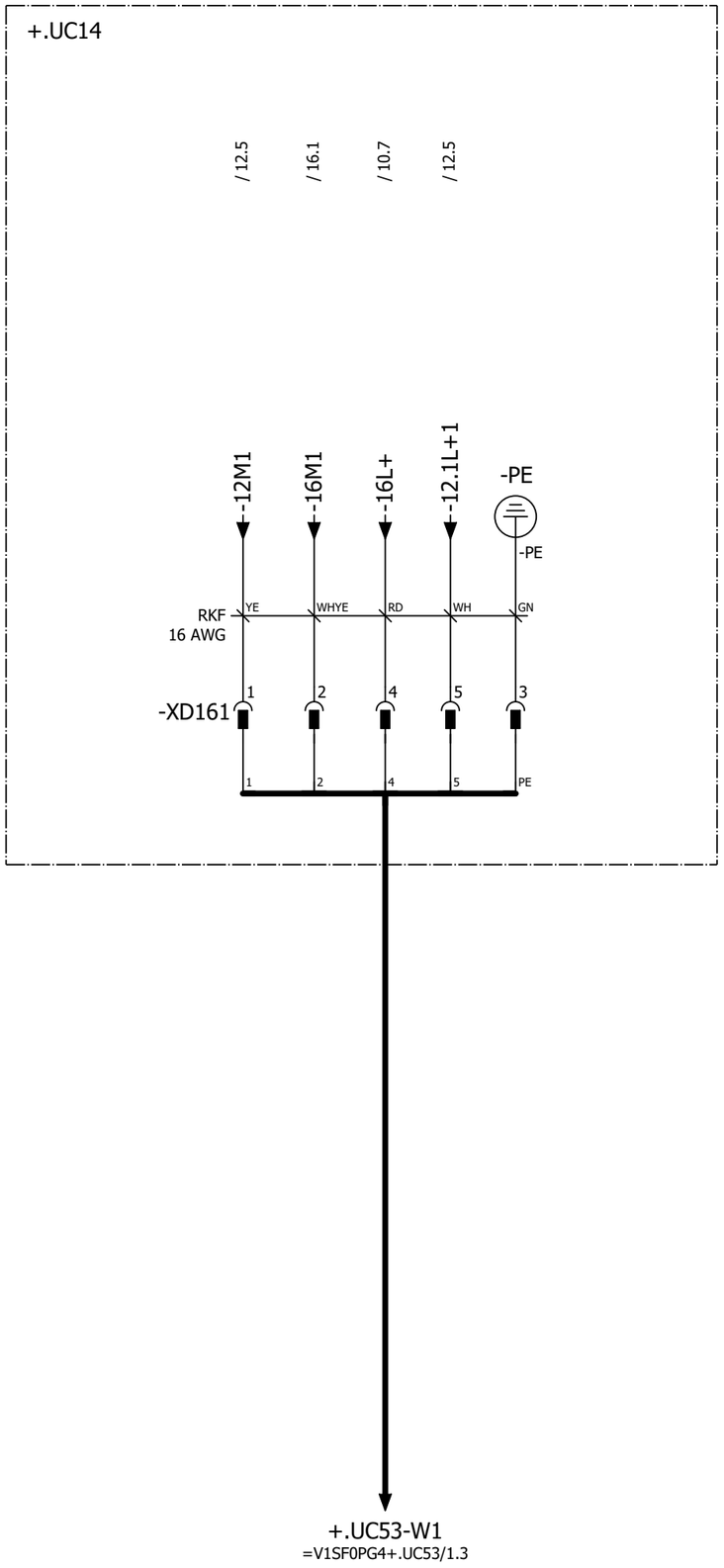

POWER IN / POWER OUT

Pin 1: 0 V UA
Pin 2: 0 V US
Pin 3: FE
Pin 4: +24 V US / 9 A
Pin 5: +24 V UA / 9 A

Pin #	WIRE	COLOR
Pin 1	-12M1	YE
Pin 2	-16M1	WHYE
Pin 3	GND	GN
Pin 4	-16L+	RD
Pin 5	-12.1L+1	WH

			Date	1/11/2023	Volvo Trucks North America		Valiant TMS	24VDC Switched Power 2	Drawing name: =2V10&EFS-EL		= V1WC4
			Ed.	MKLEPADLO							+ V1UC14
			Appr		P6700 Bodyside RH - Robot Cell 2V10				Document type: EFS	Project nr: 22-16150	Page 20
Modification	Date	Name	Original		Replacement of	Replaced by	Scale 1:1				1579

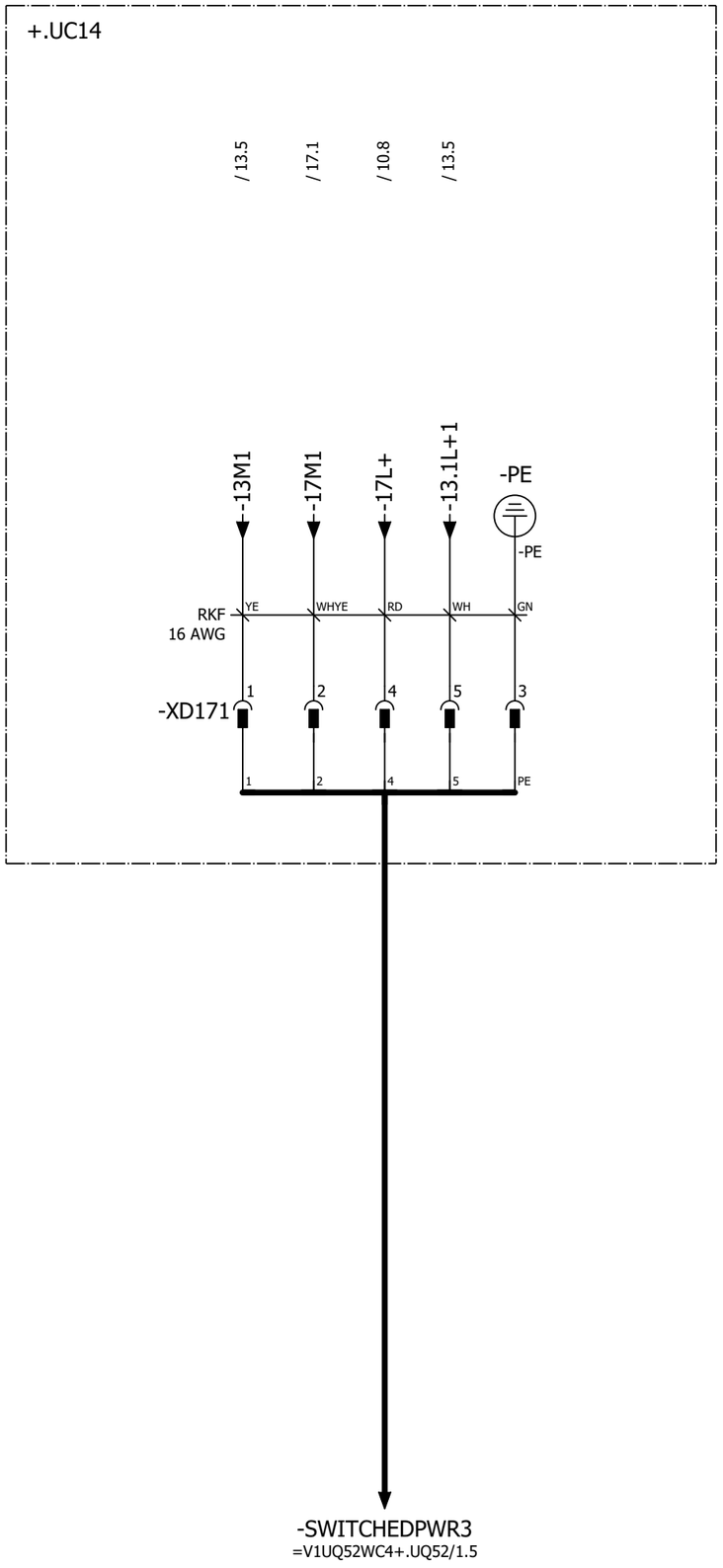

POWER IN / POWER OUT

Pin 1: 0 V UA
Pin 2: 0 V US
Pin 3: FE
Pin 4: +24 V US / 9 A
Pin 5: +24 V UA / 9 A

Pin #	WIRE	COLOR
Pin 1	-13M1	YE
Pin 2	-17M1	WHYE
Pin 3	GND	GN
Pin 4	-17L+	RD
Pin 5	-13.1L+1	WH

			Date	1/11/2023	Volvo Trucks North America	Valiant TMS	24VDC Switched Power 3	Drawing name: =2V10&EFS-EL		= V1WC4	
			Ed.	MKLEPADLO						+ V1UC14	
			Appr		P6700 Bodyside RH - Robot Cell 2V10			Document type: EFS	Project nr: 22-16150		Page 21
Modification	Date	Name	Original		Replacement of / Replaced by	Scale 1:1					1579

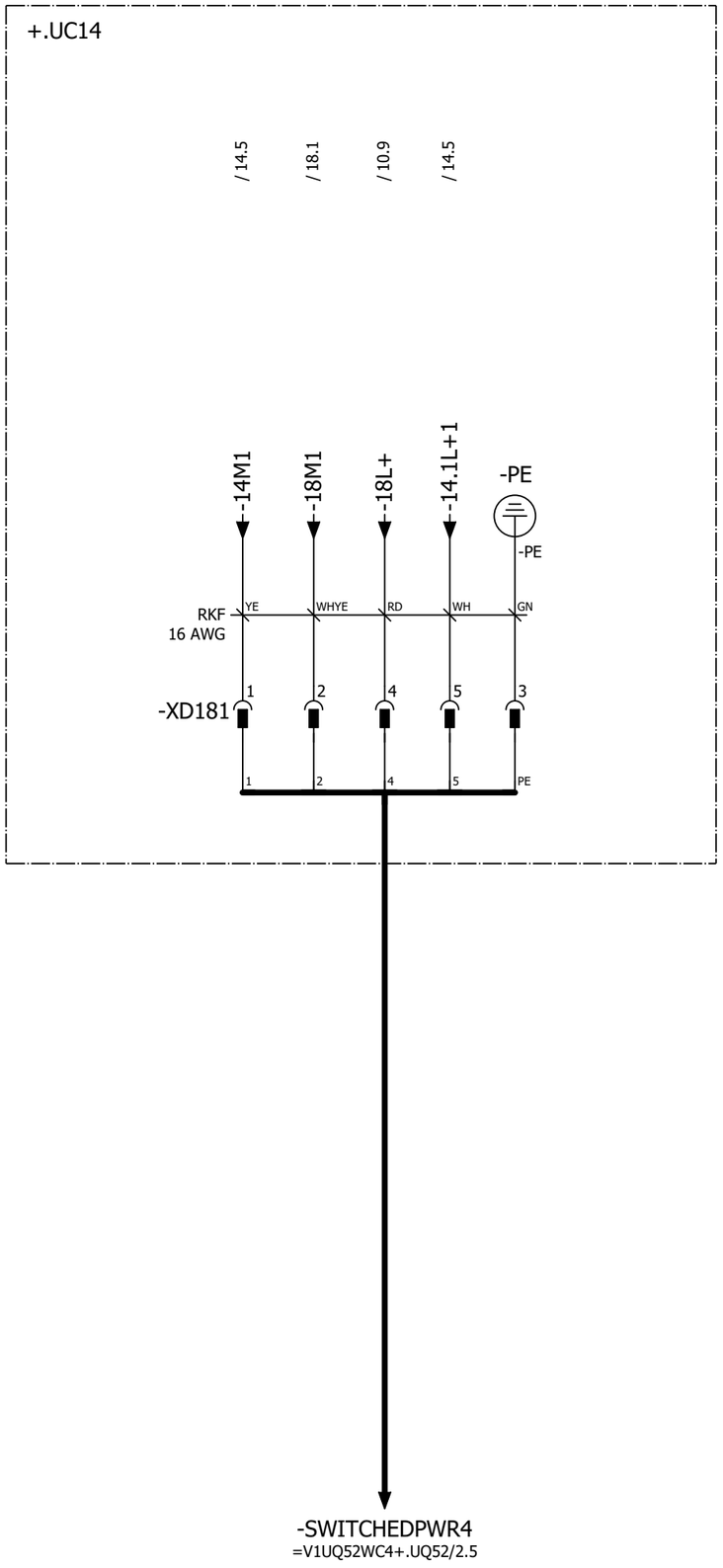

POWER IN / POWER OUT

Pin 1: 0 V UA
Pin 2: 0 V US
Pin 3: FE
Pin 4: +24 V US / 9 A
Pin 5: +24 V UA / 9 A

Pin #	WIRE	COLOR
Pin 1	-14M1	YE
Pin 2	-18M1	WHYE
Pin 3	GND	GN
Pin 4	-18L+	RD
Pin 5	-14.1L+1	WH

			Date	1/11/2023	Volvo Trucks North America		Valiant TMS	24VDC Switched Power 4	Drawing name: =2V10&EFS-EL		= V1WC4
			Ed.	MKLEPADLO							+ V1UC14
			Appr		P6700 Bodyside RH - Robot Cell 2V10				Document type: EFS	Project nr: 22-16150	Page 22
Modification	Date	Name	Original		Replacement of	Replaced by	Scale 1:1				1579

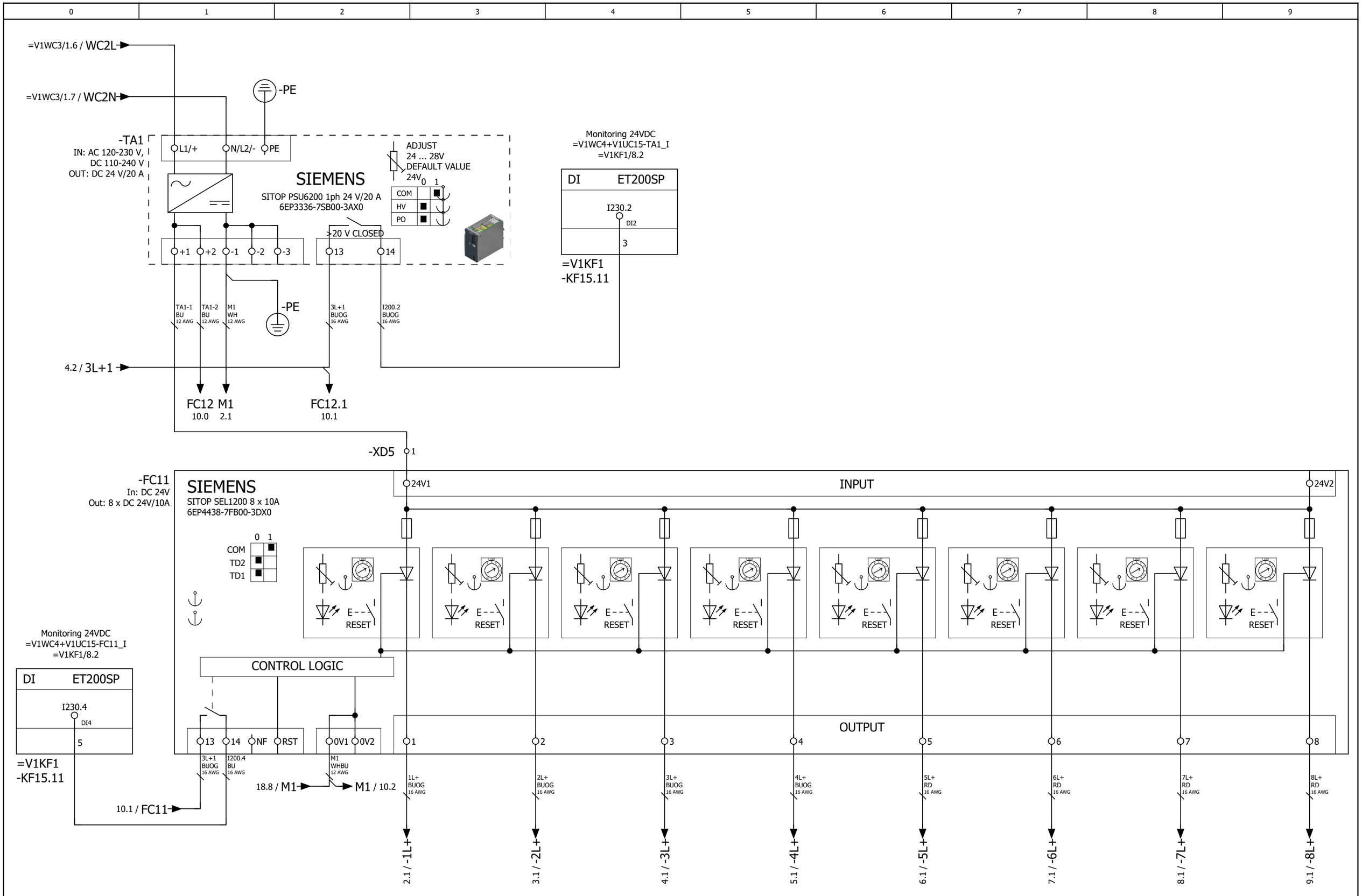

+.UC14/22

2

			Date	1/11/2023	Volvo Trucks North America	Valiant TMS	Power distribution 24VDC for Inputs	Drawing name: =2V10&EFS-EL	= V1WC4	
			Ed.	MKLEPADLO					+ V1UC15	
			Appr		P6700 Bodyside RH - Robot Cell 2V10			Document type: EFS	Project nr: 22-16150	Page 1
Modification	Date	Name	Original		Replacement of / Replaced by	Scale 1:1				1579

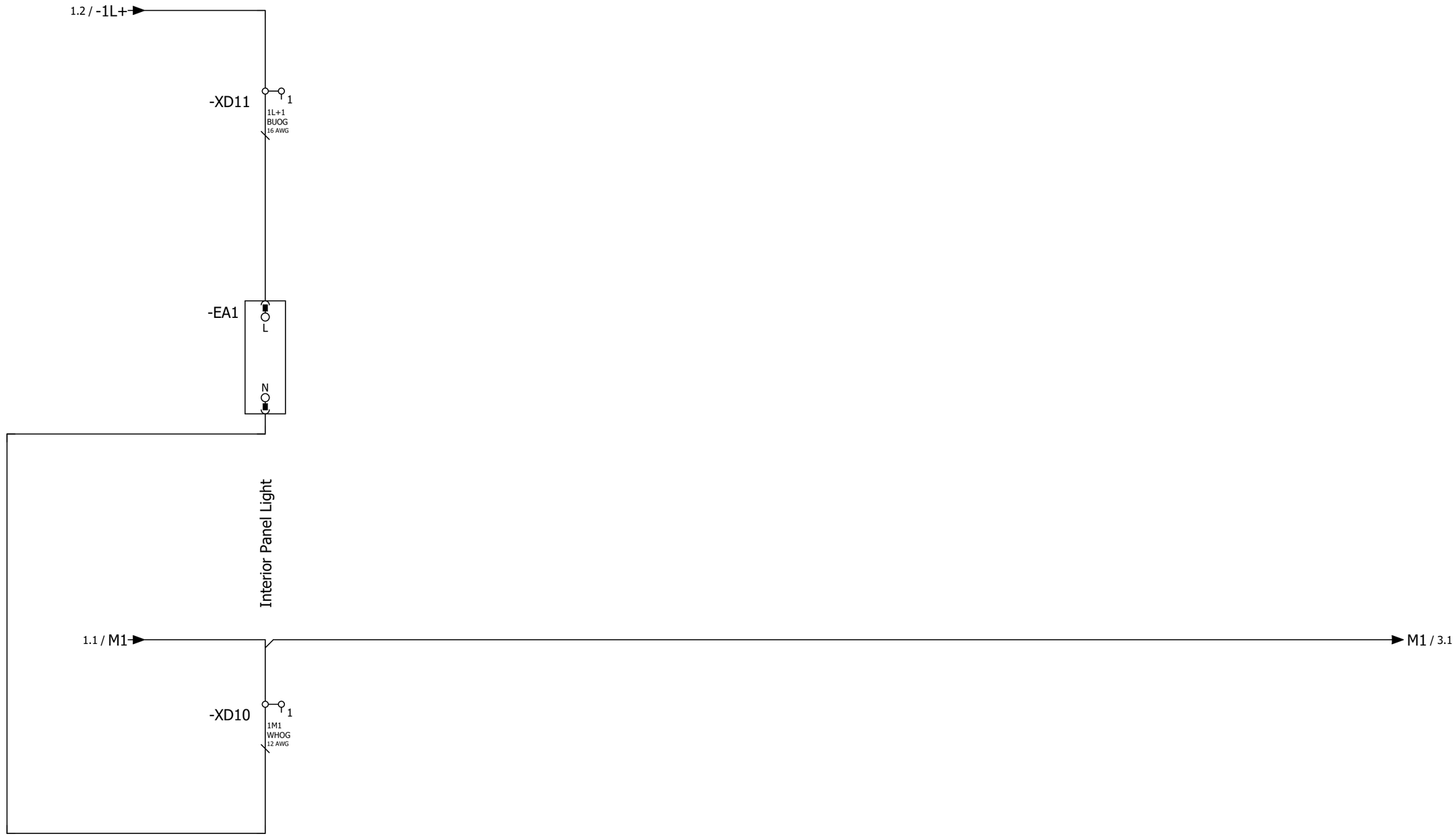

			Date	1/11/2023	Volvo Trucks North America	Valiant TMS	Power distribution 24VDC 1L+	Drawing name: =2V10&EFS-EL		= V1WC4	
			Ed.	MKLEPADLO						+ V1UC15	
			Appr		P6700 Bodyside RH - Robot Cell 2V10			Document type: EFS	Project nr: 22-16150		Page 2
Modification	Date	Name	Original		Replacement of / Replaced by	Scale 1:1					1579

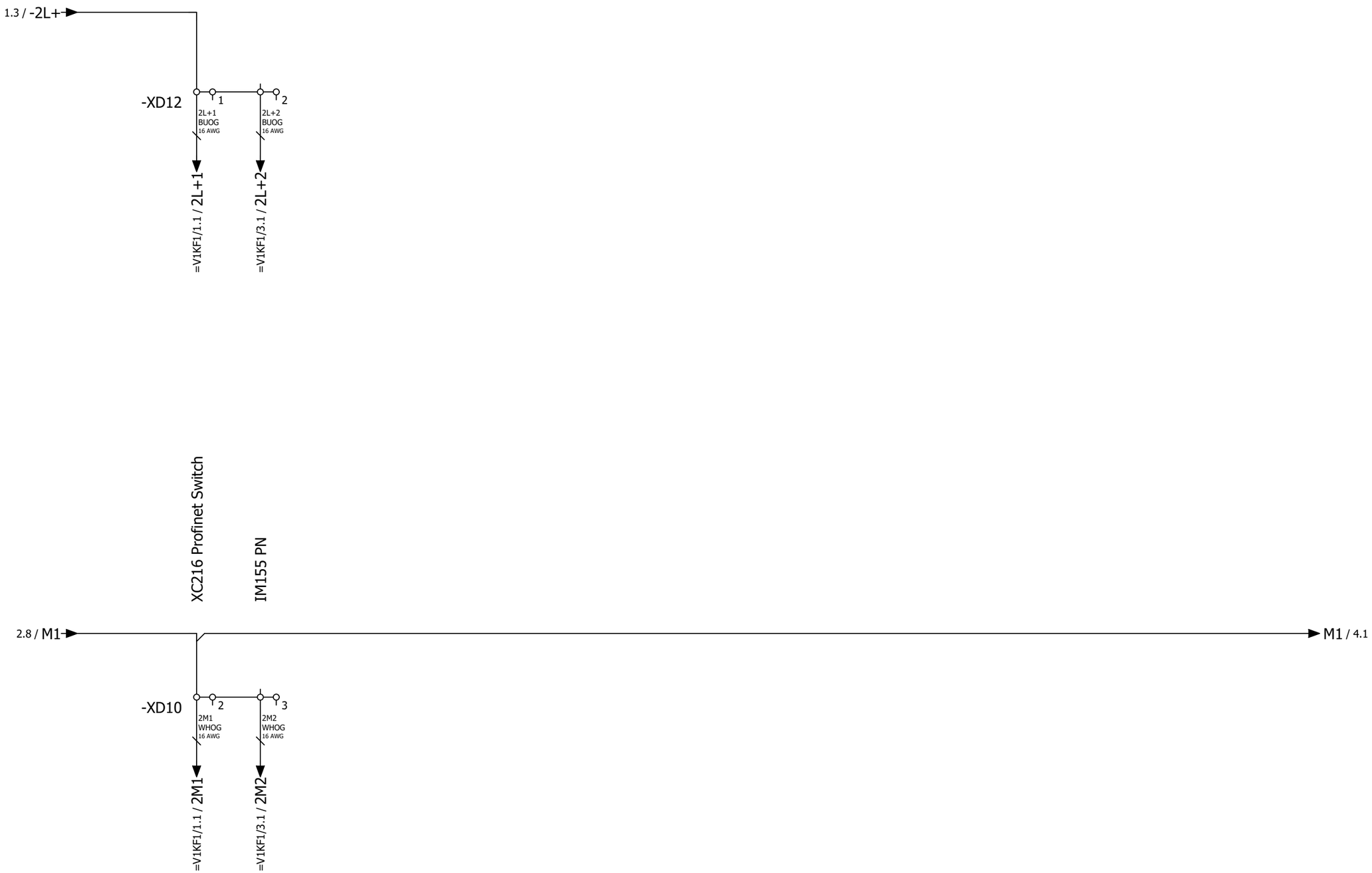

2 4

			Date	1/11/2023	Volvo Trucks North America	Valiant TMS	Power distribution 24VDC 2L+	Drawing name: =2V10&EFS-EL		= V1WC4	
			Ed.	MKLEPADLO						+ V1UC15	
			Appr		P6700 Bodyside RH - Robot Cell 2V10	Scale 1:1		Document type: EFS	Project nr: 22-16150		Page 3
Modification	Date	Name	Original		Replacement of	Replaced by					1579

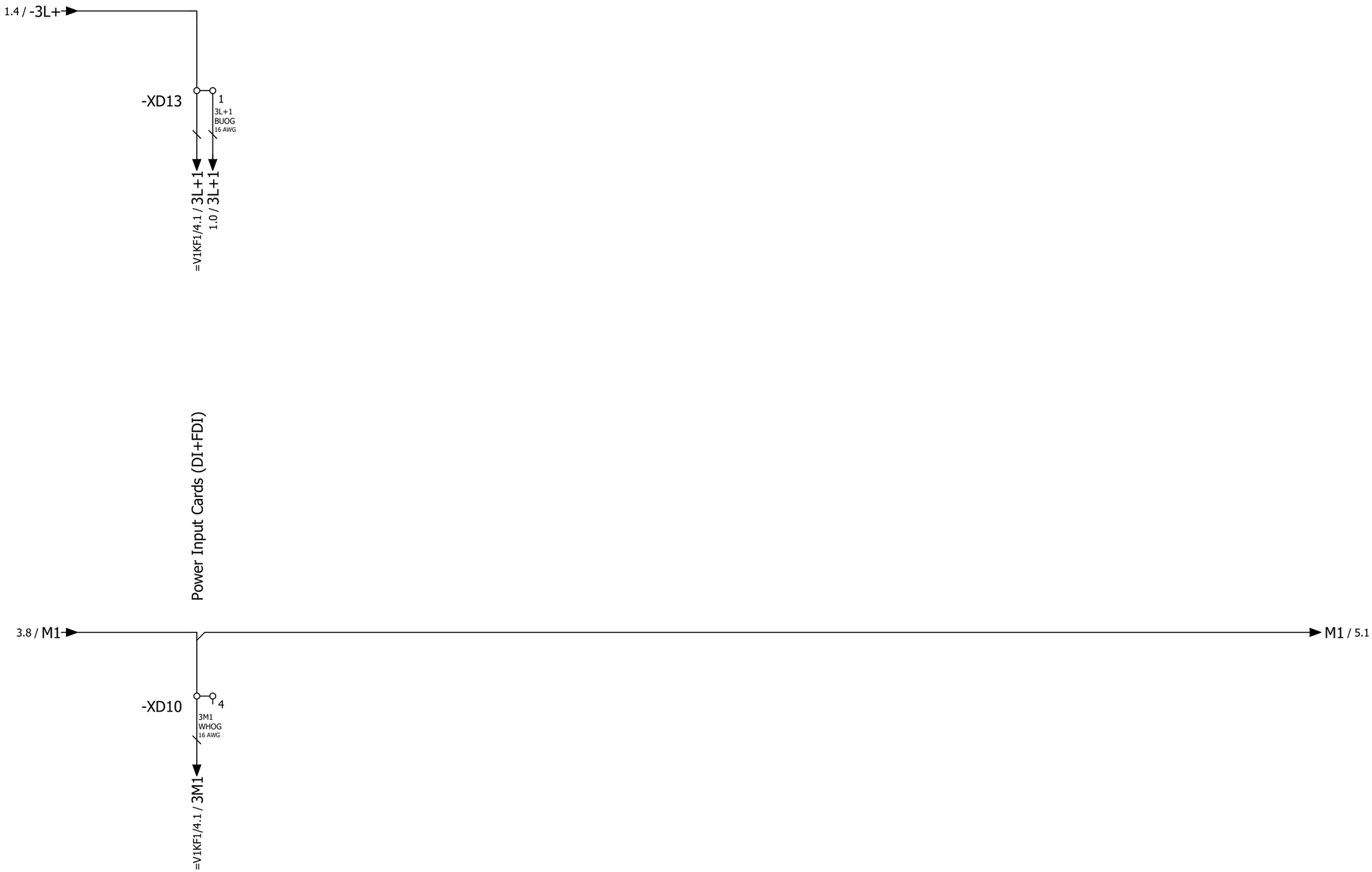

			Date	1/11/2023	Volvo Trucks North America	Valiant TMS	Power distribution 24VDC 3L+	Drawing name: =2V10&EFS-EL		= V1WC4	
			Ed.	MKLEPADLO						+ V1UC15	
			Appr		P6700 Bodyside RH - Robot Cell 2V10			Document type: EFS	Project nr: 22-16150		Page 4
Modification	Date	Name	Original		Replacement of / Replaced by	Scale 1:1					1579

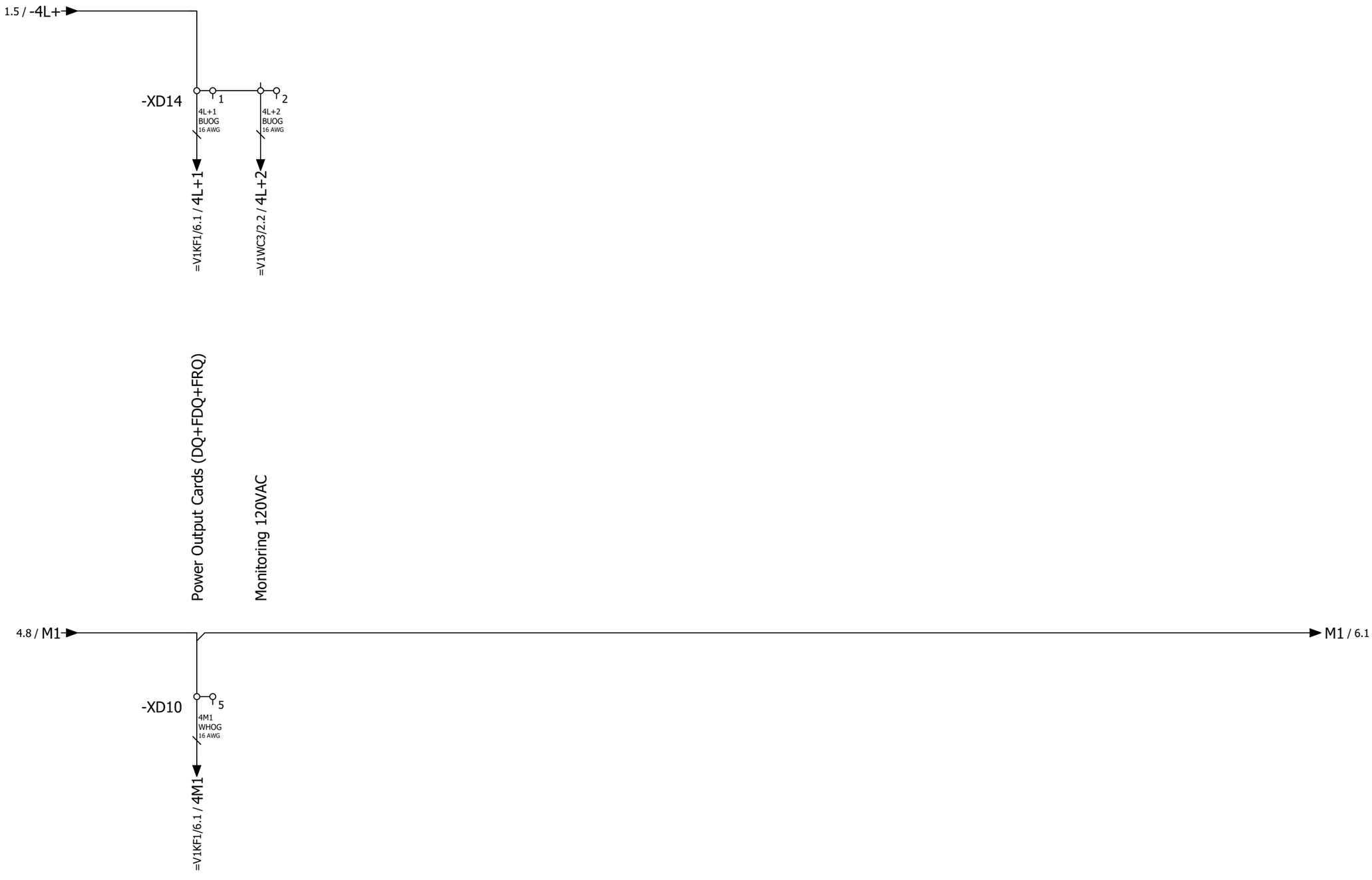

4

6

			Date	1/11/2023	Volvo Trucks North America	Valiant TMS	Power distribution 24VDC 4L+	Drawing name: =2V10&EFS-EL		= V1WC4	
			Ed.	MKLEPADLO						+ V1UC15	
			Appr		P6700 Bodyside RH - Robot Cell 2V10			Document type: EFS	Project nr: 22-16150		Page 5
Modification	Date	Name	Original		Replacement of	Replaced by	Scale 1:1				1579

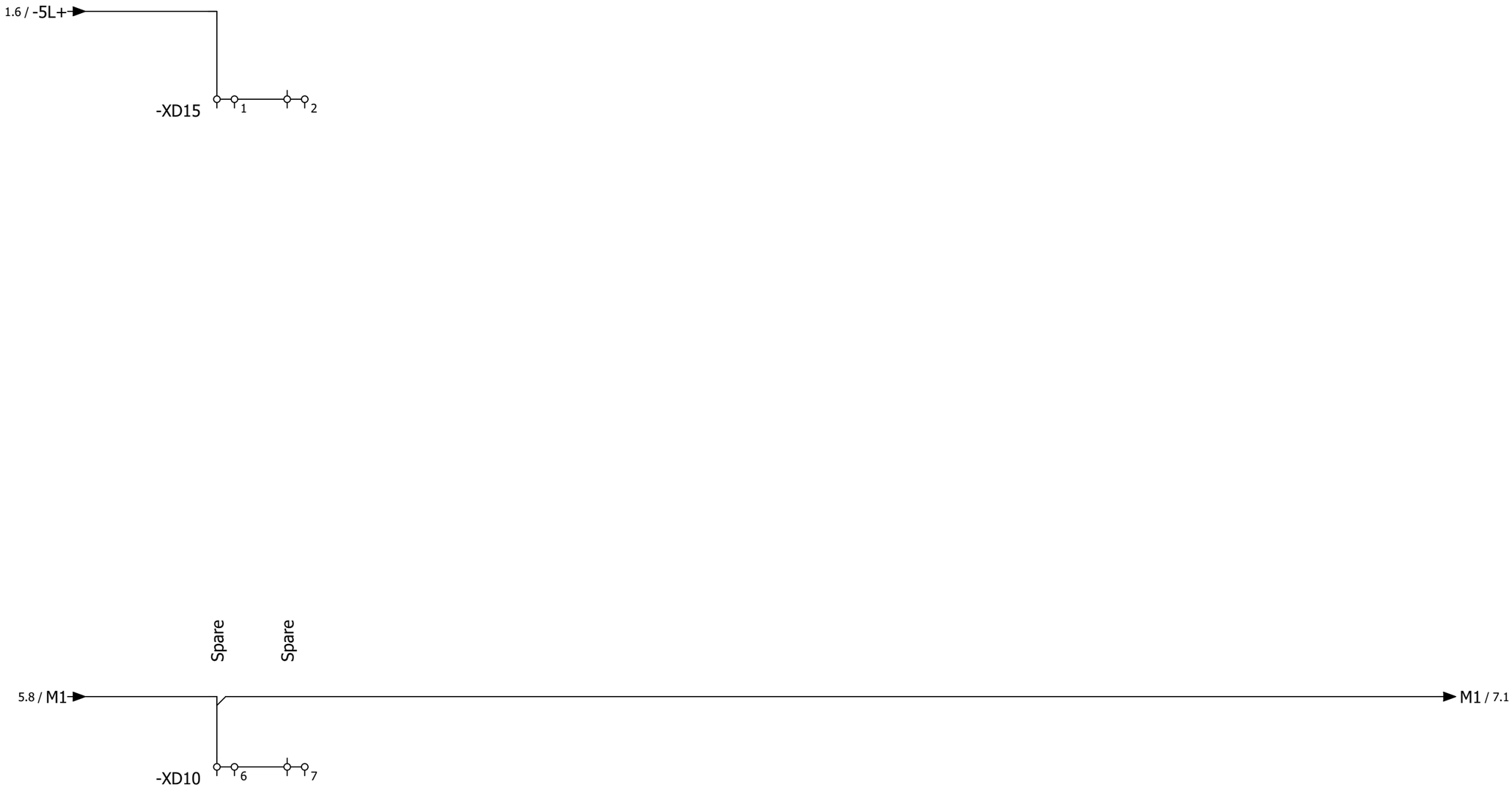

			Date	1/11/2023	Volvo Trucks North America	Valiant TMS	Power distribution 24VDC 5L+	Drawing name: =2V10&EFS-EL		= V1WC4	
			Ed.	MKLEPADLO						+ V1UC15	
			Appr		P6700 Bodyside RH - Robot Cell 2V10			Document type: EFS	Project nr: 22-16150		Page 6
Modification	Date	Name	Original		Replacement of / Replaced by	Scale 1:1					1579

			Date	1/11/2023	Volvo Trucks North America	Valiant TMS	Power distribution 24VDC 6L+	Drawing name: =2V10&EFS-EL		= V1WC4	
			Ed.	MKLEPADLO						+ V1UC15	
			Appr		P6700 Bodyside RH - Robot Cell 2V10			Document type: EFS	Project nr: 22-16150		Page 7
Modification	Date	Name	Original		Replacement of	Replaced by	Scale 1:1				1579

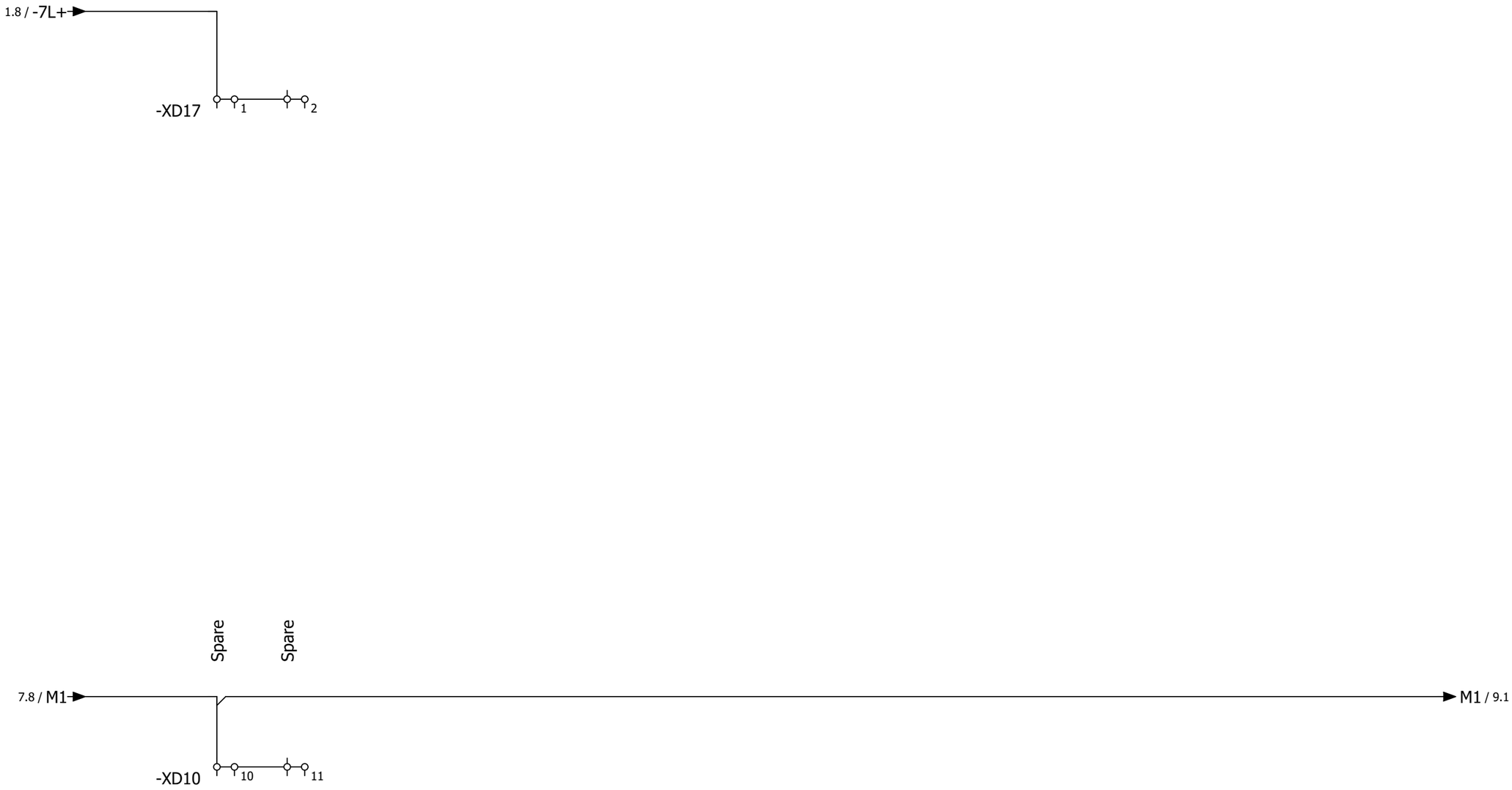

			Date	1/11/2023	Volvo Trucks North America	Valiant TMS	Power distribution 24VDC 7L+	Drawing name: =2V10&EFS-EL		= V1WC4	
			Ed.	MKLEPADLO						+ V1UC15	
			Appr		P6700 Bodyside RH - Robot Cell 2V10	Scale 1:1		Document type: EFS	Project nr: 22-16150		Page 8 / 1579
Modification	Date	Name	Original		Replacement of	Replaced by					

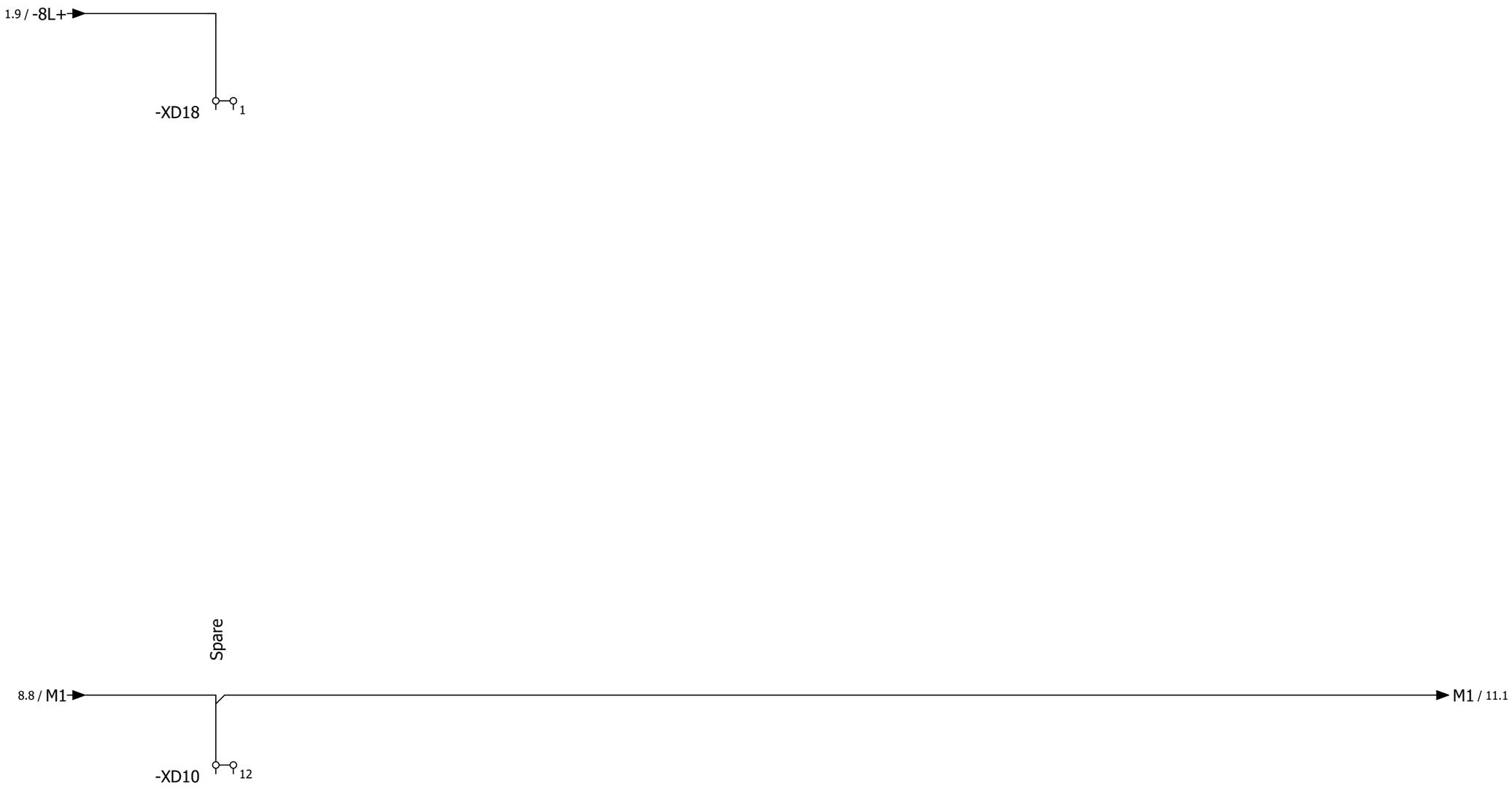

8 10

			Date	1/11/2023	Volvo Trucks North America	Valiant TMS	Power distribution 24VDC 8L+	Drawing name: =2V10&EFS-EL	= V1WC4	
			Ed.	MKLEPADLO					+ V1UC15	
			Appr		P6700 Bodyside RH - Robot Cell 2V10			Document type: EFS	Project nr: 22-16150	Page 9
Modification	Date	Name	Original		Replacement of / Replaced by	Scale 1:1				1579

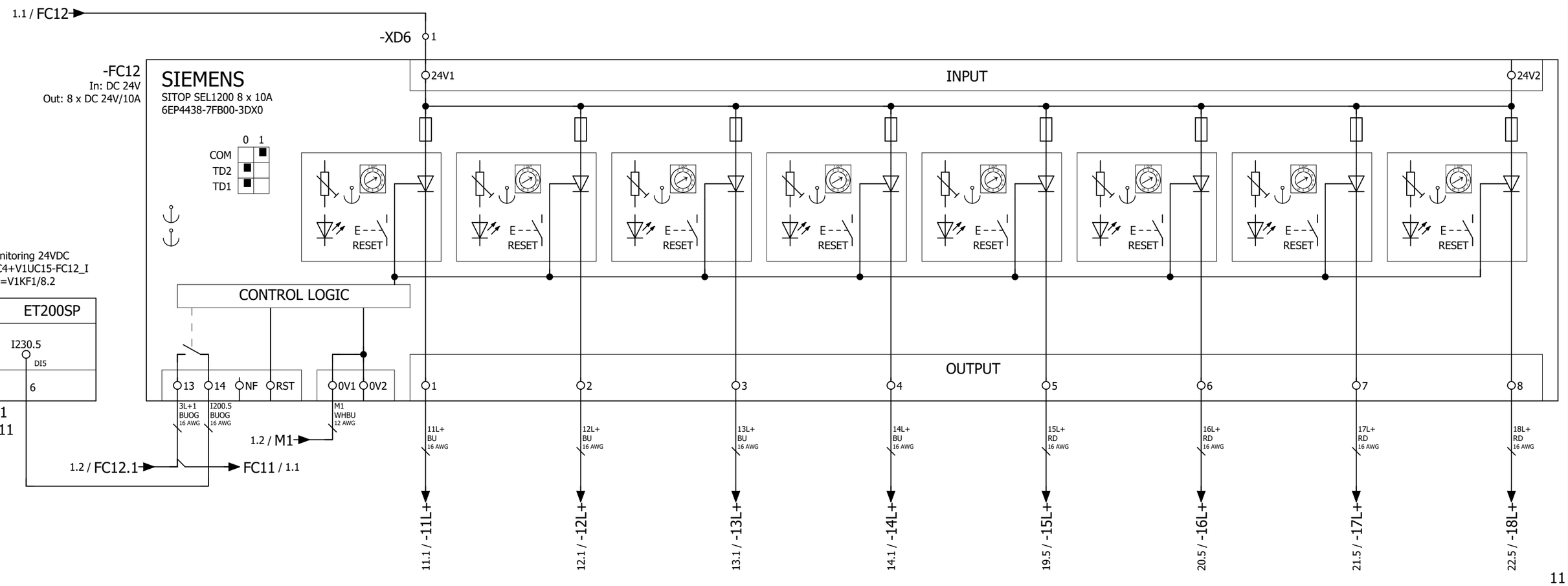

9

11

			Date	1/11/2023	Volvo Trucks North America	Valiant TMS	Power distribution 24VDC (Below Disconnect)	Drawing name: =2V10&EFS-EL	= V1WC4		
			Ed.	MKLEPADLO					+ V1UC15		
			Appr		P6700 Bodyside RH - Robot Cell 2V10			Document type: EFS	Project nr: 22-16150	Page	10
Modification	Date	Name	Original		Replacement of	Replaced by	Scale 1:1				1579

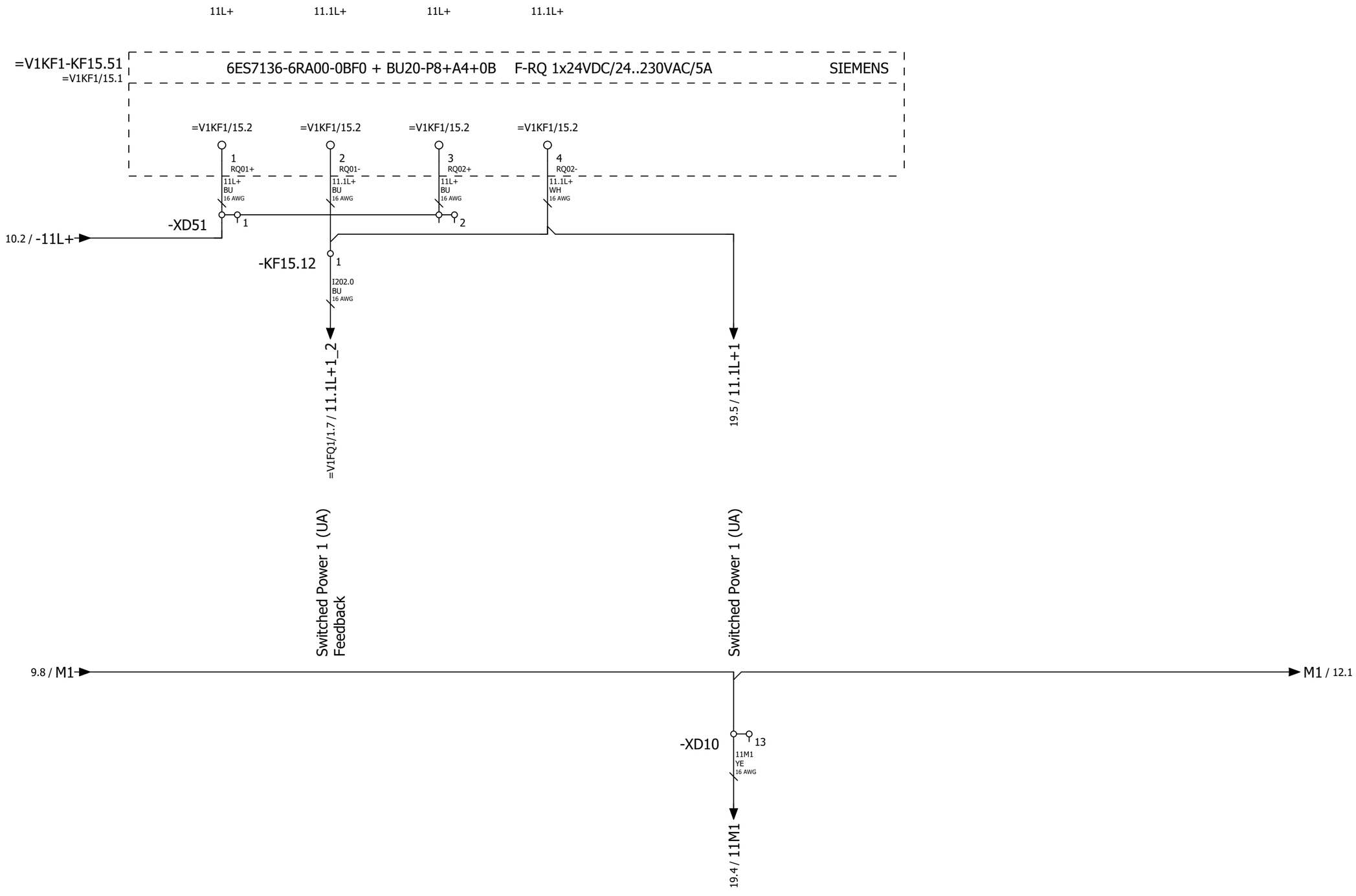

10

12

			Date	1/11/2023	Volvo Trucks North America	Valiant TMS	Power distribution 24VDC 11L+	Drawing name: =2V10&EFS-EL		= V1WC4	
			Ed.	MKLEPADLO						+ V1UC15	
			Appr		P6700 Bodyside RH - Robot Cell 2V10			Document type: EFS	Project nr: 22-16150		Page 11
Modification	Date	Name	Original		Replacement of / Replaced by	Scale 1:1					1579

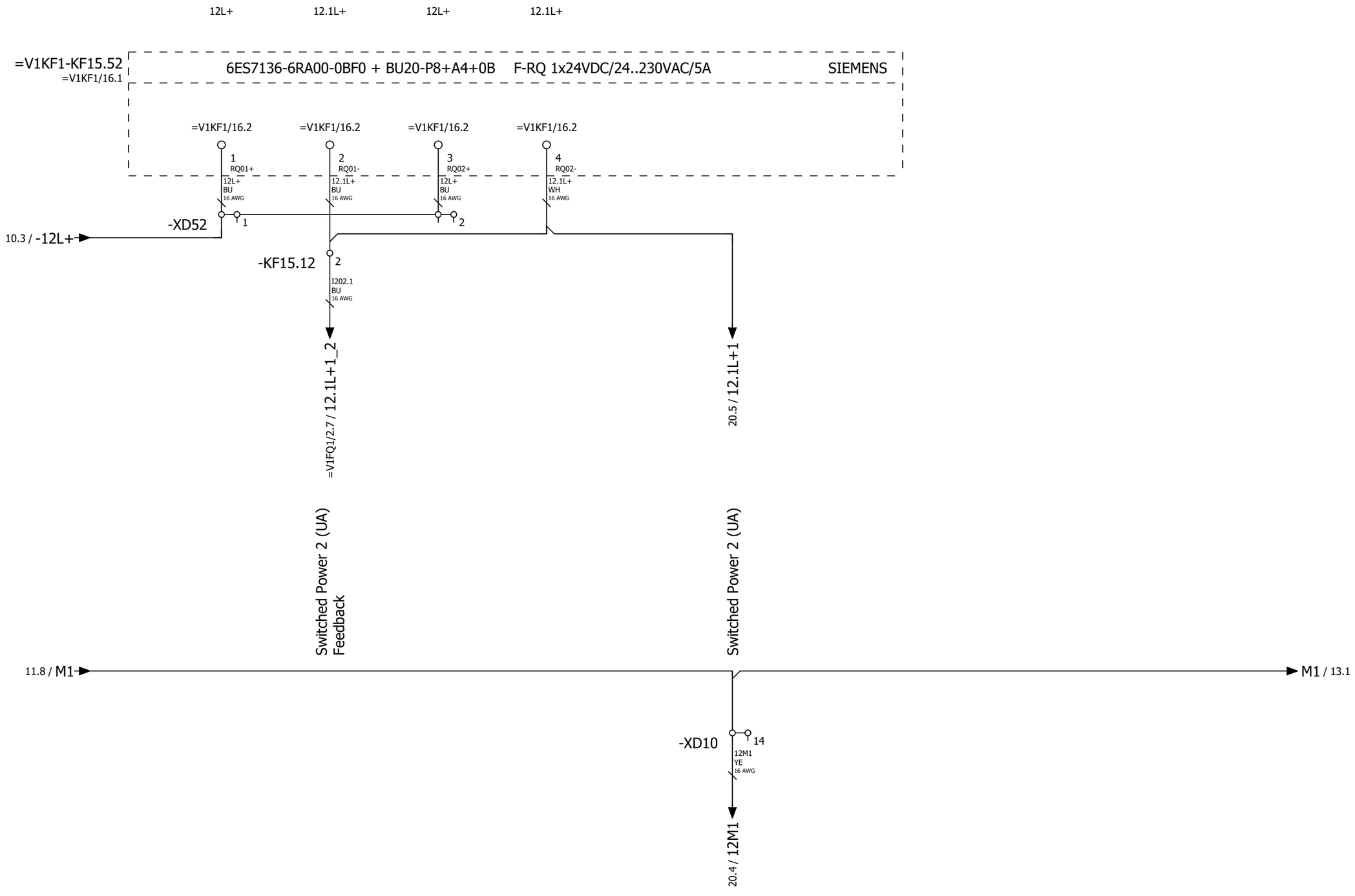

			Date	1/11/2023	Volvo Trucks North America	Valiant TMS	Power distribution 24VDC 12L+	Drawing name: =2V10&EFS-EL		= V1WC4	
			Ed.	MKLEPADLO						+ V1UC15	
			Appr		P6700 Bodyside RH - Robot Cell 2V10			Document type: EFS	Project nr: 22-16150		Page 12
Modification	Date	Name	Original		Replacement of / Replaced by	Scale 1:1					1579

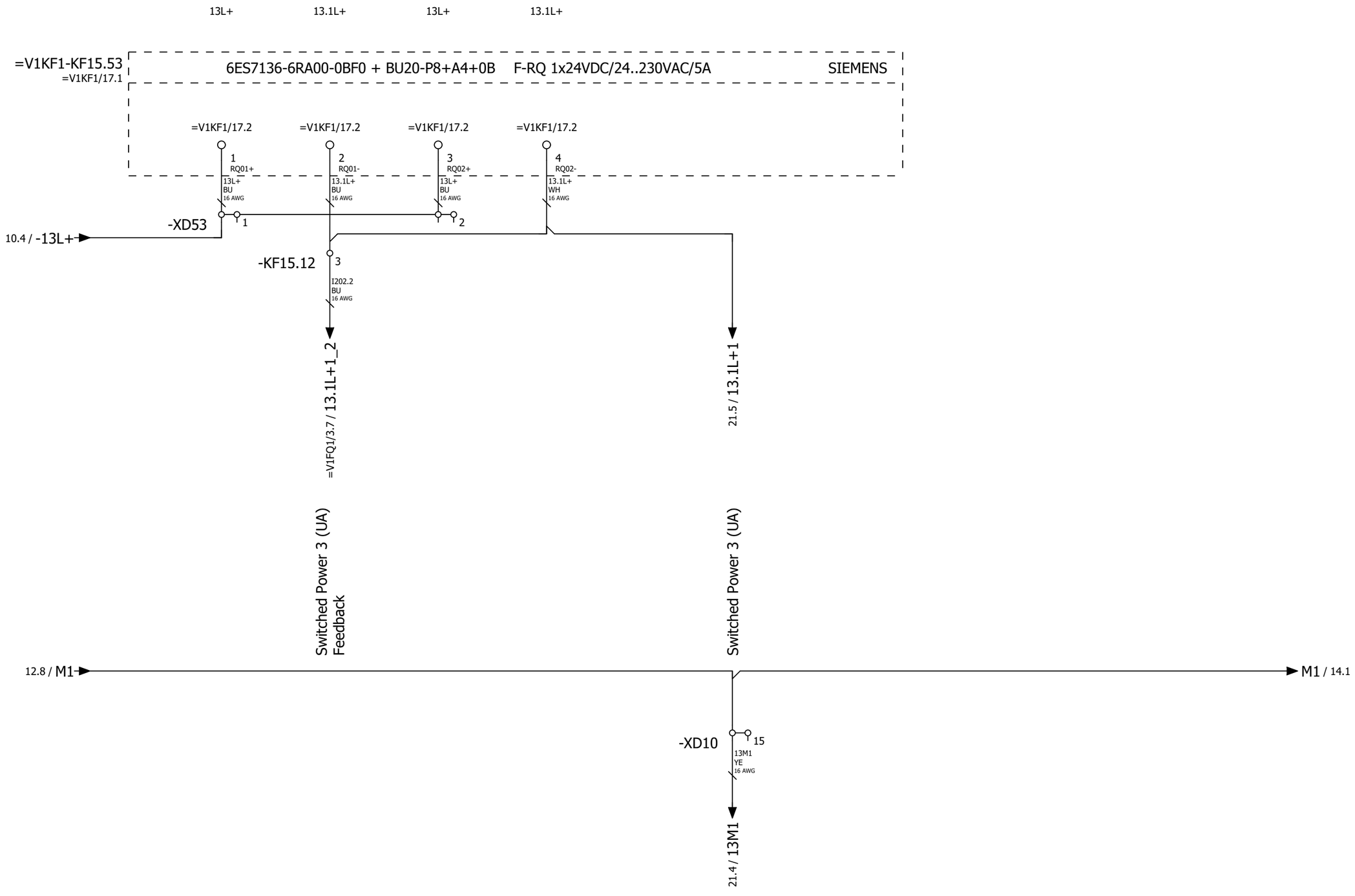

12

14

			Date	1/11/2023	Volvo Trucks North America	Valiant TMS	Power distribution 24VDC 13L+	Drawing name: =2V10&EFS-EL		= V1WC4	
			Ed.	MKLEPADLO						+ V1UC15	
			Appr		P6700 Bodyside RH - Robot Cell 2V10			Document type: EFS	Project nr: 22-16150		Page 13
Modification	Date	Name	Original		Replacement of / Replaced by	Scale 1:1					1579

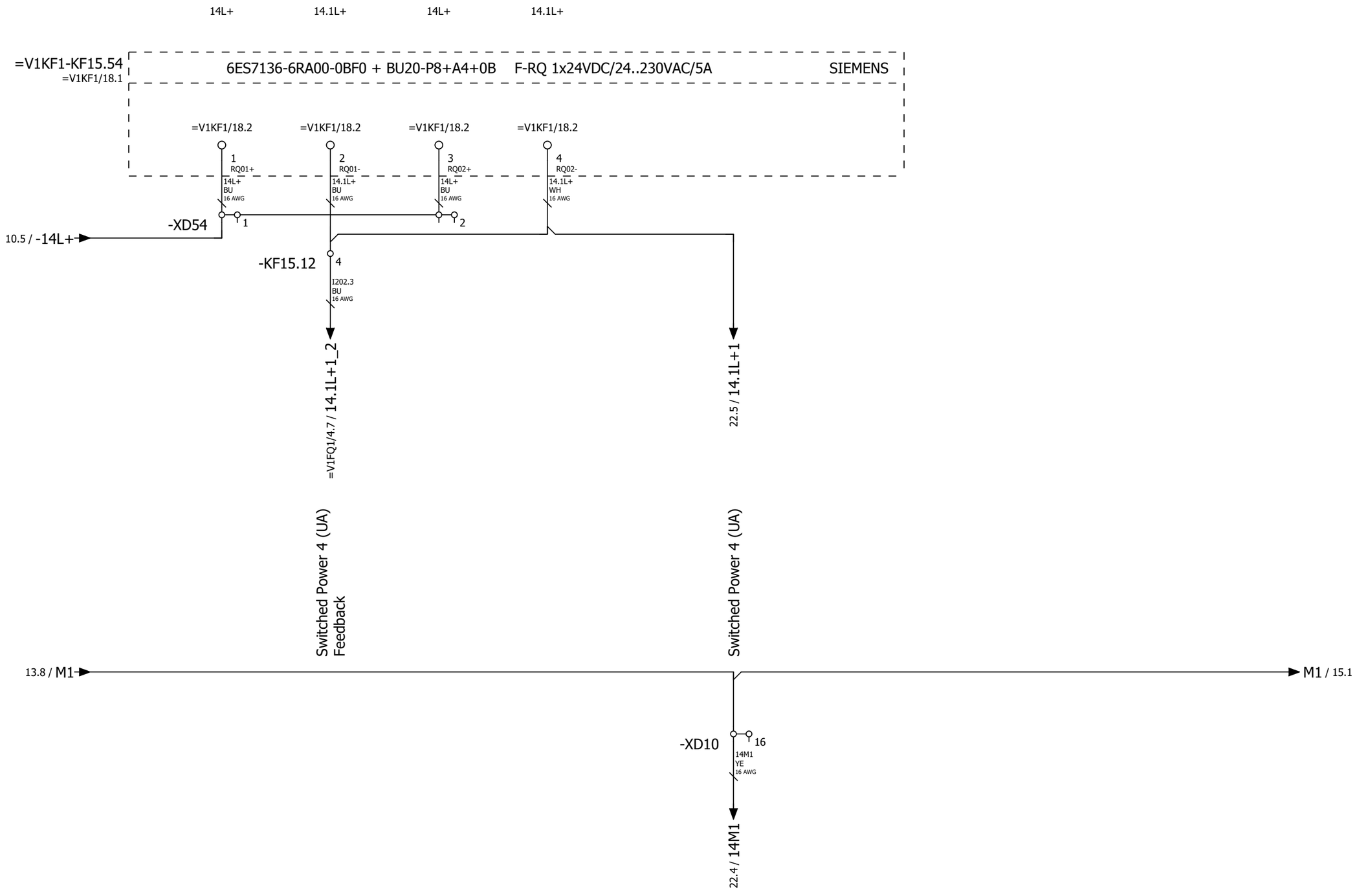

13

15

			Date	1/11/2023	Volvo Trucks North America	Valiant TMS	Power distribution 24VDC 14L+	Drawing name: =2V10&EFS-EL		= V1WC4	
			Ed.	MKLEPADLO						+ V1UC15	
			Appr		P6700 Bodyside RH - Robot Cell 2V10			Document type: EFS	Project nr: 22-16150		Page 14
Modification	Date	Name	Original		Replacement of / Replaced by	Scale 1:1					1579

			Date	1/11/2023	Volvo Trucks North America	Valiant TMS	Power distribution 24VDC 15L+	Drawing name: =2V10&EFS-EL		= V1WC4	
			Ed.	MKLEPADLO						+ V1UC15	
			Appr		P6700 Bodyside RH - Robot Cell 2V10			Document type: EFS	Project nr: 22-16150		Page 15
Modification	Date	Name	Original		Replacement of / Replaced by	Scale 1:1					1579

15

17

			Date	1/11/2023	Volvo Trucks North America	Valiant TMS	Power distribution 24VDC 16L+	Drawing name: =2V10&EFS-EL		= V1WC4	
			Ed.	MKLEPADLO						+ V1UC15	
			Appr		P6700 Bodyside RH - Robot Cell 2V10			Document type: EFS	Project nr: 22-16150	Page	16
Modification	Date	Name	Original		Replacement of / Replaced by	Scale 1:1					1579

			Date	1/11/2023	Volvo Trucks North America	Valiant TMS	Power distribution 24VDC 17L+	Drawing name: =2V10&EFS-EL		= V1WC4	
			Ed.	MKLEPADLO						+ V1UC15	
			Appr		P6700 Bodyside RH - Robot Cell 2V10			Document type: EFS	Project nr: 22-16150		Page 17
Modification	Date	Name	Original		Replacement of / Replaced by	Scale 1:1					1579

17

19

			Date	1/11/2023	Volvo Trucks North America	Valiant TMS	Power distribution 24VDC 18L+	Drawing name: =2V10&EFS-EL		= V1WC4	
			Ed.	MKLEPADLO						+ V1UC15	
			Appr		P6700 Bodyside RH - Robot Cell 2V10			Document type: EFS	Project nr: 22-16150		Page 18
Modification	Date	Name	Original		Replacement of / Replaced by	Scale 1:1					1579

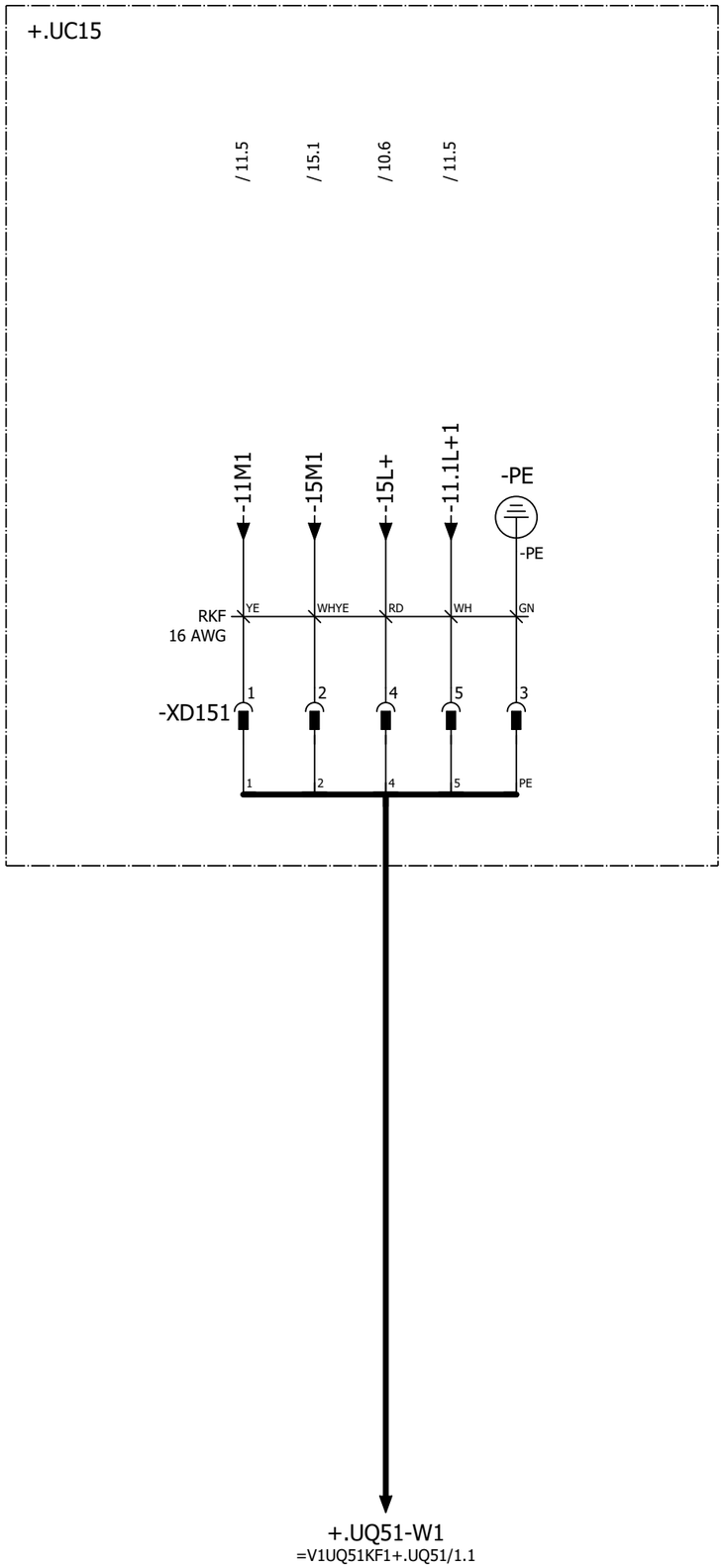

POWER IN / POWER OUT

Pin 1: 0 V UA
Pin 2: 0 V US
Pin 3: FE
Pin 4: +24 V US / 9 A
Pin 5: +24 V UA / 9 A

Pin #	WIRE	COLOR
Pin 1	-11M1	YE
Pin 2	-15M1	WHYE
Pin 3	GND	GN
Pin 4	-15L+	RD
Pin 5	-11.1L+1	WH

			Date	1/11/2023	Volvo Trucks North America	Valiant TMS	24VDC Switched Power 1	Drawing name: =2V10&EFS-EL	= V1WC4	
			Ed.	MKLEPADLO					+ V1UC15	
			Appr		P6700 Bodyside RH - Robot Cell 2V10			Document type: EFS	Project nr: 22-16150	Page 19 / 1579
Modification	Date	Name	Original		Replacement of / Replaced by	Scale 1:1				

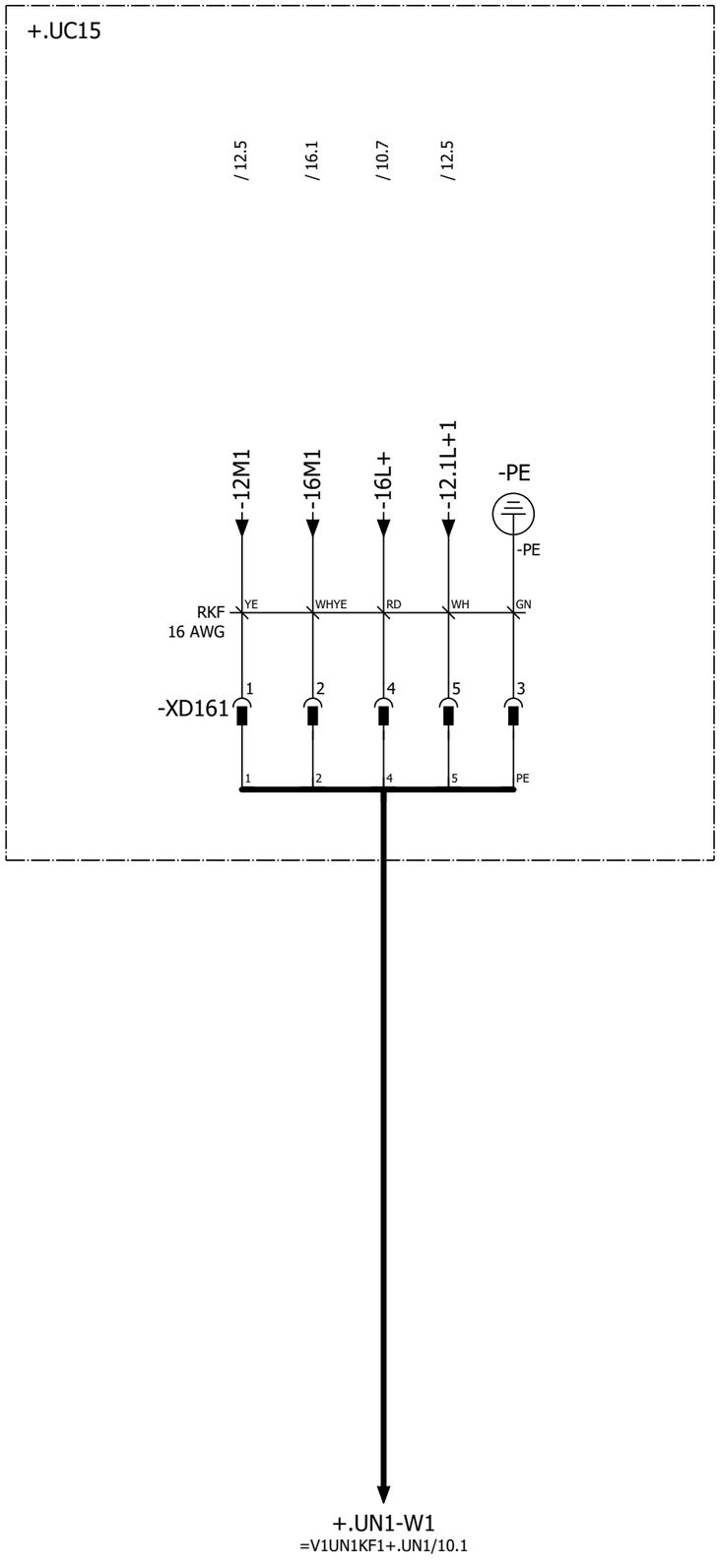

POWER IN / POWER OUT

Pin 1: 0 V UA
Pin 2: 0 V US
Pin 3: FE
Pin 4: +24 V US / 9 A
Pin 5: +24 V UA / 9 A

Pin #	WIRE	COLOR
Pin 1	-12M1	YE
Pin 2	-16M1	WHYE
Pin 3	GND	GN
Pin 4	-16L+	RD
Pin 5	-12.1L+1	WH

			Date	1/11/2023	Volvo Trucks North America		Valiant TMS	24VDC Switched Power 2	Drawing name: =2V10&EFS-EL		= V1WC4
			Ed.	MKLEPADLO							+ V1UC15
			Appr		P6700 Bodyside RH - Robot Cell 2V10				Document type: EFS	Project nr: 22-16150	Page 20
Modification	Date	Name	Original		Replacement of	Replaced by	Scale 1:1				1579

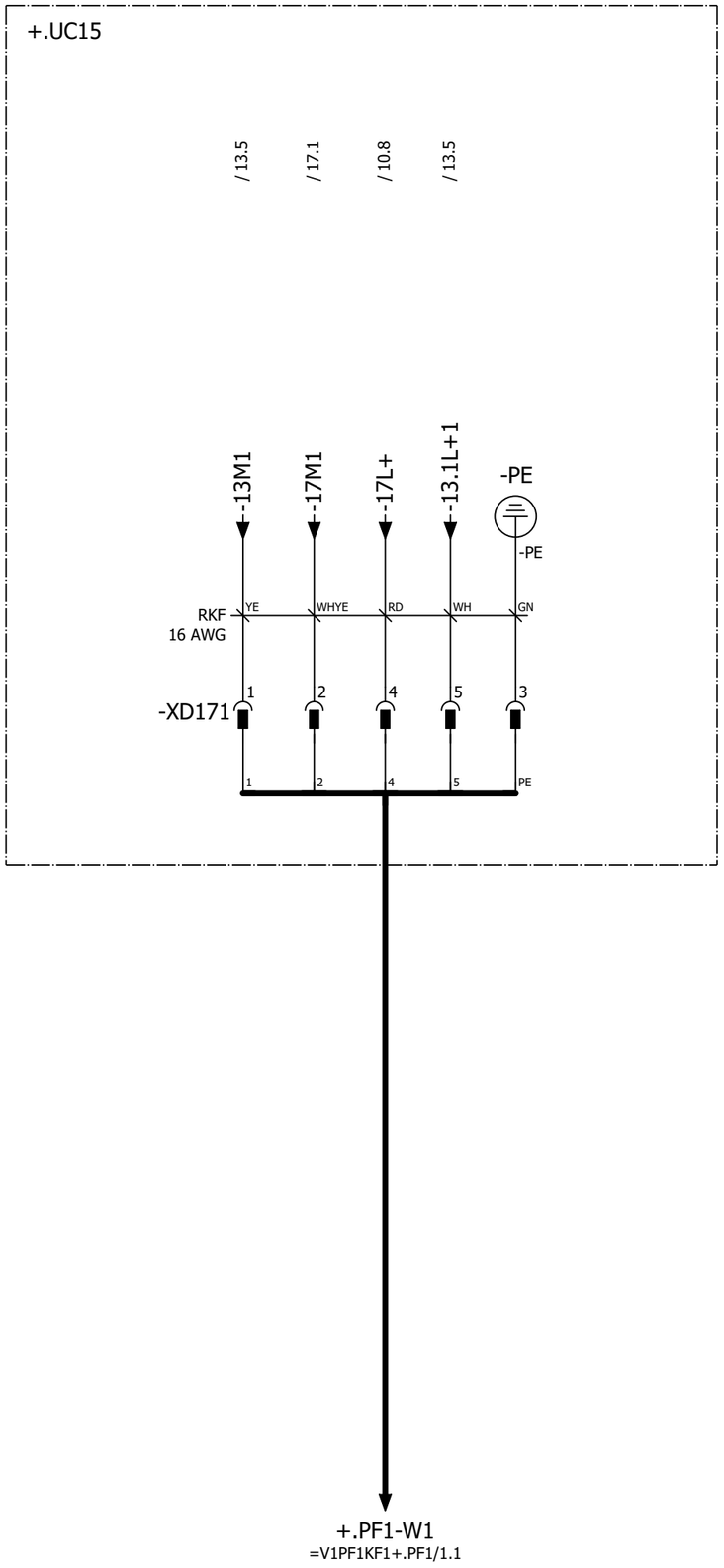

POWER IN / POWER OUT

Pin 1: 0 V UA
Pin 2: 0 V US
Pin 3: FE
Pin 4: +24 V US / 9 A
Pin 5: +24 V UA / 9 A

Pin #	WIRE	COLOR
Pin 1	-13M1	YE
Pin 2	-17M1	WHYE
Pin 3	GND	GN
Pin 4	-17L+	RD
Pin 5	-13.1L+1	WH

			Date	1/11/2023	Volvo Trucks North America	Valiant TMS	24VDC Switched Power 3	Drawing name: =2V10&EFS-EL	= V1WC4	
			Ed.	MKLEPADLO					+ V1UC15	
			Appr		P6700 Bodyside RH - Robot Cell 2V10			Document type: EFS	Project nr: 22-16150	Page 21 / 1579
Modification	Date	Name	Original		Replacement of / Replaced by	Scale 1:1				

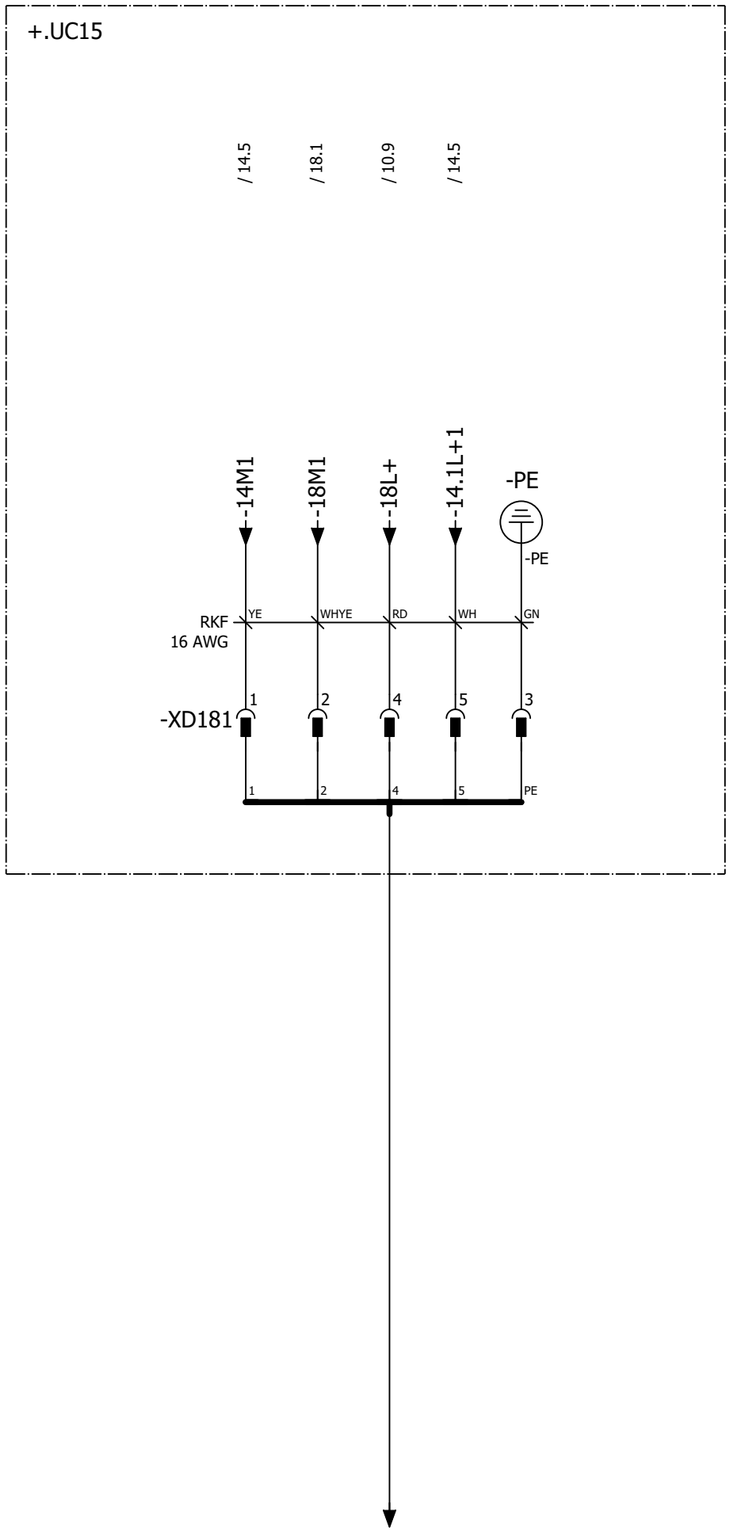

POWER IN / POWER OUT

Pin 1: 0 V UA
Pin 2: 0 V US
Pin 3: FE
Pin 4: +24 V US / 9 A
Pin 5: +24 V UA / 9 A

Pin #	WIRE	COLOR
Pin 1	-14M1	YE
Pin 2	-18M1	WHYE
Pin 3	GND	GN
Pin 4	-18L+	RD
Pin 5	-14.1L+1	WH

			Date	1/11/2023	Volvo Trucks North America		Valiant TMS	24VDC Switched Power 4	Drawing name: =2V10&EFS-EL		= V1WC4
			Ed.	MKLEPADLO							+ V1UC15
			Appr		P6700 Bodyside RH - Robot Cell 2V10				Document type: EFS	Project nr: 22-16150	Page 22
Modification	Date	Name	Original		Replacement of	Replaced by	Scale 1:1				1579

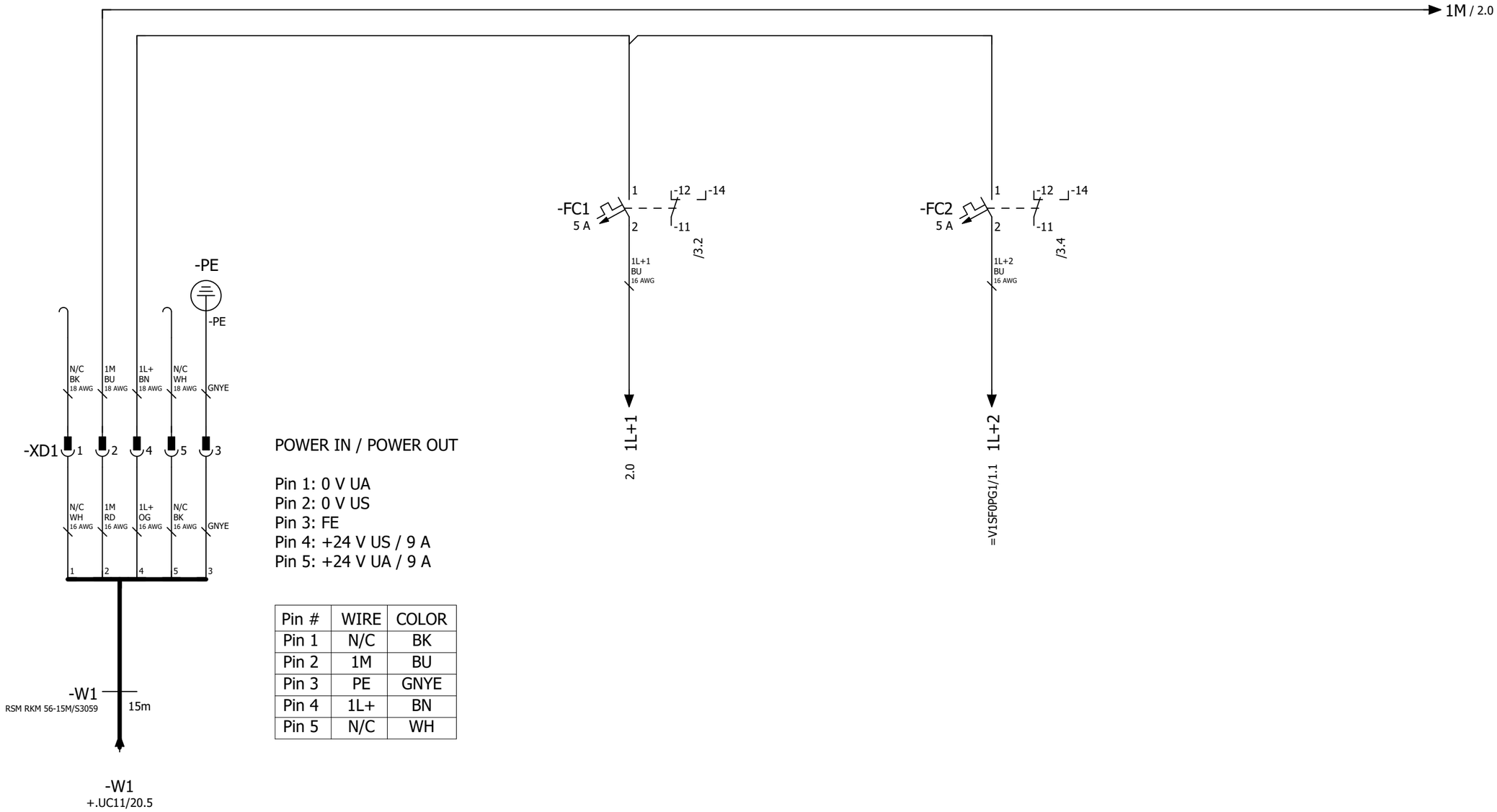

POWER IN / POWER OUT

Pin 1: 0 V UA
Pin 2: 0 V US
Pin 3: FE
Pin 4: +24 V US / 9 A
Pin 5: +24 V UA / 9 A

Pin #	WIRE	COLOR
Pin 1	N/C	BK
Pin 2	1M	BU
Pin 3	PE	GNYE
Pin 4	1L+	BN
Pin 5	N/C	WH

Power
Distribution
24 VDC
Display

Power
Distribution
24 VDC
ET200

+.UC15/22

2

			Date	1/11/2023	Volvo Trucks North America	Valiant TMS	Incomming power supply 24 VDC	Drawing name: =2V10&EFS-EL	= V1WC4	
			Ed.	MKLEPADLO					+ V1UC32	
			Appr		P6700 Bodyside RH - Robot Cell 2V10			Document type: EFS	Project nr: 22-16150	Page 1 / 1579
Modification	Date	Name	Original		Replacement of	Replaced by	Scale 1:1			

1 3

			Date	1/11/2023	Volvo Trucks North America	Valiant TMS	Power distribution 24VDC 1L+	Drawing name: =2V10&EFS-EL		= V1WC4	
			Ed.	MKLEPADLO						+ V1UC32	
			Appr		P6700 Bodyside RH - Robot Cell 2V10			Document type: EFS	Project nr: 22-16150		Page 2
Modification	Date	Name	Original		Replacement of / Replaced by	Scale 1:1					1579

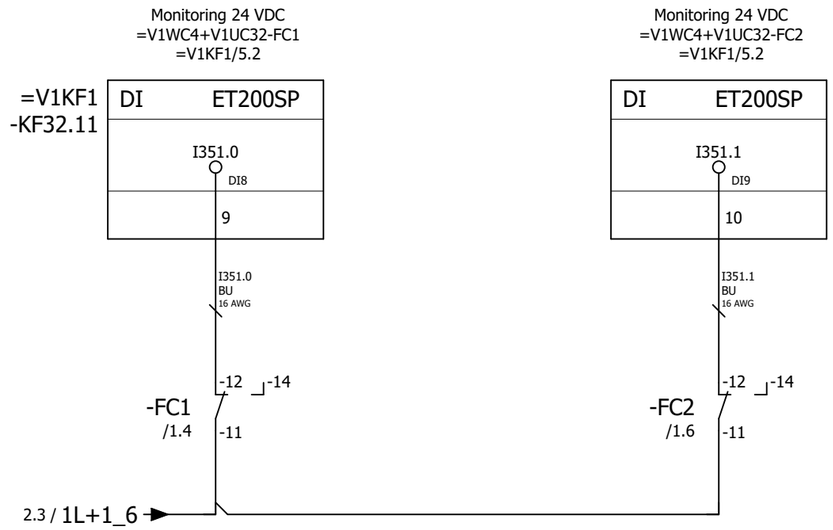

2

&ELU=KF0+UC31/1

			Date	1/11/2023	Volvo Trucks North America	Valiant TMS	Monitoring 24VDC	Drawing name: =2V10&EFS-EL		= V1WC4	
			Ed.	MKLEPADLO						+ V1UC32	
			Appr		P6700 Bodyside RH - Robot Cell 2V10			Document type: EFS	Project nr: 22-16150		Page 3
Modification	Date	Name	Original		Replacement of / Replaced by	Scale 1:1					1579

0	1	2	3	4	5	6	7	8	9

-UC31

&EFS=V1WC4+V1UC32/3

2

			Date	1/11/2023	Volvo Trucks North America	Valiant TMS	Layout	Drawing name: =2V10&EFS-EL	= KF0	
			Ed.	MKLEPADLO					+ UC31	
			Appr		P6700 Bodyside RH - Robot Cell 2V10	Scale 1:1		Document type: ELU	Project nr: 22-16150	Page 1 / 1579
Modification	Date	Name	Original		Replacement of	Replaced by				

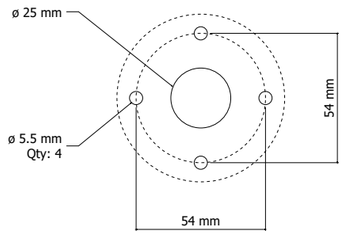

DETAIL 'B'
ABB Stack light
K70 series

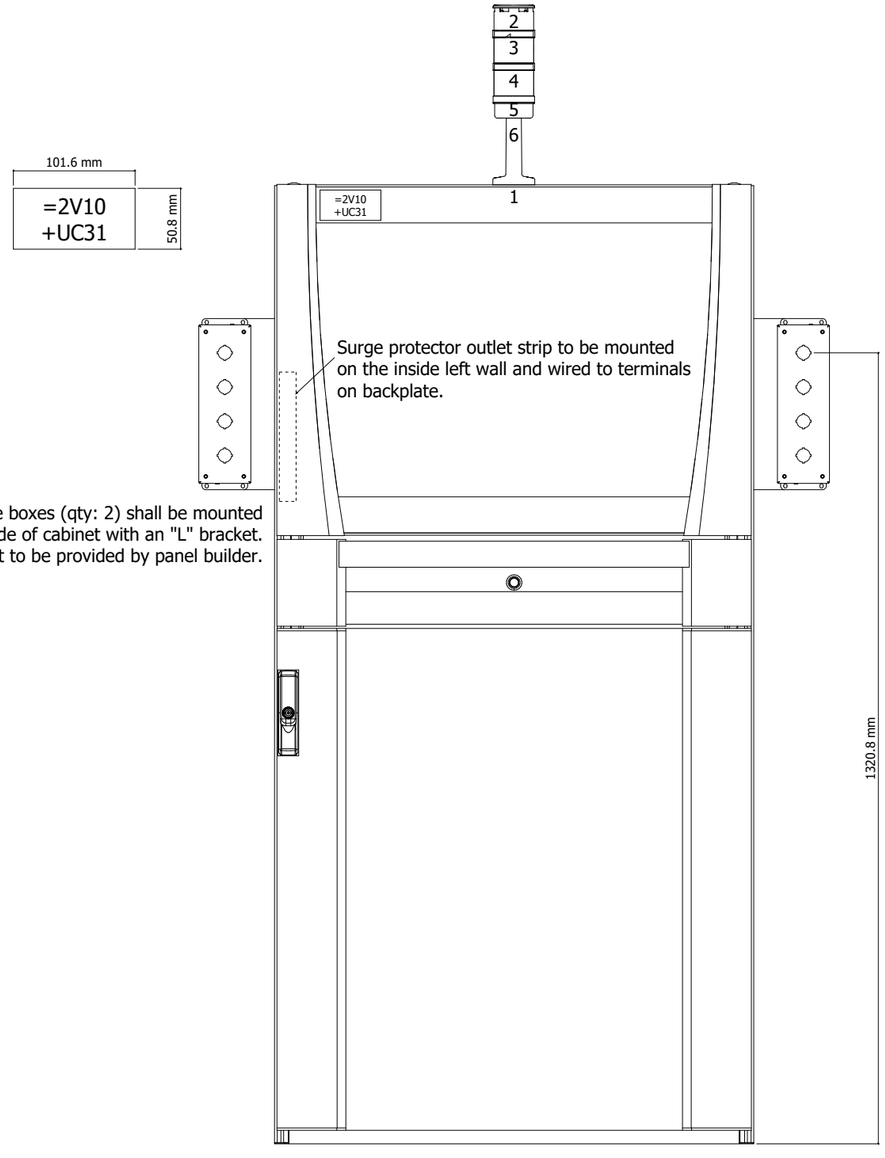

Enclosure boxes (qty: 2) shall be mounted
to the side of cabinet with an "L" bracket.
* Mounting bracket to be provided by panel builder.

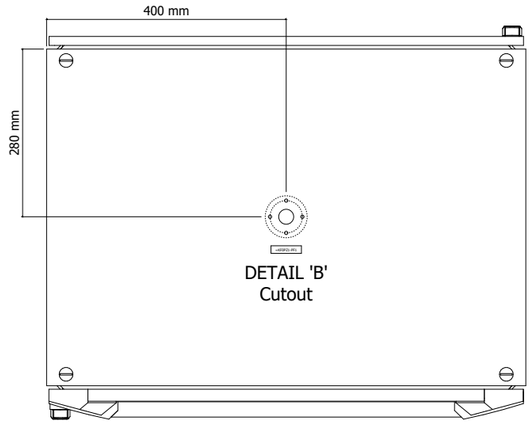

DETAIL 'B'
Cutout

Top View
of Enclosure

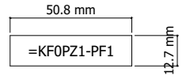

Enclosure panel shall be finished in RAL 7035 Light Grey paint.

			Date	1/11/2023	Volvo Trucks North America	Valiant TMS	Layout UC31 External View	Drawing name: =2V10&EFS-EL		= KF0	
			Ed.	MKLEPADLO						+ UC31	
			Appr		P6700 Bodyside RH - Robot Cell 2V10	Scale 1:10		Document type: ELU	Project nr: 22-16150		Page 2 / 1579
Modification	Date	Name	Original		Replacement of	Replaced by					

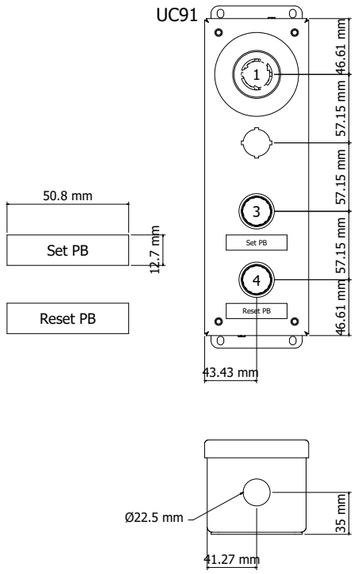

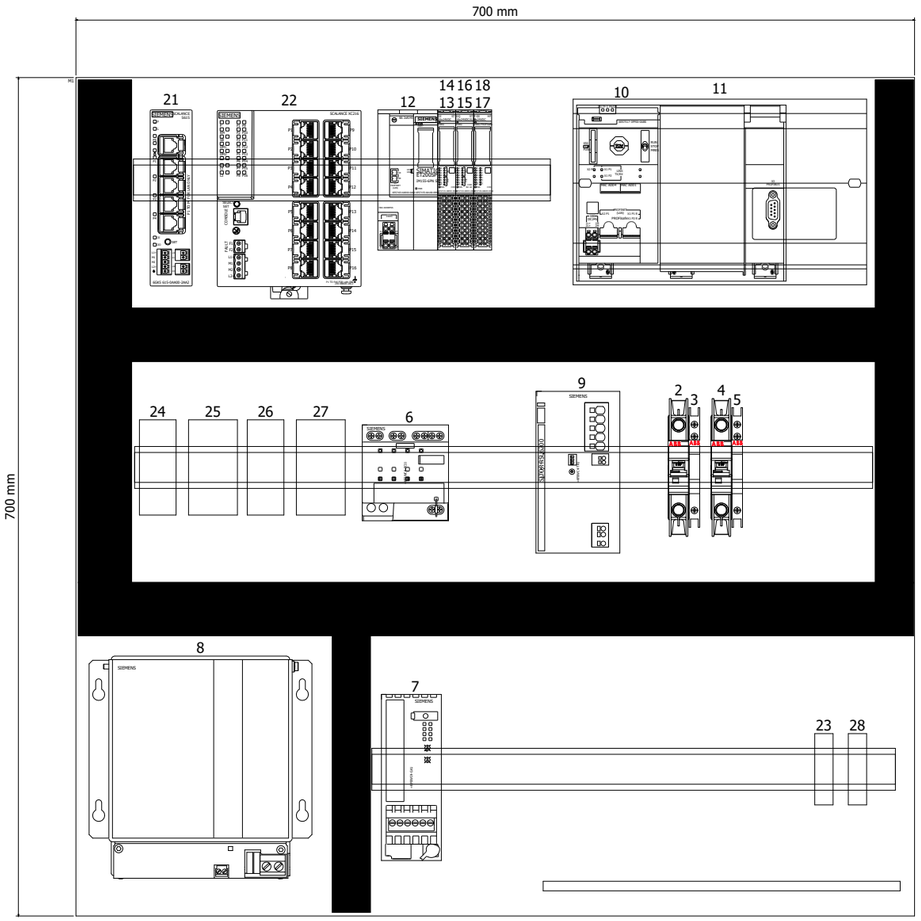

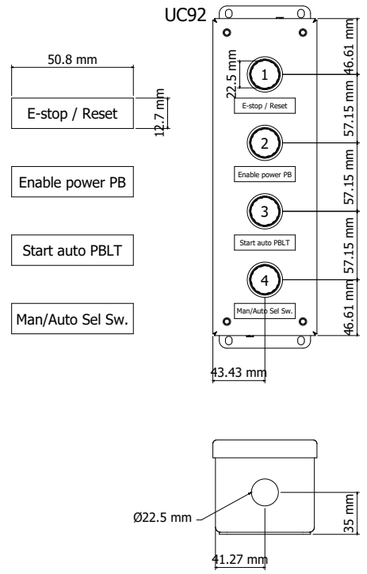

DETAIL 'B'
M12 Profinet Receptacle
Qty: 11

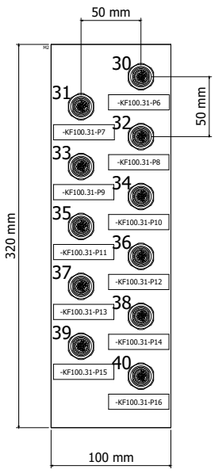

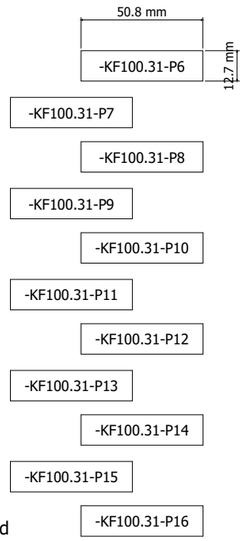

Profinet receptacle plate. Shall be mounted
to left side of subplate with a bracket.
* Mounting bracket to be provided by panel builder.

2

=V1PZ1PF1+V1UC61/1

			Date	1/11/2023	Volvo Trucks North America	Valiant TMS	Layout UC31 Internal View	Drawing name: =2V10&EFS-EL		= KF0	
			Ed.	MKLEPADLO						+ UC31	
			Appr		P6700 Bodyside RH - Robot Cell 2V10			Document type: ELU	Project nr: 22-16150		Page 3
Modification	Date	Name	Original		Replacement of / Replaced by	Scale 1:5					1579

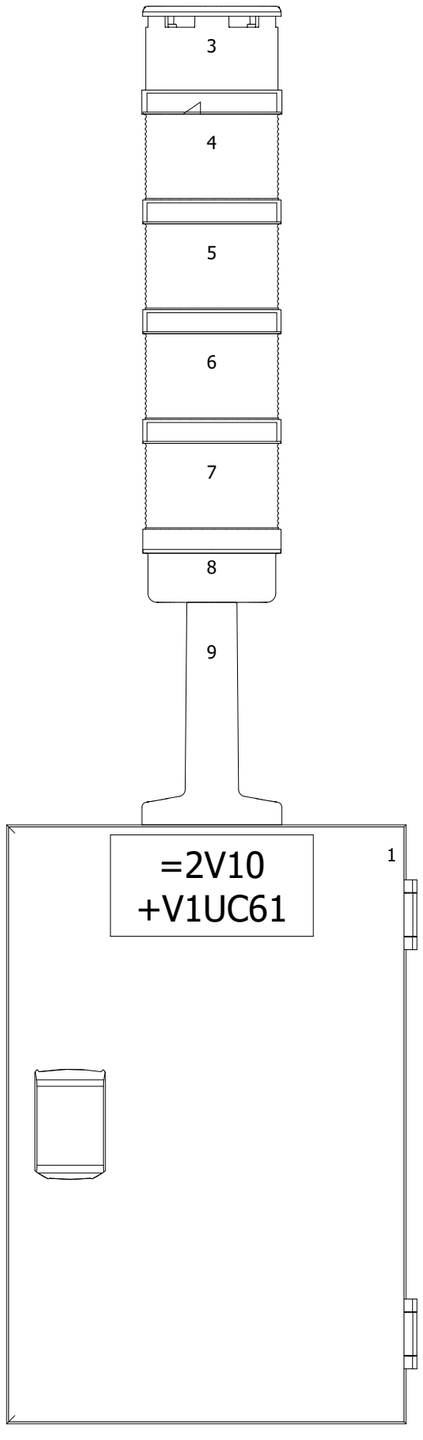

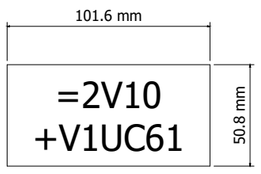

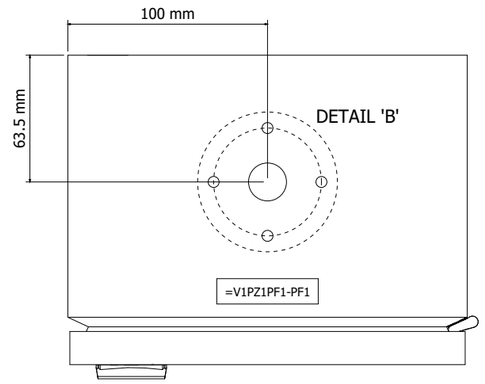

Top View
of Enclosure

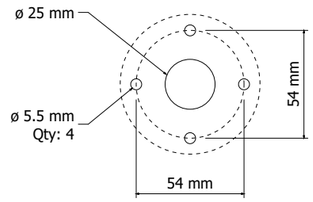

DETAIL 'B'
ABB Stack light
K70 series

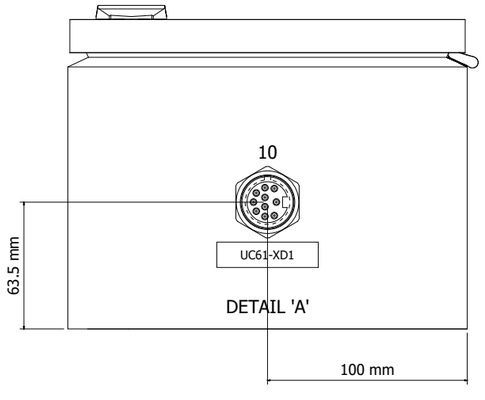

Buttom View
of Enclosure

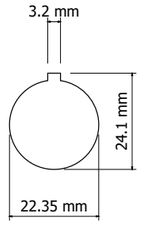

DETAIL 'A'
1-1/8" Receptacle

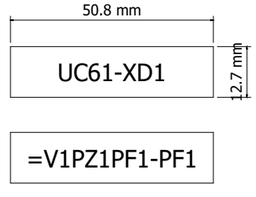

=KF0+UC31/3

2

			Date	1/11/2023	Volvo Trucks North America	Valiant TMS	Layout UC61 SL External View	Drawing name: =2V10&EFS-EL		= V1PZ1PF1	
			Ed.	MKLEPADLO						+ V1UC61	
			Appr		P6700 Bodyside RH - Robot Cell 2V10			Document type: ELU	Project nr: 22-16150		Page 1
Modification	Date	Name	Original		Replacement of	Replaced by	Scale 1:3				1579

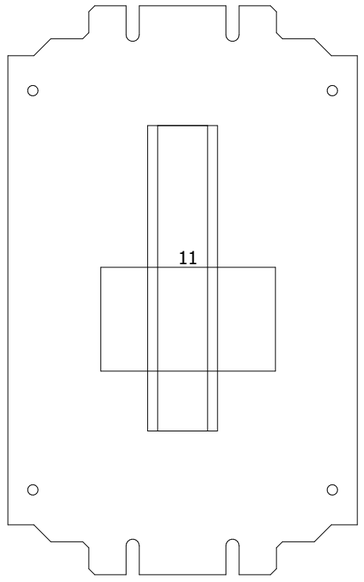

1

=V1PZ1PF2+.UC62/1

			Date	1/11/2023	Volvo Trucks North America	Valiant TMS	Layout UC61 SL Internal View	Drawing name: =2V10&EFS-EL		= V1PZ1PF1	
			Ed.	MKLEPADLO						+ V1UC61	
			Appr		P6700 Bodyside RH - Robot Cell 2V10			Document type: ELU	Project nr: 22-16150		Page 2
Modification	Date	Name	Original		Replacement of / Replaced by	Scale 1:3					1579

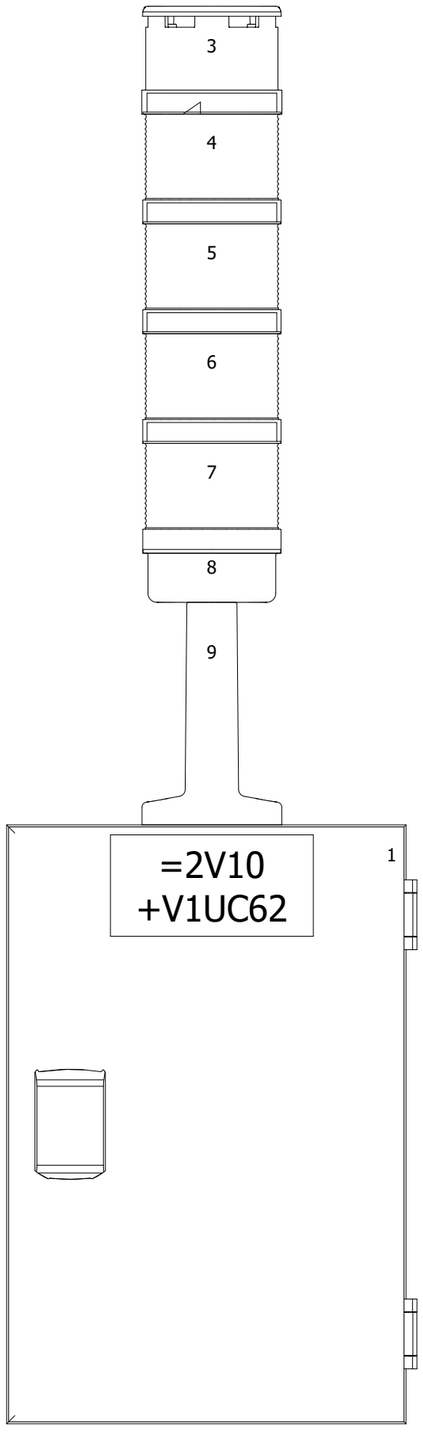

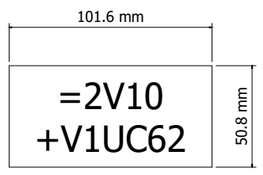

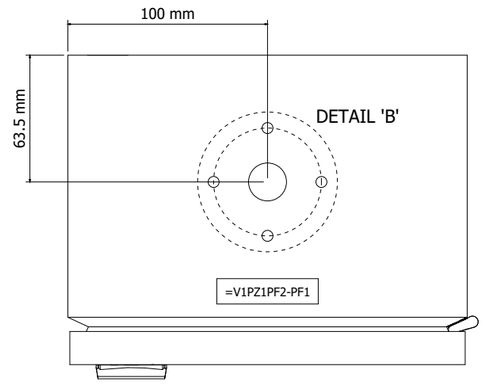

Top View
of Enclosure

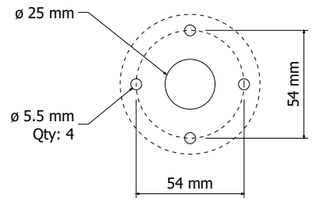

DETAIL 'B'
ABB Stack light
K70 series

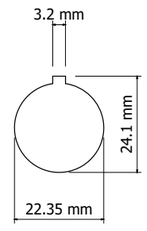

DETAIL 'A'
1-1/8" Receptacle

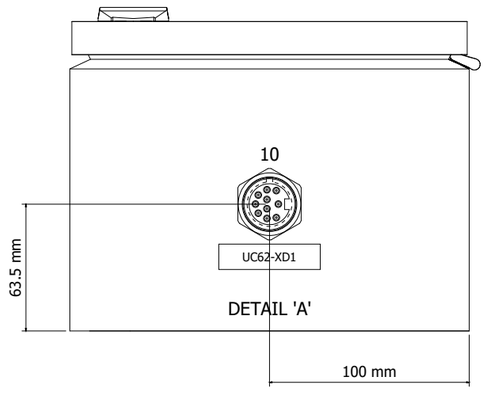

Buttom View
of Enclosure

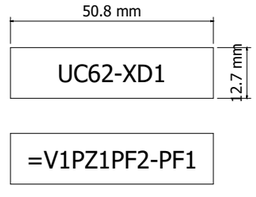

=V1PZ1PF1+.UC61/2

2

			Date	1/11/2023	Volvo Trucks North America	Valiant TMS	Layout UC62 SL External View	Drawing name: =2V10&EFS-EL		= V1PZ1PF2	
			Ed.	MKLEPADLO						+ V1UC62	
			Appr		P6700 Bodyside RH - Robot Cell 2V10			Document type: ELU	Project nr: 22-16150		Page 1
Modification	Date	Name	Original		Replacement of	Replaced by	Scale 1:3				1579

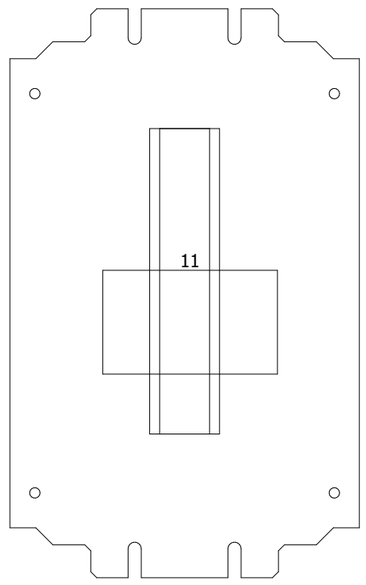

1

=V1PZ1PF3+.UC63/1

			Date	1/11/2023	Volvo Trucks North America		Valiant TMS	Layout UC62 SL Internal View	Drawing name: =2V10&EFS-EL		= V1PZ1PF2
			Ed.	MKLEPADLO							+ V1UC62
			Appr		P6700 Bodyside RH - Robot Cell 2V10				Document type: ELU	Project nr: 22-16150	Page 2
Modification	Date	Name	Original		Replacement of	Replaced by	Scale 1:3				1579

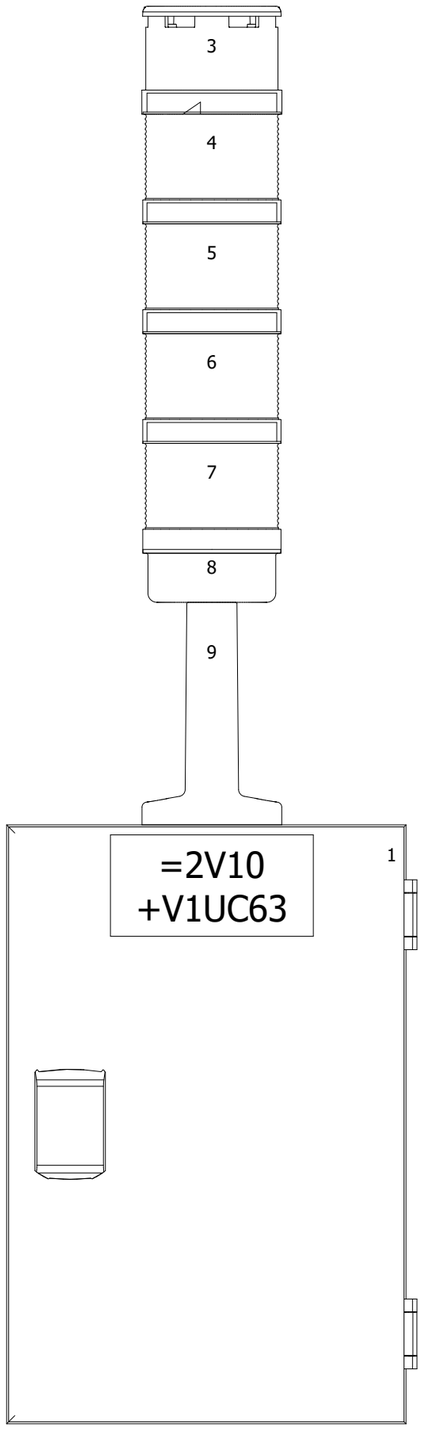

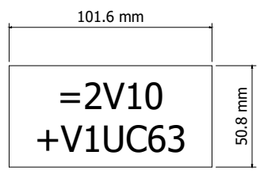

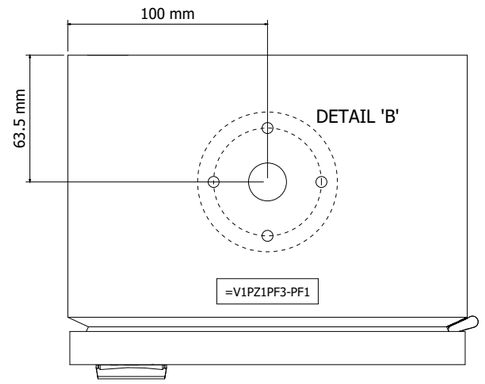

Top View
of Enclosure

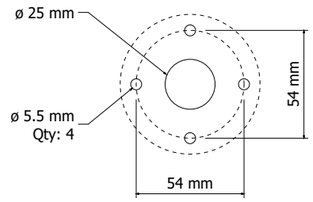

DETAIL 'B'
ABB Stack light
K70 series

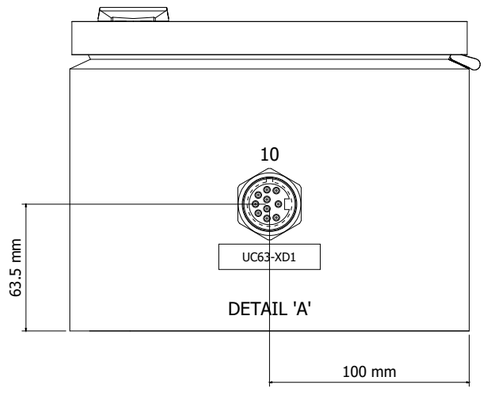

Buttom View
of Enclosure

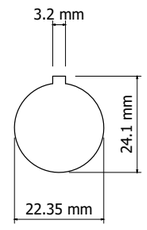

DETAIL 'A'
1-1/8" Receptacle

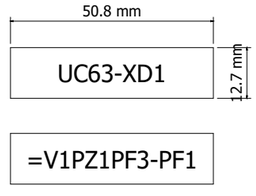

=V1PZ1PF2+.UC62/2

2

			Date	1/11/2023	Volvo Trucks North America	Valiant TMS	Layout UC63 SL External View	Drawing name: =2V10&EFS-EL		= V1PZ1PF3	
			Ed.	MKLEPADLO						+ V1UC63	
			Appr		P6700 Bodyside RH - Robot Cell 2V10			Document type: ELU	Project nr: 22-16150		Page 1
Modification	Date	Name	Original		Replacement of	Replaced by	Scale 1:3				1579

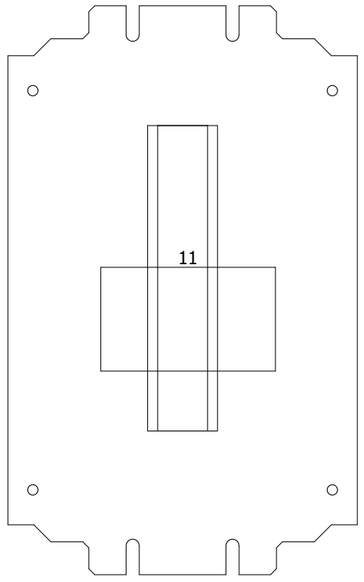

1

=V1PZ1PF4+.UC64/1

			Date	1/11/2023	Volvo Trucks North America	Valiant TMS	Layout UC63 SL Internal View	Drawing name: =2V10&EFS-EL		= V1PZ1PF3	
			Ed.	MKLEPADLO						+ V1UC63	
			Appr		P6700 Bodyside RH - Robot Cell 2V10			Document type: ELU	Project nr: 22-16150		Page 2
Modification	Date	Name	Original		Replacement of / Replaced by	Scale 1:3					1579

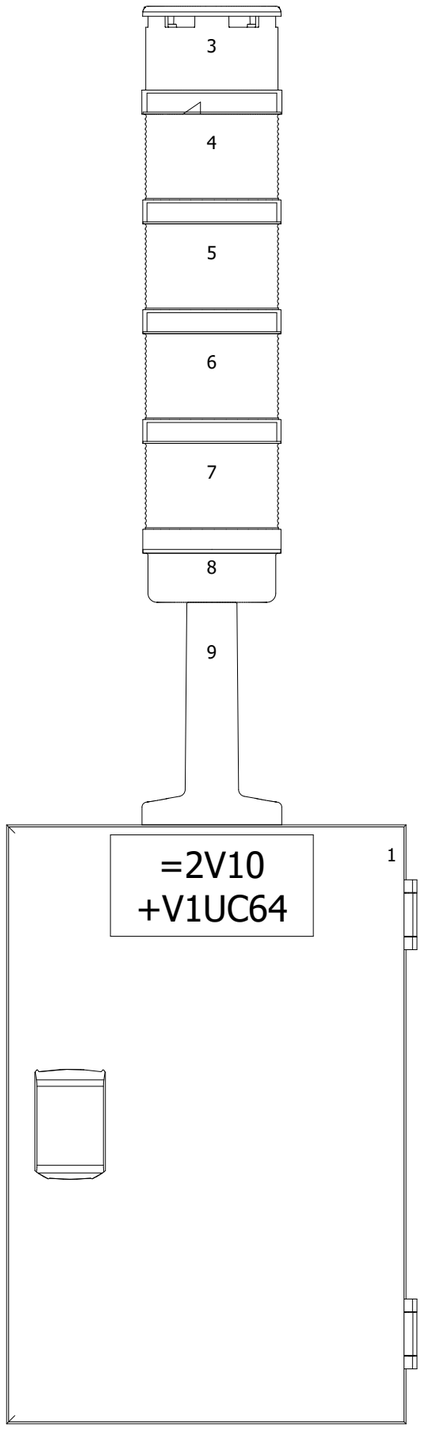

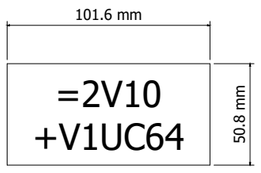

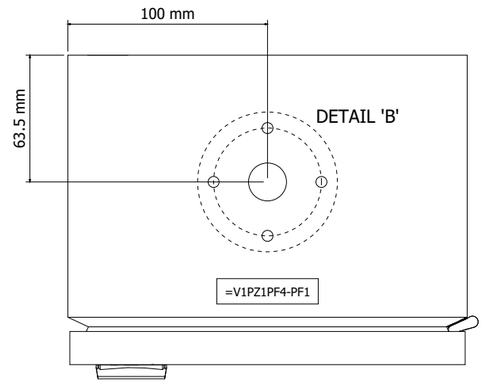

Top View
of Enclosure

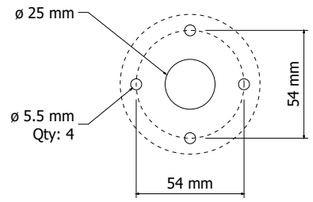

DETAIL 'B'
ABB Stack light
K70 series

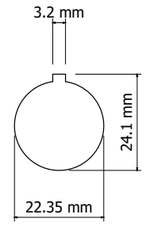

DETAIL 'A'
1-1/8" Receptacle

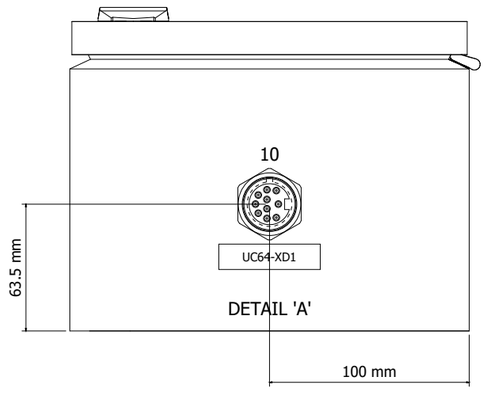

Buttom View
of Enclosure

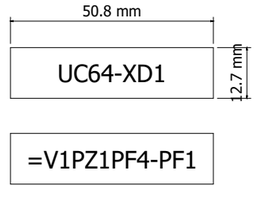

=V1PZ1PF3+.UC63/2

2

			Date	1/11/2023	Volvo Trucks North America	Valiant TMS	Layout UC64 SL External View	Drawing name: =2V10&EFS-EL		= V1PZ1PF4	
			Ed.	MKLEPADLO						+ V1UC64	
			Appr		P6700 Bodyside RH - Robot Cell 2V10			Document type: ELU	Project nr: 22-16150		Page 1
Modification	Date	Name	Original		Replacement of	Replaced by	Scale 1:3				1579

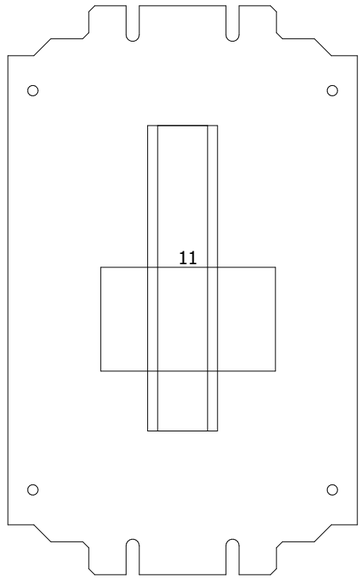

1

=V1SF0PG1+.UC32/1

			Date	1/11/2023	Volvo Trucks North America	Valiant TMS	Layout UC64 SL Internal View	Drawing name: =2V10&EFS-EL		= V1PZ1PF4	
			Ed.	MKLEPADLO						+ V1UC64	
			Appr		P6700 Bodyside RH - Robot Cell 2V10			Document type: ELU	Project nr: 22-16150		Page 2
Modification	Date	Name	Original		Replacement of / Replaced by	Scale 1:3					1579

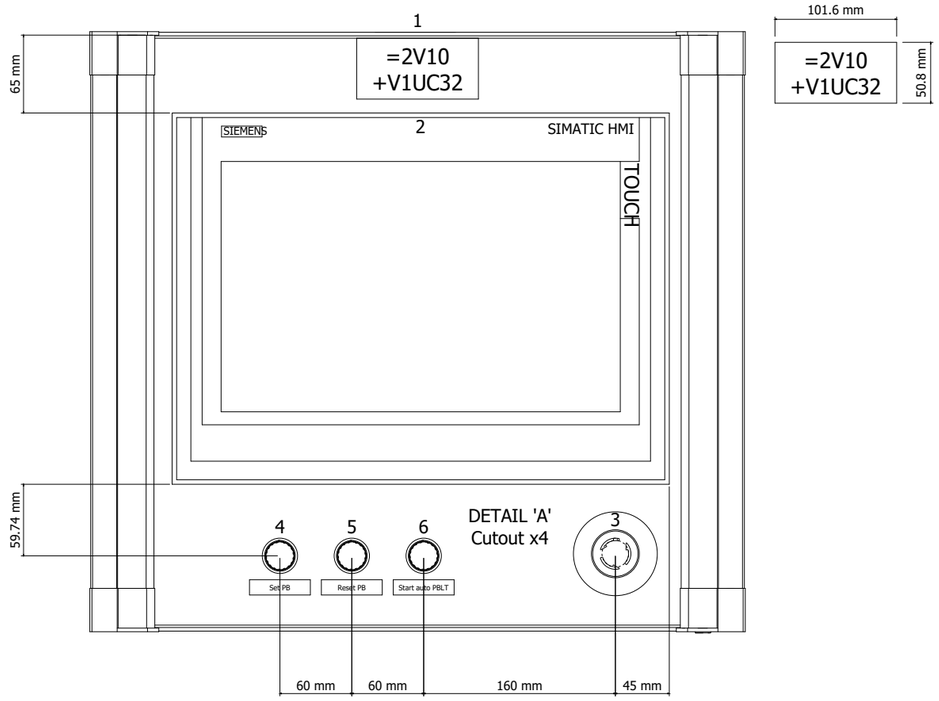

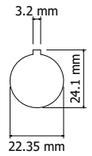

DETAIL 'A'
7/8" Receptacle,
Pushbutton and E-stop

DETAIL 'B'
M12 Profinet Receptacle

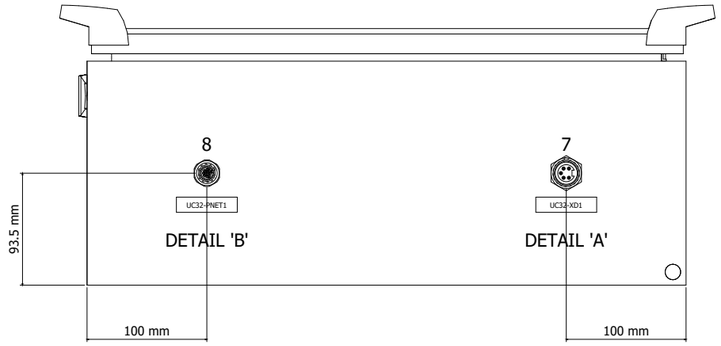

Buttom View
of Enclosure

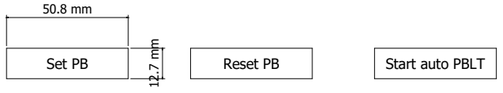

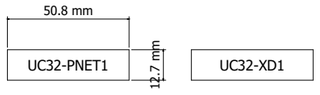

Enclosure panel shall be finished in RAL 7035 Light Grey paint.

=V1PZ1PF4+.UC64/2

2

			Date	1/11/2023	Volvo Trucks North America		Valiant TMS	Layout UC32 SOP External View	Drawing name: =2V10&EFS-EL	= V1SF0PG1	
			Ed.	MKLEPADLO						+ V1UC32	
			Appr		P6700 Bodyside RH - Robot Cell 2V10				Document type: ELU	Project nr: 22-16150	Page 1
Modification	Date	Name	Original		Replacement of	Replaced by	Scale 1:5				1579

0	1	2	3	4	5	6	7	8	9

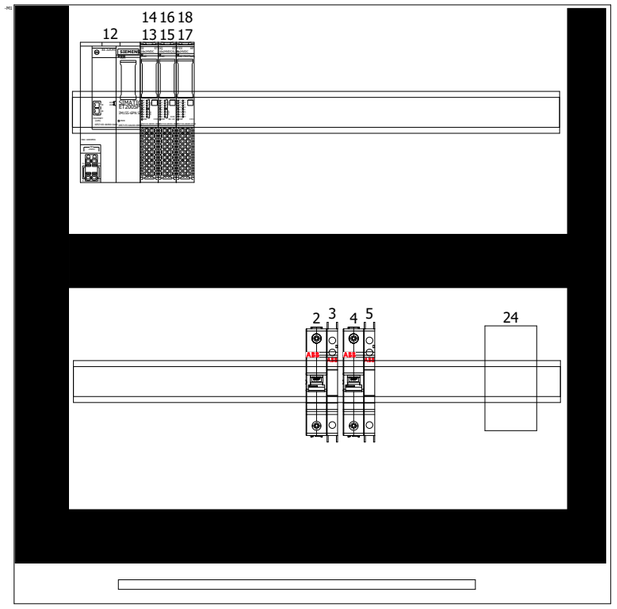

1

=V1SF0PG2+.UC51/1

			Date	1/11/2023	Volvo Trucks North America	Valiant TMS	Layout UC32 SOP Internal View	Drawing name: =2V10&EFS-EL		= V1SF0PG1	
			Ed.	MKLEPADLO						+ V1UC32	
			Appr		P6700 Bodyside RH - Robot Cell 2V10			Document type: ELU	Project nr: 22-16150		Page 2
Modification	Date	Name	Original		Replacement of	Replaced by	Scale 1:5				1579

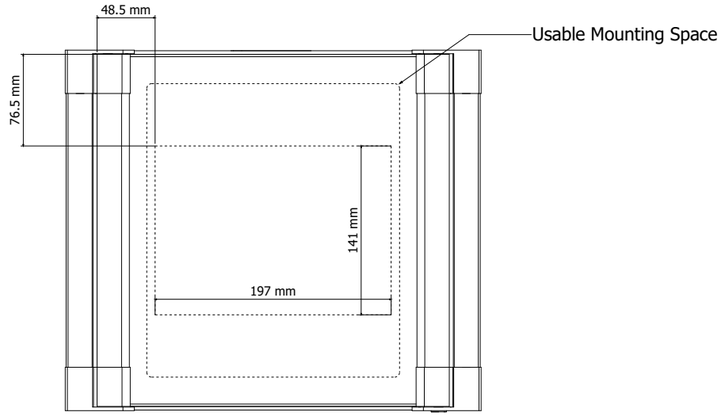

(Cutout measured from edge of removable mounting plate)

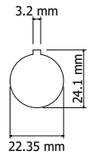

DETAIL 'A'
7/8" Receptacle

DETAIL 'B'
M12 Profinet Receptacle

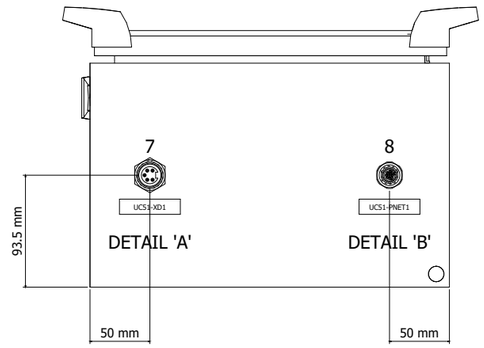

Buttom View
of Enclosure

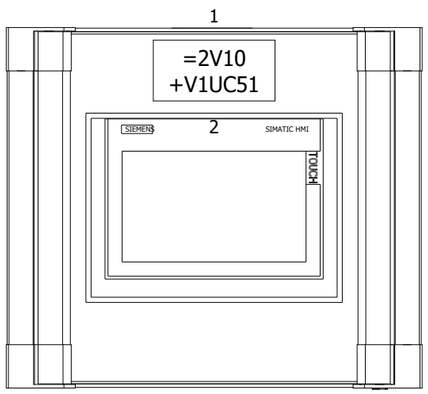

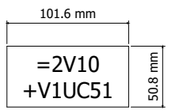

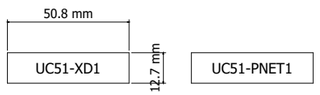

Enclosure panel shall be finished in RAL 7035 Light Grey paint.

=V1SF0PG1+.UC32/2

=V1SF0PG3+.UC52/1

			Date	1/11/2023	Volvo Trucks North America	Valiant TMS	Layout UC51 OD External View	Drawing name: =2V10&EFS-EL	= V1SF0PG2	
			Ed.	MKLEPADLO					+ V1UC51	
			Appr		P6700 Bodyside RH - Robot Cell 2V10			Document type: ELU	Project nr: 22-16150	Page 1
Modification	Date	Name	Original		Replacement of / Replaced by	Scale 1:5				1579

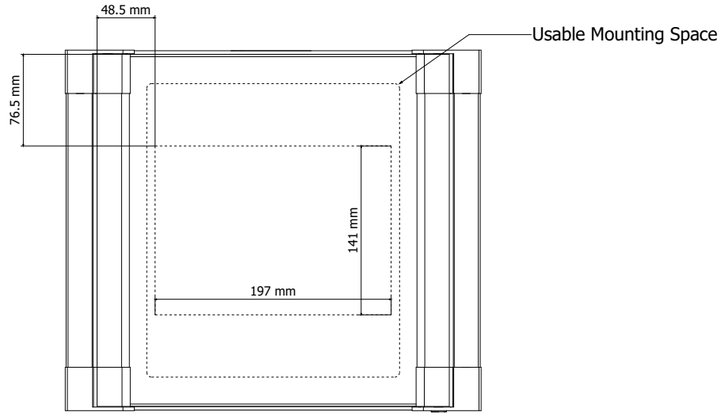

(Cutout measured from edge of removable mounting plate)

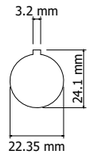

DETAIL 'A'
7/8" Receptacle

DETAIL 'B'
M12 Profinet Receptacle

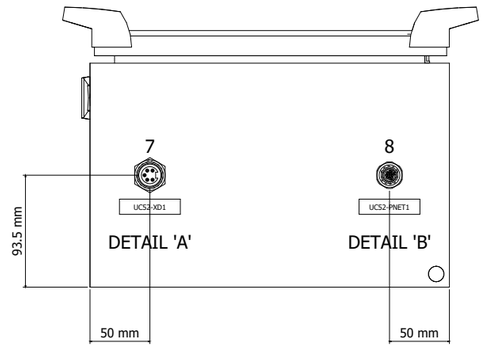

Buttom View
of Enclosure

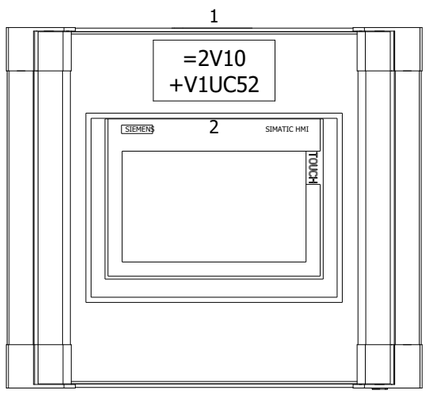

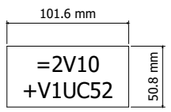

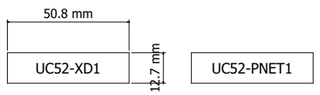

Enclosure panel shall be finished in RAL 7035 Light Grey paint.

=V1SF0PG2+.UC51/1

=V1SF0PG4+.UC53/1

			Date	1/11/2023	Volvo Trucks North America		Valiant TMS	Layout UC52 OD External View	Drawing name: =2V10&EFS-EL		= V1SF0PG3
			Ed.	MKLEPADLO							+ V1UC52
			Appr		P6700 Bodyside RH - Robot Cell 2V10				Document type: ELU	Project nr: 22-16150	Page 1
Modification	Date	Name	Original		Replacement of	Replaced by	Scale 1:5				1579

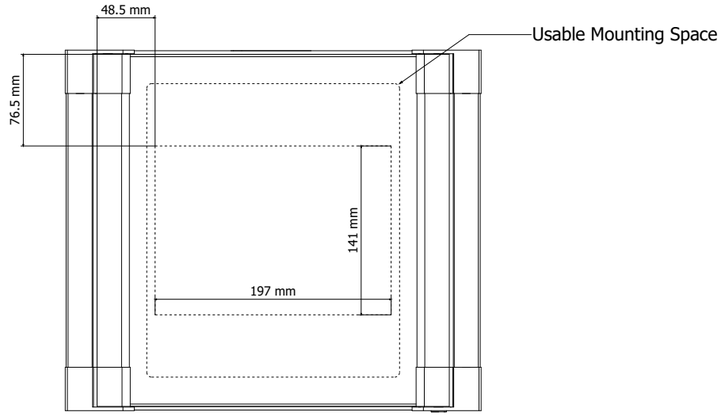

(Cutout measured from edge of removable mounting plate)

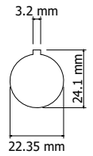

DETAIL 'A'
7/8" Receptacle

DETAIL 'B'
M12 Profinet Receptacle

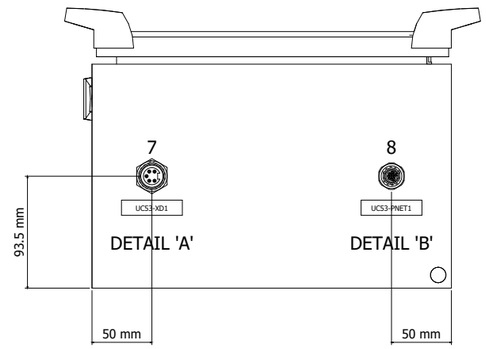

Buttom View
of Enclosure

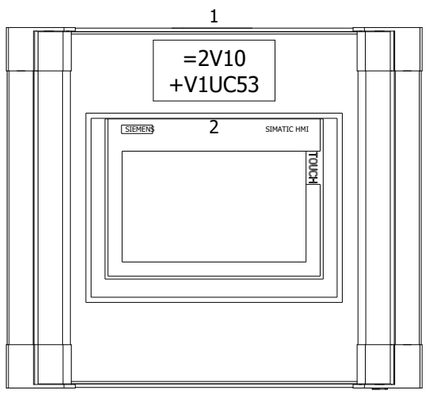

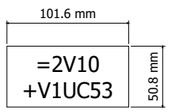

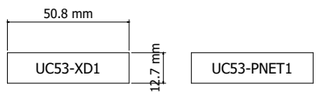

Enclosure panel shall be finished in RAL 7035 Light Grey paint.

=V1SF0PG3+.UC52/1

=V1SF0PG5+.UC54/1

			Date	1/11/2023	Volvo Trucks North America	Valiant TMS	Layout UC53 OD External View	Drawing name: =2V10&EFS-EL	= V1SF0PG4	
			Ed.	MKLEPADLO					+ V1UC53	
			Appr		P6700 Bodyside RH - Robot Cell 2V10			Document type: ELU	Project nr: 22-16150	Page 1
Modification	Date	Name	Original		Replacement of / Replaced by	Scale 1:5				1579

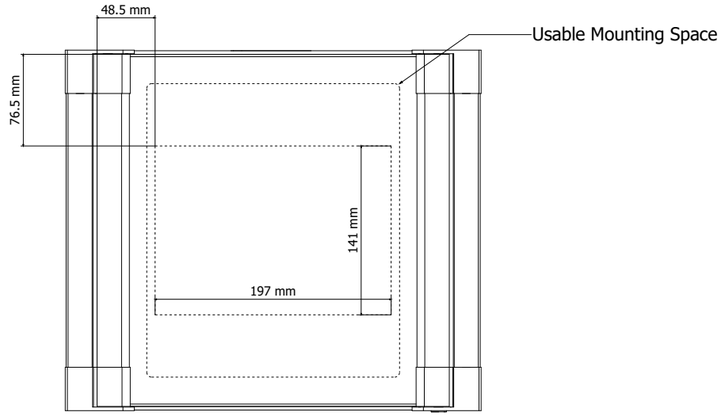

(Cutout measured from edge of removable mounting plate)

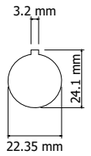

DETAIL 'A'
7/8" Receptacle

DETAIL 'B'
M12 Profinet Receptacle

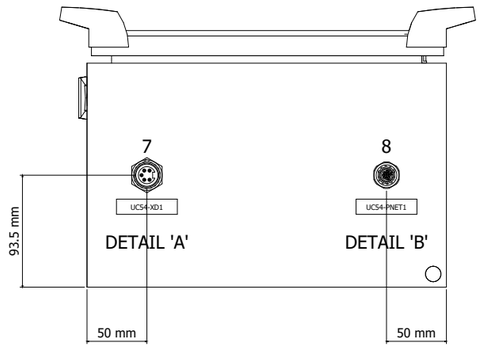

Buttom View
of Enclosure

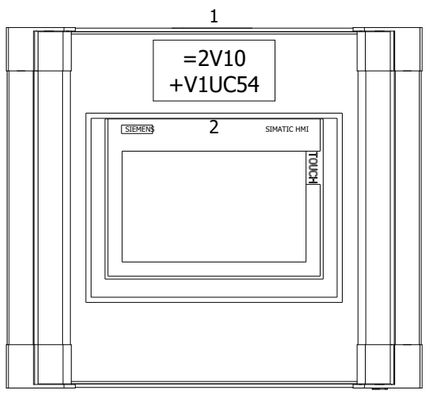

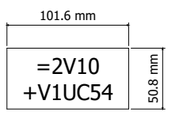

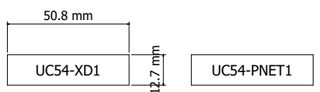

Enclosure panel shall be finished in RAL 7035 Light Grey paint.

=V1SF0PG4+.UC53/1

=V1SF0SF1+.UC71/1

			Date	1/11/2023	Volvo Trucks North America		Valiant TMS	Layout UC54 OD External View	Drawing name: =2V10&EFS-EL		= V1SF0PG5
			Ed.	MKLEPADLO							+ V1UC54
			Appr		P6700 Bodyside RH - Robot Cell 2V10				Document type: ELU	Project nr: 22-16150	Page 1
Modification	Date	Name	Original		Replacement of	Replaced by	Scale 1:5				1579

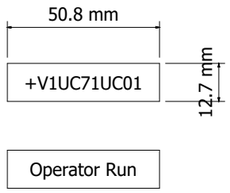

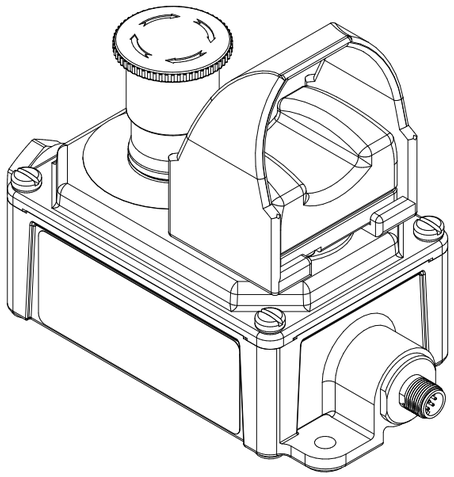

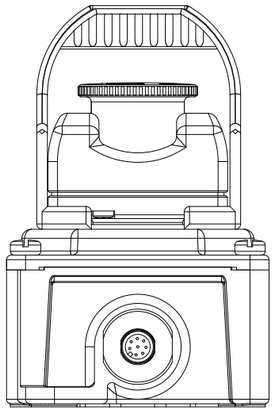

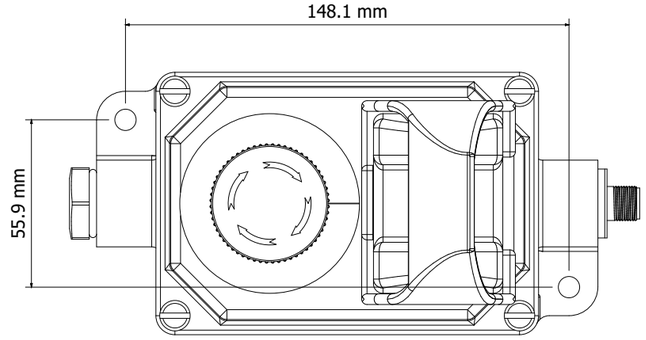

=V1SF0PG5+.UC54/1

=V1SF0SF2+.UC72/1

			Date	1/11/2023	Volvo Trucks North America	Valiant TMS	LAYOUT UC71 RB EXTERNAL VIEW	Drawing name: =2V10&EFS-EL		= V1SF0SF1	
			Ed.	MKLEPADLO						+ V1UC71	
			Appr		P6700 Bodyside RH - Robot Cell 2V10			Document type: ELU	Project nr: 22-16150		Page 1
Modification	Date	Name	Original		Replacement of	Replaced by	Scale 1:2				1579

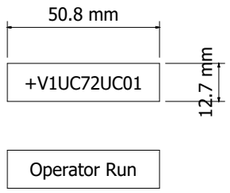

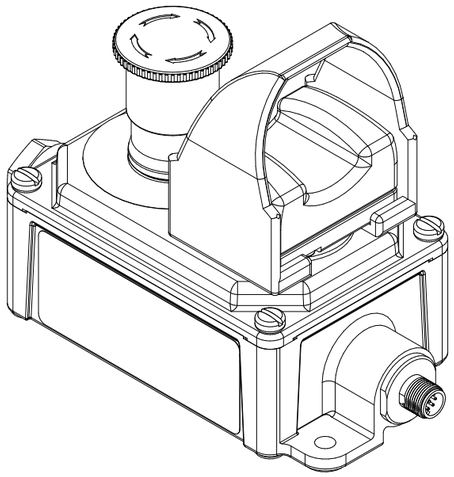

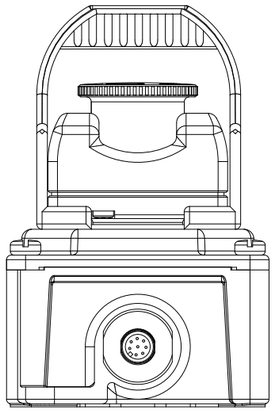

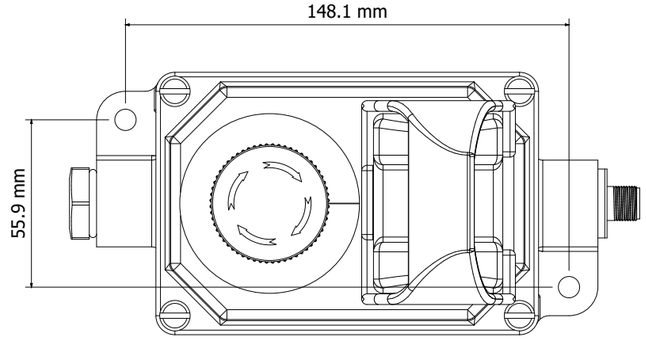

=V1SF0SF1+.UC71/1

=V1SF0SF3+.UC73/1

			Date	1/11/2023	Volvo Trucks North America	Valiant TMS	LAYOUT UC72 RB EXTERNAL VIEW	Drawing name: =2V10&EFS-EL		= V1SF0SF2	
			Ed.	MKLEPADLO						+ V1UC72	
			Appr		P6700 Bodyside RH - Robot Cell 2V10			Document type: ELU	Project nr: 22-16150		Page 1
Modification	Date	Name	Original		Replacement of	Replaced by	Scale 1:2				1579

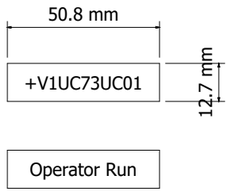

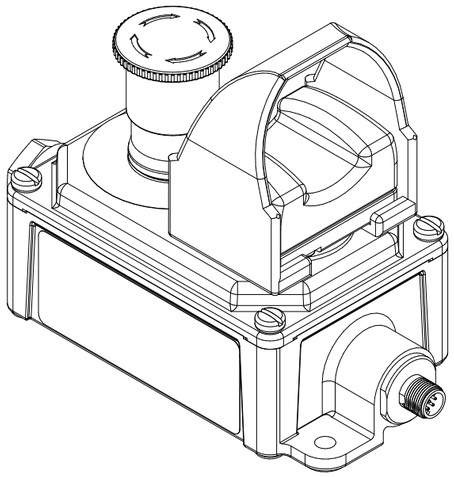

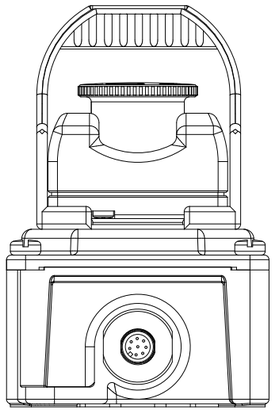

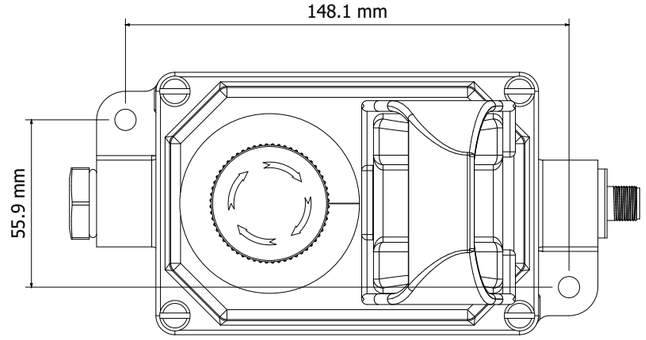

=V1SF0SF2+.UC72/1

=V1SF0SF4+.UC74/1

			Date	1/11/2023	Volvo Trucks North America	Valiant TMS	LAYOUT UC73 RB EXTERNAL VIEW	Drawing name: =2V10&EFS-EL		= V1SF0SF3	
			Ed.	MKLEPADLO						+ V1UC73	
			Appr		P6700 Bodyside RH - Robot Cell 2V10			Document type: ELU	Project nr: 22-16150		Page 1
Modification	Date	Name	Original		Replacement of	Replaced by	Scale 1:2				1579

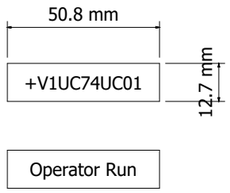

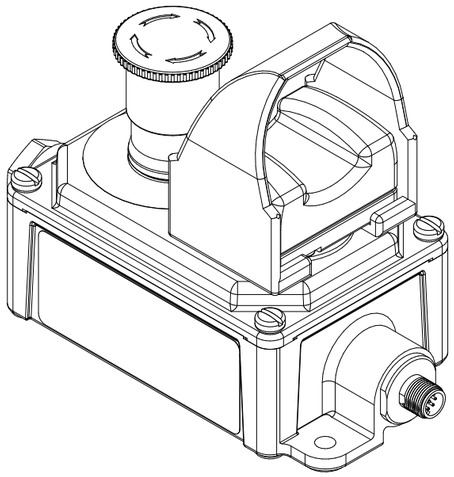

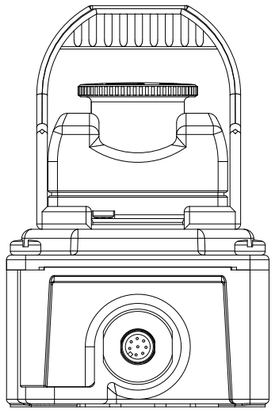

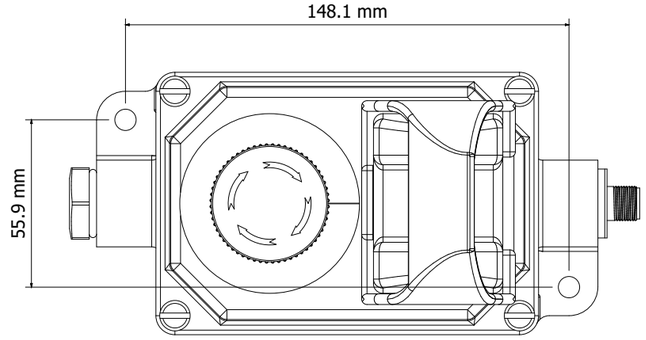

=V1SF0SF3+.UC73/1

=V1UC11+.UC11/1

			Date	1/11/2023	Volvo Trucks North America	Valiant TMS	LAYOUT UC74 RB EXTERNAL VIEW	Drawing name: =2V10&EFS-EL		= V1SF0SF4	
			Ed.	MKLEPADLO						+ V1UC74	
			Appr		P6700 Bodyside RH - Robot Cell 2V10			Document type: ELU	Project nr: 22-16150		Page 1
Modification	Date	Name	Original		Replacement of	Replaced by	Scale 1:2				1579

0	1	2	3	4	5	6	7	8	9

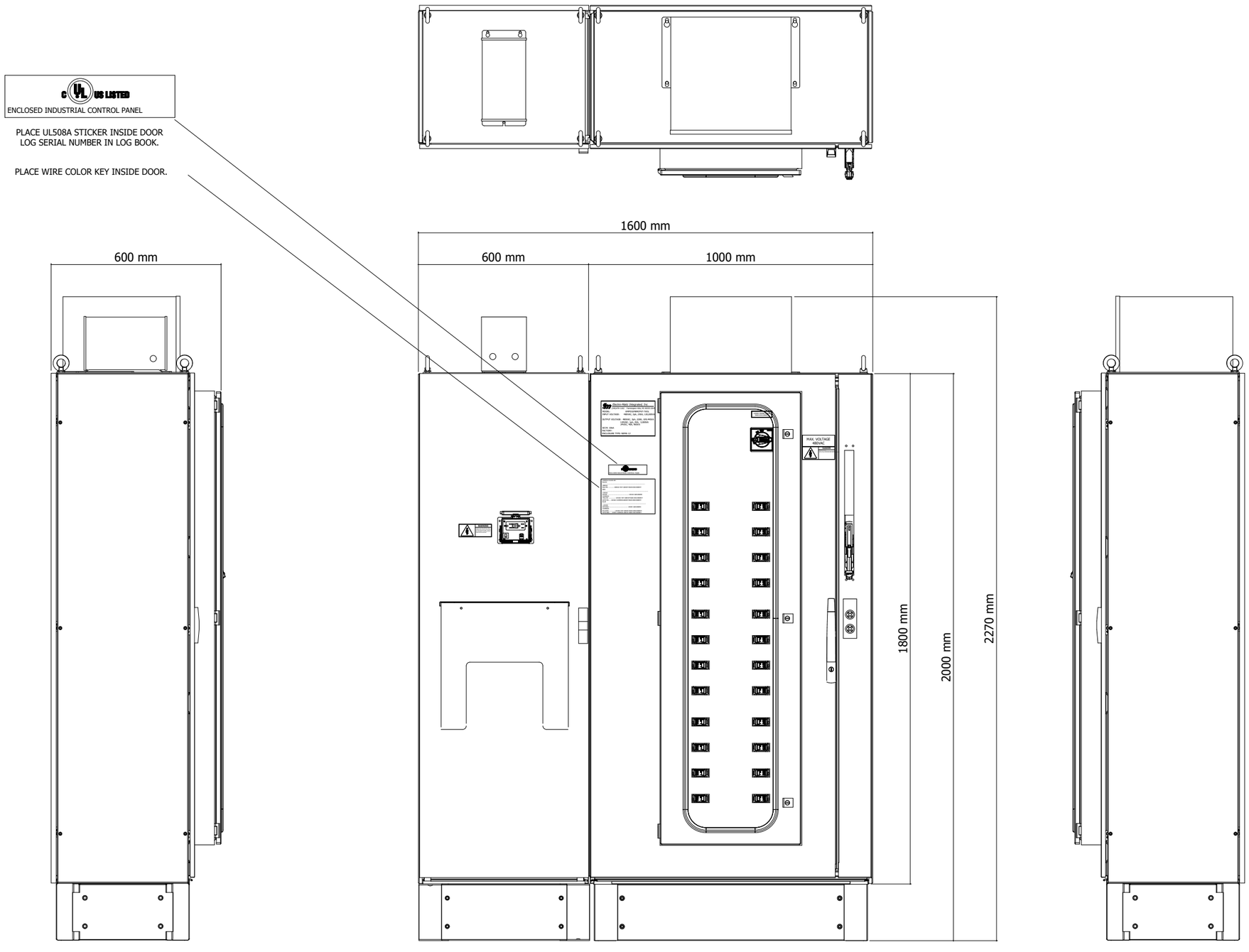

=V1SF0SF4+.UC74/1

2

			Date	1/11/2023	Volvo Trucks North America	Valiant TMS	Layout UC11 PDP External View	Drawing name: =2V10&EFS-EL		= V1UC11	
			Ed.	MKLEPADLO	P6700 Bodyside RH - Robot Cell 2V10					+ V1UC11	
			Appr					Document type: ELU	Project nr: 22-16150		Page 1
Modification	Date	Name	Original		Replacement of	Replaced by	Scale 1:15				1579

0	1	2	3	4	5	6	7	8	9

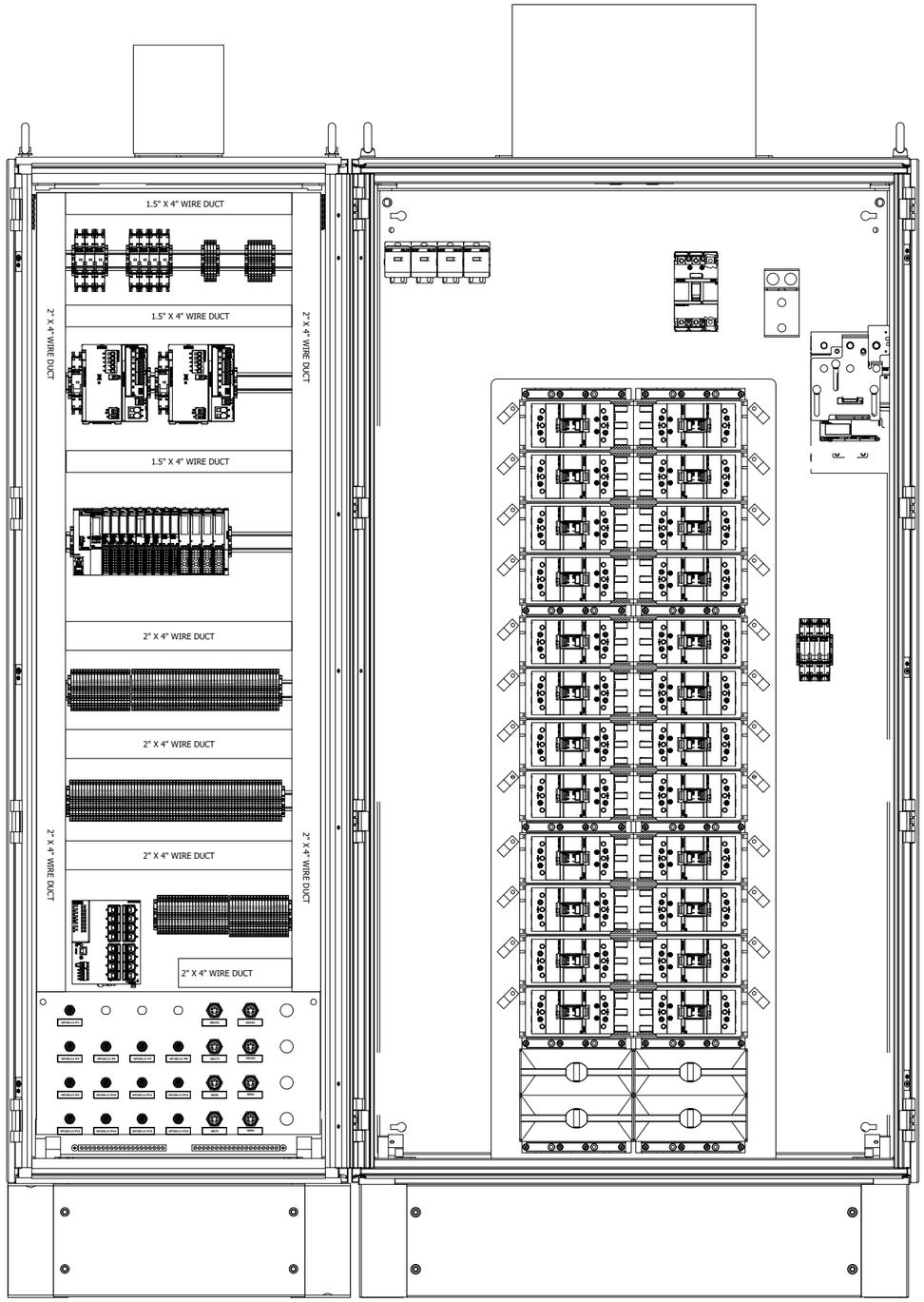

1

=V1UC12+.UC12/1

			Date	1/11/2023	Volvo Trucks North America	Valiant TMS	Layout UC11 PDP Internal View	Drawing name: =2V10&EFS-EL		= V1UC11	
			Ed.	MKLEPADLO						+ V1UC11	
1	2020-11-06	MINO	Appr		P6700 Bodyside RH - Robot Cell 2V10			Document type: ELU	Project nr: 22-16150		Page 2
Modification	Date	Name	Original		Replacement of	Replaced by	Scale 1:10				1579

0	1	2	3	4	5	6	7	8	9

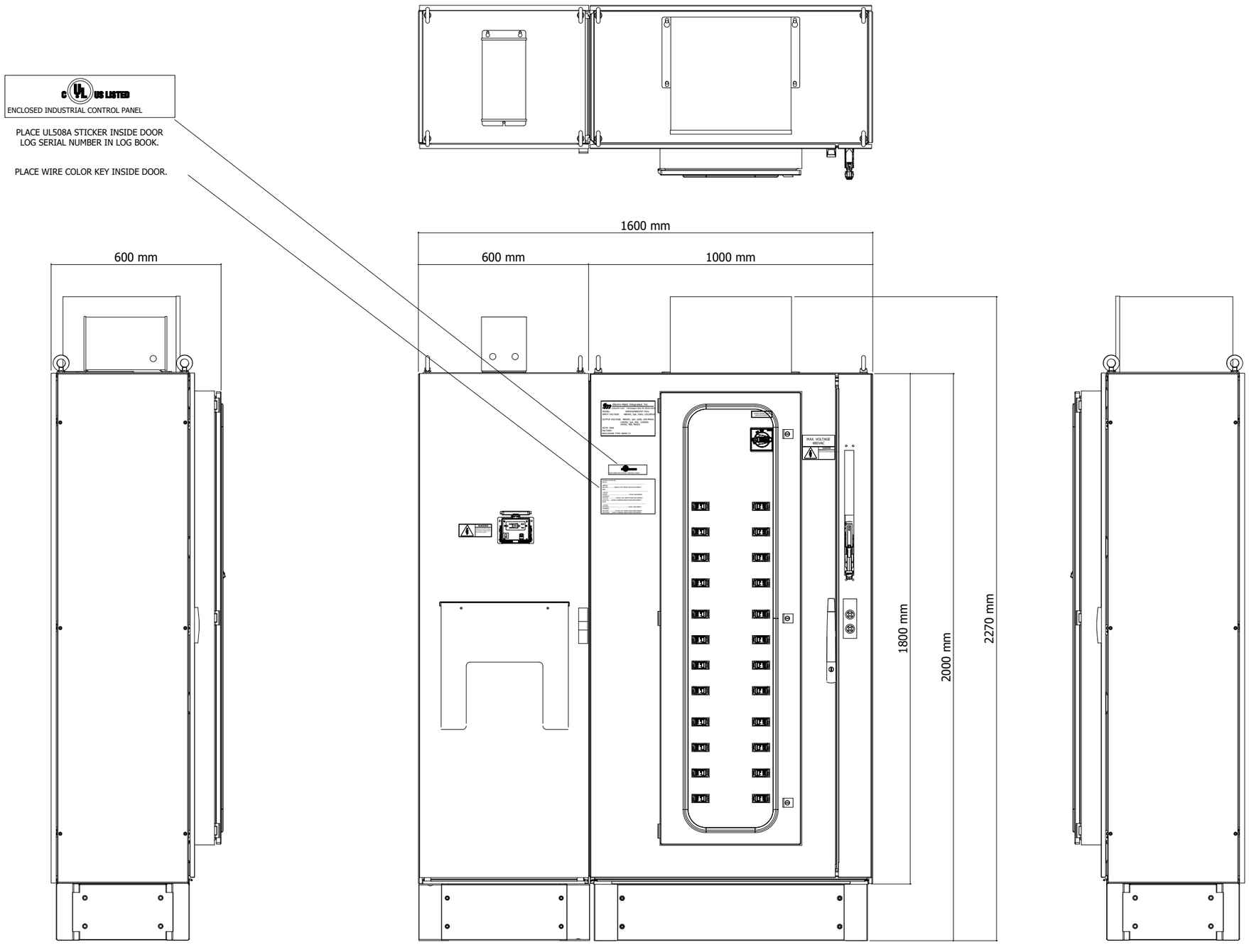

=V1UC11+.UC11/2

2

			Date	1/11/2023	Volvo Trucks North America	Valiant TMS	Layout UC12 PDP External View	Drawing name: =2V10&EFS-EL		= V1UC12	
			Ed.	MKLEPADLO						+ V1UC12	
			Appr		P6700 Bodyside RH - Robot Cell 2V10			Document type: ELU	Project nr: 22-16150		Page 1
Modification	Date	Name	Original		Replacement of	Replaced by	Scale 1:15				1579

0	1	2	3	4	5	6	7	8	9

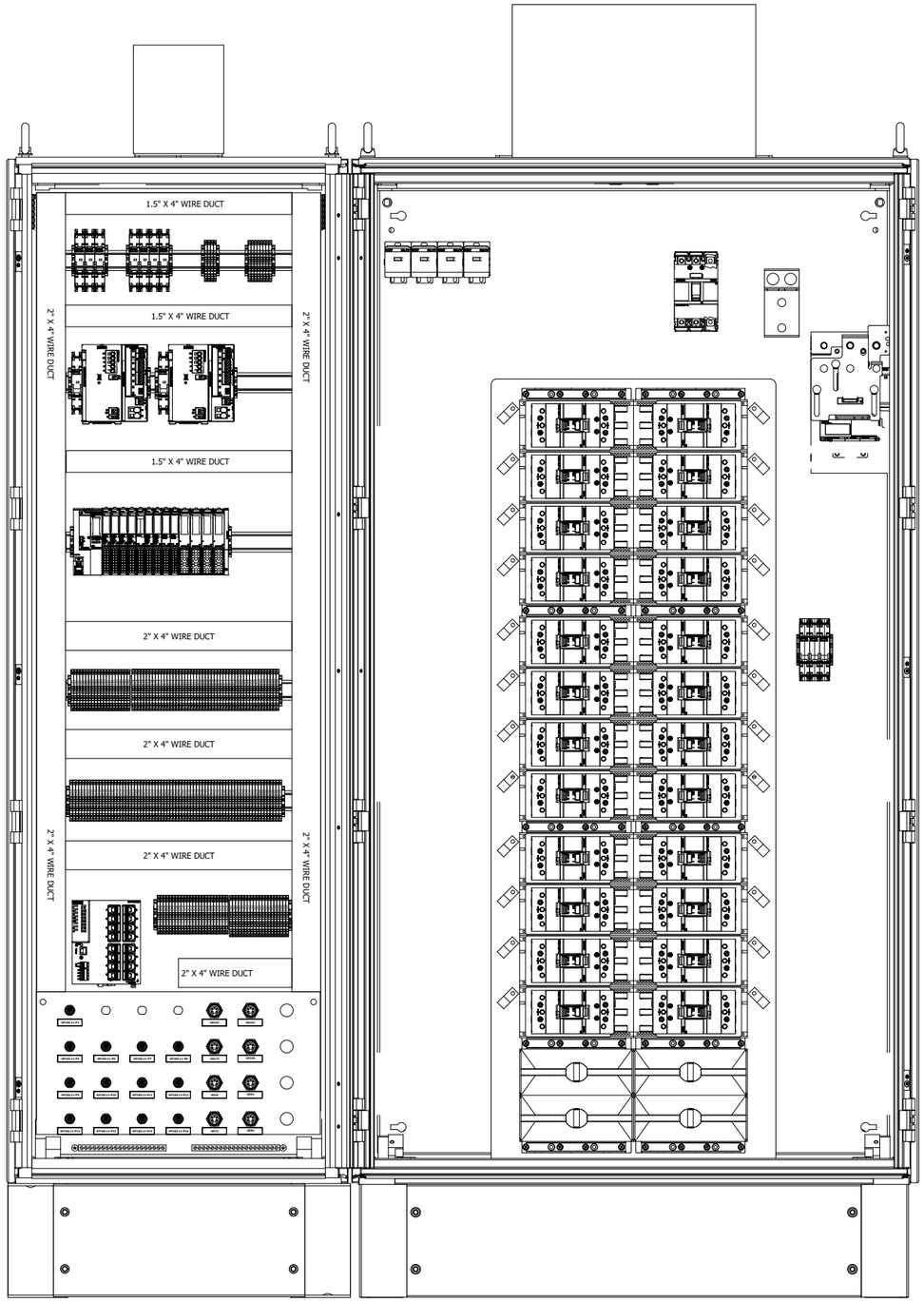

1

=V1UC14+.UC14/1

			Date	1/11/2023	Volvo Trucks North America	Valiant TMS	Layout UC12 PDP Internal View	Drawing name: =2V10&EFS-EL		= V1UC12	
			Ed.	MKLEPADLO						+ V1UC12	
1	2020-11-06	MINO	Appr		P6700 Bodyside RH - Robot Cell 2V10			Document type: ELU	Project nr: 22-16150		Page 2
Modification	Date	Name	Original		Replacement of	Replaced by	Scale 1:10				1579

0	1	2	3	4	5	6	7	8	9

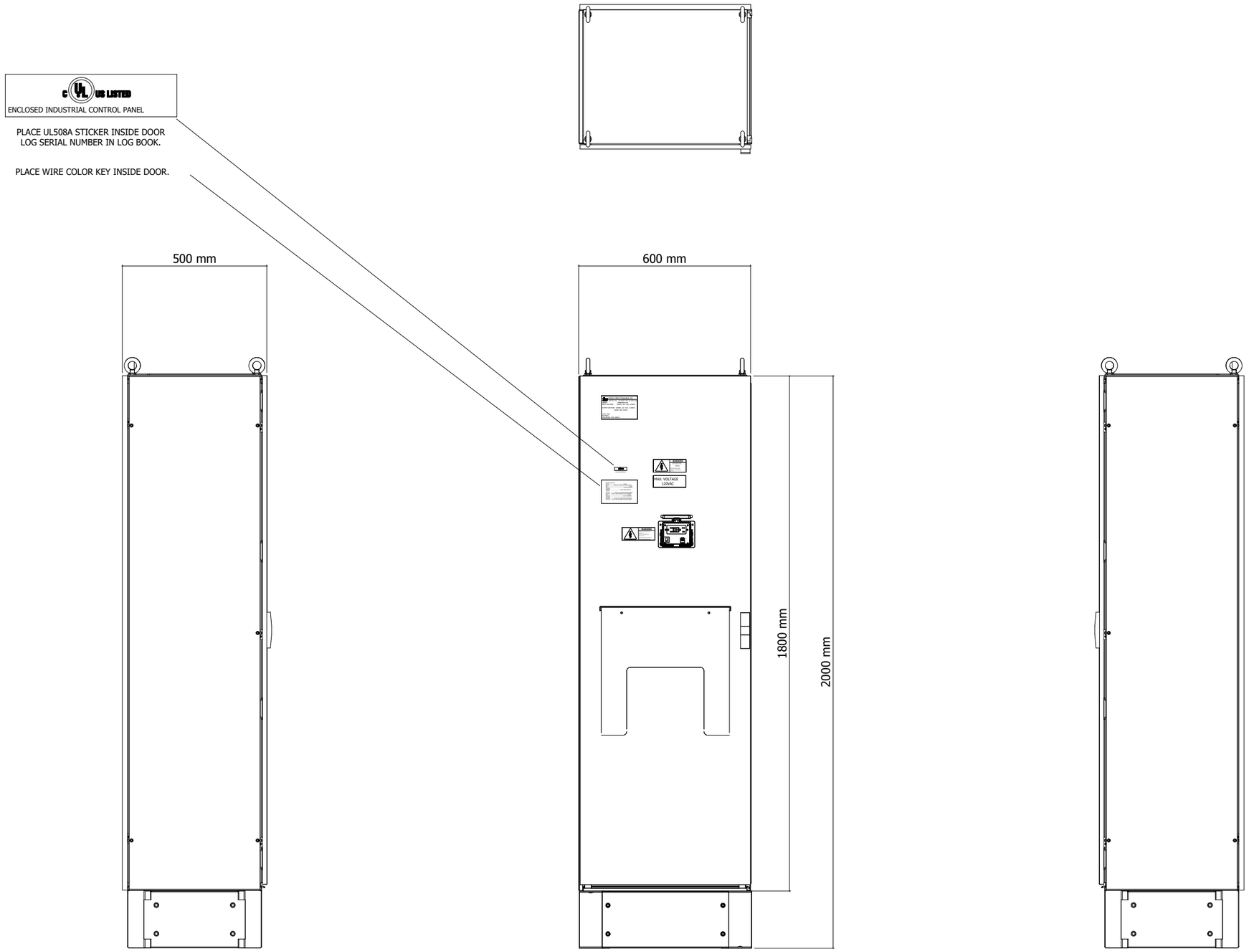

=V1UC12+.UC12/2

2

			Date	1/11/2023	Volvo Trucks North America	Valiant TMS	Layout UC14 RIO External View	Drawing name: =2V10&EFS-EL	= V1UC14	
			Ed.	MKLEPADLO					+ V1UC14	
			Appr		P6700 Bodyside RH - Robot Cell 2V10			Document type: ELU	Project nr: 22-16150	Page 1
Modification	Date	Name	Original		Replacement of / Replaced by	Scale 1:15				1579

0	1	2	3	4	5	6	7	8	9

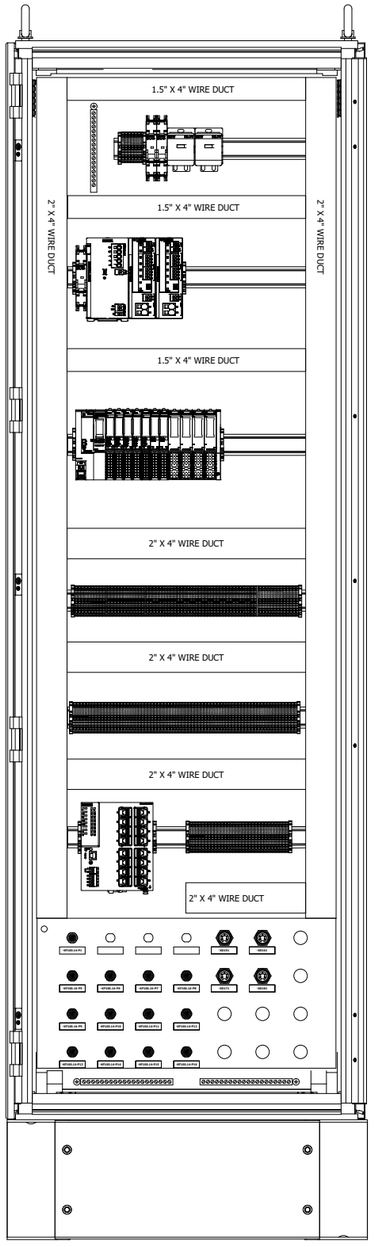

1

=V1UC15+.UC15/1

			Date	1/11/2023	Volvo Trucks North America	Valiant TMS	Layout UC14 RIO Internal Controls View	Drawing name: =2V10&EFS-EL		= V1UC14	
			Ed.	MKLEPADLO						+ V1UC14	
			Appr		P6700 Bodyside RH - Robot Cell 2V10			Document type: ELU	Project nr: 22-16150		Page 2
Modification	Date	Name	Original		Replacement of	Replaced by	Scale 1:10				1579

0	1	2	3	4	5	6	7	8	9

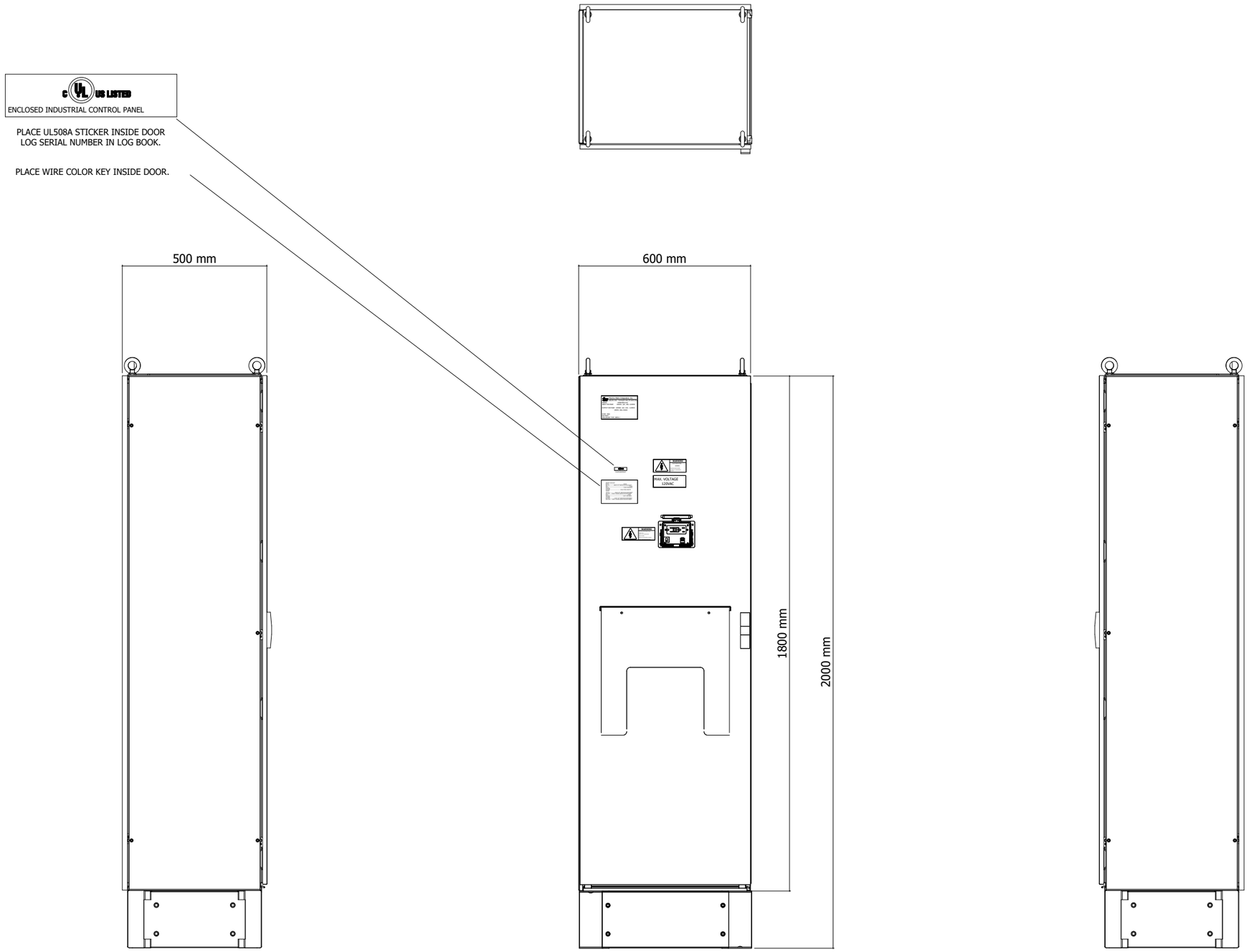

=V1UC14+.UC14/2

2

			Date	1/11/2023	Volvo Trucks North America	Valiant TMS	Layout UC15 RIO External View	Drawing name: =2V10&EFS-EL		= V1UC15	
			Ed.	MKLEPADLO						+ V1UC15	
			Appr		P6700 Bodyside RH - Robot Cell 2V10			Document type: ELU	Project nr: 22-16150		Page 1
Modification	Date	Name	Original		Replacement of / Replaced by	Scale 1:15					1579

0	1	2	3	4	5	6	7	8	9

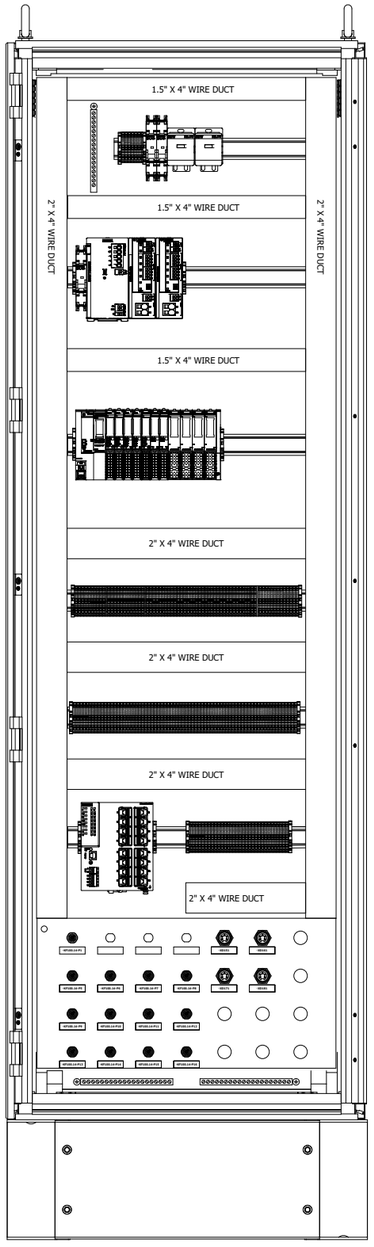

1

&EMC+/1

			Date	1/11/2023	Volvo Trucks North America	Valiant TMS	Layout UC15 RIO Internal Controls View	Drawing name: =2V10&EFS-EL	= V1UC15	
			Ed.	MKLEPADLO					+ V1UC15	
			Appr		P6700 Bodyside RH - Robot Cell 2V10			Document type: ELU	Project nr: 22-16150	Page 2
Modification	Date	Name	Original		Replacement of	Replaced by	Scale 1:10			1579

Cable overview

F10_001_Cable

Cable name	Source (from)	Target (to)	cable type	all conductors	Conductors used	Cross-section [mm]	Length [m]	remark
=V1SF0SF1-W1	=V1KF1+V1UC12-KF12.14	=V1SF0SF1+V1UC71-SF1	CBL	8	8	24	25	
	=V1WC4+V1UC12-XD14							
	=V1KF1+V1UC12-KF12.32							
	=V1WC4+V1UC12-XD10							
=V1SF0SF3-W1	=V1KF1+V1UC14-KF14.12	=V1SF0SF3+V1UC73-SF1	CBL	8	8	24	25	
	=V1WC4+V1UC14-XD16							
	=V1KF1+V1UC14-KF14.32							
	=V1WC4+V1UC14-XD10							
=KH0-W1			NEBS-L1G4-K-5-LE4	4	0	26	5	
=KF0KF1-KF1.31-P2	=KF0KF1+UC31-KF1.31-X1	=KF0KF1+UC31-KF31	PROFINET Cable	4	0	22		
=KF0KF1-KF100-P1	=KF0KF1+UC31-KF100.31	=KF0KF1+UC31-KF99.31	PROFINET Cable	4	1	22		
=KF0KF1-KF100.31-P2	=KF0KF1+UC31-KF1.31-X2	=KF0KF1+UC31-KF100.31	PROFINET Cable	4	0	22		
=KF0KF1-KF100.31-P3	=KF0KF1+UC31-KF1.31-X1	=KF0KF1+UC31-KF100.31	PROFINET Cable	4	0	22		
=KF0KF1-KF100.31-P4	=KF0KF1+UC31-KF100.31	=KF0KF1+UC31-PC1	PROFINET Cable	4	0	22		
=KF0KF1-KF100.31-P5	=KF0KF1+UC31-KF100.31	=KF0KF1+UC31-PC1	PROFINET Cable	4	0	22		
=KF0KF1-KF100.31-P6	=KF0KF1+UC31-KF100.31-P6	=KF0KF1+UC31-KF100.31	PROFINET Cable	4	1	22		
=KF0KF1-KF100.31-P7	=KF0KF1+UC31-KF100.31-P7	=KF0KF1+UC31-KF100.31	PROFINET Cable	4	1	22		
=KF0KF1-KF100.31-P8	=KF0KF1+UC31-KF100.31-P8	=KF0KF1+UC31-KF100.31	PROFINET Cable	4	1	22		
=KF0KF1-KF100.31-P9	=KF0KF1+UC31-KF100.31-P9	=KF0KF1+UC31-XG2	PROFINET Cable	4	1	22		
		=KF0KF1+UC31-KF100.31						
=KF0KF1-KF100.31-P10	=KF0KF1+UC31-KF100.31-P10	=KF0KF1+UC31-KF100.31	PROFINET Cable	4	1	22		
=KF0KF1-KF100.31-P11	=KF0KF1+UC31-KF100.31-P11	=KF0KF1+UC31-KF100.31	PROFINET Cable	4	1	22		
=KF0KF1-KF100.31-P12	=KF0KF1+UC31-KF100.31-P12	=KF0KF1+UC31-KF100.31	PROFINET Cable	4	1	22		
=KF0KF1-KF100.31-P13	=KF0KF1+UC31-KF100.31-P13	=KF0KF1+UC31-KF100.31	PROFINET Cable	4	1	22		
=KF0KF1-KF100.31-P14	=KF0KF1+UC31-KF100.31-P14	=KF0KF1+UC31-KF100.31	PROFINET Cable	4	1	22		
=KF0KF1-KF100.31-P15	=KF0KF1+UC31-KF100.31-P15	=KF0KF1+UC31-KF100.31	PROFINET Cable	4	1	22		
=KF0KF1-KF100.31-P16	=KF0KF1+UC31-KF100.31-P16	=KF0KF1+UC31-KF100.31	PROFINET Cable	4	1	22		
=KF0KF1-WF1	=KF0KF1+UC31-KF99.31	=KF0KF1+UC31-xx	PROFINET Cable	4	0	22		
=V1AR11KF1-KF100.15-P5	=V1AR11KF1+V1AR11UC01-XPN-X2	=V1KF1+V1UC15-KF100.15-P5	PROFINET Cable	4	1	22		
=V1AR11UQ41KF1-WF1	=V1AR11UQ41KF1+V1AR11UQ41-KF1-TP1	=V1AR11UQ41KF1+V1AR11UQ41-R3.CP/CS	PROFINET Cable	4	1	22		
	=V1AR11UQ41KF1+V1AR11UQ41-KF1-TP2	=V1AR11UQ41KF1+V1AR11UQ41-KF1.14						
=V1AR21KF1-KF100.14-P5	=V1AR21KF1+V1AR21UC01-XPN-X2	=V1KF1+V1UC14-KF100.14-P5	PROFINET Cable	4	1	22		
=V1AR22KF1-KF100.15-P6	=V1AR22KF1+V1AR22UC01-XPN-X2	=V1KF1+V1UC15-KF100.15-P6	PROFINET Cable	4	1	22		
=V1AR23KF1-KF100.15-P7	=V1AR23KF1+V1AR23UC01-XPN-X2	=V1KF1+V1UC15-KF100.15-P7	PROFINET Cable	4	1	22		
=V1AR24KF1-KF100.14-P6	=V1AR24KF1+V1AR24UC01-XPN-X2	=V1KF1+V1UC14-KF100.14-P6	PROFINET Cable	4	1	22		
=V1AR25KF1-KF100.14-P7	=V1AR25KF1+V1AR25UC01-XPN-X2	=V1KF1+V1UC14-KF100.14-P7	PROFINET Cable	4	1	22		
=V1AR26KF1-KF100.15-P8	=V1AR26KF1+V1AR26UC01-XPN-X2	=V1KF1+V1UC15-KF100.15-P8	PROFINET Cable	4	1	22		
=V1AR27KF1-KF100.15-P13	=V1AR27KF1+V1AR27UC01-XPN-X2	=V1KF1+V1UC15-KF100.15-P13	PROFINET Cable	4	1	22		
=V1AR28KF1-KF100.11-P6	=V1AR28KF1+V1AR28UC01-XPN-X2	=V1KF1+V1UC11-KF100.11-P6	PROFINET Cable	4	1	22		
=V1AR29KF1-KF100.14-P8	=V1AR29KF1+V1AR29UC01-XPN-X2	=V1KF1+V1UC14-KF100.14-P8	PROFINET Cable	4	1	22		
=V1AR31KF1-KF100.11-P7	=V1AR31KF1+V1AR31UC01-XPN-X2	=V1KF1+V1UC11-KF100.11-P7	PROFINET Cable	4	1	22		
=V1AR31UQ41KF1-WF1	=V1AR31UQ41KF1+V1AR31UQ41-KF1-TP1	=V1AR31UQ41KF1+V1AR31UQ41-R3.CP/CS	PROFINET Cable	4	1	22		
=V1AR31XQ41KF1-KF1			PROFINET Cable	4	0	22		
=V1AR81KF1-KF100.15-P9	=V1AR81KF1+V1AR81UC01-XPN-X2	=V1KF1+V1UC15-KF100.15-P9	PROFINET Cable	4	1	22		

&ELU=V1UC15+V1UC15/2

2

Cable overview

F10_001_Cable

Cable name	Source (from)	Target (to)	cable type	all conductors	Conductors used	Cross-section [mm]	Length [m]	remark
=V1AR81UQ41KF1-WF1	=V1AR81UQ41KF1+V1AR81UQ41-KF1-TP1	=V1AR81UQ41KF1+V1AR81UQ41-R3.CP/CS	PROFINET Cable	4	1	22		
=V1AR191KF1-KF100.11-P5	=V1AR191KF1+V1AR191UC01-XPN-X2	=V1KF1+V1UC11-KF100.11-P5	PROFINET Cable	4	1	22		
=V1AR211KF1-KF100.11-P8	=V1AR211KF1+V1AR211UC01-XPN-X2	=V1KF1+V1UC11-KF100.11-P8	PROFINET Cable	4	1	22		
=V1AR212KF1-KF100.11-P9	=V1AR212KF1+V1AR212UC01-XPN-X2	=V1KF1+V1UC11-KF100.11-P9	PROFINET Cable	4	1	22		
=V1BX11WC3-KF100.11-P10	=V1KF1+V1UC11-KF100.11-P10	=V1BX11WC3+V1BX11UC01-KFS1	PROFINET Cable	4	1	22		
=V1FQ1-KF100.11-P16	=V1FQ1+V1FQ1BG1-BG1-X4	=V1FQ1+V1FQ1BG2-BG2-X3	PROFINET Cable	4	0	22		
	=V1FQ1+V1FQ1BG2-BG2-X4	=V1FQ1+V1FQ1BG3-BG3-X3						
=V1FQ1-KF100.15-P16	=V1FQ1+V1FQ1BG4-BG4-X4	=V1FQ1+V1FQ1BG5-BG5-X3	PROFINET Cable	4	0	22		
	=V1FQ1+V1FQ1BG5-BG5-X4	=V1FQ1+V1FQ1BG6-BG6-X3						
=V1GL1UQ51KF1-WF1			PROFINET Cable	4	0	22		
=V1GL1UQ51KF2-WF2	=V1GL1UQ51KF1+V1GL1UQ51-KF1-TP2	=V1GL1UQ51KF2+V1GL1UQ51-KF2-TP1	PROFINET Cable	4	1	22		
=V1GL1UQ51KF3-WF3	=V1GL1UQ51KF2+V1GL1UQ51-KF2-TP2	=V1GL1UQ51KF3+V1GL1UQ51-KF3-TP1	PROFINET Cable	4	1	22		
=V1GL1UQ52KF1-WF1			PROFINET Cable	4	0	22		
=V1GL1UQ52KF2-WF2	=V1GL1UQ52KF1+V1GL1UQ52-KF1-TP2	=V1GL1UQ52KF2+V1GL1UQ52-KF2-TP1	PROFINET Cable	4	1	22		
=V1GL1UQ52KF3-WF3	=V1GL1UQ52KF2+V1GL1UQ52-KF2-TP2	=V1GL1UQ52KF3+V1GL1UQ52-KF3-TP1	PROFINET Cable	4	1	22		
=V1GL1UQ53KF1-WF1			PROFINET Cable	4	0	22		
=V1GL1UQ53KF2-WF2	=V1GL1UQ53KF1+V1GL1UQ53-KF1-TP2	=V1GL1UQ53KF2+V1GL1UQ53-KF2-TP1	PROFINET Cable	4	1	22		
=V1GL1UQ53KF3-WF3	=V1GL1UQ53KF2+V1GL1UQ53-KF2-TP2	=V1GL1UQ53KF3+V1GL1UQ53-KF3-TP1	PROFINET Cable	4	1	22		
=V1GL1UQ54KF1-WF1			PROFINET Cable	4	0	22		
=V1GL1UQ54KF2-WF2	=V1GL1UQ54KF1+V1GL1UQ54-KF1-TP2	=V1GL1UQ54KF2+V1GL1UQ54-KF2-TP1	PROFINET Cable	4	1	22		
=V1GL1UQ54KF3-WF3	=V1GL1UQ54KF2+V1GL1UQ54-KF2-TP2	=V1GL1UQ54KF3+V1GL1UQ54-KF3-TP1	PROFINET Cable	4	1	22		
=V1GL1UQ56KF1-KF100.12-P10	=V1KF1+V1UC12-KF100.12-P10	=V1GL1UQ56KF1+V1GL1UQ56-KF1-TP1	PROFINET Cable	4	1	22		
=V1GL1UQ57KF1-KF100.12-P11	=V1KF1+V1UC12-KF100.12-P11	=V1GL1UQ57KF1+V1GL1UQ57-KF1-TP1	PROFINET Cable	4	1	22		
=V1GL2UQ51KF1-WF2	=V1GL2WC4+V1GL2-UCMS1	=V1GL2UQ51KF1+V1GL2UQ51-KF1-TP1	PROFINET Cable	4	1	22		
=V1GL2UQ51KF2-WF3	=V1GL2UQ51KF1+V1GL2UQ51-KF1-TP2	=V1GL2UQ51KF2+V1GL2UQ51-KF2-TP1	PROFINET Cable	4	1	22		
=V1GL2UQ51KF3-WF4	=V1GL2UQ51KF2+V1GL2UQ51-KF2-TP2	=V1GL2UQ51KF3+V1GL2UQ51-KF3-TP1	PROFINET Cable	4	1	22		
=V1GL2UQ51KF4-WF5	=V1GL2UQ51KF3+V1GL2UQ51-KF3-TP2	=V1GL2UQ51KF4+V1GL2UQ51-KF4-TP1	PROFINET Cable	4	1	22		
=V1GL2WC4-KF100.14-P9	=V1GL2WC4+V1GL2-W1.1	=V1KF1+V1UC14-KF100.14-P9	PROFINET Cable	4	0	22	37	
=V1GL2WC4-KF100.14-P10	=V1GL2WC4+V1GL2-W1.2	=V1KF1+V1UC14-KF100.14-P10	PROFINET Cable	4	0	22	37	
=V1GL2WC4-WF1	=V1GL2WC4+V1GL2-UCMS1	=V1GL2WC4+V1GL2-W1.1	PROFINET Cable	4	0	22	15	
=V1GL2WC4-WF5	=V1GL2WC4+V1GL2-W1.2	=V1GL2KF1+V1GL2-KF1-X1	PROFINET Cable	4	0	22	15	
=V1GL18UQ51KF1-KF100.11-P11	=V1KF1+V1UC11-KF100.11-P11	=V1GL18UQ51KF1+V1GL18UQ51-KF1-TP1	PROFINET Cable	4	1	22	40	
=V1KF1-KF100.11-P1	=V1KF1+V1UC11-KF100.11-P1	=V1KF1+V1UC11-KF100.11	PROFINET Cable	4	1	22		
=V1KF1-KF100.11-P4	=V1KF1+V1UC11-KF100.11-P4	=V1KF1+V1UC11-KF100.11	PROFINET Cable	4	1	22		
=V1KF1-KF100.11-P5	=V1KF1+V1UC11-KF100.11-P5	=V1KF1+V1UC11-KF100.11	PROFINET Cable	4	1	22		
=V1KF1-KF100.11-P6	=V1KF1+V1UC11-KF100.11-P6	=V1KF1+V1UC11-KF100.11	PROFINET Cable	4	1	22		
=V1KF1-KF100.11-P7	=V1KF1+V1UC11-KF100.11-P7	=V1KF1+V1UC11-KF100.11	PROFINET Cable	4	1	22		
=V1KF1-KF100.11-P8	=V1KF1+V1UC11-KF100.11-P8	=V1KF1+V1UC11-KF100.11	PROFINET Cable	4	1	22		
=V1KF1-KF100.11-P9	=V1KF1+V1UC11-KF100.11-P9	=V1KF1+V1UC11-KF100.11	PROFINET Cable	4	1	22		
=V1KF1-KF100.11-P10	=V1KF1+V1UC11-KF100.11-P10	=V1KF1+V1UC11-KF100.11	PROFINET Cable	4	1	22		
=V1KF1-KF100.11-P11	=V1KF1+V1UC11-KF100.11-P11	=V1KF1+V1UC11-KF100.11	PROFINET Cable	4	1	22		
=V1KF1-KF100.11-P12	=V1KF1+V1UC11-KF100.11-P12	=V1KF1+V1UC11-KF100.11	PROFINET Cable	4	1	22		
=V1KF1-KF100.11-P13	=V1KF1+V1UC11-KF100.11-P13	=V1KF1+V1UC11-KF100.11	PROFINET Cable	4	1	22		
=V1KF1-KF100.11-P14	=V1KF1+V1UC11-KF100.11-P14	=V1KF1+V1UC11-KF100.11	PROFINET Cable	4	1	22		
=V1KF1-KF100.11-P15	=V1KF1+V1UC11-KF100.11-P15	=V1KF1+V1UC11-KF100.11	PROFINET Cable	4	1	22		
=V1KF1-KF100.11-P16	=V1KF1+V1UC11-KF100.11-P16	=V1FQ1+V1FQ1BG1-BG1-X3	PROFINET Cable	4	1	22		

Cable overview

F10_001_Cable

Cable name	Source (from)	Target (to)	cable type	all conductors	Conductors used	Cross-section [mm]	Length [m]	remark
		=V1KF1+V1UC11-KF100.11						
=V1KF1-KF100.11-P3	=V1KF1+V1UC11-KF100.11	=V1KF1+V1UC11-KF11	PROFINET Cable	4	0	22		
=V1KF1-KF100.31-P6	=KF0KF1+UC31-KF100.31-P6	=V1KF1+V1UC11-KF100.11-P1	PROFINET Cable	4	0	22		
=V1KF1-KF100.12-P1	=V1KF1+V1UC12-KF100.12-P1	=V1KF1+V1UC12-KF100.12	PROFINET Cable	4	1	22		
=V1KF1-KF100.12-P4	=V1KF1+V1UC12-KF100.12-P4	=V1KF1+V1UC12-KF100.12	PROFINET Cable	4	1	22		
=V1KF1-KF100.12-P5	=V1KF1+V1UC12-KF100.12-P5	=V1KF1+V1UC12-KF100.12	PROFINET Cable	4	1	22		
=V1KF1-KF100.12-P6	=V1KF1+V1UC12-KF100.12-P6	=V1KF1+V1UC12-KF100.12	PROFINET Cable	4	1	22		
=V1KF1-KF100.12-P7	=V1KF1+V1UC12-KF100.12-P7	=V1KF1+V1UC12-KF100.12	PROFINET Cable	4	1	22		
=V1KF1-KF100.12-P8	=V1KF1+V1UC12-KF100.12-P8	=V1KF1+V1UC12-KF100.12	PROFINET Cable	4	1	22		
=V1KF1-KF100.12-P9	=V1KF1+V1UC12-KF100.12-P9	=V1KF1+V1UC12-KF100.12	PROFINET Cable	4	1	22		
=V1KF1-KF100.12-P10	=V1KF1+V1UC12-KF100.12-P10	=V1KF1+V1UC12-KF100.12	PROFINET Cable	4	1	22		
=V1KF1-KF100.12-P11	=V1KF1+V1UC12-KF100.12-P11	=V1KF1+V1UC12-KF100.12	PROFINET Cable	4	1	22		
=V1KF1-KF100.12-P12	=V1KF1+V1UC12-KF100.12-P12	=V1KF1+V1UC12-KF100.12	PROFINET Cable	4	1	22		
=V1KF1-KF100.12-P13	=V1KF1+V1UC12-KF100.12-P13	=V1KF1+V1UC12-KF100.12	PROFINET Cable	4	1	22		
=V1KF1-KF100.12-P14	=V1KF1+V1UC12-KF100.12-P14	=V1KF1+V1UC12-KF100.12	PROFINET Cable	4	1	22		
=V1KF1-KF100.12-P15	=V1KF1+V1UC12-KF100.12-P15	=V1KF1+V1UC12-KF100.12	PROFINET Cable	4	1	22		
=V1KF1-KF100.12-P16	=V1KF1+V1UC12-KF100.12-P16	=V1KF1+V1UC12-KF100.12	PROFINET Cable	4	1	22		
=V1KF1-KF100.12-P3	=V1KF1+V1UC12-KF100.12	=V1KF1+V1UC12-KF12	PROFINET Cable	4	0	22		
=V1KF1-KF100.31-P10	=KF0KF1+UC31-KF100.31-P10	=V1KF1+V1UC12-KF100.12-P1	PROFINET Cable	4	0	22		
=V1KF1-KF100.14-P1	=V1KF1+V1UC14-KF100.14-P1	=V1KF1+V1UC14-KF100.14	PROFINET Cable	4	1	22		
=V1KF1-KF100.14-P3	=V1KF1+V1UC14-KF100.14	=V1KF1+V1UC14-KF14	PROFINET Cable	4	0	22		
=V1KF1-KF100.14-P4	=V1KF1+V1UC14-KF100.14-P4	=V1KF1+V1UC14-KF100.14	PROFINET Cable	4	1	22		
=V1KF1-KF100.14-P5	=V1KF1+V1UC14-KF100.14-P5	=V1KF1+V1UC14-KF100.14	PROFINET Cable	4	1	22		
=V1KF1-KF100.14-P6	=V1KF1+V1UC14-KF100.14-P6	=V1KF1+V1UC14-KF100.14	PROFINET Cable	4	1	22		
=V1KF1-KF100.14-P7	=V1KF1+V1UC14-KF100.14-P7	=V1KF1+V1UC14-KF100.14	PROFINET Cable	4	1	22		
=V1KF1-KF100.14-P8	=V1KF1+V1UC14-KF100.14-P8	=V1KF1+V1UC14-KF100.14	PROFINET Cable	4	1	22		
=V1KF1-KF100.14-P9	=V1KF1+V1UC14-KF100.14-P9	=V1KF1+V1UC14-KF100.14	PROFINET Cable	4	1	22		
=V1KF1-KF100.14-P10	=V1KF1+V1UC14-KF100.14-P10	=V1KF1+V1UC14-KF100.14	PROFINET Cable	4	1	22		
=V1KF1-KF100.14-P11	=V1KF1+V1UC14-KF100.14-P11	=V1KF1+V1UC14-KF100.14	PROFINET Cable	4	1	22		
=V1KF1-KF100.14-P12	=V1KF1+V1UC14-KF100.14-P12	=V1KF1+V1UC14-KF100.14	PROFINET Cable	4	1	22		
=V1KF1-KF100.14-P13	=V1KF1+V1UC14-KF100.14-P13	=V1KF1+V1UC14-KF100.14	PROFINET Cable	4	1	22		
=V1KF1-KF100.14-P14	=V1KF1+V1UC14-KF100.14-P14	=V1KF1+V1UC14-KF100.14	PROFINET Cable	4	1	22		
=V1KF1-KF100.14-P15	=V1KF1+V1UC14-KF100.14-P15	=V1KF1+V1UC14-KF100.14	PROFINET Cable	4	1	22		
=V1KF1-KF100.14-P16	=V1KF1+V1UC14-KF100.14-P16	=V1KF1+V1UC14-KF100.14	PROFINET Cable	4	1	22		
=V1KF1-KF100.31-P10	=KF0KF1+UC31-KF100.31-P7	=V1KF1+V1UC14-KF100.14-P1	PROFINET Cable	4	0	22		
=V1KF1-KF100.14-P1	=V1KF1+V1UC15-KF100.15-P1	=V1KF1+V1UC15-KF100.15	PROFINET Cable	4	1	22		
=V1KF1-KF100.15-P3	=V1KF1+V1UC15-KF100.15	=V1KF1+V1UC15-KF15	PROFINET Cable	4	0	22		
=V1KF1-KF100.15-P4	=V1KF1+V1UC15-KF100.14-P4	=V1KF1+V1UC15-KF100.15	PROFINET Cable	4	1	22		
=V1KF1-KF100.15-P5	=V1KF1+V1UC15-KF100.15-P5	=V1KF1+V1UC15-KF100.15	PROFINET Cable	4	1	22		
=V1KF1-KF100.15-P6	=V1KF1+V1UC15-KF100.15-P6	=V1KF1+V1UC15-KF100.15	PROFINET Cable	4	1	22		
=V1KF1-KF100.15-P7	=V1KF1+V1UC15-KF100.15-P7	=V1KF1+V1UC15-KF100.15	PROFINET Cable	4	1	22		
=V1KF1-KF100.15-P8	=V1KF1+V1UC15-KF100.15-P8	=V1KF1+V1UC15-KF100.15	PROFINET Cable	4	1	22		
=V1KF1-KF100.15-P9	=V1KF1+V1UC15-KF100.15-P9	=V1KF1+V1UC15-KF100.15	PROFINET Cable	4	1	22		
=V1KF1-KF100.15-P10	=V1KF1+V1UC15-KF100.15-P10	=V1KF1+V1UC15-KF100.15	PROFINET Cable	4	1	22		
=V1KF1-KF100.15-P11	=V1KF1+V1UC15-KF100.15-P11	=V1KF1+V1UC15-KF100.15	PROFINET Cable	4	1	22		
=V1KF1-KF100.15-P12	=V1KF1+V1UC15-KF100.15-P12	=V1KF1+V1UC15-KF100.15	PROFINET Cable	4	1	22		

Cable overview

F10_001_Cable

Cable name	Source (from)	Target (to)	cable type	all conductors	Conductors used	Cross-section [mm]	Length [m]	remark
=V1KF1-KF100.15-P13	=V1KF1+V1UC15-KF100.15-P13	=V1KF1+V1UC15-KF100.15	PROFINET Cable	4	1	22		
=V1KF1-KF100.15-P14	=V1KF1+V1UC15-KF100.15-P14	=V1KF1+V1UC15-KF100.15	PROFINET Cable	4	1	22		
=V1KF1-KF100.15-P15	=V1KF1+V1UC15-KF100.15-P15	=V1KF1+V1UC15-KF100.15	PROFINET Cable	4	1	22		
=V1KF1-KF100.15-P16	=V1KF1+V1UC15-KF100.15-P16	=V1FQ1+V1FQ1BG4-BG4-X3	PROFINET Cable	4	1	22		
		=V1KF1+V1UC15-KF100.15						
=V1KF1-KF100.31-P10	=KF0KF1+UC31-KF100.31-P8	=V1KF1+V1UC15-KF100.15-P1	PROFINET Cable	4	0	22		
=V1KF1-KF100.11-P15	=V1KF1+V1UC11-KF100.11-P15	=V1KF1+V1UC32-PNET1	PROFINET Cable	4	1	22		
=V1KF1-PNET1	=V1KF1+V1UC32-PNET1	=V1KF1+V1UC32-KF32	PROFINET Cable	4	0	22		
=V1PF1KF1-KF100.15-P12	=V1KF1+V1UC15-KF100.15-P12	=V1PF1KF1+V1PF1-KF1-TP1	PROFINET Cable	4	1	22	30	
=V1PF1WC3-KF100.14-P12	=V1KF1+V1UC14-KF100.14-P12	=V1PF1WC3+V1PF1UC01-ENET0	PROFINET Cable	4	1	22	30	
=V1SF0PG1-KF32-P2	=V1KF1+V1UC32-KF32	=V1SF0PG1+V1UC32-PG1	PROFINET Cable	4	0	22		
=V1SF0PG2-KF100.12-P14	=V1KF1+V1UC12-KF100.12-P14	=V1SF0PG2+V1UC51-PNET1	PROFINET Cable	4	0	22		
=V1SF0PG2-PNET1	=V1SF0PG2+V1UC51-PNET1	=V1SF0PG2+V1UC51-PG1	PROFINET Cable	4	0	22		
=V1SF0PG3-KF100.12-P15	=V1KF1+V1UC12-KF100.12-P15	=V1SF0PG3+V1UC52-PNET1	PROFINET Cable	4	0	22		
=V1SF0PG3-PNET1	=V1SF0PG3+V1UC52-PNET1	=V1SF0PG3+V1UC52-PG1	PROFINET Cable	4	0	22		
=V1SF0PG4-KF100.14-P14	=V1KF1+V1UC14-KF100.14-P14	=V1SF0PG4+V1UC53-PNET1	PROFINET Cable	4	0	22		
=V1SF0PG4-PNET1	=V1SF0PG4+V1UC53-PNET1	=V1SF0PG4+V1UC53-PG1	PROFINET Cable	4	0	22		
=V1SF0PG5-KF100.14-P15	=V1KF1+V1UC14-KF100.14-P15	=V1SF0PG5+V1UC54-PNET1	PROFINET Cable	4	0	22		
=V1SF0PG5-PNET1	=V1SF0PG5+V1UC54-PNET1	=V1SF0PG5+V1UC54-PG1	PROFINET Cable	4	0	22		
=V1U10U01KF1-KF100.12-P12	=V1KF1+V1UC12-KF100.12-P12	=V1U10U01KF1+V1U10U01-KF1.11	PROFINET Cable	4	0	22		
=V1U20U01KF1-KF100.14-P13	=V1KF1+V1UC14-KF100.14-P13	=V1U20U01KF1+V1U20U01-KF1.11	PROFINET Cable	4	0	22		
=V1UN1KF1-KF100.15-P11	=V1KF1+V1UC15-KF100.15-P11	=V1UN1KF1+V1UN1-KF1.11	PROFINET Cable	4	0	22	30	
=V1UQ51KF1-KF100.15-P10	=V1KF1+V1UC15-KF100.15-P10	=V1UQ51KF1+V1UQ51-KF1-TP1	PROFINET Cable	4	1	22	25	
=V1UQ52KF1-KF100.14-P11	=V1KF1+V1UC14-KF100.14-P11	=V1UQ52KF1+V1UQ52-KF1-TP1	PROFINET Cable	4	1	22		
=V1UQ52KF2-WF1	=V1UQ52KF1+V1UQ52-KF1-TP2	=V1UQ52KF2+V1UQ52-KF2-TP1	PROFINET Cable	4	1	22		
=V1UQ52KF3-WF2	=V1UQ52KF2+V1UQ52-KF2-TP2	=V1UQ52KF3+V1UQ52-KF3-TP1	PROFINET Cable	4	1	22		
=V1UQ52KF4-WF3	=V1UQ52KF3+V1UQ52-KF3-TP2	=V1UQ52KF4+V1UQ52-KF4-TP1	PROFINET Cable	4	1	22		
=V1UQ52KF5-WF4	=V1UQ52KF4+V1UQ52-KF4-TP2	=V1UQ52KF5+V1UQ52-KF5-TP1	PROFINET Cable	4	1	22		
=V1UQ53KF1-KF100.11-P12	=V1KF1+V1UC11-KF100.11-P12	=V1UQ53KF1+V1UQ53-KF1-TP1	PROFINET Cable	4	1	22		
=V1UQ53KF2-WF1	=V1UQ53KF1+V1UQ53-KF1-TP2	=V1UQ53KF2+V1UQ53-KF2-TP1	PROFINET Cable	4	1	22		
=V1UQ54KF1-KF100.11-P13	=V1KF1+V1UC11-KF100.11-P13	=V1UQ54KF1+V1UQ54-KF1-TP1	PROFINET Cable	4	1	22		
=V1UQ54KF2-WF1	=V1UQ54KF1+V1UQ54-KF1-TP2	=V1UQ54KF2+V1UQ54-KF2-TP1	PROFINET Cable	4	1	22		
=V1UQ55KF1-KF100.11-P14	=V1KF1+V1UC11-KF100.11-P14	=V1UQ55KF1+V1UQ55-KF1-TP1	PROFINET Cable	4	1	22		
=V1WC1-KF100.11-P2	=V1KF1+V1UC11-KF100.11	=V1WC1+V1UC11-KF1.2	PROFINET Cable	4	1	22		
=V1WC1-KF100.12-P2	=V1KF1+V1UC12-KF100.12	=V1WC1+V1UC12-KF1.2	PROFINET Cable	4	1	22		
=V1WC1-GND1	=WC1+V1UC161-WC1	=V1WC1+V1UC161-GND	RK	1	0	2		
=V1WC1-GND1	=WC1+V1UC162-WC1	=V1WC1+V1UC162-GND	RK	1	0	2		
=V1WC1-GND1	=WC1+V1UC163-WC1	=V1WC1+V1UC163-GND	RK	1	0	2		
=V1WC1-GND1	=WC1+V1UC164-WC1	=V1WC1+V1UC164-GND	RK	1	0	2		
=V1WC1-GND1	=WC1+V1UC165-WC1	=V1WC1+V1UC165-GND	RK	1	0	2		
=V1WC1-GND1	=V1WC1+V1UC11-PE	=V1WC1+V1UC11-GND	RK	1	0	6		
=V1WC1-GND1	=V1WC1+V1UC12-GND	=V1WC1+V1UC12-PE	RK	1	1	6		
=V1AR21XQ11WC1-W1	=V1AR21XQ11WC1+V1AR21XQ11UC01-XG1	=V1WC2+V1UC161-XG1	TC-ER	4	4	1	7.62	Max.
		=V1WC2+V1UC161-XG2						
=V1AR22XQ11WC1-W1	=V1AR22XQ11WC1+V1AR22XQ11UC01-XG1	=V1WC2+V1UC164-XG1	TC-ER	4	4	1	7.62	Max.
		=V1WC2+V1UC164-XG2						

Cable overview

F10_001_Cable

Cable name	Source (from)	Target (to)	cable type	all conductors	Conductors used	Cross-section [mm]	Length [m]	remark
=V1AR23XQ11WC1-W1	=V1AR23XQ11WC1+V1AR23XQ11UC01-XG1	=V1WC2+V1UC164-XG1	TC-ER	4	4	1	7.62	Max.
		=V1WC2+V1UC164-XG2						
=V1AR24XQ11WC1-W1	=V1AR24XQ11WC1+V1AR24XQ11UC01-XG1	=V1WC2+V1UC161-XG1	TC-ER	4	4	1	7.62	Max.
		=V1WC2+V1UC161-XG2						
=V1AR25XQ11WC1-W1	=V1AR25XQ11WC1+V1AR25XQ11UC01-XG1	=V1WC2+V1UC161-XG1	TC-ER	4	4	1	7.62	Max.
		=V1WC2+V1UC161-XG2						
=V1AR26XQ11WC1-W1	=V1AR26XQ11WC1+V1AR26XQ11UC01-XG1	=V1WC2+V1UC165-XG1	TC-ER	4	4	1	7.62	Max.
		=V1WC2+V1UC165-XG2						
=V1AR27XQ11WC1-W1	=V1AR27XQ11WC1+V1AR27XQ11UC01-XG1	=V1WC2+V1UC165-XG1	TC-ER	4	4	1	7.62	Max.
		=V1WC2+V1UC165-XG2						
=V1AR28XQ11WC1-W1	=V1AR28XQ11WC1+V1AR28XQ11UC01-XG1	=V1WC2+V1UC162-XG1	TC-ER	4	4	1	7.62	Max.
		=V1WC2+V1UC162-XG2						
=V1AR29XQ11WC1-W1	=V1AR29XQ11WC1+V1AR29XQ11UC01-XG1	=V1WC2+V1UC162-XG1	TC-ER	4	4	1	7.62	Max.
		=V1WC2+V1UC162-XG2						
=V1AR211XQ11WC1-W1	=V1AR211XQ11WC1+V1AR211XQ11UC01-XG1	=V1WC2+V1UC163-XG1	TC-ER	4	4	1	7.62	Max.
		=V1WC2+V1UC163-XG2						
=V1AR212XQ11WC1-W1	=V1AR212XQ11WC1+V1AR212XQ11UC01-XG1	=V1WC2+V1UC163-XG1	TC-ER	4	4	1	7.62	Max.
		=V1WC2+V1UC163-XG2						
=V1AR31XQ41WC1-W1		=V1AR31XQ41WC1+V1AR31XQ41UC01-XD0	TC-ER	4	4	4	12	
	=V1AR31XQ41+V1UC11-FC1							
=V1AR81XQ51WC1-W1	=V1AR81XQ51WC1+V1AR81XQ51UC01-XG1	=V1AR81XQ51+V1UC11-FC1	TC-ER	4	4	8	60	
=V1AR81XQ52WC1-W1	=V1AR81XQ52WC1+V1AR81XQ52UC01-XG1	=V1AR81XQ52+V1UC11-FC1	TC-ER	4	4	8	60	
=V1BX11WC3-W1	=V1WC3+V1UC11-XD2	=V1BX11WC3+V1BX11UC01-Q1	TC-ER	3	3	8	20	
	=V1BX11WC3+V1BX11UC01-PE	=V1WC3+V1UC11-PE						
=V1GL1WC1-W1		=V1GL1WC1+V1GL1UC01-PE	TC-ER	4	3	8	5	
	=V1GL1+V1UC12-FC1	=V1GL1WC1+V1GL1UC01-Q1						
=V1GL2WC1-W1		=V1GL2WC1+V1GL2UC01-PE	TC-ER	4	4	8	30	
	=V1GL2+V1UC11-FC1	=V1GL2WC1+V1GL2UC01-Q1						
=KF0WC3-W1	=KF0WC3+UC31-XD1	=V1WC3+V1UC11-XD1	TC-ER	3	3	10	27	
		=V1WC3+V1UC11-PE						
=V1AR11WC1-W1		=V1AR11WC1+V1AR11UC01-PE	TC-ER	4	4	10	60	Power Robot
	=V1AR11+V1UC11-FC1	=V1AR11WC1+V1AR11UC01-Q1						
=V1AR21WC1-W1		=V1AR21WC1+V1AR21UC01-PE	TC-ER	4	4	10	25	
	=V1AR21+V1UC11-FC1	=V1AR21WC1+V1AR21UC01-Q1						
=V1AR22WC1-W1		=V1AR22WC1+V1AR22UC01-PE	TC-ER	4	4	10	65	
	=V1AR22+V1UC11-FC1	=V1AR22WC1+V1AR22UC01-Q1						
=V1AR23WC1-W1		=V1AR23WC1+V1AR23UC01-PE	TC-ER	4	4	10	65	
	=V1AR23+V1UC11-FC1	=V1AR23WC1+V1AR23UC01-Q1						
=V1AR24WC1-W1		=V1AR24WC1+V1AR24UC01-PE	TC-ER	4	4	10	25	
	=V1AR24+V1UC11-FC1	=V1AR24WC1+V1AR24UC01-Q1						
=V1AR25WC1-W1		=V1AR25WC1+V1AR25UC01-PE	TC-ER	4	4	10	20	
	=V1AR25+V1UC11-FC1	=V1AR25WC1+V1AR25UC01-Q1						
=V1AR26WC1-W1		=V1AR26WC1+V1AR26UC01-PE	TC-ER	4	4	10	55	
	=V1AR26+V1UC11-FC1	=V1AR26WC1+V1AR26UC01-Q1						

Cable overview

F10_001_Cable

Cable name	Source (from)	Target (to)	cable type	all conductors	Conductors used	Cross-section [mm]	Length [m]	remark
=V1AR27WC1-W1		=V1AR27WC1+V1AR27UC01-PE	TC-ER	4	4	10	55	
	=V1AR27+V1UC11-FC1	=V1AR27WC1+V1AR27UC01-Q1						
=V1AR28WC1-W1		=V1AR28WC1+V1AR28UC01-PE	TC-ER	4	4	10	15	
	=V1AR28+V1UC11-FC1	=V1AR28WC1+V1AR28UC01-Q1						
=V1AR29WC1-W1		=V1AR29WC1+V1AR29UC01-PE	TC-ER	4	4	10	16	
	=V1AR29+V1UC11-FC1	=V1AR29WC1+V1AR29UC01-Q1						
=V1AR31WC1-W1		=V1AR31WC1+V1AR31UC01-PE	TC-ER	4	4	10	12	Power Robot
	=V1AR31+V1UC11-FC1	=V1AR31WC1+V1AR31UC01-Q1						
=V1AR81WC1-W1		=V1AR81WC1+V1AR81UC01-PE	TC-ER	4	4	10	45	
	=V1AR81+V1UC11-FC1	=V1AR81WC1+V1AR81UC01-Q1						
=V1AR191WC1-W1		=V1AR191WC1+V1AR191UC01-PE	TC-ER	4	4	10	15	
	=V1AR191+V1UC11-FC1	=V1AR191WC1+V1AR191UC01-Q1						
=V1AR211WC1-W1		=V1AR211WC1+V1AR211UC01-PE	TC-ER	4	4	10	12	
	=V1AR211+V1UC11-FC1	=V1AR211WC1+V1AR211UC01-Q1						
=V1AR212WC1-W1		=V1AR212WC1+V1AR212UC01-PE	TC-ER	4	4	10	12	
	=V1AR212+V1UC11-FC1	=V1AR212WC1+V1AR212UC01-Q1						
=V1WC3-W1	=V1WC3+V1UC11-XD2	=V1WC3+V1UC14-XD1	TC-ER	3	3	10	28	
	=V1WC3+V1UC11-PE							
=V1WC3-W1	=V1WC3+V1UC11-XD2	=V1WC3+V1UC15-XD1	TC-ER	3	3	10	65	
	=V1WC3+V1UC11-PE							
=KH0-W2	=V1KF1+V1UC12-KF12.14	=KH0+KH0-BP2	TPE	4	4	18	20	Air supply
	=V1WC4+V1UC12-XD10							
	=V1WC4+V1UC12-XD13							
=KH0-W3	=V1KF1+V1UC14-KF14.12	=KH0+KH0-BP3	TPE	4	4	18	10	Air supply
	=V1WC4+V1UC14-XD10							
	=V1WC4+V1UC14-XD16							
=KH0-W4	=V1KF1+V1UC15-KF15.12	=KH0+KH0-BP4	TPE	4	4	18	10	Air supply
	=V1WC4+V1UC15-XD10							
	=V1WC4+V1UC15-XD16							
=KH0-W5	=V1KF1+V1UC11-KF11.14	=KH0+KH0-BP5	TPE	4	4	18	10	Air supply
	=V1WC4+V1UC11-XD10							
	=V1WC4+V1UC11-XD13							
=KH0-W6	=V1KF1+V1UC11-KF11.14	=KH0+KH0-BP6	TPE	4	4	18	10	Air supply
	=V1WC4+V1UC11-XD10							
	=V1WC4+V1UC11-XD13							
=KH0-W7	=V1KF1+V1UC11-KF11.14	=KH0+KH0-BP7	TPE	4	4	18	30	Air supply
	=V1WC4+V1UC11-XD10							
	=V1WC4+V1UC11-XD13							
=KH0-W8	=V1KF1+V1UC11-KF11.14	=KH0+KH0-BP8	TPE	4	4	18	20	Air supply
	=V1WC4+V1UC11-XD10							

Cable overview

F10_001_Cable

Cable name	Source (from)	Target (to)	cable type	all conductors	Conductors used	Cross-section [mm]	Length [m]	remark
	=V1WC4+V1UC11-XD13							
=KH0-W9	=V1KF1+V1UC11-KF11.14	=KH0+KH0-BP9	TPE	4	4	18	35	Air supply
	=V1WC4+V1UC11-XD10							
	=V1WC4+V1UC11-XD13							
=KH3-W1	=V1KF1+V1UC11-KF11.14	=KH3+KH3-BF1	TPE	4	4	18	20	Air supply
	=V1WC4+V1UC11-XD10							
	=V1WC4+V1UC11-XD13							
=KH3-W2	=V1KF1+V1UC11-KF11.14	=KH3+KH3-BF2	TPE	4	4	18	20	Air supply
	=V1WC4+V1UC11-XD10							
	=V1WC4+V1UC11-XD13							
=V1AR11UQ41BG0-W1	=V1AR11UQ41BG0+V1AR11UQ41-XG1/2	=V1AR11UQ41KF1+V1AR11UQ41-KF1.14	TPE	4	4	18	0.5	
=V1AR11UQ41BG0-W1.1	=V1AR11UQ41BG0+V1AR11UQ41-BG01	=V1AR11UQ41BG0+V1AR11UQ41-XG1/2	TPE	4	3	18	4	
=V1AR11UQ41BG0-W1.2	=V1AR11UQ41BG0+V1AR11UQ41-BG02	=V1AR11UQ41BG0+V1AR11UQ41-XG1/2	TPE	4	3	18	2	
=V1AR11UQ41BG0-W2	=V1AR11UQ41BG0+V1AR11UQ41-XG3/4	=V1AR11UQ41KF1+V1AR11UQ41-KF1.14	TPE	4	4	18	0.5	
=V1AR11UQ41BG0-W2.1	=V1AR11UQ41BG0+V1AR11UQ41-BG03	=V1AR11UQ41BG0+V1AR11UQ41-XG3/4	TPE	4	3	18	2	
=V1AR11UQ41BG0-W2.2	=V1AR11UQ41BG0+V1AR11UQ41-BG04	=V1AR11UQ41BG0+V1AR11UQ41-XG3/4	TPE	4	3	18	2	
=V1AR11UQ41BG0-W3	=V1AR11UQ41BG0+V1AR11UQ41-XG5/6	=V1AR11UQ41KF1+V1AR11UQ41-KF1.14	TPE	4	4	18	0.5	
=V1AR11UQ41BG0-W3.1	=V1AR11UQ41BG0+V1AR11UQ41-BG05	=V1AR11UQ41BG0+V1AR11UQ41-XG5/6	TPE	4	3	18	2	
=V1AR11UQ41BG0-W3.2	=V1AR11UQ41BG0+V1AR11UQ41-BG06	=V1AR11UQ41BG0+V1AR11UQ41-XG5/6	TPE	4	3	18	5	
=V1AR11UQ41BG0-W4	=V1AR11UQ41BG0+V1AR11UQ41-XG7/8	=V1AR11UQ41KF1+V1AR11UQ41-KF1.14	TPE	4	4	18	0.5	
=V1AR11UQ41BG0-W4.1	=V1AR11UQ41BG0+V1AR11UQ41-BG07	=V1AR11UQ41BG0+V1AR11UQ41-XG7/8	TPE	4	3	18	4	
=V1AR11UQ41BG0-W4.2	=V1AR11UQ41BG0+V1AR11UQ41-BG08	=V1AR11UQ41BG0+V1AR11UQ41-XG7/8	TPE	4	3	18	2	
=V1AR11UQ41BG0-W5	=V1AR11UQ41BG0+V1AR11UQ41-XG9/10	=V1AR11UQ41KF1+V1AR11UQ41-KF1.14	TPE	4	4	18	0.5	
=V1AR11UQ41BG0-W5.1	=V1AR11UQ41BG0+V1AR11UQ41-BG09	=V1AR11UQ41BG0+V1AR11UQ41-XG9/10	TPE	4	3	18	2	
=V1AR11UQ41BG0-W5.2	=V1AR11UQ41BG0+V1AR11UQ41-BG10	=V1AR11UQ41BG0+V1AR11UQ41-XG9/10	TPE	4	3	18	3	
=V1AR11UQ41UQ1.1-W1	=V1AR11UQ41KF1+V1AR11UQ41-KF1.11-X1	=V1AR11UQ41UQ1.1+V1AR11UQ41UQ1.1-BGS/R	TPE	4	4	18	4	
=V1AR11UQ41UQ1.2-W1	=V1AR11UQ41KF1+V1AR11UQ41-KF1.11-X2	=V1AR11UQ41UQ1.2+V1AR11UQ41UQ1.2-BGS/R	TPE	4	4	18	2	
=V1AR11UQ41UQ1.3-W1	=V1AR11UQ41KF1+V1AR11UQ41-KF1.11-X3	=V1AR11UQ41UQ1.3+V1AR11UQ41UQ1.3-BGS/R	TPE	4	4	18	2	
=V1AR11UQ41UQ1.4-W1	=V1AR11UQ41KF1+V1AR11UQ41-KF1.11-X4	=V1AR11UQ41UQ1.4+V1AR11UQ41UQ1.4-BGS/R	TPE	4	4	18	2	
=V1AR11UQ41UQ2.1-W1	=V1AR11UQ41KF1+V1AR11UQ41-KF1.11-X5	=V1AR11UQ41UQ2.1+V1AR11UQ41UQ2.1-BGS/R	TPE	4	4	18	4	
=V1AR11UQ41UQ2.2-W1	=V1AR11UQ41KF1+V1AR11UQ41-KF1.11-X6	=V1AR11UQ41UQ2.2+V1AR11UQ41UQ2.2-BGS/R	TPE	4	4	18	4	
=V1AR11UQ41UQ2.3-W1	=V1AR11UQ41KF1+V1AR11UQ41-KF1.11-X7	=V1AR11UQ41UQ2.3+V1AR11UQ41UQ2.3-BGS/R	TPE	4	4	18	4	
=V1AR11UQ41UQ3.1-W1	=V1AR11UQ41KF1+V1AR11UQ41-KF1.11-X8	=V1AR11UQ41UQ3.1+V1AR11UQ41UQ3.1-BGS/R	TPE	4	4	18	2	
=V1AR11UQ41UQ3.2-W1	=V1AR11UQ41KF1+V1AR11UQ41-KF1.12-X1	=V1AR11UQ41UQ3.2+V1AR11UQ41UQ3.2-BGS/R	TPE	4	4	18	1	
=V1AR11UQ41UQ4.1-W1	=V1AR11UQ41KF1+V1AR11UQ41-KF1.12-X2	=V1AR11UQ41UQ4.1+V1AR11UQ41UQ4.1-BGS/R	TPE	4	4	18	5	
=V1AR11UQ41UQ4.2-W1	=V1AR11UQ41KF1+V1AR11UQ41-KF1.12-X3	=V1AR11UQ41UQ4.2+V1AR11UQ41UQ4.2-BGS/R	TPE	4	4	18	4	
=V1AR11UQ41UQ4.3-W1	=V1AR11UQ41KF1+V1AR11UQ41-KF1.12-X4	=V1AR11UQ41UQ4.3+V1AR11UQ41UQ4.3-BGS/R	TPE	4	4	18	3	
=V1AR11UQ41UQ5.1-W1	=V1AR11UQ41KF1+V1AR11UQ41-KF1.12-X5	=V1AR11UQ41UQ5.1+V1AR11UQ41UQ5.1-BGS/R	TPE	4	4	18	2	
=V1AR11UQ41UQ5.2-W1	=V1AR11UQ41KF1+V1AR11UQ41-KF1.12-X6	=V1AR11UQ41UQ5.2+V1AR11UQ41UQ5.2-BGS/R	TPE	4	4	18	2	
=V1AR11UQ41UQ5.3-W1	=V1AR11UQ41KF1+V1AR11UQ41-KF1.12-X7	=V1AR11UQ41UQ5.3+V1AR11UQ41UQ5.3-BGS/R	TPE	4	4	18	2	
=V1AR11UQ41UQ6.1-W1	=V1AR11UQ41KF1+V1AR11UQ41-KF1.12-X8	=V1AR11UQ41UQ6.1+V1AR11UQ41UQ6.1-BGS/R	TPE	4	4	18	2	
=V1AR11UQ41UQ7.1-W1	=V1AR11UQ41KF1+V1AR11UQ41-KF1.13-X1	=V1AR11UQ41UQ7.1+V1AR11UQ41UQ7.1-BGS/R	TPE	4	4	18	1	

Cable overview

F10_001_Cable

Cable name	Source (from)	Target (to)	cable type	all conductors	Conductors used	Cross-section [mm]	Length [m]	remark
=V1AR11UQ41UQ8.1-W1	=V1AR11UQ41KF1+V1AR11UQ41-KF1.13-X2	=V1AR11UQ41UQ8.1+V1AR11UQ41UQ8.1-BGS/R	TPE	4	4	18	3	
=V1AR11UQ41UQ9.1-W1	=V1AR11UQ41KF1+V1AR11UQ41-KF1.13-X3	=V1AR11UQ41UQ9.1+V1AR11UQ41UQ9.1-BGS/R	TPE	4	4	18	2	
=V1AR11UQ41UQ9.2-W1	=V1AR11UQ41KF1+V1AR11UQ41-KF1.13-X4	=V1AR11UQ41UQ9.2+V1AR11UQ41UQ9.2-BGS/R	TPE	4	4	18	2	
=V1AR11UQ41UQ10.1-W1	=V1AR11UQ41KF1+V1AR11UQ41-KF1.13-X5	=V1AR11UQ41UQ10.1+V1AR11UQ41UQ10.1-BGS/R	TPE	4	4	18	3	
=V1AR11UQ41UQ10.2-W1	=V1AR11UQ41KF1+V1AR11UQ41-KF1.13-X6	=V1AR11UQ41UQ10.2+V1AR11UQ41UQ10.2-BGS/R	TPE	4	4	18	1	
=V1AR31UQ41BG0-W1	=V1AR31UQ41BG0+V1AR31UQ41-XG1/2	=V1AR31UQ41KF1+V1AR31UQ41-KF1.13-X1	TPE	4	4	18	0.5	
=V1AR31UQ41BG0-W1.1	=V1AR31UQ41BG0+V1AR31UQ41-BG01	=V1AR31UQ41BG0+V1AR31UQ41-XG1/2	TPE	4	3	18	2	
=V1AR31UQ41BG0-W1.2	=V1AR31UQ41BG0+V1AR31UQ41-BG02	=V1AR31UQ41BG0+V1AR31UQ41-XG1/2	TPE	4	3	18	3	
=V1AR31UQ41BG0-W2	=V1AR31UQ41BG0+V1AR31UQ41-XG3/4	=V1AR31UQ41KF1+V1AR31UQ41-KF1.13-X2	TPE	4	4	18	0.5	
=V1AR31UQ41BG0-W2.1	=V1AR31UQ41BG0+V1AR31UQ41-BG03	=V1AR31UQ41BG0+V1AR31UQ41-XG3/4	TPE	4	3	18	3	
=V1AR31UQ41BG0-W2.2	=V1AR31UQ41BG0+V1AR31UQ41-BG04	=V1AR31UQ41BG0+V1AR31UQ41-XG3/4	TPE	4	3	18	3	
=V1AR31UQ41BG0-W3	=V1AR31UQ41BG0+V1AR31UQ41-BG05	=V1AR31UQ41KF1+V1AR31UQ41-KF1.13-X3	TPE	4	3	18	3	
=V1AR31UQ41UQ1.1-W1	=V1AR31UQ41KF1+V1AR31UQ41-KF1.11-X1	=V1AR31UQ41UQ1.1+V1AR31UQ41UQ1.1-BGS/R	TPE	4	4	18	3	
=V1AR31UQ41UQ2.1-W1	=V1AR31UQ41KF1+V1AR31UQ41-KF1.11-X2	=V1AR31UQ41UQ2.1+V1AR31UQ41UQ2.1-BGS/R	TPE	4	4	18	3	
=V1AR31UQ41UQ2.2-W1	=V1AR31UQ41KF1+V1AR31UQ41-KF1.11-X3	=V1AR31UQ41UQ2.2+V1AR31UQ41UQ2.2-BGS/R	TPE	4	4	18	3	
=V1AR31UQ41UQ3.1-W1	=V1AR31UQ41KF1+V1AR31UQ41-KF1.11-X4	=V1AR31UQ41UQ3.1+V1AR31UQ41UQ3.1-BGS/R	TPE	4	4	18	3	
=V1AR31UQ41UQ4.1-W1	=V1AR31UQ41KF1+V1AR31UQ41-KF1.11-X5	=V1AR31UQ41UQ4.1+V1AR31UQ41UQ4.1-BGS/R	TPE	4	4	18	2	
=V1AR31UQ41UQ5.1-W1	=V1AR31UQ41KF1+V1AR31UQ41-KF1.11-X6	=V1AR31UQ41UQ5.1+V1AR31UQ41UQ5.1-BGS/R	TPE	4	4	18	3	
=V1AR31UQ41UQ6.1-W1	=V1AR31UQ41KF1+V1AR31UQ41-KF1.11-X7	=V1AR31UQ41UQ6.1+V1AR31UQ41UQ6.1-BGS/R	TPE	4	4	18	2	
=V1AR31UQ41UQ7.1-W1	=V1AR31UQ41KF1+V1AR31UQ41-KF1.11-X8	=V1AR31UQ41UQ7.1+V1AR31UQ41UQ7.1-BGS/R	TPE	4	4	18	2	
=V1AR31UQ41UQ7.2-W1	=V1AR31UQ41KF1+V1AR31UQ41-KF1.12-X1	=V1AR31UQ41UQ7.2+V1AR31UQ41UQ7.2-BGS/R	TPE	4	4	18	3	
=V1AR31UQ41UQ8.1-W1	=V1AR31UQ41KF1+V1AR31UQ41-KF1.12-X2	=V1AR31UQ41UQ8.1+V1AR31UQ41UQ8.1-BGS/R	TPE	4	4	18	3	
=V1AR31UQ41UQ8.2-W1	=V1AR31UQ41KF1+V1AR31UQ41-KF1.12-X3	=V1AR31UQ41UQ8.2+V1AR31UQ41UQ8.2-BGS/R	TPE	4	4	18	3	
=V1AR31UQ41UQ9.1-W1	=V1AR31UQ41KF1+V1AR31UQ41-KF1.12-X4	=V1AR31UQ41UQ9.1+V1AR31UQ41UQ9.1-BGS/R	TPE	4	4	18	4	
=V1AR31UQ41UQ9.2-W1	=V1AR31UQ41KF1+V1AR31UQ41-KF1.12-X5	=V1AR31UQ41UQ9.2+V1AR31UQ41UQ9.2-BGS/R	TPE	4	4	18	4	
=V1AR31XQ41UQ1.1-W1	=V1AR31XQ41KF1+V1AR31XQ41-KF1.11-X1	=V1AR31XQ41UQ1.1+V1AR31XQ41UQ1.1-XG1/2	TPE	4	4	18	0.5	
=V1AR31XQ41UQ1.1-W1.1	=V1AR31XQ41UQ1.1+V1AR31XQ41UQ1.1-BGR	=V1AR31XQ41UQ1.1+V1AR31XQ41UQ1.1-XG1/2	TPE	4	3	18	0.5	
=V1AR31XQ41UQ1.1-W1.2	=V1AR31XQ41UQ1.1+V1AR31XQ41UQ1.1-BGS	=V1AR31XQ41UQ1.1+V1AR31XQ41UQ1.1-XG1/2	TPE	4	3	18	0.5	
=V1AR81UQ41BG0-W1	=V1AR81UQ41BG0+V1AR81UQ41-XG1/2	=V1AR81UQ41KF1+V1AR81UQ41-KF1.13-X1	TPE	4	4	18	0.5	
=V1AR81UQ41BG0-W1.1	=V1AR81UQ41BG0+V1AR81UQ41-BG01	=V1AR81UQ41BG0+V1AR81UQ41-XG1/2	TPE	4	3	18	5	
=V1AR81UQ41BG0-W1.2	=V1AR81UQ41BG0+V1AR81UQ41-BG02	=V1AR81UQ41BG0+V1AR81UQ41-XG1/2	TPE	4	3	18	3	
=V1AR81UQ41BG0-W2	=V1AR81UQ41BG0+V1AR81UQ41-XG3/4	=V1AR81UQ41KF1+V1AR81UQ41-KF1.13-X2	TPE	4	4	18	0.5	
=V1AR81UQ41BG0-W2.1	=V1AR81UQ41BG0+V1AR81UQ41-BG03	=V1AR81UQ41BG0+V1AR81UQ41-XG3/4	TPE	4	3	18	2	
=V1AR81UQ41BG0-W2.2	=V1AR81UQ41BG0+V1AR81UQ41-BG04	=V1AR81UQ41BG0+V1AR81UQ41-XG3/4	TPE	4	3	18	1	
=V1AR81UQ41BG0-W3	=V1AR81UQ41BG0+V1AR81UQ41-BG05	=V1AR81UQ41KF1+V1AR81UQ41-KF1.13-X3	TPE	4	3	18	1	
=V1AR81UQ41UQ1.1-W1	=V1AR81UQ41KF1+V1AR81UQ41-KF1.11-X1	=V1AR81UQ41UQ1.1+V1AR81UQ41UQ1.1-BGS/R	TPE	4	4	18	5	
=V1AR81UQ41UQ2.1-W1	=V1AR81UQ41KF1+V1AR81UQ41-KF1.11-X2	=V1AR81UQ41UQ2.1+V1AR81UQ41UQ2.1-BGS/R	TPE	4	4	18	3	
=V1AR81UQ41UQ3.1-W1	=V1AR81UQ41KF1+V1AR81UQ41-KF1.11-X3	=V1AR81UQ41UQ3.1+V1AR81UQ41UQ3.1-BGS/R	TPE	4	4	18	2	
=V1AR81UQ41UQ4.1-W1	=V1AR81UQ41KF1+V1AR81UQ41-KF1.11-X4	=V1AR81UQ41UQ4.1+V1AR81UQ41UQ4.1-BGS/R	TPE	4	4	18	2	
=V1AR81UQ41UQ5.1-W1	=V1AR81UQ41KF1+V1AR81UQ41-KF1.11-X5	=V1AR81UQ41UQ5.1+V1AR81UQ41UQ5.1-BGS/R	TPE	4	4	18	2	
=V1AR81UQ41UQ6.1-W1	=V1AR81UQ41KF1+V1AR81UQ41-KF1.11-X6	=V1AR81UQ41UQ6.1+V1AR81UQ41UQ6.1-BGS/R	TPE	4	4	18	4	
=V1AR81UQ41UQ6.2-W1	=V1AR81UQ41KF1+V1AR81UQ41-KF1.11-X7	=V1AR81UQ41UQ6.2+V1AR81UQ41UQ6.2-BGS/R	TPE	4	4	18	4	
=V1AR81UQ41UQ6.3-W1	=V1AR81UQ41KF1+V1AR81UQ41-KF1.11-X8	=V1AR81UQ41UQ6.3+V1AR81UQ41UQ6.3-BGS/R	TPE	4	4	18	4	
=V1AR81UQ41UQ6.4-W1	=V1AR81UQ41KF1+V1AR81UQ41-KF1.12-X1	=V1AR81UQ41UQ6.4+V1AR81UQ41UQ6.4-BGS/R	TPE	4	4	18	5	
=V1AR81UQ41UQ7.1-W1	=V1AR81UQ41KF1+V1AR81UQ41-KF1.12-X2	=V1AR81UQ41UQ7.1+V1AR81UQ41UQ7.1-BGS/R	TPE	4	4	18	2	
=V1AR81UQ41UQ7.2-W1	=V1AR81UQ41KF1+V1AR81UQ41-KF1.12-X3	=V1AR81UQ41UQ7.2+V1AR81UQ41UQ7.2-BGS/R	TPE	4	4	18	2	

Cable overview

F10_001_Cable

Cable name	Source (from)	Target (to)	cable type	all conductors	Conductors used	Cross-section [mm]	Length [m]	remark
=V1AR81UQ41UQ8.1-W1	=V1AR81UQ41KF1+V1AR81UQ41-KF1.12-X4	=V1AR81UQ41UQ8.1+V1AR81UQ41UQ8.1-BGS/R	TPE	4	4	18	2	
=V1AR81UQ41UQ8.2-W1	=V1AR81UQ41KF1+V1AR81UQ41-KF1.12-X5	=V1AR81UQ41UQ8.2+V1AR81UQ41UQ8.2-BGS/R	TPE	4	4	18	2	
=V1AR81UQ41UQ9.1-W1	=V1AR81UQ41KF1+V1AR81UQ41-KF1.12-X6	=V1AR81UQ41UQ9.1+V1AR81UQ41UQ9.1-BGS/R	TPE	4	4	18	2	
=V1AR81UQ41UQ9.2-W1	=V1AR81UQ41KF1+V1AR81UQ41-KF1.12-X7	=V1AR81UQ41UQ9.2+V1AR81UQ41UQ9.2-BGS/R	TPE	4	4	18	2	
=V1FQ1-W11R	=V1KF1+V1UC12-KF12.31	=V1FQ1+V1FQ1-BR11-R	TPE	4	4	18	25	
	=V1WC4+V1UC12-XD10							
	=V1WC4+V1UC12-XD13							
=V1FQ1-W11T	=V1WC4+V1UC12-XD10	=V1FQ1+V1FQ1-BR11-T	TPE	4	4	18	30	
	=V1WC4+V1UC12-XD13							
=V1FQ1-W13R	=V1KF1+V1UC12-KF12.31	=V1FQ1+V1FQ1-BR13-R	TPE	4	4	18	20	
	=V1WC4+V1UC12-XD10							
	=V1WC4+V1UC12-XD13							
=V1FQ1-W13T	=V1WC4+V1UC12-XD10	=V1FQ1+V1FQ1-BR13-T	TPE	4	4	18	25	
	=V1WC4+V1UC12-XD13							
=V1FQ1-W15R	=V1KF1+V1UC12-KF12.31	=V1FQ1+V1FQ1-BR15-R	TPE	4	4	18	20	
	=V1WC4+V1UC12-XD10							
	=V1WC4+V1UC12-XD13							
=V1FQ1-W15T	=V1WC4+V1UC12-XD10	=V1FQ1+V1FQ1-BR15-T	TPE	4	4	18	20	
	=V1WC4+V1UC12-XD13							
=V1FQ1-W16R	=V1KF1+V1UC14-KF14.31	=V1FQ1+V1FQ1-BR16-R	TPE	4	4	18	20	
	=V1WC4+V1UC14-XD10							
	=V1WC4+V1UC14-XD15							
=V1FQ1-W16T	=V1WC4+V1UC14-XD10	=V1FQ1+V1FQ1-BR16-T	TPE	4	4	18	25	
	=V1WC4+V1UC14-XD15							
=V1FQ1-W18R	=V1KF1+V1UC14-KF14.31	=V1FQ1+V1FQ1-BR18-R	TPE	4	4	18	25	
	=V1WC4+V1UC14-XD10							
	=V1WC4+V1UC14-XD17							
=V1FQ1-W18T	=V1WC4+V1UC14-XD10	=V1FQ1+V1FQ1-BR18-T	TPE	4	4	18	30	
	=V1WC4+V1UC14-XD17							
=V1FQ1-W20R	=V1KF1+V1UC14-KF14.31	=V1FQ1+V1FQ1-BR20-R	TPE	4	4	18	15	
	=V1WC4+V1UC14-XD10							
	=V1WC4+V1UC14-XD17							
=V1FQ1-W20T	=V1WC4+V1UC14-XD10	=V1FQ1+V1FQ1-BR20-T	TPE	4	4	18	20	
	=V1WC4+V1UC14-XD17							
=V1GL1UQ51BG0-W1	=V1GL1UQ51BG0+V1GL1UQ51-XG1/2	=V1GL1UQ51KF1+V1GL1UQ51-KF1.13-X1	TPE	4	4	18	0.5	
=V1GL1UQ51BG0-W1.1	=V1GL1UQ51BG0+V1GL1UQ51-BG01	=V1GL1UQ51BG0+V1GL1UQ51-XG1/2	TPE	4	3	18	5	
=V1GL1UQ51BG0-W1.2	=V1GL1UQ51BG0+V1GL1UQ51-BG02	=V1GL1UQ51BG0+V1GL1UQ51-XG1/2	TPE	4	3	18	5	
=V1GL1UQ51BG0-W2	=V1GL1UQ51BG0+V1GL1UQ51-XG3/4	=V1GL1UQ51KF1+V1GL1UQ51-KF1.13-X2	TPE	4	4	18	0.5	
=V1GL1UQ51BG0-W2.1	=V1GL1UQ51BG0+V1GL1UQ51-BG03	=V1GL1UQ51BG0+V1GL1UQ51-XG3/4	TPE	4	3	18	2	
=V1GL1UQ51BG0-W2.2	=V1GL1UQ51BG0+V1GL1UQ51-BG04	=V1GL1UQ51BG0+V1GL1UQ51-XG3/4	TPE	4	3	18	4	

Cable overview

F10_001_Cable

Cable name	Source (from)	Target (to)	cable type	all conductors	Conductors used	Cross-section [mm]	Length [m]	remark
=V1GL1UQ51BG0-W3	=V1GL1UQ51BG0+V1GL1UQ51-XG5/6	=V1GL1UQ51KF1+V1GL1UQ51-KF1.13-X3	TPE	4	4	18	0.5	
=V1GL1UQ51BG0-W3.1	=V1GL1UQ51BG0+V1GL1UQ51-BG05	=V1GL1UQ51BG0+V1GL1UQ51-XG5/6	TPE	4	3	18	4	
=V1GL1UQ51BG0-W3.2	=V1GL1UQ51BG0+V1GL1UQ51-BG06	=V1GL1UQ51BG0+V1GL1UQ51-XG5/6	TPE	4	3	18	6	
=V1GL1UQ51BG0-W4	=V1GL1UQ51BG0+V1GL1UQ51-XG7/8	=V1GL1UQ51KF1+V1GL1UQ51-KF1.13-X4	TPE	4	4	18	0.5	
=V1GL1UQ51BG0-W4.1	=V1GL1UQ51BG0+V1GL1UQ51-BG07	=V1GL1UQ51BG0+V1GL1UQ51-XG7/8	TPE	4	3	18	5	
=V1GL1UQ51BG0-W4.2	=V1GL1UQ51BG0+V1GL1UQ51-BG08	=V1GL1UQ51BG0+V1GL1UQ51-XG7/8	TPE	4	3	18	5	
=V1GL1UQ51BG0-W5	=V1GL1UQ51BG0+V1GL1UQ51-XG9/10	=V1GL1UQ51KF1+V1GL1UQ51-KF1.13-X5	TPE	4	4	18	0.5	
=V1GL1UQ51BG0-W5.1	=V1GL1UQ51BG0+V1GL1UQ51-BG09	=V1GL1UQ51BG0+V1GL1UQ51-XG9/10	TPE	4	3	18	5	
=V1GL1UQ51BG0-W5.2	=V1GL1UQ51BG0+V1GL1UQ51-BG10	=V1GL1UQ51BG0+V1GL1UQ51-XG9/10	TPE	4	3	18	5	
=V1GL1UQ51BG0-W6	=V1GL1UQ51BG0+V1GL1UQ51-XG11/12	=V1GL1UQ51KF1+V1GL1UQ51-KF1.13-X6	TPE	4	4	18	0.5	
=V1GL1UQ51BG0-W6.1	=V1GL1UQ51BG0+V1GL1UQ51-BG11	=V1GL1UQ51BG0+V1GL1UQ51-XG11/12	TPE	4	3	18	5	
=V1GL1UQ51BG0-W6.2	=V1GL1UQ51BG0+V1GL1UQ51-BG12	=V1GL1UQ51BG0+V1GL1UQ51-XG11/12	TPE	4	3	18	5	
=V1GL1UQ51BG0-W7	=V1GL1UQ51BG0+V1GL1UQ51-XG13/14	=V1GL1UQ51KF1+V1GL1UQ51-KF1.13-X7	TPE	4	4	18	0.5	
=V1GL1UQ51BG0-W7.1	=V1GL1UQ51BG0+V1GL1UQ51-BG13	=V1GL1UQ51BG0+V1GL1UQ51-XG13/14	TPE	4	3	18	5	
=V1GL1UQ51BG0-W7.2	=V1GL1UQ51BG0+V1GL1UQ51-BG14	=V1GL1UQ51BG0+V1GL1UQ51-XG13/14	TPE	4	3	18	5	
=V1GL1UQ51BG0-W8	=V1GL1UQ51BG0+V1GL1UQ51-XG15/16	=V1GL1UQ51KF1+V1GL1UQ51-KF1.13-X8	TPE	4	4	18	0.5	
=V1GL1UQ51BG0-W8.1	=V1GL1UQ51BG0+V1GL1UQ51-BG15	=V1GL1UQ51BG0+V1GL1UQ51-XG15/16	TPE	4	3	18	5	
=V1GL1UQ51BG0-W8.2	=V1GL1UQ51BG0+V1GL1UQ51-BG16	=V1GL1UQ51BG0+V1GL1UQ51-XG15/16	TPE	4	3	18	5	
=V1GL1UQ51BG0-W9	=V1GL1UQ51BG0+V1GL1UQ51-XG17/18	=V1GL1UQ51KF3+V1GL1UQ51-KF3.12-X1	TPE	4	4	18	0.5	
=V1GL1UQ51BG0-W9.1	=V1GL1UQ51BG0+V1GL1UQ51-BG17	=V1GL1UQ51BG0+V1GL1UQ51-XG17/18	TPE	4	3	18	5	
=V1GL1UQ51BG0-W9.2	=V1GL1UQ51BG0+V1GL1UQ51-BG18	=V1GL1UQ51BG0+V1GL1UQ51-XG17/18	TPE	4	3	18	5	
=V1GL1UQ51BG0-W10	=V1GL1UQ51BG0+V1GL1UQ51-XG19/20	=V1GL1UQ51KF3+V1GL1UQ51-KF3.12-X2	TPE	4	4	18	0.5	
=V1GL1UQ51BG0-W10.1	=V1GL1UQ51BG0+V1GL1UQ51-BG19	=V1GL1UQ51BG0+V1GL1UQ51-XG19/20	TPE	4	3	18	8	
=V1GL1UQ51BG0-W10.2	=V1GL1UQ51BG0+V1GL1UQ51-BG20	=V1GL1UQ51BG0+V1GL1UQ51-XG19/20	TPE	4	3	18	6	
=V1GL1UQ51BG0-W11	=V1GL1UQ51BG0+V1GL1UQ51-XG21/22	=V1GL1UQ51KF3+V1GL1UQ51-KF3.12-X3	TPE	4	4	18	0.5	
=V1GL1UQ51BG0-W11.1	=V1GL1UQ51BG0+V1GL1UQ51-BG21	=V1GL1UQ51BG0+V1GL1UQ51-XG21/22	TPE	4	3	18	6	
=V1GL1UQ51BG0-W11.2	=V1GL1UQ51BG0+V1GL1UQ51-BG22	=V1GL1UQ51BG0+V1GL1UQ51-XG21/22	TPE	4	3	18	8	
=V1GL1UQ51BG0-W12	=V1GL1UQ51BG0+V1GL1UQ51-XG23/24	=V1GL1UQ51KF3+V1GL1UQ51-KF3.12-X4	TPE	4	4	18	0.5	
=V1GL1UQ51BG0-W12.1	=V1GL1UQ51BG0+V1GL1UQ51-BG23	=V1GL1UQ51BG0+V1GL1UQ51-XG23/24	TPE	4	3	18	3	
=V1GL1UQ51BG0-W12.2	=V1GL1UQ51BG0+V1GL1UQ51-BG24	=V1GL1UQ51BG0+V1GL1UQ51-XG23/24	TPE	4	3	18	8	
=V1GL1UQ51BG0-W13	=V1GL1UQ51BG0+V1GL1UQ51-BG25	=V1GL1UQ51KF3+V1GL1UQ51-KF3.12-X5	TPE	4	3	18	8	
=V1GL1UQ51UQ1.1-W1	=V1GL1UQ51KF1+V1GL1UQ51-KF1.11-X1	=V1GL1UQ51UQ1.1+V1GL1UQ51UQ1.1-BGS/R	TPE	4	4	18	3	
=V1GL1UQ51UQ1.2-W1	=V1GL1UQ51KF1+V1GL1UQ51-KF1.11-X2	=V1GL1UQ51UQ1.2+V1GL1UQ51UQ1.2-BGS/R	TPE	4	4	18	2	
=V1GL1UQ51UQ1.3-W1	=V1GL1UQ51KF1+V1GL1UQ51-KF1.11-X3	=V1GL1UQ51UQ1.3+V1GL1UQ51UQ1.3-BGS/R	TPE	4	4	18	4	
=V1GL1UQ51UQ2.1-W1	=V1GL1UQ51KF1+V1GL1UQ51-KF1.11-X4	=V1GL1UQ51UQ2.1+V1GL1UQ51UQ2.1-BGS/R	TPE	4	4	18	4	
=V1GL1UQ51UQ3.1-W1	=V1GL1UQ51KF1+V1GL1UQ51-KF1.11-X5	=V1GL1UQ51UQ3.1+V1GL1UQ51UQ3.1-BGS/R	TPE	4	4	18	5	
=V1GL1UQ51UQ3.2-W1	=V1GL1UQ51KF1+V1GL1UQ51-KF1.11-X6	=V1GL1UQ51UQ3.2+V1GL1UQ51UQ3.2-BGS/R	TPE	4	4	18	5	
=V1GL1UQ51UQ4.1-W1	=V1GL1UQ51KF1+V1GL1UQ51-KF1.11-X7	=V1GL1UQ51UQ4.1+V1GL1UQ51UQ4.1-BGS/R	TPE	4	4	18	4	
=V1GL1UQ51UQ4.2-W1	=V1GL1UQ51KF1+V1GL1UQ51-KF1.11-X8	=V1GL1UQ51UQ4.2+V1GL1UQ51UQ4.2-BGS/R	TPE	4	4	18	5	
=V1GL1UQ51UQ5.1-W1	=V1GL1UQ51KF1+V1GL1UQ51-KF1.12-X1	=V1GL1UQ51UQ5.1+V1GL1UQ51UQ5.1-BGS/R	TPE	4	4	18	4	
=V1GL1UQ51UQ6.1-W1	=V1GL1UQ51KF1+V1GL1UQ51-KF1.12-X2	=V1GL1UQ51UQ6.1+V1GL1UQ51UQ6.1-BGS/R	TPE	4	4	18	4	
=V1GL1UQ51UQ7.1-W1	=V1GL1UQ51KF1+V1GL1UQ51-KF1.12-X3	=V1GL1UQ51UQ7.1+V1GL1UQ51UQ7.1-XGR/S	TPE	4	4	18	4	
=V1GL1UQ51UQ7.1-W1.1	=V1GL1UQ51UQ7.1+V1GL1UQ51UQ7.1-BGR	=V1GL1UQ51UQ7.1+V1GL1UQ51UQ7.1-XGR/S	TPE	4	3	18	0.5	
=V1GL1UQ51UQ7.1-W1.2	=V1GL1UQ51UQ7.1+V1GL1UQ51UQ7.1-BGS	=V1GL1UQ51UQ7.1+V1GL1UQ51UQ7.1-XGR/S	TPE	4	3	18	0.5	
=V1GL1UQ51UQ8.1-W1	=V1GL1UQ51KF1+V1GL1UQ51-KF1.12-X4	=V1GL1UQ51UQ8.1+V1GL1UQ51UQ8.1-BGS/R	TPE	4	4	18	5	
=V1GL1UQ51UQ8.2-W1	=V1GL1UQ51KF1+V1GL1UQ51-KF1.12-X5	=V1GL1UQ51UQ8.2+V1GL1UQ51UQ8.2-BGS/R	TPE	4	4	18	5	

Cable overview

F10_001_Cable

Cable name	Source (from)	Target (to)	cable type	all conductors	Conductors used	Cross-section [mm]	Length [m]	remark
=V1GL1UQ51UQ8.3-W1	=V1GL1UQ51KF1+V1GL1UQ51-KF1.12-X6	=V1GL1UQ51UQ8.3+V1GL1UQ51UQ8.3-BGS/R	TPE	4	4	18	5	
=V1GL1UQ51UQ9.1-W1	=V1GL1UQ51KF1+V1GL1UQ51-KF1.12-X7	=V1GL1UQ51UQ9.1+V1GL1UQ51UQ9.1-BGS/R	TPE	4	4	18	6	
=V1GL1UQ51UQ10.1-W1	=V1GL1UQ51KF1+V1GL1UQ51-KF1.12-X8	=V1GL1UQ51UQ10.1+V1GL1UQ51UQ10.1-BGS/R	TPE	4	4	18	6	
=V1GL1UQ51UQ11.1-W1	=V1GL1UQ51KF2+V1GL1UQ51-KF2.11-X1	=V1GL1UQ51UQ11.1+V1GL1UQ51UQ11.1-BGS/R	TPE	4	4	18	4	
=V1GL1UQ51UQ11.2-W1	=V1GL1UQ51KF2+V1GL1UQ51-KF2.11-X2	=V1GL1UQ51UQ11.2+V1GL1UQ51UQ11.2-BGS/R	TPE	4	4	18	4	
=V1GL1UQ51UQ11.3-W1	=V1GL1UQ51KF2+V1GL1UQ51-KF2.11-X3	=V1GL1UQ51UQ11.3+V1GL1UQ51UQ11.3-BGS/R	TPE	4	4	18	4	
=V1GL1UQ51UQ11.4-W1	=V1GL1UQ51KF2+V1GL1UQ51-KF2.11-X4	=V1GL1UQ51UQ11.4+V1GL1UQ51UQ11.4-BGS/R	TPE	4	4	18	5	
=V1GL1UQ51UQ11.5-W1	=V1GL1UQ51KF2+V1GL1UQ51-KF2.11-X5	=V1GL1UQ51UQ11.5+V1GL1UQ51UQ11.5-BGS/R	TPE	4	4	18	3	
=V1GL1UQ51UQ11.6-W1	=V1GL1UQ51KF2+V1GL1UQ51-KF2.11-X6	=V1GL1UQ51UQ11.6+V1GL1UQ51UQ11.6-BGS/R	TPE	4	4	18	3	
=V1GL1UQ51UQ12.1-W1	=V1GL1UQ51KF2+V1GL1UQ51-KF2.11-X7	=V1GL1UQ51UQ12.1+V1GL1UQ51UQ12.1-BGS/R	TPE	4	4	18	5	
=V1GL1UQ51UQ12.2-W1	=V1GL1UQ51KF2+V1GL1UQ51-KF2.11-X8	=V1GL1UQ51UQ12.2+V1GL1UQ51UQ12.2-BGS/R	TPE	4	4	18	4	
=V1GL1UQ51UQ12.3-W1	=V1GL1UQ51KF2+V1GL1UQ51-KF2.12-X1	=V1GL1UQ51UQ12.3+V1GL1UQ51UQ12.3-BGS/R	TPE	4	4	18	5	
=V1GL1UQ51UQ12.4-W1	=V1GL1UQ51KF2+V1GL1UQ51-KF2.12-X2	=V1GL1UQ51UQ12.4+V1GL1UQ51UQ12.4-BGS/R	TPE	4	4	18	3	
=V1GL1UQ51UQ13.1-W1	=V1GL1UQ51KF2+V1GL1UQ51-KF2.12-X3	=V1GL1UQ51UQ13.1+V1GL1UQ51UQ13.1-BGS/R	TPE	4	4	18	5	
=V1GL1UQ51UQ13.2-W1	=V1GL1UQ51KF2+V1GL1UQ51-KF2.12-X4	=V1GL1UQ51UQ13.2+V1GL1UQ51UQ13.2-BGS/R	TPE	4	4	18	4	
=V1GL1UQ51UQ14.1-W1	=V1GL1UQ51KF2+V1GL1UQ51-KF2.12-X5	=V1GL1UQ51UQ14.1+V1GL1UQ51UQ14.1-BGS/R	TPE	4	4	18	5	
=V1GL1UQ51UQ14.2-W1	=V1GL1UQ51KF2+V1GL1UQ51-KF2.12-X6	=V1GL1UQ51UQ14.2+V1GL1UQ51UQ14.2-BGS/R	TPE	4	4	18	6	
=V1GL1UQ51UQ14.3-W1	=V1GL1UQ51KF2+V1GL1UQ51-KF2.12-X7	=V1GL1UQ51UQ14.3+V1GL1UQ51UQ14.3-BGS/R	TPE	4	4	18	1	
=V1GL1UQ51UQ14.4-W1	=V1GL1UQ51KF2+V1GL1UQ51-KF2.12-X8	=V1GL1UQ51UQ14.4+V1GL1UQ51UQ14.4-BGS/R	TPE	4	4	18	5	
=V1GL1UQ51UQ15.1-W1	=V1GL1UQ51KF2+V1GL1UQ51-KF2.13-X1	=V1GL1UQ51UQ15.1+V1GL1UQ51UQ15.1-BGS/R	TPE	4	4	18	4	
=V1GL1UQ51UQ16.1-W1	=V1GL1UQ51KF2+V1GL1UQ51-KF2.13-X2	=V1GL1UQ51UQ16.1+V1GL1UQ51UQ16.1-BGS/R	TPE	4	4	18	4	
=V1GL1UQ51UQ17.1-W1	=V1GL1UQ51KF2+V1GL1UQ51-KF2.13-X3	=V1GL1UQ51UQ17.1+V1GL1UQ51UQ17.1-BGS/R	TPE	4	4	18	4	
=V1GL1UQ51UQ18.1-W1	=V1GL1UQ51KF2+V1GL1UQ51-KF2.13-X4	=V1GL1UQ51UQ18.1+V1GL1UQ51UQ18.1-BGS/R	TPE	4	4	18	6	
=V1GL1UQ51UQ19.1-W1	=V1GL1UQ51KF2+V1GL1UQ51-KF2.13-X5	=V1GL1UQ51UQ19.1+V1GL1UQ51UQ19.1-BGS/R	TPE	4	4	18	6	
=V1GL1UQ51UQ20.1-W1	=V1GL1UQ51KF2+V1GL1UQ51-KF2.13-X6	=V1GL1UQ51UQ20.1+V1GL1UQ51UQ20.1-BGS/R	TPE	4	4	18	6	
=V1GL1UQ51UQ21.1-W1	=V1GL1UQ51KF3+V1GL1UQ51-KF3.11-X1	=V1GL1UQ51UQ21.1+V1GL1UQ51UQ21.1-BGS/R	TPE	4	4	18	5	
=V1GL1UQ51UQ22.1-W1	=V1GL1UQ51KF3+V1GL1UQ51-KF3.11-X2	=V1GL1UQ51UQ22.1+V1GL1UQ51UQ22.1-BGS/R	TPE	4	4	18	6	
=V1GL1UQ51UQ23.1-W1	=V1GL1UQ51KF3+V1GL1UQ51-KF3.11-X3	=V1GL1UQ51UQ23.1+V1GL1UQ51UQ23.1-BGS/R	TPE	4	4	18	5	
=V1GL1UQ51UQ24.1-W1	=V1GL1UQ51KF3+V1GL1UQ51-KF3.11-X4	=V1GL1UQ51UQ24.1+V1GL1UQ51UQ24.1-BGS/R	TPE	4	4	18	6	
=V1GL1UQ51UQ25.1-W1	=V1GL1UQ51KF3+V1GL1UQ51-KF3.11-X5	=V1GL1UQ51UQ25.1+V1GL1UQ51UQ25.1-BGS/R	TPE	4	4	18	5	
=V1GL1UQ51UQ26.1-W1	=V1GL1UQ51KF3+V1GL1UQ51-KF3.11-X6	=V1GL1UQ51UQ26.1+V1GL1UQ51UQ26.1-BGS/R	TPE	4	4	18	5	
=V1GL1UQ51UQ26.2-W1	=V1GL1UQ51KF3+V1GL1UQ51-KF3.11-X7	=V1GL1UQ51UQ26.2+V1GL1UQ51UQ26.2-BGS/R	TPE	4	4	18	4	
=V1GL1UQ52BG0-W1	=V1GL1UQ52BG0+V1GL1UQ52-XG1/2	=V1GL1UQ52KF2+V1GL1UQ52-KF2.14-X1	TPE	4	4	18	0.5	
=V1GL1UQ52BG0-W1.1	=V1GL1UQ52BG0+V1GL1UQ52-BG01	=V1GL1UQ52BG0+V1GL1UQ52-XG1/2	TPE	4	3	18	2	
=V1GL1UQ52BG0-W1.2	=V1GL1UQ52BG0+V1GL1UQ52-BG02	=V1GL1UQ52BG0+V1GL1UQ52-XG1/2	TPE	4	3	18	4	
=V1GL1UQ52BG0-W2	=V1GL1UQ52BG0+V1GL1UQ52-XG3/4	=V1GL1UQ52KF2+V1GL1UQ52-KF2.14-X2	TPE	4	4	18	0.5	
=V1GL1UQ52BG0-W2.1	=V1GL1UQ52BG0+V1GL1UQ52-BG03	=V1GL1UQ52BG0+V1GL1UQ52-XG3/4	TPE	4	3	18	4	
=V1GL1UQ52BG0-W2.2	=V1GL1UQ52BG0+V1GL1UQ52-BG04	=V1GL1UQ52BG0+V1GL1UQ52-XG3/4	TPE	4	3	18	5	
=V1GL1UQ52BG0-W3	=V1GL1UQ52BG0+V1GL1UQ52-XG5/6	=V1GL1UQ52KF2+V1GL1UQ52-KF2.14-X3	TPE	4	4	18	0.5	
=V1GL1UQ52BG0-W3.1	=V1GL1UQ52BG0+V1GL1UQ52-BG05	=V1GL1UQ52BG0+V1GL1UQ52-XG5/6	TPE	4	3	18	5	
=V1GL1UQ52BG0-W3.2	=V1GL1UQ52BG0+V1GL1UQ52-BG06	=V1GL1UQ52BG0+V1GL1UQ52-XG5/6	TPE	4	3	18	6	
=V1GL1UQ52BG0-W4	=V1GL1UQ52BG0+V1GL1UQ52-XG7/8	=V1GL1UQ52KF2+V1GL1UQ52-KF2.14-X4	TPE	4	4	18	0.5	
=V1GL1UQ52BG0-W4.1	=V1GL1UQ52BG0+V1GL1UQ52-BG07	=V1GL1UQ52BG0+V1GL1UQ52-XG7/8	TPE	4	3	18	6	
=V1GL1UQ52BG0-W4.2	=V1GL1UQ52BG0+V1GL1UQ52-BG08	=V1GL1UQ52BG0+V1GL1UQ52-XG7/8	TPE	4	3	18	6	
=V1GL1UQ52BG0-W5	=V1GL1UQ52BG0+V1GL1UQ52-XG9/10	=V1GL1UQ52KF2+V1GL1UQ52-KF2.14-X5	TPE	4	4	18	0.5	
=V1GL1UQ52BG0-W5.1	=V1GL1UQ52BG0+V1GL1UQ52-BG09	=V1GL1UQ52BG0+V1GL1UQ52-XG9/10	TPE	4	3	18	5	

Cable overview

F10_001_Cable

Cable name	Source (from)	Target (to)	cable type	all conductors	Conductors used	Cross-section [mm]	Length [m]	remark
=V1GL1UQ52BG0-W5.2	=V1GL1UQ52BG0+V1GL1UQ52-BG10	=V1GL1UQ52BG0+V1GL1UQ52-XG9/10	TPE	4	3	18	5	
=V1GL1UQ52BG0-W6	=V1GL1UQ52BG0+V1GL1UQ52-XG11/12	=V1GL1UQ52KF2+V1GL1UQ52-KF2.14-X6	TPE	4	4	18	0.5	
=V1GL1UQ52BG0-W6.1	=V1GL1UQ52BG0+V1GL1UQ52-BG11	=V1GL1UQ52BG0+V1GL1UQ52-XG11/12	TPE	4	3	18	4	
=V1GL1UQ52BG0-W6.2	=V1GL1UQ52BG0+V1GL1UQ52-BG12	=V1GL1UQ52BG0+V1GL1UQ52-XG11/12	TPE	4	3	18	4	
=V1GL1UQ52BG0-W7	=V1GL1UQ52BG0+V1GL1UQ52-XG13/14	=V1GL1UQ52KF2+V1GL1UQ52-KF2.14-X7	TPE	4	4	18	0.5	
=V1GL1UQ52BG0-W7.1	=V1GL1UQ52BG0+V1GL1UQ52-BG13	=V1GL1UQ52BG0+V1GL1UQ52-XG13/14	TPE	4	3	18	5	
=V1GL1UQ52BG0-W7.2	=V1GL1UQ52BG0+V1GL1UQ52-BG14	=V1GL1UQ52BG0+V1GL1UQ52-XG13/14	TPE	4	3	18	5	
=V1GL1UQ52BG0-W8	=V1GL1UQ52BG0+V1GL1UQ52-XG15/16	=V1GL1UQ52KF2+V1GL1UQ52-KF2.14-X8	TPE	4	4	18	0.5	
=V1GL1UQ52BG0-W8.1	=V1GL1UQ52BG0+V1GL1UQ52-BG15	=V1GL1UQ52BG0+V1GL1UQ52-XG15/16	TPE	4	3	18	5	
=V1GL1UQ52BG0-W8.2	=V1GL1UQ52BG0+V1GL1UQ52-BG16	=V1GL1UQ52BG0+V1GL1UQ52-XG15/16	TPE	4	3	18	6	
=V1GL1UQ52BG0-W9	=V1GL1UQ52BG0+V1GL1UQ52-XG17/18	=V1GL1UQ52KF2+V1GL1UQ52-KF2.15-X1	TPE	4	4	18	0.5	
=V1GL1UQ52BG0-W9.1	=V1GL1UQ52BG0+V1GL1UQ52-BG17	=V1GL1UQ52BG0+V1GL1UQ52-XG17/18	TPE	4	3	18	6	
=V1GL1UQ52BG0-W9.2	=V1GL1UQ52BG0+V1GL1UQ52-BG18	=V1GL1UQ52BG0+V1GL1UQ52-XG17/18	TPE	4	3	18	6	
=V1GL1UQ52BG0-W10	=V1GL1UQ52BG0+V1GL1UQ52-XG19/20	=V1GL1UQ52KF2+V1GL1UQ52-KF2.15-X2	TPE	4	4	18	0.5	
=V1GL1UQ52BG0-W10.1	=V1GL1UQ52BG0+V1GL1UQ52-BG19	=V1GL1UQ52BG0+V1GL1UQ52-XG19/20	TPE	4	3	18	5	
=V1GL1UQ52BG0-W10.2	=V1GL1UQ52BG0+V1GL1UQ52-BG20	=V1GL1UQ52BG0+V1GL1UQ52-XG19/20	TPE	4	3	18	4	
=V1GL1UQ52BG0-W11	=V1GL1UQ52BG0+V1GL1UQ52-XG21/22	=V1GL1UQ52KF2+V1GL1UQ52-KF2.15-X3	TPE	4	4	18	0.5	
=V1GL1UQ52BG0-W11.1	=V1GL1UQ52BG0+V1GL1UQ52-BG21	=V1GL1UQ52BG0+V1GL1UQ52-XG21/22	TPE	4	3	18	5	
=V1GL1UQ52BG0-W11.2	=V1GL1UQ52BG0+V1GL1UQ52-BG22	=V1GL1UQ52BG0+V1GL1UQ52-XG21/22	TPE	4	3	18	5	
=V1GL1UQ52BG0-W12	=V1GL1UQ52BG0+V1GL1UQ52-XG23/24	=V1GL1UQ52KF2+V1GL1UQ52-KF2.15-X4	TPE	4	4	18	0.5	
=V1GL1UQ52BG0-W12.1	=V1GL1UQ52BG0+V1GL1UQ52-BG23	=V1GL1UQ52BG0+V1GL1UQ52-XG23/24	TPE	4	3	18	4	
=V1GL1UQ52BG0-W12.2	=V1GL1UQ52BG0+V1GL1UQ52-BG24	=V1GL1UQ52BG0+V1GL1UQ52-XG23/24	TPE	4	3	18	4	
=V1GL1UQ52BG0-W13	=V1GL1UQ52BG0+V1GL1UQ52-XG25/26	=V1GL1UQ52KF2+V1GL1UQ52-KF2.15-X5	TPE	4	4	18	0.5	
=V1GL1UQ52BG0-W13.1	=V1GL1UQ52BG0+V1GL1UQ52-BG25	=V1GL1UQ52BG0+V1GL1UQ52-XG25/26	TPE	4	3	18	6	
=V1GL1UQ52BG0-W13.2	=V1GL1UQ52BG0+V1GL1UQ52-BG26	=V1GL1UQ52BG0+V1GL1UQ52-XG25/26	TPE	4	3	18	4	
=V1GL1UQ52BG0-W14	=V1GL1UQ52BG0+V1GL1UQ52-XG27/28	=V1GL1UQ52KF2+V1GL1UQ52-KF2.15-X6	TPE	4	4	18	0.5	
=V1GL1UQ52BG0-W14.1	=V1GL1UQ52BG0+V1GL1UQ52-BG27	=V1GL1UQ52BG0+V1GL1UQ52-XG27/28	TPE	4	3	18	5	
=V1GL1UQ52BG0-W14.2	=V1GL1UQ52BG0+V1GL1UQ52-BG28	=V1GL1UQ52BG0+V1GL1UQ52-XG27/28	TPE	4	3	18	4	
=V1GL1UQ52BG0-W15	=V1GL1UQ52BG0+V1GL1UQ52-XG29/30	=V1GL1UQ52KF2+V1GL1UQ52-KF2.15-X7	TPE	4	4	18	0.5	
=V1GL1UQ52BG0-W15.1	=V1GL1UQ52BG0+V1GL1UQ52-BG29	=V1GL1UQ52BG0+V1GL1UQ52-XG29/30	TPE	4	3	18	4	
=V1GL1UQ52BG0-W15.2	=V1GL1UQ52BG0+V1GL1UQ52-BG30	=V1GL1UQ52BG0+V1GL1UQ52-XG29/30	TPE	4	3	18	6	
=V1GL1UQ52BG0-W16	=V1GL1UQ52BG0+V1GL1UQ52-XG31/32	=V1GL1UQ52KF2+V1GL1UQ52-KF2.15-X8	TPE	4	4	18	0.5	
=V1GL1UQ52BG0-W16.1	=V1GL1UQ52BG0+V1GL1UQ52-BG31	=V1GL1UQ52BG0+V1GL1UQ52-XG31/32	TPE	4	3	18	6	
=V1GL1UQ52BG0-W16.2	=V1GL1UQ52BG0+V1GL1UQ52-BG32	=V1GL1UQ52BG0+V1GL1UQ52-XG31/32	TPE	4	3	18	4	
=V1GL1UQ52BG0-W17	=V1GL1UQ52BG0+V1GL1UQ52-XG33/34	=V1GL1UQ52KF1+V1GL1UQ52-KF1.15-X5	TPE	4	4	18	0.5	
=V1GL1UQ52BG0-W17.1	=V1GL1UQ52BG0+V1GL1UQ52-BG33	=V1GL1UQ52BG0+V1GL1UQ52-XG33/34	TPE	4	3	18	5	
=V1GL1UQ52BG0-W17.2	=V1GL1UQ52BG0+V1GL1UQ52-BG34	=V1GL1UQ52BG0+V1GL1UQ52-XG33/34	TPE	4	3	18	4	
=V1GL1UQ52BG0-W18	=V1GL1UQ52BG0+V1GL1UQ52-BG35	=V1GL1UQ52KF1+V1GL1UQ52-KF1.15-X6	TPE	4	3	18	5	
=V1GL1UQ52UQ1.1-W1	=V1GL1UQ52KF1+V1GL1UQ52-KF1.11-X1	=V1GL1UQ52UQ1.1+V1GL1UQ52UQ1.1-BGS/R	TPE	4	4	18	3	
=V1GL1UQ52UQ1.2-W1	=V1GL1UQ52KF1+V1GL1UQ52-KF1.11-X2	=V1GL1UQ52UQ1.2+V1GL1UQ52UQ1.2-BGS/R	TPE	4	4	18	2	
=V1GL1UQ52UQ1.3-W1	=V1GL1UQ52KF1+V1GL1UQ52-KF1.11-X3	=V1GL1UQ52UQ1.3+V1GL1UQ52UQ1.3-BGS/R	TPE	4	4	18	5	
=V1GL1UQ52UQ1.4-W1	=V1GL1UQ52KF1+V1GL1UQ52-KF1.11-X4	=V1GL1UQ52UQ1.4+V1GL1UQ52UQ1.4-BGS/R	TPE	4	4	18	6	
=V1GL1UQ52UQ1.5-W1	=V1GL1UQ52KF1+V1GL1UQ52-KF1.11-X5	=V1GL1UQ52UQ1.5+V1GL1UQ52UQ1.5-BGS/R	TPE	4	4	18	6	
=V1GL1UQ52UQ1.6-W1	=V1GL1UQ52KF1+V1GL1UQ52-KF1.11-X6	=V1GL1UQ52UQ1.6+V1GL1UQ52UQ1.6-BGS/R	TPE	4	4	18	4	
=V1GL1UQ52UQ2.1-W1	=V1GL1UQ52KF1+V1GL1UQ52-KF1.11-X7	=V1GL1UQ52UQ2.1+V1GL1UQ52UQ2.1-BGS/R	TPE	4	4	18	4	
=V1GL1UQ52UQ3.1-W1	=V1GL1UQ52KF1+V1GL1UQ52-KF1.11-X8	=V1GL1UQ52UQ3.1+V1GL1UQ52UQ3.1-BGS/R	TPE	4	4	18	4	

Cable overview

F10_001_Cable

Cable name	Source (from)	Target (to)	cable type	all conductors	Conductors used	Cross-section [mm]	Length [m]	remark
=V1GL1UQ52UQ3.2-W1	=V1GL1UQ52KF1+V1GL1UQ52-KF1.12-X1	=V1GL1UQ52UQ3.2+V1GL1UQ52UQ3.2-BGS/R	TPE	4	4	18	5	
=V1GL1UQ52UQ3.3-W1	=V1GL1UQ52KF1+V1GL1UQ52-KF1.12-X2	=V1GL1UQ52UQ3.3+V1GL1UQ52UQ3.3-BGS/R	TPE	4	4	18	5	
=V1GL1UQ52UQ3.4-W1	=V1GL1UQ52KF1+V1GL1UQ52-KF1.12-X3	=V1GL1UQ52UQ3.4+V1GL1UQ52UQ3.4-BGS/R	TPE	4	4	18	5	
=V1GL1UQ52UQ3.5-W1	=V1GL1UQ52KF1+V1GL1UQ52-KF1.12-X4	=V1GL1UQ52UQ3.5+V1GL1UQ52UQ3.5-BGS/R	TPE	4	4	18	4	
=V1GL1UQ52UQ3.6-W1	=V1GL1UQ52KF1+V1GL1UQ52-KF1.12-X5	=V1GL1UQ52UQ3.6+V1GL1UQ52UQ3.6-BGS/R	TPE	4	4	18	4	
=V1GL1UQ52UQ4.1-W1	=V1GL1UQ52KF1+V1GL1UQ52-KF1.12-X6	=V1GL1UQ52UQ4.1+V1GL1UQ52UQ4.1-BGS/R	TPE	4	4	18	4	
=V1GL1UQ52UQ4.2-W1	=V1GL1UQ52KF1+V1GL1UQ52-KF1.12-X7	=V1GL1UQ52UQ4.2+V1GL1UQ52UQ4.2-BGS/R	TPE	4	4	18	5	
=V1GL1UQ52UQ4.3-W1	=V1GL1UQ52KF1+V1GL1UQ52-KF1.12-X8	=V1GL1UQ52UQ4.3+V1GL1UQ52UQ4.3-BGS/R	TPE	4	4	18	5	
=V1GL1UQ52UQ5.1-W1	=V1GL1UQ52KF1+V1GL1UQ52-KF1.13-X1	=V1GL1UQ52UQ5.1+V1GL1UQ52UQ5.1-BGS/R	TPE	4	4	18	4	
=V1GL1UQ52UQ5.2-W1	=V1GL1UQ52KF1+V1GL1UQ52-KF1.13-X2	=V1GL1UQ52UQ5.2+V1GL1UQ52UQ5.2-BGS/R	TPE	4	4	18	5	
=V1GL1UQ52UQ5.3-W1	=V1GL1UQ52KF1+V1GL1UQ52-KF1.13-X3	=V1GL1UQ52UQ5.3+V1GL1UQ52UQ5.3-BGS/R	TPE	4	4	18	5	
=V1GL1UQ52UQ6.1-W1	=V1GL1UQ52KF1+V1GL1UQ52-KF1.13-X4	=V1GL1UQ52UQ6.1+V1GL1UQ52UQ6.1-BGS/R	TPE	4	4	18	6	
=V1GL1UQ52UQ7.1-W1	=V1GL1UQ52KF1+V1GL1UQ52-KF1.13-X5	=V1GL1UQ52UQ7.1+V1GL1UQ52UQ7.1-BGS/R	TPE	4	4	18	4	
=V1GL1UQ52UQ8.1-W1	=V1GL1UQ52KF3+V1GL1UQ52-KF3.11-X1	=V1GL1UQ52UQ8.1+V1GL1UQ52UQ8.1-XGR/S	TPE	4	4	18	4	
=V1GL1UQ52UQ8.1-W1.1	=V1GL1UQ52UQ8.1+V1GL1UQ52UQ8.1-BGR	=V1GL1UQ52UQ8.1+V1GL1UQ52UQ8.1-XGR/S	TPE	4	3	18	0.5	
=V1GL1UQ52UQ8.1-W1.2	=V1GL1UQ52UQ8.1+V1GL1UQ52UQ8.1-BGS	=V1GL1UQ52UQ8.1+V1GL1UQ52UQ8.1-XGR/S	TPE	4	3	18	0.5	
=V1GL1UQ52UQ9.1-W1	=V1GL1UQ52KF1+V1GL1UQ52-KF1.13-X6	=V1GL1UQ52UQ9.1+V1GL1UQ52UQ9.1-BGS/R	TPE	4	4	18	5	
=V1GL1UQ52UQ9.2-W1	=V1GL1UQ52KF1+V1GL1UQ52-KF1.13-X7	=V1GL1UQ52UQ9.2+V1GL1UQ52UQ9.2-BGS/R	TPE	4	4	18	4	
=V1GL1UQ52UQ10.1-W1	=V1GL1UQ52KF1+V1GL1UQ52-KF1.13-X8	=V1GL1UQ52UQ10.1+V1GL1UQ52UQ10.1-BGS/R	TPE	4	4	18	3	
=V1GL1UQ52UQ10.2-W1	=V1GL1UQ52KF1+V1GL1UQ52-KF1.14-X1	=V1GL1UQ52UQ10.2+V1GL1UQ52UQ10.2-BGS/R	TPE	4	4	18	3	
=V1GL1UQ52UQ10.3-W1	=V1GL1UQ52KF1+V1GL1UQ52-KF1.14-X2	=V1GL1UQ52UQ10.3+V1GL1UQ52UQ10.3-BGS/R	TPE	4	4	18	3	
=V1GL1UQ52UQ10.4-W1	=V1GL1UQ52KF1+V1GL1UQ52-KF1.14-X3	=V1GL1UQ52UQ10.4+V1GL1UQ52UQ10.4-BGS/R	TPE	4	4	18	3	
=V1GL1UQ52UQ10.5-W1	=V1GL1UQ52KF1+V1GL1UQ52-KF1.14-X4	=V1GL1UQ52UQ10.5+V1GL1UQ52UQ10.5-BGS/R	TPE	4	4	18	2	
=V1GL1UQ52UQ10.6-W1	=V1GL1UQ52KF1+V1GL1UQ52-KF1.14-X5	=V1GL1UQ52UQ10.6+V1GL1UQ52UQ10.6-BGS/R	TPE	4	4	18	3	
=V1GL1UQ52UQ11.1-W1	=V1GL1UQ52KF1+V1GL1UQ52-KF1.14-X6	=V1GL1UQ52UQ11.1+V1GL1UQ52UQ11.1-BGS/R	TPE	4	4	18	3	
=V1GL1UQ52UQ11.2-W1	=V1GL1UQ52KF1+V1GL1UQ52-KF1.14-X7	=V1GL1UQ52UQ11.2+V1GL1UQ52UQ11.2-BGS/R	TPE	4	4	18	4	
=V1GL1UQ52UQ11.3-W1	=V1GL1UQ52KF1+V1GL1UQ52-KF1.14-X8	=V1GL1UQ52UQ11.3+V1GL1UQ52UQ11.3-BGS/R	TPE	4	4	18	5	
=V1GL1UQ52UQ11.4-W1	=V1GL1UQ52KF1+V1GL1UQ52-KF1.15-X1	=V1GL1UQ52UQ11.4+V1GL1UQ52UQ11.4-BGS/R	TPE	4	4	18	6	
=V1GL1UQ52UQ11.5-W1	=V1GL1UQ52KF1+V1GL1UQ52-KF1.15-X2	=V1GL1UQ52UQ11.5+V1GL1UQ52UQ11.5-BGS/R	TPE	4	4	18	7	
=V1GL1UQ52UQ12.1-W1	=V1GL1UQ52KF2+V1GL1UQ52-KF2.11-X1	=V1GL1UQ52UQ12.1+V1GL1UQ52UQ12.1-BGS/R	TPE	4	4	18	5	
=V1GL1UQ52UQ12.2-W1	=V1GL1UQ52KF2+V1GL1UQ52-KF2.11-X2	=V1GL1UQ52UQ12.2+V1GL1UQ52UQ12.2-BGS/R	TPE	4	4	18	3	
=V1GL1UQ52UQ12.3-W1	=V1GL1UQ52KF2+V1GL1UQ52-KF2.11-X3	=V1GL1UQ52UQ12.3+V1GL1UQ52UQ12.3-BGS/R	TPE	4	4	18	6	
=V1GL1UQ52UQ12.4-W1	=V1GL1UQ52KF2+V1GL1UQ52-KF2.11-X4	=V1GL1UQ52UQ12.4+V1GL1UQ52UQ12.4-BGS/R	TPE	4	4	18	5	
=V1GL1UQ52UQ12.5-W1	=V1GL1UQ52KF2+V1GL1UQ52-KF2.11-X5	=V1GL1UQ52UQ12.5+V1GL1UQ52UQ12.5-BGS/R	TPE	4	4	18	3	
=V1GL1UQ52UQ12.6-W1	=V1GL1UQ52KF2+V1GL1UQ52-KF2.11-X6	=V1GL1UQ52UQ12.6+V1GL1UQ52UQ12.6-BGS/R	TPE	4	4	18	3	
=V1GL1UQ52UQ13.1-W1	=V1GL1UQ52KF2+V1GL1UQ52-KF2.11-X7	=V1GL1UQ52UQ13.1+V1GL1UQ52UQ13.1-BGS/R	TPE	4	4	18	4	
=V1GL1UQ52UQ14.1-W1	=V1GL1UQ52KF2+V1GL1UQ52-KF2.11-X8	=V1GL1UQ52UQ14.1+V1GL1UQ52UQ14.1-BGS/R	TPE	4	4	18	4	
=V1GL1UQ52UQ15.1-W1	=V1GL1UQ52KF2+V1GL1UQ52-KF2.12-X1	=V1GL1UQ52UQ15.1+V1GL1UQ52UQ15.1-BGS/R	TPE	4	4	18	5	
=V1GL1UQ52UQ16.1-W1	=V1GL1UQ52KF2+V1GL1UQ52-KF2.12-X2	=V1GL1UQ52UQ16.1+V1GL1UQ52UQ16.1-BGS/R	TPE	4	4	18	4	
=V1GL1UQ52UQ16.2-W1	=V1GL1UQ52KF2+V1GL1UQ52-KF2.12-X3	=V1GL1UQ52UQ16.2+V1GL1UQ52UQ16.2-BGS/R	TPE	4	4	18	4	
=V1GL1UQ52UQ17.1-W1	=V1GL1UQ52KF2+V1GL1UQ52-KF2.12-X4	=V1GL1UQ52UQ17.1+V1GL1UQ52UQ17.1-BGS/R	TPE	4	4	18	3	
=V1GL1UQ52UQ18.1-W1	=V1GL1UQ52KF2+V1GL1UQ52-KF2.12-X5	=V1GL1UQ52UQ18.1+V1GL1UQ52UQ18.1-BGS/R	TPE	4	4	18	4	
=V1GL1UQ52UQ18.2-W1	=V1GL1UQ52KF2+V1GL1UQ52-KF2.12-X6	=V1GL1UQ52UQ18.2+V1GL1UQ52UQ18.2-BGS/R	TPE	4	4	18	5	
=V1GL1UQ52UQ19.1-W1	=V1GL1UQ52KF2+V1GL1UQ52-KF2.12-X7	=V1GL1UQ52UQ19.1+V1GL1UQ52UQ19.1-BGS/R	TPE	4	4	18	4	
=V1GL1UQ52UQ19.2-W1	=V1GL1UQ52KF2+V1GL1UQ52-KF2.12-X8	=V1GL1UQ52UQ19.2+V1GL1UQ52UQ19.2-BGS/R	TPE	4	4	18	3	
=V1GL1UQ52UQ20.1-W1	=V1GL1UQ52KF2+V1GL1UQ52-KF2.13-X1	=V1GL1UQ52UQ20.1+V1GL1UQ52UQ20.1-BGS/R	TPE	4	4	18	5	

Cable overview

F10_001_Cable

Cable name	Source (from)	Target (to)	cable type	all conductors	Conductors used	Cross-section [mm]	Length [m]	remark
=V1GL1UQ52UQ21.1-W1	=V1GL1UQ52KF2+V1GL1UQ52-KF2.13-X2	=V1GL1UQ52UQ21.1+V1GL1UQ52UQ21.1-BGS/R	TPE	4	4	18	4	
=V1GL1UQ52UQ22.1-W1			TPE	4	0	18	4	
=V1GL1UQ52UQ23.1-W1			TPE	4	0	18	4	
=V1GL1UQ52UQ24.1-W1			TPE	4	0	18	4	
=V1GL1UQ52UQ25.1-W1			TPE	4	0	18	4	
=V1GL1UQ53BG0-W1	=V1GL1UQ53BG0+V1GL1UQ53-XG1/2	=V1GL1UQ53KF1+V1GL1UQ53-KF1.13-X1	TPE	4	4	18	0.5	
=V1GL1UQ53BG0-W1.1	=V1GL1UQ53BG0+V1GL1UQ53-BG01	=V1GL1UQ53BG0+V1GL1UQ53-XG1/2	TPE	4	3	18	5	
=V1GL1UQ53BG0-W1.2	=V1GL1UQ53BG0+V1GL1UQ53-BG02	=V1GL1UQ53BG0+V1GL1UQ53-XG1/2	TPE	4	3	18	5	
=V1GL1UQ53BG0-W2	=V1GL1UQ53BG0+V1GL1UQ53-XG3/4	=V1GL1UQ53KF1+V1GL1UQ53-KF1.13-X2	TPE	4	4	18	0.5	
=V1GL1UQ53BG0-W2.1	=V1GL1UQ53BG0+V1GL1UQ53-BG03	=V1GL1UQ53BG0+V1GL1UQ53-XG3/4	TPE	4	3	18	2	
=V1GL1UQ53BG0-W2.2	=V1GL1UQ53BG0+V1GL1UQ53-BG04	=V1GL1UQ53BG0+V1GL1UQ53-XG3/4	TPE	4	3	18	4	
=V1GL1UQ53BG0-W3	=V1GL1UQ53BG0+V1GL1UQ53-XG5/6	=V1GL1UQ53KF1+V1GL1UQ53-KF1.13-X3	TPE	4	4	18	0.5	
=V1GL1UQ53BG0-W3.1	=V1GL1UQ53BG0+V1GL1UQ53-BG05	=V1GL1UQ53BG0+V1GL1UQ53-XG5/6	TPE	4	3	18	4	
=V1GL1UQ53BG0-W3.2	=V1GL1UQ53BG0+V1GL1UQ53-BG06	=V1GL1UQ53BG0+V1GL1UQ53-XG5/6	TPE	4	3	18	6	
=V1GL1UQ53BG0-W4	=V1GL1UQ53BG0+V1GL1UQ53-XG7/8	=V1GL1UQ53KF1+V1GL1UQ53-KF1.13-X4	TPE	4	4	18	0.5	
=V1GL1UQ53BG0-W4.1	=V1GL1UQ53BG0+V1GL1UQ53-BG07	=V1GL1UQ53BG0+V1GL1UQ53-XG7/8	TPE	4	3	18	5	
=V1GL1UQ53BG0-W4.2	=V1GL1UQ53BG0+V1GL1UQ53-BG08	=V1GL1UQ53BG0+V1GL1UQ53-XG7/8	TPE	4	3	18	5	
=V1GL1UQ53BG0-W5	=V1GL1UQ53BG0+V1GL1UQ53-XG9/10	=V1GL1UQ53KF1+V1GL1UQ53-KF1.13-X5	TPE	4	4	18	0.5	
=V1GL1UQ53BG0-W5.1	=V1GL1UQ53BG0+V1GL1UQ53-BG09	=V1GL1UQ53BG0+V1GL1UQ53-XG9/10	TPE	4	3	18	5	
=V1GL1UQ53BG0-W5.2	=V1GL1UQ53BG0+V1GL1UQ53-BG10	=V1GL1UQ53BG0+V1GL1UQ53-XG9/10	TPE	4	3	18	5	
=V1GL1UQ53BG0-W6	=V1GL1UQ53BG0+V1GL1UQ53-XG11/12	=V1GL1UQ53KF1+V1GL1UQ53-KF1.13-X6	TPE	4	4	18	0.5	
=V1GL1UQ53BG0-W6.1	=V1GL1UQ53BG0+V1GL1UQ53-BG11	=V1GL1UQ53BG0+V1GL1UQ53-XG11/12	TPE	4	3	18	5	
=V1GL1UQ53BG0-W6.2	=V1GL1UQ53BG0+V1GL1UQ53-BG12	=V1GL1UQ53BG0+V1GL1UQ53-XG11/12	TPE	4	3	18	5	
=V1GL1UQ53BG0-W7	=V1GL1UQ53BG0+V1GL1UQ53-XG13/14	=V1GL1UQ53KF1+V1GL1UQ53-KF1.13-X7	TPE	4	4	18	0.5	
=V1GL1UQ53BG0-W7.1	=V1GL1UQ53BG0+V1GL1UQ53-BG13	=V1GL1UQ53BG0+V1GL1UQ53-XG13/14	TPE	4	3	18	5	
=V1GL1UQ53BG0-W7.2	=V1GL1UQ53BG0+V1GL1UQ53-BG14	=V1GL1UQ53BG0+V1GL1UQ53-XG13/14	TPE	4	3	18	5	
=V1GL1UQ53BG0-W8	=V1GL1UQ53BG0+V1GL1UQ53-XG15/16	=V1GL1UQ53KF1+V1GL1UQ53-KF1.13-X8	TPE	4	4	18	0.5	
=V1GL1UQ53BG0-W8.1	=V1GL1UQ53BG0+V1GL1UQ53-BG15	=V1GL1UQ53BG0+V1GL1UQ53-XG15/16	TPE	4	3	18	5	
=V1GL1UQ53BG0-W8.2	=V1GL1UQ53BG0+V1GL1UQ53-BG16	=V1GL1UQ53BG0+V1GL1UQ53-XG15/16	TPE	4	3	18	5	
=V1GL1UQ53BG0-W9	=V1GL1UQ53BG0+V1GL1UQ53-XG17/18	=V1GL1UQ53KF3+V1GL1UQ53-KF3.12-X1	TPE	4	4	18	0.5	
=V1GL1UQ53BG0-W9.1	=V1GL1UQ53BG0+V1GL1UQ53-BG17	=V1GL1UQ53BG0+V1GL1UQ53-XG17/18	TPE	4	3	18	5	
=V1GL1UQ53BG0-W9.2	=V1GL1UQ53BG0+V1GL1UQ53-BG18	=V1GL1UQ53BG0+V1GL1UQ53-XG17/18	TPE	4	3	18	5	
=V1GL1UQ53BG0-W10	=V1GL1UQ53BG0+V1GL1UQ53-XG19/20	=V1GL1UQ53KF3+V1GL1UQ53-KF3.12-X2	TPE	4	4	18	0.5	
=V1GL1UQ53BG0-W10.1	=V1GL1UQ53BG0+V1GL1UQ53-BG19	=V1GL1UQ53BG0+V1GL1UQ53-XG19/20	TPE	4	3	18	8	
=V1GL1UQ53BG0-W10.2	=V1GL1UQ53BG0+V1GL1UQ53-BG20	=V1GL1UQ53BG0+V1GL1UQ53-XG19/20	TPE	4	3	18	6	
=V1GL1UQ53BG0-W11	=V1GL1UQ53BG0+V1GL1UQ53-XG21/22	=V1GL1UQ53KF3+V1GL1UQ53-KF3.12-X3	TPE	4	4	18	0.5	
=V1GL1UQ53BG0-W11.1	=V1GL1UQ53BG0+V1GL1UQ53-BG21	=V1GL1UQ53BG0+V1GL1UQ53-XG21/22	TPE	4	3	18	6	
=V1GL1UQ53BG0-W11.2	=V1GL1UQ53BG0+V1GL1UQ53-BG22	=V1GL1UQ53BG0+V1GL1UQ53-XG21/22	TPE	4	3	18	8	
=V1GL1UQ53BG0-W12	=V1GL1UQ53BG0+V1GL1UQ53-XG23/24	=V1GL1UQ53KF3+V1GL1UQ53-KF3.12-X4	TPE	4	4	18	0.5	
=V1GL1UQ53BG0-W12.1	=V1GL1UQ53BG0+V1GL1UQ53-BG23	=V1GL1UQ53BG0+V1GL1UQ53-XG23/24	TPE	4	3	18	3	
=V1GL1UQ53BG0-W12.2	=V1GL1UQ53BG0+V1GL1UQ53-BG24	=V1GL1UQ53BG0+V1GL1UQ53-XG23/24	TPE	4	3	18	8	
=V1GL1UQ53BG0-W13	=V1GL1UQ53BG0+V1GL1UQ53-BG25	=V1GL1UQ53KF3+V1GL1UQ53-KF3.12-X5	TPE	4	3	18	8	
=V1GL1UQ53UQ1.1-W1	=V1GL1UQ53KF1+V1GL1UQ53-KF1.11-X1	=V1GL1UQ53UQ1.1+V1GL1UQ53UQ1.1-BGS/R	TPE	4	4	18	3	
=V1GL1UQ53UQ1.2-W1	=V1GL1UQ53KF1+V1GL1UQ53-KF1.11-X2	=V1GL1UQ53UQ1.2+V1GL1UQ53UQ1.2-BGS/R	TPE	4	4	18	2	
=V1GL1UQ53UQ1.3-W1	=V1GL1UQ53KF1+V1GL1UQ53-KF1.11-X3	=V1GL1UQ53UQ1.3+V1GL1UQ53UQ1.3-BGS/R	TPE	4	4	18	4	
=V1GL1UQ53UQ2.1-W1	=V1GL1UQ53KF1+V1GL1UQ53-KF1.11-X4	=V1GL1UQ53UQ2.1+V1GL1UQ53UQ2.1-BGS/R	TPE	4	4	18	4	

Cable overview

F10_001_Cable

Cable name	Source (from)	Target (to)	cable type	all conductors	Conductors used	Cross-section [mm]	Length [m]	remark
=V1GL1UQ53UQ3.1-W1	=V1GL1UQ53KF1+V1GL1UQ53-KF1.11-X5	=V1GL1UQ53UQ3.1+V1GL1UQ53UQ3.1-BGS/R	TPE	4	4	18	5	
=V1GL1UQ53UQ3.2-W1	=V1GL1UQ53KF1+V1GL1UQ53-KF1.11-X6	=V1GL1UQ53UQ3.2+V1GL1UQ53UQ3.2-BGS/R	TPE	4	4	18	5	
=V1GL1UQ53UQ4.1-W1	=V1GL1UQ53KF1+V1GL1UQ53-KF1.11-X7	=V1GL1UQ53UQ4.1+V1GL1UQ53UQ4.1-BGS/R	TPE	4	4	18	4	
=V1GL1UQ53UQ4.2-W1	=V1GL1UQ53KF1+V1GL1UQ53-KF1.11-X8	=V1GL1UQ53UQ4.2+V1GL1UQ53UQ4.2-BGS/R	TPE	4	4	18	5	
=V1GL1UQ53UQ5.1-W1	=V1GL1UQ53KF1+V1GL1UQ53-KF1.12-X1	=V1GL1UQ53UQ5.1+V1GL1UQ53UQ5.1-BGS/R	TPE	4	4	18	4	
=V1GL1UQ53UQ6.1-W1	=V1GL1UQ53KF1+V1GL1UQ53-KF1.12-X2	=V1GL1UQ53UQ6.1+V1GL1UQ53UQ6.1-BGS/R	TPE	4	4	18	4	
=V1GL1UQ53UQ7.1-W1	=V1GL1UQ53KF1+V1GL1UQ53-KF1.12-X3	=V1GL1UQ53UQ7.1+V1GL1UQ53UQ7.1-XGR/S	TPE	4	4	18	4	
=V1GL1UQ53UQ7.1-W1.1	=V1GL1UQ53UQ7.1+V1GL1UQ53UQ7.1-BGR	=V1GL1UQ53UQ7.1+V1GL1UQ53UQ7.1-XGR/S	TPE	4	3	18	0.5	
=V1GL1UQ53UQ7.1-W1.2	=V1GL1UQ53UQ7.1+V1GL1UQ53UQ7.1-BGS	=V1GL1UQ53UQ7.1+V1GL1UQ53UQ7.1-XGR/S	TPE	4	3	18	0.5	
=V1GL1UQ53UQ8.1-W1	=V1GL1UQ53KF1+V1GL1UQ53-KF1.12-X4	=V1GL1UQ53UQ8.1+V1GL1UQ53UQ8.1-BGS/R	TPE	4	4	18	5	
=V1GL1UQ53UQ8.2-W1	=V1GL1UQ53KF1+V1GL1UQ53-KF1.12-X5	=V1GL1UQ53UQ8.2+V1GL1UQ53UQ8.2-BGS/R	TPE	4	4	18	5	
=V1GL1UQ53UQ8.3-W1	=V1GL1UQ53KF1+V1GL1UQ53-KF1.12-X6	=V1GL1UQ53UQ8.3+V1GL1UQ53UQ8.3-BGS/R	TPE	4	4	18	5	
=V1GL1UQ53UQ9.1-W1	=V1GL1UQ53KF1+V1GL1UQ53-KF1.12-X7	=V1GL1UQ53UQ9.1+V1GL1UQ53UQ9.1-BGS/R	TPE	4	4	18	6	
=V1GL1UQ53UQ10.1-W1	=V1GL1UQ53KF1+V1GL1UQ53-KF1.12-X8	=V1GL1UQ53UQ10.1+V1GL1UQ53UQ10.1-BGS/R	TPE	4	4	18	6	
=V1GL1UQ53UQ11.1-W1	=V1GL1UQ53KF2+V1GL1UQ53-KF2.11-X1	=V1GL1UQ53UQ11.1+V1GL1UQ53UQ11.1-BGS/R	TPE	4	4	18	4	
=V1GL1UQ53UQ11.2-W1	=V1GL1UQ53KF2+V1GL1UQ53-KF2.11-X2	=V1GL1UQ53UQ11.2+V1GL1UQ53UQ11.2-BGS/R	TPE	4	4	18	4	
=V1GL1UQ53UQ11.3-W1	=V1GL1UQ53KF2+V1GL1UQ53-KF2.11-X3	=V1GL1UQ53UQ11.3+V1GL1UQ53UQ11.3-BGS/R	TPE	4	4	18	4	
=V1GL1UQ53UQ11.4-W1	=V1GL1UQ53KF2+V1GL1UQ53-KF2.11-X4	=V1GL1UQ53UQ11.4+V1GL1UQ53UQ11.4-BGS/R	TPE	4	4	18	5	
=V1GL1UQ53UQ11.5-W1	=V1GL1UQ53KF2+V1GL1UQ53-KF2.11-X5	=V1GL1UQ53UQ11.5+V1GL1UQ53UQ11.5-BGS/R	TPE	4	4	18	3	
=V1GL1UQ53UQ11.6-W1	=V1GL1UQ53KF2+V1GL1UQ53-KF2.11-X6	=V1GL1UQ53UQ11.6+V1GL1UQ53UQ11.6-BGS/R	TPE	4	4	18	3	
=V1GL1UQ53UQ12.1-W1	=V1GL1UQ53KF2+V1GL1UQ53-KF2.11-X7	=V1GL1UQ53UQ12.1+V1GL1UQ53UQ12.1-BGS/R	TPE	4	4	18	5	
=V1GL1UQ53UQ12.2-W1	=V1GL1UQ53KF2+V1GL1UQ53-KF2.11-X8	=V1GL1UQ53UQ12.2+V1GL1UQ53UQ12.2-BGS/R	TPE	4	4	18	4	
=V1GL1UQ53UQ12.3-W1	=V1GL1UQ53KF2+V1GL1UQ53-KF2.12-X1	=V1GL1UQ53UQ12.3+V1GL1UQ53UQ12.3-BGS/R	TPE	4	4	18	5	
=V1GL1UQ53UQ13.1-W1	=V1GL1UQ53KF2+V1GL1UQ53-KF2.12-X3	=V1GL1UQ53UQ13.1+V1GL1UQ53UQ13.1-BGS/R	TPE	4	4	18	5	
=V1GL1UQ53UQ13.2-W1	=V1GL1UQ53KF2+V1GL1UQ53-KF2.12-X4	=V1GL1UQ53UQ13.2+V1GL1UQ53UQ13.2-BGS/R	TPE	4	4	18	4	
=V1GL1UQ53UQ14.1-W1	=V1GL1UQ53KF2+V1GL1UQ53-KF2.12-X5	=V1GL1UQ53UQ14.1+V1GL1UQ53UQ14.1-BGS/R	TPE	4	4	18	5	
=V1GL1UQ53UQ14.2-W1	=V1GL1UQ53KF2+V1GL1UQ53-KF2.12-X6	=V1GL1UQ53UQ14.2+V1GL1UQ53UQ14.2-BGS/R	TPE	4	4	18	6	
=V1GL1UQ53UQ14.3-W1	=V1GL1UQ53KF2+V1GL1UQ53-KF2.12-X7	=V1GL1UQ53UQ14.3+V1GL1UQ53UQ14.3-BGS/R	TPE	4	4	18	1	
=V1GL1UQ53UQ14.4-W1	=V1GL1UQ53KF2+V1GL1UQ53-KF2.12-X8	=V1GL1UQ53UQ14.4+V1GL1UQ53UQ14.4-BGS/R	TPE	4	4	18	5	
=V1GL1UQ53UQ15.1-W1	=V1GL1UQ53KF2+V1GL1UQ53-KF2.13-X1	=V1GL1UQ53UQ15.1+V1GL1UQ53UQ15.1-BGS/R	TPE	4	4	18	4	
=V1GL1UQ53UQ16.1-W1	=V1GL1UQ53KF2+V1GL1UQ53-KF2.13-X2	=V1GL1UQ53UQ16.1+V1GL1UQ53UQ16.1-BGS/R	TPE	4	4	18	4	
=V1GL1UQ53UQ17.1-W1	=V1GL1UQ53KF2+V1GL1UQ53-KF2.13-X3	=V1GL1UQ53UQ17.1+V1GL1UQ53UQ17.1-BGS/R	TPE	4	4	18	4	
=V1GL1UQ53UQ18.1-W1	=V1GL1UQ53KF2+V1GL1UQ53-KF2.13-X4	=V1GL1UQ53UQ18.1+V1GL1UQ53UQ18.1-BGS/R	TPE	4	4	18	6	
=V1GL1UQ53UQ19.1-W1	=V1GL1UQ53KF2+V1GL1UQ53-KF2.13-X5	=V1GL1UQ53UQ19.1+V1GL1UQ53UQ19.1-BGS/R	TPE	4	4	18	6	
=V1GL1UQ53UQ20.1-W1	=V1GL1UQ53KF2+V1GL1UQ53-KF2.13-X6	=V1GL1UQ53UQ20.1+V1GL1UQ53UQ20.1-BGS/R	TPE	4	4	18	6	
=V1GL1UQ53UQ21.1-W1	=V1GL1UQ53KF3+V1GL1UQ53-KF3.11-X1	=V1GL1UQ53UQ21.1+V1GL1UQ53UQ21.1-BGS/R	TPE	4	4	18	5	
=V1GL1UQ53UQ22.1-W1	=V1GL1UQ53KF3+V1GL1UQ53-KF3.11-X2	=V1GL1UQ53UQ22.1+V1GL1UQ53UQ22.1-BGS/R	TPE	4	4	18	6	
=V1GL1UQ53UQ23.1-W1	=V1GL1UQ53KF3+V1GL1UQ53-KF3.11-X3	=V1GL1UQ53UQ23.1+V1GL1UQ53UQ23.1-BGS/R	TPE	4	4	18	5	
=V1GL1UQ53UQ24.1-W1	=V1GL1UQ53KF3+V1GL1UQ53-KF3.11-X4	=V1GL1UQ53UQ24.1+V1GL1UQ53UQ24.1-BGS/R	TPE	4	4	18	6	
=V1GL1UQ53UQ25.1-W1	=V1GL1UQ53KF3+V1GL1UQ53-KF3.11-X5	=V1GL1UQ53UQ25.1+V1GL1UQ53UQ25.1-BGS/R	TPE	4	4	18	5	
=V1GL1UQ53UQ26.1-W1	=V1GL1UQ53KF3+V1GL1UQ53-KF3.11-X6	=V1GL1UQ53UQ26.1+V1GL1UQ53UQ26.1-BGS/R	TPE	4	4	18	5	
=V1GL1UQ53UQ26.2-W1	=V1GL1UQ53KF3+V1GL1UQ53-KF3.11-X7	=V1GL1UQ53UQ26.2+V1GL1UQ53UQ26.2-BGS/R	TPE	4	4	18	4	
=V1GL1UQ54BG0-W1	=V1GL1UQ54BG0+V1GL1UQ54-XG1/2	=V1GL1UQ54KF2+V1GL1UQ54-KF2.14-X1	TPE	4	4	18	0.5	
=V1GL1UQ54BG0-W1.1	=V1GL1UQ54BG0+V1GL1UQ54-BG01	=V1GL1UQ54BG0+V1GL1UQ54-XG1/2	TPE	4	3	18	2	
=V1GL1UQ54BG0-W1.2	=V1GL1UQ54BG0+V1GL1UQ54-BG02	=V1GL1UQ54BG0+V1GL1UQ54-XG1/2	TPE	4	3	18	4	
=V1GL1UQ54BG0-W2	=V1GL1UQ54BG0+V1GL1UQ54-XG3/4	=V1GL1UQ54KF2+V1GL1UQ54-KF2.14-X2	TPE	4	4	18	0.5	

Cable overview

F10_001_Cable

Cable name	Source (from)	Target (to)	cable type	all conductors	Conductors used	Cross-section [mm]	Length [m]	remark
=V1GL1UQ54BG0-W2.1	=V1GL1UQ54BG0+V1GL1UQ54-BG03	=V1GL1UQ54BG0+V1GL1UQ54-XG3/4	TPE	4	3	18	4	
=V1GL1UQ54BG0-W2.2	=V1GL1UQ54BG0+V1GL1UQ54-BG04	=V1GL1UQ54BG0+V1GL1UQ54-XG3/4	TPE	4	3	18	5	
=V1GL1UQ54BG0-W3	=V1GL1UQ54BG0+V1GL1UQ54-XG5/6	=V1GL1UQ54KF2+V1GL1UQ54-KF2.14-X3	TPE	4	4	18	0.5	
=V1GL1UQ54BG0-W3.1	=V1GL1UQ54BG0+V1GL1UQ54-BG05	=V1GL1UQ54BG0+V1GL1UQ54-XG5/6	TPE	4	3	18	5	
=V1GL1UQ54BG0-W3.2	=V1GL1UQ54BG0+V1GL1UQ54-BG06	=V1GL1UQ54BG0+V1GL1UQ54-XG5/6	TPE	4	3	18	6	
=V1GL1UQ54BG0-W4	=V1GL1UQ54BG0+V1GL1UQ54-XG7/8	=V1GL1UQ54KF2+V1GL1UQ54-KF2.14-X4	TPE	4	4	18	0.5	
=V1GL1UQ54BG0-W4.1	=V1GL1UQ54BG0+V1GL1UQ54-BG07	=V1GL1UQ54BG0+V1GL1UQ54-XG7/8	TPE	4	3	18	6	
=V1GL1UQ54BG0-W4.2	=V1GL1UQ54BG0+V1GL1UQ54-BG08	=V1GL1UQ54BG0+V1GL1UQ54-XG7/8	TPE	4	3	18	6	
=V1GL1UQ54BG0-W5	=V1GL1UQ54BG0+V1GL1UQ54-XG9/10	=V1GL1UQ54KF2+V1GL1UQ54-KF2.14-X5	TPE	4	4	18	0.5	
=V1GL1UQ54BG0-W5.1	=V1GL1UQ54BG0+V1GL1UQ54-BG09	=V1GL1UQ54BG0+V1GL1UQ54-XG9/10	TPE	4	3	18	5	
=V1GL1UQ54BG0-W5.2	=V1GL1UQ54BG0+V1GL1UQ54-BG10	=V1GL1UQ54BG0+V1GL1UQ54-XG9/10	TPE	4	3	18	5	
=V1GL1UQ54BG0-W6	=V1GL1UQ54BG0+V1GL1UQ54-XG11/12	=V1GL1UQ54KF2+V1GL1UQ54-KF2.14-X6	TPE	4	4	18	0.5	
=V1GL1UQ54BG0-W6.1	=V1GL1UQ54BG0+V1GL1UQ54-BG11	=V1GL1UQ54BG0+V1GL1UQ54-XG11/12	TPE	4	3	18	4	
=V1GL1UQ54BG0-W6.2	=V1GL1UQ54BG0+V1GL1UQ54-BG12	=V1GL1UQ54BG0+V1GL1UQ54-XG11/12	TPE	4	3	18	4	
=V1GL1UQ54BG0-W7	=V1GL1UQ54BG0+V1GL1UQ54-XG13/14	=V1GL1UQ54KF2+V1GL1UQ54-KF2.14-X7	TPE	4	4	18	0.5	
=V1GL1UQ54BG0-W7.1	=V1GL1UQ54BG0+V1GL1UQ54-BG13	=V1GL1UQ54BG0+V1GL1UQ54-XG13/14	TPE	4	3	18	5	
=V1GL1UQ54BG0-W7.2	=V1GL1UQ54BG0+V1GL1UQ54-BG14	=V1GL1UQ54BG0+V1GL1UQ54-XG13/14	TPE	4	3	18	5	
=V1GL1UQ54BG0-W8	=V1GL1UQ54BG0+V1GL1UQ54-XG15/16	=V1GL1UQ54KF2+V1GL1UQ54-KF2.14-X8	TPE	4	4	18	0.5	
=V1GL1UQ54BG0-W8.1	=V1GL1UQ54BG0+V1GL1UQ54-BG15	=V1GL1UQ54BG0+V1GL1UQ54-XG15/16	TPE	4	3	18	5	
=V1GL1UQ54BG0-W8.2	=V1GL1UQ54BG0+V1GL1UQ54-BG16	=V1GL1UQ54BG0+V1GL1UQ54-XG15/16	TPE	4	3	18	6	
=V1GL1UQ54BG0-W9	=V1GL1UQ54BG0+V1GL1UQ54-XG17/18	=V1GL1UQ54KF2+V1GL1UQ54-KF2.15-X1	TPE	4	4	18	0.5	
=V1GL1UQ54BG0-W9.1	=V1GL1UQ54BG0+V1GL1UQ54-BG17	=V1GL1UQ54BG0+V1GL1UQ54-XG17/18	TPE	4	3	18	6	
=V1GL1UQ54BG0-W9.2	=V1GL1UQ54BG0+V1GL1UQ54-BG18	=V1GL1UQ54BG0+V1GL1UQ54-XG17/18	TPE	4	3	18	6	
=V1GL1UQ54BG0-W10	=V1GL1UQ54BG0+V1GL1UQ54-XG19/20	=V1GL1UQ54KF2+V1GL1UQ54-KF2.15-X2	TPE	4	4	18	0.5	
=V1GL1UQ54BG0-W10.1	=V1GL1UQ54BG0+V1GL1UQ54-BG19	=V1GL1UQ54BG0+V1GL1UQ54-XG19/20	TPE	4	3	18	5	
=V1GL1UQ54BG0-W10.2	=V1GL1UQ54BG0+V1GL1UQ54-BG20	=V1GL1UQ54BG0+V1GL1UQ54-XG19/20	TPE	4	3	18	4	
=V1GL1UQ54BG0-W11	=V1GL1UQ54BG0+V1GL1UQ54-XG21/22	=V1GL1UQ54KF2+V1GL1UQ54-KF2.15-X3	TPE	4	4	18	0.5	
=V1GL1UQ54BG0-W11.1	=V1GL1UQ54BG0+V1GL1UQ54-BG21	=V1GL1UQ54BG0+V1GL1UQ54-XG21/22	TPE	4	3	18	5	
=V1GL1UQ54BG0-W11.2	=V1GL1UQ54BG0+V1GL1UQ54-BG22	=V1GL1UQ54BG0+V1GL1UQ54-XG21/22	TPE	4	3	18	5	
=V1GL1UQ54BG0-W12	=V1GL1UQ54BG0+V1GL1UQ54-XG23/24	=V1GL1UQ54KF2+V1GL1UQ54-KF2.15-X4	TPE	4	4	18	0.5	
=V1GL1UQ54BG0-W12.1	=V1GL1UQ54BG0+V1GL1UQ54-BG23	=V1GL1UQ54BG0+V1GL1UQ54-XG23/24	TPE	4	3	18	4	
=V1GL1UQ54BG0-W12.2	=V1GL1UQ54BG0+V1GL1UQ54-BG24	=V1GL1UQ54BG0+V1GL1UQ54-XG23/24	TPE	4	3	18	4	
=V1GL1UQ54BG0-W13	=V1GL1UQ54BG0+V1GL1UQ54-XG25/26	=V1GL1UQ54KF2+V1GL1UQ54-KF2.15-X5	TPE	4	4	18	0.5	
=V1GL1UQ54BG0-W13.1	=V1GL1UQ54BG0+V1GL1UQ54-BG25	=V1GL1UQ54BG0+V1GL1UQ54-XG25/26	TPE	4	3	18	6	
=V1GL1UQ54BG0-W13.2	=V1GL1UQ54BG0+V1GL1UQ54-BG26	=V1GL1UQ54BG0+V1GL1UQ54-XG25/26	TPE	4	3	18	4	
=V1GL1UQ54BG0-W14	=V1GL1UQ54BG0+V1GL1UQ54-XG27/28	=V1GL1UQ54KF2+V1GL1UQ54-KF2.15-X6	TPE	4	4	18	0.5	
=V1GL1UQ54BG0-W14.1	=V1GL1UQ54BG0+V1GL1UQ54-BG27	=V1GL1UQ54BG0+V1GL1UQ54-XG27/28	TPE	4	3	18	5	
=V1GL1UQ54BG0-W14.2	=V1GL1UQ54BG0+V1GL1UQ54-BG28	=V1GL1UQ54BG0+V1GL1UQ54-XG27/28	TPE	4	3	18	4	
=V1GL1UQ54BG0-W15	=V1GL1UQ54BG0+V1GL1UQ54-XG29/30	=V1GL1UQ54KF2+V1GL1UQ54-KF2.15-X7	TPE	4	4	18	0.5	
=V1GL1UQ54BG0-W15.1	=V1GL1UQ54BG0+V1GL1UQ54-BG29	=V1GL1UQ54BG0+V1GL1UQ54-XG29/30	TPE	4	3	18	4	
=V1GL1UQ54BG0-W15.2	=V1GL1UQ54BG0+V1GL1UQ54-BG30	=V1GL1UQ54BG0+V1GL1UQ54-XG29/30	TPE	4	3	18	6	
=V1GL1UQ54BG0-W16	=V1GL1UQ54BG0+V1GL1UQ54-XG31/32	=V1GL1UQ54KF2+V1GL1UQ54-KF2.15-X8	TPE	4	4	18	0.5	
=V1GL1UQ54BG0-W16.1	=V1GL1UQ54BG0+V1GL1UQ54-BG31	=V1GL1UQ54BG0+V1GL1UQ54-XG31/32	TPE	4	3	18	6	
=V1GL1UQ54BG0-W16.2	=V1GL1UQ54BG0+V1GL1UQ54-BG32	=V1GL1UQ54BG0+V1GL1UQ54-XG31/32	TPE	4	3	18	4	
=V1GL1UQ54BG0-W17	=V1GL1UQ54BG0+V1GL1UQ54-XG33/34	=V1GL1UQ54KF1+V1GL1UQ54-KF1.15-X5	TPE	4	4	18	0.5	
=V1GL1UQ54BG0-W17.1	=V1GL1UQ54BG0+V1GL1UQ54-BG33	=V1GL1UQ54BG0+V1GL1UQ54-XG33/34	TPE	4	3	18	5	

Cable overview

F10_001_Cable

Cable name	Source (from)	Target (to)	cable type	all conductors	Conductors used	Cross-section [mm]	Length [m]	remark
=V1GL1UQ54BG0-W17.2	=V1GL1UQ54BG0+V1GL1UQ54-BG34	=V1GL1UQ54BG0+V1GL1UQ54-XG33/34	TPE	4	3	18	4	
=V1GL1UQ54BG0-W18	=V1GL1UQ54BG0+V1GL1UQ54-BG35	=V1GL1UQ54KF1+V1GL1UQ54-KF1.15-X6	TPE	4	3	18	5	
=V1GL1UQ54UQ1.1-W1	=V1GL1UQ54KF1+V1GL1UQ54-KF1.11-X1	=V1GL1UQ54UQ1.1+V1GL1UQ54UQ1.1-BGS/R	TPE	4	4	18	3	
=V1GL1UQ54UQ1.2-W1	=V1GL1UQ54KF1+V1GL1UQ54-KF1.11-X2	=V1GL1UQ54UQ1.2+V1GL1UQ54UQ1.2-BGS/R	TPE	4	4	18	2	
=V1GL1UQ54UQ1.3-W1	=V1GL1UQ54KF1+V1GL1UQ54-KF1.11-X3	=V1GL1UQ54UQ1.3+V1GL1UQ54UQ1.3-BGS/R	TPE	4	4	18	5	
=V1GL1UQ54UQ1.4-W1	=V1GL1UQ54KF1+V1GL1UQ54-KF1.11-X4	=V1GL1UQ54UQ1.4+V1GL1UQ54UQ1.4-BGS/R	TPE	4	4	18	6	
=V1GL1UQ54UQ1.5-W1	=V1GL1UQ54KF1+V1GL1UQ54-KF1.11-X5	=V1GL1UQ54UQ1.5+V1GL1UQ54UQ1.5-BGS/R	TPE	4	4	18	6	
=V1GL1UQ54UQ1.6-W1	=V1GL1UQ54KF1+V1GL1UQ54-KF1.11-X6	=V1GL1UQ54UQ1.6+V1GL1UQ54UQ1.6-BGS/R	TPE	4	4	18	4	
=V1GL1UQ54UQ2.1-W1	=V1GL1UQ54KF1+V1GL1UQ54-KF1.11-X7	=V1GL1UQ54UQ2.1+V1GL1UQ54UQ2.1-BGS/R	TPE	4	4	18	4	
=V1GL1UQ54UQ3.1-W1	=V1GL1UQ54KF1+V1GL1UQ54-KF1.11-X8	=V1GL1UQ54UQ3.1+V1GL1UQ54UQ3.1-BGS/R	TPE	4	4	18	4	
=V1GL1UQ54UQ3.2-W1	=V1GL1UQ54KF1+V1GL1UQ54-KF1.12-X1	=V1GL1UQ54UQ3.2+V1GL1UQ54UQ3.2-BGS/R	TPE	4	4	18	5	
=V1GL1UQ54UQ3.3-W1	=V1GL1UQ54KF1+V1GL1UQ54-KF1.12-X2	=V1GL1UQ54UQ3.3+V1GL1UQ54UQ3.3-BGS/R	TPE	4	4	18	5	
=V1GL1UQ54UQ3.4-W1	=V1GL1UQ54KF1+V1GL1UQ54-KF1.12-X3	=V1GL1UQ54UQ3.4+V1GL1UQ54UQ3.4-BGS/R	TPE	4	4	18	5	
=V1GL1UQ54UQ3.5-W1	=V1GL1UQ54KF1+V1GL1UQ54-KF1.12-X4	=V1GL1UQ54UQ3.5+V1GL1UQ54UQ3.5-BGS/R	TPE	4	4	18	4	
=V1GL1UQ54UQ3.6-W1	=V1GL1UQ54KF1+V1GL1UQ54-KF1.12-X5	=V1GL1UQ54UQ3.6+V1GL1UQ54UQ3.6-BGS/R	TPE	4	4	18	4	
=V1GL1UQ54UQ4.1-W1	=V1GL1UQ54KF1+V1GL1UQ54-KF1.12-X6	=V1GL1UQ54UQ4.1+V1GL1UQ54UQ4.1-BGS/R	TPE	4	4	18	4	
=V1GL1UQ54UQ4.2-W1	=V1GL1UQ54KF1+V1GL1UQ54-KF1.12-X7	=V1GL1UQ54UQ4.2+V1GL1UQ54UQ4.2-BGS/R	TPE	4	4	18	5	
=V1GL1UQ54UQ4.3-W1	=V1GL1UQ54KF1+V1GL1UQ54-KF1.12-X8	=V1GL1UQ54UQ4.3+V1GL1UQ54UQ4.3-BGS/R	TPE	4	4	18	5	
=V1GL1UQ54UQ5.1-W1	=V1GL1UQ54KF1+V1GL1UQ54-KF1.13-X1	=V1GL1UQ54UQ5.1+V1GL1UQ54UQ5.1-BGS/R	TPE	4	4	18	4	
=V1GL1UQ54UQ5.2-W1	=V1GL1UQ54KF1+V1GL1UQ54-KF1.13-X2	=V1GL1UQ54UQ5.2+V1GL1UQ54UQ5.2-BGS/R	TPE	4	4	18	5	
=V1GL1UQ54UQ5.3-W1	=V1GL1UQ54KF1+V1GL1UQ54-KF1.13-X3	=V1GL1UQ54UQ5.3+V1GL1UQ54UQ5.3-BGS/R	TPE	4	4	18	5	
=V1GL1UQ54UQ6.1-W1	=V1GL1UQ54KF1+V1GL1UQ54-KF1.13-X4	=V1GL1UQ54UQ6.1+V1GL1UQ54UQ6.1-BGS/R	TPE	4	4	18	6	
=V1GL1UQ54UQ7.1-W1	=V1GL1UQ54KF1+V1GL1UQ54-KF1.13-X5	=V1GL1UQ54UQ7.1+V1GL1UQ54UQ7.1-BGS/R	TPE	4	4	18	4	
=V1GL1UQ54UQ8.1-W1	=V1GL1UQ54KF3+V1GL1UQ54-KF3.11-X1	=V1GL1UQ54UQ8.1+V1GL1UQ54UQ8.1-XGR/S	TPE	4	4	18	4	
=V1GL1UQ54UQ8.1-W1.1	=V1GL1UQ54UQ8.1+V1GL1UQ54UQ8.1-BGR	=V1GL1UQ54UQ8.1+V1GL1UQ54UQ8.1-XGR/S	TPE	4	3	18	0.5	
=V1GL1UQ54UQ8.1-W1.2	=V1GL1UQ54UQ8.1+V1GL1UQ54UQ8.1-BGS	=V1GL1UQ54UQ8.1+V1GL1UQ54UQ8.1-XGR/S	TPE	4	3	18	0.5	
=V1GL1UQ54UQ9.1-W1	=V1GL1UQ54KF1+V1GL1UQ54-KF1.13-X6	=V1GL1UQ54UQ9.1+V1GL1UQ54UQ9.1-BGS/R	TPE	4	4	18	5	
=V1GL1UQ54UQ9.2-W1	=V1GL1UQ54KF1+V1GL1UQ54-KF1.13-X7	=V1GL1UQ54UQ9.2+V1GL1UQ54UQ9.2-BGS/R	TPE	4	4	18	4	
=V1GL1UQ54UQ10.1-W1	=V1GL1UQ54KF1+V1GL1UQ54-KF1.13-X8	=V1GL1UQ54UQ10.1+V1GL1UQ54UQ10.1-BGS/R	TPE	4	4	18	3	
=V1GL1UQ54UQ10.2-W1	=V1GL1UQ54KF1+V1GL1UQ54-KF1.14-X1	=V1GL1UQ54UQ10.2+V1GL1UQ54UQ10.2-BGS/R	TPE	4	4	18	3	
=V1GL1UQ54UQ10.3-W1	=V1GL1UQ54KF1+V1GL1UQ54-KF1.14-X2	=V1GL1UQ54UQ10.3+V1GL1UQ54UQ10.3-BGS/R	TPE	4	4	18	3	
=V1GL1UQ54UQ10.4-W1	=V1GL1UQ54KF1+V1GL1UQ54-KF1.14-X3	=V1GL1UQ54UQ10.4+V1GL1UQ54UQ10.4-BGS/R	TPE	4	4	18	3	
=V1GL1UQ54UQ10.5-W1	=V1GL1UQ54KF1+V1GL1UQ54-KF1.14-X4	=V1GL1UQ54UQ10.5+V1GL1UQ54UQ10.5-BGS/R	TPE	4	4	18	2	
=V1GL1UQ54UQ10.6-W1	=V1GL1UQ54KF1+V1GL1UQ54-KF1.14-X5	=V1GL1UQ54UQ10.6+V1GL1UQ54UQ10.6-BGS/R	TPE	4	4	18	3	
=V1GL1UQ54UQ11.1-W1	=V1GL1UQ54KF1+V1GL1UQ54-KF1.14-X6	=V1GL1UQ54UQ11.1+V1GL1UQ54UQ11.1-BGS/R	TPE	4	4	18	3	
=V1GL1UQ54UQ11.2-W1	=V1GL1UQ54KF1+V1GL1UQ54-KF1.14-X7	=V1GL1UQ54UQ11.2+V1GL1UQ54UQ11.2-BGS/R	TPE	4	4	18	4	
=V1GL1UQ54UQ11.3-W1	=V1GL1UQ54KF1+V1GL1UQ54-KF1.14-X8	=V1GL1UQ54UQ11.3+V1GL1UQ54UQ11.3-BGS/R	TPE	4	4	18	5	
=V1GL1UQ54UQ11.4-W1	=V1GL1UQ54KF1+V1GL1UQ54-KF1.15-X1	=V1GL1UQ54UQ11.4+V1GL1UQ54UQ11.4-BGS/R	TPE	4	4	18	6	
=V1GL1UQ54UQ11.5-W1	=V1GL1UQ54KF1+V1GL1UQ54-KF1.15-X2	=V1GL1UQ54UQ11.5+V1GL1UQ54UQ11.5-BGS/R	TPE	4	4	18	7	
=V1GL1UQ54UQ12.1-W1	=V1GL1UQ54KF2+V1GL1UQ54-KF2.11-X1	=V1GL1UQ54UQ12.1+V1GL1UQ54UQ12.1-BGS/R	TPE	4	4	18	5	
=V1GL1UQ54UQ12.2-W1	=V1GL1UQ54KF2+V1GL1UQ54-KF2.11-X2	=V1GL1UQ54UQ12.2+V1GL1UQ54UQ12.2-BGS/R	TPE	4	4	18	3	
=V1GL1UQ54UQ12.3-W1	=V1GL1UQ54KF2+V1GL1UQ54-KF2.11-X3	=V1GL1UQ54UQ12.3+V1GL1UQ54UQ12.3-BGS/R	TPE	4	4	18	6	
=V1GL1UQ54UQ12.4-W1	=V1GL1UQ54KF2+V1GL1UQ54-KF2.11-X4	=V1GL1UQ54UQ12.4+V1GL1UQ54UQ12.4-BGS/R	TPE	4	4	18	5	
=V1GL1UQ54UQ12.5-W1	=V1GL1UQ54KF2+V1GL1UQ54-KF2.11-X5	=V1GL1UQ54UQ12.5+V1GL1UQ54UQ12.5-BGS/R	TPE	4	4	18	3	
=V1GL1UQ54UQ12.6-W1	=V1GL1UQ54KF2+V1GL1UQ54-KF2.11-X6	=V1GL1UQ54UQ12.6+V1GL1UQ54UQ12.6-BGS/R	TPE	4	4	18	3	
=V1GL1UQ54UQ13.1-W1	=V1GL1UQ54KF2+V1GL1UQ54-KF2.11-X7	=V1GL1UQ54UQ13.1+V1GL1UQ54UQ13.1-BGS/R	TPE	4	4	18	4	

Cable overview

F10_001_Cable

Cable name	Source (from)	Target (to)	cable type	all conductors	Conductors used	Cross-section [mm]	Length [m]	remark
=V1GL1UQ54UQ14.1-W1	=V1GL1UQ54KF2+V1GL1UQ54-KF2.11-X8	=V1GL1UQ54UQ14.1+V1GL1UQ54UQ14.1-BGS/R	TPE	4	4	18	4	
=V1GL1UQ54UQ15.1-W1	=V1GL1UQ54KF2+V1GL1UQ54-KF2.12-X1	=V1GL1UQ54UQ15.1+V1GL1UQ54UQ15.1-BGS/R	TPE	4	4	18	5	
=V1GL1UQ54UQ16.1-W1	=V1GL1UQ54KF2+V1GL1UQ54-KF2.12-X2	=V1GL1UQ54UQ16.1+V1GL1UQ54UQ16.1-BGS/R	TPE	4	4	18	4	
=V1GL1UQ54UQ16.2-W1	=V1GL1UQ54KF2+V1GL1UQ54-KF2.12-X3	=V1GL1UQ54UQ16.2+V1GL1UQ54UQ16.2-BGS/R	TPE	4	4	18	4	
=V1GL1UQ54UQ17.1-W1	=V1GL1UQ54KF2+V1GL1UQ54-KF2.12-X4	=V1GL1UQ54UQ17.1+V1GL1UQ54UQ17.1-BGS/R	TPE	4	4	18	3	
=V1GL1UQ54UQ18.1-W1	=V1GL1UQ54KF2+V1GL1UQ54-KF2.12-X5	=V1GL1UQ54UQ18.1+V1GL1UQ54UQ18.1-BGS/R	TPE	4	4	18	4	
=V1GL1UQ54UQ18.2-W1	=V1GL1UQ54KF2+V1GL1UQ54-KF2.12-X6	=V1GL1UQ54UQ18.2+V1GL1UQ54UQ18.2-BGS/R	TPE	4	4	18	5	
=V1GL1UQ54UQ19.1-W1	=V1GL1UQ54KF2+V1GL1UQ54-KF2.12-X7	=V1GL1UQ54UQ19.1+V1GL1UQ54UQ19.1-BGS/R	TPE	4	4	18	4	
=V1GL1UQ54UQ19.2-W1	=V1GL1UQ54KF2+V1GL1UQ54-KF2.12-X8	=V1GL1UQ54UQ19.2+V1GL1UQ54UQ19.2-BGS/R	TPE	4	4	18	3	
=V1GL1UQ54UQ20.1-W1	=V1GL1UQ54KF2+V1GL1UQ54-KF2.13-X1	=V1GL1UQ54UQ20.1+V1GL1UQ54UQ20.1-BGS/R	TPE	4	4	18	5	
=V1GL1UQ54UQ21.1-W1	=V1GL1UQ54KF2+V1GL1UQ54-KF2.13-X2	=V1GL1UQ54UQ21.1+V1GL1UQ54UQ21.1-BGS/R	TPE	4	4	18	4	
=V1GL1UQ54UQ22.1-W1			TPE	4	0	18	4	
=V1GL1UQ54UQ23.1-W1			TPE	4	0	18	4	
=V1GL1UQ54UQ24.1-W1			TPE	4	0	18	4	
=V1GL1UQ54UQ25.1-W1			TPE	4	0	18	4	
=V1GL1UQ56UQ1.1-W1	=V1GL1UQ56KF1+V1GL1UQ56-KF1.11-X1	=V1GL1UQ56UQ1.1+V1GL1UQ56UQ1.1-XGR/S	TPE	4	4	18	5	
=V1GL1UQ56UQ1.1-W1.1	=V1GL1UQ56UQ1.1+V1GL1UQ56UQ1.1-BGR	=V1GL1UQ56UQ1.1+V1GL1UQ56UQ1.1-XGR/S	TPE	4	3	18	0.5	
=V1GL1UQ56UQ1.1-W1.2	=V1GL1UQ56UQ1.1+V1GL1UQ56UQ1.1-BGS	=V1GL1UQ56UQ1.1+V1GL1UQ56UQ1.1-XGR/S	TPE	4	3	18	0.5	
=V1GL1UQ57UQ1.1-W1	=V1GL1UQ57KF1+V1GL1UQ57-KF1.11-X1	=V1GL1UQ57UQ1.1+V1GL1UQ57UQ1.1-XGR/S	TPE	4	4	18	5	
=V1GL1UQ57UQ1.1-W1.1	=V1GL1UQ57UQ1.1+V1GL1UQ57UQ1.1-BGR	=V1GL1UQ57UQ1.1+V1GL1UQ57UQ1.1-XGR/S	TPE	4	3	18	0.5	
=V1GL1UQ57UQ1.1-W1.2	=V1GL1UQ57UQ1.1+V1GL1UQ57UQ1.1-BGS	=V1GL1UQ57UQ1.1+V1GL1UQ57UQ1.1-XGR/S	TPE	4	3	18	0.5	
=V1GL2UQ51BG0-W1	=V1GL2UQ51BG0+V1GL2UQ51-XG1/2	=V1GL2UQ51KF3+V1GL2UQ51-KF3.13-X1	TPE	4	4	18	0.5	
=V1GL2UQ51BG0-W1.1	=V1GL2UQ51BG0+V1GL2UQ51-BG01	=V1GL2UQ51BG0+V1GL2UQ51-XG1/2	TPE	4	3	18	3	
=V1GL2UQ51BG0-W1.2	=V1GL2UQ51BG0+V1GL2UQ51-BG02	=V1GL2UQ51BG0+V1GL2UQ51-XG1/2	TPE	4	3	18	3	
=V1GL2UQ51BG0-W2	=V1GL2UQ51BG0+V1GL2UQ51-XG3/4	=V1GL2UQ51KF3+V1GL2UQ51-KF3.13-X2	TPE	4	4	18	0.5	
=V1GL2UQ51BG0-W2.1	=V1GL2UQ51BG0+V1GL2UQ51-BG03	=V1GL2UQ51BG0+V1GL2UQ51-XG3/4	TPE	4	3	18	4	
=V1GL2UQ51BG0-W2.2	=V1GL2UQ51BG0+V1GL2UQ51-BG04	=V1GL2UQ51BG0+V1GL2UQ51-XG3/4	TPE	4	3	18	2	
=V1GL2UQ51BG0-W3	=V1GL2UQ51BG0+V1GL2UQ51-XG5/6	=V1GL2UQ51KF3+V1GL2UQ51-KF3.13-X3	TPE	4	4	18	0.5	
=V1GL2UQ51BG0-W3.1	=V1GL2UQ51BG0+V1GL2UQ51-BG05	=V1GL2UQ51BG0+V1GL2UQ51-XG5/6	TPE	4	3	18	3	
=V1GL2UQ51BG0-W3.2	=V1GL2UQ51BG0+V1GL2UQ51-BG06	=V1GL2UQ51BG0+V1GL2UQ51-XG5/6	TPE	4	3	18	4	
=V1GL2UQ51BG0-W4	=V1GL2UQ51BG0+V1GL2UQ51-XG7/8	=V1GL2UQ51KF3+V1GL2UQ51-KF3.13-X4	TPE	4	4	18	0.5	
=V1GL2UQ51BG0-W4.1	=V1GL2UQ51BG0+V1GL2UQ51-BG07	=V1GL2UQ51BG0+V1GL2UQ51-XG7/8	TPE	4	3	18	4	
=V1GL2UQ51BG0-W4.2	=V1GL2UQ51BG0+V1GL2UQ51-BG08	=V1GL2UQ51BG0+V1GL2UQ51-XG7/8	TPE	4	3	18	4	
=V1GL2UQ51BG0-W5	=V1GL2UQ51BG0+V1GL2UQ51-BG09	=V1GL2UQ51KF3+V1GL2UQ51-KF3.13-X5	TPE	4	3	18	5	
=V1GL2UQ51BG0-W6	=V1GL2UQ51BG0+V1GL2UQ51-XG11/12	=V1GL2UQ51KF3+V1GL2UQ51-KF3.13-X6	TPE	4	4	18	0.5	
=V1GL2UQ51BG0-W6.1	=V1GL2UQ51BG0+V1GL2UQ51-BG11	=V1GL2UQ51BG0+V1GL2UQ51-XG11/12	TPE	4	3	18	5	
=V1GL2UQ51BG0-W6.2	=V1GL2UQ51BG0+V1GL2UQ51-BG12	=V1GL2UQ51BG0+V1GL2UQ51-XG11/12	TPE	4	3	18	5	
=V1GL2UQ51BG0-W7	=V1GL2UQ51BG0+V1GL2UQ51-XG13/14	=V1GL2UQ51KF3+V1GL2UQ51-KF3.13-X7	TPE	4	4	18	0.5	
=V1GL2UQ51BG0-W7.1	=V1GL2UQ51BG0+V1GL2UQ51-BG13	=V1GL2UQ51BG0+V1GL2UQ51-XG13/14	TPE	4	3	18	6	
=V1GL2UQ51BG0-W7.2	=V1GL2UQ51BG0+V1GL2UQ51-BG14	=V1GL2UQ51BG0+V1GL2UQ51-XG13/14	TPE	4	3	18	5	
=V1GL2UQ51BG0-W8	=V1GL2UQ51BG0+V1GL2UQ51-XG15/16	=V1GL2UQ51KF3+V1GL2UQ51-KF3.13-X8	TPE	4	4	18	0.5	
=V1GL2UQ51BG0-W8.1	=V1GL2UQ51BG0+V1GL2UQ51-BG15	=V1GL2UQ51BG0+V1GL2UQ51-XG15/16	TPE	4	3	18	6	
=V1GL2UQ51BG0-W8.2	=V1GL2UQ51BG0+V1GL2UQ51-BG16	=V1GL2UQ51BG0+V1GL2UQ51-XG15/16	TPE	4	3	18	6	
=V1GL2UQ51BG0-W9	=V1GL2UQ51BG0+V1GL2UQ51-XG17/18	=V1GL2UQ51KF4+V1GL2UQ51-KF4.12-X1	TPE	4	4	18	0.5	
=V1GL2UQ51BG0-W9.1	=V1GL2UQ51BG0+V1GL2UQ51-BG17	=V1GL2UQ51BG0+V1GL2UQ51-XG17/18	TPE	4	3	18	6	
=V1GL2UQ51BG0-W9.2	=V1GL2UQ51BG0+V1GL2UQ51-BG18	=V1GL2UQ51BG0+V1GL2UQ51-XG17/18	TPE	4	3	18	6	

Cable overview

F10_001_Cable

Cable name	Source (from)	Target (to)	cable type	all conductors	Conductors used	Cross-section [mm]	Length [m]	remark
=V1GL2UQ51BG0-W10	=V1GL2UQ51BG0+V1GL2UQ51-XG19/20	=V1GL2UQ51KF4+V1GL2UQ51-KF4.12-X2	TPE	4	4	18	0.5	
=V1GL2UQ51BG0-W10.1	=V1GL2UQ51BG0+V1GL2UQ51-BG19	=V1GL2UQ51BG0+V1GL2UQ51-XG19/20	TPE	4	3	18	6	
=V1GL2UQ51BG0-W10.2	=V1GL2UQ51BG0+V1GL2UQ51-BG20	=V1GL2UQ51BG0+V1GL2UQ51-XG19/20	TPE	4	3	18	5	
=V1GL2UQ51UQ1.1-W1	=V1GL2UQ51KF1+V1GL2UQ51-KF1.11-X1	=V1GL2UQ51UQ1.1+V1GL2UQ51UQ1.1-XGR/S	TPE	4	4	18	4	
=V1GL2UQ51UQ1.1-W1.1	=V1GL2UQ51UQ1.1+V1GL2UQ51UQ1.1-BGR	=V1GL2UQ51UQ1.1+V1GL2UQ51UQ1.1-XGR/S	TPE	4	3	18	0.5	
=V1GL2UQ51UQ1.1-W1.2	=V1GL2UQ51UQ1.1+V1GL2UQ51UQ1.1-BGS	=V1GL2UQ51UQ1.1+V1GL2UQ51UQ1.1-XGR/S	TPE	4	3	18	0.5	
=V1GL2UQ51UQ2.1-W1	=V1GL2UQ51KF1+V1GL2UQ51-KF1.11-X2	=V1GL2UQ51UQ2.1+V1GL2UQ51UQ2.1-XGR/S	TPE	4	4	18	4	
=V1GL2UQ51UQ2.1-W1.1	=V1GL2UQ51UQ2.1+V1GL2UQ51UQ2.1-BGR	=V1GL2UQ51UQ2.1+V1GL2UQ51UQ2.1-XGR/S	TPE	4	3	18	0.5	
=V1GL2UQ51UQ2.1-W1.2	=V1GL2UQ51UQ2.1+V1GL2UQ51UQ2.1-BGS	=V1GL2UQ51UQ2.1+V1GL2UQ51UQ2.1-XGR/S	TPE	4	3	18	0.5	
=V1GL2UQ51UQ3.1-W1	=V1GL2UQ51KF1+V1GL2UQ51-KF1.11-X3	=V1GL2UQ51UQ3.1+V1GL2UQ51UQ3.1-XGR/S	TPE	4	4	18	6	
=V1GL2UQ51UQ3.1-W1.1	=V1GL2UQ51UQ3.1+V1GL2UQ51UQ3.1-BGR	=V1GL2UQ51UQ3.1+V1GL2UQ51UQ3.1-XGR/S	TPE	4	3	18	0.5	
=V1GL2UQ51UQ3.1-W1.2	=V1GL2UQ51UQ3.1+V1GL2UQ51UQ3.1-BGS	=V1GL2UQ51UQ3.1+V1GL2UQ51UQ3.1-XGR/S	TPE	4	3	18	0.5	
=V1GL2UQ51UQ4.1-W1	=V1GL2UQ51KF1+V1GL2UQ51-KF1.11-X4	=V1GL2UQ51UQ4.1+V1GL2UQ51UQ4.1-XGR/S	TPE	4	4	18	3	
=V1GL2UQ51UQ4.1-W1.1	=V1GL2UQ51UQ4.1+V1GL2UQ51UQ4.1-BGR	=V1GL2UQ51UQ4.1+V1GL2UQ51UQ4.1-XGR/S	TPE	4	3	18	0.5	
=V1GL2UQ51UQ4.1-W1.2	=V1GL2UQ51UQ4.1+V1GL2UQ51UQ4.1-BGS	=V1GL2UQ51UQ4.1+V1GL2UQ51UQ4.1-XGR/S	TPE	4	3	18	0.5	
=V1GL2UQ51UQ4.2-W1	=V1GL2UQ51KF1+V1GL2UQ51-KF1.11-X5	=V1GL2UQ51UQ4.2+V1GL2UQ51UQ4.2-BGS/R	TPE	4	4	18	3	
=V1GL2UQ51UQ4.3-W1	=V1GL2UQ51KF1+V1GL2UQ51-KF1.11-X6	=V1GL2UQ51UQ4.3+V1GL2UQ51UQ4.3-XGR/S	TPE	4	4	18	4	
=V1GL2UQ51UQ4.3-W1.1	=V1GL2UQ51UQ4.3+V1GL2UQ51UQ4.3-BGR	=V1GL2UQ51UQ4.3+V1GL2UQ51UQ4.3-XGR/S	TPE	4	3	18	0.5	
=V1GL2UQ51UQ4.3-W1.2	=V1GL2UQ51UQ4.3+V1GL2UQ51UQ4.3-BGS	=V1GL2UQ51UQ4.3+V1GL2UQ51UQ4.3-XGR/S	TPE	4	3	18	0.5	
=V1GL2UQ51UQ5.1-W1	=V1GL2UQ51KF1+V1GL2UQ51-KF1.11-X7	=V1GL2UQ51UQ5.1+V1GL2UQ51UQ5.1-BGS/R	TPE	4	4	18	4	
=V1GL2UQ51UQ5.2-W1	=V1GL2UQ51KF1+V1GL2UQ51-KF1.11-X8	=V1GL2UQ51UQ5.2+V1GL2UQ51UQ5.2-BGS/R	TPE	4	4	18	4	
=V1GL2UQ51UQ5.3-W1	=V1GL2UQ51KF1+V1GL2UQ51-KF1.12-X1	=V1GL2UQ51UQ5.3+V1GL2UQ51UQ5.3-BGS/R	TPE	4	4	18	5	
=V1GL2UQ51UQ6.1-W1	=V1GL2UQ51KF1+V1GL2UQ51-KF1.12-X2	=V1GL2UQ51UQ6.1+V1GL2UQ51UQ6.1-XGR/S	TPE	4	4	18	5	
=V1GL2UQ51UQ6.1-W1.1	=V1GL2UQ51UQ6.1+V1GL2UQ51UQ6.1-BGR	=V1GL2UQ51UQ6.1+V1GL2UQ51UQ6.1-XGR/S	TPE	4	3	18	0.5	
=V1GL2UQ51UQ6.1-W1.2	=V1GL2UQ51UQ6.1+V1GL2UQ51UQ6.1-BGS	=V1GL2UQ51UQ6.1+V1GL2UQ51UQ6.1-XGR/S	TPE	4	3	18	0.5	
=V1GL2UQ51UQ6.2-W1	=V1GL2UQ51KF1+V1GL2UQ51-KF1.12-X3	=V1GL2UQ51UQ6.2+V1GL2UQ51UQ6.2-XGR/S	TPE	4	4	18	4	
=V1GL2UQ51UQ6.2-W1.1	=V1GL2UQ51UQ6.2+V1GL2UQ51UQ6.2-BGR	=V1GL2UQ51UQ6.2+V1GL2UQ51UQ6.2-XGR/S	TPE	4	3	18	0.5	
=V1GL2UQ51UQ6.2-W1.2	=V1GL2UQ51UQ6.2+V1GL2UQ51UQ6.2-BGS	=V1GL2UQ51UQ6.2+V1GL2UQ51UQ6.2-XGR/S	TPE	4	3	18	0.5	
=V1GL2UQ51UQ7.1-W1	=V1GL2UQ51KF1+V1GL2UQ51-KF1.12-X4	=V1GL2UQ51UQ7.1+V1GL2UQ51UQ7.1-XGR/S	TPE	4	4	18	6	
=V1GL2UQ51UQ7.1-W1.1	=V1GL2UQ51UQ7.1+V1GL2UQ51UQ7.1-BGR	=V1GL2UQ51UQ7.1+V1GL2UQ51UQ7.1-XGR/S	TPE	4	3	18	0.5	
=V1GL2UQ51UQ7.1-W1.2	=V1GL2UQ51UQ7.1+V1GL2UQ51UQ7.1-BGS	=V1GL2UQ51UQ7.1+V1GL2UQ51UQ7.1-XGR/S	TPE	4	3	18	0.5	
=V1GL2UQ51UQ7.2-W1	=V1GL2UQ51KF1+V1GL2UQ51-KF1.12-X5	=V1GL2UQ51UQ7.2+V1GL2UQ51UQ7.2-BGS/R	TPE	4	4	18	3	
=V1GL2UQ51UQ8.1-W1	=V1GL2UQ51KF1+V1GL2UQ51-KF1.12-X6	=V1GL2UQ51UQ8.1+V1GL2UQ51UQ8.1-BGS/R	TPE	4	4	18	5	
=V1GL2UQ51UQ8.2-W1	=V1GL2UQ51KF1+V1GL2UQ51-KF1.12-X7	=V1GL2UQ51UQ8.2+V1GL2UQ51UQ8.2-BGS/R	TPE	4	4	18	6	
=V1GL2UQ51UQ8.3-W1	=V1GL2UQ51KF1+V1GL2UQ51-KF1.12-X8	=V1GL2UQ51UQ8.3+V1GL2UQ51UQ8.3-BGS/R	TPE	4	4	18	2	
=V1GL2UQ51UQ9.1-W1	=V1GL2UQ51KF2+V1GL2UQ51-KF2.11-X1	=V1GL2UQ51UQ9.1+V1GL2UQ51UQ9.1-BGS/R	TPE	4	4	18	7	
=V1GL2UQ51UQ9.2-W1	=V1GL2UQ51KF2+V1GL2UQ51-KF2.11-X2	=V1GL2UQ51UQ9.2+V1GL2UQ51UQ9.2-BGS/R	TPE	4	4	18	6	
=V1GL2UQ51UQ9.3-W1	=V1GL2UQ51KF2+V1GL2UQ51-KF2.11-X3	=V1GL2UQ51UQ9.3+V1GL2UQ51UQ9.3-BGS/R	TPE	4	4	18	2	
=V1GL2UQ51UQ10.1-W1	=V1GL2UQ51KF2+V1GL2UQ51-KF2.11-X4	=V1GL2UQ51UQ10.1+V1GL2UQ51UQ10.1-BGS/R	TPE	4	4	18	3	
=V1GL2UQ51UQ10.2-W1	=V1GL2UQ51KF2+V1GL2UQ51-KF2.11-X5	=V1GL2UQ51UQ10.2+V1GL2UQ51UQ10.2-BGS/R	TPE	4	4	18	3	
=V1GL2UQ51UQ10.3-W1	=V1GL2UQ51KF2+V1GL2UQ51-KF2.11-X6	=V1GL2UQ51UQ10.3+V1GL2UQ51UQ10.3-BGS/R	TPE	4	4	18	3	
=V1GL2UQ51UQ10.4-W1	=V1GL2UQ51KF2+V1GL2UQ51-KF2.11-X7	=V1GL2UQ51UQ10.4+V1GL2UQ51UQ10.4-BGS/R	TPE	4	4	18	4	
=V1GL2UQ51UQ10.5-W1	=V1GL2UQ51KF2+V1GL2UQ51-KF2.11-X8	=V1GL2UQ51UQ10.5+V1GL2UQ51UQ10.5-BGS/R	TPE	4	4	18	3	
=V1GL2UQ51UQ10.6-W1	=V1GL2UQ51KF2+V1GL2UQ51-KF2.12-X1	=V1GL2UQ51UQ10.6+V1GL2UQ51UQ10.6-BGS/R	TPE	4	4	18	3	
=V1GL2UQ51UQ11.1-W1	=V1GL2UQ51KF2+V1GL2UQ51-KF2.12-X2	=V1GL2UQ51UQ11.1+V1GL2UQ51UQ11.1-BGS/R	TPE	4	4	18	4	
=V1GL2UQ51UQ12.1-W1	=V1GL2UQ51KF2+V1GL2UQ51-KF2.12-X3	=V1GL2UQ51UQ12.1+V1GL2UQ51UQ12.1-BGS/R	TPE	4	4	18	3	

Cable overview

F10_001_Cable

Cable name	Source (from)	Target (to)	cable type	all conductors	Conductors used	Cross-section [mm]	Length [m]	remark
=V1GL2UQ51UQ13.1-W1	=V1GL2UQ51KF2+V1GL2UQ51-KF2.12-X4	=V1GL2UQ51UQ13.1+V1GL2UQ51UQ13.1-BGS/R	TPE	4	4	18	4	
=V1GL2UQ51UQ14.1-W1	=V1GL2UQ51KF2+V1GL2UQ51-KF2.12-X5	=V1GL2UQ51UQ14.1+V1GL2UQ51UQ14.1-BGS/R	TPE	4	4	18	3	
=V1GL2UQ51UQ15.1-W1	=V1GL2UQ51KF2+V1GL2UQ51-KF2.12-X6	=V1GL2UQ51UQ15.1+V1GL2UQ51UQ15.1-BGS/R	TPE	4	4	18	5	
=V1GL2UQ51UQ16.1-W1	=V1GL2UQ51KF2+V1GL2UQ51-KF2.12-X7	=V1GL2UQ51UQ16.1+V1GL2UQ51UQ16.1-BGS/R	TPE	4	4	18	4	
=V1GL2UQ51UQ17.1-W1	=V1GL2UQ51KF2+V1GL2UQ51-KF2.12-X8	=V1GL2UQ51UQ17.1+V1GL2UQ51UQ17.1-BGS/R	TPE	4	4	18	4	
=V1GL2UQ51UQ17.2-W1	=V1GL2UQ51KF2+V1GL2UQ51-KF2.13-X1	=V1GL2UQ51UQ17.2+V1GL2UQ51UQ17.2-BGS/R	TPE	4	4	18	5	
=V1GL2UQ51UQ17.3-W1	=V1GL2UQ51KF2+V1GL2UQ51-KF2.13-X2	=V1GL2UQ51UQ17.3+V1GL2UQ51UQ17.3-BGS/R	TPE	4	4	18	5	
=V1GL2UQ51UQ17.4-W1	=V1GL2UQ51KF2+V1GL2UQ51-KF2.13-X3	=V1GL2UQ51UQ17.4+V1GL2UQ51UQ17.4-BGS/R	TPE	4	4	18	5	
=V1GL2UQ51UQ18.1-W1	=V1GL2UQ51KF2+V1GL2UQ51-KF2.13-X4	=V1GL2UQ51UQ18.1+V1GL2UQ51UQ18.1-BGS/R	TPE	4	4	18	5	
=V1GL2UQ51UQ18.2-W1	=V1GL2UQ51KF2+V1GL2UQ51-KF2.13-X5	=V1GL2UQ51UQ18.2+V1GL2UQ51UQ18.2-BGS/R	TPE	4	4	18	5	
=V1GL2UQ51UQ19.1-W1	=V1GL2UQ51KF3+V1GL2UQ51-KF3.11-X1	=V1GL2UQ51UQ19.1+V1GL2UQ51UQ19.1-BGS/R	TPE	4	4	18	8	
=V1GL2UQ51UQ19.2-W1	=V1GL2UQ51KF3+V1GL2UQ51-KF3.11-X2	=V1GL2UQ51UQ19.2+V1GL2UQ51UQ19.2-BGS/R	TPE	4	4	18	8	
=V1GL2UQ51UQ20.1-W1	=V1GL2UQ51KF3+V1GL2UQ51-KF3.11-X3	=V1GL2UQ51UQ20.1+V1GL2UQ51UQ20.1-BGS/R	TPE	4	4	18	5	
=V1GL2UQ51UQ21.1-W1	=V1GL2UQ51KF3+V1GL2UQ51-KF3.11-X4	=V1GL2UQ51UQ21.1+V1GL2UQ51UQ21.1-BGS/R	TPE	4	4	18	5	
=V1GL2UQ51UQ22.1-W1	=V1GL2UQ51KF3+V1GL2UQ51-KF3.11-X5	=V1GL2UQ51UQ22.1+V1GL2UQ51UQ22.1-BGS/R	TPE	4	4	18	6	
=V1GL2UQ51UQ22.2-W1	=V1GL2UQ51KF3+V1GL2UQ51-KF3.11-X6	=V1GL2UQ51UQ22.2+V1GL2UQ51UQ22.2-BGS/R	TPE	4	4	18	6	
=V1GL2UQ51UQ22.3-W1	=V1GL2UQ51KF3+V1GL2UQ51-KF3.11-X7	=V1GL2UQ51UQ22.3+V1GL2UQ51UQ22.3-BGS/R	TPE	4	4	18	6	
=V1GL2UQ51UQ23.1-W1	=V1GL2UQ51KF3+V1GL2UQ51-KF3.11-X8	=V1GL2UQ51UQ23.1+V1GL2UQ51UQ23.1-BGS/R	TPE	4	4	18	6	
=V1GL2UQ51UQ24.1-W1	=V1GL2UQ51KF3+V1GL2UQ51-KF3.12-X1	=V1GL2UQ51UQ24.1+V1GL2UQ51UQ24.1-BGS/R	TPE	4	4	18	8	
=V1GL2UQ51UQ25.1-W1	=V1GL2UQ51KF3+V1GL2UQ51-KF3.12-X2	=V1GL2UQ51UQ25.1+V1GL2UQ51UQ25.1-BGS/R	TPE	4	4	18	8	
=V1GL2UQ51UQ26.1-W1	=V1GL2UQ51KF3+V1GL2UQ51-KF3.12-X3	=V1GL2UQ51UQ26.1+V1GL2UQ51UQ26.1-BGS/R	TPE	4	4	18	3	
=V1GL2UQ51UQ27.1-W1	=V1GL2UQ51KF3+V1GL2UQ51-KF3.12-X4	=V1GL2UQ51UQ27.1+V1GL2UQ51UQ27.1-BGS/R	TPE	4	4	18	5	
=V1GL2UQ51UQ28.1-W1	=V1GL2UQ51KF3+V1GL2UQ51-KF3.12-X5	=V1GL2UQ51UQ28.1+V1GL2UQ51UQ28.1-BGS/R	TPE	4	4	18	5	
=V1GL2UQ51UQ29.1-W1	=V1GL2UQ51KF4+V1GL2UQ51-KF4.11-X1	=V1GL2UQ51UQ29.1+V1GL2UQ51UQ29.1-BGS/R	TPE	4	4	18	5	
=V1GL2UQ51UQ30.1-W1	=V1GL2UQ51KF4+V1GL2UQ51-KF4.11-X2	=V1GL2UQ51UQ30.1+V1GL2UQ51UQ30.1-BGS/R	TPE	4	4	18	6	
=V1GL2UQ51UQ31.1-W1	=V1GL2UQ51KF4+V1GL2UQ51-KF4.11-X3	=V1GL2UQ51UQ31.1+V1GL2UQ51UQ31.1-BGS/R	TPE	4	4	18	5	
=V1GL2UQ51UQ32.1-W1	=V1GL2UQ51KF4+V1GL2UQ51-KF4.11-X4	=V1GL2UQ51UQ32.1+V1GL2UQ51UQ32.1-BGS/R	TPE	4	4	18	4	
=V1GL2UQ51UQ33.1-W1	=V1GL2UQ51KF4+V1GL2UQ51-KF4.11-X5	=V1GL2UQ51UQ33.1+V1GL2UQ51UQ33.1-BGS/R	TPE	4	4	18	5	
=V1GL2UQ51UQ34.1-W1	=V1GL2UQ51KF4+V1GL2UQ51-KF4.11-X6	=V1GL2UQ51UQ34.1+V1GL2UQ51UQ34.1-XGR/S	TPE	4	4	18	5	
=V1GL2UQ51UQ34.1-W1.1	=V1GL2UQ51UQ34.1+V1GL2UQ51UQ34.1-BGR	=V1GL2UQ51UQ34.1+V1GL2UQ51UQ34.1-XGR/S	TPE	4	3	18	0.5	
=V1GL2UQ51UQ34.1-W1.2	=V1GL2UQ51UQ34.1+V1GL2UQ51UQ34.1-BGS	=V1GL2UQ51UQ34.1+V1GL2UQ51UQ34.1-XGR/S	TPE	4	3	18	0.5	
=V1GL2UQ51UQ35.1-W1	=V1GL2UQ51KF4+V1GL2UQ51-KF4.11-X7	=V1GL2UQ51UQ35.1+V1GL2UQ51UQ35.1-BGS/R	TPE	4	4	18	5	
=V1GL18UQ51BG0-W1	=V1GL18UQ51BG0+V1GL18UQ51-XG1/2	=V1GL18UQ51KF1+V1GL18UQ51-KF1.12-X1	TPE	4	4	18	3	
=V1GL18UQ51BG0-W1.1	=V1GL18UQ51BG0+V1GL18UQ51-BG01	=V1GL18UQ51BG0+V1GL18UQ51-XG1/2	TPE	4	3	18	1	
=V1GL18UQ51BG0-W1.2	=V1GL18UQ51BG0+V1GL18UQ51-BG02	=V1GL18UQ51BG0+V1GL18UQ51-XG1/2	TPE	4	3	18	1	
=V1GL18UQ51BG0-W2	=V1GL18UQ51BG0+V1GL18UQ51-XG3/4	=V1GL18UQ51KF1+V1GL18UQ51-KF1.12-X2	TPE	4	4	18	1	
=V1GL18UQ51BG0-W2.1	=V1GL18UQ51BG0+V1GL18UQ51-BG03	=V1GL18UQ51BG0+V1GL18UQ51-XG3/4	TPE	4	3	18	2	
=V1GL18UQ51BG0-W2.2	=V1GL18UQ51BG0+V1GL18UQ51-BG04	=V1GL18UQ51BG0+V1GL18UQ51-XG3/4	TPE	4	3	18	2	
=V1GL18UQ51BG0-W3	=V1GL18UQ51BG0+V1GL18UQ51-XG5/11	=V1GL18UQ51KF1+V1GL18UQ51-KF1.12-X3	TPE	4	4	18	1	
=V1GL18UQ51BG0-W3.1	=V1GL18UQ51BG0+V1GL18UQ51-BG10	=V1GL18UQ51BG0+V1GL18UQ51-XG5/11	TPE	4	3	18	2	
=V1GL18UQ51BG0-W3.2	=V1GL18UQ51BG0+V1GL18UQ51-BG11	=V1GL18UQ51BG0+V1GL18UQ51-XG5/11	TPE	4	3	18	2	
=V1GL18UQ51UQ1.1-W1	=V1GL18UQ51KF1+V1GL18UQ51-KF1.11-X1	=V1GL18UQ51UQ1.1+V1GL18UQ51UQ1.1-XGR/S	TPE	4	4	18	4	
=V1GL18UQ51UQ1.1-W1.1	=V1GL18UQ51UQ1.1+V1GL18UQ51UQ1.1-BGR	=V1GL18UQ51UQ1.1+V1GL18UQ51UQ1.1-XGR/S	TPE	4	3	18	0.5	
=V1GL18UQ51UQ1.1-W1.2	=V1GL18UQ51UQ1.1+V1GL18UQ51UQ1.1-BGS	=V1GL18UQ51UQ1.1+V1GL18UQ51UQ1.1-XGR/S	TPE	4	3	18	0.5	
=V1GL18UQ51UQ2.1-W1	=V1GL18UQ51KF1+V1GL18UQ51-KF1.11-X2	=V1GL18UQ51UQ2.1+V1GL18UQ51UQ2.1-XGR/S	TPE	4	4	18	4	
=V1GL18UQ51UQ2.1-W1.1	=V1GL18UQ51UQ2.1+V1GL18UQ51UQ2.1-BGR	=V1GL18UQ51UQ2.1+V1GL18UQ51UQ2.1-XGR/S	TPE	4	3	18	0.5	

			Date	1/17/2023	Volvo Trucks North America	Valiant TMS	Cable overview	Drawing name: =2V10&EFS-EL	=		
			Ed.	MKLEPADLO					+		
			Appr		P6700 Bodyside RH - Robot Cell 2V10			Document type: EMC	Project nr: 22-16150	Page	20
Modification	Date	Name	Original		Replacement of / Replaced by	Scale 1:1					1579

Cable overview

F10_001_Cable

Cable name	Source (from)	Target (to)	cable type	all conductors	Conductors used	Cross-section [mm]	Length [m]	remark
=V1GL18UQ51UQ2.1-W1.2	=V1GL18UQ51UQ2.1+V1GL18UQ51UQ2.1-BGS	=V1GL18UQ51UQ2.1+V1GL18UQ51UQ2.1-XGR/S	TPE	4	3	18	0.5	
=V1GL18UQ51UQ6.1-W1	=V1GL18UQ51KF1+V1GL18UQ51-KF1.11-X3	=V1GL18UQ51UQ6.1+V1GL18UQ51UQ6.1-XGR/S	TPE	4	4	18	4	
=V1GL18UQ51UQ6.1-W1.1	=V1GL18UQ51UQ6.1+V1GL18UQ51UQ6.1-BGR	=V1GL18UQ51UQ6.1+V1GL18UQ51UQ6.1-XGR/S	TPE	4	3	18	0.5	
=V1GL18UQ51UQ6.1-W1.2	=V1GL18UQ51UQ6.1+V1GL18UQ51UQ6.1-BGS	=V1GL18UQ51UQ6.1+V1GL18UQ51UQ6.1-XGR/S	TPE	4	3	18	0.5	
=V1PF1UQ1.1-W1	=V1PF1KF1+V1PF1-KF1.11-X1	=V1PF1UQ1.1+V1PF1UQ1.1-BGS/R	TPE	4	4	18	2	
=V1U10FQ1-W1	=V1KF1+V1UC12-KF12.32	=V1U10FQ1+V1U10-BG01	TPE	4	4	18	20	
=V1U10U01PF1-W1.1	=V1U10U01KF1+V1U10U01-KF1.11	=V1U10U01PF1+V1U10U01-PF1-Branch1	TPE	4	4	18	5	
=V1U10U01PF1-W1.2	=V1U10U01KF1+V1U10U01-KF1.11	=V1U10U01PF1+V1U10U01-PF1-Branch2	TPE	4	4	18	5	
=V1U20U01PF1-W1.1	=V1U20U01KF1+V1U20U01-KF1.11	=V1U20U01PF1+V1U20U01-PF1-Branch1	TPE	4	4	18	5	
=V1U20U01PF1-W1.2	=V1U20U01KF1+V1U20U01-KF1.11	=V1U20U01PF1+V1U20U01-PF1-Branch2	TPE	4	4	18	5	
=V1UN1BG0-W1	=V1UN1BG0+V1UN1-XG1/2	=V1UN1KF1+V1UN1-KF1.11	TPE	4	4	18	0.5	
=V1UN1BG0-W1.1	=V1UN1BG0+V1UN1-BG01	=V1UN1BG0+V1UN1-XG1/2	TPE	4	3	18	2	
=V1UN1BG0-W1.2	=V1UN1BG0+V1UN1-BG02	=V1UN1BG0+V1UN1-XG1/2	TPE	4	3	18	5	
=V1UN1BG0-W2	=V1UN1BG0+V1UN1-BG03	=V1UN1KF1+V1UN1-KF1.11	TPE	4	3	18	5	
=V1UN1BG0-W3	=V1UN1BG0+V1UN1-BG04	=V1UN1KF1+V1UN1-KF1.11	TPE	4	3	18	5	
=V1UN1FQ1-W1	=V1KF1+V1UC15-KF15.31	=V1UN1FQ1+V1UN1-BG01	TPE	4	4	18	20	
=V1UN1PF1-W1.1	=V1UN1KF1+V1UN1-KF1.11	=V1UN1PF1+V1UN1-PF1-Branch1	TPE	4	4	18	5	
=V1UN1PF1-W1.2	=V1UN1KF1+V1UN1-KF1.11	=V1UN1PF1+V1UN1-PF1-Branch2	TPE	4	4	18	5	
=V1UQ51BG0-W1	=V1UQ51BG0+V1UQ51-XG1/2	=V1UQ51KF1+V1UQ51-KF1.13-X3	TPE	4	4	18	0.5	
=V1UQ51BG0-W1.1	=V1UQ51BG0+V1UQ51-BG01	=V1UQ51BG0+V1UQ51-XG1/2	TPE	4	3	18	3	
=V1UQ51BG0-W1.2	=V1UQ51BG0+V1UQ51-BG02	=V1UQ51BG0+V1UQ51-XG1/2	TPE	4	3	18	4	
=V1UQ51BG0-W2	=V1UQ51BG0+V1UQ51-XG3/4	=V1UQ51KF1+V1UQ51-KF1.13-X4	TPE	4	4	18	0.5	
=V1UQ51BG0-W2.1	=V1UQ51BG0+V1UQ51-BG03	=V1UQ51BG0+V1UQ51-XG3/4	TPE	4	3	18	5	
=V1UQ51BG0-W2.2	=V1UQ51BG0+V1UQ51-BG04	=V1UQ51BG0+V1UQ51-XG3/4	TPE	4	3	18	6	
=V1UQ51BG0-W3	=V1UQ51BG0+V1UQ51-BG05	=V1UQ51KF1+V1UQ51-KF1.13-X5	TPE	4	3	18	6	
=V1UQ51UQ1.1-W1	=V1UQ51KF1+V1UQ51-KF1.11-X1	=V1UQ51UQ1.1+V1UQ51UQ1.1-BGS/R	TPE	4	4	18	2	
=V1UQ51UQ2.1-W1	=V1UQ51KF1+V1UQ51-KF1.11-X2	=V1UQ51UQ2.1+V1UQ51UQ2.1-BGS/R	TPE	4	4	18	3	
=V1UQ51UQ3.1-W1	=V1UQ51KF1+V1UQ51-KF1.11-X3	=V1UQ51UQ3.1+V1UQ51UQ3.1-BGS/R	TPE	4	4	18	5	
=V1UQ51UQ4.1-W1	=V1UQ51KF1+V1UQ51-KF1.11-X4	=V1UQ51UQ4.1+V1UQ51UQ4.1-BGS/R	TPE	4	4	18	6	
=V1UQ51UQ4.2-W1	=V1UQ51KF1+V1UQ51-KF1.11-X5	=V1UQ51UQ4.2+V1UQ51UQ4.2-BGS/R	TPE	4	4	18	5	
=V1UQ51UQ5.1-W1	=V1UQ51KF1+V1UQ51-KF1.11-X6	=V1UQ51UQ5.1+V1UQ51UQ5.1-BGS/R	TPE	4	4	18	7	
=V1UQ51UQ5.2-W1	=V1UQ51KF1+V1UQ51-KF1.11-X7	=V1UQ51UQ5.2+V1UQ51UQ5.2-BGS/R	TPE	4	4	18	6	
=V1UQ51UQ6.1-W1	=V1UQ51KF1+V1UQ51-KF1.11-X8	=V1UQ51UQ6.1+V1UQ51UQ6.1-BGS/R	TPE	4	4	18	4	
=V1UQ51UQ7.1-W1	=V1UQ51KF1+V1UQ51-KF1.12-X1	=V1UQ51UQ7.1+V1UQ51UQ7.1-BGS/R	TPE	4	4	18	3	
=V1UQ51UQ7.2-W1	=V1UQ51KF1+V1UQ51-KF1.12-X2	=V1UQ51UQ7.2+V1UQ51UQ7.2-BGS/R	TPE	4	4	18	3	
=V1UQ51UQ7.3-W1	=V1UQ51KF1+V1UQ51-KF1.12-X3	=V1UQ51UQ7.3+V1UQ51UQ7.3-BGS/R	TPE	4	4	18	2	
=V1UQ51UQ7.4-W1	=V1UQ51KF1+V1UQ51-KF1.12-X4	=V1UQ51UQ7.4+V1UQ51UQ7.4-BGS/R	TPE	4	4	18	1	
=V1UQ51UQ7.5-W1	=V1UQ51KF1+V1UQ51-KF1.12-X5	=V1UQ51UQ7.5+V1UQ51UQ7.5-BGS/R	TPE	4	4	18	2	
=V1UQ51UQ8.1-W1	=V1UQ51KF1+V1UQ51-KF1.12-X6	=V1UQ51UQ8.1+V1UQ51UQ8.1-BGS/R	TPE	4	4	18	3	
=V1UQ51UQ9.1-W1	=V1UQ51KF1+V1UQ51-KF1.12-X7	=V1UQ51UQ9.1+V1UQ51UQ9.1-BGS/R	TPE	4	4	18	6	
=V1UQ51UQ9.2-W1	=V1UQ51KF1+V1UQ51-KF1.12-X8	=V1UQ51UQ9.2+V1UQ51UQ9.2-BGS/R	TPE	4	4	18	5	
=V1UQ51UQ10.1-W1	=V1UQ51KF1+V1UQ51-KF1.13-X1	=V1UQ51UQ10.1+V1UQ51UQ10.1-BGS/R	TPE	4	4	18	5	
=V1UQ51UQ10.2-W1	=V1UQ51KF1+V1UQ51-KF1.13-X2	=V1UQ51UQ10.2+V1UQ51UQ10.2-BGS/R	TPE	4	4	18	4	
=V1UQ52BG0-W1	=V1UQ52BG0+V1UQ52-XG1/2	=V1UQ52KF2+V1UQ52-KF2.13-X1	TPE	4	4	18	0.5	
=V1UQ52BG0-W1.1	=V1UQ52BG0+V1UQ52-BG01	=V1UQ52BG0+V1UQ52-XG1/2	TPE	4	3	18	3	
=V1UQ52BG0-W1.2	=V1UQ52BG0+V1UQ52-BG02	=V1UQ52BG0+V1UQ52-XG1/2	TPE	4	3	18	3	

Cable overview

F10_001_Cable

Cable name	Source (from)	Target (to)	cable type	all conductors	Conductors used	Cross-section [mm]	Length [m]	remark
=V1UQ52BG0-W2	=V1UQ52BG0+V1UQ52-XG3/4	=V1UQ52KF2+V1UQ52-KF2.13-X2	TPE	4	4	18	0.5	
=V1UQ52BG0-W2.1	=V1UQ52BG0+V1UQ52-BG03	=V1UQ52BG0+V1UQ52-XG3/4	TPE	4	3	18	2	
=V1UQ52BG0-W2.2	=V1UQ52BG0+V1UQ52-BG04	=V1UQ52BG0+V1UQ52-XG3/4	TPE	4	3	18	3	
=V1UQ52BG0-W3	=V1UQ52BG0+V1UQ52-XG5/6	=V1UQ52KF2+V1UQ52-KF2.13-X3	TPE	4	4	18	0.5	
=V1UQ52BG0-W3.1	=V1UQ52BG0+V1UQ52-BG05	=V1UQ52BG0+V1UQ52-XG5/6	TPE	4	3	18	2	
=V1UQ52BG0-W3.2	=V1UQ52BG0+V1UQ52-BG06	=V1UQ52BG0+V1UQ52-XG5/6	TPE	4	3	18	3	
=V1UQ52BG0-W4	=V1UQ52BG0+V1UQ52-XG7/8	=V1UQ52KF2+V1UQ52-KF2.13-X4	TPE	4	4	18	0.5	
=V1UQ52BG0-W4.1	=V1UQ52BG0+V1UQ52-BG07	=V1UQ52BG0+V1UQ52-XG7/8	TPE	4	3	18	3	
=V1UQ52BG0-W4.2	=V1UQ52BG0+V1UQ52-BG08	=V1UQ52BG0+V1UQ52-XG7/8	TPE	4	3	18	4	
=V1UQ52BG0-W5	=V1UQ52BG0+V1UQ52-XG9/10	=V1UQ52KF2+V1UQ52-KF2.13-X5	TPE	4	4	18	0.5	
=V1UQ52BG0-W5.1	=V1UQ52BG0+V1UQ52-BG09	=V1UQ52BG0+V1UQ52-XG9/10	TPE	4	3	18	3	
=V1UQ52BG0-W5.2	=V1UQ52BG0+V1UQ52-BG10	=V1UQ52BG0+V1UQ52-XG9/10	TPE	4	3	18	5	
=V1UQ52UQ1.1-W1	=V1UQ52KF1+V1UQ52-KF1.11-X1	=V1UQ52UQ1.1+V1UQ52UQ1.1-BGS/R	TPE	4	4	18	3	
=V1UQ52UQ2.1-W1	=V1UQ52KF1+V1UQ52-KF1.11-X2	=V1UQ52UQ2.1+V1UQ52UQ2.1-XG2	TPE	4	4	18	2	
=V1UQ52UQ2.1-W1.1	=V1UQ52UQ2.1+V1UQ52UQ2.1-BGR	=V1UQ52UQ2.1+V1UQ52UQ2.1-XG2	TPE	4	3	18	0.5	
=V1UQ52UQ2.1-W1.2	=V1UQ52UQ2.1+V1UQ52UQ2.1-BGS	=V1UQ52UQ2.1+V1UQ52UQ2.1-XG2	TPE	4	3	18	0.5	
=V1UQ52UQ2.2-W1	=V1UQ52KF1+V1UQ52-KF1.11-X3	=V1UQ52UQ2.2+V1UQ52UQ2.2-BGS/R	TPE	4	4	18	2	
=V1UQ52UQ2.3-W1	=V1UQ52KF1+V1UQ52-KF1.11-X4	=V1UQ52UQ2.3+V1UQ52UQ2.3-BGS/R	TPE	4	4	18	2	
=V1UQ52UQ3.1-W1	=V1UQ52KF1+V1UQ52-KF1.11-X5	=V1UQ52UQ3.1+V1UQ52UQ3.1-BGS/R	TPE	4	4	18	3	
=V1UQ52UQ4.1-W1	=V1UQ52KF1+V1UQ52-KF1.11-X6	=V1UQ52UQ4.1+V1UQ52UQ4.1-XG4	TPE	4	4	18	4	
=V1UQ52UQ4.1-W1.1	=V1UQ52UQ4.1+V1UQ52UQ4.1-BGR	=V1UQ52UQ4.1+V1UQ52UQ4.1-XG4	TPE	4	3	18	0.5	
=V1UQ52UQ4.1-W1.2	=V1UQ52UQ4.1+V1UQ52UQ4.1-BGS	=V1UQ52UQ4.1+V1UQ52UQ4.1-XG4	TPE	4	3	18	0.5	
=V1UQ52UQ5.1-W1	=V1UQ52KF1+V1UQ52-KF1.11-X7	=V1UQ52UQ5.1+V1UQ52UQ5.1-BGS/R	TPE	4	4	18	2	
=V1UQ52UQ6.1-W1	=V1UQ52KF1+V1UQ52-KF1.11-X8	=V1UQ52UQ6.1+V1UQ52UQ6.1-BGS/R	TPE	4	4	18	1	
=V1UQ52UQ7.1-W1	=V1UQ52KF1+V1UQ52-KF1.12-X1	=V1UQ52UQ7.1+V1UQ52UQ7.1-BGS/R	TPE	4	4	18	2	
=V1UQ52UQ8.1-W1	=V1UQ52KF1+V1UQ52-KF1.12-X2	=V1UQ52UQ8.1+V1UQ52UQ8.1-BGS/R	TPE	4	4	18	1	
=V1UQ52UQ8.2-W1	=V1UQ52KF1+V1UQ52-KF1.12-X3	=V1UQ52UQ8.2+V1UQ52UQ8.2-BGS/R	TPE	4	4	18	3	
=V1UQ52UQ9.1-W1	=V1UQ52KF1+V1UQ52-KF1.12-X4	=V1UQ52UQ9.1+V1UQ52UQ9.1-BGS/R	TPE	4	4	18	2	
=V1UQ52UQ10.1-W1	=V1UQ52KF1+V1UQ52-KF1.12-X5	=V1UQ52UQ10.1+V1UQ52UQ10.1-BGS/R	TPE	4	4	18	2	
=V1UQ52UQ10.2-W1	=V1UQ52KF1+V1UQ52-KF1.12-X6	=V1UQ52UQ10.2+V1UQ52UQ10.2-BGS/R	TPE	4	4	18	2	
=V1UQ52UQ10.3-W1	=V1UQ52KF1+V1UQ52-KF1.12-X7	=V1UQ52UQ10.3+V1UQ52UQ10.3-BGS/R	TPE	4	4	18	2	
=V1UQ52UQ10.4-W1	=V1UQ52KF1+V1UQ52-KF1.12-X8	=V1UQ52UQ10.4+V1UQ52UQ10.4-BGS/R	TPE	4	4	18	1	
=V1UQ52UQ10.5-W1	=V1UQ52KF1+V1UQ52-KF1.13-X1	=V1UQ52UQ10.5+V1UQ52UQ10.5-BGS/R	TPE	4	4	18	2	
=V1UQ52UQ10.6-W1	=V1UQ52KF1+V1UQ52-KF1.13-X2	=V1UQ52UQ10.6+V1UQ52UQ10.6-BGS/R	TPE	4	4	18	2	
=V1UQ52UQ11.1-W1	=V1UQ52KF2+V1UQ52-KF2.11-X1	=V1UQ52UQ11.1+V1UQ52UQ11.1-BGS/R	TPE	4	4	18	3	
=V1UQ52UQ11.2-W1	=V1UQ52KF2+V1UQ52-KF2.11-X2	=V1UQ52UQ11.2+V1UQ52UQ11.2-BGS/R	TPE	4	4	18	2	
=V1UQ52UQ11.3-W1	=V1UQ52KF2+V1UQ52-KF2.11-X3	=V1UQ52UQ11.3+V1UQ52UQ11.3-BGS/R	TPE	4	4	18	3	
=V1UQ52UQ12.1-W1	=V1UQ52KF2+V1UQ52-KF2.11-X4	=V1UQ52UQ12.1+V1UQ52UQ12.1-BGS/R	TPE	4	4	18	2	
=V1UQ52UQ12.2-W1	=V1UQ52KF2+V1UQ52-KF2.11-X5	=V1UQ52UQ12.2+V1UQ52UQ12.2-BGS/R	TPE	4	4	18	5	
=V1UQ52UQ13.1-W1	=V1UQ52KF2+V1UQ52-KF2.11-X6	=V1UQ52UQ13.1+V1UQ52UQ13.1-BGS/R	TPE	4	4	18	2	
=V1UQ52UQ14.1-W1	=V1UQ52KF2+V1UQ52-KF2.11-X7	=V1UQ52UQ14.1+V1UQ52UQ14.1-BGS/R	TPE	4	4	18	5	
=V1UQ52UQ14.2-W1	=V1UQ52KF2+V1UQ52-KF2.11-X8	=V1UQ52UQ14.2+V1UQ52UQ14.2-BGS/R	TPE	4	4	18	3	
=V1UQ52UQ14.3-W1	=V1UQ52KF2+V1UQ52-KF2.12-X1	=V1UQ52UQ14.3+V1UQ52UQ14.3-BGS/R	TPE	4	4	18	3	
=V1UQ52UQ15.1-W1	=V1UQ52KF2+V1UQ52-KF2.12-X2	=V1UQ52UQ15.1+V1UQ52UQ15.1-BGS/R	TPE	4	4	18	2	
=V1UQ52UQ16.1-W1	=V1UQ52KF2+V1UQ52-KF2.12-X3	=V1UQ52UQ16.1+V1UQ52UQ16.1-BGS/R	TPE	4	4	18	2	
=V1UQ52UQ17.1-W1	=V1UQ52KF2+V1UQ52-KF2.12-X4	=V1UQ52UQ17.1+V1UQ52UQ17.1-BGS/R	TPE	4	4	18	3	

Cable overview

F10_001_Cable

Cable name	Source (from)	Target (to)	cable type	all conductors	Conductors used	Cross-section [mm]	Length [m]	remark
=V1UQ52UQ18.1-W1	=V1UQ52KF2+V1UQ52-KF2.12-X5	=V1UQ52UQ18.1+V1UQ52UQ18.1-BGS/R	TPE	4	4	18	2	
=V1UQ52UQ19.1-W1	=V1UQ52KF2+V1UQ52-KF2.12-X6	=V1UQ52UQ19.1+V1UQ52UQ19.1-BGS/R	TPE	4	4	18	2	
=V1UQ52UQ20.1-W1	=V1UQ52KF2+V1UQ52-KF2.12-X7	=V1UQ52UQ20.1+V1UQ52UQ20.1-BGS/R	TPE	4	4	18	4	
=V1UQ52UQ21.1-W1	=V1UQ52KF3+V1UQ52-KF3.11-X1	=V1UQ52UQ21.1+V1UQ52UQ21.1-BGS/R	TPE	4	4	18	2	
=V1UQ52UQ22.1-W1	=V1UQ52KF3+V1UQ52-KF3.11-X2	=V1UQ52UQ22.1+V1UQ52UQ22.1-BGS/R	TPE	4	4	18	2	
=V1UQ52UQ23.1-W1	=V1UQ52KF3+V1UQ52-KF3.11-X3	=V1UQ52UQ23.1+V1UQ52UQ23.1-BGS/R	TPE	4	4	18	3	
=V1UQ52UQ24.1-W1	=V1UQ52KF3+V1UQ52-KF3.11-X4	=V1UQ52UQ24.1+V1UQ52UQ24.1-BGS/R	TPE	4	4	18	4	
=V1UQ52UQ25.1-W1	=V1UQ52KF3+V1UQ52-KF3.11-X5	=V1UQ52UQ25.1+V1UQ52UQ25.1-XGR/S	TPE	4	4	18	4	
=V1UQ52UQ25.1-W1.1	=V1UQ52UQ25.1+V1UQ52UQ25.1-BGR	=V1UQ52UQ25.1+V1UQ52UQ25.1-XGR/S	TPE	4	3	18	0.5	
=V1UQ52UQ25.1-W1.2	=V1UQ52UQ25.1+V1UQ52UQ25.1-BGS	=V1UQ52UQ25.1+V1UQ52UQ25.1-XGR/S	TPE	4	3	18	0.5	
=V1UQ52UQ26.1-W1	=V1UQ52KF3+V1UQ52-KF3.11-X6	=V1UQ52UQ26.1+V1UQ52UQ26.1-BGS/R	TPE	4	4	18	3	
=V1UQ52UQ27.1-W1	=V1UQ52KF3+V1UQ52-KF3.11-X7	=V1UQ52UQ27.1+V1UQ52UQ27.1-BGS/R	TPE	4	4	18	2	
=V1UQ52UQ28.1-W1	=V1UQ52KF3+V1UQ52-KF3.11-X8	=V1UQ52UQ28.1+V1UQ52UQ28.1-BGS/R	TPE	4	4	18	2	
=V1UQ52UQ29.1-W1	=V1UQ52KF3+V1UQ52-KF3.12-X1	=V1UQ52UQ29.1+V1UQ52UQ29.1-BGS/R	TPE	4	4	18	3	
=V1UQ52UQ30.1-W1	=V1UQ52KF3+V1UQ52-KF3.12-X2	=V1UQ52UQ30.1+V1UQ52UQ30.1-BGS/R	TPE	4	4	18	2	
=V1UQ52UQ31.1-W1	=V1UQ52KF4+V1UQ52-KF4.11-X1	=V1UQ52UQ31.1+V1UQ52UQ31.1-BGS/R	TPE	4	4	18	4	
=V1UQ52UQ32.1-W1	=V1UQ52KF4+V1UQ52-KF4.11-X2	=V1UQ52UQ32.1+V1UQ52UQ32.1-BGS/R	TPE	4	4	18	4	
=V1UQ52UQ33.1-W1	=V1UQ52KF4+V1UQ52-KF4.11-X3	=V1UQ52UQ33.1+V1UQ52UQ33.1-BGS/R	TPE	4	4	18	1	
=V1UQ52UQ34.1-W1	=V1UQ52KF4+V1UQ52-KF4.11-X4	=V1UQ52UQ34.1+V1UQ52UQ34.1-BGS/R	TPE	4	4	18	3	
=V1UQ52UQ35.1-W1	=V1UQ52KF4+V1UQ52-KF4.11-X5	=V1UQ52UQ35.1+V1UQ52UQ35.1-BGS/R	TPE	4	4	18	1	
=V1UQ52UQ36.1-W1	=V1UQ52KF4+V1UQ52-KF4.11-X6	=V1UQ52UQ36.1+V1UQ52UQ36.1-BGS/R	TPE	4	4	18	2	
=V1UQ52UQ37.1-W1	=V1UQ52KF4+V1UQ52-KF4.11-X7	=V1UQ52UQ37.1+V1UQ52UQ37.1-BGS/R	TPE	4	4	18	3	
=V1UQ52UQ38.1-W1	=V1UQ52KF4+V1UQ52-KF4.11-X8	=V1UQ52UQ38.1+V1UQ52UQ38.1-BGS/R	TPE	4	4	18	4	
=V1UQ52UQ39.1-W1	=V1UQ52KF4+V1UQ52-KF4.12-X1	=V1UQ52UQ39.1+V1UQ52UQ39.1-BGS/R	TPE	4	4	18	1	
=V1UQ52UQ40.1-W1	=V1UQ52KF4+V1UQ52-KF4.12-X2	=V1UQ52UQ40.1+V1UQ52UQ40.1-BGS/R	TPE	4	4	18	4	
=V1UQ52UQ41.1-W1	=V1UQ52KF5+V1UQ52-KF5.11-X1	=V1UQ52UQ41.1+V1UQ52UQ41.1-BGS/R	TPE	4	4	18	3	
=V1UQ52UQ42.1-W1	=V1UQ52KF5+V1UQ52-KF5.11-X2	=V1UQ52UQ42.1+V1UQ52UQ42.1-BGS/R	TPE	4	4	18	4	
=V1UQ52UQ42.2-W1	=V1UQ52KF5+V1UQ52-KF5.11-X3	=V1UQ52UQ42.2+V1UQ52UQ42.2-BGS/R	TPE	4	4	18	2	
=V1UQ52UQ43.1-W1	=V1UQ52KF5+V1UQ52-KF5.11-X4	=V1UQ52UQ43.1+V1UQ52UQ43.1-BGS/R	TPE	4	4	18	2	
=V1UQ52UQ44.1-W1	=V1UQ52KF5+V1UQ52-KF5.11-X5	=V1UQ52UQ44.1+V1UQ52UQ44.1-BGS/R	TPE	4	4	18	3	
=V1UQ52UQ44.2-W1	=V1UQ52KF5+V1UQ52-KF5.11-X6	=V1UQ52UQ44.2+V1UQ52UQ44.2-BGS/R	TPE	4	4	18	3	
=V1UQ52UQ45.1-W1	=V1UQ52KF5+V1UQ52-KF5.11-X7	=V1UQ52UQ45.1+V1UQ52UQ45.1-BGS/R	TPE	4	4	18	2	
=V1UQ52UQ46.1-W1	=V1UQ52KF5+V1UQ52-KF5.11-X8	=V1UQ52UQ46.1+V1UQ52UQ46.1-BGS/R	TPE	4	4	18	3	
=V1UQ52UQ47.1-W1	=V1UQ52KF5+V1UQ52-KF5.12-X1	=V1UQ52UQ47.1+V1UQ52UQ47.1-BGS/R	TPE	4	4	18	3	
=V1UQ53BG0-W1	=V1UQ53BG0+V1UQ53-XG1/2	=V1UQ53KF2+V1UQ53-KF2.12-X1	TPE	4	4	18	0.5	
=V1UQ53BG0-W1.1	=V1UQ53BG0+V1UQ53-BG01	=V1UQ53BG0+V1UQ53-XG1/2	TPE	4	3	18	3	
=V1UQ53BG0-W1.2	=V1UQ53BG0+V1UQ53-BG02	=V1UQ53BG0+V1UQ53-XG1/2	TPE	4	3	18	3	
=V1UQ53BG0-W2	=V1UQ53BG0+V1UQ53-XG3/4	=V1UQ53KF2+V1UQ53-KF2.12-X2	TPE	4	4	18	0.5	
=V1UQ53BG0-W2.1	=V1UQ53BG0+V1UQ53-BG03	=V1UQ53BG0+V1UQ53-XG3/4	TPE	4	3	18	4	
=V1UQ53BG0-W2.2	=V1UQ53BG0+V1UQ53-BG04	=V1UQ53BG0+V1UQ53-XG3/4	TPE	4	3	18	5	
=V1UQ53BG0-W3	=V1UQ53BG0+V1UQ53-BG05	=V1UQ53KF2+V1UQ53-KF2.12-X3	TPE	4	3	18	5	
=V1UQ53UQ1.1-W1	=V1UQ53KF1+V1UQ53-KF1.11-X1	=V1UQ53UQ1.1+V1UQ53UQ1.1-BGS/R	TPE	4	4	18	2	
=V1UQ53UQ2.1-W1	=V1UQ53KF1+V1UQ53-KF1.11-X2	=V1UQ53UQ2.1+V1UQ53UQ2.1-BGS/R	TPE	4	4	18	3	
=V1UQ53UQ3.1-W1	=V1UQ53KF1+V1UQ53-KF1.11-X3	=V1UQ53UQ3.1+V1UQ53UQ3.1-BGS/R	TPE	4	4	18	2	
=V1UQ53UQ3.2-W1	=V1UQ53KF1+V1UQ53-KF1.11-X4	=V1UQ53UQ3.2+V1UQ53UQ3.2-BGS/R	TPE	4	4	18	2	
=V1UQ53UQ3.3-W1	=V1UQ53KF1+V1UQ53-KF1.11-X5	=V1UQ53UQ3.3+V1UQ53UQ3.3-BGS/R	TPE	4	4	18	3	

Cable overview

F10_001_Cable

Cable name	Source (from)	Target (to)	cable type	all conductors	Conductors used	Cross-section [mm]	Length [m]	remark
=V1UQ53UQ3.4-W1	=V1UQ53KF1+V1UQ53-KF1.11-X6	=V1UQ53UQ3.4+V1UQ53UQ3.4-BGS/R	TPE	4	4	18	4	
=V1UQ53UQ3.5-W1	=V1UQ53KF1+V1UQ53-KF1.11-X7	=V1UQ53UQ3.5+V1UQ53UQ3.5-BGS/R	TPE	4	4	18	2	
=V1UQ53UQ4.1-W1	=V1UQ53KF1+V1UQ53-KF1.11-X8	=V1UQ53UQ4.1+V1UQ53UQ4.1-BGS/R	TPE	4	4	18	4	
=V1UQ53UQ4.2-W1	=V1UQ53KF1+V1UQ53-KF1.12-X1	=V1UQ53UQ4.2+V1UQ53UQ4.2-BGS/R	TPE	4	4	18	4	
=V1UQ53UQ4.3-W1	=V1UQ53KF1+V1UQ53-KF1.12-X2	=V1UQ53UQ4.3+V1UQ53UQ4.3-BGS/R	TPE	4	4	18	2	
=V1UQ53UQ5.1-W1	=V1UQ53KF1+V1UQ53-KF1.12-X3	=V1UQ53UQ5.1+V1UQ53UQ5.1-BGS/R	TPE	4	4	18	4	
=V1UQ53UQ5.2-W1	=V1UQ53KF1+V1UQ53-KF1.12-X4	=V1UQ53UQ5.2+V1UQ53UQ5.2-BGS/R	TPE	4	4	18	3	
=V1UQ53UQ5.3-W1	=V1UQ53KF1+V1UQ53-KF1.12-X5	=V1UQ53UQ5.3+V1UQ53UQ5.3-BGS/R	TPE	4	4	18	2	
=V1UQ53UQ6.1-W1	=V1UQ53KF1+V1UQ53-KF1.12-X6	=V1UQ53UQ6.1+V1UQ53UQ6.1-BGS/R	TPE	4	4	18	5	
=V1UQ53UQ7.1-W1	=V1UQ53KF1+V1UQ53-KF1.12-X7	=V1UQ53UQ7.1+V1UQ53UQ7.1-BGS/R	TPE	4	4	18	6	
=V1UQ53UQ8.1-W1	=V1UQ53KF1+V1UQ53-KF1.12-X8	=V1UQ53UQ8.1+V1UQ53UQ8.1-BGS/R	TPE	4	4	18	4	
=V1UQ53UQ8.2-W1	=V1UQ53KF1+V1UQ53-KF1.13-X1	=V1UQ53UQ8.2+V1UQ53UQ8.2-BGS/R	TPE	4	4	18	6	
=V1UQ53UQ9.1-W1	=V1UQ53KF1+V1UQ53-KF1.13-X2	=V1UQ53UQ9.1+V1UQ53UQ9.1-BGS/R	TPE	4	4	18	6	
=V1UQ53UQ10.1-W1	=V1UQ53KF1+V1UQ53-KF1.13-X3	=V1UQ53UQ10.1+V1UQ53UQ10.1-BGS/R	TPE	4	4	18	5	
=V1UQ53UQ10.2-W1	=V1UQ53KF1+V1UQ53-KF1.13-X4	=V1UQ53UQ10.2+V1UQ53UQ10.2-BGS/R	TPE	4	4	18	6	
=V1UQ53UQ11.1-W1	=V1UQ53KF2+V1UQ53-KF2.11-X1	=V1UQ53UQ11.1+V1UQ53UQ11.1-BGS/R	TPE	4	4	18	5	
=V1UQ53UQ11.2-W1	=V1UQ53KF2+V1UQ53-KF2.11-X2	=V1UQ53UQ11.2+V1UQ53UQ11.2-BGS/R	TPE	4	4	18	7	
=V1UQ53UQ12.1-W1	=V1UQ53KF2+V1UQ53-KF2.11-X3	=V1UQ53UQ12.1+V1UQ53UQ12.1-BGS/R	TPE	4	4	18	4	
=V1UQ53UQ13.1-W1	=V1UQ53KF2+V1UQ53-KF2.11-X4	=V1UQ53UQ13.1+V1UQ53UQ13.1-BGS/R	TPE	4	4	18	4	
=V1UQ53UQ14.1-W1	=V1UQ53KF2+V1UQ53-KF2.11-X5	=V1UQ53UQ14.1+V1UQ53UQ14.1-BGS/R	TPE	4	4	18	4	
=V1UQ53UQ15.1-W1	=V1UQ53KF2+V1UQ53-KF2.11-X6	=V1UQ53UQ15.1+V1UQ53UQ15.1-BGS/R	TPE	4	4	18	4	
=V1UQ53UQ16.1-W1	=V1UQ53KF2+V1UQ53-KF2.11-X7	=V1UQ53UQ16.1+V1UQ53UQ16.1-BGS/R	TPE	4	4	18	5	
=V1UQ53UQ17.1-W1	=V1UQ53KF2+V1UQ53-KF2.11-X8	=V1UQ53UQ17.1+V1UQ53UQ17.1-BGS/R	TPE	4	4	18	4	
=V1UQ54BG0-W1	=V1UQ54BG0+V1UQ54-XG1/2	=V1UQ54KF2+V1UQ54-KF2.12-X1	TPE	4	4	18	0.5	
=V1UQ54BG0-W1.1	=V1UQ54BG0+V1UQ54-BG01	=V1UQ54BG0+V1UQ54-XG1/2	TPE	4	3	18	2	
=V1UQ54BG0-W1.2	=V1UQ54BG0+V1UQ54-BG02	=V1UQ54BG0+V1UQ54-XG1/2	TPE	4	3	18	3	
=V1UQ54BG0-W2	=V1UQ54BG0+V1UQ54-XG3/4	=V1UQ54KF2+V1UQ54-KF2.12-X2	TPE	4	4	18	0.5	
=V1UQ54BG0-W2.1	=V1UQ54BG0+V1UQ54-BG03	=V1UQ54BG0+V1UQ54-XG3/4	TPE	4	3	18	4	
=V1UQ54BG0-W2.2	=V1UQ54BG0+V1UQ54-BG04	=V1UQ54BG0+V1UQ54-XG3/4	TPE	4	3	18	5	
=V1UQ54BG0-W3	=V1UQ54BG0+V1UQ54-BG05	=V1UQ54KF2+V1UQ54-KF2.12-X3	TPE	4	3	18	5	
=V1UQ54UQ1.1-W1	=V1UQ54KF1+V1UQ54-KF1.11-X1	=V1UQ54UQ1.1+V1UQ54UQ1.1-BGS/R	TPE	4	4	18	2	
=V1UQ54UQ2.1-W1	=V1UQ54KF1+V1UQ54-KF1.11-X2	=V1UQ54UQ2.1+V1UQ54UQ2.1-BGS/R	TPE	4	4	18	3	
=V1UQ54UQ3.1-W1	=V1UQ54KF1+V1UQ54-KF1.11-X3	=V1UQ54UQ3.1+V1UQ54UQ3.1-BGS/R	TPE	4	4	18	2	
=V1UQ54UQ3.2-W1	=V1UQ54KF1+V1UQ54-KF1.11-X4	=V1UQ54UQ3.2+V1UQ54UQ3.2-BGS/R	TPE	4	4	18	2	
=V1UQ54UQ3.3-W1	=V1UQ54KF1+V1UQ54-KF1.11-X5	=V1UQ54UQ3.3+V1UQ54UQ3.3-BGS/R	TPE	4	4	18	3	
=V1UQ54UQ4.1-W1	=V1UQ54KF1+V1UQ54-KF1.11-X6	=V1UQ54UQ4.1+V1UQ54UQ4.1-BGS/R	TPE	4	4	18	3	
=V1UQ54UQ4.2-W1	=V1UQ54KF1+V1UQ54-KF1.11-X7	=V1UQ54UQ4.2+V1UQ54UQ4.2-BGS/R	TPE	4	4	18	4	
=V1UQ54UQ4.3-W1	=V1UQ54KF1+V1UQ54-KF1.11-X8	=V1UQ54UQ4.3+V1UQ54UQ4.3-BGS/R	TPE	4	4	18	2	
=V1UQ54UQ5.1-W1	=V1UQ54KF1+V1UQ54-KF1.12-X1	=V1UQ54UQ5.1+V1UQ54UQ5.1-BGS/R	TPE	4	4	18	4	
=V1UQ54UQ5.2-W1	=V1UQ54KF1+V1UQ54-KF1.12-X2	=V1UQ54UQ5.2+V1UQ54UQ5.2-BGS/R	TPE	4	4	18	4	
=V1UQ54UQ5.3-W1	=V1UQ54KF1+V1UQ54-KF1.12-X3	=V1UQ54UQ5.3+V1UQ54UQ5.3-BGS/R	TPE	4	4	18	2	
=V1UQ54UQ5.4-W1	=V1UQ54KF1+V1UQ54-KF1.12-X4	=V1UQ54UQ5.4+V1UQ54UQ5.4-BGS/R	TPE	4	4	18	5	
=V1UQ54UQ6.1-W1	=V1UQ54KF1+V1UQ54-KF1.12-X5	=V1UQ54UQ6.1+V1UQ54UQ6.1-BGS/R	TPE	4	4	18	5	
=V1UQ54UQ6.2-W1	=V1UQ54KF1+V1UQ54-KF1.12-X6	=V1UQ54UQ6.2+V1UQ54UQ6.2-BGS/R	TPE	4	4	18	1	
=V1UQ54UQ7.1-W1	=V1UQ54KF1+V1UQ54-KF1.12-X7	=V1UQ54UQ7.1+V1UQ54UQ7.1-BGS/R	TPE	4	4	18	4	
=V1UQ54UQ8.1-W1	=V1UQ54KF1+V1UQ54-KF1.12-X8	=V1UQ54UQ8.1+V1UQ54UQ8.1-BGS/R	TPE	4	4	18	4	

			Date	1/17/2023	Volvo Trucks North America	Valiant TMS	Cable overview	Drawing name: =2V10&EFS-EL	=		
			Ed.	MKLEPADLO					+		
			Appr		P6700 Bodyside RH - Robot Cell 2V10			Document type: EMC	Project nr: 22-16150	Page	24
Modification	Date	Name	Original		Replacement of / Replaced by	Scale 1:1					1579

Cable overview

F10_001_Cable

Cable name	Source (from)	Target (to)	cable type	all conductors	Conductors used	Cross-section [mm]	Length [m]	remark
=V1UQ54UQ8.2-W1	=V1UQ54KF1+V1UQ54-KF1.13-X1	=V1UQ54UQ8.2+V1UQ54UQ8.2-BGS/R	TPE	4	4	18	6	
=V1UQ54UQ9.1-W1	=V1UQ54KF1+V1UQ54-KF1.13-X2	=V1UQ54UQ9.1+V1UQ54UQ9.1-BGS/R	TPE	4	4	18	6	
=V1UQ54UQ10.1-W1	=V1UQ54KF1+V1UQ54-KF1.13-X3	=V1UQ54UQ10.1+V1UQ54UQ10.1-BGS/R	TPE	4	4	18	5	
=V1UQ54UQ10.2-W1	=V1UQ54KF1+V1UQ54-KF1.13-X4	=V1UQ54UQ10.2+V1UQ54UQ10.2-BGS/R	TPE	4	4	18	6	
=V1UQ54UQ11.1-W1	=V1UQ54KF2+V1UQ54-KF2.11-X1	=V1UQ54UQ11.1+V1UQ54UQ11.1-BGS/R	TPE	4	4	18	5	
=V1UQ54UQ12.1-W1	=V1UQ54KF2+V1UQ54-KF2.11-X2	=V1UQ54UQ12.1+V1UQ54UQ12.1-BGS/R	TPE	4	4	18	5	
=V1UQ54UQ13.1-W1	=V1UQ54KF2+V1UQ54-KF2.11-X3	=V1UQ54UQ13.1+V1UQ54UQ13.1-BGS/R	TPE	4	4	18	6	
=V1UQ54UQ14.1-W1	=V1UQ54KF2+V1UQ54-KF2.11-X4	=V1UQ54UQ14.1+V1UQ54UQ14.1-BGS/R	TPE	4	4	18	5	
=V1UQ55BG0-W1	=V1UQ55BG0+V1UQ55-XG1/2	=V1UQ55KF1+V1UQ55-KF1.12-X1	TPE	4	4	18	0.5	
=V1UQ55BG0-W1.1	=V1UQ55BG0+V1UQ55-BG01	=V1UQ55BG0+V1UQ55-XG1/2	TPE	4	3	18	2	
=V1UQ55BG0-W1.2	=V1UQ55BG0+V1UQ55-BG02	=V1UQ55BG0+V1UQ55-XG1/2	TPE	4	3	18	3	
=V1UQ55BG0-W2	=V1UQ55BG0+V1UQ55-XG3/4	=V1UQ55KF1+V1UQ55-KF1.12-X2	TPE	4	4	18	0.5	
=V1UQ55BG0-W2.1	=V1UQ55BG0+V1UQ55-BG03	=V1UQ55BG0+V1UQ55-XG3/4	TPE	4	3	18	3	
=V1UQ55BG0-W2.2	=V1UQ55BG0+V1UQ55-BG04	=V1UQ55BG0+V1UQ55-XG3/4	TPE	4	3	18	3	
=V1UQ55BG0-W3	=V1UQ55BG0+V1UQ55-BG05	=V1UQ55KF1+V1UQ55-KF1.12-X3	TPE	4	3	18	1	
=V1UQ55UQ1.1-W1	=V1UQ55KF1+V1UQ55-KF1.11-X1	=V1UQ55UQ1.1+V1UQ55UQ1.1-BGS/R	TPE	4	4	18	3	
=V1UQ55UQ2.1-W1	=V1UQ55KF1+V1UQ55-KF1.11-X2	=V1UQ55UQ2.1+V1UQ55UQ2.1-BGS/R	TPE	4	4	18	2	
=V1UQ55UQ3.1-W1	=V1UQ55KF1+V1UQ55-KF1.11-X3	=V1UQ55UQ3.1+V1UQ55UQ3.1-BGS/R	TPE	4	4	18	2	
=V1UQ55UQ4.1-W1	=V1UQ55KF1+V1UQ55-KF1.11-X4	=V1UQ55UQ4.1+V1UQ55UQ4.1-BGS/R	TPE	4	4	18	2	
=V1UQ55UQ4.2-W1	=V1UQ55KF1+V1UQ55-KF1.11-X5	=V1UQ55UQ4.2+V1UQ55UQ4.2-BGS/R	TPE	4	4	18	4	
=V1GL1UQ53UQ12.4-W1	=V1GL1UQ53KF2+V1GL1UQ53-KF2.12-X2	=V1GL1UQ53UQ12.4+V1GL1UQ53UQ12.4-BGS/R	TPE	4	4	18	3	
=V1FQ1-W12R	=V1FQ1+V1FQ1-BR11-R	=V1FQ1+V1FQ1-BR12-R	TPE	8	8	22	0.61	
=V1FQ1-W12T	=V1FQ1+V1FQ1-BR11-T	=V1FQ1+V1FQ1-BR12-T	TPE	8	8	22	0.61	
=V1FQ1-W14R	=V1FQ1+V1FQ1-BR13-R	=V1FQ1+V1FQ1-BR14-R	TPE	8	8	22	0.61	
=V1FQ1-W14T	=V1FQ1+V1FQ1-BR13-T	=V1FQ1+V1FQ1-BR14-T	TPE	8	8	22	0.61	
=V1FQ1-W17R	=V1FQ1+V1FQ1-BR16-R	=V1FQ1+V1FQ1-BR17-R	TPE	8	8	22	0.61	
=V1FQ1-W17T	=V1FQ1+V1FQ1-BR16-T	=V1FQ1+V1FQ1-BR17-T	TPE	8	8	22	0.61	
=V1FQ1-W19R	=V1FQ1+V1FQ1-BR18-R	=V1FQ1+V1FQ1-BR19-R	TPE	8	8	22	0.61	
=V1FQ1-W19T	=V1FQ1+V1FQ1-BR18-T	=V1FQ1+V1FQ1-BR19-T	TPE	8	8	22	0.61	
=V1PF1WC3-W1	=V1PF1WC3+V1PF1UC01-XG1-X1	=V1WC3+V1UC11-XD2	TPU	3	3	12	20	
		=V1WC3+V1UC11-PE						
=V1AR11UQ41KF1-W1	=V1AR11UQ41KF1+V1AR11UQ41-R3.CP/CS	=V1AR11UQ41KF1+V1AR11UQ41-XG1	TPU	5	4	16	2	
=V1AR11UQ41KF1-W1.1	=V1AR11UQ41KF1+V1AR11UQ41-KF1-X20	=V1AR11UQ41KF1+V1AR11UQ41-XG1	TPU	5	4	16	1	
=V1AR11UQ41KF1-W1.2	=V1AR11UQ41KF1+V1AR11UQ41-KF1.14	=V1AR11UQ41KF1+V1AR11UQ41-XG1	TPU	5	4	16	2	
=V1AR31UQ41KF1-W1	=V1AR31UQ41KF1+V1AR31UQ41-KF1-X20	=V1AR31UQ41KF1+V1AR31UQ41-R3.CP/CS	TPU	5	5	16	1	
=V1AR31XQ41KF1-W1			TPU	5	0	16	2	
=V1AR81UQ41KF1-W1	=V1AR81UQ41KF1+V1AR81UQ41-KF1-X20	=V1AR81UQ41KF1+V1AR81UQ41-R3.CP/CS	TPU	5	5	16	1	
=V1FQ1-W1			TPU	5	0	16	15	
=V1FQ1-W2	=V1FQ1+V1FQ1BG1-BG1-X2	=V1FQ1+V1FQ1BG2-BG2-X1	TPU	5	5	16	25	
=V1FQ1-W3	=V1FQ1+V1FQ1BG2-BG2-X2	=V1FQ1+V1FQ1BG3-BG3-X1	TPU	5	5	16	25	
=V1FQ1-W4			TPU	5	0	16	20	
=V1FQ1-W5	=V1FQ1+V1FQ1BG4-BG4-X2	=V1FQ1+V1FQ1BG5-BG5-X1	TPU	5	5	16	20	
=V1FQ1-W6	=V1FQ1+V1FQ1BG5-BG5-X2	=V1FQ1+V1FQ1BG6-BG6-X1	TPU	5	5	16	20	
=V1GL1UQ51KF1-W1.1	=V1GL1UQ51KF1+V1GL1UQ51-KF1-X20	=V1GL1UQ51WC4+V1GL1UQ51-XG51.1	TPU	5	5	16	2	
=V1GL1UQ51KF2-W2.1	=V1GL1UQ51KF2+V1GL1UQ51-KF2-X20	=V1GL1UQ51WC4+V1GL1UQ51-XG51.2	TPU	5	5	16	5	
=V1GL1UQ51KF3-W3.1	=V1GL1UQ51KF3+V1GL1UQ51-KF3-X20	=V1GL1UQ51WC4+V1GL1UQ51-XG51.2	TPU	5	5	16	2	

Cable overview

F10_001_Cable

Cable name	Source (from)	Target (to)	cable type	all conductors	Conductors used	Cross-section [mm]	Length [m]	remark
=V1GL1UQ51WC4-W1			TPU	5	0	16	2	
=V1GL1UQ51WC4-W1.1	=V1GL1UQ51WC4+V1GL1UQ51-XG51.1	=V1GL1UQ51WC4+V1GL1UQ51-XG51.2	TPU	5	5	16	5	
=V1GL1UQ52KF1-W1.1	=V1GL1UQ52KF1+V1GL1UQ52-KF1-X20	=V1GL1UQ52WC4+V1GL1UQ52-XG51.1	TPU	5	5	16	2	
=V1GL1UQ52KF2-W2.1	=V1GL1UQ52KF2+V1GL1UQ52-KF2-X20	=V1GL1UQ52WC4+V1GL1UQ52-XG51.2	TPU	5	5	16	5	
=V1GL1UQ52KF3-W3.1	=V1GL1UQ52KF3+V1GL1UQ52-KF3-X20	=V1GL1UQ52WC4+V1GL1UQ52-XG51.2	TPU	5	5	16	2	
=V1GL1UQ52WC4-W1			TPU	5	0	16	2	
=V1GL1UQ52WC4-W1.1	=V1GL1UQ52WC4+V1GL1UQ52-XG51.1	=V1GL1UQ52WC4+V1GL1UQ52-XG51.2	TPU	5	5	16	5	
=V1GL1UQ53KF1-W1.1	=V1GL1UQ53KF1+V1GL1UQ53-KF1-X20	=V1GL1UQ53WC4+V1GL1UQ53-XG51.1	TPU	5	5	16	2	
=V1GL1UQ53KF2-W2.1	=V1GL1UQ53KF2+V1GL1UQ53-KF2-X20	=V1GL1UQ53WC4+V1GL1UQ53-XG51.2	TPU	5	5	16	5	
=V1GL1UQ53KF3-W3.1	=V1GL1UQ53KF3+V1GL1UQ53-KF3-X20	=V1GL1UQ53WC4+V1GL1UQ53-XG51.2	TPU	5	5	16	2	
=V1GL1UQ53WC4-W1			TPU	5	0	16	2	
=V1GL1UQ53WC4-W1.1	=V1GL1UQ53WC4+V1GL1UQ53-XG51.1	=V1GL1UQ53WC4+V1GL1UQ53-XG51.2	TPU	5	5	16	5	
=V1GL1UQ54KF1-W1.1	=V1GL1UQ54KF1+V1GL1UQ54-KF1-X20	=V1GL1UQ54WC4+V1GL1UQ54-XG51.1	TPU	5	5	16	2	
=V1GL1UQ54KF2-W2.1	=V1GL1UQ54KF2+V1GL1UQ54-KF2-X20	=V1GL1UQ54WC4+V1GL1UQ54-XG51.2	TPU	5	5	16	5	
=V1GL1UQ54KF3-W3.1	=V1GL1UQ54KF3+V1GL1UQ54-KF3-X20	=V1GL1UQ54WC4+V1GL1UQ54-XG51.2	TPU	5	5	16	2	
=V1GL1UQ54WC4-W1			TPU	5	0	16	2	
=V1GL1UQ54WC4-W1.1	=V1GL1UQ54WC4+V1GL1UQ54-XG51.1	=V1GL1UQ54WC4+V1GL1UQ54-XG51.2	TPU	5	5	16	5	
=V1GL1UQ56KF1-W1	=V1WC4+V1UC12-XD151	=V1GL1UQ56KF1+V1GL1UQ56-KF1-X20	TPU	5	5	16	25	
=V1GL1UQ57KF1-W1	=V1WC4+V1UC12-XD161	=V1GL1UQ57KF1+V1GL1UQ57-KF1-X20	TPU	5	5	16	25	
=V1GL2UQ51KF1-W3.2	=V1GL2UQ51KF1+V1GL2UQ51-KF1-X20	=V1GL2UQ51WC4+V1GL1UQ52-XG51.1	TPU	5	5	16	1	
=V1GL2UQ51KF2-W4.2	=V1GL2UQ51KF2+V1GL2UQ51-KF2-X20	=V1GL2UQ51WC4+V1GL1UQ52-XG51.2	TPU	5	5	16	1	
=V1GL2UQ51KF3-W5.1	=V1GL2UQ51KF3+V1GL2UQ51-KF3-X20	=V1GL2UQ51WC4+V1GL1UQ52-XG51.3	TPU	5	5	16	1	
=V1GL2UQ51KF4-W5.2	=V1GL2UQ51KF4+V1GL2UQ51-KF4-X20	=V1GL2UQ51WC4+V1GL1UQ52-XG51.3	TPU	5	5	16	1	
=V1GL2UQ51WC4-W3	=V1GL2WC4+V1GL2-UCMS1	=V1GL2UQ51WC4+V1GL1UQ52-XG51.1	TPU	5	5	16	25	
=V1GL2UQ51WC4-W3.1	=V1GL2UQ51WC4+V1GL1UQ52-XG51.1	=V1GL2UQ51WC4+V1GL1UQ52-XG51.2	TPU	5	5	16	5	
=V1GL2UQ51WC4-W4.1	=V1GL2UQ51WC4+V1GL1UQ52-XG51.2	=V1GL2UQ51WC4+V1GL1UQ52-XG51.3	TPU	5	5	16	5	
=V1GL2WC4-W1.1	=V1GL2WC4+V1GL2-W1.1	=V1WC4+V1UC14-XG51	TPU	5	5	16	30	
=V1GL2WC4-W1.2	=V1GL2WC4+V1GL2-W1.2	=V1WC4+V1UC14-XG51	TPU	5	5	16	30	
=V1GL2WC4-W2	=V1GL2WC4+V1GL2-UCMS1	=V1GL2WC4+V1GL2-W1.1	TPU	5	5	16	15	
=V1GL2WC4-W5	=V1GL2WC4+V1GL2-W1.2	=V1GL2KF1+V1GL2-KF1-I1	TPU	5	5	16	15	
=V1GL18UQ51KF1-W1	=V1WC4+V1UC11-XD151	=V1GL18UQ51KF1+V1GL18UQ51-KF1-X20	TPU	5	5	16	40	
=V1PF1KF1-W1	=V1WC4+V1UC15-XD171	=V1PF1KF1+V1PF1-KF1-X20	TPU	5	5	16	30	
=V1PZ1PF1-W1			TPU	5	0	16	8	
=V1PZ1PF2-W1			TPU	5	0	16	8	
=V1PZ1PF3-W1			TPU	5	0	16	8	
=V1PZ1PF4-W1			TPU	5	0	16	8	
=V1SF0PG2-W1	=V1WC4+V1UC12-XD51	=V1SF0PG2+V1UC51-XG1	TPU	5	5	16	25	
=V1SF0PG2-W1.2	=V1SF0PG2+V1UC51-XD1	=V1SF0PG2+V1UC51-XG1	TPU	5	4	16	1	
=V1SF0PG3-W1	=V1SF0PG3+V1UC52-XD1	=V1SF0PG2+V1UC51-XG1	TPU	5	4	16	10	
=V1SF0PG4-W1	=V1WC4+V1UC14-XD161	=V1SF0PG4+V1UC53-XG1	TPU	5	5	16	20	
=V1SF0PG4-W1.2	=V1SF0PG4+V1UC53-XD1	=V1SF0PG4+V1UC53-XG1	TPU	5	4	16	1	
=V1SF0PG5-W1.1	=V1SF0PG4+V1UC53-XG1	=V1SF0PG5+V1UC54-XG2	TPU	5	5	16	10	
=V1SF0PG5-W2.2	=V1SF0PG5+V1UC54-XD1	=V1SF0PG5+V1UC54-XG2	TPU	5	4	16	1	
=V1U10U01KF1-W1	=V1WC4+V1UC12-XD171	=V1U10U01KF1+V1U10U01-KF1.11	TPU	5	4	16	25	
=V1U20U01KF1-W2.1	=V1SF0PG5+V1UC54-XG2	=V1U20U01KF1+V1U20U01-KF1.11	TPU	5	4	16	5	
=V1UN1KF1-W1	=V1WC4+V1UC15-XD161	=V1UN1KF1+V1UN1-KF1.11	TPU	5	4	16	30	

Cable overview

F10_001_Cable

Cable name	Source (from)	Target (to)	cable type	all conductors	Conductors used	Cross-section [mm]	Length [m]	remark
=V1UQ51KF1-W1	=V1WC4+V1UC15-XD151	=V1UQ51KF1+V1UQ51-KF1-X20	TPU	5	5	16	25	
=V1UQ52KF1-W1.2	=V1UQ52KF1+V1UQ52-KF1-X20	=V1UQ52WC4+V1UQ52-XG51.1	TPU	5	5	16	1	
=V1UQ52KF2-W2.1	=V1UQ52KF2+V1UQ52-KF2-X20	=V1UQ52WC4+V1UQ52-XG51.2	TPU	5	5	16	1	
=V1UQ52KF3-W2.2	=V1UQ52KF3+V1UQ52-KF3-X20	=V1UQ52WC4+V1UQ52-XG51.2	TPU	5	5	16	3	
=V1UQ52KF4-W3.1	=V1UQ52KF4+V1UQ52-KF4-X20	=V1UQ52WC4+V1UQ52-XG51.3	TPU	5	5	16	1	
=V1UQ52KF5-W3.2	=V1UQ52KF5+V1UQ52-KF5-X20	=V1UQ52WC4+V1UQ52-XG51.3	TPU	5	5	16	2	
=V1UQ52WC4-W1	=V1WC4+V1UC14-XD171	=V1UQ52WC4+V1UQ52-XG51.1	TPU	5	5	16	40	
=V1UQ52WC4-W1.1	=V1UQ52WC4+V1UQ52-XG51.1	=V1UQ52WC4+V1UQ52-XG51.2	TPU	5	5	16	5	
=V1UQ52WC4-W3	=V1WC4+V1UC14-XD181	=V1UQ52WC4+V1UQ52-XG51.3	TPU	5	5	16	40	
=V1UQ53KF1-W1.1	=V1UQ53KF1+V1UQ53-KF1-X20	=V1UQ53WC4+V1UQ53-XG51	TPU	5	5	16	1	
=V1UQ53KF2-W1.2	=V1UQ53KF2+V1UQ53-KF2-X20	=V1UQ53WC4+V1UQ53-XG51	TPU	5	5	16	5	
=V1UQ53WC4-W1	=V1WC4+V1UC11-XD161	=V1UQ53WC4+V1UQ53-XG51	TPU	5	5	16	25	
=V1UQ54KF1-W1.1	=V1UQ54KF1+V1UQ54-KF1-X20	=V1UQ54WC4+V1UQ54-XG51	TPU	5	5	16	1	
=V1UQ54KF2-W1.2	=V1UQ54KF2+V1UQ54-KF2-X20	=V1UQ54WC4+V1UQ54-XG51	TPU	5	5	16	5	
=V1UQ54WC4-W1	=V1WC4+V1UC11-XD171	=V1UQ54WC4+V1UQ54-XG51	TPU	5	5	16	20	
=V1UQ55KF1-W1	=V1WC4+V1UC11-XD181	=V1UQ55KF1+V1UQ55-KF1-X20	TPU	5	5	16	30	
=V1WC4-W1	=V1WC4+V1UC14-XD151	=V1WC4+V1UC14-XG51	TPU	5	5	16	5	
=V1WC4-W1	=V1WC4+V1UC11-XD51	=V1WC4+V1UC32-XD1	TPU	5	4	16	15	
=V1SF0SF2-W1	=V1KF1+V1UC12-KF12.14	=V1SF0SF2+V1UC72-SF1	TPU	8	8	24	20	
	=V1WC4+V1UC12-XD14							
	=V1KF1+V1UC12-KF12.32							
	=V1WC4+V1UC12-XD10							
=V1SF0SF4-W1	=V1KF1+V1UC14-KF14.12	=V1SF0SF4+V1UC74-SF1	TPU	8	8	24	20	
	=V1WC4+V1UC14-XD16							
	=V1KF1+V1UC14-KF14.32							
	=V1WC4+V1UC14-XD10							

Parts list

F01_001

Device tag	Quantity	Designation	Type number	Supplier	Part number
	9	Mounting rail EN 50 022 (35x7,5)	TS 35_7,5		TS 35_7,5

&EMC/27

+KH0/1

			Date	1/17/2023	Volvo Trucks North America	Valiant TMS	Parts list : TS 35_7,5 - TS 35_7,5	Drawing name: =2V10&EFS-EL	=	
			Ed.	MKLEPADLO					+	
			Appr		P6700 Bodyside RH - Robot Cell 2V10			Document type: EPB	Project nr: 22-16150	Page 1 / 1579
Modification	Date	Name	Original		Replacement of / Replaced by	Scale 1:1				

Parts list

F01_001

Device tag	Quantity	Designation	Type number	Supplier	Part number
=KH0-W1-XD2	1				TUR.BS 8251-0/PG9

+/1

+UC31/1

			Date	1/17/2023	Volvo Trucks North America	Valiant TMS	Parts list : TUR.BS 8251-0/PG9 - TUR.BS 8251-0/PG9	Drawing name:	=	
			Ed.	MKLEPADLO					+ KH0	
			Appr		P6700 Bodyside RH - Robot Cell 2V10			Document type: EPB	Project nr: 22-16150	Page 1 / 1579
Modification	Date	Name	Original		Replacement of / Replaced by	Scale 1:1				

Parts list

F01_001

Device tag	Quantity	Designation	Type number	Supplier	Part number
=KF0-M1	1	Ground bar kit, 5 positions.	ECGB5	SIE	US2.ECGB5
=KF0-M1	1	Wiring Duct Covers, PVC	C1.5LG6	PAN	PAN.C1.5LG6
=KF0-M1	1	Wiring Duct Covers, PVC	C1LG6	PAN	PAN.C1LG6
=KF0-M1	1	Wide Slotted Wiring Duct, PVC	G1.5X4LG6	PAN	PAN.G1.5X4LG6
=KF0-M1	1	Wide Slotted Wiring Duct, PVC	G1X4LG6	PAN	PAN.G1X4LG6
=KF0-M1	1	STAND.SECTIONAL RAIL 35MM, LENGTH 483MM	6ES5710-8MA11	Siemens AG	SIE.6ES5710-8MA11
=KF0-UC31	1	PC PC enclosure system, WHD: 800x1600x600 mm, Sheet steel	PC.5386050	RIT	RIT.5386050
=KF0-UC31	1	VX Partial mounting plate, for VX: 700x700 mm	VX.8617580	RIT	RIT.8617580
=KF0-UC31	1	Base/plinth corner piece with base/plinth trim panels, front and rear,	VX.8640003		RIT.8640003
=KF0-UC31	1	Base/plinth trim panels, side, sheet steel, optimised design, 100 mm	VX.8640033		RIT.8640033
=KF0-UC91	1	Pushbutton Enclosure, Type 12, 4PB, 22.5mm holes, 10.00Hx3.25Wx2.75D, Gray, Steel	E4PBG	HOFFMAN	HOF.E4PBG
=KF0-UC91	1	Hol-Sealers Hole Seal, 1.22" diameter, Gray, Steel	ASPBG	HOFFMAN	ASPBG
=KF0-UC92	1	Pushbutton Enclosure, Type 12, 4PB, 22.5mm holes, 10.00Hx3.25Wx2.75D, Gray, Steel	E4PBG	HOFFMAN	HOF.E4PBG
=KF0-UC92	1	LEGEND PLATET KTC15-1005	KTC15-1005		ABB.1SFA616915R1005
=KF0-UC92	1	Hol-Sealers Hole Seal, 1.22" diameter, Gray, Steel	ASPBG	HOFFMAN	ASPBG
=KF0KF1-KF1.31	1	CPU 1517F-3 PN/DP, 3MB PROG., 8MB DATA	6ES7517-3FP00-0AB0	SIE	SIE.6ES7517-3FP00-0AB0
=KF0KF1-KF1.31	1	SIMATIC S7 MEMORY CARD, 2 GB	6ES7954-8LP03-0AA0	SIE	SIE.6ES7954-8LP03-0AA0
=KF0KF1-KF1.31	1	MOUNTING RAIL 245MM (9.6")	6ES7590-1AC40-0AA0	SIE	SIE.6ES7590-1AC40-0AA0
=KF0KF1-KF31	1				SIE.6ES7155-6AA01-0BN0_subassembly
=KF0KF1-KF31	1	ET200SP, SERVERMODULE	6ES7193-6PA00-0AA0		SIE.6ES7193-6PA00-0AA0
=KF0KF1-KF31.11	1	ET 200SP, DI 16x 24V DC ST, PU 1	6ES7131-6BH01-0BA0	SIE	SIE.6ES7131-6BH01-0BA0
=KF0KF1-KF31.11	1	BASEUNIT TYPE A0, BU15-P16+A0+2D	6ES7193-6BP00-0DA0	SIE	SIE.6ES7193-6BP00-0DA0
=KF0KF1-KF31.21	1	ET 200SP, DQ 16x 24V DC/0,5A ST, PU 1	6ES7132-6BH01-0BA0	SIE	SIE.6ES7132-6BH01-0BA0
=KF0KF1-KF31.21	1	BASEUNIT TYPE A0, BU15-P16+A0+2D	6ES7193-6BP00-0DA0	SIE	SIE.6ES7193-6BP00-0DA0
=KF0KF1-KF31.31	1	ET 200SP, El-Mod., F-DI 8x24VDC HF	6ES7136-6BA01-0CA0	SIE	SIE.6ES7136-6BA01-0CA0
=KF0KF1-KF31.31	1	BASEUNIT TYPE A0, BU15-P16+A0+2D	6ES7193-6BP00-0DA0	SIE	SIE.6ES7193-6BP00-0DA0
=KF0KF1-KF99.31	1	SCALANCE S615	6GK5615-0AA00-2AA2	SIE	SIE.6GK5615-0AA00-2AA2
=KF0KF1-KF100.31	1	SCALANCE XC216	6GK5216-0BA00-2AC2	SIE	SIE.6GK5216-0BA00-2AC2
=KF0KF1-KF100.31-P6	1	Profinet cable - RJ45 plug to M12 Female receptacle; 1m long	RJ45S FKSDED 423-1M	TURCK	TUR.RJ45S FKSDED 423-1M
=KF0KF1-KF100.31-P7	1	Profinet cable - RJ45 plug to M12 Female receptacle; 1m long	RJ45S FKSDED 423-1M	TURCK	TUR.RJ45S FKSDED 423-1M
=KF0KF1-KF100.31-P8	1	Profinet cable - RJ45 plug to M12 Female receptacle; 1m long	RJ45S FKSDED 423-1M	TURCK	TUR.RJ45S FKSDED 423-1M
=KF0KF1-KF100.31-P9	1	Profinet cable - RJ45 plug to M12 Female receptacle; 1m long	RJ45S FKSDED 423-1M	TURCK	TUR.RJ45S FKSDED 423-1M
=KF0KF1-KF100.31-P10	1	Profinet cable - RJ45 plug to M12 Female receptacle; 1m long	RJ45S FKSDED 423-1M	TURCK	TUR.RJ45S FKSDED 423-1M
=KF0KF1-KF100.31-P11	1	Profinet cable - RJ45 plug to M12 Female receptacle; 1m long	RJ45S FKSDED 423-1M	TURCK	TUR.RJ45S FKSDED 423-1M
=KF0KF1-KF100.31-P12	1	Profinet cable - RJ45 plug to M12 Female receptacle; 1m long	RJ45S FKSDED 423-1M	TURCK	TUR.RJ45S FKSDED 423-1M
=KF0KF1-KF100.31-P13	1	Profinet cable - RJ45 plug to M12 Female receptacle; 1m long	RJ45S FKSDED 423-1M	TURCK	TUR.RJ45S FKSDED 423-1M
=KF0KF1-KF100.31-P14	1	Profinet cable - RJ45 plug to M12 Female receptacle; 1m long	RJ45S FKSDED 423-1M	TURCK	TUR.RJ45S FKSDED 423-1M
=KF0KF1-KF100.31-P15	1	Profinet cable - RJ45 plug to M12 Female receptacle; 1m long	RJ45S FKSDED 423-1M	TURCK	TUR.RJ45S FKSDED 423-1M
=KF0KF1-KF100.31-P16	1	Profinet cable - RJ45 plug to M12 Female receptacle; 1m long	RJ45S FKSDED 423-1M	TURCK	TUR.RJ45S FKSDED 423-1M
=KF0KF1-XG1	1				4000-73000-0180000
=KF0KF1-XG2	1				4000-73000-0180000
=KF0PZ1-PF1	1	Signaling column connection element for pipe mounting incl. end cover and seal	8WD4408-0AA	SIE	SIE.8WD4408-0AA
=KF0PZ1-PF1	1	Tube with foot, tube length 100 mm, accessory for signaling columns 8WD44, D=70 mm	8WD4308-0DA	SIEMENS	SIE.8WD4308-0DA
=KF0PZ1-PF1	1	Signaling column multifunctional siren element different sounds can be set 24 V	8WD4420-0EA2		SIE.8WD4420-0EA2
=KF0PZ1-PF1	1	Signaling column continuous light element LED red, 24 V AC/DC	8WD4420-5AB	SIE	SIE.8WD4420-5AB
=KF0PZ1-PF1	1	Signaling column continuous light element LED green, 24 V AC/DC	8WD4420-5AC	SIE	SIE.8WD4420-5AC
=KF0WC3-FC1	1	Miniature Circuit Breaker - SU200 M - 1P - C - 10 A	SU201M-C10	ABB	ABB.2CDS271337R0104
=KF0WC3-FC1	1	S2C-H6RU - Auxiliary Contact	S2C-H6RU	ABB	ABB.2CDS200914R0001
=KF0WC3-FC2	1	Miniature Circuit Breaker - SU200 M - 1P - C - 10 A	SU201M-C10	ABB	ABB.2CDS271337R0104
=KF0WC3-FC2	1	S2C-H6RU - Auxiliary Contact	S2C-H6RU	ABB	ABB.2CDS200914R0001
=KF0WC4-FC11	1	4x3-10A	6EP1961-2BA41	SIE	SIE.6EP1961-2BA41
=KF0WC4-GA1	1	SITOP UPS1600	6EP4134-3AB00-2AY0		SIE.6EP4134-3AB00-2AY0
=KF0WC4-GB1	1	SITOP UPS1100	6EP4134-0GB00-0AY0	SIE	SIE.6EP4134-0GB00-0AY0
=KF0WC4-TA1	1	SITOP PSU6200 1ph 24 V/20 A	6EP3336-7SB00-3AX0		SIE.6EP3336-7SB00-3AX0

Parts list

F01_001

Device tag	Quantity	Designation	Type number	Supplier	Part number
=KF0FQ0-SF1	1	EMERGENCY STOP CE4T-10R-02	CE4T-10R-02	ABB	ABB.1SFA619550R1051
=KF0FQ0-SF1	1	LEGEND PLATET KTC15-1005	KTC15-1005		ABB.1SFA616915R1005
=KF0SF1-SF5	1	PUSHBUTTON CP1-10G-20	CP1-10G-20	ABB	ABB.1SFA619100R1022
=KF0SF1-SF6	1	PUSHBUTTON CP1-10Y-20	CP1-10Y-20	ABB	ABB.1SFA619100R1023

Parts list

F01_001

Device tag	Quantity	Designation	Type number	Supplier	Part number
=KF0SF1-SF1/PF1	1	PUSHBUTTON CP1-11R-10 24V AC/DC	CP1-11R-10	ABB	ABB.1SFA619100R1111
=KF0SF1-SF2	1	PUSHBUTTON CP1-10B-20	CP1-10B-20	ABB	ABB.1SFA619100R1026
=KF0SF1-SF3/PF3	1	PUSHBUTTON CP1-11C-10	CP1-11C-10	ABB	ABB.1SFA619100R1118
=KF0SF1-SF4	1	SELECTOR SWITCH C2SS1-10B-10	C2SS1-10B-10	ABB	ABB.1SFA619200R1016

Parts list

F01_001

Device tag	Quantity	Designation	Type number	Supplier	Part number
=FQ0V1SF1S01-SF1	1	EMERGENCY STOP CE4T-10R-02	CE4T-10R-02	ABB	ABB.1SFA619550R1051
=FQ0V1SF1S01-SF1	1	LEGEND PLATET KTC15-1005	KTC15-1005		ABB.1SFA616915R1005

+UC31UC92/1

+V1AR11UQ41/1

			Date	1/17/2023	Volvo Trucks North America	Valiant TMS	Parts list : ABB.1SFA619550R1051 - ABB.1SFA616915R1005	Drawing name: =2V10&EFS-EL	=
			Ed.	MKLEPADLO					+ UC32
			Appr		P6700 Bodyside RH - Robot Cell 2V10			Document type: EPB	Project nr: 22-16150
Modification	Date	Name	Original		Replacement of / Replaced by	Scale 1:1			Page 1 / 1579

Parts list

F01_001

Device tag	Quantity	Designation	Type number	Supplier	Part number
=V1AR11UQ41BG0-BG01	1	Inductive sensor	NI50U-CK40-AP6X2-H1141/S1590 W/BS4_A	Turck	TUR.1625891
=V1AR11UQ41BG0-BG02	1	Inductive sensor	NI50U-CK40-AP6X2-H1141/S1590 W/BS4_A	Turck	TUR.1625891
=V1AR11UQ41BG0-BG03	1	Inductive sensor	NI50U-CK40-AP6X2-H1141/S1590 W/BS4_A	Turck	TUR.1625891
=V1AR11UQ41BG0-BG04	1	Inductive sensor	NI50U-CK40-AP6X2-H1141/S1590 W/BS4_A	Turck	TUR.1625891
=V1AR11UQ41BG0-BG05	1	Inductive sensor	NI50U-CK40-AP6X2-H1141/S1590 W/BS4_A	Turck	TUR.1625891
=V1AR11UQ41BG0-BG06	1	Inductive sensor	NI50U-CK40-AP6X2-H1141/S1590 W/BS4_A	Turck	TUR.1625891
=V1AR11UQ41BG0-BG07	1	Inductive sensor	NI50U-CK40-AP6X2-H1141/S1590 W/BS4_A	Turck	TUR.1625891
=V1AR11UQ41BG0-BG08	1	Inductive sensor	NI50U-CK40-AP6X2-H1141/S1590 W/BS4_A	Turck	TUR.1625891
=V1AR11UQ41BG0-BG09	1	Inductive sensor	NI50U-CK40-AP6X2-H1141/S1590 W/BS4_A	Turck	TUR.1625891
=V1AR11UQ41BG0-BG10	1	Inductive sensor	NI50U-CK40-AP6X2-H1141/S1590 W/BS4_A	Turck	TUR.1625891
=V1AR11UQ41BG0-XG1/2	1	Y splitter	U2-30676	TURCK	TUR.VB2-FSM 4.4/2FKM 4/S3450
=V1AR11UQ41BG0-XG3/4	1	Y splitter	U2-30676	TURCK	TUR.VB2-FSM 4.4/2FKM 4/S3450
=V1AR11UQ41BG0-XG5/6	1	Y splitter	U2-30676	TURCK	TUR.VB2-FSM 4.4/2FKM 4/S3450
=V1AR11UQ41BG0-XG7/8	1	Y splitter	U2-30676	TURCK	TUR.VB2-FSM 4.4/2FKM 4/S3450
=V1AR11UQ41BG0-XG9/10	1	Y splitter	U2-30676	TURCK	TUR.VB2-FSM 4.4/2FKM 4/S3450
=V1AR11UQ41KF1-KF1	0	Bus node	CPX-FB33	FES	FES.548755
=V1AR11UQ41KF1-KF1	0	Interlinking block	CPX-M-GE-EV-S-7/8-5POL	FES	FES.550208
=V1AR11UQ41KF1-KF1.11	0	Manifold block	CPX-M-AB-8-M12X2-5POL	FES	FES.549335
=V1AR11UQ41KF1-KF1.12	0	Manifold block	CPX-M-AB-8-M12X2-5POL	FES	FES.549335
=V1AR11UQ41KF1-KF1.13	0	Manifold block	CPX-M-AB-8-M12X2-5POL	FES	FES.549335
=V1AR11UQ41KF1-KF1.14	1	MVK-MPNIO DIO16 IRT 7/8" 5pin	MVK-MPNIO DI16	MURR	MURR.55530
=V1AR11UQ41KF1-XG1	1	TEE, 5-PIN MINI, STANDARD KEYWAY	RSM-2RKM 50	TURCK	TUR.RSM-2RKM 50

Parts list

F01_001

Device tag	Quantity	Designation	Type number	Supplier	Part number
=V1AR11UQ41UQ1.1-BGS/R	1	Inductive sensor Monitoring Kit for Power Clamps	WWS001A	WELKER	WELKER.WWS001A

+V1AR11UQ41/1

+.AR11UQ41UQ1.2/1

			Date	1/17/2023	Volvo Trucks North America	Valiant TMS	Parts list : WELKER.WWS001A - WELKER.WWS001A	Drawing name: =2V10&EFS-EL		=	
			Ed.	MKLEPADLO						+ V1AR11UQ41UQ1.1	
			Appr		P6700 Bodyside RH - Robot Cell 2V10			Document type: EPB	Project nr: 22-16150	Page	1
Modification	Date	Name	Original		Replacement of / Replaced by	Scale 1:1					1579

Parts list

F01_001

Device tag	Quantity	Designation	Type number	Supplier	Part number
=V1AR11UQ41UQ1.2-BGS/R	1	Inductive sensor Monitoring Kit for Power Clamps	WWS001A	WELKER	WELKER.WWS001A

+.AR11UQ41UQ1.1/1

+.AR11UQ41UQ1.3/1

Parts list

F01_001

Device tag	Quantity	Designation	Type number	Supplier	Part number
=V1AR11UQ41UQ1.3-BGS/R	1	Inductive sensor Monitoring Kit for Power Clamps	WWS001A	WELKER	WELKER.WWS001A

+.AR11UQ41UQ1.2/1

+.AR11UQ41UQ1.4/1

Parts list

F01_001

Device tag	Quantity	Designation	Type number	Supplier	Part number
=V1AR11UQ41UQ1.4-BGS/R	1	Inductive sensor Monitoring Kit for Power Clamps	WWS001A	WELKER	WELKER.WWS001A

+.AR11UQ41UQ1.3/1

+.AR11UQ41UQ2.1/1

Parts list

F01_001

Device tag	Quantity	Designation	Type number	Supplier	Part number
=V1AR11UQ41UQ2.1-BGS/R	1	Inductive sensor Monitoring Kit for Vario Clamps	1324633	TUNKERS	TUN.1324633

+.AR11UQ41UQ1.4/1

+.AR11UQ41UQ2.2/1

			Date	1/17/2023	Volvo Trucks North America		Valiant TMS	Parts list : TUN.1324633 - TUN.1324633	Drawing name: =2V10&EFS-EL	= + V1AR11UQ41UQ2.1	
			Ed.	MKLEPADLO							
			Appr		P6700 Bodyside RH - Robot Cell 2V10				Document type: EPB	Project nr: 22-16150	Page 1 / 1579
Modification	Date	Name	Original		Replacement of	Replaced by	Scale 1:1				

Parts list

F01_001

Device tag	Quantity	Designation	Type number	Supplier	Part number
=V1AR11UQ41UQ2.2-BGS/R	1	Inductive sensor Monitoring Kit for Vario Clamps	1324633	TUNKERS	TUN.1324633

+.AR11UQ41UQ2.1/1

+.AR11UQ41UQ2.3/1

Parts list

F01_001

Device tag	Quantity	Designation	Type number	Supplier	Part number
=V1AR11UQ41UQ2.3-BGS/R	1	Inductive sensor Monitoring Kit for Vario Clamps	1324633	TUNKERS	TUN.1324633

+.AR11UQ41UQ2.2/1

+.AR11UQ41UQ3.1/1

			Date	1/17/2023	Volvo Trucks North America	Valiant TMS	Parts list : TUN.1324633 - TUN.1324633	Drawing name: =2V10&EFS-EL	= + V1AR11UQ41UQ2.3	
			Ed.	MKLEPADLO						
			Appr		P6700 Bodyside RH - Robot Cell 2V10			Document type: EPB	Project nr: 22-16150	Page 1 / 1579
Modification	Date	Name	Original		Replacement of / Replaced by	Scale 1:1				

Parts list

F01_001

Device tag	Quantity	Designation	Type number	Supplier	Part number
=V1AR11UQ41UQ3.1-BGS/R	1	Inductive sensor Monitoring Kit for Vario Clamps	1324633	TUNKERS	TUN.1324633

+.AR11UQ41UQ2.3/1

+.AR11UQ41UQ3.2/1

			Date	1/17/2023	Volvo Trucks North America	Valiant TMS	Parts list : TUN.1324633 - TUN.1324633	Drawing name: =2V10&EFS-EL		=	
			Ed.	MKLEPADLO						+ V1AR11UQ41UQ3.1	
			Appr		P6700 Bodyside RH - Robot Cell 2V10			Document type: EPB	Project nr: 22-16150	Page	1
Modification	Date	Name	Original		Replacement of / Replaced by	Scale 1:1					1579

Parts list

F01_001

Device tag	Quantity	Designation	Type number	Supplier	Part number
=V1AR11UQ41UQ3.2-BGS/R	1	Inductive sensor Monitoring Kit for Vario Clamps	1324633	TUNKERS	TUN.1324633

+.AR11UQ41UQ3.1/1

+.AR11UQ41UQ4.1/1

			Date	1/17/2023	Volvo Trucks North America	Valiant TMS	Parts list : TUN.1324633 - TUN.1324633	Drawing name: =2V10&EFS-EL	= + V1AR11UQ41UQ3.2	
			Ed.	MKLEPADLO						
			Appr		P6700 Bodyside RH - Robot Cell 2V10			Document type: EPB	Project nr: 22-16150	Page 1 / 1579
Modification	Date	Name	Original		Replacement of / Replaced by	Scale 1:1				

Parts list

F01_001

Device tag	Quantity	Designation	Type number	Supplier	Part number
=V1AR11UQ41UQ4.1-BGS/R	1	Inductive sensor Monitoring Kit for Vario Clamps	1324633	TUNKERS	TUN.1324633

+.AR11UQ41UQ3.2/1

+.AR11UQ41UQ4.2/1

			Date	1/17/2023	Volvo Trucks North America	Valiant TMS	Parts list : TUN.1324633 - TUN.1324633	Drawing name: =2V10&EFS-EL		=	
			Ed.	MKLEPADLO						+ V1AR11UQ41UQ4.1	
			Appr		P6700 Bodyside RH - Robot Cell 2V10			Document type: EPB	Project nr: 22-16150	Page	1
Modification	Date	Name	Original		Replacement of / Replaced by	Scale 1:1					1579

Parts list

F01_001

Device tag	Quantity	Designation	Type number	Supplier	Part number
=V1AR11UQ41UQ4.2-BGS/R	1	Inductive sensor Monitoring Kit for Vario Clamps	1324633	TUNKERS	TUN.1324633

+.AR11UQ41UQ4.1/1

+.AR11UQ41UQ4.3/1

Parts list

F01_001

Device tag	Quantity	Designation	Type number	Supplier	Part number
=V1AR11UQ41UQ4.3-BGS/R	1	Inductive sensor Monitoring Kit for Vario Clamps	1324633	TUNKERS	TUN.1324633

+.AR11UQ41UQ4.2/1

+.AR11UQ41UQ5.1/1

Parts list

F01_001

Device tag	Quantity	Designation	Type number	Supplier	Part number
=V1AR11UQ41UQ5.1-BGS/R	1	Inductive sensor Monitoring Kit for Vario Clamps	1324633	TUNKERS	TUN.1324633

+.AR11UQ41UQ4.3/1

+.AR11UQ41UQ5.2/1

			Date	1/17/2023	Volvo Trucks North America	Valiant TMS	Parts list : TUN.1324633 - TUN.1324633	Drawing name: =2V10&EFS-EL	= + V1AR11UQ41UQ5.1	
			Ed.	MKLEPADLO						
			Appr		P6700 Bodyside RH - Robot Cell 2V10			Document type: EPB	Project nr: 22-16150	Page 1 / 1579
Modification	Date	Name	Original		Replacement of / Replaced by	Scale 1:1				

Parts list

F01_001

Device tag	Quantity	Designation	Type number	Supplier	Part number
=V1AR11UQ41UQ5.2-BGS/R	1	Inductive sensor Monitoring Kit for Vario Clamps	1324633	TUNKERS	TUN.1324633

+.AR11UQ41UQ5.1/1

+.AR11UQ41UQ5.3/1

Parts list

F01_001

Device tag	Quantity	Designation	Type number	Supplier	Part number
=V1AR11UQ41UQ5.3-BGS/R	1	Inductive sensor Monitoring Kit for Vario Clamps	1324633	TUNKERS	TUN.1324633

+.AR11UQ41UQ5.2/1

+.AR11UQ41UQ6.1/1

Parts list

F01_001

Device tag	Quantity	Designation	Type number	Supplier	Part number
=V1AR11UQ41UQ6.1-BGS/R	1	Inductive sensor Monitoring Kit for Vario Clamps	1324633	TUNKERS	TUN.1324633

+.AR11UQ41UQ5.3/1

+.AR11UQ41UQ7.1/1

Parts list

F01_001

Device tag	Quantity	Designation	Type number	Supplier	Part number
=V1AR11UQ41UQ7.1-BGS/R	1	Inductive sensor Monitoring Kit for Vario Clamps	1324633	TUNKERS	TUN.1324633

+.AR11UQ41UQ6.1/1

+.AR11UQ41UQ8.1/1

			Date	1/17/2023	Volvo Trucks North America	Valiant TMS	Parts list : TUN.1324633 - TUN.1324633	Drawing name: =2V10&EFS-EL	= + V1AR11UQ41UQ7.1	
			Ed.	MKLEPADLO						
			Appr		P6700 Bodyside RH - Robot Cell 2V10			Document type: EPB	Project nr: 22-16150	Page 1 / 1579
Modification	Date	Name	Original		Replacement of / Replaced by	Scale 1:1				

Parts list

F01_001

Device tag	Quantity	Designation	Type number	Supplier	Part number
=V1AR11UQ41UQ8.1-BGS/R	1	Inductive sensor Monitoring Kit for Vario Clamps	1324633	TUNKERS	TUN.1324633

+.AR11UQ41UQ7.1/1

+.AR11UQ41UQ9.1/1

Parts list

F01_001

Device tag	Quantity	Designation	Type number	Supplier	Part number
=V1AR11UQ41UQ9.1-BGS/R	1	Inductive sensor Monitoring Kit for Vario Clamps	1324633	TUNKERS	TUN.1324633

+.AR11UQ41UQ8.1/1

+.AR11UQ41UQ9.2/1

Parts list

F01_001

Device tag	Quantity	Designation	Type number	Supplier	Part number
=V1AR11UQ41UQ9.2-BGS/R	1	Inductive sensor Monitoring Kit for Vario Clamps	1324633	TUNKERS	TUN.1324633

+.AR11UQ41UQ9.1/1

+.AR11UQ41UQ10.1/1

			Date	1/17/2023	Volvo Trucks North America	Valiant TMS	Parts list : TUN.1324633 - TUN.1324633	Drawing name: =2V10&EFS-EL	= + V1AR11UQ41UQ9.2	
			Ed.	MKLEPADLO						
			Appr		P6700 Bodyside RH - Robot Cell 2V10			Document type: EPB	Project nr: 22-16150	Page 1 / 1579
Modification	Date	Name	Original		Replacement of / Replaced by	Scale 1:1				

Parts list

F01_001

Device tag	Quantity	Designation	Type number	Supplier	Part number
=V1AR11UQ41UQ10.1-BGS/R	1	Inductive sensor Monitoring Kit for Vario Clamps	1324633	TUNKERS	TUN.1324633

+.AR11UQ41UQ9.2/1

+.AR11UQ41UQ10.2/1

Parts list

F01_001

Device tag	Quantity	Designation	Type number	Supplier	Part number
=V1AR11UQ41UQ10.2-BGS/R	1	Inductive sensor Monitoring Kit for Vario Clamps	1324633	TUNKERS	TUN.1324633

+.AR11UQ41UQ10.1/1

+.AR21XQ11UC01/1

			Date	1/17/2023	Volvo Trucks North America	Valiant TMS	Parts list : TUN.1324633 - TUN.1324633	Drawing name: =2V10&EFS-EL	= + V1AR11UQ41UQ10.2	
			Ed.	MKLEPADLO						
			Appr		P6700 Bodyside RH - Robot Cell 2V10			Document type: EPB	Project nr: 22-16150	Page 1 / 1579
Modification	Date	Name	Original		Replacement of / Replaced by	Scale 1:1				

Parts list

F01_001

Device tag	Quantity	Designation	Type number	Supplier	Part number
=V1AR21XQ11WC1-XG1	1	Surface socket-outlet		ABB	ABB.2CMA193115R1000

+.AR11UQ41UQ10.2/1

+.AR21XQ12UC01/1

			Date	1/17/2023	Volvo Trucks North America	Valiant TMS	Parts list : ABB.2CMA193115R1000 - ABB.2CMA193115R1000	Drawing name: =2V10&EFS-EL	=	
			Ed.	MKLEPADLO					+ V1AR21XQ11UC01	
			Appr		P6700 Bodyside RH - Robot Cell 2V10			Document type: EPB	Project nr: 22-16150	Page 1 / 1579
Modification	Date	Name	Original		Replacement of / Replaced by	Scale 1:1				

Parts list

F01_001

Device tag	Quantity	Designation	Type number	Supplier	Part number
=V1AR21XQ12WC1-XG1	1	Surface socket-outlet		ABB	ABB.2CMA193115R1000

+.AR21XQ11UC01/1

+.AR22XQ11UC01/1

Parts list

F01_001

Device tag	Quantity	Designation	Type number	Supplier	Part number
=V1AR22XQ11WC1-XG1	1	Surface socket-outlet		ABB	ABB.2CMA193115R1000

+.AR21XQ12UC01/1

+.AR22XQ12UC01/1

			Date	1/17/2023	Volvo Trucks North America	Valiant TMS	Parts list : ABB.2CMA193115R1000 - ABB.2CMA193115R1000	Drawing name: =2V10&EFS-EL	=	
			Ed.	MKLEPADLO					+ V1AR22XQ11UC01	
			Appr		P6700 Bodyside RH - Robot Cell 2V10	Scale 1:1		Document type: EPB	Project nr: 22-16150	Page 1 / 1579
Modification	Date	Name	Original		Replacement of / Replaced by					

Parts list

F01_001

Device tag	Quantity	Designation	Type number	Supplier	Part number
=V1AR22XQ12WC1-XG1	1	Surface socket-outlet		ABB	ABB.2CMA193115R1000

+.AR22XQ11UC01/1

+.AR23XQ11UC01/1

			Date	1/17/2023	Volvo Trucks North America	Valiant TMS	Parts list : ABB.2CMA193115R1000 - ABB.2CMA193115R1000	Drawing name: =2V10&EFS-EL	=	
			Ed.	MKLEPADLO					+ V1AR22XQ12UC01	
			Appr		P6700 Bodyside RH - Robot Cell 2V10	Scale 1:1		Document type: EPB	Project nr: 22-16150	Page 1 / 1579
Modification	Date	Name	Original		Replacement of	Replaced by				

Parts list

F01_001

Device tag	Quantity	Designation	Type number	Supplier	Part number
=V1AR23XQ11WC1-XG1	1	Surface socket-outlet		ABB	ABB.2CMA193115R1000

+.AR22XQ12UC01/1

+.AR23XQ12UC01/1

			Date	1/17/2023	Volvo Trucks North America	Valiant TMS	Parts list : ABB.2CMA193115R1000 - ABB.2CMA193115R1000	Drawing name: =2V10&EFS-EL	=	
			Ed.	MKLEPADLO					+ V1AR23XQ11UC01	
			Appr		P6700 Bodyside RH - Robot Cell 2V10	Scale 1:1		Document type: EPB	Project nr: 22-16150	Page 1 / 1579
Modification	Date	Name	Original		Replacement of	Replaced by				

Parts list

F01_001

Device tag	Quantity	Designation	Type number	Supplier	Part number
=V1AR23XQ12WC1-XG1	1	Surface socket-outlet		ABB	ABB.2CMA193115R1000

+.AR23XQ11UC01/1

+.AR24XQ11UC01/1

			Date	1/17/2023	Volvo Trucks North America	Valiant TMS	Parts list : ABB.2CMA193115R1000 - ABB.2CMA193115R1000	Drawing name: =2V10&EFS-EL	=	
			Ed.	MKLEPADLO					+ V1AR23XQ12UC01	
			Appr		P6700 Bodyside RH - Robot Cell 2V10	Scale 1:1		Document type: EPB	Project nr: 22-16150	Page 1 / 1579
Modification	Date	Name	Original		Replacement of	Replaced by				

Parts list

F01_001

Device tag	Quantity	Designation	Type number	Supplier	Part number
=V1AR24XQ11WC1-XG1	1	Surface socket-outlet		ABB	ABB.2CMA193115R1000

+.AR23XQ12UC01/1

+.AR25XQ11UC01/1

Parts list

F01_001

Device tag	Quantity	Designation	Type number	Supplier	Part number
=V1AR25XQ11WC1-XG1	1	Surface socket-outlet		ABB	ABB.2CMA193115R1000

+.AR24XQ11UC01/1

+.AR26XQ11UC01/1

Parts list

F01_001

Device tag	Quantity	Designation	Type number	Supplier	Part number
=V1AR26XQ11WC1-XG1	1	Surface socket-outlet		ABB	ABB.2CMA193115R1000

+.AR25XQ11UC01/1

+.AR27XQ11UC01/1

Parts list

F01_001

Device tag	Quantity	Designation	Type number	Supplier	Part number
=V1AR27XQ11WC1-XG1	1	Surface socket-outlet		ABB	ABB.2CMA193115R1000

+.AR26XQ11UC01/1

+.AR28XQ11UC01/1

Parts list

F01_001

Device tag	Quantity	Designation	Type number	Supplier	Part number
=V1AR28XQ11WC1-XG1	1	Surface socket-outlet		ABB	ABB.2CMA193115R1000

+.AR27XQ11UC01/1

+.AR28XQ12UC01/1

Parts list

F01_001

Device tag	Quantity	Designation	Type number	Supplier	Part number
=V1AR28XQ12WC1-XG1	1	Surface socket-outlet		ABB	ABB.2CMA193115R1000

+.AR28XQ11UC01/1

+.AR29XQ11UC01/1

Parts list

F01_001

Device tag	Quantity	Designation	Type number	Supplier	Part number
=V1AR29XQ11WC1-XG1	1	Surface socket-outlet		ABB	ABB.2CMA193115R1000

+.AR28XQ12UC01/1

+.AR31UQ41/1

			Date	1/17/2023	Volvo Trucks North America	Valiant TMS	Parts list : ABB.2CMA193115R1000 - ABB.2CMA193115R1000	Drawing name: =2V10&EFS-EL	=	
			Ed.	MKLEPADLO					+ V1AR29XQ11UC01	
			Appr		P6700 Bodyside RH - Robot Cell 2V10			Document type: EPB	Project nr: 22-16150	Page 1
Modification	Date	Name	Original		Replacement of / Replaced by	Scale 1:1				1579

Parts list

F01_001

Device tag	Quantity	Designation	Type number	Supplier	Part number
=V1AR31UQ41BG0-BG01	1	Inductive sensor	NI50U-CK40-AP6X2-H1141/S1590 W/BS4_A	Turck	TUR.1625891
=V1AR31UQ41BG0-BG02	1	Inductive sensor	NI50U-CK40-AP6X2-H1141/S1590 W/BS4_A	Turck	TUR.1625891
=V1AR31UQ41BG0-BG03	1	Inductive sensor	NI50U-CK40-AP6X2-H1141/S1590 W/BS4_A	Turck	TUR.1625891
=V1AR31UQ41BG0-BG04	1	Inductive sensor	NI50U-CK40-AP6X2-H1141/S1590 W/BS4_A	Turck	TUR.1625891
=V1AR31UQ41BG0-BG05	1	Inductive sensor	NI50U-CK40-AP6X2-H1141/S1590 W/BS4_A	Turck	TUR.1625891
=V1AR31UQ41BG0-XG1/2	1	Y splitter	U2-30676	TURCK	TUR.VB2-FSM 4.4/2FKM 4/S3450
=V1AR31UQ41BG0-XG3/4	1	Y splitter	U2-30676	TURCK	TUR.VB2-FSM 4.4/2FKM 4/S3450
=V1AR31UQ41KF1-KF1	0	Bus node	CPX-FB33	FES	FES.548755
=V1AR31UQ41KF1-KF1	0	Interlinking block	CPX-M-GE-EV-S-7/8-5POL	FES	FES.550208
=V1AR31UQ41KF1-KF1.11	0	Manifold block	CPX-M-AB-8-M12X2-5POL	FES	FES.549335
=V1AR31UQ41KF1-KF1.12	0	Manifold block	CPX-M-AB-8-M12X2-5POL	FES	FES.549335
=V1AR31UQ41KF1-KF1.13	0	Manifold block	CPX-M-AB-8-M12X2-5POL	FES	FES.549335

Parts list

F01_001

Device tag	Quantity	Designation	Type number	Supplier	Part number
=V1AR31UQ41UQ1.1-BGS/R	1	4-Wire, 4-Pin, DC M12 X 1 (PNP)	WWS001A	WEL	WEL.WWS001A

+V1AR31UQ41/1

+.AR31UQ41UQ2.1/1

Parts list

F01_001

Device tag	Quantity	Designation	Type number	Supplier	Part number
=V1AR31UQ41UQ2.1-BGS/R	1	Inductive sensor Monitoring Kit for Power Clamps	1324638	TUNKERS	TUN.1324638

+.AR31UQ41UQ1.1/1

+.AR31UQ41UQ2.2/1

			Date	1/17/2023	Volvo Trucks North America	Valiant TMS	Parts list : TUN.1324638 - TUN.1324638	Drawing name: =2V10&EFS-EL	= + V1AR31UQ41UQ2.1	
			Ed.	MKLEPADLO						
			Appr		P6700 Bodyside RH - Robot Cell 2V10			Document type: EPB	Project nr: 22-16150	Page 1 / 1579
Modification	Date	Name	Original		Replacement of / Replaced by	Scale 1:1				

Parts list

F01_001

Device tag	Quantity	Designation	Type number	Supplier	Part number
=V1AR31UQ41UQ2.2-BGS/R	1	Inductive sensor Monitoring Kit for Power Clamps	1324638	TUNKERS	TUN.1324638

+.AR31UQ41UQ2.1/1

+.AR31UQ41UQ3.1/1

Parts list

F01_001

Device tag	Quantity	Designation	Type number	Supplier	Part number
=V1AR31UQ41UQ3.1-BGS/R	1	Inductive sensor Monitoring Kit for Power Clamps	1324638	TUNKERS	TUN.1324638

+.AR31UQ41UQ2.2/1

+.AR31UQ41UQ4.1/1

Parts list

F01_001

Device tag	Quantity	Designation	Type number	Supplier	Part number
=V1AR31UQ41UQ4.1-BGS/R	1	Inductive sensor Monitoring Kit for Power Clamps	1324638	TUNKERS	TUN.1324638

+.AR31UQ41UQ3.1/1

+.AR31UQ41UQ5.1/1

			Date	1/17/2023	Volvo Trucks North America		Valiant TMS	Parts list : TUN.1324638 - TUN.1324638	Drawing name: =2V10&EFS-EL		=
			Ed.	MKLEPADLO							+ V1AR31UQ41UQ4.1
			Appr		P6700 Bodyside RH - Robot Cell 2V10				Document type: EPB	Project nr: 22-16150	Page 1
Modification	Date	Name	Original		Replacement of	Replaced by	Scale 1:1				1579

Parts list

F01_001

Device tag	Quantity	Designation	Type number	Supplier	Part number
=V1AR31UQ41UQ5.1-BGS/R	1	Inductive sensor Monitoring Kit for Power Clamps	1324638	TUNKERS	TUN.1324638

+.AR31UQ41UQ4.1/1

+.AR31UQ41UQ6.1/1

			Date	1/17/2023	Volvo Trucks North America	Valiant TMS	Parts list : TUN.1324638 - TUN.1324638	Drawing name: =2V10&EFS-EL	= + V1AR31UQ41UQ5.1	
			Ed.	MKLEPADLO						
			Appr		P6700 Bodyside RH - Robot Cell 2V10			Document type: EPB	Project nr: 22-16150	Page 1 / 1579
Modification	Date	Name	Original		Replacement of / Replaced by	Scale 1:1				

Parts list

F01_001

Device tag	Quantity	Designation	Type number	Supplier	Part number
=V1AR31UQ41UQ6.1-BGS/R	1	Inductive sensor Monitoring Kit for Power Clamps	1324638	TUNKERS	TUN.1324638

+.AR31UQ41UQ5.1/1

+.AR31UQ41UQ7.1/1

			Date	1/17/2023	Volvo Trucks North America	Valiant TMS	Parts list : TUN.1324638 - TUN.1324638	Drawing name: =2V10&EFS-EL	= + V1AR31UQ41UQ6.1	
			Ed.	MKLEPADLO						
			Appr		P6700 Bodyside RH - Robot Cell 2V10			Document type: EPB	Project nr: 22-16150	Page 1 / 1579
Modification	Date	Name	Original		Replacement of / Replaced by	Scale 1:1				

Parts list

F01_001

Device tag	Quantity	Designation	Type number	Supplier	Part number
=V1AR31UQ41UQ7.1-BGS/R	1	Inductive sensor Monitoring Kit for Power Clamps	1324638	TUNKERS	TUN.1324638

+.AR31UQ41UQ6.1/1

+.AR31UQ41UQ7.2/1

Parts list

F01_001

Device tag	Quantity	Designation	Type number	Supplier	Part number
=V1AR31UQ41UQ7.2-BGS/R	1	Inductive sensor Monitoring Kit for Power Clamps	1324638	TUNKERS	TUN.1324638

+.AR31UQ41UQ7.1/1

+.AR31UQ41UQ8.1/1

Parts list

F01_001

Device tag	Quantity	Designation	Type number	Supplier	Part number
=V1AR31UQ41UQ8.1-BGS/R	1	Inductive sensor Monitoring Kit for Power Clamps	1324638	TUNKERS	TUN.1324638

+.AR31UQ41UQ7.2/1

+.AR31UQ41UQ8.2/1

			Date	1/17/2023	Volvo Trucks North America		Valiant TMS	Parts list : TUN.1324638 - TUN.1324638	Drawing name: =2V10&EFS-EL	= + V1AR31UQ41UQ8.1	
			Ed.	MKLEPADLO							
			Appr		P6700 Bodyside RH - Robot Cell 2V10		Scale 1:1		Document type: EPB	Project nr: 22-16150	Page 1 / 1579
Modification	Date	Name	Original		Replacement of	Replaced by					

Parts list

F01_001

Device tag	Quantity	Designation	Type number	Supplier	Part number
=V1AR31UQ41UQ8.2-BGS/R	1	Inductive sensor Monitoring Kit for Power Clamps	1324638	TUNKERS	TUN.1324638

+.AR31UQ41UQ8.1/1

+.AR31UQ41UQ9.1/1

			Date	1/17/2023	Volvo Trucks North America	Valiant TMS	Parts list : TUN.1324638 - TUN.1324638	Drawing name: =2V10&EFS-EL	= + V1AR31UQ41UQ8.2	
			Ed.	MKLEPADLO						
			Appr		P6700 Bodyside RH - Robot Cell 2V10			Document type: EPB	Project nr: 22-16150	Page 1 / 1579
Modification	Date	Name	Original		Replacement of / Replaced by	Scale 1:1				

Parts list

F01_001

Device tag	Quantity	Designation	Type number	Supplier	Part number
=V1AR31UQ41UQ9.1-BGS/R	1	Inductive sensor Monitoring Kit for Power Clamps	1324638	TUNKERS	TUN.1324638

+.AR31UQ41UQ8.2/1

+.AR31UQ41UQ9.2/1

			Date	1/17/2023	Volvo Trucks North America	Valiant TMS	Parts list : TUN.1324638 - TUN.1324638	Drawing name: =2V10&EFS-EL	= + V1AR31UQ41UQ9.1	
			Ed.	MKLEPADLO						
			Appr		P6700 Bodyside RH - Robot Cell 2V10			Document type: EPB	Project nr: 22-16150	Page 1 / 1579
Modification	Date	Name	Original		Replacement of / Replaced by	Scale 1:1				

Parts list

F01_001

Device tag	Quantity	Designation	Type number	Supplier	Part number
=V1AR31UQ41UQ9.2-BGS/R	1	Inductive sensor Monitoring Kit for Power Clamps	1324638	TUNKERS	TUN.1324638

+.AR31UQ41UQ9.1/1

+.AR31XQ41/1

			Date	1/17/2023	Volvo Trucks North America	Valiant TMS	Parts list : TUN.1324638 - TUN.1324638	Drawing name: =2V10&EFS-EL	= + V1AR31UQ41UQ9.2	
			Ed.	MKLEPADLO						
			Appr		P6700 Bodyside RH - Robot Cell 2V10			Document type: EPB	Project nr: 22-16150	Page 1 / 1579
Modification	Date	Name	Original		Replacement of / Replaced by	Scale 1:1				

Parts list

F01_001

Device tag	Quantity	Designation	Type number	Supplier	Part number
=V1AR31XQ41KF1-KF1	0	Bus node	CPX-FB33	FES	FES.548755
=V1AR31XQ41KF1-KF1	0	Interlinking block	CPX-M-GE-EV-S-7/8-5POL	FES	FES.550208
=V1AR31XQ41KF1-KF1.11	0	Manifold block	CPX-M-AB-8-M12X2-5POL	FES	FES.549335

+.AR31UQ41UQ9.2/1

+.AR31XQ41UQ1.1/1

			Date	1/17/2023	Volvo Trucks North America	Valiant TMS	Parts list : FES.548755 - FES.549335	Drawing name: =2V10&EFS-EL	= + V1AR31XQ41	
			Ed.	MKLEPADLO						
			Appr		P6700 Bodyside RH - Robot Cell 2V10			Document type: EPB	Project nr: 22-16150	Page 1 / 1579
Modification	Date	Name	Original		Replacement of / Replaced by	Scale 1:1				

Parts list

F01_001

Device tag	Quantity	Designation	Type number	Supplier	Part number
=V1AR31XQ41UQ1.1-BGR	1	Inductive sensor	BI20U-CA40-AP6X2-H1141/S1590 W/BS2.0	Turck	TUR.1627205
=V1AR31XQ41UQ1.1-BGS	1	Inductive sensor	BI20U-CA40-AP6X2-H1141/S1590 W/BS2.0	Turck	TUR.1627205
=V1AR31XQ41UQ1.1-XG1/2	1	Y splitter	U2-30676	TURCK	TUR.VB2-FSM 4.4/2FKM 4/S3450

Parts list

F01_001

Device tag	Quantity	Designation	Type number	Supplier	Part number
=V1AR81UQ41BG0-BG01	1	Inductive sensor	NI50U-CK40-AP6X2-H1141/S1590 W/BS4_A	Turck	TUR.1625891
=V1AR81UQ41BG0-BG02	1	Inductive sensor	NI50U-CK40-AP6X2-H1141/S1590 W/BS4_A	Turck	TUR.1625891
=V1AR81UQ41BG0-BG03	1	Inductive sensor	NI50U-CK40-AP6X2-H1141/S1590 W/BS4_A	Turck	TUR.1625891
=V1AR81UQ41BG0-BG04	1	Inductive sensor	NI50U-CK40-AP6X2-H1141/S1590 W/BS4_A	Turck	TUR.1625891
=V1AR81UQ41BG0-BG05	1	Inductive sensor	NI50U-CK40-AP6X2-H1141/S1590 W/BS4_A	Turck	TUR.1625891
=V1AR81UQ41BG0-XG1/2	1	Y splitter	U2-30676	TURCK	TUR.VB2-FSM 4.4/2FKM 4/S3450
=V1AR81UQ41BG0-XG3/4	1	Y splitter	U2-30676	TURCK	TUR.VB2-FSM 4.4/2FKM 4/S3450
=V1AR81UQ41KF1-KF1	0	Bus node	CPX-FB33	FES	FES.548755
=V1AR81UQ41KF1-KF1	0	Interlinking block	CPX-M-GE-EV-S-7/8-5POL	FES	FES.550208
=V1AR81UQ41KF1-KF1.11	0	Manifold block	CPX-M-AB-8-M12X2-5POL	FES	FES.549335
=V1AR81UQ41KF1-KF1.12	0	Manifold block	CPX-M-AB-8-M12X2-5POL	FES	FES.549335
=V1AR81UQ41KF1-KF1.13	0	Manifold block	CPX-M-AB-8-M12X2-5POL	FES	FES.549335

Parts list

F01_001

Device tag	Quantity	Designation	Type number	Supplier	Part number
=V1AR81UQ41UQ1.1-BGS/R	1	4-Wire, 4-Pin, DC M12 X 1 (PNP)	WWS001A	WEL	WEL.WWS001A

+V1AR81UQ41/1

+.AR81UQ41UQ2.1/1

Parts list

F01_001

Device tag	Quantity	Designation	Type number	Supplier	Part number
=V1AR81UQ41UQ2.1-BGS/R	1	4-Wire, 4-Pin, DC M12 X 1 (PNP)	WWS001A	WEL	WEL.WWS001A

+.AR81UQ41UQ1.1/1

+.AR81UQ41UQ3.1/1

Parts list

F01_001

Device tag	Quantity	Designation	Type number	Supplier	Part number
=V1AR81UQ41UQ3.1-BGS/R	1	4-Wire, 4-Pin, DC M12 X 1 (PNP)	WWS001A	WEL	WEL.WWS001A

+.AR81UQ41UQ2.1/1

+.AR81UQ41UQ4.1/1

Parts list

F01_001

Device tag	Quantity	Designation	Type number	Supplier	Part number
=V1AR81UQ41UQ4.1-BGS/R	1	4-Wire, 4-Pin, DC M12 X 1 (PNP)	WWS001A	WEL	WEL.WWS001A

+.AR81UQ41UQ3.1/1

+.AR81UQ41UQ5.1/1

Parts list

F01_001

Device tag	Quantity	Designation	Type number	Supplier	Part number
=V1AR81UQ41UQ5.1-BGS/R	1	4-Wire, 4-Pin, DC M12 X 1 (PNP)	WWS001A	WEL	WEL.WWS001A

+.AR81UQ41UQ4.1/1

+.AR81UQ41UQ6.1/1

Parts list

F01_001

Device tag	Quantity	Designation	Type number	Supplier	Part number
=V1AR81UQ41UQ6.1-BGS/R	1	Inductive sensor Monitoring Kit for Power Clamps	1324638	TUNKERS	TUN.1324638

+.AR81UQ41UQ5.1/1

+.AR81UQ41UQ6.2/1

Parts list

F01_001

Device tag	Quantity	Designation	Type number	Supplier	Part number
=V1AR81UQ41UQ6.2-BGS/R	1	Inductive sensor Monitoring Kit for Power Clamps	1324638	TUNKERS	TUN.1324638

+.AR81UQ41UQ6.1/1

+.AR81UQ41UQ6.3/1

			Date	1/17/2023	Volvo Trucks North America		Valiant TMS	Parts list : TUN.1324638 - TUN.1324638	Drawing name: =2V10&EFS-EL		=
			Ed.	MKLEPADLO							+ V1AR81UQ41UQ6.2
			Appr		P6700 Bodyside RH - Robot Cell 2V10				Document type: EPB	Project nr: 22-16150	Page 1
Modification	Date	Name	Original		Replacement of	Replaced by	Scale 1:1				1579

Parts list

F01_001

Device tag	Quantity	Designation	Type number	Supplier	Part number
=V1AR81UQ41UQ6.3-BGS/R	1	Inductive sensor Monitoring Kit for Power Clamps	1324638	TUNKERS	TUN.1324638

+.AR81UQ41UQ6.2/1

+.AR81UQ41UQ6.4/1

			Date	1/17/2023	Volvo Trucks North America		Valiant TMS	Parts list : TUN.1324638 - TUN.1324638	Drawing name: =2V10&EFS-EL	= + V1AR81UQ41UQ6.3	
			Ed.	MKLEPADLO							
			Appr		P6700 Bodyside RH - Robot Cell 2V10				Document type: EPB	Project nr: 22-16150	Page 1 / 1579
Modification	Date	Name	Original		Replacement of	Replaced by	Scale 1:1				

Parts list

F01_001

Device tag	Quantity	Designation	Type number	Supplier	Part number
=V1AR81UQ41UQ6.4-BGS/R	1	Inductive sensor Monitoring Kit for Power Clamps	1324638	TUNKERS	TUN.1324638

+.AR81UQ41UQ6.3/1

+.AR81UQ41UQ7.1/1

Parts list

F01_001

Device tag	Quantity	Designation	Type number	Supplier	Part number
=V1AR81UQ41UQ7.1-BGS/R	1	Inductive sensor Monitoring Kit for Power Clamps	1324638	TUNKERS	TUN.1324638

+.AR81UQ41UQ6.4/1

+.AR81UQ41UQ7.2/1

			Date	1/17/2023	Volvo Trucks North America		Valiant TMS	Parts list : TUN.1324638 - TUN.1324638	Drawing name: =2V10&EFS-EL	= + V1AR81UQ41UQ7.1	
			Ed.	MKLEPADLO							
			Appr		P6700 Bodyside RH - Robot Cell 2V10		Scale 1:1		Document type: EPB	Project nr: 22-16150	Page 1 / 1579
Modification	Date	Name	Original		Replacement of	Replaced by					

Parts list

F01_001

Device tag	Quantity	Designation	Type number	Supplier	Part number
=V1AR81UQ41UQ7.2-BGS/R	1	Inductive sensor Monitoring Kit for Power Clamps	1324638	TUNKERS	TUN.1324638

+.AR81UQ41UQ7.1/1

+.AR81UQ41UQ8.1/1

			Date	1/17/2023	Volvo Trucks North America	Valiant TMS	Parts list : TUN.1324638 - TUN.1324638	Drawing name: =2V10&EFS-EL	= + V1AR81UQ41UQ7.2	
			Ed.	MKLEPADLO						
			Appr		P6700 Bodyside RH - Robot Cell 2V10			Document type: EPB	Project nr: 22-16150	Page 1 / 1579
Modification	Date	Name	Original		Replacement of / Replaced by	Scale 1:1				

Parts list

F01_001

Device tag	Quantity	Designation	Type number	Supplier	Part number
=V1AR81UQ41UQ8.1-BGS/R	1	Inductive sensor Monitoring Kit for Power Clamps	1324638	TUNKERS	TUN.1324638

+.AR81UQ41UQ7.2/1

+.AR81UQ41UQ8.2/1

Parts list

F01_001

Device tag	Quantity	Designation	Type number	Supplier	Part number
=V1AR81UQ41UQ8.2-BGS/R	1	Inductive sensor Monitoring Kit for Power Clamps	1324638	TUNKERS	TUN.1324638

+.AR81UQ41UQ8.1/1

+.AR81UQ41UQ9.1/1

			Date	1/17/2023	Volvo Trucks North America	Valiant TMS	Parts list : TUN.1324638 - TUN.1324638	Drawing name: =2V10&EFS-EL	= + V1AR81UQ41UQ8.2	
			Ed.	MKLEPADLO						
			Appr		P6700 Bodyside RH - Robot Cell 2V10			Document type: EPB	Project nr: 22-16150	Page 1 / 1579
Modification	Date	Name	Original		Replacement of / Replaced by	Scale 1:1				

Parts list

F01_001

Device tag	Quantity	Designation	Type number	Supplier	Part number
=V1AR81UQ41UQ9.1-BGS/R	1	Inductive sensor Monitoring Kit for Power Clamps	1324638	TUNKERS	TUN.1324638

+.AR81UQ41UQ8.2/1

+.AR81UQ41UQ9.2/1

			Date	1/17/2023	Volvo Trucks North America		Valiant TMS	Parts list : TUN.1324638 - TUN.1324638	Drawing name: =2V10&EFS-EL		=
			Ed.	MKLEPADLO							+ V1AR81UQ41UQ9.1
			Appr		P6700 Bodyside RH - Robot Cell 2V10				Document type: EPB	Project nr: 22-16150	Page 1
Modification	Date	Name	Original		Replacement of	Replaced by	Scale 1:1				1579

Parts list

F01_001

Device tag	Quantity	Designation	Type number	Supplier	Part number
=V1AR81UQ41UQ9.2-BGS/R	1	Inductive sensor Monitoring Kit for Power Clamps	1324638	TUNKERS	TUN.1324638

+.AR81UQ41UQ9.1/1

+.AR81XQ51UC01/1

			Date	1/17/2023	Volvo Trucks North America	Valiant TMS	Parts list : TUN.1324638 - TUN.1324638	Drawing name: =2V10&EFS-EL	=	
			Ed.	MKLEPADLO					+ V1AR81UQ41UQ9.2	
			Appr		P6700 Bodyside RH - Robot Cell 2V10			Document type: EPB	Project nr: 22-16150	Page 1
Modification	Date	Name	Original		Replacement of / Replaced by	Scale 1:1				1579

Parts list

F01_001

Device tag	Quantity	Designation	Type number	Supplier	Part number
=V1AR81XQ51WC1-XG1	1	Surface socket-outlet		ABB	ABB.2CMA193115R1000

+.AR81UQ41UQ9.2/1

+.AR81XQ52UC01/1

			Date	1/17/2023	Volvo Trucks North America	Valiant TMS	Parts list : ABB.2CMA193115R1000 - ABB.2CMA193115R1000	Drawing name: =2V10&EFS-EL	=	
			Ed.	MKLEPADLO					+ V1AR81XQ51UC01	
			Appr		P6700 Bodyside RH - Robot Cell 2V10			Document type: EPB	Project nr: 22-16150	Page 1 / 1579
Modification	Date	Name	Original		Replacement of / Replaced by	Scale 1:1				

Parts list

F01_001

Device tag	Quantity	Designation	Type number	Supplier	Part number
=V1AR81XQ52WC1-XG1	1	Surface socket-outlet		ABB	ABB.2CMA193115R1000

+.AR81XQ51UC01/1

+.AR211XQ11UC01/1

			Date	1/17/2023	Volvo Trucks North America	Valiant TMS	Parts list : ABB.2CMA193115R1000 - ABB.2CMA193115R1000	Drawing name: =2V10&EFS-EL	=	
			Ed.	MKLEPADLO					+ V1AR81XQ52UC01	
			Appr		P6700 Bodyside RH - Robot Cell 2V10			Document type: EPB	Project nr: 22-16150	Page 1
Modification	Date	Name	Original		Replacement of / Replaced by	Scale 1:1				1579

Parts list

F01_001

Device tag	Quantity	Designation	Type number	Supplier	Part number
=V1AR211XQ11WC1-XG1	1	Surface socket-outlet		ABB	ABB.2CMA193115R1000

+.AR81XQ52UC01/1

+.AR212XQ11UC01/1

			Date	1/17/2023	Volvo Trucks North America	Valiant TMS	Parts list : ABB.2CMA193115R1000 - ABB.2CMA193115R1000	Drawing name: =2V10&EFS-EL	=	
			Ed.	MKLEPADLO					+ V1AR211XQ11UC01	
			Appr		P6700 Bodyside RH - Robot Cell 2V10	Scale 1:1		Document type: EPB	Project nr: 22-16150	Page 1 / 1579
Modification	Date	Name	Original		Replacement of / Replaced by					

Parts list

F01_001

Device tag	Quantity	Designation	Type number	Supplier	Part number
=V1AR212XQ11WC1-XG1	1	Surface socket-outlet		ABB	ABB.2CMA193115R1000

+.AR211XQ11UC01/1

+.FQ1/1

			Date	1/17/2023	Volvo Trucks North America	Valiant TMS	Parts list : ABB.2CMA193115R1000 - ABB.2CMA193115R1000	Drawing name: =2V10&EFS-EL	=	
			Ed.	MKLEPADLO					+ V1AR212XQ11UC01	
			Appr		P6700 Bodyside RH - Robot Cell 2V10			Document type: EPB	Project nr: 22-16150	Page 1
Modification	Date	Name	Original		Replacement of / Replaced by	Scale 1:1				1579

Parts list

F01_001

Device tag	Quantity	Designation	Type number	Supplier	Part number
=V1FQ1-BR11	1	EZ-Screen System	SLSCP30-1200P44NT	BANNER	BAN.SLSCP30-1200P44NT
=V1FQ1-BR12	1	EZ-Screen System	SLSCP30-1200P88	BANNER	BAN.SLSCP30-1200P88
=V1FQ1-BR13	1	EZ-Screen System	SLSCP30-1200P44NT	BANNER	BAN.SLSCP30-1200P44NT
=V1FQ1-BR14	1	EZ-Screen System	SLSCP30-1200P88	BANNER	BAN.SLSCP30-1200P88
=V1FQ1-BR15	1	EZ-Screen System	SLSCP30-1200P44NT	BANNER	BAN.SLSCP30-1200P44NT
=V1FQ1-BR16	1	EZ-Screen System	SLSCP30-1200P44NT	BANNER	BAN.SLSCP30-1200P44NT
=V1FQ1-BR17	1	EZ-Screen System	SLSCP30-1200P88	BANNER	BAN.SLSCP30-1200P88
=V1FQ1-BR18	1	EZ-Screen System	SLSCP30-1200P44NT	BANNER	BAN.SLSCP30-1200P44NT
=V1FQ1-BR19	1	EZ-Screen System	SLSCP30-1200P88	BANNER	BAN.SLSCP30-1200P88
=V1FQ1-BR20	1	EZ-Screen System	SLSCP30-1200P44NT	BANNER	BAN.SLSCP30-1200P44NT

Parts list

F01_001

Device tag	Quantity	Designation	Type number	Supplier	Part number
=V1FQ1-BG1	1	SWITCH	MGB-L2B-PNA-L-121863	EUCHNER	EUC.MGB-L2B-PNA-L-121863
=V1FQ1-BG1	1	HANDLE	MGB-H-AA1A2-L-106221	EUCHNER	EUC.MGB-H-AA1A2-L-106221
=V1FQ1-BG1	1	MOUNTING PLATE	MGB-A-MOUNTINGPLATE-H-109491	EUCHNER	EUC.MGB-A-MOUNTINGPLATE-H-109491
=V1FQ1-BG1	1	ESCAPE RELEASE	MGB-E-A2-106051	EUCHNER	EUC.MGB-E-A2-106051

Parts list

F01_001

Device tag	Quantity	Designation	Type number	Supplier	Part number
=V1FQ1-BG2	1	SWITCH	MGB-L2B-PNA-L-121863	EUCHNER	EUC.MGB-L2B-PNA-L-121863
=V1FQ1-BG2	1	HANDLE	MGB-H-AA1A2-L-106221	EUCHNER	EUC.MGB-H-AA1A2-L-106221
=V1FQ1-BG2	1	MOUNTING PLATE	MGB-A-MOUNTINGPLATE-H-109491	EUCHNER	EUC.MGB-A-MOUNTINGPLATE-H-109491
=V1FQ1-BG2	1	ESCAPE RELEASE	MGB-E-A2-106051	EUCHNER	EUC.MGB-E-A2-106051

Parts list

F01_001

Device tag	Quantity	Designation	Type number	Supplier	Part number
=V1FQ1-BG3	1	SWITCH	MGB-L2B-PNA-L-121863	EUCHNER	EUC.MGB-L2B-PNA-L-121863
=V1FQ1-BG3	1	HANDLE	MGB-H-AA1A2-L-106221	EUCHNER	EUC.MGB-H-AA1A2-L-106221
=V1FQ1-BG3	1	MOUNTING PLATE	MGB-A-MOUNTINGPLATE-H-109491	EUCHNER	EUC.MGB-A-MOUNTINGPLATE-H-109491
=V1FQ1-BG3	1	ESCAPE RELEASE	MGB-E-A2-106051	EUCHNER	EUC.MGB-E-A2-106051

+.FQ1BG2/1

+.FQ1BG4/1

			Date	1/17/2023	Volvo Trucks North America	Valiant TMS	Parts list : EUC.MGB-L2B-PNA-L-121863 - EUC.MGB-E-A2-106051	Drawing name: =2V10&EFS-EL	= + V1FQ1BG3	
			Ed.	MKLEPADLO	P6700 Bodyside RH - Robot Cell 2V10					
			Appr			Scale 1:1		Document type: EPB	Project nr: 22-16150	Page 1 / 1579
Modification	Date	Name	Original		Replacement of / Replaced by					

Parts list

F01_001

Device tag	Quantity	Designation	Type number	Supplier	Part number
=V1FQ1-BG4	1	SWITCH	MGB-L2B-PNA-L-121863	EUCHNER	EUC.MGB-L2B-PNA-L-121863
=V1FQ1-BG4	1	HANDLE	MGB-H-AA1A2-L-106221	EUCHNER	EUC.MGB-H-AA1A2-L-106221
=V1FQ1-BG4	1	MOUNTING PLATE	MGB-A-MOUNTINGPLATE-H-109491	EUCHNER	EUC.MGB-A-MOUNTINGPLATE-H-109491
=V1FQ1-BG4	1	ESCAPE RELEASE	MGB-E-A2-106051	EUCHNER	EUC.MGB-E-A2-106051

+.FQ1BG3/1

+.FQ1BG5/1

			Date	1/17/2023	Volvo Trucks North America	Valiant TMS	Parts list : EUC.MGB-L2B-PNA-L-121863 - EUC.MGB-E-A2-106051	Drawing name: =2V10&EFS-EL	= + V1FQ1BG4	
			Ed.	MKLEPADLO	P6700 Bodyside RH - Robot Cell 2V10					
			Appr			Scale 1:1		Document type: EPB	Project nr: 22-16150	Page 1 / 1579
Modification	Date	Name	Original		Replacement of	Replaced by				

Parts list

F01_001

Device tag	Quantity	Designation	Type number	Supplier	Part number
=V1FQ1-BG5	1	SWITCH	MGB-L2B-PNA-L-121863	EUCHNER	EUC.MGB-L2B-PNA-L-121863
=V1FQ1-BG5	1	HANDLE	MGB-H-AA1A2-L-106221	EUCHNER	EUC.MGB-H-AA1A2-L-106221
=V1FQ1-BG5	1	MOUNTING PLATE	MGB-A-MOUNTINGPLATE-H-109491	EUCHNER	EUC.MGB-A-MOUNTINGPLATE-H-109491
=V1FQ1-BG5	1	ESCAPE RELEASE	MGB-E-A2-106051	EUCHNER	EUC.MGB-E-A2-106051

Parts list

F01_001

Device tag	Quantity	Designation	Type number	Supplier	Part number
=V1FQ1-BG6	1	SWITCH	MGB-L2B-PNA-L-121863	EUCHNER	EUC.MGB-L2B-PNA-L-121863
=V1FQ1-BG6	1	HANDLE	MGB-H-AA1A2-L-106221	EUCHNER	EUC.MGB-H-AA1A2-L-106221
=V1FQ1-BG6	1	MOUNTING PLATE	MGB-A-MOUNTINGPLATE-H-109491	EUCHNER	EUC.MGB-A-MOUNTINGPLATE-H-109491
=V1FQ1-BG6	1	ESCAPE RELEASE	MGB-E-A2-106051	EUCHNER	EUC.MGB-E-A2-106051

+.FQ1BG5/1

+.GL1UQ51/1

			Date	1/17/2023	Volvo Trucks North America	Valiant TMS	Parts list : EUC.MGB-L2B-PNA-L-121863 - EUC.MGB-E-A2-106051	Drawing name: =2V10&EFS-EL	= + V1FQ1BG6	
			Ed.	MKLEPADLO	P6700 Bodyside RH - Robot Cell 2V10					
			Appr			Scale 1:1		Document type: EPB	Project nr: 22-16150	Page 1 / 1579
Modification	Date	Name	Original		Replacement of / Replaced by					

Parts list

F01_001

Device tag	Quantity	Designation	Type number	Supplier	Part number
=V1GL1UQ51BG0-BG01	1	Inductive sensor	BI20U-CA40-AP6X2-H1141/S1590 W/BS2.0	TURCK	TUR.1627297
=V1GL1UQ51BG0-BG02	1	Inductive sensor	BI20U-CA40-AP6X2-H1141/S1590 W/BS2.0	TURCK	TUR.1627297
=V1GL1UQ51BG0-BG03	1	Inductive sensor	BI20U-CA40-AP6X2-H1141/S1590 W/BS2.0	TURCK	TUR.1627297
=V1GL1UQ51BG0-BG04	1	Inductive sensor	BI20U-CA40-AP6X2-H1141/S1590 W/BS2.0	TURCK	TUR.1627297
=V1GL1UQ51BG0-BG05	1	Inductive sensor	BI20U-CA40-AP6X2-H1141/S1590 W/BS2.0	TURCK	TUR.1627297
=V1GL1UQ51BG0-BG06	1	Inductive sensor	BI4U-MT12E-AP6X2-H1141/S1589	TURCK	TUR.1644797
=V1GL1UQ51BG0-BG07	1	Inductive sensor	BI20U-CA40-AP6X2-H1141/S1590 W/BS2.0	TURCK	TUR.1627297
=V1GL1UQ51BG0-BG08	1	Inductive sensor	BI10U-MT18-AP6X2-H1141/S1589	TURCK	TUR.16449050
=V1GL1UQ51BG0-BG09	1	Inductive sensor	BI10U-MT18-AP6X2-H1141/S1589	TURCK	TUR.16449050
=V1GL1UQ51BG0-BG10	1	Inductive sensor	BI10U-MT18-AP6X2-H1141/S1589	TURCK	TUR.16449050
=V1GL1UQ51BG0-BG11	1	Inductive sensor	BI20U-CA40-AP6X2-H1141/S1590 W/BS2.0	TURCK	TUR.1627297
=V1GL1UQ51BG0-BG12	1				1627297
=V1GL1UQ51BG0-BG13	1	Inductive sensor	BI10U-MT18-AP6X2-H1141/S1589	TURCK	TUR.16449050
=V1GL1UQ51BG0-BG14	1	Inductive sensor	BI10U-MT18-AP6X2-H1141/S1589	TURCK	TUR.16449050
=V1GL1UQ51BG0-BG15	1	Inductive sensor	BI10U-MT18-AP6X2-H1141/S1589	TURCK	TUR.16449050
=V1GL1UQ51BG0-BG16	1	Inductive sensor	BI20U-CA40-AP6X2-H1141/S1590 W/BS2.0	TURCK	TUR.1627297
=V1GL1UQ51BG0-BG17	1	Inductive sensor	BI20U-CA40-AP6X2-H1141/S1590 W/BS2.0	TURCK	TUR.1627297
=V1GL1UQ51BG0-BG18	1	Inductive sensor	BI10U-MT18-AP6X2-H1141/S1589	TURCK	TUR.16449050
=V1GL1UQ51BG0-BG19	1	Inductive sensor	BI20U-CA40-AP6X2-H1141/S1590 W/BS2.0	Turck	TUR.1627205
=V1GL1UQ51BG0-BG20	1	Inductive sensor	BI20U-CA40-AP6X2-H1141/S1590 W/BS2.0	Turck	TUR.1627205
=V1GL1UQ51BG0-BG21	1	Inductive sensor	BI10U-MT18-AP6X2-H1141/S1589	TURCK	TUR.16449050
=V1GL1UQ51BG0-BG22	1	QS30 Series High-Performance Long-Range Sensor	QS30FF600QPMA16		BAN.73093
=V1GL1UQ51BG0-BG23	1	Inductive sensor	BI20U-CA40-AP6X2-H1141/S1590 W/BS2.0	Turck	TUR.1627205
=V1GL1UQ51BG0-BG24	1	Inductive sensor	BI10U-MT18-AP6X2-H1141/S1589	TURCK	TUR.16449050
=V1GL1UQ51BG0-BG25	1	Inductive sensor	BI4U-MT12E-AP6X2-H1141/S1589	TURCK	TUR.1644797
=V1GL1UQ51BG0-XG1/2	1	Y splitter	U2-30676	TURCK	TUR.VB2-FSM 4.4/2FKM 4/S3450
=V1GL1UQ51BG0-XG3/4	1	Y splitter	U2-30676	TURCK	TUR.VB2-FSM 4.4/2FKM 4/S3450
=V1GL1UQ51BG0-XG5/6	1	Y splitter	U2-30676	TURCK	TUR.VB2-FSM 4.4/2FKM 4/S3450
=V1GL1UQ51BG0-XG7/8	1	Y splitter	U2-30676	TURCK	TUR.VB2-FSM 4.4/2FKM 4/S3450
=V1GL1UQ51BG0-XG9/10	1	Y splitter	U2-30676	TURCK	TUR.VB2-FSM 4.4/2FKM 4/S3450
=V1GL1UQ51BG0-XG11/12	1	Y splitter	U2-30676	TURCK	TUR.VB2-FSM 4.4/2FKM 4/S3450
=V1GL1UQ51BG0-XG13/14	1	Y splitter	U2-30676	TURCK	TUR.VB2-FSM 4.4/2FKM 4/S3450
=V1GL1UQ51BG0-XG15/16	1	Y splitter	U2-30676	TURCK	TUR.VB2-FSM 4.4/2FKM 4/S3450
=V1GL1UQ51BG0-XG17/18	1	Y splitter	U2-30676	TURCK	TUR.VB2-FSM 4.4/2FKM 4/S3450
=V1GL1UQ51BG0-XG19/20	1	Y splitter	U2-30676	TURCK	TUR.VB2-FSM 4.4/2FKM 4/S3450
=V1GL1UQ51BG0-XG21/22	1	Y splitter	U2-30676	TURCK	TUR.VB2-FSM 4.4/2FKM 4/S3450
=V1GL1UQ51BG0-XG23/24	1	Y splitter	U2-30676	TURCK	TUR.VB2-FSM 4.4/2FKM 4/S3450
=V1GL1UQ51KF1-KF1	0	Bus node	CPX-FB33	FES	FES.548755
=V1GL1UQ51KF1-KF1	0	Interlinking block	CPX-M-GE-EV-S-7/8-5POL	FES	FES.550208
=V1GL1UQ51KF1-KF1.11	0	Manifold block	CPX-M-AB-8-M12X2-5POL	FES	FES.549335
=V1GL1UQ51KF1-KF1.12	0	Manifold block	CPX-M-AB-8-M12X2-5POL	FES	FES.549335
=V1GL1UQ51KF1-KF1.13	0	Manifold block	CPX-M-AB-8-M12X2-5POL	FES	FES.549335
=V1GL1UQ51KF2-KF2	0	Bus node	CPX-FB33	FES	FES.548755
=V1GL1UQ51KF2-KF2	0	Interlinking block	CPX-M-GE-EV-S-7/8-5POL	FES	FES.550208
=V1GL1UQ51KF2-KF2.11	0	Manifold block	CPX-M-AB-8-M12X2-5POL	FES	FES.549335
=V1GL1UQ51KF2-KF2.12	0	Manifold block	CPX-M-AB-8-M12X2-5POL	FES	FES.549335
=V1GL1UQ51KF2-KF2.13	0	Manifold block	CPX-M-AB-8-M12X2-5POL	FES	FES.549335
=V1GL1UQ51KF3-KF3	0	Bus node	CPX-FB33	FES	FES.548755
=V1GL1UQ51KF3-KF3	0	Interlinking block	CPX-M-GE-EV-S-7/8-5POL	FES	FES.550208
=V1GL1UQ51KF3-KF3.11	0	Manifold block	CPX-M-AB-8-M12X2-5POL	FES	FES.549335
=V1GL1UQ51KF3-KF3.12	0	Manifold block	CPX-M-AB-8-M12X2-5POL	FES	FES.549335
=V1GL1UQ51WC4-XG51.1	1	TEE, 5-PIN MINI, STANDARD KEYWAY	RSM-2RKM 50	TURCK	TUR.RSM-2RKM 50
=V1GL1UQ51WC4-XG51.2	1	TEE, 5-PIN MINI, STANDARD KEYWAY	RSM-2RKM 50	TURCK	TUR.RSM-2RKM 50

Parts list

F01_001

Device tag	Quantity	Designation	Type number	Supplier	Part number
=V1GL1UQ51UQ1.1-BGS/R	1	4-Wire, 4-Pin, DC M12 X 1 (PNP)	WWS001A	WEL	WEL.WWS001A

+V1GL1UQ51/1

+.GL1UQ51UQ1.2/1

Parts list

F01_001

Device tag	Quantity	Designation	Type number	Supplier	Part number
=V1GL1UQ51UQ1.2-BGS/R	1	4-Wire, 4-Pin, DC M12 X 1 (PNP)	WWS001A	WEL	WEL.WWS001A

+.GL1UQ51UQ1.1/1

+.GL1UQ51UQ1.3/1

Parts list

F01_001

Device tag	Quantity	Designation	Type number	Supplier	Part number
=V1GL1UQ51UQ1.3-BGS/R	1	4-Wire, 4-Pin, DC M12 X 1 (PNP)	WWS001A	WEL	WEL.WWS001A

+.GL1UQ51UQ1.2/1

+.GL1UQ51UQ2.1/1

Parts list

F01_001

Device tag	Quantity	Designation	Type number	Supplier	Part number
=V1GL1UQ51UQ2.1-BGS/R	1	4-Wire, 4-Pin, DC M12 X 1 (PNP)	WWS001A	WEL	WEL.WWS001A

+.GL1UQ51UQ1.3/1

+.GL1UQ51UQ3.1/1

Parts list

F01_001

Device tag	Quantity	Designation	Type number	Supplier	Part number
=V1GL1UQ51UQ3.1-BGS/R	1	4-Wire, 4-Pin, DC M12 X 1 (PNP)	WWS001A	WEL	WEL.WWS001A

+.GL1UQ51UQ2.1/1

+.GL1UQ51UQ3.2/1

Parts list

F01_001

Device tag	Quantity	Designation	Type number	Supplier	Part number
=V1GL1UQ51UQ3.2-BGS/R	1	4-Wire, 4-Pin, DC M12 X 1 (PNP)	WWS001A	WEL	WEL.WWS001A

+.GL1UQ51UQ3.1/1

+.GL1UQ51UQ4.1/1

Parts list

F01_001

Device tag	Quantity	Designation	Type number	Supplier	Part number
=V1GL1UQ51UQ4.1-BGS/R	1	4-Wire, 4-Pin, DC M12 X 1 (PNP)	WWS001A	WEL	WEL.WWS001A

+.GL1UQ51UQ3.2/1

+.GL1UQ51UQ4.2/1

Parts list

F01_001

Device tag	Quantity	Designation	Type number	Supplier	Part number
=V1GL1UQ51UQ4.2-BGS/R	1	4-Wire, 4-Pin, DC M12 X 1 (PNP)	WWS001A	WEL	WEL.WWS001A

+.GL1UQ51UQ4.1/1

+.GL1UQ51UQ5.1/1

Parts list

F01_001

Device tag	Quantity	Designation	Type number	Supplier	Part number
=V1GL1UQ51UQ5.1-BGS/R	1	4-Wire, 4-Pin, DC M12 X 1 (PNP)	WWS001A	WEL	WEL.WWS001A

+.GL1UQ51UQ4.2/1

+.GL1UQ51UQ6.1/1

Parts list

F01_001

Device tag	Quantity	Designation	Type number	Supplier	Part number
=V1GL1UQ51UQ6.1-BGS/R	1	4-Wire, 4-Pin, DC M12 X 1 (PNP)	WWS001A	WEL	WEL.WWS001A

+.GL1UQ51UQ5.1/1

+.GL1UQ51UQ7.1/1

Parts list

F01_001

Device tag	Quantity	Designation	Type number	Supplier	Part number
=V1GL1UQ51UQ7.1-BGR	1	Inductive sensor	BI2-CRS260-AP4X2-H1141/S34	TURCK	TUR.BI2-CRS260-AP4X2-H1141/S34
=V1GL1UQ51UQ7.1-BGS	1	Inductive sensor	BI2-CRS260-AP4X2-H1141/S34	TURCK	TUR.BI2-CRS260-AP4X2-H1141/S34
=V1GL1UQ51UQ7.1-XGR/S	1	Y splitter	U2-30676	TURCK	TUR.VB2-FSM 4.4/2FKM 4/S3450

Parts list

F01_001

Device tag	Quantity	Designation	Type number	Supplier	Part number
=V1GL1UQ51UQ8.1-BGS/R	1	4-Wire, 4-Pin, DC M12 X 1 (PNP)	WWS001A	WEL	WEL.WWS001A

+.GL1UQ51UQ7.1/1

+.GL1UQ51UQ8.2/1

Parts list

F01_001

Device tag	Quantity	Designation	Type number	Supplier	Part number
=V1GL1UQ51UQ8.2-BGS/R	1	4-Wire, 4-Pin, DC M12 X 1 (PNP)	WWS001A	WEL	WEL.WWS001A

+.GL1UQ51UQ8.1/1

+.GL1UQ51UQ8.3/1

Parts list

F01_001

Device tag	Quantity	Designation	Type number	Supplier	Part number
=V1GL1UQ51UQ8.3-BGS/R	1	4-Wire, 4-Pin, DC M12 X 1 (PNP)	WWS001A	WEL	WEL.WWS001A

+.GL1UQ51UQ8.2/1

+.GL1UQ51UQ9.1/1

Parts list

F01_001

Device tag	Quantity	Designation	Type number	Supplier	Part number
=V1GL1UQ51UQ9.1-BGS/R	1	4-Wire, 4-Pin, DC M12 X 1 (PNP)	WWS001A	WEL	WEL.WWS001A

Parts list

F01_001

Device tag	Quantity	Designation	Type number	Supplier	Part number
=V1GL1UQ51UQ10.1-BGS/R	1	4-Wire, 4-Pin, DC M12 X 1 (PNP)	WWS001A	WEL	WEL.WWS001A

+.GL1UQ51UQ9.1/1

+.GL1UQ51UQ11.1/1

Parts list

F01_001

Device tag	Quantity	Designation	Type number	Supplier	Part number
=V1GL1UQ51UQ11.1-BGS/R	1	Inductive sensor Monitoring Kit for Power Clamps	1324638	TUNKERS	TUN.1324638

+.GL1UQ51UQ10.1/1

+.GL1UQ51UQ11.2/1

Parts list

F01_001

Device tag	Quantity	Designation	Type number	Supplier	Part number
=V1GL1UQ51UQ11.2-BGS/R	1	Inductive sensor Monitoring Kit for Power Clamps	1324638	TUNKERS	TUN.1324638

+.GL1UQ51UQ11.1/1

+.GL1UQ51UQ11.3/1

			Date	1/17/2023	Volvo Trucks North America	Valiant TMS	Parts list : TUN.1324638 - TUN.1324638	Drawing name: =2V10&EFS-EL		=	
			Ed.	MKLEPADLO						+ V1GL1UQ51UQ11.2	
			Appr		P6700 Bodyside RH - Robot Cell 2V10			Document type: EPB	Project nr: 22-16150	Page	1
Modification	Date	Name	Original		Replacement of / Replaced by	Scale 1:1					1579

Parts list

F01_001

Device tag	Quantity	Designation	Type number	Supplier	Part number
=V1GL1UQ51UQ11.3-BGS/R	1	Inductive sensor Monitoring Kit for Power Clamps	1324638	TUNKERS	TUN.1324638

Parts list

F01_001

Device tag	Quantity	Designation	Type number	Supplier	Part number
=V1GL1UQ51UQ11.4-BGS/R	1	Inductive sensor Monitoring Kit for Power Clamps	1324638	TUNKERS	TUN.1324638

+.GL1UQ51UQ11.3/1

+.GL1UQ51UQ11.5/1

Parts list

F01_001

Device tag	Quantity	Designation	Type number	Supplier	Part number
=V1GL1UQ51UQ11.5-BGS/R	1	Inductive sensor Monitoring Kit for Power Clamps	1324638	TUNKERS	TUN.1324638

Parts list

F01_001

Device tag	Quantity	Designation	Type number	Supplier	Part number
=V1GL1UQ51UQ11.6-BGS/R	1	Inductive sensor Monitoring Kit for Power Clamps	1324638	TUNKERS	TUN.1324638

+.GL1UQ51UQ11.5/1

+.GL1UQ51UQ12.1/1

			Date	1/17/2023	Volvo Trucks North America	Valiant TMS	Parts list : TUN.1324638 - TUN.1324638	Drawing name: =2V10&EFS-EL	= + V1GL1UQ51UQ11.6	
			Ed.	MKLEPADLO						
			Appr		P6700 Bodyside RH - Robot Cell 2V10			Document type: EPB	Project nr: 22-16150	Page 1 / 1579
Modification	Date	Name	Original		Replacement of / Replaced by	Scale 1:1				

Parts list

F01_001

Device tag	Quantity	Designation	Type number	Supplier	Part number
=V1GL1UQ51UQ12.1-BGS/R	1	Inductive sensor Monitoring Kit for Power Clamps	1324644	TUNKERS	TUN.1324644

Parts list

F01_001

Device tag	Quantity	Designation	Type number	Supplier	Part number
=V1GL1UQ51UQ12.2-BGS/R	1	Inductive sensor Monitoring Kit for Power Clamps	1324644	TUNKERS	TUN.1324644

+.GL1UQ51UQ12.1/1

+.GL1UQ51UQ12.3/1

Parts list

F01_001

Device tag	Quantity	Designation	Type number	Supplier	Part number
=V1GL1UQ51UQ12.3-BGS/R	1	Inductive sensor Monitoring Kit for Power Clamps	1324638	TUNKERS	TUN.1324638

Parts list

F01_001

Device tag	Quantity	Designation	Type number	Supplier	Part number
=V1GL1UQ51UQ12.4-BGS/R	1	Inductive sensor Monitoring Kit for Power Clamps	1324638	TUNKERS	TUN.1324638

+.GL1UQ51UQ12.3/1

+.GL1UQ51UQ13.1/1

Parts list

F01_001

Device tag	Quantity	Designation	Type number	Supplier	Part number
=V1GL1UQ51UQ13.1-BGS/R	1	Inductive sensor Monitoring Kit for Power Clamps	1324638	TUNKERS	TUN.1324638

+.GL1UQ51UQ12.4/1

+.GL1UQ51UQ13.2/1

Parts list

F01_001

Device tag	Quantity	Designation	Type number	Supplier	Part number
=V1GL1UQ51UQ13.2-BGS/R	1	Inductive sensor Monitoring Kit for Power Clamps	1324638	TUNKERS	TUN.1324638

+.GL1UQ51UQ13.1/1

+.GL1UQ51UQ14.1/1

Parts list

F01_001

Device tag	Quantity	Designation	Type number	Supplier	Part number
=V1GL1UQ51UQ14.1-BGS/R	1	Inductive sensor Monitoring Kit for Power Clamps	1324644	TUNKERS	TUN.1324644

+.GL1UQ51UQ13.2/1

+.GL1UQ51UQ14.2/1

			Date	1/17/2023	Volvo Trucks North America	Valiant TMS	Parts list : TUN.1324644 - TUN.1324644	Drawing name: =2V10&EFS-EL		=	
			Ed.	MKLEPADLO						+ V1GL1UQ51UQ14.1	
			Appr		P6700 Bodyside RH - Robot Cell 2V10			Document type: EPB	Project nr: 22-16150	Page	1
Modification	Date	Name	Original		Replacement of / Replaced by	Scale 1:1					1579

Parts list

F01_001

Device tag	Quantity	Designation	Type number	Supplier	Part number
=V1GL1UQ51UQ14.2-BGS/R	1	Inductive sensor Monitoring Kit for Power Clamps	1324644	TUNKERS	TUN.1324644

+.GL1UQ51UQ14.1/1

+.GL1UQ51UQ14.3/1

Parts list

F01_001

Device tag	Quantity	Designation	Type number	Supplier	Part number
=V1GL1UQ51UQ14.3-BGS/R	1	Inductive sensor Monitoring Kit for Power Clamps	1324644	TUNKERS	TUN.1324644

Parts list

F01_001

Device tag	Quantity	Designation	Type number	Supplier	Part number
=V1GL1UQ51UQ14.4-BGS/R	1	Inductive sensor Monitoring Kit for Power Clamps	1324644	TUNKERS	TUN.1324644

+.GL1UQ51UQ14.3/1

+.GL1UQ51UQ15.1/1

			Date	1/17/2023	Volvo Trucks North America	Valiant TMS	Parts list : TUN.1324644 - TUN.1324644	Drawing name: =2V10&EFS-EL	= + V1GL1UQ51UQ14.4	
			Ed.	MKLEPADLO						
			Appr		P6700 Bodyside RH - Robot Cell 2V10			Document type: EPB	Project nr: 22-16150	Page 1 / 1579
Modification	Date	Name	Original		Replacement of / Replaced by	Scale 1:1				

Parts list

F01_001

Device tag	Quantity	Designation	Type number	Supplier	Part number
=V1GL1UQ51UQ15.1-BGS/R	1	Inductive sensor Monitoring Kit for Power Clamps	285425	TUNKERS	TUN.285425

+.GL1UQ51UQ14.4/1

+.GL1UQ51UQ16.1/1

			Date	1/17/2023	Volvo Trucks North America		Valiant TMS	Parts list : TUN.285425 - TUN.285425	Drawing name: =2V10&EFS-EL		=
			Ed.	MKLEPADLO							+ V1GL1UQ51UQ15.1
			Appr		P6700 Bodyside RH - Robot Cell 2V10				Document type: EPB	Project nr: 22-16150	Page 1
Modification	Date	Name	Original		Replacement of	Replaced by	Scale 1:1				1579

Parts list

F01_001

Device tag	Quantity	Designation	Type number	Supplier	Part number
=V1GL1UQ51UQ16.1-BGS/R	1	Inductive sensor Monitoring Kit for Power Clamps	1324644	TUNKERS	TUN.1324644

+.GL1UQ51UQ15.1/1

+.GL1UQ51UQ17.1/1

			Date	1/17/2023	Volvo Trucks North America	Valiant TMS	Parts list : TUN.1324644 - TUN.1324644	Drawing name: =2V10&EFS-EL	= + V1GL1UQ51UQ16.1	
			Ed.	MKLEPADLO	P6700 Bodyside RH - Robot Cell 2V10			Document type: EPB	Project nr: 22-16150	Page 1 / 1579
			Appr			Scale 1:1				
Modification	Date	Name	Original		Replacement of / Replaced by					

Parts list

F01_001

Device tag	Quantity	Designation	Type number	Supplier	Part number
=V1GL1UQ51UQ17.1-BGS/R	1	Inductive sensor Monitoring Kit for Power Clamps	1324638	TUNKERS	TUN.1324638

+.GL1UQ51UQ16.1/1

+.GL1UQ51UQ18.1/1

Parts list

F01_001

Device tag	Quantity	Designation	Type number	Supplier	Part number
=V1GL1UQ51UQ18.1-BGS/R	1	50MM RANGE 4-PIN M12 INDUCTIVE SENSOR	NBN2-F581-100S6-E8-V1	P+F	P+F.NBN2-F581-100S6-E8-V1

+.GL1UQ51UQ17.1/1

+.GL1UQ51UQ19.1/1

			Date	1/17/2023	Volvo Trucks North America	Valiant TMS	Parts list : P+F.NBN2-F581-100S6-E8-V1 - P+F.NBN2-F581-100S6-E8-V1	Drawing name: =2V10&EFS-EL	=	
			Ed.	MKLEPADLO					+ V1GL1UQ51UQ18.1	
			Appr		P6700 Bodyside RH - Robot Cell 2V10			Document type: EPB	Project nr: 22-16150	Page 1
Modification	Date	Name	Original		Replacement of / Replaced by	Scale 1:1				1579

Parts list

F01_001

Device tag	Quantity	Designation	Type number	Supplier	Part number
=V1GL1UQ51UQ19.1-BGS/R	1	Inductive sensor Monitoring Kit for Power Clamps	1324638	TUNKERS	TUN.1324638

+.GL1UQ51UQ18.1/1

+.GL1UQ51UQ20.1/1

Parts list

F01_001

Device tag	Quantity	Designation	Type number	Supplier	Part number
=V1GL1UQ51UQ20.1-BGS/R	1	Inductive sensor Monitoring Kit for Power Clamps	1324638	TUNKERS	TUN.1324638

+.GL1UQ51UQ19.1/1

+.GL1UQ51UQ21.1/1

Parts list

F01_001

Device tag	Quantity	Designation	Type number	Supplier	Part number
=V1GL1UQ51UQ21.1-BGS/R	1	Inductive sensor Monitoring Kit for Power Clamps	1324644	TUNKERS	TUN.1324644

+.GL1UQ51UQ20.1/1

+.GL1UQ51UQ22.1/1

Parts list

F01_001

Device tag	Quantity	Designation	Type number	Supplier	Part number
=V1GL1UQ51UQ22.1-BGS/R	1	Inductive sensor Monitoring Kit for Power Clamps	1324638	TUNKERS	TUN.1324638

+.GL1UQ51UQ21.1/1

+.GL1UQ51UQ23.1/1

Parts list

F01_001

Device tag	Quantity	Designation	Type number	Supplier	Part number
=V1GL1UQ51UQ23.1-BGS/R	1	Inductive sensor Monitoring Kit for Power Clamps	1324644	TUNKERS	TUN.1324644

+.GL1UQ51UQ22.1/1

+.GL1UQ51UQ24.1/1

Parts list

F01_001

Device tag	Quantity	Designation	Type number	Supplier	Part number
=V1GL1UQ51UQ24.1-BGS/R	1	Inductive sensor Monitoring Kit for Power Clamps	1324638	TUNKERS	TUN.1324638

+.GL1UQ51UQ23.1/1

+.GL1UQ51UQ25.1/1

			Date	1/17/2023	Volvo Trucks North America	Valiant TMS	Parts list : TUN.1324638 - TUN.1324638	Drawing name: =2V10&EFS-EL	= + V1GL1UQ51UQ24.1	
			Ed.	MKLEPADLO						
			Appr		P6700 Bodyside RH - Robot Cell 2V10			Document type: EPB	Project nr: 22-16150	Page 1 / 1579
Modification	Date	Name	Original		Replacement of / Replaced by	Scale 1:1				

Parts list

F01_001

Device tag	Quantity	Designation	Type number	Supplier	Part number
=V1GL1UQ51UQ25.1-BGS/R	1	4-Wire, 4-Pin, DC M12 X 1 (PNP)	WWS001A	WEL	WEL.WWS001A

+.GL1UQ51UQ24.1/1

+.GL1UQ51UQ26.1/1

Parts list

F01_001

Device tag	Quantity	Designation	Type number	Supplier	Part number
=V1GL1UQ51UQ26.1-BGS/R	1	Inductive sensor Monitoring Kit for Power Clamps	1324638	TUNKERS	TUN.1324638

+.GL1UQ51UQ25.1/1

+.GL1UQ51UQ26.2/1

Parts list

F01_001

Device tag	Quantity	Designation	Type number	Supplier	Part number
=V1GL1UQ51UQ26.2-BGS/R	1	Inductive sensor Monitoring Kit for Power Clamps	1324644	TUNKERS	TUN.1324644

+.GL1UQ51UQ26.1/1

+.GL1UQ52/1

Parts list

F01_001

Device tag	Quantity	Designation	Type number	Supplier	Part number
=V1GL1UQ52BG0-BG01	1	Inductive sensor	BI20U-CA40-AP6X2-H1141/S1590 W/BS2.0	TURCK	TUR.1627297
=V1GL1UQ52BG0-BG02	1	Inductive sensor	BI20U-CA40-AP6X2-H1141/S1590 W/BS2.0	TURCK	TUR.1627297
=V1GL1UQ52BG0-BG03	1	Inductive sensor	BI20U-CA40-AP6X2-H1141/S1590 W/BS2.0	TURCK	TUR.1627297
=V1GL1UQ52BG0-BG04	1	QS30 Series High-Performance Long-Range Sensor	QS30FF600QPMA16		BAN.73093
=V1GL1UQ52BG0-BG05	1	Inductive sensor	BI20U-CA40-AP6X2-H1141/S1590 W/BS2.0	TURCK	TUR.1627297
=V1GL1UQ52BG0-BG06	1	QS30 Series High-Performance Long-Range Sensor	QS30FF600QPMA16		BAN.73093
=V1GL1UQ52BG0-BG07	1	Inductive sensor	BI20U-CA40-AP6X2-H1141/S1590 W/BS2.0	TURCK	TUR.1627297
=V1GL1UQ52BG0-BG08	1	Inductive sensor	BI20U-CA40-AP6X2-H1141/S1590 W/BS2.0	TURCK	TUR.1627297
=V1GL1UQ52BG0-BG09	1	Inductive sensor	BI20U-CA40-AP6X2-H1141/S1590 W/BS2.0	TURCK	TUR.1627297
=V1GL1UQ52BG0-BG10	1	Inductive sensor	BI10U-MT18-AP6X2-H1141/S1589	Turck	TUR.1644905
=V1GL1UQ52BG0-BG11	1	Inductive sensor	BI10U-MT18-AP6X2-H1141/S1589	Turck	TUR.1644905
=V1GL1UQ52BG0-BG12	1				1627297
=V1GL1UQ52BG0-BG13	1	Inductive sensor	BI20U-CA40-AP6X2-H1141/S1590 W/BS2.0	TURCK	TUR.1627297
=V1GL1UQ52BG0-BG14	1	Inductive sensor	BI20U-CA40-AP6X2-H1141/S1590 W/BS2.0	TURCK	TUR.1627297
=V1GL1UQ52BG0-BG15	1	Inductive sensor	BI20U-CA40-AP6X2-H1141/S1590 W/BS2.0	TURCK	TUR.1627297
=V1GL1UQ52BG0-BG16	1	Inductive sensor	BI20U-CA40-AP6X2-H1141/S1590 W/BS2.0	TURCK	TUR.1627297
=V1GL1UQ52BG0-BG17	1	Inductive sensor	BI20U-CA40-AP6X2-H1141/S1590 W/BS2.0	TURCK	TUR.1627297
=V1GL1UQ52BG0-BG18	1	Inductive sensor	BI20U-CA40-AP6X2-H1141/S1590 W/BS2.0	TURCK	TUR.1627297
=V1GL1UQ52BG0-BG19	1	Inductive sensor	BI20U-CA40-AP6X2-H1141/S1590 W/BS2.0	TURCK	TUR.1627297
=V1GL1UQ52BG0-BG20	1	Inductive sensor	BI20U-CA40-AP6X2-H1141/S1590 W/BS2.0	TURCK	TUR.1627297
=V1GL1UQ52BG0-BG21	1	Inductive sensor	BI20U-CA40-AP6X2-H1141/S1590 W/BS2.0	TURCK	TUR.1627297
=V1GL1UQ52BG0-BG22	1	Inductive sensor	BI10U-MT18-AP6X2-H1141/S1589	Turck	TUR.1644905
=V1GL1UQ52BG0-BG23	1	Inductive sensor	BI20U-CA40-AP6X2-H1141/S1590 W/BS2.0	TURCK	TUR.1627297
=V1GL1UQ52BG0-BG24	1	Inductive sensor	BI10U-MT18-AP6X2-H1141/S1589	Turck	TUR.1644905
=V1GL1UQ52BG0-BG25	1	Inductive sensor	BI20U-CA40-AP6X2-H1141/S1590 W/BS2.0	TURCK	TUR.1627297
=V1GL1UQ52BG0-BG26	1	Inductive sensor	BI10U-MT18-AP6X2-H1141/S1589	Turck	TUR.1644905
=V1GL1UQ52BG0-BG27	1	Inductive sensor	BI20U-CA40-AP6X2-H1141/S1590 W/BS2.0	TURCK	TUR.1627297
=V1GL1UQ52BG0-BG28	1	Inductive sensor	BI10U-MT18-AP6X2-H1141/S1589	Turck	TUR.1644905
=V1GL1UQ52BG0-BG29	1	Inductive sensor	BI4U-MT12E-AP6X-H1141/S1589	Turck	TUR.1644979
=V1GL1UQ52BG0-BG30	1	Inductive sensor	BI10U-MT18-AP6X2-H1141/S1589	Turck	TUR.1644905
=V1GL1UQ52BG0-BG31	1	Inductive sensor	BI10U-MT18-AP6X2-H1141/S1589	Turck	TUR.1644905
=V1GL1UQ52BG0-BG32	1	Inductive sensor	BI20U-CA40-AP6X2-H1141/S1590 W/BS2.0	TURCK	TUR.1627297
=V1GL1UQ52BG0-BG33	1	Inductive sensor	BI10U-MT18-AP6X2-H1141/S1589	Turck	TUR.1644905
=V1GL1UQ52BG0-BG34	1	Inductive sensor	BI10U-MT18-AP6X2-H1141/S1589	Turck	TUR.1644905
=V1GL1UQ52BG0-BG35	1	Magnetic field sensor For Detection of Ferromagnetic Parts	NIMFE-M12/4.6L88-UN6X-H1141	TURCK	TUR.1600610
=V1GL1UQ52BG0-XG1/2	1	Y splitter	U2-30676	TURCK	TUR.VB2-FSM 4.4/2FKM 4/S3450
=V1GL1UQ52BG0-XG3/4	1	Y splitter	U2-30676	TURCK	TUR.VB2-FSM 4.4/2FKM 4/S3450
=V1GL1UQ52BG0-XG5/6	1	Y splitter	U2-30676	TURCK	TUR.VB2-FSM 4.4/2FKM 4/S3450
=V1GL1UQ52BG0-XG7/8	1	Y splitter	U2-30676	TURCK	TUR.VB2-FSM 4.4/2FKM 4/S3450
=V1GL1UQ52BG0-XG9/10	1	Y splitter	U2-30676	TURCK	TUR.VB2-FSM 4.4/2FKM 4/S3450
=V1GL1UQ52BG0-XG11/12	1	Y splitter	U2-30676	TURCK	TUR.VB2-FSM 4.4/2FKM 4/S3450
=V1GL1UQ52BG0-XG13/14	1	Y splitter	U2-30676	TURCK	TUR.VB2-FSM 4.4/2FKM 4/S3450
=V1GL1UQ52BG0-XG15/16	1	Y splitter	U2-30676	TURCK	TUR.VB2-FSM 4.4/2FKM 4/S3450
=V1GL1UQ52BG0-XG17/18	1	Y splitter	U2-30676	TURCK	TUR.VB2-FSM 4.4/2FKM 4/S3450
=V1GL1UQ52BG0-XG19/20	1	Y splitter	U2-30676	TURCK	TUR.VB2-FSM 4.4/2FKM 4/S3450
=V1GL1UQ52BG0-XG21/22	1	Y splitter	U2-30676	TURCK	TUR.VB2-FSM 4.4/2FKM 4/S3450
=V1GL1UQ52BG0-XG23/24	1	Y splitter	U2-30676	TURCK	TUR.VB2-FSM 4.4/2FKM 4/S3450
=V1GL1UQ52BG0-XG25/26	1	Y splitter	U2-30676	TURCK	TUR.VB2-FSM 4.4/2FKM 4/S3450
=V1GL1UQ52BG0-XG27/28	1	Y splitter	U2-30676	TURCK	TUR.VB2-FSM 4.4/2FKM 4/S3450
=V1GL1UQ52BG0-XG29/30	1	Y splitter	U2-30676	TURCK	TUR.VB2-FSM 4.4/2FKM 4/S3450
=V1GL1UQ52BG0-XG31/32	1	Y splitter	U2-30676	TURCK	TUR.VB2-FSM 4.4/2FKM 4/S3450
=V1GL1UQ52BG0-XG33/34	1	Y splitter	U2-30676	TURCK	TUR.VB2-FSM 4.4/2FKM 4/S3450
=V1GL1UQ52KF1-KF1	0	Bus node	CPX-FB33	FES	FES.548755
=V1GL1UQ52KF1-KF1	0	Interlinking block	CPX-M-GE-EV-S-7/8-5POL	FES	FES.550208
=V1GL1UQ52KF1-KF1.11	0	Manifold block	CPX-M-AB-8-M12X2-5POL	FES	FES.549335
=V1GL1UQ52KF1-KF1.12	0	Manifold block	CPX-M-AB-8-M12X2-5POL	FES	FES.549335

Parts list

F01_001

Device tag	Quantity	Designation	Type number	Supplier	Part number
=V1GL1UQ52KF1-KF1.13	0	Manifold block	CPX-M-AB-8-M12X2-5POL	FES	FES.549335
=V1GL1UQ52KF1-KF1.14	0	Manifold block	CPX-M-AB-8-M12X2-5POL	FES	FES.549335
=V1GL1UQ52KF1-KF1.15	0	Manifold block	CPX-M-AB-8-M12X2-5POL	FES	FES.549335
=V1GL1UQ52KF2-KF2	0	Bus node	CPX-FB33	FES	FES.548755
=V1GL1UQ52KF2-KF2	0	Interlinking block	CPX-M-GE-EV-S-7/8-5POL	FES	FES.550208
=V1GL1UQ52KF2-KF2.11	0	Manifold block	CPX-M-AB-8-M12X2-5POL	FES	FES.549335
=V1GL1UQ52KF2-KF2.12	0	Manifold block	CPX-M-AB-8-M12X2-5POL	FES	FES.549335
=V1GL1UQ52KF2-KF2.13	0	Manifold block	CPX-M-AB-8-M12X2-5POL	FES	FES.549335
=V1GL1UQ52KF2-KF2.14	0	Manifold block	CPX-M-AB-8-M12X2-5POL	FES	FES.549335
=V1GL1UQ52KF2-KF2.15	0	Manifold block	CPX-M-AB-8-M12X2-5POL	FES	FES.549335
=V1GL1UQ52KF3-KF3	0	Bus node	CPX-FB33	FES	FES.548755
=V1GL1UQ52KF3-KF3	0	Interlinking block	CPX-M-GE-EV-S-7/8-5POL	FES	FES.550208
=V1GL1UQ52KF3-KF3.11	0	Manifold block	CPX-M-AB-8-M12X2-5POL	FES	FES.549335
=V1GL1UQ52WC4-XG51.1	1	TEE, 5-PIN MINI, STANDARD KEYWAY	RSM-2RKM 50	TURCK	TUR.RSM-2RKM 50
=V1GL1UQ52WC4-XG51.2	1	TEE, 5-PIN MINI, STANDARD KEYWAY	RSM-2RKM 50	TURCK	TUR.RSM-2RKM 50
=V1GL2UQ51WC4-XG51.1	1	TEE, 5-PIN MINI, STANDARD KEYWAY	RSM-2RKM 50	TURCK	TUR.RSM-2RKM 50
=V1GL2UQ51WC4-XG51.2	1	TEE, 5-PIN MINI, STANDARD KEYWAY	RSM-2RKM 50	TURCK	TUR.RSM-2RKM 50
=V1GL2UQ51WC4-XG51.3	1	TEE, 5-PIN MINI, STANDARD KEYWAY	RSM-2RKM 50	TURCK	TUR.RSM-2RKM 50

Parts list

F01_001

Device tag	Quantity	Designation	Type number	Supplier	Part number
=V1GL1UQ52UQ1.1-BGS/R	1	4-Wire, 4-Pin, DC M12 X 1 (PNP)	WWS001A	WEL	WEL.WWS001A

+V1GL1UQ52/2

+.GL1UQ52UQ1.2/1

Parts list

F01_001

Device tag	Quantity	Designation	Type number	Supplier	Part number
=V1GL1UQ52UQ1.2-BGS/R	1	4-Wire, 4-Pin, DC M12 X 1 (PNP)	WWS001A	WEL	WEL.WWS001A

+.GL1UQ52UQ1.1/1

+.GL1UQ52UQ1.3/1

Parts list

F01_001

Device tag	Quantity	Designation	Type number	Supplier	Part number
=V1GL1UQ52UQ1.3-BGS/R	1	4-Wire, 4-Pin, DC M12 X 1 (PNP)	WWS001A	WEL	WEL.WWS001A

+.GL1UQ52UQ1.2/1

+.GL1UQ52UQ1.4/1

Parts list

F01_001

Device tag	Quantity	Designation	Type number	Supplier	Part number
=V1GL1UQ52UQ1.4-BGS/R	1	4-Wire, 4-Pin, DC M12 X 1 (PNP)	WWS001A	WEL	WEL.WWS001A

+.GL1UQ52UQ1.3/1

+.GL1UQ52UQ1.5/1

Parts list

F01_001

Device tag	Quantity	Designation	Type number	Supplier	Part number
=V1GL1UQ52UQ1.5-BGS/R	1	4-Wire, 4-Pin, DC M12 X 1 (PNP)	WWS001A	WEL	WEL.WWS001A

+.GL1UQ52UQ1.4/1

+.GL1UQ52UQ1.6/1

Parts list

F01_001

Device tag	Quantity	Designation	Type number	Supplier	Part number
=V1GL1UQ52UQ1.6-BGS/R	1	4-Wire, 4-Pin, DC M12 X 1 (PNP)	WWS001A	WEL	WEL.WWS001A

+.GL1UQ52UQ1.5/1

+.GL1UQ52UQ2.1/1

			Date	1/17/2023	Volvo Trucks North America	Valiant TMS	Parts list : WEL.WWS001A - WEL.WWS001A	Drawing name: =2V10&EFS-EL	= + V1GL1UQ52UQ1.6	
			Ed.	MKLEPADLO						
			Appr		P6700 Bodyside RH - Robot Cell 2V10			Document type: EPB	Project nr: 22-16150	Page 1 / 1579
Modification	Date	Name	Original		Replacement of / Replaced by	Scale 1:1				

Parts list

F01_001

Device tag	Quantity	Designation	Type number	Supplier	Part number
=V1GL1UQ52UQ2.1-BGS/R	1	4-Wire, 4-Pin, DC M12 X 1 (PNP)	WWS001A	WEL	WEL.WWS001A

+.GL1UQ52UQ1.6/1

+.GL1UQ52UQ3.1/1

Parts list

F01_001

Device tag	Quantity	Designation	Type number	Supplier	Part number
=V1GL1UQ52UQ3.1-BGS/R	1	4-Wire, 4-Pin, DC M12 X 1 (PNP)	WWS001A	WEL	WEL.WWS001A

+.GL1UQ52UQ2.1/1

+.GL1UQ52UQ3.2/1

Parts list

F01_001

Device tag	Quantity	Designation	Type number	Supplier	Part number
=V1GL1UQ52UQ3.2-BGS/R	1	4-Wire, 4-Pin, DC M12 X 1 (PNP)	WWS001A	WEL	WEL.WWS001A

+.GL1UQ52UQ3.1/1

+.GL1UQ52UQ3.3/1

Parts list

F01_001

Device tag	Quantity	Designation	Type number	Supplier	Part number
=V1GL1UQ52UQ3.3-BGS/R	1	4-Wire, 4-Pin, DC M12 X 1 (PNP)	WWS001A	WEL	WEL.WWS001A

+.GL1UQ52UQ3.2/1

+.GL1UQ52UQ3.4/1

Parts list

F01_001

Device tag	Quantity	Designation	Type number	Supplier	Part number
=V1GL1UQ52UQ3.4-BGS/R	1	4-Wire, 4-Pin, DC M12 X 1 (PNP)	WWS001A	WEL	WEL.WWS001A

+.GL1UQ52UQ3.3/1

+.GL1UQ52UQ3.5/1

Parts list

F01_001

Device tag	Quantity	Designation	Type number	Supplier	Part number
=V1GL1UQ52UQ3.5-BGS/R	1	4-Wire, 4-Pin, DC M12 X 1 (PNP)	WWS001A	WEL	WEL.WWS001A

+.GL1UQ52UQ3.4/1

+.GL1UQ52UQ3.6/1

Parts list

F01_001

Device tag	Quantity	Designation	Type number	Supplier	Part number
=V1GL1UQ52UQ3.6-BGS/R	1	4-Wire, 4-Pin, DC M12 X 1 (PNP)	WWS001A	WEL	WEL.WWS001A

+.GL1UQ52UQ3.5/1

+.GL1UQ52UQ4.1/1

Parts list

F01_001

Device tag	Quantity	Designation	Type number	Supplier	Part number
=V1GL1UQ52UQ4.1-BGS/R	1	4-Wire, 4-Pin, DC M12 X 1 (PNP)	WWS001A	WEL	WEL.WWS001A

+.GL1UQ52UQ3.6/1

+.GL1UQ52UQ4.2/1

Parts list

F01_001

Device tag	Quantity	Designation	Type number	Supplier	Part number
=V1GL1UQ52UQ4.2-BGS/R	1	4-Wire, 4-Pin, DC M12 X 1 (PNP)	WWS001A	WEL	WEL.WWS001A

+.GL1UQ52UQ4.1/1

+.GL1UQ52UQ4.3/1

Parts list

F01_001

Device tag	Quantity	Designation	Type number	Supplier	Part number
=V1GL1UQ52UQ4.3-BGS/R	1	4-Wire, 4-Pin, DC M12 X 1 (PNP)	WWS001A	WEL	WEL.WWS001A

+.GL1UQ52UQ4.2/1

+.GL1UQ52UQ5.1/1

Parts list

F01_001

Device tag	Quantity	Designation	Type number	Supplier	Part number
=V1GL1UQ52UQ5.1-BGS/R	1	4-Wire, 4-Pin, DC M12 X 1 (PNP)	WWS001A	WEL	WEL.WWS001A

+.GL1UQ52UQ4.3/1

+.GL1UQ52UQ5.2/1

Parts list

F01_001

Device tag	Quantity	Designation	Type number	Supplier	Part number
=V1GL1UQ52UQ5.2-BGS/R	1	4-Wire, 4-Pin, DC M12 X 1 (PNP)	WWS001A	WEL	WEL.WWS001A

+.GL1UQ52UQ5.1/1

+.GL1UQ52UQ5.3/1

Parts list

F01_001

Device tag	Quantity	Designation	Type number	Supplier	Part number
=V1GL1UQ52UQ5.3-BGS/R	1	4-Wire, 4-Pin, DC M12 X 1 (PNP)	WWS001A	WEL	WEL.WWS001A

+.GL1UQ52UQ5.2/1

+.GL1UQ52UQ6.1/1

Parts list

F01_001

Device tag	Quantity	Designation	Type number	Supplier	Part number
=V1GL1UQ52UQ6.1-BGS/R	1	4-Wire, 4-Pin, DC M12 X 1 (PNP)	WWS001A	WEL	WEL.WWS001A

+.GL1UQ52UQ5.3/1

+.GL1UQ52UQ7.1/1

Parts list

F01_001

Device tag	Quantity	Designation	Type number	Supplier	Part number
=V1GL1UQ52UQ7.1-BGS/R	1	4-Wire, 4-Pin, DC M12 X 1 (PNP)	WWS001A	WEL	WEL.WWS001A

+.GL1UQ52UQ6.1/1

+.GL1UQ52UQ8.1/1

Parts list

F01_001

Device tag	Quantity	Designation	Type number	Supplier	Part number
=V1GL1UQ52UQ8.1-BGR	1	Inductive sensor	BI10U-MT18-AP6X2-H1141/S1589	TURCK	TUR.16449050
=V1GL1UQ52UQ8.1-BGS	1	Inductive sensor	BI10U-MT18-AP6X2-H1141/S1589	TURCK	TUR.16449050
=V1GL1UQ52UQ8.1-XGR/S	1	Y splitter	U2-30676	TURCK	TUR.VB2-FSM 4.4/2FKM 4/S3450

Parts list

F01_001

Device tag	Quantity	Designation	Type number	Supplier	Part number
=V1GL1UQ52UQ9.1-BGS/R	1	4-Wire, 4-Pin, DC M12 X 1 (PNP)	WWS001A	WEL	WEL.WWS001A

+.GL1UQ52UQ8.1/1

+.GL1UQ52UQ9.2/1

Parts list

F01_001

Device tag	Quantity	Designation	Type number	Supplier	Part number
=V1GL1UQ52UQ9.2-BGS/R	1	4-Wire, 4-Pin, DC M12 X 1 (PNP)	WWS001A	WEL	WEL.WWS001A

+.GL1UQ52UQ9.1/1

+.GL1UQ52UQ10.1/1

Parts list

F01_001

Device tag	Quantity	Designation	Type number	Supplier	Part number
=V1GL1UQ52UQ10.1-BGS/R	1	Inductive sensor Monitoring Kit for Power Clamps	1324638	TUNKERS	TUN.1324638

+.GL1UQ52UQ9.2/1

+.GL1UQ52UQ10.2/1

Parts list

F01_001

Device tag	Quantity	Designation	Type number	Supplier	Part number
=V1GL1UQ52UQ10.2-BGS/R	1	Inductive sensor Monitoring Kit for Power Clamps	1324644	TUNKERS	TUN.1324644

+.GL1UQ52UQ10.1/1

+.GL1UQ52UQ10.3/1

			Date	1/17/2023	Volvo Trucks North America	Valiant TMS	Parts list : TUN.1324644 - TUN.1324644	Drawing name: =2V10&EFS-EL	= + V1GL1UQ52UQ10.2	
			Ed.	MKLEPADLO						
			Appr		P6700 Bodyside RH - Robot Cell 2V10			Document type: EPB	Project nr: 22-16150	Page 1 / 1579
Modification	Date	Name	Original		Replacement of / Replaced by	Scale 1:1				

Parts list

F01_001

Device tag	Quantity	Designation	Type number	Supplier	Part number
=V1GL1UQ52UQ10.3-BGS/R	1	Inductive sensor Monitoring Kit for Power Clamps	1324638	TUNKERS	TUN.1324638

Parts list

F01_001

Device tag	Quantity	Designation	Type number	Supplier	Part number
=V1GL1UQ52UQ10.4-BGS/R	1	Inductive sensor Monitoring Kit for Power Clamps	1324638	TUNKERS	TUN.1324638

Parts list

F01_001

Device tag	Quantity	Designation	Type number	Supplier	Part number
=V1GL1UQ52UQ10.5-BGS/R	1	Inductive sensor Monitoring Kit for Power Clamps	1324638	TUNKERS	TUN.1324638

+.GL1UQ52UQ10.4/1

+.GL1UQ52UQ10.6/1

			Date	1/17/2023	Volvo Trucks North America	Valiant TMS	Parts list : TUN.1324638 - TUN.1324638	Drawing name: =2V10&EFS-EL		=	
			Ed.	MKLEPADLO						+ V1GL1UQ52UQ10.5	
			Appr		P6700 Bodyside RH - Robot Cell 2V10			Document type: EPB	Project nr: 22-16150	Page	1
Modification	Date	Name	Original		Replacement of / Replaced by	Scale 1:1					1579

Parts list

F01_001

Device tag	Quantity	Designation	Type number	Supplier	Part number
=V1GL1UQ52UQ10.6-BGS/R	1	Inductive sensor Monitoring Kit for Power Clamps	1324638	TUNKERS	TUN.1324638

+.GL1UQ52UQ10.5/1

+.GL1UQ52UQ11.1/1

			Date	1/17/2023	Volvo Trucks North America	Valiant TMS	Parts list : TUN.1324638 - TUN.1324638	Drawing name: =2V10&EFS-EL	= + V1GL1UQ52UQ10.6	
			Ed.	MKLEPADLO						
			Appr		P6700 Bodyside RH - Robot Cell 2V10			Document type: EPB	Project nr: 22-16150	Page 1 / 1579
Modification	Date	Name	Original		Replacement of / Replaced by	Scale 1:1				

Parts list

F01_001

Device tag	Quantity	Designation	Type number	Supplier	Part number
=V1GL1UQ52UQ11.1-BGS/R	1	Inductive sensor Monitoring Kit for Power Clamps	1324644	TUNKERS	TUN.1324644

+.GL1UQ52UQ10.6/1

+.GL1UQ52UQ11.2/1

Parts list

F01_001

Device tag	Quantity	Designation	Type number	Supplier	Part number
=V1GL1UQ52UQ11.2-BGS/R	1	Inductive sensor Monitoring Kit for Power Clamps	1324644	TUNKERS	TUN.1324644

+.GL1UQ52UQ11.1/1

+.GL1UQ52UQ11.3/1

Parts list

F01_001

Device tag	Quantity	Designation	Type number	Supplier	Part number
=V1GL1UQ52UQ11.3-BGS/R	1	Inductive sensor Monitoring Kit for Power Clamps	1324638	TUNKERS	TUN.1324638

Parts list

F01_001

Device tag	Quantity	Designation	Type number	Supplier	Part number
=V1GL1UQ52UQ11.4-BGS/R	1	Inductive sensor Monitoring Kit for Power Clamps	1324638	TUNKERS	TUN.1324638

+.GL1UQ52UQ11.3/1

+.GL1UQ52UQ11.5/1

Parts list

F01_001

Device tag	Quantity	Designation	Type number	Supplier	Part number
=V1GL1UQ52UQ11.5-BGS/R	1	Inductive sensor Monitoring Kit for Power Clamps	1324644	TUNKERS	TUN.1324644

+.GL1UQ52UQ11.4/1

+.GL1UQ52UQ12.1/1

			Date	1/17/2023	Volvo Trucks North America	Valiant TMS	Parts list : TUN.1324644 - TUN.1324644	Drawing name: =2V10&EFS-EL	= + V1GL1UQ52UQ11.5	
			Ed.	MKLEPADLO						
			Appr		P6700 Bodyside RH - Robot Cell 2V10			Document type: EPB	Project nr: 22-16150	Page 1 / 1579
Modification	Date	Name	Original		Replacement of / Replaced by	Scale 1:1				

Parts list

F01_001

Device tag	Quantity	Designation	Type number	Supplier	Part number
=V1GL1UQ52UQ12.1-BGS/R	1	Inductive sensor Monitoring Kit for Power Clamps	1324638	TUNKERS	TUN.1324638

+.GL1UQ52UQ11.5/1

+.GL1UQ52UQ12.2/1

Parts list

F01_001

Device tag	Quantity	Designation	Type number	Supplier	Part number
=V1GL1UQ52UQ12.2-BGS/R	1	Inductive sensor Monitoring Kit for Power Clamps	1324644	TUNKERS	TUN.1324644

+.GL1UQ52UQ12.1/1

+.GL1UQ52UQ12.3/1

Parts list

F01_001

Device tag	Quantity	Designation	Type number	Supplier	Part number
=V1GL1UQ52UQ12.3-BGS/R	1	Inductive sensor Monitoring Kit for Power Clamps	1324644	TUNKERS	TUN.1324644

+.GL1UQ52UQ12.2/1

+.GL1UQ52UQ12.4/1

Parts list

F01_001

Device tag	Quantity	Designation	Type number	Supplier	Part number
=V1GL1UQ52UQ12.4-BGS/R	1	Inductive sensor Monitoring Kit for Power Clamps	1324644	TUNKERS	TUN.1324644

+.GL1UQ52UQ12.3/1

+.GL1UQ52UQ12.5/1

Parts list

F01_001

Device tag	Quantity	Designation	Type number	Supplier	Part number
=V1GL1UQ52UQ12.5-BGS/R	1	Inductive sensor Monitoring Kit for Power Clamps	1324638	TUNKERS	TUN.1324638

+.GL1UQ52UQ12.4/1

+.GL1UQ52UQ12.6/1

			Date	1/17/2023	Volvo Trucks North America	Valiant TMS	Parts list : TUN.1324638 - TUN.1324638	Drawing name: =2V10&EFS-EL		= + V1GL1UQ52UQ12.5	
			Ed.	MKLEPADLO							
			Appr		P6700 Bodyside RH - Robot Cell 2V10			Document type: EPB	Project nr: 22-16150		Page 1 / 1579
Modification	Date	Name	Original		Replacement of / Replaced by	Scale 1:1					

Parts list

F01_001

Device tag	Quantity	Designation	Type number	Supplier	Part number
=V1GL1UQ52UQ12.6-BGS/R	1	Inductive sensor Monitoring Kit for Power Clamps	1324644	TUNKERS	TUN.1324644

+.GL1UQ52UQ12.5/1

+.GL1UQ52UQ13.1/1

			Date	1/17/2023	Volvo Trucks North America	Valiant TMS	Parts list : TUN.1324644 - TUN.1324644	Drawing name: =2V10&EFS-EL	= + V1GL1UQ52UQ12.6	
			Ed.	MKLEPADLO						
			Appr		P6700 Bodyside RH - Robot Cell 2V10			Document type: EPB	Project nr: 22-16150	Page 1 / 1579
Modification	Date	Name	Original		Replacement of / Replaced by	Scale 1:1				

Parts list

F01_001

Device tag	Quantity	Designation	Type number	Supplier	Part number
=V1GL1UQ52UQ13.1-BGS/R	1	Inductive sensor Monitoring Kit for Power Clamps	1324644	TUNKERS	TUN.1324644

+.GL1UQ52UQ12.6/1

+.GL1UQ52UQ14.1/1

Parts list

F01_001

Device tag	Quantity	Designation	Type number	Supplier	Part number
=V1GL1UQ52UQ14.1-BGS/R	1	Inductive sensor Monitoring Kit for Power Clamps	1324644	TUNKERS	TUN.1324644

+.GL1UQ52UQ13.1/1

+.GL1UQ52UQ15.1/1

Parts list

F01_001

Device tag	Quantity	Designation	Type number	Supplier	Part number
=V1GL1UQ52UQ15.1-BGS/R	1	Inductive sensor Monitoring Kit for Power Clamps	1324638	TUNKERS	TUN.1324638

+.GL1UQ52UQ14.1/1

+.GL1UQ52UQ16.1/1

			Date	1/17/2023	Volvo Trucks North America		Valiant TMS	Parts list : TUN.1324638 - TUN.1324638	Drawing name: =2V10&EFS-EL		=
			Ed.	MKLEPADLO							+ V1GL1UQ52UQ15.1
			Appr		P6700 Bodyside RH - Robot Cell 2V10				Document type: EPB	Project nr: 22-16150	Page 1
Modification	Date	Name	Original		Replacement of	Replaced by	Scale 1:1				1579

Parts list

F01_001

Device tag	Quantity	Designation	Type number	Supplier	Part number
=V1GL1UQ52UQ16.1-BGS/R	1	Inductive sensor Monitoring Kit for Power Clamps	1324638	TUNKERS	TUN.1324638

+.GL1UQ52UQ15.1/1

+.GL1UQ52UQ16.2/1

Parts list

F01_001

Device tag	Quantity	Designation	Type number	Supplier	Part number
=V1GL1UQ52UQ16.2-BGS/R	1	Inductive sensor Monitoring Kit for Power Clamps	1324644	TUNKERS	TUN.1324644

+.GL1UQ52UQ16.1/1

+.GL1UQ52UQ17.1/1

Parts list

F01_001

Device tag	Quantity	Designation	Type number	Supplier	Part number
=V1GL1UQ52UQ17.1-BGS/R	1	Inductive sensor Monitoring Kit for Power Clamps	1324638	TUNKERS	TUN.1324638

Parts list

F01_001

Device tag	Quantity	Designation	Type number	Supplier	Part number
=V1GL1UQ52UQ18.1-BGS/R	1	4-Wire, 4-Pin, DC M12 X 1 (PNP)	WWS001A	WEL	WEL.WWS001A

+.GL1UQ52UQ17.1/1

+.GL1UQ52UQ18.2/1

Parts list

F01_001

Device tag	Quantity	Designation	Type number	Supplier	Part number
=V1GL1UQ52UQ18.2-BGS/R	1	4-Wire, 4-Pin, DC M12 X 1 (PNP)	WWS001A	WEL	WEL.WWS001A

+.GL1UQ52UQ18.1/1

+.GL1UQ52UQ19.1/1

Parts list

F01_001

Device tag	Quantity	Designation	Type number	Supplier	Part number
=V1GL1UQ52UQ19.1-BGS/R	1	Inductive sensor Monitoring Kit for Power Clamps	1324638	TUNKERS	TUN.1324638

+.GL1UQ52UQ18.2/1

+.GL1UQ52UQ19.2/1

Parts list

F01_001

Device tag	Quantity	Designation	Type number	Supplier	Part number
=V1GL1UQ52UQ19.2-BGS/R	1	Inductive sensor Monitoring Kit for Power Clamps	1324638	TUNKERS	TUN.1324638

+.GL1UQ52UQ19.1/1

+.GL1UQ52UQ20.1/1

			Date	1/17/2023	Volvo Trucks North America	Valiant TMS	Parts list : TUN.1324638 - TUN.1324638	Drawing name: =2V10&EFS-EL	= + V1GL1UQ52UQ19.2	
			Ed.	MKLEPADLO						
			Appr		P6700 Bodyside RH - Robot Cell 2V10			Document type: EPB	Project nr: 22-16150	Page 1 / 1579
Modification	Date	Name	Original		Replacement of / Replaced by	Scale 1:1				

Parts list

F01_001

Device tag	Quantity	Designation	Type number	Supplier	Part number
=V1GL1UQ52UQ20.1-BGS/R	1	Inductive sensor Monitoring Kit for Power Clamps	1324638	TUNKERS	TUN.1324638

+.GL1UQ52UQ19.2/1

+.GL1UQ52UQ21.1/1

			Date	1/17/2023	Volvo Trucks North America	Valiant TMS	Parts list : TUN.1324638 - TUN.1324638	Drawing name: =2V10&EFS-EL		=	
			Ed.	MKLEPADLO						+ V1GL1UQ52UQ20.1	
			Appr		P6700 Bodyside RH - Robot Cell 2V10			Document type: EPB	Project nr: 22-16150	Page	1
Modification	Date	Name	Original		Replacement of / Replaced by	Scale 1:1					1579

Parts list

F01_001

Device tag	Quantity	Designation	Type number	Supplier	Part number
=V1GL1UQ52UQ21.1-BGS/R	1	4-Wire, 4-Pin, DC M12 X 1 (PNP)	WWS001A	WEL	WEL.WWS001A

+.GL1UQ52UQ20.1/1

+.GL1UQ52UQ22.1/1

Parts list

F01_001

Device tag	Quantity	Designation	Type number	Supplier	Part number
=V1GL1UQ52UQ22.1-BGS/R	1	4-Wire, 4-Pin, DC M12 X 1 (PNP)	WWS001A	WEL	WEL.WWS001A

+.GL1UQ52UQ21.1/1

+.GL1UQ52UQ23.1/1

Parts list

F01_001

Device tag	Quantity	Designation	Type number	Supplier	Part number
=V1GL1UQ52UQ23.1-BGS/R	1	4-Wire, 4-Pin, DC M12 X 1 (PNP)	WWS001A	WEL	WEL.WWS001A

+.GL1UQ52UQ22.1/1

+.GL1UQ52UQ24.1/1

Parts list

F01_001

Device tag	Quantity	Designation	Type number	Supplier	Part number
=V1GL1UQ52UQ24.1-BGS/R	1	Inductive sensor Monitoring Kit for Power Clamps	1324644	TUNKERS	TUN.1324644

+.GL1UQ52UQ23.1/1

+.GL1UQ52UQ25.1/1

Parts list

F01_001

Device tag	Quantity	Designation	Type number	Supplier	Part number
=V1GL1UQ52UQ25.1-BGS/R	1	Inductive sensor Monitoring Kit for Power Clamps	1324644	TUNKERS	TUN.1324644

+.GL1UQ52UQ24.1/1

+.GL1UQ53/1

			Date	1/17/2023	Volvo Trucks North America	Valiant TMS	Parts list : TUN.1324644 - TUN.1324644	Drawing name: =2V10&EFS-EL	= + V1GL1UQ52UQ25.1	
			Ed.	MKLEPADLO						
			Appr		P6700 Bodyside RH - Robot Cell 2V10			Document type: EPB	Project nr: 22-16150	Page 1 / 1579
Modification	Date	Name	Original		Replacement of / Replaced by	Scale 1:1				

Parts list

F01_001

Device tag	Quantity	Designation	Type number	Supplier	Part number
=V1GL1UQ53BG0-BG01	1	Inductive sensor	BI20U-CA40-AP6X2-H1141/S1590 W/BS2.0	TURCK	TUR.1627297
=V1GL1UQ53BG0-BG02	1	Inductive sensor	BI20U-CA40-AP6X2-H1141/S1590 W/BS2.0	TURCK	TUR.1627297
=V1GL1UQ53BG0-BG03	1	Inductive sensor	BI20U-CA40-AP6X2-H1141/S1590 W/BS2.0	TURCK	TUR.1627297
=V1GL1UQ53BG0-BG04	1	Inductive sensor	BI20U-CA40-AP6X2-H1141/S1590 W/BS2.0	TURCK	TUR.1627297
=V1GL1UQ53BG0-BG05	1	Inductive sensor	BI20U-CA40-AP6X2-H1141/S1590 W/BS2.0	TURCK	TUR.1627297
=V1GL1UQ53BG0-BG06	1	Inductive sensor	BI4U-MT12E-AP6X2-H1141/S1589	TURCK	TUR.1644797
=V1GL1UQ53BG0-BG07	1	Inductive sensor	BI20U-CA40-AP6X2-H1141/S1590 W/BS2.0	TURCK	TUR.1627297
=V1GL1UQ53BG0-BG08	1	Inductive sensor	BI10U-MT18-AP6X2-H1141/S1589	TURCK	TUR.16449050
=V1GL1UQ53BG0-BG09	1	Inductive sensor	BI10U-MT18-AP6X2-H1141/S1589	TURCK	TUR.16449050
=V1GL1UQ53BG0-BG10	1	Inductive sensor	BI10U-MT18-AP6X2-H1141/S1589	TURCK	TUR.16449050
=V1GL1UQ53BG0-BG11	1	Inductive sensor	BI20U-CA40-AP6X2-H1141/S1590 W/BS2.0	TURCK	TUR.1627297
=V1GL1UQ53BG0-BG12	1				1627297
=V1GL1UQ53BG0-BG13	1	Inductive sensor	BI10U-MT18-AP6X2-H1141/S1589	TURCK	TUR.16449050
=V1GL1UQ53BG0-BG14	1	Inductive sensor	BI10U-MT18-AP6X2-H1141/S1589	TURCK	TUR.16449050
=V1GL1UQ53BG0-BG15	1	Inductive sensor	BI10U-MT18-AP6X2-H1141/S1589	TURCK	TUR.16449050
=V1GL1UQ53BG0-BG16	1	Inductive sensor	BI20U-CA40-AP6X2-H1141/S1590 W/BS2.0	TURCK	TUR.1627297
=V1GL1UQ53BG0-BG17	1	Inductive sensor	BI20U-CA40-AP6X2-H1141/S1590 W/BS2.0	TURCK	TUR.1627297
=V1GL1UQ53BG0-BG18	1	Inductive sensor	BI10U-MT18-AP6X2-H1141/S1589	TURCK	TUR.16449050
=V1GL1UQ53BG0-BG19	1	Inductive sensor	BI20U-CA40-AP6X2-H1141/S1590 W/BS2.0	Turck	TUR.1627205
=V1GL1UQ53BG0-BG20	1	Inductive sensor	BI20U-CA40-AP6X2-H1141/S1590 W/BS2.0	Turck	TUR.1627205
=V1GL1UQ53BG0-BG21	1	Inductive sensor	BI10U-MT18-AP6X2-H1141/S1589	TURCK	TUR.16449050
=V1GL1UQ53BG0-BG22	1	QS30 Series High-Performance Long-Range Sensor	QS30FF600QPMA16		BAN.73093
=V1GL1UQ53BG0-BG23	1	Inductive sensor	BI20U-CA40-AP6X2-H1141/S1590 W/BS2.0	Turck	TUR.1627205
=V1GL1UQ53BG0-BG24	1	Inductive sensor	BI10U-MT18-AP6X2-H1141/S1589	TURCK	TUR.16449050
=V1GL1UQ53BG0-BG25	1	Inductive sensor	BI4U-MT12E-AP6X2-H1141/S1589	TURCK	TUR.1644797
=V1GL1UQ53BG0-XG1/2	1	Y splitter	U2-30676	TURCK	TUR.VB2-FSM 4.4/2FKM 4/S3450
=V1GL1UQ53BG0-XG3/4	1	Y splitter	U2-30676	TURCK	TUR.VB2-FSM 4.4/2FKM 4/S3450
=V1GL1UQ53BG0-XG5/6	1	Y splitter	U2-30676	TURCK	TUR.VB2-FSM 4.4/2FKM 4/S3450
=V1GL1UQ53BG0-XG7/8	1	Y splitter	U2-30676	TURCK	TUR.VB2-FSM 4.4/2FKM 4/S3450
=V1GL1UQ53BG0-XG9/10	1	Y splitter	U2-30676	TURCK	TUR.VB2-FSM 4.4/2FKM 4/S3450
=V1GL1UQ53BG0-XG11/12	1	Y splitter	U2-30676	TURCK	TUR.VB2-FSM 4.4/2FKM 4/S3450
=V1GL1UQ53BG0-XG13/14	1	Y splitter	U2-30676	TURCK	TUR.VB2-FSM 4.4/2FKM 4/S3450
=V1GL1UQ53BG0-XG15/16	1	Y splitter	U2-30676	TURCK	TUR.VB2-FSM 4.4/2FKM 4/S3450
=V1GL1UQ53BG0-XG17/18	1	Y splitter	U2-30676	TURCK	TUR.VB2-FSM 4.4/2FKM 4/S3450
=V1GL1UQ53BG0-XG19/20	1	Y splitter	U2-30676	TURCK	TUR.VB2-FSM 4.4/2FKM 4/S3450
=V1GL1UQ53BG0-XG21/22	1	Y splitter	U2-30676	TURCK	TUR.VB2-FSM 4.4/2FKM 4/S3450
=V1GL1UQ53BG0-XG23/24	1	Y splitter	U2-30676	TURCK	TUR.VB2-FSM 4.4/2FKM 4/S3450
=V1GL1UQ53KF1-KF1	0	Bus node	CPX-FB33	FES	FES.548755
=V1GL1UQ53KF1-KF1	0	Interlinking block	CPX-M-GE-EV-S-7/8-5POL	FES	FES.550208
=V1GL1UQ53KF1-KF1.11	0	Manifold block	CPX-M-AB-8-M12X2-5POL	FES	FES.549335
=V1GL1UQ53KF1-KF1.12	0	Manifold block	CPX-M-AB-8-M12X2-5POL	FES	FES.549335
=V1GL1UQ53KF1-KF1.13	0	Manifold block	CPX-M-AB-8-M12X2-5POL	FES	FES.549335
=V1GL1UQ53KF2-KF2	0	Bus node	CPX-FB33	FES	FES.548755
=V1GL1UQ53KF2-KF2	0	Interlinking block	CPX-M-GE-EV-S-7/8-5POL	FES	FES.550208
=V1GL1UQ53KF2-KF2.11	0	Manifold block	CPX-M-AB-8-M12X2-5POL	FES	FES.549335
=V1GL1UQ53KF2-KF2.12	0	Manifold block	CPX-M-AB-8-M12X2-5POL	FES	FES.549335
=V1GL1UQ53KF2-KF2.13	0	Manifold block	CPX-M-AB-8-M12X2-5POL	FES	FES.549335
=V1GL1UQ53KF3-KF3	0	Bus node	CPX-FB33	FES	FES.548755
=V1GL1UQ53KF3-KF3	0	Interlinking block	CPX-M-GE-EV-S-7/8-5POL	FES	FES.550208
=V1GL1UQ53KF3-KF3.11	0	Manifold block	CPX-M-AB-8-M12X2-5POL	FES	FES.549335
=V1GL1UQ53KF3-KF3.12	0	Manifold block	CPX-M-AB-8-M12X2-5POL	FES	FES.549335
=V1GL1UQ53WC4-XG51.1	1	TEE, 5-PIN MINI, STANDARD KEYWAY	RSM-2RKM 50	TURCK	TUR.RSM-2RKM 50
=V1GL1UQ53WC4-XG51.2	1	TEE, 5-PIN MINI, STANDARD KEYWAY	RSM-2RKM 50	TURCK	TUR.RSM-2RKM 50

Parts list

F01_001

Device tag	Quantity	Designation	Type number	Supplier	Part number
=V1GL1UQ53UQ1.1-BGS/R	1	4-Wire, 4-Pin, DC M12 X 1 (PNP)	WWS001A	WEL	WEL.WWS001A

+V1GL1UQ53/1

+.GL1UQ53UQ1.2/1

Parts list

F01_001

Device tag	Quantity	Designation	Type number	Supplier	Part number
=V1GL1UQ53UQ1.2-BGS/R	1	4-Wire, 4-Pin, DC M12 X 1 (PNP)	WWS001A	WEL	WEL.WWS001A

+.GL1UQ53UQ1.1/1

+.GL1UQ53UQ1.3/1

Parts list

F01_001

Device tag	Quantity	Designation	Type number	Supplier	Part number
=V1GL1UQ53UQ1.3-BGS/R	1	4-Wire, 4-Pin, DC M12 X 1 (PNP)	WWS001A	WEL	WEL.WWS001A

+.GL1UQ53UQ1.2/1

+.GL1UQ53UQ2.1/1

Parts list

F01_001

Device tag	Quantity	Designation	Type number	Supplier	Part number
=V1GL1UQ53UQ2.1-BGS/R	1	4-Wire, 4-Pin, DC M12 X 1 (PNP)	WWS001A	WEL	WEL.WWS001A

+.GL1UQ53UQ1.3/1

+.GL1UQ53UQ3.1/1

Parts list

F01_001

Device tag	Quantity	Designation	Type number	Supplier	Part number
=V1GL1UQ53UQ3.1-BGS/R	1	4-Wire, 4-Pin, DC M12 X 1 (PNP)	WWS001A	WEL	WEL.WWS001A

+.GL1UQ53UQ2.1/1

+.GL1UQ53UQ3.2/1

Parts list

F01_001

Device tag	Quantity	Designation	Type number	Supplier	Part number
=V1GL1UQ53UQ3.2-BGS/R	1	4-Wire, 4-Pin, DC M12 X 1 (PNP)	WWS001A	WEL	WEL.WWS001A

+.GL1UQ53UQ3.1/1

+.GL1UQ53UQ4.1/1

Parts list

F01_001

Device tag	Quantity	Designation	Type number	Supplier	Part number
=V1GL1UQ53UQ4.1-BGS/R	1	4-Wire, 4-Pin, DC M12 X 1 (PNP)	WWS001A	WEL	WEL.WWS001A

+.GL1UQ53UQ3.2/1

+.GL1UQ53UQ4.2/1

Parts list

F01_001

Device tag	Quantity	Designation	Type number	Supplier	Part number
=V1GL1UQ53UQ4.2-BGS/R	1	4-Wire, 4-Pin, DC M12 X 1 (PNP)	WWS001A	WEL	WEL.WWS001A

+.GL1UQ53UQ4.1/1

+.GL1UQ53UQ5.1/1

Parts list

F01_001

Device tag	Quantity	Designation	Type number	Supplier	Part number
=V1GL1UQ53UQ5.1-BGS/R	1	4-Wire, 4-Pin, DC M12 X 1 (PNP)	WWS001A	WEL	WEL.WWS001A

+.GL1UQ53UQ4.2/1

+.GL1UQ53UQ6.1/1

Parts list

F01_001

Device tag	Quantity	Designation	Type number	Supplier	Part number
=V1GL1UQ53UQ6.1-BGS/R	1	4-Wire, 4-Pin, DC M12 X 1 (PNP)	WWS001A	WEL	WEL.WWS001A

+.GL1UQ53UQ5.1/1

+.GL1UQ53UQ7.1/1

Parts list

F01_001

Device tag	Quantity	Designation	Type number	Supplier	Part number
=V1GL1UQ53UQ7.1-BGR	1	Inductive sensor	BI2-CRS260-AP4X2-H1141/S34	TURCK	TUR.BI2-CRS260-AP4X2-H1141/S34
=V1GL1UQ53UQ7.1-BGS	1	Inductive sensor	BI2-CRS260-AP4X2-H1141/S34	TURCK	TUR.BI2-CRS260-AP4X2-H1141/S34
=V1GL1UQ53UQ7.1-XGR/S	1	Y splitter	U2-30676	TURCK	TUR.VB2-FSM 4.4/2FKM 4/S3450

Parts list

F01_001

Device tag	Quantity	Designation	Type number	Supplier	Part number
=V1GL1UQ53UQ8.1-BGS/R	1	4-Wire, 4-Pin, DC M12 X 1 (PNP)	WWS001A	WEL	WEL.WWS001A

+.GL1UQ53UQ7.1/1

+.GL1UQ53UQ8.2/1

Parts list

F01_001

Device tag	Quantity	Designation	Type number	Supplier	Part number
=V1GL1UQ53UQ8.2-BGS/R	1	4-Wire, 4-Pin, DC M12 X 1 (PNP)	WWS001A	WEL	WEL.WWS001A

+.GL1UQ53UQ8.1/1

+.GL1UQ53UQ8.3/1

Parts list

F01_001

Device tag	Quantity	Designation	Type number	Supplier	Part number
=V1GL1UQ53UQ8.3-BGS/R	1	4-Wire, 4-Pin, DC M12 X 1 (PNP)	WWS001A	WEL	WEL.WWS001A

+.GL1UQ53UQ8.2/1

+.GL1UQ53UQ9.1/1

Parts list

F01_001

Device tag	Quantity	Designation	Type number	Supplier	Part number
=V1GL1UQ53UQ9.1-BGS/R	1	4-Wire, 4-Pin, DC M12 X 1 (PNP)	WWS001A	WEL	WEL.WWS001A

+.GL1UQ53UQ8.3/1

+.GL1UQ53UQ10.1/1

Parts list

F01_001

Device tag	Quantity	Designation	Type number	Supplier	Part number
=V1GL1UQ53UQ10.1-BGS/R	1	4-Wire, 4-Pin, DC M12 X 1 (PNP)	WWS001A	WEL	WEL.WWS001A

+.GL1UQ53UQ9.1/1

+.GL1UQ53UQ11.1/1

Parts list

F01_001

Device tag	Quantity	Designation	Type number	Supplier	Part number
=V1GL1UQ53UQ11.1-BGS/R	1	Inductive sensor Monitoring Kit for Power Clamps	1324638	TUNKERS	TUN.1324638

+.GL1UQ53UQ10.1/1

+.GL1UQ53UQ11.2/1

Parts list

F01_001

Device tag	Quantity	Designation	Type number	Supplier	Part number
=V1GL1UQ53UQ11.2-BGS/R	1	Inductive sensor Monitoring Kit for Power Clamps	1324638	TUNKERS	TUN.1324638

+.GL1UQ53UQ11.1/1

+.GL1UQ53UQ11.3/1

Parts list

F01_001

Device tag	Quantity	Designation	Type number	Supplier	Part number
=V1GL1UQ53UQ11.3-BGS/R	1	Inductive sensor Monitoring Kit for Power Clamps	1324638	TUNKERS	TUN.1324638

Parts list

F01_001

Device tag	Quantity	Designation	Type number	Supplier	Part number
=V1GL1UQ53UQ11.4-BGS/R	1	Inductive sensor Monitoring Kit for Power Clamps	1324638	TUNKERS	TUN.1324638

+.GL1UQ53UQ11.3/1

+.GL1UQ53UQ11.5/1

Parts list

F01_001

Device tag	Quantity	Designation	Type number	Supplier	Part number
=V1GL1UQ53UQ11.5-BGS/R	1	Inductive sensor Monitoring Kit for Power Clamps	1324638	TUNKERS	TUN.1324638

Parts list

F01_001

Device tag	Quantity	Designation	Type number	Supplier	Part number
=V1GL1UQ53UQ11.6-BGS/R	1	Inductive sensor Monitoring Kit for Power Clamps	1324638	TUNKERS	TUN.1324638

+.GL1UQ53UQ11.5/1

+.GL1UQ53UQ12.1/1

Parts list

F01_001

Device tag	Quantity	Designation	Type number	Supplier	Part number
=V1GL1UQ53UQ12.1-BGS/R	1	Inductive sensor Monitoring Kit for Power Clamps	1324644	TUNKERS	TUN.1324644

+.GL1UQ53UQ11.6/1

+.GL1UQ53UQ12.2/1

Parts list

F01_001

Device tag	Quantity	Designation	Type number	Supplier	Part number
=V1GL1UQ53UQ12.2-BGS/R	1	Inductive sensor Monitoring Kit for Power Clamps	1324644	TUNKERS	TUN.1324644

+.GL1UQ53UQ12.1/1

+.GL1UQ53UQ12.3/1

			Date	1/17/2023	Volvo Trucks North America	Valiant TMS	Parts list : TUN.1324644 - TUN.1324644	Drawing name: =2V10&EFS-EL	= + V1GL1UQ53UQ12.2	
			Ed.	MKLEPADLO						
			Appr		P6700 Bodyside RH - Robot Cell 2V10			Document type: EPB	Project nr: 22-16150	Page 1 / 1579
Modification	Date	Name	Original		Replacement of / Replaced by	Scale 1:1				

Parts list

F01_001

Device tag	Quantity	Designation	Type number	Supplier	Part number
=V1GL1UQ53UQ12.3-BGS/R	1	Inductive sensor Monitoring Kit for Power Clamps	1324638	TUNKERS	TUN.1324638

+.GL1UQ53UQ12.2/1

+.GL1UQ53UQ13.1/1

Parts list

F01_001

Device tag	Quantity	Designation	Type number	Supplier	Part number
=V1GL1UQ53UQ13.1-BGS/R	1	Inductive sensor Monitoring Kit for Power Clamps	1324638	TUNKERS	TUN.1324638

+.GL1UQ53UQ12.3/1

+.GL1UQ53UQ13.2/1

Parts list

F01_001

Device tag	Quantity	Designation	Type number	Supplier	Part number
=V1GL1UQ53UQ13.2-BGS/R	1	Inductive sensor Monitoring Kit for Power Clamps	1324638	TUNKERS	TUN.1324638

+.GL1UQ53UQ13.1/1

+.GL1UQ53UQ14.1/1

Parts list

F01_001

Device tag	Quantity	Designation	Type number	Supplier	Part number
=V1GL1UQ53UQ14.1-BGS/R	1	Inductive sensor Monitoring Kit for Power Clamps	1324644	TUNKERS	TUN.1324644

+.GL1UQ53UQ13.2/1

+.GL1UQ53UQ14.2/1

Parts list

F01_001

Device tag	Quantity	Designation	Type number	Supplier	Part number
=V1GL1UQ53UQ14.2-BGS/R	1	Inductive sensor Monitoring Kit for Power Clamps	1324644	TUNKERS	TUN.1324644

+.GL1UQ53UQ14.1/1

+.GL1UQ53UQ14.3/1

			Date	1/17/2023	Volvo Trucks North America		Valiant TMS	Parts list : TUN.1324644 - TUN.1324644	Drawing name: =2V10&EFS-EL		=
			Ed.	MKLEPADLO							+ V1GL1UQ53UQ14.2
			Appr		P6700 Bodyside RH - Robot Cell 2V10				Document type: EPB	Project nr: 22-16150	Page 1
Modification	Date	Name	Original		Replacement of	Replaced by	Scale 1:1				1579

Parts list

F01_001

Device tag	Quantity	Designation	Type number	Supplier	Part number
=V1GL1UQ53UQ14.3-BGS/R	1	Inductive sensor Monitoring Kit for Power Clamps	1324644	TUNKERS	TUN.1324644

Parts list

F01_001

Device tag	Quantity	Designation	Type number	Supplier	Part number
=V1GL1UQ53UQ14.4-BGS/R	1	Inductive sensor Monitoring Kit for Power Clamps	1324644	TUNKERS	TUN.1324644

+.GL1UQ53UQ14.3/1

+.GL1UQ53UQ15.1/1

Parts list

F01_001

Device tag	Quantity	Designation	Type number	Supplier	Part number
=V1GL1UQ53UQ15.1-BGS/R	1	Inductive sensor Monitoring Kit for Power Clamps	285425	TUNKERS	TUN.285425

+.GL1UQ53UQ14.4/1

+.GL1UQ53UQ16.1/1

Parts list

F01_001

Device tag	Quantity	Designation	Type number	Supplier	Part number
=V1GL1UQ53UQ16.1-BGS/R	1	Inductive sensor Monitoring Kit for Power Clamps	1324644	TUNKERS	TUN.1324644

+.GL1UQ53UQ15.1/1

+.GL1UQ53UQ17.1/1

			Date	1/17/2023	Volvo Trucks North America		Valiant TMS	Parts list : TUN.1324644 - TUN.1324644	Drawing name: =2V10&EFS-EL		=
			Ed.	MKLEPADLO							+ V1GL1UQ53UQ16.1
			Appr		P6700 Bodyside RH - Robot Cell 2V10				Document type: EPB	Project nr: 22-16150	Page 1
Modification	Date	Name	Original		Replacement of	Replaced by	Scale 1:1				1579

Parts list

F01_001

Device tag	Quantity	Designation	Type number	Supplier	Part number
=V1GL1UQ53UQ17.1-BGS/R	1	Inductive sensor Monitoring Kit for Power Clamps	1324638	TUNKERS	TUN.1324638

+.GL1UQ53UQ16.1/1

+.GL1UQ53UQ18.1/1

Parts list

F01_001

Device tag	Quantity	Designation	Type number	Supplier	Part number
=V1GL1UQ53UQ18.1-BGS/R	1	50MM RANGE 4-PIN M12 INDUCTIVE SENSOR	NBN2-F581-100S6-E8-V1	P+F	P+F.NBN2-F581-100S6-E8-V1

+.GL1UQ53UQ17.1/1

+.GL1UQ53UQ19.1/1

			Date	1/17/2023	Volvo Trucks North America	Valiant TMS	Parts list : P+F.NBN2-F581-100S6-E8-V1 - P+F.NBN2-F581-100S6-E8-V1	Drawing name: =2V10&EFS-EL	=	
			Ed.	MKLEPADLO					+ V1GL1UQ53UQ18.1	
			Appr		P6700 Bodyside RH - Robot Cell 2V10			Document type: EPB	Project nr: 22-16150	Page 1
Modification	Date	Name	Original		Replacement of / Replaced by	Scale 1:1				1579

Parts list

F01_001

Device tag	Quantity	Designation	Type number	Supplier	Part number
=V1GL1UQ53UQ19.1-BGS/R	1	Inductive sensor Monitoring Kit for Power Clamps	1324638	TUNKERS	TUN.1324638

+.GL1UQ53UQ18.1/1

+.GL1UQ53UQ20.1/1

Parts list

F01_001

Device tag	Quantity	Designation	Type number	Supplier	Part number
=V1GL1UQ53UQ20.1-BGS/R	1	Inductive sensor Monitoring Kit for Power Clamps	1324638	TUNKERS	TUN.1324638

+.GL1UQ53UQ19.1/1

+.GL1UQ53UQ21.1/1

			Date	1/17/2023	Volvo Trucks North America	Valiant TMS	Parts list : TUN.1324638 - TUN.1324638	Drawing name: =2V10&EFS-EL	= + V1GL1UQ53UQ20.1	
			Ed.	MKLEPADLO						
			Appr		P6700 Bodyside RH - Robot Cell 2V10			Document type: EPB	Project nr: 22-16150	Page 1 / 1579
Modification	Date	Name	Original		Replacement of / Replaced by	Scale 1:1				

Parts list

F01_001

Device tag	Quantity	Designation	Type number	Supplier	Part number
=V1GL1UQ53UQ21.1-BGS/R	1	Inductive sensor Monitoring Kit for Power Clamps	1324644	TUNKERS	TUN.1324644

+.GL1UQ53UQ20.1/1

+.GL1UQ53UQ22.1/1

Parts list

F01_001

Device tag	Quantity	Designation	Type number	Supplier	Part number
=V1GL1UQ53UQ22.1-BGS/R	1	Inductive sensor Monitoring Kit for Power Clamps	1324638	TUNKERS	TUN.1324638

+.GL1UQ53UQ21.1/1

+.GL1UQ53UQ23.1/1

Parts list

F01_001

Device tag	Quantity	Designation	Type number	Supplier	Part number
=V1GL1UQ53UQ23.1-BGS/R	1	Inductive sensor Monitoring Kit for Power Clamps	1324644	TUNKERS	TUN.1324644

+.GL1UQ53UQ22.1/1

+.GL1UQ53UQ24.1/1

Parts list

F01_001

Device tag	Quantity	Designation	Type number	Supplier	Part number
=V1GL1UQ53UQ24.1-BGS/R	1	Inductive sensor Monitoring Kit for Power Clamps	1324638	TUNKERS	TUN.1324638

+.GL1UQ53UQ23.1/1

+.GL1UQ53UQ25.1/1

			Date	1/17/2023	Volvo Trucks North America	Valiant TMS	Parts list : TUN.1324638 - TUN.1324638	Drawing name: =2V10&EFS-EL	=	
			Ed.	MKLEPADLO					+ V1GL1UQ53UQ24.1	
			Appr		P6700 Bodyside RH - Robot Cell 2V10			Document type: EPB	Project nr: 22-16150	Page 1 / 1579
Modification	Date	Name	Original		Replacement of / Replaced by	Scale 1:1				

Parts list

F01_001

Device tag	Quantity	Designation	Type number	Supplier	Part number
=V1GL1UQ53UQ25.1-BGS/R	1	4-Wire, 4-Pin, DC M12 X 1 (PNP)	WWS001A	WEL	WEL.WWS001A

+.GL1UQ53UQ24.1/1

+.GL1UQ53UQ26.1/1

Parts list

F01_001

Device tag	Quantity	Designation	Type number	Supplier	Part number
=V1GL1UQ53UQ26.1-BGS/R	1	Inductive sensor Monitoring Kit for Power Clamps	1324638	TUNKERS	TUN.1324638

+.GL1UQ53UQ25.1/1

+.GL1UQ53UQ26.2/1

Parts list

F01_001

Device tag	Quantity	Designation	Type number	Supplier	Part number
=V1GL1UQ53UQ26.2-BGS/R	1	Inductive sensor Monitoring Kit for Power Clamps	1324644	TUNKERS	TUN.1324644

+.GL1UQ53UQ26.1/1

+.GL1UQ54/1

Parts list

F01_001

Device tag	Quantity	Designation	Type number	Supplier	Part number
=V1GL1UQ54BG0-BG01	1	Inductive sensor	BI20U-CA40-AP6X2-H1141/S1590 W/BS2.0	TURCK	TUR.1627297
=V1GL1UQ54BG0-BG02	1	Inductive sensor	BI20U-CA40-AP6X2-H1141/S1590 W/BS2.0	TURCK	TUR.1627297
=V1GL1UQ54BG0-BG03	1	Inductive sensor	BI20U-CA40-AP6X2-H1141/S1590 W/BS2.0	TURCK	TUR.1627297
=V1GL1UQ54BG0-BG04	1	QS30 Series High-Performance Long-Range Sensor	QS30FF600QPMA16		BAN.73093
=V1GL1UQ54BG0-BG05	1	Inductive sensor	BI20U-CA40-AP6X2-H1141/S1590 W/BS2.0	TURCK	TUR.1627297
=V1GL1UQ54BG0-BG06	1	QS30 Series High-Performance Long-Range Sensor	QS30FF600QPMA16		BAN.73093
=V1GL1UQ54BG0-BG07	1	Inductive sensor	BI20U-CA40-AP6X2-H1141/S1590 W/BS2.0	TURCK	TUR.1627297
=V1GL1UQ54BG0-BG08	1	Inductive sensor	BI20U-CA40-AP6X2-H1141/S1590 W/BS2.0	TURCK	TUR.1627297
=V1GL1UQ54BG0-BG09	1	Inductive sensor	BI20U-CA40-AP6X2-H1141/S1590 W/BS2.0	TURCK	TUR.1627297
=V1GL1UQ54BG0-BG10	1	Inductive sensor	BI10U-MT18-AP6X2-H1141/S1589	Turck	TUR.1644905
=V1GL1UQ54BG0-BG11	1	Inductive sensor	BI10U-MT18-AP6X2-H1141/S1589	Turck	TUR.1644905
=V1GL1UQ54BG0-BG12	1				1627297
=V1GL1UQ54BG0-BG13	1	Inductive sensor	BI20U-CA40-AP6X2-H1141/S1590 W/BS2.0	TURCK	TUR.1627297
=V1GL1UQ54BG0-BG14	1	Inductive sensor	BI20U-CA40-AP6X2-H1141/S1590 W/BS2.0	TURCK	TUR.1627297
=V1GL1UQ54BG0-BG15	1	Inductive sensor	BI20U-CA40-AP6X2-H1141/S1590 W/BS2.0	TURCK	TUR.1627297
=V1GL1UQ54BG0-BG16	1	Inductive sensor	BI20U-CA40-AP6X2-H1141/S1590 W/BS2.0	TURCK	TUR.1627297
=V1GL1UQ54BG0-BG17	1	Inductive sensor	BI20U-CA40-AP6X2-H1141/S1590 W/BS2.0	TURCK	TUR.1627297
=V1GL1UQ54BG0-BG18	1	Inductive sensor	BI20U-CA40-AP6X2-H1141/S1590 W/BS2.0	TURCK	TUR.1627297
=V1GL1UQ54BG0-BG19	1	Inductive sensor	BI20U-CA40-AP6X2-H1141/S1590 W/BS2.0	TURCK	TUR.1627297
=V1GL1UQ54BG0-BG20	1	Inductive sensor	BI20U-CA40-AP6X2-H1141/S1590 W/BS2.0	TURCK	TUR.1627297
=V1GL1UQ54BG0-BG21	1	Inductive sensor	BI20U-CA40-AP6X2-H1141/S1590 W/BS2.0	TURCK	TUR.1627297
=V1GL1UQ54BG0-BG22	1	Inductive sensor	BI10U-MT18-AP6X2-H1141/S1589	Turck	TUR.1644905
=V1GL1UQ54BG0-BG23	1	Inductive sensor	BI20U-CA40-AP6X2-H1141/S1590 W/BS2.0	TURCK	TUR.1627297
=V1GL1UQ54BG0-BG24	1	Inductive sensor	BI10U-MT18-AP6X2-H1141/S1589	Turck	TUR.1644905
=V1GL1UQ54BG0-BG25	1	Inductive sensor	BI20U-CA40-AP6X2-H1141/S1590 W/BS2.0	TURCK	TUR.1627297
=V1GL1UQ54BG0-BG26	1	Inductive sensor	BI10U-MT18-AP6X2-H1141/S1589	Turck	TUR.1644905
=V1GL1UQ54BG0-BG27	1	Inductive sensor	BI20U-CA40-AP6X2-H1141/S1590 W/BS2.0	TURCK	TUR.1627297
=V1GL1UQ54BG0-BG28	1	Inductive sensor	BI10U-MT18-AP6X2-H1141/S1589	Turck	TUR.1644905
=V1GL1UQ54BG0-BG29	1	Inductive sensor	BI4U-MT12E-AP6X-H1141/S1589	Turck	TUR.1644979
=V1GL1UQ54BG0-BG30	1	Inductive sensor	BI10U-MT18-AP6X2-H1141/S1589	Turck	TUR.1644905
=V1GL1UQ54BG0-BG31	1	Inductive sensor	BI10U-MT18-AP6X2-H1141/S1589	Turck	TUR.1644905
=V1GL1UQ54BG0-BG32	1	Inductive sensor	BI20U-CA40-AP6X2-H1141/S1590 W/BS2.0	TURCK	TUR.1627297
=V1GL1UQ54BG0-BG33	1	Inductive sensor	BI10U-MT18-AP6X2-H1141/S1589	Turck	TUR.1644905
=V1GL1UQ54BG0-BG34	1	Inductive sensor	BI10U-MT18-AP6X2-H1141/S1589	Turck	TUR.1644905
=V1GL1UQ54BG0-BG35	1	Magnetic field sensor For Detection of Ferromagnetic Parts	NIMFE-M12/4.6L88-UN6X-H1141	TURCK	TUR.1600610
=V1GL1UQ54BG0-XG1/2	1	Y splitter	U2-30676	TURCK	TUR.VB2-FSM 4.4/2FKM 4/S3450
=V1GL1UQ54BG0-XG3/4	1	Y splitter	U2-30676	TURCK	TUR.VB2-FSM 4.4/2FKM 4/S3450
=V1GL1UQ54BG0-XG5/6	1	Y splitter	U2-30676	TURCK	TUR.VB2-FSM 4.4/2FKM 4/S3450
=V1GL1UQ54BG0-XG7/8	1	Y splitter	U2-30676	TURCK	TUR.VB2-FSM 4.4/2FKM 4/S3450
=V1GL1UQ54BG0-XG9/10	1	Y splitter	U2-30676	TURCK	TUR.VB2-FSM 4.4/2FKM 4/S3450
=V1GL1UQ54BG0-XG11/12	1	Y splitter	U2-30676	TURCK	TUR.VB2-FSM 4.4/2FKM 4/S3450
=V1GL1UQ54BG0-XG13/14	1	Y splitter	U2-30676	TURCK	TUR.VB2-FSM 4.4/2FKM 4/S3450
=V1GL1UQ54BG0-XG15/16	1	Y splitter	U2-30676	TURCK	TUR.VB2-FSM 4.4/2FKM 4/S3450
=V1GL1UQ54BG0-XG17/18	1	Y splitter	U2-30676	TURCK	TUR.VB2-FSM 4.4/2FKM 4/S3450
=V1GL1UQ54BG0-XG19/20	1	Y splitter	U2-30676	TURCK	TUR.VB2-FSM 4.4/2FKM 4/S3450
=V1GL1UQ54BG0-XG21/22	1	Y splitter	U2-30676	TURCK	TUR.VB2-FSM 4.4/2FKM 4/S3450
=V1GL1UQ54BG0-XG23/24	1	Y splitter	U2-30676	TURCK	TUR.VB2-FSM 4.4/2FKM 4/S3450
=V1GL1UQ54BG0-XG25/26	1	Y splitter	U2-30676	TURCK	TUR.VB2-FSM 4.4/2FKM 4/S3450
=V1GL1UQ54BG0-XG27/28	1	Y splitter	U2-30676	TURCK	TUR.VB2-FSM 4.4/2FKM 4/S3450
=V1GL1UQ54BG0-XG29/30	1	Y splitter	U2-30676	TURCK	TUR.VB2-FSM 4.4/2FKM 4/S3450
=V1GL1UQ54BG0-XG31/32	1	Y splitter	U2-30676	TURCK	TUR.VB2-FSM 4.4/2FKM 4/S3450
=V1GL1UQ54BG0-XG33/34	1	Y splitter	U2-30676	TURCK	TUR.VB2-FSM 4.4/2FKM 4/S3450
=V1GL1UQ54KF1-KF1	0	Bus node	CPX-FB33	FES	FES.548755
=V1GL1UQ54KF1-KF1	0	Interlinking block	CPX-M-GE-EV-S-7/8-5POL	FES	FES.550208
=V1GL1UQ54KF1-KF1.11	0	Manifold block	CPX-M-AB-8-M12X2-5POL	FES	FES.549335
=V1GL1UQ54KF1-KF1.12	0	Manifold block	CPX-M-AB-8-M12X2-5POL	FES	FES.549335

Parts list

F01_001

Device tag	Quantity	Designation	Type number	Supplier	Part number
=V1GL1UQ54KF1-KF1.13	0	Manifold block	CPX-M-AB-8-M12X2-5POL	FES	FES.549335
=V1GL1UQ54KF1-KF1.14	0	Manifold block	CPX-M-AB-8-M12X2-5POL	FES	FES.549335
=V1GL1UQ54KF1-KF1.15	0	Manifold block	CPX-M-AB-8-M12X2-5POL	FES	FES.549335
=V1GL1UQ54KF2-KF2	0	Bus node	CPX-FB33	FES	FES.548755
=V1GL1UQ54KF2-KF2	0	Interlinking block	CPX-M-GE-EV-S-7/8-5POL	FES	FES.550208
=V1GL1UQ54KF2-KF2.11	0	Manifold block	CPX-M-AB-8-M12X2-5POL	FES	FES.549335
=V1GL1UQ54KF2-KF2.12	0	Manifold block	CPX-M-AB-8-M12X2-5POL	FES	FES.549335
=V1GL1UQ54KF2-KF2.13	0	Manifold block	CPX-M-AB-8-M12X2-5POL	FES	FES.549335
=V1GL1UQ54KF2-KF2.14	0	Manifold block	CPX-M-AB-8-M12X2-5POL	FES	FES.549335
=V1GL1UQ54KF2-KF2.15	0	Manifold block	CPX-M-AB-8-M12X2-5POL	FES	FES.549335
=V1GL1UQ54KF3-KF3	0	Bus node	CPX-FB33	FES	FES.548755
=V1GL1UQ54KF3-KF3	0	Interlinking block	CPX-M-GE-EV-S-7/8-5POL	FES	FES.550208
=V1GL1UQ54KF3-KF3.11	0	Manifold block	CPX-M-AB-8-M12X2-5POL	FES	FES.549335
=V1GL1UQ54WC4-XG51.1	1	TEE, 5-PIN MINI, STANDARD KEYWAY	RSM-2RKM 50	TURCK	TUR.RSM-2RKM 50
=V1GL1UQ54WC4-XG51.2	1	TEE, 5-PIN MINI, STANDARD KEYWAY	RSM-2RKM 50	TURCK	TUR.RSM-2RKM 50

Parts list

F01_001

Device tag	Quantity	Designation	Type number	Supplier	Part number
=V1GL1UQ54UQ1.1-BGS/R	1	4-Wire, 4-Pin, DC M12 X 1 (PNP)	WWS001A	WEL	WEL.WWS001A

+V1GL1UQ54/2

+.GL1UQ54UQ1.2/1

Parts list

F01_001

Device tag	Quantity	Designation	Type number	Supplier	Part number
=V1GL1UQ54UQ1.2-BGS/R	1	4-Wire, 4-Pin, DC M12 X 1 (PNP)	WWS001A	WEL	WEL.WWS001A

+.GL1UQ54UQ1.1/1

+.GL1UQ54UQ1.3/1

Parts list

F01_001

Device tag	Quantity	Designation	Type number	Supplier	Part number
=V1GL1UQ54UQ1.3-BGS/R	1	4-Wire, 4-Pin, DC M12 X 1 (PNP)	WWS001A	WEL	WEL.WWS001A

+.GL1UQ54UQ1.2/1

+.GL1UQ54UQ1.4/1

Parts list

F01_001

Device tag	Quantity	Designation	Type number	Supplier	Part number
=V1GL1UQ54UQ1.4-BGS/R	1	4-Wire, 4-Pin, DC M12 X 1 (PNP)	WWS001A	WEL	WEL.WWS001A

+.GL1UQ54UQ1.3/1

+.GL1UQ54UQ1.5/1

Parts list

F01_001

Device tag	Quantity	Designation	Type number	Supplier	Part number
=V1GL1UQ54UQ1.5-BGS/R	1	4-Wire, 4-Pin, DC M12 X 1 (PNP)	WWS001A	WEL	WEL.WWS001A

+.GL1UQ54UQ1.4/1

+.GL1UQ54UQ1.6/1

Parts list

F01_001

Device tag	Quantity	Designation	Type number	Supplier	Part number
=V1GL1UQ54UQ1.6-BGS/R	1	4-Wire, 4-Pin, DC M12 X 1 (PNP)	WWS001A	WEL	WEL.WWS001A

+.GL1UQ54UQ1.5/1

+.GL1UQ54UQ2.1/1

Parts list

F01_001

Device tag	Quantity	Designation	Type number	Supplier	Part number
=V1GL1UQ54UQ2.1-BGS/R	1	4-Wire, 4-Pin, DC M12 X 1 (PNP)	WWS001A	WEL	WEL.WWS001A

+.GL1UQ54UQ1.6/1

+.GL1UQ54UQ3.1/1

Parts list

F01_001

Device tag	Quantity	Designation	Type number	Supplier	Part number
=V1GL1UQ54UQ3.1-BGS/R	1	4-Wire, 4-Pin, DC M12 X 1 (PNP)	WWS001A	WEL	WEL.WWS001A

+.GL1UQ54UQ2.1/1

+.GL1UQ54UQ3.2/1

Parts list

F01_001

Device tag	Quantity	Designation	Type number	Supplier	Part number
=V1GL1UQ54UQ3.2-BGS/R	1	4-Wire, 4-Pin, DC M12 X 1 (PNP)	WWS001A	WEL	WEL.WWS001A

+.GL1UQ54UQ3.1/1

+.GL1UQ54UQ3.3/1

Parts list

F01_001

Device tag	Quantity	Designation	Type number	Supplier	Part number
=V1GL1UQ54UQ3.3-BGS/R	1	4-Wire, 4-Pin, DC M12 X 1 (PNP)	WWS001A	WEL	WEL.WWS001A

+.GL1UQ54UQ3.2/1

+.GL1UQ54UQ3.4/1

Parts list

F01_001

Device tag	Quantity	Designation	Type number	Supplier	Part number
=V1GL1UQ54UQ3.4-BGS/R	1	4-Wire, 4-Pin, DC M12 X 1 (PNP)	WWS001A	WEL	WEL.WWS001A

+.GL1UQ54UQ3.3/1

+.GL1UQ54UQ3.5/1

Parts list

F01_001

Device tag	Quantity	Designation	Type number	Supplier	Part number
=V1GL1UQ54UQ3.5-BGS/R	1	4-Wire, 4-Pin, DC M12 X 1 (PNP)	WWS001A	WEL	WEL.WWS001A

+.GL1UQ54UQ3.4/1

+.GL1UQ54UQ3.6/1

Parts list

F01_001

Device tag	Quantity	Designation	Type number	Supplier	Part number
=V1GL1UQ54UQ3.6-BGS/R	1	4-Wire, 4-Pin, DC M12 X 1 (PNP)	WWS001A	WEL	WEL.WWS001A

+.GL1UQ54UQ3.5/1

+.GL1UQ54UQ4.1/1

Parts list

F01_001

Device tag	Quantity	Designation	Type number	Supplier	Part number
=V1GL1UQ54UQ4.1-BGS/R	1	4-Wire, 4-Pin, DC M12 X 1 (PNP)	WWS001A	WEL	WEL.WWS001A

+.GL1UQ54UQ3.6/1

+.GL1UQ54UQ4.2/1

Parts list

F01_001

Device tag	Quantity	Designation	Type number	Supplier	Part number
=V1GL1UQ54UQ4.2-BGS/R	1	4-Wire, 4-Pin, DC M12 X 1 (PNP)	WWS001A	WEL	WEL.WWS001A

+.GL1UQ54UQ4.1/1

+.GL1UQ54UQ4.3/1

Parts list

F01_001

Device tag	Quantity	Designation	Type number	Supplier	Part number
=V1GL1UQ54UQ4.3-BGS/R	1	4-Wire, 4-Pin, DC M12 X 1 (PNP)	WWS001A	WEL	WEL.WWS001A

+.GL1UQ54UQ4.2/1

+.GL1UQ54UQ5.1/1

Parts list

F01_001

Device tag	Quantity	Designation	Type number	Supplier	Part number
=V1GL1UQ54UQ5.1-BGS/R	1	4-Wire, 4-Pin, DC M12 X 1 (PNP)	WWS001A	WEL	WEL.WWS001A

+.GL1UQ54UQ4.3/1

+.GL1UQ54UQ5.2/1

Parts list

F01_001

Device tag	Quantity	Designation	Type number	Supplier	Part number
=V1GL1UQ54UQ5.2-BGS/R	1	4-Wire, 4-Pin, DC M12 X 1 (PNP)	WWS001A	WEL	WEL.WWS001A

+.GL1UQ54UQ5.1/1

+.GL1UQ54UQ5.3/1

Parts list

F01_001

Device tag	Quantity	Designation	Type number	Supplier	Part number
=V1GL1UQ54UQ5.3-BGS/R	1	4-Wire, 4-Pin, DC M12 X 1 (PNP)	WWS001A	WEL	WEL.WWS001A

+.GL1UQ54UQ5.2/1

+.GL1UQ54UQ6.1/1

Parts list

F01_001

Device tag	Quantity	Designation	Type number	Supplier	Part number
=V1GL1UQ54UQ6.1-BGS/R	1	4-Wire, 4-Pin, DC M12 X 1 (PNP)	WWS001A	WEL	WEL.WWS001A

+.GL1UQ54UQ5.3/1

+.GL1UQ54UQ7.1/1

Parts list

F01_001

Device tag	Quantity	Designation	Type number	Supplier	Part number
=V1GL1UQ54UQ7.1-BGS/R	1	4-Wire, 4-Pin, DC M12 X 1 (PNP)	WWS001A	WEL	WEL.WWS001A

+.GL1UQ54UQ6.1/1

+.GL1UQ54UQ8.1/1

Parts list

F01_001

Device tag	Quantity	Designation	Type number	Supplier	Part number
=V1GL1UQ54UQ8.1-BGR	1	Inductive sensor	BI10U-MT18-AP6X2-H1141/S1589	TURCK	TUR.16449050
=V1GL1UQ54UQ8.1-BGS	1	Inductive sensor	BI10U-MT18-AP6X2-H1141/S1589	TURCK	TUR.16449050
=V1GL1UQ54UQ8.1-XGR/S	1	Y splitter	U2-30676	TURCK	TUR.VB2-FSM 4.4/2FKM 4/S3450

+.GL1UQ54UQ7.1/1

+.GL1UQ54UQ9.1/1

			Date	1/17/2023	Volvo Trucks North America	Valiant TMS	Parts list : TUR.16449050 - TUR.VB2-FSM 4.4/2FKM 4/S3450	Drawing name: =2V10&EFS-EL		= + V1GL1UQ54UQ8.1	
			Ed.	MKLEPADLO	P6700 Bodyside RH - Robot Cell 2V10			Document type: EPB	Project nr: 22-16150	Page	1 / 1579
Modification	Date	Name	Appr		Replacement of	Replaced by	Scale 1:1				
			Original								

Parts list

F01_001

Device tag	Quantity	Designation	Type number	Supplier	Part number
=V1GL1UQ54UQ9.1-BGS/R	1	4-Wire, 4-Pin, DC M12 X 1 (PNP)	WWS001A	WEL	WEL.WWS001A

+.GL1UQ54UQ8.1/1

+.GL1UQ54UQ9.2/1

Parts list

F01_001

Device tag	Quantity	Designation	Type number	Supplier	Part number
=V1GL1UQ54UQ9.2-BGS/R	1	4-Wire, 4-Pin, DC M12 X 1 (PNP)	WWS001A	WEL	WEL.WWS001A

+.GL1UQ54UQ9.1/1

+.GL1UQ54UQ10.1/1

Parts list

F01_001

Device tag	Quantity	Designation	Type number	Supplier	Part number
=V1GL1UQ54UQ10.1-BGS/R	1	Inductive sensor Monitoring Kit for Power Clamps	1324638	TUNKERS	TUN.1324638

+.GL1UQ54UQ9.2/1

+.GL1UQ54UQ10.2/1

Parts list

F01_001

Device tag	Quantity	Designation	Type number	Supplier	Part number
=V1GL1UQ54UQ10.2-BGS/R	1	Inductive sensor Monitoring Kit for Power Clamps	1324644	TUNKERS	TUN.1324644

+.GL1UQ54UQ10.1/1

+.GL1UQ54UQ10.3/1

			Date	1/17/2023	Volvo Trucks North America	Valiant TMS	Parts list : TUN.1324644 - TUN.1324644	Drawing name: =2V10&EFS-EL	= + V1GL1UQ54UQ10.2	
			Ed.	MKLEPADLO						
			Appr		P6700 Bodyside RH - Robot Cell 2V10			Document type: EPB	Project nr: 22-16150	Page 1 / 1579
Modification	Date	Name	Original		Replacement of / Replaced by	Scale 1:1				

Parts list

F01_001

Device tag	Quantity	Designation	Type number	Supplier	Part number
=V1GL1UQ54UQ10.3-BGS/R	1	Inductive sensor Monitoring Kit for Power Clamps	1324638	TUNKERS	TUN.1324638

Parts list

F01_001

Device tag	Quantity	Designation	Type number	Supplier	Part number
=V1GL1UQ54UQ10.4-BGS/R	1	Inductive sensor Monitoring Kit for Power Clamps	1324638	TUNKERS	TUN.1324638

+.GL1UQ54UQ10.3/1

+.GL1UQ54UQ10.5/1

			Date	1/17/2023	Volvo Trucks North America	Valiant TMS	Parts list : TUN.1324638 - TUN.1324638	Drawing name: =2V10&EFS-EL	= + V1GL1UQ54UQ10.4	
			Ed.	MKLEPADLO						
			Appr		P6700 Bodyside RH - Robot Cell 2V10			Document type: EPB	Project nr: 22-16150	Page 1 / 1579
Modification	Date	Name	Original		Replacement of / Replaced by	Scale 1:1				

Parts list

F01_001

Device tag	Quantity	Designation	Type number	Supplier	Part number
=V1GL1UQ54UQ10.5-BGS/R	1	Inductive sensor Monitoring Kit for Power Clamps	1324638	TUNKERS	TUN.1324638

+.GL1UQ54UQ10.4/1

+.GL1UQ54UQ10.6/1

Parts list

F01_001

Device tag	Quantity	Designation	Type number	Supplier	Part number
=V1GL1UQ54UQ10.6-BGS/R	1	Inductive sensor Monitoring Kit for Power Clamps	1324638	TUNKERS	TUN.1324638

+.GL1UQ54UQ10.5/1

+.GL1UQ54UQ11.1/1

Parts list

F01_001

Device tag	Quantity	Designation	Type number	Supplier	Part number
=V1GL1UQ54UQ11.1-BGS/R	1	Inductive sensor Monitoring Kit for Power Clamps	1324644	TUNKERS	TUN.1324644

+.GL1UQ54UQ10.6/1

+.GL1UQ54UQ11.2/1

Parts list

F01_001

Device tag	Quantity	Designation	Type number	Supplier	Part number
=V1GL1UQ54UQ11.2-BGS/R	1	Inductive sensor Monitoring Kit for Power Clamps	1324644	TUNKERS	TUN.1324644

+.GL1UQ54UQ11.1/1

+.GL1UQ54UQ11.3/1

			Date	1/17/2023	Volvo Trucks North America	Valiant TMS	Parts list : TUN.1324644 - TUN.1324644	Drawing name: =2V10&EFS-EL		=	
			Ed.	MKLEPADLO						+ V1GL1UQ54UQ11.2	
			Appr		P6700 Bodyside RH - Robot Cell 2V10			Document type: EPB	Project nr: 22-16150	Page	1
Modification	Date	Name	Original		Replacement of / Replaced by	Scale 1:1					1579

Parts list

F01_001

Device tag	Quantity	Designation	Type number	Supplier	Part number
=V1GL1UQ54UQ11.3-BGS/R	1	Inductive sensor Monitoring Kit for Power Clamps	1324638	TUNKERS	TUN.1324638

+.GL1UQ54UQ11.2/1

+.GL1UQ54UQ11.4/1

			Date	1/17/2023	Volvo Trucks North America	Valiant TMS	Parts list : TUN.1324638 - TUN.1324638	Drawing name: =2V10&EFS-EL	= + V1GL1UQ54UQ11.3	
			Ed.	MKLEPADLO						
			Appr		P6700 Bodyside RH - Robot Cell 2V10			Document type: EPB	Project nr: 22-16150	Page 1 / 1579
Modification	Date	Name	Original		Replacement of / Replaced by	Scale 1:1				

Parts list

F01_001

Device tag	Quantity	Designation	Type number	Supplier	Part number
=V1GL1UQ54UQ11.4-BGS/R	1	Inductive sensor Monitoring Kit for Power Clamps	1324638	TUNKERS	TUN.1324638

+.GL1UQ54UQ11.3/1

+.GL1UQ54UQ11.5/1

Parts list

F01_001

Device tag	Quantity	Designation	Type number	Supplier	Part number
=V1GL1UQ54UQ11.5-BGS/R	1	Inductive sensor Monitoring Kit for Power Clamps	1324644	TUNKERS	TUN.1324644

+.GL1UQ54UQ11.4/1

+.GL1UQ54UQ12.1/1

			Date	1/17/2023	Volvo Trucks North America	Valiant TMS	Parts list : TUN.1324644 - TUN.1324644	Drawing name: =2V10&EFS-EL	= + V1GL1UQ54UQ11.5	
			Ed.	MKLEPADLO	P6700 Bodyside RH - Robot Cell 2V10					
			Appr			Scale 1:1		Document type: EPB	Project nr: 22-16150	Page 1 / 1579
Modification	Date	Name	Original		Replacement of / Replaced by					

Parts list

F01_001

Device tag	Quantity	Designation	Type number	Supplier	Part number
=V1GL1UQ54UQ12.1-BGS/R	1	Inductive sensor Monitoring Kit for Power Clamps	1324638	TUNKERS	TUN.1324638

+.GL1UQ54UQ11.5/1

+.GL1UQ54UQ12.2/1

Parts list

F01_001

Device tag	Quantity	Designation	Type number	Supplier	Part number
=V1GL1UQ54UQ12.2-BGS/R	1	Inductive sensor Monitoring Kit for Power Clamps	1324644	TUNKERS	TUN.1324644

+.GL1UQ54UQ12.1/1

+.GL1UQ54UQ12.3/1

Parts list

F01_001

Device tag	Quantity	Designation	Type number	Supplier	Part number
=V1GL1UQ54UQ12.3-BGS/R	1	Inductive sensor Monitoring Kit for Power Clamps	1324644	TUNKERS	TUN.1324644

Parts list

F01_001

Device tag	Quantity	Designation	Type number	Supplier	Part number
=V1GL1UQ54UQ12.4-BGS/R	1	Inductive sensor Monitoring Kit for Power Clamps	1324644	TUNKERS	TUN.1324644

+.GL1UQ54UQ12.3/1

+.GL1UQ54UQ12.5/1

Parts list

F01_001

Device tag	Quantity	Designation	Type number	Supplier	Part number
=V1GL1UQ54UQ12.5-BGS/R	1	Inductive sensor Monitoring Kit for Power Clamps	1324638	TUNKERS	TUN.1324638

+.GL1UQ54UQ12.4/1

+.GL1UQ54UQ12.6/1

			Date	1/17/2023	Volvo Trucks North America	Valiant TMS	Parts list : TUN.1324638 - TUN.1324638	Drawing name: =2V10&EFS-EL		=	
			Ed.	MKLEPADLO						+ V1GL1UQ54UQ12.5	
			Appr		P6700 Bodyside RH - Robot Cell 2V10			Document type: EPB	Project nr: 22-16150	Page	1
Modification	Date	Name	Original		Replacement of / Replaced by	Scale 1:1					1579

Parts list

F01_001

Device tag	Quantity	Designation	Type number	Supplier	Part number
=V1GL1UQ54UQ12.6-BGS/R	1	Inductive sensor Monitoring Kit for Power Clamps	1324644	TUNKERS	TUN.1324644

+.GL1UQ54UQ12.5/1

+.GL1UQ54UQ13.1/1

			Date	1/17/2023	Volvo Trucks North America	Valiant TMS	Parts list : TUN.1324644 - TUN.1324644	Drawing name: =2V10&EFS-EL		=	
			Ed.	MKLEPADLO						+ V1GL1UQ54UQ12.6	
			Appr		P6700 Bodyside RH - Robot Cell 2V10			Document type: EPB	Project nr: 22-16150	Page	1
Modification	Date	Name	Original		Replacement of / Replaced by	Scale 1:1					1579

Parts list

F01_001

Device tag	Quantity	Designation	Type number	Supplier	Part number
=V1GL1UQ54UQ13.1-BGS/R	1	Inductive sensor Monitoring Kit for Power Clamps	1324644	TUNKERS	TUN.1324644

+.GL1UQ54UQ12.6/1

+.GL1UQ54UQ14.1/1

Parts list

F01_001

Device tag	Quantity	Designation	Type number	Supplier	Part number
=V1GL1UQ54UQ14.1-BGS/R	1	Inductive sensor Monitoring Kit for Power Clamps	1324644	TUNKERS	TUN.1324644

+.GL1UQ54UQ13.1/1

+.GL1UQ54UQ15.1/1

			Date	1/17/2023	Volvo Trucks North America	Valiant TMS	Parts list : TUN.1324644 - TUN.1324644	Drawing name: =2V10&EFS-EL	=	
			Ed.	MKLEPADLO					+ V1GL1UQ54UQ14.1	
			Appr		P6700 Bodyside RH - Robot Cell 2V10			Document type: EPB	Project nr: 22-16150	Page 1 / 1579
Modification	Date	Name	Original		Replacement of / Replaced by	Scale 1:1				

Parts list

F01_001

Device tag	Quantity	Designation	Type number	Supplier	Part number
=V1GL1UQ54UQ15.1-BGS/R	1	Inductive sensor Monitoring Kit for Power Clamps	1324638	TUNKERS	TUN.1324638

+.GL1UQ54UQ14.1/1

+.GL1UQ54UQ16.1/1

Parts list

F01_001

Device tag	Quantity	Designation	Type number	Supplier	Part number
=V1GL1UQ54UQ16.1-BGS/R	1	Inductive sensor Monitoring Kit for Power Clamps	1324638	TUNKERS	TUN.1324638

+.GL1UQ54UQ15.1/1

+.GL1UQ54UQ16.2/1

Parts list

F01_001

Device tag	Quantity	Designation	Type number	Supplier	Part number
=V1GL1UQ54UQ16.2-BGS/R	1	Inductive sensor Monitoring Kit for Power Clamps	1324644	TUNKERS	TUN.1324644

+.GL1UQ54UQ16.1/1

+.GL1UQ54UQ17.1/1

			Date	1/17/2023	Volvo Trucks North America	Valiant TMS	Parts list : TUN.1324644 - TUN.1324644	Drawing name: =2V10&EFS-EL	=	
			Ed.	MKLEPADLO					+ V1GL1UQ54UQ16.2	
			Appr		P6700 Bodyside RH - Robot Cell 2V10			Document type: EPB	Project nr: 22-16150	Page 1
Modification	Date	Name	Original		Replacement of / Replaced by	Scale 1:1				1579

Parts list

F01_001

Device tag	Quantity	Designation	Type number	Supplier	Part number
=V1GL1UQ54UQ17.1-BGS/R	1	Inductive sensor Monitoring Kit for Power Clamps	1324638	TUNKERS	TUN.1324638

+.GL1UQ54UQ16.2/1

+.GL1UQ54UQ18.1/1

Parts list

F01_001

Device tag	Quantity	Designation	Type number	Supplier	Part number
=V1GL1UQ54UQ18.1-BGS/R	1	4-Wire, 4-Pin, DC M12 X 1 (PNP)	WWS001A	WEL	WEL.WWS001A

+.GL1UQ54UQ17.1/1

+.GL1UQ54UQ18.2/1

Parts list

F01_001

Device tag	Quantity	Designation	Type number	Supplier	Part number
=V1GL1UQ54UQ18.2-BGS/R	1	4-Wire, 4-Pin, DC M12 X 1 (PNP)	WWS001A	WEL	WEL.WWS001A

+.GL1UQ54UQ18.1/1

+.GL1UQ54UQ19.1/1

Parts list

F01_001

Device tag	Quantity	Designation	Type number	Supplier	Part number
=V1GL1UQ54UQ19.1-BGS/R	1	Inductive sensor Monitoring Kit for Power Clamps	1324638	TUNKERS	TUN.1324638

+.GL1UQ54UQ18.2/1

+.GL1UQ54UQ19.2/1

Parts list

F01_001

Device tag	Quantity	Designation	Type number	Supplier	Part number
=V1GL1UQ54UQ19.2-BGS/R	1	Inductive sensor Monitoring Kit for Power Clamps	1324638	TUNKERS	TUN.1324638

+.GL1UQ54UQ19.1/1

+.GL1UQ54UQ20.1/1

			Date	1/17/2023	Volvo Trucks North America	Valiant TMS	Parts list : TUN.1324638 - TUN.1324638	Drawing name: =2V10&EFS-EL	= + V1GL1UQ54UQ19.2	
			Ed.	MKLEPADLO						
			Appr		P6700 Bodyside RH - Robot Cell 2V10			Document type: EPB	Project nr: 22-16150	Page 1 / 1579
Modification	Date	Name	Original		Replacement of / Replaced by	Scale 1:1				

Parts list

F01_001

Device tag	Quantity	Designation	Type number	Supplier	Part number
=V1GL1UQ54UQ20.1-BGS/R	1	Inductive sensor Monitoring Kit for Power Clamps	1324638	TUNKERS	TUN.1324638

+.GL1UQ54UQ19.2/1

+.GL1UQ54UQ21.1/1

Parts list

F01_001

Device tag	Quantity	Designation	Type number	Supplier	Part number
=V1GL1UQ54UQ21.1-BGS/R	1	4-Wire, 4-Pin, DC M12 X 1 (PNP)	WWS001A	WEL	WEL.WWS001A

+.GL1UQ54UQ20.1/1

+.GL1UQ54UQ22.1/1

Parts list

F01_001

Device tag	Quantity	Designation	Type number	Supplier	Part number
=V1GL1UQ54UQ22.1-BGS/R	1	4-Wire, 4-Pin, DC M12 X 1 (PNP)	WWS001A	WEL	WEL.WWS001A

+.GL1UQ54UQ21.1/1

+.GL1UQ54UQ23.1/1

Parts list

F01_001

Device tag	Quantity	Designation	Type number	Supplier	Part number
=V1GL1UQ54UQ23.1-BGS/R	1	4-Wire, 4-Pin, DC M12 X 1 (PNP)	WWS001A	WEL	WEL.WWS001A

+.GL1UQ54UQ22.1/1

+.GL1UQ54UQ24.1/1

Parts list

F01_001

Device tag	Quantity	Designation	Type number	Supplier	Part number
=V1GL1UQ54UQ24.1-BGS/R	1	Inductive sensor Monitoring Kit for Power Clamps	1324644	TUNKERS	TUN.1324644

+.GL1UQ54UQ23.1/1

+.GL1UQ54UQ25.1/1

Parts list

F01_001

Device tag	Quantity	Designation	Type number	Supplier	Part number
=V1GL1UQ54UQ25.1-BGS/R	1	Inductive sensor Monitoring Kit for Power Clamps	1324644	TUNKERS	TUN.1324644

+.GL1UQ54UQ24.1/1

+.GL1UQ56/1

			Date	1/17/2023	Volvo Trucks North America	Valiant TMS	Parts list : TUN.1324644 - TUN.1324644	Drawing name: =2V10&EFS-EL	=	
			Ed.	MKLEPADLO					+ V1GL1UQ54UQ25.1	
			Appr		P6700 Bodyside RH - Robot Cell 2V10			Document type: EPB	Project nr: 22-16150	Page 1
Modification	Date	Name	Original		Replacement of / Replaced by	Scale 1:1				1579

Parts list

F01_001

Device tag	Quantity	Designation	Type number	Supplier	Part number
=V1GL1UQ56KF1-KF1	0	Bus node	CPX-FB33	FES	FES.548755
=V1GL1UQ56KF1-KF1	0	Interlinking block	CPX-M-GE-EV-S-7/8-5POL	FES	FES.550208
=V1GL1UQ56KF1-KF1.11	0	Manifold block	CPX-M-AB-8-M12X2-5POL	FES	FES.549335

+.GL1UQ54UQ25.1/1

+.GL1UQ56UQ1.1/1

			Date	1/17/2023	Volvo Trucks North America	Valiant TMS	Parts list : FES.548755 - FES.549335	Drawing name: =2V10&EFS-EL	=	
			Ed.	MKLEPADLO					+ V1GL1UQ56	
			Appr		P6700 Bodyside RH - Robot Cell 2V10			Document type: EPB	Project nr: 22-16150	Page 1 / 1579
Modification	Date	Name	Original		Replacement of / Replaced by	Scale 1:1				

Parts list

F01_001

Device tag	Quantity	Designation	Type number	Supplier	Part number
=V1GL1UQ56UQ1.1-BGR	1	Inductive sensor	BI4U-MT12E-AP6X2-H1141/S1589	TURCK	TUR.1644797
=V1GL1UQ56UQ1.1-BGS	1	Inductive sensor	BI4U-MT12E-AP6X2-H1141/S1589	TURCK	TUR.1644797
=V1GL1UQ56UQ1.1-XGR/S	1	Y splitter	U2-30676	TURCK	TUR.VB2-FSM 4.4/2FKM 4/S3450

+V1GL1UQ56/1

+.GL1UQ57/1

			Date	1/17/2023	Volvo Trucks North America	Valiant TMS	Parts list : TUR.1644797 - TUR.VB2-FSM 4.4/2FKM 4/S3450	Drawing name: =2V10&EFS-EL	= + V1GL1UQ56UQ1.1	
			Ed.	MKLEPADLO	P6700 Bodyside RH - Robot Cell 2V10					
			Appr					Document type: EPB	Project nr: 22-16150	Page 1 / 1579
Modification	Date	Name	Original		Replacement of / Replaced by	Scale 1:1				

Parts list

F01_001

Device tag	Quantity	Designation	Type number	Supplier	Part number
=V1GL1UQ57KF1-KF1	0	Bus node	CPX-FB33	FES	FES.548755
=V1GL1UQ57KF1-KF1	0	Interlinking block	CPX-M-GE-EV-S-7/8-5POL	FES	FES.550208
=V1GL1UQ57KF1-KF1.11	0	Manifold block	CPX-M-AB-8-M12X2-5POL	FES	FES.549335

Parts list

F01_001

Device tag	Quantity	Designation	Type number	Supplier	Part number
=V1GL1UQ57UQ1.1-BGR	1	Inductive sensor	BI4U-MT12E-AP6X2-H1141/S1589	TURCK	TUR.1644797
=V1GL1UQ57UQ1.1-BGS	1	Inductive sensor	BI4U-MT12E-AP6X2-H1141/S1589	TURCK	TUR.1644797
=V1GL1UQ57UQ1.1-XGR/S	1	Y splitter	U2-30676	TURCK	TUR.VB2-FSM 4.4/2FKM 4/S3450

Parts list

F01_001

Device tag	Quantity	Designation	Type number	Supplier	Part number
=V1GL2KF1-KF1	0	Bus node	CPX-FB33	FES	FES.548755
=V1GL2KF1-KF1	0	Interlinking block	CPX-M-GE-EV-S-7/8-5POL	FES	FES.550208
=V1GL2KF1-KF1.11	0	Manifold block	CPX-AB-4-M12X2-5POL-R	FES	FES.541254
=V1GL2KF1-KF1.12	1	Manifold block	CPX-AB-4-M12X2-5POL-R	FES	FES.541254
=V1GL2KF1-KF1.13	1	Manifold block	CPX-AB-4-M12X2-5POL-R	FES	FES.541254
=V1GL2WC4-UCMS1	1	5 PIN MINI FIELD ATTACHABLE, FEMALE, STRAIGHT	BS 4151-0/9	TURCK	TUR.BS 4151-0/9
=V1GL2WC4-W1.1	1	5 PIN MINI FIELD ATTACHABLE, FEMALE, STRAIGHT	BS 4151-0/9	TURCK	TUR.BS 4151-0/9
=V1GL2WC4-W1.2	1	5 PIN MINI FIELD ATTACHABLE, FEMALE, STRAIGHT	BS 4151-0/9	TURCK	TUR.BS 4151-0/9

Parts list

F01_001

Device tag	Quantity	Designation	Type number	Supplier	Part number
=V1GL2UQ51BG0-BG01	1	Inductive sensor	BI20U-CA40-AP6X2-H1141/S1590 W/BS2.0	TURCK	TUR.1627297
=V1GL2UQ51BG0-BG02	1	Inductive sensor	BI20U-CA40-AP6X2-H1141/S1590 W/BS2.0	TURCK	TUR.1627297
=V1GL2UQ51BG0-BG03	1	Inductive sensor	BI20U-CA40-AP6X2-H1141/S1590 W/BS2.0	TURCK	TUR.1627297
=V1GL2UQ51BG0-BG04	1	Inductive sensor	BI20U-CA40-AP6X2-H1141/S1590 W/BS2.0	TURCK	TUR.1627297
=V1GL2UQ51BG0-BG05	1	Inductive sensor	BI20U-CA40-AP6X2-H1141/S1590 W/BS2.0	TURCK	TUR.1627297
=V1GL2UQ51BG0-BG06	1	Inductive sensor	BI20U-CA40-AP6X2-H1141/S1590 W/BS2.0	TURCK	TUR.1627297
=V1GL2UQ51BG0-BG07	1	Inductive sensor	BI20U-CA40-AP6X2-H1141/S1590 W/BS2.0	TURCK	TUR.1627297
=V1GL2UQ51BG0-BG08	1	Inductive sensor	BI20U-CA40-AP6X2-H1141/S1590 W/BS2.0	TURCK	TUR.1627297
=V1GL2UQ51BG0-BG09	1	Inductive sensor	BI20U-CA40-AP6X2-H1141/S1590 W/BS2.0	TURCK	TUR.1627297
=V1GL2UQ51BG0-BG11	1	Inductive sensor	BI10U-MT18-AP6X2-H1141/S1589	Turck	TUR.1644905
=V1GL2UQ51BG0-BG12	1	Inductive sensor	BI10U-MT18-AP6X2-H1141/S1589	Turck	TUR.1644905
=V1GL2UQ51BG0-BG13	1	Inductive sensor	BI20U-CA40-AP6X2-H1141/S1590 W/BS2.0	TURCK	TUR.1627297
=V1GL2UQ51BG0-BG14	1	Inductive sensor	BI20U-CA40-AP6X2-H1141/S1590 W/BS2.0	TURCK	TUR.1627297
=V1GL2UQ51BG0-BG15	1	Inductive sensor	BI20U-CA40-AP6X2-H1141/S1590 W/BS2.0	TURCK	TUR.1627297
=V1GL2UQ51BG0-BG16	1	Inductive sensor	BI20U-CA40-AP6X2-H1141/S1590 W/BS2.0	TURCK	TUR.1627297
=V1GL2UQ51BG0-BG17	1	Inductive sensor	BI20U-CA40-AP6X2-H1141/S1590 W/BS2.0	TURCK	TUR.1627297
=V1GL2UQ51BG0-BG18	1	Inductive sensor	BI20U-CA40-AP6X2-H1141/S1590 W/BS2.0	TURCK	TUR.1627297
=V1GL2UQ51BG0-BG19	1	Inductive sensor	BI20U-CA40-AP6X2-H1141/S1590 W/BS2.0	TURCK	TUR.1627297
=V1GL2UQ51BG0-BG20	1	Inductive sensor	BI20U-CA40-AP6X2-H1141/S1590 W/BS2.0	TURCK	TUR.1627297
=V1GL2UQ51BG0-XG1/2	1	Y splitter	U2-30676	TURCK	TUR.VB2-FSM 4.4/2FKM 4/S3450
=V1GL2UQ51BG0-XG3/4	1	Y splitter	U2-30676	TURCK	TUR.VB2-FSM 4.4/2FKM 4/S3450
=V1GL2UQ51BG0-XG5/6	1	Y splitter	U2-30676	TURCK	TUR.VB2-FSM 4.4/2FKM 4/S3450
=V1GL2UQ51BG0-XG7/8	1	Y splitter	U2-30676	TURCK	TUR.VB2-FSM 4.4/2FKM 4/S3450
=V1GL2UQ51BG0-XG11/12	1	Y splitter	U2-30676	TURCK	TUR.VB2-FSM 4.4/2FKM 4/S3450
=V1GL2UQ51BG0-XG13/14	1	Y splitter	U2-30676	TURCK	TUR.VB2-FSM 4.4/2FKM 4/S3450
=V1GL2UQ51BG0-XG15/16	1	Y splitter	U2-30676	TURCK	TUR.VB2-FSM 4.4/2FKM 4/S3450
=V1GL2UQ51BG0-XG17/18	1	Y splitter	U2-30676	TURCK	TUR.VB2-FSM 4.4/2FKM 4/S3450
=V1GL2UQ51BG0-XG19/20	1	Y splitter	U2-30676	TURCK	TUR.VB2-FSM 4.4/2FKM 4/S3450
=V1GL2UQ51KF1-KF1	0	Bus node	CPX-FB33	FES	FES.548755
=V1GL2UQ51KF1-KF1	0	Interlinking block	CPX-M-GE-EV-S-7/8-5POL	FES	FES.550208
=V1GL2UQ51KF1-KF1.11	0	Manifold block	CPX-M-AB-8-M12X2-5POL	FES	FES.549335
=V1GL2UQ51KF1-KF1.12	0	Manifold block	CPX-M-AB-8-M12X2-5POL	FES	FES.549335
=V1GL2UQ51KF2-KF2	0	Bus node	CPX-FB33	FES	FES.548755
=V1GL2UQ51KF2-KF2	0	Interlinking block	CPX-M-GE-EV-S-7/8-5POL	FES	FES.550208
=V1GL2UQ51KF2-KF2.11	0	Manifold block	CPX-M-AB-8-M12X2-5POL	FES	FES.549335
=V1GL2UQ51KF2-KF2.12	0	Manifold block	CPX-M-AB-8-M12X2-5POL	FES	FES.549335
=V1GL2UQ51KF2-KF2.13	0	Manifold block	CPX-M-AB-8-M12X2-5POL	FES	FES.549335
=V1GL2UQ51KF3-KF3	0	Bus node	CPX-FB33	FES	FES.548755
=V1GL2UQ51KF3-KF3	0	Interlinking block	CPX-M-GE-EV-S-7/8-5POL	FES	FES.550208
=V1GL2UQ51KF3-KF3.11	0	Manifold block	CPX-M-AB-8-M12X2-5POL	FES	FES.549335
=V1GL2UQ51KF3-KF3.12	0	Manifold block	CPX-M-AB-8-M12X2-5POL	FES	FES.549335
=V1GL2UQ51KF3-KF3.13	0	Manifold block	CPX-M-AB-8-M12X2-5POL	FES	FES.549335
=V1GL2UQ51KF4-KF4	0	Bus node	CPX-FB33	FES	FES.548755
=V1GL2UQ51KF4-KF4	0	Interlinking block	CPX-M-GE-EV-S-7/8-5POL	FES	FES.550208
=V1GL2UQ51KF4-KF4.11	0	Manifold block	CPX-M-AB-8-M12X2-5POL	FES	FES.549335
=V1GL2UQ51KF4-KF4.12	0	Manifold block	CPX-M-AB-8-M12X2-5POL	FES	FES.549335
=V1GL2UQ51KF4-KF4.13	0	Manifold block	CPX-M-AB-8-M12X2-5POL	FES	FES.549335

Parts list

F01_001

Device tag	Quantity	Designation	Type number	Supplier	Part number
=V1GL2UQ51UQ1.1-BGR	1	Inductive sensor	BI10U-MT18-AP6X2-H1141/S1589	Turck	TUR.1644905
=V1GL2UQ51UQ1.1-BGS	1	Inductive sensor	BI10U-MT18-AP6X2-H1141/S1589	Turck	TUR.1644905
=V1GL2UQ51UQ1.1-XGR/S	1	Y splitter	U2-30676	TURCK	TUR.VB2-FSM 4.4/2FKM 4/S3450

+V1GL2UQ51/1

+.GL2UQ51UQ2.1/1

			Date	1/17/2023	Volvo Trucks North America	Valiant TMS	Parts list : TUR.1644905 - TUR.VB2-FSM 4.4/2FKM 4/S3450	Drawing name: =2V10&EFS-EL	= + V1GL2UQ51UQ1.1	
			Ed.	MKLEPADLO	P6700 Bodyside RH - Robot Cell 2V10					
			Appr					Document type: EPB	Project nr: 22-16150	Page 1 / 1579
Modification	Date	Name	Original		Replacement of / Replaced by	Scale 1:1				

Parts list

F01_001

Device tag	Quantity	Designation	Type number	Supplier	Part number
=V1GL2UQ51UQ2.1-BGR	1	Inductive sensor	BI10U-MT18-AP6X2-H1141/S1589	Turck	TUR.1644905
=V1GL2UQ51UQ2.1-BGS	1	Inductive sensor	BI10U-MT18-AP6X2-H1141/S1589	Turck	TUR.1644905
=V1GL2UQ51UQ2.1-XGR/S	1	Y splitter	U2-30676	TURCK	TUR.VB2-FSM 4.4/2FKM 4/S3450

+.GL2UQ51UQ1.1/1

+.GL2UQ51UQ3.1/1

			Date	1/17/2023	Volvo Trucks North America	Valiant TMS	Parts list : TUR.1644905 - TUR.VB2-FSM 4.4/2FKM 4/S3450	Drawing name: =2V10&EFS-EL	=	
			Ed.	MKLEPADLO					+ V1GL2UQ51UQ2.1	
			Appr		P6700 Bodyside RH - Robot Cell 2V10			Document type: EPB	Project nr: 22-16150	Page 1
Modification	Date	Name	Original		Replacement of / Replaced by	Scale 1:1				1579

Parts list

F01_001

Device tag	Quantity	Designation	Type number	Supplier	Part number
=V1GL2UQ51UQ3.1-BGR	1	Inductive sensor	BI10U-MT18-AP6X2-H1141/S1589	Turck	TUR.1644905
=V1GL2UQ51UQ3.1-BGS	1	Inductive sensor	BI10U-MT18-AP6X2-H1141/S1589	Turck	TUR.1644905
=V1GL2UQ51UQ3.1-XGR/S	1	Y splitter	U2-30676	TURCK	TUR.VB2-FSM 4.4/2FKM 4/S3450

+.GL2UQ51UQ2.1/1

+.GL2UQ51UQ4.1/1

			Date	1/17/2023	Volvo Trucks North America	Valiant TMS	Parts list : TUR.1644905 - TUR.VB2-FSM 4.4/2FKM 4/S3450	Drawing name: =2V10&EFS-EL	=	
			Ed.	MKLEPADLO					+ V1GL2UQ51UQ3.1	
			Appr		P6700 Bodyside RH - Robot Cell 2V10			Document type: EPB	Project nr: 22-16150	Page 1
Modification	Date	Name	Original		Replacement of / Replaced by	Scale 1:1				1579

Parts list

F01_001

Device tag	Quantity	Designation	Type number	Supplier	Part number
=V1GL2UQ51UQ4.1-BGR	1	Inductive sensor	BI2-CRS260-AP4X2-H1141/S34	TURCK	TUR.BI2-CRS260-AP4X2-H1141/S34
=V1GL2UQ51UQ4.1-BGS	1	Inductive sensor	BI2-CRS260-AP4X2-H1141/S34	TURCK	TUR.BI2-CRS260-AP4X2-H1141/S34
=V1GL2UQ51UQ4.1-XGR/S	1	Y splitter	U2-30676	TURCK	TUR.VB2-FSM 4.4/2FKM 4/S3450

Parts list

F01_001

Device tag	Quantity	Designation	Type number	Supplier	Part number
=V1GL2UQ51UQ4.2-BGS/R	1	4-Wire, 4-Pin, DC M12 X 1 (PNP)	WWS001A	WEL	WEL.WWS001A

+.GL2UQ51UQ4.1/1

+.GL2UQ51UQ4.3/1

Parts list

F01_001

Device tag	Quantity	Designation	Type number	Supplier	Part number
=V1GL2UQ51UQ4.3-BGR	1	Inductive sensor	BI2-CRS260-AP4X2-H1141/S34	TURCK	TUR.BI2-CRS260-AP4X2-H1141/S34
=V1GL2UQ51UQ4.3-BGS	1	Inductive sensor	BI2-CRS260-AP4X2-H1141/S34	TURCK	TUR.BI2-CRS260-AP4X2-H1141/S34
=V1GL2UQ51UQ4.3-XGR/S	1	Y splitter	U2-30676	TURCK	TUR.VB2-FSM 4.4/2FKM 4/S3450

Parts list

F01_001

Device tag	Quantity	Designation	Type number	Supplier	Part number
=V1GL2UQ51UQ5.1-BGS/R	1	4-Wire, 4-Pin, DC M12 X 1 (PNP)	WWS001A	WEL	WEL.WWS001A

+.GL2UQ51UQ4.3/1

+.GL2UQ51UQ5.2/1

Parts list

F01_001

Device tag	Quantity	Designation	Type number	Supplier	Part number
=V1GL2UQ51UQ5.2-BGS/R	1	4-Wire, 4-Pin, DC M12 X 1 (PNP)	WWS001A	WEL	WEL.WWS001A

+.GL2UQ51UQ5.1/1

+.GL2UQ51UQ5.3/1

Parts list

F01_001

Device tag	Quantity	Designation	Type number	Supplier	Part number
=V1GL2UQ51UQ5.3-BGS/R	1	4-Wire, 4-Pin, DC M12 X 1 (PNP)	WWS001A	WEL	WEL.WWS001A

+.GL2UQ51UQ5.2/1

+.GL2UQ51UQ6.1/1

Parts list

F01_001

Device tag	Quantity	Designation	Type number	Supplier	Part number
=V1GL2UQ51UQ6.1-BGR	1	Inductive sensor	BI2-CRS260-AP4X2-H1141/S34	TURCK	TUR.BI2-CRS260-AP4X2-H1141/S34
=V1GL2UQ51UQ6.1-BGS	1	Inductive sensor	BI2-CRS260-AP4X2-H1141/S34	TURCK	TUR.BI2-CRS260-AP4X2-H1141/S34
=V1GL2UQ51UQ6.1-XGR/S	1	Y splitter	U2-30676	TURCK	TUR.VB2-FSM 4.4/2FKM 4/S3450

Parts list

F01_001

Device tag	Quantity	Designation	Type number	Supplier	Part number
=V1GL2UQ51UQ6.2-BGR	1	Inductive sensor	BI2-CRS260-AP4X2-H1141/S34	TURCK	TUR.BI2-CRS260-AP4X2-H1141/S34
=V1GL2UQ51UQ6.2-BGS	1	Inductive sensor	BI2-CRS260-AP4X2-H1141/S34	TURCK	TUR.BI2-CRS260-AP4X2-H1141/S34
=V1GL2UQ51UQ6.2-XGR/S	1	Y splitter	U2-30676	TURCK	TUR.VB2-FSM 4.4/2FKM 4/S3450

Parts list

F01_001

Device tag	Quantity	Designation	Type number	Supplier	Part number
=V1GL2UQ51UQ7.1-BGR	1	Inductive sensor	BI2-CRS260-AP4X2-H1141/S34	TURCK	TUR.BI2-CRS260-AP4X2-H1141/S34
=V1GL2UQ51UQ7.1-BGS	1	Inductive sensor	BI2-CRS260-AP4X2-H1141/S34	TURCK	TUR.BI2-CRS260-AP4X2-H1141/S34
=V1GL2UQ51UQ7.1-XGR/S	1	Y splitter	U2-30676	TURCK	TUR.VB2-FSM 4.4/2FKM 4/S3450

Parts list

F01_001

Device tag	Quantity	Designation	Type number	Supplier	Part number
=V1GL2UQ51UQ7.2-BGS/R	1	4-Wire, 4-Pin, DC M12 X 1 (PNP)	WWS001A	WEL	WEL.WWS001A

+.GL2UQ51UQ7.1/1

+.GL2UQ51UQ8.1/1

Parts list

F01_001

Device tag	Quantity	Designation	Type number	Supplier	Part number
=V1GL2UQ51UQ8.1-BGS/R	1	4-Wire, 4-Pin, DC M12 X 1 (PNP)	WWS001A	WEL	WEL.WWS001A

+.GL2UQ51UQ7.2/1

+.GL2UQ51UQ8.2/1

Parts list

F01_001

Device tag	Quantity	Designation	Type number	Supplier	Part number
=V1GL2UQ51UQ8.2-BGS/R	1	4-Wire, 4-Pin, DC M12 X 1 (PNP)	WWS001A	WEL	WEL.WWS001A

+.GL2UQ51UQ8.1/1

+.GL2UQ51UQ8.3/1

Parts list

F01_001

Device tag	Quantity	Designation	Type number	Supplier	Part number
=V1GL2UQ51UQ8.3-BGS/R	1	4-Wire, 4-Pin, DC M12 X 1 (PNP)	WWS001A	WEL	WEL.WWS001A

+.GL2UQ51UQ8.2/1

+.GL2UQ51UQ9.1/1

Parts list

F01_001

Device tag	Quantity	Designation	Type number	Supplier	Part number
=V1GL2UQ51UQ9.1-BGS/R	1	4-Wire, 4-Pin, DC M12 X 1 (PNP)	WWS001A	WEL	WEL.WWS001A

+.GL2UQ51UQ8.3/1

+.GL2UQ51UQ9.2/1

Parts list

F01_001

Device tag	Quantity	Designation	Type number	Supplier	Part number
=V1GL2UQ51UQ9.2-BGS/R	1	4-Wire, 4-Pin, DC M12 X 1 (PNP)	WWS001A	WEL	WEL.WWS001A

+.GL2UQ51UQ9.1/1

+.GL2UQ51UQ9.3/1

Parts list

F01_001

Device tag	Quantity	Designation	Type number	Supplier	Part number
=V1GL2UQ51UQ9.3-BGS/R	1	4-Wire, 4-Pin, DC M12 X 1 (PNP)	WWS001A	WEL	WEL.WWS001A

+.GL2UQ51UQ9.2/1

+.GL2UQ51UQ10.1/1

Parts list

F01_001

Device tag	Quantity	Designation	Type number	Supplier	Part number
=V1GL2UQ51UQ10.1-BGS/R	1	Inductive sensor Monitoring Kit for Power Clamps	1324638	TUNKERS	TUN.1324638

+.GL2UQ51UQ9.3/1

+.GL2UQ51UQ10.2/1

Parts list

F01_001

Device tag	Quantity	Designation	Type number	Supplier	Part number
=V1GL2UQ51UQ10.2-BGS/R	1	Inductive sensor Monitoring Kit for Power Clamps	1324638	TUNKERS	TUN.1324638

+.GL2UQ51UQ10.1/1

+.GL2UQ51UQ10.3/1

Parts list

F01_001

Device tag	Quantity	Designation	Type number	Supplier	Part number
=V1GL2UQ51UQ10.3-BGS/R	1	Inductive sensor Monitoring Kit for Power Clamps	1324638	TUNKERS	TUN.1324638

Parts list

F01_001

Device tag	Quantity	Designation	Type number	Supplier	Part number
=V1GL2UQ51UQ10.4-BGS/R	1	Inductive sensor Monitoring Kit for Power Clamps	1324638	TUNKERS	TUN.1324638

Parts list

F01_001

Device tag	Quantity	Designation	Type number	Supplier	Part number
=V1GL2UQ51UQ10.5-BGS/R	1	Inductive sensor Monitoring Kit for Power Clamps	1324638	TUNKERS	TUN.1324638

+.GL2UQ51UQ10.4/1

+.GL2UQ51UQ10.6/1

			Date	1/17/2023	Volvo Trucks North America	Valiant TMS	Parts list : TUN.1324638 - TUN.1324638	Drawing name: =2V10&EFS-EL	= + V1GL2UQ51UQ10.5	
			Ed.	MKLEPADLO						
			Appr		P6700 Bodyside RH - Robot Cell 2V10			Document type: EPB	Project nr: 22-16150	Page 1 / 1579
Modification	Date	Name	Original		Replacement of / Replaced by	Scale 1:1				

Parts list

F01_001

Device tag	Quantity	Designation	Type number	Supplier	Part number
=V1GL2UQ51UQ10.6-BGS/R	1	Inductive sensor Monitoring Kit for Power Clamps	1324644	TUNKERS	TUN.1324644

+.GL2UQ51UQ10.5/1

+.GL2UQ51UQ11.1/1

Parts list

F01_001

Device tag	Quantity	Designation	Type number	Supplier	Part number
=V1GL2UQ51UQ11.1-BGS/R	1	Inductive sensor Monitoring Kit for Power Clamps	1324644	TUNKERS	TUN.1324644

+.GL2UQ51UQ10.6/1

+.GL2UQ51UQ12.1/1

			Date	1/17/2023	Volvo Trucks North America	Valiant TMS	Parts list : TUN.1324644 - TUN.1324644	Drawing name: =2V10&EFS-EL	= + V1GL2UQ51UQ11.1	
			Ed.	MKLEPADLO						
			Appr		P6700 Bodyside RH - Robot Cell 2V10			Document type: EPB	Project nr: 22-16150	Page 1 / 1579
Modification	Date	Name	Original		Replacement of / Replaced by	Scale 1:1				

Parts list

F01_001

Device tag	Quantity	Designation	Type number	Supplier	Part number
=V1GL2UQ51UQ12.1-BGS/R	1	Inductive sensor Monitoring Kit for Power Clamps	1324638	TUNKERS	TUN.1324638

+.GL2UQ51UQ11.1/1

+.GL2UQ51UQ13.1/1

Parts list

F01_001

Device tag	Quantity	Designation	Type number	Supplier	Part number
=V1GL2UQ51UQ13.1-BGS/R	1	Inductive sensor Monitoring Kit for Power Clamps	1324644	TUNKERS	TUN.1324644

+.GL2UQ51UQ12.1/1

+.GL2UQ51UQ14.1/1

			Date	1/17/2023	Volvo Trucks North America	Valiant TMS	Parts list : TUN.1324644 - TUN.1324644	Drawing name: =2V10&EFS-EL	= + V1GL2UQ51UQ13.1	
			Ed.	MKLEPADLO						
			Appr		P6700 Bodyside RH - Robot Cell 2V10	Scale 1:1		Document type: EPB	Project nr: 22-16150	Page 1 / 1579
Modification	Date	Name	Original		Replacement of	Replaced by				

Parts list

F01_001

Device tag	Quantity	Designation	Type number	Supplier	Part number
=V1GL2UQ51UQ14.1-BGS/R	1	Inductive sensor Monitoring Kit for Power Clamps	1324644	TUNKERS	TUN.1324644

+.GL2UQ51UQ13.1/1

+.GL2UQ51UQ15.1/1

Parts list

F01_001

Device tag	Quantity	Designation	Type number	Supplier	Part number
=V1GL2UQ51UQ15.1-BGS/R	1	Inductive sensor Monitoring Kit for Power Clamps	1324638	TUNKERS	TUN.1324638

+.GL2UQ51UQ14.1/1

+.GL2UQ51UQ16.1/1

Parts list

F01_001

Device tag	Quantity	Designation	Type number	Supplier	Part number
=V1GL2UQ51UQ16.1-BGS/R	1	Inductive sensor Monitoring Kit for Power Clamps	1324644	TUNKERS	TUN.1324644

+.GL2UQ51UQ15.1/1

+.GL2UQ51UQ17.1/1

Parts list

F01_001

Device tag	Quantity	Designation	Type number	Supplier	Part number
=V1GL2UQ51UQ17.1-BGS/R	1	Inductive sensor Monitoring Kit for Power Clamps	1324638	TUNKERS	TUN.1324638

+.GL2UQ51UQ16.1/1

+.GL2UQ51UQ17.2/1

Parts list

F01_001

Device tag	Quantity	Designation	Type number	Supplier	Part number
=V1GL2UQ51UQ17.2-BGS/R	1	Inductive sensor Monitoring Kit for Power Clamps	1324638	TUNKERS	TUN.1324638

+.GL2UQ51UQ17.1/1

+.GL2UQ51UQ17.3/1

Parts list

F01_001

Device tag	Quantity	Designation	Type number	Supplier	Part number
=V1GL2UQ51UQ17.3-BGS/R	1	Inductive sensor Monitoring Kit for Power Clamps	1324638	TUNKERS	TUN.1324638

Parts list

F01_001

Device tag	Quantity	Designation	Type number	Supplier	Part number
=V1GL2UQ51UQ17.4-BGS/R	1	Inductive sensor Monitoring Kit for Power Clamps	1324638	TUNKERS	TUN.1324638

+.GL2UQ51UQ17.3/1

+.GL2UQ51UQ18.1/1

Parts list

F01_001

Device tag	Quantity	Designation	Type number	Supplier	Part number
=V1GL2UQ51UQ18.1-BGS/R	1	Inductive sensor Monitoring Kit for Power Clamps	1324638	TUNKERS	TUN.1324638

+.GL2UQ51UQ17.4/1

+.GL2UQ51UQ18.2/1

Parts list

F01_001

Device tag	Quantity	Designation	Type number	Supplier	Part number
=V1GL2UQ51UQ18.2-BGS/R	1	Inductive sensor Monitoring Kit for Power Clamps	1324638	TUNKERS	TUN.1324638

+.GL2UQ51UQ18.1/1

+.GL2UQ51UQ19.1/1

Parts list

F01_001

Device tag	Quantity	Designation	Type number	Supplier	Part number
=V1GL2UQ51UQ19.1-BGS/R	1	Inductive sensor Monitoring Kit for Power Clamps	1324638	TUNKERS	TUN.1324638

+.GL2UQ51UQ18.2/1

+.GL2UQ51UQ19.2/1

Parts list

F01_001

Device tag	Quantity	Designation	Type number	Supplier	Part number
=V1GL2UQ51UQ19.2-BGS/R	1	Inductive sensor Monitoring Kit for Power Clamps	1324638	TUNKERS	TUN.1324638

+.GL2UQ51UQ19.1/1

+.GL2UQ51UQ20.1/1

Parts list

F01_001

Device tag	Quantity	Designation	Type number	Supplier	Part number
=V1GL2UQ51UQ20.1-BGS/R	1	Inductive sensor Monitoring Kit for Power Clamps	1324644	TUNKERS	TUN.1324644

+.GL2UQ51UQ19.2/1

+.GL2UQ51UQ21.1/1

			Date	1/17/2023	Volvo Trucks North America	Valiant TMS	Parts list : TUN.1324644 - TUN.1324644	Drawing name: =2V10&EFS-EL	= + V1GL2UQ51UQ20.1	
			Ed.	MKLEPADLO						
			Appr		P6700 Bodyside RH - Robot Cell 2V10			Document type: EPB	Project nr: 22-16150	Page 1 / 1579
Modification	Date	Name	Original		Replacement of / Replaced by	Scale 1:1				

Parts list

F01_001

Device tag	Quantity	Designation	Type number	Supplier	Part number
=V1GL2UQ51UQ21.1-BGS/R	1	Inductive sensor Monitoring Kit for Power Clamps	1324644	TUNKERS	TUN.1324644

+.GL2UQ51UQ20.1/1

+.GL2UQ51UQ22.1/1

Parts list

F01_001

Device tag	Quantity	Designation	Type number	Supplier	Part number
=V1GL2UQ51UQ22.1-BGS/R	1	Inductive sensor Monitoring Kit for Power Clamps	1324638	TUNKERS	TUN.1324638

+.GL2UQ51UQ21.1/1

+.GL2UQ51UQ22.2/1

			Date	1/17/2023	Volvo Trucks North America	Valiant TMS	Parts list : TUN.1324638 - TUN.1324638	Drawing name: =2V10&EFS-EL	= + V1GL2UQ51UQ22.1	
			Ed.	MKLEPADLO						
			Appr		P6700 Bodyside RH - Robot Cell 2V10			Document type: EPB	Project nr: 22-16150	Page 1 / 1579
Modification	Date	Name	Original		Replacement of / Replaced by	Scale 1:1				

Parts list

F01_001

Device tag	Quantity	Designation	Type number	Supplier	Part number
=V1GL2UQ51UQ22.2-BGS/R	1	Inductive sensor Monitoring Kit for Power Clamps	1324638	TUNKERS	TUN.1324638

+.GL2UQ51UQ22.1/1

+.GL2UQ51UQ22.3/1

Parts list

F01_001

Device tag	Quantity	Designation	Type number	Supplier	Part number
=V1GL2UQ51UQ22.3-BGS/R	1	Inductive sensor Monitoring Kit for Power Clamps	1324638	TUNKERS	TUN.1324638

Parts list

F01_001

Device tag	Quantity	Designation	Type number	Supplier	Part number
=V1GL2UQ51UQ23.1-BGS/R	1	Inductive sensor Monitoring Kit for Power Clamps	1324638	TUNKERS	TUN.1324638

Parts list

F01_001

Device tag	Quantity	Designation	Type number	Supplier	Part number
=V1GL2UQ51UQ24.1-BGS/R	1	Inductive sensor Monitoring Kit for Power Clamps	1324638	TUNKERS	TUN.1324638

+.GL2UQ51UQ23.1/1

+.GL2UQ51UQ25.1/1

Parts list

F01_001

Device tag	Quantity	Designation	Type number	Supplier	Part number
=V1GL2UQ51UQ25.1-BGS/R	1	Inductive sensor Monitoring Kit for Power Clamps	1324638	TUNKERS	TUN.1324638

+.GL2UQ51UQ24.1/1

+.GL2UQ51UQ26.1/1

			Date	1/17/2023	Volvo Trucks North America	Valiant TMS	Parts list : TUN.1324638 - TUN.1324638	Drawing name: =2V10&EFS-EL	= + V1GL2UQ51UQ25.1	
			Ed.	MKLEPADLO						
			Appr		P6700 Bodyside RH - Robot Cell 2V10			Document type: EPB	Project nr: 22-16150	Page 1 / 1579
Modification	Date	Name	Original		Replacement of / Replaced by	Scale 1:1				

Parts list

F01_001

Device tag	Quantity	Designation	Type number	Supplier	Part number
=V1GL2UQ51UQ26.1-BGS/R	1	Inductive sensor Monitoring Kit for Power Clamps	1324638	TUNKERS	TUN.1324638

+.GL2UQ51UQ25.1/1

+.GL2UQ51UQ27.1/1

			Date	1/17/2023	Volvo Trucks North America	Valiant TMS	Parts list : TUN.1324638 - TUN.1324638	Drawing name: =2V10&EFS-EL	= + V1GL2UQ51UQ26.1	
			Ed.	MKLEPADLO						
			Appr		P6700 Bodyside RH - Robot Cell 2V10	Scale 1:1		Document type: EPB	Project nr: 22-16150	Page 1 / 1579
Modification	Date	Name	Original		Replacement of / Replaced by					

Parts list

F01_001

Device tag	Quantity	Designation	Type number	Supplier	Part number
=V1GL2UQ51UQ27.1-BGS/R	1	Inductive sensor Monitoring Kit for Power Clamps	1324638	TUNKERS	TUN.1324638

+.GL2UQ51UQ26.1/1

+.GL2UQ51UQ28.1/1

Parts list

F01_001

Device tag	Quantity	Designation	Type number	Supplier	Part number
=V1GL2UQ51UQ28.1-BGS/R	1	Inductive sensor Monitoring Kit for Power Clamps	1324638	TUNKERS	TUN.1324638

+.GL2UQ51UQ27.1/1

+.GL2UQ51UQ29.1/1

Parts list

F01_001

Device tag	Quantity	Designation	Type number	Supplier	Part number
=V1GL2UQ51UQ29.1-BGS/R	1	Inductive sensor Monitoring Kit for Power Clamps	1324638	TUNKERS	TUN.1324638

+.GL2UQ51UQ28.1/1

+.GL2UQ51UQ30.1/1

Parts list

F01_001

Device tag	Quantity	Designation	Type number	Supplier	Part number
=V1GL2UQ51UQ30.1-BGS/R	1	Inductive sensor Monitoring Kit for Power Clamps	1324638	TUNKERS	TUN.1324638

Parts list

F01_001

Device tag	Quantity	Designation	Type number	Supplier	Part number
=V1GL2UQ51UQ31.1-BGS/R	1	Inductive sensor Monitoring Kit for Power Clamps	1329440	TUNKERS	TUN.1329440

+.GL2UQ51UQ30.1/1

+.GL2UQ51UQ32.1/1

Parts list

F01_001

Device tag	Quantity	Designation	Type number	Supplier	Part number
=V1GL2UQ51UQ32.1-BGS/R	1	4-Wire, 4-Pin, DC M12 X 1 (PNP)	WWS001A	WEL	WEL.WWS001A

+.GL2UQ51UQ31.1/1

+.GL2UQ51UQ33.1/1

Parts list

F01_001

Device tag	Quantity	Designation	Type number	Supplier	Part number
=V1GL2UQ51UQ33.1-BGS/R	1	Inductive sensor Monitoring Kit for Power Clamps	1324638	TUNKERS	TUN.1324638

+.GL2UQ51UQ32.1/1

+.GL2UQ51UQ34.1/1

Parts list

F01_001

Device tag	Quantity	Designation	Type number	Supplier	Part number
=V1GL2UQ51UQ34.1-BGR	1	Inductive sensor	BI2-CRS260-AP4X2-H1141/S34	TURCK	TUR.BI2-CRS260-AP4X2-H1141/S34
=V1GL2UQ51UQ34.1-BGS	1	Inductive sensor	BI2-CRS260-AP4X2-H1141/S34	TURCK	TUR.BI2-CRS260-AP4X2-H1141/S34
=V1GL2UQ51UQ34.1-XGR/S	1	Y splitter	U2-30676	TURCK	TUR.VB2-FSM 4.4/2FKM 4/S3450

Parts list

F01_001

Device tag	Quantity	Designation	Type number	Supplier	Part number
=V1GL2UQ51UQ35.1-BGS/R	1	Inductive sensor Monitoring Kit for Power Clamps	1324638	TUNKERS	TUN.1324638

+.GL2UQ51UQ34.1/1

+.GL18UQ51/1

Parts list

F01_001

Device tag	Quantity	Designation	Type number	Supplier	Part number
=V1GL18UQ51BG0-BG01	1				TUR.16447411
=V1GL18UQ51BG0-BG02	1				TUR.16447411
=V1GL18UQ51BG0-BG03	1				TUR.16447411
=V1GL18UQ51BG0-BG04	1				TUR.16447411
=V1GL18UQ51BG0-BG10	1				TUR.16447411
=V1GL18UQ51BG0-BG11	1				TUR.16447411
=V1GL18UQ51BG0-XG1/2	1	Y splitter	U2-30676	TURCK	TUR.VB2-FSM 4.4/2FKM 4/S3450
=V1GL18UQ51BG0-XG3/4	1	Y splitter	U2-30676	TURCK	TUR.VB2-FSM 4.4/2FKM 4/S3450
=V1GL18UQ51BG0-XG5/11	1	Y splitter	U2-30676	TURCK	TUR.VB2-FSM 4.4/2FKM 4/S3450
=V1GL18UQ51KF1-KF1	0	Bus node	CPX-FB33	FES	FES.548755
=V1GL18UQ51KF1-KF1	0	Interlinking block	CPX-M-GE-EV-S-7/8-5POL	FES	FES.550208
=V1GL18UQ51KF1-KF1.11	0	Manifold block	CPX-M-AB-8-M12X2-5POL	FES	FES.549335
=V1GL18UQ51KF1-KF1.12	0	Manifold block	CPX-M-AB-8-M12X2-5POL	FES	FES.549335
=V1GL18UQ51KF1-KF1.13	0	Manifold block	CPX-M-AB-8-M12X2-5POL	FES	FES.549335

Parts list

F01_001

Device tag	Quantity	Designation	Type number	Supplier	Part number
=V1GL18UQ51UQ1.1-BGR	1				TUR.16447411
=V1GL18UQ51UQ1.1-BGS	1				TUR.16447411
=V1GL18UQ51UQ1.1-XGR/S	1	Y splitter	U2-30676	TURCK	TUR.VB2-FSM 4.4/2FKM 4/S3450

+V1GL18UQ51/1

+.GL18UQ51UQ2.1/1

			Date	1/17/2023	Volvo Trucks North America	Valiant TMS	Parts list : TUR.16447411 - TUR.VB2-FSM 4.4/2FKM 4/S3450	Drawing name: =2V10&EFS-EL	=	
			Ed.	MKLEPADLO					+ V1GL18UQ51UQ1.1	
			Appr		P6700 Bodyside RH - Robot Cell 2V10			Document type: EPB	Project nr: 22-16150	Page 1 / 1579
Modification	Date	Name	Original		Replacement of / Replaced by	Scale 1:1				

Parts list

F01_001

Device tag	Quantity	Designation	Type number	Supplier	Part number
=V1GL18UQ51UQ2.1-BGR	1				TUR.16447411
=V1GL18UQ51UQ2.1-BGS	1				TUR.16447411
=V1GL18UQ51UQ2.1-XGR/S	1	Y splitter	U2-30676	TURCK	TUR.VB2-FSM 4.4/2FKM 4/S3450

+.GL18UQ51UQ1.1/1

+.GL18UQ51UQ6.1/1

			Date	1/17/2023	Volvo Trucks North America	Valiant TMS	Parts list : TUR.16447411 - TUR.VB2-FSM 4.4/2FKM 4/S3450	Drawing name: =2V10&EFS-EL		=	
			Ed.	MKLEPADLO						+ V1GL18UQ51UQ2.1	
			Appr		P6700 Bodyside RH - Robot Cell 2V10	Scale 1:1		Document type: EPB	Project nr: 22-16150	Page	1 / 1579
Modification	Date	Name	Original		Replacement of / Replaced by						

Parts list

F01_001

Device tag	Quantity	Designation	Type number	Supplier	Part number
=V1GL18UQ51UQ6.1-BGR	1				TUR.16447411
=V1GL18UQ51UQ6.1-BGS	1				TUR.16447411
=V1GL18UQ51UQ6.1-XGR/S	1	Y splitter	U2-30676	TURCK	TUR.VB2-FSM 4.4/2FKM 4/S3450

Parts list

F01_001

Device tag	Quantity	Designation	Type number	Supplier	Part number
=V1PF1KF1-KF1	0	Bus node	CPX-FB33	FES	FES.548755
=V1PF1KF1-KF1	0	Interlinking block	CPX-M-GE-EV-S-7/8-5POL	FES	FES.550208
=V1PF1KF1-KF1.11	0	Manifold block	CPX-M-AB-8-M12X2-5POL	FES	FES.549335

+.GL18UQ51UQ6.1/1

+.PF1UQ1.1/1

Parts list

F01_001

Device tag	Quantity	Designation	Type number	Supplier	Part number
=V1PF1UQ1.1-BGS/R	1	Inductive sensor Monitoring Kit for Power Clamps	1324638	TUNKERS	TUN.1324638

Parts list

F01_001

Device tag	Quantity	Designation	Type number	Supplier	Part number
=V1U10FQ1-BG01	1	NEMA Limit Switch - NEMA Type 4 & 13 Oiltight Construction	802T-AMP	A-B	A-B.802T-AMP

+.PF1UQ1.1/1

+.U10U01/1

			Date	1/17/2023	Volvo Trucks North America	Valiant TMS	Parts list : A-B.802T-AMP - A-B.802T-AMP	Drawing name: =2V10&EFS-EL		=	
			Ed.	MKLEPADLO						+ V1U10	
			Appr		P6700 Bodyside RH - Robot Cell 2V10			Document type: EPB	Project nr: 22-16150		Page 1
Modification	Date	Name	Original		Replacement of / Replaced by	Scale 1:1					1579

Parts list

F01_001

Device tag	Quantity	Designation	Type number	Supplier	Part number
=V1U10U01KF1-KF1.11	1	MVK-MPNIO DI8 DO8 FSU	MVK-MPNIO DI8 DO8 FSU	MURR	MURR.55339
=V1U10U01PF1-PF1	1	K50L Series Daylight Visible Indicators	K50L2RGB7QP	BANNER	BAN.805371
=V1U10U01PF1-PF1	1	Mounting kit	SMB30A	BANNER	BAN.32723

Parts list

F01_001

Device tag	Quantity	Designation	Type number	Supplier	Part number
=V1U20U01KF1-KF1.11	1	MVK-MPNIO DI8 DO8 FSU	MVK-MPNIO DI8 DO8 FSU	MURR	MURR.55339
=V1U20U01PF1-PF1	1	K50L Series Daylight Visible Indicators	K50L2RGB7QP	BANNER	BAN.805371
=V1U20U01PF1-PF1	1	Mounting kit	SMB30A	BANNER	BAN.32723

+.U10U01/1

+.UC11/1

			Date	1/17/2023	Volvo Trucks North America	Valiant TMS	Parts list : MURR.55339 - BAN.32723	Drawing name: =2V10&EFS-EL	=
			Ed.	MKLEPADLO					+ V1U20U01
			Appr		P6700 Bodyside RH - Robot Cell 2V10			Document type: EPB	Project nr: 22-16150
Modification	Date	Name	Original		Replacement of / Replaced by	Scale 1:1			Page 1 / 1579

Parts list

F01_001

Device tag	Quantity	Designation	Type number	Supplier	Part number
=V1AR11-FC1	1		EMPD3FBCB-025A-M	Electro-Matic	EMPD3FBCB-025A-M
=V1AR21-FC1	1		EMPD3FBCB-025A-M	Electro-Matic	EMPD3FBCB-025A-M
=V1AR22-FC1	1		EMPD3FBCB-025A-M	Electro-Matic	EMPD3FBCB-025A-M
=V1AR23-FC1	1		EMPD3FBCB-025A-M	Electro-Matic	EMPD3FBCB-025A-M
=V1AR24-FC1	1		EMPD3FBCB-025A-M	Electro-Matic	EMPD3FBCB-025A-M
=V1AR25-FC1	1		EMPD3FBCB-025A-M	Electro-Matic	EMPD3FBCB-025A-M
=V1AR26-FC1	1		EMPD3FBCB-025A-M	Electro-Matic	EMPD3FBCB-025A-M
=V1AR27-FC1	1		EMPD3FBCB-025A-M	Electro-Matic	EMPD3FBCB-025A-M
=V1AR28-FC1	1		EMPD3FBCB-100A-M	Electro-Matic	EMPD3FBCB-100A-M
=V1AR29-FC1	1		EMPD3FBCB-100A-M	Electro-Matic	EMPD3FBCB-100A-M
=V1AR31-FC1	1		EMPD3FBCB-025A-M	Electro-Matic	EMPD3FBCB-025A-M
=V1AR31XQ41-FC1	1		EMPD3FBCB-060A-M	Electro-Matic	EMPD3FBCB-060A-M
=V1AR81-FC1	1		EMPD3FBCB-025A-M	Electro-Matic	EMPD3FBCB-025A-M
=V1AR81XQ51-FC1	1		EMPD3FBCB-025A-M	Electro-Matic	EMPD3FBCB-025A-M
=V1AR81XQ52-FC1	1		EMPD3FBCB-025A-M	Electro-Matic	EMPD3FBCB-025A-M
=V1AR191-FC1	1		EMPD3FBCB-025A-M	Electro-Matic	EMPD3FBCB-025A-M
=V1AR211-FC1	1		EMPD3FBCB-025A-M	Electro-Matic	EMPD3FBCB-025A-M
=V1AR212-FC1	1		EMPD3FBCB-025A-M	Electro-Matic	EMPD3FBCB-025A-M
=V1GL2-FC1	1		EMPD3FBCB-025A-M	Electro-Matic	EMPD3FBCB-025A-M
=V1KF1-KF11	1				SIE.6ES7155-6AA01-0BN0_subassembly
=V1KF1-KF11	1	ET200SP, SERVERMODULE	6ES7193-6PA00-0AA0		SIE.6ES7193-6PA00-0AA0
=V1KF1-KF11.11	1	ET 200SP, DI 16x 24V DC ST, PU 1	6ES7131-6BH01-0BA0	SIE	SIE.6ES7131-6BH01-0BA0
=V1KF1-KF11.11	1	BASEUNIT TYPE A0, BU15-P16+A0+2D	6ES7193-6BP00-0DA0	SIE	SIE.6ES7193-6BP00-0DA0
=V1KF1-KF11.12	1	ET 200SP, DI 16x 24V DC ST, PU 1	6ES7131-6BH01-0BA0	SIE	SIE.6ES7131-6BH01-0BA0
=V1KF1-KF11.12	1	BASEUNIT TYPE A0, BU15-P16+A0+2B	6ES7193-6BP00-0BA0	SIE	SIE.6ES7193-6BP00-0BA0
=V1KF1-KF11.13	1	ET 200SP, DI 16x 24V DC ST, PU 1	6ES7131-6BH01-0BA0	SIE	SIE.6ES7131-6BH01-0BA0
=V1KF1-KF11.13	1	BASEUNIT TYPE A0, BU15-P16+A0+2B	6ES7193-6BP00-0BA0	SIE	SIE.6ES7193-6BP00-0BA0
=V1KF1-KF11.14	1	ET 200SP, DI 16x 24V DC ST, PU 1	6ES7131-6BH01-0BA0	SIE	SIE.6ES7131-6BH01-0BA0
=V1KF1-KF11.14	1	BASEUNIT TYPE A0, BU15-P16+A0+2B	6ES7193-6BP00-0BA0	SIE	SIE.6ES7193-6BP00-0BA0
=V1KF1-KF11.21	1	ET 200SP, DQ 16x 24V DC/0,5A ST, PU 1	6ES7132-6BH01-0BA0	SIE	SIE.6ES7132-6BH01-0BA0
=V1KF1-KF11.21	1	BASEUNIT TYPE A0, BU15-P16+A0+2D	6ES7193-6BP00-0DA0	SIE	SIE.6ES7193-6BP00-0DA0
=V1KF1-KF11.31	1	ET 200SP, El-Mod., F-DI 8x24VDC HF	6ES7136-6BA00-0CA0		SIE.6ES7136-6BA00-0CA0
=V1KF1-KF11.31	1	BASEUNIT TYPE A0, BU15-P16+A0+2B	6ES7193-6BP00-0BA0	SIE	SIE.6ES7193-6BP00-0BA0
=V1KF1-KF11.32	1	ET 200SP, El-Mod., F-DI 8x24VDC HF	6ES7136-6BA00-0CA0		SIE.6ES7136-6BA00-0CA0
=V1KF1-KF11.32	1	BASEUNIT TYPE A0, BU15-P16+A0+2B	6ES7193-6BP00-0BA0	SIE	SIE.6ES7193-6BP00-0BA0
=V1KF1-KF11.41	1	ET 200SP, El-Mod., F-DQ 4xDC 24V/2A	6ES7136-6DB00-0CA0		SIE.6ES7136-6DB00-0CA0
=V1KF1-KF11.41	1	BASEUNIT TYPE A0, BU15-P16+A0+2B	6ES7193-6BP00-0BA0	SIE	SIE.6ES7193-6BP00-0BA0
=V1KF1-KF11.42	1	ET 200SP, El-Mod., F-DQ 4xDC 24V/2A	6ES7136-6DB00-0CA0		SIE.6ES7136-6DB00-0CA0
=V1KF1-KF11.42	1	BASEUNIT TYPE A0, BU15-P16+A0+2B	6ES7193-6BP00-0BA0	SIE	SIE.6ES7193-6BP00-0BA0
=V1KF1-KF11.51	1	ET 200SP, F-RQ 1x24VDC/24..230VAC/5A ST	6ES7136-6RA00-0BF0		SIE.6ES7136-6RA00-0BF0
=V1KF1-KF11.51	1	BASEUNIT TYPE F0, BU20-P8+A4+0B	6ES7193-6BP20-0BF0	SIE	SIE.6ES7193-6BP20-0BF0
=V1KF1-KF11.52	1	ET 200SP, F-RQ 1x24VDC/24..230VAC/5A ST	6ES7136-6RA00-0BF0		SIE.6ES7136-6RA00-0BF0
=V1KF1-KF11.52	1	BASEUNIT TYPE F0, BU20-P8+A4+0B	6ES7193-6BP20-0BF0	SIE	SIE.6ES7193-6BP20-0BF0
=V1KF1-KF11.53	1	ET 200SP, F-RQ 1x24VDC/24..230VAC/5A ST	6ES7136-6RA00-0BF0		SIE.6ES7136-6RA00-0BF0
=V1KF1-KF11.53	1	BASEUNIT TYPE F0, BU20-P8+A4+0B	6ES7193-6BP20-0BF0	SIE	SIE.6ES7193-6BP20-0BF0
=V1KF1-KF11.54	1	ET 200SP, F-RQ 1x24VDC/24..230VAC/5A ST	6ES7136-6RA00-0BF0		SIE.6ES7136-6RA00-0BF0
=V1KF1-KF11.54	1	BASEUNIT TYPE F0, BU20-P8+A4+0B	6ES7193-6BP20-0BF0	SIE	SIE.6ES7193-6BP20-0BF0
=V1KF1-KF100.11	1	SCALANCE XC216	6GK5216-0BA00-2AC2	SIE	SIE.6GK5216-0BA00-2AC2
=V1WC1-FC1	1	MCCB_UL_FS125_15A_3P_65KA_TM_ FTFM	3VA5195-6ED31-0AA0	SIE	SIE.3VA5195-6ED31-0AA0
=V1WC1-KF1.1	1	BREAKER DATA SERVER, COM100	3VA9977-0TA20	SIE	SIE.3VA9977-0TA20
=V1WC1-KF1.2	1	Switched Ethernet PROFINET Module V3	7KM9300-0AE02-0AA0		SIE.7KM9300-0AE02-0AA0
=V1WC1-QB1	1	MCCB_UL_FS400_400A_3P_65KA_ETU8_LSI	3VA6340-6KP31-0AA0	SIE	SIE.3VA6340-6KP31-0AA0
=V1WC1-QB1-KF1	1	COMMUNICATION MODULE COM060	3VA9177-0TB10	SIE	SIE.3VA9177-0TB10
=V1WC1-TA1	1	Transformer	PTN102-3K	POWERTRAN	PTN102-3K
=V1WC2-A3	1	Multi-Environment Voltage Indicator and Safe-Test Point Combination Unit with Vertical Flange Warning Label	GT.R-3W2MT-LMF		GT.R-3W2MT-LMF
=V1WC2-FC1	1	MCCB_UL_FS125_20A_3P_65KA_TM_ FTFM	3VA5120-6ED31-0AA0	SIE	SIE.3VA5120-6ED31-0AA0

Parts list

F01_001

Device tag	Quantity	Designation	Type number	Supplier	Part number
=V1WC2-FC1	1	SENTRON auxiliary switch Accessories for 3VA circuit breakers	3VA9978-0AA12	SIE	SIE.3VA9978-0AA12
=V1WC2-TA2	1	Transformer	PTN102-7.5K	POWERTRAN	PTN102-7.5K
=V1WC3-FC2	1	CIRCUIT BREAKER 240V 14KA, 1-POLE, C, 20A, D=70MM	5SJ4120-7HG41	SIE	SIE.5SJ4120-7HG41
=V1WC3-FC2	1	AUXILARY SWITCH 1NO1NC UL489	5ST3010-0HG	SIE	SIE.5ST3010-0HG
=V1WC3-FC3	1	CIRCUIT BREAKER 240V 14KA, 1-POLE, C, 10A, D=70MM	5SJ4110-7HG41	SIE	SIE.5SJ4110-7HG41
=V1WC3-FC3	1	AUXILARY SWITCH 1NO1NC UL489	5ST3010-0HG	SIE	SIE.5ST3010-0HG
=V1WC3-FC4	1	CIRCUIT BREAKER 240V 14KA, 1-POLE, C, 3A, D=70MM	5SJ4103-7HG41	SIE	SIE.5SJ4103-7HG41
=V1WC3-FC4	1	AUXILARY SWITCH 1NO1NC UL489	5ST3010-0HG	SIE	SIE.5ST3010-0HG
=V1WC3-FC5	1	CIRCUIT BREAKER 240V 14KA, 1-POLE, C, 16A, D=70MM	5SJ4116-7HG41	SIE	SIE.5SJ4116-7HG41
=V1WC3-FC6	1	CIRCUIT BREAKER 240V 14KA, 1-POLE, C, 16A, D=70MM	5SJ4116-7HG41	SIE	SIE.5SJ4116-7HG41
=V1WC3-FC6	1	AUXILARY SWITCH 1NO1NC UL489	5ST3010-0HG	SIE	SIE.5ST3010-0HG
=V1WC3-FC7	1	CIRCUIT BREAKER 240V 14KA, 1-POLE, C, 16A, D=70MM	5SJ4116-7HG41	SIE	SIE.5SJ4116-7HG41
=V1WC3-FC7	1	AUXILARY SWITCH 1NO1NC UL489	5ST3010-0HG	SIE	SIE.5ST3010-0HG
=V1WC3-FC8	1	CIRCUIT BREAKER 240V 14KA, 1-POLE, C, 16A, D=70MM	5SJ4116-7HG41	SIE	SIE.5SJ4116-7HG41
=V1WC3-FC8	1	AUXILARY SWITCH 1NO1NC UL489	5ST3010-0HG	SIE	SIE.5ST3010-0HG
=V1WC3-FC9	1	CIRCUIT BREAKER 240V 14KA, 1-POLE, C, 6A, D=70MM	5SJ4106-7HG41	SIE	SIE.5SJ4106-7HG41
=V1WC3-FC9	1	AUXILARY SWITCH 1NO1NC UL489	5ST3010-0HG	SIE	SIE.5ST3010-0HG
=V1WC3-FC10	1	CIRCUIT BREAKER 240V 14KA, 1-POLE, C, 30A, D=70MM	5SJ4130-7HG41	SIE	SIE.5SJ4130-7HG41
=V1WC3-FC10	1	AUXILARY SWITCH 1NO1NC UL489	5ST3010-0HG	SIE	SIE.5ST3010-0HG
=V1WC3-FC11	1	CIRCUIT BREAKER 240V 14KA, 1-POLE, C, 6A, D=70MM	5SJ4106-7HG41	SIE	SIE.5SJ4106-7HG41
=V1WC3-FC11	1	AUXILARY SWITCH 1NO1NC UL489	5ST3010-0HG	SIE	SIE.5ST3010-0HG
=V1WC3-FC12	1	CIRCUIT BREAKER 240V 14KA, 1-POLE, C, 16A, D=70MM	5SJ4116-7HG41	SIE	SIE.5SJ4116-7HG41
=V1WC3-XG1	2	DBL175 Series Distribution Block	1SNL317510R0000	ENTRELEC	1SNL317510R0000
=V1WC3-XG2	2	DBL175 Series Distribution Block	1SNL317510R0000	ENTRELEC	1SNL317510R0000
=V1WC3-XG3	1	Panel Interface Connector with USB Type A/F to USB Type A/M [Qty: 2]; Category 5e RJ45; Panel Mount Housing; UL Type 4; Duplex Outlet; 5 Amp Circuit Breaker	GT_N.P-P11#2R2-K3RD5		GT_N.P-P11#2R2-K3RD5
=V1WC4-FC11	1	SITOP SEL1200 8 x 10A	6EP4438-7FB00-3DX0		SIE.6EP4438-7FB00-3DX0
=V1WC4-FC12	1	SITOP SEL1200 8 x 10A	6EP4438-7FB00-3DX0		SIE.6EP4438-7FB00-3DX0
=V1WC4-TA1	1	SITOP PSU6200 1ph 24 V/20 A	6EP3336-7SB00-3AX0		SIE.6EP3336-7SB00-3AX0
=V1WC4-TA2	1	SITOP PSU6200 1ph 24 V/20 A	6EP3336-7SB00-3AX0		SIE.6EP3336-7SB00-3AX0
=WC1-WC1	1	Golvskåp TS 8 sidskåp	TS8	RIT	RIT.SETS8205SID5
=WC1-WC1	1	TS Trim panel, sides, H: 100 mm, for W: 500 mm, RAL 7022, sheet steel	TS.8601050	RIT	RIT.8601050
=WC1-WC1	1	TS Base/plinth component, rear, H: 100 mm, for W: 1200 mm, RAL 7022, sheet steel	TS.8601200	RIT	RIT.8601200
=WC1-WC1	1	TS Side panel, screw-fastened, for TS, TS IT, for WD: 2000x500 mm, Sheet steel	TS.8105235	RIT	RIT.8105235
=WC1-WC1	1	PS Wiring plan pockets, for TS, CM, SE, PC, TP pedestal, sheet steel	TS.4115000	RIT	RIT.4115000

Parts list

F01_001

Device tag	Quantity	Designation	Type number	Supplier	Part number
=V1AR12-FC1	1		EMPD3FBCB-025A-M	Electro-Matic	EMPD3FBCB-025A-M
=V1AR13-FC1	1		EMPD3FBCB-025A-M	Electro-Matic	EMPD3FBCB-025A-M
=V1AR14-FC1	1		EMPD3FBCB-025A-M	Electro-Matic	EMPD3FBCB-025A-M
=V1AR22-FC1	1		EMPD3FBCB-025A-M	Electro-Matic	EMPD3FBCB-025A-M
=V1AR24-FC1	1		EMPD3FBCB-025A-M	Electro-Matic	EMPD3FBCB-025A-M
=V1AR25-FC1	1		EMPD3FBCB-025A-M	Electro-Matic	EMPD3FBCB-025A-M
=V1AR27-FC1	1		EMPD3FBCB-025A-M	Electro-Matic	EMPD3FBCB-025A-M
=V1AR29-FC1	1		EMPD3FBCB-025A-M	Electro-Matic	EMPD3FBCB-025A-M
=V1AR51-FC1	1		EMPD3FBCB-025A-M	Electro-Matic	EMPD3FBCB-025A-M
=V1AR51XQ51-FC1	1		EMPD3FBCB-030A-M	Electro-Matic	EMPD3FBCB-030A-M
=V1AR53-FC1	1		EMPD3FBCB-025A-M	Electro-Matic	EMPD3FBCB-025A-M
=V1AR53XQ51-FC1	1		EMPD3FBCB-030A-M	Electro-Matic	EMPD3FBCB-030A-M
=V1AR191-FC1	1		EMPD3FBCB-025A-M	Electro-Matic	EMPD3FBCB-025A-M
=V1AR192-FC1	1		EMPD3FBCB-025A-M	Electro-Matic	EMPD3FBCB-025A-M
=V1AR212-FC1	1		EMPD3FBCB-025A-M	Electro-Matic	EMPD3FBCB-025A-M
=V1GL1-FC1	1		EMPD3FBCB-025A-M	Electro-Matic	EMPD3FBCB-025A-M
=V1KF1-KF12	1				SIE.6ES7155-6AA01-0BN0_subassembly
=V1KF1-KF12	1	ET200SP, SERVERMODULE	6ES7193-6PA00-0AA0		SIE.6ES7193-6PA00-0AA0
=V1KF1-KF12.11	1	ET 200SP, DI 16x 24V DC ST, PU 1	6ES7131-6BH01-0BA0	SIE	SIE.6ES7131-6BH01-0BA0
=V1KF1-KF12.11	1	BASEUNIT TYPE A0, BU15-P16+A0+2D	6ES7193-6BP00-0DA0	SIE	SIE.6ES7193-6BP00-0DA0
=V1KF1-KF12.12	1	ET 200SP, DI 16x 24V DC ST, PU 1	6ES7131-6BH01-0BA0	SIE	SIE.6ES7131-6BH01-0BA0
=V1KF1-KF12.12	1	BASEUNIT TYPE A0, BU15-P16+A0+2D	6ES7193-6BP00-0DA0	SIE	SIE.6ES7193-6BP00-0DA0
=V1KF1-KF12.13	1	ET 200SP, DI 16x 24V DC ST, PU 1	6ES7131-6BH01-0BA0	SIE	SIE.6ES7131-6BH01-0BA0
=V1KF1-KF12.13	1	BASEUNIT TYPE A0, BU15-P16+A0+2D	6ES7193-6BP00-0DA0	SIE	SIE.6ES7193-6BP00-0DA0
=V1KF1-KF12.14	1	ET 200SP, DI 16x 24V DC ST, PU 1	6ES7131-6BH01-0BA0	SIE	SIE.6ES7131-6BH01-0BA0
=V1KF1-KF12.14	1	BASEUNIT TYPE A0, BU15-P16+A0+2D	6ES7193-6BP00-0DA0	SIE	SIE.6ES7193-6BP00-0DA0
=V1KF1-KF12.21	1	ET 200SP, DQ 16x 24V DC/0,5A ST, PU 1	6ES7132-6BH01-0BA0	SIE	SIE.6ES7132-6BH01-0BA0
=V1KF1-KF12.21	1	BASEUNIT TYPE A0, BU15-P16+A0+2D	6ES7193-6BP00-0DA0	SIE	SIE.6ES7193-6BP00-0DA0
=V1KF1-KF12.31	1	ET 200SP, El-Mod., F-DI 8x24VDC HF	6ES7136-6BA00-0CA0		SIE.6ES7136-6BA00-0CA0
=V1KF1-KF12.31	1	BASEUNIT TYPE A0, BU15-P16+A0+2B	6ES7193-6BP00-0BA0	SIE	SIE.6ES7193-6BP00-0BA0
=V1KF1-KF12.32	1	ET 200SP, El-Mod., F-DI 8x24VDC HF	6ES7136-6BA00-0CA0		SIE.6ES7136-6BA00-0CA0
=V1KF1-KF12.32	1	BASEUNIT TYPE A0, BU15-P16+A0+2B	6ES7193-6BP00-0BA0	SIE	SIE.6ES7193-6BP00-0BA0
=V1KF1-KF12.41	1	ET 200SP, El-Mod., F-DQ 4xDC 24V/2A	6ES7136-6DB00-0CA0		SIE.6ES7136-6DB00-0CA0
=V1KF1-KF12.41	1	BASEUNIT TYPE A0, BU15-P16+A0+2B	6ES7193-6BP00-0BA0	SIE	SIE.6ES7193-6BP00-0BA0
=V1KF1-KF12.42	1	ET 200SP, El-Mod., F-DQ 4xDC 24V/2A	6ES7136-6DB00-0CA0		SIE.6ES7136-6DB00-0CA0
=V1KF1-KF12.42	1	BASEUNIT TYPE A0, BU15-P16+A0+2B	6ES7193-6BP00-0BA0	SIE	SIE.6ES7193-6BP00-0BA0
=V1KF1-KF12.51	1	ET 200SP, F-RQ 1x24VDC/24..230VAC/5A ST	6ES7136-6RA00-0BF0		SIE.6ES7136-6RA00-0BF0
=V1KF1-KF12.51	1	BASEUNIT TYPE F0, BU20-P8+A4+0B	6ES7193-6BP20-0BF0	SIE	SIE.6ES7193-6BP20-0BF0
=V1KF1-KF12.52	1	ET 200SP, F-RQ 1x24VDC/24..230VAC/5A ST	6ES7136-6RA00-0BF0		SIE.6ES7136-6RA00-0BF0
=V1KF1-KF12.52	1	BASEUNIT TYPE F0, BU20-P8+A4+0B	6ES7193-6BP20-0BF0	SIE	SIE.6ES7193-6BP20-0BF0
=V1KF1-KF12.53	1	ET 200SP, F-RQ 1x24VDC/24..230VAC/5A ST	6ES7136-6RA00-0BF0		SIE.6ES7136-6RA00-0BF0
=V1KF1-KF12.53	1	BASEUNIT TYPE F0, BU20-P8+A4+0B	6ES7193-6BP20-0BF0	SIE	SIE.6ES7193-6BP20-0BF0
=V1KF1-KF12.54	1	ET 200SP, F-RQ 1x24VDC/24..230VAC/5A ST	6ES7136-6RA00-0BF0		SIE.6ES7136-6RA00-0BF0
=V1KF1-KF12.54	1	BASEUNIT TYPE F0, BU20-P8+A4+0B	6ES7193-6BP20-0BF0	SIE	SIE.6ES7193-6BP20-0BF0
=V1KF1-KF100.12	1	SCALANCE XC216	6GK5216-0BA00-2AC2	SIE	SIE.6GK5216-0BA00-2AC2
=V1KF1-KF100.12	1	C-PLUG	6GK1900-0AB10	SIE	SIE.6GK1900-0AB10
=V1WC1-FC1	1	MCCB_UL_FS125_15A_3P_65KA_TM_ FTFM	3VA5195-6ED31-0AA0	SIE	SIE.3VA5195-6ED31-0AA0
=V1WC1-KF1.1	1	BREAKER DATA SERVER, COM100	3VA9977-0TA20	SIE	SIE.3VA9977-0TA20
=V1WC1-KF1.2	1	Switched Ethernet PROFINET Module V3	7KM9300-0AE02-0AA0		SIE.7KM9300-0AE02-0AA0
=V1WC1-QB1	1	MCCB_UL_FS250_250A_3P_65KA_ETU8_LSI	3VA6225-6KP31-0AA0	SIE	SIE.3VA6225-6KP31-0AA0
=V1WC1-QB1-KF1	1	COMMUNICATION MODULE COM060	3VA9177-0TB10	SIE	SIE.3VA9177-0TB10
=V1WC1-TA1	1	Transformer	PTN102-3K	POWERTRAN	PTN102-3K
=V1WC2-A3	1	Multi-Environment Voltage Indicator and Safe-Test Point Combination Unit with Vertical Flange Warning Label	R-3W2MT-LMF		GT.R-3W2MT-LMF
=V1WC2-FC1	1	MCCB_UL_FS125_20A_3P_65KA_TM_ FTFM	3VA5120-6ED31-0AA0	SIE	SIE.3VA5120-6ED31-0AA0
=V1WC2-FC1	1	SENTRON auxiliary switch Accessories for 3VA circuit breakers	3VA9978-0AA12	SIE	SIE.3VA9978-0AA12
=V1WC2-TA2	1	Transformer	PTN102-7.5K	POWERTRAN	PTN102-7.5K

Parts list

F01_001

Device tag	Quantity	Designation	Type number	Supplier	Part number
=V1WC3-FC2	1	CIRCUIT BREAKER 240V 14KA, 1-POLE, C, 20A, D=70MM	5SJ4120-7HG41	SIE	SIE.5SJ4120-7HG41
=V1WC3-FC2	1	AUXILARY SWITCH 1NO1NC UL489	5ST3010-0HG	SIE	SIE.5ST3010-0HG
=V1WC3-FC3	1	CIRCUIT BREAKER 240V 14KA, 1-POLE, C, 10A, D=70MM	5SJ4110-7HG41	SIE	SIE.5SJ4110-7HG41
=V1WC3-FC3	1	AUXILARY SWITCH 1NO1NC UL489	5ST3010-0HG	SIE	SIE.5ST3010-0HG
=V1WC3-FC4	1	CIRCUIT BREAKER 240V 14KA, 1-POLE, C, 3A, D=70MM	5SJ4103-7HG41	SIE	SIE.5SJ4103-7HG41
=V1WC3-FC4	1	AUXILARY SWITCH 1NO1NC UL489	5ST3010-0HG	SIE	SIE.5ST3010-0HG
=V1WC3-FC5	1	CIRCUIT BREAKER 240V 14KA, 1-POLE, C, 16A, D=70MM	5SJ4116-7HG41	SIE	SIE.5SJ4116-7HG41
=V1WC3-FC6	1	CIRCUIT BREAKER 240V 14KA, 1-POLE, C, 16A, D=70MM	5SJ4116-7HG41	SIE	SIE.5SJ4116-7HG41
=V1WC3-FC6	1	AUXILARY SWITCH 1NO1NC UL489	5ST3010-0HG	SIE	SIE.5ST3010-0HG
=V1WC3-FC7	1	CIRCUIT BREAKER 240V 14KA, 1-POLE, C, 16A, D=70MM	5SJ4116-7HG41	SIE	SIE.5SJ4116-7HG41
=V1WC3-FC7	1	AUXILARY SWITCH 1NO1NC UL489	5ST3010-0HG	SIE	SIE.5ST3010-0HG
=V1WC3-FC8	1	CIRCUIT BREAKER 240V 14KA, 1-POLE, C, 16A, D=70MM	5SJ4116-7HG41	SIE	SIE.5SJ4116-7HG41
=V1WC3-FC8	1	AUXILARY SWITCH 1NO1NC UL489	5ST3010-0HG	SIE	SIE.5ST3010-0HG
=V1WC3-FC9	1	CIRCUIT BREAKER 240V 14KA, 1-POLE, C, 6A, D=70MM	5SJ4106-7HG41	SIE	SIE.5SJ4106-7HG41
=V1WC3-FC9	1	AUXILARY SWITCH 1NO1NC UL489	5ST3010-0HG	SIE	SIE.5ST3010-0HG
=V1WC3-FC10	1	CIRCUIT BREAKER 240V 14KA, 1-POLE, C, 16A, D=70MM	5SJ4116-7HG41	SIE	SIE.5SJ4116-7HG41
=V1WC3-XG1	2	DBL175 Series Distribution Block	1SNL317510R0000	ENTRELEC	1SNL317510R0000
=V1WC3-XG2	2	DBL175 Series Distribution Block	1SNL317510R0000	ENTRELEC	1SNL317510R0000
=V1WC3-XG3	1	Panel Interface Connector with USB Type A/F to USB Type A/M [Qty: 2]; Category 5e RJ45 Panel Mount Housing; UL Type 4; Duplex Outlet; 5 Amp Circuit Breaker	P45 1-P282-K3RD5		GT_N.P-P11#2R2-K3RD5
=V1WC4-FC11	1	SITOP SEL1200 8 x 10A	6EP4438-7FB00-3DX0		SIE.6EP4438-7FB00-3DX0
=V1WC4-FC12	1	SITOP SEL1200 8 x 10A	6EP4438-7FB00-3DX0		SIE.6EP4438-7FB00-3DX0
=V1WC4-TA1	1	SITOP PSU6200 1ph 24 V/20 A	6EP3336-7SB00-3AX0		SIE.6EP3336-7SB00-3AX0
=V1WC4-TA2	1	SITOP PSU6200 1ph 24 V/20 A	6EP3336-7SB00-3AX0		SIE.6EP3336-7SB00-3AX0
=WC1-WC1	1	Golvskåp TS 8 sidskåp	TS8	RIT	RIT.SETS8205SID5
=WC1-WC1	1	TS Trim panel, sides, H: 100 mm, for W: 500 mm, RAL 7022, sheet steel	TS.8601050	RIT	RIT.8601050
=WC1-WC1	1	TS Base/plinth component, rear, H: 100 mm, for W: 1200 mm, RAL 7022, sheet steel	TS.8601200	RIT	RIT.8601200
=WC1-WC1	1	TS Side panel, screw-fastened, for TS, TS IT, for WD: 2000x500 mm, Sheet steel	TS.8105235	RIT	RIT.8105235
=WC1-WC1	1	PS Wiring plan pockets, for TS, CM, SE, PC, TP pedestal, sheet steel	TS.4115000	RIT	RIT.4115000

Parts list

F01_001

Device tag	Quantity	Designation	Type number	Supplier	Part number
=V1KF1-KF14	1				SIE.6ES7155-6AA01-0BN0_subassembly
=V1KF1-KF14	1	ET200SP, SERVERMODULE	6ES7193-6PA00-0AA0		SIE.6ES7193-6PA00-0AA0
=V1KF1-KF14.11	1	ET 200SP, DI 16x 24V DC ST, PU 1	6ES7131-6BH01-0BA0	SIE	SIE.6ES7131-6BH01-0BA0
=V1KF1-KF14.11	1	BASEUNIT TYPE A0, BU15-P16+A0+2D	6ES7193-6BP00-0DA0	SIE	SIE.6ES7193-6BP00-0DA0
=V1KF1-KF14.12	1	ET 200SP, DI 16x 24V DC ST, PU 1	6ES7131-6BH01-0BA0	SIE	SIE.6ES7131-6BH01-0BA0
=V1KF1-KF14.12	1	BASEUNIT TYPE A0, BU15-P16+A0+2D	6ES7193-6BP00-0DA0	SIE	SIE.6ES7193-6BP00-0DA0
=V1KF1-KF14.21	1	ET 200SP, DQ 16x 24V DC/0,5A ST, PU 1	6ES7132-6BH01-0BA0	SIE	SIE.6ES7132-6BH01-0BA0
=V1KF1-KF14.21	1	BASEUNIT TYPE A0, BU15-P16+A0+2D	6ES7193-6BP00-0DA0	SIE	SIE.6ES7193-6BP00-0DA0
=V1KF1-KF14.31	1	ET 200SP, El-Mod., F-DI 8x24VDC HF	6ES7136-6BA00-0CA0		SIE.6ES7136-6BA00-0CA0
=V1KF1-KF14.31	1	BASEUNIT TYPE A0, BU15-P16+A0+2B	6ES7193-6BP00-0BA0	SIE	SIE.6ES7193-6BP00-0BA0
=V1KF1-KF14.32	1	ET 200SP, El-Mod., F-DI 8x24VDC HF	6ES7136-6BA00-0CA0		SIE.6ES7136-6BA00-0CA0
=V1KF1-KF14.32	1	BASEUNIT TYPE A0, BU15-P16+A0+2B	6ES7193-6BP00-0BA0	SIE	SIE.6ES7193-6BP00-0BA0
=V1KF1-KF14.41	1	ET 200SP, El-Mod., F-DQ 4xDC 24V/2A	6ES7136-6DB00-0CA0		SIE.6ES7136-6DB00-0CA0
=V1KF1-KF14.41	1	BASEUNIT TYPE A0, BU15-P16+A0+2B	6ES7193-6BP00-0BA0	SIE	SIE.6ES7193-6BP00-0BA0
=V1KF1-KF14.42	1	ET 200SP, El-Mod., F-DQ 4xDC 24V/2A	6ES7136-6DB00-0CA0		SIE.6ES7136-6DB00-0CA0
=V1KF1-KF14.42	1	BASEUNIT TYPE A0, BU15-P16+A0+2B	6ES7193-6BP00-0BA0	SIE	SIE.6ES7193-6BP00-0BA0
=V1KF1-KF14.51	1	ET 200SP, F-RQ 1x24VDC/24..230VAC/5A ST	6ES7136-6RA00-0BF0		SIE.6ES7136-6RA00-0BF0
=V1KF1-KF14.51	1	BASEUNIT TYPE F0, BU20-P8+A4+0B	6ES7193-6BP20-0BF0	SIE	SIE.6ES7193-6BP20-0BF0
=V1KF1-KF14.52	1	ET 200SP, F-RQ 1x24VDC/24..230VAC/5A ST	6ES7136-6RA00-0BF0		SIE.6ES7136-6RA00-0BF0
=V1KF1-KF14.52	1	BASEUNIT TYPE F0, BU20-P8+A4+0B	6ES7193-6BP20-0BF0	SIE	SIE.6ES7193-6BP20-0BF0
=V1KF1-KF14.53	1	ET 200SP, F-RQ 1x24VDC/24..230VAC/5A ST	6ES7136-6RA00-0BF0		SIE.6ES7136-6RA00-0BF0
=V1KF1-KF14.53	1	BASEUNIT TYPE F0, BU20-P8+A4+0B	6ES7193-6BP20-0BF0	SIE	SIE.6ES7193-6BP20-0BF0
=V1KF1-KF14.54	1	ET 200SP, F-RQ 1x24VDC/24..230VAC/5A ST	6ES7136-6RA00-0BF0		SIE.6ES7136-6RA00-0BF0
=V1KF1-KF14.54	1	BASEUNIT TYPE F0, BU20-P8+A4+0B	6ES7193-6BP20-0BF0	SIE	SIE.6ES7193-6BP20-0BF0
=V1KF1-KF100.14	1	SCALANCE XC216	6GK5216-0BA00-2AC2	SIE	SIE.6GK5216-0BA00-2AC2
=V1KF1-KF100.14	1	C-PLUG	6GK1900-0AB10	SIE	SIE.6GK1900-0AB10
=V1WC3-FC1	1	CIRCUIT BREAKER 240V 14KA, 1-POLE, C, 16A, D=70MM	5SJ4116-7HG41	SIE	SIE.5SJ4116-7HG41
=V1WC3-FC1	1	AUXILARY SWITCH 1NO1NC UL489	5ST3010-0HG	SIE	SIE.5ST3010-0HG
=V1WC3-FC2	1	CIRCUIT BREAKER 240V 14KA, 1-POLE, C, 3A, D=70MM	5SJ4103-7HG41	SIE	SIE.5SJ4103-7HG41
=V1WC3-FC2	1	AUXILARY SWITCH 1NO1NC UL489	5ST3010-0HG	SIE	SIE.5ST3010-0HG
=V1WC3-FC3	1	CIRCUIT BREAKER 240V 14KA, 1-POLE, C, 16A, D=70MM	5SJ4116-7HG41	SIE	SIE.5SJ4116-7HG41
=V1WC3-XG2	1	Panel Interface Connector with USB Type A/F to USB Type A/M [Qty: 2]; Category 5e RJ45; Panel Mount Housing; UL Type 4; Duplex Outlet; 5 Amp Circuit Breaker	RJ45/USB2PNQ3RD5		GT_N.P-P11#2R2-K3RD5
=V1WC4-FC11	1	SITOP SEL1200 8 x 10A	6EP4438-7FB00-3DX0		SIE.6EP4438-7FB00-3DX0
=V1WC4-FC12	1	SITOP SEL1200 8 x 10A	6EP4438-7FB00-3DX0		SIE.6EP4438-7FB00-3DX0
=V1WC4-TA1	1	SITOP PSU6200 1ph 24 V/20 A	6EP3336-7SB00-3AX0		SIE.6EP3336-7SB00-3AX0
=V1WC4-XG51	1	TEE, 5-PIN MINI, STANDARD KEYWAY	RSM-2RKM 50	TURCK	TUR.RSM-2RKM 50

Parts list

F01_001

Device tag	Quantity	Designation	Type number	Supplier	Part number
=V1KF1-KF15	1				SIE.6ES7155-6AA01-0BN0_subassembly
=V1KF1-KF15	1	ET200SP, SERVERMODULE	6ES7193-6PA00-0AA0		SIE.6ES7193-6PA00-0AA0
=V1KF1-KF15.11	1	ET 200SP, DI 16x 24V DC ST, PU 1	6ES7131-6BH01-0BA0	SIE	SIE.6ES7131-6BH01-0BA0
=V1KF1-KF15.11	1	BASEUNIT TYPE A0, BU15-P16+A0+2D	6ES7193-6BP00-0DA0	SIE	SIE.6ES7193-6BP00-0DA0
=V1KF1-KF15.12	1	ET 200SP, DI 16x 24V DC ST, PU 1	6ES7131-6BH01-0BA0	SIE	SIE.6ES7131-6BH01-0BA0
=V1KF1-KF15.12	1	BASEUNIT TYPE A0, BU15-P16+A0+2D	6ES7193-6BP00-0DA0	SIE	SIE.6ES7193-6BP00-0DA0
=V1KF1-KF15.21	1	ET 200SP, DQ 16x 24V DC/0,5A ST, PU 1	6ES7132-6BH01-0BA0	SIE	SIE.6ES7132-6BH01-0BA0
=V1KF1-KF15.21	1	BASEUNIT TYPE A0, BU15-P16+A0+2D	6ES7193-6BP00-0DA0	SIE	SIE.6ES7193-6BP00-0DA0
=V1KF1-KF15.31	1	ET 200SP, El-Mod., F-DI 8x24VDC HF	6ES7136-6BA00-0CA0		SIE.6ES7136-6BA00-0CA0
=V1KF1-KF15.31	1	BASEUNIT TYPE A0, BU15-P16+A0+2B	6ES7193-6BP00-0BA0	SIE	SIE.6ES7193-6BP00-0BA0
=V1KF1-KF15.32	1	ET 200SP, El-Mod., F-DI 8x24VDC HF	6ES7136-6BA00-0CA0		SIE.6ES7136-6BA00-0CA0
=V1KF1-KF15.32	1	BASEUNIT TYPE A0, BU15-P16+A0+2B	6ES7193-6BP00-0BA0	SIE	SIE.6ES7193-6BP00-0BA0
=V1KF1-KF15.41	1	ET 200SP, El-Mod., F-DQ 4xDC 24V/2A	6ES7136-6DB00-0CA0		SIE.6ES7136-6DB00-0CA0
=V1KF1-KF15.41	1	BASEUNIT TYPE A0, BU15-P16+A0+2B	6ES7193-6BP00-0BA0	SIE	SIE.6ES7193-6BP00-0BA0
=V1KF1-KF15.42	1	ET 200SP, El-Mod., F-DQ 4xDC 24V/2A	6ES7136-6DB00-0CA0		SIE.6ES7136-6DB00-0CA0
=V1KF1-KF15.42	1	BASEUNIT TYPE A0, BU15-P16+A0+2B	6ES7193-6BP00-0BA0	SIE	SIE.6ES7193-6BP00-0BA0
=V1KF1-KF15.51	1	ET 200SP, F-RQ 1x24VDC/24..230VAC/5A ST	6ES7136-6RA00-0BF0		SIE.6ES7136-6RA00-0BF0
=V1KF1-KF15.51	1	BASEUNIT TYPE F0, BU20-P8+A4+0B	6ES7193-6BP20-0BF0	SIE	SIE.6ES7193-6BP20-0BF0
=V1KF1-KF15.52	1	ET 200SP, F-RQ 1x24VDC/24..230VAC/5A ST	6ES7136-6RA00-0BF0		SIE.6ES7136-6RA00-0BF0
=V1KF1-KF15.52	1	BASEUNIT TYPE F0, BU20-P8+A4+0B	6ES7193-6BP20-0BF0	SIE	SIE.6ES7193-6BP20-0BF0
=V1KF1-KF15.53	1	ET 200SP, F-RQ 1x24VDC/24..230VAC/5A ST	6ES7136-6RA00-0BF0		SIE.6ES7136-6RA00-0BF0
=V1KF1-KF15.53	1	BASEUNIT TYPE F0, BU20-P8+A4+0B	6ES7193-6BP20-0BF0	SIE	SIE.6ES7193-6BP20-0BF0
=V1KF1-KF15.54	1	ET 200SP, F-RQ 1x24VDC/24..230VAC/5A ST	6ES7136-6RA00-0BF0		SIE.6ES7136-6RA00-0BF0
=V1KF1-KF15.54	1	BASEUNIT TYPE F0, BU20-P8+A4+0B	6ES7193-6BP20-0BF0	SIE	SIE.6ES7193-6BP20-0BF0
=V1KF1-KF100.15	1	SCALANCE XC216	6GK5216-0BA00-2AC2	SIE	SIE.6GK5216-0BA00-2AC2
=V1KF1-KF100.15	1	C-PLUG	6GK1900-0AB10	SIE	SIE.6GK1900-0AB10
=V1WC3-FC1	1	CIRCUIT BREAKER 240V 14KA, 1-POLE, C, 16A, D=70MM	5SJ4116-7HG41	SIE	SIE.5SJ4116-7HG41
=V1WC3-FC1	1	AUXILARY SWITCH 1NO1NC UL489	5ST3010-0HG	SIE	SIE.5ST3010-0HG
=V1WC3-FC2	1	CIRCUIT BREAKER 240V 14KA, 1-POLE, C, 3A, D=70MM	5SJ4103-7HG41	SIE	SIE.5SJ4103-7HG41
=V1WC3-FC2	1	AUXILARY SWITCH 1NO1NC UL489	5ST3010-0HG	SIE	SIE.5ST3010-0HG
=V1WC3-FC3	1	CIRCUIT BREAKER 240V 14KA, 1-POLE, C, 16A, D=70MM	5SJ4116-7HG41	SIE	SIE.5SJ4116-7HG41
=V1WC3-XG2	1	Panel Interface Connector with USB Type A/F to USB Type A/M [Qty: 2]; Category 5e RJ45 Panel Mount Housing; UL Type 4; Duplex Outlet; 5 Amp Circuit Breaker	RJ45-1-K2RD-K3RD5		GT_N.P-P11#2R2-K3RD5
=V1WC4-FC11	1	SITOP SEL1200 8 x 10A	6EP4438-7FB00-3DX0		SIE.6EP4438-7FB00-3DX0
=V1WC4-FC12	1	SITOP SEL1200 8 x 10A	6EP4438-7FB00-3DX0		SIE.6EP4438-7FB00-3DX0
=V1WC4-TA1	1	SITOP PSU6200 1ph 24 V/20 A	6EP3336-7SB00-3AX0		SIE.6EP3336-7SB00-3AX0

Parts list

F01_001

Device tag	Quantity	Designation	Type number	Supplier	Part number
=V1KF1-KF32	1				SIE.6ES7155-6AA01-0BN0_subassembly
=V1KF1-KF32	1	ET200SP, SERVERMODULE	6ES7193-6PA00-0AA0		SIE.6ES7193-6PA00-0AA0
=V1KF1-KF32.11	1	ET 200SP, DI 16x 24V DC ST, PU 1	6ES7131-6BH01-0BA0	SIE	SIE.6ES7131-6BH01-0BA0
=V1KF1-KF32.11	1	BASEUNIT TYPE A0, BU15-P16+A0+2D	6ES7193-6BP00-0DA0	SIE	SIE.6ES7193-6BP00-0DA0
=V1KF1-KF32.21	1	ET 200SP, DQ 16x 24V DC/0,5A ST, PU 1	6ES7132-6BH01-0BA0	SIE	SIE.6ES7132-6BH01-0BA0
=V1KF1-KF32.21	1	BASEUNIT TYPE A0, BU15-P16+A0+2D	6ES7193-6BP00-0DA0	SIE	SIE.6ES7193-6BP00-0DA0
=V1KF1-KF32.31	1	ET 200SP, El-Mod., F-DI 8x24VDC HF	6ES7136-6BA01-0CA0	SIE	SIE.6ES7136-6BA01-0CA0
=V1KF1-KF32.31	1	BASEUNIT TYPE A0, BU15-P16+A0+2D	6ES7193-6BP00-0DA0	SIE	SIE.6ES7193-6BP00-0DA0
=V1KF1-PNET1	1	Profinet cable - RJ45 plug to M12 Female receptacle; 1m long	RJ45S FKSDED 423-1M	TURCK	TUR.RJ45S FKSDED 423-1M
=V1SF0PG1-M1	1	Ground bar kit, 5 positions.	ECGB5	SIE	US2.ECGB5
=V1SF0PG1-M1	1	Wiring Duct Covers, PVC	C1.5LG6	PAN	PAN.C1.5LG6
=V1SF0PG1-M1	1	Wiring Duct Covers, PVC	C1LG6	PAN	PAN.C1LG6
=V1SF0PG1-M1	1	Wide Slotted Wiring Duct, PVC	G1.5X4LG6	PAN	PAN.G1.5X4LG6
=V1SF0PG1-M1	1	Wide Slotted Wiring Duct, PVC	G1X4LG6	PAN	PAN.G1X4LG6
=V1SF0PG1-PG1	1	SIMATIC HMI TP1500 COMFORT	6AV2124-0QC02-0AX1	SIE	SIE.6AV2124-0QC02-0AX1
=V1SF0PG1-PG1	1	SIMATIC HMI SD MEMORY CARD 2 GB	6AV2181-8XP00-0AX0	SIE	SIE.6AV2181-8XP00-0AX0
=V1SF0PG1-SF1	1	PUSHBUTTON CP1-10G-20	CP1-10G-20	ABB	ABB.1SFA619100R1022
=V1SF0PG1-SF2	1	PUSHBUTTON CP1-10Y-20	CP1-10Y-20	ABB	ABB.1SFA619100R1023
=V1SF0PG1-SF3/PF3	1	PUSHBUTTON CP1-11C-10	CP1-11C-10	ABB	ABB.1SFA619100R1118
=V1SF0PG1-UC01	1	Compact enclosure AX	AX.6315450	RIT	RIT.6315450
=V1SF0PG1-UC01	1	Pedestal, open	CP.6106500	RIT	RIT.6106500
=V1SF0PG1-UC01	1	Coupling CP 60	CP.6206300	RIT	RIT.6206300
=V1SF0PG1-UC01	1	Accessory bag, for AX	AX.5051300	RIT	RIT.5051300
=V1SF0PG1-UC01	1	Mounting plate, for AX	AX.5051375	RIT	RIT.5051375
=V1WC4-FC1	1	Miniature Circuit Breaker MCBs - S200UDC - Number of Poles 1 - Tripping characteristic	S201UDC-K5	ABB	ABB.2CDS271517R0357
=V1WC4-FC1	1	S2C-H6RU - Auxiliary Contact	S2C-H6RU	ABB	ABB.2CDS200914R0001
=V1WC4-FC2	1	Miniature Circuit Breaker MCBs - S200UDC - Number of Poles 1 - Tripping characteristic	S201UDC-K5	ABB	ABB.2CDS271517R0357
=V1WC4-FC2	1	S2C-H6RU - Auxiliary Contact	S2C-H6RU	ABB	ABB.2CDS200914R0001
=V1WC4-PG1	1	SIMATIC HMI TP1500 COMFORT	6AV2124-0QC02-0AX1	SIE	SIE.6AV2124-0QC02-0AX1
=V1WC4-XD1	1	RECEPTACLE MINI 5P MALE 1M	RSF 50-1M/NPT	TURCK	TUR.RSF 50-1M/NPT

Parts list

F01_001

Device tag	Quantity	Designation	Type number	Supplier	Part number
=V1SF0PG1-UC01	1	Compact enclosure AX	AX.6315150	RIT	RIT.6315150
=V1SF0PG2-PG1	1	SIMATIC HMI TP700 COMFORT	6AV2124-0GC01-0AX0	SIE	SIE.6AV2124-0GC01-0AX0
=V1SF0PG2-PG1	1	SIMATIC HMI SD MEMORY CARD 2 GB	6AV2181-8XP00-0AX0	SIE	SIE.6AV2181-8XP00-0AX0
=V1SF0PG2-PNET1	1	Profinet cable - RJ45 plug to M12 Female receptacle; 0.5m long	RJ45S FKSDED 423-0.5M	TURCK	TUR.RJ45S FKSDED 423-0.5M
=V1SF0PG2-UC01	1	Compact enclosure AX	AX.6315150	RIT	RIT.6315150
=V1SF0PG2-UC01	1	Accessory bag, for AX	AX.5051300	RIT	RIT.5051300
=V1SF0PG2-UC01	1	Mounting plate, for AX	AX.5051368	RIT	RIT.5051368
=V1SF0PG2-XD1	1	RECEPTACLE MINI 5P MALE 1M	RSF 50-1M/NPT	TURCK	TUR.RSF 50-1M/NPT
=V1SF0PG2-XG1	1	TEE, 5-PIN MINI, STANDARD KEYWAY	RSM-2RKM 50	TURCK	TUR.RSM-2RKM 50

Parts list

F01_001

Device tag	Quantity	Designation	Type number	Supplier	Part number
=V1SF0PG2-UC01	1	Compact enclosure AX	AX.6315150	RIT	RIT.6315150
=V1SF0PG3-PG1	1	SIMATIC HMI TP700 COMFORT	6AV2124-0GC01-0AX0	SIE	SIE.6AV2124-0GC01-0AX0
=V1SF0PG3-PG1	1	SIMATIC HMI SD MEMORY CARD 2 GB	6AV2181-8XP00-0AX0	SIE	SIE.6AV2181-8XP00-0AX0
=V1SF0PG3-PNET1	1	Profinet cable - RJ45 plug to M12 Female receptacle; 0.5m long	RJ45S FKSDED 423-0.5M	TURCK	TUR.RJ45S FKSDED 423-0.5M
=V1SF0PG3-UC01	1	Compact enclosure AX	AX.6315150	RIT	RIT.6315150
=V1SF0PG3-UC01	1	Accessory bag, for AX	AX.5051300	RIT	RIT.5051300
=V1SF0PG3-UC01	1	Mounting plate, for AX	AX.5051368	RIT	RIT.5051368
=V1SF0PG3-XD1	1	RECEPTACLE MINI 5P MALE 1M	RSF 50-1M/NPT	TURCK	TUR.RSF 50-1M/NPT

Parts list

F01_001

Device tag	Quantity	Designation	Type number	Supplier	Part number
=V1SF0PG3-UC01	1	Compact enclosure AX	AX.6315150	RIT	RIT.6315150
=V1SF0PG3-UC01	1	Accessory bag, for AX	AX.5051300	RIT	RIT.5051300
=V1SF0PG3-UC01	1	Mounting plate, for AX	AX.5051368	RIT	RIT.5051368
=V1SF0PG4-PG1	1	SIMATIC HMI TP700 COMFORT	6AV2124-0GC01-0AX0	SIE	SIE.6AV2124-0GC01-0AX0
=V1SF0PG4-PG1	1	SIMATIC HMI SD MEMORY CARD 2 GB	6AV2181-8XP00-0AX0	SIE	SIE.6AV2181-8XP00-0AX0
=V1SF0PG4-PNET1	1	Profinet cable - RJ45 plug to M12 Female receptacle; 0.5m long	RJ45S FKSDED 423-0.5M	TURCK	TUR.RJ45S FKSDED 423-0.5M
=V1SF0PG4-XD1	1	RECEPTACLE MINI 5P MALE 1M	RSF 50-1M/NPT	TURCK	TUR.RSF 50-1M/NPT
=V1SF0PG4-XG1	1	TEE, 5-PIN MINI, STANDARD KEYWAY	RSM-2RKM 50	TURCK	TUR.RSM-2RKM 50

Parts list

F01_001

Device tag	Quantity	Designation	Type number	Supplier	Part number
=V1SF0PG4-UC01	1	Compact enclosure AX	AX.6315150	RIT	RIT.6315150
=V1SF0PG5-PG1	1	SIMATIC HMI TP700 COMFORT	6AV2124-0GC01-0AX0	SIE	SIE.6AV2124-0GC01-0AX0
=V1SF0PG5-PG1	1	SIMATIC HMI SD MEMORY CARD 2 GB	6AV2181-8XP00-0AX0	SIE	SIE.6AV2181-8XP00-0AX0
=V1SF0PG5-PNET1	1	Profinet cable - RJ45 plug to M12 Female receptacle; 0.5m long	RJ45S FKSDED 423-0.5M	TURCK	TUR.RJ45S FKSDED 423-0.5M
=V1SF0PG5-UC01	1	Compact enclosure AX	AX.6315150	RIT	RIT.6315150
=V1SF0PG5-UC01	1	Accessory bag, for AX	AX.5051300	RIT	RIT.5051300
=V1SF0PG5-UC01	1	Mounting plate, for AX	AX.5051368	RIT	RIT.5051368
=V1SF0PG5-XD1	1	RECEPTACLE MINI 5P MALE 1M	RSF 50-1M/NPT	TURCK	TUR.RSF 50-1M/NPT
=V1SF0PG5-XG2	1	TEE, 5-PIN MINI, STANDARD KEYWAY	RSM-2RKM 50	TURCK	TUR.RSM-2RKM 50

Parts list

F01_001

Device tag	Quantity	Designation	Type number	Supplier	Part number
=V1PZ1PF1-PF1	1	Signaling column connection element for pipe mounting incl. end cover and seal	8WD4408-0AA	SIE	SIE.8WD4408-0AA
=V1PZ1PF1-PF1	1	Tube with foot, tube length 100 mm, accessory for signaling columns 8WD44, D=70 mm	8WD4308-0DA	SIEMENS	SIE.8WD4308-0DA
=V1PZ1PF1-PF1	1	Signaling column multifunctional siren element different sounds can be set 24 V	8WD4420-0EA2		SIE.8WD4420-0EA2
=V1PZ1PF1-PF1	1	Signaling column continuous light element LED red, 24 V AC/DC	8WD4420-5AB	SIE	SIE.8WD4420-5AB
=V1PZ1PF1-PF1	1	Signaling column continuous light element LED green, 24 V AC/DC	8WD4420-5AC	SIE	SIE.8WD4420-5AC
=V1PZ1PF1-PF1	1	Signaling column continuous light element LED yellow, 24 V AC/DC	8WD4420-5AD	SIE	SIE.8WD4420-5AD
=V1PZ1PF1-PF1	1	Signaling column continuous light element LED blue, 24 V AC/DC	8WD4420-5AF	SIE	SIE.8WD4420-5AF
=V1PZ1PF1-UC01	1	Small enclosures KX	KX.1574000		RIT.1574000
=V1PZ1PF1-XD1	1	RECEPTACLE 1-1/8" MINIFAST 10P MALE 2M	RSF 106-2M/14.5/NPT/CS16486	TURCK	TUR.RSF 106-2M/14.5/NPT/CS16486

Parts list

F01_001

Device tag	Quantity	Designation	Type number	Supplier	Part number
=V1PZ1PF2-PF1	1	Signaling column connection element for pipe mounting incl. end cover and seal	8WD4408-0AA	SIE	SIE.8WD4408-0AA
=V1PZ1PF2-PF1	1	Tube with foot, tube length 100 mm, accessory for signaling columns 8WD44, D=70 mm	8WD4308-0DA	SIEMENS	SIE.8WD4308-0DA
=V1PZ1PF2-PF1	1	Signaling column multifunctional siren element different sounds can be set 24 V	8WD4420-0EA2		SIE.8WD4420-0EA2
=V1PZ1PF2-PF1	1	Signaling column continuous light element LED red, 24 V AC/DC	8WD4420-5AB	SIE	SIE.8WD4420-5AB
=V1PZ1PF2-PF1	1	Signaling column continuous light element LED green, 24 V AC/DC	8WD4420-5AC	SIE	SIE.8WD4420-5AC
=V1PZ1PF2-PF1	1	Signaling column continuous light element LED yellow, 24 V AC/DC	8WD4420-5AD	SIE	SIE.8WD4420-5AD
=V1PZ1PF2-PF1	1	Signaling column continuous light element LED blue, 24 V AC/DC	8WD4420-5AF	SIE	SIE.8WD4420-5AF
=V1PZ1PF2-UC01	1	Small enclosures KX	KX.1574000		RIT.1574000
=V1PZ1PF2-XD1	1	RECEPTACLE 1-1/8" MINIFAST 10P MALE 2M	RSF 106-2M/14.5/NPT/CS16486	TURCK	TUR.RSF 106-2M/14.5/NPT/CS16486

Parts list

F01_001

Device tag	Quantity	Designation	Type number	Supplier	Part number
=V1PZ1PF3-PF1	1	Signaling column connection element for pipe mounting incl. end cover and seal	8WD4408-0AA	SIE	SIE.8WD4408-0AA
=V1PZ1PF3-PF1	1	Tube with foot, tube length 100 mm, accessory for signaling columns 8WD44, D=70 mm	8WD4308-0DA	SIEMENS	SIE.8WD4308-0DA
=V1PZ1PF3-PF1	1	Signaling column multifunctional siren element different sounds can be set 24 V	8WD4420-0EA2		SIE.8WD4420-0EA2
=V1PZ1PF3-PF1	1	Signaling column continuous light element LED red, 24 V AC/DC	8WD4420-5AB	SIE	SIE.8WD4420-5AB
=V1PZ1PF3-PF1	1	Signaling column continuous light element LED green, 24 V AC/DC	8WD4420-5AC	SIE	SIE.8WD4420-5AC
=V1PZ1PF3-PF1	1	Signaling column continuous light element LED yellow, 24 V AC/DC	8WD4420-5AD	SIE	SIE.8WD4420-5AD
=V1PZ1PF3-PF1	1	Signaling column continuous light element LED blue, 24 V AC/DC	8WD4420-5AF	SIE	SIE.8WD4420-5AF
=V1PZ1PF3-UC01	1	Small enclosures KX	KX.1574000		RIT.1574000
=V1PZ1PF3-XD1	1	RECEPTACLE 1-1/8" MINIFAST 10P MALE 2M	RSF 106-2M/14.5/NPT/CS16486	TURCK	TUR.RSF 106-2M/14.5/NPT/CS16486

Parts list

F01_001

Device tag	Quantity	Designation	Type number	Supplier	Part number
=V1PZ1PF4-PF1	1	Signaling column connection element for pipe mounting incl. end cover and seal	8WD4408-0AA	SIE	SIE.8WD4408-0AA
=V1PZ1PF4-PF1	1	Tube with foot, tube length 100 mm, accessory for signaling columns 8WD44, D=70 mm	8WD4308-0DA	SIEMENS	SIE.8WD4308-0DA
=V1PZ1PF4-PF1	1	Signaling column multifunctional siren element different sounds can be set 24 V	8WD4420-0EA2		SIE.8WD4420-0EA2
=V1PZ1PF4-PF1	1	Signaling column continuous light element LED red, 24 V AC/DC	8WD4420-5AB	SIE	SIE.8WD4420-5AB
=V1PZ1PF4-PF1	1	Signaling column continuous light element LED green, 24 V AC/DC	8WD4420-5AC	SIE	SIE.8WD4420-5AC
=V1PZ1PF4-PF1	1	Signaling column continuous light element LED yellow, 24 V AC/DC	8WD4420-5AD	SIE	SIE.8WD4420-5AD
=V1PZ1PF4-PF1	1	Signaling column continuous light element LED blue, 24 V AC/DC	8WD4420-5AF	SIE	SIE.8WD4420-5AF
=V1PZ1PF4-UC01	1	Small enclosures KX	KX.1574000		RIT.1574000
=V1PZ1PF4-XD1	1	RECEPTACLE 1-1/8" MINIFAST 10P MALE 2M	RSF 106-2M/14.5/NPT/CS16486	TURCK	TUR.RSF 106-2M/14.5/NPT/CS16486

Parts list

F01_001

Device tag	Quantity	Designation	Type number	Supplier	Part number
=V1SF0SF1-SF1	1	Push-to-Stop, Twist-to-Release Electro-Mechanical Push Buttons	SSA-EBM Series	BANNER	BAN.SSA-EBM-12EB1Q8OTBB

+.UC64/1

+.UC72/1

			Date	1/17/2023	Volvo Trucks North America	Valiant TMS	Parts list : BAN.SSA-EBM-12EB1Q8OTBB - BAN.SSA-EBM-12EB1Q8OTBB	Drawing name: =2V10&EFS-EL	=	
			Ed.	MKLEPADLO					+ V1UC71	
			Appr		P6700 Bodyside RH - Robot Cell 2V10	Scale 1:1		Document type: EPB	Project nr: 22-16150	Page 1 / 1579
Modification	Date	Name	Original		Replacement of	Replaced by				

Parts list

F01_001

Device tag	Quantity	Designation	Type number	Supplier	Part number
=V1SF0SF2-SF1	1	Push-to-Stop, Twist-to-Release Electro-Mechanical Push Buttons	SSA-EBM Series	BANNER	BAN.SSA-EBM-12EB1Q8OTBB

+.UC71/1

+.UC73/1

			Date	1/17/2023	Volvo Trucks North America	Valiant TMS	Parts list : BAN.SSA-EBM-12EB1Q8OTBB - BAN.SSA-EBM-12EB1Q8OTBB	Drawing name: =2V10&EFS-EL	=	
			Ed.	MKLEPADLO					+ V1UC72	
			Appr		P6700 Bodyside RH - Robot Cell 2V10			Document type: EPB	Project nr: 22-16150	Page 1
Modification	Date	Name	Original		Replacement of / Replaced by	Scale 1:1				1579

Parts list

F01_001

Device tag	Quantity	Designation	Type number	Supplier	Part number
=V1SF0SF3-SF1	1	Push-to-Stop, Twist-to-Release Electro-Mechanical Push Buttons	SSA-EBM Series	BANNER	BAN.SSA-EBM-12EB1Q8OTBB

+.UC72/1

+.UC74/1

			Date	1/17/2023	Volvo Trucks North America	Valiant TMS	Parts list : BAN.SSA-EBM-12EB1Q8OTBB - BAN.SSA-EBM-12EB1Q8OTBB	Drawing name: =2V10&EFS-EL	=	
			Ed.	MKLEPADLO					+ V1UC73	
			Appr		P6700 Bodyside RH - Robot Cell 2V10	Scale 1:1		Document type: EPB	Project nr: 22-16150	Page 1 / 1579
Modification	Date	Name	Original		Replacement of	Replaced by				

Parts list

F01_001

Device tag	Quantity	Designation	Type number	Supplier	Part number
=V1SF0SF4-SF1	1	Push-to-Stop, Twist-to-Release Electro-Mechanical Push Buttons	SSA-EBM Series	BANNER	BAN.SSA-EBM-12EB1Q8OTBB

+.UC73/1

+.UC161/1

			Date	1/17/2023	Volvo Trucks North America	Valiant TMS	Parts list : BAN.SSA-EBM-12EB1Q8OTBB - BAN.SSA-EBM-12EB1Q8OTBB	Drawing name: =2V10&EFS-EL		=	
			Ed.	MKLEPADLO						+ V1UC74	
			Appr		P6700 Bodyside RH - Robot Cell 2V10	Scale 1:1		Document type: EPB	Project nr: 22-16150	Page	1
Modification	Date	Name	Original		Replacement of	Replaced by					1579

Parts list

F01_001

Device tag	Quantity	Designation	Type number	Supplier	Part number
=V1WC2-XG1	1	3P DISTRIBUTION BLOCK 1 LINE / 4 LOAD	MB-231-03	SYNDEVCO	MB-231-03
=V1WC2-XG2	1	3P GROUND BLOCK 3 LINE / 3 LOAD	STGS-3D-3D	SYNDEVCO	STGS-3D-3D
=WC1-WC1	1	Golvskåp TS 8 sidskåp	TS8	RIT	RIT.SETS8205SID5
=WC1-WC1	1	TS Trim panel, sides, H: 100 mm, for W: 500 mm, RAL 7022, sheet steel	TS.8601050	RIT	RIT.8601050
=WC1-WC1	1	TS Base/plinth component, rear, H: 100 mm, for W: 1200 mm, RAL 7022, sheet steel	TS.8601200	RIT	RIT.8601200
=WC1-WC1	1	TS Side panel, screw-fastened, for TS, TS IT, for WD: 2000x500 mm, Sheet steel	TS.8105235	RIT	RIT.8105235
=WC1-WC1	1	PS Wiring plan pockets, for TS, CM, SE, PC, TP pedestal, sheet steel	TS.4115000	RIT	RIT.4115000

Parts list

F01_001

Device tag	Quantity	Designation	Type number	Supplier	Part number
=V1WC2-XG1	0	3P DISTRIBUTION BLOCK 2 LINE / 6 LOAD	CPB-E2G06-03	SYNDEVCO	CPB-E2G06-03
=V1WC2-XG2	0	3P GROUND BLOCK 2 LINE / 6 LOAD	HCG-E2G06	SYNDEVCO	HCG-E2G06
=WC1-WC1	1	Golvskåp TS 8 sidskåp	TS8	RIT	RIT.SETS8205SID5
=WC1-WC1	1	TS Trim panel, sides, H: 100 mm, for W: 500 mm, RAL 7022, sheet steel	TS.8601050	RIT	RIT.8601050
=WC1-WC1	1	TS Base/plinth component, rear, H: 100 mm, for W: 1200 mm, RAL 7022, sheet steel	TS.8601200	RIT	RIT.8601200
=WC1-WC1	1	TS Side panel, screw-fastened, for TS, TS IT, for WD: 2000x500 mm, Sheet steel	TS.8105235	RIT	RIT.8105235
=WC1-WC1	1	PS Wiring plan pockets, for TS, CM, SE, PC, TP pedestal, sheet steel	TS.4115000	RIT	RIT.4115000

Parts list

F01_001

Device tag	Quantity	Designation	Type number	Supplier	Part number
=V1WC2-XG1	0	3P DISTRIBUTION BLOCK 2 LINE / 6 LOAD	CPB-E2G06-03	SYNDEVCO	CPB-E2G06-03
=V1WC2-XG2	0	3P GROUND BLOCK 2 LINE / 6 LOAD	HCG-E2G06	SYNDEVCO	HCG-E2G06
=WC1-WC1	1	Golvskåp TS 8 sidskåp	TS8	RIT	RIT.SETS8205SID5
=WC1-WC1	1	TS Trim panel, sides, H: 100 mm, for W: 500 mm, RAL 7022, sheet steel	TS.8601050	RIT	RIT.8601050
=WC1-WC1	1	TS Base/plinth component, rear, H: 100 mm, for W: 1200 mm, RAL 7022, sheet steel	TS.8601200	RIT	RIT.8601200
=WC1-WC1	1	TS Side panel, screw-fastened, for TS, TS IT, for WD: 2000x500 mm, Sheet steel	TS.8105235	RIT	RIT.8105235
=WC1-WC1	1	PS Wiring plan pockets, for TS, CM, SE, PC, TP pedestal, sheet steel	TS.4115000	RIT	RIT.4115000

Parts list

F01_001

Device tag	Quantity	Designation	Type number	Supplier	Part number
=V1WC2-XG1	0	3P DISTRIBUTION BLOCK 2 LINE / 6 LOAD	CPB-E2G06-03	SYNDEVCO	CPB-E2G06-03
=V1WC2-XG2	0	3P GROUND BLOCK 2 LINE / 6 LOAD	HCG-E2G06	SYNDEVCO	HCG-E2G06
=WC1-WC1	1	Golvskåp TS 8 sidskåp	TS8	RIT	RIT.SETS8205SID5
=WC1-WC1	1	TS Trim panel, sides, H: 100 mm, for W: 500 mm, RAL 7022, sheet steel	TS.8601050	RIT	RIT.8601050
=WC1-WC1	1	TS Base/plinth component, rear, H: 100 mm, for W: 1200 mm, RAL 7022, sheet steel	TS.8601200	RIT	RIT.8601200
=WC1-WC1	1	TS Side panel, screw-fastened, for TS, TS IT, for WD: 2000x500 mm, Sheet steel	TS.8105235	RIT	RIT.8105235
=WC1-WC1	1	PS Wiring plan pockets, for TS, CM, SE, PC, TP pedestal, sheet steel	TS.4115000	RIT	RIT.4115000

Parts list

F01_001

Device tag	Quantity	Designation	Type number	Supplier	Part number
=V1WC2-XG1	0	3P DISTRIBUTION BLOCK 2 LINE / 6 LOAD	CPB-E2G06-03	SYNDEVCO	CPB-E2G06-03
=V1WC2-XG2	0	3P GROUND BLOCK 2 LINE / 6 LOAD	HCG-E2G06	SYNDEVCO	HCG-E2G06
=WC1-WC1	1	Golvskåp TS 8 sidskåp	TS8	RIT	RIT.SETS8205SID5
=WC1-WC1	1	TS Trim panel, sides, H: 100 mm, for W: 500 mm, RAL 7022, sheet steel	TS.8601050	RIT	RIT.8601050
=WC1-WC1	1	TS Base/plinth component, rear, H: 100 mm, for W: 1200 mm, RAL 7022, sheet steel	TS.8601200	RIT	RIT.8601200
=WC1-WC1	1	TS Side panel, screw-fastened, for TS, TS IT, for WD: 2000x500 mm, Sheet steel	TS.8105235	RIT	RIT.8105235
=WC1-WC1	1	PS Wiring plan pockets, for TS, CM, SE, PC, TP pedestal, sheet steel	TS.4115000	RIT	RIT.4115000

Parts list

F01_001

Device tag	Quantity	Designation	Type number	Supplier	Part number
=V1UN1BG0-BG01	1				BAN.801918
=V1UN1BG0-BG02	1				TUR.BI20U-CA40-AP6X2-H1141/S1590W/BS2.0
=V1UN1BG0-BG03	1	Inductive sensor	BI20U-CA40-AP6X2-H1141/S1590 W/BS2.0	TURCK	TUR.1627297
=V1UN1BG0-BG04	1	Inductive sensor	BI5U-MT18-AP6X2-H1141/S395/S1589	TURCK	TUR.1635291
=V1UN1BG0-XG1/2	1	Y splitter	U2-30676	TURCK	TUR.VB2-FSM 4.4/2FKM 4/S3450
=V1UN1FQ1-BG01	1	NEMA Limit Switch - NEMA Type 4 & 13 Oiltight Construction	802T-AMP	A-B	A-B.802T-AMP
=V1UN1KF1-KF1.11	1	MVK-MPNIO DI8 DO8 FSU	MVK-MPNIO DI8 DO8 FSU	MURR	MURR.55339
=V1UN1PF1-PF1	1	K50L Series Daylight Visible Indicators	K50L2RGB7QP	BANNER	BAN.805371
=V1UN1PF1-PF1	1	Mounting kit	SMB30A	BANNER	BAN.32723

Parts list

F01_001

Device tag	Quantity	Designation	Type number	Supplier	Part number
=V1UQ51BG0-BG01	1	Inductive sensor	BI20U-CA40-AP6X2-H1141/S1590 W/BS2.0	TURCK	TUR.1627297
=V1UQ51BG0-BG02	1	Inductive sensor	BI20U-CA40-AP6X2-H1141/S1590 W/BS2.0	TURCK	TUR.1627297
=V1UQ51BG0-BG03	1	Inductive sensor	BI20U-CA40-AP6X2-H1141/S1590 W/BS2.0	TURCK	TUR.1627297
=V1UQ51BG0-BG04	1	Inductive sensor	BI20U-CA40-AP6X2-H1141/S1590 W/BS2.0	TURCK	TUR.1627297
=V1UQ51BG0-BG05	1	Inductive sensor	BI20U-CA40-AP6X2-H1141/S1590 W/BS2.0	TURCK	TUR.1627297
=V1UQ51BG0-XG1/2	1	Y splitter	U2-30676	TURCK	TUR.VB2-FSM 4.4/2FKM 4/S3450
=V1UQ51BG0-XG3/4	1	Y splitter	U2-30676	TURCK	TUR.VB2-FSM 4.4/2FKM 4/S3450
=V1UQ51KF1-KF1	0	Bus node	CPX-FB33	FES	FES.548755
=V1UQ51KF1-KF1	0	Interlinking block	CPX-M-GE-EV-S-7/8-5POL	FES	FES.550208
=V1UQ51KF1-KF1.11	0	Manifold block	CPX-M-AB-8-M12X2-5POL	FES	FES.549335
=V1UQ51KF1-KF1.12	0	Manifold block	CPX-M-AB-8-M12X2-5POL	FES	FES.549335
=V1UQ51KF1-KF1.13	0	Manifold block	CPX-M-AB-8-M12X2-5POL	FES	FES.549335

Parts list

F01_001

Device tag	Quantity	Designation	Type number	Supplier	Part number
=V1UQ51UQ1.1-BGS/R	1	4-Wire, 4-Pin, DC M12 X 1 (PNP)	WWS001A	WEL	WEL.WWS001A

Parts list

F01_001

Device tag	Quantity	Designation	Type number	Supplier	Part number
=V1UQ51UQ2.1-BGS/R	1	4-Wire, 4-Pin, DC M12 X 1 (PNP)	WWS001A	WEL	WEL.WWS001A

+.UQ51UQ1.1/1

+.UQ51UQ3.1/1

Parts list

F01_001

Device tag	Quantity	Designation	Type number	Supplier	Part number
=V1UQ51UQ3.1-BGS/R	1	4-Wire, 4-Pin, DC M12 X 1 (PNP)	WWS001A	WEL	WEL.WWS001A

+.UQ51UQ2.1/1

+.UQ51UQ4.1/1

Parts list

F01_001

Device tag	Quantity	Designation	Type number	Supplier	Part number
=V1UQ51UQ4.1-BGS/R	1	Inductive sensor Monitoring Kit for Power Clamps	1324638	TUNKERS	TUN.1324638

+.UQ51UQ3.1/1

+.UQ51UQ4.2/1

			Date	1/17/2023	Volvo Trucks North America	Valiant TMS	Parts list : TUN.1324638 - TUN.1324638	Drawing name: =2V10&EFS-EL	= + V1UQ51UQ4.1	
			Ed.	MKLEPADLO	P6700 Bodyside RH - Robot Cell 2V10					
			Appr					Document type: EPB	Project nr: 22-16150	Page 1 / 1579
Modification	Date	Name	Original		Replacement of / Replaced by	Scale 1:1				

Parts list

F01_001

Device tag	Quantity	Designation	Type number	Supplier	Part number
=V1UQ51UQ4.2-BGS/R	1	Inductive sensor Monitoring Kit for Power Clamps	1324638	TUNKERS	TUN.1324638

+.UQ51UQ4.1/1

+.UQ51UQ5.1/1

			Date	1/17/2023	Volvo Trucks North America	Valiant TMS	Parts list : TUN.1324638 - TUN.1324638	Drawing name: =2V10&EFS-EL	= + V1UQ51UQ4.2	
			Ed.	MKLEPADLO	P6700 Bodyside RH - Robot Cell 2V10					
			Appr					Document type: EPB	Project nr: 22-16150	Page 1 / 1579
Modification	Date	Name	Original		Replacement of / Replaced by	Scale 1:1				

Parts list

F01_001

Device tag	Quantity	Designation	Type number	Supplier	Part number
=V1UQ51UQ5.1-BGS/R	1	Inductive sensor Monitoring Kit for Power Clamps	1324638	TUNKERS	TUN.1324638

+.UQ51UQ4.2/1

+.UQ51UQ5.2/1

Parts list

F01_001

Device tag	Quantity	Designation	Type number	Supplier	Part number
=V1UQ51UQ5.2-BGS/R	1	Inductive sensor Monitoring Kit for Power Clamps	1324638	TUNKERS	TUN.1324638

+.UQ51UQ5.1/1

+.UQ51UQ6.1/1

			Date	1/17/2023	Volvo Trucks North America	Valiant TMS	Parts list : TUN.1324638 - TUN.1324638	Drawing name: =2V10&EFS-EL	= + V1UQ51UQ5.2	
			Ed.	MKLEPADLO						
			Appr		P6700 Bodyside RH - Robot Cell 2V10			Document type: EPB	Project nr: 22-16150	Page 1 / 1579
Modification	Date	Name	Original		Replacement of / Replaced by	Scale 1:1				

Parts list

F01_001

Device tag	Quantity	Designation	Type number	Supplier	Part number
=V1UQ51UQ6.1-BGS/R	1	Inductive sensor Monitoring Kit for Power Clamps	1324638	TUNKERS	TUN.1324638

+.UQ51UQ5.2/1

+.UQ51UQ7.1/1

			Date	1/17/2023	Volvo Trucks North America		Valiant TMS	Parts list : TUN.1324638 - TUN.1324638	Drawing name: =2V10&EFS-EL	= + V1UQ51UQ6.1	
			Ed.	MKLEPADLO							
			Appr		P6700 Bodyside RH - Robot Cell 2V10		Scale 1:1		Document type: EPB	Project nr: 22-16150	Page 1 / 1579
Modification	Date	Name	Original		Replacement of	Replaced by					

Parts list

F01_001

Device tag	Quantity	Designation	Type number	Supplier	Part number
=V1UQ51UQ7.1-BGS/R	1	Inductive sensor Monitoring Kit for Power Clamps	1324638	TUNKERS	TUN.1324638

+.UQ51UQ6.1/1

+.UQ51UQ7.2/1

Parts list

F01_001

Device tag	Quantity	Designation	Type number	Supplier	Part number
=V1UQ51UQ7.2-BGS/R	1	Inductive sensor Monitoring Kit for Power Clamps	1324638	TUNKERS	TUN.1324638

+.UQ51UQ7.1/1

+.UQ51UQ7.3/1

Parts list

F01_001

Device tag	Quantity	Designation	Type number	Supplier	Part number
=V1UQ51UQ7.3-BGS/R	1	Inductive sensor Monitoring Kit for Power Clamps	1324638	TUNKERS	TUN.1324638

+.UQ51UQ7.2/1

+.UQ51UQ7.4/1

			Date	1/17/2023	Volvo Trucks North America	Valiant TMS	Parts list : TUN.1324638 - TUN.1324638	Drawing name: =2V10&EFS-EL	=	
			Ed.	MKLEPADLO					+ V1UQ51UQ7.3	
			Appr		P6700 Bodyside RH - Robot Cell 2V10			Document type: EPB	Project nr: 22-16150	Page 1
Modification	Date	Name	Original		Replacement of / Replaced by	Scale 1:1				1579

Parts list

F01_001

Device tag	Quantity	Designation	Type number	Supplier	Part number
=V1UQ51UQ7.4-BGS/R	1	Inductive sensor Monitoring Kit for Power Clamps	1324638	TUNKERS	TUN.1324638

+.UQ51UQ7.3/1

+.UQ51UQ7.5/1

			Date	1/17/2023	Volvo Trucks North America	Valiant TMS	Parts list : TUN.1324638 - TUN.1324638	Drawing name: =2V10&EFS-EL	=	
			Ed.	MKLEPADLO	P6700 Bodyside RH - Robot Cell 2V10				+ V1UQ51UQ7.4	
			Appr					Document type: EPB	Project nr: 22-16150	Page 1 / 1579
Modification	Date	Name	Original		Replacement of / Replaced by	Scale 1:1				

Parts list

F01_001

Device tag	Quantity	Designation	Type number	Supplier	Part number
=V1UQ51UQ7.5-BGS/R	1	Inductive sensor Monitoring Kit for Power Clamps	1324638	TUNKERS	TUN.1324638

+.UQ51UQ7.4/1

+.UQ51UQ8.1/1

Parts list

F01_001

Device tag	Quantity	Designation	Type number	Supplier	Part number
=V1UQ51UQ8.1-BGS/R	1	Inductive sensor Monitoring Kit for Power Clamps	1324638	TUNKERS	TUN.1324638

+.UQ51UQ7.5/1

+.UQ51UQ9.1/1

			Date	1/17/2023	Volvo Trucks North America	Valiant TMS	Parts list : TUN.1324638 - TUN.1324638	Drawing name: =2V10&EFS-EL	= + V1UQ51UQ8.1	
			Ed.	MKLEPADLO	P6700 Bodyside RH - Robot Cell 2V10					
			Appr					Document type: EPB	Project nr: 22-16150	Page 1 / 1579
Modification	Date	Name	Original		Replacement of / Replaced by	Scale 1:1				

Parts list

F01_001

Device tag	Quantity	Designation	Type number	Supplier	Part number
=V1UQ51UQ9.1-BGS/R	1	Inductive sensor Monitoring Kit for Power Clamps	1324638	TUNKERS	TUN.1324638

+.UQ51UQ8.1/1

+.UQ51UQ9.2/1

			Date	1/17/2023	Volvo Trucks North America	Valiant TMS	Parts list : TUN.1324638 - TUN.1324638	Drawing name: =2V10&EFS-EL	= + V1UQ51UQ9.1	
			Ed.	MKLEPADLO	P6700 Bodyside RH - Robot Cell 2V10					
			Appr			Scale 1:1		Document type: EPB	Project nr: 22-16150	Page 1 / 1579
Modification	Date	Name	Original		Replacement of / Replaced by					

Parts list

F01_001

Device tag	Quantity	Designation	Type number	Supplier	Part number
=V1UQ51UQ9.2-BGS/R	1	Inductive sensor Monitoring Kit for Power Clamps	1324638	TUNKERS	TUN.1324638

+.UQ51UQ9.1/1

+.UQ51UQ10.1/1

Parts list

F01_001

Device tag	Quantity	Designation	Type number	Supplier	Part number
=V1UQ51UQ10.1-BGS/R	1	Inductive sensor Monitoring Kit for Power Clamps	1324638	TUNKERS	TUN.1324638

+.UQ51UQ9.2/1

+.UQ51UQ10.2/1

			Date	1/17/2023	Volvo Trucks North America	Valiant TMS	Parts list : TUN.1324638 - TUN.1324638	Drawing name: =2V10&EFS-EL	=	
			Ed.	MKLEPADLO					+ V1UQ51UQ10.1	
			Appr		P6700 Bodyside RH - Robot Cell 2V10			Document type: EPB	Project nr: 22-16150	Page 1
Modification	Date	Name	Original		Replacement of / Replaced by	Scale 1:1				1579

Parts list

F01_001

Device tag	Quantity	Designation	Type number	Supplier	Part number
=V1UQ51UQ10.2-BGS/R	1	Inductive sensor Monitoring Kit for Power Clamps	1324638	TUNKERS	TUN.1324638

+.UQ51UQ10.1/1

+.UQ52/1

			Date	1/17/2023	Volvo Trucks North America	Valiant TMS	Parts list : TUN.1324638 - TUN.1324638	Drawing name: =2V10&EFS-EL	= + V1UQ51UQ10.2	
			Ed.	MKLEPADLO	P6700 Bodyside RH - Robot Cell 2V10					
			Appr			Scale 1:1		Document type: EPB	Project nr: 22-16150	Page 1 / 1579
Modification	Date	Name	Original		Replacement of / Replaced by					

Parts list

F01_001

Device tag	Quantity	Designation	Type number	Supplier	Part number
=V1UQ52BG0-BG01	1	Inductive sensor	BI20U-CA40-AP6X2-H1141/S1590 W/BS2.0	TURCK	TUR.1627297
=V1UQ52BG0-BG02	1	Inductive sensor	BI20U-CA40-AP6X2-H1141/S1590 W/BS2.0	TURCK	TUR.1627297
=V1UQ52BG0-BG03	1	Inductive sensor	BI10U-MT18-AP6X2-H1141/S1589	Turck	TUR.1644905
=V1UQ52BG0-BG04	1	Inductive sensor	BI20U-CA40-AP6X2-H1141/S1590 W/BS2.0	TURCK	TUR.1627297
=V1UQ52BG0-BG05	1	Inductive sensor	BI20U-CA40-AP6X2-H1141/S1590 W/BS2.0	TURCK	TUR.1627297
=V1UQ52BG0-BG06	1	Inductive sensor	BI10U-MT18-AP6X2-H1141/S1589	Turck	TUR.1644905
=V1UQ52BG0-BG07	1	Inductive sensor	BI20U-CA40-AP6X2-H1141/S1590 W/BS2.0	TURCK	TUR.1627297
=V1UQ52BG0-BG08	1	Inductive sensor	BI20U-CA40-AP6X2-H1141/S1590 W/BS2.0	TURCK	TUR.1627297
=V1UQ52BG0-BG09	1	Inductive sensor	BI20U-CA40-AP6X2-H1141/S1590 W/BS2.0	TURCK	TUR.1627297
=V1UQ52BG0-BG10	1	Inductive sensor	BI20U-CA40-AP6X2-H1141/S1590 W/BS2.0	TURCK	TUR.1627297
=V1UQ52BG0-XG1/2	1	Y splitter	U2-30676	TURCK	TUR.VB2-FSM 4.4/2FKM 4/S3450
=V1UQ52BG0-XG3/4	1	Y splitter	U2-30676	TURCK	TUR.VB2-FSM 4.4/2FKM 4/S3450
=V1UQ52BG0-XG5/6	1	Y splitter	U2-30676	TURCK	TUR.VB2-FSM 4.4/2FKM 4/S3450
=V1UQ52BG0-XG7/8	1	Y splitter	U2-30676	TURCK	TUR.VB2-FSM 4.4/2FKM 4/S3450
=V1UQ52BG0-XG9/10	1	Y splitter	U2-30676	TURCK	TUR.VB2-FSM 4.4/2FKM 4/S3450
=V1UQ52KF1-KF1	0	Bus node	CPX-FB33	FES	FES.548755
=V1UQ52KF1-KF1	0	Interlinking block	CPX-M-GE-EV-S-7/8-5POL	FES	FES.550208
=V1UQ52KF1-KF1.11	0	Manifold block	CPX-M-AB-8-M12X2-5POL	FES	FES.549335
=V1UQ52KF1-KF1.12	0	Manifold block	CPX-M-AB-8-M12X2-5POL	FES	FES.549335
=V1UQ52KF1-KF1.13	0	Manifold block	CPX-M-AB-8-M12X2-5POL	FES	FES.549335
=V1UQ52KF2-KF2	0	Bus node	CPX-FB33	FES	FES.548755
=V1UQ52KF2-KF2	0	Interlinking block	CPX-M-GE-EV-S-7/8-5POL	FES	FES.550208
=V1UQ52KF2-KF2.11	0	Manifold block	CPX-M-AB-8-M12X2-5POL	FES	FES.549335
=V1UQ52KF2-KF2.12	0	Manifold block	CPX-M-AB-8-M12X2-5POL	FES	FES.549335
=V1UQ52KF2-KF2.13	0	Manifold block	CPX-M-AB-8-M12X2-5POL	FES	FES.549335
=V1UQ52KF3-KF3	0	Bus node	CPX-FB33	FES	FES.548755
=V1UQ52KF3-KF3	0	Interlinking block	CPX-M-GE-EV-S-7/8-5POL	FES	FES.550208
=V1UQ52KF3-KF3.11	0	Manifold block	CPX-M-AB-8-M12X2-5POL	FES	FES.549335
=V1UQ52KF3-KF3.12	0	Manifold block	CPX-M-AB-8-M12X2-5POL	FES	FES.549335
=V1UQ52KF4-KF4	0	Bus node	CPX-FB33	FES	FES.548755
=V1UQ52KF4-KF4	0	Interlinking block	CPX-M-GE-EV-S-7/8-5POL	FES	FES.550208
=V1UQ52KF4-KF4.11	0	Manifold block	CPX-M-AB-8-M12X2-5POL	FES	FES.549335
=V1UQ52KF4-KF4.12	0	Manifold block	CPX-M-AB-8-M12X2-5POL	FES	FES.549335
=V1UQ52KF5-KF5	0	Bus node	CPX-FB33	FES	FES.548755
=V1UQ52KF5-KF5	0	Interlinking block	CPX-M-GE-EV-S-7/8-5POL	FES	FES.550208
=V1UQ52KF5-KF5.11	0	Manifold block	CPX-M-AB-8-M12X2-5POL	FES	FES.549335
=V1UQ52KF5-KF5.12	0	Manifold block	CPX-M-AB-8-M12X2-5POL	FES	FES.549335
=V1UQ52WC4-XG51.1	1	TEE, 5-PIN MINI, STANDARD KEYWAY	RSM-2RKM 50	TURCK	TUR.RSM-2RKM 50
=V1UQ52WC4-XG51.2	1	TEE, 5-PIN MINI, STANDARD KEYWAY	RSM-2RKM 50	TURCK	TUR.RSM-2RKM 50
=V1UQ52WC4-XG51.3	1	TEE, 5-PIN MINI, STANDARD KEYWAY	RSM-2RKM 50	TURCK	TUR.RSM-2RKM 50

Parts list

F01_001

Device tag	Quantity	Designation	Type number	Supplier	Part number
=V1UQ52UQ1.1-BGS/R	1	4-Wire, 4-Pin, DC M12 X 1 (PNP)	WWS001A	WEL	WEL.WWS001A

+V1UQ52/1

+.UQ52UQ2.1/1

			Date	1/17/2023	Volvo Trucks North America	Valiant TMS	Parts list : WEL.WWS001A - WEL.WWS001A	Drawing name: =2V10&EFS-EL	=	
			Ed.	MKLEPADLO					+ V1UQ52UQ1.1	
			Appr		P6700 Bodyside RH - Robot Cell 2V10			Document type: EPB	Project nr: 22-16150	Page 1
Modification	Date	Name	Original		Replacement of	Replaced by	Scale 1:1			1579

Parts list

F01_001

Device tag	Quantity	Designation	Type number	Supplier	Part number
=V1UQ52UQ2.1-BGR	1	Inductive sensor	BI2-CRS260-AP4X2-H1141/S34	TURCK	TUR.BI2-CRS260-AP4X2-H1141/S34
=V1UQ52UQ2.1-BGS	1	Inductive sensor	BI2-CRS260-AP4X2-H1141/S34	TURCK	TUR.BI2-CRS260-AP4X2-H1141/S34
=V1UQ52UQ2.1-XG2	1	Y splitter	U2-30676	TURCK	TUR.VB2-FSM 4.4/2FKM 4/S3450

Parts list

F01_001

Device tag	Quantity	Designation	Type number	Supplier	Part number
=V1UQ52UQ2.2-BGS/R	1	4-Wire, 4-Pin, DC M12 X 1 (PNP)	WWS001A	WEL	WEL.WWS001A

+.UQ52UQ2.1/1

+.UQ52UQ2.3/1

Parts list

F01_001

Device tag	Quantity	Designation	Type number	Supplier	Part number
=V1UQ52UQ2.3-BGS/R	1	4-Wire, 4-Pin, DC M12 X 1 (PNP)	WWS001A	WEL	WEL.WWS001A

+.UQ52UQ2.2/1

+.UQ52UQ3.1/1

Parts list

F01_001

Device tag	Quantity	Designation	Type number	Supplier	Part number
=V1UQ52UQ3.1-BGS/R	1	4-Wire, 4-Pin, DC M12 X 1 (PNP)	WWS001A	WEL	WEL.WWS001A

+.UQ52UQ2.3/1

+.UQ52UQ4.1/1

			Date	1/17/2023	Volvo Trucks North America	Valiant TMS	Parts list : WEL.WWS001A - WEL.WWS001A	Drawing name: =2V10&EFS-EL	= + V1UQ52UQ3.1	
			Ed.	MKLEPADLO						
			Appr		P6700 Bodyside RH - Robot Cell 2V10			Document type: EPB	Project nr: 22-16150	Page 1 / 1579
Modification	Date	Name	Original		Replacement of / Replaced by	Scale 1:1				

Parts list

F01_001

Device tag	Quantity	Designation	Type number	Supplier	Part number
=V1UQ52UQ4.1-BGR	1	Inductive sensor	BI2-CRS260-AP4X2-H1141/S34	TURCK	TUR.BI2-CRS260-AP4X2-H1141/S34
=V1UQ52UQ4.1-BGS	1	Inductive sensor	BI2-CRS260-AP4X2-H1141/S34	TURCK	TUR.BI2-CRS260-AP4X2-H1141/S34
=V1UQ52UQ4.1-XG4	1	Y splitter	U2-30676	TURCK	TUR.VB2-FSM 4.4/2FKM 4/S3450

Parts list

F01_001

Device tag	Quantity	Designation	Type number	Supplier	Part number
=V1UQ52UQ5.1-BGS/R	1	4-Wire, 4-Pin, DC M12 X 1 (PNP)	WWS001A	WEL	WEL.WWS001A

+.UQ52UQ4.1/1

+.UQ52UQ6.1/1

Parts list

F01_001

Device tag	Quantity	Designation	Type number	Supplier	Part number
=V1UQ52UQ6.1-BGS/R	1	4-Wire, 4-Pin, DC M12 X 1 (PNP)	WWS001A	WEL	WEL.WWS001A

+.UQ52UQ5.1/1

+.UQ52UQ7.1/1

Parts list

F01_001

Device tag	Quantity	Designation	Type number	Supplier	Part number
=V1UQ52UQ7.1-BGS/R	1	4-Wire, 4-Pin, DC M12 X 1 (PNP)	WWS001A	WEL	WEL.WWS001A

+.UQ52UQ6.1/1

+.UQ52UQ8.1/1

Parts list

F01_001

Device tag	Quantity	Designation	Type number	Supplier	Part number
=V1UQ52UQ8.1-BGS/R	1	4-Wire, 4-Pin, DC M12 X 1 (PNP)	WWS001A	WEL	WEL.WWS001A

+.UQ52UQ7.1/1

+.UQ52UQ8.2/1

Parts list

F01_001

Device tag	Quantity	Designation	Type number	Supplier	Part number
=V1UQ52UQ8.2-BGS/R	1	4-Wire, 4-Pin, DC M12 X 1 (PNP)	WWS001A	WEL	WEL.WWS001A

+.UQ52UQ8.1/1

+.UQ52UQ9.1/1

Parts list

F01_001

Device tag	Quantity	Designation	Type number	Supplier	Part number
=V1UQ52UQ9.1-BGS/R	1	4-Wire, 4-Pin, DC M12 X 1 (PNP)	WWS001A	WEL	WEL.WWS001A

+.UQ52UQ8.2/1

+.UQ52UQ10.1/1

Parts list

F01_001

Device tag	Quantity	Designation	Type number	Supplier	Part number
=V1UQ52UQ10.1-BGS/R	1	Inductive sensor Monitoring Kit for Power Clamps	1324638	TUNKERS	TUN.1324638

+.UQ52UQ9.1/1

+.UQ52UQ10.2/1

			Date	1/17/2023	Volvo Trucks North America	Valiant TMS	Parts list : TUN.1324638 - TUN.1324638	Drawing name: =2V10&EFS-EL	= + V1UQ52UQ10.1	
			Ed.	MKLEPADLO	P6700 Bodyside RH - Robot Cell 2V10			Document type: EPB	Project nr: 22-16150	Page 1 / 1579
			Appr			Scale 1:1				
Modification	Date	Name	Original		Replacement of / Replaced by					

Parts list

F01_001

Device tag	Quantity	Designation	Type number	Supplier	Part number
=V1UQ52UQ10.2-BGS/R	1	Inductive sensor Monitoring Kit for Power Clamps	1324638	TUNKERS	TUN.1324638

+.UQ52UQ10.1/1

+.UQ52UQ10.3/1

Parts list

F01_001

Device tag	Quantity	Designation	Type number	Supplier	Part number
=V1UQ52UQ10.3-BGS/R	1	Inductive sensor Monitoring Kit for Power Clamps	1324638	TUNKERS	TUN.1324638

+.UQ52UQ10.2/1

+.UQ52UQ10.4/1

Parts list

F01_001

Device tag	Quantity	Designation	Type number	Supplier	Part number
=V1UQ52UQ10.4-BGS/R	1	Inductive sensor Monitoring Kit for Power Clamps	1324638	TUNKERS	TUN.1324638

+.UQ52UQ10.3/1

+.UQ52UQ10.5/1

Parts list

F01_001

Device tag	Quantity	Designation	Type number	Supplier	Part number
=V1UQ52UQ10.5-BGS/R	1	Inductive sensor Monitoring Kit for Power Clamps	1324638	TUNKERS	TUN.1324638

+.UQ52UQ10.4/1

+.UQ52UQ10.6/1

Parts list

F01_001

Device tag	Quantity	Designation	Type number	Supplier	Part number
=V1UQ52UQ10.6-BGS/R	1	Inductive sensor Monitoring Kit for Power Clamps	1324638	TUNKERS	TUN.1324638

+.UQ52UQ10.5/1

+.UQ52UQ11.1/1

			Date	1/17/2023	Volvo Trucks North America	Valiant TMS	Parts list : TUN.1324638 - TUN.1324638	Drawing name: =2V10&EFS-EL	= + V1UQ52UQ10.6	
			Ed.	MKLEPADLO						
			Appr		P6700 Bodyside RH - Robot Cell 2V10			Document type: EPB	Project nr: 22-16150	Page 1 / 1579
Modification	Date	Name	Original		Replacement of / Replaced by	Scale 1:1				

Parts list

F01_001

Device tag	Quantity	Designation	Type number	Supplier	Part number
=V1UQ52UQ11.1-BGS/R	1	Inductive sensor Monitoring Kit for Power Clamps	1324638	TUNKERS	TUN.1324638

+.UQ52UQ10.6/1

+.UQ52UQ11.2/1

Parts list

F01_001

Device tag	Quantity	Designation	Type number	Supplier	Part number
=V1UQ52UQ11.2-BGS/R	1	Inductive sensor Monitoring Kit for Power Clamps	1324644	TUNKERS	TUN.1324644

+.UQ52UQ11.1/1

+.UQ52UQ11.3/1

			Date	1/17/2023	Volvo Trucks North America	Valiant TMS	Parts list : TUN.1324644 - TUN.1324644	Drawing name: =2V10&EFS-EL	=	
			Ed.	MKLEPADLO					+ V1UQ52UQ11.2	
			Appr		P6700 Bodyside RH - Robot Cell 2V10			Document type: EPB	Project nr: 22-16150	Page 1
Modification	Date	Name	Original		Replacement of / Replaced by	Scale 1:1				1579

Parts list

F01_001

Device tag	Quantity	Designation	Type number	Supplier	Part number
=V1UQ52UQ11.3-BGS/R	1	Inductive sensor Monitoring Kit for Power Clamps	1324644	TUNKERS	TUN.1324644

+.UQ52UQ11.2/1

+.UQ52UQ12.1/1

Parts list

F01_001

Device tag	Quantity	Designation	Type number	Supplier	Part number
=V1UQ52UQ12.1-BGS/R	1	Inductive sensor Monitoring Kit for Power Clamps	1324638	TUNKERS	TUN.1324638

+.UQ52UQ11.3/1

+.UQ52UQ12.2/1

			Date	1/17/2023	Volvo Trucks North America	Valiant TMS	Parts list : TUN.1324638 - TUN.1324638	Drawing name: =2V10&EFS-EL	= + V1UQ52UQ12.1	
			Ed.	MKLEPADLO						
			Appr		P6700 Bodyside RH - Robot Cell 2V10			Document type: EPB	Project nr: 22-16150	Page 1 / 1579
Modification	Date	Name	Original		Replacement of / Replaced by	Scale 1:1				

Parts list

F01_001

Device tag	Quantity	Designation	Type number	Supplier	Part number
=V1UQ52UQ12.2-BGS/R	1	Inductive sensor Monitoring Kit for Power Clamps	1324638	TUNKERS	TUN.1324638

+.UQ52UQ12.1/1

+.UQ52UQ13.1/1

Parts list

F01_001

Device tag	Quantity	Designation	Type number	Supplier	Part number
=V1UQ52UQ13.1-BGS/R	1	Inductive sensor Monitoring Kit for Power Clamps	1324638	TUNKERS	TUN.1324638

+.UQ52UQ12.2/1

+.UQ52UQ14.1/1

Parts list

F01_001

Device tag	Quantity	Designation	Type number	Supplier	Part number
=V1UQ52UQ14.1-BGS/R	1	Inductive sensor Monitoring Kit for Power Clamps	1324638	TUNKERS	TUN.1324638

+.UQ52UQ13.1/1

+.UQ52UQ14.2/1

Parts list

F01_001

Device tag	Quantity	Designation	Type number	Supplier	Part number
=V1UQ52UQ14.2-BGS/R	1	Inductive sensor Monitoring Kit for Power Clamps	1324638	TUNKERS	TUN.1324638

+.UQ52UQ14.1/1

+.UQ52UQ14.3/1

Parts list

F01_001

Device tag	Quantity	Designation	Type number	Supplier	Part number
=V1UQ52UQ14.3-BGS/R	1	Inductive sensor Monitoring Kit for Power Clamps	1324638	TUNKERS	TUN.1324638

+.UQ52UQ14.2/1

+.UQ52UQ15.1/1

Parts list

F01_001

Device tag	Quantity	Designation	Type number	Supplier	Part number
=V1UQ52UQ15.1-BGS/R	1	Inductive sensor Monitoring Kit for Power Clamps	1324638	TUNKERS	TUN.1324638

+.UQ52UQ14.3/1

+.UQ52UQ16.1/1

Parts list

F01_001

Device tag	Quantity	Designation	Type number	Supplier	Part number
=V1UQ52UQ16.1-BGS/R	1	Inductive sensor Monitoring Kit for Power Clamps	1324638	TUNKERS	TUN.1324638

+.UQ52UQ15.1/1

+.UQ52UQ17.1/1

Parts list

F01_001

Device tag	Quantity	Designation	Type number	Supplier	Part number
=V1UQ52UQ17.1-BGS/R	1	Inductive sensor Monitoring Kit for Power Clamps	1324638	TUNKERS	TUN.1324638

+.UQ52UQ16.1/1

+.UQ52UQ18.1/1

			Date	1/17/2023	Volvo Trucks North America	Valiant TMS	Parts list : TUN.1324638 - TUN.1324638	Drawing name: =2V10&EFS-EL	= + V1UQ52UQ17.1	
			Ed.	MKLEPADLO	P6700 Bodyside RH - Robot Cell 2V10			Document type: EPB	Project nr: 22-16150	Page 1 / 1579
			Appr			Scale 1:1				
Modification	Date	Name	Original		Replacement of / Replaced by					

Parts list

F01_001

Device tag	Quantity	Designation	Type number	Supplier	Part number
=V1UQ52UQ18.1-BGS/R	1	Inductive sensor Monitoring Kit for Power Clamps	1324638	TUNKERS	TUN.1324638

+.UQ52UQ17.1/1

+.UQ52UQ19.1/1

			Date	1/17/2023	Volvo Trucks North America	Valiant TMS	Parts list : TUN.1324638 - TUN.1324638	Drawing name: =2V10&EFS-EL	= + V1UQ52UQ18.1	
			Ed.	MKLEPADLO	P6700 Bodyside RH - Robot Cell 2V10			Document type: EPB	Project nr: 22-16150	Page 1 / 1579
			Appr			Scale 1:1				
Modification	Date	Name	Original		Replacement of / Replaced by					

Parts list

F01_001

Device tag	Quantity	Designation	Type number	Supplier	Part number
=V1UQ52UQ19.1-BGS/R	1	Inductive sensor Monitoring Kit for Power Clamps	1324638	TUNKERS	TUN.1324638

+.UQ52UQ18.1/1

+.UQ52UQ20.1/1

Parts list

F01_001

Device tag	Quantity	Designation	Type number	Supplier	Part number
=V1UQ52UQ20.1-BGS/R	1	Inductive sensor Monitoring Kit for Power Clamps	1324644	TUNKERS	TUN.1324644

+.UQ52UQ19.1/1

+.UQ52UQ21.1/1

Parts list

F01_001

Device tag	Quantity	Designation	Type number	Supplier	Part number
=V1UQ52UQ21.1-BGS/R	1	Inductive sensor Monitoring Kit for Power Clamps	1324638	TUNKERS	TUN.1324638

+.UQ52UQ20.1/1

+.UQ52UQ22.1/1

			Date	1/17/2023	Volvo Trucks North America	Valiant TMS	Parts list : TUN.1324638 - TUN.1324638	Drawing name: =2V10&EFS-EL	= + V1UQ52UQ21.1	
			Ed.	MKLEPADLO	P6700 Bodyside RH - Robot Cell 2V10					
			Appr					Document type: EPB	Project nr: 22-16150	Page 1 / 1579
Modification	Date	Name	Original		Replacement of / Replaced by	Scale 1:1				

Parts list

F01_001

Device tag	Quantity	Designation	Type number	Supplier	Part number
=V1UQ52UQ22.1-BGS/R	1	Inductive sensor Monitoring Kit for Power Clamps	1324638	TUNKERS	TUN.1324638

+.UQ52UQ21.1/1

+.UQ52UQ23.1/1

			Date	1/17/2023	Volvo Trucks North America	Valiant TMS	Parts list : TUN.1324638 - TUN.1324638	Drawing name: =2V10&EFS-EL	= + V1UQ52UQ22.1	
			Ed.	MKLEPADLO	P6700 Bodyside RH - Robot Cell 2V10					
			Appr			Scale 1:1		Document type: EPB	Project nr: 22-16150	Page 1 / 1579
Modification	Date	Name	Original		Replacement of / Replaced by					

Parts list

F01_001

Device tag	Quantity	Designation	Type number	Supplier	Part number
=V1UQ52UQ23.1-BGS/R	1	4-Wire, 4-Pin, DC M12 X 1 (PNP)	WWS001A	WEL	WEL.WWS001A

+.UQ52UQ22.1/1

+.UQ52UQ24.1/1

Parts list

F01_001

Device tag	Quantity	Designation	Type number	Supplier	Part number
=V1UQ52UQ24.1-BGS/R	1	Inductive sensor Monitoring Kit for Power Clamps	1324638	TUNKERS	TUN.1324638

+.UQ52UQ23.1/1

+.UQ52UQ25.1/1

			Date	1/17/2023	Volvo Trucks North America	Valiant TMS	Parts list : TUN.1324638 - TUN.1324638	Drawing name: =2V10&EFS-EL	= + V1UQ52UQ24.1	
			Ed.	MKLEPADLO	P6700 Bodyside RH - Robot Cell 2V10			Document type: EPB	Project nr: 22-16150	Page 1 / 1579
			Appr			Scale 1:1				
Modification	Date	Name	Original		Replacement of / Replaced by					

Parts list

F01_001

Device tag	Quantity	Designation	Type number	Supplier	Part number
=V1UQ52UQ25.1-BGR	1	Inductive sensor	BI10U-MT18-AP6X2-H1141/S1589	Turck	TUR.1644905
=V1UQ52UQ25.1-BGS	1	Inductive sensor	BI10U-MT18-AP6X2-H1141/S1589	Turck	TUR.1644905
=V1UQ52UQ25.1-XGR/S	1	Y splitter	U2-30676	TURCK	TUR.VB2-FSM 4.4/2FKM 4/S3450

Parts list

F01_001

Device tag	Quantity	Designation	Type number	Supplier	Part number
=V1UQ52UQ26.1-BGS/R	1	4-Wire, 4-Pin, DC M12 X 1 (PNP)	WWS001A	WEL	WEL.WWS001A

+.UQ52UQ25.1/1

+.UQ52UQ27.1/1

Parts list

F01_001

Device tag	Quantity	Designation	Type number	Supplier	Part number
=V1UQ52UQ27.1-BGS/R	1	Inductive sensor Monitoring Kit for Power Clamps	1324638	TUNKERS	TUN.1324638

+.UQ52UQ26.1/1

+.UQ52UQ28.1/1

Parts list

F01_001

Device tag	Quantity	Designation	Type number	Supplier	Part number
=V1UQ52UQ28.1-BGS/R	1	Inductive sensor Monitoring Kit for Power Clamps	1324638	TUNKERS	TUN.1324638

+.UQ52UQ27.1/1

+.UQ52UQ29.1/1

Parts list

F01_001

Device tag	Quantity	Designation	Type number	Supplier	Part number
=V1UQ52UQ29.1-BGS/R	1	Inductive sensor Monitoring Kit for Power Clamps	1324638	TUNKERS	TUN.1324638

+.UQ52UQ28.1/1

+.UQ52UQ30.1/1

Parts list

F01_001

Device tag	Quantity	Designation	Type number	Supplier	Part number
=V1UQ52UQ30.1-BGS/R	1	Inductive sensor Monitoring Kit for Power Clamps	1324638	TUNKERS	TUN.1324638

+.UQ52UQ29.1/1

+.UQ52UQ31.1/1

			Date	1/17/2023	Volvo Trucks North America	Valiant TMS	Parts list : TUN.1324638 - TUN.1324638	Drawing name: =2V10&EFS-EL	= + V1UQ52UQ30.1	
			Ed.	MKLEPADLO						
			Appr		P6700 Bodyside RH - Robot Cell 2V10			Document type: EPB	Project nr: 22-16150	Page 1 / 1579
Modification	Date	Name	Original		Replacement of / Replaced by	Scale 1:1				

Parts list

F01_001

Device tag	Quantity	Designation	Type number	Supplier	Part number
=V1UQ52UQ31.1-BGS/R	1	Inductive sensor Monitoring Kit for Power Clamps	1324638	TUNKERS	TUN.1324638

+.UQ52UQ30.1/1

+.UQ52UQ32.1/1

Parts list

F01_001

Device tag	Quantity	Designation	Type number	Supplier	Part number
=V1UQ52UQ32.1-BGS/R	1	Inductive sensor Monitoring Kit for Power Clamps	1324638	TUNKERS	TUN.1324638

+.UQ52UQ31.1/1

+.UQ52UQ33.1/1

			Date	1/17/2023	Volvo Trucks North America	Valiant TMS	Parts list : TUN.1324638 - TUN.1324638	Drawing name: =2V10&EFS-EL	= + V1UQ52UQ32.1	
			Ed.	MKLEPADLO						
			Appr		P6700 Bodyside RH - Robot Cell 2V10			Document type: EPB	Project nr: 22-16150	Page 1 / 1579
Modification	Date	Name	Original		Replacement of / Replaced by	Scale 1:1				

Parts list

F01_001

Device tag	Quantity	Designation	Type number	Supplier	Part number
=V1UQ52UQ33.1-BGS/R	1	Inductive sensor Monitoring Kit for Power Clamps	1324638	TUNKERS	TUN.1324638

+.UQ52UQ32.1/1

+.UQ52UQ34.1/1

Parts list

F01_001

Device tag	Quantity	Designation	Type number	Supplier	Part number
=V1UQ52UQ34.1-BGS/R	1	Inductive sensor Monitoring Kit for Power Clamps	1324638	TUNKERS	TUN.1324638

+.UQ52UQ33.1/1

+.UQ52UQ35.1/1

Parts list

F01_001

Device tag	Quantity	Designation	Type number	Supplier	Part number
=V1UQ52UQ35.1-BGS/R	1	4-Wire, 4-Pin, DC M12 X 1 (PNP)	WWS001A	WEL	WEL.WWS001A

+.UQ52UQ34.1/1

+.UQ52UQ36.1/1

Parts list

F01_001

Device tag	Quantity	Designation	Type number	Supplier	Part number
=V1UQ52UQ36.1-BGS/R	1	Inductive sensor Monitoring Kit for Power Clamps	1324638	TUNKERS	TUN.1324638

+.UQ52UQ35.1/1

+.UQ52UQ37.1/1

Parts list

F01_001

Device tag	Quantity	Designation	Type number	Supplier	Part number
=V1UQ52UQ37.1-BGS/R	1	Inductive sensor Monitoring Kit for Power Clamps	1324638	TUNKERS	TUN.1324638

+.UQ52UQ36.1/1

+.UQ52UQ38.1/1

Parts list

F01_001

Device tag	Quantity	Designation	Type number	Supplier	Part number
=V1UQ52UQ38.1-BGS/R	1	Inductive sensor Monitoring Kit for Power Clamps	1324644	TUNKERS	TUN.1324644

+.UQ52UQ37.1/1

+.UQ52UQ39.1/1

Parts list

F01_001

Device tag	Quantity	Designation	Type number	Supplier	Part number
=V1UQ52UQ39.1-BGS/R	1	4-Wire, 4-Pin, DC M12 X 1 (PNP)	WWS001A	WEL	WEL.WWS001A

+.UQ52UQ38.1/1

+.UQ52UQ40.1/1

Parts list

F01_001

Device tag	Quantity	Designation	Type number	Supplier	Part number
=V1UQ52UQ40.1-BGS/R	1	Inductive sensor Monitoring Kit for Power Clamps	1324644	TUNKERS	TUN.1324644

+.UQ52UQ39.1/1

+.UQ52UQ41.1/1

Parts list

F01_001

Device tag	Quantity	Designation	Type number	Supplier	Part number
=V1UQ52UQ41.1-BGS/R	1	Inductive sensor Monitoring Kit for Power Clamps	1324644	TUNKERS	TUN.1324644

+.UQ52UQ40.1/1

+.UQ52UQ42.1/1

			Date	1/17/2023	Volvo Trucks North America	Valiant TMS	Parts list : TUN.1324644 - TUN.1324644	Drawing name: =2V10&EFS-EL	=	
			Ed.	MKLEPADLO					+ V1UQ52UQ41.1	
			Appr		P6700 Bodyside RH - Robot Cell 2V10			Document type: EPB	Project nr: 22-16150	Page 1
Modification	Date	Name	Original		Replacement of / Replaced by	Scale 1:1				1579

Parts list

F01_001

Device tag	Quantity	Designation	Type number	Supplier	Part number
=V1UQ52UQ42.1-BGS/R	1	Inductive sensor Monitoring Kit for Power Clamps	1324638	TUNKERS	TUN.1324638

+.UQ52UQ41.1/1

+.UQ52UQ42.2/1

Parts list

F01_001

Device tag	Quantity	Designation	Type number	Supplier	Part number
=V1UQ52UQ42.2-BGS/R	1	Inductive sensor Monitoring Kit for Power Clamps	1324638	TUNKERS	TUN.1324638

+.UQ52UQ42.1/1

+.UQ52UQ43.1/1

			Date	1/17/2023	Volvo Trucks North America	Valiant TMS	Parts list : TUN.1324638 - TUN.1324638	Drawing name: =2V10&EFS-EL	= + V1UQ52UQ42.2	
			Ed.	MKLEPADLO	P6700 Bodyside RH - Robot Cell 2V10			Document type: EPB	Project nr: 22-16150	Page 1 / 1579
			Appr			Scale 1:1				
Modification	Date	Name	Original		Replacement of / Replaced by					

Parts list

F01_001

Device tag	Quantity	Designation	Type number	Supplier	Part number
=V1UQ52UQ43.1-BGS/R	1	Inductive sensor Monitoring Kit for Power Clamps	1324638	TUNKERS	TUN.1324638

+.UQ52UQ42.2/1

+.UQ52UQ44.1/1

Parts list

F01_001

Device tag	Quantity	Designation	Type number	Supplier	Part number
=V1UQ52UQ44.1-BGS/R	1	4-Wire, 4-Pin, DC M12 X 1 (PNP)	WWS001A	WEL	WEL.WWS001A

+.UQ52UQ43.1/1

+.UQ52UQ44.2/1

Parts list

F01_001

Device tag	Quantity	Designation	Type number	Supplier	Part number
=V1UQ52UQ44.2-BGS/R	1	4-Wire, 4-Pin, DC M12 X 1 (PNP)	WWS001A	WEL	WEL.WWS001A

+.UQ52UQ44.1/1

+.UQ52UQ45.1/1

Parts list

F01_001

Device tag	Quantity	Designation	Type number	Supplier	Part number
=V1UQ52UQ45.1-BGS/R	1	Inductive sensor Monitoring Kit for Power Clamps	1324638	TUNKERS	TUN.1324638

Parts list

F01_001

Device tag	Quantity	Designation	Type number	Supplier	Part number
=V1UQ52UQ46.1-BGS/R	1	Inductive sensor Monitoring Kit for Power Clamps	1324644	TUNKERS	TUN.1324644

+.UQ52UQ45.1/1

+.UQ52UQ47.1/1

			Date	1/17/2023	Volvo Trucks North America	Valiant TMS	Parts list : TUN.1324644 - TUN.1324644	Drawing name: =2V10&EFS-EL	=	
			Ed.	MKLEPADLO					+ V1UQ52UQ46.1	
			Appr		P6700 Bodyside RH - Robot Cell 2V10			Document type: EPB	Project nr: 22-16150	Page 1
Modification	Date	Name	Original		Replacement of / Replaced by	Scale 1:1				1579

Parts list

F01_001

Device tag	Quantity	Designation	Type number	Supplier	Part number
=V1UQ52UQ47.1-BGS/R	1	4-Wire, 4-Pin, DC M12 X 1 (PNP)	WWS001A	WEL	WEL.WWS001A

+.UQ52UQ46.1/1

+.UQ53/1

Parts list

F01_001

Device tag	Quantity	Designation	Type number	Supplier	Part number
=V1UQ53BG0-BG01	1	Inductive sensor	BI20U-CA40-AP6X2-H1141/S1590 W/BS2.0	TURCK	TUR.1627297
=V1UQ53BG0-BG02	1	Inductive sensor	BI20U-CA40-AP6X2-H1141/S1590 W/BS2.0	TURCK	TUR.1627297
=V1UQ53BG0-BG03	1	Inductive sensor	BI20U-CA40-AP6X2-H1141/S1590 W/BS2.0	TURCK	TUR.1627297
=V1UQ53BG0-BG04	1	Inductive sensor	BI20U-CA40-AP6X2-H1141/S1590 W/BS2.0	TURCK	TUR.1627297
=V1UQ53BG0-BG05	1	Inductive sensor	BI20U-CA40-AP6X2-H1141/S1590 W/BS2.0	TURCK	TUR.1627297
=V1UQ53BG0-XG1/2	1	Y splitter	U2-30676	TURCK	TUR.VB2-FSM 4.4/2FKM 4/S3450
=V1UQ53BG0-XG3/4	1	Y splitter	U2-30676	TURCK	TUR.VB2-FSM 4.4/2FKM 4/S3450
=V1UQ53KF1-KF1	0	Bus node	CPX-FB33	FES	FES.548755
=V1UQ53KF1-KF1	0	Interlinking block	CPX-M-GE-EV-S-7/8-5POL	FES	FES.550208
=V1UQ53KF1-KF1.11	0	Manifold block	CPX-M-AB-8-M12X2-5POL	FES	FES.549335
=V1UQ53KF1-KF1.12	0	Manifold block	CPX-M-AB-8-M12X2-5POL	FES	FES.549335
=V1UQ53KF1-KF1.13	0	Manifold block	CPX-M-AB-8-M12X2-5POL	FES	FES.549335
=V1UQ53KF2-KF2	0	Bus node	CPX-FB33	FES	FES.548755
=V1UQ53KF2-KF2	0	Interlinking block	CPX-M-GE-EV-S-7/8-5POL	FES	FES.550208
=V1UQ53KF2-KF2.11	0	Manifold block	CPX-M-AB-8-M12X2-5POL	FES	FES.549335
=V1UQ53KF2-KF2.12	0	Manifold block	CPX-M-AB-8-M12X2-5POL	FES	FES.549335
=V1UQ53WC4-XG51	1	TEE, 5-PIN MINI, STANDARD KEYWAY	RSM-2RKM 50	TURCK	TUR.RSM-2RKM 50

Parts list

F01_001

Device tag	Quantity	Designation	Type number	Supplier	Part number
=V1UQ53UQ1.1-BGS/R	1	4-Wire, 4-Pin, DC M12 X 1 (PNP)	WWS001A	WEL	WEL.WWS001A

+V1UQ53/1

+.UQ53UQ2.1/1

			Date	1/17/2023	Volvo Trucks North America	Valiant TMS	Parts list : WEL.WWS001A - WEL.WWS001A	Drawing name: =2V10&EFS-EL	=
			Ed.	MKLEPADLO					+ V1UQ53UQ1.1
			Appr		P6700 Bodyside RH - Robot Cell 2V10			Document type: EPB	Project nr: 22-16150
Modification	Date	Name	Original		Replacement of / Replaced by	Scale 1:1			Page 1 / 1579

Parts list

F01_001

Device tag	Quantity	Designation	Type number	Supplier	Part number
=V1UQ53UQ2.1-BGS/R	1	4-Wire, 4-Pin, DC M12 X 1 (PNP)	WWS001A	WEL	WEL.WWS001A

+.UQ53UQ1.1/1

+.UQ53UQ3.1/1

Parts list

F01_001

Device tag	Quantity	Designation	Type number	Supplier	Part number
=V1UQ53UQ3.1-BGS/R	1	Inductive sensor Monitoring Kit for Power Clamps	1324638	TUNKERS	TUN.1324638

+.UQ53UQ2.1/1

+.UQ53UQ3.2/1

Parts list

F01_001

Device tag	Quantity	Designation	Type number	Supplier	Part number
=V1UQ53UQ3.2-BGS/R	1	Inductive sensor Monitoring Kit for Power Clamps	1324638	TUNKERS	TUN.1324638

+.UQ53UQ3.1/1

+.UQ53UQ3.3/1

Parts list

F01_001

Device tag	Quantity	Designation	Type number	Supplier	Part number
=V1UQ53UQ3.3-BGS/R	1	Inductive sensor Monitoring Kit for Power Clamps	1324638	TUNKERS	TUN.1324638

+.UQ53UQ3.2/1

+.UQ53UQ3.4/1

Parts list

F01_001

Device tag	Quantity	Designation	Type number	Supplier	Part number
=V1UQ53UQ3.4-BGS/R	1	Inductive sensor Monitoring Kit for Power Clamps	1324638	TUNKERS	TUN.1324638

+.UQ53UQ3.3/1

+.UQ53UQ3.5/1

			Date	1/17/2023	Volvo Trucks North America	Valiant TMS	Parts list : TUN.1324638 - TUN.1324638	Drawing name: =2V10&EFS-EL	= + V1UQ53UQ3.4	
			Ed.	MKLEPADLO	P6700 Bodyside RH - Robot Cell 2V10			Document type: EPB	Project nr: 22-16150	Page 1 / 1579
			Appr			Scale 1:1				
Modification	Date	Name	Original		Replacement of / Replaced by					

Parts list

F01_001

Device tag	Quantity	Designation	Type number	Supplier	Part number
=V1UQ53UQ3.5-BGS/R	1	Inductive sensor Monitoring Kit for Power Clamps	1324638	TUNKERS	TUN.1324638

+.UQ53UQ3.4/1

+.UQ53UQ4.1/1

Parts list

F01_001

Device tag	Quantity	Designation	Type number	Supplier	Part number
=V1UQ53UQ4.1-BGS/R	1	Inductive sensor Monitoring Kit for Power Clamps	1324638	TUNKERS	TUN.1324638

+.UQ53UQ3.5/1

+.UQ53UQ4.2/1

Parts list

F01_001

Device tag	Quantity	Designation	Type number	Supplier	Part number
=V1UQ53UQ4.2-BGS/R	1	Inductive sensor Monitoring Kit for Power Clamps	1324638	TUNKERS	TUN.1324638

+.UQ53UQ4.1/1

+.UQ53UQ4.3/1

Parts list

F01_001

Device tag	Quantity	Designation	Type number	Supplier	Part number
=V1UQ53UQ4.3-BGS/R	1	Inductive sensor Monitoring Kit for Power Clamps	1324638	TUNKERS	TUN.1324638

+.UQ53UQ4.2/1

+.UQ53UQ5.1/1

Parts list

F01_001

Device tag	Quantity	Designation	Type number	Supplier	Part number
=V1UQ53UQ5.1-BGS/R	1	Inductive sensor Monitoring Kit for Power Clamps	1324638	TUNKERS	TUN.1324638

+.UQ53UQ4.3/1

+.UQ53UQ5.2/1

Parts list

F01_001

Device tag	Quantity	Designation	Type number	Supplier	Part number
=V1UQ53UQ5.2-BGS/R	1	Inductive sensor Monitoring Kit for Power Clamps	1324638	TUNKERS	TUN.1324638

+.UQ53UQ5.1/1

+.UQ53UQ5.3/1

Parts list

F01_001

Device tag	Quantity	Designation	Type number	Supplier	Part number
=V1UQ53UQ5.3-BGS/R	1	Inductive sensor Monitoring Kit for Power Clamps	1324638	TUNKERS	TUN.1324638

+.UQ53UQ5.2/1

+.UQ53UQ6.1/1

Parts list

F01_001

Device tag	Quantity	Designation	Type number	Supplier	Part number
=V1UQ53UQ6.1-BGS/R	1	Inductive sensor Monitoring Kit for Power Clamps	1324638	TUNKERS	TUN.1324638

+.UQ53UQ5.3/1

+.UQ53UQ7.1/1

Parts list

F01_001

Device tag	Quantity	Designation	Type number	Supplier	Part number
=V1UQ53UQ7.1-BGS/R	1	Inductive sensor Monitoring Kit for Power Clamps	1324638	TUNKERS	TUN.1324638

+.UQ53UQ6.1/1

+.UQ53UQ8.1/1

Parts list

F01_001

Device tag	Quantity	Designation	Type number	Supplier	Part number
=V1UQ53UQ8.1-BGS/R	1	Inductive sensor Monitoring Kit for Power Clamps	1324638	TUNKERS	TUN.1324638

+.UQ53UQ7.1/1

+.UQ53UQ8.2/1

			Date	1/17/2023	Volvo Trucks North America	Valiant TMS	Parts list : TUN.1324638 - TUN.1324638	Drawing name: =2V10&EFS-EL	= + V1UQ53UQ8.1	
			Ed.	MKLEPADLO	P6700 Bodyside RH - Robot Cell 2V10					
			Appr			Scale 1:1		Document type: EPB	Project nr: 22-16150	Page 1 / 1579
Modification	Date	Name	Original		Replacement of / Replaced by					

Parts list

F01_001

Device tag	Quantity	Designation	Type number	Supplier	Part number
=V1UQ53UQ8.2-BGS/R	1	Inductive sensor Monitoring Kit for Power Clamps	1324638	TUNKERS	TUN.1324638

+.UQ53UQ8.1/1

+.UQ53UQ9.1/1

			Date	1/17/2023	Volvo Trucks North America	Valiant TMS	Parts list : TUN.1324638 - TUN.1324638	Drawing name: =2V10&EFS-EL	=
			Ed.	MKLEPADLO					+ V1UQ53UQ8.2
			Appr		P6700 Bodyside RH - Robot Cell 2V10			Document type: EPB	Project nr: 22-16150
Modification	Date	Name	Original		Replacement of / Replaced by	Scale 1:1			Page 1 / 1579

Parts list

F01_001

Device tag	Quantity	Designation	Type number	Supplier	Part number
=V1UQ53UQ9.1-BGS/R	1	Inductive sensor Monitoring Kit for Power Clamps	1324638	TUNKERS	TUN.1324638

+.UQ53UQ8.2/1

+.UQ53UQ10.1/1

Parts list

F01_001

Device tag	Quantity	Designation	Type number	Supplier	Part number
=V1UQ53UQ10.1-BGS/R	1	Inductive sensor Monitoring Kit for Power Clamps	1324638	TUNKERS	TUN.1324638

+.UQ53UQ9.1/1

+.UQ53UQ10.2/1

			Date	1/17/2023	Volvo Trucks North America	Valiant TMS	Parts list : TUN.1324638 - TUN.1324638	Drawing name: =2V10&EFS-EL	=	
			Ed.	MKLEPADLO					+ V1UQ53UQ10.1	
			Appr		P6700 Bodyside RH - Robot Cell 2V10			Document type: EPB	Project nr: 22-16150	Page 1
Modification	Date	Name	Original		Replacement of / Replaced by	Scale 1:1				1579

Parts list

F01_001

Device tag	Quantity	Designation	Type number	Supplier	Part number
=V1UQ53UQ10.2-BGS/R	1	Inductive sensor Monitoring Kit for Power Clamps	1324638	TUNKERS	TUN.1324638

+.UQ53UQ10.1/1

+.UQ53UQ11.1/1

Parts list

F01_001

Device tag	Quantity	Designation	Type number	Supplier	Part number
=V1UQ53UQ11.1-BGS/R	1	Inductive sensor Monitoring Kit for Power Clamps	1324638	TUNKERS	TUN.1324638

+.UQ53UQ10.2/1

+.UQ53UQ11.2/1

Parts list

F01_001

Device tag	Quantity	Designation	Type number	Supplier	Part number
=V1UQ53UQ11.2-BGS/R	1	Inductive sensor Monitoring Kit for Power Clamps	1324638	TUNKERS	TUN.1324638

+.UQ53UQ11.1/1

+.UQ53UQ12.1/1

Parts list

F01_001

Device tag	Quantity	Designation	Type number	Supplier	Part number
=V1UQ53UQ12.1-BGS/R	1	Inductive sensor Monitoring Kit for Power Clamps	1324638	TUNKERS	TUN.1324638

+.UQ53UQ11.2/1

+.UQ53UQ13.1/1

			Date	1/17/2023	Volvo Trucks North America	Valiant TMS	Parts list : TUN.1324638 - TUN.1324638	Drawing name: =2V10&EFS-EL	=	
			Ed.	MKLEPADLO					+ V1UQ53UQ12.1	
			Appr		P6700 Bodyside RH - Robot Cell 2V10			Document type: EPB	Project nr: 22-16150	Page 1
Modification	Date	Name	Original		Replacement of / Replaced by	Scale 1:1				1579

Parts list

F01_001

Device tag	Quantity	Designation	Type number	Supplier	Part number
=V1UQ53UQ13.1-BGS/R	1	Inductive sensor Monitoring Kit for Power Clamps	1324638	TUNKERS	TUN.1324638

+.UQ53UQ12.1/1

+.UQ53UQ14.1/1

			Date	1/17/2023	Volvo Trucks North America	Valiant TMS	Parts list : TUN.1324638 - TUN.1324638	Drawing name: =2V10&EFS-EL	=	
			Ed.	MKLEPADLO					+ V1UQ53UQ13.1	
			Appr		P6700 Bodyside RH - Robot Cell 2V10			Document type: EPB	Project nr: 22-16150	Page 1
Modification	Date	Name	Original		Replacement of / Replaced by	Scale 1:1				1579

Parts list

F01_001

Device tag	Quantity	Designation	Type number	Supplier	Part number
=V1UQ53UQ14.1-BGS/R	1	4-Wire, 4-Pin, DC M12 X 1 (PNP)	WWS001A	WEL	WEL.WWS001A

+.UQ53UQ13.1/1

+.UQ53UQ15.1/1

Parts list

F01_001

Device tag	Quantity	Designation	Type number	Supplier	Part number
=V1UQ53UQ15.1-BGS/R	1	4-Wire, 4-Pin, DC M12 X 1 (PNP)	WWS001A	WEL	WEL.WWS001A

+.UQ53UQ14.1/1

+.UQ53UQ16.1/1

Parts list

F01_001

Device tag	Quantity	Designation	Type number	Supplier	Part number
=V1UQ53UQ16.1-BGS/R	1	4-Wire, 4-Pin, DC M12 X 1 (PNP)	WWS001A	WEL	WEL.WWS001A

+.UQ53UQ15.1/1

+.UQ53UQ17.1/1

Parts list

F01_001

Device tag	Quantity	Designation	Type number	Supplier	Part number
=V1UQ53UQ17.1-BGS/R	1	4-Wire, 4-Pin, DC M12 X 1 (PNP)	WWS001A	WEL	WEL.WWS001A

Parts list

F01_001

Device tag	Quantity	Designation	Type number	Supplier	Part number
=V1UQ54BG0-BG01	1	Inductive sensor	BI20U-CA40-AP6X2-H1141/S1590 W/BS2.0	TURCK	TUR.1627297
=V1UQ54BG0-BG02	1	Inductive sensor	BI20U-CA40-AP6X2-H1141/S1590 W/BS2.0	TURCK	TUR.1627297
=V1UQ54BG0-BG03	1	Inductive sensor	BI20U-CA40-AP6X2-H1141/S1590 W/BS2.0	TURCK	TUR.1627297
=V1UQ54BG0-BG04	1	Inductive sensor	BI20U-CA40-AP6X2-H1141/S1590 W/BS2.0	TURCK	TUR.1627297
=V1UQ54BG0-BG05	1	Inductive sensor	BI20U-CA40-AP6X2-H1141/S1590 W/BS2.0	TURCK	TUR.1627297
=V1UQ54BG0-XG1/2	1	Y splitter	U2-30676	TURCK	TUR.VB2-FSM 4.4/2FKM 4/S3450
=V1UQ54BG0-XG3/4	1	Y splitter	U2-30676	TURCK	TUR.VB2-FSM 4.4/2FKM 4/S3450
=V1UQ54KF1-KF1	0	Bus node	CPX-FB33	FES	FES.548755
=V1UQ54KF1-KF1	0	Interlinking block	CPX-M-GE-EV-S-7/8-5POL	FES	FES.550208
=V1UQ54KF1-KF1.11	0	Manifold block	CPX-M-AB-8-M12X2-5POL	FES	FES.549335
=V1UQ54KF1-KF1.12	0	Manifold block	CPX-M-AB-8-M12X2-5POL	FES	FES.549335
=V1UQ54KF1-KF1.13	0	Manifold block	CPX-M-AB-8-M12X2-5POL	FES	FES.549335
=V1UQ54KF2-KF2	0	Bus node	CPX-FB33	FES	FES.548755
=V1UQ54KF2-KF2	0	Interlinking block	CPX-M-GE-EV-S-7/8-5POL	FES	FES.550208
=V1UQ54KF2-KF2.11	0	Manifold block	CPX-M-AB-8-M12X2-5POL	FES	FES.549335
=V1UQ54KF2-KF2.12	0	Manifold block	CPX-M-AB-8-M12X2-5POL	FES	FES.549335
=V1UQ54WC4-XG51	1	TEE, 5-PIN MINI, STANDARD KEYWAY	RSM-2RKM 50	TURCK	TUR.RSM-2RKM 50

Parts list

F01_001

Device tag	Quantity	Designation	Type number	Supplier	Part number
=V1UQ54UQ1.1-BGS/R	1	4-Wire, 4-Pin, DC M12 X 1 (PNP)	WWS001A	WEL	WEL.WWS001A

Parts list

F01_001

Device tag	Quantity	Designation	Type number	Supplier	Part number
=V1UQ54UQ2.1-BGS/R	1	4-Wire, 4-Pin, DC M12 X 1 (PNP)	WWS001A	WEL	WEL.WWS001A

+.UQ54UQ1.1/1

+.UQ54UQ3.1/1

Parts list

F01_001

Device tag	Quantity	Designation	Type number	Supplier	Part number
=V1UQ54UQ3.1-BGS/R	1	Inductive sensor Monitoring Kit for Power Clamps	1324638	TUNKERS	TUN.1324638

+.UQ54UQ2.1/1

+.UQ54UQ3.2/1

			Date	1/17/2023	Volvo Trucks North America	Valiant TMS	Parts list : TUN.1324638 - TUN.1324638	Drawing name: =2V10&EFS-EL	= + V1UQ54UQ3.1	
			Ed.	MKLEPADLO						
			Appr		P6700 Bodyside RH - Robot Cell 2V10			Document type: EPB	Project nr: 22-16150	Page 1 / 1579
Modification	Date	Name	Original		Replacement of / Replaced by	Scale 1:1				

Parts list

F01_001

Device tag	Quantity	Designation	Type number	Supplier	Part number
=V1UQ54UQ3.2-BGS/R	1	Inductive sensor Monitoring Kit for Power Clamps	1324638	TUNKERS	TUN.1324638

+.UQ54UQ3.1/1

+.UQ54UQ3.3/1

			Date	1/17/2023	Volvo Trucks North America	Valiant TMS	Parts list : TUN.1324638 - TUN.1324638	Drawing name: =2V10&EFS-EL	=	
			Ed.	MKLEPADLO					+ V1UQ54UQ3.2	
			Appr		P6700 Bodyside RH - Robot Cell 2V10			Document type: EPB	Project nr: 22-16150	Page 1
Modification	Date	Name	Original		Replacement of / Replaced by	Scale 1:1				1579

Parts list

F01_001

Device tag	Quantity	Designation	Type number	Supplier	Part number
=V1UQ54UQ3.3-BGS/R	1	Inductive sensor Monitoring Kit for Power Clamps	1324638	TUNKERS	TUN.1324638

+.UQ54UQ3.2/1

+.UQ54UQ4.1/1

			Date	1/17/2023	Volvo Trucks North America	Valiant TMS	Parts list : TUN.1324638 - TUN.1324638	Drawing name: =2V10&EFS-EL	= + V1UQ54UQ3.3	
			Ed.	MKLEPADLO						
			Appr		P6700 Bodyside RH - Robot Cell 2V10			Document type: EPB	Project nr: 22-16150	Page 1 / 1579
Modification	Date	Name	Original		Replacement of / Replaced by	Scale 1:1				

Parts list

F01_001

Device tag	Quantity	Designation	Type number	Supplier	Part number
=V1UQ54UQ4.1-BGS/R	1	Inductive sensor Monitoring Kit for Power Clamps	1324638	TUNKERS	TUN.1324638

+.UQ54UQ3.3/1

+.UQ54UQ4.2/1

			Date	1/17/2023	Volvo Trucks North America	Valiant TMS	Parts list : TUN.1324638 - TUN.1324638	Drawing name: =2V10&EFS-EL	=	
			Ed.	MKLEPADLO					+ V1UQ54UQ4.1	
			Appr		P6700 Bodyside RH - Robot Cell 2V10			Document type: EPB	Project nr: 22-16150	Page 1
Modification	Date	Name	Original		Replacement of / Replaced by	Scale 1:1				1579

Parts list

F01_001

Device tag	Quantity	Designation	Type number	Supplier	Part number
=V1UQ54UQ4.2-BGS/R	1	Inductive sensor Monitoring Kit for Power Clamps	1324638	TUNKERS	TUN.1324638

+.UQ54UQ4.1/1

+.UQ54UQ4.3/1

			Date	1/17/2023	Volvo Trucks North America	Valiant TMS	Parts list : TUN.1324638 - TUN.1324638	Drawing name: =2V10&EFS-EL	=
			Ed.	MKLEPADLO					+ V1UQ54UQ4.2
			Appr		P6700 Bodyside RH - Robot Cell 2V10			Document type: EPB	Project nr: 22-16150
Modification	Date	Name	Original		Replacement of / Replaced by	Scale 1:1			Page 1 / 1579

Parts list

F01_001

Device tag	Quantity	Designation	Type number	Supplier	Part number
=V1UQ54UQ4.3-BGS/R	1	Inductive sensor Monitoring Kit for Power Clamps	1324638	TUNKERS	TUN.1324638

+.UQ54UQ4.2/1

+.UQ54UQ5.1/1

			Date	1/17/2023	Volvo Trucks North America	Valiant TMS	Parts list : TUN.1324638 - TUN.1324638	Drawing name: =2V10&EFS-EL	= + V1UQ54UQ4.3	
			Ed.	MKLEPADLO	P6700 Bodyside RH - Robot Cell 2V10			Document type: EPB	Project nr: 22-16150	Page 1 / 1579
			Appr			Scale 1:1				
Modification	Date	Name	Original		Replacement of	Replaced by				

Parts list

F01_001

Device tag	Quantity	Designation	Type number	Supplier	Part number
=V1UQ54UQ5.1-BGS/R	1	Inductive sensor Monitoring Kit for Power Clamps	1324638	TUNKERS	TUN.1324638

+.UQ54UQ4.3/1

+.UQ54UQ5.2/1

			Date	1/17/2023	Volvo Trucks North America		Valiant TMS	Parts list : TUN.1324638 - TUN.1324638	Drawing name: =2V10&EFS-EL	= + V1UQ54UQ5.1	
			Ed.	MKLEPADLO							
			Appr		P6700 Bodyside RH - Robot Cell 2V10		Scale 1:1		Document type: EPB	Project nr: 22-16150	Page 1 / 1579
Modification	Date	Name	Original		Replacement of	Replaced by					

Parts list

F01_001

Device tag	Quantity	Designation	Type number	Supplier	Part number
=V1UQ54UQ5.2-BGS/R	1	Inductive sensor Monitoring Kit for Power Clamps	1324638	TUNKERS	TUN.1324638

+.UQ54UQ5.1/1

+.UQ54UQ5.3/1

Parts list

F01_001

Device tag	Quantity	Designation	Type number	Supplier	Part number
=V1UQ54UQ5.3-BGS/R	1	Inductive sensor Monitoring Kit for Power Clamps	1324638	TUNKERS	TUN.1324638

+.UQ54UQ5.2/1

+.UQ54UQ5.4/1

			Date	1/17/2023	Volvo Trucks North America	Valiant TMS	Parts list : TUN.1324638 - TUN.1324638	Drawing name: =2V10&EFS-EL	=	
			Ed.	MKLEPADLO					+ V1UQ54UQ5.3	
			Appr		P6700 Bodyside RH - Robot Cell 2V10			Document type: EPB	Project nr: 22-16150	Page 1 / 1579
Modification	Date	Name	Original		Replacement of / Replaced by	Scale 1:1				

Parts list

F01_001

Device tag	Quantity	Designation	Type number	Supplier	Part number
=V1UQ54UQ5.4-BGS/R	1	Inductive sensor Monitoring Kit for Power Clamps	1324638	TUNKERS	TUN.1324638

+.UQ54UQ5.3/1

+.UQ54UQ6.1/1

			Date	1/17/2023	Volvo Trucks North America	Valiant TMS	Parts list : TUN.1324638 - TUN.1324638	Drawing name: =2V10&EFS-EL	= + V1UQ54UQ5.4	
			Ed.	MKLEPADLO	P6700 Bodyside RH - Robot Cell 2V10			Document type: EPB	Project nr: 22-16150	Page 1 / 1579
			Appr			Scale 1:1				
Modification	Date	Name	Original		Replacement of / Replaced by					

Parts list

F01_001

Device tag	Quantity	Designation	Type number	Supplier	Part number
=V1UQ54UQ6.1-BGS/R	1	Inductive sensor Monitoring Kit for Power Clamps	1324638	TUNKERS	TUN.1324638

+.UQ54UQ5.4/1

+.UQ54UQ6.2/1

Parts list

F01_001

Device tag	Quantity	Designation	Type number	Supplier	Part number
=V1UQ54UQ6.2-BGS/R	1	Inductive sensor Monitoring Kit for Power Clamps	1324638	TUNKERS	TUN.1324638

+.UQ54UQ6.1/1

+.UQ54UQ7.1/1

			Date	1/17/2023	Volvo Trucks North America	Valiant TMS	Parts list : TUN.1324638 - TUN.1324638	Drawing name: =2V10&EFS-EL	=	
			Ed.	MKLEPADLO					+ V1UQ54UQ6.2	
			Appr		P6700 Bodyside RH - Robot Cell 2V10			Document type: EPB	Project nr: 22-16150	Page 1
Modification	Date	Name	Original		Replacement of / Replaced by	Scale 1:1				1579

Parts list

F01_001

Device tag	Quantity	Designation	Type number	Supplier	Part number
=V1UQ54UQ7.1-BGS/R	1	Inductive sensor Monitoring Kit for Power Clamps	1324638	TUNKERS	TUN.1324638

+.UQ54UQ6.2/1

+.UQ54UQ8.1/1

			Date	1/17/2023	Volvo Trucks North America	Valiant TMS	Parts list : TUN.1324638 - TUN.1324638	Drawing name: =2V10&EFS-EL	=	
			Ed.	MKLEPADLO					+ V1UQ54UQ7.1	
			Appr		P6700 Bodyside RH - Robot Cell 2V10			Document type: EPB	Project nr: 22-16150	Page 1 / 1579
Modification	Date	Name	Original		Replacement of / Replaced by	Scale 1:1				

Parts list

F01_001

Device tag	Quantity	Designation	Type number	Supplier	Part number
=V1UQ54UQ8.1-BGS/R	1	Inductive sensor Monitoring Kit for Power Clamps	1324638	TUNKERS	TUN.1324638

+.UQ54UQ7.1/1

+.UQ54UQ8.2/1

			Date	1/17/2023	Volvo Trucks North America	Valiant TMS	Parts list : TUN.1324638 - TUN.1324638	Drawing name: =2V10&EFS-EL	= + V1UQ54UQ8.1	
			Ed.	MKLEPADLO						
			Appr		P6700 Bodyside RH - Robot Cell 2V10			Document type: EPB	Project nr: 22-16150	Page 1 / 1579
Modification	Date	Name	Original		Replacement of / Replaced by	Scale 1:1				

Parts list

F01_001

Device tag	Quantity	Designation	Type number	Supplier	Part number
=V1UQ54UQ8.2-BGS/R	1	Inductive sensor Monitoring Kit for Power Clamps	1324638	TUNKERS	TUN.1324638

+.UQ54UQ8.1/1

+.UQ54UQ9.1/1

			Date	1/17/2023	Volvo Trucks North America	Valiant TMS	Parts list : TUN.1324638 - TUN.1324638	Drawing name: =2V10&EFS-EL	=	
			Ed.	MKLEPADLO					+ V1UQ54UQ8.2	
			Appr		P6700 Bodyside RH - Robot Cell 2V10			Document type: EPB	Project nr: 22-16150	Page 1
Modification	Date	Name	Original		Replacement of / Replaced by	Scale 1:1				1579

Parts list

F01_001

Device tag	Quantity	Designation	Type number	Supplier	Part number
=V1UQ54UQ9.1-BGS/R	1	Inductive sensor Monitoring Kit for Power Clamps	1324638	TUNKERS	TUN.1324638

+.UQ54UQ8.2/1

+.UQ54UQ10.1/1

Parts list

F01_001

Device tag	Quantity	Designation	Type number	Supplier	Part number
=V1UQ54UQ10.1-BGS/R	1	Inductive sensor Monitoring Kit for Power Clamps	1324638	TUNKERS	TUN.1324638

+.UQ54UQ9.1/1

+.UQ54UQ10.2/1

Parts list

F01_001

Device tag	Quantity	Designation	Type number	Supplier	Part number
=V1UQ54UQ10.2-BGS/R	1	Inductive sensor Monitoring Kit for Power Clamps	1324638	TUNKERS	TUN.1324638

+.UQ54UQ10.1/1

+.UQ54UQ11.1/1

			Date	1/17/2023	Volvo Trucks North America	Valiant TMS	Parts list : TUN.1324638 - TUN.1324638	Drawing name: =2V10&EFS-EL	= + V1UQ54UQ10.2	
			Ed.	MKLEPADLO						
			Appr		P6700 Bodyside RH - Robot Cell 2V10			Document type: EPB	Project nr: 22-16150	Page 1 / 1579
Modification	Date	Name	Original		Replacement of / Replaced by	Scale 1:1				

Parts list

F01_001

Device tag	Quantity	Designation	Type number	Supplier	Part number
=V1UQ54UQ11.1-BGS/R	1	4-Wire, 4-Pin, DC M12 X 1 (PNP)	WWS001A	WEL	WEL.WWS001A

+.UQ54UQ10.2/1

+.UQ54UQ12.1/1

Parts list

F01_001

Device tag	Quantity	Designation	Type number	Supplier	Part number
=V1UQ54UQ12.1-BGS/R	1	4-Wire, 4-Pin, DC M12 X 1 (PNP)	WWS001A	WEL	WEL.WWS001A

+.UQ54UQ11.1/1

+.UQ54UQ13.1/1

Parts list

F01_001

Device tag	Quantity	Designation	Type number	Supplier	Part number
=V1UQ54UQ13.1-BGS/R	1	4-Wire, 4-Pin, DC M12 X 1 (PNP)	WWS001A	WEL	WEL.WWS001A

+.UQ54UQ12.1/1

+.UQ54UQ14.1/1

			Date	1/17/2023	Volvo Trucks North America	Valiant TMS	Parts list : WEL.WWS001A - WEL.WWS001A	Drawing name: =2V10&EFS-EL	=
			Ed.	MKLEPADLO					+ V1UQ54UQ13.1
			Appr		P6700 Bodyside RH - Robot Cell 2V10			Document type: EPB	Project nr: 22-16150
Modification	Date	Name	Original		Replacement of / Replaced by	Scale 1:1			Page 1 / 1579

Parts list

F01_001

Device tag	Quantity	Designation	Type number	Supplier	Part number
=V1UQ54UQ14.1-BGS/R	1	4-Wire, 4-Pin, DC M12 X 1 (PNP)	WWS001A	WEL	WEL.WWS001A

Parts list

F01_001

Device tag	Quantity	Designation	Type number	Supplier	Part number
=V1UQ55BG0-BG01	1	Inductive sensor	BI20U-CA40-AP6X2-H1141/S1590 W/BS2.0	TURCK	TUR.1627297
=V1UQ55BG0-BG02	1	Inductive sensor	BI20U-CA40-AP6X2-H1141/S1590 W/BS2.0	TURCK	TUR.1627297
=V1UQ55BG0-BG03	1	Inductive sensor	BI20U-CA40-AP6X2-H1141/S1590 W/BS2.0	TURCK	TUR.1627297
=V1UQ55BG0-BG04	1	Inductive sensor	BI20U-CA40-AP6X2-H1141/S1590 W/BS2.0	TURCK	TUR.1627297
=V1UQ55BG0-BG05	1	Inductive sensor	BI20U-CA40-AP6X2-H1141/S1590 W/BS2.0	TURCK	TUR.1627297
=V1UQ55BG0-XG1/2	1	Y splitter	U2-30676	TURCK	TUR.VB2-FSM 4.4/2FKM 4/S3450
=V1UQ55BG0-XG3/4	1	Y splitter	U2-30676	TURCK	TUR.VB2-FSM 4.4/2FKM 4/S3450
=V1UQ55KF1-KF1	0	Bus node	CPX-FB33	FES	FES.548755
=V1UQ55KF1-KF1	0	Interlinking block	CPX-M-GE-EV-S-7/8-5POL	FES	FES.550208
=V1UQ55KF1-KF1.11	0	Manifold block	CPX-M-AB-8-M12X2-5POL	FES	FES.549335
=V1UQ55KF1-KF1.12	0	Manifold block	CPX-M-AB-8-M12X2-5POL	FES	FES.549335

Parts list

F01_001

Device tag	Quantity	Designation	Type number	Supplier	Part number
=V1UQ55UQ1.1-BGS/R	1	4-Wire, 4-Pin, DC M12 X 1 (PNP)	WWS001A	WEL	WEL.WWS001A

Parts list

F01_001

Device tag	Quantity	Designation	Type number	Supplier	Part number
=V1UQ55UQ2.1-BGS/R	1	4-Wire, 4-Pin, DC M12 X 1 (PNP)	WWS001A	WEL	WEL.WWS001A

+.UQ55UQ1.1/1

+.UQ55UQ3.1/1

Parts list

F01_001

Device tag	Quantity	Designation	Type number	Supplier	Part number
=V1UQ55UQ3.1-BGS/R	1	4-Wire, 4-Pin, DC M12 X 1 (PNP)	WWS001A	WEL	WEL.WWS001A

+.UQ55UQ2.1/1

+.UQ55UQ4.1/1

Parts list

F01_001

Device tag	Quantity	Designation	Type number	Supplier	Part number
=V1UQ55UQ4.1-BGS/R	1	Inductive sensor Monitoring Kit for Power Clamps	1324638	TUNKERS	TUN.1324638

+.UQ55UQ3.1/1

+.UQ55UQ4.2/1

			Date	1/17/2023	Volvo Trucks North America	Valiant TMS	Parts list : TUN.1324638 - TUN.1324638	Drawing name: =2V10&EFS-EL		=	
			Ed.	MKLEPADLO						+ V1UQ55UQ4.1	
			Appr		P6700 Bodyside RH - Robot Cell 2V10			Document type: EPB	Project nr: 22-16150	Page	1
Modification	Date	Name	Original		Replacement of / Replaced by	Scale 1:1					1579

Parts list

F01_001

Device tag	Quantity	Designation	Type number	Supplier	Part number
=V1UQ55UQ4.2-BGS/R	1	Inductive sensor Monitoring Kit for Power Clamps	1324638	TUNKERS	TUN.1324638

+.UQ55UQ4.1/1

+.GL1UQ53UQ12.4/1

			Date	1/17/2023	Volvo Trucks North America	Valiant TMS	Parts list : TUN.1324638 - TUN.1324638	Drawing name: =2V10&EFS-EL	=	
			Ed.	MKLEPADLO					+ V1UQ55UQ4.2	
			Appr		P6700 Bodyside RH - Robot Cell 2V10			Document type: EPB	Project nr: 22-16150	Page 1 / 1579
Modification	Date	Name	Original		Replacement of / Replaced by	Scale 1:1				

Parts list

F01_001

Device tag	Quantity	Designation	Type number	Supplier	Part number
=V1GL1UQ53UQ12.4-BGS/R	1	Inductive sensor Monitoring Kit for Power Clamps	1324638	TUNKERS	TUN.1324638

+.UQ55UQ4.2/1

&ETT+/1

			Date	1/17/2023	Volvo Trucks North America	Valiant TMS	Parts list : TUN.1324638 - TUN.1324638	Drawing name:	=
			Ed.	MKLEPADLO					+ V1GL1UQ53UQ12.4
			Appr		P6700 Bodyside RH - Robot Cell 2V10			Document type: EPB	Project nr: 22-16150 / Page 1
Modification	Date	Name	Original		Replacement of / Replaced by	Scale 1:1			1579

Terminal line-up diagram

F12_001

Part number					
Mounting rail			Strip label	End angle rear	End plate

Terminal					
Part number	Type number	Cross-section	Terminal label	Jumper	Cover

=KF0KF1+UC31-PC1

	DVI	

&EPB+V1GL1UQ53UQ12.4/1

2

			Date	1/17/2023	Volvo Trucks North America	Valiant TMS	Terminal line-up diagram =KF0KF1+UC31-PC1	Drawing name: =2V10&EFS-EL	=		
			Ed.	MKLEPADLO					+		
			Appr		P6700 Bodyside RH - Robot Cell 2V10			Document type: ETT	Project nr: 22-16150	Page	1
Modification	Date	Name	Original		Replacement of / Replaced by	Scale 1:1					1579

Terminal line-up diagram

F12_001

Part number					
Mounting rail			Strip label	End angle rear	End plate

Terminal					
Part number	Type number	Cross-section	Terminal label	Jumper	Cover

=KF0KF1+UC31-PH1

DVI

1

3

			Date	1/17/2023	Volvo Trucks North America	Valiant TMS	Terminal line-up diagram =KF0KF1+UC31-PH1	Drawing name: =2V10&EFS-EL	=
			Ed.	MKLEPADLO					+
			Appr		P6700 Bodyside RH - Robot Cell 2V10			Document type: ETT	Project nr: 22-16150	Page 2
Modification	Date	Name	Original		Replacement of / Replaced by	Scale 1:1			1579

Terminal line-up diagram

F12_001

Part number					
Mounting rail			Strip label	End angle rear	End plate

Terminal					
Part number	Type number	Cross-section	Terminal label	Jumper	Cover
WEI.1608510000	ZDU 2.5	2.5			
WEI.1608740000	ZAP/TW 1				
WEI.9540000000	ZEW 35				
WEI.1608520000	ZDU 2.5 BL	2.5 mm²			
WEI.1608520000	ZDU 2.5 BL	2.5 mm²			

=KF0WC3+UC31-XD1

'	L1	
'	N	
'		
'	PE	
'		

2 4

			Date	1/17/2023	Volvo Trucks North America	Valiant TMS	Terminal line-up diagram =KF0WC3+UC31-XD1	Drawing name: =2V10&EFS-EL	=
			Ed.	MKLEPADLO					+
			Appr		P6700 Bodyside RH - Robot Cell 2V10			Document type: ETT	Project nr: 22-16150	Page 3
Modification	Date	Name	Original		Replacement of / Replaced by	Scale 1:1			1579

Terminal line-up diagram

F12_001

Part number					
Mounting rail			Strip label	End angle rear	End plate

Terminal					
Part number	Type number	Cross-section	Terminal label	Jumper	Cover
WEI.1608510000	ZDU 2.5	2.5			
WEI.1608740000	ZAP/TW 1				
WEI.9540000000	ZEW 35				
WEI.1608520000	ZDU 2.5 BL	2.5 mm²			
WEI.1608520000	ZDU 2.5 BL	2.5 mm²			

=KF0WC3+UC31-XD2

'	1L1	
'	N	
'		
'	PE	
'		

3

5

			Date	1/17/2023	Volvo Trucks North America	Valiant TMS	Terminal line-up diagram =KF0WC3+UC31-XD2	Drawing name: =2V10&EFS-EL	=
			Ed.	MKLEPADLO					+
			Appr		P6700 Bodyside RH - Robot Cell 2V10			Document type: ETT	Project nr: 22-16150	Page 4
Modification	Date	Name	Original		Replacement of / Replaced by	Scale 1:1			1579

Terminal line-up diagram

F12_001

Part number					
Mounting rail			Strip label	End angle rear	End plate

Terminal					
Part number	Type number	Cross-section	Terminal label	Jumper	Cover
WEI.8731720000	ZTR 2.5/3AN	2.5			
WEI.1608800000	ZAP/TW 3				
WEI.9540000000	ZEW 35				
WEI.8731720000	ZTR 2.5/3AN	2.5			
WEI.8731720000	ZTR 2.5/3AN	2.5			
WEI.8731720000	ZTR 2.5/3AN	2.5			
WEI.8731720000	ZTR 2.5/3AN	2.5			
WEI.8731720000	ZTR 2.5/3AN	2.5			

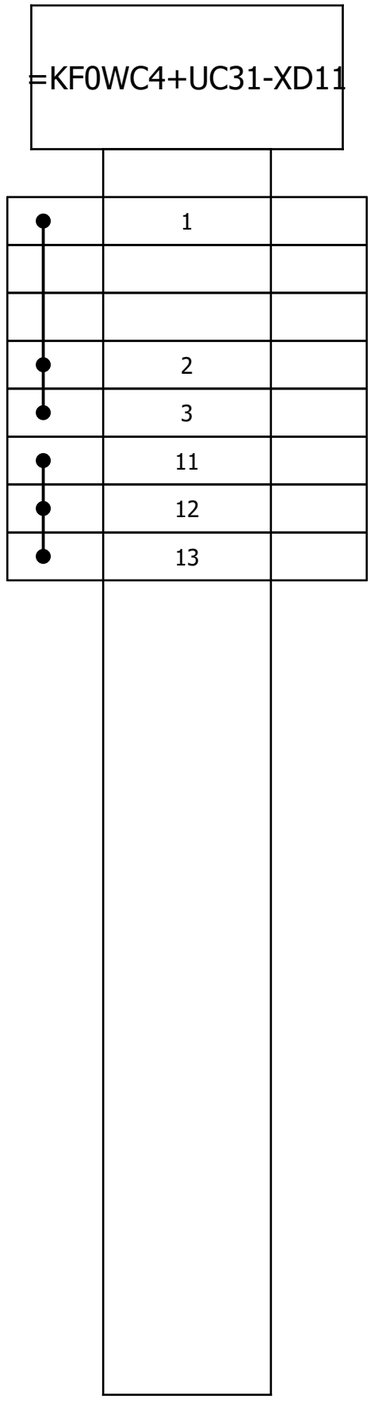

Terminal line-up diagram

F12_001

Part number					
Mounting rail			Strip label	End angle rear	End plate

Terminal					
Part number	Type number	Cross-section	Terminal label	Jumper	Cover
WEI.8731720000	ZTR 2.5/3AN	2.5			
WEI.1608800000	ZAP/TW 3				
WEI.9540000000	ZEW 35				
WEI.8731720000	ZTR 2.5/3AN	2.5			
WEI.8731720000	ZTR 2.5/3AN	2.5			
WEI.8731720000	ZTR 2.5/3AN	2.5			
WEI.8731720000	ZTR 2.5/3AN	2.5			
WEI.8731720000	ZTR 2.5/3AN	2.5			
WEI.8731720000	ZTR 2.5/3AN	2.5			
WEI.8731720000	ZTR 2.5/3AN	2.5			

=KF0WC4+UC31-XD12

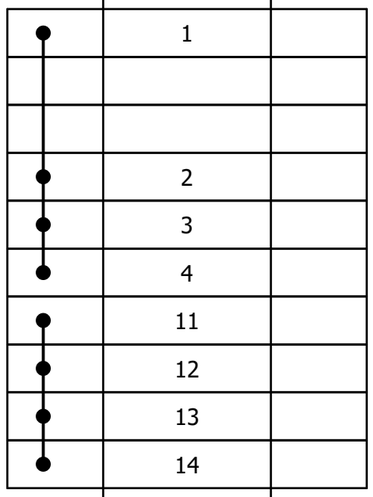

5 7

			Date	1/17/2023	Volvo Trucks North America	Valiant TMS	Terminal line-up diagram =KF0WC4+UC31-XD12	Drawing name: =2V10&EFS-EL	=	
			Ed.	MKLEPADLO					+	
			Appr		P6700 Bodyside RH - Robot Cell 2V10			Document type: ETT	Project nr: 22-16150	Page 6
Modification	Date	Name	Original		Replacement of / Replaced by	Scale 1:1				1579

Terminal line-up diagram

F12_001

Part number					
Mounting rail			Strip label	End angle rear	End plate

Terminal					
Part number	Type number	Cross-section	Terminal label	Jumper	Cover
WEI.8731720000	ZTR 2.5/3AN	2.5			
WEI.1608800000	ZAP/TW 3				
WEI.9540000000	ZEW 35				
WEI.8731720000	ZTR 2.5/3AN	2.5			
WEI.8731720000	ZTR 2.5/3AN	2.5			
WEI.8731720000	ZTR 2.5/3AN	2.5			
WEI.8731720000	ZTR 2.5/3AN	2.5			
WEI.8731720000	ZTR 2.5/3AN	2.5			

=KF0WC4+UC31-XD13

	1	
	2	
	3	
	11	
	12	
	13	

6

8

			Date	1/17/2023	Volvo Trucks North America	Valiant TMS	Terminal line-up diagram =KF0WC4+UC31-XD13	Drawing name: =2V10&EFS-EL	=	
			Ed.	MKLEPADLO					+	
			Appr		P6700 Bodyside RH - Robot Cell 2V10			Document type: ETT	Project nr: 22-16150	Page 7
Modification	Date	Name	Original		Replacement of	Replaced by	Scale 1:1			1579

Terminal line-up diagram

F12_001

Part number					
Mounting rail			Strip label	End angle rear	End plate

Terminal					
Part number	Type number	Cross-section	Terminal label	Jumper	Cover
WEI.8731720000	ZTR 2.5/3AN	2.5			
WEI.1608800000	ZAP/TW 3				
WEI.9540000000	ZEW 35				
WEI.8731720000	ZTR 2.5/3AN	2.5			
WEI.8731720000	ZTR 2.5/3AN	2.5			
WEI.8731720000	ZTR 2.5/3AN	2.5			
WEI.8731720000	ZTR 2.5/3AN	2.5			
WEI.8731720000	ZTR 2.5/3AN	2.5			
WEI.8731720000	ZTR 2.5/3AN	2.5			
WEI.8731720000	ZTR 2.5/3AN	2.5			

=KF0WC4+UC31-XD14

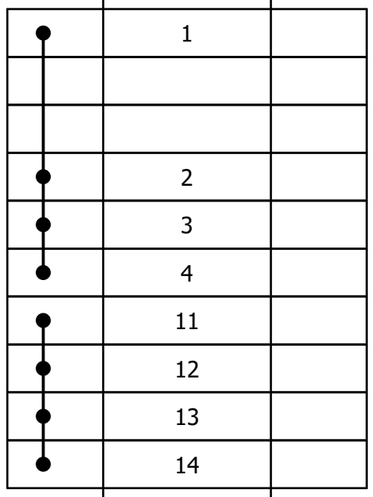

Terminal line-up diagram

F12_001

Part number					
Mounting rail			Strip label	End angle rear	End plate

Terminal					
Part number	Type number	Cross-section	Terminal label	Jumper	Cover

=V1WC1+V1UC11-PE

'	PE	

8

10

			Date	1/17/2023	Volvo Trucks North America	Valiant TMS	Terminal line-up diagram =V1WC1+V1UC11-PE	Drawing name: =2V10&EFS-EL	=
			Ed.	MKLEPADLO					+
			Appr		P6700 Bodyside RH - Robot Cell 2V10			Document type: ETT	Project nr: 22-16150	Page 9
Modification	Date	Name	Original		Replacement of / Replaced by	Scale 1:1			1579

Terminal line-up diagram

F12_001

Part number					
Mounting rail			Strip label	End angle rear	End plate

Terminal					
Part number	Type number	Cross-section	Terminal label	Jumper	Cover
1SNK705012R0000	ZK2.5-4P	2.5			
1SNK705012R0000	ZK2.5-4P	2.5			
1SNK705012R0000	ZK2.5-4P	2.5			
1SNK705012R0000	ZK2.5-4P	2.5			
1SNK705012R0000	ZK2.5-4P	2.5			
1SNK705012R0000	ZK2.5-4P	2.5			
1SNK705012R0000	ZK2.5-4P	2.5			
1SNK705012R0000	ZK2.5-4P	2.5			
1SNK705012R0000	ZK2.5-4P	2.5			
1SNK705012R0000	ZK2.5-4P	2.5			
1SNK705012R0000	ZK2.5-4P	2.5			
1SNK705012R0000	ZK2.5-4P	2.5			
1SNK705012R0000	ZK2.5-4P	2.5			
1SNK705012R0000	ZK2.5-4P	2.5			
1SNK705012R0000	ZK2.5-4P	2.5			
1SNK705012R0000	ZK2.5-4P	2.5			

=V1WC2+V1UC11-XD1

	1	
	2	
	3	
	4	
	5	
	6	
	7	
	8	
	9	
	10	
	11	
	12	
	13	
	14	
	15	
	16	

Terminal line-up diagram

F12_001

Part number					
Mounting rail			Strip label	End angle rear	End plate

Terminal					
Part number	Type number	Cross-section	Terminal label	Jumper	Cover
1SNK705012R0000	ZK2.5-4P	2.5			
1SNK705012R0000	ZK2.5-4P	2.5			
1SNK705012R0000	ZK2.5-4P	2.5			
1SNK705012R0000	ZK2.5-4P	2.5			
1SNK705012R0000	ZK2.5-4P	2.5			
1SNK705012R0000	ZK2.5-4P	2.5			
1SNK705012R0000	ZK2.5-4P	2.5			
1SNK705012R0000	ZK2.5-4P	2.5			

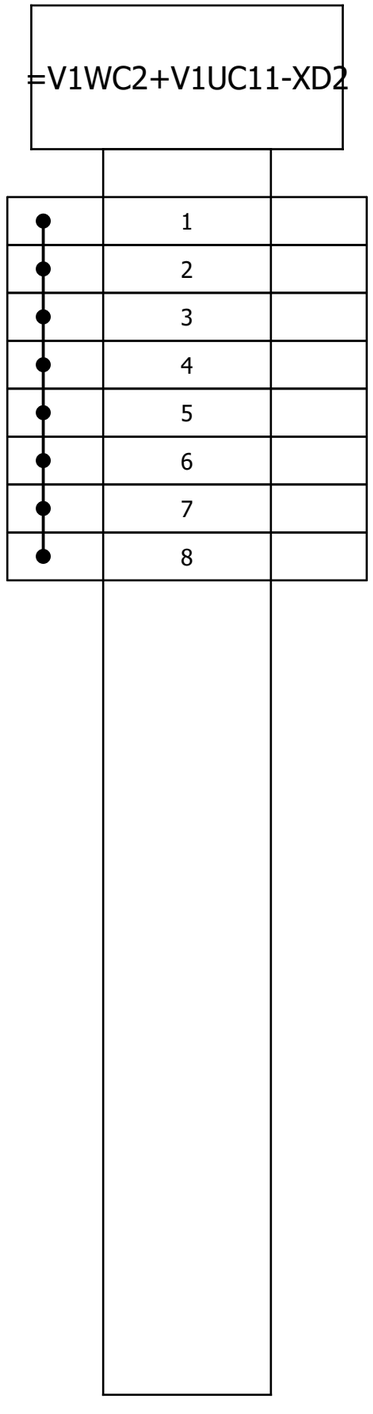

Terminal line-up diagram

F12_001

Part number					
Mounting rail			Strip label	End angle rear	End plate

Terminal					
Part number	Type number	Cross-section	Terminal label	Jumper	Cover
1SNK705012R0000	ZK2.5-4P	2.5			
1SNK705012R0000	ZK2.5-4P	2.5			
1SNK705012R0000	ZK2.5-4P	2.5			
1SNK705012R0000	ZK2.5-4P	2.5			
1SNK705012R0000	ZK2.5-4P	2.5			

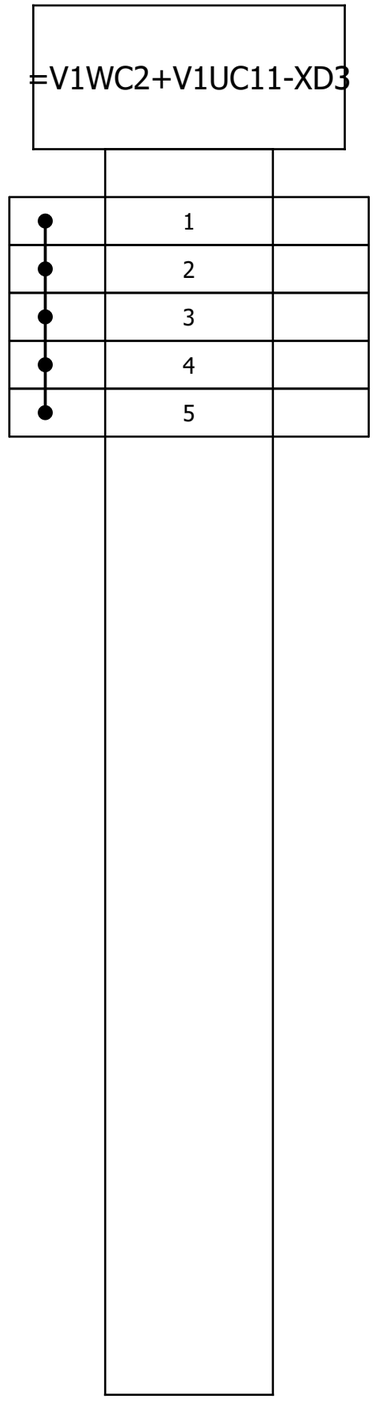

			Date	1/17/2023	Volvo Trucks North America	Valiant TMS	Terminal line-up diagram =V1WC2+V1UC11-XD3	Drawing name: =2V10&EFS-EL	=	
			Ed.	MKLEPADLO	P6700 Bodyside RH - Robot Cell 2V10				+	
			Appr					Document type: ETT	Project nr: 22-16150	Page 12 / 1579
Modification	Date	Name	Original		Replacement of	Replaced by	Scale 1:1			

Terminal line-up diagram

F12_001

Part number					
Mounting rail			Strip label	End angle rear	End plate

Terminal					
Part number	Type number	Cross-section	Terminal label	Jumper	Cover
1SNK706012R0000	ZK4-4P	4			
1SNK706012R0000	ZK4-4P	4			
1SNK706012R0000	ZK4-4P	4			
1SNK706012R0000	ZK4-4P	4			

=V1WC3+V1UC11-XD1

'	1	
'	2	
'	3	
'	4	

12

14

			Date	1/17/2023	Volvo Trucks North America	Valiant TMS	Terminal line-up diagram =V1WC3+V1UC11-XD1	Drawing name: =2V10&EFS-EL	=	
			Ed.	MKLEPADLO					+	
			Appr		P6700 Bodyside RH - Robot Cell 2V10			Document type: ETT	Project nr: 22-16150	Page 13
Modification	Date	Name	Original		Replacement of	Replaced by	Scale 1:1			1579

Terminal line-up diagram

F12_001

Part number					
Mounting rail			Strip label	End angle rear	End plate

=V1WC3+V1UC11-XD2

Terminal					
Part number	Type number	Cross-section	Terminal label	Jumper	Cover
1SNK706012R0000	ZK4-4P	4			
1SNK706012R0000	ZK4-4P	4			
1SNK706012R0000	ZK4-4P	4			
1SNK706012R0000	ZK4-4P	4			
1SNK706012R0000	ZK4-4P	4			
1SNK706012R0000	ZK4-4P	4			
1SNK706012R0000	ZK4-4P	4			
1SNK706012R0000	ZK4-4P	4			
1SNK706012R0000	ZK4-4P	4			
1SNK706012R0000	ZK4-4P	4			
1SNK706012R0000	ZK4-4P	4			
1SNK706012R0000	ZK4-4P	4			

'	1	
'	2	
'	3	
'	4	
'	5	
'	6	
'	7	
'	8	
'	9	
'	10	
'	11	
'	12	

			Date	1/17/2023	Volvo Trucks North America	Valiant TMS	Terminal line-up diagram =V1WC3+V1UC11-XD2	Drawing name: =2V10&EFS-EL	=	
			Ed.	MKLEPADLO					+	
			Appr		P6700 Bodyside RH - Robot Cell 2V10			Document type: ETT	Project nr: 22-16150	Page 14
Modification	Date	Name	Original		Replacement of / Replaced by	Scale 1:1				1579

Terminal line-up diagram

F12_001

Part number					
Mounting rail			Strip label	End angle rear	End plate
Terminal					
Part number	Type number	Cross-section	Terminal label	Jumper	Cover
1SNK705012R0000	ZK2.5-4P	2.5			
1SNK705012R0000	ZK2.5-4P	2.5			
1SNK705012R0000	ZK2.5-4P	2.5			
1SNK705012R0000	ZK2.5-4P	2.5			
1SNK705012R0000	ZK2.5-4P	2.5			
1SNK705012R0000	ZK2.5-4P	2.5			
1SNK705012R0000	ZK2.5-4P	2.5			
1SNK705012R0000	ZK2.5-4P	2.5			
1SNK705012R0000	ZK2.5-4P	2.5			

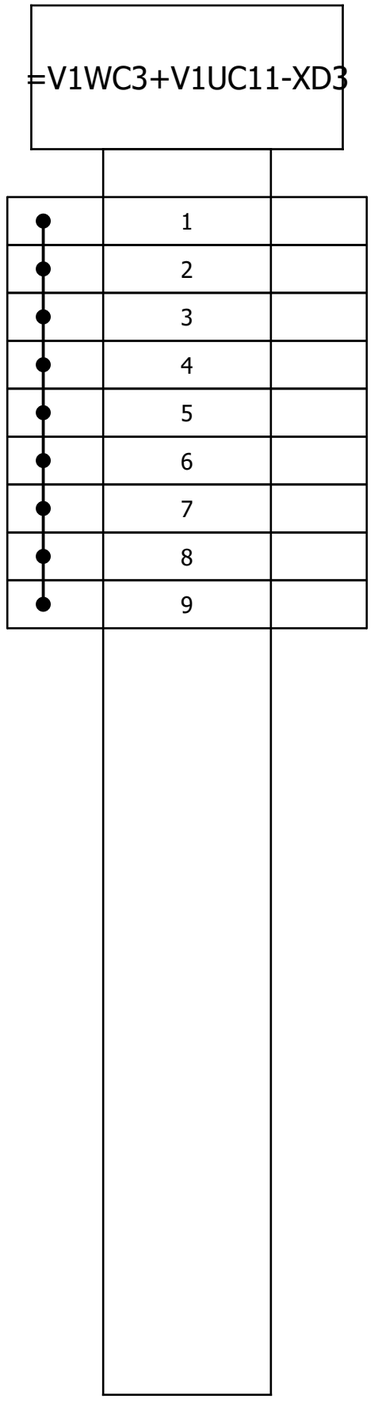

14

16

			Date	1/17/2023	Volvo Trucks North America	Valiant TMS	Terminal line-up diagram =V1WC3+V1UC11-XD3	Drawing name: =2V10&EFS-EL	=
			Ed.	MKLEPADLO					+
			Appr		P6700 Bodyside RH - Robot Cell 2V10			Document type: ETT	Project nr: 22-16150
Modification	Date	Name	Original		Replacement of / Replaced by	Scale 1:1			Page 15 / 1579

Terminal line-up diagram

F12_001

Part number					
Mounting rail			Strip label	End angle rear	End plate

=V1WC4+V1UC11-KF11.14

Terminal					
Part number	Type number	Cross-section	Terminal label	Jumper	Cover
WEI.8731720000	ZTR 2.5/3AN	2.5			
WEI.8731720000	ZTR 2.5/3AN	2.5			
WEI.8731720000	ZTR 2.5/3AN	2.5			
WEI.8731720000	ZTR 2.5/3AN	2.5			

'	1	
'	2	
'	3	
'	4	

Terminal line-up diagram

F12_001

Part number					
Mounting rail			Strip label	End angle rear	End plate

Terminal					
Part number	Type number	Cross-section	Terminal label	Jumper	Cover

=V1WC4+V1UC11-XD5

'	1	

16

18

			Date	1/17/2023	Volvo Trucks North America	Valiant TMS	Terminal line-up diagram =V1WC4+V1UC11-XD5	Drawing name: =2V10&EFS-EL	=
			Ed.	MKLEPADLO					+
			Appr		P6700 Bodyside RH - Robot Cell 2V10			Document type: ETT	Project nr: 22-16150
Modification	Date	Name	Original		Replacement of	Replaced by	Scale 1:1		Page 17 / 1579

Terminal line-up diagram

F12_001

Part number					
Mounting rail			Strip label	End angle rear	End plate

Terminal					
Part number	Type number	Cross-section	Terminal label	Jumper	Cover

=V1WC4+V1UC11-XD6

'	1	

17

19

			Date	1/17/2023	Volvo Trucks North America	Valiant TMS	Terminal line-up diagram =V1WC4+V1UC11-XD6	Drawing name: =2V10&EFS-EL	=
			Ed.	MKLEPADLO					+
			Appr		P6700 Bodyside RH - Robot Cell 2V10			Document type: ETT	Project nr: 22-16150
Modification	Date	Name	Original		Replacement of	Replaced by	Scale 1:1		Page 18 / 1579

Terminal line-up diagram

F12_001

Part number					
Mounting rail			Strip label	End angle rear	End plate

=V1WC4+V1UC11-XD10

Terminal					
Part number	Type number	Cross-section	Terminal label	Jumper	Cover
WEI.8731720000	ZTR 2.5/3AN	2.5			
WEI.8731720000	ZTR 2.5/3AN	2.5			
WEI.8731720000	ZTR 2.5/3AN	2.5			
WEI.8731720000	ZTR 2.5/3AN	2.5			
WEI.8731720000	ZTR 2.5/3AN	2.5			
WEI.8731720000	ZTR 2.5/3AN	2.5			
WEI.8731720000	ZTR 2.5/3AN	2.5			
WEI.8731720000	ZTR 2.5/3AN	2.5			
WEI.8731720000	ZTR 2.5/3AN	2.5			
WEI.8731720000	ZTR 2.5/3AN	2.5			
WEI.8731720000	ZTR 2.5/3AN	2.5			
WEI.8731720000	ZTR 2.5/3AN	2.5			
WEI.8731720000	ZTR 2.5/3AN	2.5			
WEI.8731720000	ZTR 2.5/3AN	2.5			
WEI.8731720000	ZTR 2.5/3AN	2.5			

	1	
	2	
	3	
	5	
	4	
	6	
	7	
	8	
	9	
	10	
	11	
	12	
	13	
	14	
	15	

Terminal line-up diagram

F12_001

Part number					
Mounting rail			Strip label	End angle rear	End plate

Terminal					
Part number	Type number	Cross-section	Terminal label	Jumper	Cover
WEI.8731720000	ZTR 2.5/3AN	2.5			

=V1WC4+V1UC11-XD11

'	1	

19

21

			Date	1/17/2023	Volvo Trucks North America	Valiant TMS	Terminal line-up diagram =V1WC4+V1UC11-XD11	Drawing name: =2V10&EFS-EL	=
			Ed.	MKLEPADLO	P6700 Bodyside RH - Robot Cell 2V10				+
			Appr					Document type: ETT	Project nr: 22-16150
Modification	Date	Name	Original		Replacement of	Replaced by	Scale 1:1		Page 20 / 1579

Terminal line-up diagram

F12_001

Part number					
Mounting rail			Strip label	End angle rear	End plate

Terminal					
Part number	Type number	Cross-section	Terminal label	Jumper	Cover
WEI.8731720000	ZTR 2.5/3AN	2.5			
WEI.8731720000	ZTR 2.5/3AN	2.5			

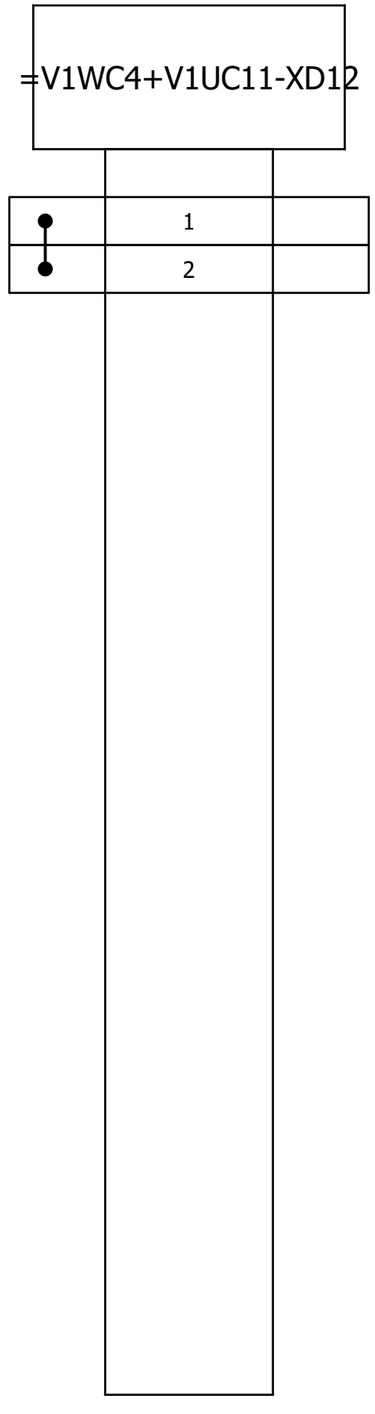

Terminal line-up diagram

F12_001

Part number					
Mounting rail			Strip label	End angle rear	End plate
Terminal					
Part number	Type number	Cross-section	Terminal label	Jumper	Cover
WEI.8731720000	ZTR 2.5/3AN	2.5			
WEI.8731720000	ZTR 2.5/3AN	2.5			
WEI.8731720000	ZTR 2.5/3AN	2.5			
WEI.8731720000	ZTR 2.5/3AN	2.5			
WEI.8731720000	ZTR 2.5/3AN	2.5			
WEI.8731720000	ZTR 2.5/3AN	2.5			
WEI.8731720000	ZTR 2.5/3AN	2.5			
WEI.8731720000	ZTR 2.5/3AN	2.5			

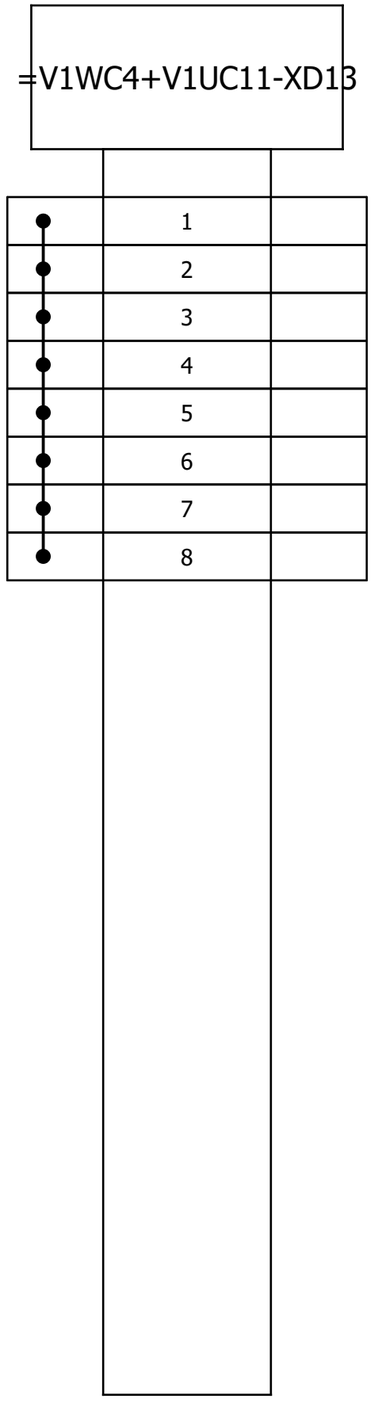

Terminal line-up diagram

F12_001

Part number					
Mounting rail			Strip label	End angle rear	End plate

Terminal					
Part number	Type number	Cross-section	Terminal label	Jumper	Cover
WEI.8731720000	ZTR 2.5/3AN	2.5			
WEI.8731720000	ZTR 2.5/3AN	2.5			

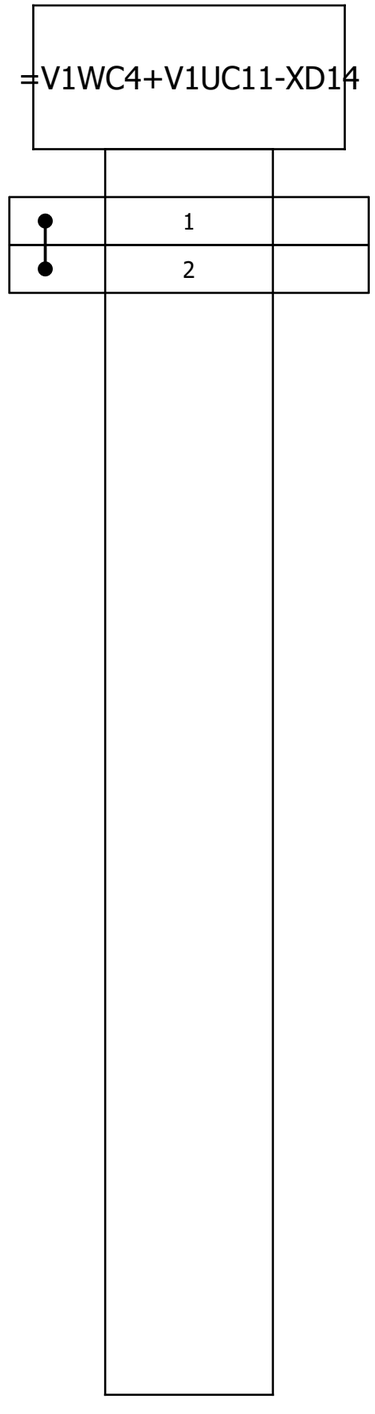

Terminal line-up diagram

F12_001

Part number					
Mounting rail			Strip label	End angle rear	End plate

Terminal					
Part number	Type number	Cross-section	Terminal label	Jumper	Cover
WEI.8731720000	ZTR 2.5/3AN	2.5			
WEI.8731720000	ZTR 2.5/3AN	2.5			
WEI.8731720000	ZTR 2.5/3AN	2.5			
WEI.8731720000	ZTR 2.5/3AN	2.5			
WEI.8731720000	ZTR 2.5/3AN	2.5			
WEI.8731720000	ZTR 2.5/3AN	2.5			
WEI.8731720000	ZTR 2.5/3AN	2.5			
WEI.8731720000	ZTR 2.5/3AN	2.5			

=V1WC4+V1UC11-XD20

	1	
	2	
	3	
	4	
	5	
	6	
	7	
	8	

			Date	1/17/2023	Volvo Trucks North America	Valiant TMS	Terminal line-up diagram =V1WC4+V1UC11-XD20	Drawing name: =2V10&EFS-EL	=		
			Ed.	MKLEPADLO	P6700 Bodyside RH - Robot Cell 2V10				+		
			Appr					Document type: ETT	Project nr: 22-16150	Page	24
Modification	Date	Name	Original		Replacement of / Replaced by	Scale 1:1					1579

Terminal line-up diagram

F12_001

Part number					
Mounting rail			Strip label	End angle rear	End plate
Terminal					
Part number	Type number	Cross-section	Terminal label	Jumper	Cover
WEI.8731720000	ZTR 2.5/3AN	2.5			
WEI.8731720000	ZTR 2.5/3AN	2.5			

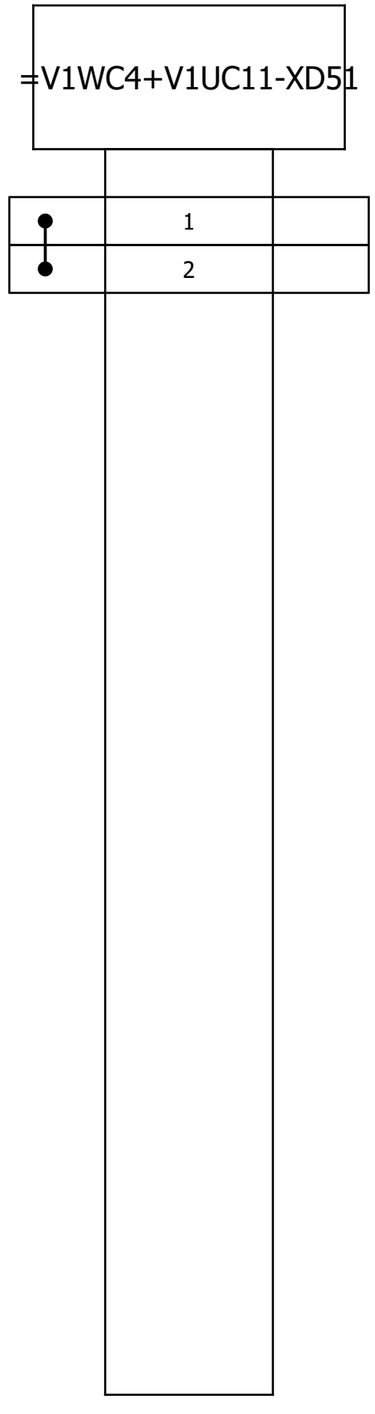

Terminal line-up diagram

F12_001

Part number					
Mounting rail			Strip label	End angle rear	End plate

Terminal					
Part number	Type number	Cross-section	Terminal label	Jumper	Cover
WEI.8731720000	ZTR 2.5/3AN	2.5			
WEI.8731720000	ZTR 2.5/3AN	2.5			

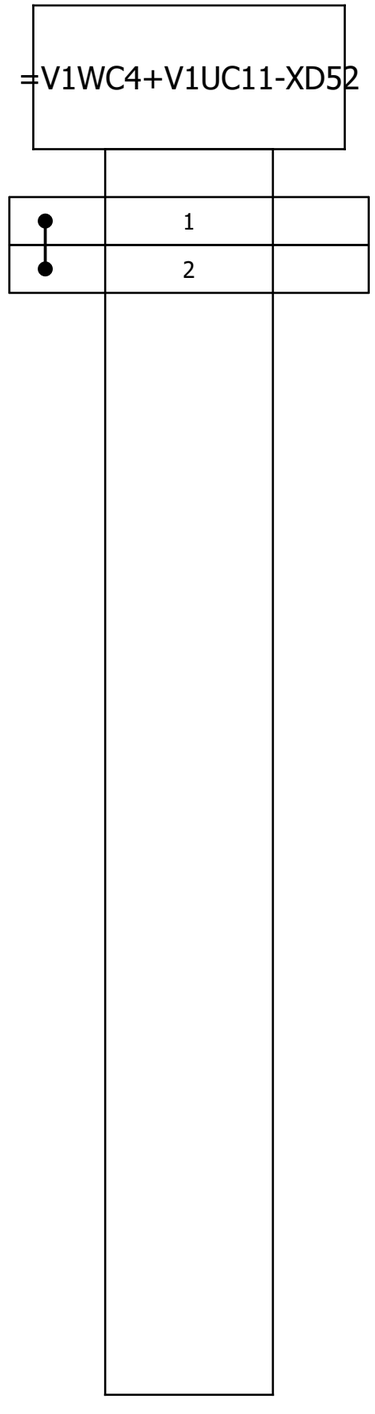

Terminal line-up diagram

F12_001

Part number					
Mounting rail			Strip label	End angle rear	End plate

Terminal					
Part number	Type number	Cross-section	Terminal label	Jumper	Cover
WEI.8731720000	ZTR 2.5/3AN	2.5			
WEI.8731720000	ZTR 2.5/3AN	2.5			

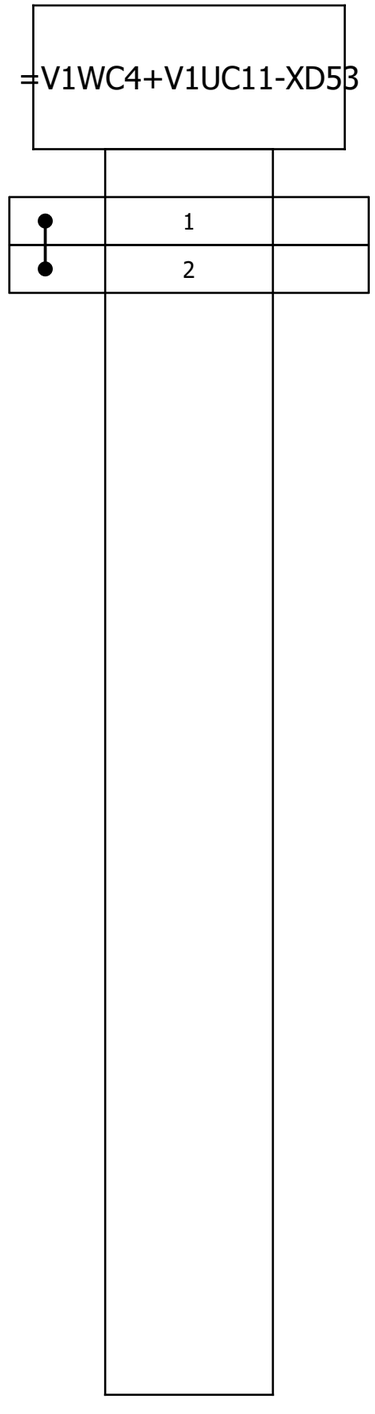

Terminal line-up diagram

F12_001

Part number					
Mounting rail			Strip label	End angle rear	End plate

Terminal					
Part number	Type number	Cross-section	Terminal label	Jumper	Cover
WEI.8731720000	ZTR 2.5/3AN	2.5			
WEI.8731720000	ZTR 2.5/3AN	2.5			

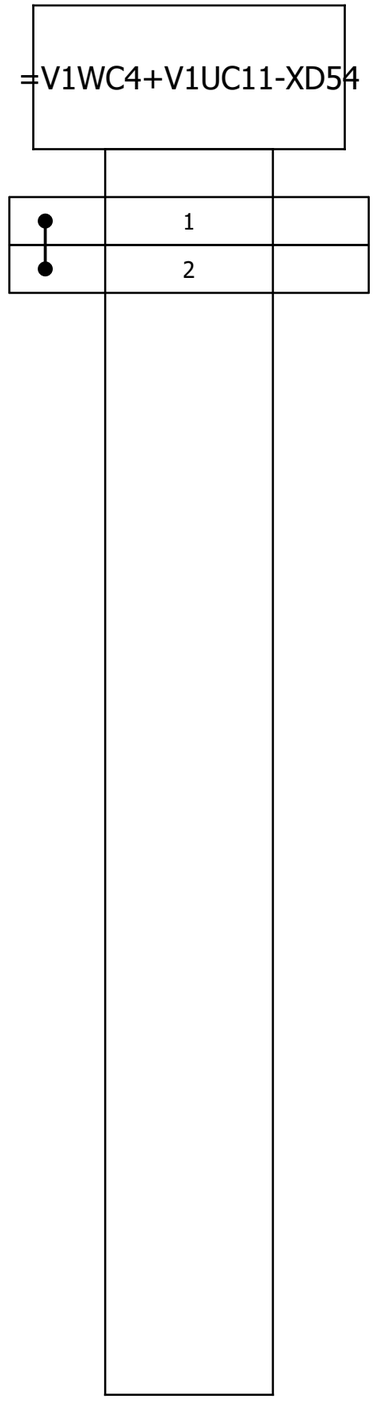

Terminal line-up diagram

F12_001

Part number					
Mounting rail			Strip label	End angle rear	End plate

Terminal					
Part number	Type number	Cross-section	Terminal label	Jumper	Cover

=V1WC1+V1UC12-PE

'	PE	

28

30

			Date	1/17/2023	Volvo Trucks North America	Valiant TMS	Terminal line-up diagram =V1WC1+V1UC12-PE	Drawing name: =2V10&EFS-EL	=
			Ed.	MKLEPADLO					+
			Appr		P6700 Bodyside RH - Robot Cell 2V10			Document type: ETT	Project nr: 22-16150	Page 29
Modification	Date	Name	Original		Replacement of / Replaced by	Scale 1:1			1579

Terminal line-up diagram

F12_001

Part number					
Mounting rail			Strip label	End angle rear	End plate

Terminal					
Part number	Type number	Cross-section	Terminal label	Jumper	Cover
1SNK705012R0000	ZK2.5-4P	2.5			
1SNK705012R0000	ZK2.5-4P	2.5			
1SNK705012R0000	ZK2.5-4P	2.5			
1SNK705012R0000	ZK2.5-4P	2.5			
1SNK705012R0000	ZK2.5-4P	2.5			
1SNK705012R0000	ZK2.5-4P	2.5			
1SNK705012R0000	ZK2.5-4P	2.5			
1SNK705012R0000	ZK2.5-4P	2.5			
1SNK705012R0000	ZK2.5-4P	2.5			
1SNK705012R0000	ZK2.5-4P	2.5			
1SNK705012R0000	ZK2.5-4P	2.5			
1SNK705012R0000	ZK2.5-4P	2.5			
1SNK705012R0000	ZK2.5-4P	2.5			
1SNK705012R0000	ZK2.5-4P	2.5			
1SNK705012R0000	ZK2.5-4P	2.5			
1SNK705012R0000	ZK2.5-4P	2.5			
1SNK705012R0000	ZK2.5-4P	2.5			
1SNK705012R0000	ZK2.5-4P	2.5			
1SNK705012R0000	ZK2.5-4P	2.5			
1SNK705012R0000	ZK2.5-4P	2.5			
1SNK705012R0000	ZK2.5-4P	2.5			
1SNK705012R0000	ZK2.5-4P	2.5			
1SNK705012R0000	ZK2.5-4P	2.5			

=V1WC2+V1UC12-XD1

	1	
	2	
	3	
	4	
	5	
	6	
	7	
	8	
	9	
	10	
	11	
	12	
	13	
	14	
	15	
	16	

			Date	1/17/2023	Volvo Trucks North America	Valiant TMS	Terminal line-up diagram =V1WC2+V1UC12-XD1	Drawing name: =2V10&EFS-EL	=		
			Ed.	MKLEPADLO					+		
			Appr		P6700 Bodyside RH - Robot Cell 2V10			Document type: ETT	Project nr: 22-16150	Page	30
Modification	Date	Name	Original		Replacement of / Replaced by	Scale 1:1					1579

Terminal line-up diagram

F12_001

Part number					
Mounting rail			Strip label	End angle rear	End plate

Terminal					
Part number	Type number	Cross-section	Terminal label	Jumper	Cover
1SNK705012R0000	ZK2.5-4P	2.5			
1SNK705012R0000	ZK2.5-4P	2.5			
1SNK705012R0000	ZK2.5-4P	2.5			
1SNK705012R0000	ZK2.5-4P	2.5			
1SNK705012R0000	ZK2.5-4P	2.5			
1SNK705012R0000	ZK2.5-4P	2.5			
1SNK705012R0000	ZK2.5-4P	2.5			
1SNK705012R0000	ZK2.5-4P	2.5			

=V1WC2+V1UC12-XD2

	1	
	2	
	3	
	4	
	5	
	6	
	7	
	8	

30

32

			Date	1/17/2023	Volvo Trucks North America	Valiant TMS	Terminal line-up diagram =V1WC2+V1UC12-XD2	Drawing name: =2V10&EFS-EL	=
			Ed.	MKLEPADLO					+
			Appr		P6700 Bodyside RH - Robot Cell 2V10			Document type: ETT	Project nr: 22-16150
Modification	Date	Name	Original		Replacement of	Replaced by	Scale 1:1		Page 31 / 1579

Terminal line-up diagram

F12_001

Part number					
Mounting rail			Strip label	End angle rear	End plate
Terminal					
Part number	Type number	Cross-section	Terminal label	Jumper	Cover
1SNK705012R0000	ZK2.5-4P	2.5			
1SNK705012R0000	ZK2.5-4P	2.5			
1SNK705012R0000	ZK2.5-4P	2.5			
1SNK705012R0000	ZK2.5-4P	2.5			
1SNK705012R0000	ZK2.5-4P	2.5			

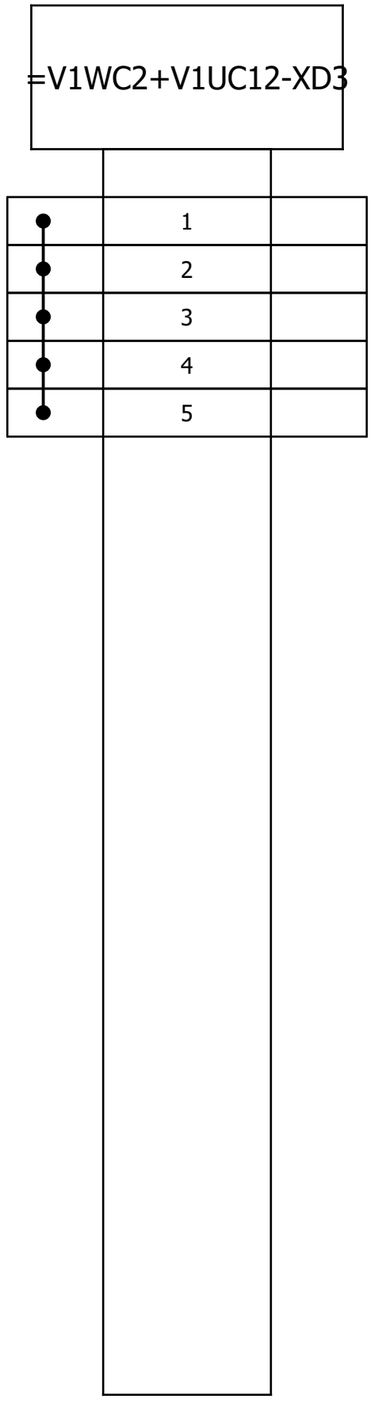

			Date	1/17/2023	Volvo Trucks North America		Valiant TMS	Terminal line-up diagram =V1WC2+V1UC12-XD3	Drawing name: =2V10&EFS-EL	=	
			Ed.	MKLEPADLO						+	
			Appr		P6700 Bodyside RH - Robot Cell 2V10				Document type: ETT	Project nr: 22-16150	Page 32
Modification	Date	Name	Original		Replacement of	Replaced by	Scale 1:1				1579

Terminal line-up diagram

F12_001

Part number					
Mounting rail			Strip label	End angle rear	End plate

Terminal					
Part number	Type number	Cross-section	Terminal label	Jumper	Cover
1SNK706012R0000	ZK4-4P	4			
1SNK706012R0000	ZK4-4P	4			
1SNK706012R0000	ZK4-4P	4			
1SNK706012R0000	ZK4-4P	4			

=V1WC3+V1UC12-XD1

'	1	
'	2	
'	3	
'	4	

Terminal line-up diagram

F12_001

Part number					
Mounting rail			Strip label	End angle rear	End plate

=V1WC3+V1UC12-XD2

Terminal					
Part number	Type number	Cross-section	Terminal label	Jumper	Cover
1SNK706012R0000	ZK4-4P	4			
1SNK706012R0000	ZK4-4P	4			
1SNK706012R0000	ZK4-4P	4			
1SNK706012R0000	ZK4-4P	4			
1SNK706012R0000	ZK4-4P	4			
1SNK706012R0000	ZK4-4P	4			
1SNK706012R0000	ZK4-4P	4			
1SNK706012R0000	ZK4-4P	4			

'	1	
'	2	
'	3	
'	4	
'	7	
'	8	
'	9	
'	10	

Terminal line-up diagram

F12_001

Part number					
Mounting rail			Strip label	End angle rear	End plate

Terminal					
Part number	Type number	Cross-section	Terminal label	Jumper	Cover
1SNK705012R0000	ZK2.5-4P	2.5			
1SNK705012R0000	ZK2.5-4P	2.5			
1SNK705012R0000	ZK2.5-4P	2.5			
1SNK705012R0000	ZK2.5-4P	2.5			
1SNK705012R0000	ZK2.5-4P	2.5			
1SNK705012R0000	ZK2.5-4P	2.5			
1SNK705012R0000	ZK2.5-4P	2.5			
1SNK705012R0000	ZK2.5-4P	2.5			

=V1WC3+V1UC12-XD3

	1	
	2	
	3	
	4	
	5	
	6	
	7	
	8	

			Date	1/17/2023	Volvo Trucks North America		Valiant TMS	Terminal line-up diagram =V1WC3+V1UC12-XD3	Drawing name: =2V10&EFS-EL	=	
			Ed.	MKLEPADLO	P6700 Bodyside RH - Robot Cell 2V10					+	
			Appr				Scale 1:1		Document type: ETT	Project nr: 22-16150	Page 35 / 1579
Modification	Date	Name	Original		Replacement of	Replaced by					

Terminal line-up diagram

F12_001

Part number					
Mounting rail			Strip label	End angle rear	End plate

Terminal					
Part number	Type number	Cross-section	Terminal label	Jumper	Cover
1SNK705012R0000	ZK2.5-4P	2.5			
1SNK705012R0000	ZK2.5-4P	2.5			
1SNK705012R0000	ZK2.5-4P	2.5			
1SNK705012R0000	ZK2.5-4P	2.5			

=V1WC4+V1UC12-KF12.14

'	1	
'	2	
'	3	
'	4	

			Date	1/17/2023	Volvo Trucks North America		Valiant TMS	Terminal line-up diagram =V1WC4+V1UC12-KF12.14	Drawing name: =2V10&EFS-EL	=	
			Ed.	MKLEPADLO						+	
			Appr		P6700 Bodyside RH - Robot Cell 2V10				Document type: ETT	Project nr: 22-16150	Page 36
Modification	Date	Name	Original		Replacement of	Replaced by	Scale 1:1				1579

Terminal line-up diagram

F12_001

Part number					
Mounting rail			Strip label	End angle rear	End plate

Terminal					
Part number	Type number	Cross-section	Terminal label	Jumper	Cover
1SNK705012R0000	ZK2.5-4P	2.5			

=V1WC4+V1UC12-XD5

'	1	

36

38

			Date	1/17/2023	Volvo Trucks North America	Valiant TMS	Terminal line-up diagram =V1WC4+V1UC12-XD5	Drawing name: =2V10&EFS-EL	=	
			Ed.	MKLEPADLO	P6700 Bodyside RH - Robot Cell 2V10				+	
			Appr					Document type: ETT	Project nr: 22-16150	Page 37 / 1579
Modification	Date	Name	Original		Replacement of	Replaced by	Scale 1:1			

Terminal line-up diagram

F12_001

Part number					
Mounting rail			Strip label	End angle rear	End plate

Terminal					
Part number	Type number	Cross-section	Terminal label	Jumper	Cover
1SNK705012R0000	ZK2.5-4P	2.5			

=V1WC4+V1UC12-XD6

'	1	

37

39

			Date	1/17/2023	Volvo Trucks North America	Valiant TMS	Terminal line-up diagram =V1WC4+V1UC12-XD6	Drawing name: =2V10&EFS-EL	=
			Ed.	MKLEPADLO	P6700 Bodyside RH - Robot Cell 2V10				+
			Appr					Document type: ETT	Project nr: 22-16150
Modification	Date	Name	Original		Replacement of	Replaced by	Scale 1:1		Page 38 / 1579

Terminal line-up diagram

F12_001

Part number					
Mounting rail			Strip label	End angle rear	End plate
Terminal					
Part number	Type number	Cross-section	Terminal label	Jumper	Cover
1SNK705012R0000	ZK2.5-4P	2.5			
1SNK705012R0000	ZK2.5-4P	2.5			
1SNK705012R0000	ZK2.5-4P	2.5			
1SNK705012R0000	ZK2.5-4P	2.5			
1SNK705012R0000	ZK2.5-4P	2.5			
1SNK705012R0000	ZK2.5-4P	2.5			
1SNK705012R0000	ZK2.5-4P	2.5			
1SNK705012R0000	ZK2.5-4P	2.5			
1SNK705012R0000	ZK2.5-4P	2.5			
1SNK705012R0000	ZK2.5-4P	2.5			
1SNK705012R0000	ZK2.5-4P	2.5			
1SNK705012R0000	ZK2.5-4P	2.5			
1SNK705012R0000	ZK2.5-4P	2.5			
1SNK705012R0000	ZK2.5-4P	2.5			
1SNK705012R0000	ZK2.5-4P	2.5			
1SNK705012R0000	ZK2.5-4P	2.5			

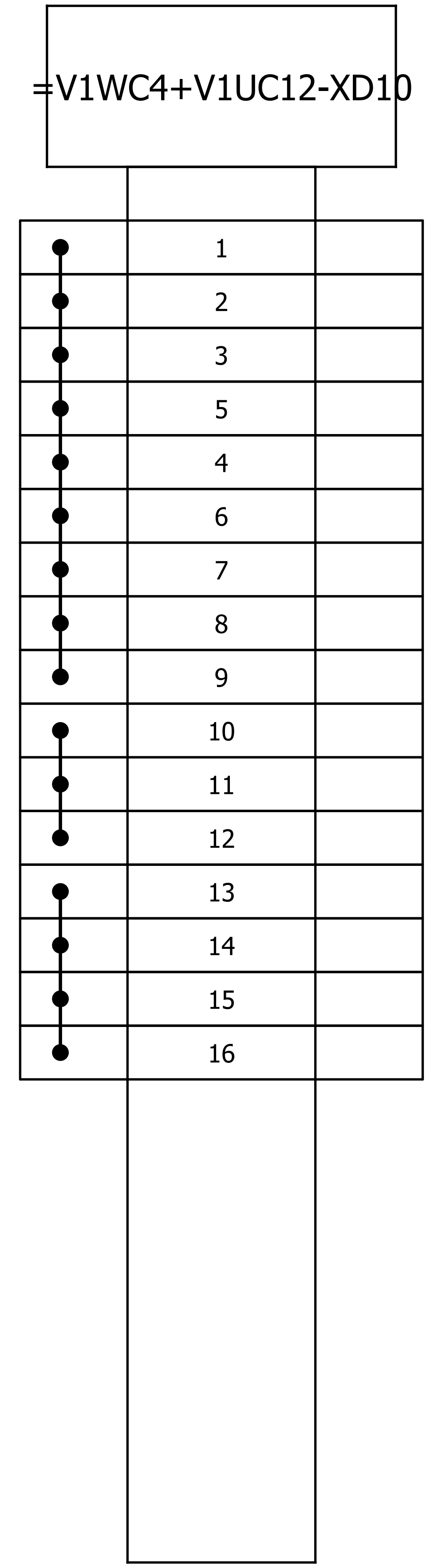

Terminal line-up diagram

F12_001

Part number					
Mounting rail			Strip label	End angle rear	End plate

Terminal					
Part number	Type number	Cross-section	Terminal label	Jumper	Cover
1SNK705012R0000	ZK2.5-4P	2.5			

=V1WC4+V1UC12-XD11

'	1	

39

41

			Date	1/17/2023	Volvo Trucks North America	Valiant TMS	Terminal line-up diagram =V1WC4+V1UC12-XD11	Drawing name: =2V10&EFS-EL	=
			Ed.	MKLEPADLO	P6700 Bodyside RH - Robot Cell 2V10				+
			Appr					Document type: ETT	Project nr: 22-16150
Modification	Date	Name	Original		Replacement of	Replaced by	Scale 1:1		Page 40 / 1579

Terminal line-up diagram

F12_001

Part number					
Mounting rail			Strip label	End angle rear	End plate

Terminal					
Part number	Type number	Cross-section	Terminal label	Jumper	Cover
1SNK705012R0000	ZK2.5-4P	2.5			
1SNK705012R0000	ZK2.5-4P	2.5			

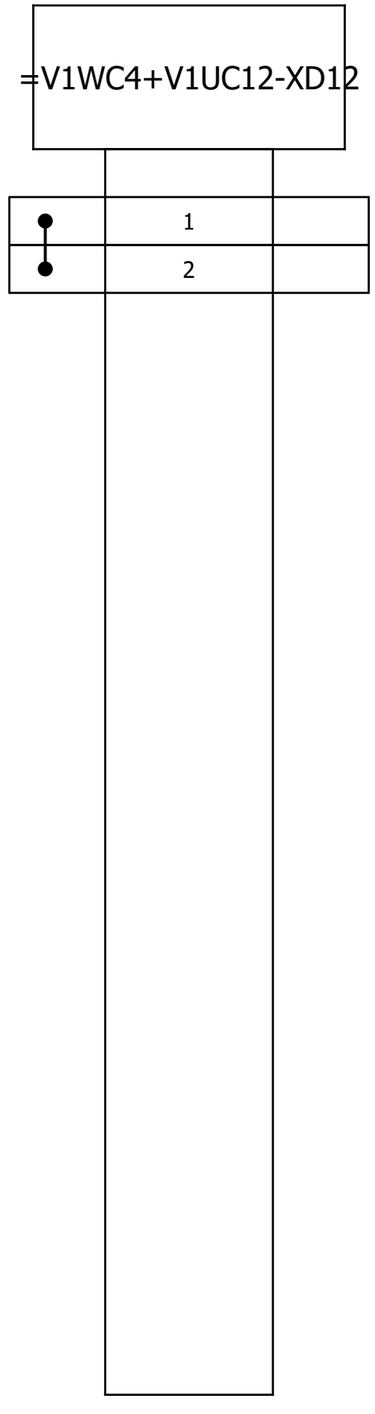

			Date	1/17/2023	Volvo Trucks North America		Valiant TMS	Terminal line-up diagram =V1WC4+V1UC12-XD12	Drawing name: =2V10&EFS-EL	=	
			Ed.	MKLEPADLO						+	
			Appr		P6700 Bodyside RH - Robot Cell 2V10				Document type: ETT	Project nr: 22-16150	Page 41
Modification	Date	Name	Original		Replacement of	Replaced by	Scale 1:1				1579

Terminal line-up diagram

F12_001

Part number					
Mounting rail			Strip label	End angle rear	End plate
Terminal					
Part number	Type number	Cross-section	Terminal label	Jumper	Cover
1SNK705012R0000	ZK2.5-4P	2.5			
1SNK705012R0000	ZK2.5-4P	2.5			
1SNK705012R0000	ZK2.5-4P	2.5			
1SNK705012R0000	ZK2.5-4P	2.5			
1SNK705012R0000	ZK2.5-4P	2.5			
1SNK705012R0000	ZK2.5-4P	2.5			
1SNK705012R0000	ZK2.5-4P	2.5			
1SNK705012R0000	ZK2.5-4P	2.5			

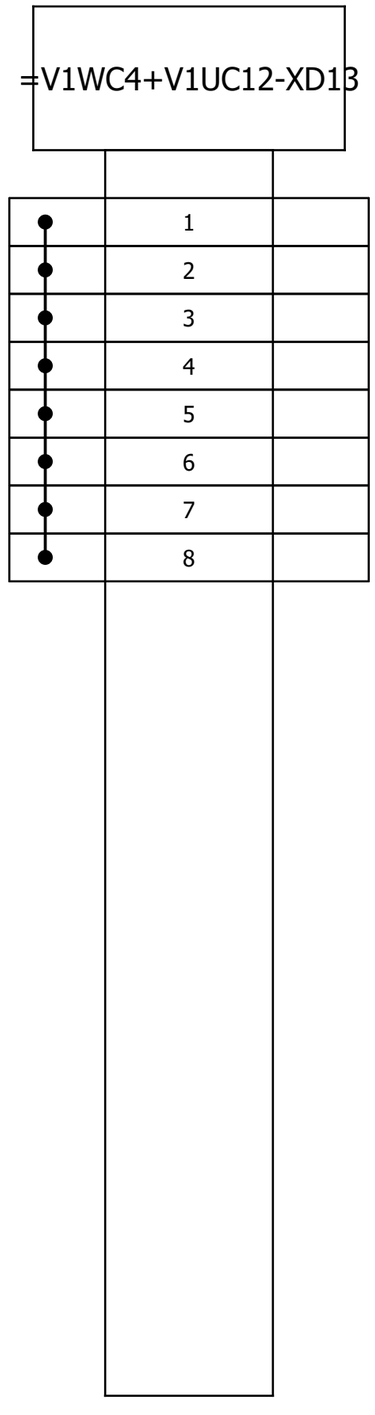

			Date	1/17/2023	Volvo Trucks North America	Valiant TMS	Terminal line-up diagram =V1WC4+V1UC12-XD13	Drawing name: =2V10&EFS-EL	=		
			Ed.	MKLEPADLO					+		
			Appr		P6700 Bodyside RH - Robot Cell 2V10			Document type: ETT	Project nr: 22-16150	Page	42
Modification	Date	Name	Original		Replacement of / Replaced by	Scale 1:1					1579

Terminal line-up diagram

F12_001

Part number					
Mounting rail			Strip label	End angle rear	End plate
Terminal					
Part number	Type number	Cross-section	Terminal label	Jumper	Cover
1SNK705012R0000	ZK2.5-4P	2.5			
1SNK705012R0000	ZK2.5-4P	2.5			

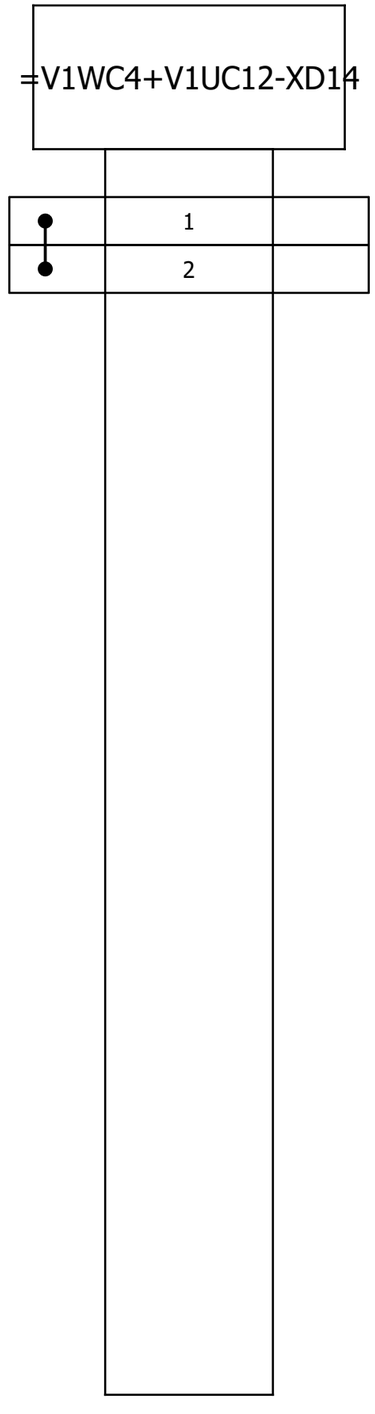

Terminal line-up diagram

F12_001

Part number					
Mounting rail			Strip label	End angle rear	End plate

Terminal					
Part number	Type number	Cross-section	Terminal label	Jumper	Cover
1SNK705012R0000	ZK2.5-4P	2.5			
1SNK705012R0000	ZK2.5-4P	2.5			
1SNK705012R0000	ZK2.5-4P	2.5			
1SNK705012R0000	ZK2.5-4P	2.5			
1SNK705012R0000	ZK2.5-4P	2.5			
1SNK705012R0000	ZK2.5-4P	2.5			
1SNK705012R0000	ZK2.5-4P	2.5			
1SNK705012R0000	ZK2.5-4P	2.5			

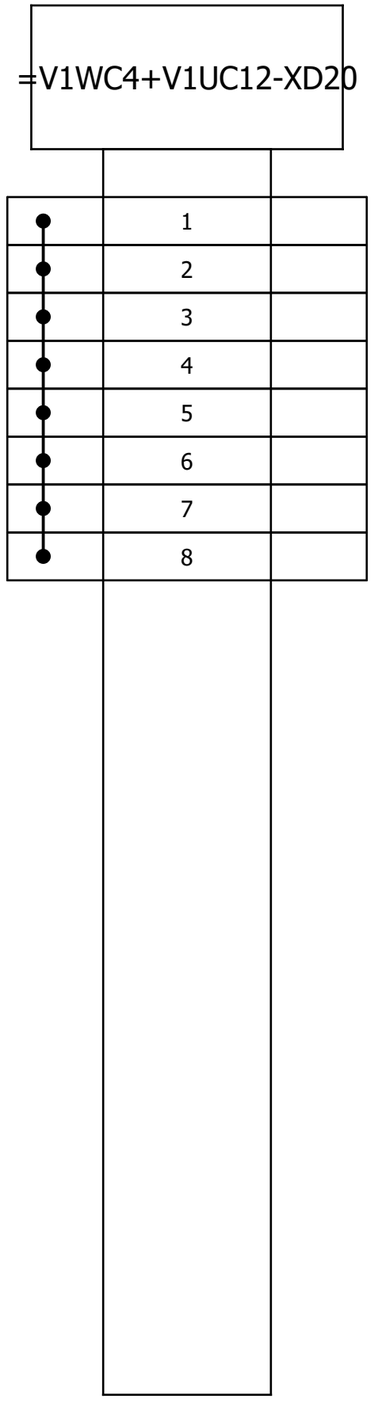

			Date	1/17/2023	Volvo Trucks North America	Valiant TMS	Terminal line-up diagram =V1WC4+V1UC12-XD20	Drawing name: =2V10&EFS-EL	=		
			Ed.	MKLEPADLO	P6700 Bodyside RH - Robot Cell 2V10				+		
			Appr					Document type: ETT	Project nr: 22-16150	Page	44
Modification	Date	Name	Original		Replacement of	Replaced by	Scale 1:1				1579

Terminal line-up diagram

F12_001

Part number					
Mounting rail			Strip label	End angle rear	End plate

Terminal					
Part number	Type number	Cross-section	Terminal label	Jumper	Cover
1SNK705012R0000	ZK2.5-4P	2.5			
1SNK705012R0000	ZK2.5-4P	2.5			

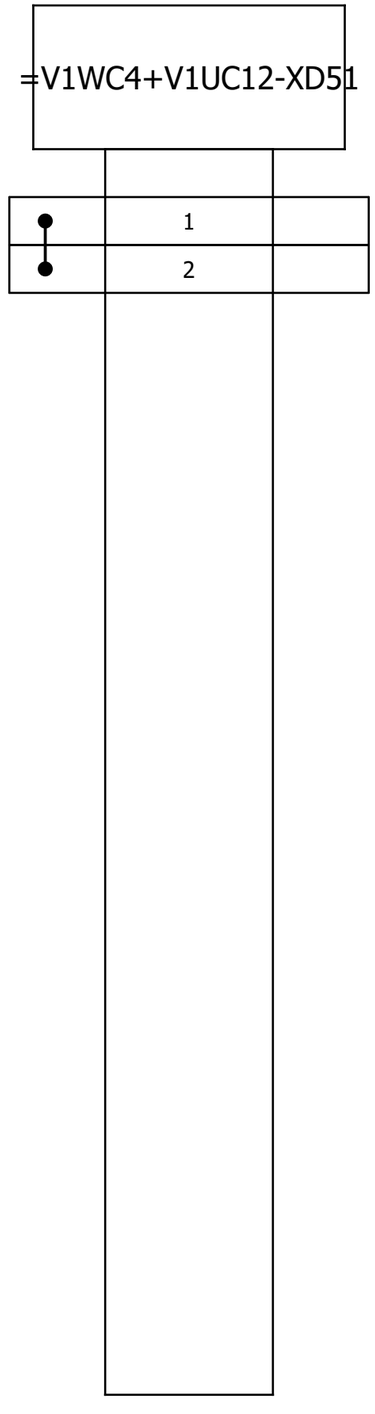

			Date	1/17/2023	Volvo Trucks North America		Valiant TMS	Terminal line-up diagram =V1WC4+V1UC12-XD51	Drawing name: =2V10&EFS-EL	=	
			Ed.	MKLEPADLO						+	
			Appr		P6700 Bodyside RH - Robot Cell 2V10				Document type: ETT	Project nr: 22-16150	Page 45
Modification	Date	Name	Original		Replacement of	Replaced by	Scale 1:1				1579

Terminal line-up diagram

F12_001

Part number					
Mounting rail			Strip label	End angle rear	End plate

Terminal					
Part number	Type number	Cross-section	Terminal label	Jumper	Cover
1SNK705012R0000	ZK2.5-4P	2.5			
1SNK705012R0000	ZK2.5-4P	2.5			

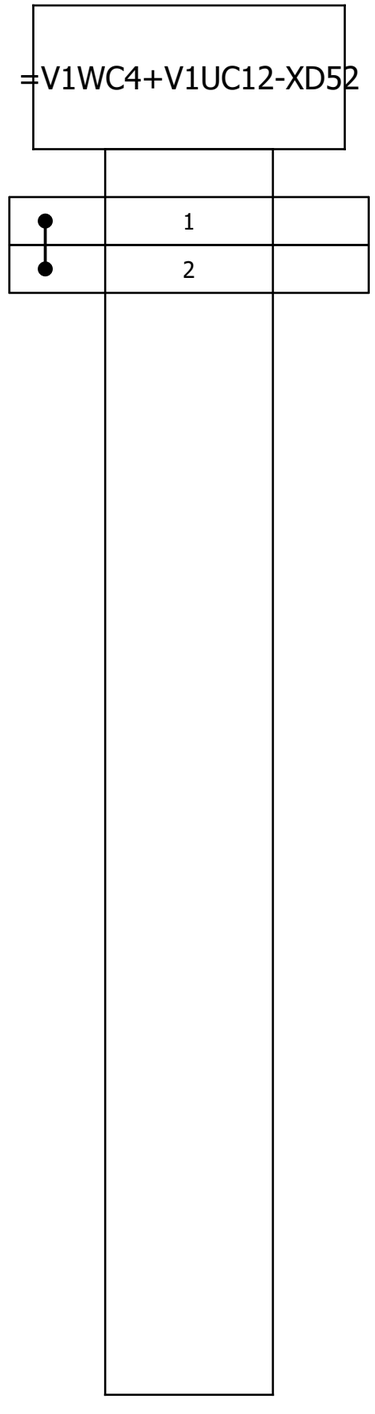

			Date	1/17/2023	Volvo Trucks North America	Valiant TMS	Terminal line-up diagram =V1WC4+V1UC12-XD52	Drawing name: =2V10&EFS-EL	=		
			Ed.	MKLEPADLO	P6700 Bodyside RH - Robot Cell 2V10				+		
			Appr					Document type: ETT	Project nr: 22-16150	Page	46
Modification	Date	Name	Original		Replacement of	Replaced by	Scale 1:1				1579

Terminal line-up diagram

F12_001

Part number					
Mounting rail			Strip label	End angle rear	End plate

Terminal					
Part number	Type number	Cross-section	Terminal label	Jumper	Cover
1SNK705012R0000	ZK2.5-4P	2.5			
1SNK705012R0000	ZK2.5-4P	2.5			

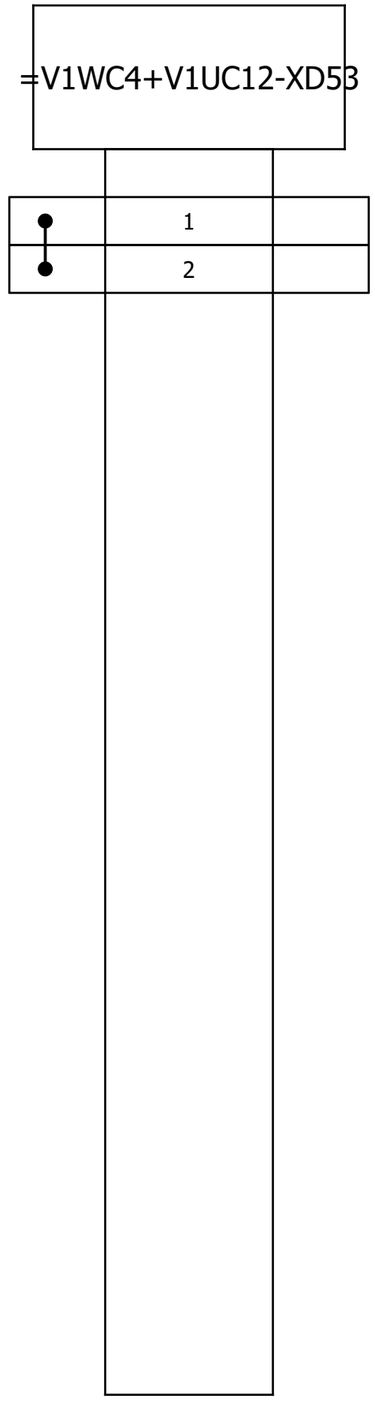

			Date	1/17/2023	Volvo Trucks North America		Valiant TMS	Terminal line-up diagram =V1WC4+V1UC12-XD53	Drawing name: =2V10&EFS-EL	=	
			Ed.	MKLEPADLO						+	
			Appr		P6700 Bodyside RH - Robot Cell 2V10				Document type: ETT	Project nr: 22-16150	Page 47
Modification	Date	Name	Original		Replacement of	Replaced by	Scale 1:1				1579

Terminal line-up diagram

F12_001

Part number					
Mounting rail			Strip label	End angle rear	End plate

Terminal					
Part number	Type number	Cross-section	Terminal label	Jumper	Cover
1SNK705012R0000	ZK2.5-4P	2.5			
1SNK705012R0000	ZK2.5-4P	2.5			

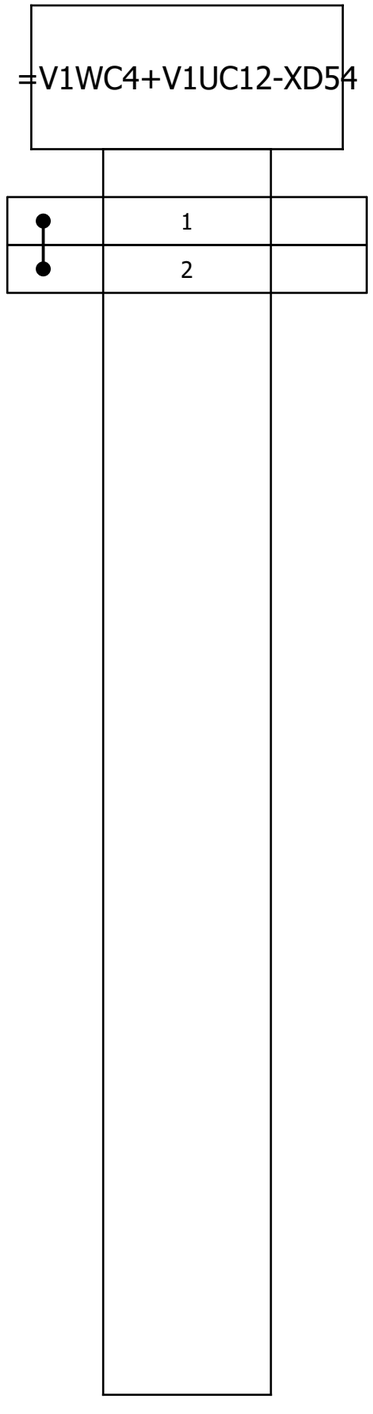

			Date	1/17/2023	Volvo Trucks North America		Valiant TMS	Terminal line-up diagram =V1WC4+V1UC12-XD54	Drawing name: =2V10&EFS-EL	=	
			Ed.	MKLEPADLO						+	
			Appr		P6700 Bodyside RH - Robot Cell 2V10				Document type: ETT	Project nr: 22-16150	Page 48 / 1579
Modification	Date	Name	Original		Replacement of	Replaced by	Scale 1:1				

Terminal line-up diagram

F12_001

Part number					
Mounting rail			Strip label	End angle rear	End plate

Terminal					
Part number	Type number	Cross-section	Terminal label	Jumper	Cover
WEI.1608510000	ZDU 2.5	2.5			
WEI.1608740000	ZAP/TW 1				
WEI.9540000000	ZEW 35				
WEI.1608520000	ZDU 2.5 BL	2.5 mm²			
WEI.1608520000	ZDU 2.5 BL	2.5 mm²			

=V1WC3+V1UC14-XD1

'	L1	
'	N	
'		
'	PE	
'		

48

50

			Date	1/17/2023	Volvo Trucks North America	Valiant TMS	Terminal line-up diagram =V1WC3+V1UC14-XD1	Drawing name: =2V10&EFS-EL	=	
			Ed.	MKLEPADLO					+	
			Appr		P6700 Bodyside RH - Robot Cell 2V10			Document type: ETT	Project nr: 22-16150	Page 49
Modification	Date	Name	Original		Replacement of	Replaced by	Scale 1:1			1579

Terminal line-up diagram

F12_001

Part number					
Mounting rail			Strip label	End angle rear	End plate

Terminal					
Part number	Type number	Cross-section	Terminal label	Jumper	Cover
WEI.8731720000	ZTR 2.5/3AN	2.5			
WEI.8731720000	ZTR 2.5/3AN	2.5			
WEI.8731720000	ZTR 2.5/3AN	2.5			
WEI.8731720000	ZTR 2.5/3AN	2.5			

=V1WC4+V1UC14-KF14.12

'	1	
'	2	
'	3	
'	4	

Terminal line-up diagram

F12_001

Part number					
Mounting rail			Strip label	End angle rear	End plate

Terminal					
Part number	Type number	Cross-section	Terminal label	Jumper	Cover

=V1WC4+V1UC14-XD5

'	1	

50

52

			Date	1/17/2023	Volvo Trucks North America	Valiant TMS	Terminal line-up diagram =V1WC4+V1UC14-XD5	Drawing name: =2V10&EFS-EL	=
			Ed.	MKLEPADLO					+
			Appr		P6700 Bodyside RH - Robot Cell 2V10			Document type: ETT	Project nr: 22-16150	Page 51
Modification	Date	Name	Original		Replacement of	Replaced by	Scale 1:1			1579

Terminal line-up diagram

F12_001

Part number					
Mounting rail			Strip label	End angle rear	End plate

Terminal					
Part number	Type number	Cross-section	Terminal label	Jumper	Cover

=V1WC4+V1UC14-XD6

'	1	

51

53

			Date	1/17/2023	Volvo Trucks North America	Valiant TMS	Terminal line-up diagram =V1WC4+V1UC14-XD6	Drawing name: =2V10&EFS-EL	=	
			Ed.	MKLEPADLO					+	
			Appr		P6700 Bodyside RH - Robot Cell 2V10			Document type: ETT	Project nr: 22-16150	Page 52
Modification	Date	Name	Original		Replacement of / Replaced by	Scale 1:1				1579

Terminal line-up diagram

F12_001

Part number					
Mounting rail			Strip label	End angle rear	End plate

=V1WC4+V1UC14-XD10

Terminal					
Part number	Type number	Cross-section	Terminal label	Jumper	Cover
WEI.8731720000	ZTR 2.5/3AN	2.5			
WEI.8731720000	ZTR 2.5/3AN	2.5			
WEI.8731720000	ZTR 2.5/3AN	2.5			
WEI.8731720000	ZTR 2.5/3AN	2.5			
WEI.8731720000	ZTR 2.5/3AN	2.5			
WEI.8731720000	ZTR 2.5/3AN	2.5			
WEI.8731720000	ZTR 2.5/3AN	2.5			
WEI.8731720000	ZTR 2.5/3AN	2.5			
WEI.8731720000	ZTR 2.5/3AN	2.5			
WEI.8731720000	ZTR 2.5/3AN	2.5			
WEI.8731720000	ZTR 2.5/3AN	2.5			
WEI.8731720000	ZTR 2.5/3AN	2.5			
WEI.8731720000	ZTR 2.5/3AN	2.5			
WEI.8731720000	ZTR 2.5/3AN	2.5			
WEI.8731720000	ZTR 2.5/3AN	2.5			
WEI.8731720000	ZTR 2.5/3AN	2.5			
WEI.8731720000	ZTR 2.5/3AN	2.5			
WEI.8731720000	ZTR 2.5/3AN	2.5			
WEI.8731720000	ZTR 2.5/3AN	2.5			
WEI.8731720000	ZTR 2.5/3AN	2.5			
WEI.8731720000	ZTR 2.5/3AN	2.5			

1	
2	
4	
3	
7	
9	
11	
5	
6	
8	
10	
12	
13	
14	
15	
16	
17	
18	
19	
20	

			Date	1/17/2023	Volvo Trucks North America	Valiant TMS	Terminal line-up diagram =V1WC4+V1UC14-XD10	Drawing name: =2V10&EFS-EL	=		
			Ed.	MKLEPADLO					+		
			Appr		P6700 Bodyside RH - Robot Cell 2V10			Document type: ETT	Project nr: 22-16150	Page	53
Modification	Date	Name	Original		Replacement of / Replaced by	Scale 1:1					1579

Terminal line-up diagram

F12_001

Part number					
Mounting rail			Strip label	End angle rear	End plate

Terminal					
Part number	Type number	Cross-section	Terminal label	Jumper	Cover
WEI.8731720000	ZTR 2.5/3AN	2.5			

=V1WC4+V1UC14-XD11

'	1	

53

55

			Date	1/17/2023	Volvo Trucks North America	Valiant TMS	Terminal line-up diagram =V1WC4+V1UC14-XD11	Drawing name: =2V10&EFS-EL	=
			Ed.	MKLEPADLO	P6700 Bodyside RH - Robot Cell 2V10				+
			Appr					Document type: ETT	Project nr: 22-16150
Modification	Date	Name	Original		Replacement of	Replaced by	Scale 1:1		Page 54 / 1579

Terminal line-up diagram

F12_001

Part number					
Mounting rail			Strip label	End angle rear	End plate

Terminal					
Part number	Type number	Cross-section	Terminal label	Jumper	Cover
WEI.8731720000	ZTR 2.5/3AN	2.5			
WEI.8731720000	ZTR 2.5/3AN	2.5			

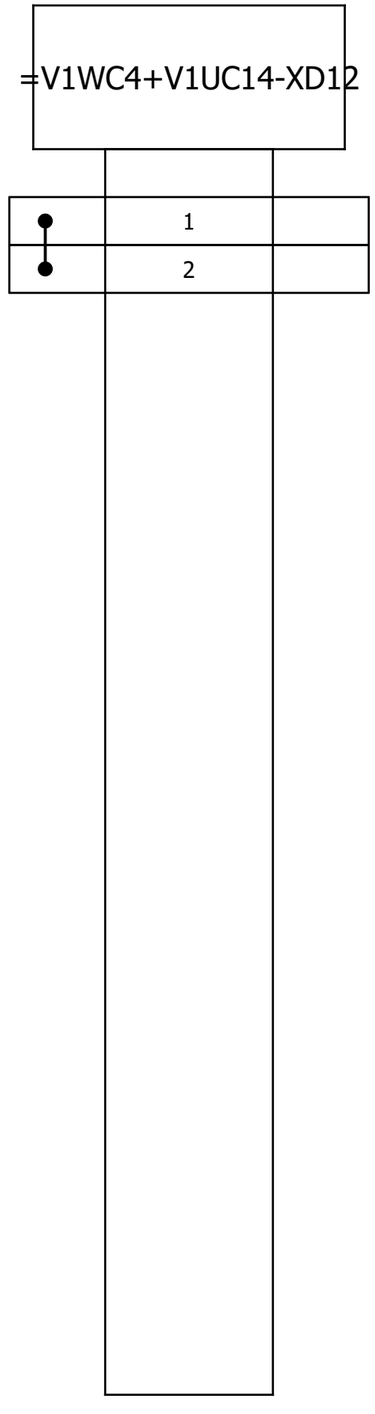

Terminal line-up diagram

F12_001

Part number					
Mounting rail			Strip label	End angle rear	End plate

Terminal					
Part number	Type number	Cross-section	Terminal label	Jumper	Cover
WEI.8731720000	ZTR 2.5/3AN	2.5			

=V1WC4+V1UC14-XD13

'	1	

55

57

			Date	1/17/2023	Volvo Trucks North America	Valiant TMS	Terminal line-up diagram =V1WC4+V1UC14-XD13	Drawing name: =2V10&EFS-EL	=
			Ed.	MKLEPADLO	P6700 Bodyside RH - Robot Cell 2V10				+
			Appr					Document type: ETT	Project nr: 22-16150
Modification	Date	Name	Original		Replacement of	Replaced by	Scale 1:1		Page 56 / 1579

Terminal line-up diagram

F12_001

Part number					
Mounting rail			Strip label	End angle rear	End plate

Terminal					
Part number	Type number	Cross-section	Terminal label	Jumper	Cover
WEI.8731720000	ZTR 2.5/3AN	2.5			
WEI.8731720000	ZTR 2.5/3AN	2.5			

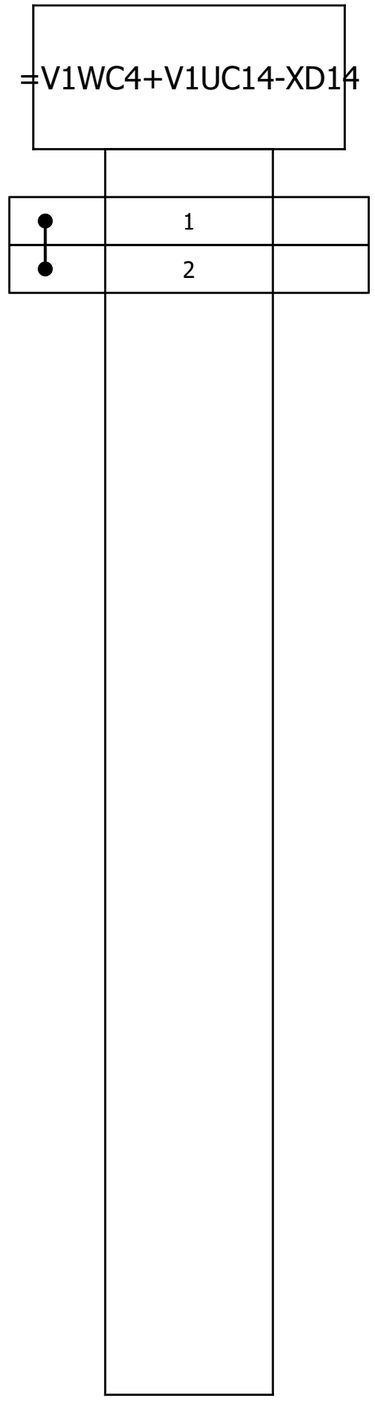

			Date	1/17/2023	Volvo Trucks North America		Valiant TMS	Terminal line-up diagram =V1WC4+V1UC14-XD14	Drawing name: =2V10&EFS-EL	=	
			Ed.	MKLEPADLO	P6700 Bodyside RH - Robot Cell 2V10					+	
			Appr				Scale 1:1		Document type: ETT	Project nr: 22-16150	Page 57 / 1579
Modification	Date	Name	Original		Replacement of	Replaced by					

Terminal line-up diagram

F12_001

Part number					
Mounting rail			Strip label	End angle rear	End plate

Terminal					
Part number	Type number	Cross-section	Terminal label	Jumper	Cover
WEI.8731720000	ZTR 2.5/3AN	2.5			
WEI.8731720000	ZTR 2.5/3AN	2.5			

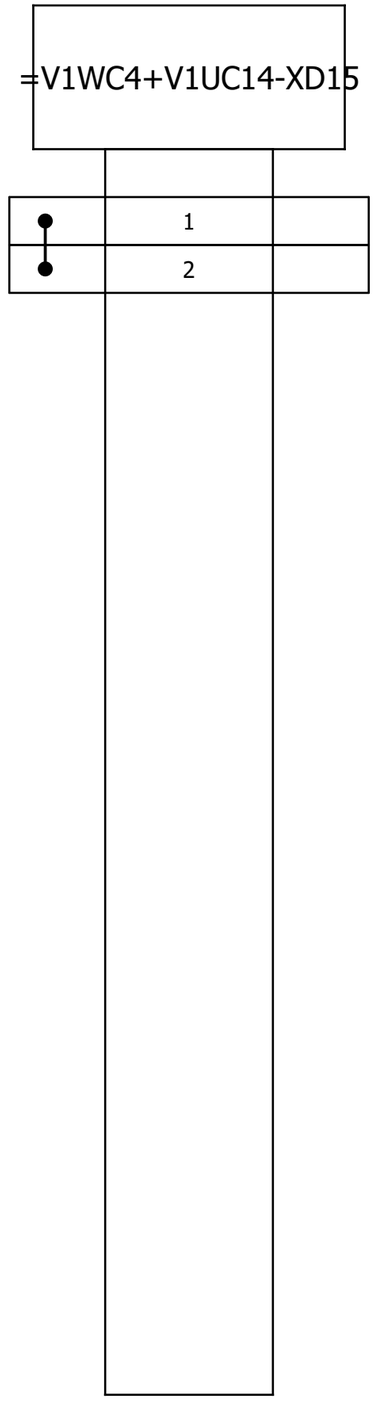

Terminal line-up diagram

F12_001

Part number					
Mounting rail			Strip label	End angle rear	End plate

Terminal					
Part number	Type number	Cross-section	Terminal label	Jumper	Cover
WEI.8731720000	ZTR 2.5/3AN	2.5			
WEI.8731720000	ZTR 2.5/3AN	2.5			

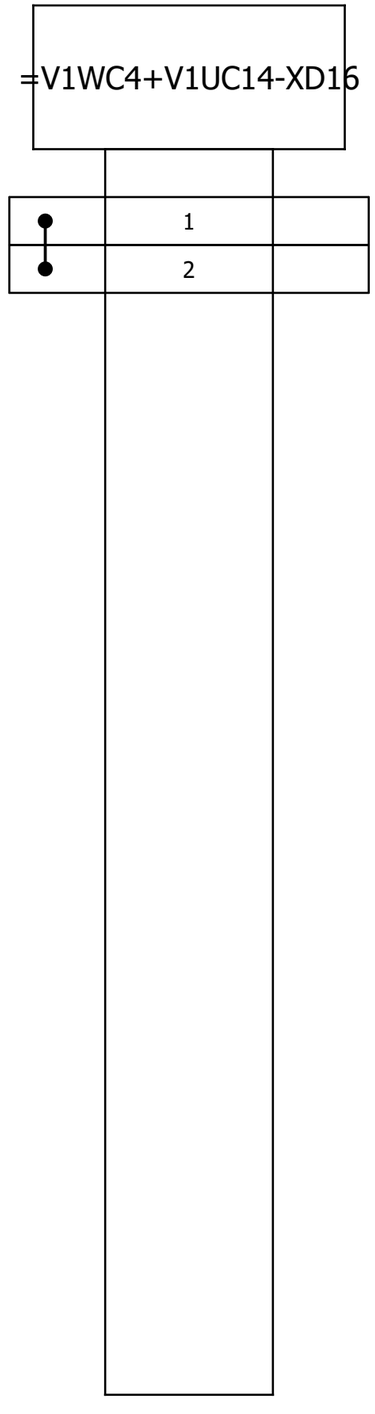

Terminal line-up diagram

F12_001

Part number					
Mounting rail			Strip label	End angle rear	End plate
Terminal					
Part number	Type number	Cross-section	Terminal label	Jumper	Cover
WEI.8731720000	ZTR 2.5/3AN	2.5			
WEI.8731720000	ZTR 2.5/3AN	2.5			

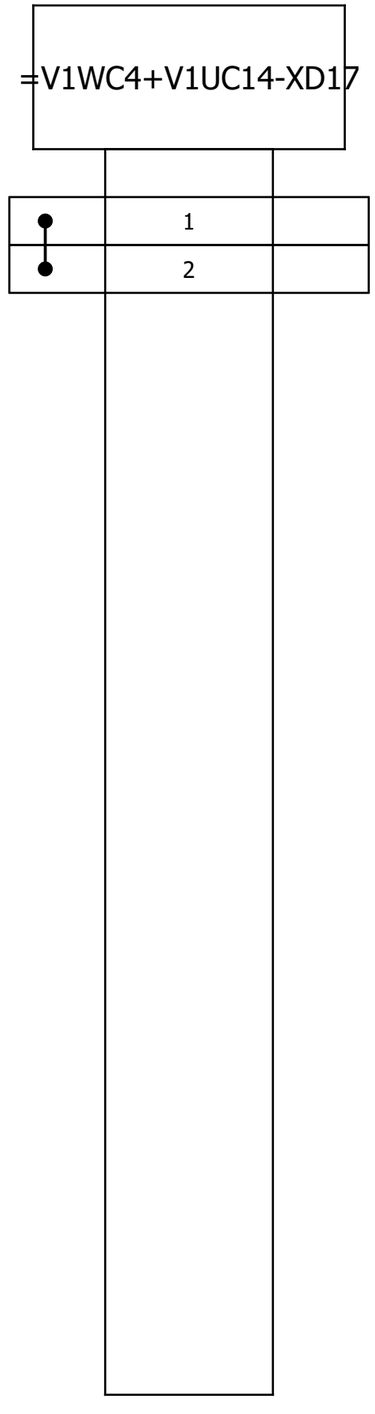

			Date	1/17/2023	Volvo Trucks North America	Valiant TMS	Terminal line-up diagram =V1WC4+V1UC14-XD17	Drawing name: =2V10&EFS-EL	=		
			Ed.	MKLEPADLO	P6700 Bodyside RH - Robot Cell 2V10				+		
			Appr					Document type: ETT	Project nr: 22-16150	Page	60
Modification	Date	Name	Original		Replacement of	Replaced by	Scale 1:1				1579

Terminal line-up diagram

F12_001

Part number					
Mounting rail			Strip label	End angle rear	End plate

Terminal					
Part number	Type number	Cross-section	Terminal label	Jumper	Cover
WEI.8731720000	ZTR 2.5/3AN	2.5			

=V1WC4+V1UC14-XD18

'	1	

60

62

			Date	1/17/2023	Volvo Trucks North America	Valiant TMS	Terminal line-up diagram =V1WC4+V1UC14-XD18	Drawing name: =2V10&EFS-EL	=
			Ed.	MKLEPADLO	P6700 Bodyside RH - Robot Cell 2V10				+
			Appr					Document type: ETT	Project nr: 22-16150
Modification	Date	Name	Original		Replacement of	Replaced by	Scale 1:1		Page 61 / 1579

Terminal line-up diagram

F12_001

Part number					
Mounting rail			Strip label	End angle rear	End plate

Terminal					
Part number	Type number	Cross-section	Terminal label	Jumper	Cover
WEI.8731720000	ZTR 2.5/3AN	2.5			
WEI.8731720000	ZTR 2.5/3AN	2.5			

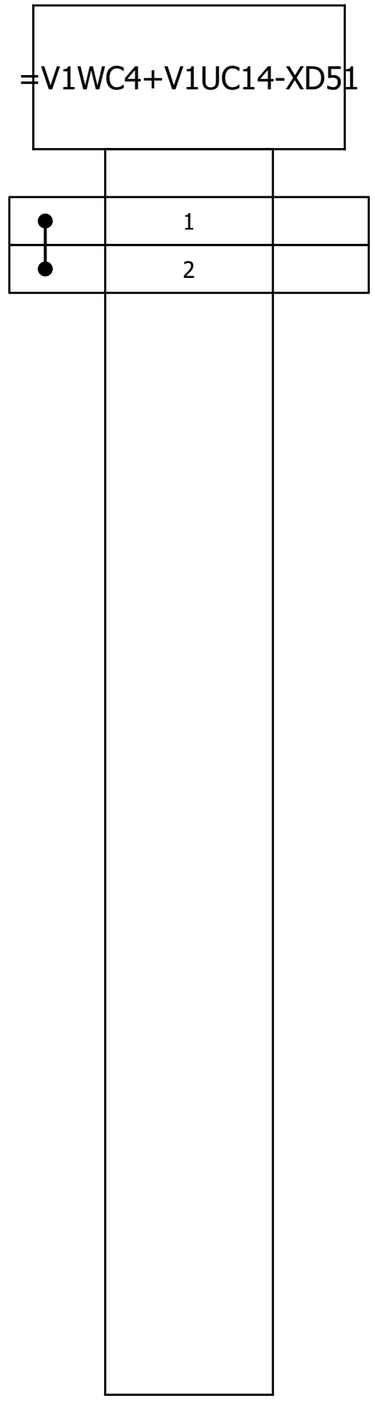

			Date	1/17/2023	Volvo Trucks North America		Valiant TMS	Terminal line-up diagram =V1WC4+V1UC14-XD51	Drawing name: =2V10&EFS-EL	=	
			Ed.	MKLEPADLO						+	
			Appr		P6700 Bodyside RH - Robot Cell 2V10				Document type: ETT	Project nr: 22-16150	Page 62 / 1579
Modification	Date	Name	Original		Replacement of	Replaced by	Scale 1:1				

Terminal line-up diagram

F12_001

Part number					
Mounting rail			Strip label	End angle rear	End plate

Terminal					
Part number	Type number	Cross-section	Terminal label	Jumper	Cover
WEI.8731720000	ZTR 2.5/3AN	2.5			
WEI.8731720000	ZTR 2.5/3AN	2.5			

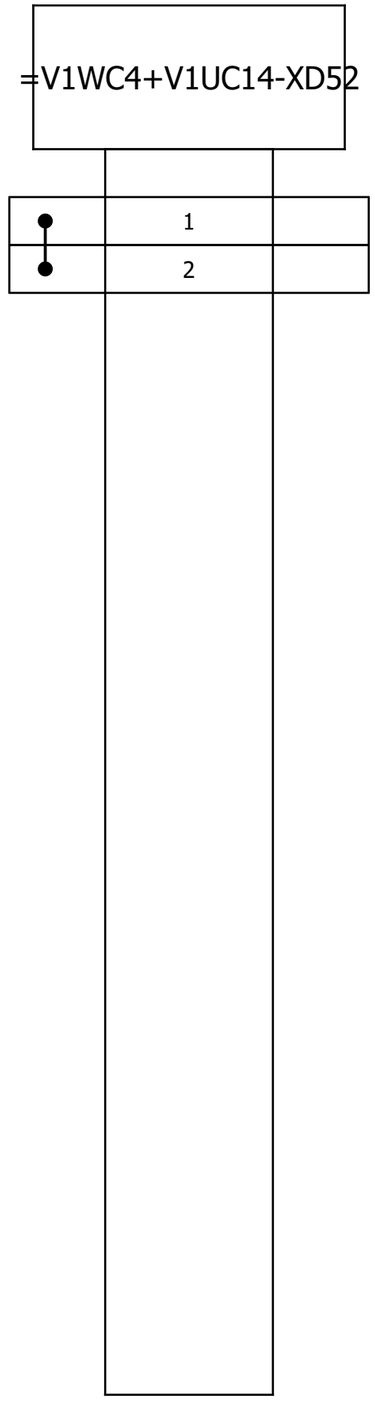

Terminal line-up diagram

F12_001

Part number					
Mounting rail			Strip label	End angle rear	End plate

Terminal					
Part number	Type number	Cross-section	Terminal label	Jumper	Cover
WEI.8731720000	ZTR 2.5/3AN	2.5			
WEI.8731720000	ZTR 2.5/3AN	2.5			

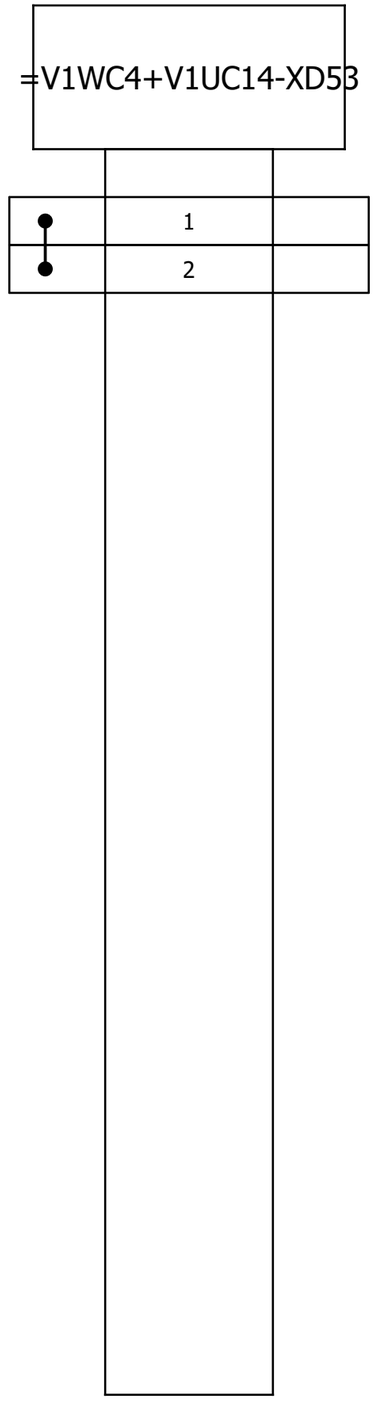

			Date	1/17/2023	Volvo Trucks North America		Valiant TMS	Terminal line-up diagram =V1WC4+V1UC14-XD53	Drawing name: =2V10&EFS-EL	=	
			Ed.	MKLEPADLO	P6700 Bodyside RH - Robot Cell 2V10					+	
			Appr				Scale 1:1		Document type: ETT	Project nr: 22-16150	Page 64 / 1579
Modification	Date	Name	Original		Replacement of	Replaced by					

Terminal line-up diagram

F12_001

Part number					
Mounting rail			Strip label	End angle rear	End plate
Terminal					
Part number	Type number	Cross-section	Terminal label	Jumper	Cover
WEI.8731720000	ZTR 2.5/3AN	2.5			
WEI.8731720000	ZTR 2.5/3AN	2.5			

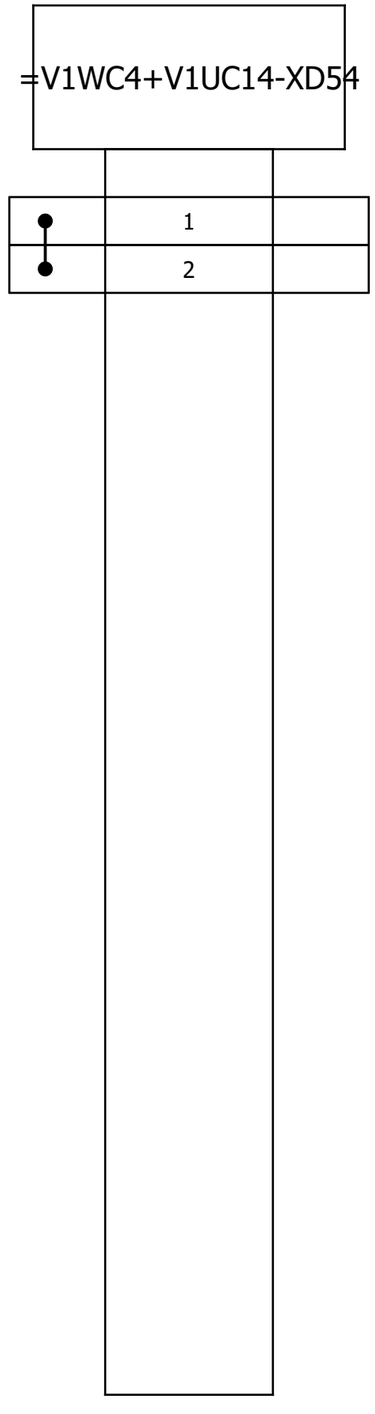

Terminal line-up diagram

F12_001

Part number					
Mounting rail			Strip label	End angle rear	End plate

Terminal					
Part number	Type number	Cross-section	Terminal label	Jumper	Cover
WEI.1608510000	ZDU 2.5	2.5			
WEI.1608740000	ZAP/TW 1				
WEI.9540000000	ZEW 35				
WEI.1608520000	ZDU 2.5 BL	2.5 mm²			
WEI.1608520000	ZDU 2.5 BL	2.5 mm²			

=V1WC3+V1UC15-XD1

'	L1	
'	N	
'		
'	PE	
'		

65

67

			Date	1/17/2023	Volvo Trucks North America	Valiant TMS	Terminal line-up diagram =V1WC3+V1UC15-XD1	Drawing name: =2V10&EFS-EL	=	
			Ed.	MKLEPADLO					+	
			Appr		P6700 Bodyside RH - Robot Cell 2V10			Document type: ETT	Project nr: 22-16150	Page 66
Modification	Date	Name	Original		Replacement of	Replaced by	Scale 1:1			1579

Terminal line-up diagram

F12_001

Part number					
Mounting rail			Strip label	End angle rear	End plate

=V1WC4+V1UC15-KF15.12

Terminal					
Part number	Type number	Cross-section	Terminal label	Jumper	Cover
WEI.8731720000	ZTR 2.5/3AN	2.5			
WEI.8731720000	ZTR 2.5/3AN	2.5			
WEI.8731720000	ZTR 2.5/3AN	2.5			
WEI.8731720000	ZTR 2.5/3AN	2.5			

'	1	
'	2	
'	3	
'	4	

Terminal line-up diagram

F12_001

Part number					
Mounting rail			Strip label	End angle rear	End plate

Terminal					
Part number	Type number	Cross-section	Terminal label	Jumper	Cover

=V1WC4+V1UC15-XD5

'	1	

67

69

			Date	1/17/2023	Volvo Trucks North America	Valiant TMS	Terminal line-up diagram =V1WC4+V1UC15-XD5	Drawing name: =2V10&EFS-EL	=	
			Ed.	MKLEPADLO					+	
			Appr		P6700 Bodyside RH - Robot Cell 2V10			Document type: ETT	Project nr: 22-16150	Page 68 / 1579
Modification	Date	Name	Original		Replacement of / Replaced by	Scale 1:1				

Terminal line-up diagram

F12_001

Part number					
Mounting rail			Strip label	End angle rear	End plate

Terminal					
Part number	Type number	Cross-section	Terminal label	Jumper	Cover

=V1WC4+V1UC15-XD6

'	1	

68

70

			Date	1/17/2023	Volvo Trucks North America	Valiant TMS	Terminal line-up diagram =V1WC4+V1UC15-XD6	Drawing name: =2V10&EFS-EL	=
			Ed.	MKLEPADLO					+
			Appr		P6700 Bodyside RH - Robot Cell 2V10			Document type: ETT	Project nr: 22-16150
Modification	Date	Name	Original		Replacement of	Replaced by	Scale 1:1		Page 69 / 1579

Terminal line-up diagram

F12_001

Part number					
Mounting rail			Strip label	End angle rear	End plate

=V1WC4+V1UC15-XD10

Terminal					
Part number	Type number	Cross-section	Terminal label	Jumper	Cover
WEI.8731720000	ZTR 2.5/3AN	2.5			
WEI.8731720000	ZTR 2.5/3AN	2.5			
WEI.8731720000	ZTR 2.5/3AN	2.5			
WEI.8731720000	ZTR 2.5/3AN	2.5			
WEI.8731720000	ZTR 2.5/3AN	2.5			
WEI.8731720000	ZTR 2.5/3AN	2.5			
WEI.8731720000	ZTR 2.5/3AN	2.5			
WEI.8731720000	ZTR 2.5/3AN	2.5			
WEI.8731720000	ZTR 2.5/3AN	2.5			
WEI.8731720000	ZTR 2.5/3AN	2.5			
WEI.8731720000	ZTR 2.5/3AN	2.5			
WEI.8731720000	ZTR 2.5/3AN	2.5			
WEI.8731720000	ZTR 2.5/3AN	2.5			
WEI.8731720000	ZTR 2.5/3AN	2.5			
WEI.8731720000	ZTR 2.5/3AN	2.5			
WEI.8731720000	ZTR 2.5/3AN	2.5			
WEI.8731720000	ZTR 2.5/3AN	2.5			
WEI.8731720000	ZTR 2.5/3AN	2.5			
WEI.8731720000	ZTR 2.5/3AN	2.5			
WEI.8731720000	ZTR 2.5/3AN	2.5			
WEI.8731720000	ZTR 2.5/3AN	2.5			

1	
2	
4	
3	
7	
9	
11	
5	
6	
8	
10	
12	
13	
14	
15	
16	
17	
18	
19	
20	

			Date	1/17/2023	Volvo Trucks North America	Valiant TMS	Terminal line-up diagram =V1WC4+V1UC15-XD10	Drawing name: =2V10&EFS-EL	=		
			Ed.	MKLEPADLO					+		
			Appr		P6700 Bodyside RH - Robot Cell 2V10			Document type: ETT	Project nr: 22-16150	Page	70
Modification	Date	Name	Original		Replacement of / Replaced by	Scale 1:1					1579

Terminal line-up diagram

F12_001

Part number					
Mounting rail			Strip label	End angle rear	End plate

Terminal					
Part number	Type number	Cross-section	Terminal label	Jumper	Cover
WEI.8731720000	ZTR 2.5/3AN	2.5			

=V1WC4+V1UC15-XD11

'	1	

Terminal line-up diagram

F12_001

Part number					
Mounting rail			Strip label	End angle rear	End plate

Terminal					
Part number	Type number	Cross-section	Terminal label	Jumper	Cover
WEI.8731720000	ZTR 2.5/3AN	2.5			
WEI.8731720000	ZTR 2.5/3AN	2.5			

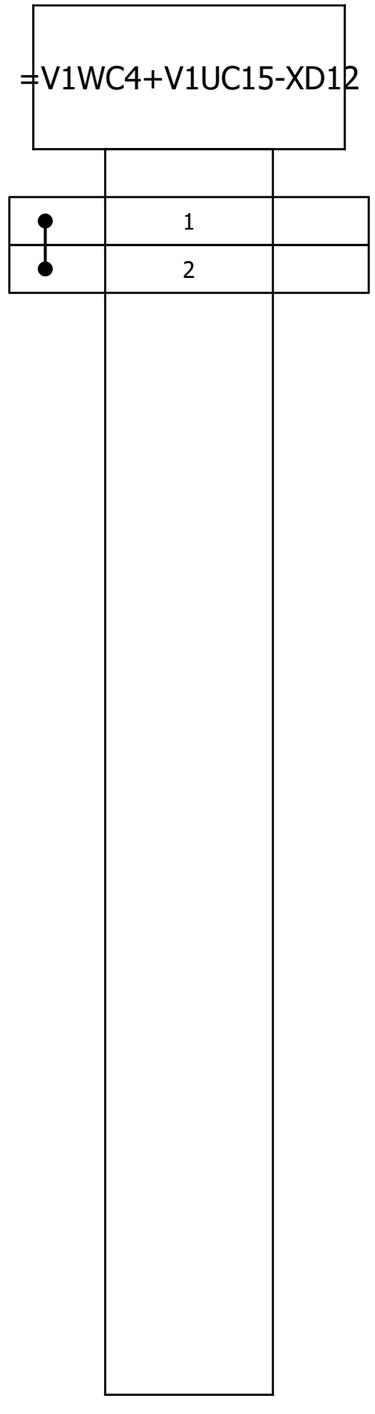

			Date	1/17/2023	Volvo Trucks North America		Valiant TMS	Terminal line-up diagram =V1WC4+V1UC15-XD12	Drawing name: =2V10&EFS-EL	=	
			Ed.	MKLEPADLO						+	
			Appr		P6700 Bodyside RH - Robot Cell 2V10				Document type: ETT	Project nr: 22-16150	Page 72
Modification	Date	Name	Original		Replacement of	Replaced by	Scale 1:1				1579

Terminal line-up diagram

F12_001

Part number					
Mounting rail			Strip label	End angle rear	End plate

=V1WC4+V1UC15-XD13

Terminal					
Part number	Type number	Cross-section	Terminal label	Jumper	Cover
WEI.8731720000	ZTR 2.5/3AN	2.5			

'	1	

72

74

			Date	1/17/2023	Volvo Trucks North America	Valiant TMS	Terminal line-up diagram =V1WC4+V1UC15-XD13	Drawing name: =2V10&EFS-EL	=
			Ed.	MKLEPADLO					+
			Appr		P6700 Bodyside RH - Robot Cell 2V10			Document type: ETT	Project nr: 22-16150
Modification	Date	Name	Original		Replacement of	Replaced by	Scale 1:1		Page 73 / 1579

Terminal line-up diagram

F12_001

Part number					
Mounting rail			Strip label	End angle rear	End plate

Terminal					
Part number	Type number	Cross-section	Terminal label	Jumper	Cover
WEI.8731720000	ZTR 2.5/3AN	2.5			
WEI.8731720000	ZTR 2.5/3AN	2.5			

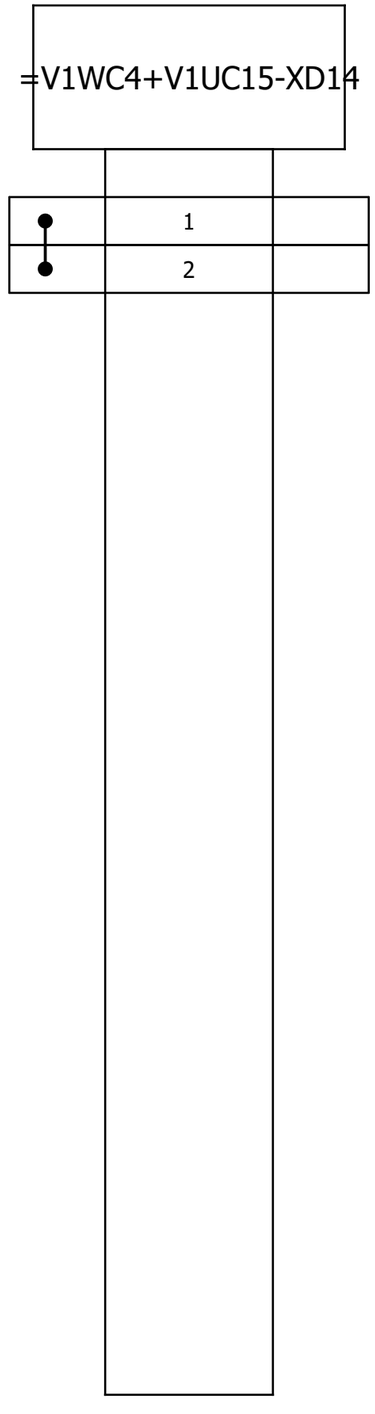

Terminal line-up diagram

F12_001

Part number					
Mounting rail			Strip label	End angle rear	End plate

Terminal					
Part number	Type number	Cross-section	Terminal label	Jumper	Cover
WEI.8731720000	ZTR 2.5/3AN	2.5			
WEI.8731720000	ZTR 2.5/3AN	2.5			

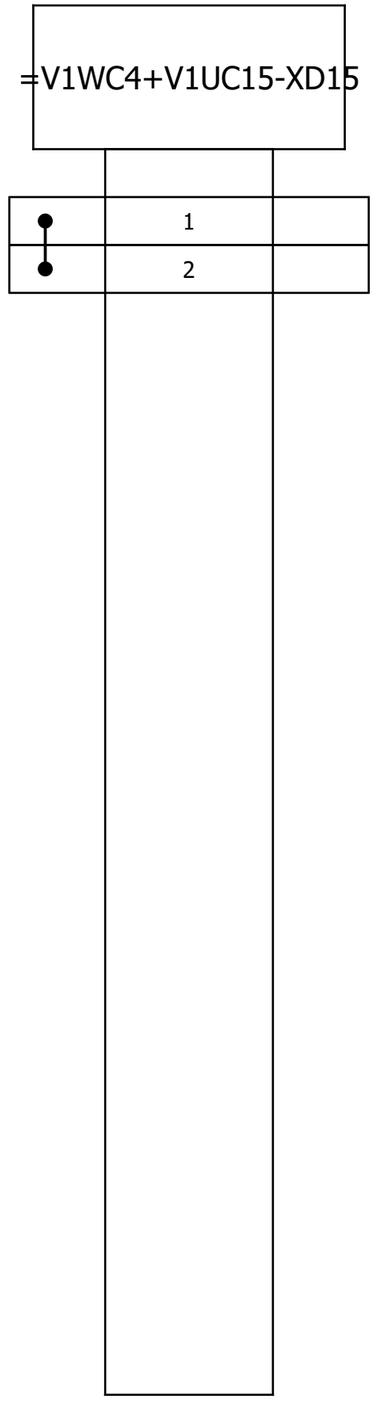

Terminal line-up diagram

F12_001

Part number					
Mounting rail			Strip label	End angle rear	End plate

Terminal					
Part number	Type number	Cross-section	Terminal label	Jumper	Cover
WEI.8731720000	ZTR 2.5/3AN	2.5			
WEI.8731720000	ZTR 2.5/3AN	2.5			

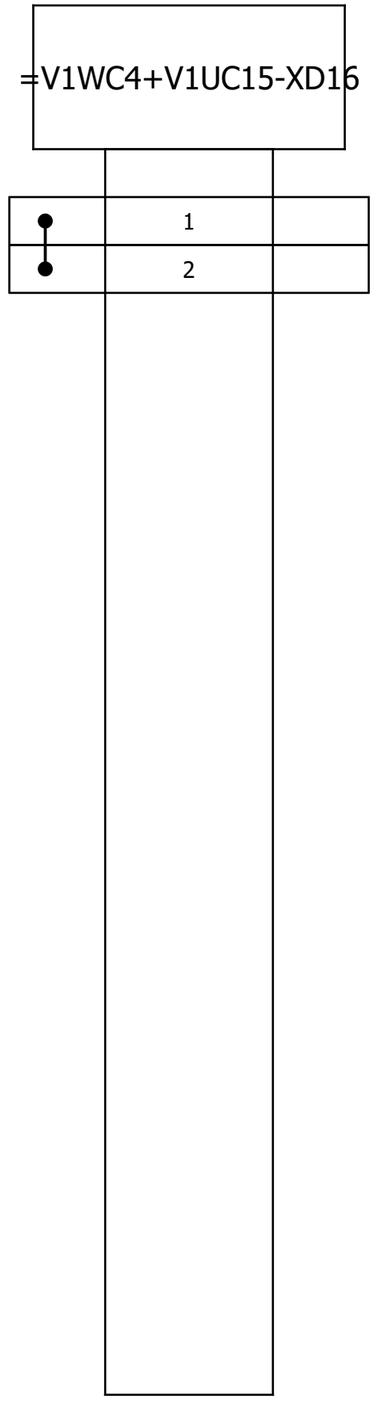

Terminal line-up diagram

F12_001

Part number					
Mounting rail			Strip label	End angle rear	End plate

Terminal					
Part number	Type number	Cross-section	Terminal label	Jumper	Cover
WEI.8731720000	ZTR 2.5/3AN	2.5			
WEI.8731720000	ZTR 2.5/3AN	2.5			

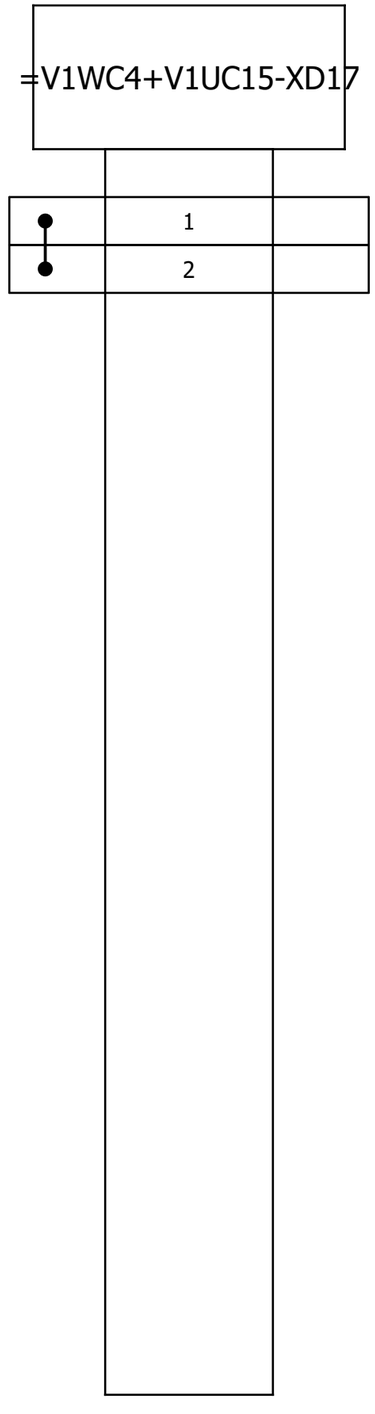

			Date	1/17/2023	Volvo Trucks North America		Valiant TMS	Terminal line-up diagram =V1WC4+V1UC15-XD17	Drawing name: =2V10&EFS-EL	=	
			Ed.	MKLEPADLO	P6700 Bodyside RH - Robot Cell 2V10					+	
			Appr				Scale 1:1		Document type: ETT	Project nr: 22-16150	Page 77 / 1579
Modification	Date	Name	Original		Replacement of	Replaced by					

Terminal line-up diagram

F12_001

Part number					
Mounting rail			Strip label	End angle rear	End plate

Terminal					
Part number	Type number	Cross-section	Terminal label	Jumper	Cover
WEI.8731720000	ZTR 2.5/3AN	2.5			

=V1WC4+V1UC15-XD18

'	1	

77

79

			Date	1/17/2023	Volvo Trucks North America	Valiant TMS	Terminal line-up diagram =V1WC4+V1UC15-XD18	Drawing name: =2V10&EFS-EL	=
			Ed.	MKLEPADLO	P6700 Bodyside RH - Robot Cell 2V10				+
			Appr					Document type: ETT	Project nr: 22-16150
Modification	Date	Name	Original		Replacement of	Replaced by	Scale 1:1		Page 78 / 1579

Terminal line-up diagram

F12_001

Part number					
Mounting rail			Strip label	End angle rear	End plate

Terminal					
Part number	Type number	Cross-section	Terminal label	Jumper	Cover
WEI.8731720000	ZTR 2.5/3AN	2.5			
WEI.8731720000	ZTR 2.5/3AN	2.5			

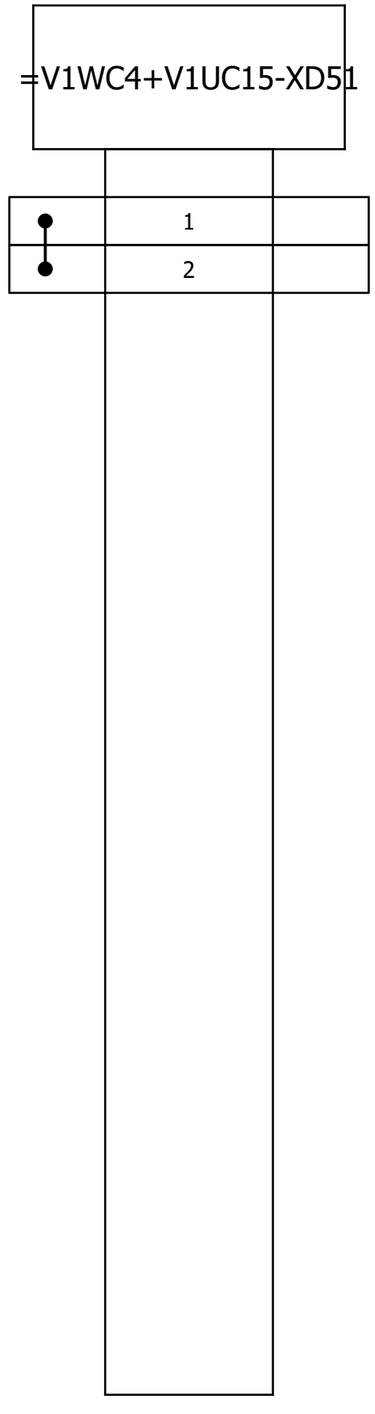

Terminal line-up diagram

F12_001

Part number					
Mounting rail			Strip label	End angle rear	End plate

Terminal					
Part number	Type number	Cross-section	Terminal label	Jumper	Cover
WEI.8731720000	ZTR 2.5/3AN	2.5			
WEI.8731720000	ZTR 2.5/3AN	2.5			

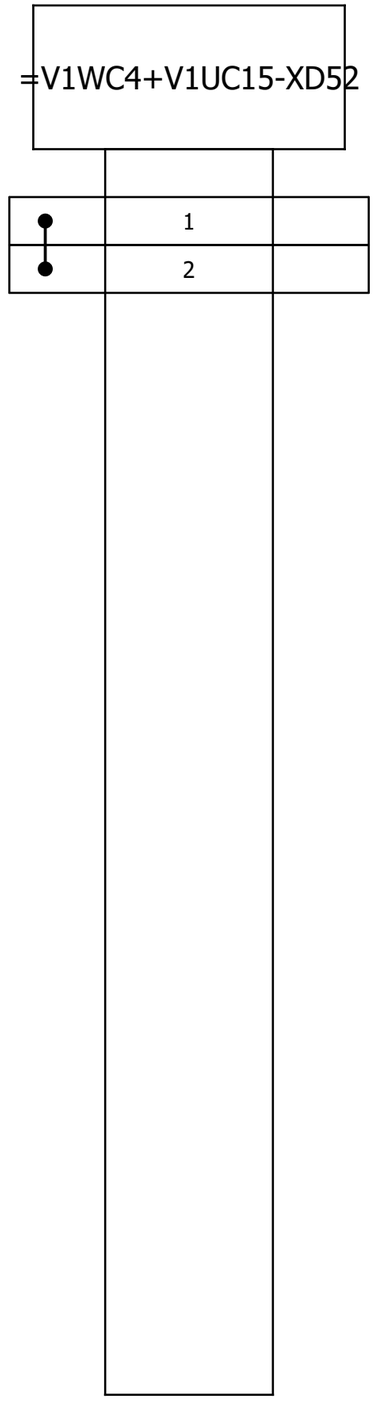

			Date	1/17/2023	Volvo Trucks North America	Valiant TMS	Terminal line-up diagram =V1WC4+V1UC15-XD52	Drawing name: =2V10&EFS-EL	=		
			Ed.	MKLEPADLO					+		
			Appr		P6700 Bodyside RH - Robot Cell 2V10			Document type: ETT	Project nr: 22-16150	Page	80
Modification	Date	Name	Original		Replacement of / Replaced by	Scale 1:1					1579

Terminal line-up diagram

F12_001

Part number					
Mounting rail			Strip label	End angle rear	End plate

Terminal					
Part number	Type number	Cross-section	Terminal label	Jumper	Cover
WEI.8731720000	ZTR 2.5/3AN	2.5			
WEI.8731720000	ZTR 2.5/3AN	2.5			

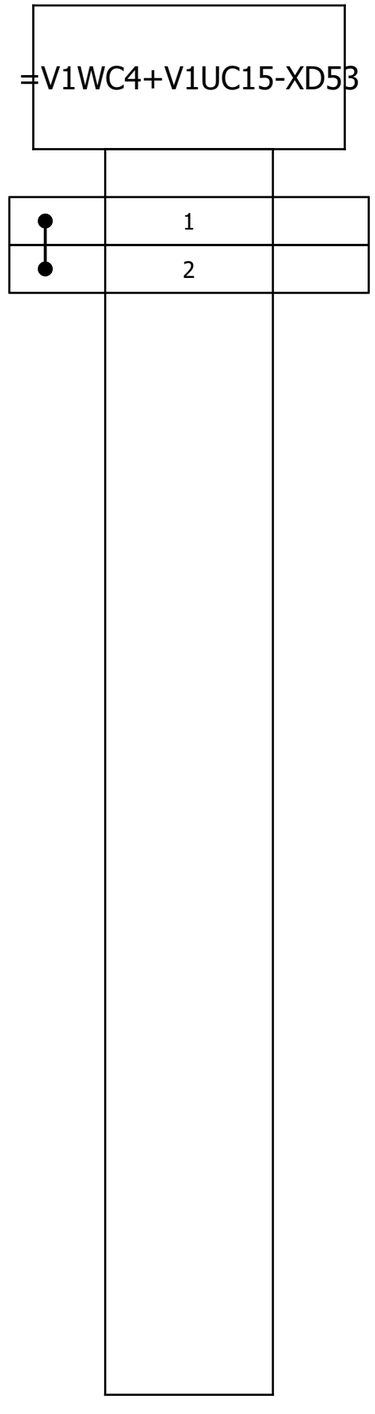

Terminal line-up diagram

F12_001

Part number					
Mounting rail			Strip label	End angle rear	End plate

Terminal					
Part number	Type number	Cross-section	Terminal label	Jumper	Cover
WEI.8731720000	ZTR 2.5/3AN	2.5			
WEI.8731720000	ZTR 2.5/3AN	2.5			

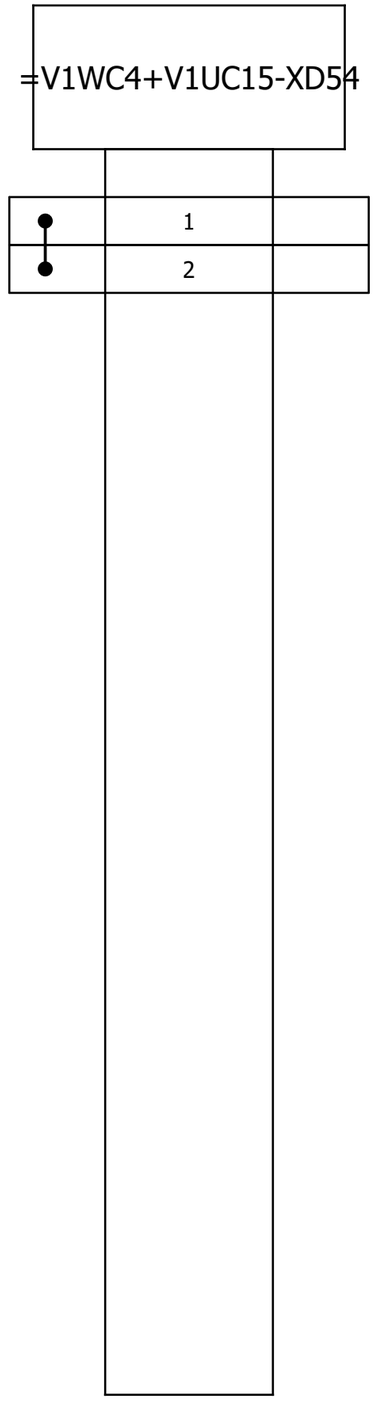

			Date	1/17/2023	Volvo Trucks North America		Valiant TMS	Terminal line-up diagram =V1WC4+V1UC15-XD54	Drawing name: =2V10&EFS-EL	=	
			Ed.	MKLEPADLO	P6700 Bodyside RH - Robot Cell 2V10					+	
			Appr				Scale 1:1		Document type: ETT	Project nr: 22-16150	Page 82 / 1579
Modification	Date	Name	Original		Replacement of	Replaced by					

Terminal line-up diagram

F12_001

Part number					
Mounting rail			Strip label	End angle rear	End plate

Terminal					
Part number	Type number	Cross-section	Terminal label	Jumper	Cover
WEI.8731720000	ZTR 2.5/3AN	2.5			
WEI.1608800000	ZAP/TW 3				
WEI.9540000000	ZEW 35				
WEI.8731720000	ZTR 2.5/3AN	2.5			
WEI.8731720000	ZTR 2.5/3AN	2.5			
WEI.8731720000	ZTR 2.5/3AN	2.5			
WEI.8731720000	ZTR 2.5/3AN	2.5			
WEI.8731720000	ZTR 2.5/3AN	2.5			
WEI.8731720000	ZTR 2.5/3AN	2.5			
WEI.8731720000	ZTR 2.5/3AN	2.5			
WEI.8731720000	ZTR 2.5/3AN	2.5			
WEI.8731720000	ZTR 2.5/3AN	2.5			
WEI.8731720000	ZTR 2.5/3AN	2.5			
WEI.8731720000	ZTR 2.5/3AN	2.5			
WEI.8731720000	ZTR 2.5/3AN	2.5			

=V1WC4+V1UC32-XD11

	1	
	2	
	3	
	4	
	5	
	6	
	7	
	11	
	12	
	13	
	14	
	15	
	16	
	17	

Terminal line-up diagram

F12_001

Part number					
Mounting rail			Strip label	End angle rear	End plate

Terminal					
Part number	Type number	Cross-section	Terminal label	Jumper	Cover
WEI.1608520000	ZDU 2.5 BL	2.5 mm²			
WEI.1608740000	ZAP/TW 1				
WEI.9540000000	ZEW 35				
WEI.1608520000	ZDU 2.5 BL	2.5 mm²			
WEI.1608520000	ZDU 2.5 BL	2.5 mm²			
WEI.1608520000	ZDU 2.5 BL	2.5 mm²			
WEI.1608520000	ZDU 2.5 BL	2.5 mm²			
WEI.1608520000	ZDU 2.5 BL	2.5 mm²			
WEI.1608520000	ZDU 2.5 BL	2.5 mm²			
WEI.1608520000	ZDU 2.5 BL	2.5 mm²			
WEI.1608520000	ZDU 2.5 BL	2.5 mm²			

=V1PZ1PF1+V1UC61-XD11

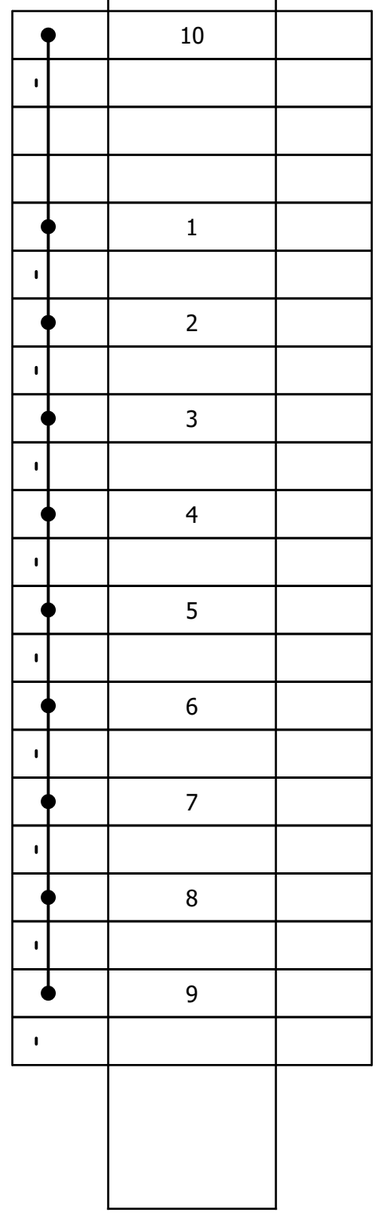

			Date	1/17/2023	Volvo Trucks North America		Valiant TMS	Terminal line-up diagram =V1PZ1PF1+V1UC61-XD11	Drawing name: =2V10&EFS-EL	=	
			Ed.	MKLEPADLO						+	
			Appr		P6700 Bodyside RH - Robot Cell 2V10		Scale 1:1		Document type: ETT	Project nr: 22-16150	Page 84 / 1579
Modification	Date	Name	Original		Replacement of	Replaced by					

Terminal line-up diagram

F12_001

Part number					
Mounting rail			Strip label	End angle rear	End plate

Terminal					
Part number	Type number	Cross-section	Terminal label	Jumper	Cover
WEI.1608520000	ZDU 2.5 BL	2.5 mm²			
WEI.1608740000	ZAP/TW 1				
WEI.9540000000	ZEW 35				
WEI.1608520000	ZDU 2.5 BL	2.5 mm²			
WEI.1608520000	ZDU 2.5 BL	2.5 mm²			
WEI.1608520000	ZDU 2.5 BL	2.5 mm²			
WEI.1608520000	ZDU 2.5 BL	2.5 mm²			
WEI.1608520000	ZDU 2.5 BL	2.5 mm²			
WEI.1608520000	ZDU 2.5 BL	2.5 mm²			
WEI.1608520000	ZDU 2.5 BL	2.5 mm²			
WEI.1608520000	ZDU 2.5 BL	2.5 mm²			

=V1PZ1PF2+V1UC62-XD11

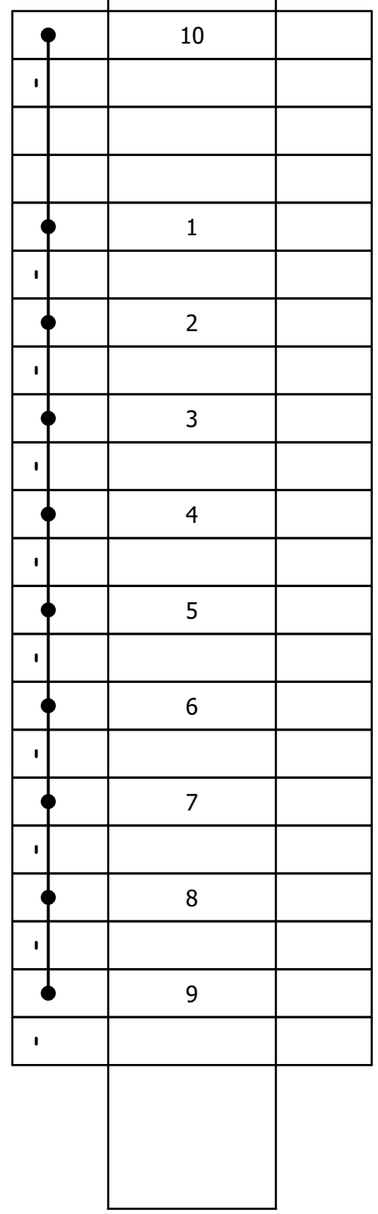

Terminal line-up diagram

F12_001

Part number					
Mounting rail			Strip label	End angle rear	End plate

Terminal					
Part number	Type number	Cross-section	Terminal label	Jumper	Cover
WEI.1608520000	ZDU 2.5 BL	2.5 mm²			
WEI.1608740000	ZAP/TW 1				
WEI.9540000000	ZEW 35				
WEI.1608520000	ZDU 2.5 BL	2.5 mm²			
WEI.1608520000	ZDU 2.5 BL	2.5 mm²			
WEI.1608520000	ZDU 2.5 BL	2.5 mm²			
WEI.1608520000	ZDU 2.5 BL	2.5 mm²			
WEI.1608520000	ZDU 2.5 BL	2.5 mm²			
WEI.1608520000	ZDU 2.5 BL	2.5 mm²			
WEI.1608520000	ZDU 2.5 BL	2.5 mm²			
WEI.1608520000	ZDU 2.5 BL	2.5 mm²			

=V1PZ1PF3+V1UC63-XD11

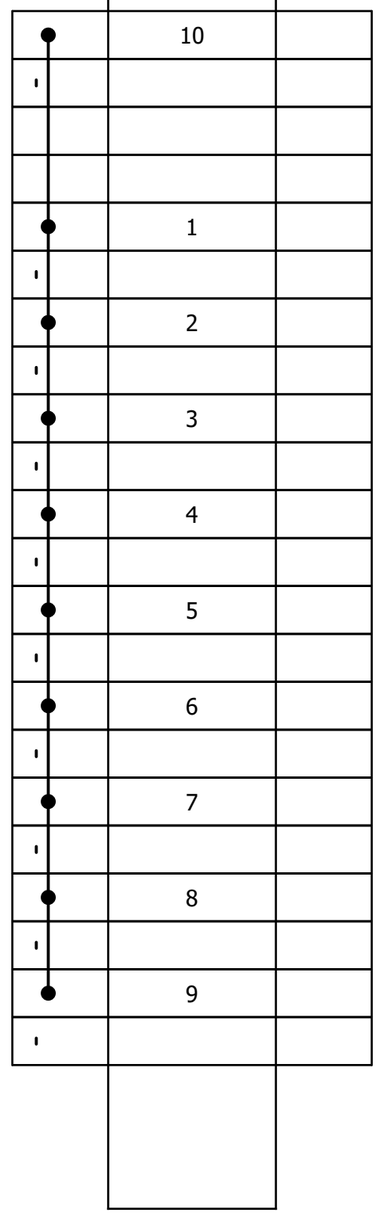

			Date	1/17/2023	Volvo Trucks North America		Valiant TMS	Terminal line-up diagram =V1PZ1PF3+V1UC63-XD11	Drawing name: =2V10&EFS-EL	=	
			Ed.	MKLEPADLO						+	
			Appr		P6700 Bodyside RH - Robot Cell 2V10				Document type: ETT	Project nr: 22-16150	Page 86
Modification	Date	Name	Original		Replacement of	Replaced by	Scale 1:1				1579

Terminal line-up diagram

F12_001

Part number					
Mounting rail			Strip label	End angle rear	End plate

Terminal					
Part number	Type number	Cross-section	Terminal label	Jumper	Cover
WEI.1608520000	ZDU 2.5 BL	2.5 mm²			
WEI.1608740000	ZAP/TW 1				
WEI.9540000000	ZEW 35				
WEI.1608520000	ZDU 2.5 BL	2.5 mm²			
WEI.1608520000	ZDU 2.5 BL	2.5 mm²			
WEI.1608520000	ZDU 2.5 BL	2.5 mm²			
WEI.1608520000	ZDU 2.5 BL	2.5 mm²			
WEI.1608520000	ZDU 2.5 BL	2.5 mm²			
WEI.1608520000	ZDU 2.5 BL	2.5 mm²			
WEI.1608520000	ZDU 2.5 BL	2.5 mm²			
WEI.1608520000	ZDU 2.5 BL	2.5 mm²			

=V1PZ1PF4+V1UC64-XD11

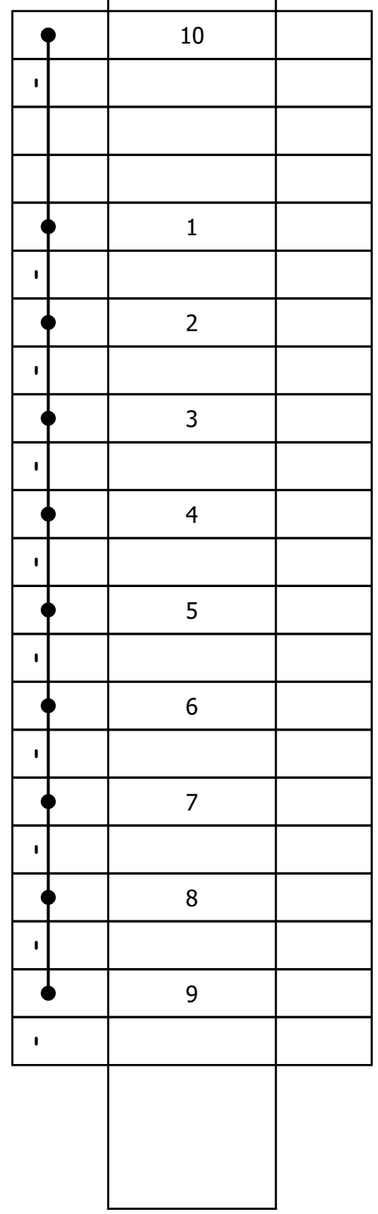

&EXX/1

			Date	1/17/2023	Volvo Trucks North America		Valiant TMS	Terminal line-up diagram =V1PZ1PF4+V1UC64-XD11	Drawing name: =2V10&EFS-EL	=	
			Ed.	MKLEPADLO						+	
			Appr		P6700 Bodyside RH - Robot Cell 2V10				Document type: ETT	Project nr: 22-16150	Page 87
Modification	Date	Name	Original		Replacement of	Replaced by	Scale 1:1				1579

Summarized parts list

F02_001

Order number	Quantity	Description Designation	Type number Part number	Manufacturer Supplier	Unit price	Total price	Pos
	9 Piece	Mounting rail EN 50 022 (35x7,5)	TS 35_7,5 TS 35_7,5		0.00	0.00	
1SFA619550R1051	2 PCE	EMERGENCY STOP CE4T-10R-02	CE4T-10R-02 ABB.1SFA619550R1051	ABB ABB	0.00	0.00	
1SFA616915R1005	3 Piece	LEGEND PLATET KTC15-1005	KTC15-1005 ABB.1SFA616915R1005	ABB	0.00	0.00	
	0					0.00	
ECGB5	2 Piece	Ground bar kit, 5 positions.	ECGB5 US2.ECGB5	SIE SIE	0.00	0.00	
C1.5LG6	2 ft	Wiring Duct Covers, PVC	C1.5LG6 PAN.C1.5LG6	PAN PAN	0.00	0.00	
C1LG6	2 ft	Wiring Duct Covers, PVC	C1LG6 PAN.C1LG6	PAN PAN	0.00	0.00	
G1.5X4LG6	2 ft	Wide Slotted Wiring Duct, PVC	G1.5X4LG6 PAN.G1.5X4LG6	PAN PAN	0.00	0.00	
G1X4LG6	2 ft	Wide Slotted Wiring Duct, PVC	G1X4LG6 PAN.G1X4LG6	PAN PAN	0.00	0.00	
6ES5710-8MA11	1	STAND.SECTIONAL RAIL 35MM, LENGTH 483MM	6ES5710-8MA11 SIE.6ES5710-8MA11	SIE Siemens AG	0.00	0.00	
5386050	1 pc(s).	PC PC enclosure system, WHD: 800x1600x600 mm, Sheet steel	PC.5386050 RIT.5386050	RIT RIT	0.00	0.00	
8617580	1 pc(s).	VX Partial mounting plate, for VX: 700x700 mm	VX.8617580 RIT.8617580	RIT RIT	0.00	0.00	
E4PBG	2 piece	Pushbutton Enclosure, Type 12, 4PB, 22.5mm holes, 10.00Hx3.25Wx2.75D, Gray, Steel	E4PBG HOFFMAN.E4PBG	HOFFMAN HOFFMAN	0.00	0.00	
ASPBG	2 piece	Hol-Sealers Hole Seal, 1.22" diameter, Gray, Steel	ASPBG ASPBG	HOFFMAN HOFFMAN	0.00	0.00	
6ES7517-3FP00-0AB0	1	CPU 1517F-3 PN/DP, 3MB PROG., 8MB DATA	6ES7517-3FP00-0AB0 SIE.6ES7517-3FP00-0AB0	SIE SIE	0.00	0.00	
6ES7590-1AC40-0AA0	1	MOUNTING RAIL 245MM (9.6")	6ES7590-1AC40-0AA0 SIE.6ES7590-1AC40-0AA0	SIE SIE	0.00	0.00	
6ES7155-6AA01-0BN0	6	ET 200SP, IM155-6PN ST INCL. BA 2XRJ45	6ES7155-6AA01-0BN0 SIE.6ES7155-6AA01-0BN0	SIE SIE	0.00	0.00	
6ES7131-6BH01-0BA0	14	ET 200SP, DI 16x 24V DC ST, PU 1	6ES7131-6BH01-0BA0 SIE.6ES7131-6BH01-0BA0	SIE SIE	0.00	0.00	
6ES7132-6BH01-0BA0	6	ET 200SP, DQ 16x 24V DC/0,5A ST, PU 1	6ES7132-6BH01-0BA0 SIE.6ES7132-6BH01-0BA0	SIE SIE	0.00	0.00	

Summarized parts list

F02_001

Order number	Quantity	Description Designation	Type number Part number	Manufacturer Supplier	Unit price	Total price	Pos
6ES7136-6BA01-0CA0	2	ET 200SP, El-Mod., F-DI 8x24VDC HF	6ES7136-6BA01-0CA0 SIE.6ES7136-6BA01-0CA0	SIE SIE	0.00	0.00	
6GK5615-0AA00-2AA2	1	SCALANCE S615	6GK5615-0AA00-2AA2 SIE.6GK5615-0AA00-2AA2	SIE SIE	0.00	0.00	
6GK5216-0BA00-2AC2	5	SCALANCE XC216	6GK5216-0BA00-2AC2 SIE.6GK5216-0BA00-2AC2	SIE SIE	0.00	0.00	
RJ45S FKSDED 423-1M	76	Profinet cable - RJ45 plug to M12 Female receptacle; 1m long	RJ45S FKSDED 423-1M TUR.RJ45S FKSDED 423-1M	TURCK TURCK	0.00	0.00	
	2		4000-73000-0180000		0.00	0.00	
8WD4408-0AA	5 piece	Signaling column connection element for pipe mounting incl. end cover and seal	8WD4408-0AA SIE.8WD4408-0AA	SIE SIE	0.00	0.00	
8WD4420-0EA2	5 piece	Signaling column multifunctional siren element different sounds can be set	8WD4420-0EA2 SIE.8WD4420-0EA2	SIE	0.00	0.00	
8WD4420-5AB	5 piece	Signaling column continuous light element LED red, 24 V AC/DC	8WD4420-5AB SIE.8WD4420-5AB	SIE SIE	0.00	0.00	
8WD4420-5AC	5 piece	Signaling column continuous light element LED green, 24 V AC/DC	8WD4420-5AC SIE.8WD4420-5AC	SIE SIE	0.00	0.00	
1SFA619100R1022	2 PCE	PUSHBUTTON CP1-10G-20	CP1-10G-20 ABB.1SFA619100R1022	ABB ABB	0.00	0.00	
1SFA619100R1023	2 PCE	PUSHBUTTON CP1-10Y-20	CP1-10Y-20 ABB.1SFA619100R1023	ABB ABB	0.00	0.00	
1SFA619100R1111	1 PCE	PUSHBUTTON CP1-11R-10 24V AC/DC	CP1-11R-10 ABB.1SFA619100R1111	ABB ABB	0.00	0.00	
1SFA619100R1026	1 PCE	PUSHBUTTON CP1-10B-20	CP1-10B-20 ABB.1SFA619100R1026	ABB ABB	0.00	0.00	
1SFA619100R1118	2 PCE	PUSHBUTTON CP1-11C-10	CP1-11C-10 ABB.1SFA619100R1118	ABB ABB	0.00	0.00	
1SFA619200R1016	1 PCE	SELECTOR SWITCH C2SS1-10B-10	C2SS1-10B-10 ABB.1SFA619200R1016	ABB ABB	0.00	0.00	
2CDS271337R0104	2 PCE	Miniature Circuit Breaker - SU200 M - 1P - C - 10 A	SU201M-C10 ABB.2CDS271337R0104	ABB ABB	0.00	0.00	
6EP19612BA41	1	4x3-10A	6EP1961-2BA41 SIE.6EP1961-2BA41	SIE SIE	0.00	0.00	
6EP4134-3AB00-2AY0	1	SITOP UPS1600	6EP4134-3AB00-2AY0 SIE.6EP4134-3AB00-2AY0	SIE	0.00	0.00	
6EP4134-0GB00-0AY0	1	SITOP UPS1100	6EP4134-0GB00-0AY0 SIE.6EP4134-0GB00-0AY0	SIE SIE	0.00	0.00	

Summarized parts list

F02_001

Order number	Quantity	Description Designation	Type number Part number	Manufacturer Supplier	Unit price	Total price	Pos
6EP3336-7SB00-3AX0	7	SITOP PSU6200 1ph 24 V/20 A	6EP3336-7SB00-3AX0 SIE.6EP3336-7SB00-3AX0	SIE	0.00	0.00	
	1		TUR.BS 8251-0/PG9			0.00	
EMPD3FBCB-025A-M	30		EMPD3FBCB-025A-M EMPD3FBCB-025A-M	Electro-Matic Electro-Matic	0.00	0.00	
1625891	20 piece	Inductive sensor	NI50U-CK40-AP6X2-H1141/S1590 W/BS4_A TUR.1625891	TUR Turck	0.00	0.00	
VB2-FSM 4.4/2FKM 4/S3450	115	Y splitter	U2-30676 TUR.VB2-FSM 4.4/2FKM 4/S3450	TURCK TURCK	0.00	0.00	
548755	0	Bus node	CPX-FB33 FES.548755	FES FES	0.00	0.00	
550208	0	Interlinking block	CPX-M-GE-EV-S-7/8-5POL FES.550208	FES FES	0.00	0.00	
549335	0	Manifold block	CPX-M-AB-8-M12X2-5POL FES.549335	FES FES	0.00	0.00	
55530	1 Piece	MVK-MPNIO DIO16 IRT 7/8" 5pin	MVK-MPNIO DI16 MURR.55530	MURR MURR	0.00	0.00	
U2109-9	21 piece	TEE, 5-PIN MINI, STANDARD KEYWAY	RSM-2RKM 50 TUR.RSM-2RKM 50	TURCK TURCK	0.00	0.00	
WWS001A	4 piece	Inductive sensor Monitoring Kit for Power Clamps	WWS001A WELKER.WWS001A	WELKER WELKER	0.00	0.00	
1324633	18 piece	Inductive sensor Monitoring Kit for Vario Clamps	1324633 TUN.1324633	TUNKERS TUNKERS	0.00	0.00	
2CMA193115R1000	17	Surface socket-outlet	ABB.2CMA193115R1000	ABB ABB	0.00	0.00	
EMPD3FBCB-100A-M	2		EMPD3FBCB-100A-M EMPD3FBCB-100A-M	Electro-Matic Electro-Matic	0.00	0.00	
WWS001A	141	4-Wire, 4-Pin, DC M12 X 1 (PNP)	WWS001A WEL.WWS001A	WEL WEL	0.00	0.00	
1324638	205 piece	Inductive sensor Monitoring Kit for Power Clamps	1324638 TUN.1324638	TUNKERS TUNKERS	0.00	0.00	
EMPD3FBCB-060A-M	1		EMPD3FBCB-060A-M EMPD3FBCB-060A-M	Electro-Matic Electro-Matic	0.00	0.00	
1627205	8 piece	Inductive sensor	BI20U-CA40-AP6X2-H1141/S1590 W/BS2.0 TUR.1627205	TUR Turck	0.00	0.00	
EMPD3FBCB-030A-M	2		EMPD3FBCB-030A-M EMPD3FBCB-030A-M	Electro-Matic Electro-Matic	0.00	0.00	

Summarized parts list

F02_001

Order number	Quantity	Description Designation	Type number Part number	Manufacturer Supplier	Unit price	Total price	Pos
SLSCP30-1200P44NT	6	EZ-Screen System	SLSCP30-1200P44NT BAN.SLSCP30-1200P44NT	BANNER BANNER	0.00	0.00	
SLSCP30-1200P88	4	EZ-Screen System	SLSCP30-1200P88 BAN.SLSCP30-1200P88	BANNER BANNER	0.00	0.00	
MGB-L2B-PNA-L-121863	6 Piece	SWITCH	MGB-L2B-PNA-L-121863 EUC.MGB-L2B-PNA-L-121863	EUCHNER EUCHNER	0.00	0.00	
MGB-H-AA1A2-L-106221	6 Piece	HANDLE	MGB-H-AA1A2-L-106221 EUC.MGB-H-AA1A2-L-106221	EUCHNER EUCHNER	0.00	0.00	
MGB-A-MOUNTINGPLATE-H-109491	6 Piece	MOUNTING PLATE	MGB-A-MOUNTINGPLATE-H-109491 EUC.MGB-A-MOUNTINGPLATE-H-109491	EUCHNER EUCHNER	0.00	0.00	
MGB-E-A2-106051	6 Piece	ESCAPE RELEASE	MGB-E-A2-106051 EUC.MGB-E-A2-106051	EUCHNER EUCHNER	0.00	0.00	
1627297	104 piece	Inductive sensor	BI20U-CA40-AP6X2-H1141/S1590 W/BS2.0 TUR.1627297	TURCK TURCK	0.00	0.00	
1644797	8 piece	Inductive sensor	BI4U-MT12E-AP6X2-H1141/S1589 TUR.1644797	TURCK TURCK	0.00	0.00	
16449050	22 piece	Inductive sensor	BI10U-MT18-AP6X2-H1141/S1589 TUR.16449050	TURCK TURCK	0.00	0.00	
	4		1627297			0.00	
73093	6 Piece	QS30 Series High-Performance Long-Range Sensor	QS30FF600QPMA16 BAN.73093	BAN	0.00	0.00	
4570890	20 piece	Inductive sensor	BI2-CRS260-AP4X2-H1141/S34 TUR.BI2-CRS260-AP4X2-H1141/S34	TURCK TURCK	0.00	0.00	
1324644	60 piece	Inductive sensor Monitoring Kit for Power Clamps	1324644 TUN.1324644	TUNKERS TUNKERS	0.00	0.00	
285425	2 piece	Inductive sensor Monitoring Kit for Power Clamps	285425 TUN.285425	TUNKERS TUNKERS	0.00	0.00	
NBN2-F581-¶100S6-E8-V1	2	50MM RANGE 4-PIN M12 INDUCTIVE SENSOR	NBN2-F581-100S6-E8-V1 P+F.NBN2-F581-100S6-E8-V1	P+F P+F	0.00	0.00	
1644905	32 piece	Inductive sensor	BI10U-MT18-AP6X2-H1141/S1589 TUR.1644905	TUR Turck	0.00	0.00	
1644979	2 piece	Inductive sensor	BI4U-MT12E-AP6X-H1141/S1589 TUR.1644979	TUR Turck	0.00	0.00	
1600610	2 piece	Magnetic field sensor For Detection of Ferromagnetic Parts	NIMFE-M12/4.6L88-UN6X-H1141 TUR.1600610	TURCK TURCK	0.00	0.00	
541254	2	Manifold block	CPX-AB-4-M12X2-5POL-R FES.541254	FES FES	0.00	0.00	

Summarized parts list

F02_001

Order number	Quantity	Description Designation	Type number Part number	Manufacturer Supplier	Unit price	Total price	Pos
1329440	1 piece	Inductive sensor Monitoring Kit for Power Clamps	1329440 TUN.1329440	TUNKERS TUNKERS	0.00	0.00	
BS 4151-0/9	3 piece	5 PIN MINI FIELD ATTACHABLE, FEMALE, STRAIGHT	BS 4151-0/9 TUR.BS 4151-0/9	TURCK TURCK	0.00	0.00	
	12		TUR.16447411			0.00	
6ES7136-6BA00-0CA0	8	ET 200SP, El-Mod., F-DI 8x24VDC HF	6ES7136-6BA00-0CA0 SIE.6ES7136-6BA00-0CA0	SIE	0.00	0.00	
6ES7136-6DB00-0CA0	8	ET 200SP, El-Mod., F-DQ 4xDC 24V/2A	6ES7136-6DB00-0CA0 SIE.6ES7136-6DB00-0CA0	SIE	0.00	0.00	
6ES7136-6RA00-0BF0	16	ET 200SP, F-RQ 1x24VDC/24..230VAC/5A ST	6ES7136-6RA00-0BF0 SIE.6ES7136-6RA00-0BF0	SIE	0.00	0.00	
6ES7193-6BP20-0BF0	16	BASEUNIT TYPE F0, BU20-P8+A4+0B	6ES7193-6BP20-0BF0 SIE.6ES7193-6BP20-0BF0	SIE SIE	0.00	0.00	
6ES7193-6BP00-0DA0	8	BASEUNIT TYPE A0, BU15-P16+A0+2D	6ES7193-6BP00-0DA0 SIE.6ES7193-6BP00-0DA0	SIE SIE	0.00	0.00	
6GK1900-0AB10	3	C-PLUG	6GK1900-0AB10 SIE.6GK1900-0AB10	SIE SIE	0.00	0.00	
8WD4420-5AD	4 piece	Signaling column continuous light element LED yellow, 24 V AC/DC	8WD4420-5AD SIE.8WD4420-5AD	SIE SIE	0.00	0.00	
8WD4420-5AF	4 piece	Signaling column continuous light element LED blue, 24 V AC/DC	8WD4420-5AF SIE.8WD4420-5AF	SIE SIE	0.00	0.00	
1574000	4 piece	Small enclosures KX	KX.1574000 RIT.1574000	RIT	0.00	0.00	
RSF 106-2M/14.5/NPT/CS16486	4	RECEPTACLE 1-1/8" MINIFAST 10P MALE 2M	RSF 106-2M/14.5/NPT/CS16486 TUR.RSF 106-2M/14.5/NPT/CS16486	TURCK TURCK	0.00	0.00	
6AV2124-0QC02-0AX1	2	SIMATIC HMI TP1500 COMFORT	6AV2124-0QC02-0AX1 SIE.6AV2124-0QC02-0AX1	SIE SIE	0.00	0.00	
6315450	1 piece	Compact enclosure AX	AX.6315450 RIT.6315450	RIT RIT	0.00	0.00	
6106500	1 piece	Pedestal, open	CP.6106500 RIT.6106500	RIT RIT	0.00	0.00	
6206300	1 piece	Coupling CP 60	CP.6206300 RIT.6206300	RIT RIT	0.00	0.00	
5051300	5 pc(s).	Accessory bag, for AX	AX.5051300 RIT.5051300	RIT RIT	0.00	0.00	
5051375	1 pc(s).	Mounting plate, for AX	AX.5051375 RIT.5051375	RIT RIT	0.00	0.00	

Summarized parts list

F02_001

Order number	Quantity	Description Designation	Type number Part number	Manufacturer Supplier	Unit price	Total price	Pos
6315150	7 piece	Compact enclosure AX	AX.6315150 RIT.6315150	RIT RIT	0.00	0.00	
6AV2124-0GC01-0AX0	4	SIMATIC HMI TP700 COMFORT	6AV2124-0GC01-0AX0 SIE.6AV2124-0GC01-0AX0	SIE SIE	0.00	0.00	
RJ45S FKSDED 423-0.5M	8	Profinet cable - RJ45 plug to M12 Female receptacle; 0.5m long	RJ45S FKSDED 423-0.5M TUR.RJ45S FKSDED 423-0.5M	TURCK TURCK	0.00	0.00	
5051368	4 pc(s).	Mounting plate, for AX	AX.5051368 RIT.5051368	RIT RIT	0.00	0.00	
RSF 50-1M/NPT	5	RECEPTACLE MINI 5P MALE 1M	RSF 50-1M/NPT TUR.RSF 50-1M/NPT	TURCK TURCK	0.00	0.00	
SSA-EBM-12EB1Q8OTBB	4 piece	Push-to-Stop, Twist-to-Release Electro-Mechanical Push Buttons	SSA-EBM Series BAN.SSA-EBM-12EB1Q8OTBB	BANNER BANNER	0.00	0.00	
802T-AMP	2	NEMA Limit Switch - NEMA Type 4 & 13 Oiltight Construction	802T-AMP A-B.802T-AMP	A-B A-B	0.00	0.00	
55339	3 Piece	MVK-MPNIO DI8 DO8 FSU	MVK-MPNIO DI8 DO8 FSU MURR.55339	MURR MURR	0.00	0.00	
805371	3 piece	K50L Series Daylight Visible Indicators	K50L2RGB7QP BAN.805371	BANNER BANNER	0.00	0.00	
SMB30A	3	Mounting kit	SMB30A BAN.32723	BANNER BANNER	0.00	0.00	
	1		BAN.801918			0.00	
	1		TUR.BI20U-CA40-AP6X2-H1141/S1590W/BS2.0			0.00	
1635291	1 piece	Inductive sensor	BI5U-MT18-AP6X2-H1141/S395/S1589 TUR.1635291	TURCK TURCK	0.00	0.00	
3VA5195-6ED31-0AA0	2	MCCB_UL_FS125_15A_3P_65KA_TM_ FTFM	3VA5195-6ED31-0AA0 SIE.3VA5195-6ED31-0AA0	SIE SIE	0.00	0.00	
3VA9977-0TA20	2	BREAKER DATA SERVER, COM100	3VA9977-0TA20 SIE.3VA9977-0TA20	SIE SIE	0.00	0.00	
7KM9300-0AE02-0AA0	2 Piece	Switched Ethernet PROFINET Module V3	7KM9300-0AE02-0AA0 SIE.7KM9300-0AE02-0AA0	SIE	0.00	0.00	
3VA6340-6KP31-0AA0	1	MCCB_UL_FS400_400A_3P_65KA_ETU8_LSI	3VA6340-6KP31-0AA0 SIE.3VA6340-6KP31-0AA0	SIE SIE	0.00	0.00	
3VA9177-0TB10	2	COMMUNICATION MODULE COM060	3VA9177-0TB10 SIE.3VA9177-0TB10	SIE SIE	0.00	0.00	
PTN102-3K	2 Piece	Transformer	PTN102-3K PTN102-3K	POWERTRAN POWERTRAN	0.00	0.00	

Summarized parts list

F02_001

Order number	Quantity	Description Designation	Type number Part number	Manufacturer Supplier	Unit price	Total price	Pos
3VA6225-6KP31-0AA0	1	MCCB_UL_FS250_250A_3P_65KA_ETU8_LSI	3VA6225-6KP31-0AA0 SIE.3VA6225-6KP31-0AA0	SIE SIE	0.00	0.00	
R-3W2MT-LMF	2 piece	Multi-Environment Voltage Indicator and Safe-Test Point Combination Kit, Vertical/Flange Warning Label	R-3W2MT-LMF GT_R-3W2MT-LMF	GT	0.00	0.00	
3VA5120-6ED31-0AA0	2	MCCB_UL_FS125_20A_3P_65KA_TM_ FTFM	3VA5120-6ED31-0AA0 SIE.3VA5120-6ED31-0AA0	SIE SIE	0.00	0.00	
PTN102-7.5K	2 Piece	Transformer	PTN102-7.5K PTN102-7.5K	POWERTRAN POWERTRAN	0.00	0.00	
MB-231-03	1	3P DISTRIBUTION BLOCK 1 LINE / 4 LOAD	MB-231-03 MB-231-03	SYNDEVCO SYNDEVCO	0.00	0.00	
STGS-3D-3D	1	3P GROUND BLOCK 3 LINE / 3 LOAD	STGS-3D-3D STGS-3D-3D	SYNDEVCO SYNDEVCO	0.00	0.00	
CPB-E2G06-03	0	3P DISTRIBUTION BLOCK 2 LINE / 6 LOAD	CPB-E2G06-03 CPB-E2G06-03	SYNDEVCO SYNDEVCO	0.00	0.00	
HCG-E2G06	0	3P GROUND BLOCK 2 LINE / 6 LOAD	HCG-E2G06 HCG-E2G06	SYNDEVCO SYNDEVCO	0.00	0.00	
5SJ4120-7HG41	2	CIRCUIT BREAKER 240V 14KA, 1-POLE, C, 20A, D=70MM	5SJ4120-7HG41 SIE.5SJ4120-7HG41	SIE SIE	0.00	0.00	
5ST3010-0HG	20	AUXILARY SWITCH 1NO1NC UL489	5ST3010-0HG SIE.5ST3010-0HG	SIE SIE	0.00	0.00	
5SJ4110-7HG41	2	CIRCUIT BREAKER 240V 14KA, 1-POLE, C, 10A, D=70MM	5SJ4110-7HG41 SIE.5SJ4110-7HG41	SIE SIE	0.00	0.00	
5SJ4103-7HG41	4	CIRCUIT BREAKER 240V 14KA, 1-POLE, C, 3A, D=70MM	5SJ4103-7HG41 SIE.5SJ4103-7HG41	SIE SIE	0.00	0.00	
5SJ4116-7HG41	14	CIRCUIT BREAKER 240V 14KA, 1-POLE, C, 16A, D=70MM	5SJ4116-7HG41 SIE.5SJ4116-7HG41	SIE SIE	0.00	0.00	
5SJ4106-7HG41	3	CIRCUIT BREAKER 240V 14KA, 1-POLE, C, 6A, D=70MM	5SJ4106-7HG41 SIE.5SJ4106-7HG41	SIE SIE	0.00	0.00	
5SJ4130-7HG41	1	CIRCUIT BREAKER 240V 14KA, 1-POLE, C, 30A, D=70MM	5SJ4130-7HG41 SIE.5SJ4130-7HG41	SIE SIE	0.00	0.00	
1SNL317510R0000	8	DBL175 Series Distribution Block	1SNL317510R0000 1SNL317510R0000	ENTRELEC ENTRELEC	0.00	0.00	
P-P11#2R2-K3RD5	4 piece	Panel Interface Connector with USB Type A/F to USB Type A/M [QT: 1]; Panel Mount Housing; UL Type 4; Duplex Outlet; 5 Amp Circuit Breaker	P-P11#2R2-K3RD5 GT_P-P11#2R2-K3RD5	GT_N	0.00	0.00	
6EP4438-7FB00-3DX0	8	SITOP SEL1200 8 x 10A	6EP4438-7FB00-3DX0 SIE.6EP4438-7FB00-3DX0	SIE	0.00	0.00	
2CDS271517R0357	2 PCE	Miniature Circuit Breaker MCBs - S200UDC - Number of Poles 1 - Tripping Characteristic K	S201UDC-K5 ABB.2CDS271517R0357	ABB ABB	0.00	0.00	

Summarized parts list

F02_001

Order number	Quantity	Description Designation	Type number Part number	Manufacturer Supplier	Unit price	Total price	Pos
SETS8205SID5	7	Golvskåp TS 8 sidskåp	TS8 RIT.SETS8205SID5	RIT RIT	0.00	0.00	

Terminal-strip overview

F14_001

Terminal strip	Terminal strip definition text	Terminals					Graphical page of terminal diagrams
		first	last	Total PE	Total N	Total number	
=KF0KF1+UC31-PC1		DVI		0	0	4	
=KF0KF1+UC31-PH1		DVI	DVI	0	0	1	
=KF0WC3+UC31-XD1		L1	PE	0	0	5	
=KF0WC3+UC31-XD2		1L1	PE	0	0	5	
=KF0WC4+UC31-XD11		1	13	0	0	6	
=KF0WC4+UC31-XD12		1	14	0	0	8	
=KF0WC4+UC31-XD13		1	13	0	0	6	
=KF0WC4+UC31-XD14		1	14	0	0	8	

Terminal-strip overview

F14_001

Terminal strip	Terminal strip definition text	Terminals					Graphical page of terminal diagrams
		first	last	Total PE	Total N	Total number	
=V1WC1+V1UC11-PE		PE	PE	0	0	1	
=V1WC2+V1UC11-XD1		1	16	0	0	16	
=V1WC2+V1UC11-XD2		1	8	0	0	8	
=V1WC2+V1UC11-XD3		1	5	0	0	5	
=V1WC3+V1UC11-XD1		1	4	0	0	4	
=V1WC3+V1UC11-XD2		1	12	0	0	12	
=V1WC3+V1UC11-XD3		1	9	0	0	9	
=V1WC4+V1UC11-KF11.14		1	4	0	0	4	
=V1WC4+V1UC11-XD5		1	1	0	0	1	
=V1WC4+V1UC11-XD6		1	1	0	0	1	
=V1WC4+V1UC11-XD10		1	15	0	0	15	
=V1WC4+V1UC11-XD11		1	1	0	0	1	
=V1WC4+V1UC11-XD12		1	2	0	0	2	
=V1WC4+V1UC11-XD13		1	8	0	0	8	
=V1WC4+V1UC11-XD14		1	2	0	0	2	
=V1WC4+V1UC11-XD20		1	8	0	0	8	
=V1WC4+V1UC11-XD51		1	2	0	0	2	
=V1WC4+V1UC11-XD52		1	2	0	0	2	
=V1WC4+V1UC11-XD53		1	2	0	0	2	
=V1WC4+V1UC11-XD54		1	2	0	0	2	

Terminal-strip overview

F14_001

Terminal strip	Terminal strip definition text	Terminals					Graphical page of terminal diagrams
		first	last	Total PE	Total N	Total number	
=V1WC1+V1UC12-PE		PE	PE	0	0	1	
=V1WC2+V1UC12-XD1		1	16	0	0	16	
=V1WC2+V1UC12-XD2		1	8	0	0	8	
=V1WC2+V1UC12-XD3		1	5	0	0	5	
=V1WC3+V1UC12-XD1		1	4	0	0	4	
=V1WC3+V1UC12-XD2		1	10	0	0	8	
=V1WC3+V1UC12-XD3		1	8	0	0	8	
=V1WC4+V1UC12-KF12.14		1	4	0	0	4	
=V1WC4+V1UC12-XD5		1	1	0	0	1	
=V1WC4+V1UC12-XD6		1	1	0	0	1	
=V1WC4+V1UC12-XD10		1	16	0	0	16	
=V1WC4+V1UC12-XD11		1	1	0	0	1	
=V1WC4+V1UC12-XD12		1	2	0	0	2	
=V1WC4+V1UC12-XD13		1	8	0	0	8	
=V1WC4+V1UC12-XD14		1	2	0	0	2	
=V1WC4+V1UC12-XD20		1	8	0	0	8	
=V1WC4+V1UC12-XD51		1	2	0	0	2	
=V1WC4+V1UC12-XD52		1	2	0	0	2	
=V1WC4+V1UC12-XD53		1	2	0	0	2	
=V1WC4+V1UC12-XD54		1	2	0	0	2	

Terminal-strip overview

F14_001

Terminal strip	Terminal strip definition text	Terminals					Graphical page of terminal diagrams
		first	last	Total PE	Total N	Total number	
=V1WC3+V1UC14-XD1		L1	PE	0	0	5	
=V1WC4+V1UC14-KF14.12		1	4	0	0	4	
=V1WC4+V1UC14-XD5		1	1	0	0	1	
=V1WC4+V1UC14-XD6		1	1	0	0	1	
=V1WC4+V1UC14-XD10		1	20	0	0	20	
=V1WC4+V1UC14-XD11		1	1	0	0	1	
=V1WC4+V1UC14-XD12		1	2	0	0	2	
=V1WC4+V1UC14-XD13		1	1	0	0	1	
=V1WC4+V1UC14-XD14		1	2	0	0	2	
=V1WC4+V1UC14-XD15		1	2	0	0	2	
=V1WC4+V1UC14-XD16		1	2	0	0	2	
=V1WC4+V1UC14-XD17		1	2	0	0	2	
=V1WC4+V1UC14-XD18		1	1	0	0	1	
=V1WC4+V1UC14-XD51		1	2	0	0	2	
=V1WC4+V1UC14-XD52		1	2	0	0	2	
=V1WC4+V1UC14-XD53		1	2	0	0	2	
=V1WC4+V1UC14-XD54		1	2	0	0	2	

Terminal-strip overview

F14_001

Terminal strip	Terminal strip definition text	Terminals					Graphical page of terminal diagrams
		first	last	Total PE	Total N	Total number	
=V1WC3+V1UC15-XD1		L1	PE	0	0	5	
=V1WC4+V1UC15-KF15.12		1	4	0	0	4	
=V1WC4+V1UC15-XD5		1	1	0	0	1	
=V1WC4+V1UC15-XD6		1	1	0	0	1	
=V1WC4+V1UC15-XD10		1	20	0	0	20	
=V1WC4+V1UC15-XD11		1	1	0	0	1	
=V1WC4+V1UC15-XD12		1	2	0	0	2	
=V1WC4+V1UC15-XD13		1	1	0	0	1	
=V1WC4+V1UC15-XD14		1	2	0	0	2	
=V1WC4+V1UC15-XD15		1	2	0	0	2	
=V1WC4+V1UC15-XD16		1	2	0	0	2	
=V1WC4+V1UC15-XD17		1	2	0	0	2	
=V1WC4+V1UC15-XD18		1	1	0	0	1	
=V1WC4+V1UC15-XD51		1	2	0	0	2	
=V1WC4+V1UC15-XD52		1	2	0	0	2	
=V1WC4+V1UC15-XD53		1	2	0	0	2	
=V1WC4+V1UC15-XD54		1	2	0	0	2	

Terminal-strip overview

F14_001

Terminal strip	Terminal strip definition text	Terminals					Graphical page of terminal diagrams
		first	last	Total PE	Total N	Total number	
=V1WC4+V1UC32-XD11		1	17	0	0	14	

Terminal-strip overview

F14_001

Terminal strip	Terminal strip definition text	Terminals					Graphical page of terminal diagrams
		first	last	Total PE	Total N	Total number	
=V1PZ1PF1+V1UC61-XD11		10	9	0	0	20	

Terminal-strip overview

F14_001

Terminal strip	Terminal strip definition text	Terminals					Graphical page of terminal diagrams
		first	last	Total PE	Total N	Total number	
=V1PZ1PF2+V1UC62-XD11		10	9	0	0	20	

Terminal-strip overview

F14_001

Terminal strip	Terminal strip definition text	Terminals					Graphical page of terminal diagrams
		first	last	Total PE	Total N	Total number	
=V1PZ1PF3+V1UC63-XD11		10	9	0	0	20	

Terminal-strip overview

F14_001

Terminal strip	Terminal strip definition text	Terminals					Graphical page of terminal diagrams
		first	last	Total PE	Total N	Total number	
=V1PZ1PF4+V1UC64-XD11		10	9	0	0	20	

1	2	3	4	5	6	7	8	9	10

MODIFIED DRAWINGS NOT REVISED IN THE ORIGINAL				DRAWINGS FOR REVISION			REPLACE AFTER REV. BY ORIGINAL		
DATE	SIGN.	DRAWING NR:	SHEET NR:	DATE	SIGN.	REV. AV	DATE	SIGN.	REV.

&EYY/10

2

			Date	1/11/2023	Volvo Trucks North America	Valiant TMS	Amendment page	Drawing name: =2V10&EFS-EL	=
			Ed.	MKLEPADLO					+
			Appr		P6700 Bodyside RH - Robot Cell 2V10			Document type: EAZ	Project nr: 22-16150
Modification	Date	Name	Original		Replacement of / Replaced by	Scale 1:10			Page 1 / 1579

1	2	3	4	5	6	7	8	9	10

LATEST REVISION

REV.	DATE	SIGN.	DRAWING NR:	SHEET NR:
1	2022-12-16	KMAFFRE	&EFS=KF0SF1+UC31	1
1	2022-12-16	KMAFFRE	&EFS=KF0KF1+UC31	10
1	2022-12-16	KMAFFRE	&EFS=V1KF1+V1UC32	5
1	2022-12-16	KMAFFRE	&EFS=V1SF0PG1+V1UC32	2
1	2022-12-16	KMAFFRE	&ELU=KF0+UC31	3
1	2022-12-16	KMAFFRE	&ELU=V1SF0PG1+V1UC32	1

LATEST REVISION

REV.	DATE	SIGN.	DRAWING NR:	SHEET NR:
2	2023-01-09	MKLEPADLO	&EFS=V1GL1UQ51BG0+V1GL1UQ51	1,3,4,5
2	2023-01-09	MKLEPADLO	&EFS=V1GL1UQ51KF1+V1GL1UQ51	1,2,3
2	2023-01-09	MKLEPADLO	&EFS=V1GL1UQ51KF2+V1GL1UQ51	2,3,4
2	2023-01-09	MKLEPADLO	&EFS=V1GL1UQ51KF3+V1GL1UQ51	1,2,3
2	2023-01-09	MKLEPADLO	&EFS=V1GL1UQ51UQ4+V1GL1UQ51UQ4	1
2	2023-01-09	MKLEPADLO	&EFS=V1GL1UQ51UQ5+V1GL1UQ51UQ5	1
2	2023-01-09	MKLEPADLO	&EFS=V1GL1UQ51UQ6+V1GL1UQ51UQ6	1
2	2023-01-09	MKLEPADLO	&EFS=V1GL1UQ51UQ7+V1GL1UQ51UQ7	1
2	2023-01-09	MKLEPADLO	&EFS=V1GL1UQ51UQ8+V1GL1UQ51UQ8	1
2	2023-01-09	MKLEPADLO	&EFS=V1GL1UQ51UQ9+V1GL1UQ51UQ9	1
2	2023-01-09	MKLEPADLO	&EFS=V1GL1UQ51UQ10+V1GL1UQ51UQ10	1
2	2023-01-09	MKLEPADLO	&EFS=V1GL1UQ51UQ12+V1GL1UQ51UQ12	1
2	2023-01-09	MKLEPADLO	&EFS=V1GL1UQ51UQ13+V1GL1UQ51UQ13	1
2	2023-01-09	MKLEPADLO	&EFS=V1GL1UQ51UQ14+V1GL1UQ51UQ14	1
2	2023-01-09	MKLEPADLO	&EFS=V1GL1UQ51UQ15+V1GL1UQ51UQ15	1
2	2023-01-09	MKLEPADLO	&EFS=V1GL1UQ51UQ16+V1GL1UQ51UQ16	1
2	2023-01-09	MKLEPADLO	&EFS=V1GL1UQ51UQ17+V1GL1UQ51UQ17	1
2	2023-01-09	MKLEPADLO	&EFS=V1GL1UQ51UQ18+V1GL1UQ51UQ18	1
2	2023-01-09	MKLEPADLO	&EFS=V1GL1UQ51UQ19+V1GL1UQ51UQ19	1
2	2023-01-09	MKLEPADLO	&EFS=V1GL1UQ51UQ20+V1GL1UQ51UQ20	1
2	2023-01-09	MKLEPADLO	&EFS=V1GL1UQ51UQ21+V1GL1UQ51UQ21	1
2	2023-01-09	MKLEPADLO	&EFS=V1GL1UQ51UQ22+V1GL1UQ51UQ22	1
2	2023-01-09	MKLEPADLO	&EFS=V1GL1UQ51UQ23+V1GL1UQ51UQ23	1
2	2023-01-09	MKLEPADLO	&EFS=V1GL1UQ51UQ24+V1GL1UQ51UQ24	1
2	2023-01-09	MKLEPADLO	&EFS=V1GL1UQ51UQ25+V1GL1UQ51UQ25	1
2	2023-01-09	MKLEPADLO	&EFS=V1GL1UQ51UQ26+V1GL1UQ51UQ26	1

LATEST REVISION

REV.	DATE	SIGN.	DRAWING NR:	SHEET NR:
3	2023-01-10	MKLEPADLO	&EFS=V1GL1UQ53BG0+V1GL1UQ53	1,2,3,4,5
3	2023-01-10	MKLEPADLO	&EFS=V1GL1UQ53KF1+V1GL1UQ53	1,2,3,4
3	2023-01-10	MKLEPADLO	&EFS=V1GL1UQ53KF2+V1GL1UQ53	1,2,3,4
3	2023-01-10	MKLEPADLO	&EFS=V1GL1UQ53KF3+V1GL1UQ53	1,2,3
3	2023-01-10	MKLEPADLO	&EFS=V1GL1UQ53UQ1+V1GL1UQ53UQ1	1
3	2023-01-10	MKLEPADLO	&EFS=V1GL1UQ53UQ2+V1GL1UQ53UQ2	1
3	2023-01-10	MKLEPADLO	&EFS=V1GL1UQ53UQ3+V1GL1UQ53UQ3	1
3	2023-01-10	MKLEPADLO	&EFS=V1GL1UQ53UQ4+V1GL1UQ53UQ4	1
3	2023-01-10	MKLEPADLO	&EFS=V1GL1UQ53UQ5+V1GL1UQ53UQ5	1
3	2023-01-10	MKLEPADLO	&EFS=V1GL1UQ53UQ6+V1GL1UQ53UQ6	1
3	2023-01-10	MKLEPADLO	&EFS=V1GL1UQ53UQ7+V1GL1UQ53UQ7	1
3	2023-01-10	MKLEPADLO	&EFS=V1GL1UQ53UQ8+V1GL1UQ53UQ8	1
3	2023-01-10	MKLEPADLO	&EFS=V1GL1UQ53UQ9+V1GL1UQ53UQ9	1
3	2023-01-10	MKLEPADLO	&EFS=V1GL1UQ53UQ10+V1GL1UQ53UQ10	1
3	2023-01-10	MKLEPADLO	&EFS=V1GL1UQ53UQ11+V1GL1UQ53UQ11	1
3	2023-01-10	MKLEPADLO	&EFS=V1GL1UQ53UQ12+V1GL1UQ53UQ12	1
3	2023-01-10	MKLEPADLO	&EFS=V1GL1UQ53UQ13+V1GL1UQ53UQ13	1
3	2023-01-10	MKLEPADLO	&EFS=V1GL1UQ53UQ14+V1GL1UQ53UQ14	1
3	2023-01-10	MKLEPADLO	&EFS=V1GL1UQ53UQ15+V1GL1UQ53UQ15	1
3	2023-01-10	MKLEPADLO	&EFS=V1GL1UQ53UQ16+V1GL1UQ53UQ16	1
3	2023-01-10	MKLEPADLO	&EFS=V1GL1UQ53UQ17+V1GL1UQ53UQ17	1
3	2023-01-10	MKLEPADLO	&EFS=V1GL1UQ53UQ18+V1GL1UQ53UQ18	1
3	2023-01-10	MKLEPADLO	&EFS=V1GL1UQ53UQ19+V1GL1UQ53UQ19	1
3	2023-01-10	MKLEPADLO	&EFS=V1GL1UQ53UQ20+V1GL1UQ53UQ20	1
3	2023-01-10	MKLEPADLO	&EFS=V1GL1UQ53UQ21+V1GL1UQ53UQ21	1
3	2023-01-10	MKLEPADLO	&EFS=V1GL1UQ53UQ22+V1GL1UQ53UQ22	1
3	2023-01-10	MKLEPADLO	&EFS=V1GL1UQ53UQ23+V1GL1UQ53UQ23	1
3	2023-01-10	MKLEPADLO	&EFS=V1GL1UQ53UQ24+V1GL1UQ53UQ24	1
3	2023-01-10	MKLEPADLO	&EFS=V1GL1UQ53UQ25+V1GL1UQ53UQ25	1
3	2023-01-10	MKLEPADLO	&EFS=V1GL1UQ53UQ26+V1GL1UQ53UQ26	1
3	2023-01-10	MKLEPADLO	&EFS=V1GL1UQ53WC4+V1GL1UQ53	1
3	2023-01-10	MKLEPADLO	&EFS=V1GL1UQ54BG0+V1GL1UQ54	1,2,3,4,5,6

LATEST REVISION

REV.	DATE	SIGN.	DRAWING NR:	SHEET NR:
3	2023-01-10	MKLEPADLO	&EFS=V1GL1UQ54KF1+V1GL1UQ54	1,2,3,4,5,6
3	2023-01-10	MKLEPADLO	&EFS=V1GL1UQ54KF2+V1GL1UQ54	1,2,3,4,5,6
3	2023-01-10	MKLEPADLO	&EFS=V1GL1UQ54KF3+V1GL1UQ54	1,2
3	2023-01-10	MKLEPADLO	&EFS=V1GL1UQ54UQ1+V1GL1UQ54UQ1	1
3	2023-01-10	MKLEPADLO	&EFS=V1GL1UQ54UQ2+V1GL1UQ54UQ2	1
3	2023-01-10	MKLEPADLO	&EFS=V1GL1UQ54UQ3+V1GL1UQ54UQ3	1
3	2023-01-10	MKLEPADLO	&EFS=V1GL1UQ54UQ4+V1GL1UQ54UQ4	1
3	2023-01-10	MKLEPADLO	&EFS=V1GL1UQ54UQ5+V1GL1UQ54UQ5	1
3	2023-01-10	MKLEPADLO	&EFS=V1GL1UQ54UQ6+V1GL1UQ54UQ6	1
3	2023-01-10	MKLEPADLO	&EFS=V1GL1UQ54UQ7+V1GL1UQ54UQ7	1
3	2023-01-10	MKLEPADLO	&EFS=V1GL1UQ54UQ8+V1GL1UQ54UQ8	1
3	2023-01-10	MKLEPADLO	&EFS=V1GL1UQ54UQ9+V1GL1UQ54UQ9	1
3	2023-01-10	MKLEPADLO	&EFS=V1GL1UQ54UQ10+V1GL1UQ54UQ10	1
3	2023-01-10	MKLEPADLO	&EFS=V1GL1UQ54UQ11+V1GL1UQ54UQ11	1
3	2023-01-10	MKLEPADLO	&EFS=V1GL1UQ54UQ12+V1GL1UQ54UQ12	1
3	2023-01-10	MKLEPADLO	&EFS=V1GL1UQ54UQ13+V1GL1UQ54UQ13	1
3	2023-01-10	MKLEPADLO	&EFS=V1GL1UQ54UQ14+V1GL1UQ54UQ14	1
3	2023-01-10	MKLEPADLO	&EFS=V1GL1UQ54UQ15+V1GL1UQ54UQ15	1
3	2023-01-10	MKLEPADLO	&EFS=V1GL1UQ54UQ16+V1GL1UQ54UQ16	1
3	2023-01-10	MKLEPADLO	&EFS=V1GL1UQ54UQ17+V1GL1UQ54UQ17	1
3	2023-01-10	MKLEPADLO	&EFS=V1GL1UQ54UQ18+V1GL1UQ54UQ18	1
3	2023-01-10	MKLEPADLO	&EFS=V1GL1UQ54UQ19+V1GL1UQ54UQ19	1
3	2023-01-10	MKLEPADLO	&EFS=V1GL1UQ54UQ20+V1GL1UQ54UQ20	1
3	2023-01-10	MKLEPADLO	&EFS=V1GL1UQ54UQ21+V1GL1UQ54UQ21	1
3	2023-01-10	MKLEPADLO	&EFS=V1GL1UQ54UQ22+V1GL1UQ54UQ22	1
3	2023-01-10	MKLEPADLO	&EFS=V1GL1UQ54UQ23+V1GL1UQ54UQ23	1
3	2023-01-10	MKLEPADLO	&EFS=V1GL1UQ54UQ24+V1GL1UQ54UQ24	1
3	2023-01-10	MKLEPADLO	&EFS=V1GL1UQ54UQ25+V1GL1UQ54UQ25	1
3	2023-01-10	MKLEPADLO	&EFS=V1GL1UQ54WC4+V1GL1UQ54	1

1	2	3	4	5	6	7	8	9	10

LATEST REVISION

REV.	DATE	SIGN.	DRAWING NR:	SHEET NR:
4	2023-01-17	MKLEPADLO	&EFS=V1UN1BG0+V1UN1	1
4	2023-01-17	MKLEPADLO	&EFS=V1UN1KF1+V1UN1	10

5

			Date	1/17/2023	Volvo Trucks North America	Valiant TMS	Amendment page	Drawing name: =2V10&EFS-EL	=
			Ed.	MKLEPADLO					+
			Appr		P6700 Bodyside RH - Robot Cell 2V10			Document type: EAZ / Project nr: 22-16150	Page 6 / 1579
Modification	Date	Name	Original		Replacement of / Replaced by	Scale 1:10			