F26_001_VLU_V1

Valiant TMS

Company / customer	Volvo Trucks NA
Project description	Sub-Floor Members
drawing number	22-16146
Commission	Volvo Trucks North America
Manufacturer (company)	Valiant TMS
Project name	=2V13&EFS_EL
Type	

Created on 3/7/2022

Edit date 12/22/2022 by (short name) MKLEPADLO

Number of pages 614

Plant	Main Area	Area	Sub area	Main function	Sub function	Component
=	=					-
2V11						
	V01	W12	W02	WL01		MA01
	V02	V06		AR11		UC01
	V01	U10		AR31	UQ01	QN01
				FQ0	V02	SF01
This is the base of the structure. However only presented on the main cabinet and the label of the project files.	The plant is devided into main areas.	The plant is structured into areas. The areas are developed by the flow and process stages of the plant.	In an area you can have several positions. Let say you have an input area. In that area you have 5 transport conveyors. They would be labeled. W02, W04, W06, W08 and W10. Areas always only have one letter in the name.	Here you explain what type of function happening in the area. In some rare cases you skip the area before the function this is when the function is of greater importence then the area. Like emergency stop, (FQ0). Functions always have two letters in the name.	Sometimes is just one level of function not enough. You might need to add an under function or in somecases like above an area to a function.	Once you have the full function structure you finally need to define what type of component it is. A component always start with an minus followed with two letters.

1. VLU letter codes.

• Our interpretation of IEC 81346-2 is presented in the Excel document: “VLU 81346-2 (interpretation)”

2. Colour coding

Description	**Colour**	**IEC 60204**	**Minimum area**
Power circuits 400/230 VAC	Black	bk	1,5mm²
Control circuit 230 VAC	Red	rd	1,0mm²
Control circuit 24 VAC	Red	rd	1,0mm²
Control circuit 24 VDC	Dark blue	bu	1,0mm²
Control circuit before main switch or external control signals	Orange	og	1,5mm²
Protective conductor PE (Earth)	Green/yellow	gnye	1,5mm²
Neutral	Light blue	bu	1,5mm²
Test leads	Blue	bu	1,5mm²
EX safe circuit	Medium blue	bu	1,5mm²
Shield	Transparent	sh	1,5mm²

Purpose

This document is made to avoid any misconceptions about the standards we have to uphold regarding equipment grounding connections in compliance with the electrical regulations contained in NEC 250.119.

Fundemental principles

All equipment bonding connections originate from one grounding block, which is mounted either on the outside or directly on the main cabinet. This block is then connected with a minimum size 6 AWG green/yellow wire from the main cabinets grounding bar, this wire is labled (GND1).

From this block a network of green/yellow wiring is spread across the plant. At every bonding connection point a 10 AWG wire composed of a tapp-off clamp as well as a cableharness is used to connect the surface to the bonding network.

Equipment Bonding example

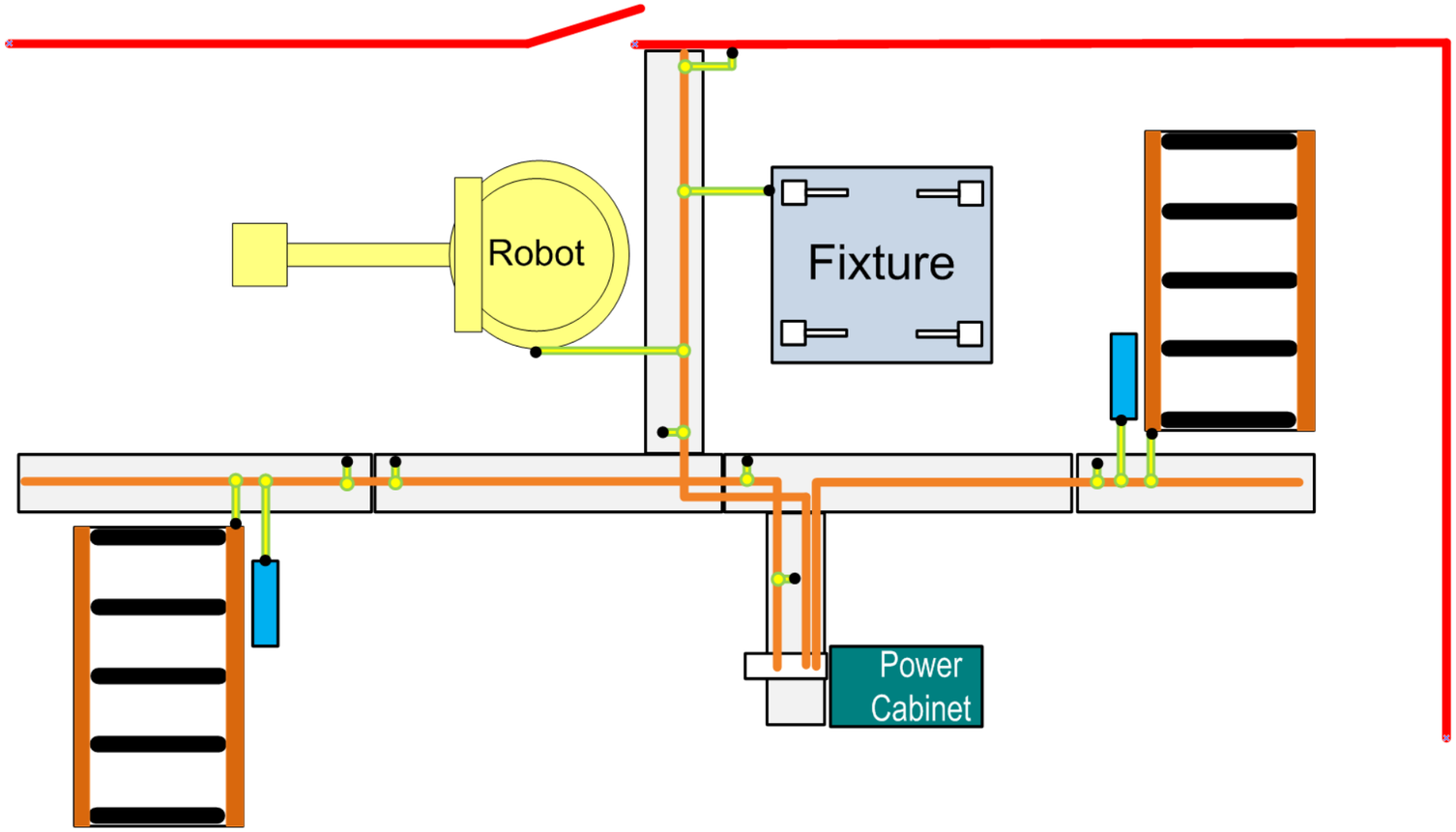

PLC Card Naming:
The following chart shall be used to cross-reference the naming of PLC cards in PDP & RIO enclosures. This chart is generic and not every enclosure will exist in this package.

Enc Type	Number	Slot 1	Slot 2	Slot 3	Slot 4	Slot 5	Slot 6	Slot 7	Slot 8	Slot 9	Slot 10	Slot 11	Slot 12	Slot 13	Slot 14
PDP	UC11 PDP1														
	UC11	KF11.11	KF11.12	KF11.13	KF11.14	KF11.31	KF11.32	KF11.21	KF11.41	KF11.42	KF11.51	KF11.52	KF11.53	KF11.54	
		DI x16	DI x16	DI x16	DI x16	F-DI x 8	F-DI x 8	DQ x16	F-DQ x 4	F-DQ x 4	F-RQ x 1	F-RQ x 1	F-RQ x 1	F-RQ x 1	
		IB 50..51	IB 52..53	IB 54..55	IB 56..57	IB 5050..5055	IB 5056..5061		IB 5062..5066	IB 5067..5071	IB 5072	IB 5073	IB 5074	IB 5075	
						QB 5050..5053	QB 5056..5059	QB 50..51	QB 5062..5066	QB 5067..5071					
	UC12 PDP2														
	UC12	KF12.11	KF12.12	KF12.13	KF12.14	KF12.31	KF12.32	KF12.21	KF12.41	KF12.42	KF12.51	KF12.52	KF12.53	KF12.54	
		DI x16	DI x16	DI x16	DI x16	F-DI x 8	F-DI x 8	DQ x16	F-DQ x 4	F-DQ x 4	F-RQ x 1	F-RQ x 1	F-RQ x 1	F-RQ x 1	
		IB 80..81	IB 82..83	IB 84..85	IB 86..87	IB 5080..5085	IB 5086..5091		IB 5092..5096	IB 5097..5101	IB 5102	IB 5103	IB 5104	IB 5105	
						QB 5080..5083	QB 5086..5089	QB 80..81	QB 5092..5096	QB 5097..5101					
	UC13 PDP3														
	UC13	KF13.11	KF13.12	KF13.13	KF13.14	KF13.31	KF13.32	KF13.21	KF13.41	KF13.42	KF13.51	KF13.52	KF13.53	KF13.54	
		DI x16	DI x16	DI x16	DI x16	F-DI x 8	F-DI x 8	DQ x16	F-DQ x 4	F-DQ x 4	F-RQ x 1	F-RQ x 1	F-RQ x 1	F-RQ x 1	
		IB 110..111	IB 112..113	IB 114..115	IB 116..117	IB 5110..5115	IB 5116..5121		IB 5122..5126	IB 5127..5131	IB 5132	IB 5133	IB 5134	IB 5135	
						QB 5110..5113	QB 5116..5119	QB 110..111	QB 5122..5126	QB 5127..5131					
RIO	UC14 RIO1														
	UC14	KF14.11	KF14.12	KF14.31	KF14.32	KF14.21	KF14.41	KF14.42	KF14.51	KF14.52	KF14.53	KF14.54			
		DI x16	DI x16	F-DI x 8	F-DI x 8	DQ x16	F-DQ x 4	F-DQ x 4	F-RQ x 1	F-RQ x 1	F-RQ x 1	F-RQ x 1			
		IB 200..201	IB 202..203	IB 5200..5205	IB 5206..5211		IB 5212..5216	IB 5217..5221	IB 5222	IB 5223	IB 5224	IB 5225			
				QB 5200..5203	QB 5206..5209	QB 200..201	QB 5212..5216	QB 5217..5221							
	UC15 RIO2														
	UC15	KF15.11	KF15.12	KF15.31	KF15.32	KF15.21	KF15.41	KF15.42	KF15.51	KF15.52	KF15.53	KF15.54			
		DI x16	DI x16	F-DI x 8	F-DI x 8	DQ x16	F-DQ x 4	F-DQ x 4	F-RQ x 1	F-RQ x 1	F-RQ x 1	F-RQ x 1			
		IB 230..231	IB 232..233	IB 5230..5235	IB 5236..5241		IB 5242..5246	IB 5247..5251	IB 5252	IB 5253	IB 5254	IB 5255			
				QB 5230..5233	QB 5236..5239	QB 230..231	QB 5242..5246	QB 5247..5251							
	UC16 RIO3														
	UC16	KF16.11	KF16.12	KF16.31	KF16.32	KF16.21	KF16.41	KF16.42	KF16.51	KF16.52	KF16.53	KF16.54			
		DI x16	DI x16	F-DI x 8	F-DI x 8	DQ x16	F-DQ x 4	F-DQ x 4	F-RQ x 1	F-RQ x 1	F-RQ x 1	F-RQ x 1			
		IB 260..261	IB 262..263	IB 5260..5265	IB 5266..5271		IB 5272..5276	IB 5277..5281	IB 5282	IB 5283	IB 5284	IB 5285			
				QB 5260..5263	QB 5266..5269	QB 260..261	QB 5272..5276	QB 5287..5281							
	UC17 RIO4														
	UC17	KF17.11	KF17.12	KF17.31	KF17.32	KF17.21	KF17.41	KF17.42	KF17.51	KF17.52	KF17.53	KF17.54			
		DI x16	DI x16	F-DI x 8	F-DI x 8	DQ x16	F-DQ x 4	F-DQ x 4	F-RQ x 1	F-RQ x 1	F-RQ x 1	F-RQ x 1			
		IB 290..291	IB 292..293	IB 5290..5295	IB 5296..5301		IB 5302..5306	IB 5307..5311	IB 5312	IB 5313	IB 5314	IB 5315			
				QB 5290..5293	QB 5296..5299	QB 290..291	QB 5302..5306	QB 5307..5311							

Table of contents

Column X: An automatically generated page was edited

F06_001

Page	Page description	supplementary page field	Date	Edited by	X
&EAA/1	Title page / cover sheet		11/3/2022	KMAFFRE	
&EAA/2	Project structure	UC11	9/27/2022	MKLEPADLO	
&EAA/3	Letter codes/colors	UC11	9/27/2022	MKLEPADLO	
&EAA/4	Equipment Grounding policy	UC11	9/27/2022	MKLEPADLO	
&EAA/5	PLC Card Naming	UC11	9/27/2022	MKLEPADLO	
&EAB/1	Table of contents : &EAA/1 - &EFS=KF0KF1+UC31/3		12/22/2022	MKLEPADLO	
&EAB/2	Table of contents : &EFS=KF0KF1+UC31/6 - &EFS=V1AR41KF1+V1AR41UC01/1		12/22/2022	MKLEPADLO	
&EAB/3	Table of contents : &EFS=V1AR41UQ41BG0+V1AR41UQ41/1 - &EFS=V1FQ1+V1FQ1/6		12/22/2022	MKLEPADLO	
&EAB/4	Table of contents : &EFS=V1FQ1+V1FQ1/7 - &EFS=V1KF1+V1UC11/15		12/22/2022	MKLEPADLO	
&EAB/5	Table of contents : &EFS=V1KF1+V1UC11/16 - &EFS=V1KF1+V1UC46/9		12/22/2022	MKLEPADLO	
&EAB/6	Table of contents : &EFS=V1KF1+V1UC46/10 - &EFS=V1WC2+V1UC11/15		12/22/2022	MKLEPADLO	
&EAB/7	Table of contents : &EFS=V1WC2+V1UC11/16 - &EFS=V1WC4+V1UC11/18		12/22/2022	MKLEPADLO	
&EAB/8	Table of contents : &EFS=V1WC4+V1UC11/19 - &EFS=V1WC4+V1UC46/2		12/22/2022	MKLEPADLO	
&EAB/9	Table of contents : &EFS=V1WC4+V1UC46/3 - &EFS=V1WR1UQ52BG0+V1WR1UQ52/1		12/22/2022	MKLEPADLO	
&EAB/10	Table of contents : &EFS=V1WR1UQ52BG0+V1WR1UQ52/2 - &EFS=V1WR2BG0+V1WR2/1		12/22/2022	MKLEPADLO	
&EAB/11	Table of contents : &EFS=V1WR2BG0+V1WR2/2 - &ELU=V1SF0PG1+V1UC51/1		12/22/2022	MKLEPADLO	
&EAB/12	Table of contents : &ELU=V1SF0PG2+V1UC52/1 - &EPB+V1AR41UQ41UQ1.4/1		12/22/2022	MKLEPADLO	
&EAB/13	Table of contents : &EPB+V1AR41UQ41UQ2.1/1 - &EPB+V1UC71/1		12/22/2022	MKLEPADLO	
&EAB/14	Table of contents : &EPB+V1UC72/1 - &EPB+V1WR1UQ52UQ2.1/1		12/22/2022	MKLEPADLO	
&EAB/15	Table of contents : &EPB+V1WR1UQ52UQ2.2/1 - &EPB+V1WR1UQ52UQ12.5/1		12/22/2022	MKLEPADLO	
&EAB/16	Table of contents : &EPB+V1WR1UQ52UQ13.1/1 - &EPB+V1WR2UQ52UQ1.6/1		12/22/2022	MKLEPADLO	
&EAB/17	Table of contents : &EPB+V1WR2UQ52UQ2.1/1 - &ETT/25		12/22/2022	MKLEPADLO	
&EAB/18	Table of contents : &ETT/26 - &ETT/58		12/22/2022	MKLEPADLO	
&EAB/19	Table of contents : &ETT/59 - &EAZ/5		12/22/2022	MKLEPADLO	
&EFA=FQ99V1+V1/1	EQUIPMENT BONDING		12/22/2022	MKLEPADLO	
&EFA=FQ99V1+V1/2	EQUIPMENT BONDING		12/22/2022	MKLEPADLO	
&EFA=FQ99V1+V1/3	EQUIPMENT BONDING		12/22/2022	MKLEPADLO	
&EFA=FQ99V1+V1/4	EQUIPMENT BONDING		12/22/2022	MKLEPADLO	
&EFA=FQ99V1+V1/5	EQUIPMENT BONDING		12/22/2022	MKLEPADLO	
&EFS=KF0FQ0+UC31/1	Operating box UC91 MOP		12/22/2022	MKLEPADLO	
&EFS=KF0KF1+UC31/1	CPU 1515-F-2PN, Failsafe		12/22/2022	MKLEPADLO	
&EFS=KF0KF1+UC31/2	Cell interface S615		12/22/2022	MKLEPADLO	
&EFS=KF0KF1+UC31/3	Switch, Scalance XC216		12/22/2022	MKLEPADLO	

Table of contents

Column X: An automatically generated page was edited

F06_001

Page	Page description	supplementary page field	Date	Edited by	X
&EFS=KF0KF1+UC31/6	MOP, PC		12/22/2022	MKLEPADLO	
&EFS=KF0KF1+UC31/10	Network overview		12/22/2022	MKLEPADLO	
&EFS=KF0KF1+UC31/11	IM 155 PN		12/22/2022	MKLEPADLO	
&EFS=KF0KF1+UC31/12	ET200S Wiring DI		12/22/2022	MKLEPADLO	
&EFS=KF0KF1+UC31/14	ET200S Wiring DO		12/22/2022	MKLEPADLO	
&EFS=KF0KF1+UC31/18	ET200S Wiring F-DI		12/22/2022	MKLEPADLO	
&EFS=KF0KF1+UC31/21	ET200S Cross-reference Input module		12/22/2022	MKLEPADLO	
&EFS=KF0KF1+UC31/41	ET200S Cross-reference Output module		12/22/2022	MKLEPADLO	
&EFS=KF0KF1+UC31/81	ET200S Cross-reference Safe input module		12/22/2022	MKLEPADLO	
&EFS=KF0PZ1+UC31/1	Indication column		12/22/2022	MKLEPADLO	
&EFS=KF0SF1+UC31/1	Operating box UC91 MOP		12/22/2022	MKLEPADLO	
&EFS=KF0SF1+UC31/2	Operating box UC92 MOP		12/22/2022	MKLEPADLO	
&EFS=KF0WC3+UC31/1	Incomming power supply 120 VAC		12/22/2022	MKLEPADLO	
&EFS=KF0WC3+UC31/2	Outlet PLC 120VAC		12/22/2022	MKLEPADLO	
&EFS=KF0WC3+UC31/3	Monitoring 120VAC		12/22/2022	MKLEPADLO	
&EFS=KF0WC4+UC31/1	Power distribution 24VDC		12/22/2022	MKLEPADLO	
&EFS=KF0WC4+UC31/2	Power distribution, UPS		12/22/2022	MKLEPADLO	
&EFS=KF0WC4+UC31/3	Power distribution 24VDC 1L+		12/22/2022	MKLEPADLO	
&EFS=KF0WC4+UC31/4	Power distribution 24VDC 2L+		12/22/2022	MKLEPADLO	
&EFS=KF0WC4+UC31/5	Power distribution 24VDC 3L+		12/22/2022	MKLEPADLO	
&EFS=KF0WC4+UC31/6	Power distribution 24VDC 4L+		12/22/2022	MKLEPADLO	
&EFS=KH0+KH0/1	Incomming air supply		12/22/2022	MKLEPADLO	
&EFS=KH0+KH0/2	Incoming air supply (STA-010-TT)		12/22/2022	MKLEPADLO	
&EFS=KH0+KH0/3	Incoming air supply (STA-030-TT)		12/22/2022	MKLEPADLO	
&EFS=KH3+KH3/1	Incoming water supply (Filter)		12/22/2022	MKLEPADLO	
&EFS=KH3+KH3/2	Incoming water supply		12/22/2022	MKLEPADLO	
&EFS=V1AR21KF1+V1AR21UC01/1	Incoming Profinet		12/22/2022	MKLEPADLO	
&EFS=V1AR21WC1+V1AR21UC01/1	Incoming power		12/22/2022	MKLEPADLO	
&EFS=V1AR21XQ11WC1+V1AR21XQ11UC01/1	Incoming power		12/22/2022	MKLEPADLO	
&EFS=V1AR22KF1+V1AR22UC01/1	Incoming Profinet		12/22/2022	MKLEPADLO	
&EFS=V1AR22WC1+V1AR22UC01/1	Incoming power		12/22/2022	MKLEPADLO	
&EFS=V1AR22XQ11WC1+V1AR22XQ11UC01/1	Incoming power		12/22/2022	MKLEPADLO	
&EFS=V1AR41KF1+V1AR41UC01/1	Incoming Profinet		12/22/2022	MKLEPADLO	

Table of contents

Column X: An automatically generated page was edited

F06_001

Page	Page description	supplementary page field	Date	Edited by	X
&EFS=V1AR41UQ41BG0+V1AR41UQ41/1	SENSORS		12/22/2022	MKLEPADLO	
&EFS=V1AR41UQ41KF1+V1AR41UQ41/1	24VDC SUPPLY AND PROFINET HANDLING MODULE		12/22/2022	MKLEPADLO	
&EFS=V1AR41UQ41KF1+V1AR41UQ41/2	CONNECTING MOD. FOR MPA MANIFOLD		12/22/2022	MKLEPADLO	
&EFS=V1AR41UQ41KF1+V1AR41UQ41/3	I/O MOD. DI16 (8 x M12) FOR MPA		12/22/2022	MKLEPADLO	
&EFS=V1AR41UQ41KF1+V1AR41UQ41/4	CONNECTING MOD. FOR FESTO DQ		12/22/2022	MKLEPADLO	
&EFS=V1AR41UQ41UQ1+V1AR41UQ41UE1/1	FESTO DQ CONNECTION QN1		12/22/2022	MKLEPADLO	
&EFS=V1AR41UQ41UQ2+V1AR41UQ41UE2/1	FESTO DQ CONNECTION QN2		12/22/2022	MKLEPADLO	
&EFS=V1AR41WC1+V1AR41UC01/1	Incoming power		12/22/2022	MKLEPADLO	
&EFS=V1AR41XQ11WC1+V1AR41XQ11UC01/1	Incoming power		12/22/2022	MKLEPADLO	
&EFS=V1AR42KF1+V1AR42UC01/1	Incoming Profinet		12/22/2022	MKLEPADLO	
&EFS=V1AR42UQ41BG0+V1AR42UQ41/1	SENSORS		12/22/2022	MKLEPADLO	
&EFS=V1AR42UQ41KF1+V1AR42UQ41/1	24VDC SUPPLY AND PROFINET HANDLING MODULE		12/22/2022	MKLEPADLO	
&EFS=V1AR42UQ41KF1+V1AR42UQ41/2	CONNECTING MOD. FOR MPA MANIFOLD		12/22/2022	MKLEPADLO	
&EFS=V1AR42UQ41KF1+V1AR42UQ41/3	I/O MOD. DI16 (8 x M12) FOR MPA		12/22/2022	MKLEPADLO	
&EFS=V1AR42UQ41KF1+V1AR42UQ41/4	CONNECTING MOD. FOR FESTO DQ		12/22/2022	MKLEPADLO	
&EFS=V1AR42UQ41UQ1+V1AR42UQ41UE1/1	FESTO DQ CONNECTION QN1		12/22/2022	MKLEPADLO	
&EFS=V1AR42UQ41UQ2+V1AR42UQ41UE2/1	FESTO DQ CONNECTION QN2		12/22/2022	MKLEPADLO	
&EFS=V1AR42UQ41UQ3+V1AR42UQ41UE3/1	FESTO DQ CONNECTION QN2		12/22/2022	MKLEPADLO	
&EFS=V1AR42WC1+V1AR42UC01/1	Incoming power		12/22/2022	MKLEPADLO	
&EFS=V1AR42XQ11WC1+V1AR42XQ11UC01/1	Incoming power		12/22/2022	MKLEPADLO	
&EFS=V1AR61KF1+V1AR61UC01/1	Incoming Profinet		12/22/2022	MKLEPADLO	
&EFS=V1AR61WC1+V1AR61UC01/1	Incoming power		12/22/2022	MKLEPADLO	
&EFS=V1AR61XQ21WC1+V1AR61XQ21UC01/1	Incoming power		12/22/2022	MKLEPADLO	
&EFS=V1AR61XQ23WC1+V1AR61XQ23UC01/1	Incoming power		12/22/2022	MKLEPADLO	
&EFS=V1AR62KF1+V1AR62UC01/4	Incoming Profinet		12/22/2022	MKLEPADLO	
&EFS=V1AR62WC1+V1AR62UC01/2	Incoming power		12/22/2022	MKLEPADLO	
&EFS=V1AR62XQ21WC1+V1AR62XQ21UC01/1	Incoming power		12/22/2022	MKLEPADLO	
&EFS=V1FQ1+V1FQ1/1	Door lock sensor -BG1		12/22/2022	MKLEPADLO	
&EFS=V1FQ1+V1FQ1/2	Door lock sensor -BG2		12/22/2022	MKLEPADLO	
&EFS=V1FQ1+V1FQ1/3	S010 Light Curtain		12/22/2022	MKLEPADLO	
&EFS=V1FQ1+V1FQ1/4	S010 Light Curtain		12/22/2022	MKLEPADLO	
&EFS=V1FQ1+V1FQ1/5	S030 Light Curtain		12/22/2022	MKLEPADLO	
&EFS=V1FQ1+V1FQ1/6	S030 Light Curtain		12/22/2022	MKLEPADLO	

Table of contents

Column X: An automatically generated page was edited

F06_001

Page	Page description	supplementary page field	Date	Edited by	X
&EFS=V1FQ1+V1FQ1/7	S010 Safety Mats		12/22/2022	MKLEPADLO	
&EFS=V1FQ1+V1FQ1/8	S030 Safety Mats		12/22/2022	MKLEPADLO	
&EFS=V1FQ1+V1UC11/1	Safety power monitoring RQ - KF11.51		12/22/2022	MKLEPADLO	
&EFS=V1FQ1+V1UC11/2	Safety power monitoring RQ - KF11.52		12/22/2022	MKLEPADLO	
&EFS=V1FQ1+V1UC11/3	Safety power monitoring RQ - KF11.53		12/22/2022	MKLEPADLO	
&EFS=V1FQ1+V1UC11/4	Safety power monitoring RQ - KF11.54		12/22/2022	MKLEPADLO	
&EFS=V1FQ1+V1UC14/1	Safety power monitoring RQ - KF14.51		12/22/2022	MKLEPADLO	
&EFS=V1FQ1+V1UC14/2	Safety power monitoring RQ - KF14.52		12/22/2022	MKLEPADLO	
&EFS=V1FQ1+V1UC14/3	Safety power monitoring RQ - KF14.53		12/22/2022	MKLEPADLO	
&EFS=V1FQ1+V1UC14/4	Safety power monitoring RQ - KF14.54		12/22/2022	MKLEPADLO	
&EFS=V1FQ1+V1UC46/1	Safety power monitoring RQ - KF46.51		12/22/2022	MKLEPADLO	
&EFS=V1FQ1+V1UC46/2	Safety power monitoring RQ - KF46.52		12/22/2022	MKLEPADLO	
&EFS=V1FQ1+V1UC46/3	Safety power monitoring RQ - KF46.53		12/22/2022	MKLEPADLO	
&EFS=V1FQ1+V1UC46/4	Safety power monitoring RQ - KF46.54		12/22/2022	MKLEPADLO	
&EFS=V1FQ1+V1UC47/1	Safety power monitoring RQ - KF47.51		12/22/2022	MKLEPADLO	
&EFS=V1FQ1+V1UC47/2	Safety power monitoring RQ - KF47.52		12/22/2022	MKLEPADLO	
&EFS=V1FQ1+V1UC47/3	Safety power monitoring RQ - KF47.53		12/22/2022	MKLEPADLO	
&EFS=V1FQ1+V1UC47/4	Safety power monitoring RQ - KF47.54		12/22/2022	MKLEPADLO	
&EFS=V1KF1+V1UC11/1	Switch, Scalance XC216		12/22/2022	MKLEPADLO	
&EFS=V1KF1+V1UC11/2	Network Overview		12/22/2022	MKLEPADLO	
&EFS=V1KF1+V1UC11/3	IM 155 PN		12/22/2022	MKLEPADLO	
&EFS=V1KF1+V1UC11/4	ET200S Wiring DI		12/22/2022	MKLEPADLO	
&EFS=V1KF1+V1UC11/5	ET200S Wiring DI		12/22/2022	MKLEPADLO	
&EFS=V1KF1+V1UC11/6	ET200S Wiring F-DI		12/22/2022	MKLEPADLO	
&EFS=V1KF1+V1UC11/7	ET200S Wiring DQ		12/22/2022	MKLEPADLO	
&EFS=V1KF1+V1UC11/8	ET200S Wiring F-DQ		12/22/2022	MKLEPADLO	
&EFS=V1KF1+V1UC11/9	ET200S DI Overview KF11.11		12/22/2022	MKLEPADLO	
&EFS=V1KF1+V1UC11/10	ET200S DI Overview KF11.12		12/22/2022	MKLEPADLO	
&EFS=V1KF1+V1UC11/11	ET200S DI Overview KF11.13		12/22/2022	MKLEPADLO	
&EFS=V1KF1+V1UC11/12	ET200S DI Overview KF11.14		12/22/2022	MKLEPADLO	
&EFS=V1KF1+V1UC11/13	ET200S DQ Overview KF11.21		12/22/2022	MKLEPADLO	
&EFS=V1KF1+V1UC11/14	ET200S F-DI Overview KF11.31		12/22/2022	MKLEPADLO	
&EFS=V1KF1+V1UC11/15	ET200S F-DI Overview KF11.32		12/22/2022	MKLEPADLO	

Table of contents

Column X: An automatically generated page was edited

F06_001

Page	Page description	supplementary page field	Date	Edited by	X
&EFS=V1KF1+V1UC11/16	ET200S F-DQ Overview KF11.41		12/22/2022	MKLEPADLO	
&EFS=V1KF1+V1UC11/17	ET200S F-DQ Overview KF11.42		12/22/2022	MKLEPADLO	
&EFS=V1KF1+V1UC11/18	ET200S F-RQ Overview KF11.51		12/22/2022	MKLEPADLO	
&EFS=V1KF1+V1UC11/19	ET200S F-RQ Overview KF11.52		12/22/2022	MKLEPADLO	
&EFS=V1KF1+V1UC11/20	ET200S F-RQ Overview KF11.53		12/22/2022	MKLEPADLO	
&EFS=V1KF1+V1UC11/21	ET200S F-RQ Overview KF11.54		12/22/2022	MKLEPADLO	
&EFS=V1KF1+V1UC14/1	Switch, Scalance XC216		12/22/2022	MKLEPADLO	
&EFS=V1KF1+V1UC14/2	Network Overview		12/22/2022	MKLEPADLO	
&EFS=V1KF1+V1UC14/3	IM 155 PN		12/22/2022	MKLEPADLO	
&EFS=V1KF1+V1UC14/4	ET200S Wiring DI		12/22/2022	MKLEPADLO	
&EFS=V1KF1+V1UC14/6	ET200S Wiring F-DI		12/22/2022	MKLEPADLO	
&EFS=V1KF1+V1UC14/7	ET200S Wiring DQ		12/22/2022	MKLEPADLO	
&EFS=V1KF1+V1UC14/8	ET200S Wiring F-DQ		12/22/2022	MKLEPADLO	
&EFS=V1KF1+V1UC14/9	ET200S DI Overview KF14.11		12/22/2022	MKLEPADLO	
&EFS=V1KF1+V1UC14/10	ET200S DI Overview KF14.12		12/22/2022	MKLEPADLO	
&EFS=V1KF1+V1UC14/11	ET200S DQ Overview KF14.21		12/22/2022	MKLEPADLO	
&EFS=V1KF1+V1UC14/12	ET200S F-DI Overview KF14.31		12/22/2022	MKLEPADLO	
&EFS=V1KF1+V1UC14/13	ET200S F-DI Overview KF14.32		12/22/2022	MKLEPADLO	
&EFS=V1KF1+V1UC14/14	ET200S F-DQ Overview KF14.41		12/22/2022	MKLEPADLO	
&EFS=V1KF1+V1UC14/15	ET200S F-DQ Overview KF14.42		12/22/2022	MKLEPADLO	
&EFS=V1KF1+V1UC14/16	ET200S F-RQ Overview KF14.51		12/22/2022	MKLEPADLO	
&EFS=V1KF1+V1UC14/17	ET200S F-RQ Overview KF14.52		12/22/2022	MKLEPADLO	
&EFS=V1KF1+V1UC14/18	ET200S F-RQ Overview KF14.53		12/22/2022	MKLEPADLO	
&EFS=V1KF1+V1UC14/19	ET200S F-RQ Overview KF14.54		12/22/2022	MKLEPADLO	
&EFS=V1KF1+V1UC46/1	Switch, Scalance XC208		12/22/2022	MKLEPADLO	
&EFS=V1KF1+V1UC46/2	Network Overview		12/22/2022	MKLEPADLO	
&EFS=V1KF1+V1UC46/3	IM 155 PN		12/22/2022	MKLEPADLO	
&EFS=V1KF1+V1UC46/4	ET200S Wiring DI		12/22/2022	MKLEPADLO	
&EFS=V1KF1+V1UC46/5	ET200S Wiring F-DQ		12/22/2022	MKLEPADLO	
&EFS=V1KF1+V1UC46/6	ET200S DI Overview KF46.11		12/22/2022	MKLEPADLO	
&EFS=V1KF1+V1UC46/7	ET200S F-DQ Overview KF46.41		12/22/2022	MKLEPADLO	
&EFS=V1KF1+V1UC46/8	ET200S F-RQ Overview KF46.51		12/22/2022	MKLEPADLO	
&EFS=V1KF1+V1UC46/9	ET200S F-RQ Overview KF46.52		12/22/2022	MKLEPADLO	

Table of contents

Column X: An automatically generated page was edited

F06_001

Page	Page description	supplementary page field	Date	Edited by	X
&EFS=V1KF1+V1UC46/10	ET200S F-RQ Overview KF46.53		12/22/2022	MKLEPADLO	
&EFS=V1KF1+V1UC46/11	ET200S F-RQ Overview KF46.54		12/22/2022	MKLEPADLO	
&EFS=V1KF1+V1UC47/1	Switch, Scalance XC208		12/22/2022	MKLEPADLO	
&EFS=V1KF1+V1UC47/2	Network Overview		12/22/2022	MKLEPADLO	
&EFS=V1KF1+V1UC47/3	IM 155 PN		12/22/2022	MKLEPADLO	
&EFS=V1KF1+V1UC47/4	ET200S Wiring DI		12/22/2022	MKLEPADLO	
&EFS=V1KF1+V1UC47/5	ET200S Wiring F-DQ		12/22/2022	MKLEPADLO	
&EFS=V1KF1+V1UC47/6	ET200S DI Overview KF47.11		12/22/2022	MKLEPADLO	
&EFS=V1KF1+V1UC47/7	ET200S F-DQ Overview KF47.41		12/22/2022	MKLEPADLO	
&EFS=V1KF1+V1UC47/8	ET200S F-RQ Overview KF47.51		12/22/2022	MKLEPADLO	
&EFS=V1KF1+V1UC47/9	ET200S F-RQ Overview KF47.52		12/22/2022	MKLEPADLO	
&EFS=V1KF1+V1UC47/10	ET200S F-RQ Overview KF47.53		12/22/2022	MKLEPADLO	
&EFS=V1KF1+V1UC47/11	ET200S F-RQ Overview KF47.54		12/22/2022	MKLEPADLO	
&EFS=V1PZ1PF1+V1UC61/1	S010 Indication column		12/22/2022	MKLEPADLO	
&EFS=V1PZ1PF2+V1UC62/1	S030 Indication column		12/22/2022	MKLEPADLO	
&EFS=V1SF0PG1+V1UC51/1	TP700: S010 Display		12/22/2022	MKLEPADLO	
&EFS=V1SF0PG2+V1UC52/1	TP700: S030 Display		12/22/2022	MKLEPADLO	
&EFS=V1SF0SF1+V1UC71/1	S010 Operating box RB		12/22/2022	MKLEPADLO	
&EFS=V1SF0SF2+V1UC72/1	S030 Operating box RB		12/22/2022	MKLEPADLO	
&EFS=V1U10U01KF1+V1U10U01/1	MURR MODULE 8 IN/ 8 OUT		12/22/2022	MKLEPADLO	
&EFS=V1U10U01PF1+V1U10U01/2	Station Dome Light		12/22/2022	MKLEPADLO	
&EFS=V1U30U01KF1+V1U30U01/1	MURR MODULE 8 IN/ 8 OUT		12/22/2022	MKLEPADLO	
&EFS=V1U30U01PF1+V1U30U01/2	Station Dome Light		12/22/2022	MKLEPADLO	
&EFS=V1UQ51BG0+V1UQ51/1	SENSORS		12/22/2022	MKLEPADLO	
&EFS=V1UQ51KF1+V1UQ51/1	MURR MODULE 16 IN/O		12/22/2022	MKLEPADLO	
&EFS=V1WC1+V1UC11/1	Incoming power supply 480 VAC		12/22/2022	MKLEPADLO	
&EFS=V1WC1+V1UC161/1	Incoming weld power supply 480 VAC		12/22/2022	MKLEPADLO	
&EFS=V1WC2+V1UC11/10	Power distribution 480 VAC		12/22/2022	MKLEPADLO	
&EFS=V1WC2+V1UC11/11	Power distribution 480 VAC		12/22/2022	MKLEPADLO	
&EFS=V1WC2+V1UC11/12	Power distribution 480 VAC		12/22/2022	MKLEPADLO	
&EFS=V1WC2+V1UC11/13	Power distribution 480 VAC		12/22/2022	MKLEPADLO	
&EFS=V1WC2+V1UC11/14	Power distribution 480 VAC		12/22/2022	MKLEPADLO	
&EFS=V1WC2+V1UC11/15	Power distribution 480 VAC		12/22/2022	MKLEPADLO	

Table of contents

Column X: An automatically generated page was edited

F06_001

Page	Page description	supplementary page field	Date	Edited by	X
&EFS=V1WC2+V1UC11/16	Power distribution 480 VAC		12/22/2022	MKLEPADLO	
&EFS=V1WC2+V1UC11/17	Power distribution 480 VAC monitoring		12/22/2022	MKLEPADLO	
&EFS=V1WC2+V1UC11/18	Power distribution 480 VAC monitoring		12/22/2022	MKLEPADLO	
&EFS=V1WC2+V1UC11/19	Power distribution 480 VAC monitoring		12/22/2022	MKLEPADLO	
&EFS=V1WC2+V1UC161/10	Weld power distribution 480 VAC		12/22/2022	MKLEPADLO	
&EFS=V1WC3+V1UC11/1	Power Distribution 120 VAC (Above Disconnect)		12/22/2022	MKLEPADLO	
&EFS=V1WC3+V1UC11/2	Power Distribution 120 VAC (Below Disconnect)		12/22/2022	MKLEPADLO	
&EFS=V1WC3+V1UC11/3	Power Distribution 120 VAC (Below Disconnect)		12/22/2022	MKLEPADLO	
&EFS=V1WC3+V1UC11/4	Power distribution 120 VAC monitoring (Above Disconnect)		12/22/2022	MKLEPADLO	
&EFS=V1WC3+V1UC14/1	Power distribution 120 VAC		12/22/2022	MKLEPADLO	
&EFS=V1WC3+V1UC14/2	Monitoring 120VAC		12/22/2022	MKLEPADLO	
&EFS=V1WC3+V1UC46/1	Power distribution 120 VAC		12/22/2022	MKLEPADLO	
&EFS=V1WC3+V1UC46/2	Monitoring 120VAC		12/22/2022	MKLEPADLO	
&EFS=V1WC3+V1UC47/3	Power distribution 120 VAC		12/22/2022	MKLEPADLO	
&EFS=V1WC3+V1UC47/4	Monitoring 120VAC		12/22/2022	MKLEPADLO	
&EFS=V1WC4+V1UC11/1	Power distribution 24VDC (Above Disconnect)		12/22/2022	MKLEPADLO	
&EFS=V1WC4+V1UC11/2	Power distribution 24VDC HL+		12/22/2022	MKLEPADLO	
&EFS=V1WC4+V1UC11/3	Power distribution 24VDC 1L+		12/22/2022	MKLEPADLO	
&EFS=V1WC4+V1UC11/4	Power distribution 24VDC 2L+		12/22/2022	MKLEPADLO	
&EFS=V1WC4+V1UC11/5	Power distribution 24VDC 3L+		12/22/2022	MKLEPADLO	
&EFS=V1WC4+V1UC11/6	Power distribution 24VDC 4L+		12/22/2022	MKLEPADLO	
&EFS=V1WC4+V1UC11/7	Power distribution 24VDC 5L+		12/22/2022	MKLEPADLO	
&EFS=V1WC4+V1UC11/8	Power distribution 24VDC 6L+		12/22/2022	MKLEPADLO	
&EFS=V1WC4+V1UC11/9	Power distribution 24VDC 7L+		12/22/2022	MKLEPADLO	
&EFS=V1WC4+V1UC11/10	Power distribution 24VDC 8L+		12/22/2022	MKLEPADLO	
&EFS=V1WC4+V1UC11/11	Power distribution 24VDC (Below Disconnect)		12/22/2022	MKLEPADLO	
&EFS=V1WC4+V1UC11/12	Power distribution 24VDC 11L+		12/22/2022	MKLEPADLO	
&EFS=V1WC4+V1UC11/13	Power distribution 24VDC 12L+		12/22/2022	MKLEPADLO	
&EFS=V1WC4+V1UC11/14	Power distribution 24VDC 13L+		12/22/2022	MKLEPADLO	
&EFS=V1WC4+V1UC11/15	Power distribution 24VDC 14L+		12/22/2022	MKLEPADLO	
&EFS=V1WC4+V1UC11/16	Power distribution 24VDC 15L+		12/22/2022	MKLEPADLO	
&EFS=V1WC4+V1UC11/17	Power distribution 24VDC 16L+		12/22/2022	MKLEPADLO	
&EFS=V1WC4+V1UC11/18	Power distribution 24VDC 17L+		12/22/2022	MKLEPADLO	

Table of contents

Column X: An automatically generated page was edited

F06_001

Page	Page description	supplementary page field	Date	Edited by	X
&EFS=V1WC4+V1UC11/19	Power distribution 24VDC 18L+		12/22/2022	MKLEPADLO	
&EFS=V1WC4+V1UC11/20	24VDC Unswitched Power 1		12/22/2022	MKLEPADLO	
&EFS=V1WC4+V1UC11/21	24VDC Unswitched Power 2		12/22/2022	MKLEPADLO	
&EFS=V1WC4+V1UC11/22	24VDC Unswitched Power 3		12/22/2022	MKLEPADLO	
&EFS=V1WC4+V1UC11/23	24VDC Unswitched Power 4		12/22/2022	MKLEPADLO	
&EFS=V1WC4+V1UC11/24	24VDC Switched Power 1		12/22/2022	MKLEPADLO	
&EFS=V1WC4+V1UC11/25	24VDC Switched Power 2		12/22/2022	MKLEPADLO	
&EFS=V1WC4+V1UC11/26	24VDC Switched Power 3		12/22/2022	MKLEPADLO	
&EFS=V1WC4+V1UC11/27	24VDC Switched Power 4		12/22/2022	MKLEPADLO	
&EFS=V1WC4+V1UC14/1	Power distribution 24VDC for Inputs		12/22/2022	MKLEPADLO	
&EFS=V1WC4+V1UC14/2	Power distribution 24VDC 1L+		12/22/2022	MKLEPADLO	
&EFS=V1WC4+V1UC14/3	Power distribution 24VDC 2L+		12/22/2022	MKLEPADLO	
&EFS=V1WC4+V1UC14/4	Power distribution 24VDC 3L+		12/22/2022	MKLEPADLO	
&EFS=V1WC4+V1UC14/5	Power distribution 24VDC 4L+		12/22/2022	MKLEPADLO	
&EFS=V1WC4+V1UC14/6	Power distribution 24VDC 5L+		12/22/2022	MKLEPADLO	
&EFS=V1WC4+V1UC14/7	Power distribution 24VDC 6L+		12/22/2022	MKLEPADLO	
&EFS=V1WC4+V1UC14/8	Power distribution 24VDC 7L+		12/22/2022	MKLEPADLO	
&EFS=V1WC4+V1UC14/9	Power distribution 24VDC 8L+		12/22/2022	MKLEPADLO	
&EFS=V1WC4+V1UC14/11	Power distribution 24VDC (Below Disconnect)		12/22/2022	MKLEPADLO	
&EFS=V1WC4+V1UC14/12	Power distribution 24VDC 11L+		12/22/2022	MKLEPADLO	
&EFS=V1WC4+V1UC14/13	Power distribution 24VDC 12L+		12/22/2022	MKLEPADLO	
&EFS=V1WC4+V1UC14/14	Power distribution 24VDC 13L+		12/22/2022	MKLEPADLO	
&EFS=V1WC4+V1UC14/15	Power distribution 24VDC 14L+		12/22/2022	MKLEPADLO	
&EFS=V1WC4+V1UC14/16	Power distribution 24VDC 15L+		12/22/2022	MKLEPADLO	
&EFS=V1WC4+V1UC14/17	Power distribution 24VDC 16L+		12/22/2022	MKLEPADLO	
&EFS=V1WC4+V1UC14/18	Power distribution 24VDC 17L+		12/22/2022	MKLEPADLO	
&EFS=V1WC4+V1UC14/19	Power distribution 24VDC 18L+		12/22/2022	MKLEPADLO	
&EFS=V1WC4+V1UC14/20	24VDC Switched Power 1		12/22/2022	MKLEPADLO	
&EFS=V1WC4+V1UC14/21	24VDC Switched Power 2		12/22/2022	MKLEPADLO	
&EFS=V1WC4+V1UC14/22	24VDC Switched Power 3		12/22/2022	MKLEPADLO	
&EFS=V1WC4+V1UC14/23	24VDC Switched Power 4		12/22/2022	MKLEPADLO	
&EFS=V1WC4+V1UC46/1	Power distribution 24VDC for Inputs		12/22/2022	MKLEPADLO	
&EFS=V1WC4+V1UC46/2	Power distribution 24VDC 1L+		12/22/2022	MKLEPADLO	

Table of contents

Column X: An automatically generated page was edited

F06_001

Page	Page description	supplementary page field	Date	Edited by	X
&EFS=V1WC4+V1UC46/3	Power distribution 24VDC 2L+		12/22/2022	MKLEPADLO	
&EFS=V1WC4+V1UC46/4	Power distribution 24VDC 2L+		12/22/2022	MKLEPADLO	
&EFS=V1WC4+V1UC46/5	Power distribution 24VDC 3L+		12/22/2022	MKLEPADLO	
&EFS=V1WC4+V1UC46/6	Power distribution 24VDC 3L+		12/22/2022	MKLEPADLO	
&EFS=V1WC4+V1UC46/7	Power distribution 24VDC 4L+		12/22/2022	MKLEPADLO	
&EFS=V1WC4+V1UC47/1	Power distribution 24VDC for Inputs		12/22/2022	MKLEPADLO	
&EFS=V1WC4+V1UC47/2	Power distribution 24VDC 1L+		12/22/2022	MKLEPADLO	
&EFS=V1WC4+V1UC47/3	Power distribution 24VDC 2L+		12/22/2022	MKLEPADLO	
&EFS=V1WC4+V1UC47/4	Power distribution 24VDC 2L+		12/22/2022	MKLEPADLO	
&EFS=V1WC4+V1UC47/5	Power distribution 24VDC 3L+		12/22/2022	MKLEPADLO	
&EFS=V1WC4+V1UC47/6	Power distribution 24VDC 3L+		12/22/2022	MKLEPADLO	
&EFS=V1WC4+V1UC47/7	Power distribution 24VDC 4L+		12/22/2022	MKLEPADLO	
&EFS=V1WR1BG0+V1WR1/1	TURNTABLE POSITION SENSORS		12/22/2022	MKLEPADLO	
&EFS=V1WR1KF1+V1WR1/1	MURR MODULE SAFE 16 IN		12/22/2022	MKLEPADLO	
&EFS=V1WR1KF2+V1WR1/1	MURR MODULE SAFE 16 IN		12/22/2022	MKLEPADLO	
&EFS=V1WR1UQ51BG0+V1WR1UQ51/1	SENSORS		12/22/2022	MKLEPADLO	
&EFS=V1WR1UQ51BG0+V1WR1UQ51/2	SENSORS		12/22/2022	MKLEPADLO	
&EFS=V1WR1UQ51BG0+V1WR1UQ51/3	SENSORS		12/22/2022	MKLEPADLO	
&EFS=V1WR1UQ51BG0+V1WR1UQ51/4	SENSORS		12/22/2022	MKLEPADLO	
&EFS=V1WR1UQ51KF1+V1WR1UQ51/1	CONNECTING MOD. FOR VTSA MANIFOLD		12/22/2022	MKLEPADLO	
&EFS=V1WR1UQ51KF1+V1WR1UQ51/2	I/O MOD. DI16 (8 x M12) FOR VTSA-F		12/22/2022	MKLEPADLO	
&EFS=V1WR1UQ51KF1+V1WR1UQ51/3	I/O MOD. DI16 (8 x M12) FOR VTSA-F		12/22/2022	MKLEPADLO	
&EFS=V1WR1UQ51KF1+V1WR1UQ51/4	I/O MOD. DI16 (8 x M12) FOR VTSA-F		12/22/2022	MKLEPADLO	
&EFS=V1WR1UQ51KF1+V1WR1UQ51/5	I/O MOD. DI16 (8 x M12) FOR VTSA-F		12/22/2022	MKLEPADLO	
&EFS=V1WR1UQ51KF1+V1WR1UQ51/6	CONNECTING MOD. FOR FESTO DQ		12/22/2022	MKLEPADLO	
&EFS=V1WR1UQ51UQ1+V1WR1UQ51UQ1/1	FESTO DQ CONNECTION QN1		12/22/2022	MKLEPADLO	
&EFS=V1WR1UQ51UQ2+V1WR1UQ51UQ2/1	FESTO DQ CONNECTION QN2		12/22/2022	MKLEPADLO	
&EFS=V1WR1UQ51UQ3+V1WR1UQ51UQ3/1	FESTO DQ CONNECTION QN3		12/22/2022	MKLEPADLO	
&EFS=V1WR1UQ51UQ4+V1WR1UQ51UQ4/1	FESTO DQ CONNECTION QN4		12/22/2022	MKLEPADLO	
&EFS=V1WR1UQ51UQ5+V1WR1UQ51UQ5/1	FESTO DQ CONNECTION QN3		12/22/2022	MKLEPADLO	
&EFS=V1WR1UQ51UQ6+V1WR1UQ51UQ6/1	FESTO DQ CONNECTION QN3		12/22/2022	MKLEPADLO	
&EFS=V1WR1UQ51WC4+V1WR1UQ51/1	24VDC		12/22/2022	MKLEPADLO	
&EFS=V1WR1UQ52BG0+V1WR1UQ52/1	SENSORS		12/22/2022	MKLEPADLO	

			Date	12/22/2022	Volvo Trucks North America	Valiant TMS	Table of contents : &EFS=V1WC4+V1UC46/3 - &EFS=V1WR1UQ52BG0+V1WR1UQ52/1	Drawing name: =2V13&EFS_EL	=		
			Ed.	MKLEPADLO					+		
			Appr		Sub-Floor Members			Document type: EAB	Project nr: 22-16146	Page	9
Modification	Date	Name	Original		Replacement of / Replaced by	Scale 1:1					614

Table of contents

Column X: An automatically generated page was edited

F06_001

Page	Page description	supplementary page field	Date	Edited by	X
&EFS=V1WR1UQ52BG0+V1WR1UQ52/2	SENSORS		12/22/2022	MKLEPADLO	
&EFS=V1WR1UQ52BG0+V1WR1UQ52/3	SENSORS		12/22/2022	MKLEPADLO	
&EFS=V1WR1UQ52BG0+V1WR1UQ52/4	SENSORS		12/22/2022	MKLEPADLO	
&EFS=V1WR1UQ52BG0+V1WR1UQ52/5	SENSORS		12/22/2022	MKLEPADLO	
&EFS=V1WR1UQ52KF1+V1WR1UQ52/1	CONNECTING MOD. FOR VTSA MANIFOLD		12/22/2022	MKLEPADLO	
&EFS=V1WR1UQ52KF1+V1WR1UQ52/2	I/O MOD. DI16 (8 x M12) FOR VTSA-F		12/22/2022	MKLEPADLO	
&EFS=V1WR1UQ52KF1+V1WR1UQ52/3	I/O MOD. DI16 (8 x M12) FOR VTSA-F		12/22/2022	MKLEPADLO	
&EFS=V1WR1UQ52KF1+V1WR1UQ52/4	I/O MOD. DI16 (8 x M12) FOR VTSA-F		12/22/2022	MKLEPADLO	
&EFS=V1WR1UQ52KF1+V1WR1UQ52/5	CONNECTING MOD. FOR FESTO DQ		12/22/2022	MKLEPADLO	
&EFS=V1WR1UQ52KF2+V1WR1UQ52/1	CONNECTING MOD. FOR VTSA MANIFOLD		12/22/2022	MKLEPADLO	
&EFS=V1WR1UQ52KF2+V1WR1UQ52/2	I/O MOD. DI16 (8 x M12) FOR VTSA-F		12/22/2022	MKLEPADLO	
&EFS=V1WR1UQ52KF2+V1WR1UQ52/3	I/O MOD. DI16 (8 x M12) FOR VTSA-F		12/22/2022	MKLEPADLO	
&EFS=V1WR1UQ52KF2+V1WR1UQ52/4	I/O MOD. DI16 (8 x M12) FOR VTSA-F		12/22/2022	MKLEPADLO	
&EFS=V1WR1UQ52KF2+V1WR1UQ52/5	I/O MOD. DI16 (8 x M12) FOR VTSA-F		12/22/2022	MKLEPADLO	
&EFS=V1WR1UQ52KF2+V1WR1UQ52/6	CONNECTING MOD. FOR FESTO DQ		12/22/2022	MKLEPADLO	
&EFS=V1WR1UQ52UQ1+V1WR1UQ52UQ1/1	FESTO DQ CONNECTION QN1		12/22/2022	MKLEPADLO	
&EFS=V1WR1UQ52UQ2+V1WR1UQ52UQ2/1	FESTO DQ CONNECTION QN2		12/22/2022	MKLEPADLO	
&EFS=V1WR1UQ52UQ3+V1WR1UQ52UQ3/1	FESTO DQ CONNECTION QN3		12/22/2022	MKLEPADLO	
&EFS=V1WR1UQ52UQ3+V1WR1UQ52UQ3/2	FESTO DQ CONNECTION QN3		12/22/2022	MKLEPADLO	
&EFS=V1WR1UQ52UQ4+V1WR1UQ52UQ4/1	FESTO DQ CONNECTION QN4		12/22/2022	MKLEPADLO	
&EFS=V1WR1UQ52UQ5+V1WR1UQ52UQ5/1	FESTO DQ CONNECTION QN5		12/22/2022	MKLEPADLO	
&EFS=V1WR1UQ52UQ6+V1WR1UQ52UQ6/1	FESTO DQ CONNECTION QN6		12/22/2022	MKLEPADLO	
&EFS=V1WR1UQ52UQ7+V1WR1UQ52UQ7/1	FESTO DQ CONNECTION QN6		12/22/2022	MKLEPADLO	
&EFS=V1WR1UQ52UQ8+V1WR1UQ52UQ8/1	FESTO DQ CONNECTION QN6		12/22/2022	MKLEPADLO	
&EFS=V1WR1UQ52UQ9+V1WR1UQ52UQ9/1	FESTO DQ CONNECTION QN6		12/22/2022	MKLEPADLO	
&EFS=V1WR1UQ52UQ10+V1WR1UQ52UQ10/1	FESTO DQ CONNECTION QN6		12/22/2022	MKLEPADLO	
&EFS=V1WR1UQ52UQ11+V1WR1UQ52UQ11/1	FESTO DQ CONNECTION QN6		12/22/2022	MKLEPADLO	
&EFS=V1WR1UQ52UQ12+V1WR1UQ52UQ12/1	FESTO DQ CONNECTION QN6		12/22/2022	MKLEPADLO	
&EFS=V1WR1UQ52UQ13+V1WR1UQ52UQ13/1	FESTO DQ CONNECTION QN6		12/22/2022	MKLEPADLO	
&EFS=V1WR1UQ52UQ14+V1WR1UQ52UQ14/1	FESTO DQ CONNECTION QN6		12/22/2022	MKLEPADLO	
&EFS=V1WR1UQ52WC4+V1WR1UQ52/1	24VDC		12/22/2022	MKLEPADLO	
&EFS=V1WR1WC1+V1WR1UC01/1	Incoming power & profinet		12/22/2022	MKLEPADLO	
&EFS=V1WR2BG0+V1WR2/1	TURNTABLE POSITION SENSORS		12/22/2022	MKLEPADLO	

Table of contents

Column X: An automatically generated page was edited

F06_001

Page	Page description	supplementary page field	Date	Edited by	X
&EFS=V1WR2BG0+V1WR2/2	TRUNNION POSITION SENSORS		12/22/2022	MKLEPADLO	
&EFS=V1WR2BG0+V1WR2/3	TRUNNION POSITION SENSORS		12/22/2022	MKLEPADLO	
&EFS=V1WR2KF1+V1WR2/1	MURR MODULE SAFE 16 IN		12/22/2022	MKLEPADLO	
&EFS=V1WR2KF2+V1WR2/1	MURR MODULE SAFE 16 IN		12/22/2022	MKLEPADLO	
&EFS=V1WR2KF3+V1WR2/1	MURR MODULE SAFE 16 IN		12/22/2022	MKLEPADLO	
&EFS=V1WR2UQ51BG0+V1WR2UQ51/1	SENSORS		12/22/2022	MKLEPADLO	
&EFS=V1WR2UQ51KF1+V1WR2UQ51/1	CONNECTING MOD. FOR VTSA MANIFOLD		12/22/2022	MKLEPADLO	
&EFS=V1WR2UQ51KF1+V1WR2UQ51/2	I/O MOD. DI16 (8 x M12) FOR VTSA-F		12/22/2022	MKLEPADLO	
&EFS=V1WR2UQ51KF1+V1WR2UQ51/3	I/O MOD. DI16 (8 x M12) FOR VTSA-F		12/22/2022	MKLEPADLO	
&EFS=V1WR2UQ51KF1+V1WR2UQ51/4	CONNECTING MOD. FOR FESTO DQ		12/22/2022	MKLEPADLO	
&EFS=V1WR2UQ51UQ1+V1WR2UQ51UQ1/1	FESTO DQ CONNECTION QN1		12/22/2022	MKLEPADLO	
&EFS=V1WR2UQ51UQ2+V1WR2UQ51UQ2/1	FESTO DQ CONNECTION QN2		12/22/2022	MKLEPADLO	
&EFS=V1WR2UQ51UQ3+V1WR2UQ51UQ3/1	FESTO DQ CONNECTION QN3		12/22/2022	MKLEPADLO	
&EFS=V1WR2UQ51WC4+V1WR2UQ51/1	24VDC		12/22/2022	MKLEPADLO	
&EFS=V1WR2UQ52BG0+V1WR2UQ52/1	SENSORS		12/22/2022	MKLEPADLO	
&EFS=V1WR2UQ52KF1+V1WR2UQ52/1	CONNECTING MOD. FOR VTSA MANIFOLD		12/22/2022	MKLEPADLO	
&EFS=V1WR2UQ52KF1+V1WR2UQ52/2	I/O MOD. DI16 (8 x M12) FOR VTSA-F		12/22/2022	MKLEPADLO	
&EFS=V1WR2UQ52KF1+V1WR2UQ52/3	I/O MOD. DI16 (8 x M12) FOR VTSA-F		12/22/2022	MKLEPADLO	
&EFS=V1WR2UQ52KF1+V1WR2UQ52/4	CONNECTING MOD. FOR FESTO DQ		12/22/2022	MKLEPADLO	
&EFS=V1WR2UQ52UQ1+V1WR2UQ52UQ1/1	FESTO DQ CONNECTION QN1		12/22/2022	MKLEPADLO	
&EFS=V1WR2UQ52UQ2+V1WR2UQ52UQ2/1	FESTO DQ CONNECTION QN2		12/22/2022	MKLEPADLO	
&EFS=V1WR2UQ52UQ3+V1WR2UQ52UQ3/1	FESTO DQ CONNECTION QN3		12/22/2022	MKLEPADLO	
&EFS=V1WR2UQ52WC4+V1WR2UQ52/1	24VDC		12/22/2022	MKLEPADLO	
&EFS=V1WR2WC1+V1WR2UC01/1	Incoming power & profinet		12/22/2022	MKLEPADLO	
&EFS=V1WR2WC1+V1WR2UC01/2	Incoming power & profinet		12/22/2022	MKLEPADLO	
&ELU=KF0+UC31/1	Layout UC31 MOP		12/22/2022	MKLEPADLO	
&ELU=KF0+UC31/2	Layout UC31 MOP External View		12/22/2022	MKLEPADLO	
&ELU=KF0+UC31/3	Layout UC31 MOP Internal View		12/22/2022	MKLEPADLO	
&ELU=V1PZ1PF1+V1UC61/1	Layout UC61 SL External View		12/22/2022	MKLEPADLO	
&ELU=V1PZ1PF1+V1UC61/2	Layout UC61 SL Internal View		12/22/2022	MKLEPADLO	
&ELU=V1PZ1PF2+V1UC62/3	Layout UC62 SL External View		12/22/2022	MKLEPADLO	
&ELU=V1PZ1PF2+V1UC62/4	Layout UC62 SL Internal View		12/22/2022	MKLEPADLO	
&ELU=V1SF0PG1+V1UC51/1	Layout UC51 OD External View		12/22/2022	MKLEPADLO	

Table of contents

Column X: An automatically generated page was edited

F06_001

Page	Page description	supplementary page field	Date	Edited by	X
&ELU=V1SF0PG2+V1UC52/1	Layout UC52 OD External View		12/22/2022	MKLEPADLO	
&ELU=V1SF0SF1+V1UC71/1	Layout UC71 RB External View		12/22/2022	MKLEPADLO	
&ELU=V1SF0SF2+V1UC72/1	Layout UC72 RB External View		12/22/2022	MKLEPADLO	
&ELU=V1UC11+V1UC11/1	Layout UC11 PDP External View		12/22/2022	MKLEPADLO	
&ELU=V1UC11+V1UC11/2	Layout UC11 PDP Internal View		12/22/2022	MKLEPADLO	
&ELU=V1UC14+V1UC14/1	Layout UC14 RIO External View		12/22/2022	MKLEPADLO	
&ELU=V1UC14+V1UC14/2	Layout UC14 RIO Internal View		12/22/2022	MKLEPADLO	
&ELU=V1UC46+V1UC46/3	Layout UC46 TT RIO External View		12/22/2022	MKLEPADLO	
&ELU=V1UC46+V1UC46/4	Layout UC46 TT RIO Internal View		12/22/2022	MKLEPADLO	
&ELU=V1UC47+V1UC47/7	Layout UC47 TT RIO External View		12/22/2022	MKLEPADLO	
&ELU=V1UC47+V1UC47/8	Layout UC47 TT RIO Internal View		12/22/2022	MKLEPADLO	
&EMC/1	Cable overview		12/22/2022	MKLEPADLO	
&EMC/2	Cable overview		12/22/2022	MKLEPADLO	
&EMC/3	Cable overview		12/22/2022	MKLEPADLO	
&EMC/4	Cable overview		12/22/2022	MKLEPADLO	
&EMC/5	Cable overview		12/22/2022	MKLEPADLO	
&EMC/6	Cable overview		12/22/2022	MKLEPADLO	
&EMC/7	Cable overview		12/22/2022	MKLEPADLO	
&EMC/8	Cable overview		12/22/2022	MKLEPADLO	
&EMC/9	Cable overview		12/22/2022	MKLEPADLO	
&EMC/10	Cable overview		12/22/2022	MKLEPADLO	
&EMC/11	Cable overview		12/22/2022	MKLEPADLO	
&EPB/1	Parts list : TS 35_7,5 - TS 35_7,5		12/22/2022	MKLEPADLO	
&EPB+UC31/1	Parts list : US2.ECGB5 - SIE.6EP3336-7SB00-3AX0		12/22/2022	MKLEPADLO	
&EPB+UC31UC91/1	Parts list : ABB.1SFA619550R1051 - ABB.1SFA619100R1023		12/22/2022	MKLEPADLO	
&EPB+UC31UC92/1	Parts list : ABB.1SFA619100R1111 - ABB.1SFA619200R1016		12/22/2022	MKLEPADLO	
&EPB+V1AR21XQ11UC01/1	Parts list : ABB.2CMA193115R1000 - ABB.2CMA193115R1000		12/22/2022	MKLEPADLO	
&EPB+V1AR22XQ11UC01/1	Parts list : ABB.2CMA193115R1000 - ABB.2CMA193115R1000		12/22/2022	MKLEPADLO	
&EPB+V1AR41UQ41/1	Parts list : TUR.1625891 - FES.549335		12/22/2022	MKLEPADLO	
&EPB+V1AR41UQ41UQ1.1/1	Parts list : TUN.1324633 - TUN.1324633		12/22/2022	MKLEPADLO	
&EPB+V1AR41UQ41UQ1.2/1	Parts list : TUN.1324633 - TUN.1324633		12/22/2022	MKLEPADLO	
&EPB+V1AR41UQ41UQ1.3/1	Parts list : TUN.1324633 - TUN.1324633		12/22/2022	MKLEPADLO	
&EPB+V1AR41UQ41UQ1.4/1	Parts list : TUN.1324633 - TUN.1324633		12/22/2022	MKLEPADLO	

Table of contents

Column X: An automatically generated page was edited

F06_001

Page	Page description	supplementary page field	Date	Edited by	X
&EPB+V1AR41UQ41UQ2.1/1	Parts list : TUN.1324633 - TUN.1324633		12/22/2022	MKLEPADLO	
&EPB+V1AR41UQ41UQ2.2/1	Parts list : TUN.1324633 - TUN.1324633		12/22/2022	MKLEPADLO	
&EPB+V1AR41UQ41UQ2.3/1	Parts list : TUN.1324633 - TUN.1324633		12/22/2022	MKLEPADLO	
&EPB+V1AR41XQ11UC01/1	Parts list : ABB.2CMA193115R1000 - ABB.2CMA193115R1000		12/22/2022	MKLEPADLO	
&EPB+V1AR42UQ41/1	Parts list : TUR.1625891 - FES.549335		12/22/2022	MKLEPADLO	
&EPB+V1AR42UQ41UQ1.1/1	Parts list : WEL.WWS001A - WEL.WWS001A		12/22/2022	MKLEPADLO	
&EPB+V1AR42UQ41UQ1.2/1	Parts list : WEL.WWS001A - WEL.WWS001A		12/22/2022	MKLEPADLO	
&EPB+V1AR42UQ41UQ2.1/1	Parts list : TUN.1324638 - TUN.1324638		12/22/2022	MKLEPADLO	
&EPB+V1AR42UQ41UQ2.2/1	Parts list : TUN.1324638 - TUN.1324638		12/22/2022	MKLEPADLO	
&EPB+V1AR42UQ41UQ2.3/1	Parts list : TUN.1324638 - TUN.1324638		12/22/2022	MKLEPADLO	
&EPB+V1AR42UQ41UQ2.4/1	Parts list : TUN.1324638 - TUN.1324638		12/22/2022	MKLEPADLO	
&EPB+V1AR42UQ41UQ3.1/1	Parts list : TUN.1324638 - TUN.1324638		12/22/2022	MKLEPADLO	
&EPB+V1AR42UQ41UQ3.2/1	Parts list : TUN.1324638 - TUN.1324638		12/22/2022	MKLEPADLO	
&EPB+V1AR42UQ41UQ3.3/1	Parts list : TUN.1324644 - TUN.1324644		12/22/2022	MKLEPADLO	
&EPB+V1AR42XQ11UC01/1	Parts list : ABB.2CMA193115R1000 - RIT.4115000		12/22/2022	MKLEPADLO	
&EPB+V1AR61XQ21UC01/1	Parts list : SE.CH362AWC - RIT.4115000		12/22/2022	MKLEPADLO	
&EPB+V1AR61XQ23UC01/1	Parts list : ABB.2CMA193115R1000 - ABB.2CMA193115R1000		12/22/2022	MKLEPADLO	
&EPB+V1AR62XQ21UC01/1	Parts list : SE.CH362AWC - RIT.4115000		12/22/2022	MKLEPADLO	
&EPB+V1FQ1/1	Parts list : BAN.SLSCP30-1200P44NT - BAN.SLSCP30-1200P44NT		12/22/2022	MKLEPADLO	
&EPB+V1FQ1BG1/1	Parts list : EUC.MGB-L2B-PNA-R-121859 - EUC.MGB-E-A2-106051		12/22/2022	MKLEPADLO	
&EPB+V1FQ1BG2/1	Parts list : EUC.MGB-L2B-PNA-R-121859 - EUC.MGB-E-A2-106051		12/22/2022	MKLEPADLO	
&EPB+V1U10U01/1	Parts list : MURR.55339 - BAN.32723		12/22/2022	MKLEPADLO	
&EPB+V1U30U01/1	Parts list : MURR.55339 - BAN.32723		12/22/2022	MKLEPADLO	
&EPB+V1UC11/1	Parts list : EMPD3FBCB-025A-M - SIE.5SJ4116-7HG41		12/22/2022	MKLEPADLO	
&EPB+V1UC11/2	Parts list : SIE.5ST3010-0HG - RIT.4115000		12/22/2022	MKLEPADLO	
&EPB+V1UC14/1	Parts list : SIE.6ES7155-6AA01-0BN0_subassembly - SIE.6EP3336-7SB00-3AX0		12/22/2022	MKLEPADLO	
&EPB+V1UC46/1	Parts list : SIE.6ES7155-6AA01-0BN0_subassembly - TUR.RKF 50-1M/NPT		12/22/2022	MKLEPADLO	
&EPB+V1UC47/1	Parts list : SIE.6ES7155-6AA01-0BN0_subassembly - TUR.RKF 50-1M/NPT		12/22/2022	MKLEPADLO	
&EPB+V1UC51/1	Parts list : SIE.6AV2124-0GC01-0AX0 - TUR.RSF 50-1M/NPT		12/22/2022	MKLEPADLO	
&EPB+V1UC52/1	Parts list : SIE.6AV2124-0GC01-0AX0 - TUR.RSF 50-1M/NPT		12/22/2022	MKLEPADLO	
&EPB+V1UC61/1	Parts list : SIE.8WD4408-0AA - TUR.RSF 106-2M/14.5/NPT/CS16486		12/22/2022	MKLEPADLO	
&EPB+V1UC62/1	Parts list : SIE.8WD4408-0AA - TUR.RSF 106-2M/14.5/NPT/CS16486		12/22/2022	MKLEPADLO	
&EPB+V1UC71/1	Parts list : BAN.SSA-EBM-12EB1Q8OTBB - BAN.SSA-EBM-12EB1Q8OTBB		12/22/2022	MKLEPADLO	

Table of contents

Column X: An automatically generated page was edited

F06_001

Page	Page description	supplementary page field	Date	Edited by	X
&EPB+V1UC72/1	Parts list : BAN.SSA-EBM-12EB1Q8OTBB - BAN.SSA-EBM-12EB1Q8OTBB		12/22/2022	MKLEPADLO	
&EPB+V1UC161/1	Parts list : MB-231-03 - RIT.4115000		12/22/2022	MKLEPADLO	
&EPB+V1UQ51/1	Parts list : TUR.1627297 - MURR.55530		12/22/2022	MKLEPADLO	
&EPB+V1WR1/1	Parts list : A-B.440F-M2036HYNN - TUR.BS 8251-0/PG9		12/22/2022	MKLEPADLO	
&EPB+V1WR1UQ51/1	Parts list : TUR.1627297 - FES.549335		12/22/2022	MKLEPADLO	
&EPB+V1WR1UQ51UQ1.1/1	Parts list : FES.543863 - FES.543863		12/22/2022	MKLEPADLO	
&EPB+V1WR1UQ51UQ1.2/1	Parts list : FES.543863 - FES.543863		12/22/2022	MKLEPADLO	
&EPB+V1WR1UQ51UQ1.3/1	Parts list : FES.543863 - FES.543863		12/22/2022	MKLEPADLO	
&EPB+V1WR1UQ51UQ1.4/1	Parts list : FES.543863 - FES.543863		12/22/2022	MKLEPADLO	
&EPB+V1WR1UQ51UQ2.1/1	Parts list : TUN.1324638 - TUN.1324638		12/22/2022	MKLEPADLO	
&EPB+V1WR1UQ51UQ2.2/1	Parts list : TUN.1324638 - TUN.1324638		12/22/2022	MKLEPADLO	
&EPB+V1WR1UQ51UQ3.1/1	Parts list : TUN.1324638 - TUN.1324638		12/22/2022	MKLEPADLO	
&EPB+V1WR1UQ51UQ3.2/1	Parts list : TUN.1324638 - TUN.1324638		12/22/2022	MKLEPADLO	
&EPB+V1WR1UQ51UQ3.3/1	Parts list : TUN.1324638 - TUN.1324638		12/22/2022	MKLEPADLO	
&EPB+V1WR1UQ51UQ3.4/1	Parts list : TUN.1324638 - TUN.1324638		12/22/2022	MKLEPADLO	
&EPB+V1WR1UQ51UQ4.1/1	Parts list : WEL.WWS001A - WEL.WWS001A		12/22/2022	MKLEPADLO	
&EPB+V1WR1UQ51UQ4.2/1	Parts list : WEL.WWS001A - WEL.WWS001A		12/22/2022	MKLEPADLO	
&EPB+V1WR1UQ51UQ5.1/1	Parts list : TUN.1324638 - TUN.1324638		12/22/2022	MKLEPADLO	
&EPB+V1WR1UQ51UQ5.2/1	Parts list : TUN.1324638 - TUN.1324638		12/22/2022	MKLEPADLO	
&EPB+V1WR1UQ51UQ5.3/1	Parts list : TUN.1324638 - TUN.1324638		12/22/2022	MKLEPADLO	
&EPB+V1WR1UQ51UQ5.4/1	Parts list : TUN.1324638 - TUN.1324638		12/22/2022	MKLEPADLO	
&EPB+V1WR1UQ51UQ5.5/1	Parts list : TUN.1324644 - TUN.1324644		12/22/2022	MKLEPADLO	
&EPB+V1WR1UQ51UQ5.6/1	Parts list : TUN.1324644 - TUN.1324644		12/22/2022	MKLEPADLO	
&EPB+V1WR1UQ51UQ6.1/1	Parts list : TUN.16324644 - TUN.16324644		12/22/2022	MKLEPADLO	
&EPB+V1WR1UQ51UQ6.2/1	Parts list : TUN.16324644 - TUN.16324644		12/22/2022	MKLEPADLO	
&EPB+V1WR1UQ51UQ6.3/1	Parts list : TUN.16324644 - TUN.16324644		12/22/2022	MKLEPADLO	
&EPB+V1WR1UQ51UQ6.4/1	Parts list : TUN.16324644 - TUN.16324644		12/22/2022	MKLEPADLO	
&EPB+V1WR1UQ51UQ6.5/1	Parts list : TUN.1324644 - TUN.1324644		12/22/2022	MKLEPADLO	
&EPB+V1WR1UQ51UQ6.6/1	Parts list : TUN.1324644 - TUN.1324644		12/22/2022	MKLEPADLO	
&EPB+V1WR1UQ52/1	Parts list : TUR.1644979 - TUR.RSM-2RKM 50		12/22/2022	MKLEPADLO	
&EPB+V1WR1UQ52UQ1.1/1	Parts list : TUN.1324638 - TUN.1324638		12/22/2022	MKLEPADLO	
&EPB+V1WR1UQ52UQ1.2/1	Parts list : TUN.1324638 - TUN.1324638		12/22/2022	MKLEPADLO	
&EPB+V1WR1UQ52UQ2.1/1	Parts list : TUN.1324638 - TUN.1324638		12/22/2022	MKLEPADLO	

Table of contents

Column X: An automatically generated page was edited

F06_001

Page	Page description	supplementary page field	Date	Edited by	X
&EPB+V1WR1UQ52UQ2.2/1	Parts list : TUN.1324638 - TUN.1324638		12/22/2022	MKLEPADLO	
&EPB+V1WR1UQ52UQ3.1/1	Parts list : TUR.1625891 - TUR.VB2-FSM 4.4/2FKM 4/S3450		12/22/2022	MKLEPADLO	
&EPB+V1WR1UQ52UQ3.2/1	Parts list : TUR.1625891 - TUR.VB2-FSM 4.4/2FKM 4/S3450		12/22/2022	MKLEPADLO	
&EPB+V1WR1UQ52UQ3.3/1	Parts list : TUR.1625891 - TUR.VB2-FSM 4.4/2FKM 4/S3450		12/22/2022	MKLEPADLO	
&EPB+V1WR1UQ52UQ3.4/1	Parts list : TUR.1625891 - TUR.VB2-FSM 4.4/2FKM 4/S3450		12/22/2022	MKLEPADLO	
&EPB+V1WR1UQ52UQ4.1/1	Parts list : TUN.1324644 - TUN.1324644		12/22/2022	MKLEPADLO	
&EPB+V1WR1UQ52UQ4.2/1	Parts list : TUN.1324644 - TUN.1324644		12/22/2022	MKLEPADLO	
&EPB+V1WR1UQ52UQ4.3/1	Parts list : TUN.1324644 - TUN.1324644		12/22/2022	MKLEPADLO	
&EPB+V1WR1UQ52UQ4.4/1	Parts list : TUN.1324644 - TUN.1324644		12/22/2022	MKLEPADLO	
&EPB+V1WR1UQ52UQ5.1/1	Parts list : TUN.1324644 - TUN.1324644		12/22/2022	MKLEPADLO	
&EPB+V1WR1UQ52UQ5.2/1	Parts list : TUN.1324644 - TUN.1324644		12/22/2022	MKLEPADLO	
&EPB+V1WR1UQ52UQ6.1/1	Parts list : TUN.1324638 - TUN.1324638		12/22/2022	MKLEPADLO	
&EPB+V1WR1UQ52UQ6.2/1	Parts list : TUN.1324638 - TUN.1324638		12/22/2022	MKLEPADLO	
&EPB+V1WR1UQ52UQ6.3/1	Parts list : TUN.1324638 - TUN.1324638		12/22/2022	MKLEPADLO	
&EPB+V1WR1UQ52UQ6.4/1	Parts list : TUN.1324638 - TUN.1324638		12/22/2022	MKLEPADLO	
&EPB+V1WR1UQ52UQ7.1/1	Parts list : TUN.1324644 - TUN.1324644		12/22/2022	MKLEPADLO	
&EPB+V1WR1UQ52UQ7.2/1	Parts list : TUN.1324644 - TUN.1324644		12/22/2022	MKLEPADLO	
&EPB+V1WR1UQ52UQ7.3/1	Parts list : TUN.1324644 - TUN.1324644		12/22/2022	MKLEPADLO	
&EPB+V1WR1UQ52UQ8.1/1	Parts list : SMC.M9PW - SMC.M9PW		12/22/2022	MKLEPADLO	
&EPB+V1WR1UQ52UQ9.1/1	Parts list : TUN.1324644 - TUN.1324644		12/22/2022	MKLEPADLO	
&EPB+V1WR1UQ52UQ9.2/1	Parts list : TUN.1324644 - TUN.1324644		12/22/2022	MKLEPADLO	
&EPB+V1WR1UQ52UQ9.3/1	Parts list : TUN.1324644 - TUN.1324644		12/22/2022	MKLEPADLO	
&EPB+V1WR1UQ52UQ9.4/1	Parts list : TUN.1324644 - TUN.1324644		12/22/2022	MKLEPADLO	
&EPB+V1WR1UQ52UQ9.5/1	Parts list : TUN.1324644 - TUN.1324644		12/22/2022	MKLEPADLO	
&EPB+V1WR1UQ52UQ10.1/1	Parts list : TUN.1324644 - TUN.1324644		12/22/2022	MKLEPADLO	
&EPB+V1WR1UQ52UQ10.2/1	Parts list : TUN.1324644 - TUN.1324644		12/22/2022	MKLEPADLO	
&EPB+V1WR1UQ52UQ10.3/1	Parts list : TUN.1324644 - TUN.1324644		12/22/2022	MKLEPADLO	
&EPB+V1WR1UQ52UQ11.1/1	Parts list : SMC.M9PW - SMC.M9PW		12/22/2022	MKLEPADLO	
&EPB+V1WR1UQ52UQ12.1/1	Parts list : TUN.1324644 - TUN.1324644		12/22/2022	MKLEPADLO	
&EPB+V1WR1UQ52UQ12.2/1	Parts list : TUN.1324644 - TUN.1324644		12/22/2022	MKLEPADLO	
&EPB+V1WR1UQ52UQ12.3/1	Parts list : TUN.1324644 - TUN.1324644		12/22/2022	MKLEPADLO	
&EPB+V1WR1UQ52UQ12.4/1	Parts list : TUN.1324644 - TUN.1324644		12/22/2022	MKLEPADLO	
&EPB+V1WR1UQ52UQ12.5/1	Parts list : TUN.1324644 - TUN.1324644		12/22/2022	MKLEPADLO	

Table of contents

Column X: An automatically generated page was edited

F06_001

Page	Page description	supplementary page field	Date	Edited by	X
&EPB+V1WR1UQ52UQ13.1/1	Parts list : TUN.1324644 - TUN.1324644		12/22/2022	MKLEPADLO	
&EPB+V1WR1UQ52UQ13.2/1	Parts list : TUN.1324638 - TUN.1324638		12/22/2022	MKLEPADLO	
&EPB+V1WR1UQ52UQ13.3/1	Parts list : TUN.1324644 - TUN.1324644		12/22/2022	MKLEPADLO	
&EPB+V1WR1UQ52UQ13.4/1	Parts list : TUN.1324644 - TUN.1324644		12/22/2022	MKLEPADLO	
&EPB+V1WR1UQ52UQ13.5/1	Parts list : TUN.1324638 - TUN.1324638		12/22/2022	MKLEPADLO	
&EPB+V1WR1UQ52UQ13.6/1	Parts list : TUN.1324644 - TUN.1324644		12/22/2022	MKLEPADLO	
&EPB+V1WR1UQ52UQ14.1/1	Parts list : WEL.WWS001A - WEL.WWS001A		12/22/2022	MKLEPADLO	
&EPB+V1WR1UQ52UQ14.2/1	Parts list : WEL.WWS001A - WEL.WWS001A		12/22/2022	MKLEPADLO	
&EPB+V1WR2/1	Parts list : A-B.440F-M2036HYNN - MURR.55556		12/22/2022	MKLEPADLO	
&EPB+V1WR2UQ51/1	Parts list : TUR.1627297 - FES.549335		12/22/2022	MKLEPADLO	
&EPB+V1WR2UQ51UQ1.1/1	Parts list : TUN.1324638 - TUN.1324638		12/22/2022	MKLEPADLO	
&EPB+V1WR2UQ51UQ1.2/1	Parts list : TUN.1324638 - TUN.1324638		12/22/2022	MKLEPADLO	
&EPB+V1WR2UQ51UQ1.3/1	Parts list : TUN.1324638 - TUN.1324638		12/22/2022	MKLEPADLO	
&EPB+V1WR2UQ51UQ1.4/1	Parts list : TUN.1324638 - TUN.1324638		12/22/2022	MKLEPADLO	
&EPB+V1WR2UQ51UQ2.1/1	Parts list : TUN.1324638 - TUN.1324638		12/22/2022	MKLEPADLO	
&EPB+V1WR2UQ51UQ2.2/1	Parts list : TUN.1324638 - TUN.1324638		12/22/2022	MKLEPADLO	
&EPB+V1WR2UQ51UQ2.3/1	Parts list : TUN.1324638 - TUN.1324638		12/22/2022	MKLEPADLO	
&EPB+V1WR2UQ51UQ2.4/1	Parts list : TUN.1324638 - TUN.1324638		12/22/2022	MKLEPADLO	
&EPB+V1WR2UQ51UQ2.5/1	Parts list : WEL.WWS001A - WEL.WWS001A		12/22/2022	MKLEPADLO	
&EPB+V1WR2UQ51UQ2.6/1	Parts list : WEL.WWS001A - WEL.WWS001A		12/22/2022	MKLEPADLO	
&EPB+V1WR2UQ51UQ3.1/1	Parts list : TUN.1324638 - TUN.1324638		12/22/2022	MKLEPADLO	
&EPB+V1WR2UQ51UQ3.2/1	Parts list : TUN.1324638 - TUN.1324638		12/22/2022	MKLEPADLO	
&EPB+V1WR2UQ51UQ3.3/1	Parts list : TUN.1324638 - TUN.1324638		12/22/2022	MKLEPADLO	
&EPB+V1WR2UQ51UQ3.4/1	Parts list : TUN.1324638 - TUN.1324638		12/22/2022	MKLEPADLO	
&EPB+V1WR2UQ51UQ3.5/1	Parts list : TUN.1324644 - TUN.1324644		12/22/2022	MKLEPADLO	
&EPB+V1WR2UQ51UQ3.6/1	Parts list : TUN.1324644 - TUN.1324644		12/22/2022	MKLEPADLO	
&EPB+V1WR2UQ52/1	Parts list : TUR.1627297 - FES.549335		12/22/2022	MKLEPADLO	
&EPB+V1WR2UQ52UQ1.1/1	Parts list : TUN.1324638 - TUN.1324638		12/22/2022	MKLEPADLO	
&EPB+V1WR2UQ52UQ1.2/1	Parts list : TUN.1324644 - TUN.1324644		12/22/2022	MKLEPADLO	
&EPB+V1WR2UQ52UQ1.3/1	Parts list : TUN.1324638 - TUN.1324638		12/22/2022	MKLEPADLO	
&EPB+V1WR2UQ52UQ1.4/1	Parts list : TUN.1324638 - TUN.1324638		12/22/2022	MKLEPADLO	
&EPB+V1WR2UQ52UQ1.5/1	Parts list : TUN.1324644 - TUN.1324644		12/22/2022	MKLEPADLO	
&EPB+V1WR2UQ52UQ1.6/1	Parts list : TUN.1324644 - TUN.1324644		12/22/2022	MKLEPADLO	

Table of contents

Column X: An automatically generated page was edited

F06_001

Page	Page description	supplementary page field	Date	Edited by	X
&EPB+V1WR2UQ52UQ2.1/1	Parts list : TUN.1324638 - TUN.1324638		12/22/2022	MKLEPADLO	
&EPB+V1WR2UQ52UQ2.2/1	Parts list : TUN.1324638 - TUN.1324638		12/22/2022	MKLEPADLO	
&EPB+V1WR2UQ52UQ2.3/1	Parts list : TUN.1324638 - TUN.1324638		12/22/2022	MKLEPADLO	
&EPB+V1WR2UQ52UQ2.4/1	Parts list : TUN.1324638 - TUN.1324638		12/22/2022	MKLEPADLO	
&EPB+V1WR2UQ52UQ3.1/1	Parts list : TUN.1324638 - TUN.1324638		12/22/2022	MKLEPADLO	
&EPB+V1WR2UQ52UQ3.2/1	Parts list : TUN.1324638 - TUN.1324638		12/22/2022	MKLEPADLO	
&EPB+V1WR2UQ52UQ3.3/1	Parts list : TUN.1324638 - TUN.1324638		12/22/2022	MKLEPADLO	
&EPB+V1WR2UQ52UQ3.4/1	Parts list : TUN.1324638 - TUN.1324638		12/22/2022	MKLEPADLO	
&ETT/1	Terminal line-up diagram =KF0KF1+UC31-PC1		12/22/2022	MKLEPADLO	
&ETT/2	Terminal line-up diagram =KF0KF1+UC31-PH1		12/22/2022	MKLEPADLO	
&ETT/3	Terminal line-up diagram =KF0WC3+UC31-XD1		12/22/2022	MKLEPADLO	
&ETT/4	Terminal line-up diagram =KF0WC3+UC31-XD2		12/22/2022	MKLEPADLO	
&ETT/5	Terminal line-up diagram =KF0WC4+UC31-XD11		12/22/2022	MKLEPADLO	
&ETT/6	Terminal line-up diagram =KF0WC4+UC31-XD12		12/22/2022	MKLEPADLO	
&ETT/7	Terminal line-up diagram =KF0WC4+UC31-XD13		12/22/2022	MKLEPADLO	
&ETT/8	Terminal line-up diagram =KF0WC4+UC31-XD14		12/22/2022	MKLEPADLO	
&ETT/9	Terminal line-up diagram =V1WC1+V1UC11-PE		12/22/2022	MKLEPADLO	
&ETT/10	Terminal line-up diagram =V1WC2+V1UC11-XD1		12/22/2022	MKLEPADLO	
&ETT/11	Terminal line-up diagram =V1WC2+V1UC11-XD2		12/22/2022	MKLEPADLO	
&ETT/12	Terminal line-up diagram =V1WC2+V1UC11-XD3		12/22/2022	MKLEPADLO	
&ETT/13	Terminal line-up diagram =V1WC3+V1UC11-XD1		12/22/2022	MKLEPADLO	
&ETT/14	Terminal line-up diagram =V1WC3+V1UC11-XD2		12/22/2022	MKLEPADLO	
&ETT/15	Terminal line-up diagram =V1WC3+V1UC11-XD3		12/22/2022	MKLEPADLO	
&ETT/16	Terminal line-up diagram =V1WC4+V1UC11-KF11.14		12/22/2022	MKLEPADLO	
&ETT/17	Terminal line-up diagram =V1WC4+V1UC11-XD5		12/22/2022	MKLEPADLO	
&ETT/18	Terminal line-up diagram =V1WC4+V1UC11-XD6		12/22/2022	MKLEPADLO	
&ETT/19	Terminal line-up diagram =V1WC4+V1UC11-XD10		12/22/2022	MKLEPADLO	
&ETT/20	Terminal line-up diagram =V1WC4+V1UC11-XD11		12/22/2022	MKLEPADLO	
&ETT/21	Terminal line-up diagram =V1WC4+V1UC11-XD12		12/22/2022	MKLEPADLO	
&ETT/22	Terminal line-up diagram =V1WC4+V1UC11-XD13		12/22/2022	MKLEPADLO	
&ETT/23	Terminal line-up diagram =V1WC4+V1UC11-XD14		12/22/2022	MKLEPADLO	
&ETT/24	Terminal line-up diagram =V1WC4+V1UC11-XD20		12/22/2022	MKLEPADLO	
&ETT/25	Terminal line-up diagram =V1WC4+V1UC11-XD51		12/22/2022	MKLEPADLO	

Table of contents

Column X: An automatically generated page was edited

F06_001

Page	Page description	supplementary page field	Date	Edited by	X
&ETT/26	Terminal line-up diagram =V1WC4+V1UC11-XD52		12/22/2022	MKLEPADLO	
&ETT/27	Terminal line-up diagram =V1WC4+V1UC11-XD53		12/22/2022	MKLEPADLO	
&ETT/28	Terminal line-up diagram =V1WC4+V1UC11-XD54		12/22/2022	MKLEPADLO	
&ETT/29	Terminal line-up diagram =V1WC3+V1UC14-XD1		12/22/2022	MKLEPADLO	
&ETT/30	Terminal line-up diagram =V1WC4+V1UC14-KF14.12		12/22/2022	MKLEPADLO	
&ETT/31	Terminal line-up diagram =V1WC4+V1UC14-XD5		12/22/2022	MKLEPADLO	
&ETT/32	Terminal line-up diagram =V1WC4+V1UC14-XD6		12/22/2022	MKLEPADLO	
&ETT/33	Terminal line-up diagram =V1WC4+V1UC14-XD10		12/22/2022	MKLEPADLO	
&ETT/34	Terminal line-up diagram =V1WC4+V1UC14-XD11		12/22/2022	MKLEPADLO	
&ETT/35	Terminal line-up diagram =V1WC4+V1UC14-XD12		12/22/2022	MKLEPADLO	
&ETT/36	Terminal line-up diagram =V1WC4+V1UC14-XD13		12/22/2022	MKLEPADLO	
&ETT/37	Terminal line-up diagram =V1WC4+V1UC14-XD14		12/22/2022	MKLEPADLO	
&ETT/38	Terminal line-up diagram =V1WC4+V1UC14-XD15		12/22/2022	MKLEPADLO	
&ETT/39	Terminal line-up diagram =V1WC4+V1UC14-XD16		12/22/2022	MKLEPADLO	
&ETT/40	Terminal line-up diagram =V1WC4+V1UC14-XD17		12/22/2022	MKLEPADLO	
&ETT/41	Terminal line-up diagram =V1WC4+V1UC14-XD18		12/22/2022	MKLEPADLO	
&ETT/42	Terminal line-up diagram =V1WC4+V1UC14-XD51		12/22/2022	MKLEPADLO	
&ETT/43	Terminal line-up diagram =V1WC4+V1UC14-XD52		12/22/2022	MKLEPADLO	
&ETT/44	Terminal line-up diagram =V1WC4+V1UC14-XD53		12/22/2022	MKLEPADLO	
&ETT/45	Terminal line-up diagram =V1WC4+V1UC14-XD54		12/22/2022	MKLEPADLO	
&ETT/46	Terminal line-up diagram =V1WC4+V1UC46-XD11		12/22/2022	MKLEPADLO	
&ETT/47	Terminal line-up diagram =V1WC4+V1UC46-XD14		12/22/2022	MKLEPADLO	
&ETT/48	Terminal line-up diagram =V1WC4+V1UC46-XD51.1		12/22/2022	MKLEPADLO	
&ETT/49	Terminal line-up diagram =V1WC4+V1UC46-XD52.1		12/22/2022	MKLEPADLO	
&ETT/50	Terminal line-up diagram =V1WC4+V1UC46-XD53.1		12/22/2022	MKLEPADLO	
&ETT/51	Terminal line-up diagram =V1WC4+V1UC46-XD54.1		12/22/2022	MKLEPADLO	
&ETT/52	Terminal line-up diagram =V1WC4+V1UC47-XD11		12/22/2022	MKLEPADLO	
&ETT/53	Terminal line-up diagram =V1WC4+V1UC47-XD14		12/22/2022	MKLEPADLO	
&ETT/54	Terminal line-up diagram =V1WC4+V1UC47-XD51.1		12/22/2022	MKLEPADLO	
&ETT/55	Terminal line-up diagram =V1WC4+V1UC47-XD52.1		12/22/2022	MKLEPADLO	
&ETT/56	Terminal line-up diagram =V1WC4+V1UC47-XD53.1		12/22/2022	MKLEPADLO	
&ETT/57	Terminal line-up diagram =V1WC4+V1UC47-XD54.1		12/22/2022	MKLEPADLO	
&ETT/58	Terminal line-up diagram =V1PZ1PF1+V1UC61-XD11		12/22/2022	MKLEPADLO	

Table of contents

Column X: An automatically generated page was edited

F06_001

Page	Page description	supplementary page field	Date	Edited by	X
&ETT/59	Terminal line-up diagram =V1PZ1PF2+V1UC62-XD11		12/22/2022	MKLEPADLO	
&EXX/1	Summarized parts list : TS 35_7,5 - SIE.6ES7155-6AA01-0BN0		12/22/2022	MKLEPADLO	
&EXX/2	Summarized parts list : SIE.6ES7131-6BH01-0BA0 - SIE.6EP1961-2BA41		12/22/2022	MKLEPADLO	
&EXX/3	Summarized parts list : SIE.6EP4134-3AB00-2AY0 - EMPD3FBCB-060A-M		12/22/2022	MKLEPADLO	
&EXX/4	Summarized parts list : BAN.SLSCP30-1200P44NT - TUR.RSF 106-2M/14.5/NPT/CS16486		12/22/2022	MKLEPADLO	
&EXX/5	Summarized parts list : SIE.6AV2124-0GC01-0AX0 - SIE.3VA9177-0TB10		12/22/2022	MKLEPADLO	
&EXX/6	Summarized parts list : PTN102-3K - EMPD3FBCB-100A-M		12/22/2022	MKLEPADLO	
&EXX/7	Summarized parts list : P+F.SJ15-E2-V1-Y40122 - RIT.SETS8205SID5		12/22/2022	MKLEPADLO	
&EYY/1	Terminal-strip overview : =KF0KF1+UC31-PC1 - =KF0WC4+UC31-XD14		12/22/2022	MKLEPADLO	
&EYY/2	Terminal-strip overview : =V1WC1+V1UC11-PE - =V1WC4+V1UC11-XD54		12/22/2022	MKLEPADLO	
&EYY/3	Terminal-strip overview : =V1WC3+V1UC14-XD1 - =V1WC4+V1UC14-XD54		12/22/2022	MKLEPADLO	
&EYY/4	Terminal-strip overview : =V1WC4+V1UC46-XD11 - =V1WC4+V1UC46-XD54.1		12/22/2022	MKLEPADLO	
&EYY/5	Terminal-strip overview : =V1WC4+V1UC47-XD11 - =V1WC4+V1UC47-XD54.1		12/22/2022	MKLEPADLO	
&EYY/6	Terminal-strip overview : =V1PZ1PF1+V1UC61-XD11 - =V1PZ1PF1+V1UC61-XD11		12/22/2022	MKLEPADLO	
&EYY/7	Terminal-strip overview : =V1PZ1PF2+V1UC62-XD11 - =V1PZ1PF2+V1UC62-XD11		12/22/2022	MKLEPADLO	
&EAZ/1	Amendment page		12/22/2022	MKLEPADLO	
&EAZ/2	Amendment page		12/22/2022	MKLEPADLO	
&EAZ/3	Amendment page		12/22/2022	MKLEPADLO	
&EAZ/4	Amendment page		12/22/2022	MKLEPADLO	
&EAZ/5	Amendment page		12/22/2022	MKLEPADLO	

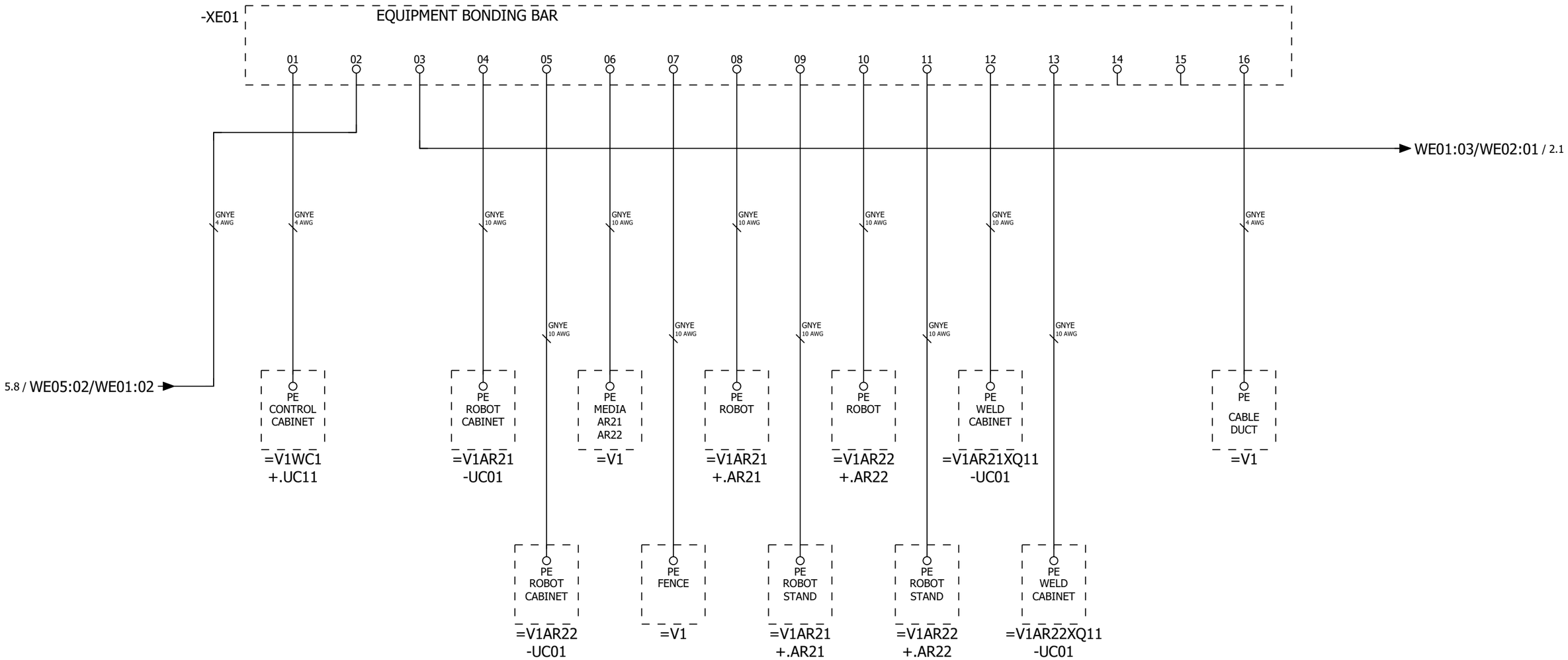

&EAB+/19

2

			Date	12/22/2022	Volvo Trucks North America	Valiant TMS	EQUIPMENT BONDING	Drawing name: =2V13&EFS_EL		= FQ99V1	
			Ed.	MKLEPADLO						+ V1	
			Appr		Sub-Floor Members			Document type: EFA	Project nr: 22-16146		Page 1
Modification	Date	Name	Original		Replacement of / Replaced by	Scale 1:1					614

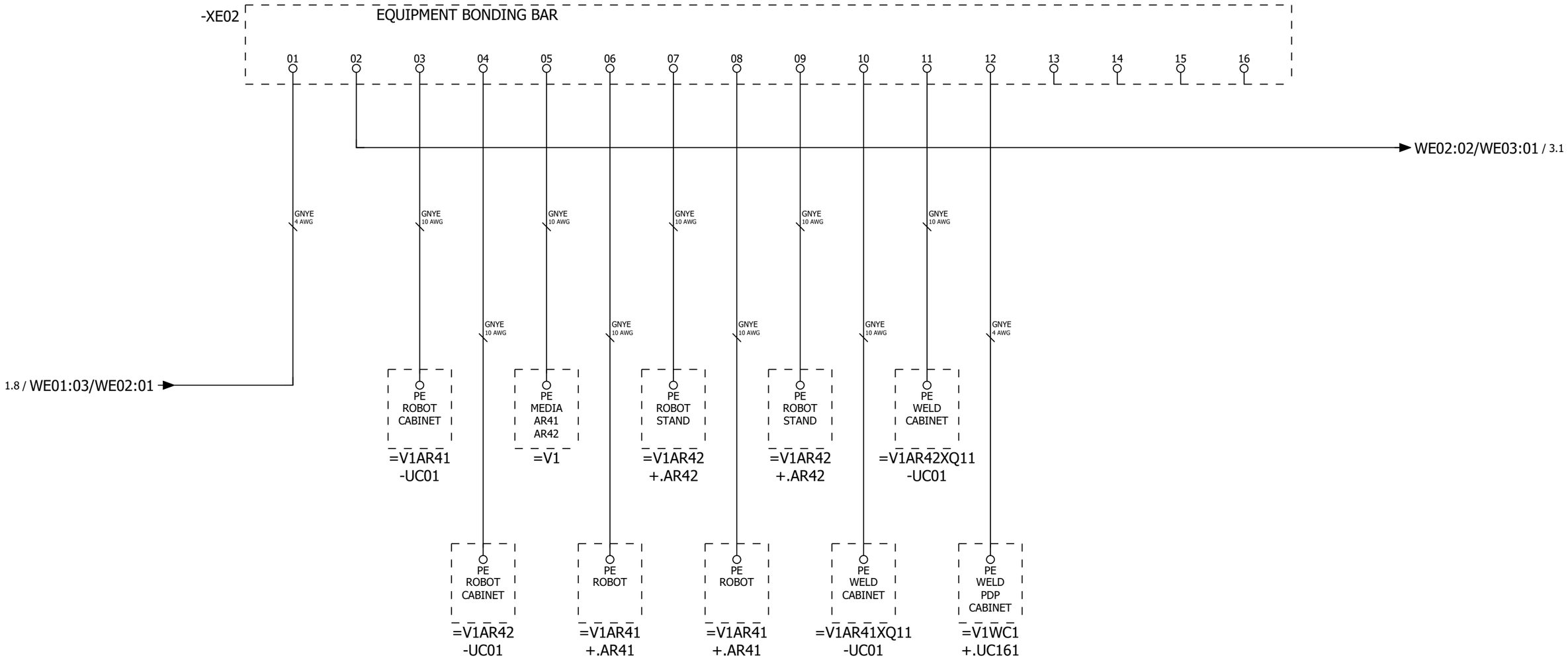

			Date	12/22/2022	Volvo Trucks North America	Valiant TMS	EQUIPMENT BONDING	Drawing name: =2V13&EFS_EL		= FQ99V1	
			Ed.	MKLEPADLO						+ V1	
			Appr		Sub-Floor Members			Document type: EFA	Project nr: 22-16146	Page	2
Modification	Date	Name	Original		Replacement of / Replaced by	Scale 1:1					614

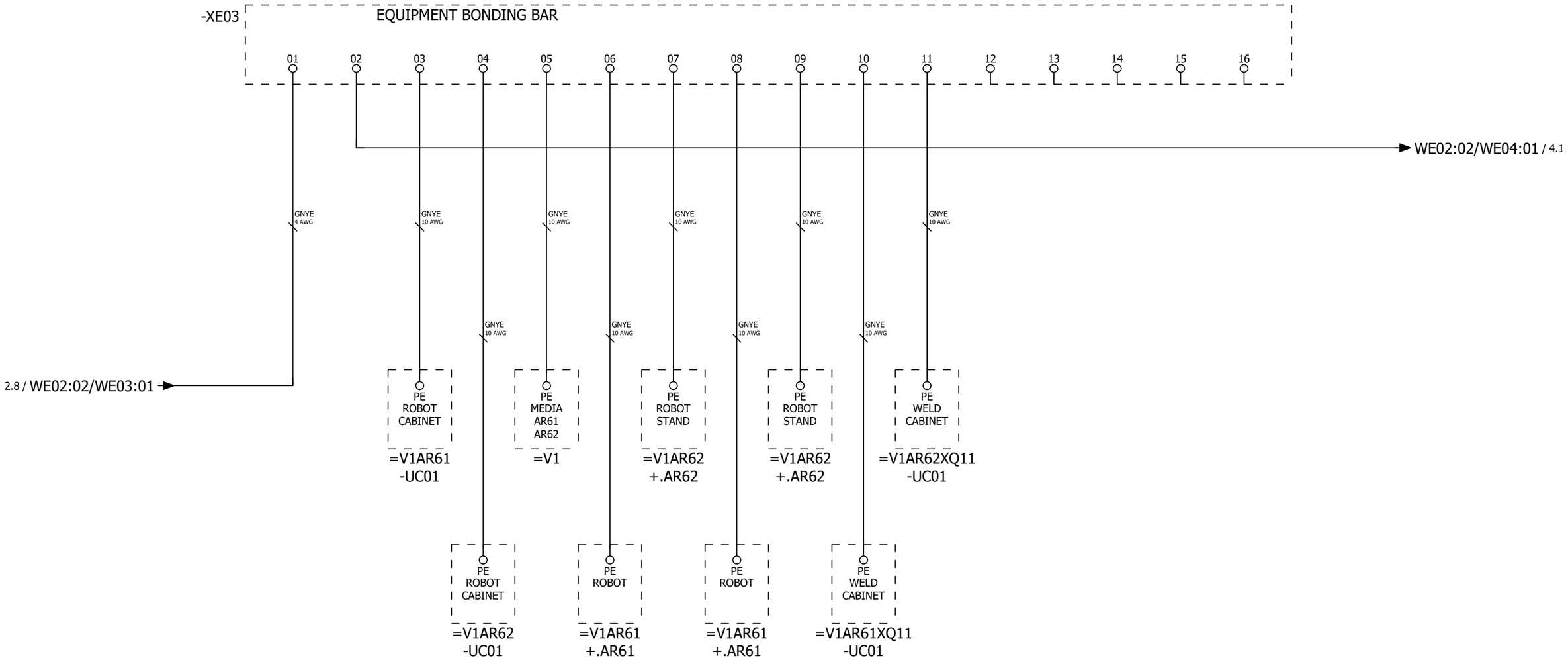

			Date	12/22/2022	Volvo Trucks North America	Valiant TMS	EQUIPMENT BONDING	Drawing name: =2V13&EFS_EL	= FQ99V1		
			Ed.	MKLEPADLO					+ V1		
			Appr		Sub-Floor Members			Document type: EFA	Project nr: 22-16146	Page	3
Modification	Date	Name	Original		Replacement of / Replaced by	Scale 1:1					614

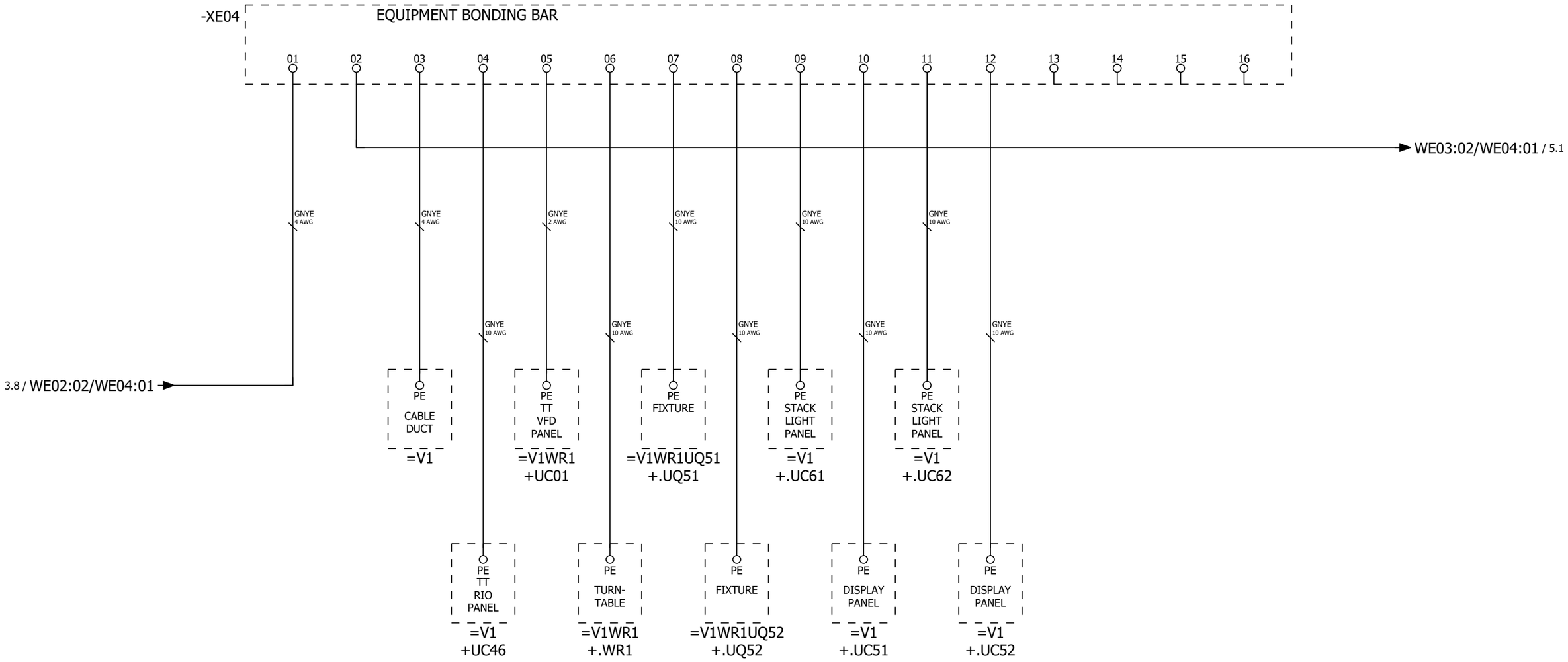

			Date	12/22/2022	Volvo Trucks North America	Valiant TMS	EQUIPMENT BONDING	Drawing name: =2V13&EFS_EL		= FQ99V1	
			Ed.	MKLEPADLO						+ V1	
			Appr		Sub-Floor Members			Document type: EFA	Project nr: 22-16146		Page 4
Modification	Date	Name	Original		Replacement of / Replaced by	Scale 1:1					614

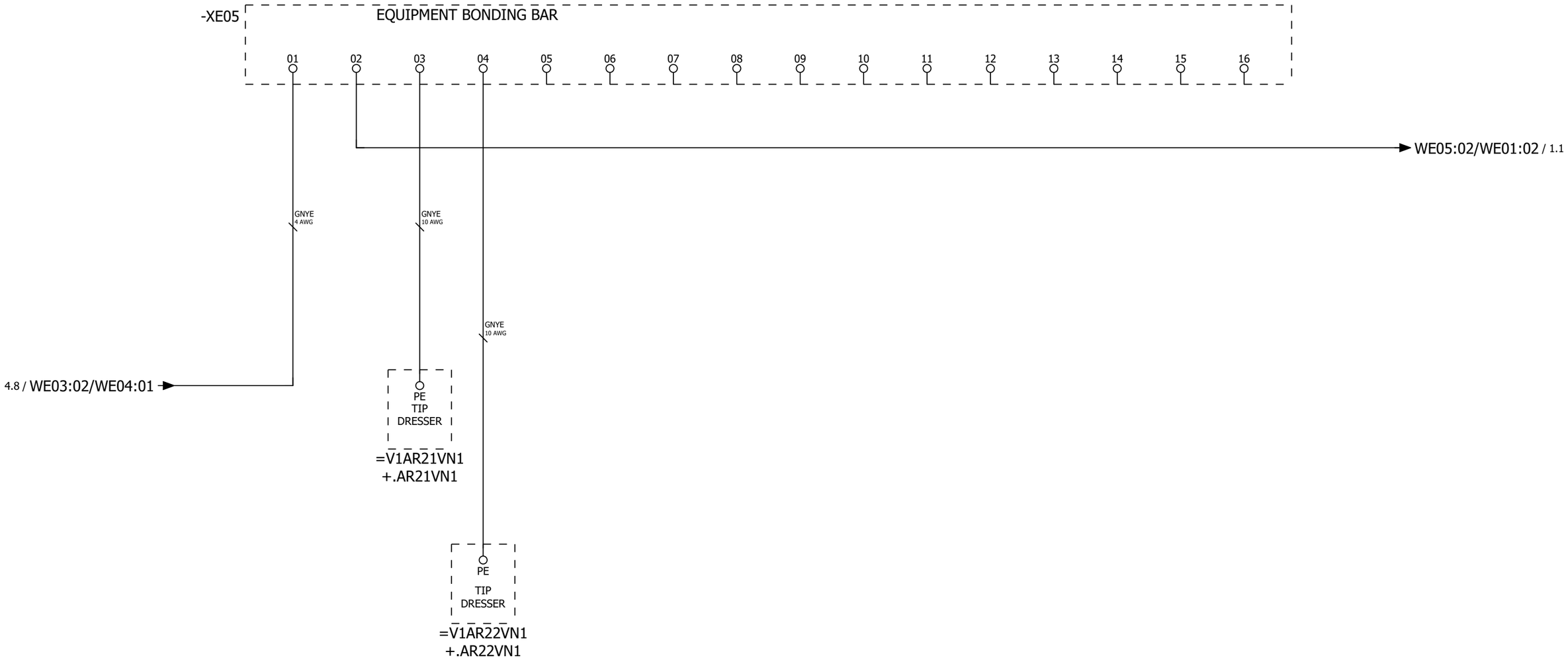

4

&EFS=KF0FQ0+UC31/1

			Date	12/22/2022	Volvo Trucks North America	Valiant TMS	EQUIPMENT BONDING	Drawing name: =2V13&EFS_EL		= FQ99V1	
			Ed.	MKLEPADLO						+ V1	
			Appr		Sub-Floor Members			Document type: EFA	Project nr: 22-16146	Page	5
Modification	Date	Name	Original		Replacement of / Replaced by	Scale 1:1					614

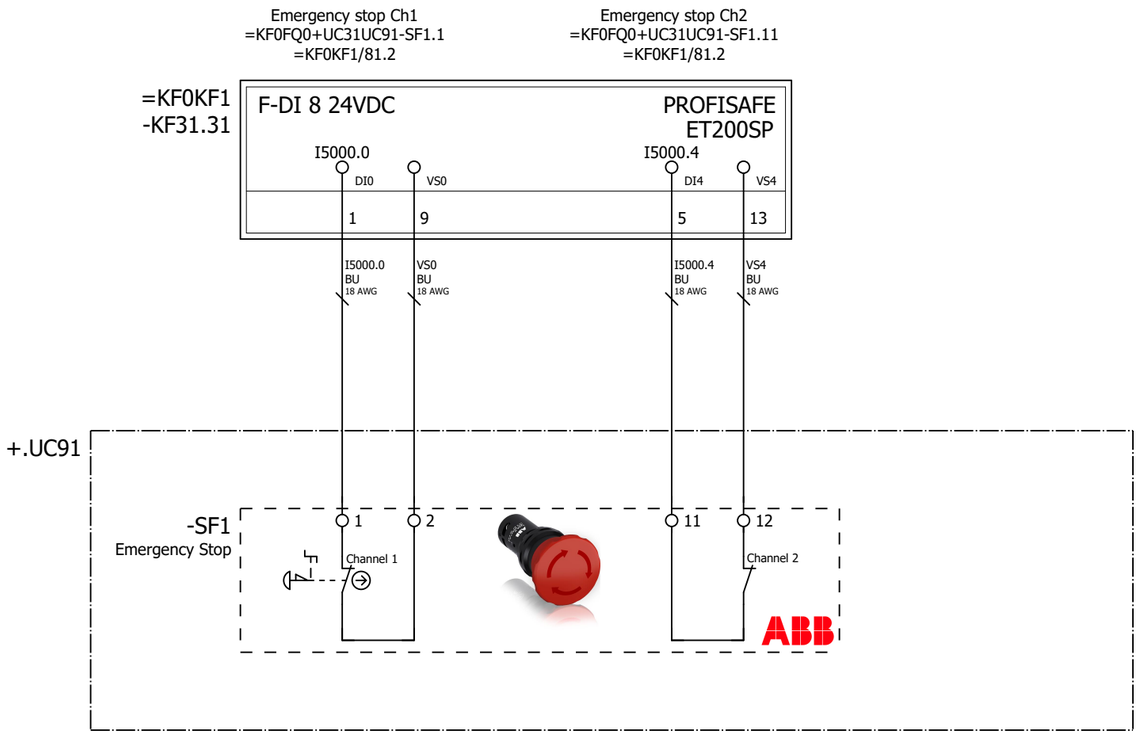

&EFA=FQ99V1+V1/5

=KF0KF1/1

			Date	12/22/2022	Volvo Trucks North America	Valiant TMS	Operating box UC91 MOP	Drawing name: =2V13&EFS_EL		= KF0FQ0	
			Ed.	MKLEPADLO						+ UC31	
			Appr		Sub-Floor Members			Document type: EFS	Project nr: 22-16146		Page 1
Modification	Date	Name	Original		Replacement of / Replaced by	Scale 1:1					614

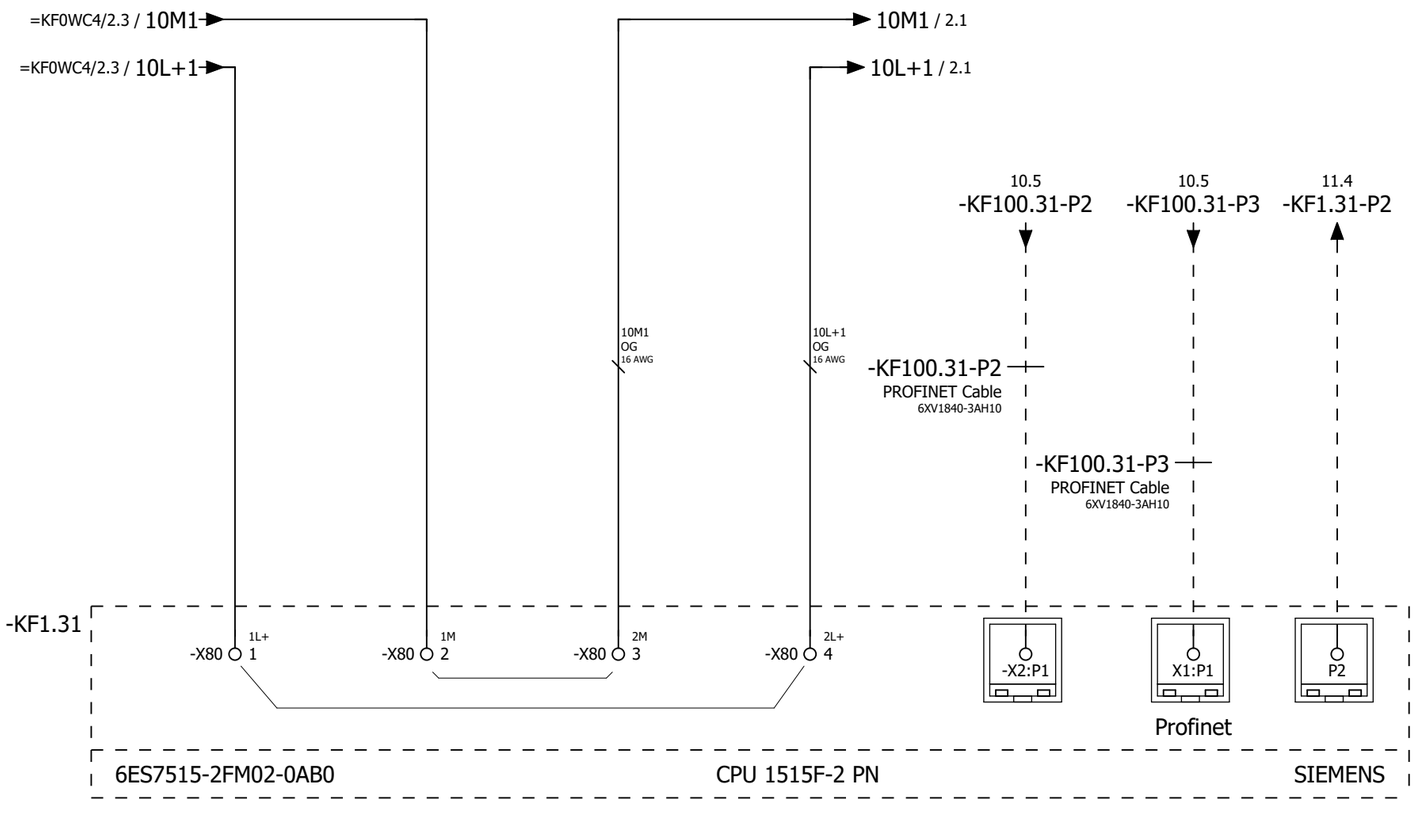

=KF0FQ0/1

2

			Date	12/22/2022	Volvo Trucks North America	Valiant TMS	CPU 1515-F-2PN, Failsafe	Drawing name: =2V13&EFS_EL	= KF0KF1		
			Ed.	MKLEPADLO					+ UC31		
			Appr		Sub-Floor Members			Document type: EFS	Project nr: 22-16146	Page	1
Modification	Date	Name	Original		Replacement of / Replaced by	Scale 1:1					614

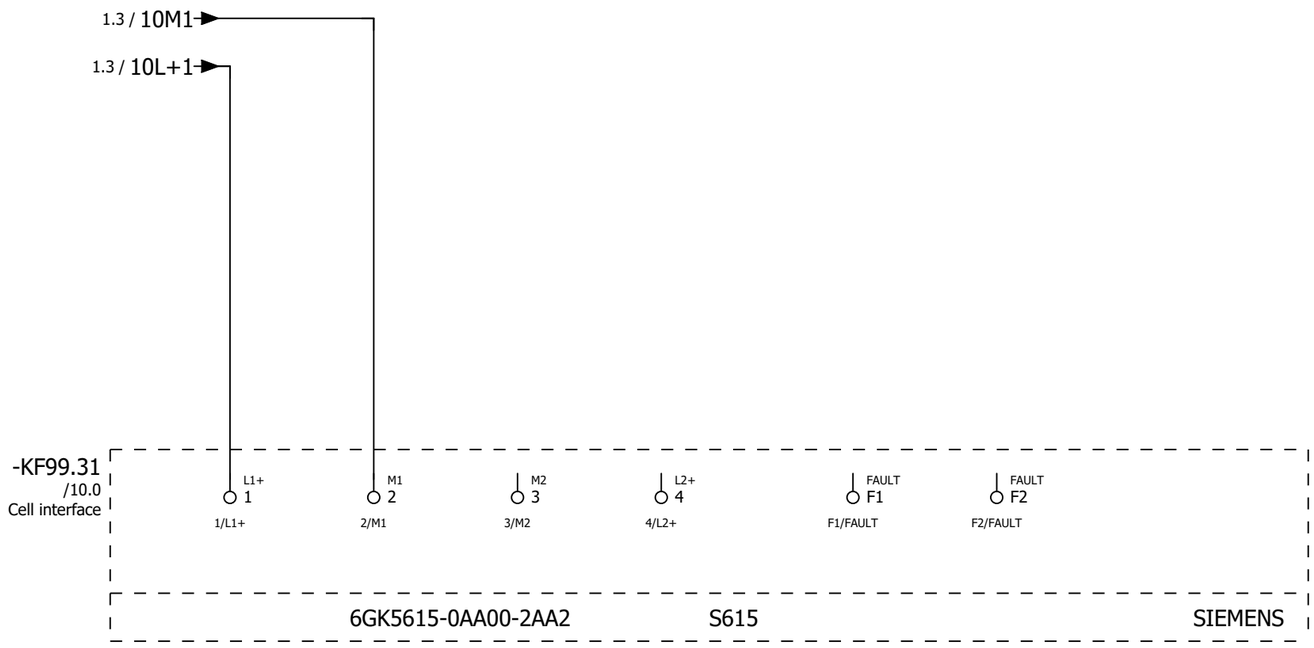

1 3

			Date	12/22/2022	Volvo Trucks North America	Valiant TMS	Cell interface S615	Drawing name: =2V13&EFS_EL		= KF0KF1	
			Ed.	MKLEPADLO						+ UC31	
			Appr		Sub-Floor Members			Document type: EFS	Project nr: 22-16146	Page	2
Modification	Date	Name	Original		Replacement of / Replaced by	Scale 1:1					614

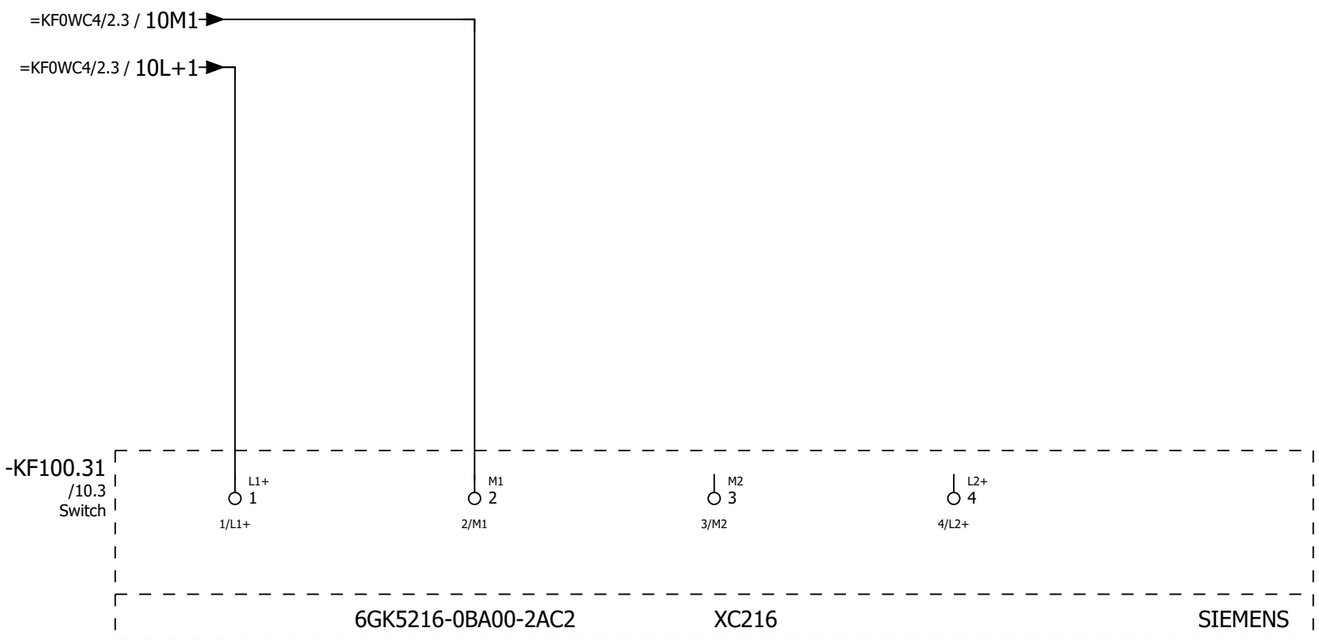

			Date	12/22/2022	Volvo Trucks North America		Valiant TMS	Switch, Scalance XC216	Drawing name: =2V13&EFS_EL		= KF0KF1
			Ed.	MKLEPADLO							+ UC31
			Appr		Sub-Floor Members				Document type: EFS	Project nr: 22-16146	Page 3
Modification	Date	Name	Original		Replacement of	Replaced by	Scale 1:1				614

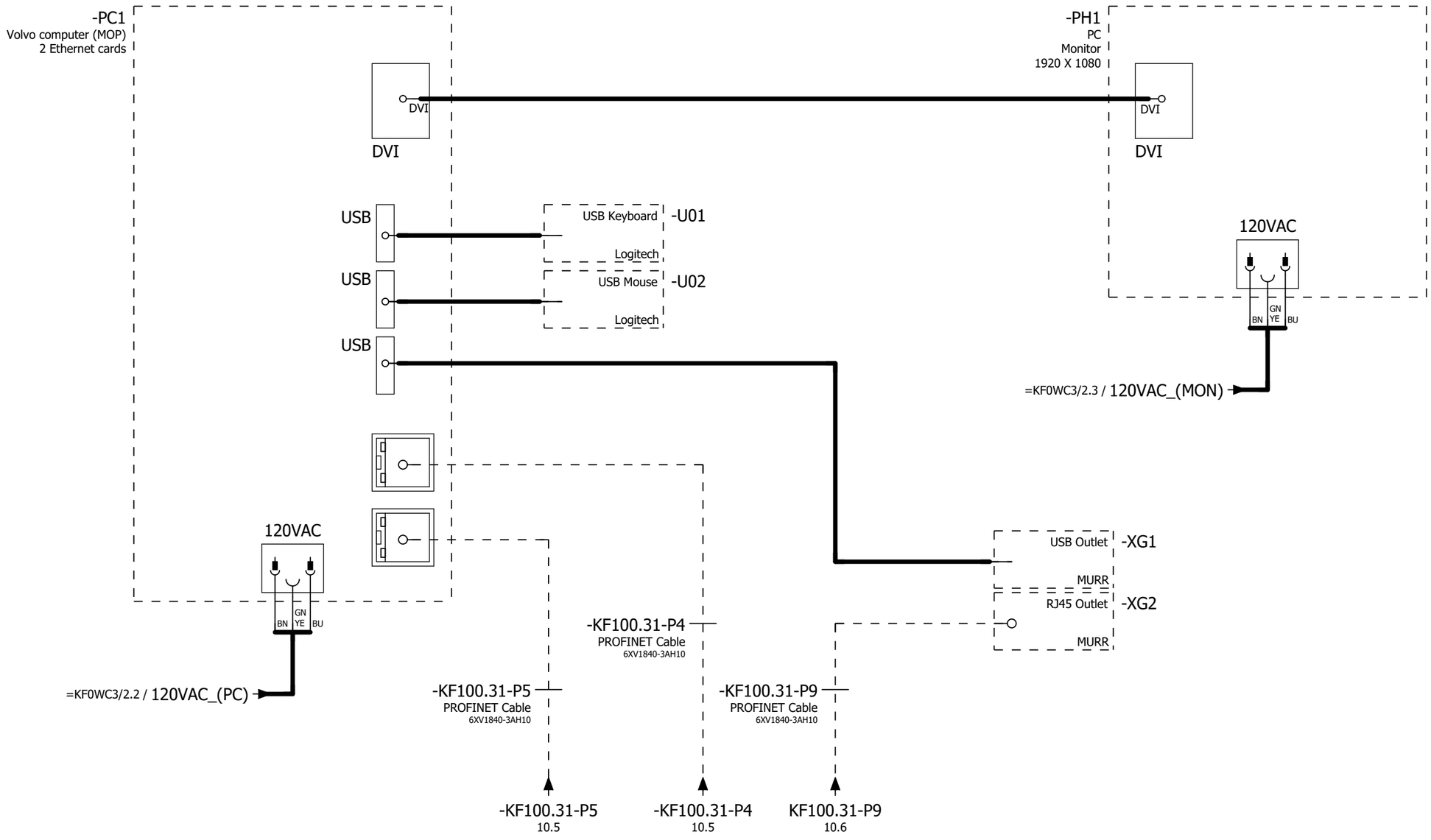
-PC1
Volvo computer (MOP)
2 Ethernet cards
DVI
DVI
-PH1
PC
Monitor
1920 X 1080
DVI
DVI
USB
USB
USB
USB Keyboard
-U01
Logitech
USB Mouse
-U02
Logitech
120VAC
BN
GN
YE
BU
=KF0WC3/2.3 / 120VAC_(MON)
120VAC
BN
GN
YE
BU
=KF0WC3/2.2 / 120VAC_(PC)
USB Outlet
-XG1
MURR
RJ45 Outlet
-XG2
MURR
-KF100.31-P4
PROFINET Cable
6XV1840-3AH10
-KF100.31-P5
PROFINET Cable
6XV1840-3AH10
-KF100.31-P9
PROFINET Cable
6XV1840-3AH10
-KF100.31-P5
10.5
-KF100.31-P4
10.5
KF100.31-P9
10.6

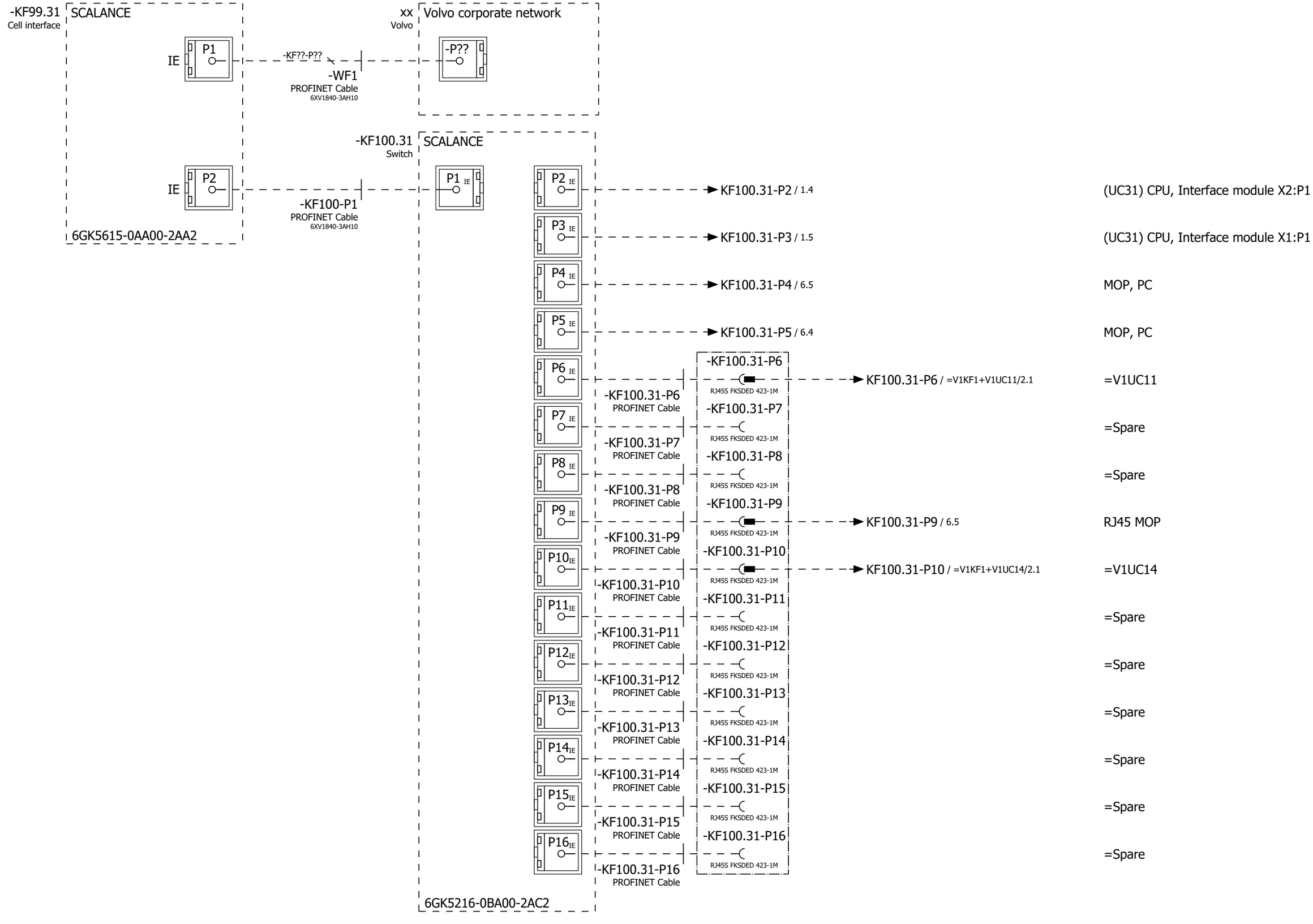

			Date	12/22/2022	Volvo Trucks North America		Valiant TMS	Network overview	Drawing name: =2V13&EFS_EL	= KF0KF1	
			Ed.	MKLEPADLO						+ UC31	
			Appr		Sub-Floor Members				Document type: EFS	Project nr: 22-16146	Page 10 / 614
Modification	Date	Name	Original		Replacement of	Replaced by	Scale 1:1				

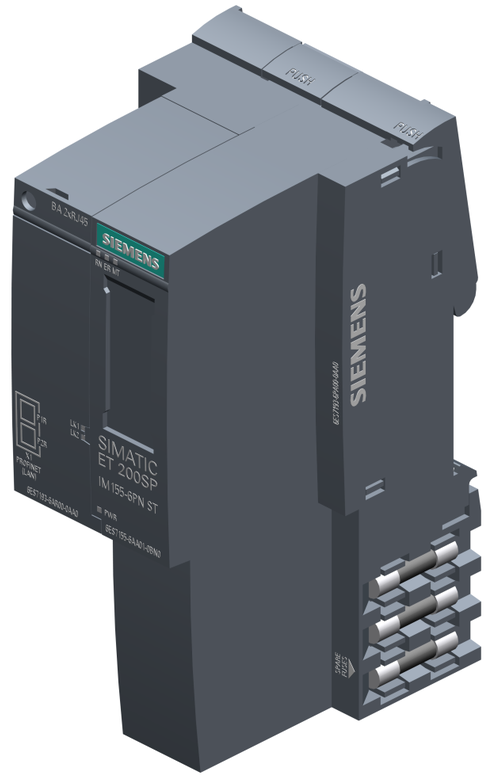

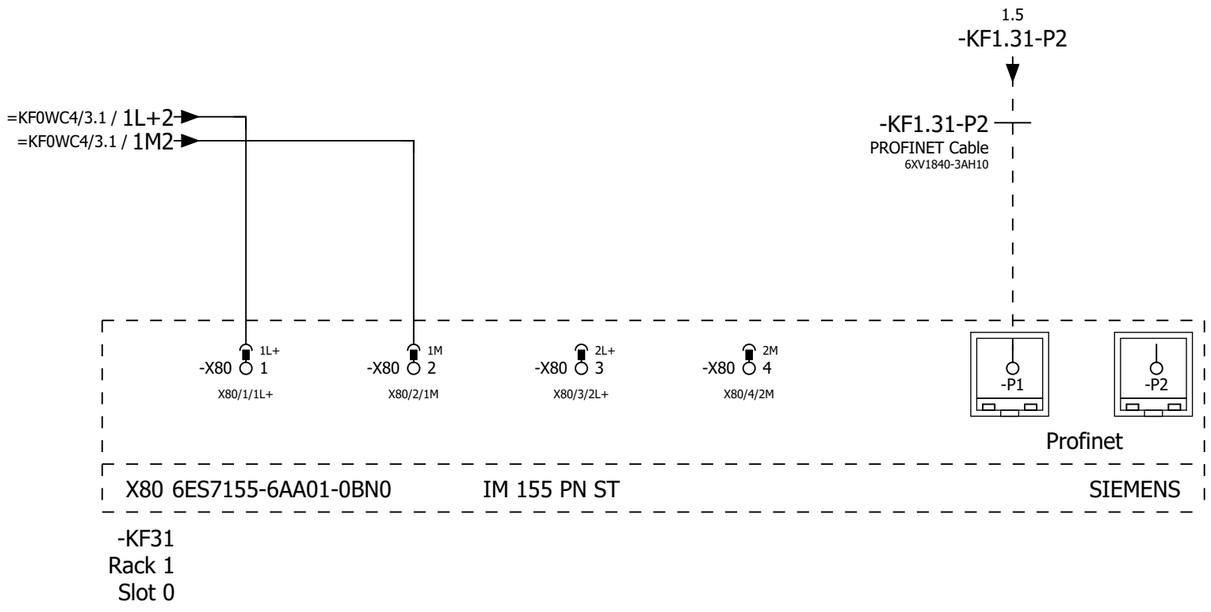

10

12

			Date	12/22/2022	Volvo Trucks North America	Valiant TMS	IM 155 PN	Drawing name: =2V13&EFS_EL	= KF0KF1	
			Ed.	MKLEPADLO					+ UC31	
			Appr		Sub-Floor Members			Document type: EFS	Project nr: 22-16146	Page 11 / 614
Modification	Date	Name	Original		Replacement of	Replaced by	Scale 1:1			

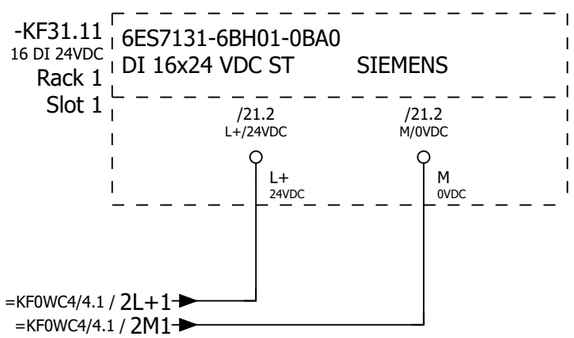

			Date	12/22/2022	Volvo Trucks North America		Valiant TMS	ET200S Wiring DI	Drawing name: =2V13&EFS_EL	= KF0KF1	
			Ed.	MKLEPADLO						+ UC31	
			Appr		Sub-Floor Members				Document type: EFS	Project nr: 22-16146	Page 12 / 614
Modification	Date	Name	Original		Replacement of	Replaced by	Scale 1:1				

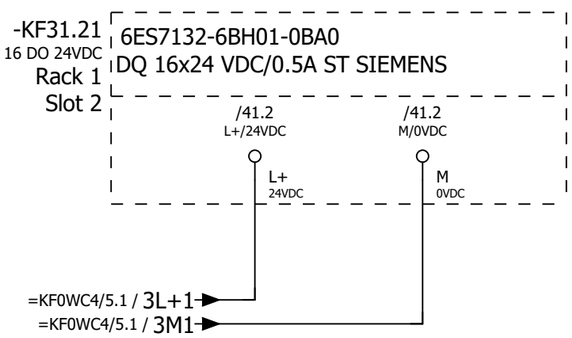

			Date	12/22/2022	Volvo Trucks North America	Valiant TMS	ET200S Wiring DO	Drawing name: =2V13&EFS_EL		= KF0KF1	
			Ed.	MKLEPADLO						+ UC31	
			Appr		Sub-Floor Members			Document type: EFS	Project nr: 22-16146		Page 14
Modification	Date	Name	Original		Replacement of	Replaced by	Scale 1:1				614

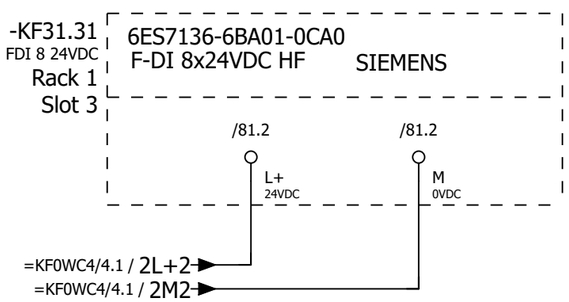

			Date	12/22/2022	Volvo Trucks North America		Valiant TMS	ET200S Wiring F-DI	Drawing name: =2V13&EFS_EL	= KF0KF1	
			Ed.	MKLEPADLO						+ UC31	
			Appr		Sub-Floor Members				Document type: EFS	Project nr: 22-16146	Page 18 / 614
Modification	Date	Name	Original		Replacement of	Replaced by	Scale 1:1				

-KF31.11

ET 200SP SIEMENS
DI 16x24 VDC ST

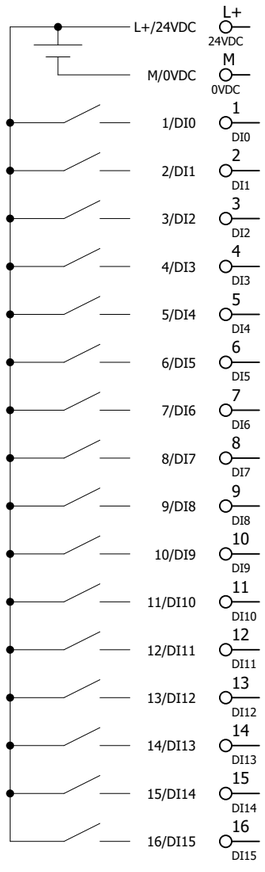

6ES7131-6BH01-0BA0

	/12.1			
	/12.2			
I00.0	=KF0SF1/2.2	=KF0SF1+UC31UC92-SF1_I	Emergency stop tripped/reset PB	
I00.1	=KF0SF1/2.5	=KF0SF1+UC31UC92-SF2_I	Enable power PB	
I00.2	=KF0SF1/2.7	=KF0SF1+UC31UC92-SF3_I	Start auto PB	
I00.3	=KF0SF1/2.7	=KF0SF1+UC31UC92-SF4_I	Man/Auto Sel Switch	
I00.4	=KF0SF1/1.5	=KF0SF1+UC31UC91-SF5_I	Set PB	
I00.5	=KF0SF1/1.2	=KF0SF1+UC31UC91-SF6_I	Reset PB	
I00.6		I00.6	Spare	
I00.7		I00.7	Spare	
I01.0	=KF0WC4/2.6	=K0WC4-GA1.1	UPS Battery	
I01.1	=KF0WC4/2.7	=K0WC4-GA1.2	UPS Alarm	
I01.2	=KF0WC3/3.2	=KF0WC3+UC31-FC1	Monitoring 120 VAC	
I01.3	=KF0WC3/3.4	=KF0WC3+UC31-FC2	Monitoring 120 VAC	
I01.4	=KF0WC4/1.3	=KF0WC4+UC31-FC11_I	Monitoring 24 VDC	
I01.5		I01.5	Spare	
I01.6		I01.6	Spare	
I01.7		I01.7	Spare	

-KF31.21

ET 200SP SIEMENS
DQ 16x24 VDC/0.5A ST

L+/24VDC	L+ 24VDC		/14.1		
M/0VDC	M 0VDC		/14.2		
1/DQ0	1 DQ0	Q00.0	=KF0SF1/2.3	=KF0SF1+UC31UC92-PF1_Q	Emergency stop tripped/reset LT
2/DQ1	2 DQ1	Q00.1	=KF0SF1/2.8	=KF0SF1+UC31UC92-PF3_Q	Start auto LT
3/DQ2	3 DQ2	Q00.2		Q00.2	Spare
4/DQ3	4 DQ3	Q00.3		Q00.3	Spare
5/DQ4	5 DQ4	Q00.4		Q00.4	Spare
6/DQ5	6 DQ5	Q00.5		Q00.5	Spare
7/DQ6	7 DQ6	Q00.6		Q00.6	Spare
8/DQ7	8 DQ7	Q00.7		Q00.7	Spare
9/DQ8	9 DQ8	Q01.0	=KF0PZ1/1.3	=KF0PZ1+UC31-PF1_1	Indication column Green
10/DQ9	10 DQ9	Q01.1	=KF0PZ1/1.3	=KF0PZ1+UC31-PF1_2	Indication column Red
11/DQ10	11 DQ10	Q01.2	=KF0PZ1/1.4	=KF0PZ1+UC31-PF1_3	Indication column Siren
12/DQ11	12 DQ11	Q01.3		Q01.3	Spare
13/DQ12	13 DQ12	Q01.4		Q01.4	Spare
14/DQ13	14 DQ13	Q01.5		Q01.5	Spare
15/DQ14	15 DQ14	Q01.6		Q01.6	Spare
16/DQ15	16 DQ15	Q01.7		Q01.7	Spare

6ES7132-6BH01-0BA0

			Date	12/22/2022	Volvo Trucks North America	Valiant TMS	ET200S Cross-reference Output module	Drawing name: =2V13&EFS_EL		= KF0KF1	
			Ed.	MKLEPADLO						+ UC31	
			Appr		Sub-Floor Members			Document type: EFS	Project nr: 22-16146	Page	41
Modification	Date	Name	Original		Replacement of / Replaced by	Scale 1:1					614

-KF31.31
/18.0

ET 200SP SIEMENS
F-DI 8x24VDC HF

	L+ 24VDC	/18.1		
	M 0VDC	/18.2		
I5000.0	1 DI0	=KF0FQ0/1.3	=KF0FQ0+UC31UC91-SF1.1	Emergency stop Ch1
	9 VS0	=KF0FQ0/1.3		
I5000.1	2 DI1		I5000.1	Spare
	10 VS1			
I5000.2	3 DI2		I5000.2	Spare
	11 VS2			
I5000.3	4 DI3		I5000.3	Spare
	12 VS3			
I5000.4	5 DI4	=KF0FQ0/1.4	=KF0FQ0+UC31UC91-SF1.11	Emergency stop Ch2
	13 VS4	=KF0FQ0/1.4		
I5000.5	6 DI5		I5000.5	Spare
	14 VS5			
I5000.6	7 DI6		I5000.6	Spare
	15 VS6			
I5000.7	8 DI7		I5000.7	Spare
	16 VS7			

6ES7136-6BA01-0CA0

			Date	12/22/2022	Volvo Trucks North America	Valiant TMS	ET200S Cross-reference	Drawing name: =2V13&EFS_EL	= KF0KF1		
			Ed.	MKLEPADLO			Safe input module		+ UC31		
			Appr		Sub-Floor Members			Document type: EFS	Project nr: 22-16146	Page	81
Modification	Date	Name	Original		Replacement of / Replaced by	Scale 1:1					614

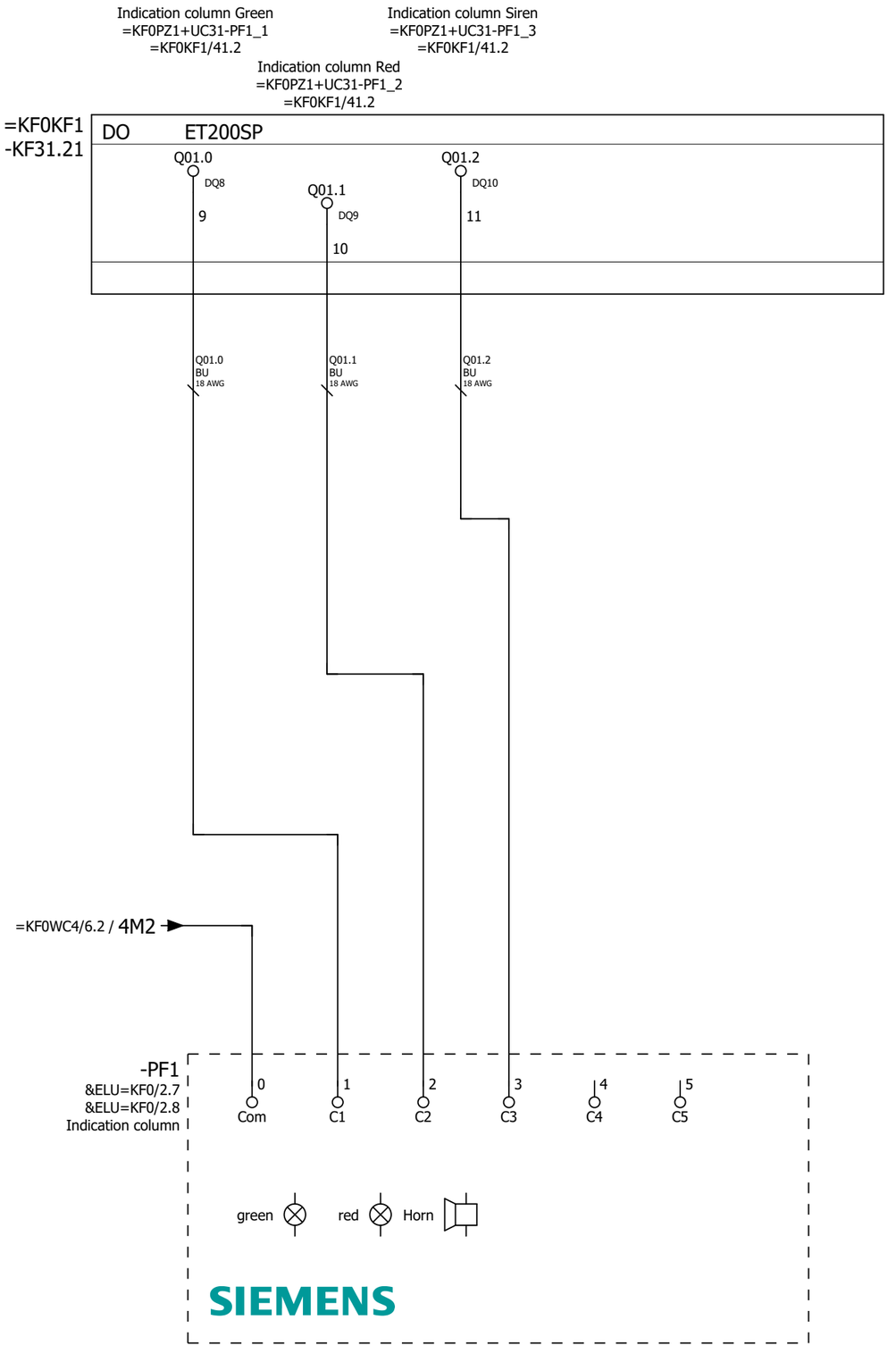

=KF0KF1/81

=KF0SF1/1

			Date	12/22/2022	Volvo Trucks North America	Valiant TMS	Indication column	Drawing name: =2V13&EFS_EL	= KF0PZ1	
			Ed.	MKLEPADLO					+ UC31	
			Appr		Sub-Floor Members			Document type: EFS	Project nr: 22-16146	Page 1
Modification	Date	Name	Original		Replacement of / Replaced by	Scale 1:1				614

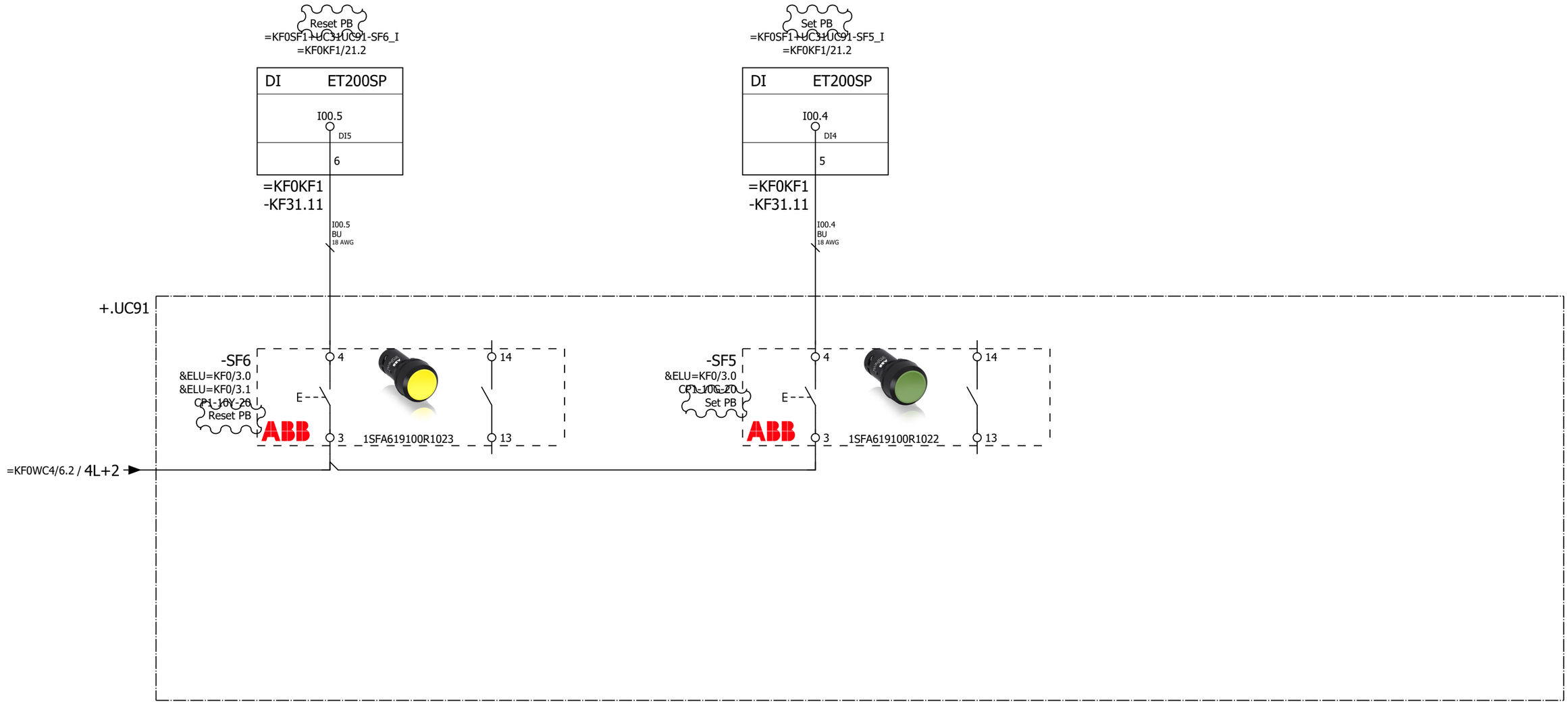

=KF0PZ1/1

2

			Date	12/22/2022	Volvo Trucks North America	Valiant TMS	Operating box UC91 MOP	Drawing name: =2V13&EFS_EL		= KF0SF1	
			Ed.	MKLEPADLO						+ UC31	
			Appr		Sub-Floor Members			Document type: EFS	Project nr: 22-16146	Page	1
Modification	Date	Name	Original		Replacement of	Replaced by	Scale 1:1				614

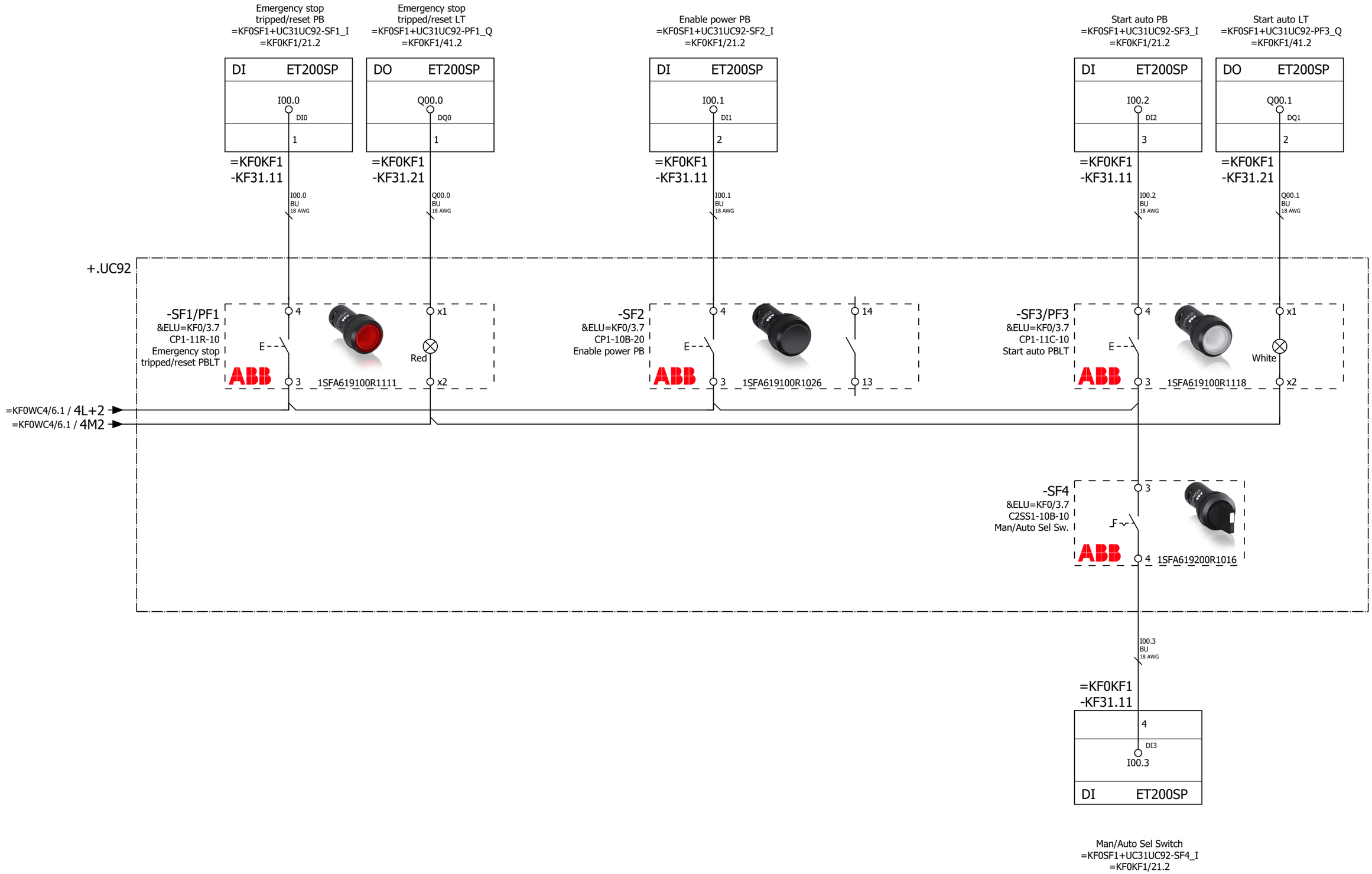

1

=KF0WC3/1

			Date	12/22/2022	Volvo Trucks North America	Valiant TMS	Operating box UC92 MOP	Drawing name: =2V13&EFS_EL	= KF0SF1	
			Ed.	MKLEPADLO					+ UC31	
			Appr		Sub-Floor Members			Document type: EFS	Project nr: 22-16146	Page 2
Modification	Date	Name	Original		Replacement of	Replaced by	Scale 1:1			614

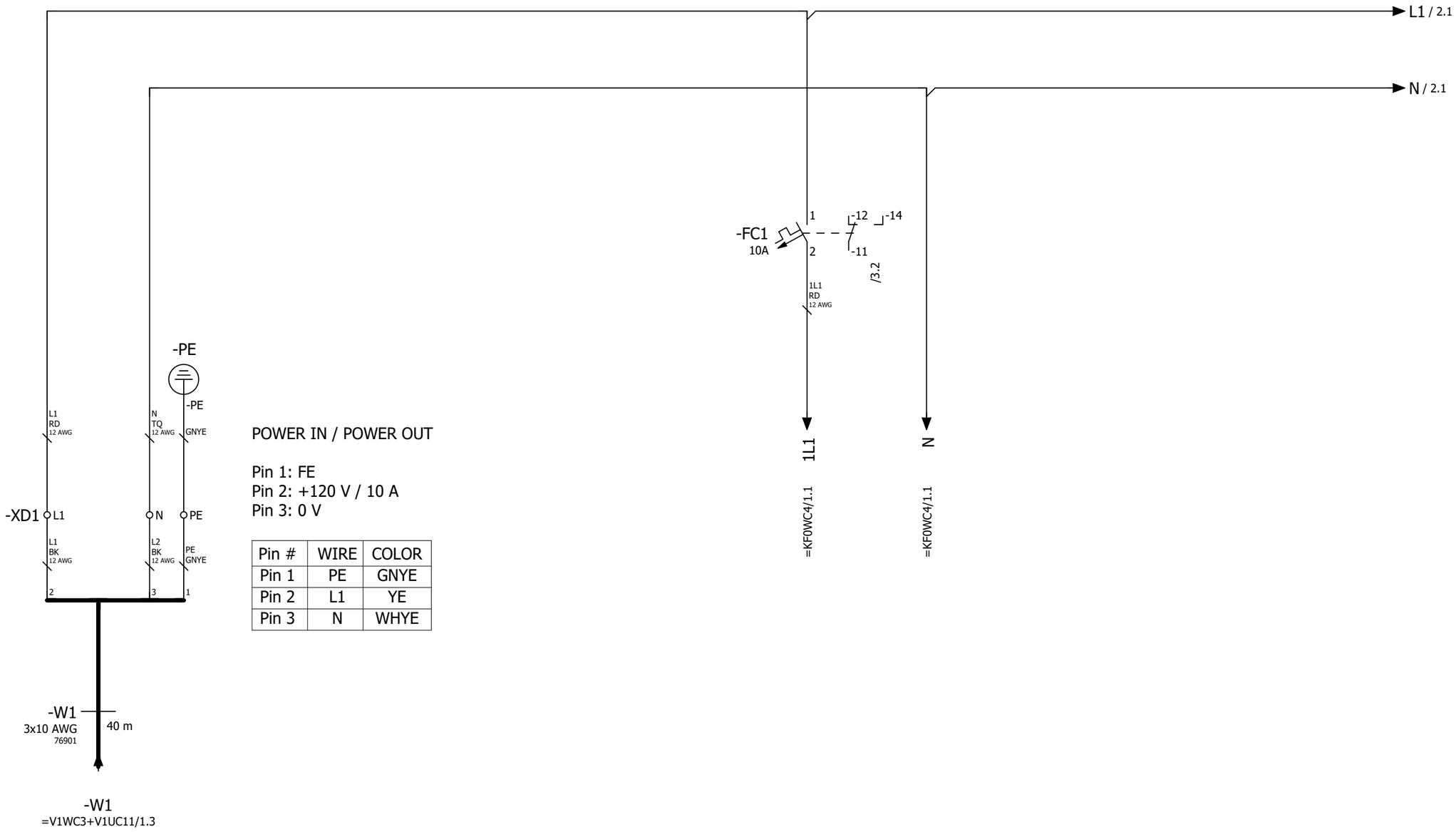

POWER IN / POWER OUT

Pin 1: FE
Pin 2: +120 V / 10 A
Pin 3: 0 V

Pin #	WIRE	COLOR
Pin 1	PE	GNYE
Pin 2	L1	YE
Pin 3	N	WHYE

Power
Distribution
24 VDC
Power Supply

=KF0SF1/2

2

			Date	12/22/2022	Volvo Trucks North America	Valiant TMS	Incomming power supply 120 VAC	Drawing name: =2V13&EFS_EL	= KF0WC3		
			Ed.	MKLEPADLO					+ UC31		
			Appr		Sub-Floor Members			Document type: EFS	Project nr: 22-16146	Page	1
Modification	Date	Name	Original		Replacement of	Replaced by	Scale 1:1				614

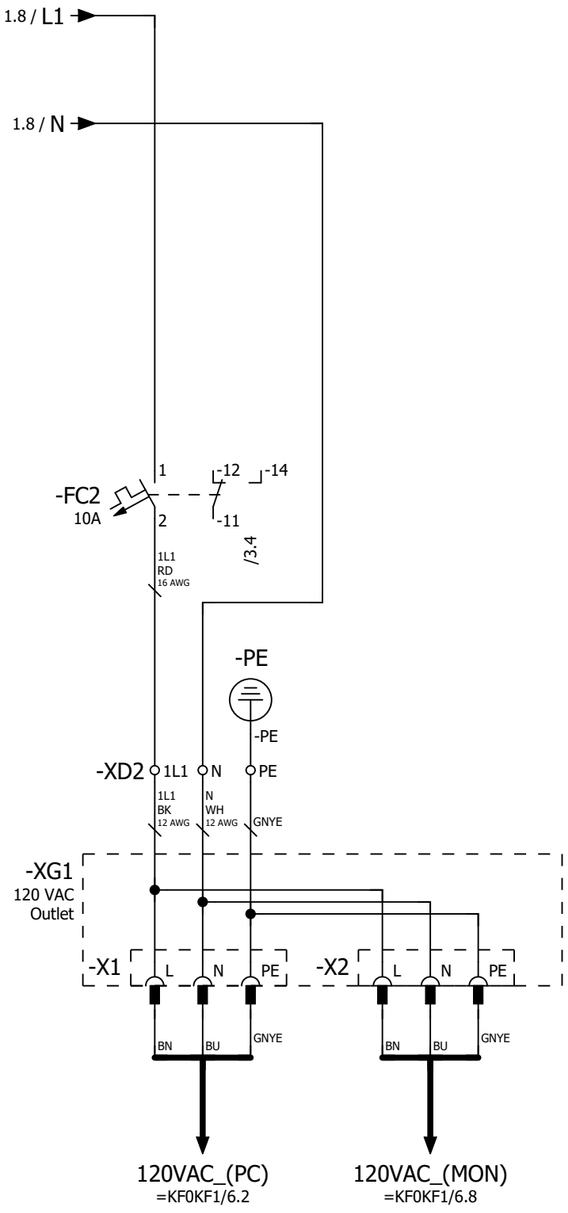

			Date	12/22/2022	Volvo Trucks North America	Valiant TMS	Outlet PLC 120VAC	Drawing name: =2V13&EFS_EL		= KF0WC3	
			Ed.	MKLEPADLO						+ UC31	
			Appr		Sub-Floor Members			Document type: EFS	Project nr: 22-16146	Page	2
Modification	Date	Name	Original		Replacement of / Replaced by	Scale 1:1					614

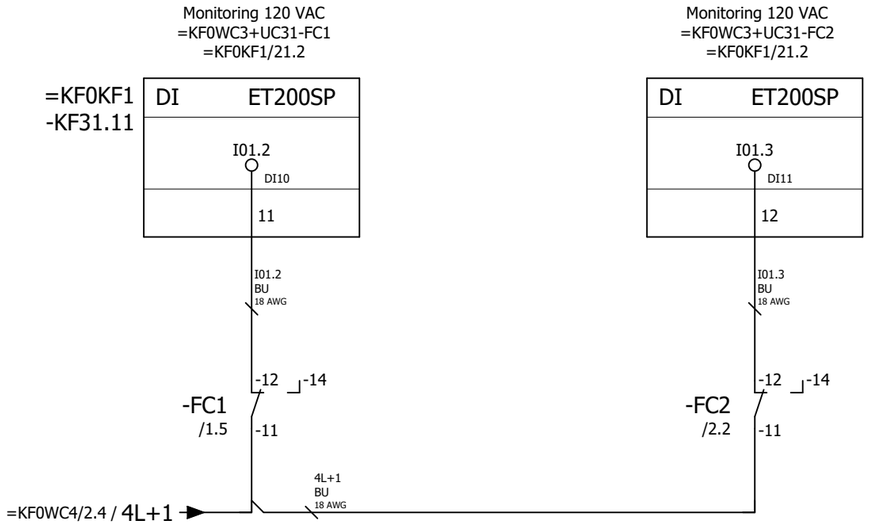

2

=KF0WC4/1

			Date	12/22/2022	Volvo Trucks North America	Valiant TMS	Monitoring 120VAC	Drawing name: =2V13&EFS_EL		= KF0WC3	
			Ed.	MKLEPADLO						+ UC31	
			Appr		Sub-Floor Members			Document type: EFS	Project nr: 22-16146		Page 3
Modification	Date	Name	Original		Replacement of / Replaced by	Scale 1:1					614

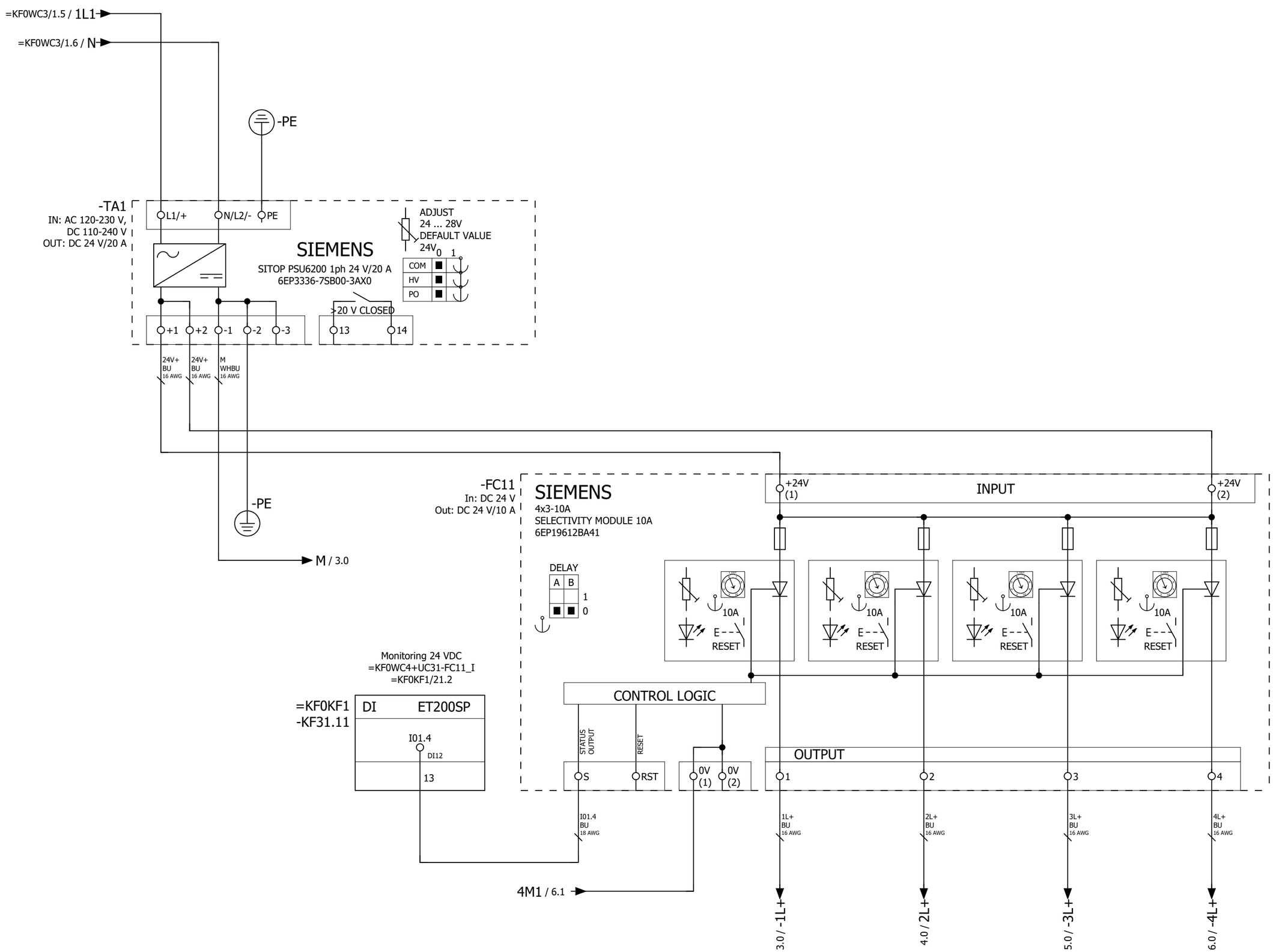

=KF0WC3/3

2

			Date	12/22/2022	Volvo Trucks North America	Valiant TMS	Power distribution 24VDC	Drawing name: =2V13&EFS_EL	= KF0WC4	
			Ed.	MKLEPADLO					+ UC31	
			Appr		Sub-Floor Members			Document type: EFS	Project nr: 22-16146	Page 1
Modification	Date	Name	Original		Replacement of	Replaced by	Scale 1:1			614

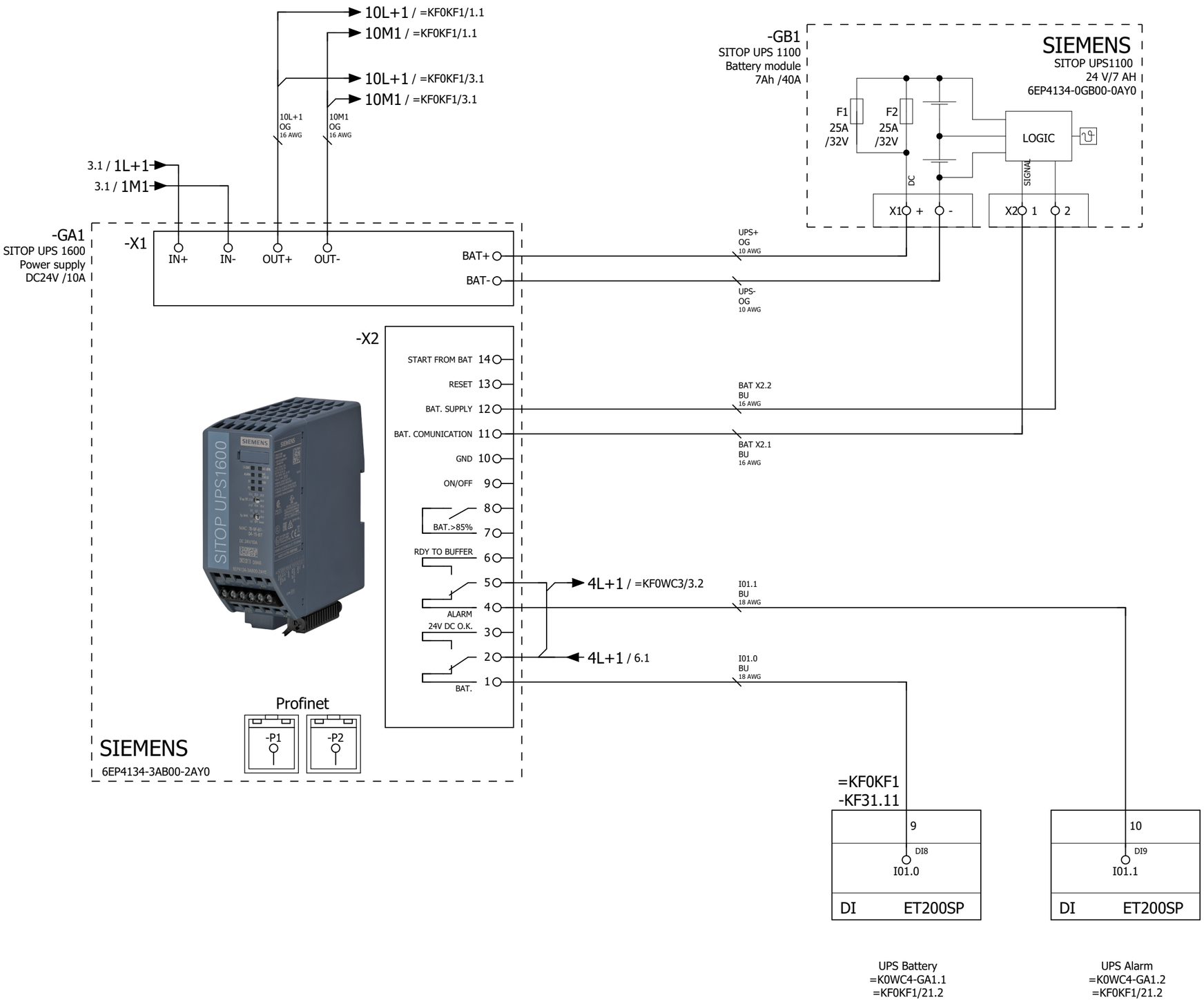

1 3

			Date	12/22/2022	Volvo Trucks North America	Valiant TMS	Power distribution, UPS	Drawing name: =2V13&EFS_EL		= KF0WC4	
			Ed.	MKLEPADLO						+ UC31	
			Appr		Sub-Floor Members			Document type: EFS	Project nr: 22-16146	Page	2
Modification	Date	Name	Original		Replacement of	Replaced by	Scale 1:1				614

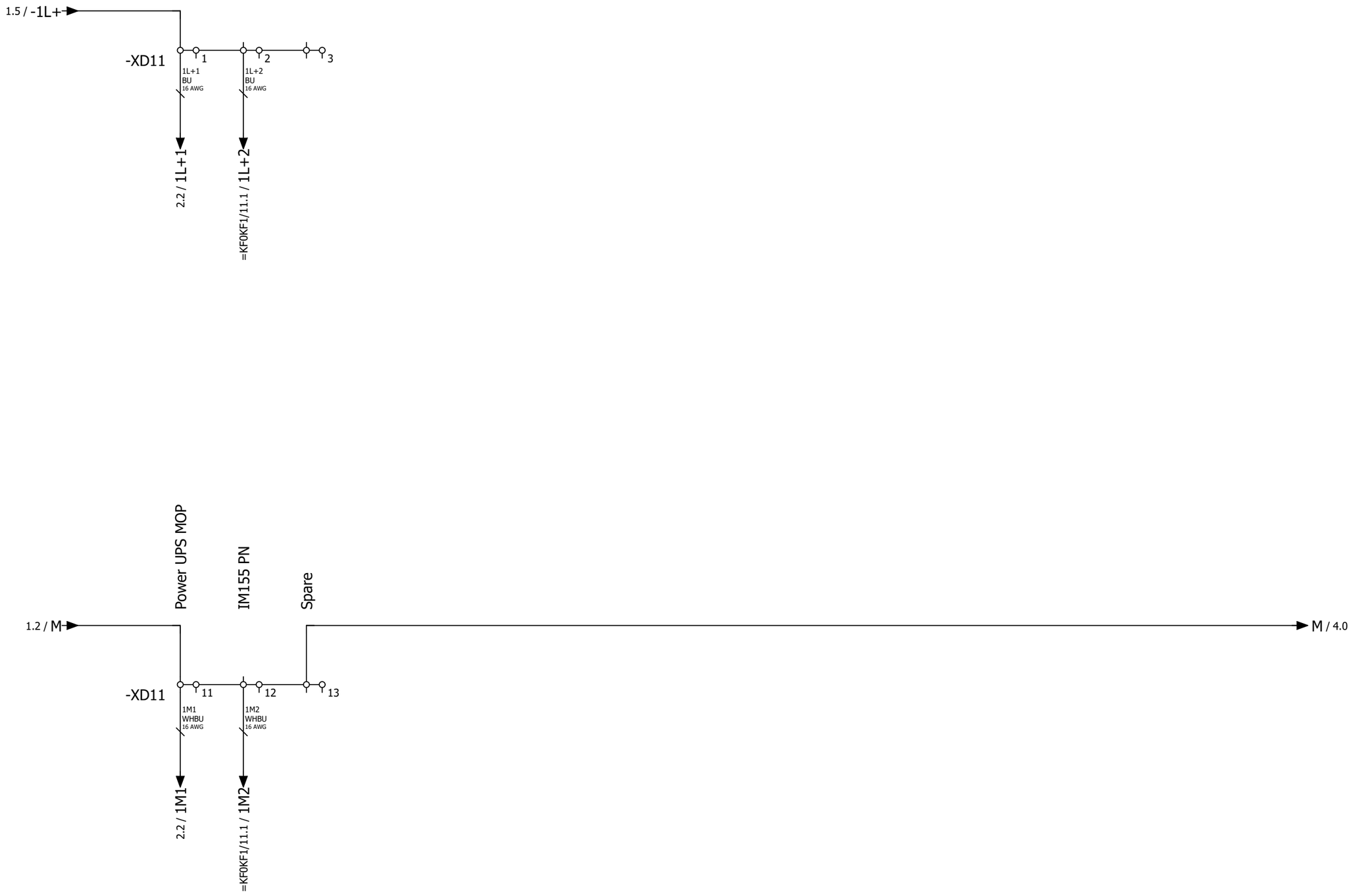
1.5 / -1L+
-XD11
1
2
3
1L+1
BU
16 AWG
1L+2
BU
16 AWG
2.2 / 1L+1
=KF0KF1/11.1 / 1L+2
Power UPS MOP
IM155 PN
Spare
1.2 / M
M / 4.0
-XD11
11
12
13
1M1
WHBU
16 AWG
1M2
WHBU
16 AWG
2.2 / 1M1
=KF0KF1/11.1 / 1M2

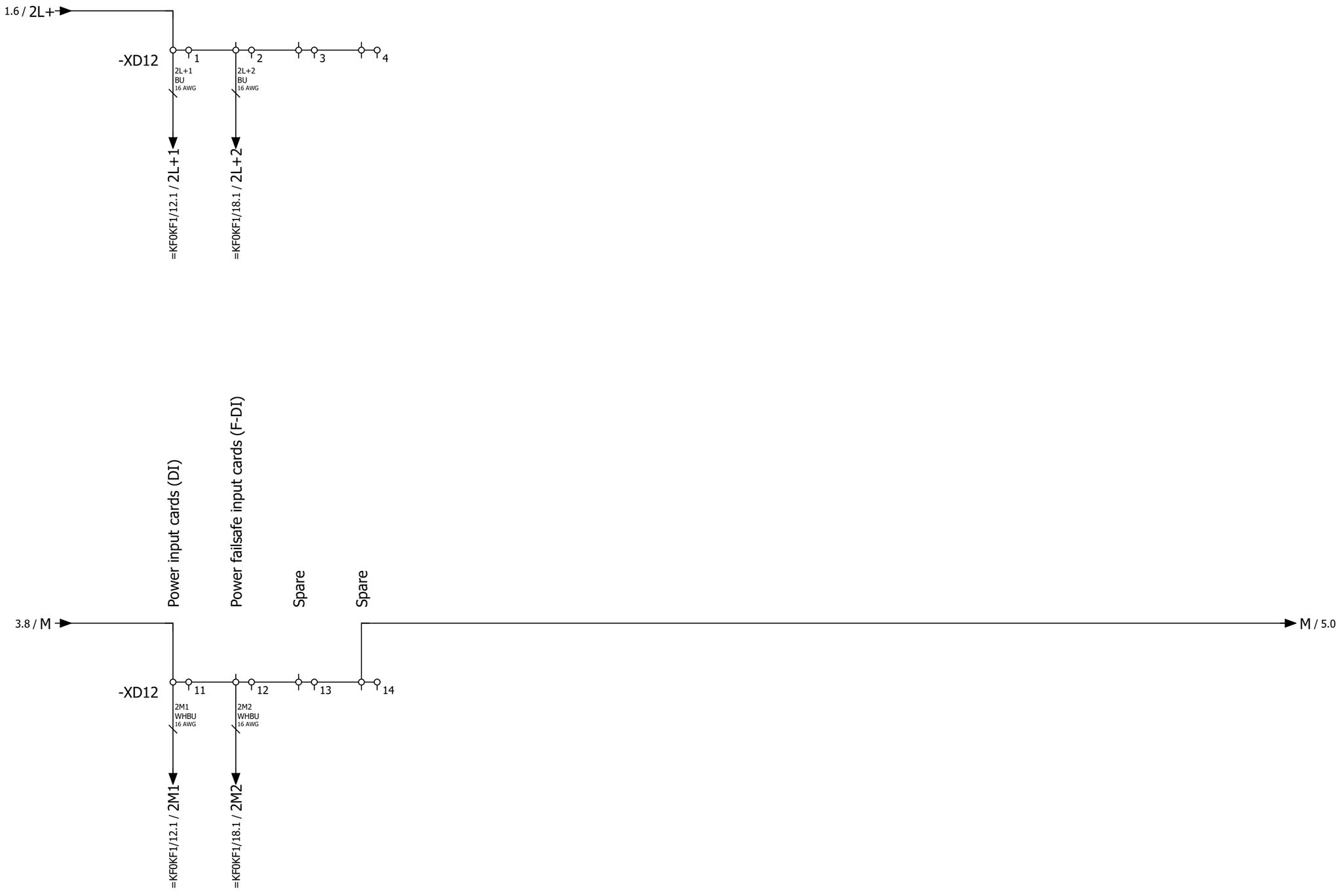

			Date	12/22/2022	Volvo Trucks North America	Valiant TMS	Power distribution 24VDC 2L+	Drawing name: =2V13&EFS_EL		= KF0WC4	
			Ed.	MKLEPADLO						+ UC31	
			Appr		Sub-Floor Members			Document type: EFS	Project nr: 22-16146		Page 4
Modification	Date	Name	Original		Replacement of / Replaced by	Scale 1:1					614

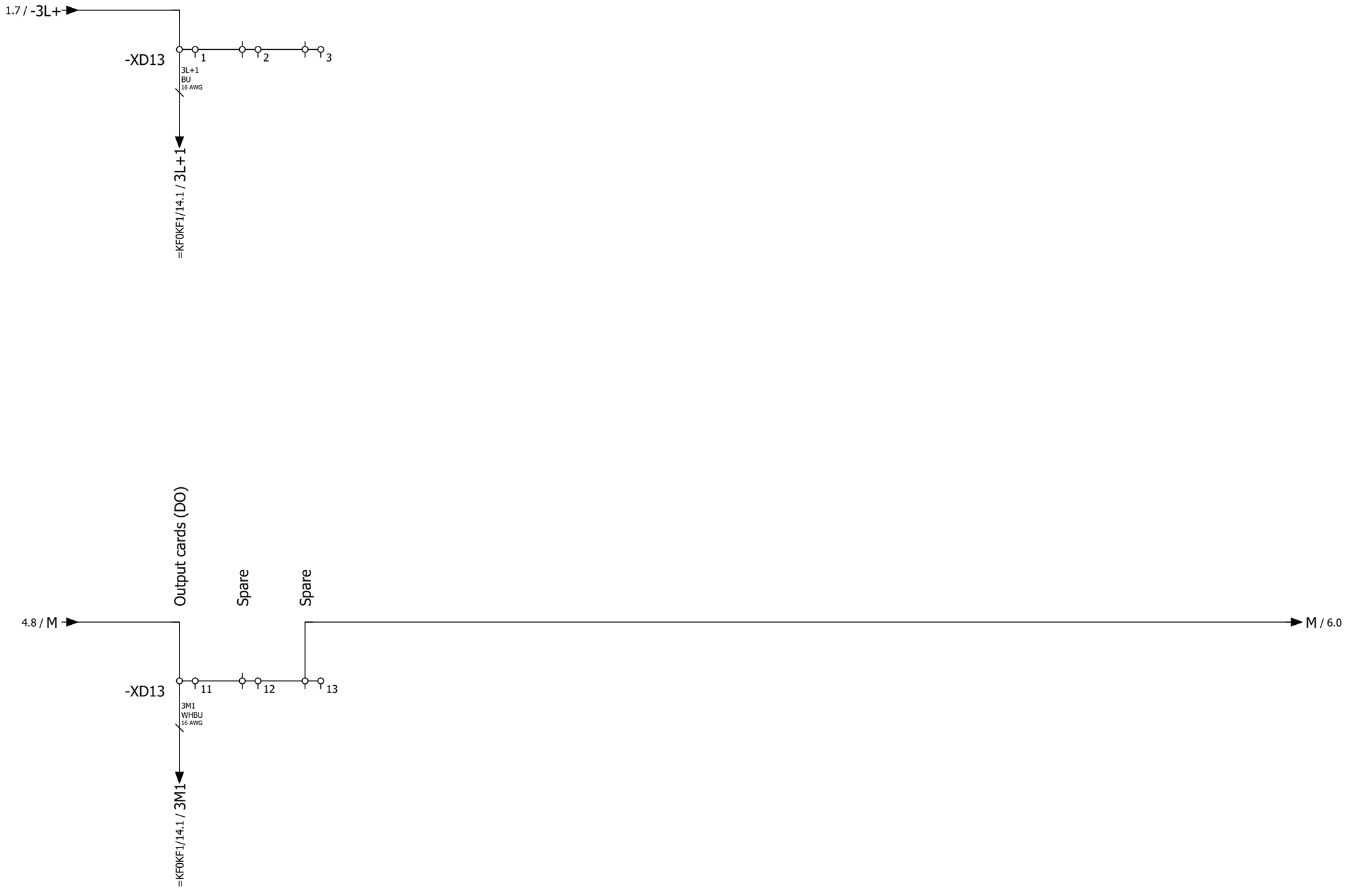

			Date	12/22/2022	Volvo Trucks North America	Valiant TMS	Power distribution 24VDC 3L+	Drawing name: =2V13&EFS_EL		= KF0WC4	
			Ed.	MKLEPADLO						+ UC31	
			Appr		Sub-Floor Members			Document type: EFS	Project nr: 22-16146		Page 5
Modification	Date	Name	Original		Replacement of / Replaced by	Scale 1:1					614

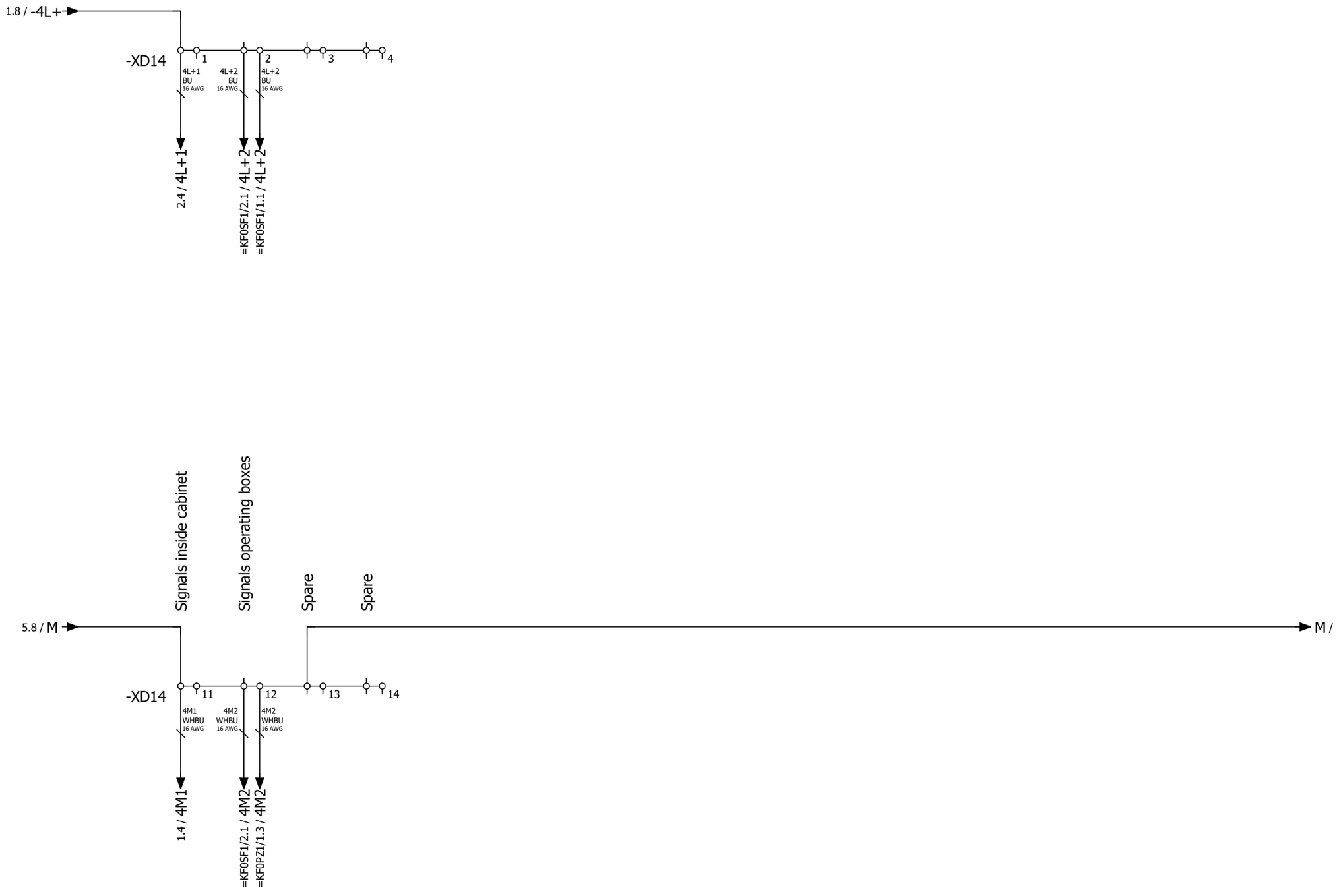

5

=KH0+KH0/1

			Date	12/22/2022	Volvo Trucks North America		Valiant TMS	Power distribution 24VDC 4L+	Drawing name: =2V13&EFS_EL		= KF0WC4
			Ed.	MKLEPADLO							+ UC31
			Appr		Sub-Floor Members				Document type: EFS	Project nr: 22-16146	Page 6
Modification	Date	Name	Original		Replacement of	Replaced by	Scale 1:1				614

=V1KF1+V1UC11

Monitoring Main AIR On
=KH0-BP1_I
=V1KF1+V1UC11/12.2

DI	ET200SP
	I56.6 DI6
	7

=V1KF1
-KF11.14

I56.6
BUOG
16 AWG

=V1WC4+V1UC11/5.4 / 3L+9

=V1WC4+V1UC11/5.4 / 3M9

-KF11.14
7

bn wh bu bk

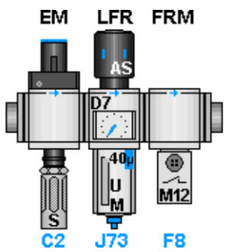

See drawing:
=2V13&MFS-PNEU

-W1
RKC 4.4T-12-RSC 4.4T/S3060
12m

bn bu bk wh

-BP1
1 L+
3 L-
4 Out
2 n.c.
M12
P
FESTO

=KF0WC4+UC31/6

2

			Date	12/22/2022	Volvo Trucks North America	Valiant TMS	Incomming air supply	Drawing name: =2V13&EFS_EL	= KH0	
			Ed.	MKLEPADLO					+ KH0	
			Appr		Sub-Floor Members			Document type: EFS	Project nr: 22-16146	Page 1 / 614
Modification	Date	Name	Original		Replacement of	Replaced by	Scale 1:1			

=V1KF1+V1UC11

Monitoring S010 Turntable AIR On
=KH0-BP2_I
=V1KF1+V1UC11/12.2

DI	ET200SP
	I56.7 DI7
	8

=V1KF1
-KF11.14

I56.7
BUOG
16 AWG

=V1WC4+V1UC11/5.5 / 3L+9

=V1WC4+V1UC11/5.5 / 3M9

-KF11.14
8

bn wh bu bk

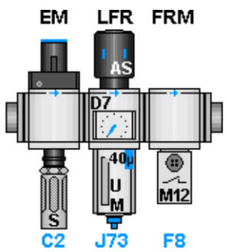

See drawing:
=2V13&MFS-PNEU

-W2
RKC 4.4T-25-RSC 4.4T/S3060
25m

bn bu bk wh

-BP2
1 L+
3 L-
4 Out
2 n.c.
M12
P
FESTO

1 3

			Date	12/22/2022	Volvo Trucks North America	Valiant TMS	Incoming air supply (STA-010-TT)	Drawing name: =2V13&EFS_EL	= KH0	
			Ed.	MKLEPADLO					+ KH0	
			Appr		Sub-Floor Members			Document type: EFS	Project nr: 22-16146	Page 2 / 614
Modification	Date	Name	Original		Replacement of	Replaced by	Scale 1:1			

=V1KF1+V1UC14

Monitoring S030 Turntable AIR On
=KH0-BP3_I
=V1KF1+V1UC14/10.2

DI	ET200SP
	I202.6 DI6
	7

=V1KF1
-KF14.12

I202.6
BUOG
16 AWG

=V1WC4+V1UC14/6.2 / 5L+3

=V1WC4+V1UC14/6.2 / 5M3

-KF14.12
7

bn wh bu bk

-W3
RKC 4.4T-12-RSC 4.4T/S3060
12m

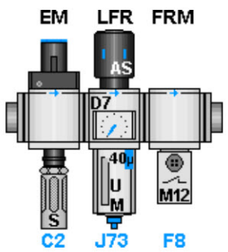

See drawing:
=2V13&MFS-PNEU

bn bu bk wh

-BP3
1 L+
3 L-
4 Out
2 n.c.
M12
P
FESTO

2

=KH3+KH3/1

			Date	12/22/2022	Volvo Trucks North America	Valiant TMS	Incoming air supply (STA-030-TT)	Drawing name: =2V13&EFS_EL	= KH0	
			Ed.	MKLEPADLO					+ KH0	
			Appr		Sub-Floor Members			Document type: EFS	Project nr: 22-16146	Page 3 / 614
Modification	Date	Name	Original		Replacement of	Replaced by	Scale 1:1			

=V1KF1+V1UC11

Monitoring Main Water Filter Dirty
=KH3-BF1_I
=V1KF1+V1UC11/12.2

DI	ET200SP
	I57.0 DI8
	9

=V1KF1
-KF11.14

I57.0
BUOG
16 AWG

=V1WC4+V1UC11/5.4 / 3L+7

=V1WC4+V1UC11/5.4 / 3M7

-KF11.14
9

bn wh bu bk

-W1
RKC 4.4T-20-RSC 4.4T/S3060
20m

See drawing:
=2V13&MFS-WATER

bn bu bk wh

-BF1

1 L+
3 L-
4 Out
2 n.c.

M12

P

=KH0+KH0/3

2

			Date	12/22/2022	Volvo Trucks North America	Valiant TMS	Incoming water supply (Filter)	Drawing name: =2V13&EFS_EL	= KH3	
			Ed.	MKLEPADLO					+ KH3	
			Appr		Sub-Floor Members			Document type: EFS	Project nr: 22-16146	Page 1
Modification	Date	Name	Original		Replacement of / Replaced by	Scale 1:1				614

=V1KF1+V1UC11

Monitoring Main Water On
=KH3-BF2_I
=V1KF1+V1UC11/12.2

DI	ET200SP
	I57.1 DI9
	10

=V1KF1
-KF11.14

I57.1
BUOG
16 AWG

=V1WC4+V1UC11/5.4 / 3L+7

=V1WC4+V1UC11/5.4 / 3M7

-KF11.14
10

bn wh bu bk

-W2
RKC 4.4T-20-RSC 4.4T/S3060
20m

bn bu bk wh

-BF2
1 L+
3 L-
4 Out
2 n.c.

M12

See drawing:
=2V13&MFS-WATER

1

=V1AR21KF1+V1AR21UC01/1

			Date	12/22/2022	Volvo Trucks North America	Valiant TMS	Incoming water supply	Drawing name: =2V13&EFS_EL	= KH3	
			Ed.	MKLEPADLO					+ KH3	
			Appr		Sub-Floor Members			Document type: EFS	Project nr: 22-16146	Page 2 / 614
Modification	Date	Name	Original		Replacement of	Replaced by	Scale 1:1			

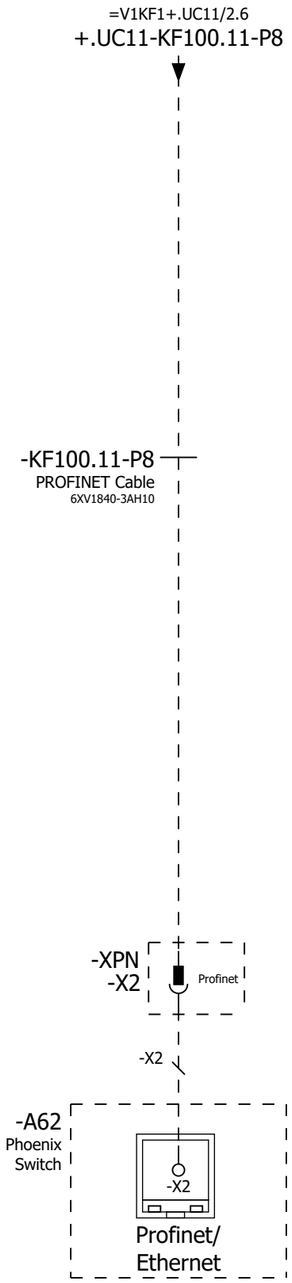

=KH3+KH3/2

=V1AR21WC1/1

			Date	12/22/2022	Volvo Trucks North America	Valiant TMS	Incoming Profinet	Drawing name: =2V13&EFS_EL	= V1AR21KF1	
			Ed.	MKLEPADLO					+ V1AR21UC01	
			Appr		Sub-Floor Members			Document type: EFS	Project nr: 22-16146	Page 1 / 614
Modification	Date	Name	Original		Replacement of / Replaced by	Scale 1:1				

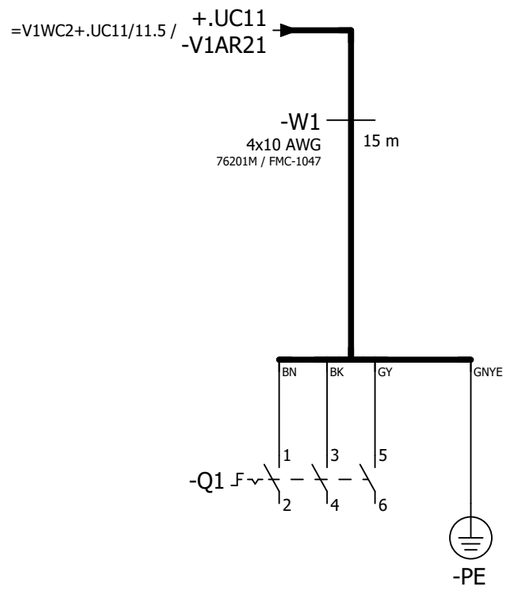

=V1AR21KF1/1

=V1AR21XQ11WC1+.AR21XQ11UC01/1

			Date	12/22/2022	Volvo Trucks North America	Valiant TMS	Incoming power	Drawing name: =2V13&EFS_EL	= V1AR21WC1	
			Ed.	MKLEPADLO					+ V1AR21UC01	
			Appr		Sub-Floor Members			Document type: EFS	Project nr: 22-16146	Page 1 / 614
Modification	Date	Name	Original		Replacement of / Replaced by	Scale 1:1				

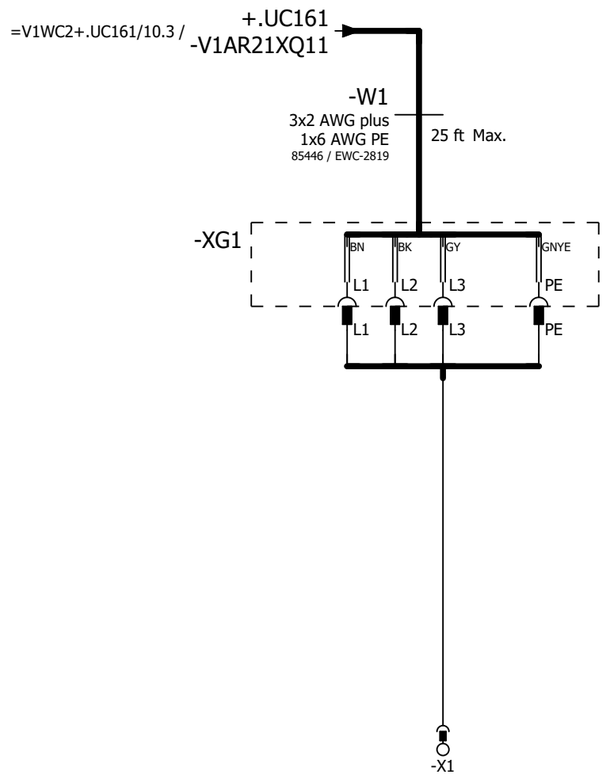

=V1AR21WC1+.AR21UC01/1

=V1AR22KF1+.AR22UC01/1

			Date	12/22/2022	Volvo Trucks North America	Valiant TMS	Incoming power	Drawing name: =2V13&EFS_EL		= V1AR21XQ11WC1	
			Ed.	MKLEPADLO						+ V1AR21XQ11UC01	
			Appr		Sub-Floor Members			Document type: EFS	Project nr: 22-16146		Page 1
Modification	Date	Name	Original		Replacement of / Replaced by	Scale 1:1					614

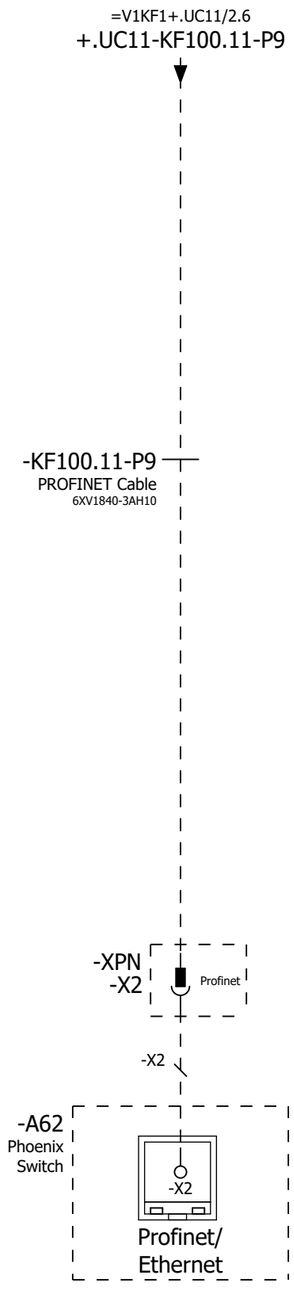

=V1AR21XQ11WC1+.AR21XQ11UC01/1

=V1AR22WC1/1

			Date	12/22/2022	Volvo Trucks North America		Valiant TMS	Incoming Profinet	Drawing name: =2V13&EFS_EL	= V1AR22KF1	
			Ed.	MKLEPADLO						+ V1AR22UC01	
			Appr		Sub-Floor Members				Document type: EFS	Project nr: 22-16146	Page 1 / 614
Modification	Date	Name	Original		Replacement of	Replaced by	Scale 1:1				

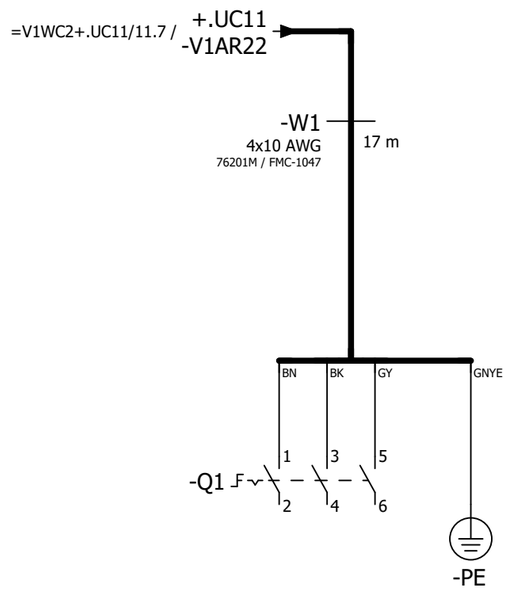

=V1AR22KF1/1

=V1AR22XQ11WC1+.AR22XQ11UC01/1

			Date	12/22/2022	Volvo Trucks North America	Valiant TMS	Incoming power	Drawing name: =2V13&EFS_EL	= V1AR22WC1	
			Ed.	MKLEPADLO					+ V1AR22UC01	
			Appr		Sub-Floor Members			Document type: EFS	Project nr: 22-16146	Page 1 / 614
Modification	Date	Name	Original		Replacement of / Replaced by	Scale 1:1				

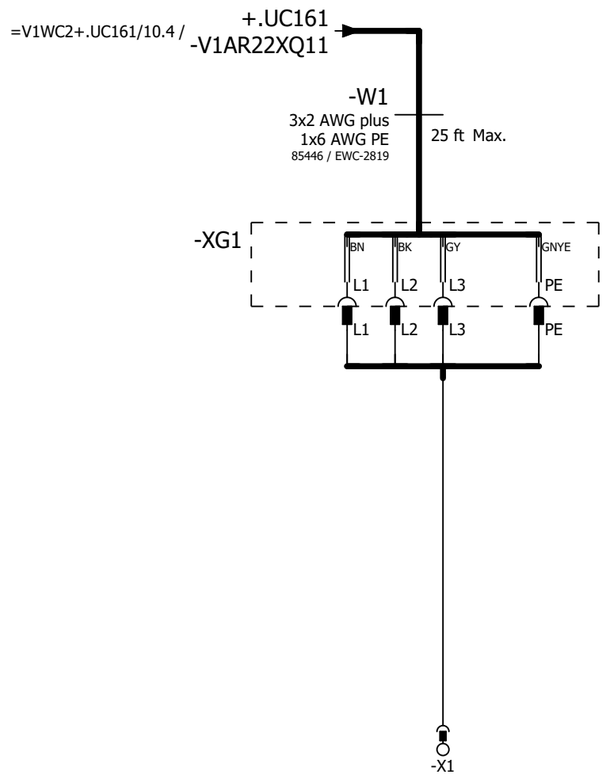

=V1AR22WC1+.AR22UC01/1

=V1AR41KF1+.AR41UC01/1

			Date	12/22/2022	Volvo Trucks North America		Valiant TMS	Incoming power	Drawing name: =2V13&EFS_EL	= V1AR22XQ11WC1	
			Ed.	MKLEPADLO						+ V1AR22XQ11UC01	
			Appr		Sub-Floor Members				Document type: EFS	Project nr: 22-16146	Page 1 / 614
Modification	Date	Name	Original		Replacement of	Replaced by	Scale 1:1				

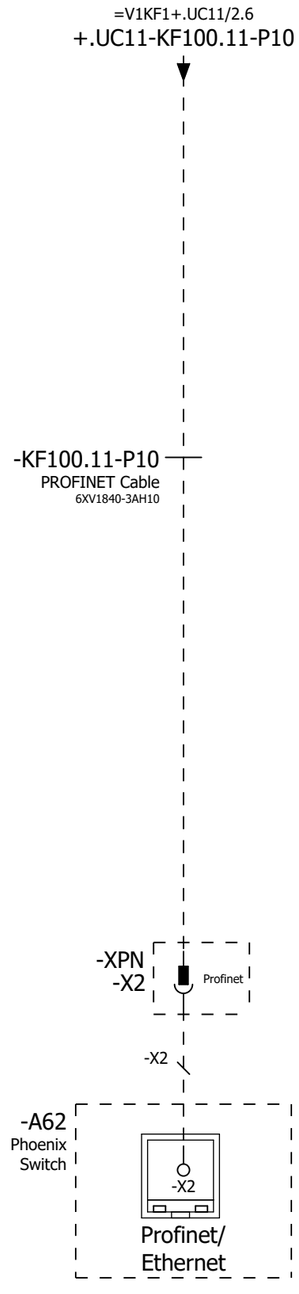

=V1AR22XQ11WC1+.AR22XQ11UC01/1

=V1AR41UQ41BG0+.AR41UQ41/1

			Date	12/22/2022	Volvo Trucks North America	Valiant TMS	Incoming Profinet	Drawing name: =2V13&EFS_EL		= V1AR41KF1	
			Ed.	MKLEPADLO						+ V1AR41UC01	
			Appr		Sub-Floor Members			Document type: EFS	Project nr: 22-16146	Page	1
Modification	Date	Name	Original		Replacement of / Replaced by	Scale 1:1					614

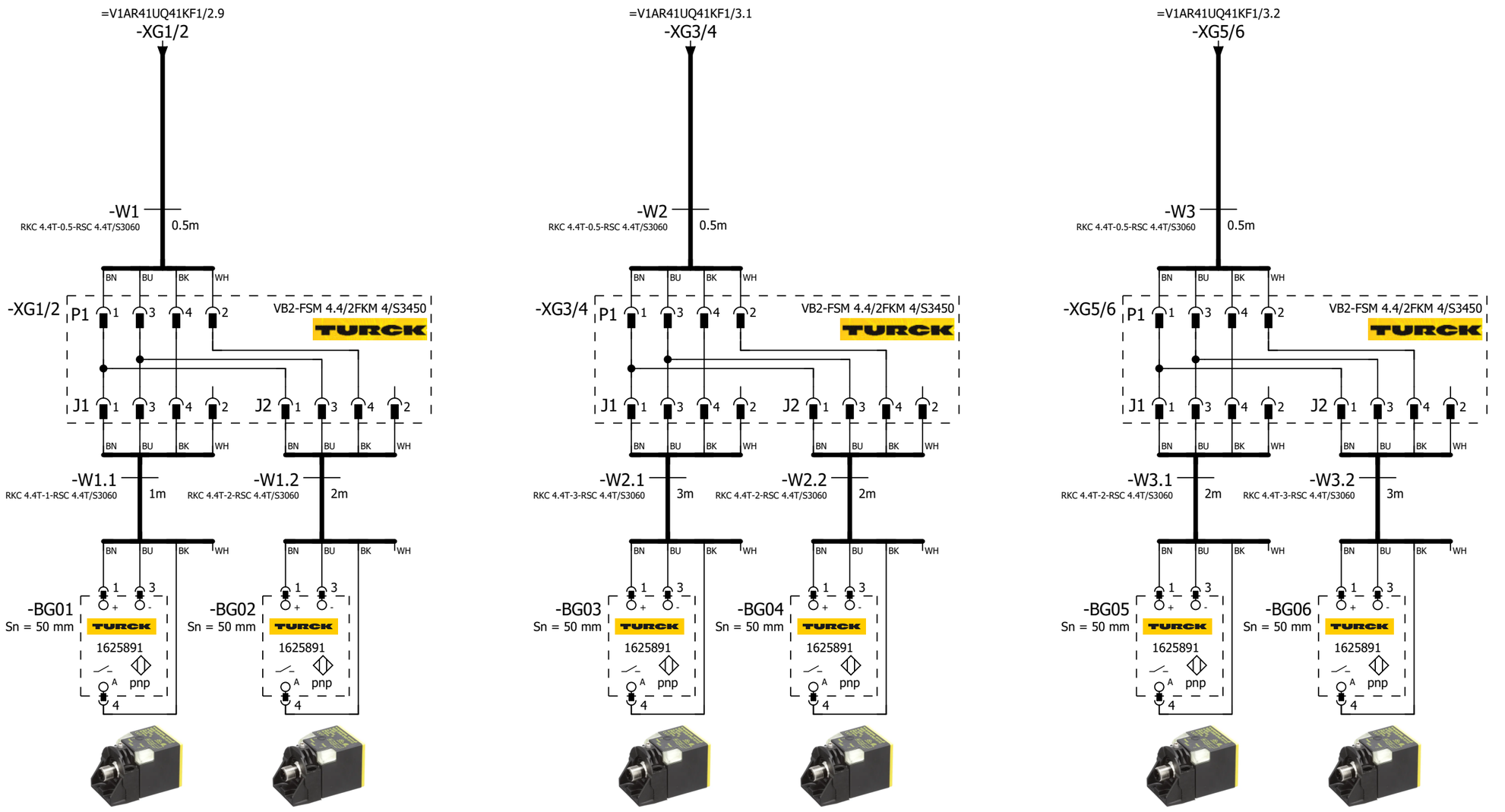

=V1AR41UQ41 -BG01 Front Suspension LH ASSY	=V1AR41UQ41 -BG02 Front Suspension LH ASSY	=V1AR41UQ41 -BG03 Front Suspension RH ASSY	=V1AR41UQ41 -BG04 Front Suspension RH ASSY	=V1AR41UQ41 -BG05 Rear Suspension ASSY	=V1AR41UQ41 -BG06 Rear Suspension ASSY

=V1AR41KF1+.AR41UC01/1

=V1AR41UQ41KF1/1

			Date	12/22/2022	Volvo Trucks North America	Valiant TMS	SENSORS	Drawing name: =2V13&EFS_EL	= V1AR41UQ41BG0	
			Ed.	MKLEPADLO					+ V1AR41UQ41	
			Appr		Sub-Floor Members			Document type: EFS	Project nr: 22-16146	Page 1 / 614
Modification	Date	Name	Original		Replacement of / Replaced by	Scale 1:1				

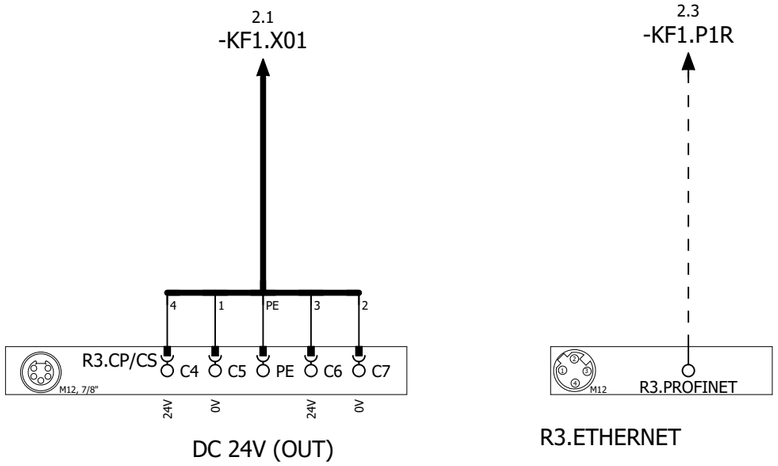

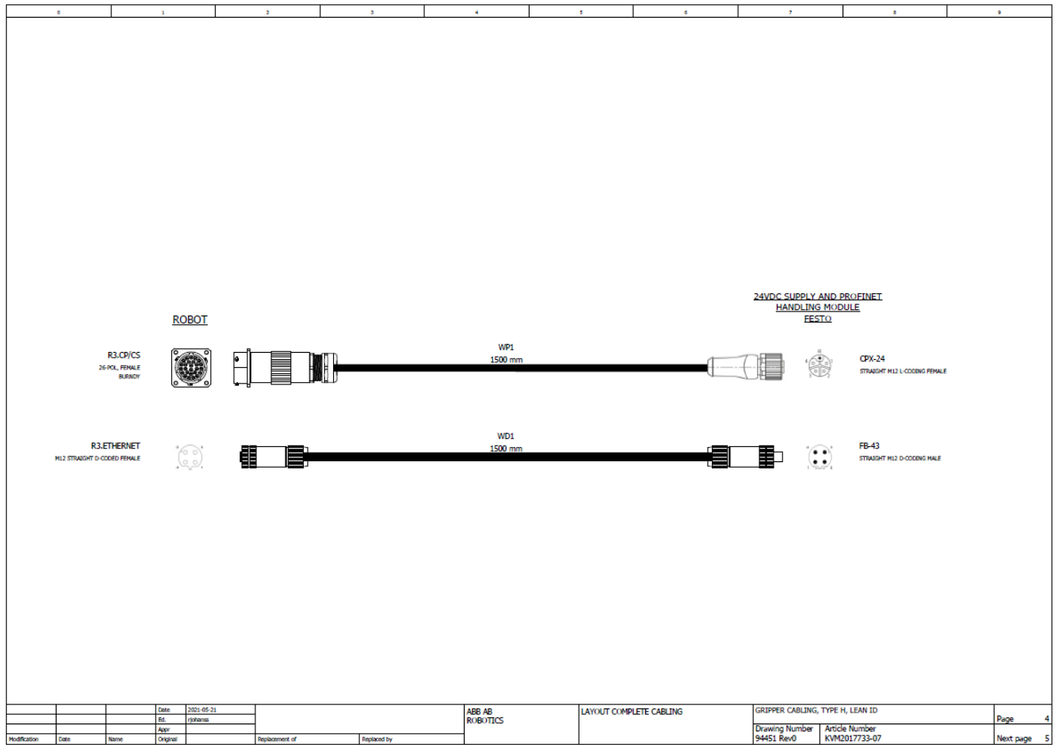

=V1AR41UQ41BG0/1

2

			Date	12/22/2022	Volvo Trucks North America		Valiant TMS	24VDC SUPPLY AND PROFINET HANDLING MODULE	Drawing name: =2V13&EFS_EL	= V1AR41UQ41KF1
			Ed.	MKLEPADLO						+ V1AR41UQ41
			Appr		Sub-Floor Members				Document type: EFS	Project nr: 22-16146 / Page 1
Modification	Date	Name	Original		Replacement of	Replaced by	Scale 1:1			614

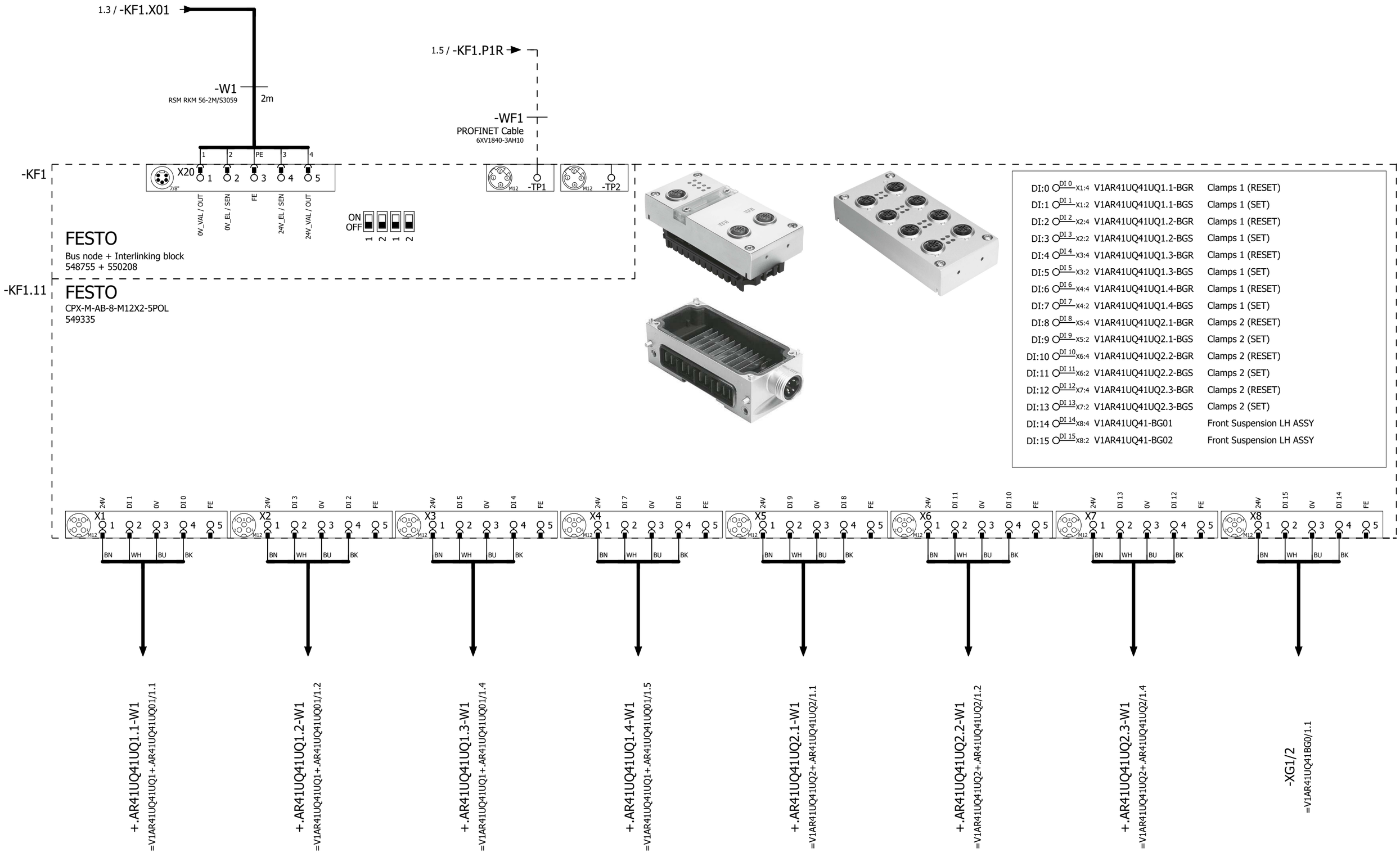

1 3

			Date	12/22/2022	Volvo Trucks North America	Valiant TMS	CONNECTING MOD. FOR MPA MANIFOLD	Drawing name: =2V13&EFS_EL	= V1AR41UQ41KF1		
			Ed.	MKLEPADLO					+ V1AR41UQ41		
			Appr		Sub-Floor Members			Document type: EFS	Project nr: 22-16146	Page	2
Modification	Date	Name	Original		Replacement of	Replaced by	Scale 1:1				614

DI:16	DI 0 X1:4	V1AR41UQ41-BG03	Front Suspension RH ASSY
DI:17	DI 1 X1:2	V1AR41UQ41-BG04	Front Suspension RH ASSY
DI:18	DI 2 X2:4	V1AR41UQ41-BG05	Rear Suspension ASSY
DI:19	DI 3 X2:2	V1AR41UQ41-BG06	Rear Suspension ASSY
DI:20	DI 4 X3:4	DI:20	Spare
DI:21	DI 5 X3:2	DI:21	Spare
DI:22	DI 6 X4:4	DI:22	Spare
DI:23	DI 7 X4:2	DI:23	Spare
DI:24	DI 8 X5:4	DI:24	Spare
DI:25	DI 9 X5:2	DI:25	Spare
DI:26	DI 10 X6:4	DI:26	Spare
DI:27	DI 11 X6:2	DI:27	Spare
DI:28	DI 12 X7:4	DI:28	Spare
DI:29	DI 13 X7:2	DI:29	Spare
DI:30	DI 14 X8:4	DI:30	Spare
DI:31	DI 15 X8:2	DI:31	Spare

-KF1.12

FESTO
CPX-M-AB-8-M12X2-5POL
549335

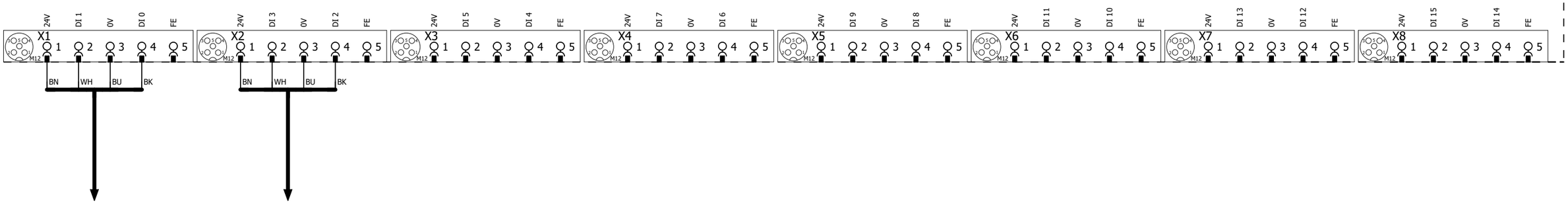

-XG3/4
=V1AR41UQ41BG0/1.4

-XG5/6
=V1AR41UQ41BG0/1.6

2 4

			Date	12/22/2022	Volvo Trucks North America	Valiant TMS	I/O MOD. DI16 (8 x M12) FOR MPA	Drawing name: =2V13&EFS_EL	= V1AR41UQ41KF1		
			Ed.	MKLEPADLO					+ V1AR41UQ41		
			Appr		Sub-Floor Members			Document type: EFS	Project nr: 22-16146	Page	3
Modification	Date	Name	Original		Replacement of / Replaced by	Scale 1:1					614

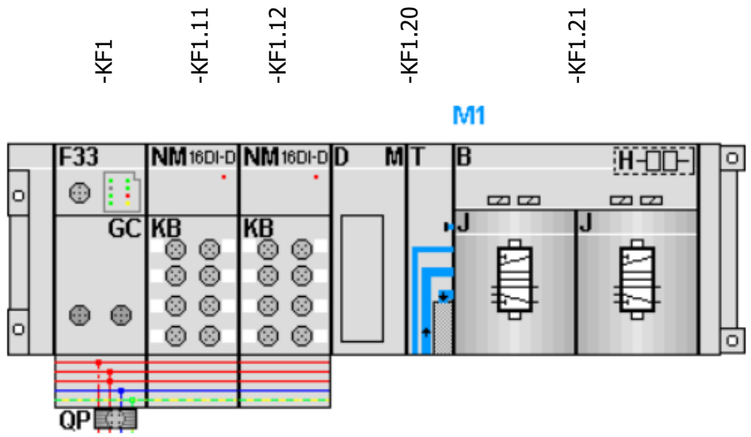

KF1.21
=V1AR41UQ41UQ1+.AR41UQ41UQ01/1.3
=V1AR41UQ41UQ2+.AR41UQ41UQ2/1.3

FESTO

=V1AR41UQ41UQ1+.AR41UQ41UQ01/1.4	DO:0 DO 0 1.1	-QN1.1_Q	Clamps 1 (RST)
=V1AR41UQ41UQ1+.AR41UQ41UQ01/1.4	DO:1 DO 1 1.2	-QN1.2_Q	Clamps 1 (SET)
=V1AR41UQ41UQ2+.AR41UQ41UQ2/1.4	DO:2 DO 2 2.1	-QN2.1_Q	Clamps 2 (RST)
=V1AR41UQ41UQ2+.AR41UQ41UQ2/1.4	DO:3 DO 3 2.2	-QN2.2_Q	Clamps 2 (SET)

			Date	12/22/2022	Volvo Trucks North America	Valiant TMS	CONNECTING MOD. FOR FESTO DQ	Drawing name: =2V13&EFS_EL		= V1AR41UQ41KF1	
			Ed.	MKLEPADLO						+ V1AR41UQ41	
			Appr		Sub-Floor Members			Document type: EFS	Project nr: 22-16146		Page 4
Modification	Date	Name	Original		Replacement of / Replaced by	Scale 1:1					614

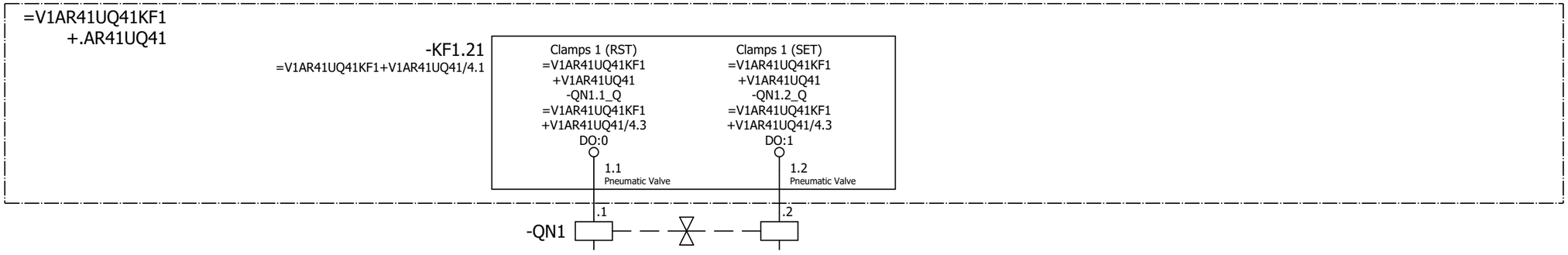

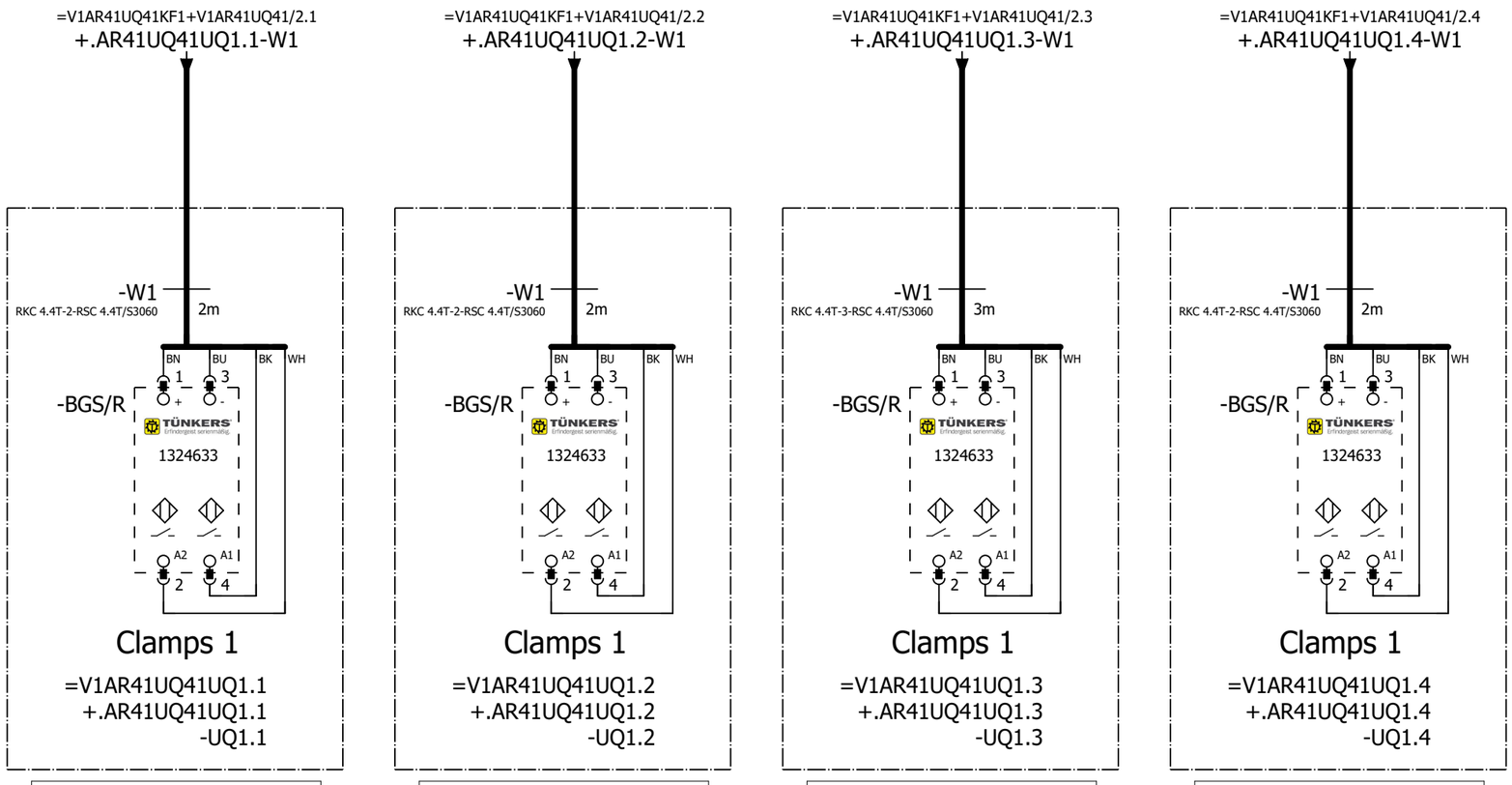

=V1AR41UQ41
-UQ1.1-BGS/R
Clamps 1

=V1AR41UQ41
-UQ1.2-BGS/R
Clamps 1

=V1AR41UQ41
-UQ1.3-BGS/R
Clamps 1

=V1AR41UQ41
-UQ1.4-BGS/R
Clamps 1

=V1AR41UQ41KF1+V1AR41UQ41/4

=V1AR41UQ41UQ2+.AR41UQ41UQ2/1

			Date	12/22/2022	Volvo Trucks North America	Valiant TMS	FESTO DQ CONNECTION QN1	Drawing name: =2V13&EFS_EL	= V1AR41UQ41UQ1	
			Ed.	MKLEPADLO					+ V1AR41UQ41UQ01	
			Appr		Sub-Floor Members			Document type: EFS	Project nr: 22-16146	Page 1
Modification	Date	Name	Original		Replacement of / Replaced by	Scale 1:1				614

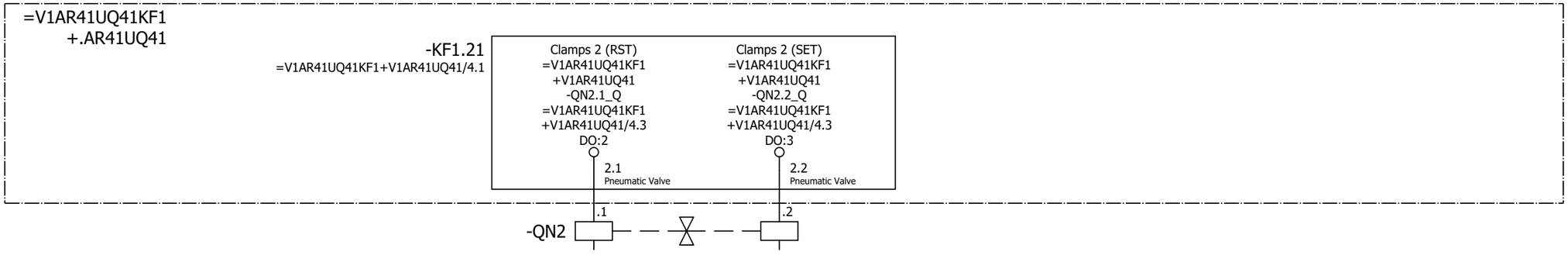

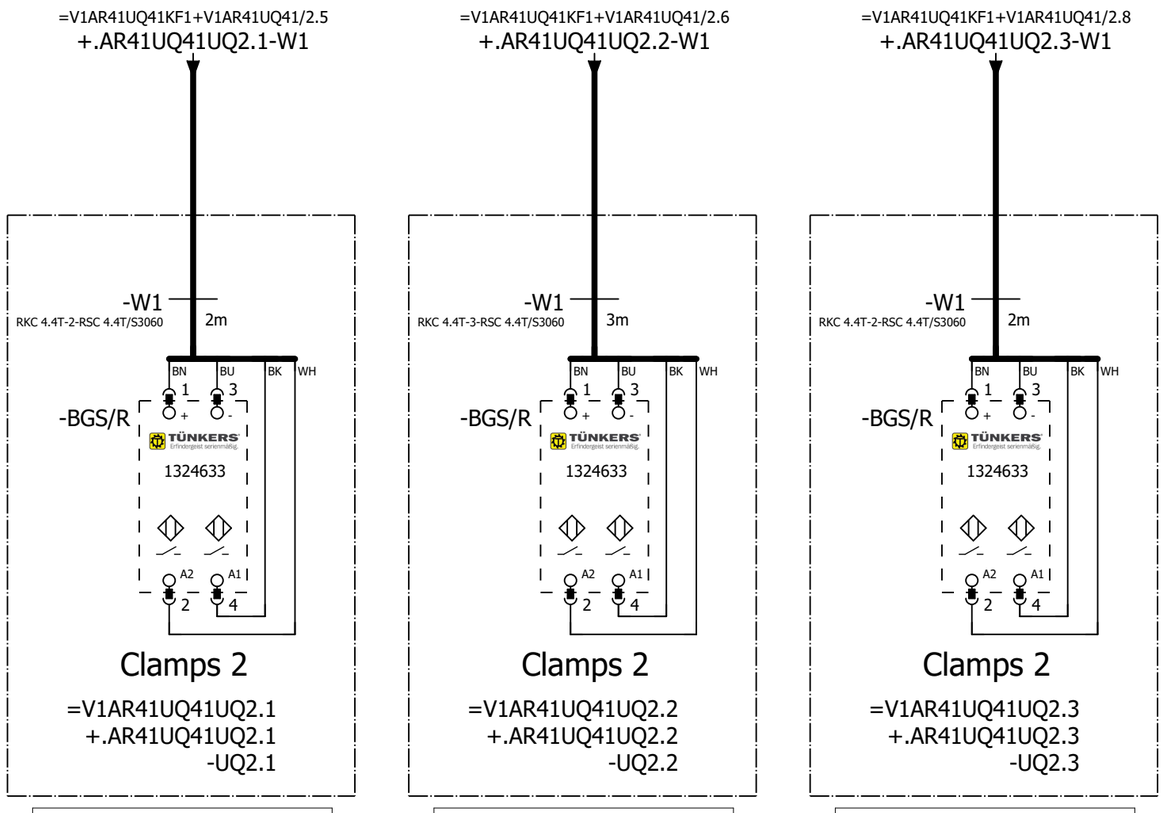

=V1AR41UQ41
-UQ2.1-BGS/R
Clamps 2

=V1AR41UQ41
-UQ2.2-BGS/R
Clamps 2

=V1AR41UQ41
-UQ2.3-BGS/R
Clamps 2

=V1AR41UQ41UQ1+.AR41UQ41UQ01/1

=V1AR41WC1+.AR41UC01/1

			Date	12/22/2022	Volvo Trucks North America		Valiant TMS	FESTO DQ CONNECTION QN2	Drawing name: =2V13&EFS_EL	= V1AR41UQ41UQ2	
			Ed.	MKLEPADLO						+ V1AR41UQ41UQ2	
			Appr		Sub-Floor Members				Document type: EFS	Project nr: 22-16146	Page 1
Modification	Date	Name	Original		Replacement of	Replaced by	Scale 1:1				614

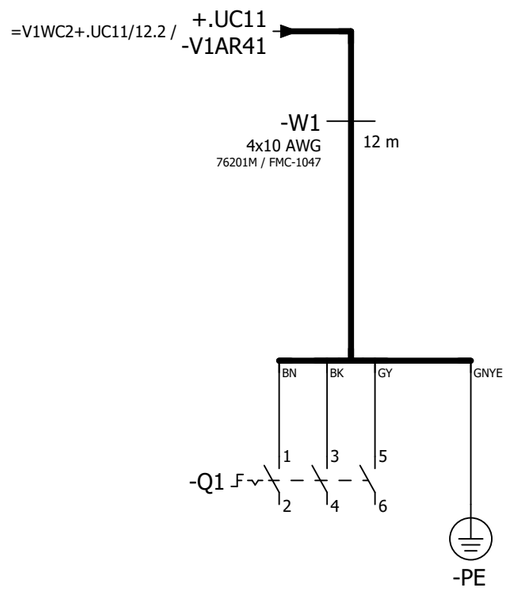

=V1AR41UQ41UQ2+.AR41UQ41UQ2/1

=V1AR41XQ11WC1+.AR41XQ11UC01/1

			Date	12/22/2022	Volvo Trucks North America	Valiant TMS	Incoming power	Drawing name: =2V13&EFS_EL		= V1AR41WC1	
			Ed.	MKLEPADLO						+ V1AR41UC01	
			Appr		Sub-Floor Members			Document type: EFS	Project nr: 22-16146	Page	1
Modification	Date	Name	Original		Replacement of / Replaced by	Scale 1:1					614

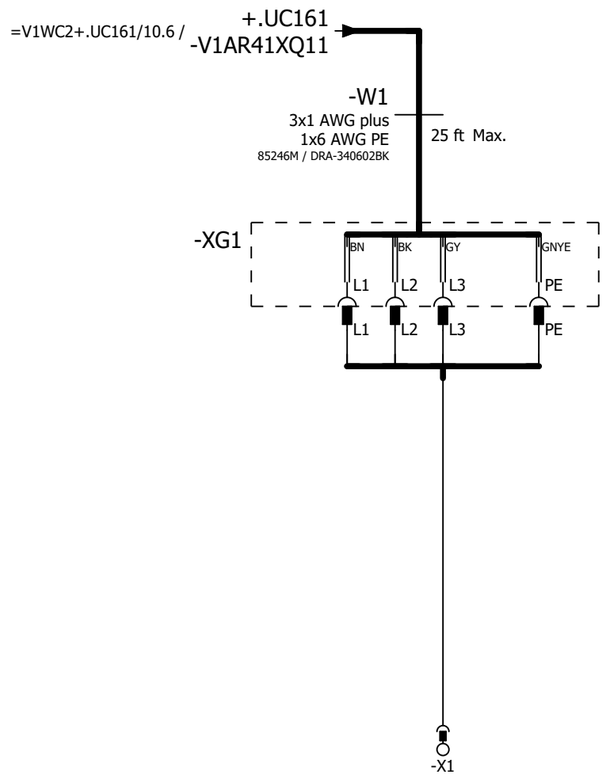

=V1AR41WC1+.AR41UC01/1

=V1AR42KF1+.AR42UC01/1

			Date	12/22/2022	Volvo Trucks North America	Valiant TMS	Incoming power	Drawing name: =2V13&EFS_EL		= V1AR41XQ11WC1	
			Ed.	MKLEPADLO						+ V1AR41XQ11UC01	
			Appr		Sub-Floor Members			Document type: EFS	Project nr: 22-16146		Page 1
Modification	Date	Name	Original		Replacement of / Replaced by	Scale 1:1					614

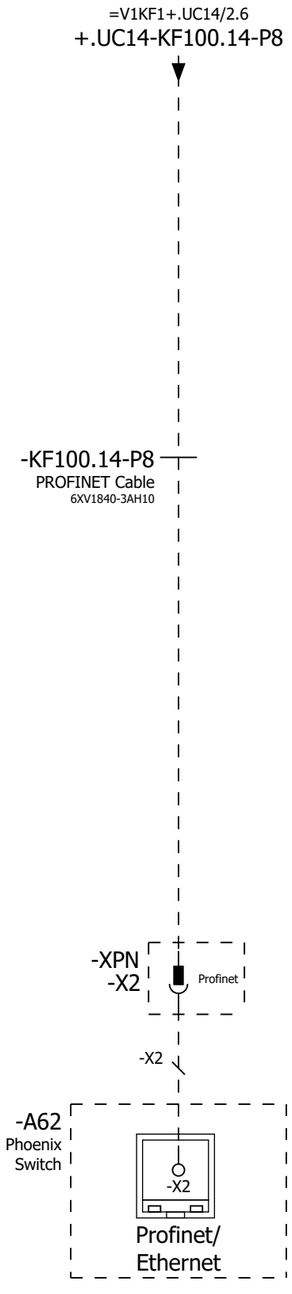

=V1AR41XQ11WC1+.AR41XQ11UC01/1

=V1AR42UQ41BG0+.AR42UQ41/1

			Date	12/22/2022	Volvo Trucks North America		Valiant TMS	Incoming Profinet	Drawing name: =2V13&EFS_EL	= V1AR42KF1	
			Ed.	MKLEPADLO						+ V1AR42UC01	
			Appr		Sub-Floor Members				Document type: EFS	Project nr: 22-16146	Page 1 / 614
Modification	Date	Name	Original		Replacement of	Replaced by	Scale 1:1				

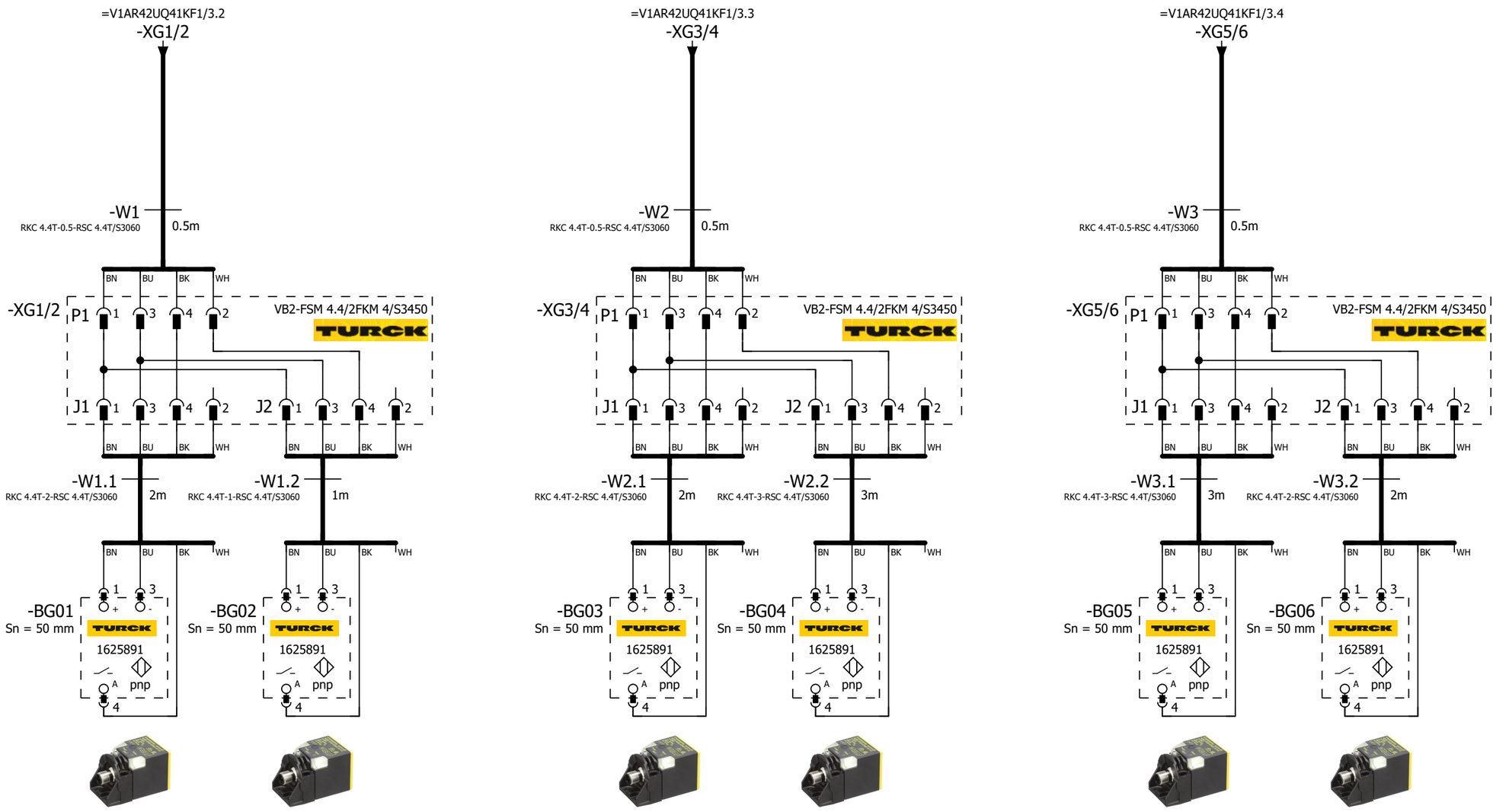

=V1AR42UQ41 -BG01 Front Suspension LH ASSY	=V1AR42UQ41 -BG02 Front Suspension RH ASSY	=V1AR42UQ41 -BG03 Front Suspension RH ASSY	=V1AR42UQ41 -BG04 Front Suspension LH ASSY	=V1AR42UQ41 -BG05 Rear Suspension ASSY	=V1AR42UQ41 -BG06 Rear Suspension ASSY

=V1AR42KF1+.AR42UC01/1

=V1AR42UQ41KF1/1

			Date	12/22/2022	Volvo Trucks North America	Valiant TMS	SENSORS	Drawing name: =2V13&EFS_EL	= V1AR42UQ41BG0	
			Ed.	MKLEPADLO					+ V1AR42UQ41	
			Appr		Sub-Floor Members			Document type: EFS	Project nr: 22-16146	Page 1 / 614
Modification	Date	Name	Original		Replacement of / Replaced by	Scale 1:1				

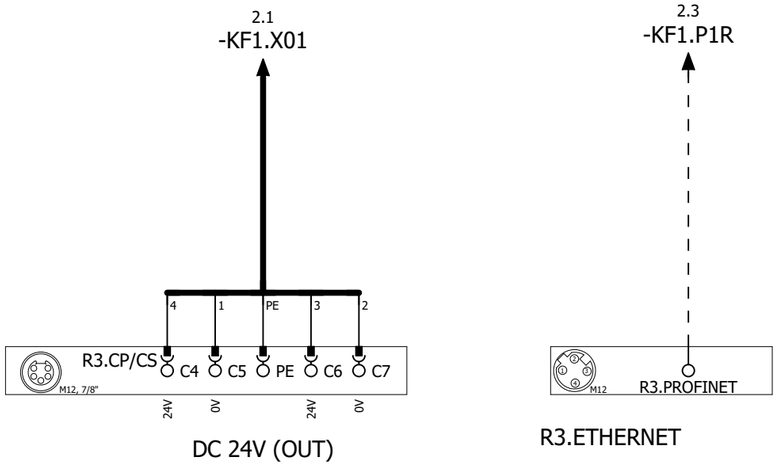

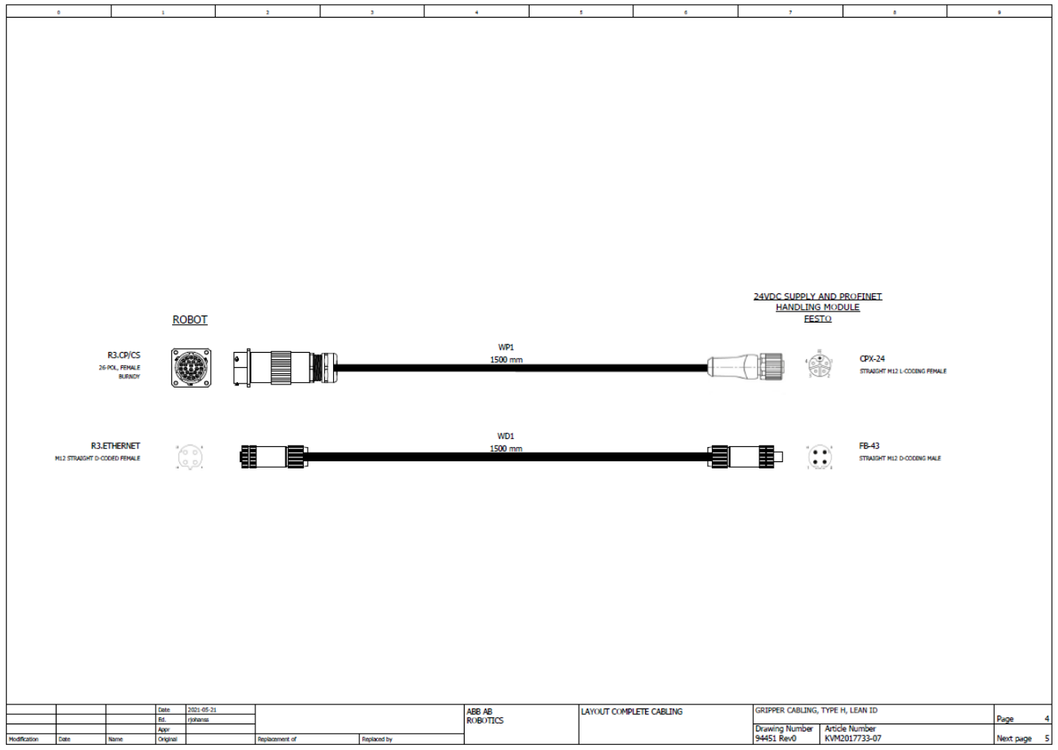

=V1AR42UQ41BG0/1

2

			Date	12/22/2022	Volvo Trucks North America		Valiant TMS	24VDC SUPPLY AND PROFINET HANDLING MODULE	Drawing name: =2V13&EFS_EL	= V1AR42UQ41KF1
			Ed.	MKLEPADLO						+ V1AR42UQ41
			Appr		Sub-Floor Members				Document type: EFS	Project nr: 22-16146
Modification	Date	Name	Original		Replacement of	Replaced by	Scale 1:1			Page 1 / 614

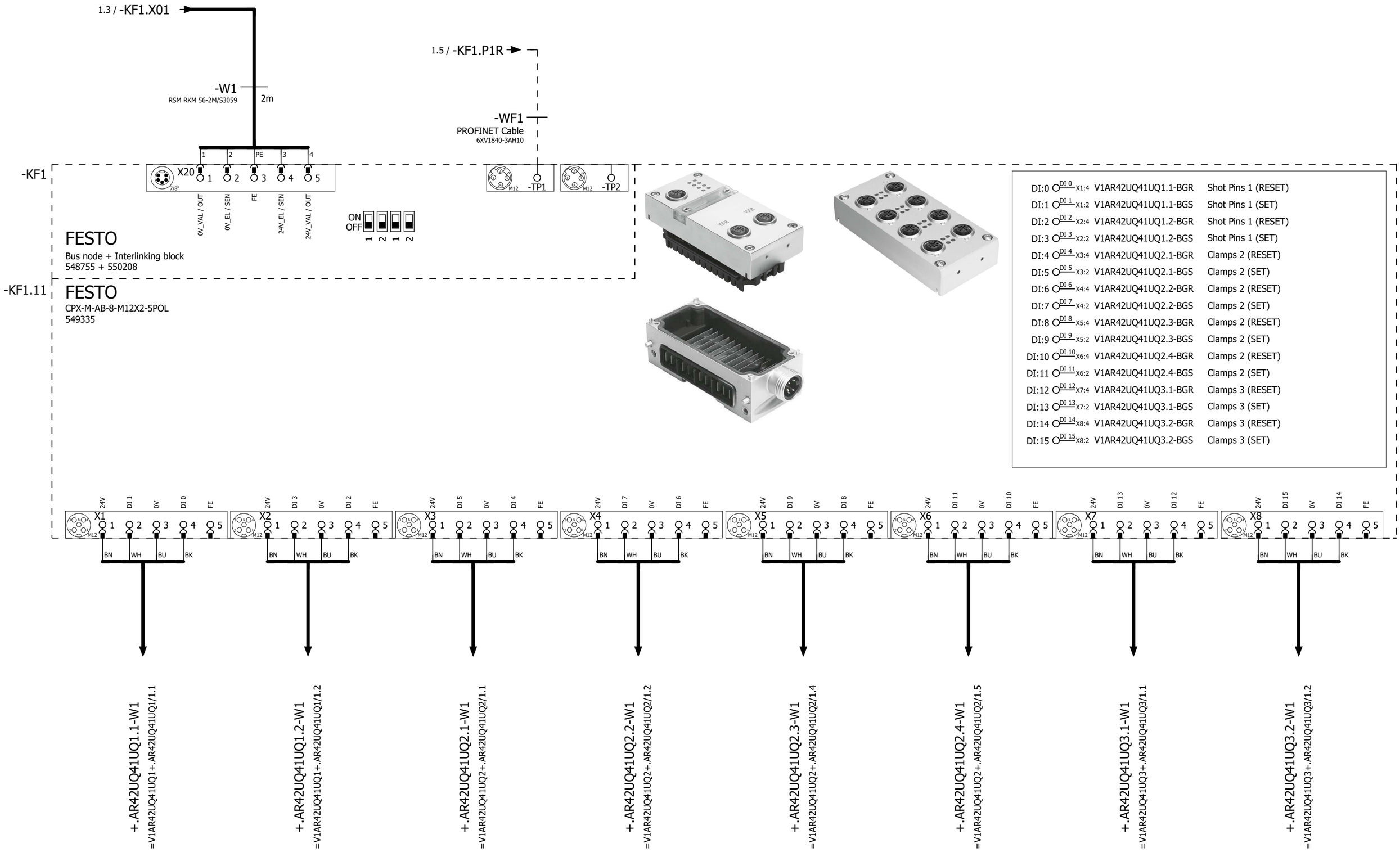

1 3

			Date	12/22/2022	Volvo Trucks North America	Valiant TMS	CONNECTING MOD. FOR MPA MANIFOLD	Drawing name: =2V13&EFS_EL	= V1AR42UQ41KF1		
			Ed.	MKLEPADLO					+ V1AR42UQ41		
			Appr		Sub-Floor Members			Document type: EFS	Project nr: 22-16146	Page	2
Modification	Date	Name	Original		Replacement of	Replaced by	Scale 1:1				614

DI:16	DI 0 X1:4	V1AR42UQ41UQ3.2-BGR	Clamps 3 (RESET)
DI:17	DI 1 X1:2	V1AR42UQ41UQ3.2-BGS	Clamps 3 (SET)
DI:18	DI 2 X2:4	V1AR42UQ41-BG01	Front Suspension LH ASSY
DI:19	DI 3 X2:2	V1AR42UQ41-BG02	Front Suspension RH ASSY
DI:20	DI 4 X3:4	V1AR42UQ41-BG03	Front Suspension RH ASSY
DI:21	DI 5 X3:2	V1AR42UQ41-BG04	Front Suspension LH ASSY
DI:22	DI 6 X4:4	V1AR42UQ41-BG05	Rear Suspension ASSY
DI:23	DI 7 X4:2	V1AR42UQ41-BG06	Rear Suspension ASSY
DI:24	DI 8 X5:4	DI:24	Spare
DI:25	DI 9 X5:2	DI:25	Spare
DI:26	DI 10 X6:4	DI:26	Spare
DI:27	DI 11 X6:2	DI:27	Spare
DI:28	DI 12 X7:4	DI:28	Spare
DI:29	DI 13 X7:2	DI:29	Spare
DI:30	DI 14 X8:4	DI:30	Spare
DI:31	DI 15 X8:2	DI:31	Spare

-KF1.12

FESTO
CPX-M-AB-8-M12X2-5POL
549335

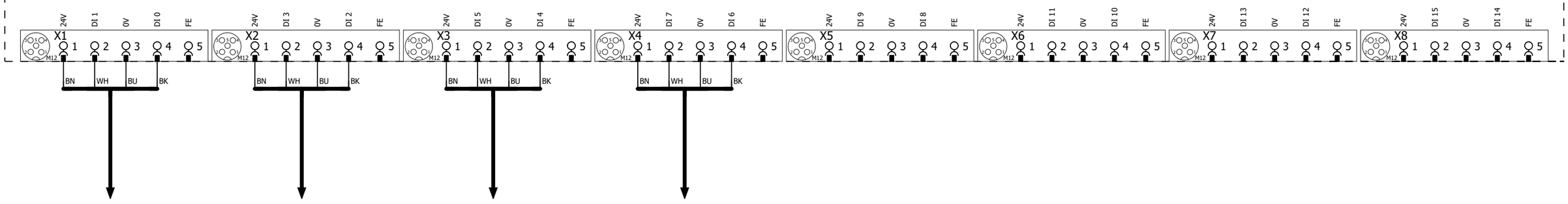

+.AR42UQ41UQ3.3-W1
=V1AR42UQ41UQ3+.AR42UQ41UQ3/1.4

-XG1/2
=V1AR42UQ41BG0/1.1

-XG3/4
=V1AR42UQ41BG0/1.4

-XG5/6
=V1AR42UQ41BG0/1.6

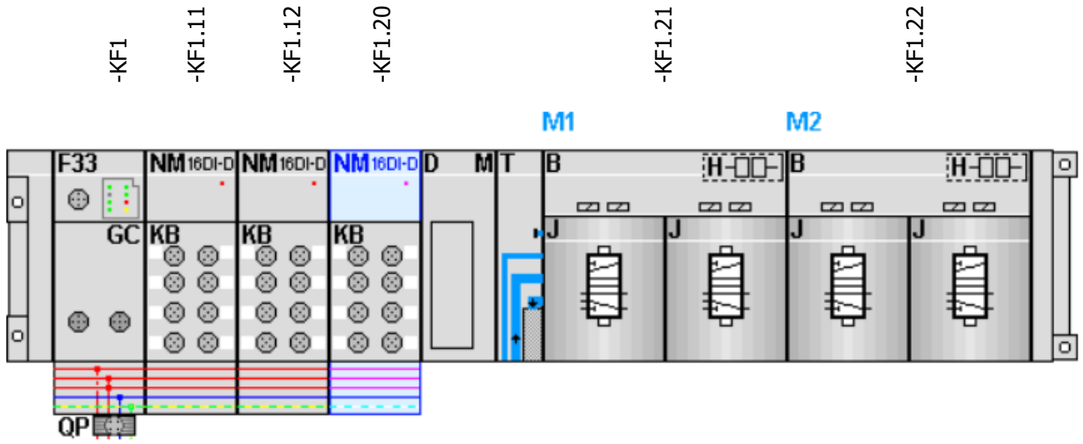

-KF1.21
=V1AR42UQ41UQ1+.AR42UQ41UQ1/1.3
=V1AR42UQ41UQ2+.AR42UQ41UQ2/1.3

FESTO

=V1AR42UQ41UQ1+.AR42UQ41UQ1/1.4	DO:0 DO 0 1.1	-QN1.1_Q	Shot Pins 1 (RST)
=V1AR42UQ41UQ1+.AR42UQ41UQ1/1.4	DO:1 DO 1 1.2	-QN1.2_Q	Shot Pins 1 (SET)
=V1AR42UQ41UQ2+.AR42UQ41UQ2/1.4	DO:2 DO 2 2.1	-QN2.1_Q	Clamps 2 (RST)
=V1AR42UQ41UQ2+.AR42UQ41UQ2/1.4	DO:3 DO 3 2.2	-QN2.2_Q	Clamps 2 (SET)

-KF1.22
=V1AR42UQ41UQ3+.AR42UQ41UQ3/1.3

FESTO

=V1AR42UQ41UQ3+.AR42UQ41UQ3/1.4	DO:4 DO 0 1.1	-QN3.1_Q	Clamps 3 (RST)
=V1AR42UQ41UQ3+.AR42UQ41UQ3/1.4	DO:5 DO 1 1.2	-QN3.2_Q	Clamps 3 (SET)
	DO:6 DO 2 2.1	-QN4.1_Q	Spare (RST)
	DO:7 DO 3 2.2	-QN4.2_Q	Spare (SET)

			Date	12/22/2022	Volvo Trucks North America	Valiant TMS	CONNECTING MOD. FOR FESTO DQ	Drawing name: =2V13&EFS_EL		= V1AR42UQ41KF1	
			Ed.	MKLEPADLO						+ V1AR42UQ41	
			Appr		Sub-Floor Members			Document type: EFS	Project nr: 22-16146		Page 4
Modification	Date	Name	Original		Replacement of / Replaced by	Scale 1:1					614

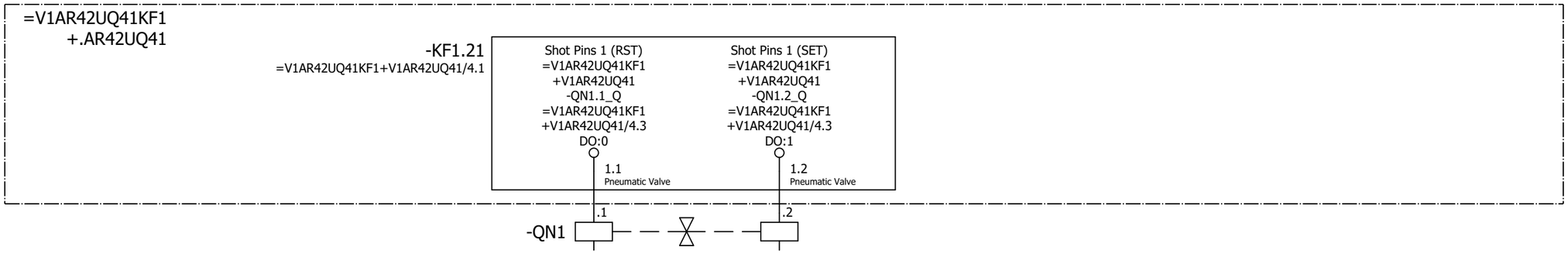

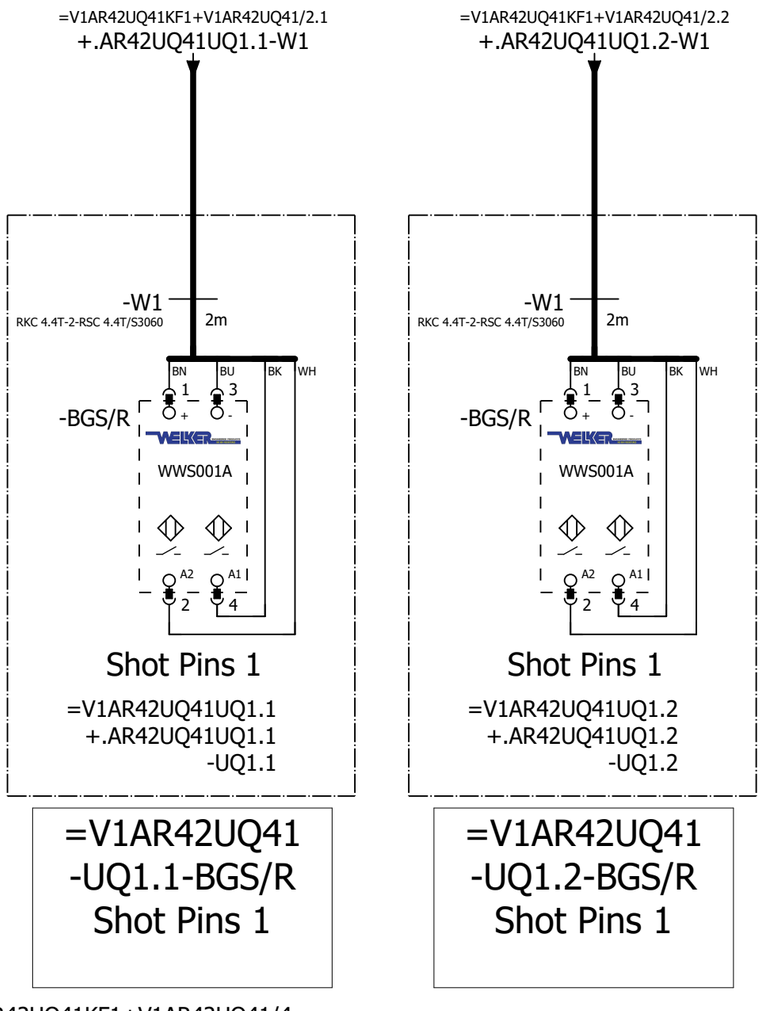

=V1AR42UQ41
-UQ1.1-BGS/R
Shot Pins 1

=V1AR42UQ41
-UQ1.2-BGS/R
Shot Pins 1

=V1AR42UQ41KF1+V1AR42UQ41/4

=V1AR42UQ41UQ2+.AR42UQ41UQ2/1

			Date	12/22/2022	Volvo Trucks North America		Valiant TMS	FESTO DQ CONNECTION QN1	Drawing name: =2V13&EFS_EL	= V1AR42UQ41UQ1	
			Ed.	MKLEPADLO						+ V1AR42UQ41UQ1	
			Appr		Sub-Floor Members				Document type: EFS	Project nr: 22-16146	Page 1
Modification	Date	Name	Original		Replacement of	Replaced by	Scale 1:1				614

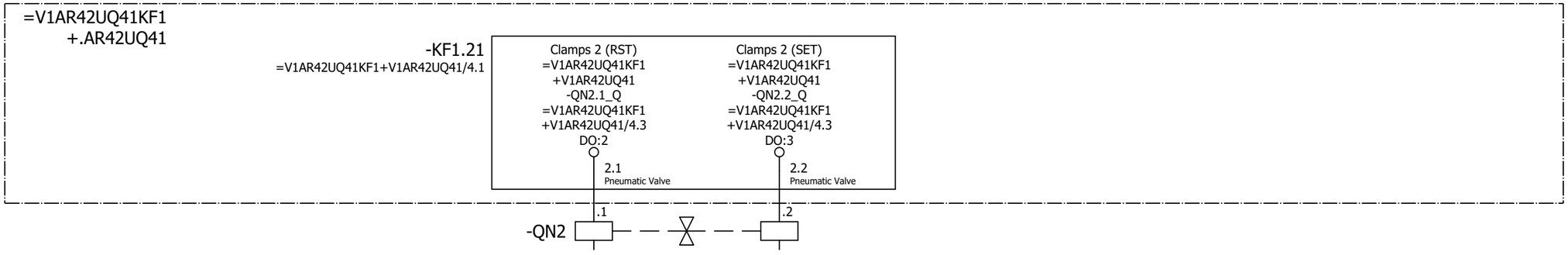

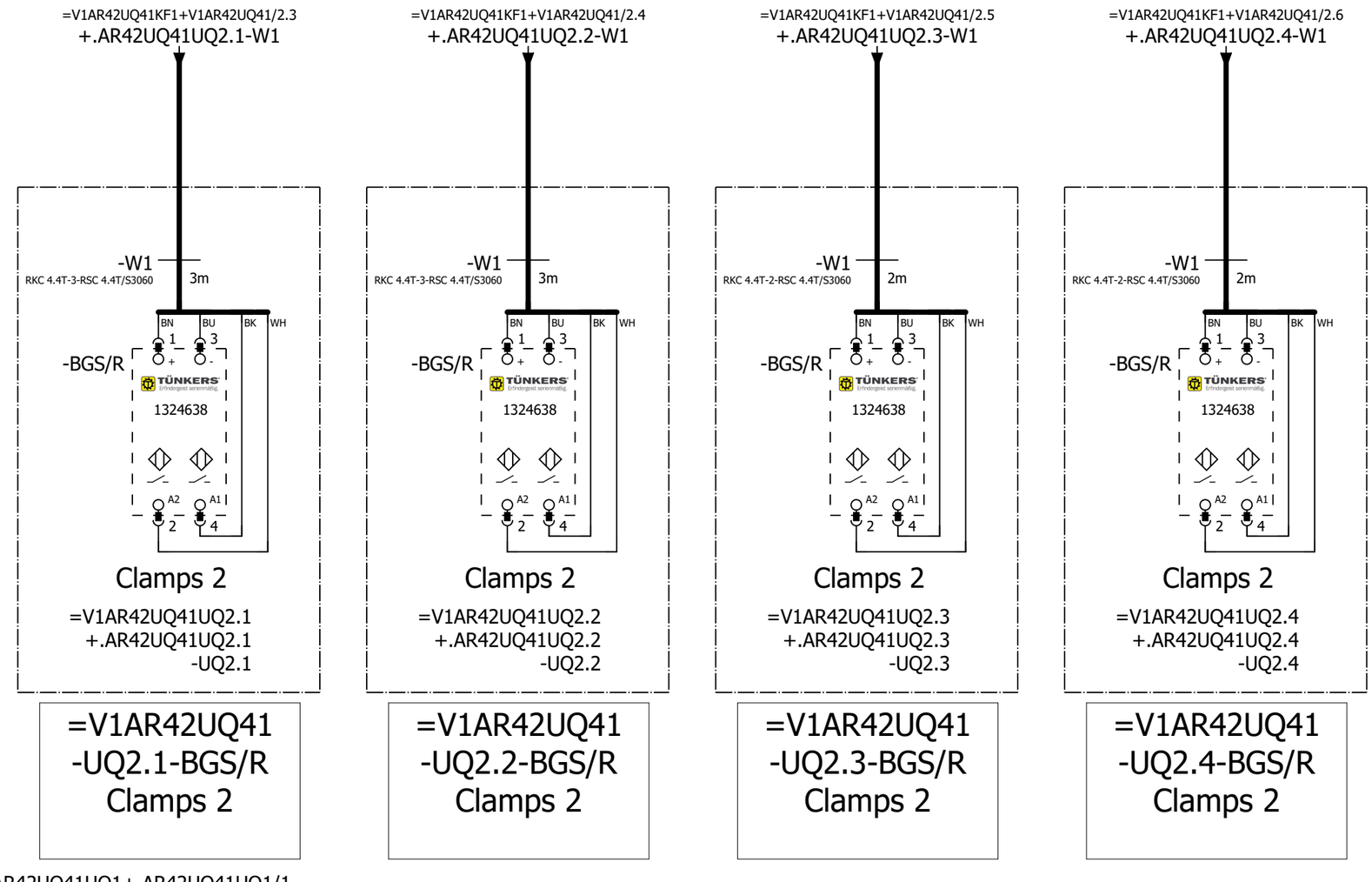

=V1AR42UQ41UQ1+.AR42UQ41UQ1/1

=V1AR42UQ41UQ3+.AR42UQ41UQ3/1

			Date	12/22/2022	Volvo Trucks North America	Valiant TMS	FESTO DQ CONNECTION QN2	Drawing name: =2V13&EFS_EL	= V1AR42UQ41UQ2		
			Ed.	MKLEPADLO					+ V1AR42UQ41UQ2		
			Appr		Sub-Floor Members			Document type: EFS	Project nr: 22-16146	Page	1
Modification	Date	Name	Original		Replacement of / Replaced by	Scale 1:1					614

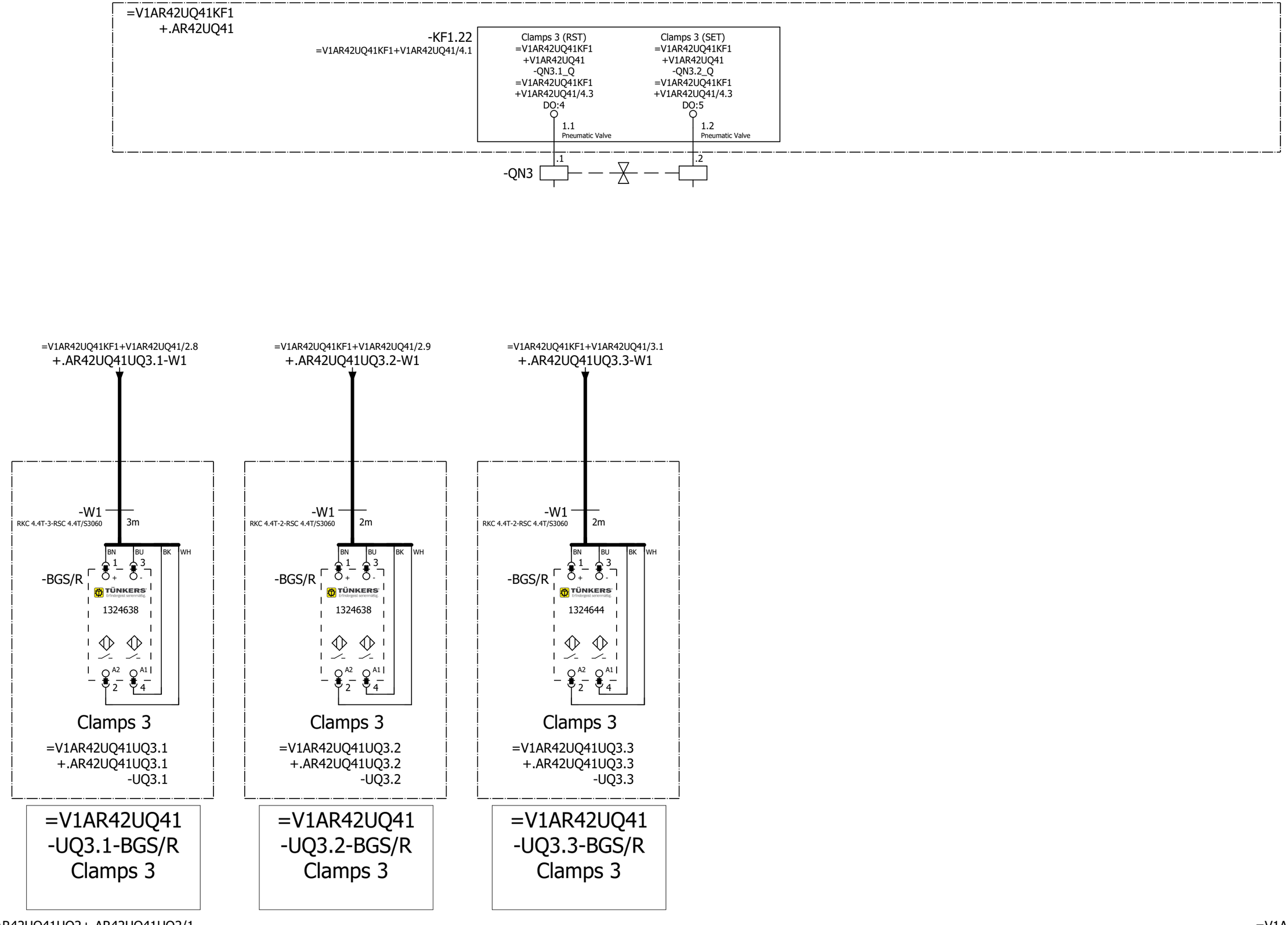

=V1AR42UQ41UQ2+.AR42UQ41UQ2/1

=V1AR42WC1+.AR42UC01/1

			Date	12/22/2022	Volvo Trucks North America	Valiant TMS	FESTO DQ CONNECTION QN2	Drawing name: =2V13&EFS_EL	= V1AR42UQ41UQ3		
			Ed.	MKLEPADLO					+ V1AR42UQ41UQ3		
			Appr		Sub-Floor Members			Document type: EFS	Project nr: 22-16146	Page	1
Modification	Date	Name	Original		Replacement of / Replaced by	Scale 1:1					614

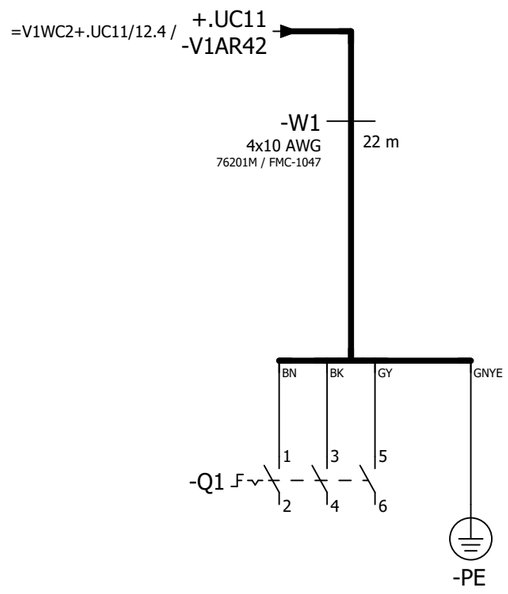

=V1AR42UQ41UQ3+.AR42UQ41UQ3/1

=V1AR42XQ11WC1+.AR42XQ11UC01/1

			Date	12/22/2022	Volvo Trucks North America	Valiant TMS	Incoming power	Drawing name: =2V13&EFS_EL		= V1AR42WC1	
			Ed.	MKLEPADLO						+ V1AR42UC01	
			Appr		Sub-Floor Members			Document type: EFS	Project nr: 22-16146	Page	1
Modification	Date	Name	Original		Replacement of / Replaced by	Scale 1:1					614

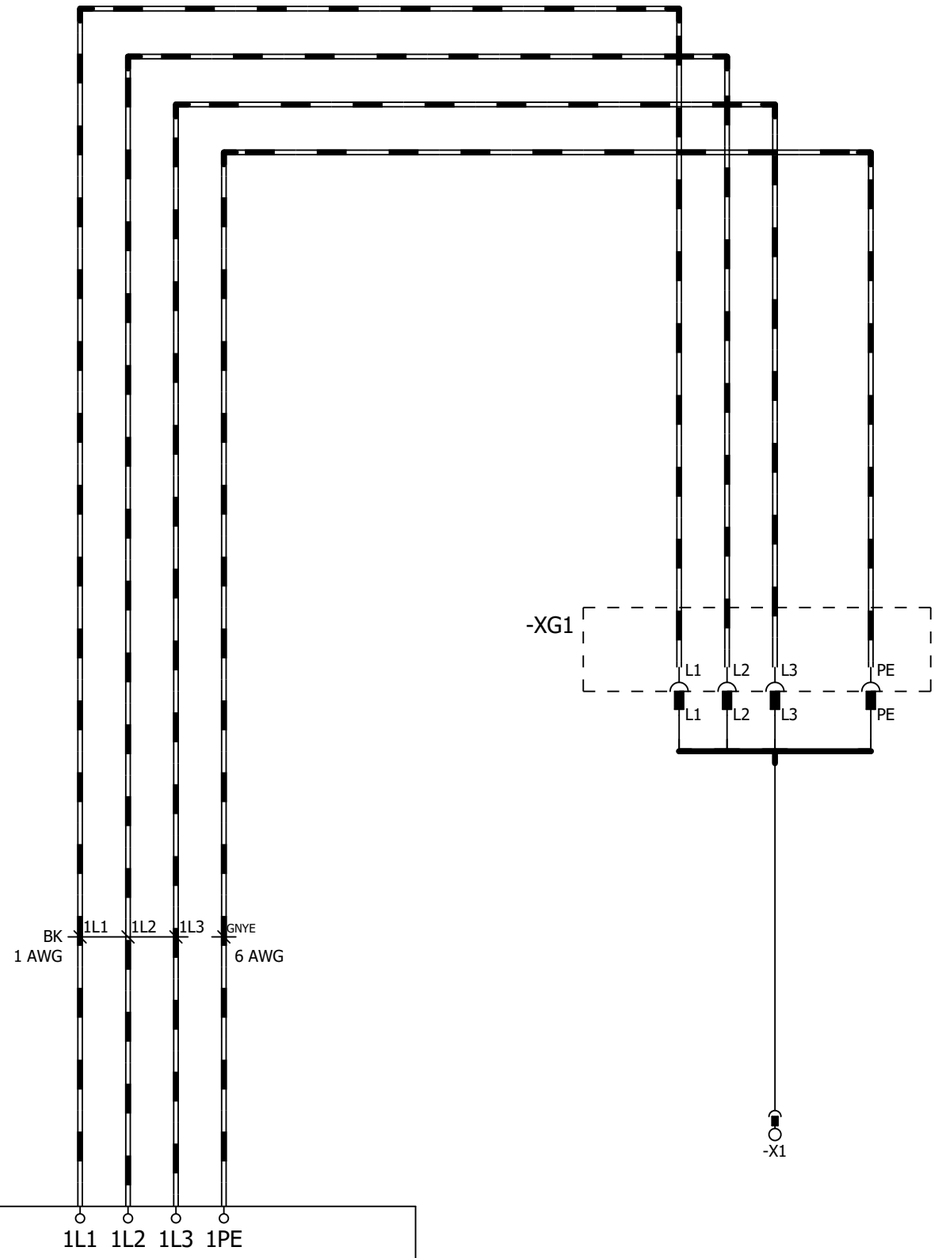

480VAC TN-S 3 PHASE 60Hz
Fed from: .....
short circuit protection: .....
Over current: .....
cable type: 1 AWG

IkMax =.....kA
IkMin = ...kA
Z: ..... mΩ.

=V1AR42WC1+.AR42UC01/1

=V1AR61KF1+.AR61UC01/1

			Date	12/22/2022	Volvo Trucks North America		Valiant TMS	Incoming power	Drawing name: =2V13&EFS_EL	= V1AR42XQ11WC1	
			Ed.	MKLEPADLO						+ V1AR42XQ11UC01	
			Appr		Sub-Floor Members				Document type: EFS	Project nr: 22-16146	Page 1
Modification	Date	Name	Original		Replacement of	Replaced by	Scale 1:1				614

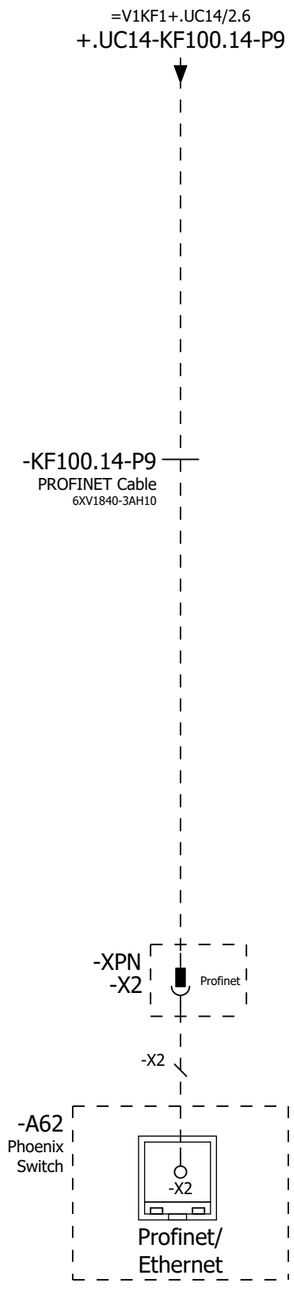

=V1AR42XQ11WC1+.AR42XQ11UC01/1

=V1AR61WC1/1

			Date	12/22/2022	Volvo Trucks North America	Valiant TMS	Incoming Profinet	Drawing name: =2V13&EFS_EL	= V1AR61KF1	
			Ed.	MKLEPADLO					+ V1AR61UC01	
			Appr		Sub-Floor Members			Document type: EFS	Project nr: 22-16146	Page 1 / 614
Modification	Date	Name	Original		Replacement of / Replaced by	Scale 1:1				

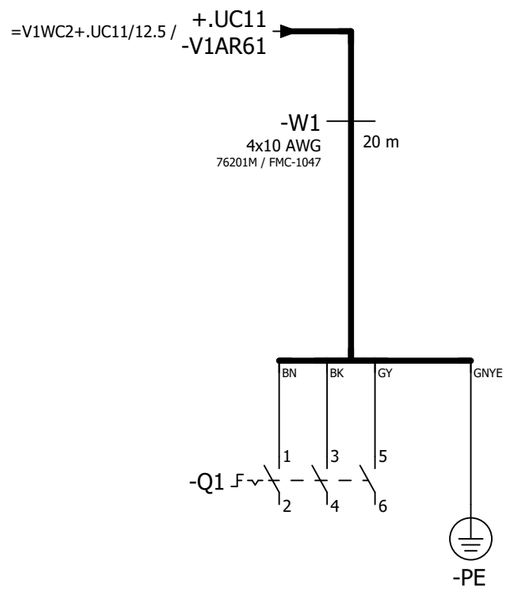

=V1AR61KF1/1

=V1AR61XQ21WC1+.AR61XQ21UC01/1

			Date	12/22/2022	Volvo Trucks North America	Valiant TMS	Incoming power	Drawing name: =2V13&EFS_EL	= V1AR61WC1	
			Ed.	MKLEPADLO					+ V1AR61UC01	
			Appr		Sub-Floor Members			Document type: EFS	Project nr: 22-16146	Page 1 / 614
Modification	Date	Name	Original		Replacement of / Replaced by	Scale 1:1				

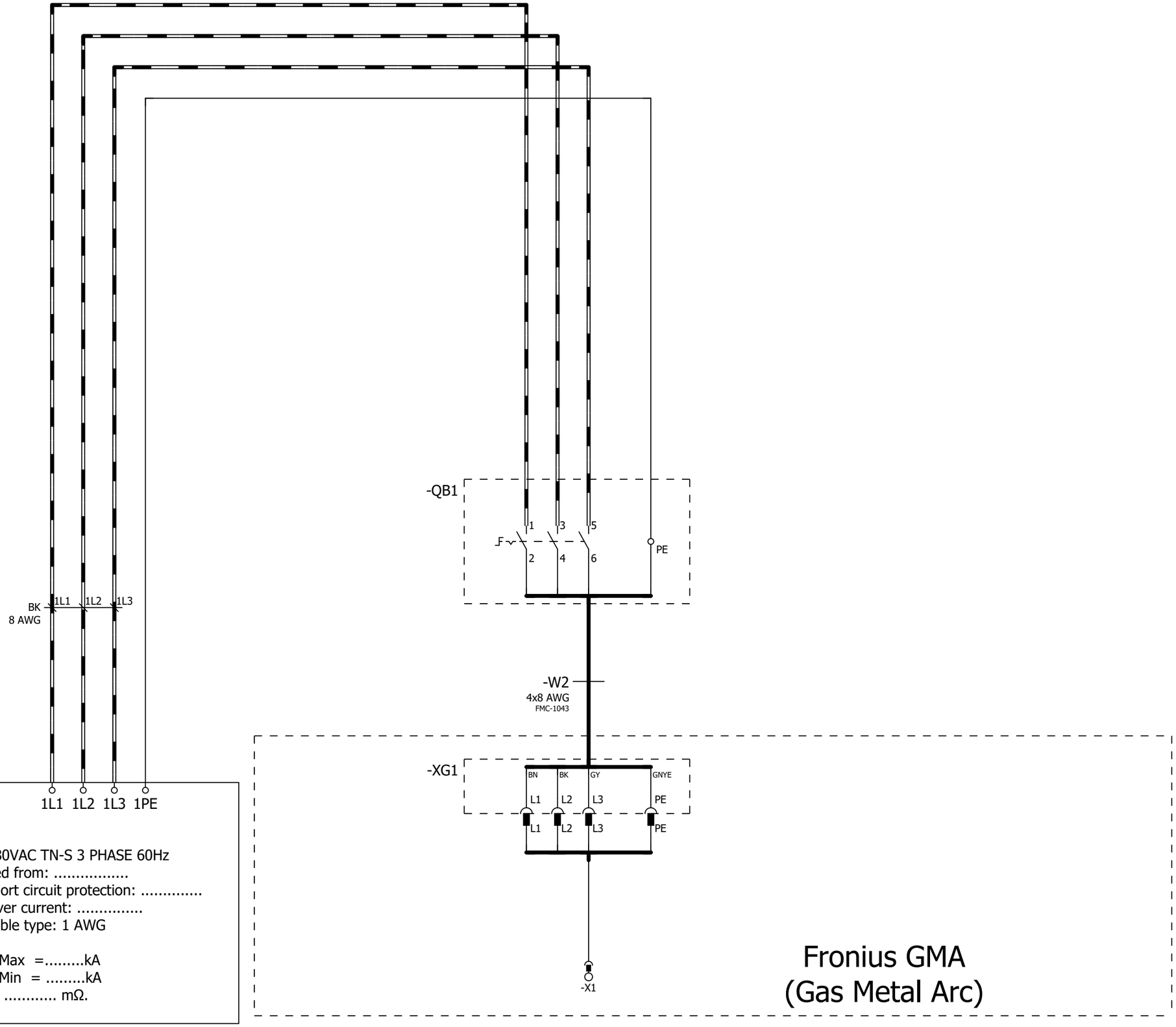

480VAC TN-S 3 PHASE 60Hz
Fed from: .....
short circuit protection: .....
Over current: .....
cable type: 1 AWG

IkMax =.....kA
IkMin = ...kA
Z: ..... mΩ.

=V1AR61WC1+.AR61UC01/1

=V1AR61XQ23WC1+.AR61XQ23UC01/1

			Date	12/22/2022	Volvo Trucks North America	Valiant TMS	Incoming power	Drawing name: =2V13&EFS_EL	= V1AR61XQ21WC1	
			Ed.	MKLEPADLO					+ V1AR61XQ21UC01	
			Appr		Sub-Floor Members			Document type: EFS	Project nr: 22-16146	Page 1
Modification	Date	Name	Original		Replacement of	Replaced by	Scale 1:1			614

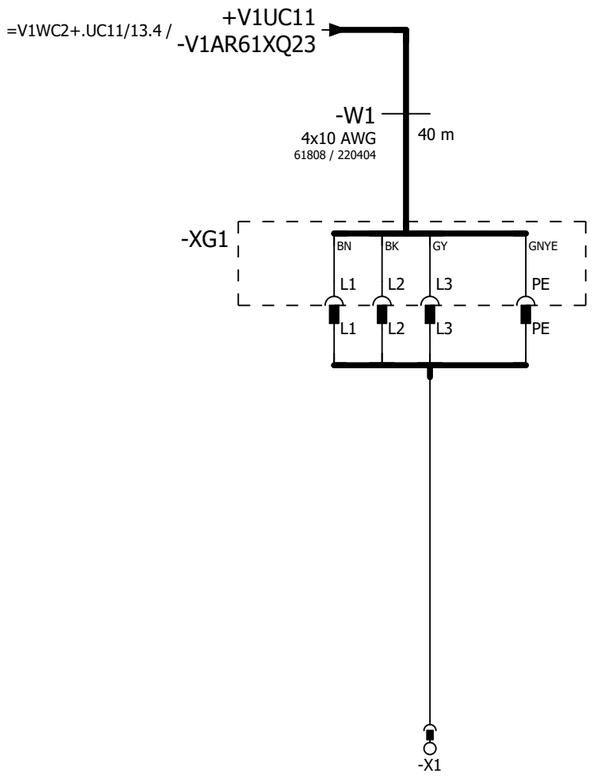

=V1AR61XQ21WC1+.AR61XQ21UC01/1

=V1AR62KF1+.AR62UC01/4

			Date	12/22/2022	Volvo Trucks North America	Valiant TMS	Incoming power	Drawing name: =2V13&EFS_EL		= V1AR61XQ23WC1	
			Ed.	MKLEPADLO						+ V1AR61XQ23UC01	
			Appr		Sub-Floor Members			Document type: EFS	Project nr: 22-16146		Page 1
Modification	Date	Name	Original		Replacement of / Replaced by	Scale 1:1					614

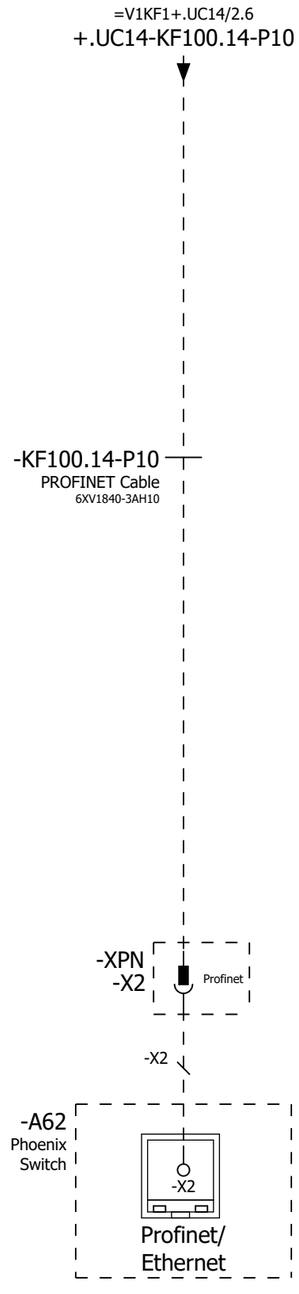

=V1AR61XQ23WC1+.AR61XQ23UC01/1

=V1AR62WC1/2

			Date	12/22/2022	Volvo Trucks North America	Valiant TMS	Incoming Profinet	Drawing name: =2V13&EFS_EL	= V1AR62KF1	
			Ed.	MKLEPADLO					+ V1AR62UC01	
			Appr		Sub-Floor Members			Document type: EFS	Project nr: 22-16146	Page 4 / 614
Modification	Date	Name	Original		Replacement of / Replaced by	Scale 1:1				

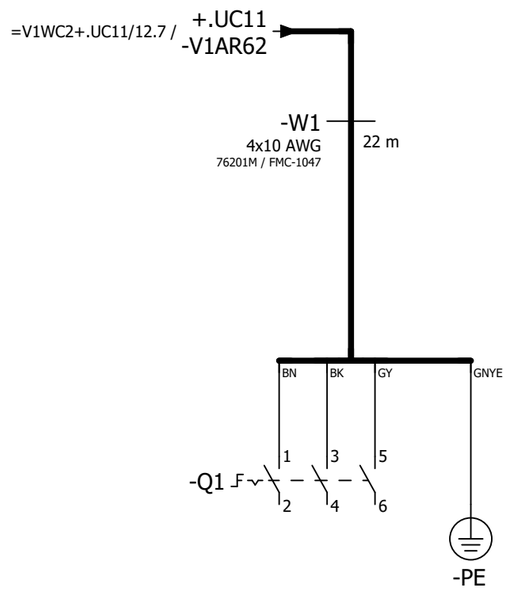

=V1AR62KF1/4

=V1AR62XQ21WC1+.AR62XQ21UC01/1

			Date	12/22/2022	Volvo Trucks North America	Valiant TMS	Incoming power	Drawing name: =2V13&EFS_EL	= V1AR62WC1	
			Ed.	MKLEPADLO					+ V1AR62UC01	
			Appr		Sub-Floor Members			Document type: EFS	Project nr: 22-16146	Page 2 / 614
Modification	Date	Name	Original		Replacement of / Replaced by	Scale 1:1				

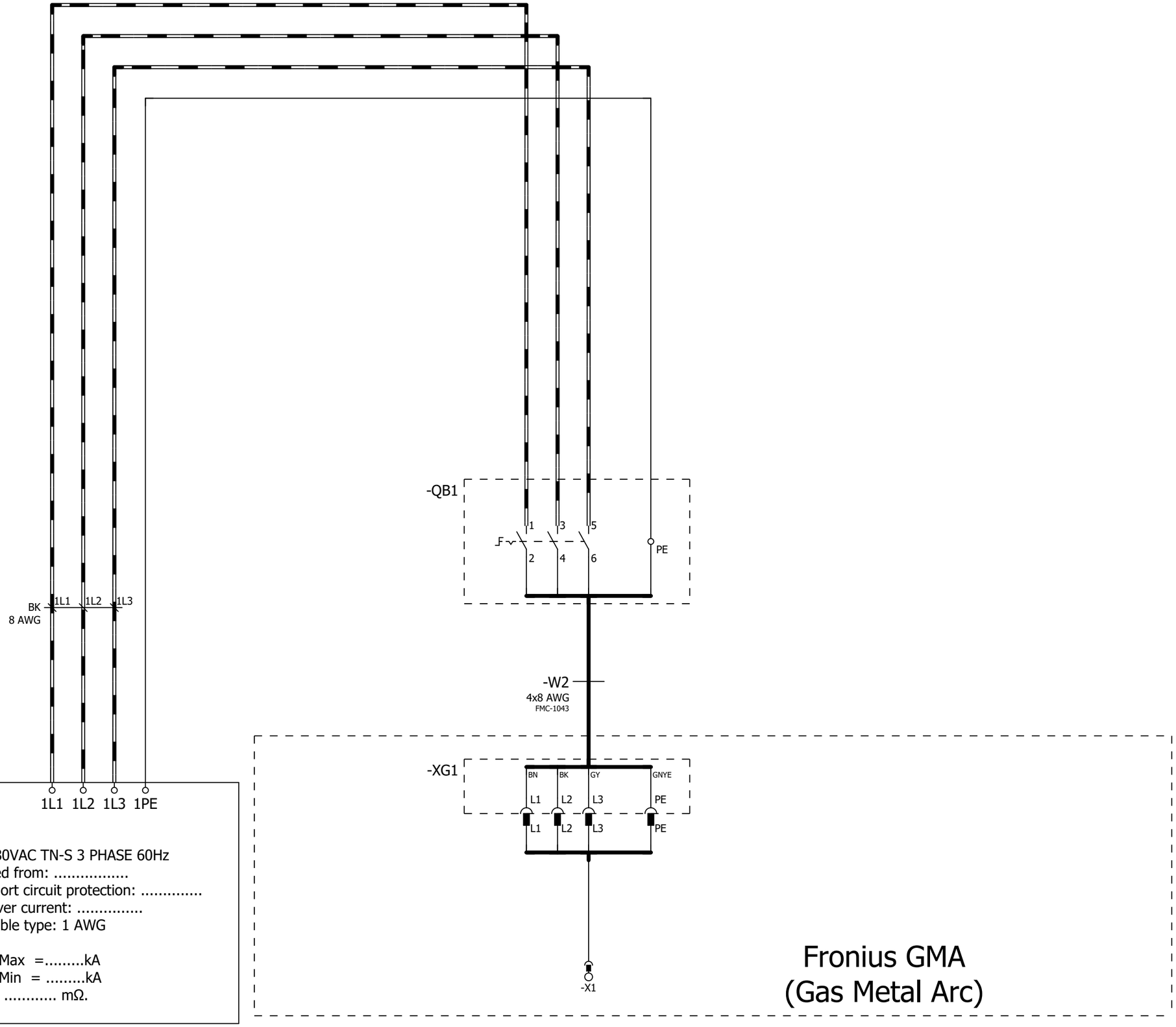

480VAC TN-S 3 PHASE 60Hz
Fed from: .....
short circuit protection: .....
Over current: .....
cable type: 1 AWG

IkMax =.....kA
IkMin = ...kA
Z: ..... mΩ.

=V1AR62WC1+.AR62UC01/2

=V1FQ1+.FQ1/1

			Date	12/22/2022	Volvo Trucks North America		Valiant TMS	Incoming power	Drawing name: =2V13&EFS_EL	= V1AR62XQ21WC1	
			Ed.	MKLEPADLO						+ V1AR62XQ21UC01	
			Appr		Sub-Floor Members				Document type: EFS	Project nr: 22-16146	Page 1
Modification	Date	Name	Original		Replacement of	Replaced by	Scale 1:1				614

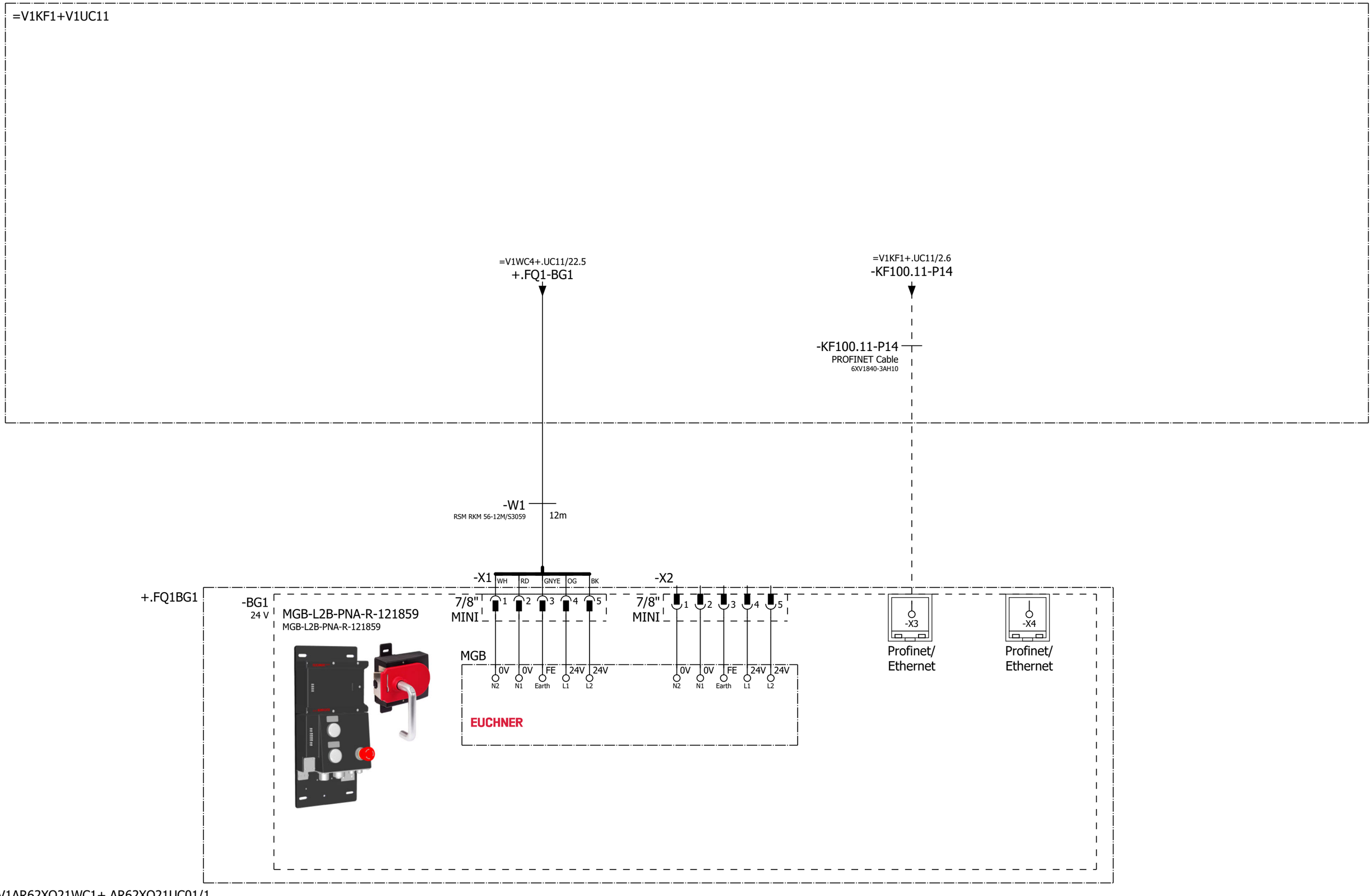

=V1AR62XQ21WC1+.AR62XQ21UC01/1

2

			Date	12/22/2022	Volvo Trucks North America	Valiant TMS	Door lock sensor -BG1	Drawing name: =2V13&EFS_EL	= V1FQ1		
			Ed.	MKLEPADLO					+ V1FQ1		
			Appr		Sub-Floor Members			Document type: EFS	Project nr: 22-16146	Page	1
Modification	Date	Name	Original		Replacement of	Replaced by	Scale 1:1				614

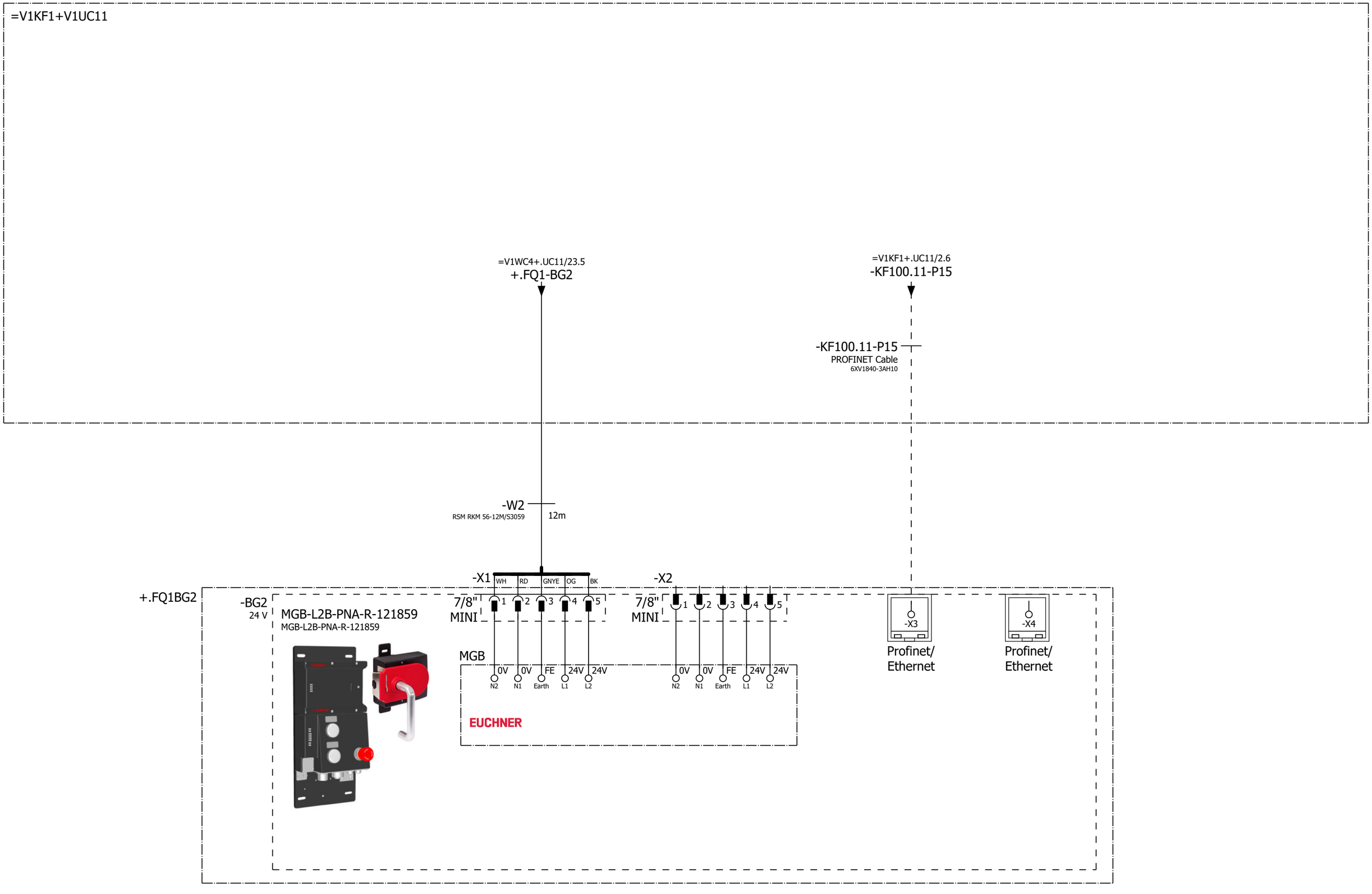

1 3

			Date	12/22/2022	Volvo Trucks North America	Valiant TMS	Door lock sensor -BG2	Drawing name: =2V13&EFS_EL	= V1FQ1		
			Ed.	MKLEPADLO					+ V1FQ1		
			Appr		Sub-Floor Members			Document type: EFS	Project nr: 22-16146	Page	2
Modification	Date	Name	Original		Replacement of	Replaced by	Scale 1:1				614

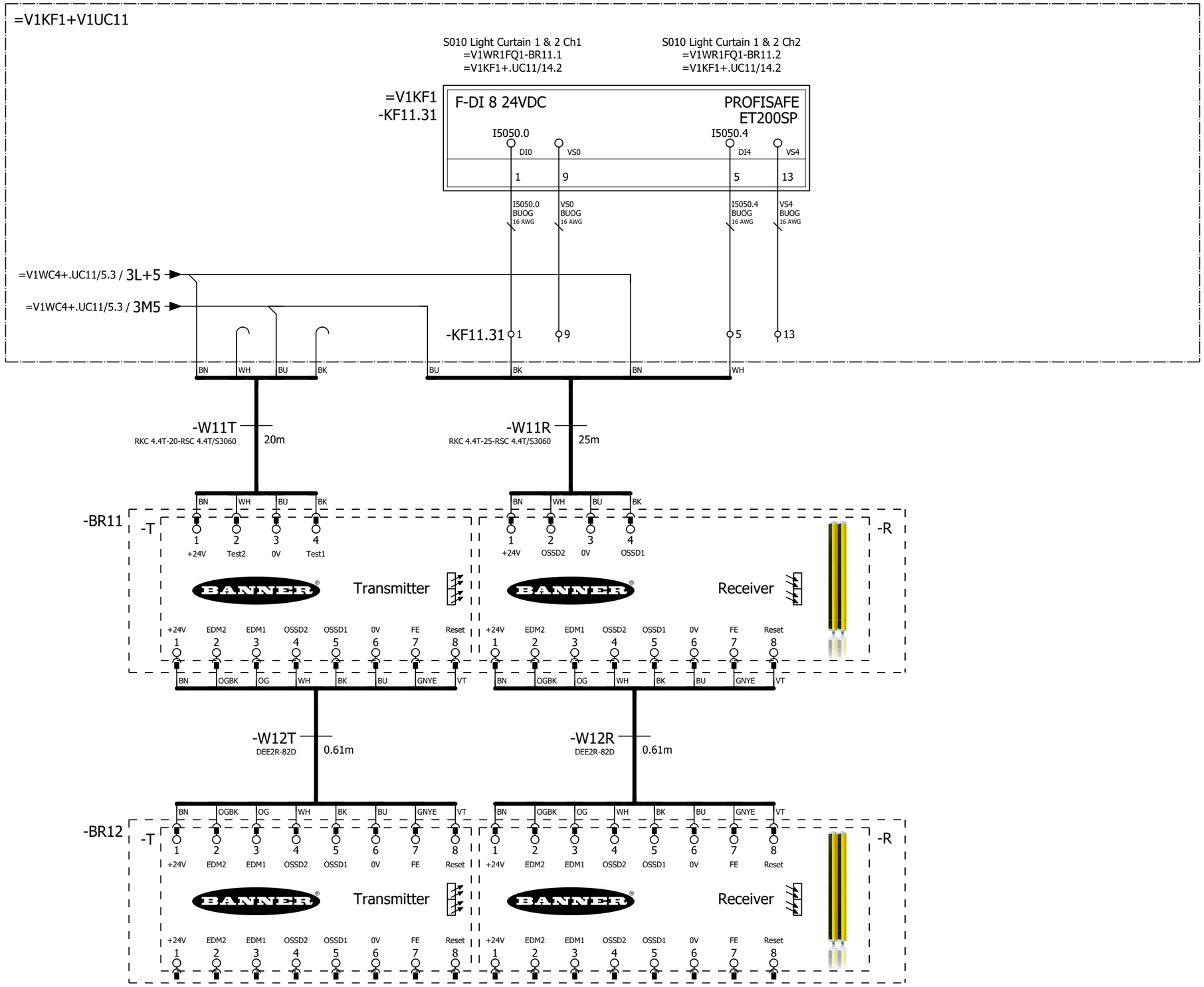

2

4

			Date	12/22/2022	Volvo Trucks North America	Valiant TMS	S010 Light Curtain	Drawing name: =2V13&EFS_EL	= V1FQ1		
			Ed.	MKLEPADLO					+ V1FQ1		
			Appr		Sub-Floor Members			Document type: EFS	Project nr: 22-16146	Page	3
Modification	Date	Name	Original		Replacement of / Replaced by	Scale 1:1					614

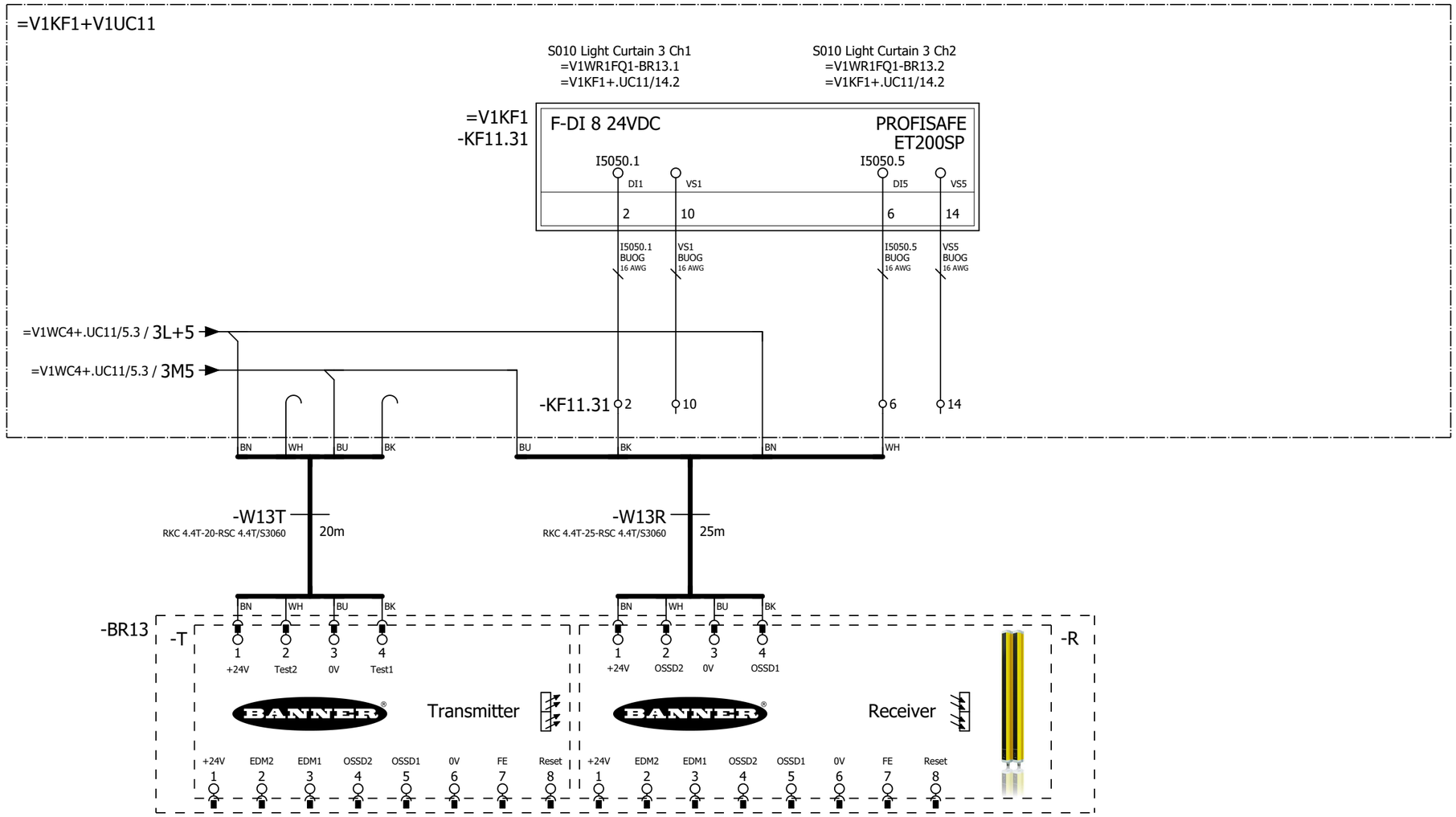

3 5

			Date	12/22/2022	Volvo Trucks North America	Valiant TMS	S010 Light Curtain	Drawing name: =2V13&EFS_EL		= V1FQ1	
			Ed.	MKLEPADLO						+ V1FQ1	
			Appr		Sub-Floor Members			Document type: EFS	Project nr: 22-16146	Page	4
Modification	Date	Name	Original		Replacement of / Replaced by	Scale 1:1					614

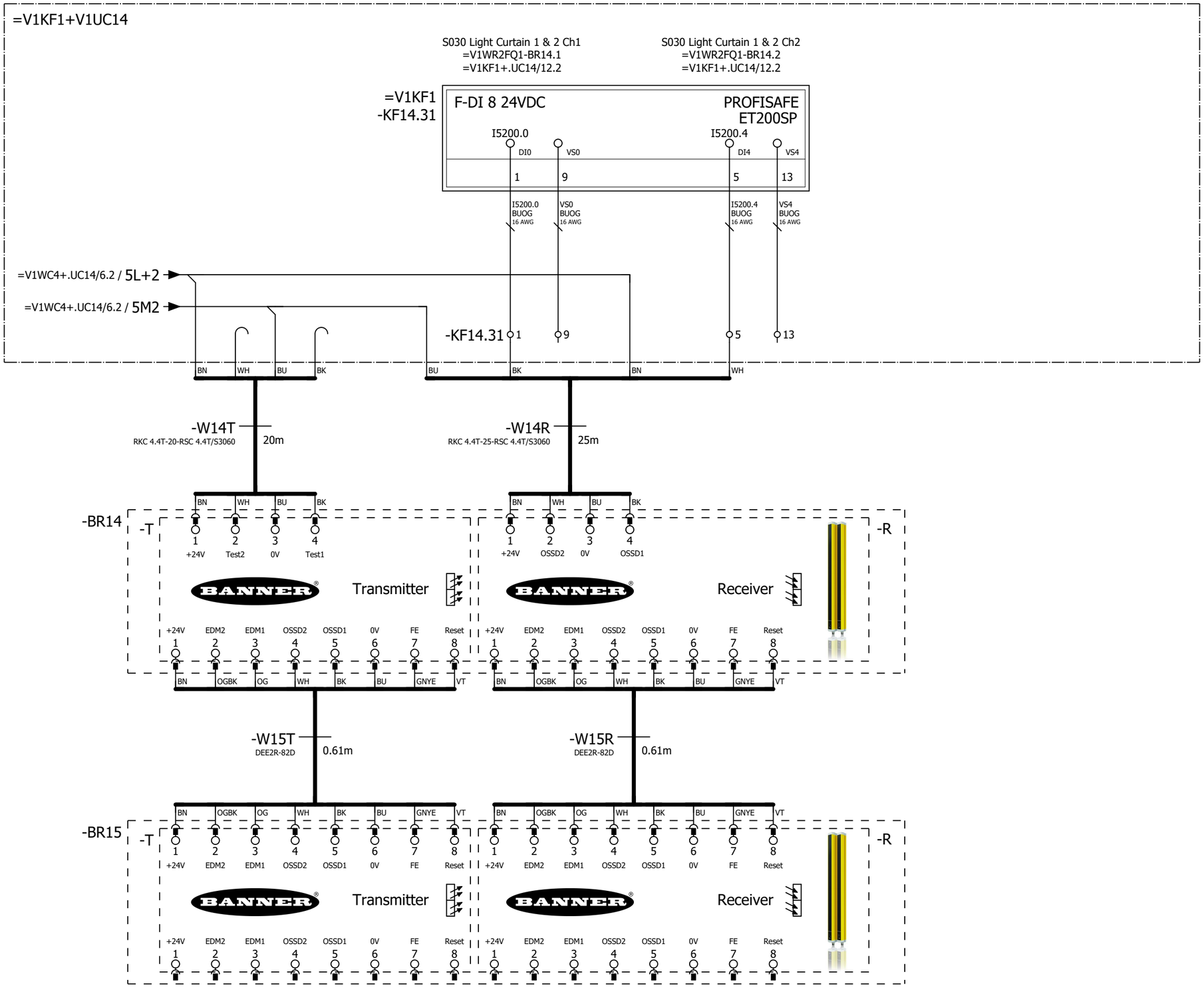

4 6

			Date	12/22/2022	Volvo Trucks North America	Valiant TMS	S030 Light Curtain	Drawing name: =2V13&EFS_EL	= V1FQ1		
			Ed.	MKLEPADLO					+ V1FQ1		
			Appr		Sub-Floor Members			Document type: EFS	Project nr: 22-16146	Page	5
Modification	Date	Name	Original		Replacement of / Replaced by	Scale 1:1					614

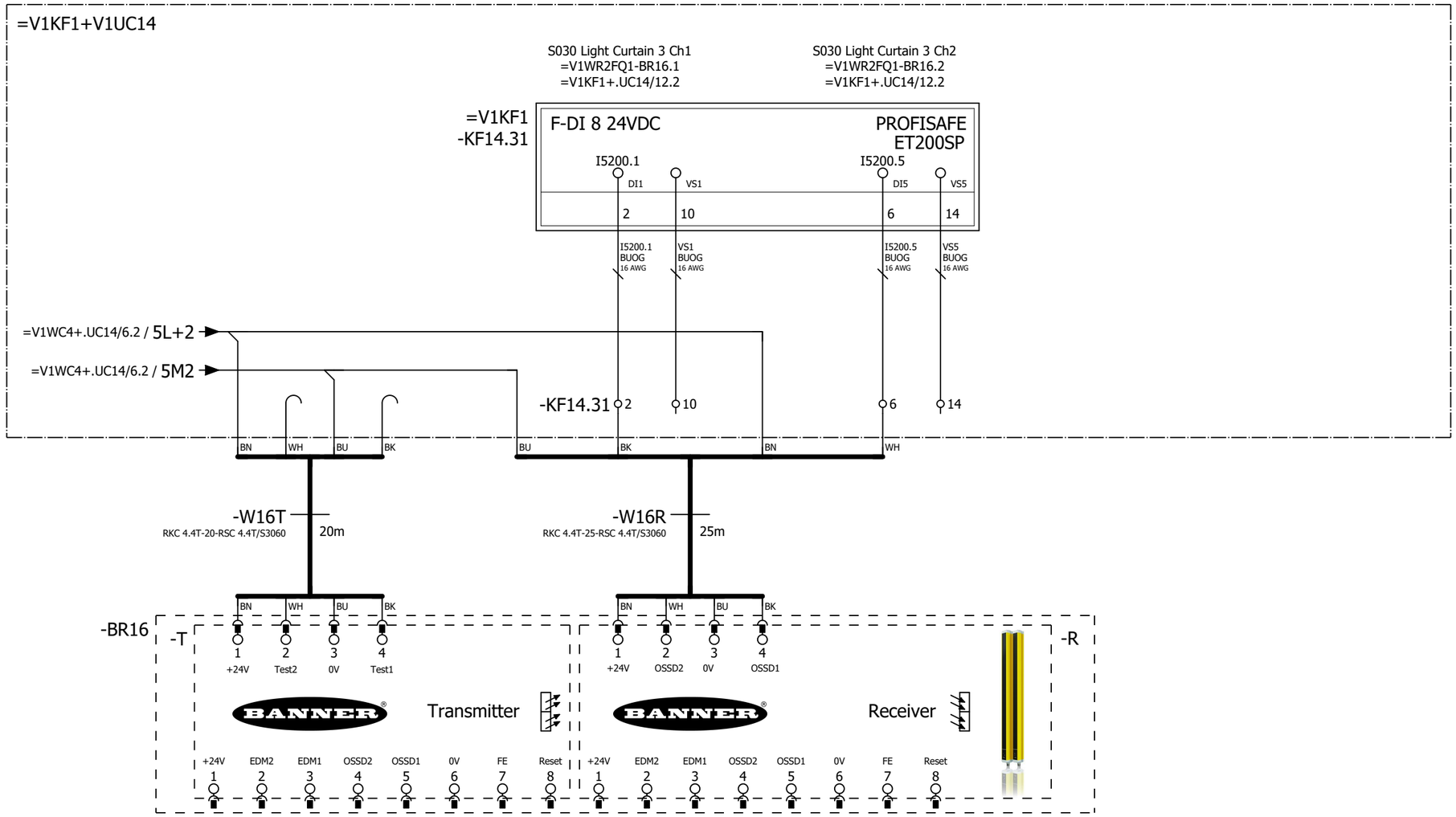

5 7

			Date	12/22/2022	Volvo Trucks North America	Valiant TMS	S030 Light Curtain	Drawing name: =2V13&EFS_EL		= V1FQ1	
			Ed.	MKLEPADLO						+ V1FQ1	
			Appr		Sub-Floor Members			Document type: EFS	Project nr: 22-16146	Page	6
Modification	Date	Name	Original		Replacement of / Replaced by	Scale 1:1					614

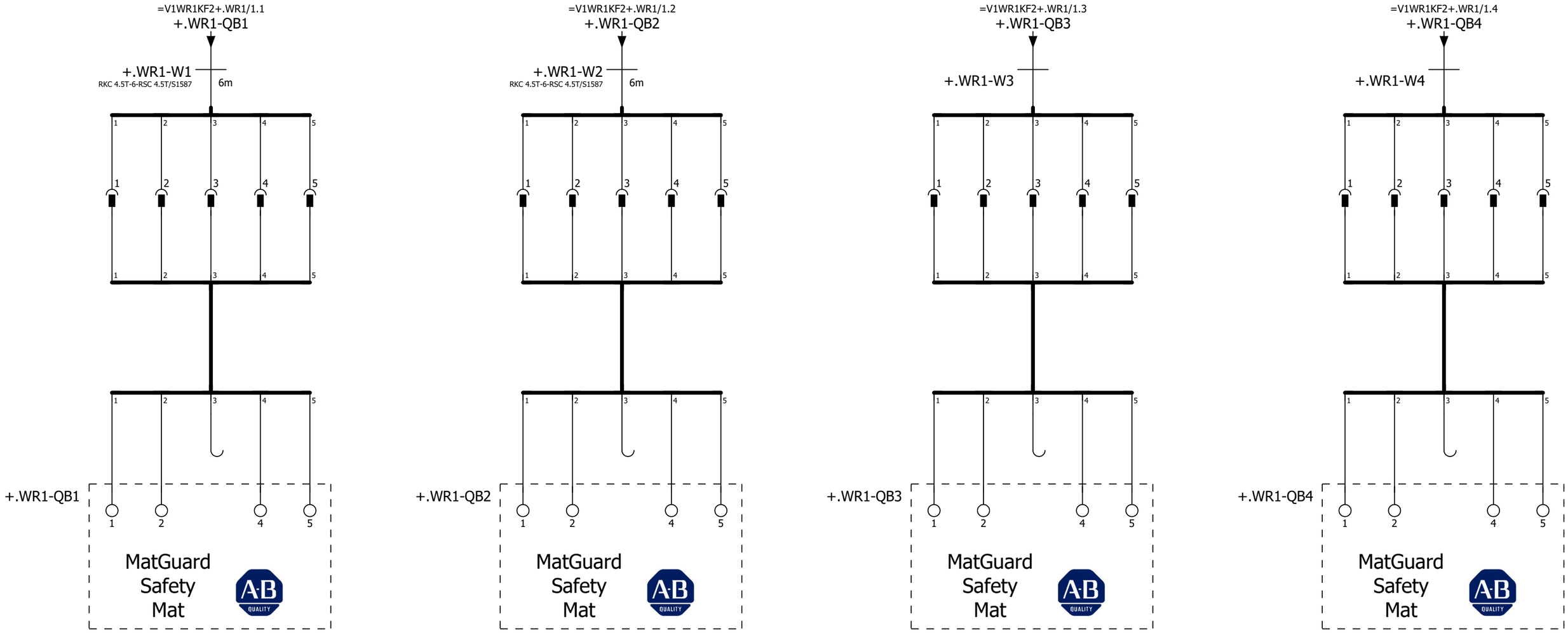
=V1WR1KF2+.WR1/1.1
+.WR1-QB1
+.WR1-W1
RKC 4.5T-6-RSC 4.5T/S1587
6m
+.WR1-QB1
MatGuard
Safety
Mat
=V1WR1KF2+.WR1/1.2
+.WR1-QB2
+.WR1-W2
RKC 4.5T-6-RSC 4.5T/S1587
6m
+.WR1-QB2
MatGuard
Safety
Mat
=V1WR1KF2+.WR1/1.3
+.WR1-QB3
+.WR1-W3
+.WR1-QB3
MatGuard
Safety
Mat
=V1WR1KF2+.WR1/1.4
+.WR1-QB4
+.WR1-W4
+.WR1-QB4
MatGuard
Safety
Mat

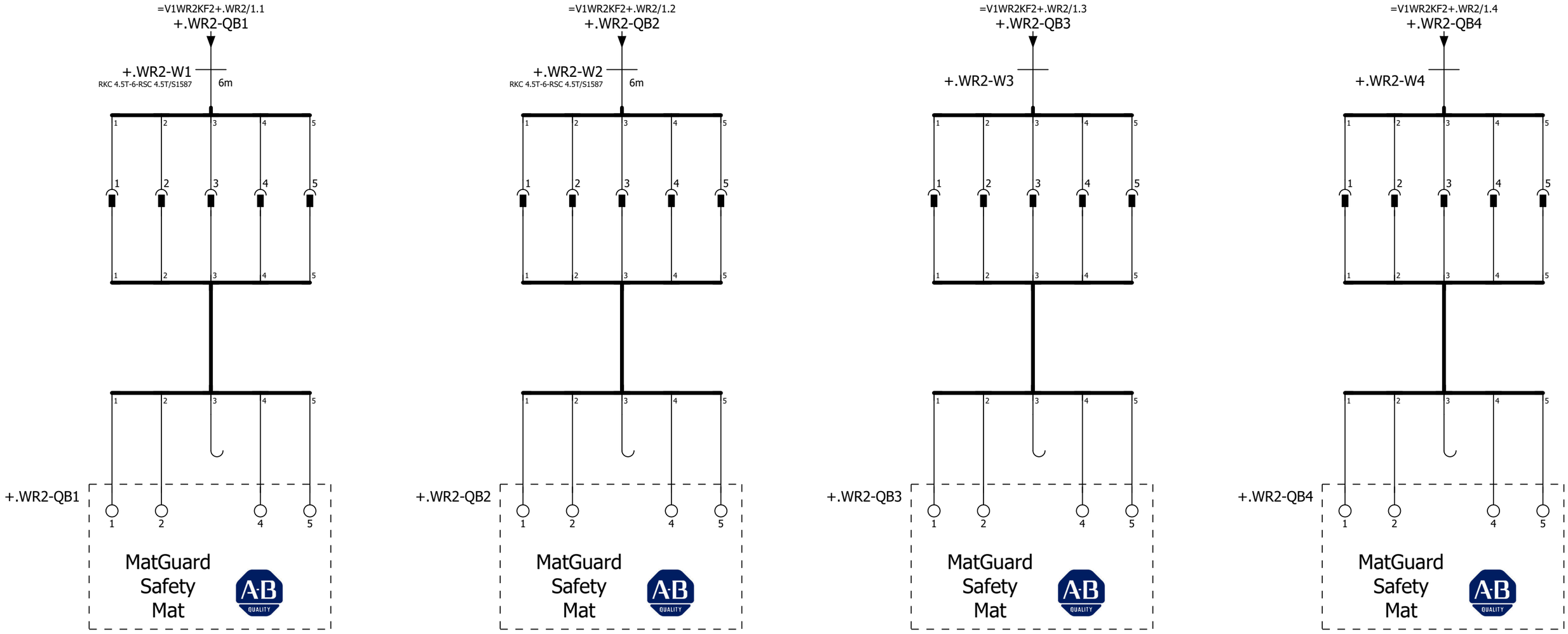

7

+.UC11/1

			Date	12/22/2022	Volvo Trucks North America	Valiant TMS	S030 Safety Mats	Drawing name: =2V13&EFS_EL	= V1FQ1	
			Ed.	MKLEPADLO					+ V1FQ1	
			Appr		Sub-Floor Members			Document type: EFS	Project nr: 22-16146	Page 8 / 614
Modification	Date	Name	Original		Replacement of / Replaced by	Scale 1:1				

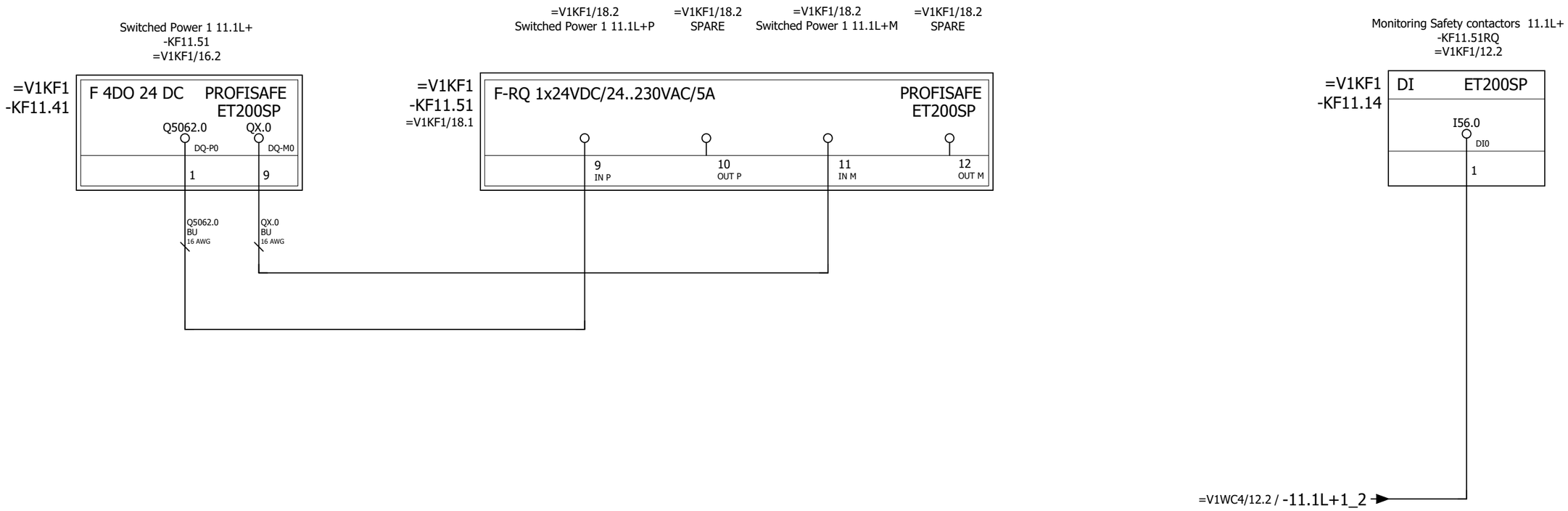

+.FQ1/8

2

			Date	12/22/2022	Volvo Trucks North America	Valiant TMS	Safety power monitoring RQ - KF11.51	Drawing name: =2V13&EFS_EL	= V1FQ1	
			Ed.	MKLEPADLO					+ V1UC11	
			Appr		Sub-Floor Members			Document type: EFS	Project nr: 22-16146	Page 1
Modification	Date	Name	Original		Replacement of / Replaced by	Scale 1:1				614

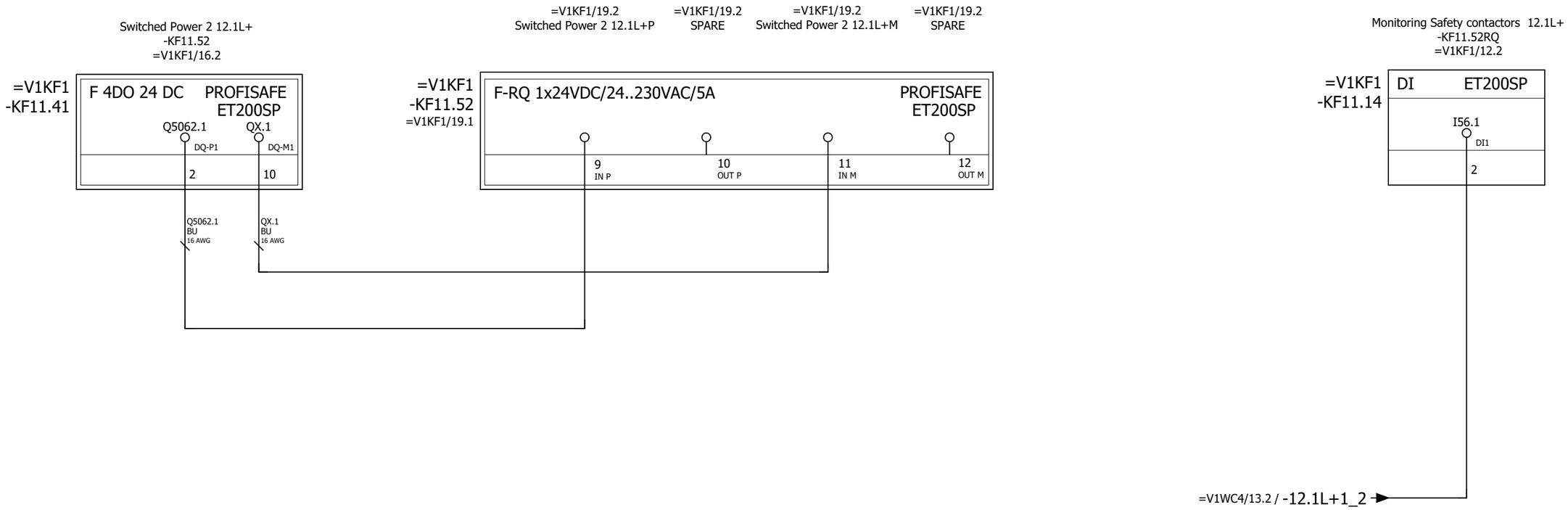

1 3

			Date	12/22/2022	Volvo Trucks North America	Valiant TMS	Safety power monitoring RQ - KF11.52	Drawing name: =2V13&EFS_EL		= V1FQ1	
			Ed.	MKLEPADLO						+ V1UC11	
			Appr		Sub-Floor Members			Document type: EFS	Project nr: 22-16146		Page 2
Modification	Date	Name	Original		Replacement of / Replaced by	Scale 1:1					614

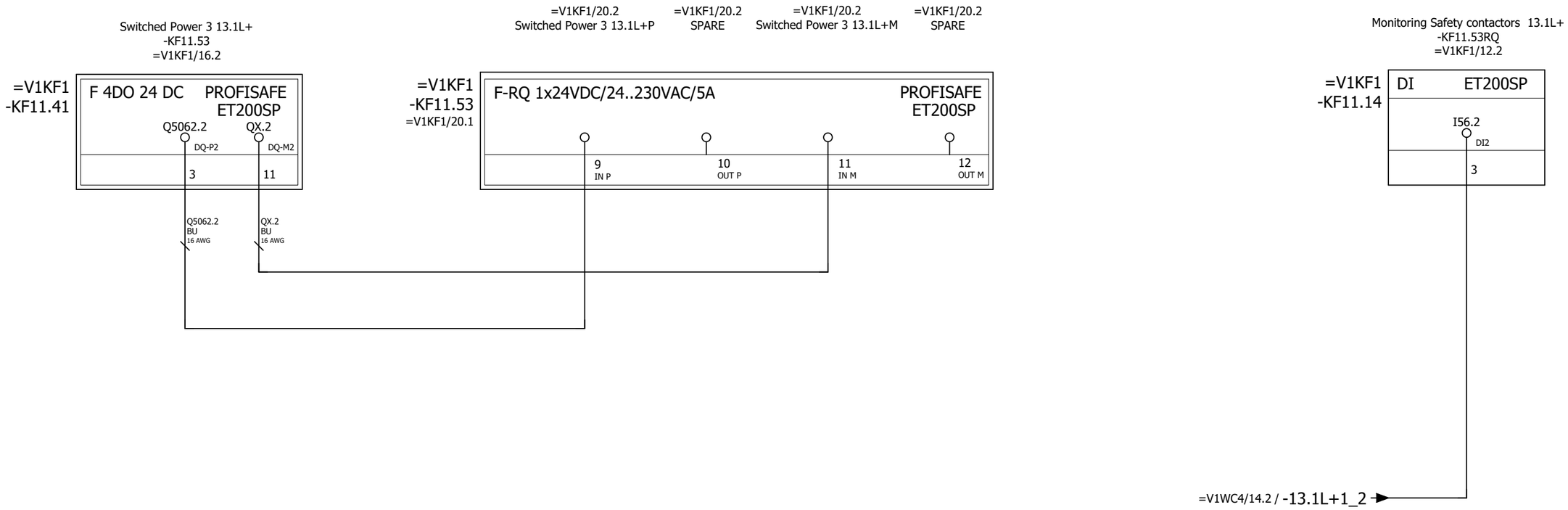

2

4

			Date	12/22/2022	Volvo Trucks North America	Valiant TMS	Safety power monitoring RQ - KF11.53	Drawing name: =2V13&EFS_EL		= V1FQ1	
			Ed.	MKLEPADLO						+ V1UC11	
			Appr		Sub-Floor Members			Document type: EFS	Project nr: 22-16146		Page 3
Modification	Date	Name	Original		Replacement of / Replaced by	Scale 1:1					614

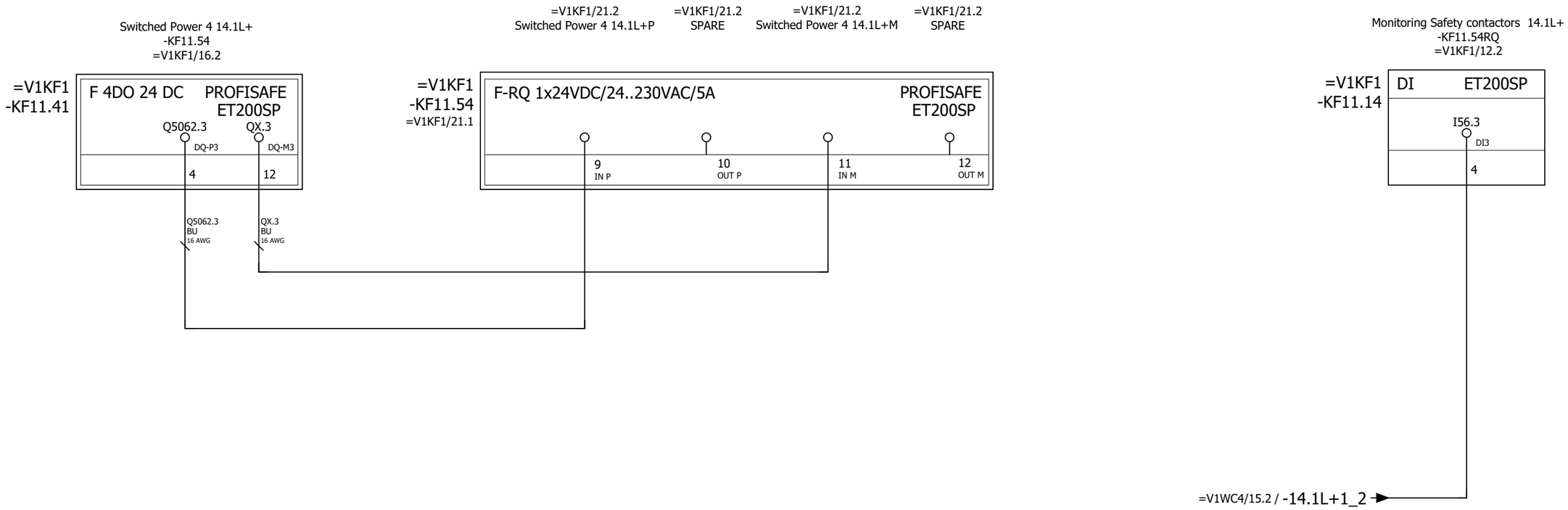

3

+.UC14/1

			Date	12/22/2022	Volvo Trucks North America	Valiant TMS	Safety power monitoring RQ - KF11.54	Drawing name: =2V13&EFS_EL		= V1FQ1	
			Ed.	MKLEPADLO						+ V1UC11	
			Appr		Sub-Floor Members			Document type: EFS	Project nr: 22-16146		Page 4
Modification	Date	Name	Original		Replacement of / Replaced by	Scale 1:1					614

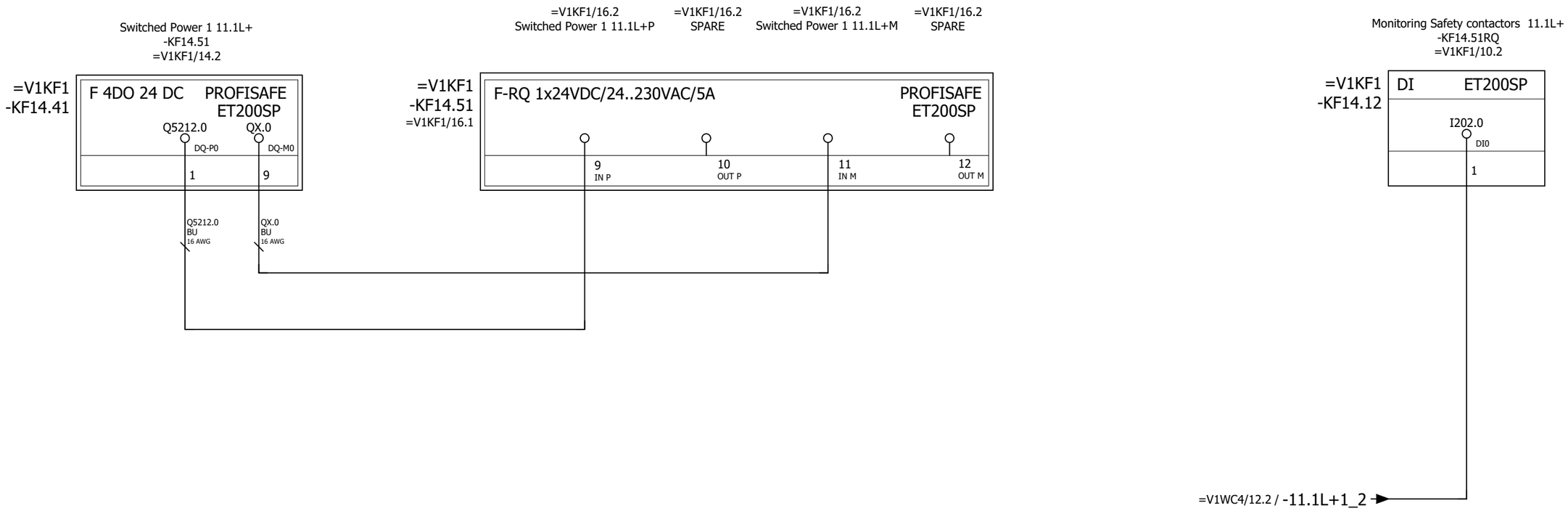

+.UC11/4

2

			Date	12/22/2022	Volvo Trucks North America	Valiant TMS	Safety power monitoring RQ - KF14.51	Drawing name: =2V13&EFS_EL		= V1FQ1	
			Ed.	MKLEPADLO						+ V1UC14	
			Appr		Sub-Floor Members			Document type: EFS	Project nr: 22-16146		Page 1
Modification	Date	Name	Original		Replacement of / Replaced by	Scale 1:1					614

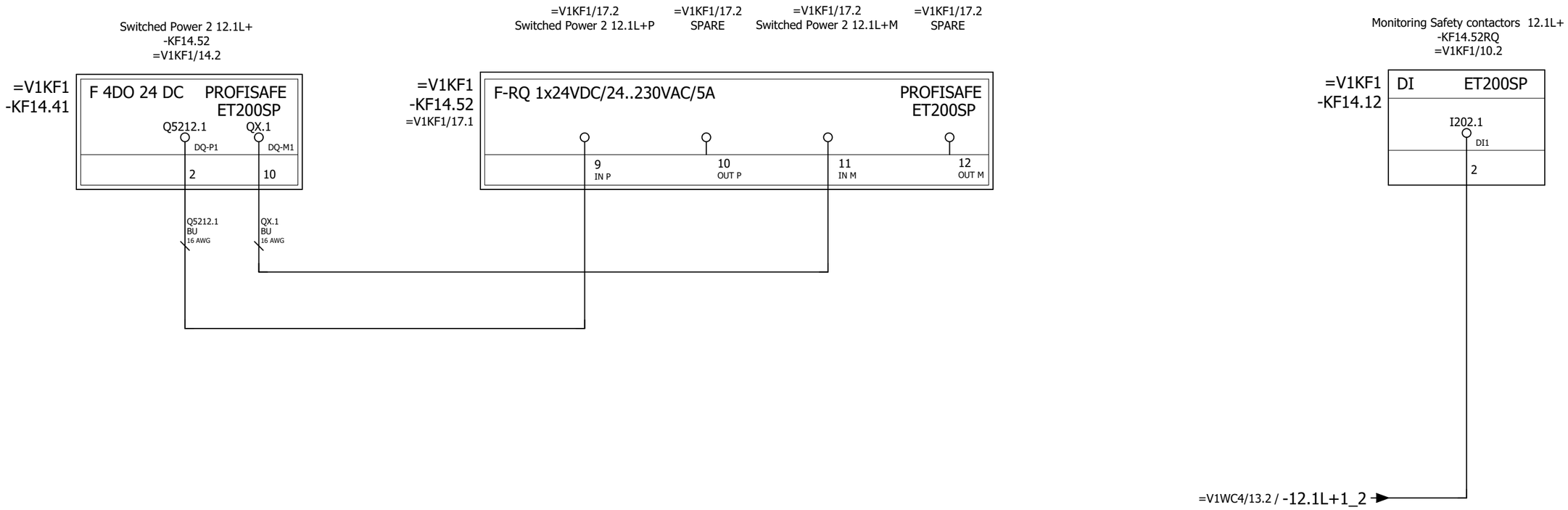

1

3

			Date	12/22/2022	Volvo Trucks North America	Valiant TMS	Safety power monitoring RQ - KF14.52	Drawing name: =2V13&EFS_EL		= V1FQ1	
			Ed.	MKLEPADLO						+ V1UC14	
			Appr		Sub-Floor Members			Document type: EFS	Project nr: 22-16146		Page 2
Modification	Date	Name	Original		Replacement of / Replaced by	Scale 1:1					614

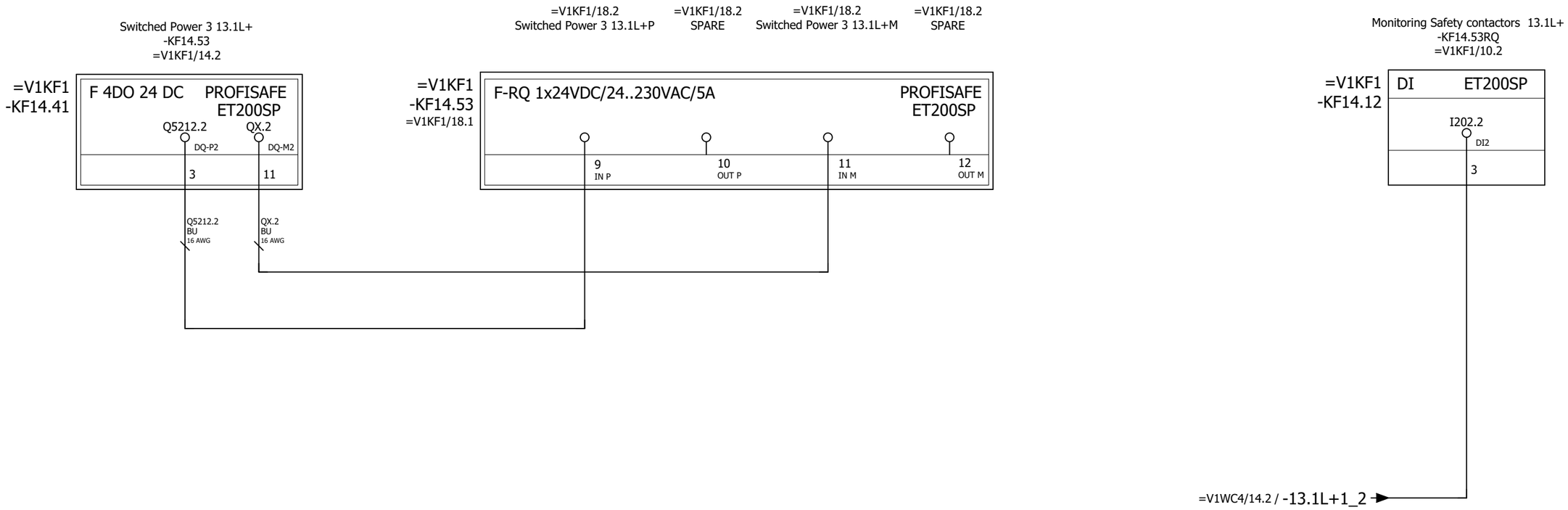

2

4

			Date	12/22/2022	Volvo Trucks North America	Valiant TMS	Safety power monitoring RQ - KF14.53	Drawing name: =2V13&EFS_EL		= V1FQ1	
			Ed.	MKLEPADLO						+ V1UC14	
			Appr		Sub-Floor Members			Document type: EFS	Project nr: 22-16146		Page 3
Modification	Date	Name	Original		Replacement of / Replaced by	Scale 1:1					614

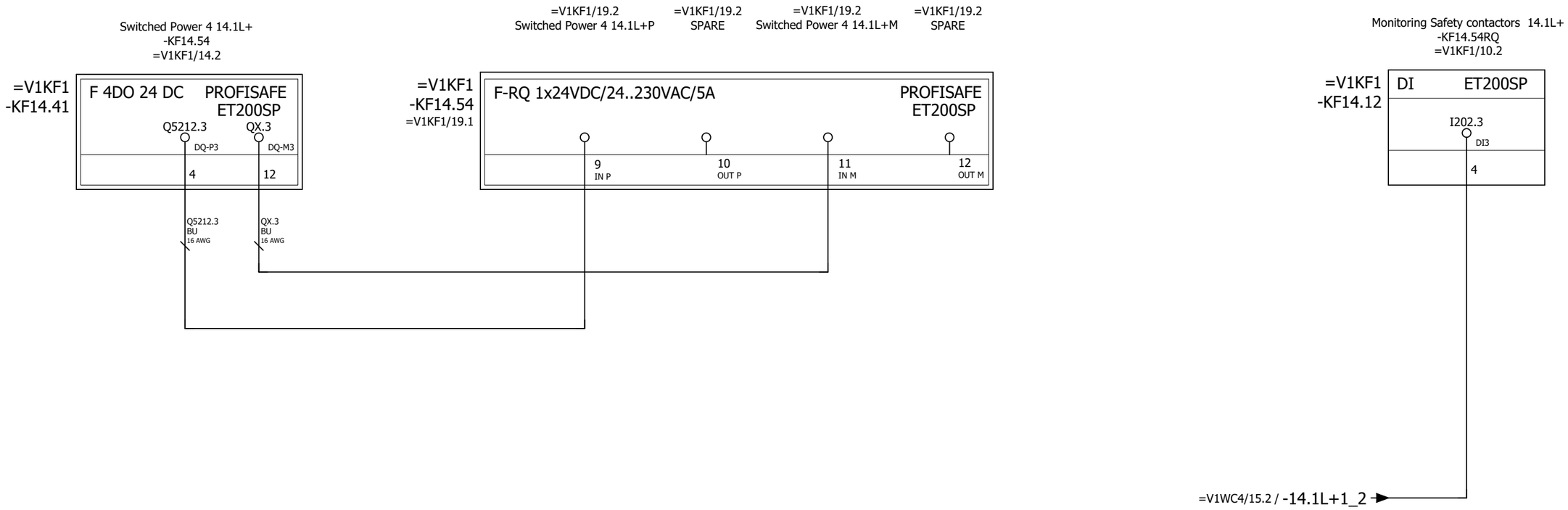

3

+.UC46/1

			Date	12/22/2022	Volvo Trucks North America	Valiant TMS	Safety power monitoring RQ - KF14.54	Drawing name: =2V13&EFS_EL		= V1FQ1	
			Ed.	MKLEPADLO						+ V1UC14	
			Appr		Sub-Floor Members			Document type: EFS	Project nr: 22-16146		Page 4
Modification	Date	Name	Original		Replacement of / Replaced by	Scale 1:1					614

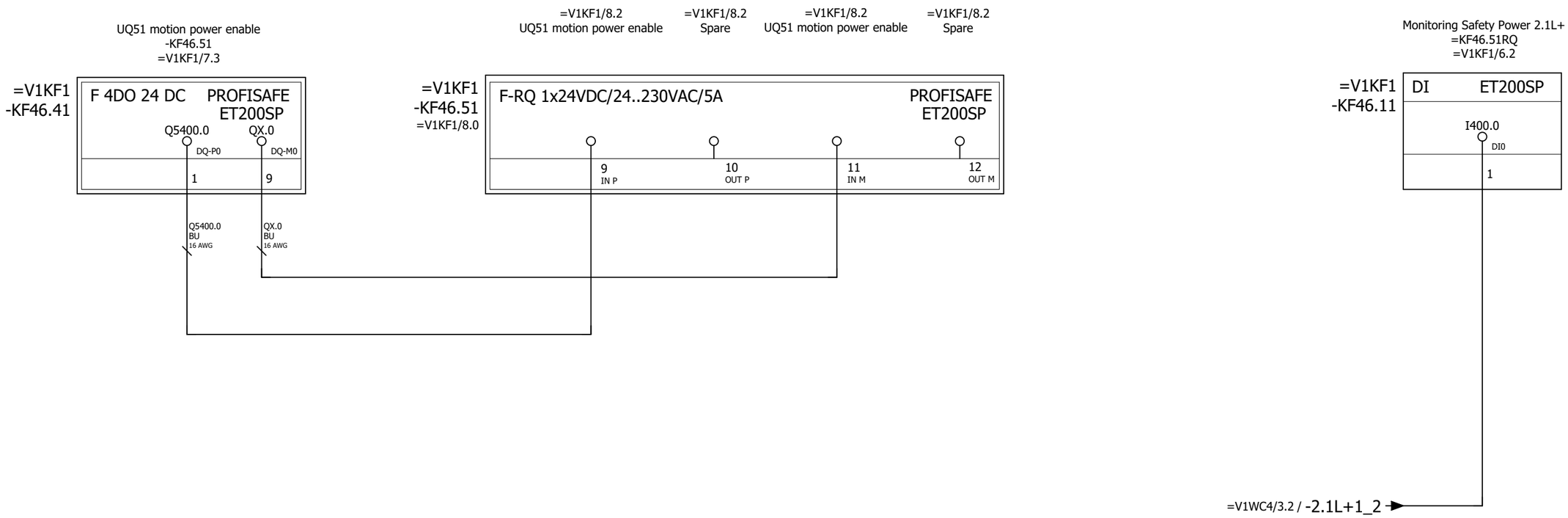

+.UC14/4

2

			Date	12/22/2022	Volvo Trucks North America	Valiant TMS	Safety power monitoring RQ - KF46.51	Drawing name: =2V13&EFS_EL		= V1FQ1	
			Ed.	MKLEPADLO						+ V1UC46	
			Appr		Sub-Floor Members			Document type: EFS	Project nr: 22-16146		Page 1
Modification	Date	Name	Original		Replacement of / Replaced by	Scale 1:1					614

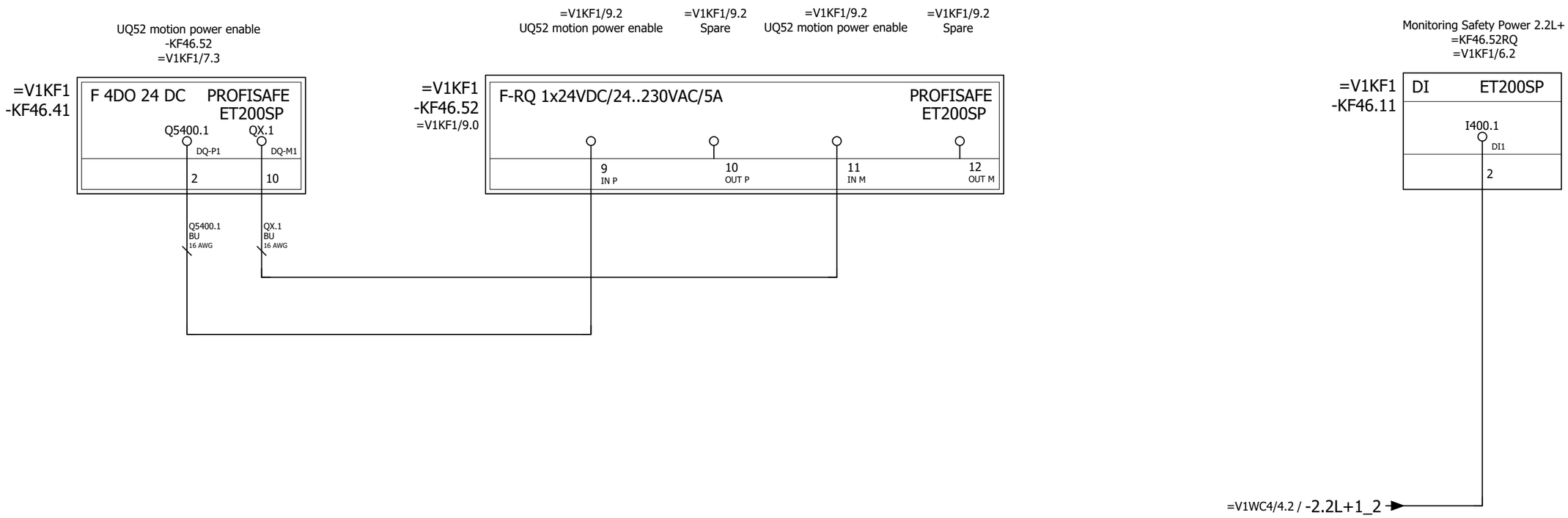

1

3

			Date	12/22/2022	Volvo Trucks North America	Valiant TMS	Safety power monitoring RQ - KF46.52	Drawing name: =2V13&EFS_EL		= V1FQ1	
			Ed.	MKLEPADLO						+ V1UC46	
			Appr		Sub-Floor Members			Document type: EFS	Project nr: 22-16146		Page 2
Modification	Date	Name	Original		Replacement of / Replaced by	Scale 1:1					614

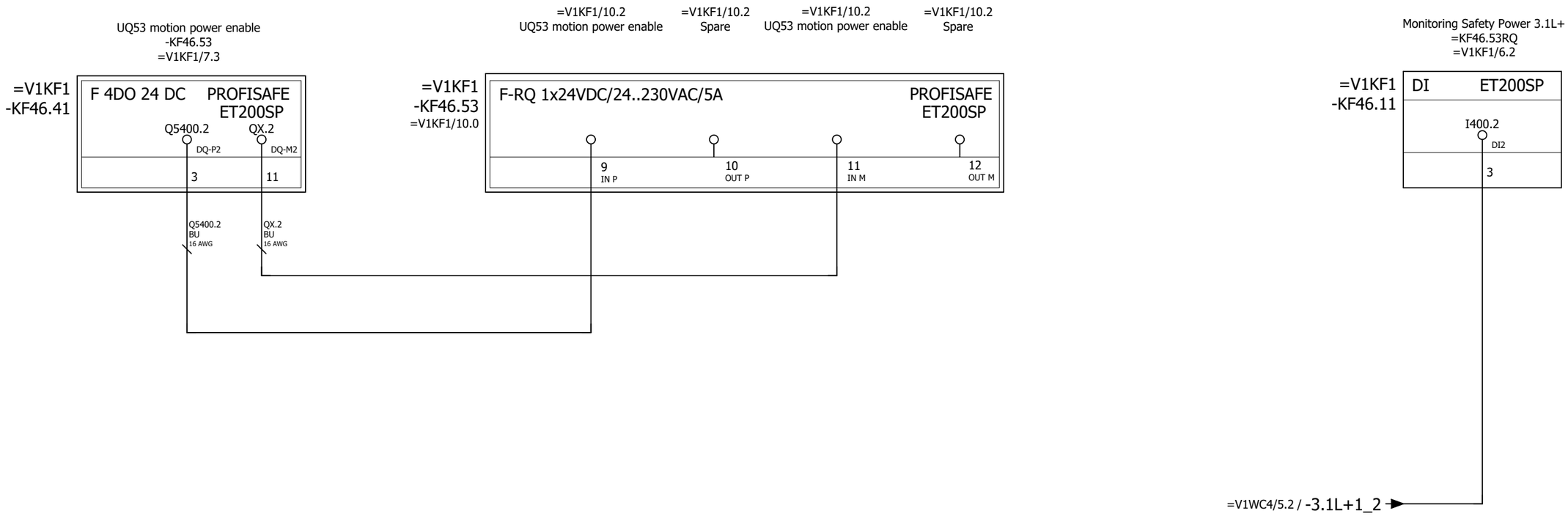

2

4

			Date	12/22/2022	Volvo Trucks North America	Valiant TMS	Safety power monitoring RQ - KF46.53	Drawing name: =2V13&EFS_EL	= V1FQ1	
			Ed.	MKLEPADLO					+ V1UC46	
			Appr		Sub-Floor Members			Document type: EFS	Project nr: 22-16146	Page 3
Modification	Date	Name	Original		Replacement of / Replaced by	Scale 1:1				614

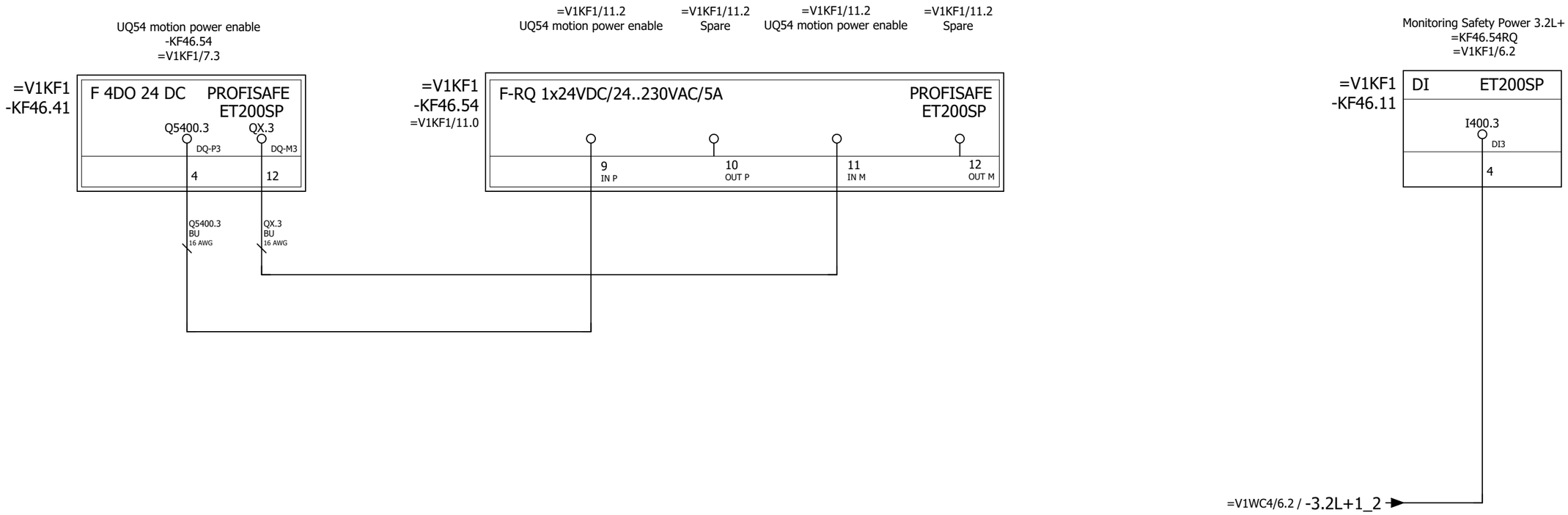

3

+.UC47/1

			Date	12/22/2022	Volvo Trucks North America	Valiant TMS	Safety power monitoring RQ - KF46.54	Drawing name: =2V13&EFS_EL	= V1FQ1	
			Ed.	MKLEPADLO					+ V1UC46	
			Appr		Sub-Floor Members			Document type: EFS	Project nr: 22-16146	Page 4 / 614
Modification	Date	Name	Original		Replacement of / Replaced by	Scale 1:1				

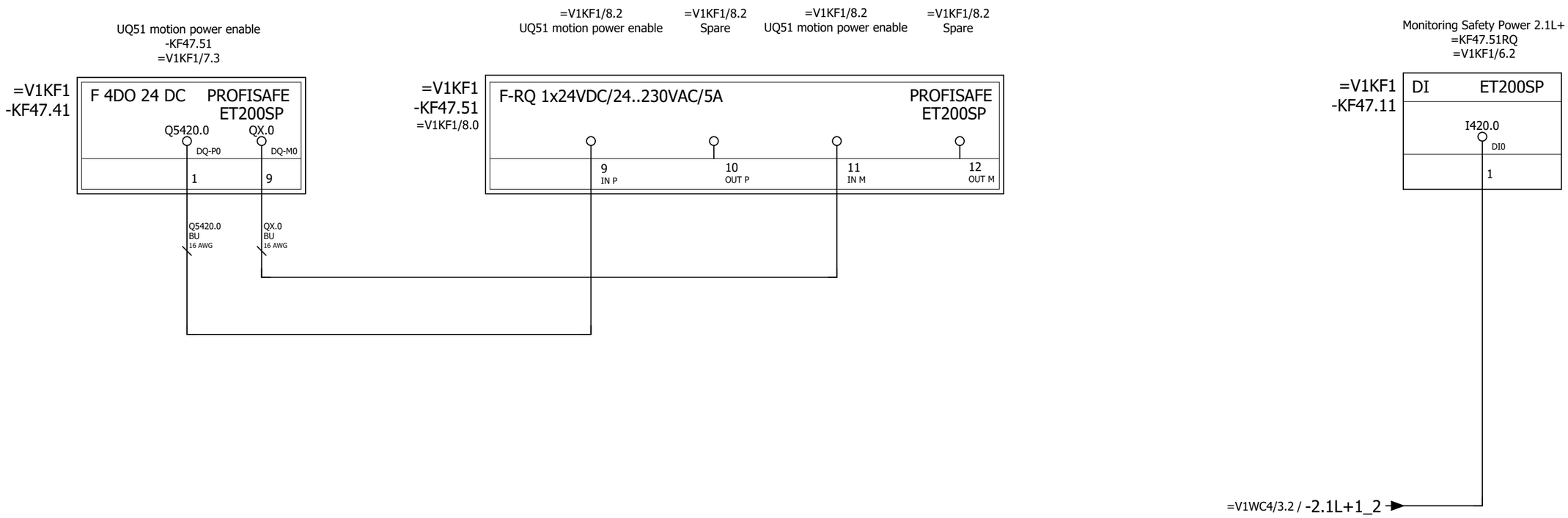

+.UC46/4

2

			Date	12/22/2022	Volvo Trucks North America	Valiant TMS	Safety power monitoring RQ - KF47.51	Drawing name: =2V13&EFS_EL	= V1FQ1		
			Ed.	MKLEPADLO					+ V1UC47		
			Appr		Sub-Floor Members			Document type: EFS	Project nr: 22-16146	Page	1
Modification	Date	Name	Original		Replacement of / Replaced by	Scale 1:1					614

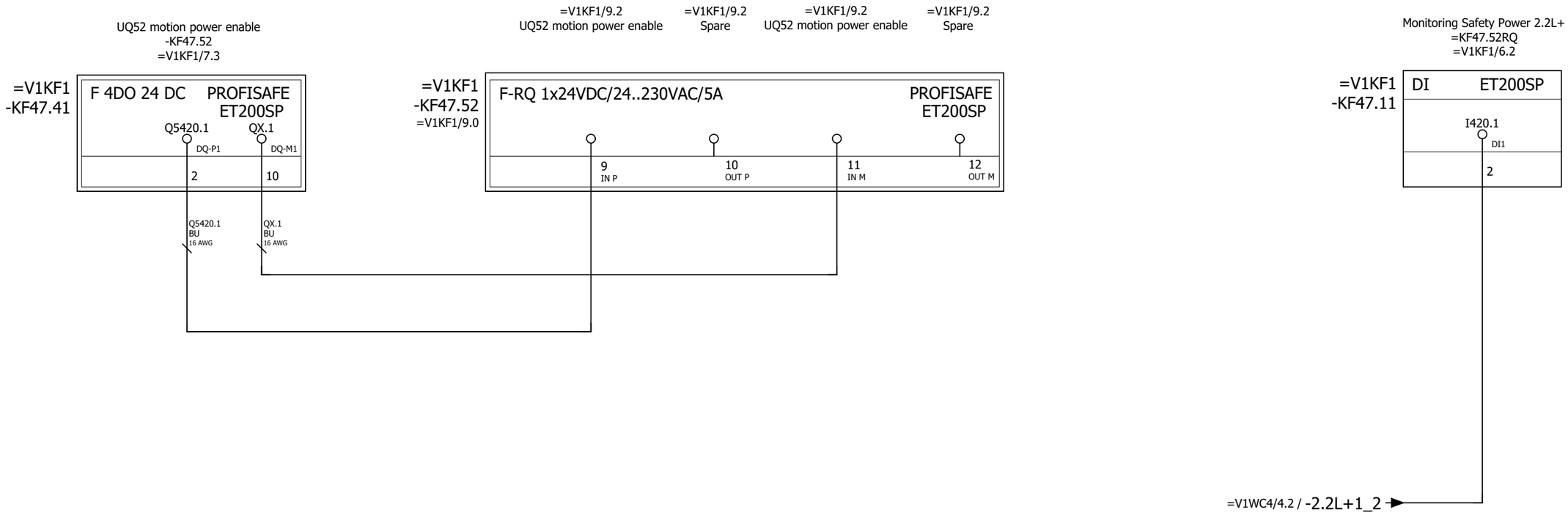

1

3

			Date	12/22/2022	Volvo Trucks North America	Valiant TMS	Safety power monitoring RQ - KF47.52	Drawing name: =2V13&EFS_EL		= V1FQ1	
			Ed.	MKLEPADLO						+ V1UC47	
			Appr		Sub-Floor Members			Document type: EFS	Project nr: 22-16146		Page 2
Modification	Date	Name	Original		Replacement of / Replaced by	Scale 1:1					614

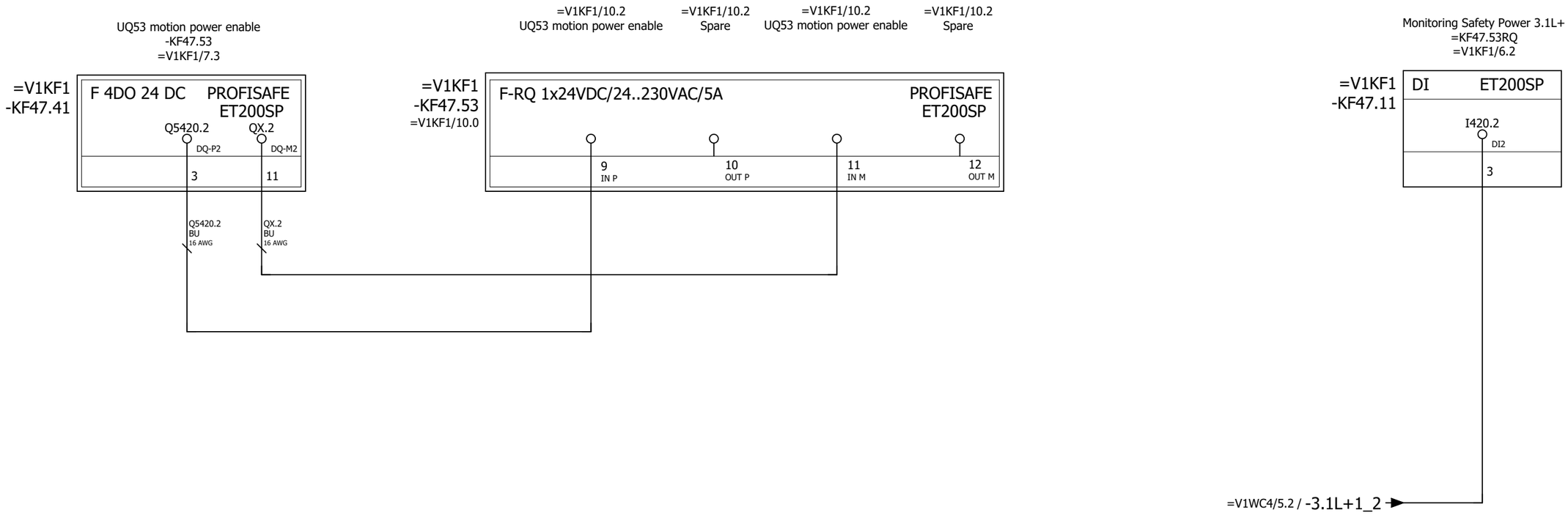

			Date	12/22/2022	Volvo Trucks North America	Valiant TMS	Safety power monitoring RQ - KF47.53	Drawing name: =2V13&EFS_EL	= V1FQ1		
			Ed.	MKLEPADLO					+ V1UC47		
			Appr		Sub-Floor Members			Document type: EFS	Project nr: 22-16146	Page	3
Modification	Date	Name	Original		Replacement of / Replaced by	Scale 1:1					614

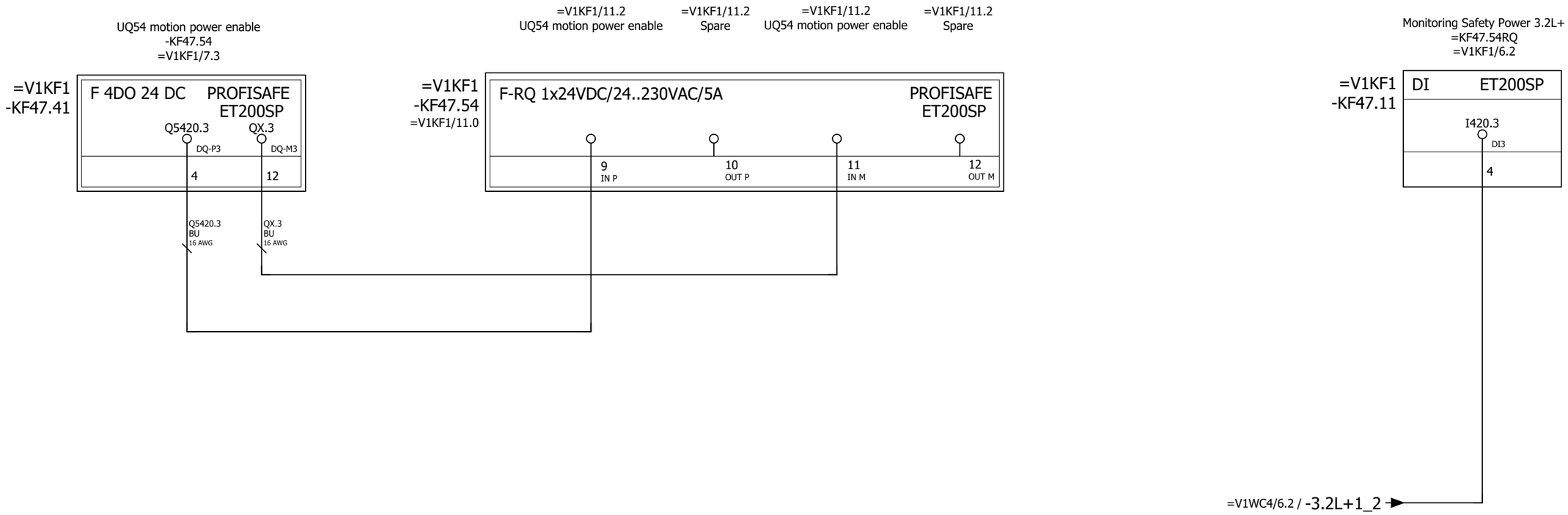

3

=V1KF1+.UC11/1

			Date	12/22/2022	Volvo Trucks North America	Valiant TMS	Safety power monitoring RQ - KF47.54	Drawing name: =2V13&EFS_EL		= V1FQ1	
			Ed.	MKLEPADLO						+ V1UC47	
			Appr		Sub-Floor Members			Document type: EFS	Project nr: 22-16146		Page 4
Modification	Date	Name	Original		Replacement of / Replaced by	Scale 1:1					614

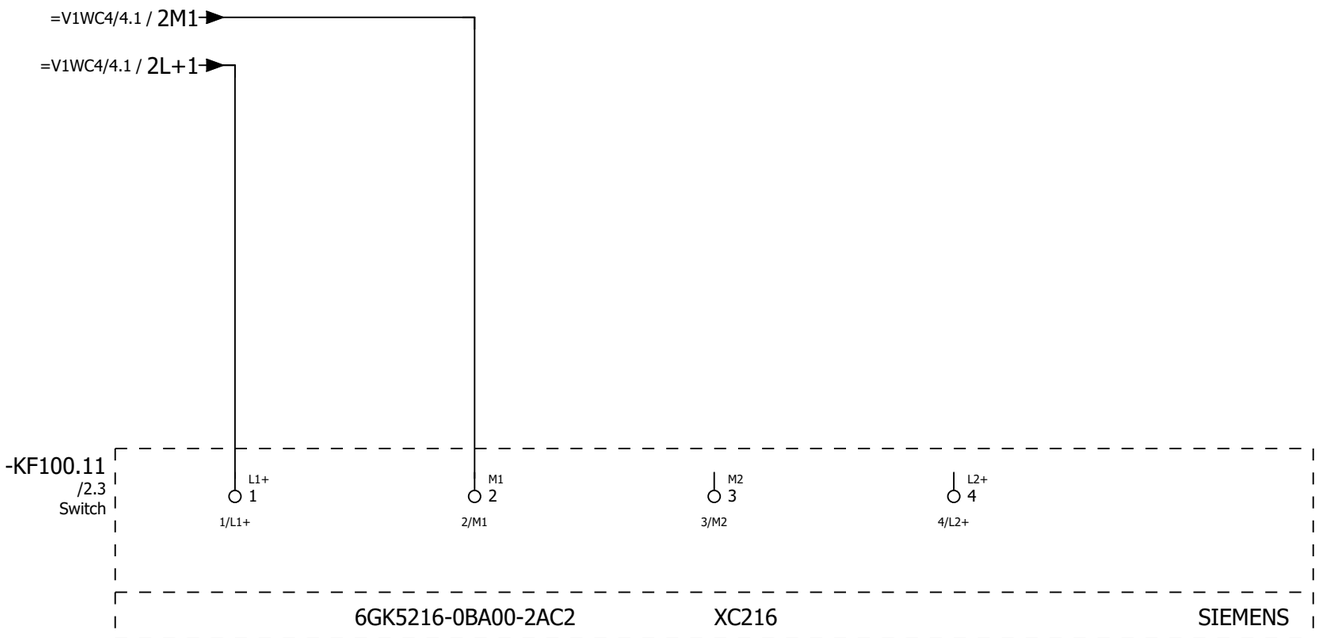

=V1FQ1+.UC47/4

2

			Date	12/22/2022	Volvo Trucks North America		Valiant TMS	Switch, Scalance XC216	Drawing name: =2V13&EFS_EL	= V1KF1	
			Ed.	MKLEPADLO						+ V1UC11	
			Appr		Sub-Floor Members				Document type: EFS	Project nr: 22-16146	Page 1
Modification	Date	Name	Original		Replacement of	Replaced by	Scale 1:1				614

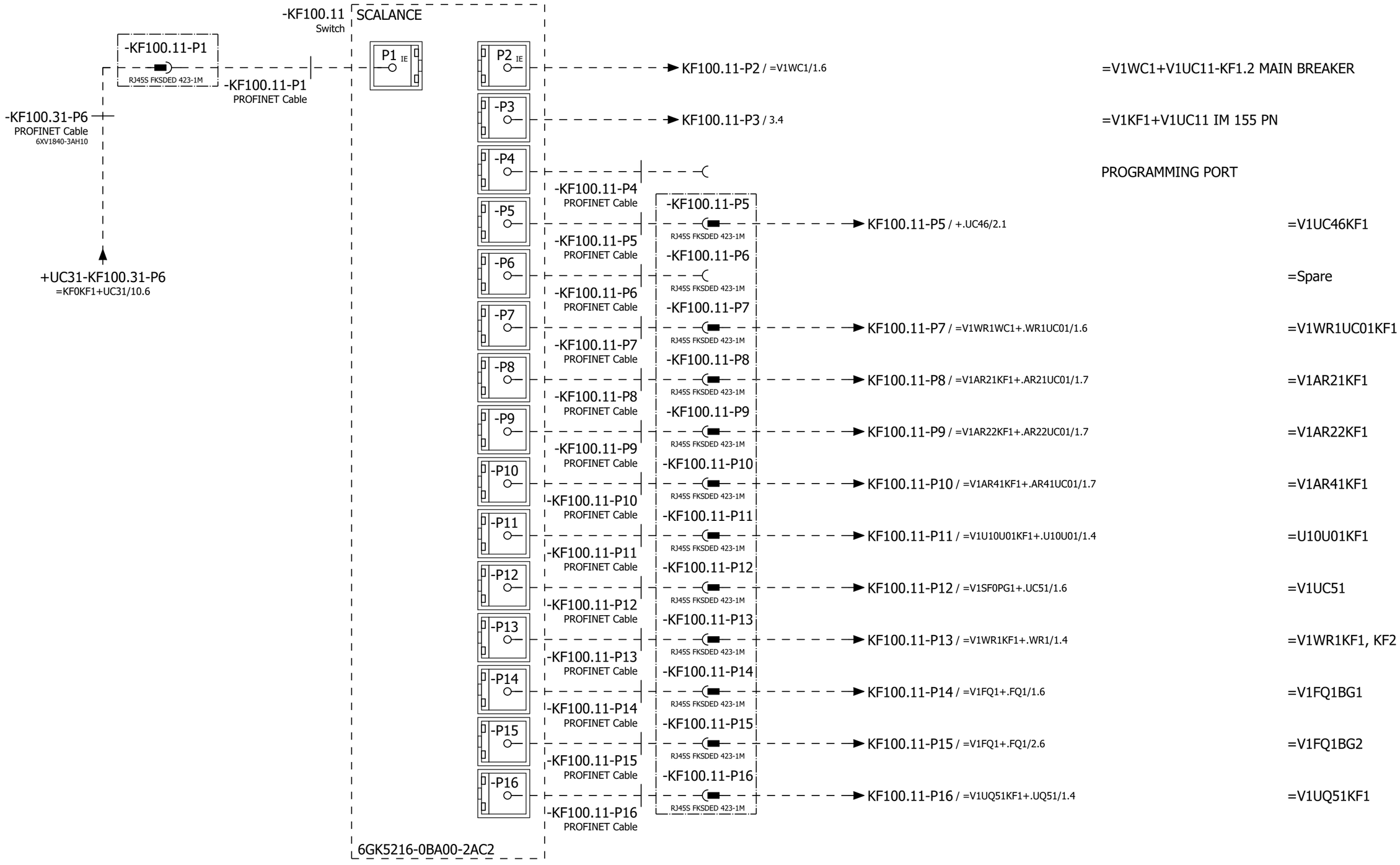

			Date	12/22/2022	Volvo Trucks North America		Valiant TMS	Network Overview	Drawing name: =2V13&EFS_EL	= V1KF1	
			Ed.	MKLEPADLO						+ V1UC11	
			Appr		Sub-Floor Members				Document type: EFS	Project nr: 22-16146	Page 2 / 614
Modification	Date	Name	Original		Replacement of	Replaced by	Scale 1:1				

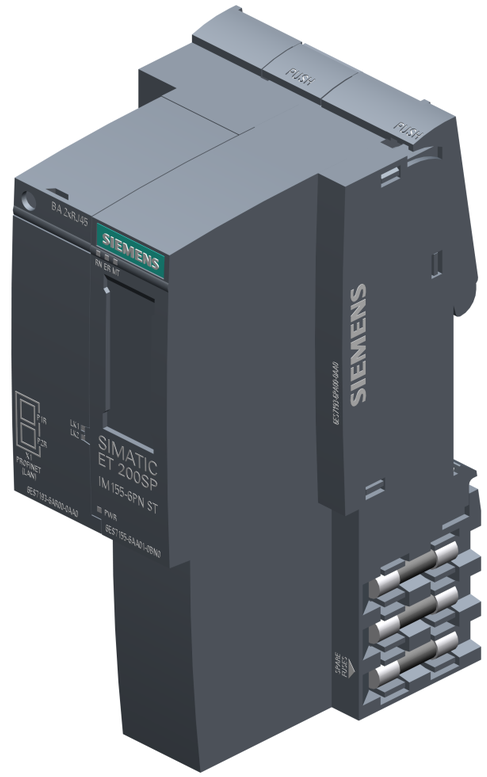

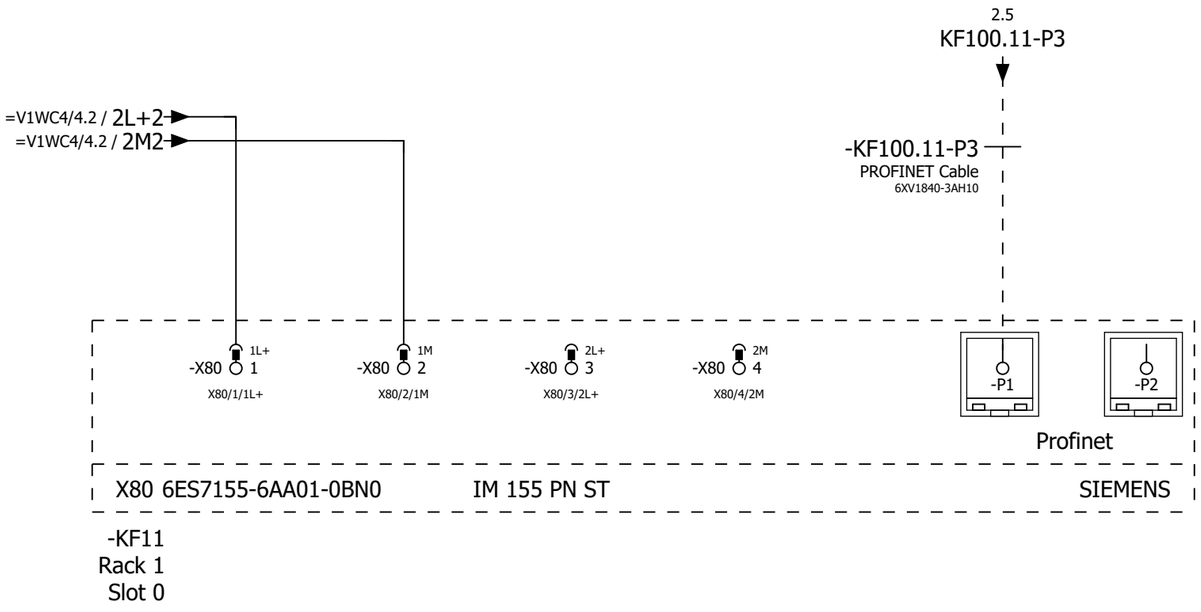

2

4

			Date	12/22/2022	Volvo Trucks North America	Valiant TMS	IM 155 PN	Drawing name: =2V13&EFS_EL	= V1KF1	
			Ed.	MKLEPADLO					+ V1UC11	
			Appr		Sub-Floor Members			Document type: EFS	Project nr: 22-16146	Page 3 / 614
Modification	Date	Name	Original		Replacement of / Replaced by	Scale 1:1				

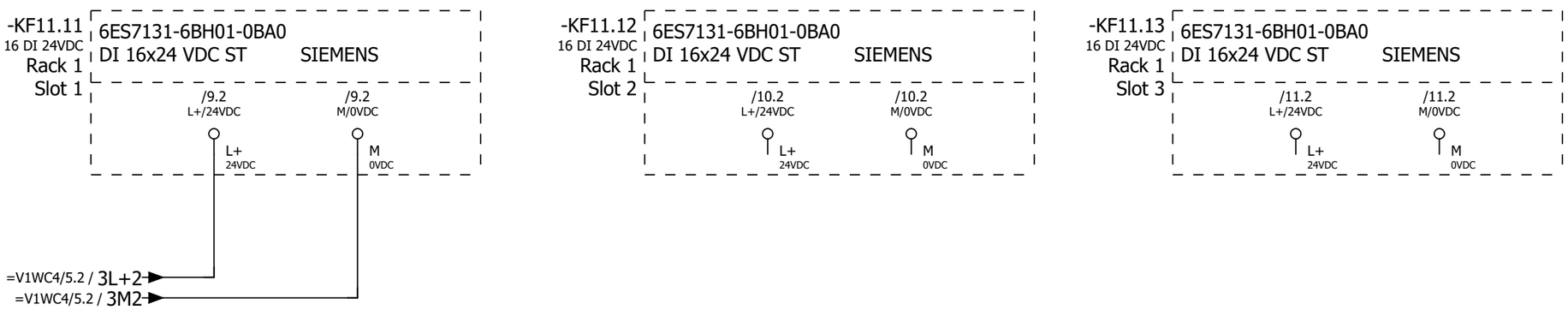

			Date	12/22/2022	Volvo Trucks North America		Valiant TMS	ET200S Wiring DI	Drawing name: =2V13&EFS_EL		= V1KF1
			Ed.	MKLEPADLO	Sub-Floor Members						+ V1UC11
			Appr						Document type: EFS	Project nr: 22-16146	Page 4
Modification	Date	Name	Original		Replacement of	Replaced by	Scale 1:1				614

-KF11.14
16 DI 24VDC
Rack 1
Slot 4

6ES7131-6BH01-0BA0
DI 16x24 VDC ST SIEMENS

/12.2	/12.2
L+/24VDC	M/0VDC
L+ 24VDC	M 0VDC

4

6

			Date	12/22/2022	Volvo Trucks North America	Valiant TMS	ET200S Wiring DI	Drawing name: =2V13&EFS_EL		= V1KF1	
			Ed.	MKLEPADLO						+ V1UC11	
			Appr		Sub-Floor Members			Document type: EFS	Project nr: 22-16146		Page 5
Modification	Date	Name	Original		Replacement of	Replaced by	Scale 1:1				614

-KF11.31
FDI 8 24VDC
Rack 1
Slot 5

6ES7136-6BA00-0CA0
F-DI 8x24VDC HF SIEMENS

/14.2 L+ 24VDC
/14.2 M 0VDC

-KF11.32
FDI 8 24VDC
Rack 1
Slot 6

6ES7136-6BA00-0CA0
F-DI 8x24VDC HF SIEMENS

/15.2 L+ 24VDC
/15.2 M 0VDC

5 7

			Date	12/22/2022	Volvo Trucks North America	Valiant TMS	ET200S Wiring F-DI	Drawing name: =2V13&EFS_EL	= V1KF1	
			Ed.	MKLEPADLO					+ V1UC11	
			Appr		Sub-Floor Members			Document type: EFS	Project nr: 22-16146	Page 6
Modification	Date	Name	Original		Replacement of / Replaced by	Scale 1:1				614

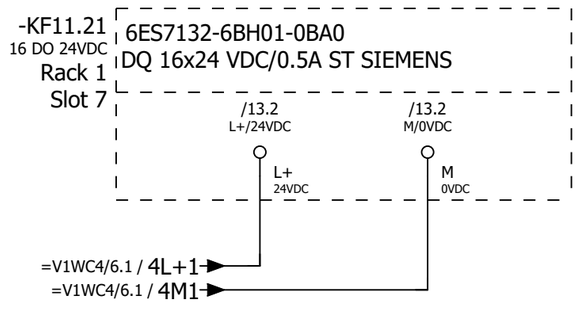
-KF11.21
16 DO 24VDC
Rack 1
Slot 7
6ES7132-6BH01-0BA0
DQ 16x24 VDC/0.5A ST SIEMENS
/13.2
L+/24VDC
/13.2
M/0VDC
L+
24VDC
M
0VDC
=V1WC4/6.1 / 4L+1
=V1WC4/6.1 / 4M1

-KF11.41
=V1FQ1/1.0
=V1FQ1/2.0
=V1FQ1/3.0
=V1FQ1/4.0
/16.1
FDO 4 24VDC
Rack 1
Slot 8

6ES7136-6DB00-0CA0 + BU15-P16+A0+2B F-DQ 4X24VDC/2A PM HF SIEMENS

/16.2 L+ 24VDC

/16.2 M 0VDC

-KF11.42
/17.1
FDO 4 24VDC
Rack 1
Slot 9

6ES7136-6DB00-0CA0 + BU15-P16+A0+2B F-DQ 4X24VDC/2A PM HF SIEMENS

/17.2 L+ 24VDC

/17.2 M 0VDC

			Date	12/22/2022	Volvo Trucks North America		Valiant TMS	ET200S Wiring F-DQ	Drawing name: =2V13&EFS_EL	= V1KF1	
			Ed.	MKLEPADLO	Sub-Floor Members					+ V1UC11	
			Appr						Document type: EFS	Project nr: 22-16146	Page 8 / 614
Modification	Date	Name	Original		Replacement of	Replaced by	Scale 1:1				

-KF11.11
/4.0

ET 200SP SIEMENS
DI 16x24 VDC ST

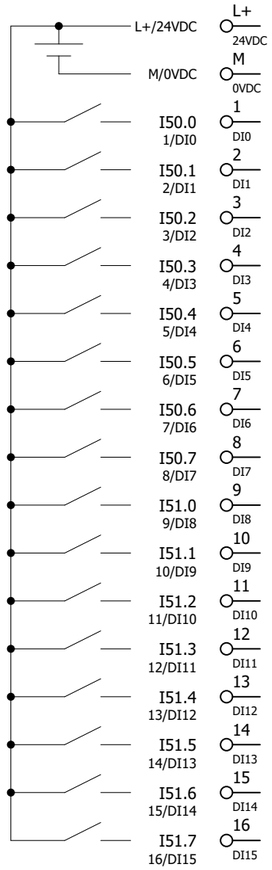

/4.1			
/4.2			
=V1WC2/17.2	I50.0	SPARE	
=V1WC2/17.3	=V1UC11-FC1	Monitoring 480 VAC	
=V1WC4/1.4	=V1WC4+V1UC11-TA1_I	Monitoring 24VDC	
=V1WC4/11.4	=V1WC4+V1UC11-TA2_I	Monitoring 24VDC	
=V1WC4/1.0	=V1WC4+V1UC11-FC11_I	Monitoring 24VDC	
=V1WC4/11.0	=V1WC4+V1UC11-FC12_I	Monitoring 24VDC	
=V1WC2/17.7	I50.6	SPARE	
=V1WC2/17.8	I50.7	SPARE	
=V1WC2/17.2	I51.0	SPARE	
=V1WC2/17.3	I51.1	SPARE	
=V1WC2/17.4	I51.2	SPARE	
=V1WC2/17.4	I51.3	SPARE	
=V1WC2/17.5	I51.4	SPARE	
=V1WC2/17.6	I51.5	SPARE	
=V1WC2/17.7	I51.6	SPARE	
=V1WC2/17.8	I51.7	SPARE	

6ES7131-6BH01-0BA0

-KF11.12
/4.3

ET 200SP SIEMENS
DI 16x24 VDC ST

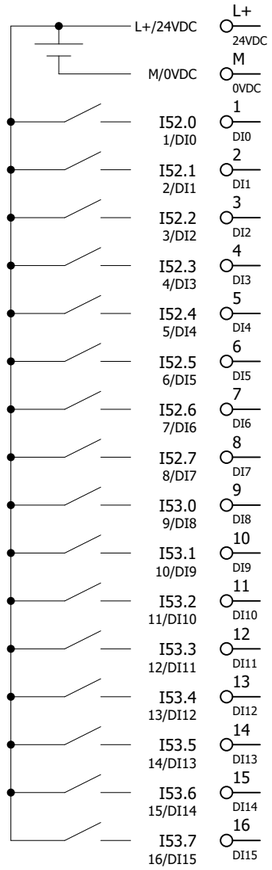

/4.3			
/4.4			
=V1WC2/18.2	=V1WR1-FC1	Monitoring 480 VAC	
=V1WC2/18.3	=V1WR2-FC1	Monitoring 480 VAC	
=V1WC2/18.4	=V1AR21-FC1	Monitoring 480 VAC	
=V1WC2/18.4	=V1AR22-FC1	Monitoring 480 VAC	
=V1WC2/18.5	=V1AR41-FC1	Monitoring 480 VAC	
=V1WC2/18.6	=V1AR42-FC1	Monitoring 480 VAC	
=V1WC2/18.7	=V1AR62-FC1	Monitoring 480 VAC	
=V1WC2/18.8	=V1AR62-FC1	Monitoring 480 VAC	
=V1WC2/18.2	I53.0	Monitoring 480 VAC	
=V1WC2/18.3	I53.1	Monitoring 480 VAC	
=V1WC2/18.4	I53.2	Monitoring 480 VAC	
=V1WC2/18.4	=V2AR181-FC1	Monitoring 480 VAC	
=V1WC2/18.5	I53.4	Spare	
=V1WC2/18.6	I53.5	Spare	
=V1WC2/18.7	I53.6	Spare	
=V1WC2/18.8	I53.7	Spare	

6ES7131-6BH01-0BA0

-KF11.13
/4.5

ET 200SP SIEMENS
DI 16x24 VDC ST

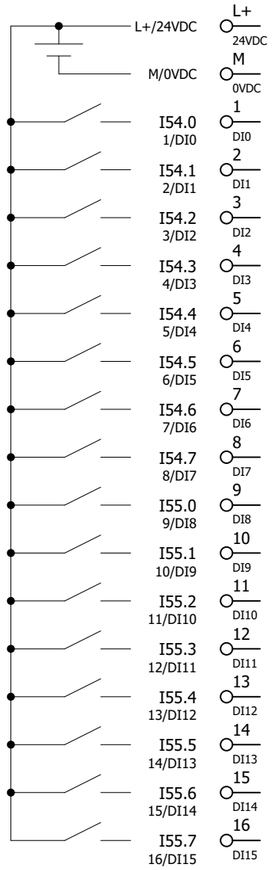

/4.6			
/4.7			
=V1WC2/19.2	I54.0	SPARE	
=V1WC2/19.3	I54.1	SPARE	
=V1WC2/19.4	I54.2	SPARE	
=V1WC2/19.4	I54.3	SPARE	
=V1WC2/19.5	I54.4	SPARE	
=V1WC2/19.6	I54.5	SPARE	
=V1WC2/19.7	I54.6	SPARE	
=V1WC2/19.8	I54.7	SPARE	
=V1WC3/4.2	=V1WC3+V1UC11-FC2	Monitoring 120 VAC	
=V1WC3/4.3	=V1WC3+V1UC11-FC3	Monitoring 120 VAC	
=V1WC3/4.4	=V1WC3+V1UC11-FC4	Monitoring 120 VAC	
=V1WC3/4.4	=V1WC3+V1UC11-FC6	Monitoring 120 VAC	
=V1WC3/4.5	=V1WC3+V1UC11-FC7	Monitoring 120 VAC	
=V1WC3/4.6	=V1WC3+V1UC11-FC8	Monitoring 120 VAC	
=V1WC3/4.7	=V1WC3+V1UC11-FC9	Monitoring 120 VAC	
=V1WC3/4.8	=V1WC3+V1UC11-FC10	Monitoring 120 VAC	

6ES7131-6BH01-0BA0

-KF11.14
/5.0

ET 200SP SIEMENS
DI 16x24 VDC ST

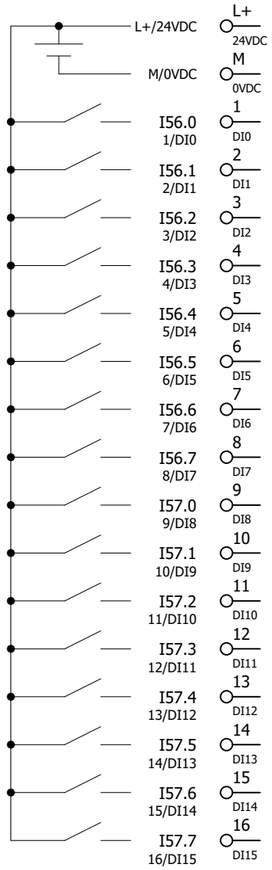

/5.1		
/5.2		
=V1FQ1/1.8	-KF11.51RQ	Monitoring Safety contactors 11.1L+
=V1FQ1/2.8	-KF11.52RQ	Monitoring Safety contactors 12.1L+
=V1FQ1/3.8	-KF11.53RQ	Monitoring Safety contactors 13.1L+
=V1FQ1/4.8	-KF11.54RQ	Monitoring Safety contactors 14.1L+
=V1SF0SF1+.UC71/1.1	=V1SF0SF1+V1UC71-SF1.1	S010 Operator Run Button
	I56.5	Spare
=KH0+KH0/1.6	=KH0-BP1_I	Monitoring Main AIR On
=KH0+KH0/2.6	=KH0-BP2_I	Monitoring S010 Turntable AIR On
=KH3+KH3/1.6	=KH3-BF1_I	Monitoring Main Water Filter Dirty
=KH3+KH3/2.6	=KH3-BF2_I	Monitoring Main Water On
	I57.2	Spare
	I57.3	Spare
	I57.4	Spare
	I57.5	Spare
	I57.6	Spare
	I57.7	Spare

6ES7131-6BH01-0BA0

-KF11.21
/7.1
16 DO 24VDC

ET 200SP SIEMENS
DQ 16x24 VDC/0.5A ST

L+/24VDC	L+ 24VDC	/7.1		
M/0VDC	M 0VDC	/7.2		
Q50.0 1/DQ0	1 DQ0	=V1PZ1PF1+.UC61/1.3	=V1PZ1PF1+UC61-PF1_1	S010 Indication column Blue
Q50.1 2/DQ1	2 DQ1	=V1PZ1PF1+.UC61/1.4	=V1PZ1PF1+UC61-PF1_2	S010 Indication column Green
Q50.2 3/DQ2	3 DQ2	=V1PZ1PF1+.UC61/1.4	=V1PZ1PF1+UC61-PF1_3	S010 Indication column Yellow
Q50.3 4/DQ3	4 DQ3	=V1PZ1PF1+.UC61/1.5	=V1PZ1PF1+UC61-PF1_4	S010 Indication column Red
Q50.4 5/DQ4	5 DQ4	=V1PZ1PF1+.UC61/1.6	=V1PZ1PF1+UC61-PF1_5	S010 Indication column Siren
Q50.5 6/DQ5	6 DQ5		Q50.5	Spare
Q50.6 7/DQ6	7 DQ6		Q50.6	Spare
Q50.7 8/DQ7	8 DQ7		Q50.7	Spare
Q51.0 9/DQ8	9 DQ8		Q51.0	Spare
Q51.1 10/DQ9	10 DQ9		Q51.1	Spare
Q51.2 11/DQ10	11 DQ10		Q51.2	Spare
Q51.3 12/DQ11	12 DQ11		Q51.3	Spare
Q51.4 13/DQ12	13 DQ12		Q51.4	Spare
Q51.5 14/DQ13	14 DQ13		Q51.5	Spare
Q51.6 15/DQ14	15 DQ14		Q51.6	Spare
Q51.7 16/DQ15	16 DQ15		Q51.7	Spare

6ES7132-6BH01-0BA0

			Date	12/22/2022	Volvo Trucks North America	Valiant TMS	ET200S DQ Overview KF11.21	Drawing name: =2V13&EFS_EL		= V1KF1	
			Ed.	MKLEPADLO						+ V1UC11	
			Appr		Sub-Floor Members			Document type: EFS	Project nr: 22-16146	Page	13
Modification	Date	Name	Original		Replacement of / Replaced by	Scale 1:1					614

-KF11.31
/6.0

ET 200SP SIEMENS
F-DI 8x24VDC HF

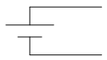

	L+ 24VDC	/6.1		
	M 0VDC	/6.2		
I5050.0	1 DI0	=V1FQ1+.FQ1/3.3	=V1WR1FQ1-BR11.1	S010 Light Curtain 1 & 2 Ch1
	9 VS0	=V1FQ1+.FQ1/3.3		
I5050.1	2 DI1	=V1FQ1+.FQ1/4.3	=V1WR1FQ1-BR13.1	S010 Light Curtain 3 Ch1
	10 VS1	=V1FQ1+.FQ1/4.3		
I5050.2	3 DI2		I5050.2	Spare
	11 VS2			
I5050.3	4 DI3		I5050.3	Spare
	12 VS3			
I5050.4	5 DI4	=V1FQ1+.FQ1/3.4	=V1WR1FQ1-BR11.2	S010 Light Curtain 1 & 2 Ch2
	13 VS4	=V1FQ1+.FQ1/3.5		
I5050.5	6 DI5	=V1FQ1+.FQ1/4.4	=V1WR1FQ1-BR13.2	S010 Light Curtain 3 Ch2
	14 VS5	=V1FQ1+.FQ1/4.5		
I5050.6	7 DI6		I5050.6	Spare
	15 VS6			
I5050.7	8 DI7		I5050.7	Spare
	16 VS7			

6ES7136-6BA00-0CA0

			Date	12/22/2022	Volvo Trucks North America	Valiant TMS	ET200S F-DI Overview KF11.31	Drawing name: =2V13&EFS_EL		= V1KF1	
			Ed.	MKLEPADLO						+ V1UC11	
			Appr		Sub-Floor Members			Document type: EFS	Project nr: 22-16146	Page	14
Modification	Date	Name	Original		Replacement of / Replaced by	Scale 1:1					614

-KF11.32
/6.3

ET 200SP SIEMENS
F-DI 8x24VDC HF

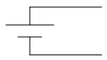

	L+ 24VDC	/6.3		
	M 0VDC	/6.4		
I5056.0	1 DI0	=V1SF0SF1+.UC71/1.5	=V1SF0SF1+V1UC71-SF1.4	S010 Operator Emergency Stop Ch1
	9 VS0	=V1SF0SF1+.UC71/1.5		
I5056.1	2 DI1		I5056.1	Spare
	10 VS1			
I5056.2	3 DI2		I5056.2	Spare
	11 VS2			
I5056.3	4 DI3		I5056.3	Spare
	12 VS3			
I5056.4	5 DI4	=V1SF0SF1+.UC71/1.6	=V1SF0SF1+V1UC71-SF1.6	S010 Operator Emergency Stop Ch2
	13 VS4	=V1SF0SF1+.UC71/1.6		
I5056.5	6 DI5		I5056.5	Spare
	14 VS5			
I5056.6	7 DI6		I5056.6	Spare
	15 VS6			
I5056.7	8 DI7		I5056.7	Spare
	16 VS7			

6ES7136-6BA00-0CA0

-KF11.41
/8.0

ET 200SP SIEMENS
F-DQ 4X24VDC/2A PM HF

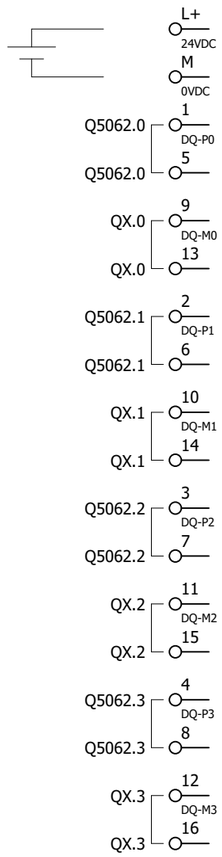

	/8.1	Q5062.0	=V1FQ1/1.1	-KF11.51 Switched Power 1 11.1L+
	/8.2	Q5062.0		
QX.0	=V1FQ1/1.1			
QX.0				
Q5062.1	=V1FQ1/2.1			-KF11.52 Switched Power 2 12.1L+
Q5062.1				
QX.1	=V1FQ1/2.1			
QX.1				
Q5062.2	=V1FQ1/3.1			-KF11.53 Switched Power 3 13.1L+
Q5062.2				
QX.2	=V1FQ1/3.1			
QX.2				
Q5062.3	=V1FQ1/4.1			-KF11.54 Switched Power 4 14.1L+
Q5062.3				
QX.3	=V1FQ1/4.1			
QX.3				

6ES7136-6DB00-0CA0 + BU15-P16+A0+2B

-KF11.42
/8.5

ET 200SP SIEMENS
F-DQ 4X24VDC/2A PM HF

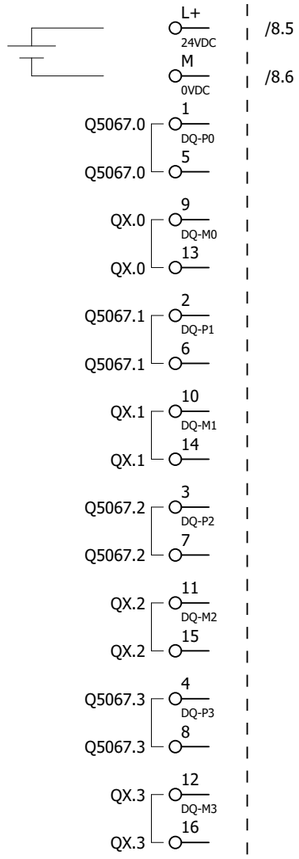

Q5067.0	Spare
Q5067.1	Spare
Q5067.2	Spare
Q5067.3	Spare

6ES7136-6DB00-0CA0 + BU15-P16+A0+2B

-KF11.51
=V1FQ1/1.2
=V1WC4/12.1

ET 200SP SIEMENS
F-RQ 1x24VDC/24..230VAC/5A

1 RQ01+	=V1WC4/12.2	11L+
2 RQ01-	=V1WC4/12.2	11.1L+
3 RQ02+	=V1WC4/12.3	11L+
4 RQ02-	=V1WC4/12.4	11.1L+
9 IN P	=V1FQ1/1.3	Switched Power 1 11.1L+P
10 OUT P	=V1FQ1/1.4	SPARE
11 IN M	=V1FQ1/1.4	Switched Power 1 11.1L+M
12 OUT M	=V1FQ1/1.5	SPARE
1A AUX		
2A AUX		
3A AUX		
4A AUX		

6ES7136-6RA00-0BF0 + BU20-P8+A4+0B

			Date	12/22/2022	Volvo Trucks North America		Valiant TMS	ET200S F-RQ Overview KF11.51	Drawing name: =2V13&EFS_EL	= V1KF1	
			Ed.	MKLEPADLO						+ V1UC11	
			Appr		Sub-Floor Members				Document type: EFS	Project nr: 22-16146	Page 18
Modification	Date	Name	Original		Replacement of	Replaced by	Scale 1:1				614

-KF11.52
=V1FQ1/2.2
=V1WC4/13.1

ET 200SP SIEMENS
F-RQ 1x24VDC/24..230VAC/5A

1 RQ01+	=V1WC4/13.2	12L+
2 RQ01-	=V1WC4/13.2	12.1L+
3 RQ02+	=V1WC4/13.3	12L+
4 RQ02-	=V1WC4/13.4	12.1L+
9 IN P	=V1FQ1/2.3	Switched Power 2 12.1L+P
10 OUT P	=V1FQ1/2.4	SPARE
11 IN M	=V1FQ1/2.4	Switched Power 2 12.1L+M
12 OUT M	=V1FQ1/2.5	SPARE
1A AUX		
2A AUX		
3A AUX		
4A AUX		

6ES7136-6RA00-0BF0 + BU20-P8+A4+0B

			Date	12/22/2022	Volvo Trucks North America		Valiant TMS	ET200S F-RQ Overview KF11.52	Drawing name: =2V13&EFS_EL	= V1KF1	
			Ed.	MKLEPADLO						+ V1UC11	
			Appr		Sub-Floor Members				Document type: EFS	Project nr: 22-16146	Page 19
Modification	Date	Name	Original		Replacement of	Replaced by	Scale 1:1				614

-KF11.53
=V1FQ1/3.2
=V1WC4/14.1

ET 200SP SIEMENS
F-RQ 1x24VDC/24..230VAC/5A

1 RQ01+	=V1WC4/14.2	13L+
2 RQ01-	=V1WC4/14.2	13.1L+
3 RQ02+	=V1WC4/14.3	13L+
4 RQ02-	=V1WC4/14.4	13.1L+
9 IN P	=V1FQ1/3.3	Switched Power 3 13.1L+P
10 OUT P	=V1FQ1/3.4	SPARE
11 IN M	=V1FQ1/3.4	Switched Power 3 13.1L+M
12 OUT M	=V1FQ1/3.5	SPARE
1A AUX		
2A AUX		
3A AUX		
4A AUX		

6ES7136-6RA00-0BF0 + BU20-P8+A4+0B

			Date	12/22/2022	Volvo Trucks North America	Valiant TMS	ET200S F-RQ Overview KF11.53	Drawing name: =2V13&EFS_EL		= V1KF1	
			Ed.	MKLEPADLO						+ V1UC11	
			Appr		Sub-Floor Members			Document type: EFS	Project nr: 22-16146	Page	20
Modification	Date	Name	Original		Replacement of / Replaced by	Scale 1:1					614

-KF11.54
=V1FQ1/4.2
=V1WC4/15.1

ET 200SP SIEMENS
F-RQ 1x24VDC/24..230VAC/5A

1 RQ01+	=V1WC4/15.2	14L+
2 RQ01-	=V1WC4/15.2	14.1L+
3 RQ02+	=V1WC4/15.3	14L+
4 RQ02-	=V1WC4/15.4	14.1L+
9 IN P	=V1FQ1/4.3	Switched Power 4 14.1L+P
10 OUT P	=V1FQ1/4.4	SPARE
11 IN M	=V1FQ1/4.4	Switched Power 4 14.1L+M
12 OUT M	=V1FQ1/4.5	SPARE
1A AUX		
2A AUX		
3A AUX		
4A AUX		

6ES7136-6RA00-0BF0 + BU20-P8+A4+0B

			Date	12/22/2022	Volvo Trucks North America	Valiant TMS	ET200S F-RQ Overview KF11.54	Drawing name: =2V13&EFS_EL	= V1KF1		
			Ed.	MKLEPADLO					+ V1UC11		
			Appr		Sub-Floor Members			Document type: EFS	Project nr: 22-16146	Page	21
Modification	Date	Name	Original		Replacement of / Replaced by	Scale 1:1					614

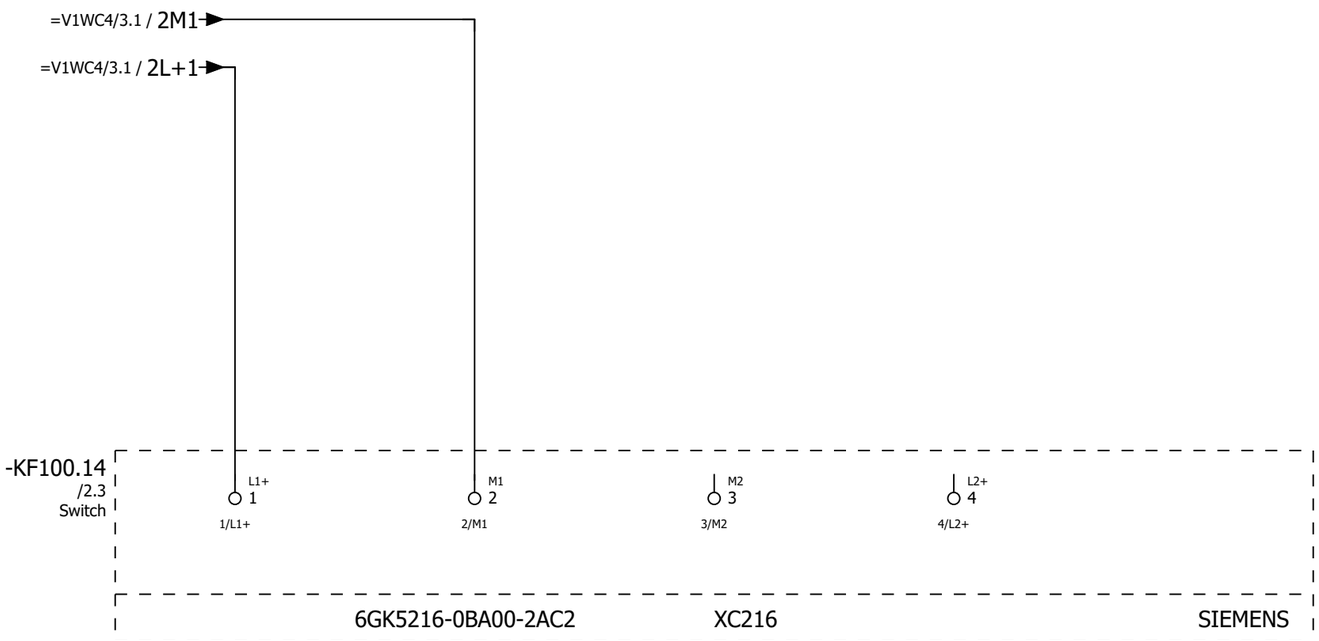

+.UC11/21

2

			Date	12/22/2022	Volvo Trucks North America		Valiant TMS	Switch, Scalance XC216	Drawing name: =2V13&EFS_EL	= V1KF1	
			Ed.	MKLEPADLO						+ V1UC14	
			Appr		Sub-Floor Members				Document type: EFS	Project nr: 22-16146	Page 1
Modification	Date	Name	Original		Replacement of	Replaced by	Scale 1:1				614

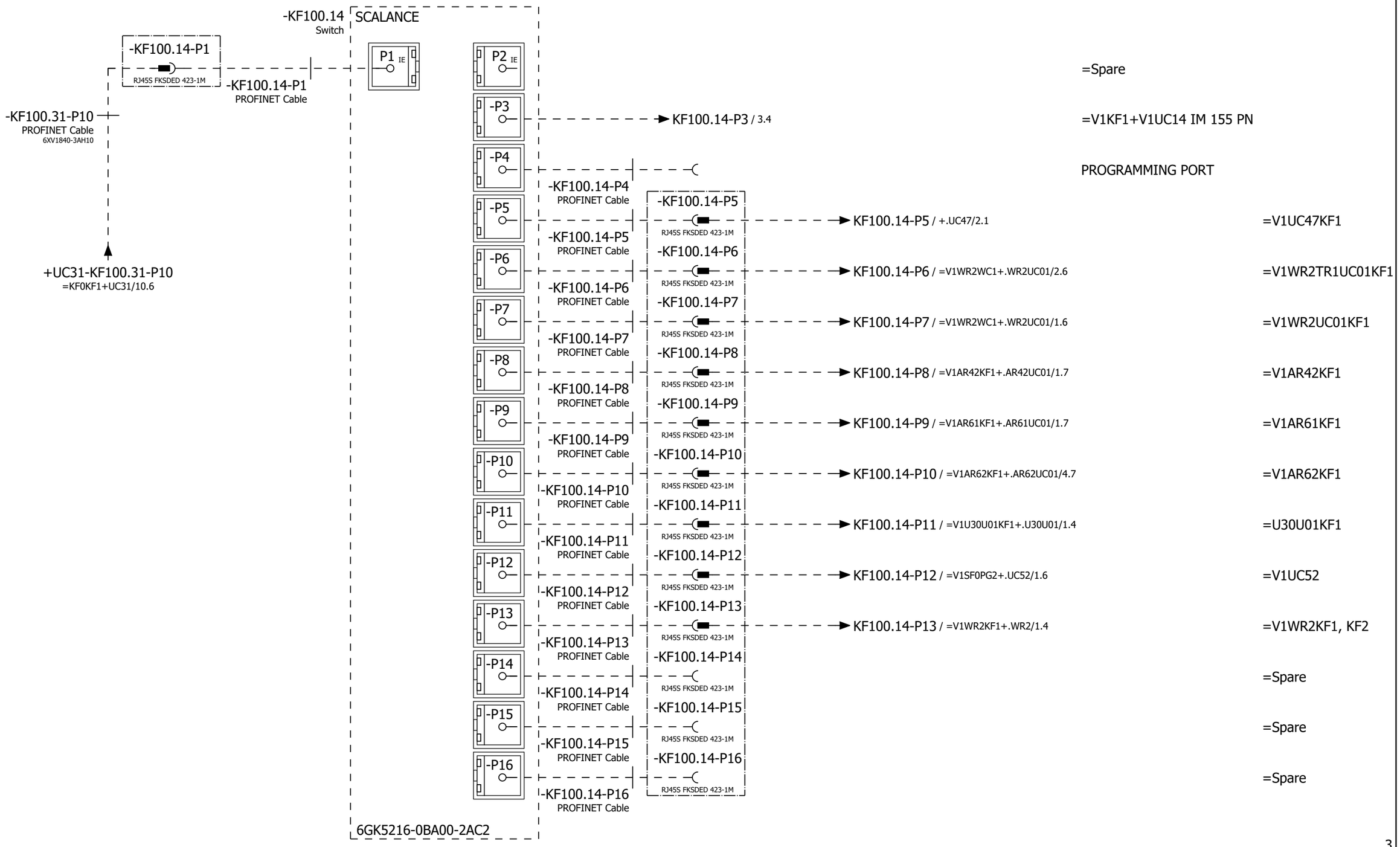

			Date	12/22/2022	Volvo Trucks North America		Valiant TMS	Network Overview	Drawing name: =2V13&EFS_EL	= V1KF1	
			Ed.	MKLEPADLO						+ V1UC14	
			Appr		Sub-Floor Members				Document type: EFS	Project nr: 22-16146	Page 2
Modification	Date	Name	Original		Replacement of	Replaced by	Scale 1:1				614

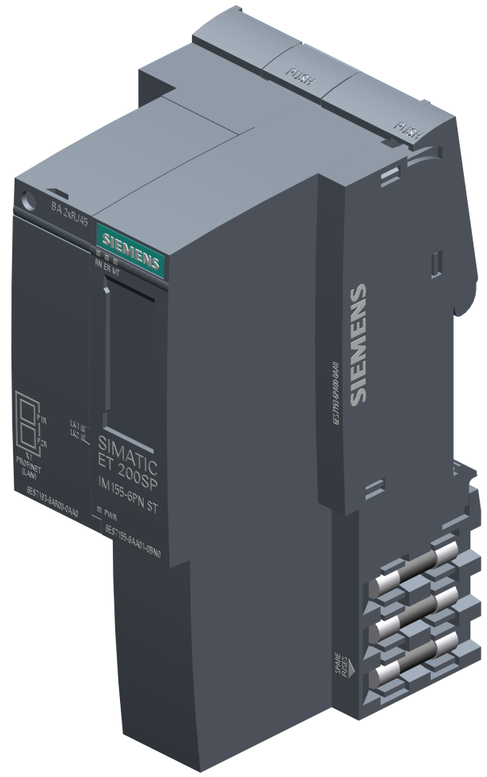

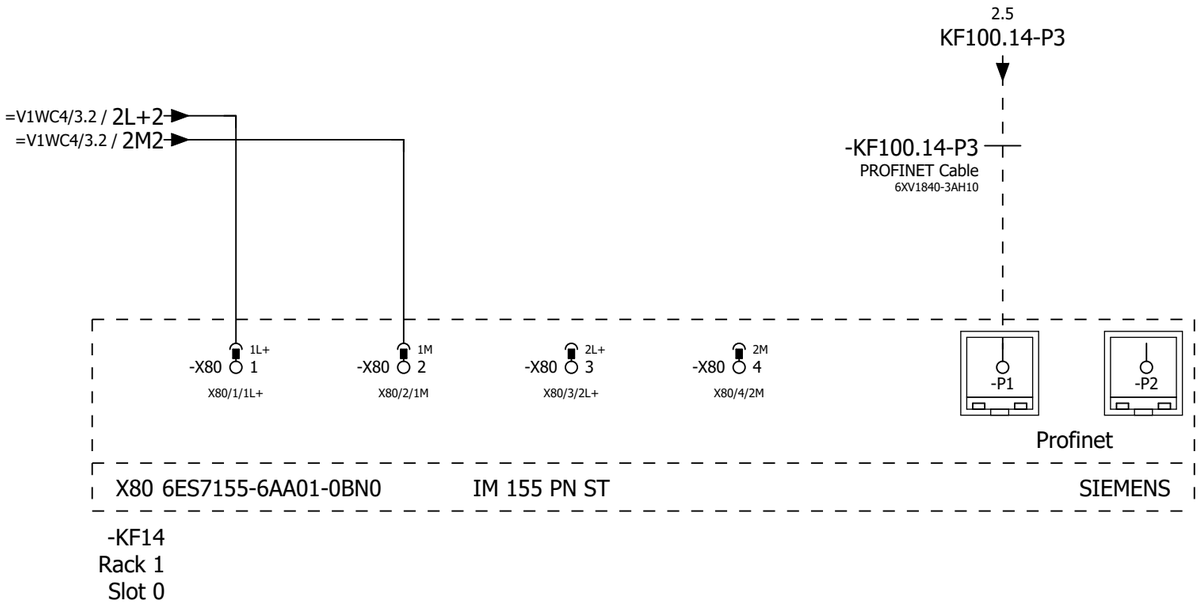

2

4

			Date	12/22/2022	Volvo Trucks North America	Valiant TMS	IM 155 PN	Drawing name: =2V13&EFS_EL	= V1KF1	
			Ed.	MKLEPADLO					+ V1UC14	
			Appr		Sub-Floor Members			Document type: EFS	Project nr: 22-16146	Page 3 / 614
Modification	Date	Name	Original		Replacement of / Replaced by	Scale 1:1				

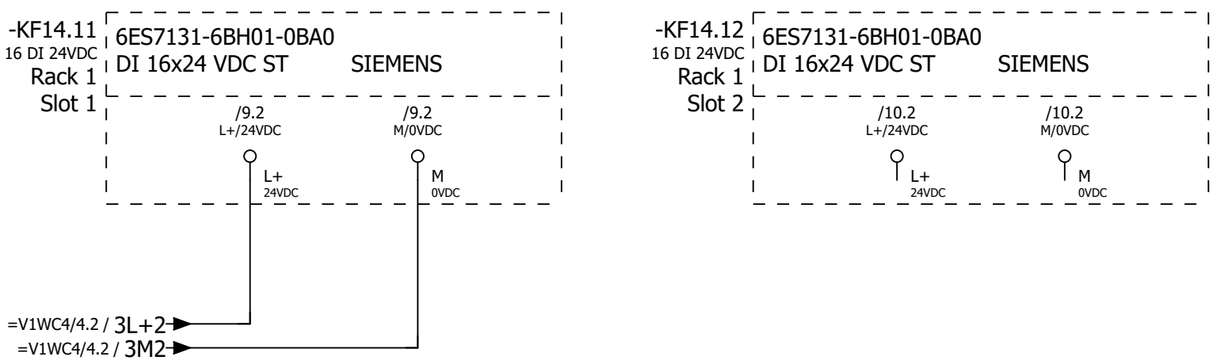

3 6

			Date	12/22/2022	Volvo Trucks North America		Valiant TMS	ET200S Wiring DI	Drawing name: =2V13&EFS_EL		= V1KF1
			Ed.	MKLEPADLO	Sub-Floor Members						+ V1UC14
			Appr						Document type: EFS	Project nr: 22-16146	Page 4
Modification	Date	Name	Original		Replacement of	Replaced by	Scale 1:1				614

-KF14.31
FDI 8 24VDC
Rack 1
Slot 3

6ES7136-6BA00-0CA0
F-DI 8x24VDC HF SIEMENS

/12.2 L+ 24VDC
/12.2 M 0VDC

-KF14.32
FDI 8 24VDC
Rack 1
Slot 4

6ES7136-6BA00-0CA0
F-DI 8x24VDC HF SIEMENS

/13.2 L+ 24VDC
/13.2 M 0VDC

			Date	12/22/2022	Volvo Trucks North America	Valiant TMS	ET200S Wiring F-DI	Drawing name: =2V13&EFS_EL		= V1KF1	
			Ed.	MKLEPADLO						+ V1UC14	
			Appr		Sub-Floor Members			Document type: EFS	Project nr: 22-16146	Page	6
Modification	Date	Name	Original		Replacement of / Replaced by	Scale 1:1					614

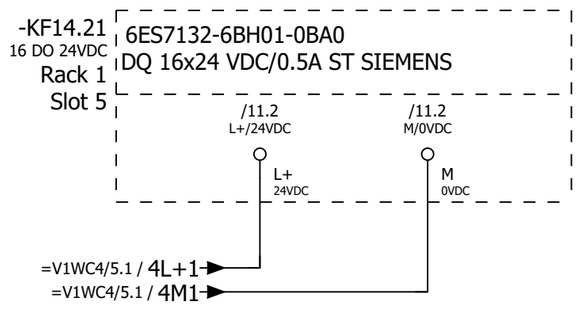
-KF14.21
16 DO 24VDC
Rack 1
Slot 5
6ES7132-6BH01-0BA0
DQ 16x24 VDC/0.5A ST SIEMENS
/11.2
L+/24VDC
/11.2
M/0VDC
L+
24VDC
M
0VDC
=V1WC4/5.1 / 4L+1
=V1WC4/5.1 / 4M1

-KF14.41
=V1FQ1/1.0
=V1FQ1/2.0
=V1FQ1/3.0
=V1FQ1/4.0
/14.1
FDO 4 24VDC
Rack 1
Slot 6

6ES7136-6DB00-0CA0 + BU15-P16+A0+2B F-DQ 4X24VDC/2A PM HF SIEMENS

/14.2 L+ 24VDC

/14.2 M 0VDC

-KF14.42
/15.1
FDO 4 24VDC
Rack 1
Slot 7

6ES7136-6DB00-0CA0 + BU15-P16+A0+2B F-DQ 4X24VDC/2A PM HF SIEMENS

/15.2 L+ 24VDC

/15.2 M 0VDC

			Date	12/22/2022	Volvo Trucks North America		Valiant TMS	ET200S Wiring F-DQ	Drawing name: =2V13&EFS_EL	= V1KF1	
			Ed.	MKLEPADLO	Sub-Floor Members					+ V1UC14	
			Appr						Document type: EFS	Project nr: 22-16146	Page 8 / 614
Modification	Date	Name	Original		Replacement of	Replaced by	Scale 1:1				

-KF14.11
/4.0

ET 200SP SIEMENS
DI 16x24 VDC ST

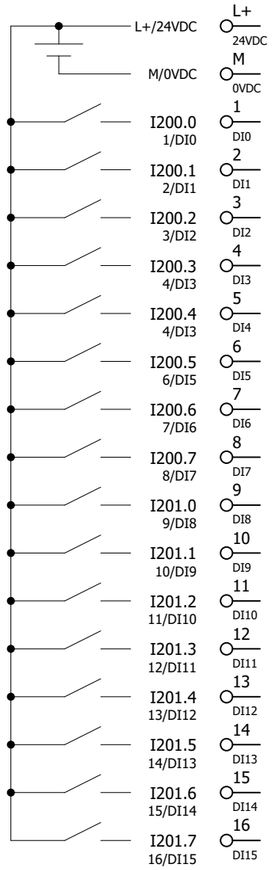

/4.1			
/4.2			
=V1WC3/2.2	=V1WC3+V1UC14-FC1	Monitoring 120 VAC	
=V1WC3/2.3	I200.1	Spare	
=V1WC4/1.4	=V1WC4+V1UC14-TA1_I	Monitoring 24VDC	
	I200.3	Spare	
=V1WC4/1.0	=V1WC4+V1UC14-FC11_I	Monitoring 24VDC	
=V1WC4/11.0	=V1WC4+V1UC14-FC12_I	Monitoring 24VDC	
	I200.6	Spare	
	I200.7	Spare	
	I201.0	Spare	
	I201.1	Spare	
	I201.2	Spare	
	I201.3	Spare	
	I201.4	Spare	
	I201.5	Spare	
	I201.6	Spare	
	I201.7	Spare	

6ES7131-6BH01-0BA0

-KF14.12
/4.3

ET 200SP SIEMENS
DI 16x24 VDC ST

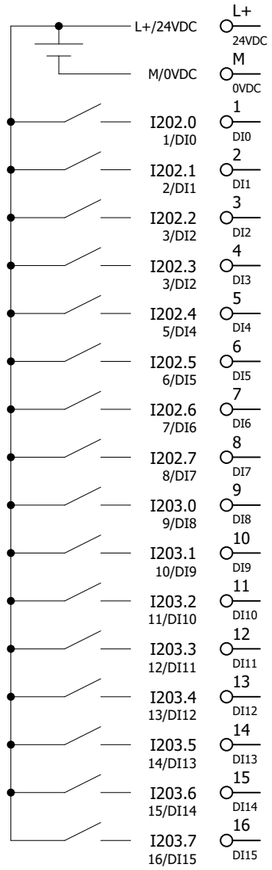

/4.3		
/4.4		
=V1FQ1/1.8	-KF14.51RQ	Monitoring Safety contactors 11.1L+
=V1FQ1/2.8	-KF14.52RQ	Monitoring Safety contactors 12.1L+
=V1FQ1/3.8	-KF14.53RQ	Monitoring Safety contactors 13.1L+
=V1FQ1/4.8	-KF14.54RQ	Monitoring Safety contactors 14.1L+
=V1SF0SF2+.UC72/1.1	=V1SF1+V1UC71-SF1.1	Operator Run Button
	I202.5	Spare
=KH0+KH0/3.6	=KH0-BP3_I	Monitoring S030 Turntable AIR On
	I202.7	Spare
	I203.0	Spare
	I203.1	Spare
	I203.2	Spare
	I203.3	Spare
	I203.4	Spare
	I203.5	Spare
	I203.6	Spare
	I203.7	Spare

6ES7131-6BH01-0BA0

-KF14.21
/7.1
16 DO 24VDC

ET 200SP SIEMENS
DQ 16x24 VDC/0.5A ST

L+/24VDC	L+ 24VDC	/7.1		
M/0VDC	M 0VDC	/7.2		
Q200.0 1/DQ0	1 DQ0	=V1PZ1PF2+.UC62/1.3	=V1PZ1PF2+UC62-PF1_1	Indication column Blue
Q200.1 2/DQ1	2 DQ1	=V1PZ1PF2+.UC62/1.4	=V1PZ1PF2+UC62-PF1_2	Indication column Green
Q200.2 3/DQ2	3 DQ2	=V1PZ1PF2+.UC62/1.4	=V1PZ1PF2+UC62-PF1_3	Indication column Yellow
Q200.3 4/DQ3	4 DQ3	=V1PZ1PF2+.UC62/1.5	=V1PZ1PF2+UC62-PF1_4	Indication column Red
Q200.4 5/DQ4	5 DQ4	=V1PZ1PF2+.UC62/1.6	=V1PZ1PF2+UC62-PF1_5	Indication column Siren
Q200.5 6/DQ5	6 DQ5		Q200.5	Spare
Q200.6 7/DQ6	7 DQ6		Q200.6	Spare
Q200.7 8/DQ7	8 DQ7		Q200.7	Spare
Q201.0 9/DQ8	9 DQ8		Q201.0	Spare
Q201.1 10/DQ9	10 DQ9		Q201.1	Spare
Q201.2 11/DQ10	11 DQ10		Q201.2	Spare
Q201.3 12/DQ11	12 DQ11		Q201.3	Spare
Q201.4 13/DQ12	13 DQ12		Q201.4	Spare
Q201.5 14/DQ13	14 DQ13		Q201.5	Spare
Q201.6 15/DQ14	15 DQ14		Q201.6	Spare
Q201.7 16/DQ15	16 DQ15		Q201.7	Spare

6ES7132-6BH01-0BA0

-KF14.31
/6.0

ET 200SP SIEMENS
F-DI 8x24VDC HF

	L+ 24VDC	/6.1		
	M 0VDC	/6.2		
I5200.0	1 DI0	=V1FQ1+.FQ1/5.3	=V1WR2FQ1-BR14.1	S030 Light Curtain 1 & 2 Ch1
	9 VS0	=V1FQ1+.FQ1/5.3		
I5200.1	2 DI1	=V1FQ1+.FQ1/6.3	=V1WR2FQ1-BR16.1	S030 Light Curtain 3 Ch1
	10 VS1	=V1FQ1+.FQ1/6.3		
I5200.2	3 DI2		I5200.2	Spare
	11 VS2			
I5200.3	4 DI3		I5200.3	Spare
	12 VS3			
I5200.4	5 DI4	=V1FQ1+.FQ1/5.4	=V1WR2FQ1-BR14.2	S030 Light Curtain 1 & 2 Ch2
	13 VS4	=V1FQ1+.FQ1/5.5		
I5200.5	6 DI5	=V1FQ1+.FQ1/6.4	=V1WR2FQ1-BR16.2	S030 Light Curtain 3 Ch2
	14 VS5	=V1FQ1+.FQ1/6.5		
I5200.6	7 DI6		I5200.6	Spare
	15 VS6			
I5200.7	8 DI7		I5200.7	Spare
	16 VS7			

6ES7136-6BA01-0CA0

-KF14.32
/6.3

ET 200SP SIEMENS
F-DI 8x24VDC HF

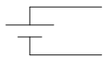

	L+ 24VDC	/6.3		
	M 0VDC	/6.4		
I5206.0	1 DI0	=V1SF0SF2+.UC72/1.5	=V1SF0SF2+V1UC72-SF1.4	S030 Operator Emergency Stop Ch1
	9 VS0	=V1SF0SF2+.UC72/1.5		
I5206.1	2 DI1		I5206.1	Spare
	10 VS1			
I5206.2	3 DI2		I5206.2	Spare
	11 VS2			
I5206.3	4 DI3		I5206.3	Spare
	12 VS3			
I5206.4	5 DI4	=V1SF0SF2+.UC72/1.6	=V1SF0SF2+V1UC72-SF1.6	S030 Operator Emergency Stop Ch2
	13 VS4	=V1SF0SF2+.UC72/1.6		
I5206.5	6 DI5		I5206.5	Spare
	14 VS5			
I5206.6	7 DI6		I5206.6	Spare
	15 VS6			
I5206.7	8 DI7		I5206.7	Spare
	16 VS7			

6ES7136-6BA00-0CA0

-KF14.41
/8.0

ET 200SP SIEMENS
F-DQ 4X24VDC/2A PM HF

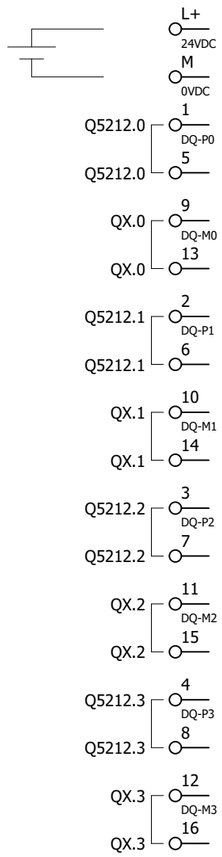

/8.1			
/8.2			
=V1FQ1/1.1	-KF14.51	Switched Power 1 11.1L+	
=V1FQ1/1.1			
=V1FQ1/2.1	-KF14.52	Switched Power 2 12.1L+	
=V1FQ1/2.1			
=V1FQ1/3.1	-KF14.53	Switched Power 3 13.1L+	
=V1FQ1/3.1			
=V1FQ1/4.1	-KF14.54	Switched Power 4 14.1L+	
=V1FQ1/4.1			

6ES7136-6DB00-0CA0 + BU15-P16+A0+2B

			Date	12/22/2022	Volvo Trucks North America	Valiant TMS	ET200S F-DQ Overview KF14.41	Drawing name: =2V13&EFS_EL		= V1KF1	
			Ed.	MKLEPADLO						+ V1UC14	
			Appr		Sub-Floor Members			Document type: EFS	Project nr: 22-16146	Page	14
Modification	Date	Name	Original		Replacement of / Replaced by	Scale 1:1					614

-KF14.42
/8.5

ET 200SP SIEMENS
F-DQ 4X24VDC/2A PM HF

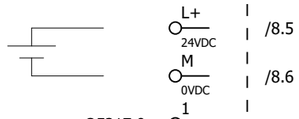

Q5217.0	Q5217.0	Spare
Q5217.1	Q5217.1	Spare
Q5217.2	Q5217.2	Spare
Q5217.3	Q5217.3	Spare

6ES7136-6DB00-0CA0 + BU15-P16+A0+2B

-KF14.51
=V1FQ1/1.2
=V1WC4/12.1

ET 200SP SIEMENS
F-RQ 1x24VDC/24..230VAC/5A

1 RQ01+	=V1WC4/12.2	11L+
2 RQ01-	=V1WC4/12.2	11.1L+
3 RQ02+	=V1WC4/12.3	11L+
4 RQ02-	=V1WC4/12.4	11.1L+
9 IN P	=V1FQ1/1.3	Switched Power 1 11.1L+P
10 OUT P	=V1FQ1/1.4	SPARE
11 IN M	=V1FQ1/1.4	Switched Power 1 11.1L+M
12 OUT M	=V1FQ1/1.5	SPARE
1A AUX		
2A AUX		
3A AUX		
4A AUX		

6ES7136-6RA00-0BF0 + BU20-P8+A4+0B

			Date	12/22/2022	Volvo Trucks North America		Valiant TMS	ET200S F-RQ Overview KF14.51	Drawing name: =2V13&EFS_EL	= V1KF1	
			Ed.	MKLEPADLO						+ V1UC14	
			Appr		Sub-Floor Members				Document type: EFS	Project nr: 22-16146	Page 16
Modification	Date	Name	Original		Replacement of	Replaced by	Scale 1:1				614

-KF14.52
=V1FQ1/2.2
=V1WC4/13.1

ET 200SP SIEMENS
F-RQ 1x24VDC/24..230VAC/5A

1 RQ01+	=V1WC4/13.2	12L+
2 RQ01-	=V1WC4/13.2	12.1L+
3 RQ02+	=V1WC4/13.3	12L+
4 RQ02-	=V1WC4/13.4	12.1L+
9 IN P	=V1FQ1/2.3	Switched Power 2 12.1L+P
10 OUT P	=V1FQ1/2.4	SPARE
11 IN M	=V1FQ1/2.4	Switched Power 2 12.1L+M
12 OUT M	=V1FQ1/2.5	SPARE
1A AUX		
2A AUX		
3A AUX		
4A AUX		

6ES7136-6RA00-0BF0 + BU20-P8+A4+0B

			Date	12/22/2022	Volvo Trucks North America		Valiant TMS	ET200S F-RQ Overview KF14.52	Drawing name: =2V13&EFS_EL	= V1KF1	
			Ed.	MKLEPADLO						+ V1UC14	
			Appr		Sub-Floor Members				Document type: EFS	Project nr: 22-16146	Page 17
Modification	Date	Name	Original		Replacement of	Replaced by	Scale 1:1				614

-KF14.53
=V1FQ1/3.2
=V1WC4/14.1

ET 200SP SIEMENS
F-RQ 1x24VDC/24..230VAC/5A

1 RQ01+	=V1WC4/14.2	13L+
2 RQ01-	=V1WC4/14.2	13.1L+
3 RQ02+	=V1WC4/14.3	13L+
4 RQ02-	=V1WC4/14.4	13.1L+
9 IN P	=V1FQ1/3.3	Switched Power 3 13.1L+P
10 OUT P	=V1FQ1/3.4	SPARE
11 IN M	=V1FQ1/3.4	Switched Power 3 13.1L+M
12 OUT M	=V1FQ1/3.5	SPARE
1A AUX		
2A AUX		
3A AUX		
4A AUX		

6ES7136-6RA00-0BF0 + BU20-P8+A4+0B

			Date	12/22/2022	Volvo Trucks North America		Valiant TMS	ET200S F-RQ Overview KF14.53	Drawing name: =2V13&EFS_EL	= V1KF1	
			Ed.	MKLEPADLO						+ V1UC14	
			Appr		Sub-Floor Members				Document type: EFS	Project nr: 22-16146	Page 18
Modification	Date	Name	Original		Replacement of	Replaced by	Scale 1:1				614

-KF14.54
=V1FQ1/4.2
=V1WC4/15.1

ET 200SP SIEMENS
F-RQ 1x24VDC/24..230VAC/5A

1 RQ01+	=V1WC4/15.2	14L+
2 RQ01-	=V1WC4/15.2	14.1L+
3 RQ02+	=V1WC4/15.3	14L+
4 RQ02-	=V1WC4/15.4	14.1L+
9 IN P	=V1FQ1/4.3	Switched Power 4 14.1L+P
10 OUT P	=V1FQ1/4.4	SPARE
11 IN M	=V1FQ1/4.4	Switched Power 4 14.1L+M
12 OUT M	=V1FQ1/4.5	SPARE
1A AUX		
2A AUX		
3A AUX		
4A AUX		

6ES7136-6RA00-0BF0 + BU20-P8+A4+0B

			Date	12/22/2022	Volvo Trucks North America	Valiant TMS	ET200S F-RQ Overview KF14.54	Drawing name: =2V13&EFS_EL		= V1KF1	
			Ed.	MKLEPADLO						+ V1UC14	
			Appr		Sub-Floor Members			Document type: EFS	Project nr: 22-16146	Page	19
Modification	Date	Name	Original		Replacement of / Replaced by	Scale 1:1					614

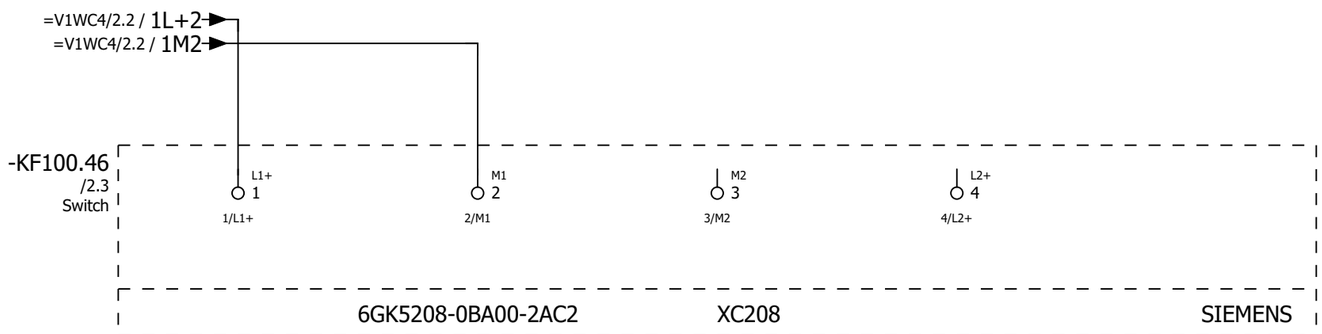

+.UC14/19

2

			Date	12/22/2022	Volvo Trucks North America		Valiant TMS	Switch, Scalance XC208	Drawing name: =2V13&EFS_EL	= V1KF1	
			Ed.	MKLEPADLO						+ V1UC46	
			Appr		Sub-Floor Members				Document type: EFS	Project nr: 22-16146	Page 1
Modification	Date	Name	Original		Replacement of	Replaced by	Scale 1:1				614

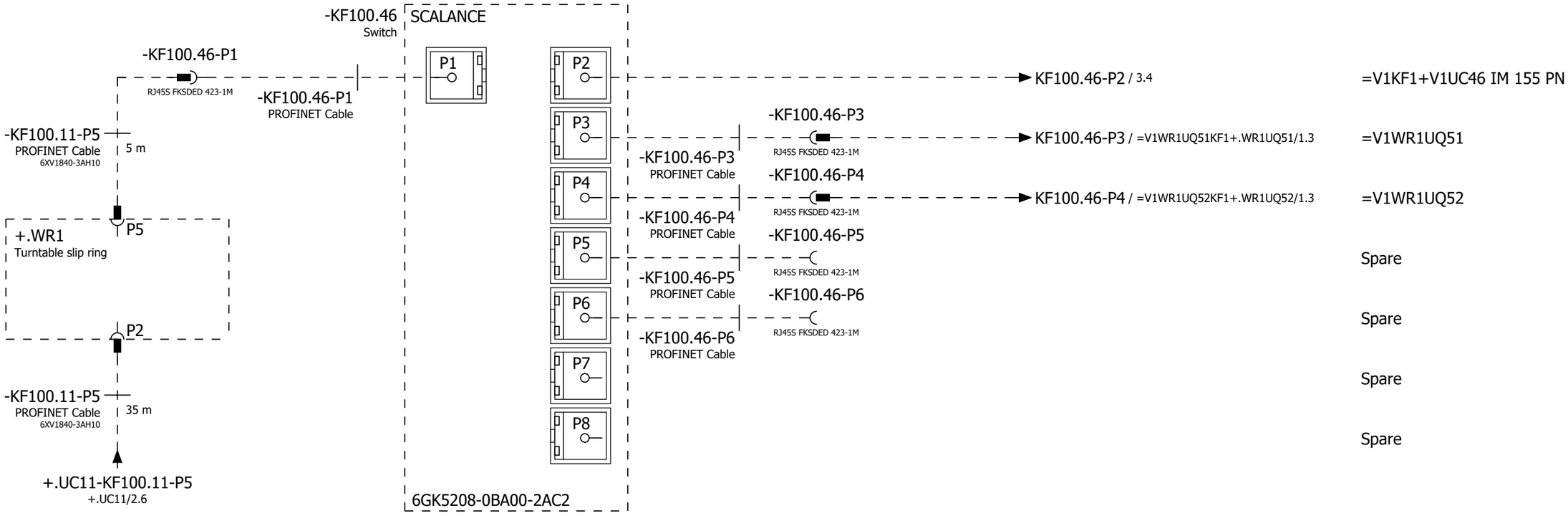

1 3

			Date	12/22/2022	Volvo Trucks North America	Valiant TMS	Network Overview	Drawing name: =2V13&EFS_EL		= V1KF1	
			Ed.	MKLEPADLO						+ V1UC46	
			Appr		Sub-Floor Members			Document type: EFS	Project nr: 22-16146		Page 2
Modification	Date	Name	Original		Replacement of	Replaced by	Scale 1:1				614

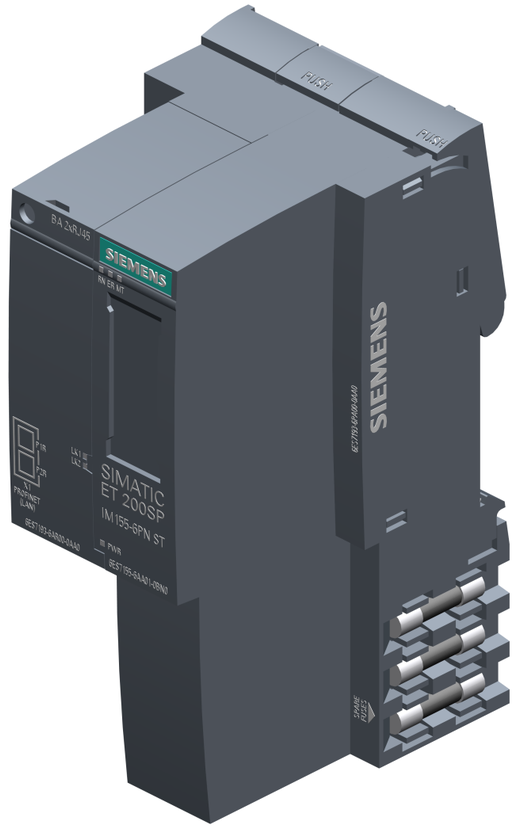

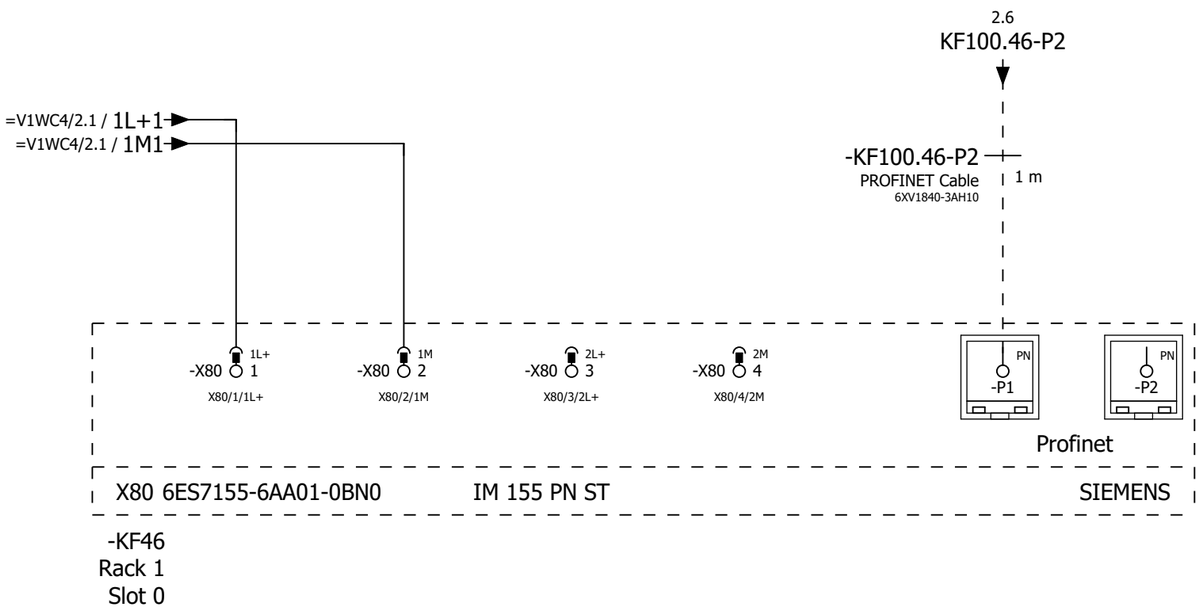

2

4

			Date	12/22/2022	Volvo Trucks North America	Valiant TMS	IM 155 PN	Drawing name: =2V13&EFS_EL	= V1KF1	
			Ed.	MKLEPADLO					+ V1UC46	
			Appr		Sub-Floor Members			Document type: EFS	Project nr: 22-16146	Page 3 / 614
Modification	Date	Name	Original		Replacement of	Replaced by	Scale 1:1			

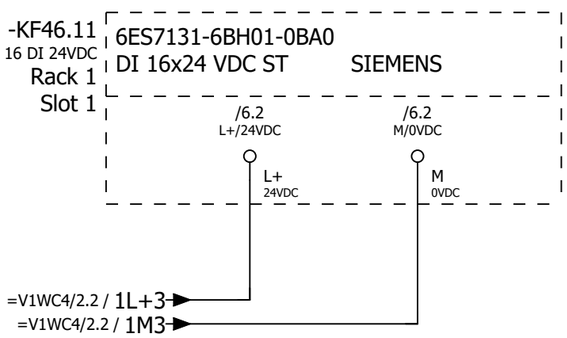

			Date	12/22/2022	Volvo Trucks North America	Valiant TMS	ET200S Wiring DI	Drawing name: =2V13&EFS_EL		= V1KF1	
			Ed.	MKLEPADLO						+ V1UC46	
			Appr		Sub-Floor Members			Document type: EFS	Project nr: 22-16146		Page 4
Modification	Date	Name	Original		Replacement of / Replaced by	Scale 1:1					614

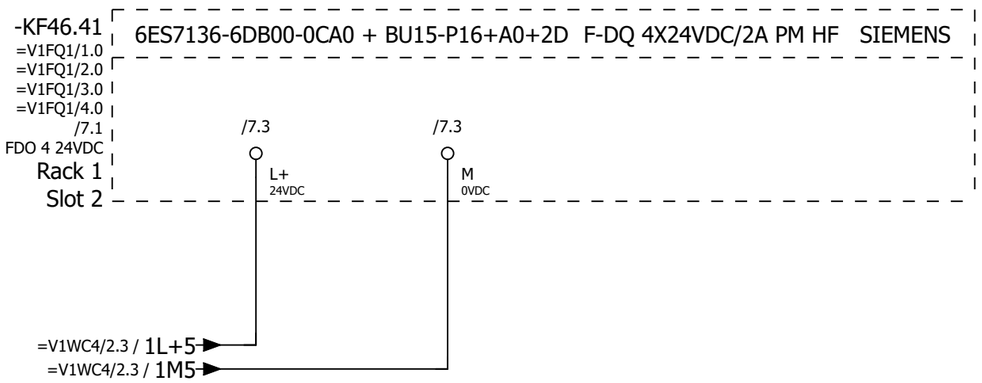

			Date	12/22/2022	Volvo Trucks North America	Valiant TMS	ET200S Wiring F-DQ	Drawing name: =2V13&EFS_EL		= V1KF1	
			Ed.	MKLEPADLO	Sub-Floor Members					+ V1UC46	
			Appr					Document type: EFS	Project nr: 22-16146		Page 5
Modification	Date	Name	Original		Replacement of	Replaced by	Scale 1:1				614

-KF46.11
/4.1

ET 200SP SIEMENS
DI 16x24 VDC ST

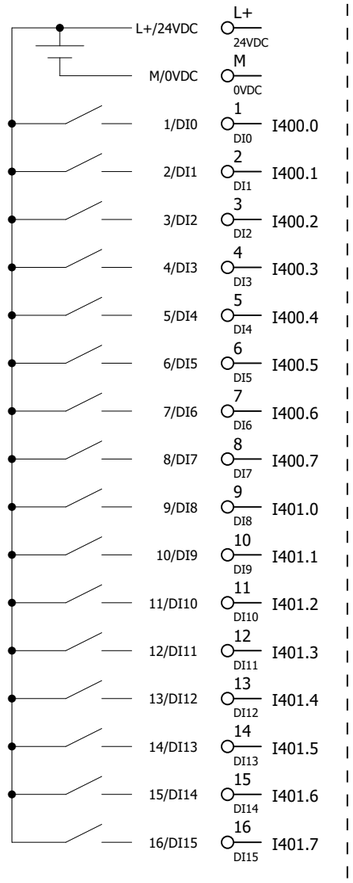

6ES7131-6BH01-0BA0

/4.1			
/4.2			
=V1FQ1/1.8	=KF46.51RQ	Monitoring Safety Power 2.1L+	
=V1FQ1/2.8	=KF46.52RQ	Monitoring Safety Power 2.2L+	
=V1FQ1/3.8	=KF46.53RQ	Monitoring Safety Power 3.1L+	
=V1FQ1/4.8	=KF46.54RQ	Monitoring Safety Power 3.2L+	
	I400.4	Spare	
	I400.5	Spare	
	I400.6	Spare	
	I400.7	Spare	
	I401.0	Spare	
	I401.1	Spare	
=V1WC3/2.2	=V1WC3+V1UC46-FC1	Monitoring 120 VAC	
=V1WC4/1.5	=V1WC4+V1UC46-TA1_I	Monitoring 24 VDC	
=V1WC4/1.3	=V1WC4+V1UC46-FC11_I	Monitoring 24 VDC	
	I401.5	Spare	
	I401.6	Spare	
	I401.7	Spare	

-KF46.41
/5.0

ET 200SP SIEMENS
F-DQ 4X24VDC/2A PM HF

	L+ 24VDC	/5.1		
	M 0VDC	/5.2		
Q5400.0	1	=V1FQ1/1.1	-KF46.51	UQ51 motion power enable
Q5400.0	5			
QX.0	9	=V1FQ1/1.1		
QX.0	13			
Q5400.1	2	=V1FQ1/2.1	-KF46.52	UQ52 motion power enable
Q5400.1	6			
QX.1	10	=V1FQ1/2.1		
QX.1	14			
Q5400.2	3	=V1FQ1/3.1	-KF46.53	UQ53 motion power enable
Q5400.2	7			
QX.2	11	=V1FQ1/3.1		
QX.2	15			
Q5400.3	4	=V1FQ1/4.1	-KF46.54	UQ54 motion power enable
Q5400.3	8			
QX.3	12	=V1FQ1/4.1		
QX.3	16			

6ES7136-6DB00-0CA0 + BU15-P16+A0+2D

			Date	12/22/2022	Volvo Trucks North America	Valiant TMS	ET200S F-DQ Overview KF46.41	Drawing name: =2V13&EFS_EL		= V1KF1	
			Ed.	MKLEPADLO	Sub-Floor Members					+ V1UC46	
			Appr					Document type: EFS	Project nr: 22-16146		Page 7
Modification	Date	Name	Original		Replacement of	Replaced by	Scale 1:1				614

-KF46.51
=V1FQ1/1.2
=V1WC4/3.1

ET 200SP SIEMENS
F-RQ 1x24VDC/24..230VAC/5A

1 RQ01+	=V1WC4/3.2	2L+
2 RQ01-	=V1WC4/3.2	2.1L+
3 RQ02+	=V1WC4/3.3	2L+
4 RQ02-	=V1WC4/3.4	2.1L+
9 IN P	=V1FQ1/1.3	UQ51 motion power enable
10 OUT M	=V1FQ1/1.4	Spare
11 IN P	=V1FQ1/1.4	UQ51 motion power enable
12 OUT M	=V1FQ1/1.5	Spare
1A AUX		
2A AUX		
3A AUX		
4A AUX		

6ES7136-6RA00-0BF0 + BU20-P8+A4+0B

-KF46.52
=V1FQ1/2.2
=V1WC4/4.1

ET 200SP SIEMENS
F-RQ 1x24VDC/24..230VAC/5A

1 RQ01+	=V1WC4/4.2	2L+
2 RQ01-	=V1WC4/4.2	2.2L+
3 RQ02+	=V1WC4/4.3	2L+
4 RQ02-	=V1WC4/4.4	2.2L+
9 IN P	=V1FQ1/2.3	UQ52 motion power enable
10 OUT M	=V1FQ1/2.4	Spare
11 IN P	=V1FQ1/2.4	UQ52 motion power enable
12 OUT M	=V1FQ1/2.5	Spare
1A AUX		
2A AUX		
3A AUX		
4A AUX		

6ES7136-6RA00-0BF0 + BU20-P8+A4+0B

			Date	12/22/2022	Volvo Trucks North America		Valiant TMS	ET200S F-RQ Overview KF46.52	Drawing name: =2V13&EFS_EL	= V1KF1	
			Ed.	MKLEPADLO						+ V1UC46	
			Appr		Sub-Floor Members				Document type: EFS	Project nr: 22-16146	Page 9
Modification	Date	Name	Original		Replacement of	Replaced by	Scale 1:1				614

-KF46.53
=V1FQ1/3.2
=V1WC4/5.1

ET 200SP SIEMENS
F-RQ 1x24VDC/24..230VAC/5A

1 RQ01+	=V1WC4/5.2	3L+
2 RQ01-	=V1WC4/5.2	3.1L+
3 RQ02+	=V1WC4/5.3	3L+
4 RQ02-	=V1WC4/5.4	3.1L+
9 IN P	=V1FQ1/3.3	UQ53 motion power enable
10 OUT M	=V1FQ1/3.4	Spare
11 IN P	=V1FQ1/3.4	UQ53 motion power enable
12 OUT M	=V1FQ1/3.5	Spare
1A AUX		
2A AUX		
3A AUX		
4A AUX		

6ES7136-6RA00-0BF0 + BU20-P8+A4+0B

-KF46.54
=V1FQ1/4.2
=V1WC4/6.1

ET 200SP SIEMENS
F-RQ 1x24VDC/24..230VAC/5A

1 RQ01+	=V1WC4/6.2	3L+
2 RQ01-	=V1WC4/6.2	3.2L+
3 RQ02+	=V1WC4/6.3	3L+
4 RQ02-	=V1WC4/6.4	3.2L+
9 IN P	=V1FQ1/4.3	UQ54 motion power enable
10 OUT M	=V1FQ1/4.4	Spare
11 IN P	=V1FQ1/4.4	UQ54 motion power enable
12 OUT M	=V1FQ1/4.5	Spare
1A AUX		
2A AUX		
3A AUX		
4A AUX		

6ES7136-6RA00-0BF0 + BU20-P8+A4+0B

			Date	12/22/2022	Volvo Trucks North America	Valiant TMS	ET200S F-RQ Overview KF46.54	Drawing name: =2V13&EFS_EL		= V1KF1	
			Ed.	MKLEPADLO						+ V1UC46	
			Appr		Sub-Floor Members			Document type: EFS	Project nr: 22-16146	Page	11
Modification	Date	Name	Original		Replacement of / Replaced by	Scale 1:1					614

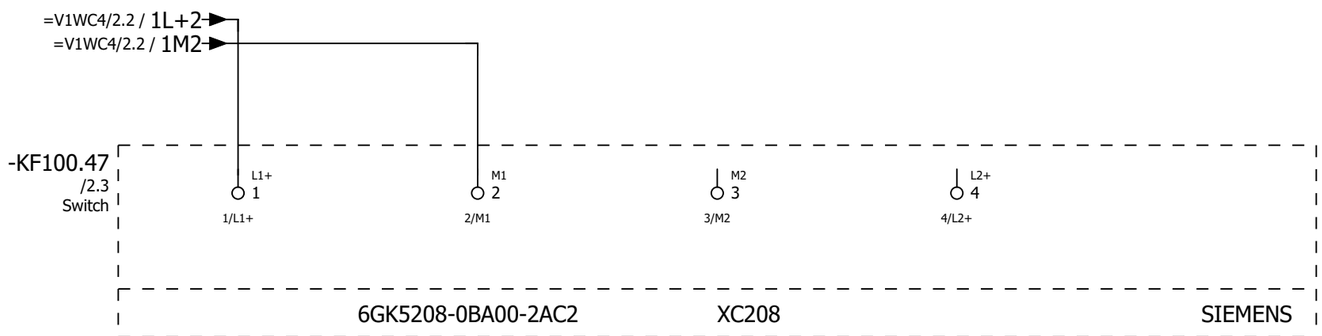

+.UC46/11

2

			Date	12/22/2022	Volvo Trucks North America		Valiant TMS	Switch, Scalance XC208	Drawing name: =2V13&EFS_EL	= V1KF1	
			Ed.	MKLEPADLO						+ V1UC47	
			Appr		Sub-Floor Members				Document type: EFS	Project nr: 22-16146	Page 1
Modification	Date	Name	Original		Replacement of	Replaced by	Scale 1:1				614

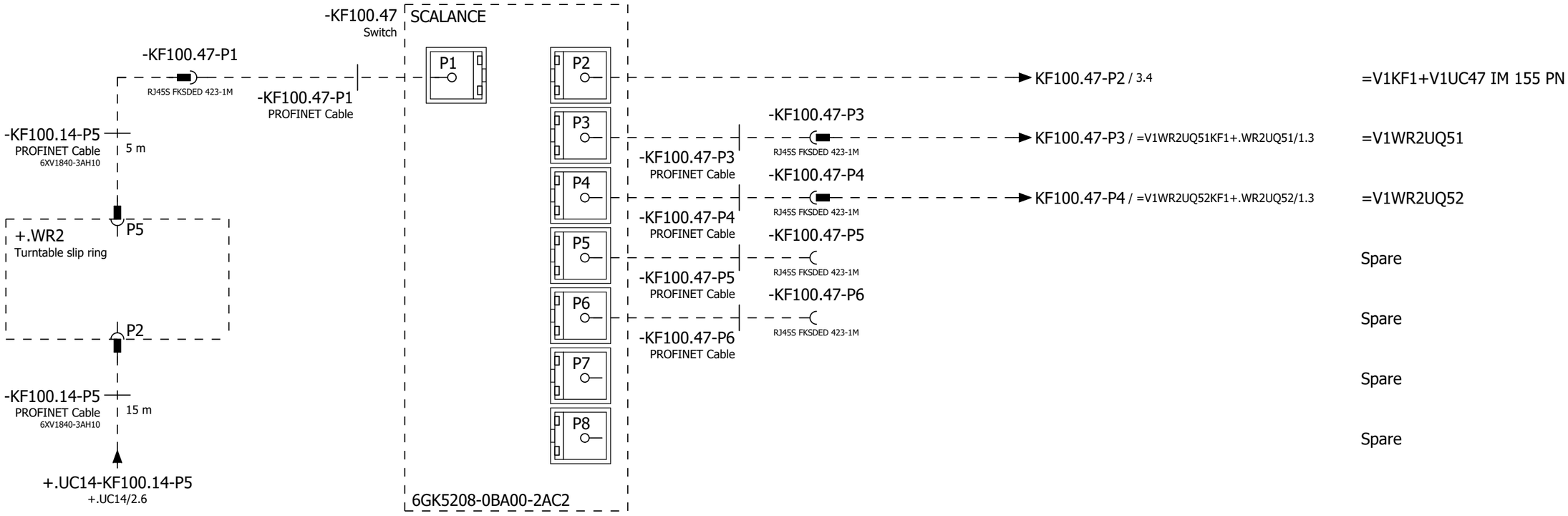

1 3

			Date	12/22/2022	Volvo Trucks North America	Valiant TMS	Network Overview	Drawing name: =2V13&EFS_EL		= V1KF1	
			Ed.	MKLEPADLO						+ V1UC47	
			Appr		Sub-Floor Members			Document type: EFS	Project nr: 22-16146		Page 2
Modification	Date	Name	Original		Replacement of	Replaced by	Scale 1:1				614

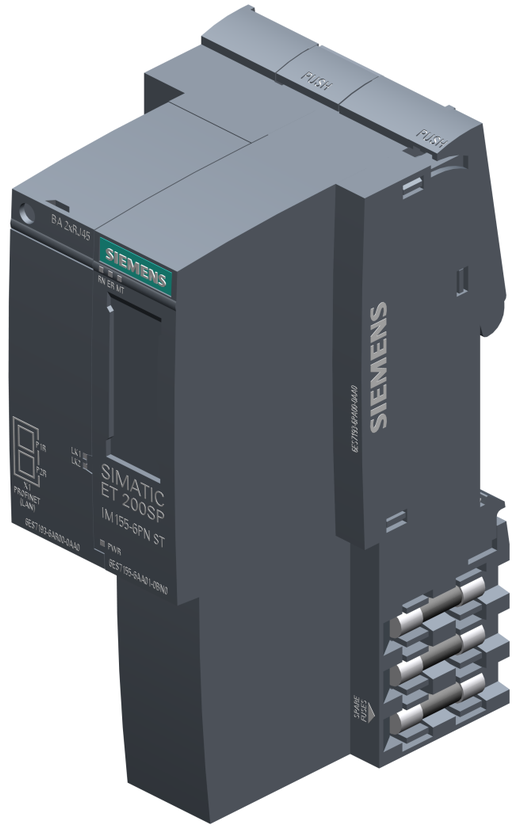

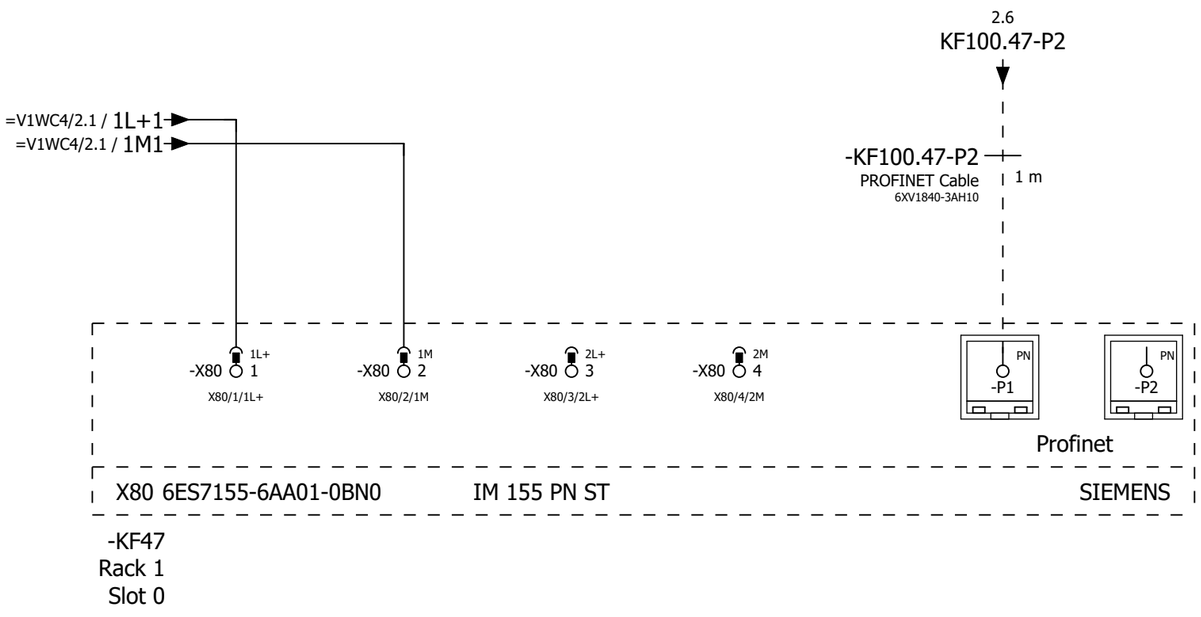

2

4

			Date	12/22/2022	Volvo Trucks North America	Valiant TMS	IM 155 PN	Drawing name: =2V13&EFS_EL	= V1KF1	
			Ed.	MKLEPADLO					+ V1UC47	
			Appr		Sub-Floor Members			Document type: EFS	Project nr: 22-16146	Page 3 / 614
Modification	Date	Name	Original		Replacement of	Replaced by	Scale 1:1			

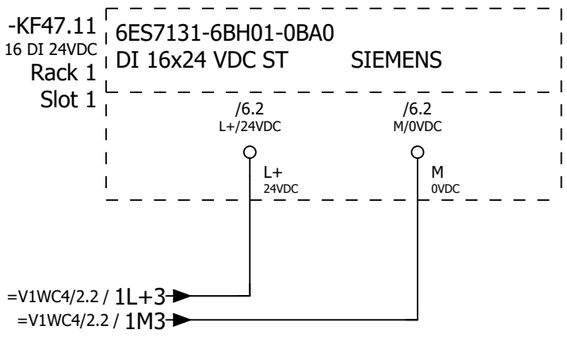
-KF47.11
16 DI 24VDC
Rack 1
Slot 1
6ES7131-6BH01-0BA0
DI 16x24 VDC ST
SIEMENS
/6.2
L+/24VDC
/6.2
M/0VDC
L+
24VDC
M
0VDC
=V1WC4/2.2 / 1L+3
=V1WC4/2.2 / 1M3

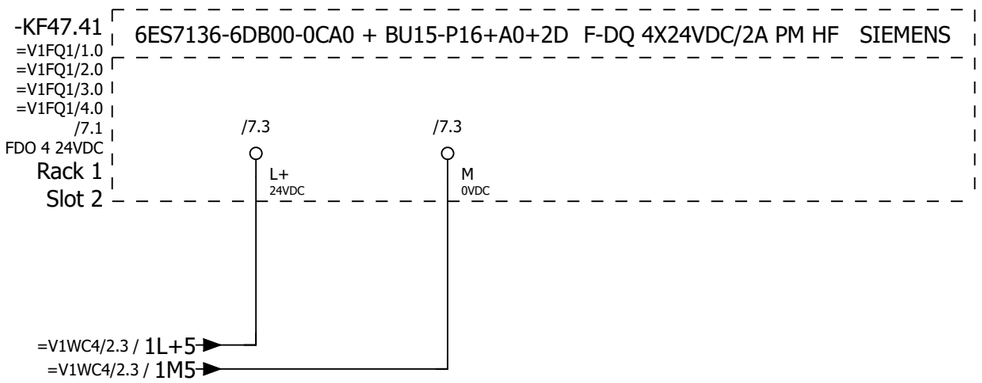

4 6

			Date	12/22/2022	Volvo Trucks North America	Valiant TMS	ET200S Wiring F-DQ	Drawing name: =2V13&EFS_EL		= V1KF1	
			Ed.	MKLEPADLO	Sub-Floor Members					+ V1UC47	
			Appr			Scale 1:1		Document type: EFS	Project nr: 22-16146		Page 5 / 614
Modification	Date	Name	Original		Replacement of	Replaced by					

-KF47.11
/4.1

ET 200SP SIEMENS
DI 16x24 VDC ST

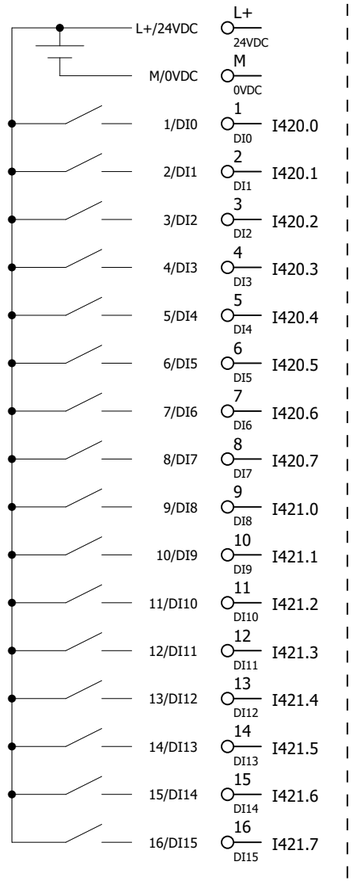

/4.1			
/4.2			
=V1FQ1/1.8	=KF47.51RQ	Monitoring Safety Power 2.1L+	
=V1FQ1/2.8	=KF47.52RQ	Monitoring Safety Power 2.2L+	
=V1FQ1/3.8	=KF47.53RQ	Monitoring Safety Power 3.1L+	
=V1FQ1/4.8	=KF47.54RQ	Monitoring Safety Power 3.2L+	
	I420.4	Spare	
	I420.5	Spare	
	I420.6	Spare	
	I420.7	Spare	
	I421.0	Spare	
	I421.1	Spare	
=V1WC3/4.2	=V1WC3+V1UC47-FC1	Monitoring 120 VAC	
=V1WC4/1.5	=V1WC4+V1UC47-TA1_I	Monitoring 24 VDC	
=V1WC4/1.3	=V1WC4+V1UC47-FC11_I	Monitoring 24 VDC	
	I421.5	Spare	
	I421.6	Spare	
	I421.7	Spare	

6ES7131-6BH01-0BA0

-KF47.41
/5.0

ET 200SP SIEMENS
F-DQ 4X24VDC/2A PM HF

L+	24VDC	/5.1		
M	0VDC	/5.2		
Q5420.0	1	=V1FQ1/1.1	-KF47.51	UQ51 motion power enable
Q5420.0	5			
QX.0	9	=V1FQ1/1.1		
QX.0	13			
Q5420.1	2	=V1FQ1/2.1	-KF47.52	UQ52 motion power enable
Q5420.1	6			
QX.1	10	=V1FQ1/2.1		
QX.1	14			
Q5420.2	3	=V1FQ1/3.1	-KF47.53	UQ53 motion power enable
Q5420.2	7			
QX.2	11	=V1FQ1/3.1		
QX.2	15			
Q5420.3	4	=V1FQ1/4.1	-KF47.54	UQ54 motion power enable
Q5420.3	8			
QX.3	12	=V1FQ1/4.1		
QX.3	16			

6ES7136-6DB00-0CA0 + BU15-P16+A0+2D

-KF47.51
=V1FQ1/1.2
=V1WC4/3.1

ET 200SP SIEMENS
F-RQ 1x24VDC/24..230VAC/5A

Q5425.0	1 RQ01+	=V1WC4/3.2	2L+
	2 RQ01-	=V1WC4/3.2	2.1L+
Q5425.1	3 RQ02+	=V1WC4/3.3	2L+
	4 RQ02-	=V1WC4/3.4	2.1L+
	9 IN P	=V1FQ1/1.3	UQ51 motion power enable
	10 OUT M	=V1FQ1/1.4	Spare
	11 IN P	=V1FQ1/1.4	UQ51 motion power enable
	12 OUT M	=V1FQ1/1.5	Spare
	1A AUX		
	2A AUX		
	3A AUX		
	4A AUX		

6ES7136-6RA00-0BF0 + BU20-P8+A4+0B

			Date	12/22/2022	Volvo Trucks North America		Valiant TMS	ET200S F-RQ Overview KF47.51	Drawing name: =2V13&EFS_EL	= V1KF1	
			Ed.	MKLEPADLO						+ V1UC47	
			Appr		Sub-Floor Members				Document type: EFS	Project nr: 22-16146	Page 8
Modification	Date	Name	Original		Replacement of	Replaced by	Scale 1:1				614

0	1	2	3	4	5	6	7	8	9

-KF47.52
=V1FQ1/2.2
=V1WC4/4.1

ET 200SP SIEMENS
F-RQ 1x24VDC/24..230VAC/5A

Q5426.0	1 RQ01+	=V1WC4/4.2	2L+
	2 RQ01-	=V1WC4/4.2	2.2L+
Q5426.1	3 RQ02+	=V1WC4/4.3	2L+
	4 RQ02-	=V1WC4/4.4	2.2L+
	9 IN P	=V1FQ1/2.3	UQ52 motion power enable
	10 OUT M	=V1FQ1/2.4	Spare
	11 IN P	=V1FQ1/2.4	UQ52 motion power enable
	12 OUT M	=V1FQ1/2.5	Spare
	1A AUX		
	2A AUX		
	3A AUX		
	4A AUX		

6ES7136-6RA00-0BF0 + BU20-P8+A4+0B

-KF47.53
=V1FQ1/3.2
=V1WC4/5.1

ET 200SP SIEMENS
F-RQ 1x24VDC/24..230VAC/5A

Q5427.0	1 RQ01+	=V1WC4/5.2	3L+
	2 RQ01-	=V1WC4/5.2	3.1L+
Q5427.1	3 RQ02+	=V1WC4/5.3	3L+
	4 RQ02-	=V1WC4/5.4	3.1L+
	9 IN P	=V1FQ1/3.3	UQ53 motion power enable
	10 OUT M	=V1FQ1/3.4	Spare
	11 IN P	=V1FQ1/3.4	UQ53 motion power enable
	12 OUT M	=V1FQ1/3.5	Spare
	1A AUX		
	2A AUX		
	3A AUX		
	4A AUX		

6ES7136-6RA00-0BF0 + BU20-P8+A4+0B

			Date	12/22/2022	Volvo Trucks North America		Valiant TMS	ET200S F-RQ Overview KF47.53	Drawing name: =2V13&EFS_EL	= V1KF1	
			Ed.	MKLEPADLO						+ V1UC47	
			Appr		Sub-Floor Members				Document type: EFS	Project nr: 22-16146	Page 10
Modification	Date	Name	Original		Replacement of	Replaced by	Scale 1:1				614

-KF47.54
=V1FQ1/4.2
=V1WC4/6.1

ET 200SP SIEMENS
F-RQ 1x24VDC/24..230VAC/5A

Q5428.0	1 RQ01+	=V1WC4/6.2	3L+
	2 RQ01-	=V1WC4/6.2	3.2L+
Q5428.1	3 RQ02+	=V1WC4/6.3	3L+
	4 RQ02-	=V1WC4/6.4	3.2L+
	9 IN P	=V1FQ1/4.3	UQ54 motion power enable
	10 OUT M	=V1FQ1/4.4	Spare
	11 IN P	=V1FQ1/4.4	UQ54 motion power enable
	12 OUT M	=V1FQ1/4.5	Spare
	1A AUX		
	2A AUX		
	3A AUX		
	4A AUX		

6ES7136-6RA00-0BF0 + BU20-P8+A4+0B

			Date	12/22/2022	Volvo Trucks North America	Valiant TMS	ET200S F-RQ Overview KF47.54	Drawing name: =2V13&EFS_EL		= V1KF1	
			Ed.	MKLEPADLO						+ V1UC47	
			Appr		Sub-Floor Members			Document type: EFS	Project nr: 22-16146	Page	11
Modification	Date	Name	Original		Replacement of / Replaced by	Scale 1:1					614

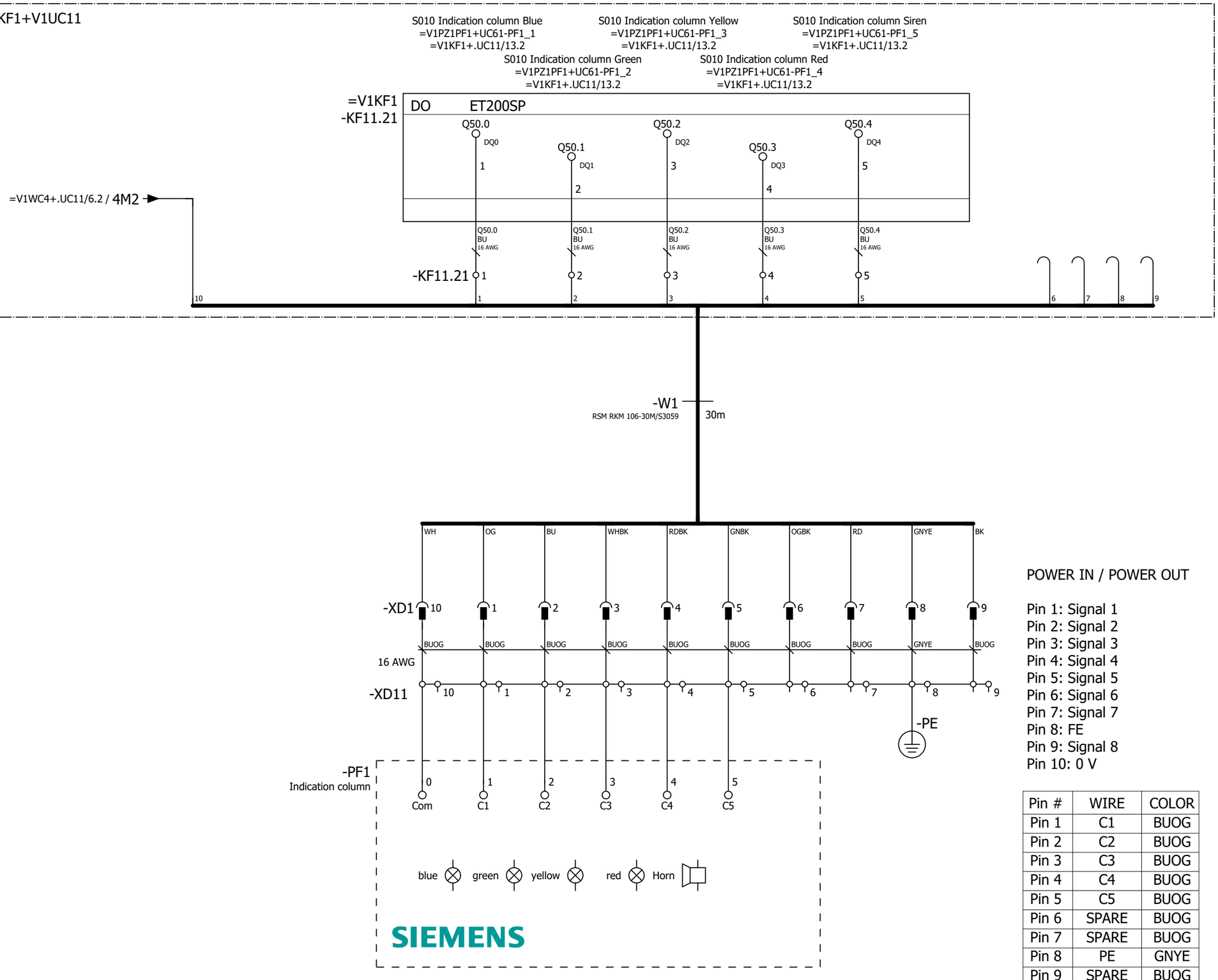

POWER IN / POWER OUT

Pin 1: Signal 1
Pin 2: Signal 2
Pin 3: Signal 3
Pin 4: Signal 4
Pin 5: Signal 5
Pin 6: Signal 6
Pin 7: Signal 7
Pin 8: FE
Pin 9: Signal 8
Pin 10: 0 V

Pin #	WIRE	COLOR
Pin 1	C1	BUOG
Pin 2	C2	BUOG
Pin 3	C3	BUOG
Pin 4	C4	BUOG
Pin 5	C5	BUOG
Pin 6	SPARE	BUOG
Pin 7	SPARE	BUOG
Pin 8	PE	GNYE
Pin 9	SPARE	BUOG
Pin 10	COM	BUOG

=V1KF1+.UC47/11

=V1PZ1PF2+.UC62/1

			Date	12/22/2022	Volvo Trucks North America	Valiant TMS	S010 Indication column	Drawing name: =2V13&EFS_EL	= V1PZ1PF1
			Ed.	MKLEPADLO					+ V1UC61
			Appr		Sub-Floor Members			Document type: EFS	Project nr: 22-16146
Modification	Date	Name	Original		Replacement of / Replaced by	Scale 1:1			Page 1 / 614

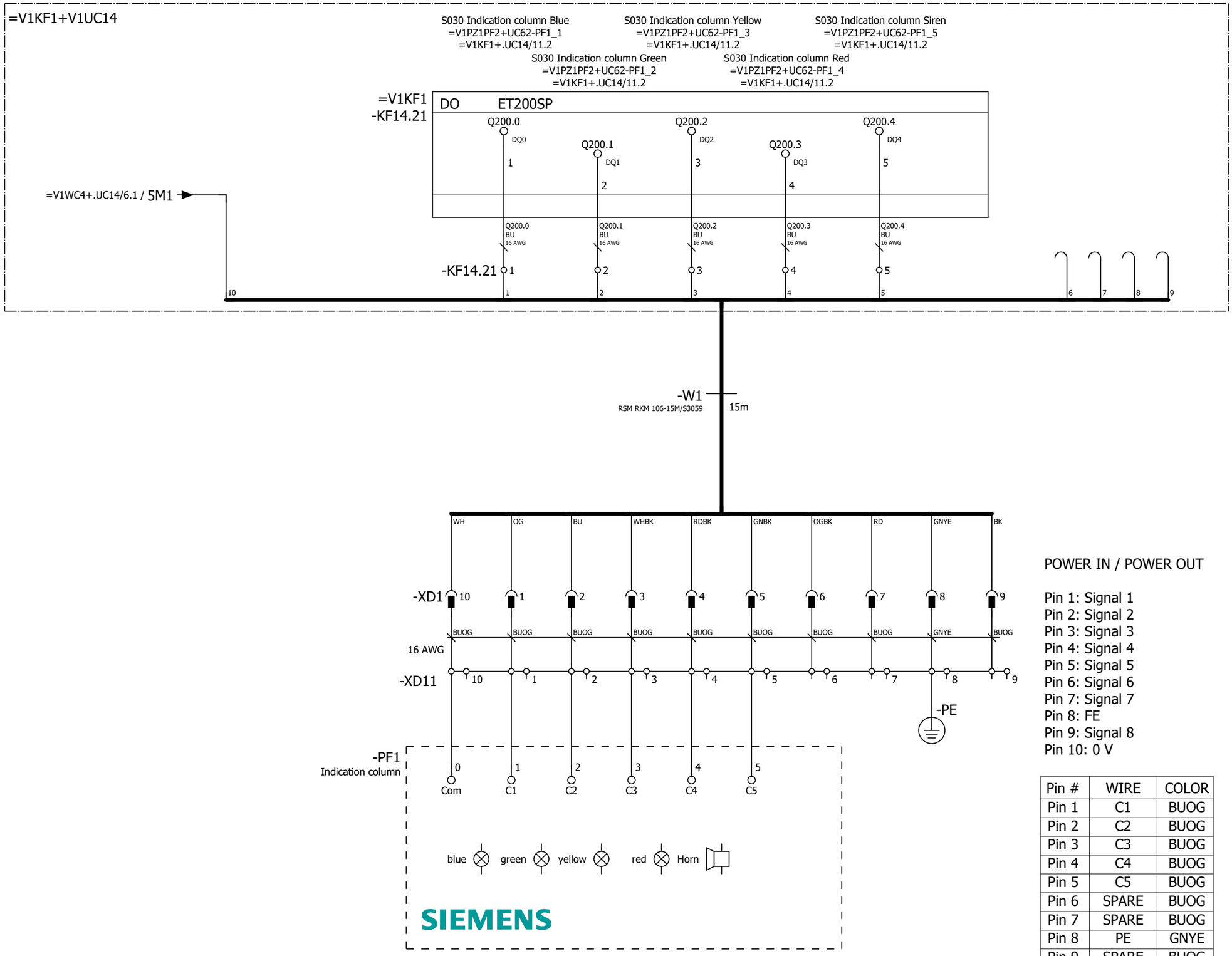

POWER IN / POWER OUT

Pin 1: Signal 1
Pin 2: Signal 2
Pin 3: Signal 3
Pin 4: Signal 4
Pin 5: Signal 5
Pin 6: Signal 6
Pin 7: Signal 7
Pin 8: FE
Pin 9: Signal 8
Pin 10: 0 V

Pin #	WIRE	COLOR
Pin 1	C1	BUOG
Pin 2	C2	BUOG
Pin 3	C3	BUOG
Pin 4	C4	BUOG
Pin 5	C5	BUOG
Pin 6	SPARE	BUOG
Pin 7	SPARE	BUOG
Pin 8	PE	GNYE
Pin 9	SPARE	BUOG
Pin 10	COM	BUOG

=V1PZ1PF1+.UC61/1

=V1SF0PG1+.UC51/1

			Date	12/22/2022	Volvo Trucks North America	Valiant TMS	S030 Indication column	Drawing name: =2V13&EFS_EL	= V1PZ1PF2
			Ed.	MKLEPADLO					+ V1UC62
			Appr		Sub-Floor Members			Document type: EFS	Project nr: 22-16146
Modification	Date	Name	Original		Replacement of / Replaced by	Scale 1:1			Page 1 / 614

Pin #	WIRE	COLOR
Pin 1	N/C	BK
Pin 2	M	BU
Pin 3	PE	GNYE
Pin 4	L+	BN
Pin 5	N/C	WH

POWER IN / POWER OUT

Pin 1: 0 V UA
Pin 2: 0 V US
Pin 3: FE
Pin 4: +24 V US / 9 A
Pin 5: +24 V UA / 9 A

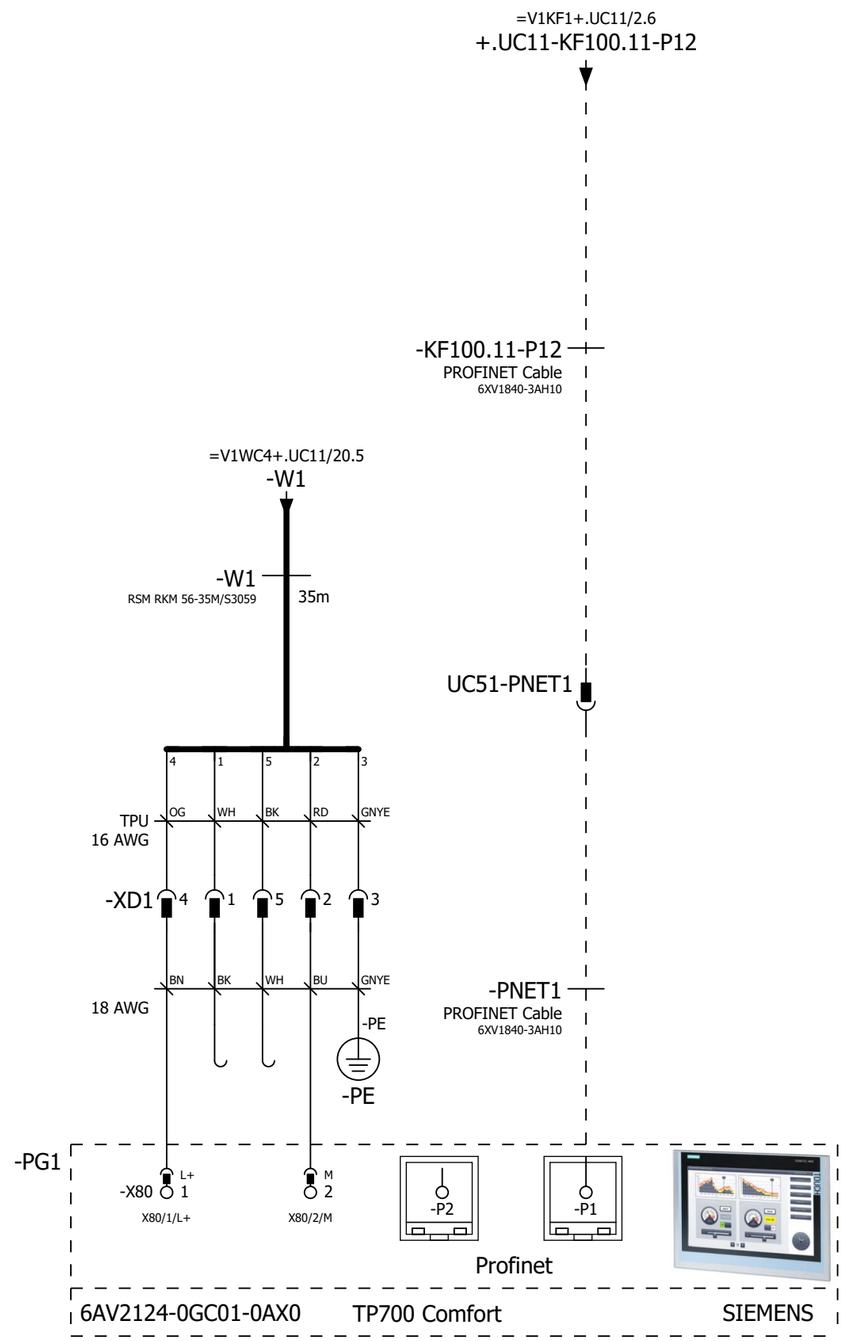

=V1PZ1PF2+.UC62/1

=V1SF0PG2+.UC52/1

			Date	12/22/2022	Volvo Trucks North America	Valiant TMS	TP700: S010 Display	Drawing name: =2V13&EFS_EL		= V1SF0PG1	
			Ed.	MKLEPADLO						+ V1UC51	
			Appr		Sub-Floor Members			Document type: EFS	Project nr: 22-16146		Page 1
Modification	Date	Name	Original		Replacement of	Replaced by	Scale 1:1				614

Pin #	WIRE	COLOR
Pin 1	N/C	BK
Pin 2	M	BU
Pin 3	PE	GNYE
Pin 4	L+	BN
Pin 5	N/C	WH

POWER IN / POWER OUT

Pin 1: 0 V UA
Pin 2: 0 V US
Pin 3: FE
Pin 4: +24 V US / 9 A
Pin 5: +24 V UA / 9 A

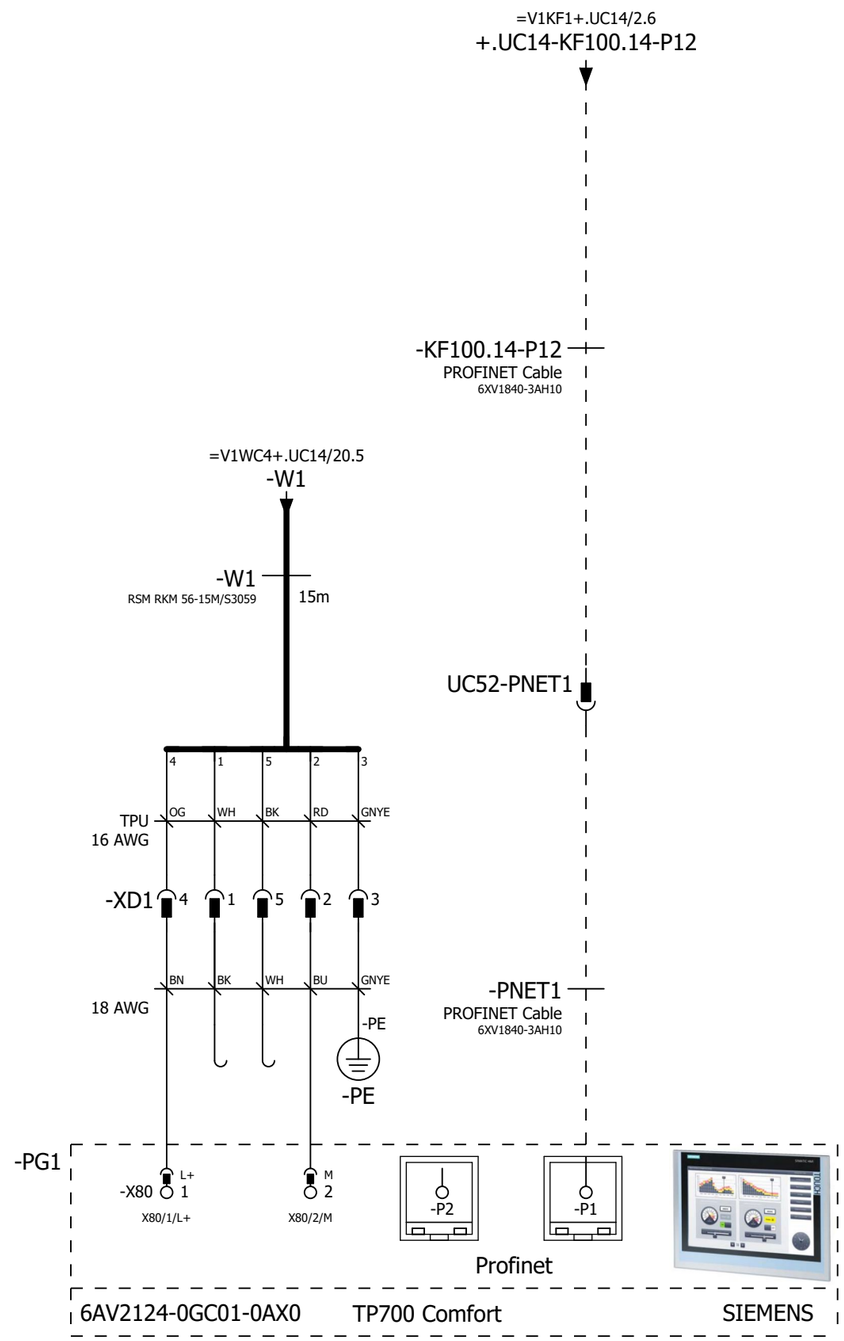

=V1SF0PG1+.UC51/1

=V1SF0SF1+.UC71/1

			Date	12/22/2022	Volvo Trucks North America	Valiant TMS	TP700: S030 Display	Drawing name: =2V13&EFS_EL		= V1SF0PG2	
			Ed.	MKLEPADLO						+ V1UC52	
			Appr		Sub-Floor Members			Document type: EFS	Project nr: 22-16146	Page	1
Modification	Date	Name	Original		Replacement of	Replaced by	Scale 1:1				614

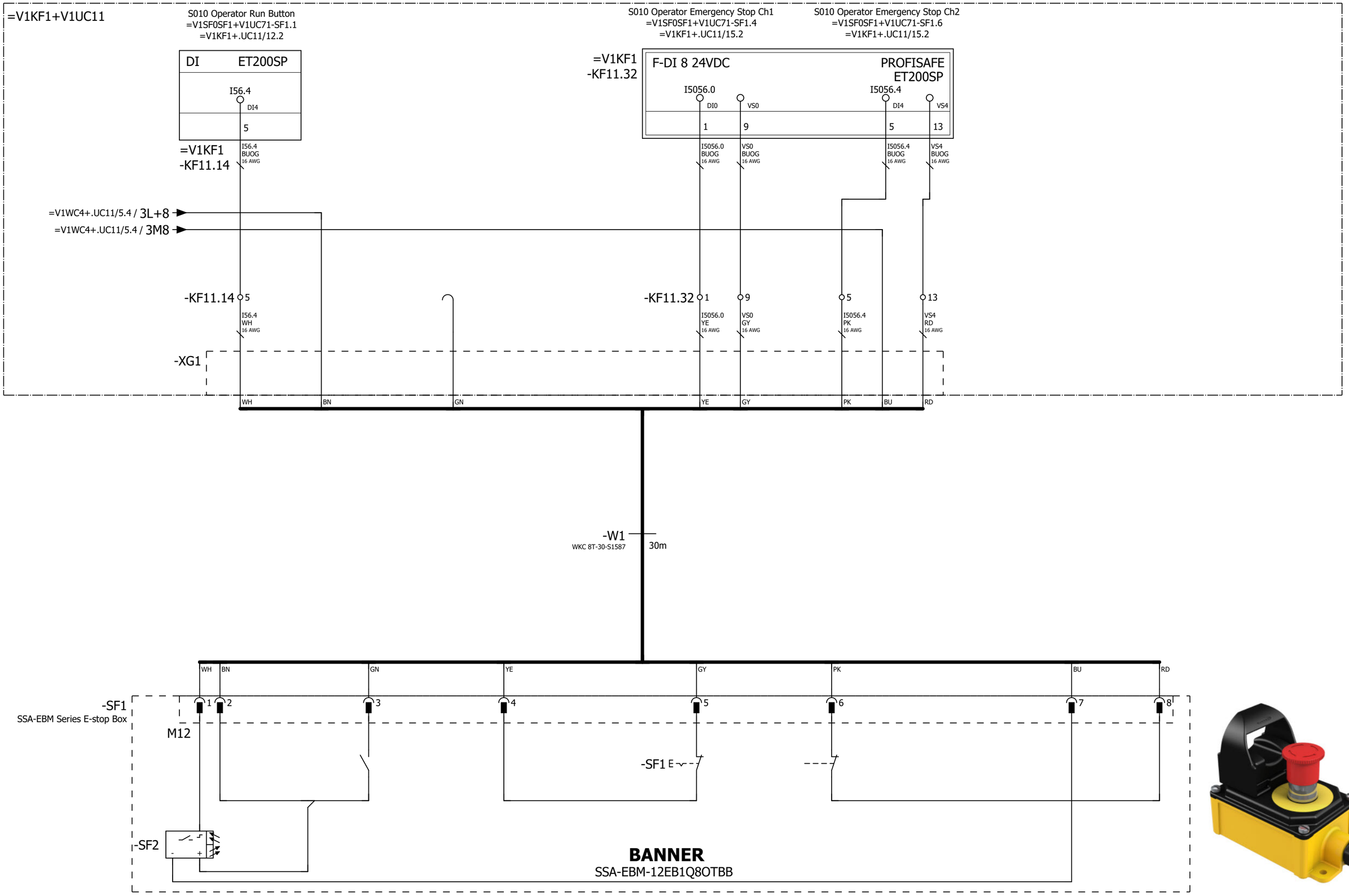

=V1SF0PG2+.UC52/1

=V1SF0SF2+.UC72/1

			Date	12/22/2022	Volvo Trucks North America		Valiant TMS	S010 Operating box RB	Drawing name: =2V13&EFS_EL	= V1SF0SF1	
			Ed.	MKLEPADLO						+ V1UC71	
			Appr		Sub-Floor Members				Document type: EFS	Project nr: 22-16146	Page 1
Modification	Date	Name	Original		Replacement of	Replaced by	Scale 1:1				614

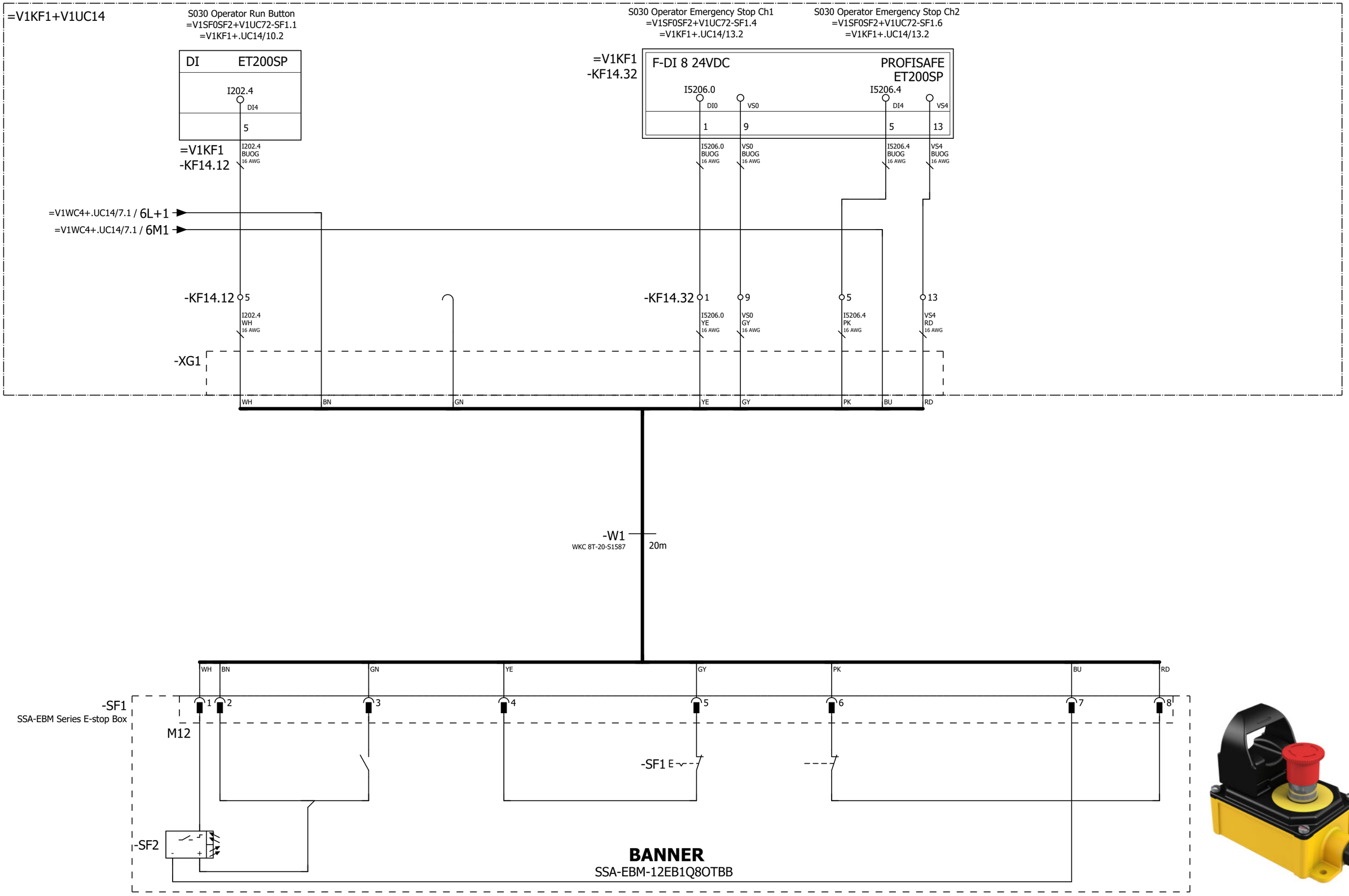

=V1SF0SF1+.UC71/1

=V1U10U01KF1+.U10U01/1

			Date	12/22/2022	Volvo Trucks North America	Valiant TMS	S030 Operating box RB	Drawing name: =2V13&EFS_EL	= V1SF0SF2		
			Ed.	MKLEPADLO					+ V1UC72		
			Appr		Sub-Floor Members			Document type: EFS	Project nr: 22-16146	Page	1
Modification	Date	Name	Original		Replacement of / Replaced by	Scale 1:1					614

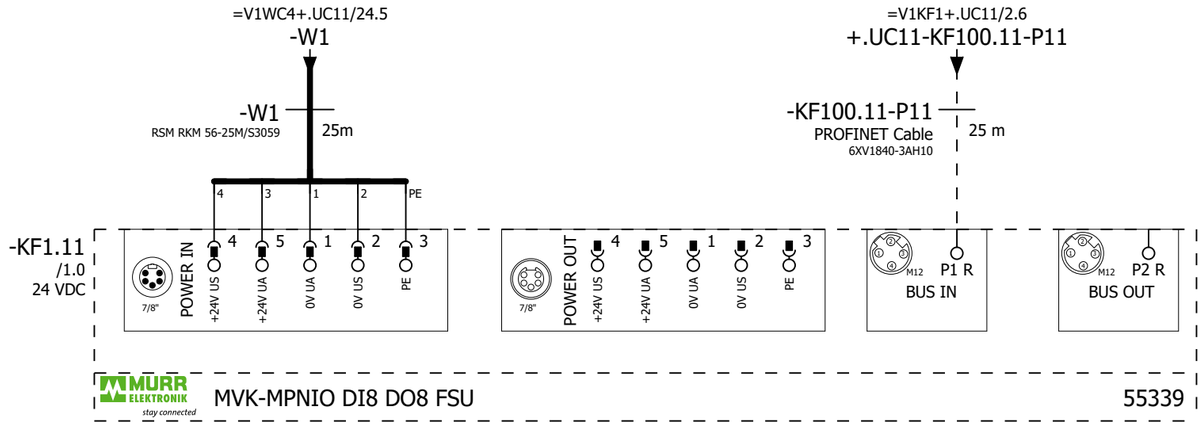

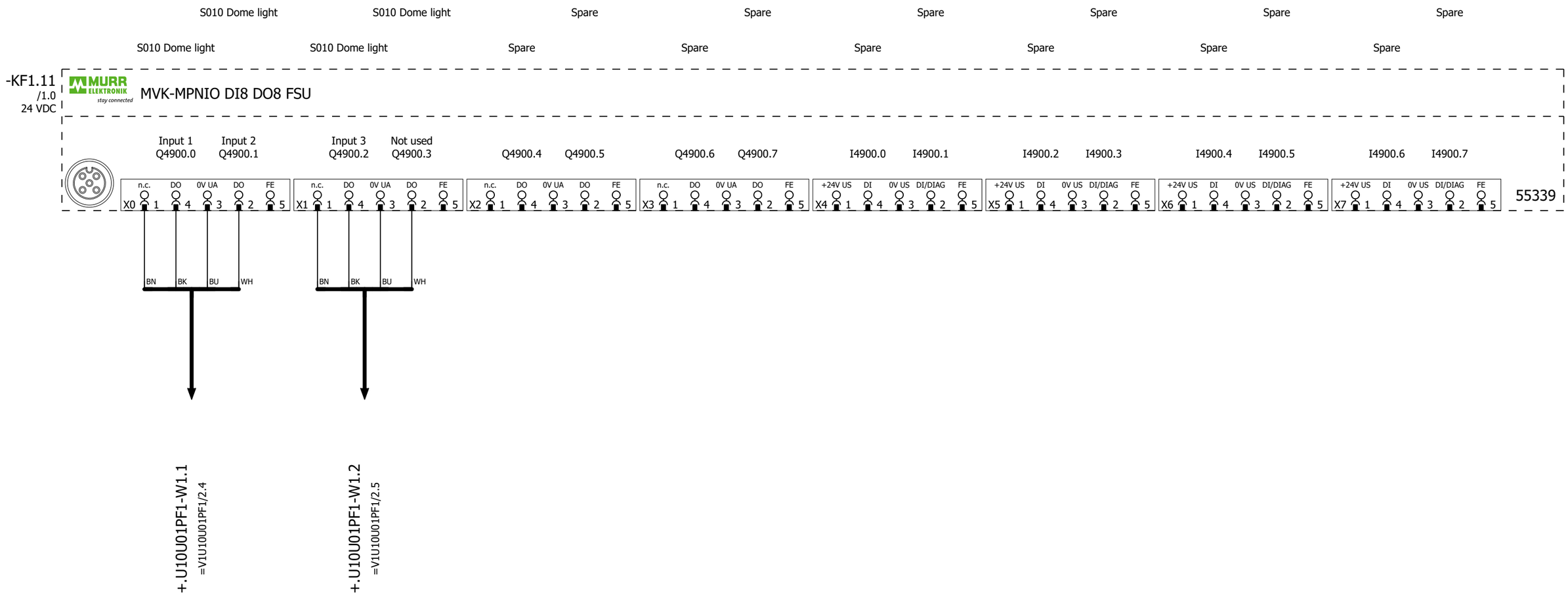

=V1SF0SF2+.UC72/1

=V1U10U01PF1/2

			Date	12/22/2022	Volvo Trucks North America	Valiant TMS	MURR MODULE 8 IN/ 8 OUT	Drawing name: =2V13&EFS_EL	= V1U10U01KF1		
			Ed.	MKLEPADLO					+ V1U10U01		
			Appr		Sub-Floor Members			Document type: EFS	Project nr: 22-16146	Page	1
Modification	Date	Name	Original		Replacement of / Replaced by	Scale 1:1					614

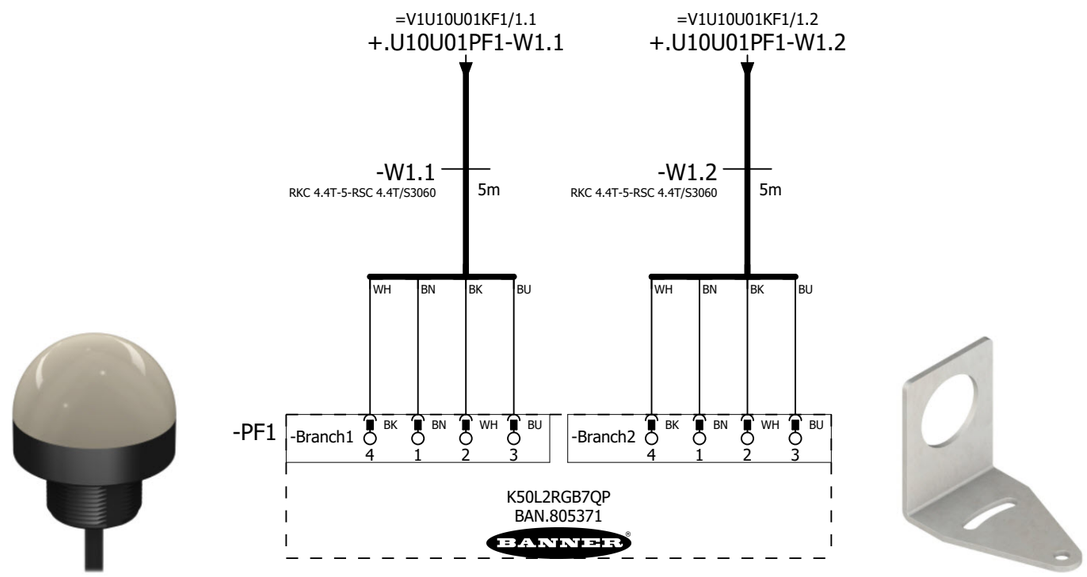

Table 1: Default Color Definition

	Red	Yellow	Green	Cyan	Blue	Magenta	White
Input 1	X	X				X	X
Input 2		X	X	X			X
Input 3				X	X	X	X

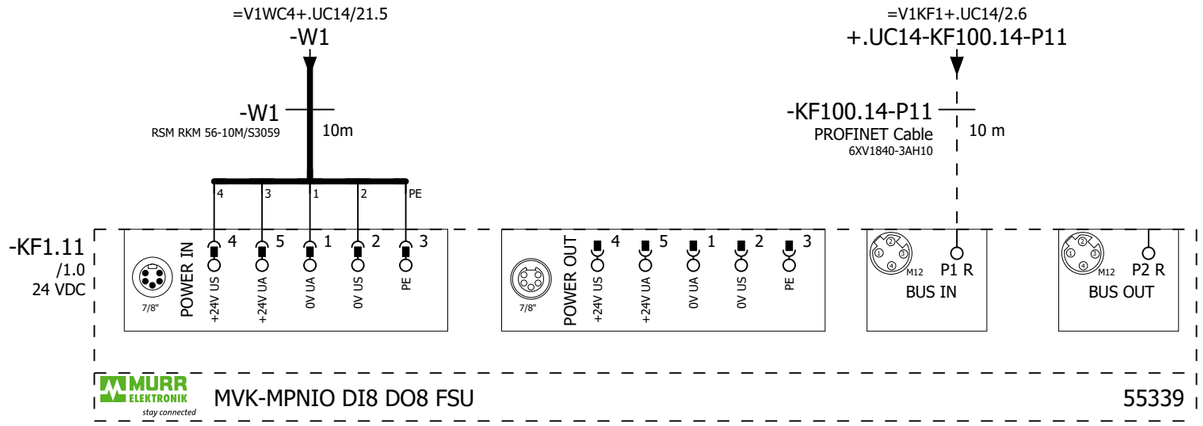

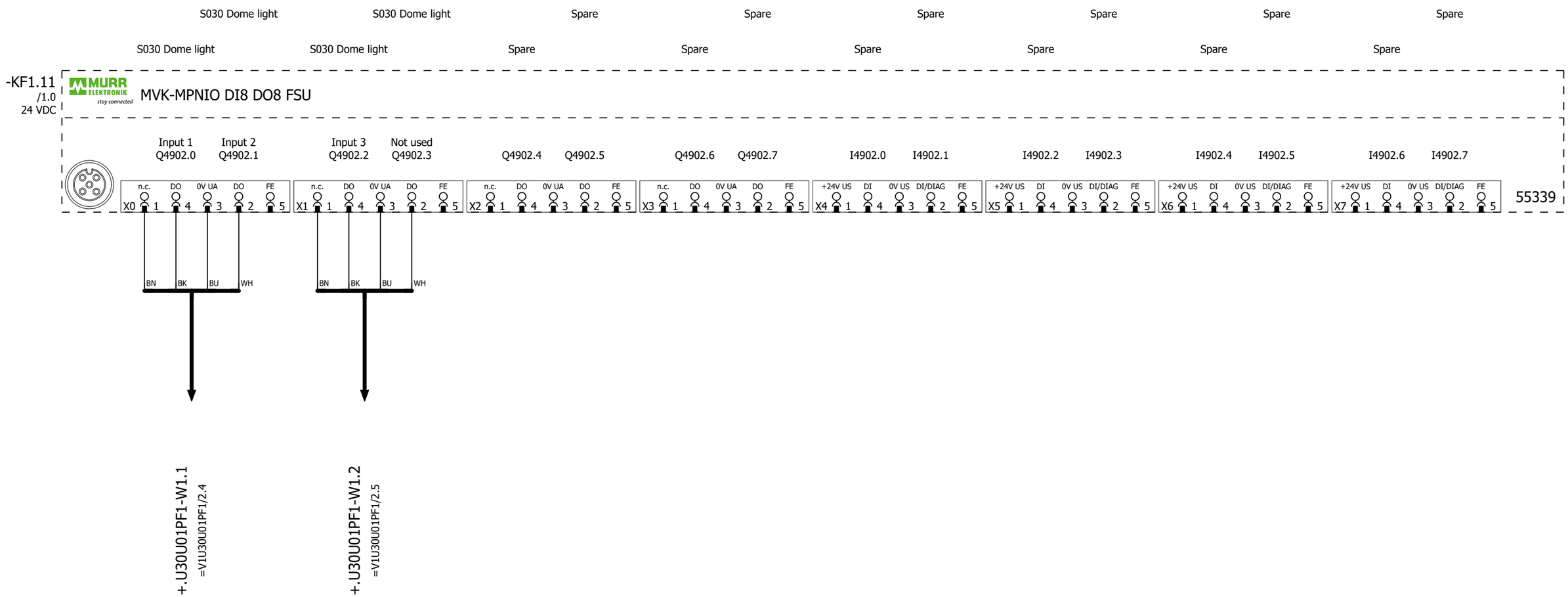

=V1U10U01PF1+.U10U01/2

=V1U30U01PF1/2

			Date	12/22/2022	Volvo Trucks North America	Valiant TMS	MURR MODULE 8 IN/ 8 OUT	Drawing name: =2V13&EFS_EL	= V1U30U01KF1		
			Ed.	MKLEPADLO	Sub-Floor Members				+ V1U30U01		
			Appr			Scale 1:1		Document type: EFS	Project nr: 22-16146	Page	1
Modification	Date	Name	Original		Replacement of / Replaced by						614

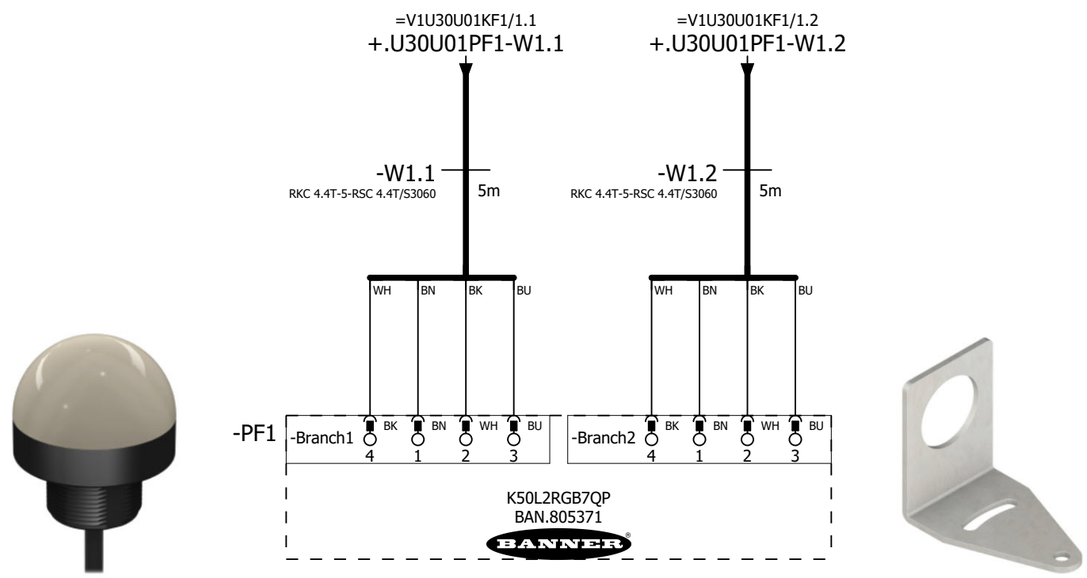

Table 1: Default Color Definition

	Red	Yellow	Green	Cyan	Blue	Magenta	White
Input 1	X	X				X	X
Input 2		X	X	X			X
Input 3				X	X	X	X

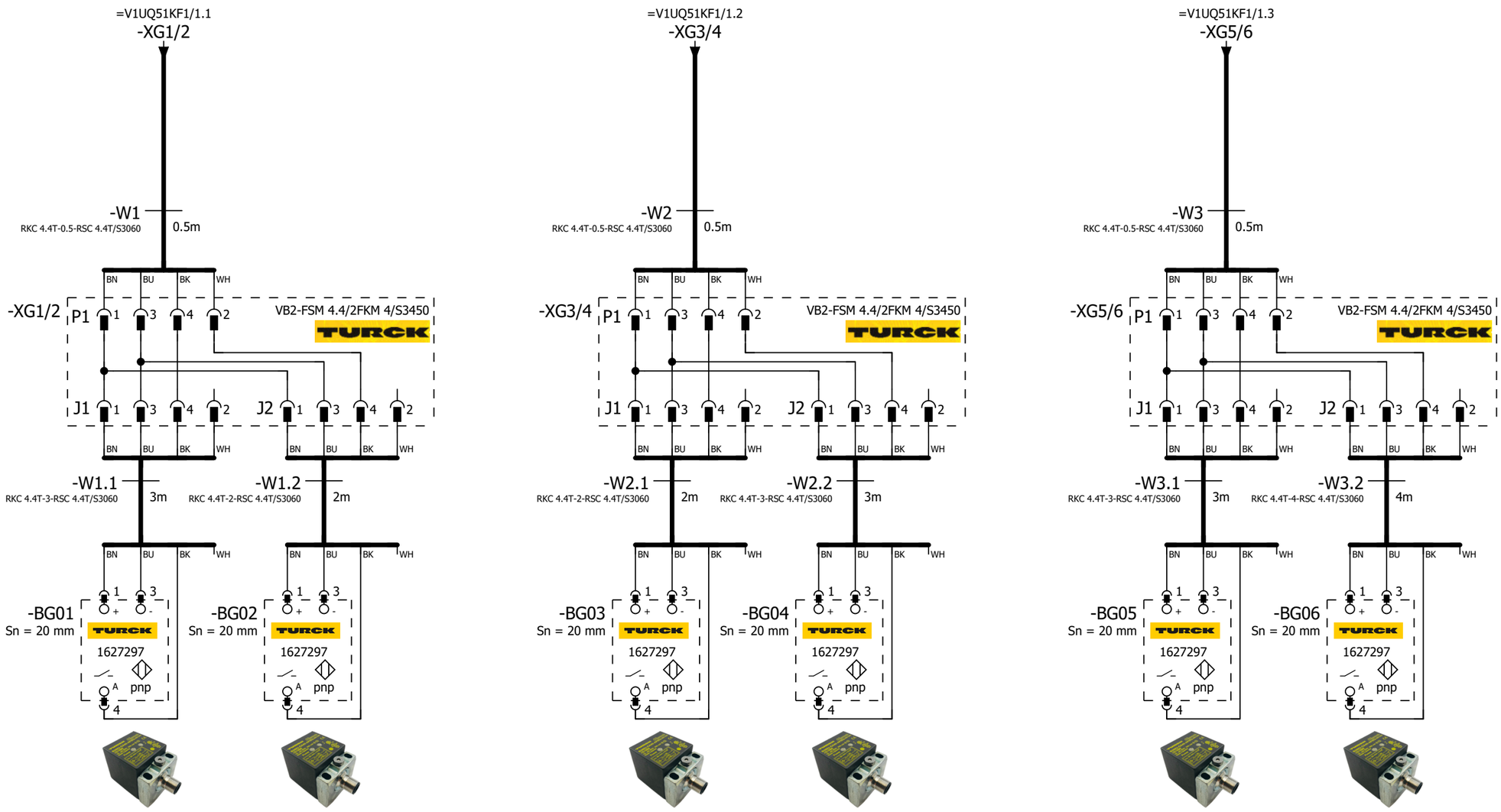

=V1UQ51 -BG01 Front Suspension LH ASSY	=V1UQ51 -BG02 Front Suspension LH ASSY	=V1UQ51 -BG03 Front Suspension RH ASSY	=V1UQ51 -BG04 Front Suspension RH ASSY	=V1UQ51 -BG05 Rear Suspension ASSY	=V1UQ51 -BG06 Rear Suspension ASSY

=V1U30U01PF1+.U30U01/2

=V1UQ51KF1/1

			Date	12/22/2022	Volvo Trucks North America	Valiant TMS	SENSORS	Drawing name: =2V13&EFS_EL	= V1UQ51BG0	
			Ed.	MKLEPADLO					+ V1UQ51	
			Appr		Sub-Floor Members			Document type: EFS	Project nr: 22-16146	Page 1 / 614
Modification	Date	Name	Original		Replacement of / Replaced by	Scale 1:1				

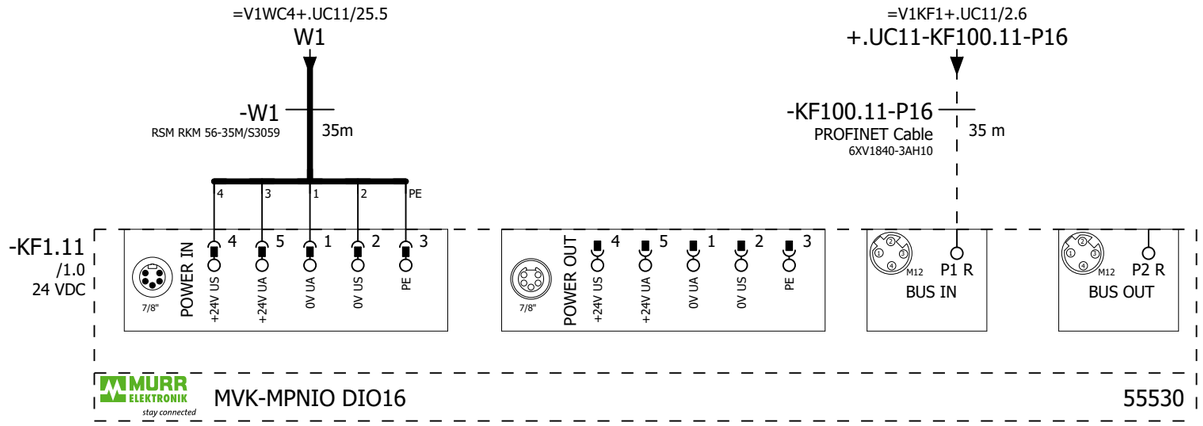

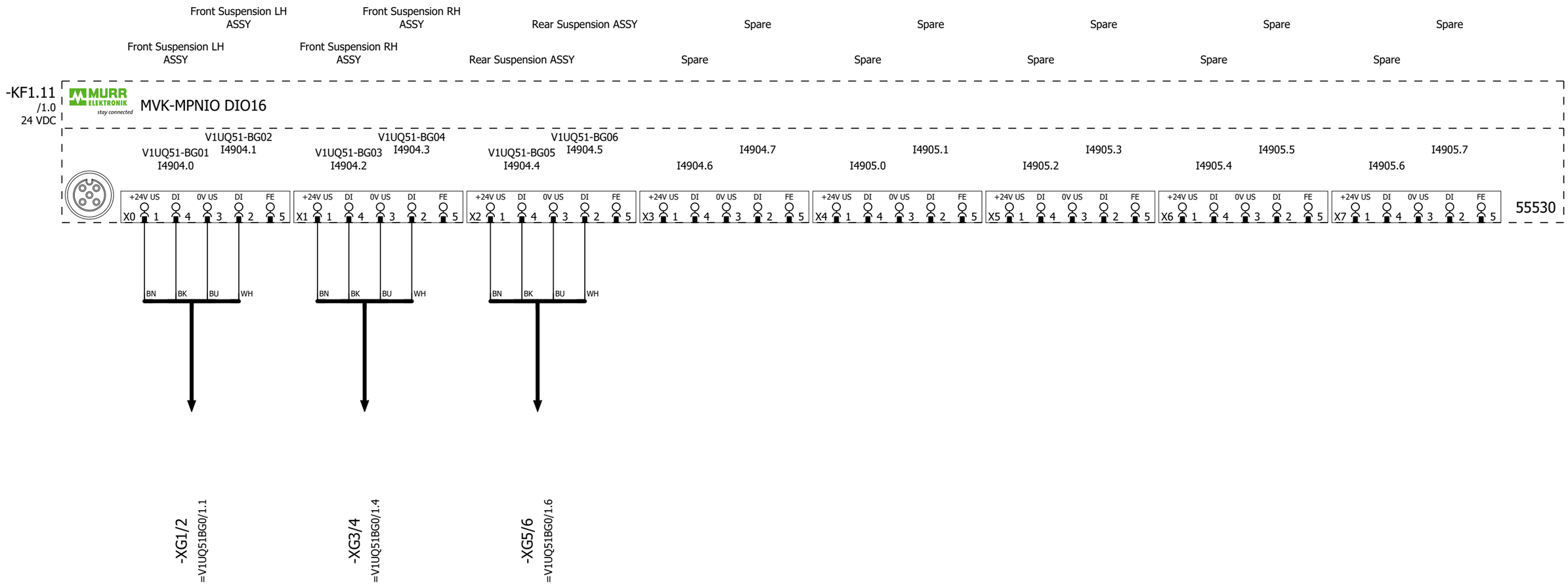

=V1UQ51BG0/1

=V1WC1+.UC11/1

			Date	12/22/2022	Volvo Trucks North America	Valiant TMS	MURR MODULE 16 IN/O	Drawing name: =2V13&EFS_EL	= V1UQ51KF1		
			Ed.	MKLEPADLO					+ V1UQ51		
			Appr		Sub-Floor Members			Document type: EFS	Project nr: 22-16146	Page	1
Modification	Date	Name	Original		Replacement of / Replaced by	Scale 1:1					614

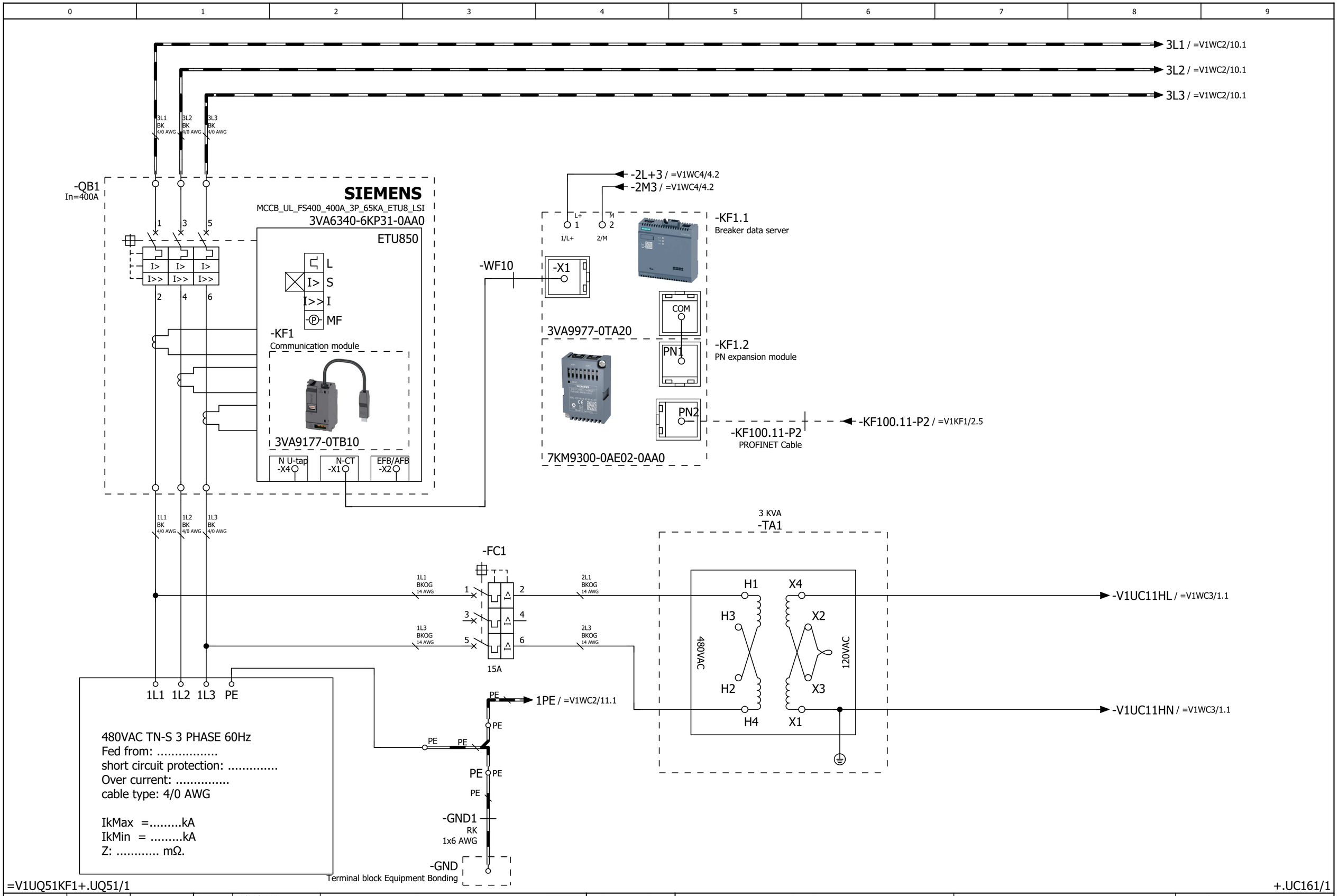

=V1UQ51KF1+.UQ51/1

+.UC161/1

			Date	12/22/2022	Volvo Trucks North America	Valiant TMS	Incoming power supply 480 VAC	Drawing name: =2V13&EFS_EL	= V1WC1		
			Ed.	MKLEPADLO					+ V1UC11		
			Appr		Sub-Floor Members			Document type: EFS	Project nr: 22-16146	Page	1
Modification	Date	Name	Original		Replacement of	Replaced by	Scale 1:1				614

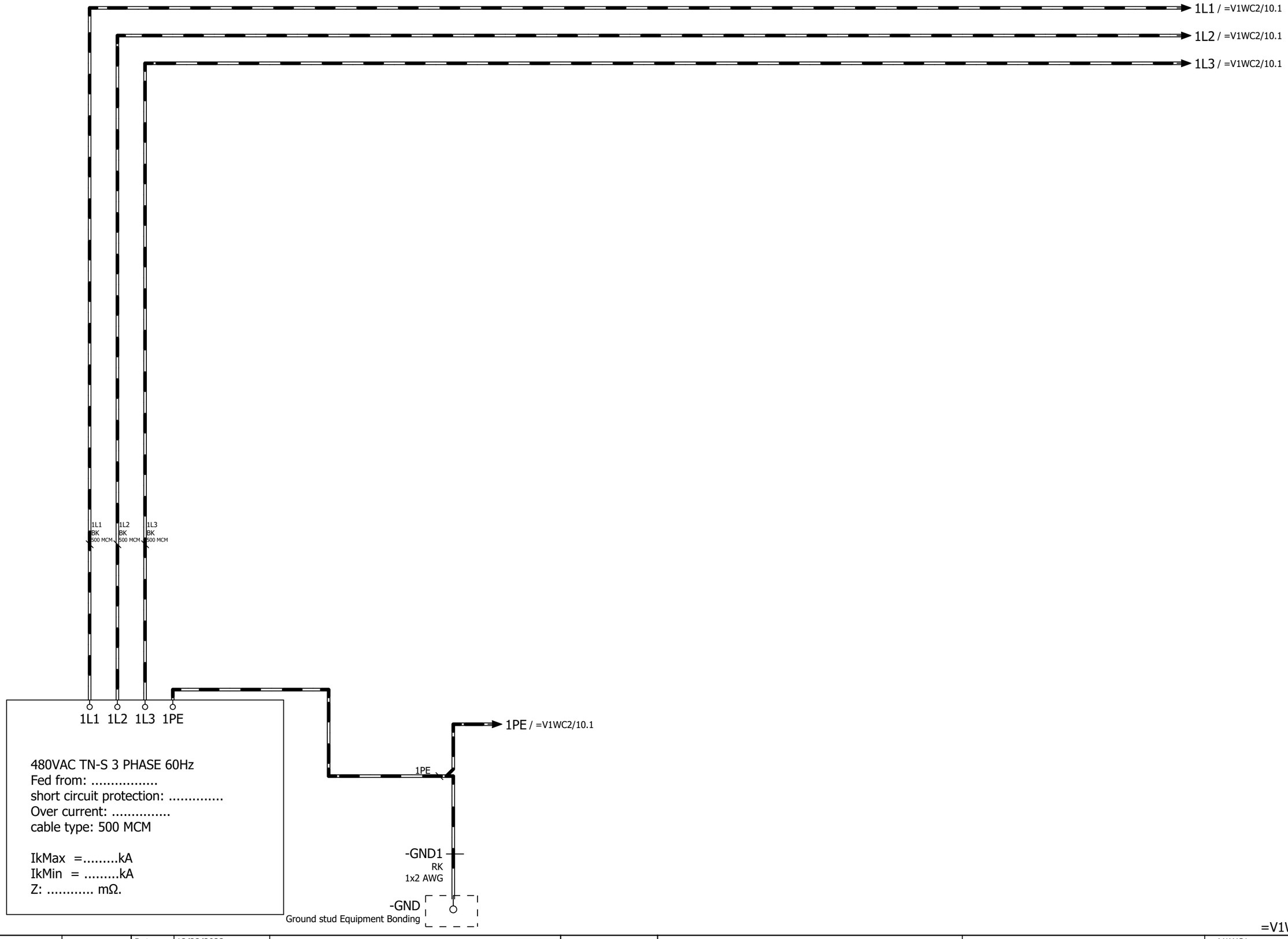

+.UC11/1

=V1WC2+.UC11/10

			Date	12/22/2022	Volvo Trucks North America		Valiant TMS	Incoming weld power supply 480 VAC	Drawing name: =2V13&EFS_EL	= V1WC1	
			Ed.	MKLEPADLO						+ V1UC161	
			Appr		Sub-Floor Members				Document type: EFS	Project nr: 22-16146	Page 1
Modification	Date	Name	Original		Replacement of	Replaced by	Scale 1:1				614

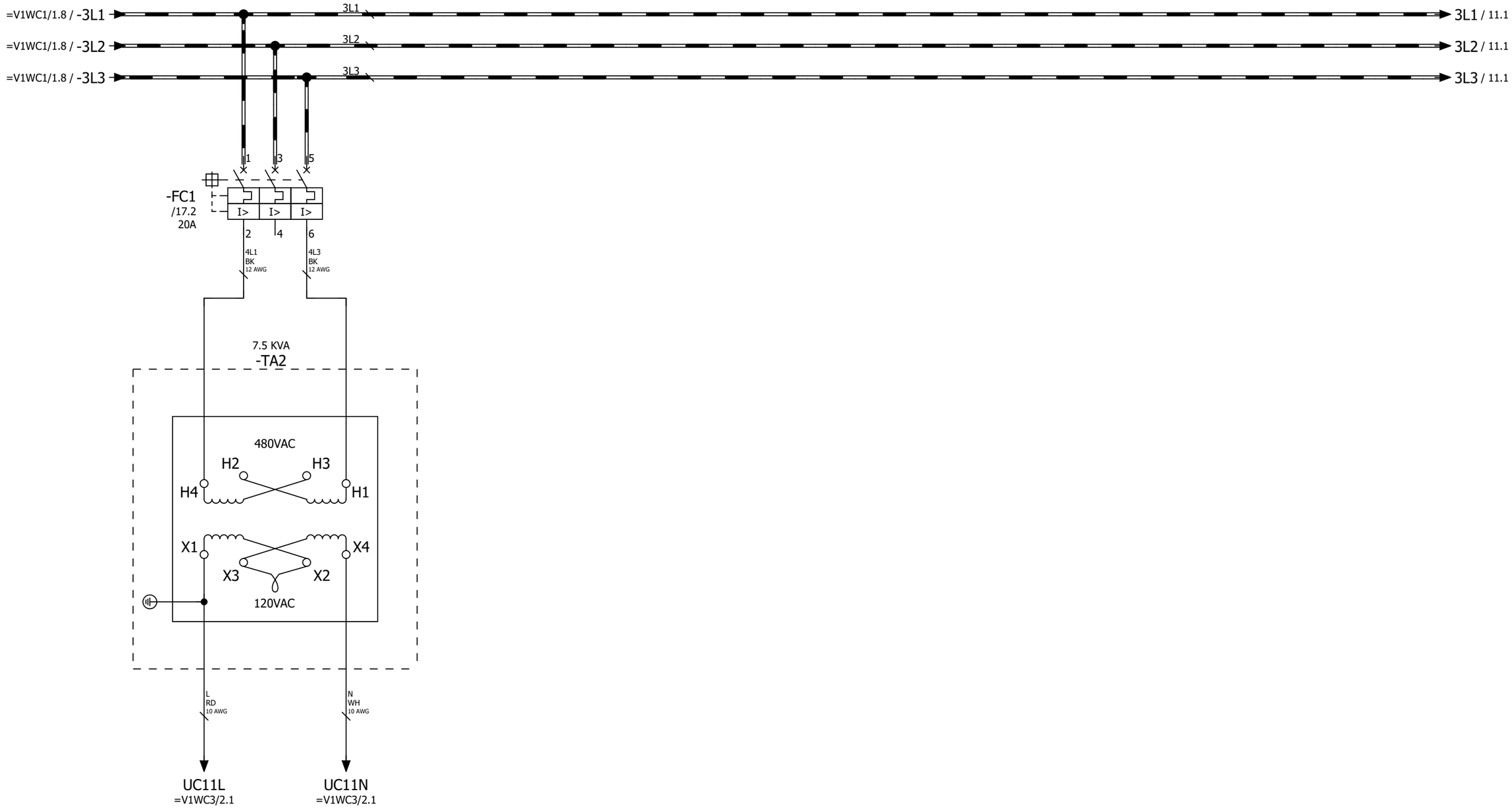

Power
Distribution
=V1UC11

=V1WC1+.UC161/1

11

			Date	12/22/2022	Volvo Trucks North America	Valiant TMS	Power distribution 480 VAC	Drawing name: =2V13&EFS_EL		= V1WC2	
			Ed.	MKLEPADLO						+ V1UC11	
			Appr		Sub-Floor Members			Document type: EFS	Project nr: 22-16146	Page	10
Modification	Date	Name	Original		Replacement of	Replaced by	Scale 1:1				614

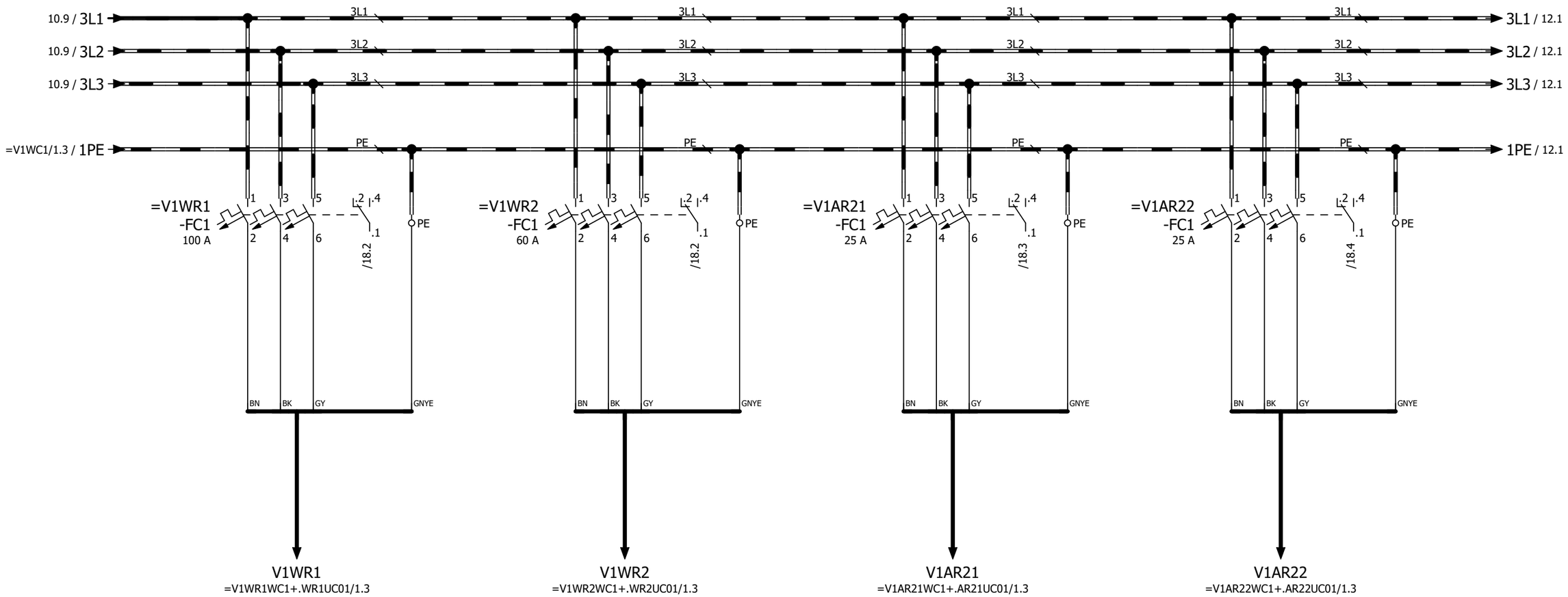

Power Distribution =V1WR1

Power Distribution =V1WR2

Power Distribution =V1AR21

Power Distribution =V1AR22

			Date	12/22/2022	Volvo Trucks North America		Valiant TMS	Power distribution 480 VAC	Drawing name: =2V13&EFS_EL	= V1WC2	
			Ed.	MKLEPADLO						+ V1UC11	
			Appr		Sub-Floor Members				Document type: EFS	Project nr: 22-16146	Page 11
Modification	Date	Name	Original		Replacement of	Replaced by	Scale 1:1				614

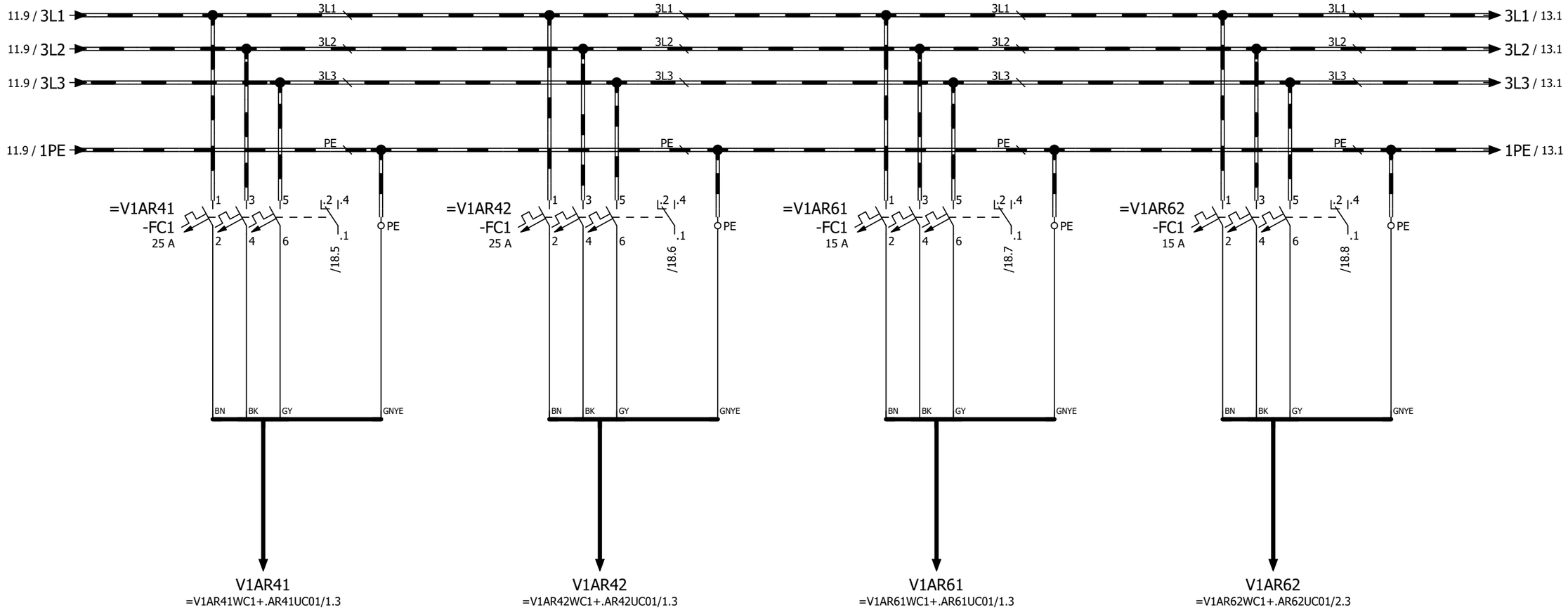

Power Distribution =V1AR41

Power Distribution =V1AR42

Power Distribution =V1AR61

Power Distribution =V1AR62

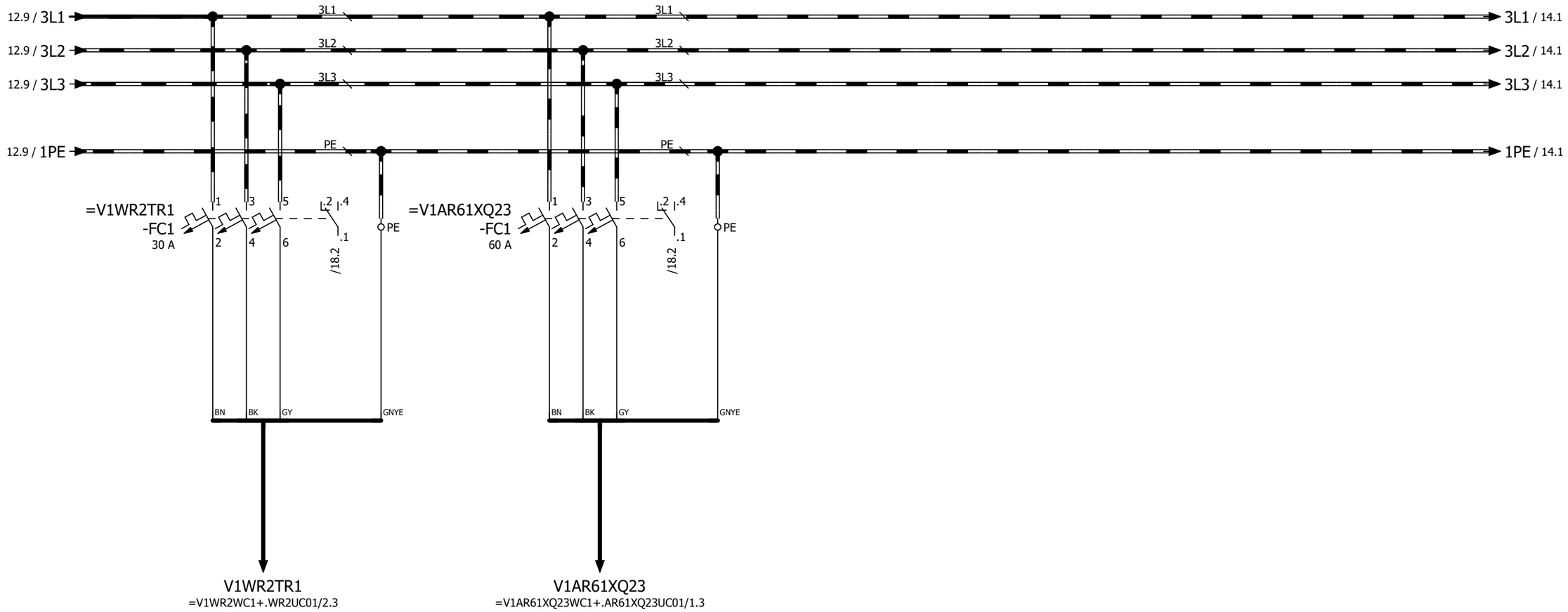

Power Distribution =V1WR2TR1

Power Distribution =V1AR61XQ23 (Fume Extractor)

12

14

			Date	12/22/2022	Volvo Trucks North America	Valiant TMS	Power distribution 480 VAC	Drawing name: =2V13&EFS_EL		= V1WC2	
			Ed.	MKLEPADLO						+ V1UC11	
			Appr		Sub-Floor Members			Document type: EFS	Project nr: 22-16146	Page	13
Modification	Date	Name	Original		Replacement of / Replaced by	Scale 1:1					614

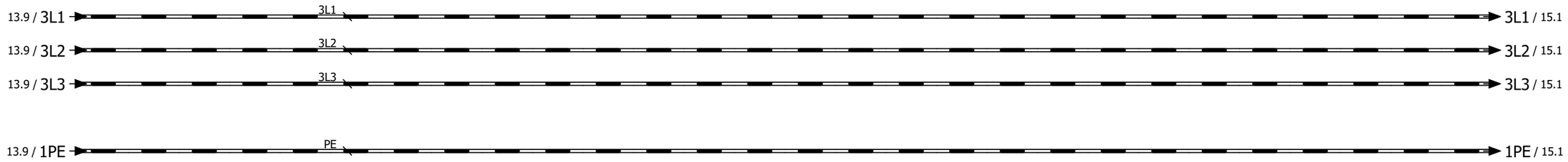

			Date	12/22/2022	Volvo Trucks North America	Valiant TMS	Power distribution 480 VAC	Drawing name: =2V13&EFS_EL		= V1WC2	
			Ed.	MKLEPADLO						+ V1UC11	
			Appr		Sub-Floor Members			Document type: EFS	Project nr: 22-16146		Page 14 / 614
Modification	Date	Name	Original		Replacement of / Replaced by	Scale 1:1					

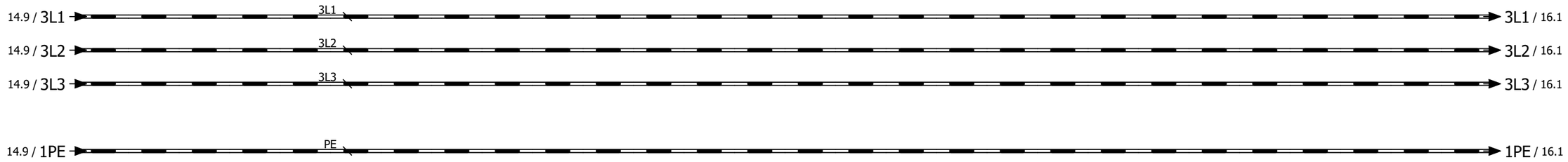

			Date	12/22/2022	Volvo Trucks North America	Valiant TMS	Power distribution 480 VAC	Drawing name: =2V13&EFS_EL		= V1WC2	
			Ed.	MKLEPADLO						+ V1UC11	
			Appr		Sub-Floor Members			Document type: EFS	Project nr: 22-16146		Page 15 / 614
Modification	Date	Name	Original		Replacement of / Replaced by	Scale 1:1					

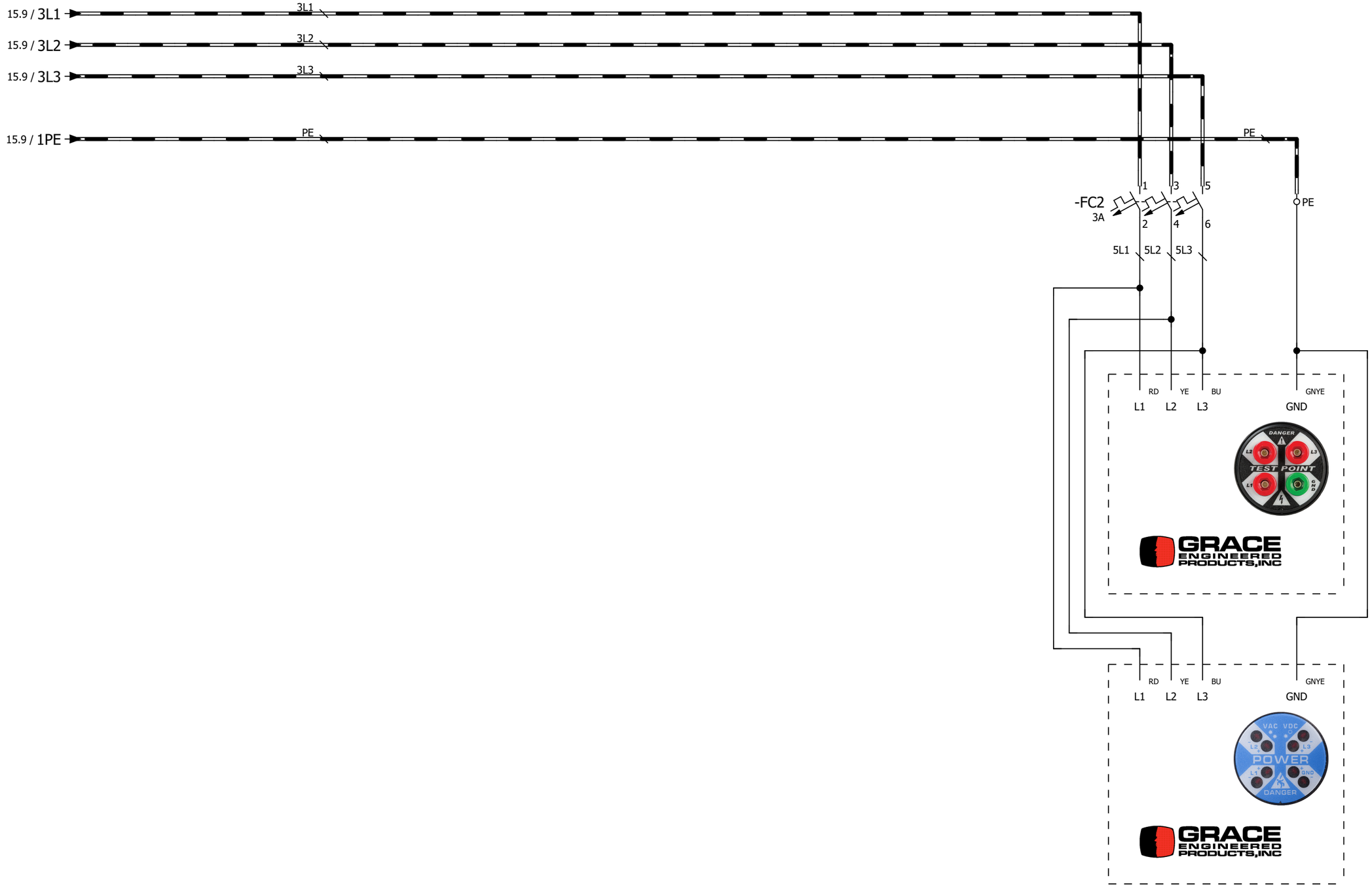

Voltage Test Port /
Indicator Light

15

17

			Date	12/22/2022	Volvo Trucks North America	Valiant TMS	Power distribution 480 VAC	Drawing name: =2V13&EFS_EL	= V1WC2	
			Ed.	MKLEPADLO					+ V1UC11	
			Appr		Sub-Floor Members			Document type: EFS	Project nr: 22-16146	Page 16 / 614
Modification	Date	Name	Original		Replacement of	Replaced by	Scale 1:1			

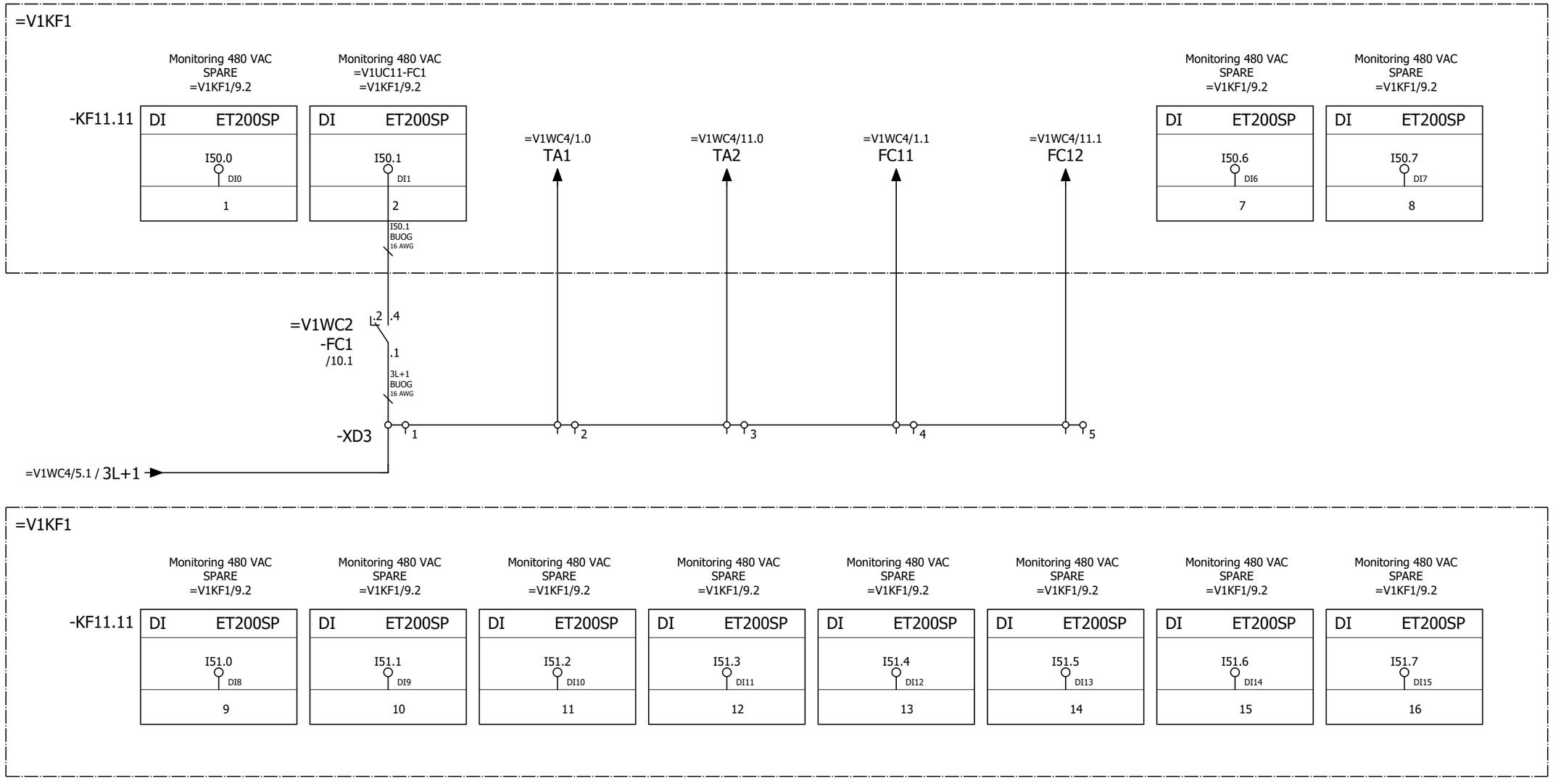

			Date	12/22/2022	Volvo Trucks North America	Valiant TMS	Power distribution 480 VAC monitoring	Drawing name: =2V13&EFS_EL		= V1WC2	
			Ed.	MKLEPADLO	Sub-Floor Members					+ V1UC11	
			Appr					Document type: EFS	Project nr: 22-16146	Page	17
Modification	Date	Name	Original		Replacement of	Replaced by	Scale 1:1				614

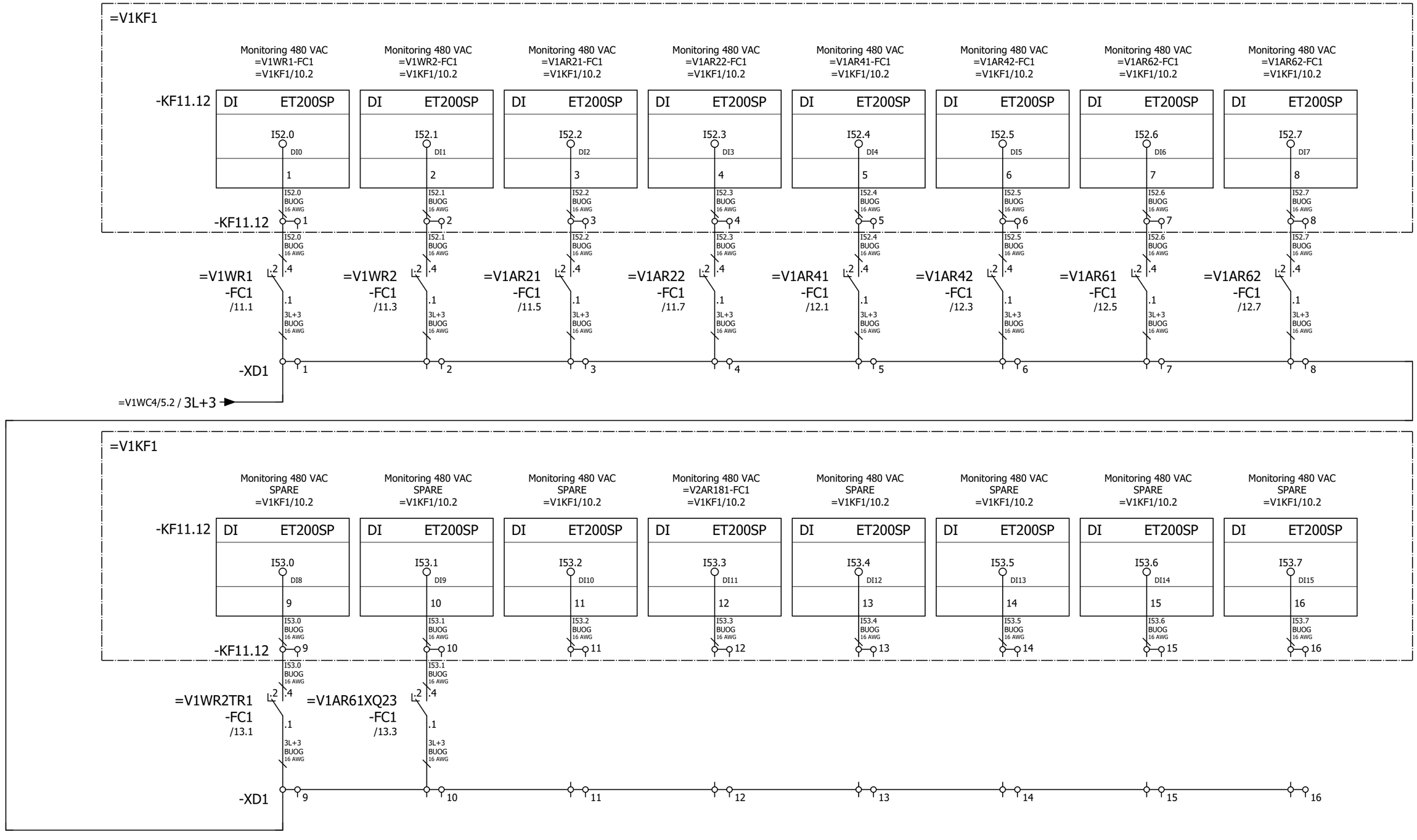

17 19

			Date	12/22/2022	Volvo Trucks North America	Valiant TMS	Power distribution 480 VAC monitoring	Drawing name: =2V13&EFS_EL	= V1WC2	
			Ed.	MKLEPADLO					+ V1UC11	
			Appr		Sub-Floor Members			Document type: EFS	Project nr: 22-16146	Page 18
Modification	Date	Name	Original		Replacement of	Replaced by	Scale 1:1			614

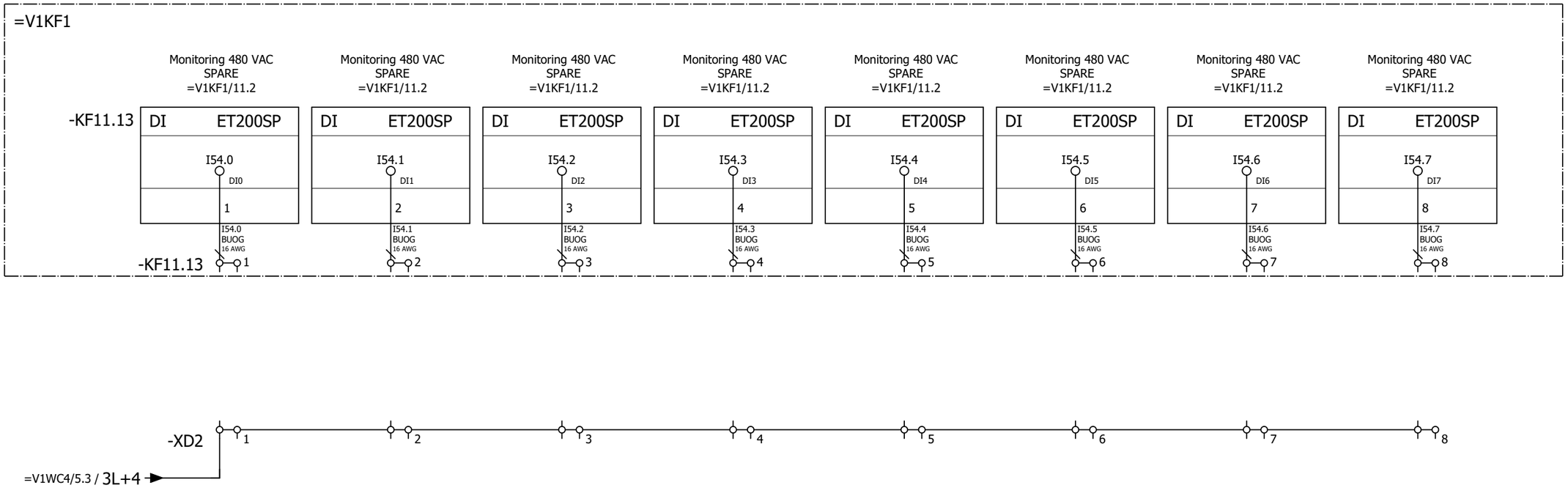

+.UC161/10

			Date	12/22/2022	Volvo Trucks North America	Valiant TMS	Power distribution 480 VAC monitoring	Drawing name: =2V13&EFS_EL		= V1WC2	
			Ed.	MKLEPADLO						+ V1UC11	
			Appr		Sub-Floor Members			Document type: EFS	Project nr: 22-16146		Page 19
Modification	Date	Name	Original		Replacement of / Replaced by	Scale 1:1					614

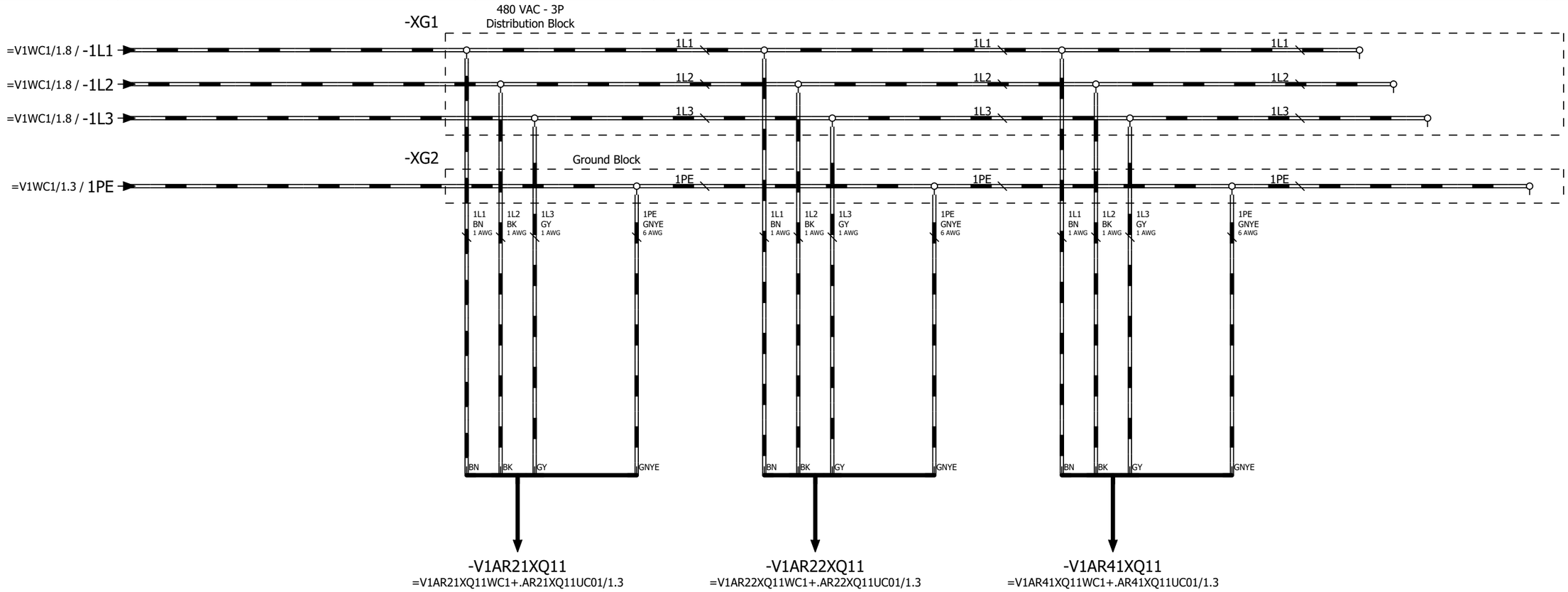

Weld Power Distribution 480 VAC S010R01-AR21 (Weld Timer)

Weld Power Distribution 480 VAC S010R02-AR22 (Weld Timer)

Weld Power Distribution 480 VAC S010R03-AR41 (Weld Timer)

Weld Power Distribution 480 VAC Spare (Weld Timer)

+.UC11/19

=V1WC3+.UC11/1

			Date	12/22/2022	Volvo Trucks North America	Valiant TMS	Weld power distribution 480 VAC	Drawing name: =2V13&EFS_EL		= V1WC2	
			Ed.	MKLEPADLO						+ V1UC161	
			Appr		Sub-Floor Members			Document type: EFS	Project nr: 22-16146	Page	10
Modification	Date	Name	Original		Replacement of / Replaced by	Scale 1:1					614

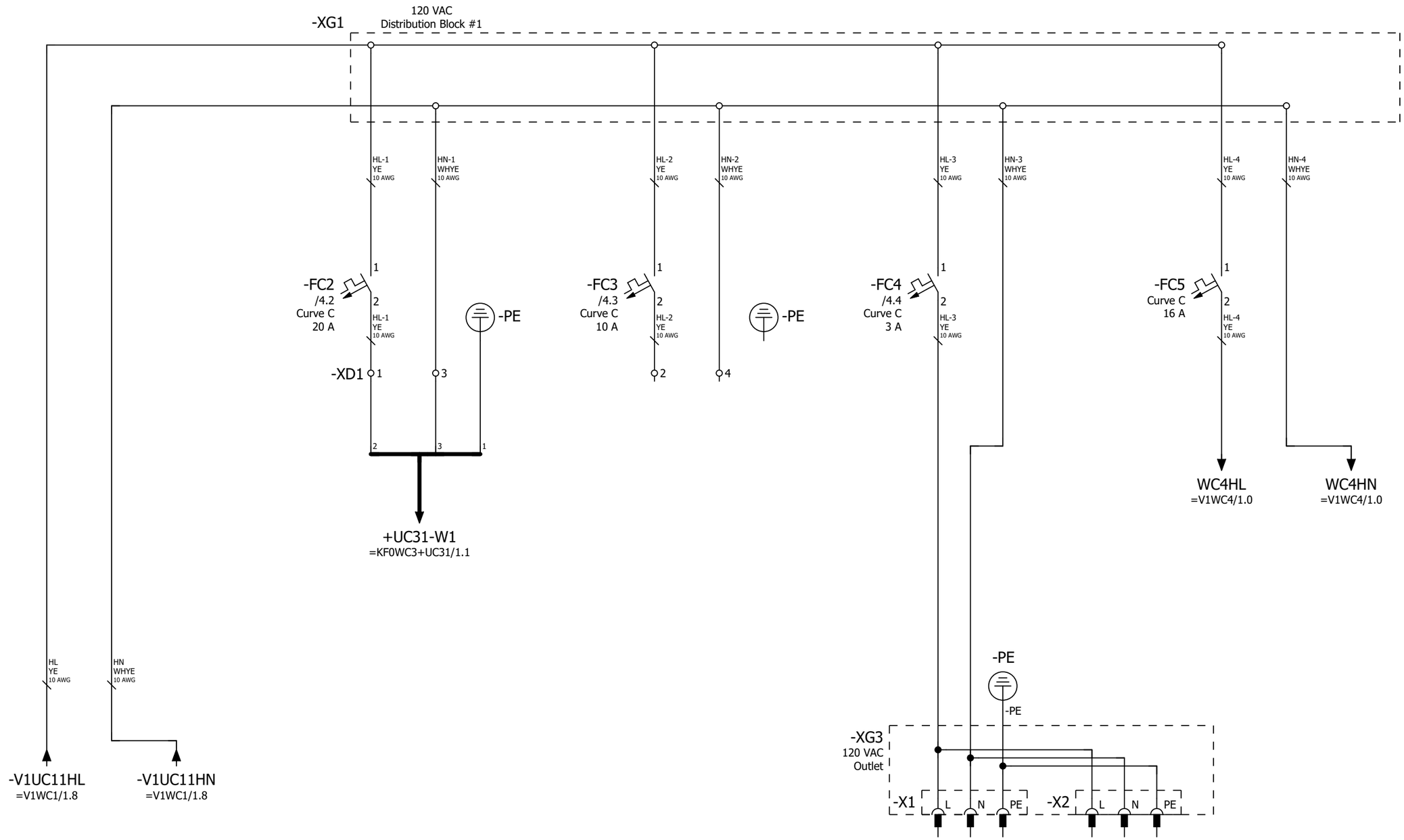

Power Distribution 120 VAC UC31 (MOP)	Power Distribution 120 VAC (SPARE)	Power Distribution 120 VAC Programming Port	Power Distribution 120 VAC To Above Disconnet 24VDC Power Supply

=V1WC2+.UC161/10

2

			Date	12/22/2022	Volvo Trucks North America		Valiant TMS	Power Distribution 120 VAC (Above Disconnect)	Drawing name: =2V13&EFS_EL	= V1WC3	
			Ed.	MKLEPADLO						+ V1UC11	
			Appr		Sub-Floor Members				Document type: EFS	Project nr: 22-16146	Page 1 / 614
Modification	Date	Name	Original		Replacement of	Replaced by	Scale 1:1				

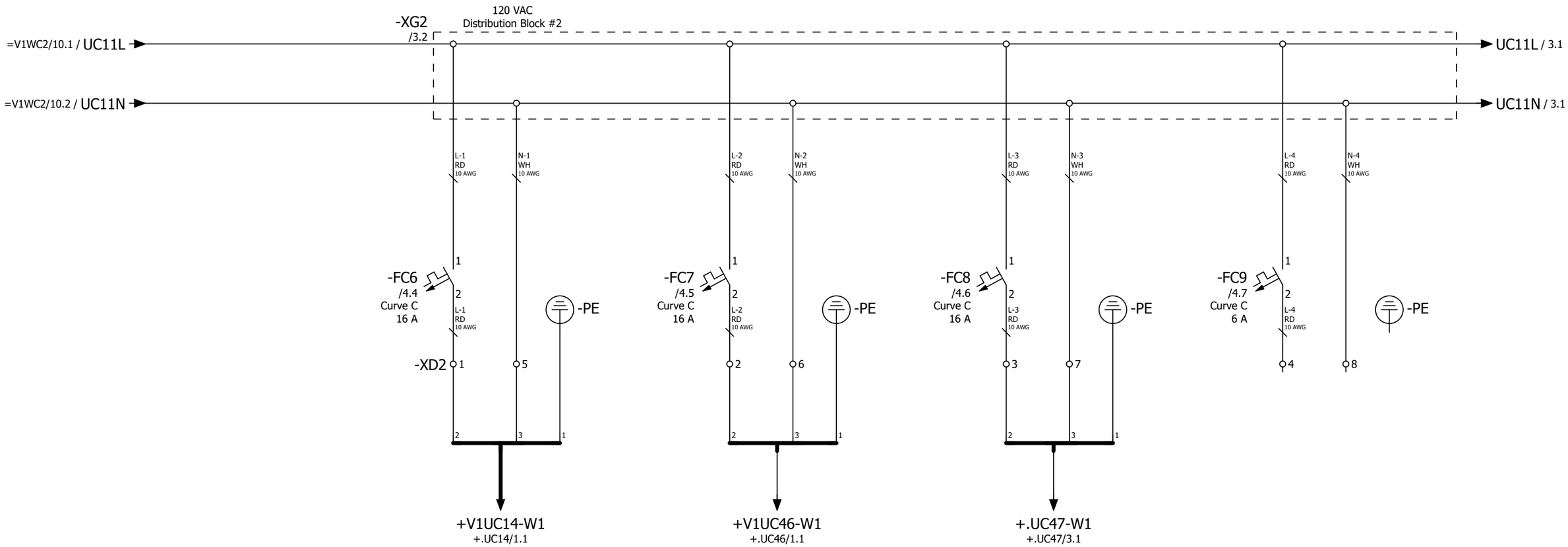

1	Power Distribution 120 VAC V1UC14 (RIO1)	Power Distribution 120 VAC V1UC46 (TT RIO)	Power Distribution 120 VAC V1UC47 (TT RIO)	Power Distribution 120 VAC Spare	3

			Date	12/22/2022	Volvo Trucks North America	Valiant TMS	Power Distribution 120 VAC (Below Disconnect)	Drawing name: =2V13&EFS_EL		= V1WC3	
			Ed.	MKLEPADLO						+ V1UC11	
			Appr		Sub-Floor Members			Document type: EFS	Project nr: 22-16146		Page 2
Modification	Date	Name	Original		Replacement of / Replaced by	Scale 1:1					614

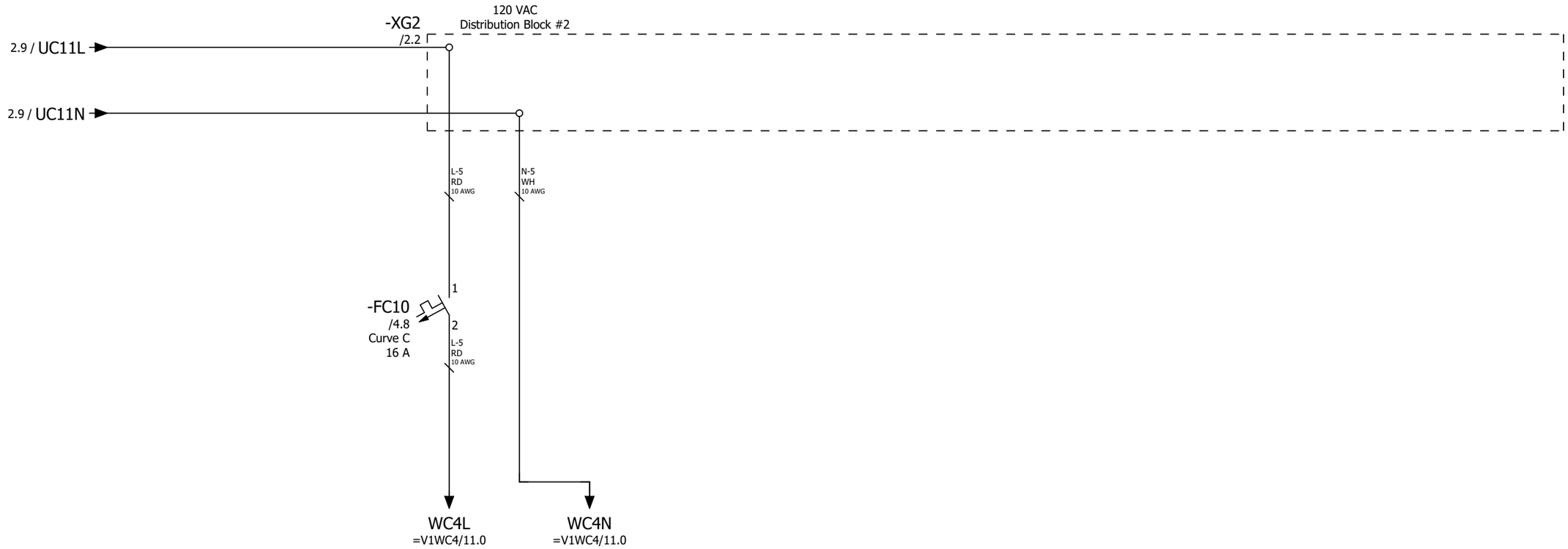

Power
Distribution
120 VAC
To Below Disconnet 24VDC Power Supply

			Date	12/22/2022	Volvo Trucks North America	Valiant TMS	Power Distribution 120 VAC (Below Disconnect)	Drawing name: =2V13&EFS_EL	= V1WC3		
			Ed.	MKLEPADLO					+ V1UC11		
			Appr		Sub-Floor Members			Document type: EFS	Project nr: 22-16146	Page	3
Modification	Date	Name	Original		Replacement of / Replaced by	Scale 1:1					614

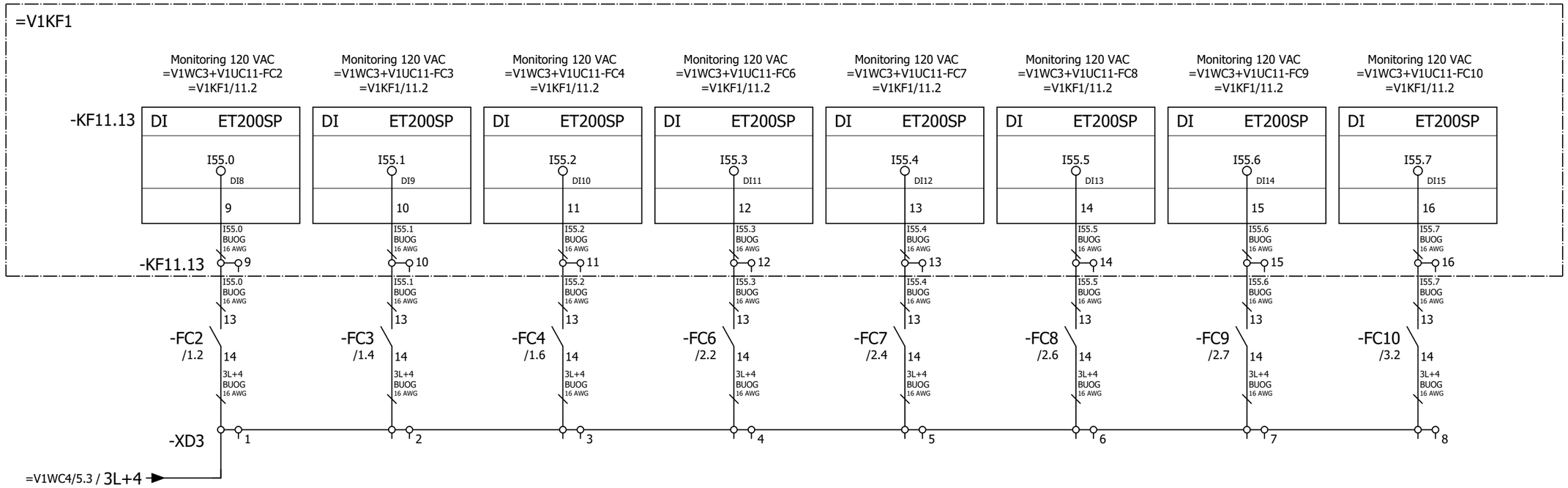

3

+.UC14/1

			Date	12/22/2022	Volvo Trucks North America	Valiant TMS	Power distribution 120 VAC monitoring (Above Disconnect)	Drawing name: =2V13&EFS_EL	= V1WC3	
			Ed.	MKLEPADLO					+ V1UC11	
			Appr		Sub-Floor Members			Document type: EFS	Project nr: 22-16146	Page 4 / 614
Modification	Date	Name	Original		Replacement of / Replaced by	Scale 1:1				

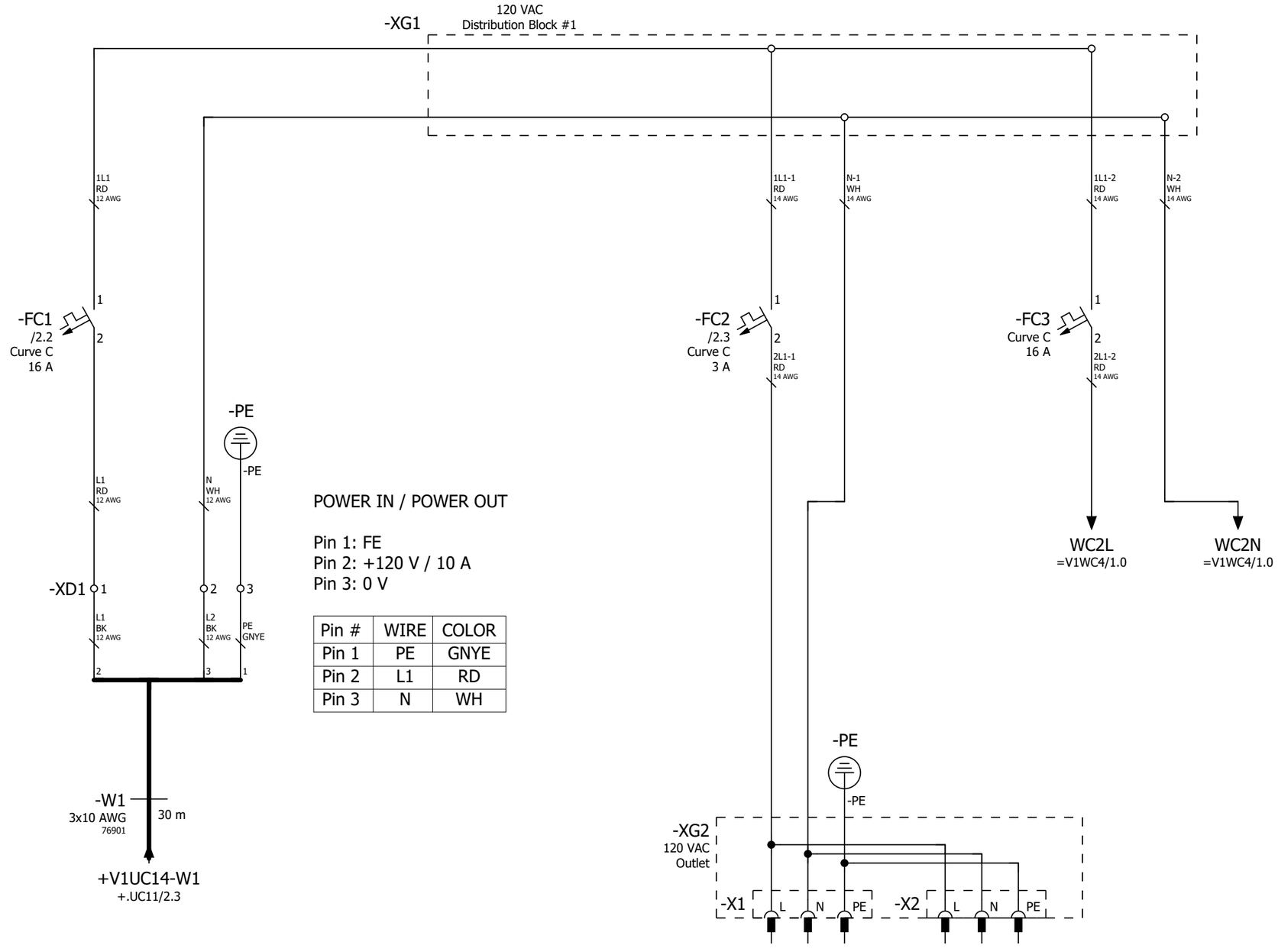

POWER IN / POWER OUT

Pin 1: FE
Pin 2: +120 V / 10 A
Pin 3: 0 V

Pin #	WIRE	COLOR
Pin 1	PE	GNYE
Pin 2	L1	RD
Pin 3	N	WH

Power
Distribution
120 VAC
Programming Port

Power
Distribution
120 VAC
To 24VDC Power Supply

+.UC11/4

2

			Date	12/22/2022	Volvo Trucks North America	Valiant TMS	Power distribution 120 VAC	Drawing name: =2V13&EFS_EL	= V1WC3	
			Ed.	MKLEPADLO					+ V1UC14	
			Appr		Sub-Floor Members			Document type: EFS	Project nr: 22-16146	Page 1
Modification	Date	Name	Original		Replacement of	Replaced by	Scale 1:1			614

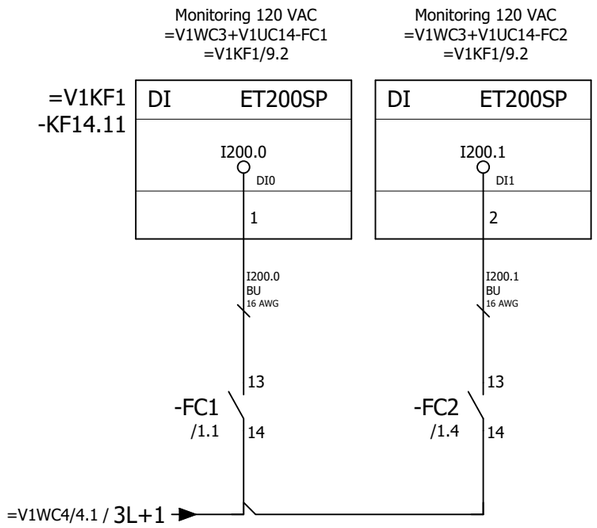

1

+.UC46/1

			Date	12/22/2022	Volvo Trucks North America	Valiant TMS	Monitoring 120VAC	Drawing name: =2V13&EFS_EL	= V1WC3	
			Ed.	MKLEPADLO					+ V1UC14	
			Appr		Sub-Floor Members			Document type: EFS	Project nr: 22-16146	Page 2 / 614
Modification	Date	Name	Original		Replacement of / Replaced by	Scale 1:1				

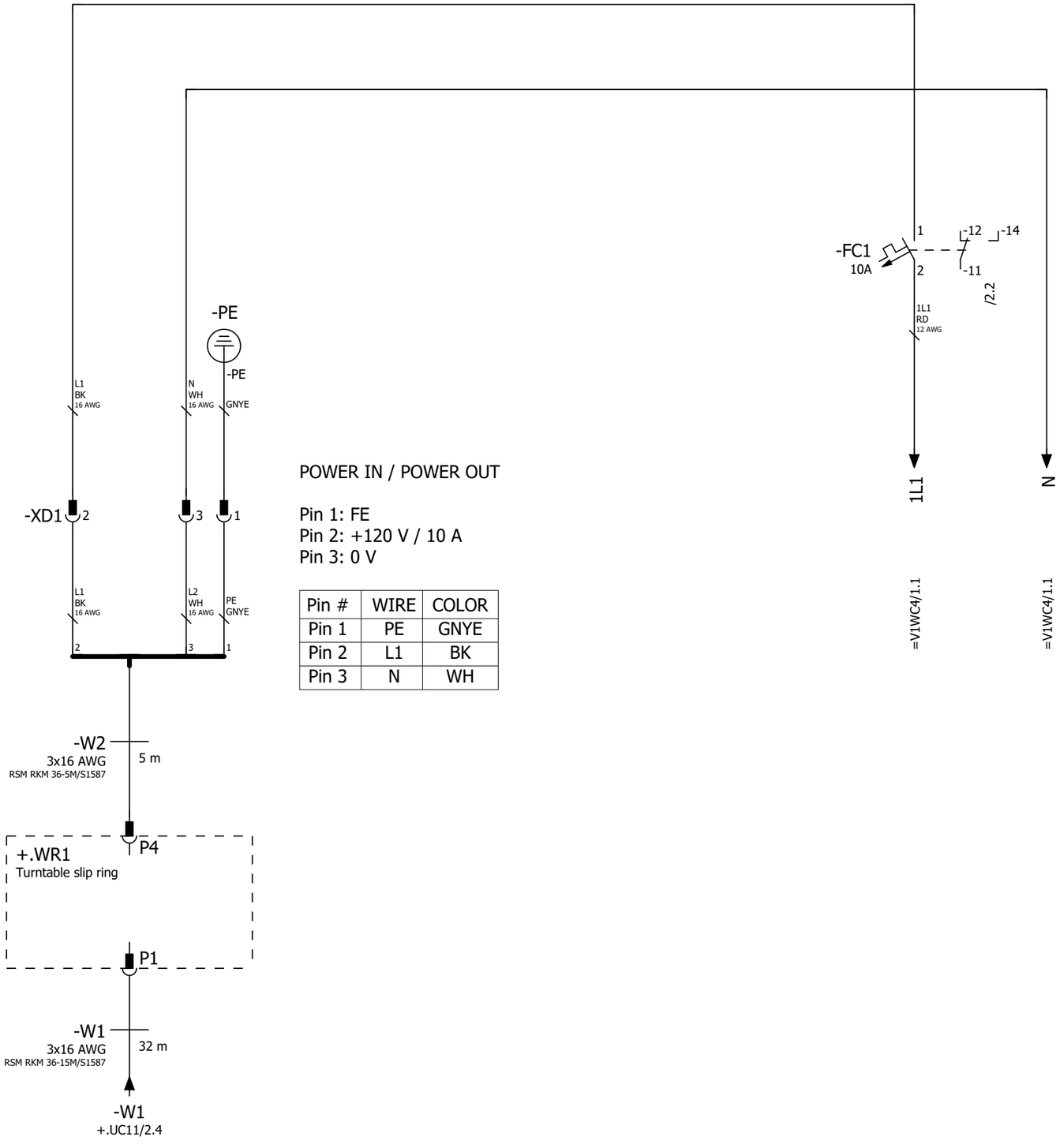

POWER IN / POWER OUT

Pin 1: FE
Pin 2: +120 V / 10 A
Pin 3: 0 V

Pin #	WIRE	COLOR
Pin 1	PE	GNYE
Pin 2	L1	BK
Pin 3	N	WH

Power
Distribution
24 VDC
Power Supply

+.UC14/2

2

			Date	12/22/2022	Volvo Trucks North America		Valiant TMS	Power distribution 120 VAC	Drawing name: =2V13&EFS_EL	= V1WC3	
			Ed.	MKLEPADLO						+ V1UC46	
			Appr		Sub-Floor Members				Document type: EFS	Project nr: 22-16146	Page 1
Modification	Date	Name	Original		Replacement of	Replaced by	Scale 1:1				614

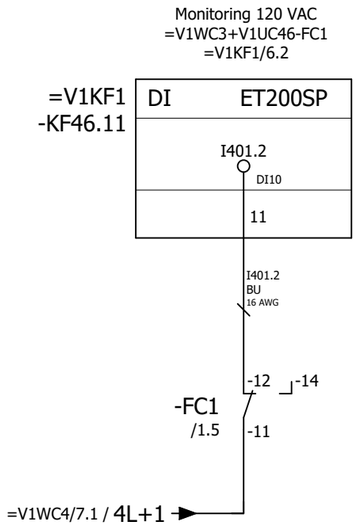

1

+.UC47/3

			Date	12/22/2022	Volvo Trucks North America	Valiant TMS	Monitoring 120VAC	Drawing name: =2V13&EFS_EL		= V1WC3	
			Ed.	MKLEPADLO						+ V1UC46	
			Appr		Sub-Floor Members			Document type: EFS	Project nr: 22-16146		Page 2
Modification	Date	Name	Original		Replacement of / Replaced by	Scale 1:1					614

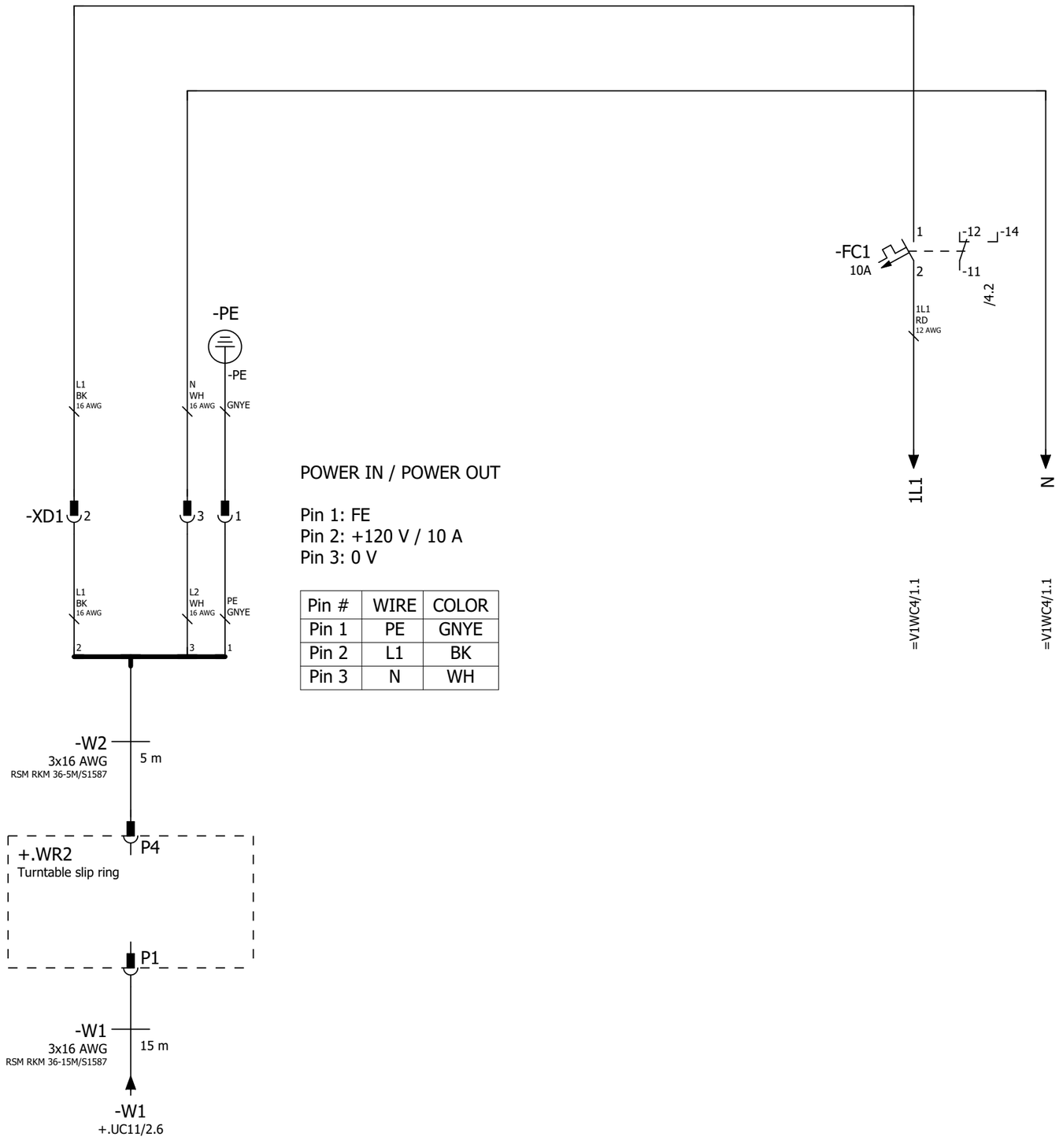

POWER IN / POWER OUT

Pin 1: FE
Pin 2: +120 V / 10 A
Pin 3: 0 V

Pin #	WIRE	COLOR
Pin 1	PE	GNYE
Pin 2	L1	BK
Pin 3	N	WH

Power
Distribution
24 VDC
Power Supply

+.UC46/2

4

			Date	12/22/2022	Volvo Trucks North America	Valiant TMS	Power distribution 120 VAC	Drawing name: =2V13&EFS_EL	= V1WC3		
			Ed.	MKLEPADLO					+ V1UC47		
			Appr		Sub-Floor Members			Document type: EFS	Project nr: 22-16146	Page	3
Modification	Date	Name	Original		Replacement of / Replaced by	Scale 1:1					614

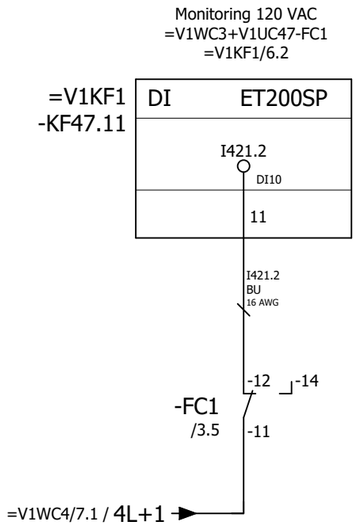

=V1WC4+.UC11/1

			Date	12/22/2022	Volvo Trucks North America	Valiant TMS	Monitoring 120VAC	Drawing name: =2V13&EFS_EL		= V1WC3	
			Ed.	MKLEPADLO						+ V1UC47	
			Appr		Sub-Floor Members			Document type: EFS	Project nr: 22-16146		Page 4
Modification	Date	Name	Original		Replacement of / Replaced by	Scale 1:1					614

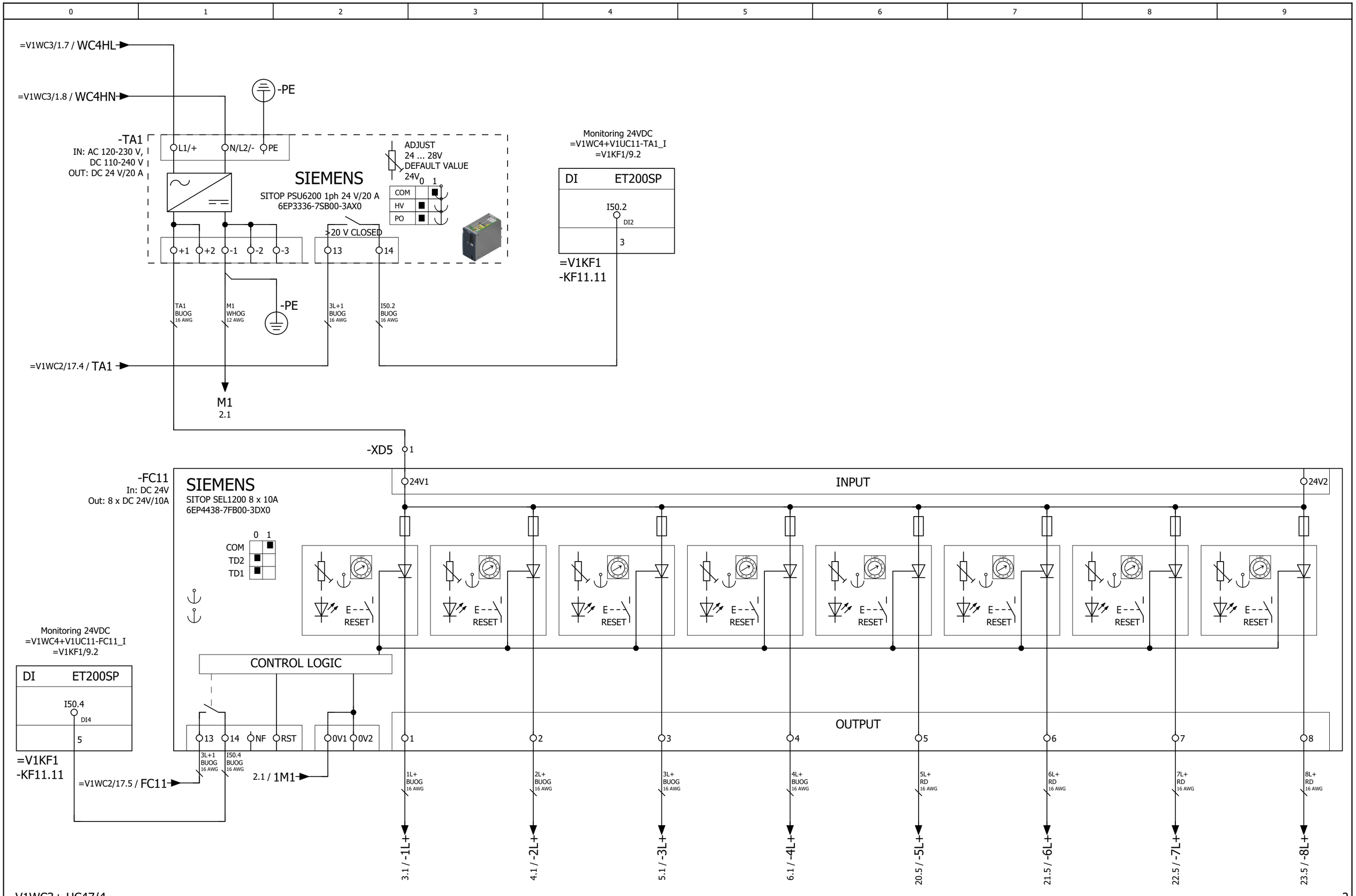

=V1WC3+.UC47/4

2

			Date	12/22/2022	Volvo Trucks North America		Valiant TMS	Power distribution 24VDC (Above Disconnect)	Drawing name: =2V13&EFS_EL	= V1WC4	
			Ed.	MKLEPADLO						+ V1UC11	
			Appr		Sub-Floor Members				Document type: EFS	Project nr: 22-16146	Page 1
Modification	Date	Name	Original		Replacement of	Replaced by	Scale 1:1				614

			Date	12/22/2022	Volvo Trucks North America	Valiant TMS	Power distribution 24VDC HL+	Drawing name: =2V13&EFS_EL		= V1WC4	
			Ed.	MKLEPADLO						+ V1UC11	
			Appr		Sub-Floor Members			Document type: EFS	Project nr: 22-16146		Page 2
Modification	Date	Name	Original		Replacement of / Replaced by	Scale 1:1					614

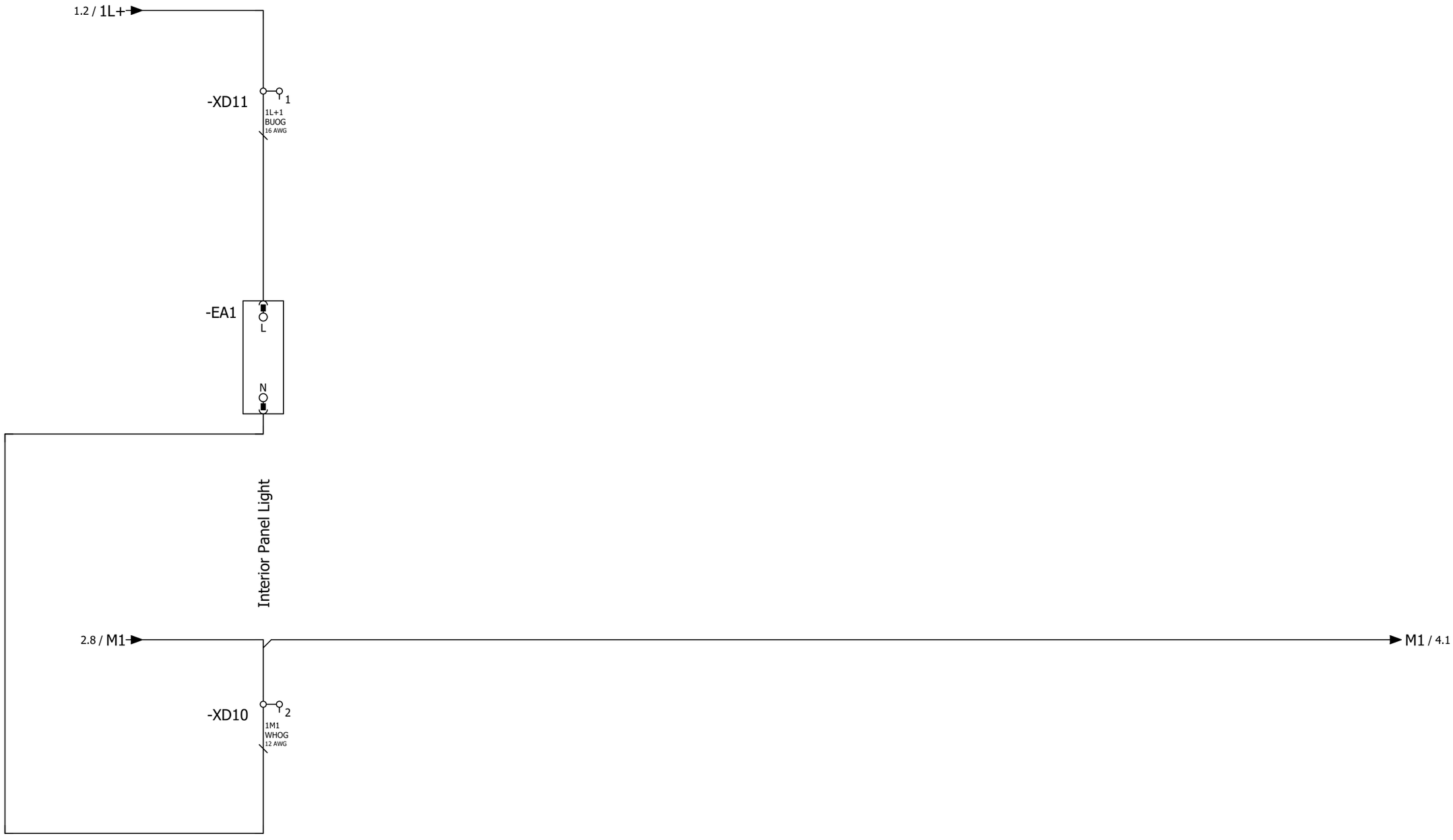

2

4

			Date	12/22/2022	Volvo Trucks North America	Valiant TMS	Power distribution 24VDC 1L+	Drawing name: =2V13&EFS_EL		= V1WC4	
			Ed.	MKLEPADLO						+ V1UC11	
			Appr		Sub-Floor Members			Document type: EFS	Project nr: 22-16146		Page 3
Modification	Date	Name	Original		Replacement of / Replaced by	Scale 1:1					614

			Date	12/22/2022	Volvo Trucks North America		Valiant TMS	Power distribution 24VDC 2L+	Drawing name: =2V13&EFS_EL	= V1WC4	
			Ed.	MKLEPADLO						+ V1UC11	
			Appr		Sub-Floor Members				Document type: EFS	Project nr: 22-16146	Page 4
Modification	Date	Name	Original		Replacement of	Replaced by	Scale 1:1				614

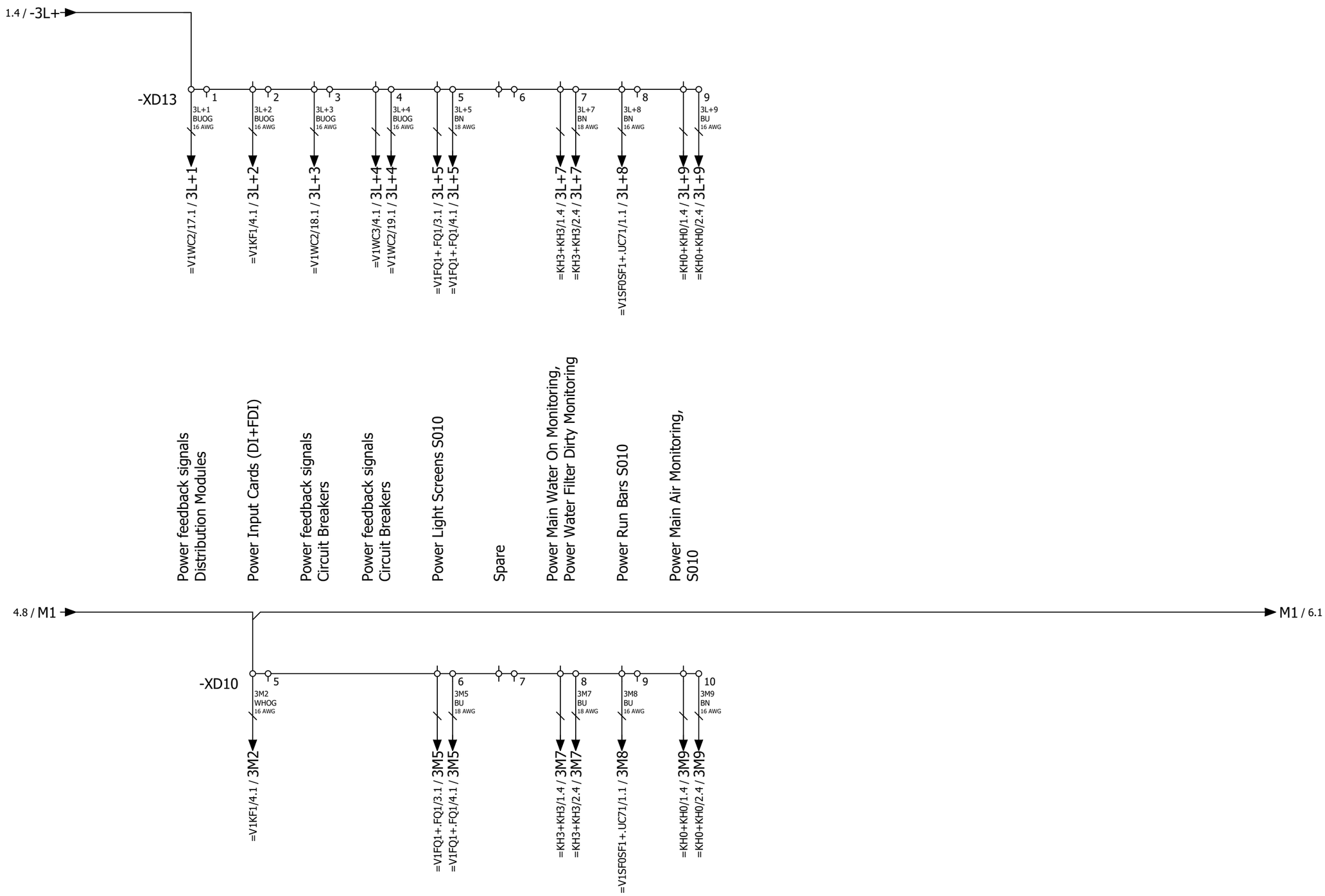

4 6

			Date	12/22/2022	Volvo Trucks North America	Valiant TMS	Power distribution 24VDC 3L+	Drawing name: =2V13&EFS_EL		= V1WC4	
			Ed.	MKLEPADLO						+ V1UC11	
			Appr		Sub-Floor Members			Document type: EFS	Project nr: 22-16146		Page 5
Modification	Date	Name	Original		Replacement of	Replaced by	Scale 1:1				614

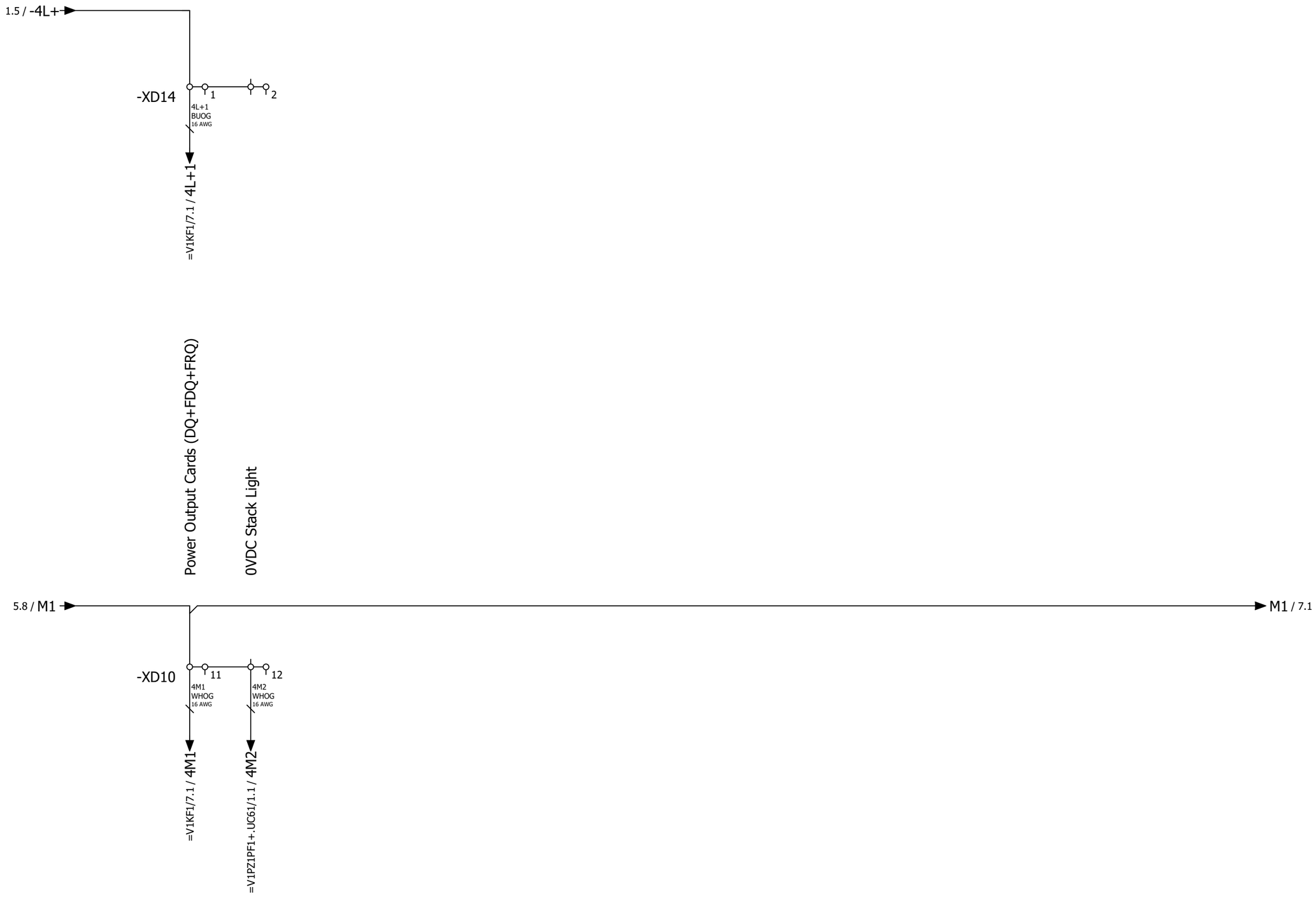

5 7

			Date	12/22/2022	Volvo Trucks North America		Valiant TMS	Power distribution 24VDC 4L+	Drawing name: =2V13&EFS_EL	= V1WC4	
			Ed.	MKLEPADLO						+ V1UC11	
			Appr		Sub-Floor Members				Document type: EFS	Project nr: 22-16146	Page 6
Modification	Date	Name	Original		Replacement of	Replaced by	Scale 1:1				614

			Date	12/22/2022	Volvo Trucks North America		Valiant TMS	Power distribution 24VDC 5L+	Drawing name: =2V13&EFS_EL		= V1WC4
			Ed.	MKLEPADLO							+ V1UC11
			Appr		Sub-Floor Members				Document type: EFS	Project nr: 22-16146	Page 7
Modification	Date	Name	Original		Replacement of	Replaced by	Scale 1:1				614

			Date	12/22/2022	Volvo Trucks North America	Valiant TMS	Power distribution 24VDC 6L+	Drawing name: =2V13&EFS_EL		= V1WC4	
			Ed.	MKLEPADLO						+ V1UC11	
			Appr		Sub-Floor Members			Document type: EFS	Project nr: 22-16146		Page 8
Modification	Date	Name	Original		Replacement of / Replaced by	Scale 1:1					614

			Date	12/22/2022	Volvo Trucks North America	Valiant TMS	Power distribution 24VDC 7L+	Drawing name: =2V13&EFS_EL		= V1WC4	
			Ed.	MKLEPADLO						+ V1UC11	
			Appr		Sub-Floor Members			Document type: EFS	Project nr: 22-16146		Page 9
Modification	Date	Name	Original		Replacement of / Replaced by	Scale 1:1					614

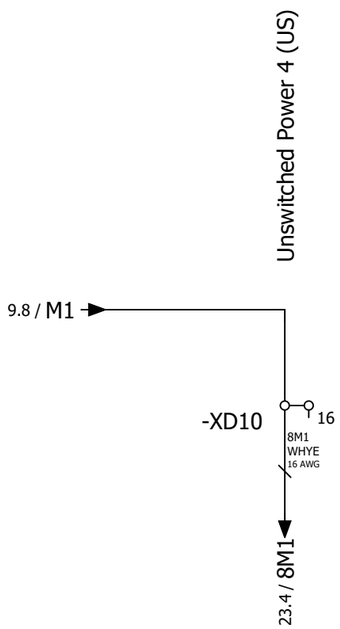

			Date	12/22/2022	Volvo Trucks North America	Valiant TMS	Power distribution 24VDC 8L+	Drawing name: =2V13&EFS_EL		= V1WC4	
			Ed.	MKLEPADLO						+ V1UC11	
			Appr		Sub-Floor Members			Document type: EFS	Project nr: 22-16146	Page	10
Modification	Date	Name	Original		Replacement of / Replaced by	Scale 1:1					614

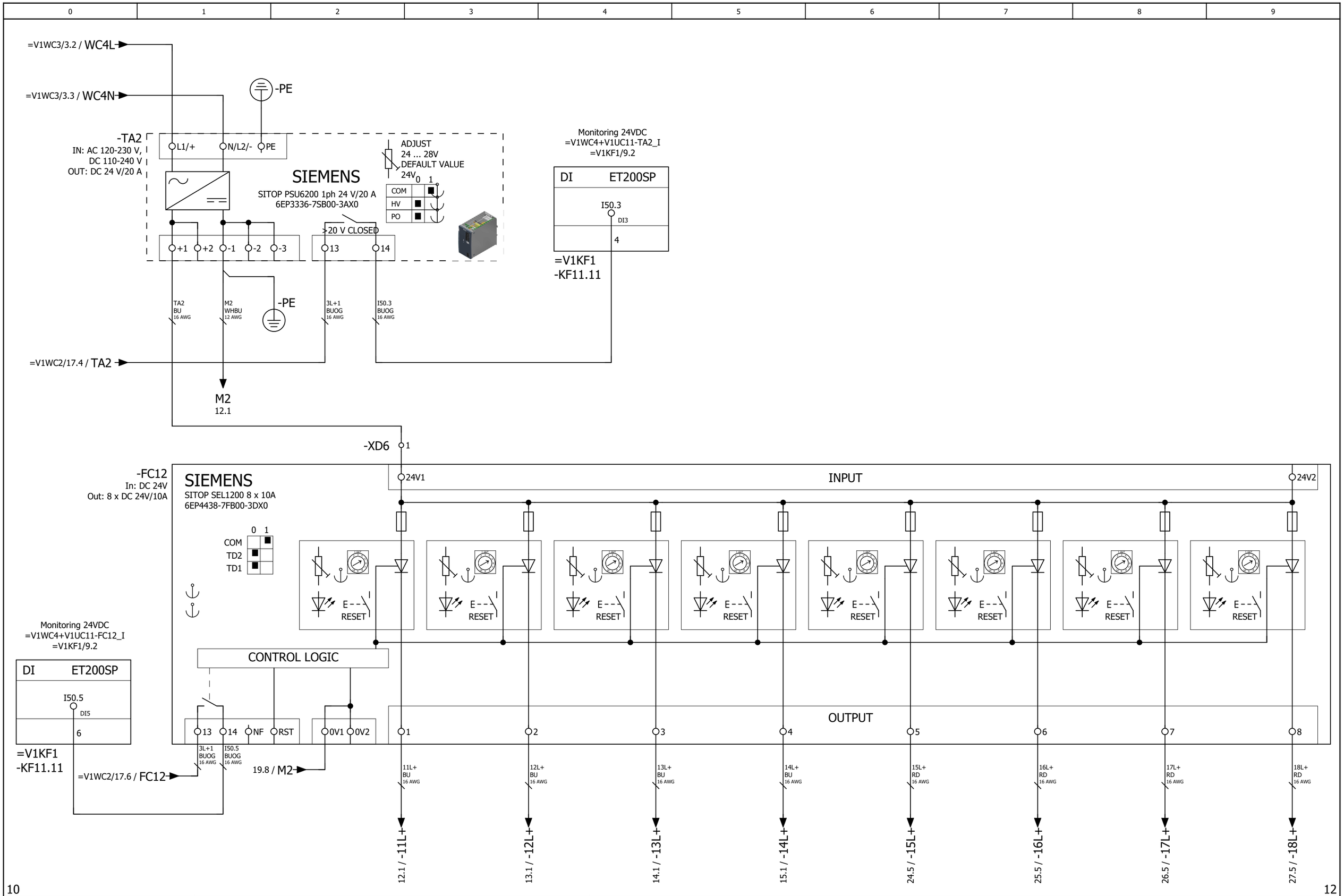

			Date	12/22/2022	Volvo Trucks North America		Valiant TMS	Power distribution 24VDC (Below Disconnect)	Drawing name: =2V13&EFS_EL	= V1WC4	
			Ed.	MKLEPADLO						+ V1UC11	
			Appr		Sub-Floor Members				Document type: EFS	Project nr: 22-16146	Page 11 / 614
Modification	Date	Name	Original		Replacement of	Replaced by	Scale 1:1				

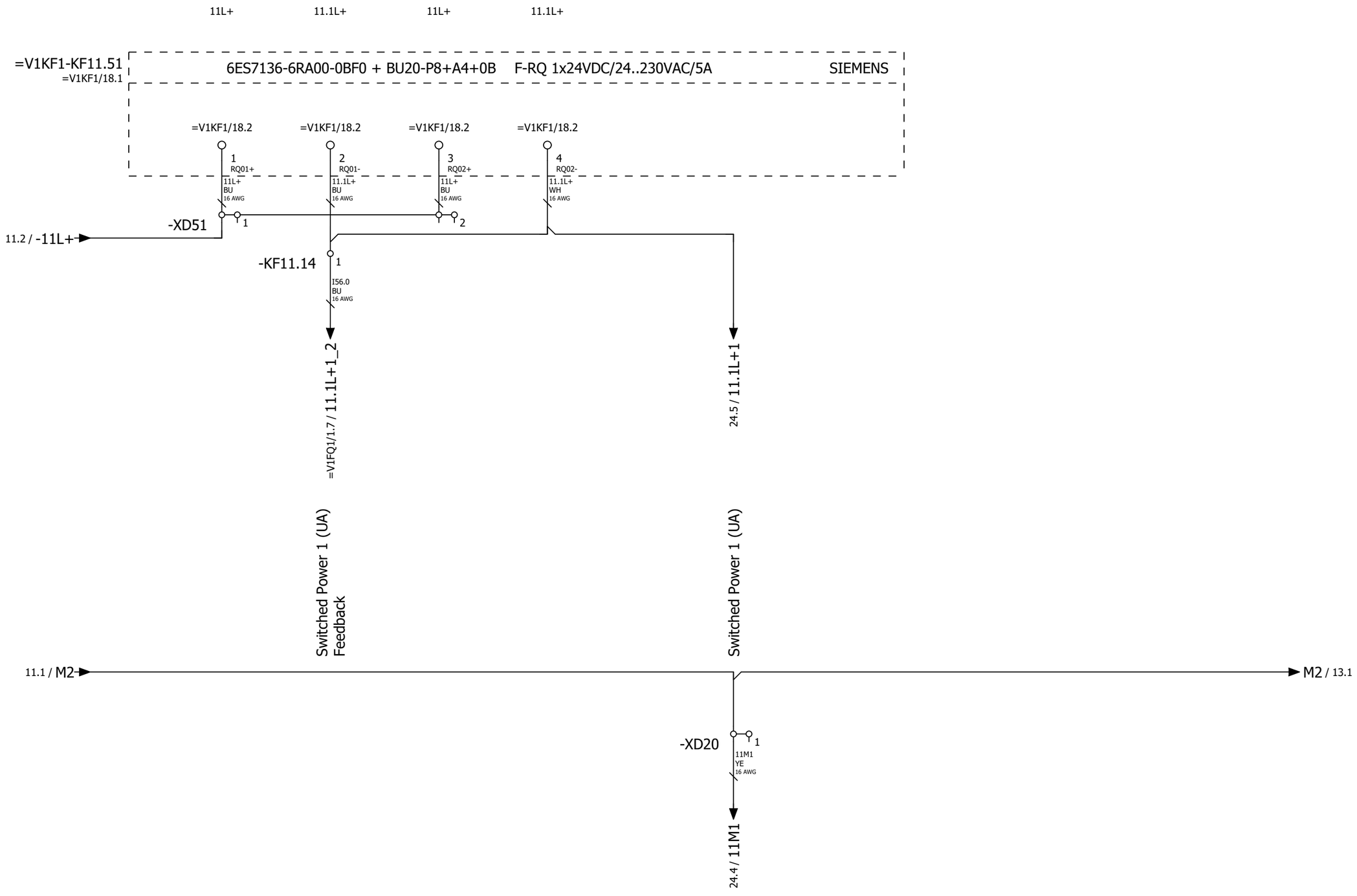

			Date	12/22/2022	Volvo Trucks North America	Valiant TMS	Power distribution 24VDC 11L+	Drawing name: =2V13&EFS_EL		= V1WC4	
			Ed.	MKLEPADLO						+ V1UC11	
			Appr		Sub-Floor Members			Document type: EFS	Project nr: 22-16146	Page	12
Modification	Date	Name	Original		Replacement of / Replaced by	Scale 1:1					614

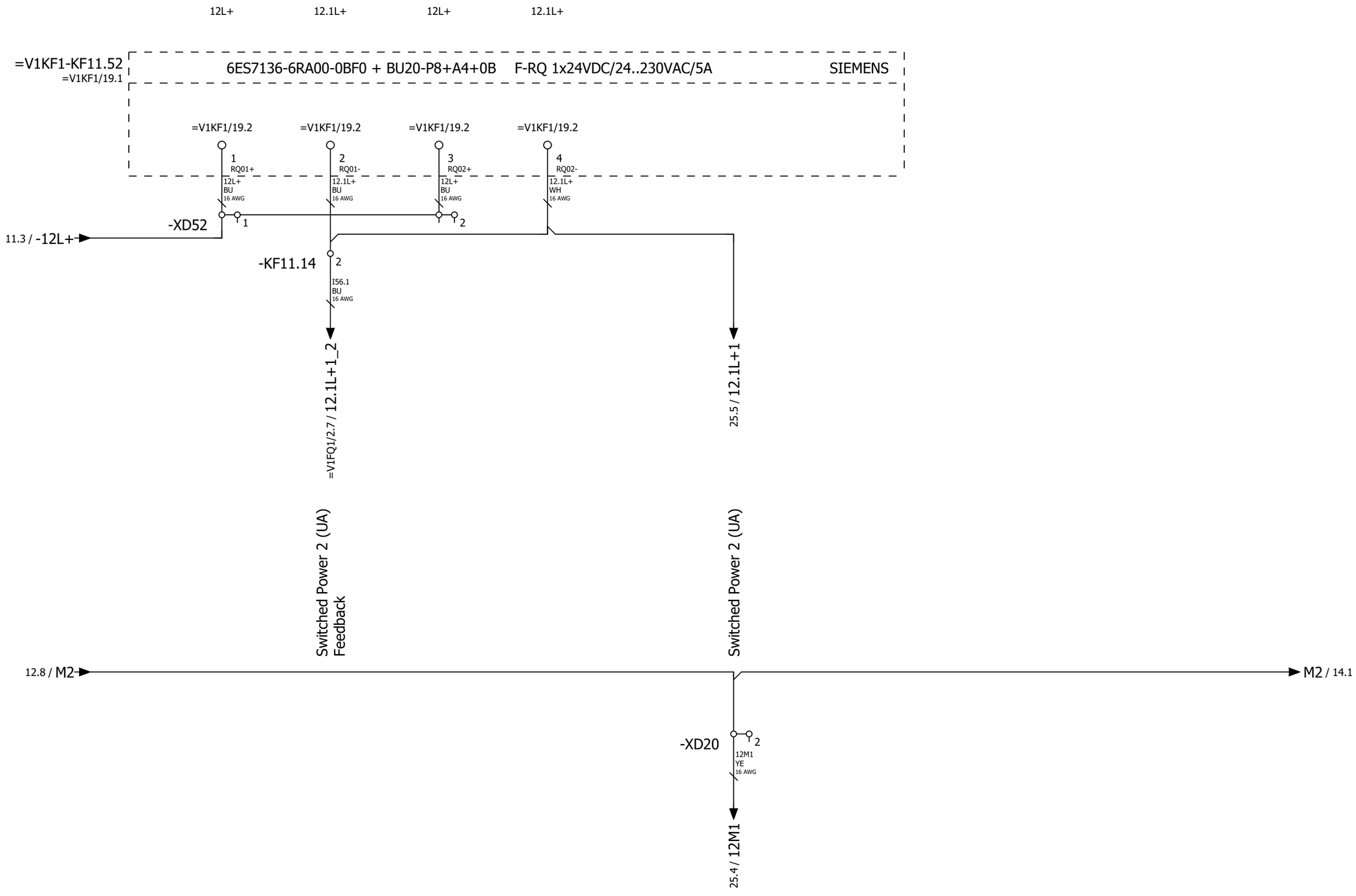

12

14

			Date	12/22/2022	Volvo Trucks North America	Valiant TMS	Power distribution 24VDC 12L+	Drawing name: =2V13&EFS_EL		= V1WC4	
			Ed.	MKLEPADLO						+ V1UC11	
			Appr		Sub-Floor Members			Document type: EFS	Project nr: 22-16146		Page 13
Modification	Date	Name	Original		Replacement of / Replaced by	Scale 1:1					614

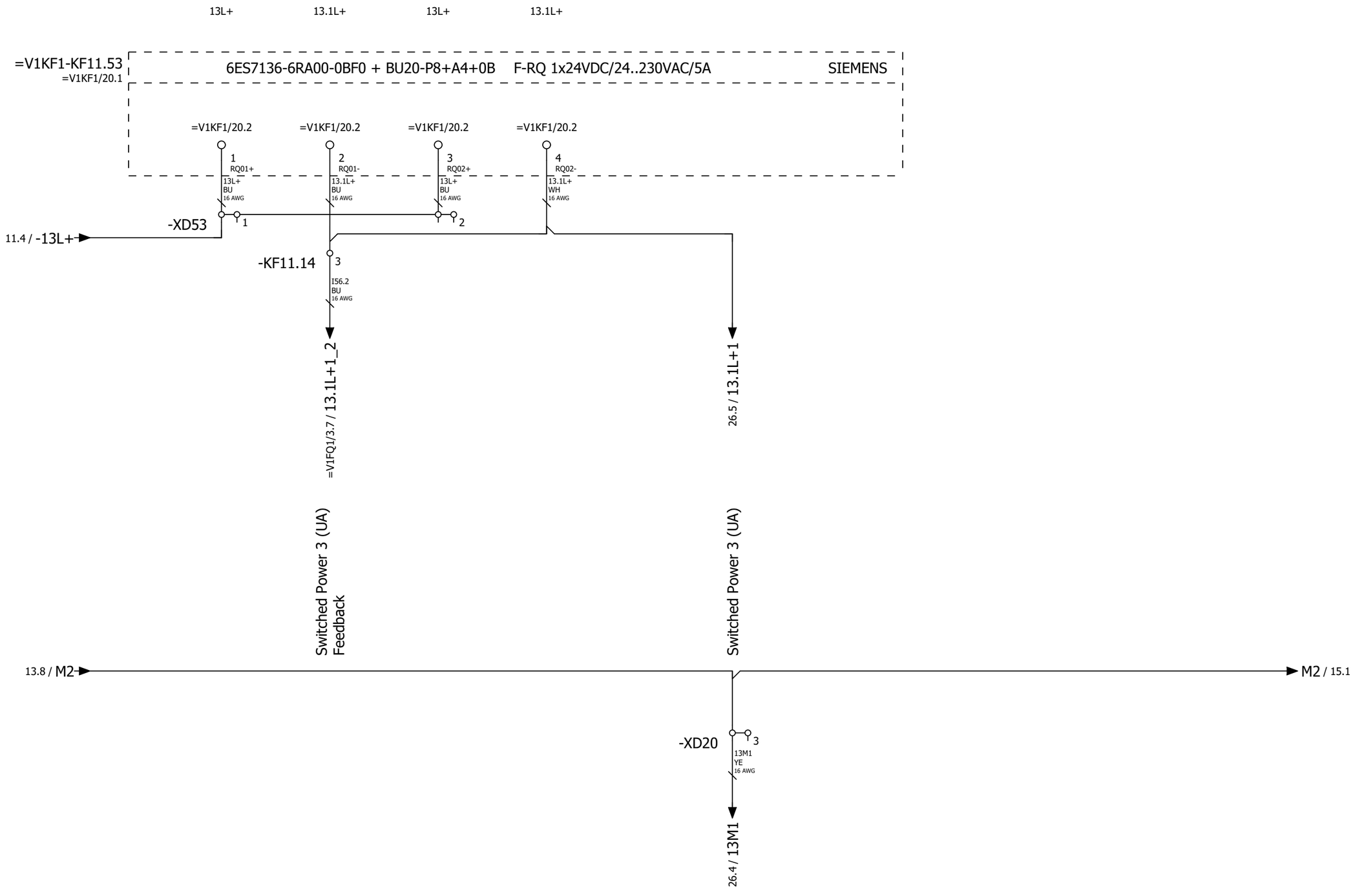

13

15

			Date	12/22/2022	Volvo Trucks North America	Valiant TMS	Power distribution 24VDC 13L+	Drawing name: =2V13&EFS_EL		= V1WC4	
			Ed.	MKLEPADLO						+ V1UC11	
			Appr		Sub-Floor Members			Document type: EFS	Project nr: 22-16146		Page 14
Modification	Date	Name	Original		Replacement of	Replaced by	Scale 1:1				614

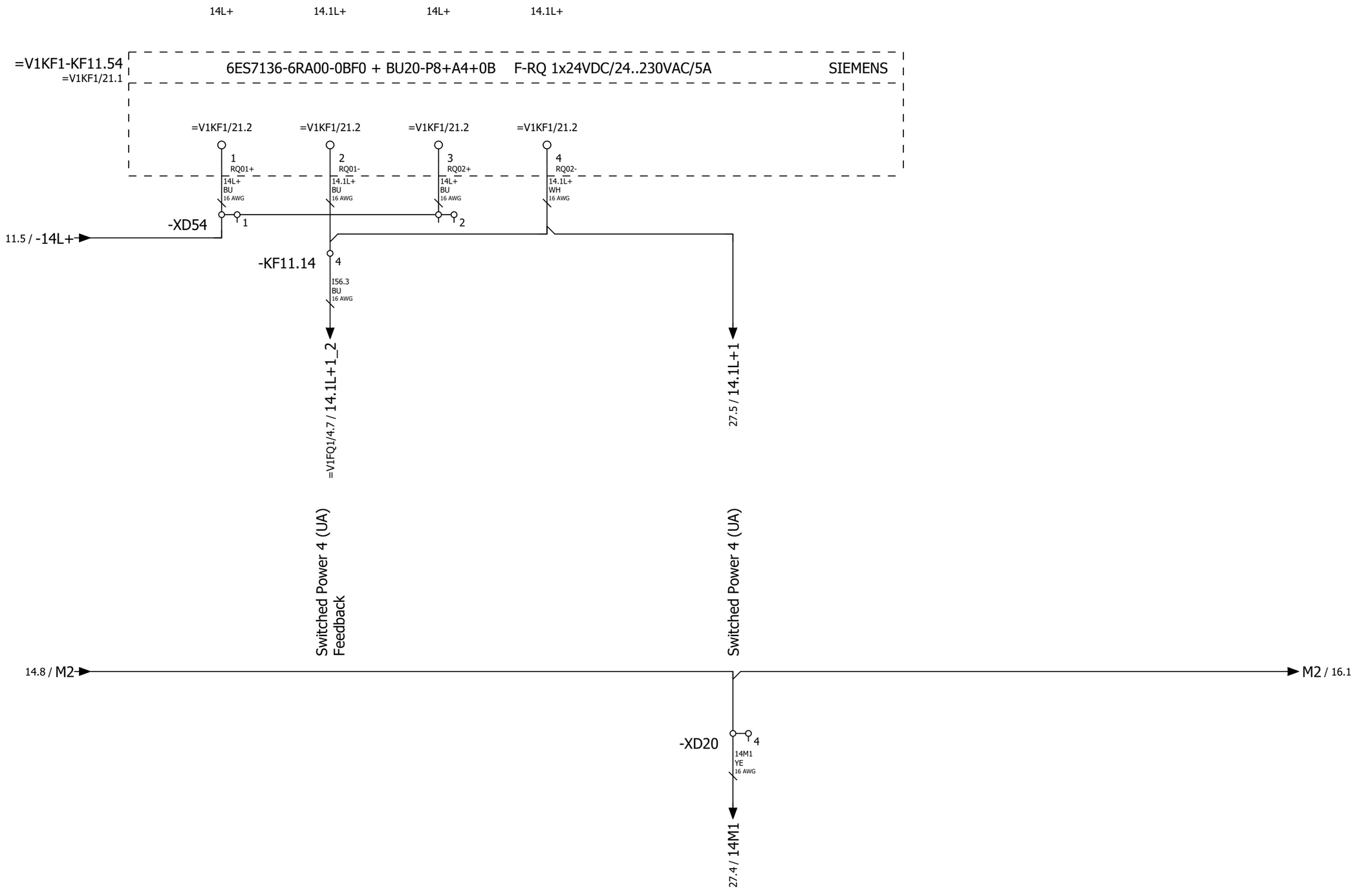

			Date	12/22/2022	Volvo Trucks North America	Valiant TMS	Power distribution 24VDC 14L+	Drawing name: =2V13&EFS_EL		= V1WC4	
			Ed.	MKLEPADLO						+ V1UC11	
			Appr		Sub-Floor Members			Document type: EFS	Project nr: 22-16146	Page	15
Modification	Date	Name	Original		Replacement of / Replaced by	Scale 1:1					614

			Date	12/22/2022	Volvo Trucks North America	Valiant TMS	Power distribution 24VDC 15L+	Drawing name: =2V13&EFS_EL	= V1WC4		
			Ed.	MKLEPADLO					+ V1UC11		
			Appr		Sub-Floor Members			Document type: EFS	Project nr: 22-16146	Page	16
Modification	Date	Name	Original		Replacement of / Replaced by	Scale 1:1					614

16

18

			Date	12/22/2022	Volvo Trucks North America	Valiant TMS	Power distribution 24VDC 16L+	Drawing name: =2V13&EFS_EL		= V1WC4	
			Ed.	MKLEPADLO						+ V1UC11	
			Appr		Sub-Floor Members			Document type: EFS	Project nr: 22-16146		Page 17
Modification	Date	Name	Original		Replacement of / Replaced by	Scale 1:1					614

17

19

			Date	12/22/2022	Volvo Trucks North America	Valiant TMS	Power distribution 24VDC 17L+	Drawing name: =2V13&EFS_EL		= V1WC4	
			Ed.	MKLEPADLO						+ V1UC11	
			Appr		Sub-Floor Members			Document type: EFS	Project nr: 22-16146	Page	18
Modification	Date	Name	Original		Replacement of / Replaced by	Scale 1:1					614

			Date	12/22/2022	Volvo Trucks North America	Valiant TMS	Power distribution 24VDC 18L+	Drawing name: =2V13&EFS_EL		= V1WC4	
			Ed.	MKLEPADLO						+ V1UC11	
			Appr		Sub-Floor Members			Document type: EFS	Project nr: 22-16146		Page 19
Modification	Date	Name	Original		Replacement of / Replaced by	Scale 1:1					614

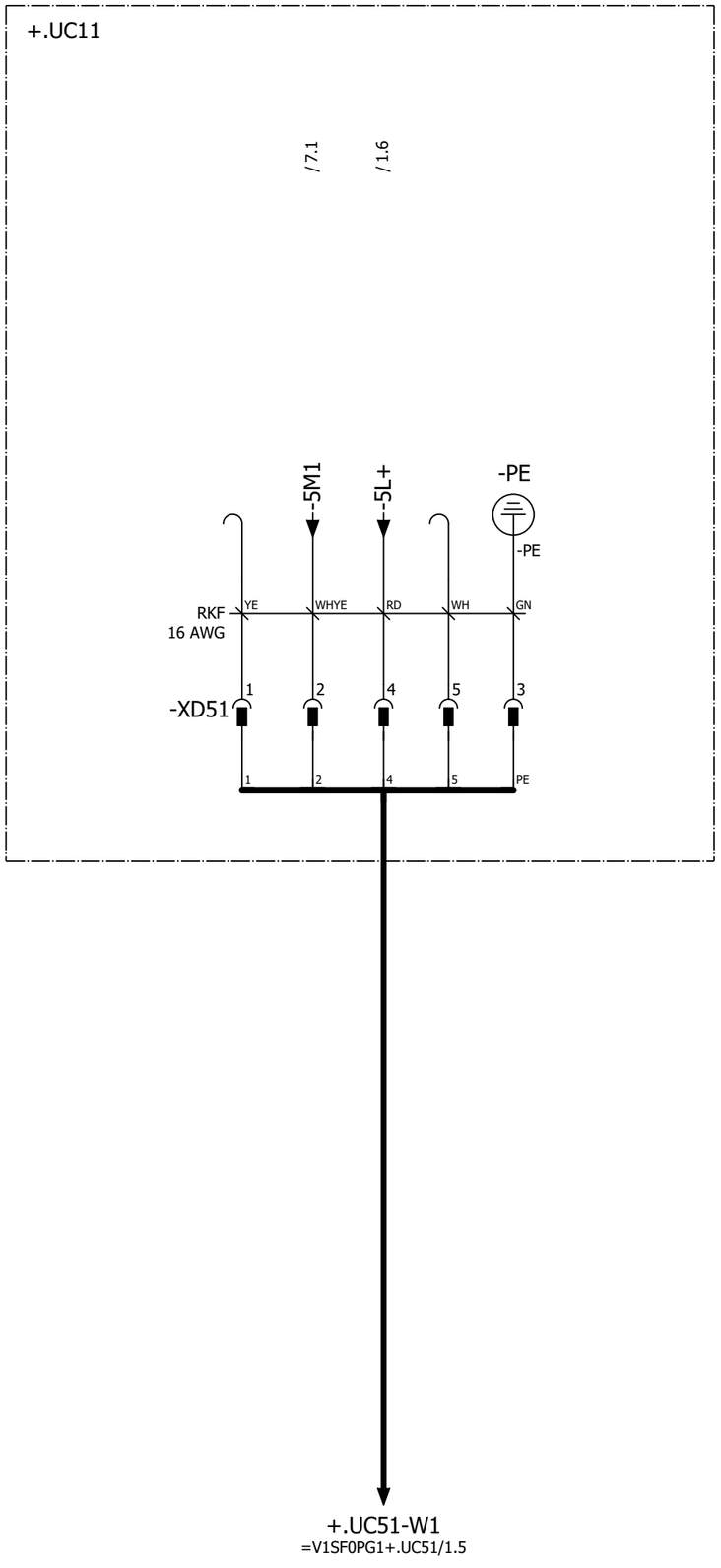

POWER IN / POWER OUT

Pin 1: 0 V UA
Pin 2: 0 V US
Pin 3: FE
Pin 4: +24 V US / 9 A
Pin 5: +24 V UA / 9 A

Pin #	WIRE	COLOR
Pin 1	N/C	YE
Pin 2	-5M1	WHYE
Pin 3	GND	GN
Pin 4	-5L+	RD
Pin 5	N/C	WH

			Date	12/22/2022	Volvo Trucks North America		Valiant TMS	24VDC Unswitched Power 1	Drawing name: =2V13&EFS_EL	= V1WC4	
			Ed.	MKLEPADLO						+ V1UC11	
			Appr		Sub-Floor Members				Document type: EFS	Project nr: 22-16146	Page 20 / 614
Modification	Date	Name	Original		Replacement of	Replaced by	Scale 1:1				

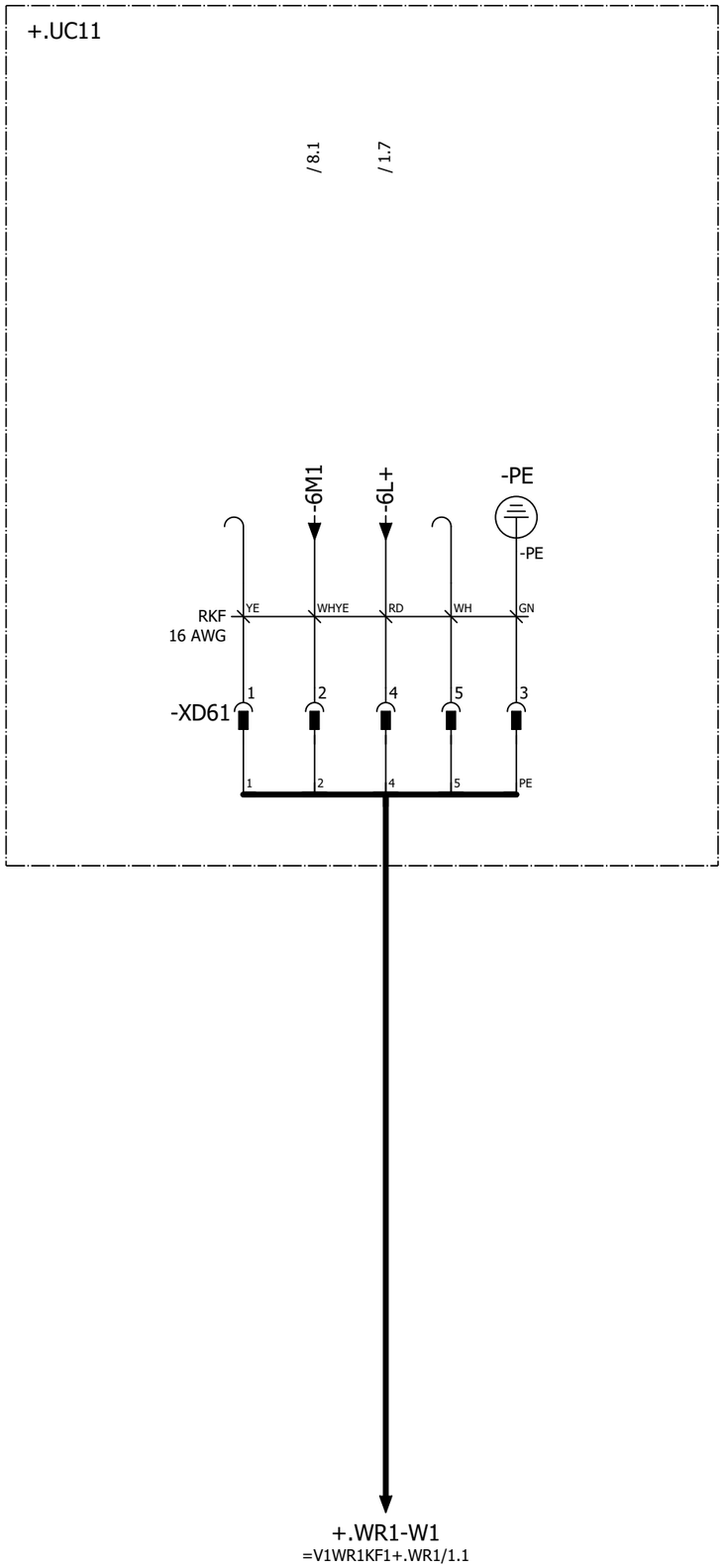

POWER IN / POWER OUT

Pin 1: 0 V UA
Pin 2: 0 V US
Pin 3: FE
Pin 4: +24 V US / 9 A
Pin 5: +24 V UA / 9 A

Pin #	WIRE	COLOR
Pin 1	N/C	YE
Pin 2	-6M1	WHYE
Pin 3	GND	GN
Pin 4	-6L+	RD
Pin 5	N/C	WH

			Date	12/22/2022	Volvo Trucks North America		Valiant TMS	24VDC Unswitched Power 2	Drawing name: =2V13&EFS_EL	= V1WC4	
			Ed.	MKLEPADLO						+ V1UC11	
			Appr		Sub-Floor Members				Document type: EFS	Project nr: 22-16146	Page 21 / 614
Modification	Date	Name	Original		Replacement of	Replaced by	Scale 1:1				

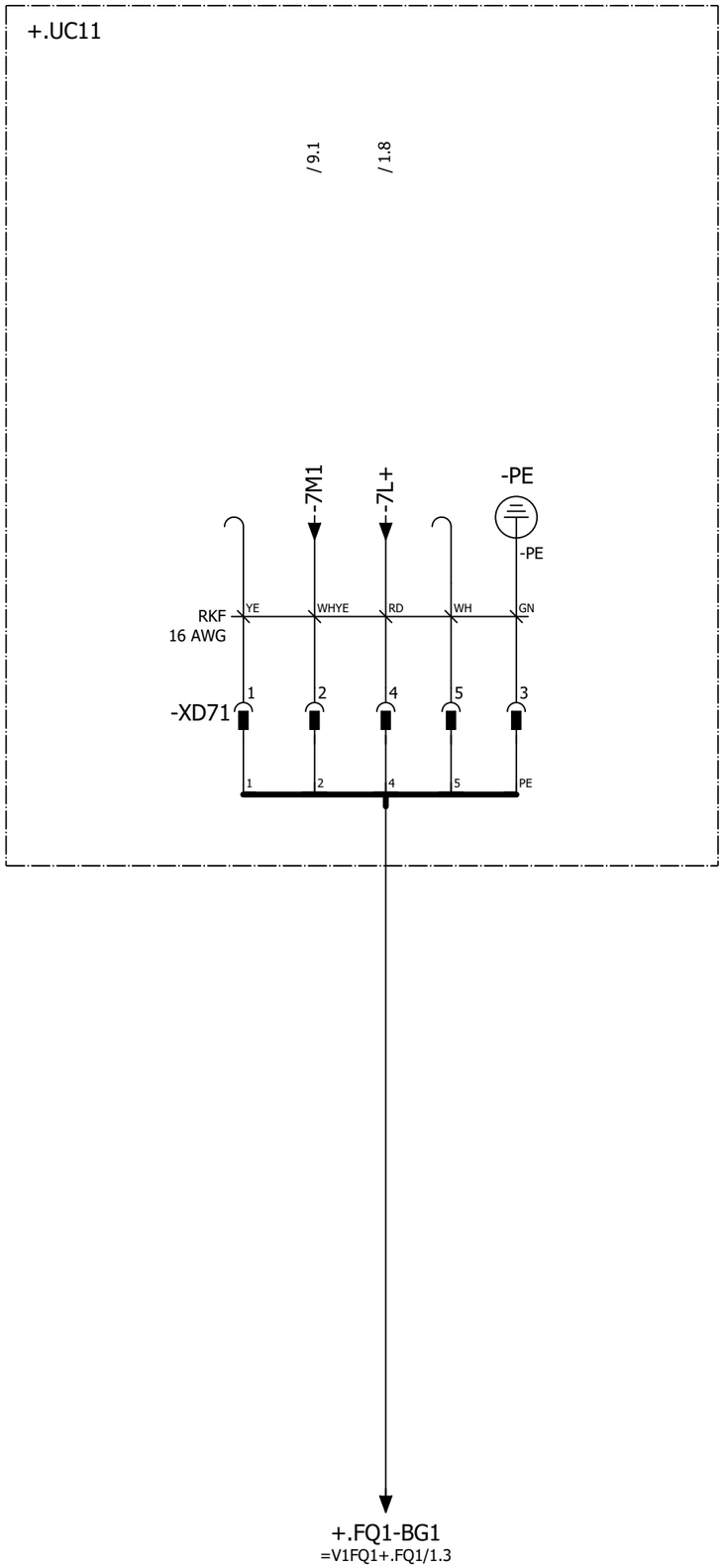

POWER IN / POWER OUT

Pin 1: 0 V UA
Pin 2: 0 V US
Pin 3: FE
Pin 4: +24 V US / 9 A
Pin 5: +24 V UA / 9 A

Pin #	WIRE	COLOR
Pin 1	N/C	YE
Pin 2	-7M1	WHYE
Pin 3	GND	GN
Pin 4	-7L+	RD
Pin 5	N/C	WH

			Date	12/22/2022	Volvo Trucks North America		Valiant TMS	24VDC Unswitched Power 3	Drawing name: =2V13&EFS_EL	= V1WC4	
			Ed.	MKLEPADLO						+ V1UC11	
			Appr		Sub-Floor Members				Document type: EFS	Project nr: 22-16146	Page 22 / 614
Modification	Date	Name	Original		Replacement of	Replaced by	Scale 1:1				

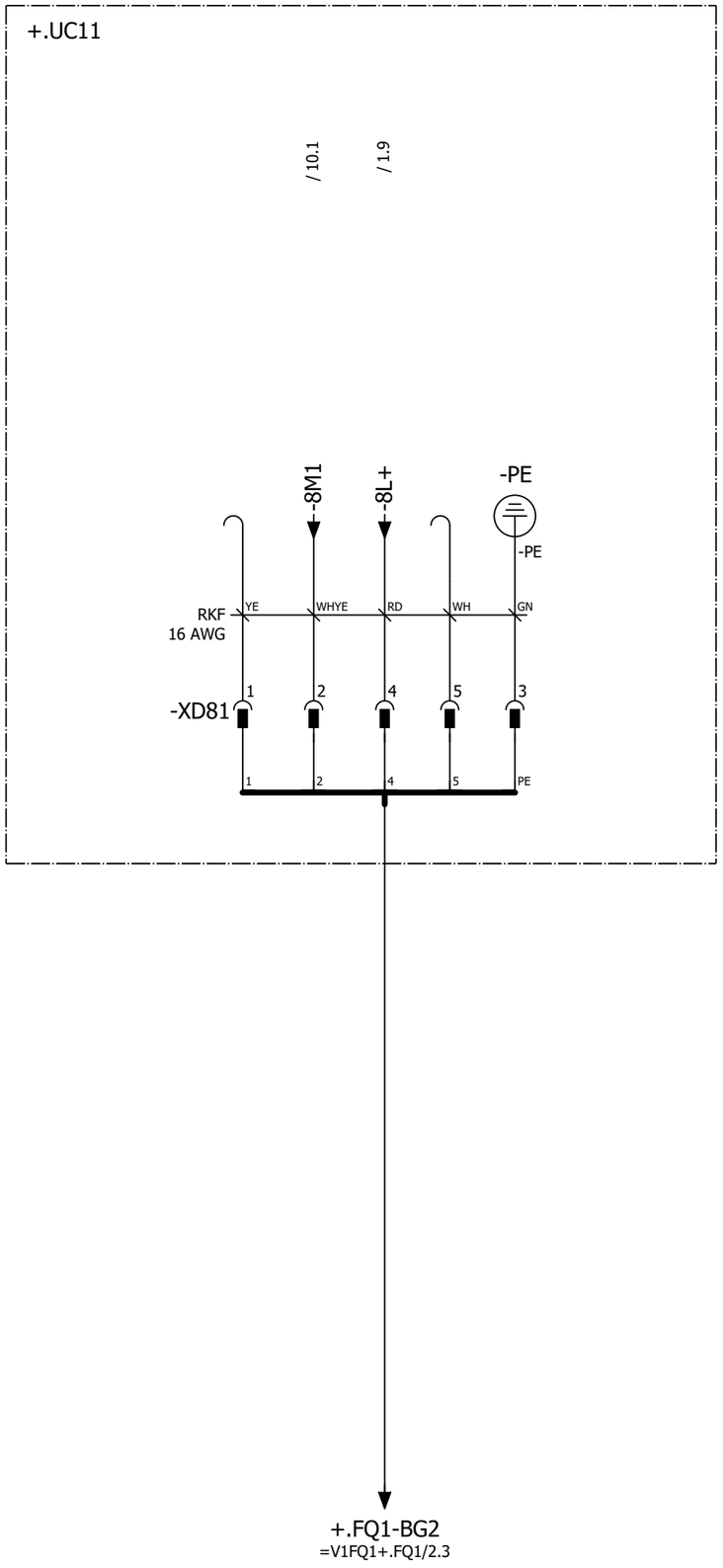

POWER IN / POWER OUT

Pin 1: 0 V UA
Pin 2: 0 V US
Pin 3: FE
Pin 4: +24 V US / 9 A
Pin 5: +24 V UA / 9 A

Pin #	WIRE	COLOR
Pin 1	N/C	YE
Pin 2	-8M1	WHYE
Pin 3	GND	GN
Pin 4	-8L+	RD
Pin 5	N/C	WH

			Date	12/22/2022	Volvo Trucks North America		Valiant TMS	24VDC Unswitched Power 4	Drawing name: =2V13&EFS_EL	= V1WC4	
			Ed.	MKLEPADLO						+ V1UC11	
			Appr		Sub-Floor Members				Document type: EFS	Project nr: 22-16146	Page 23 / 614
Modification	Date	Name	Original		Replacement of	Replaced by	Scale 1:1				

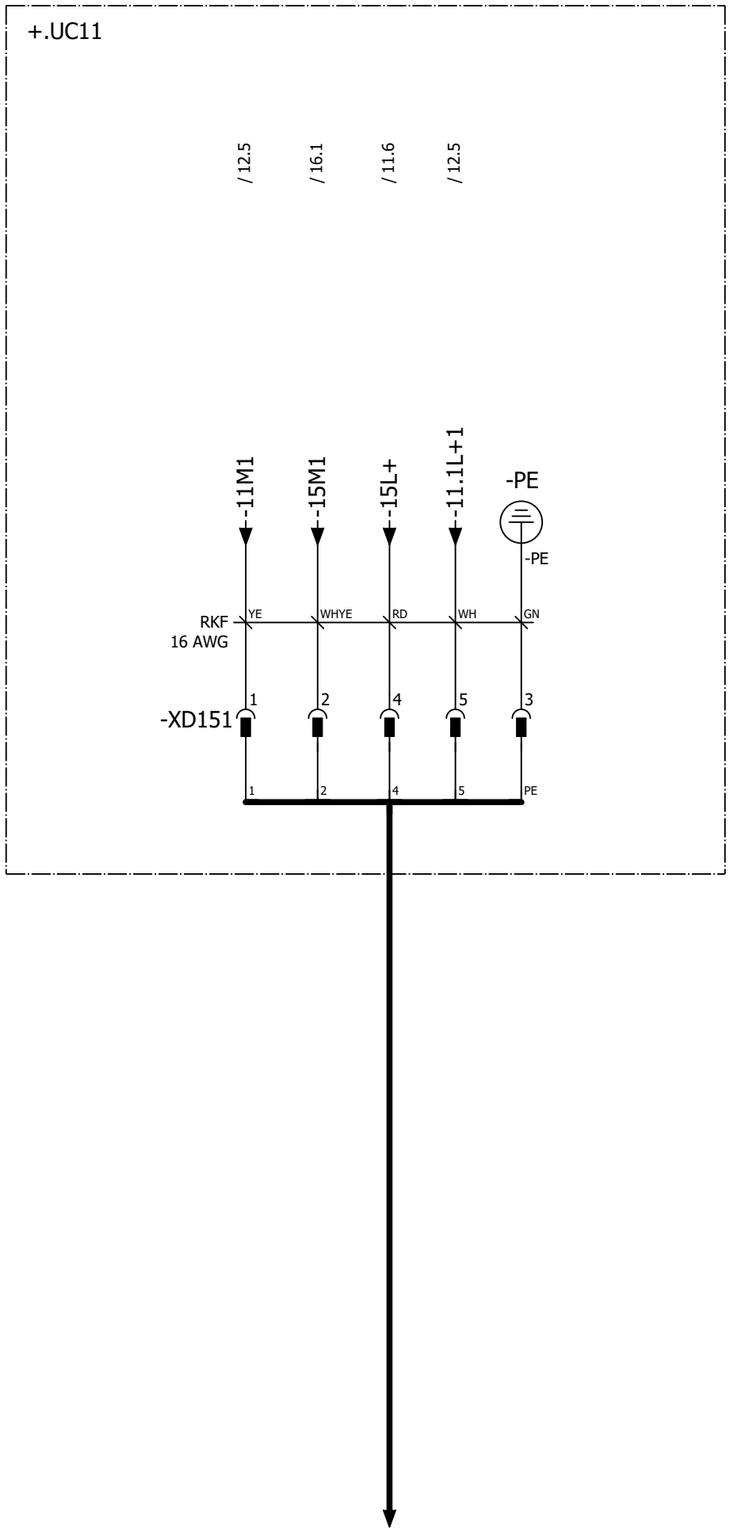

POWER IN / POWER OUT

Pin 1: 0 V UA
Pin 2: 0 V US
Pin 3: FE
Pin 4: +24 V US / 9 A
Pin 5: +24 V UA / 9 A

Pin #	WIRE	COLOR
Pin 1	-11M1	YE
Pin 2	-15M1	WHYE
Pin 3	GND	GN
Pin 4	-15L+	RD
Pin 5	-11.1L+1	WH

			Date	12/22/2022	Volvo Trucks North America		Valiant TMS	24VDC Switched Power 1	Drawing name: =2V13&EFS_EL		= V1WC4
			Ed.	MKLEPADLO							+ V1UC11
			Appr		Sub-Floor Members				Document type: EFS	Project nr: 22-16146	Page 24 / 614
Modification	Date	Name	Original		Replacement of	Replaced by	Scale 1:1				

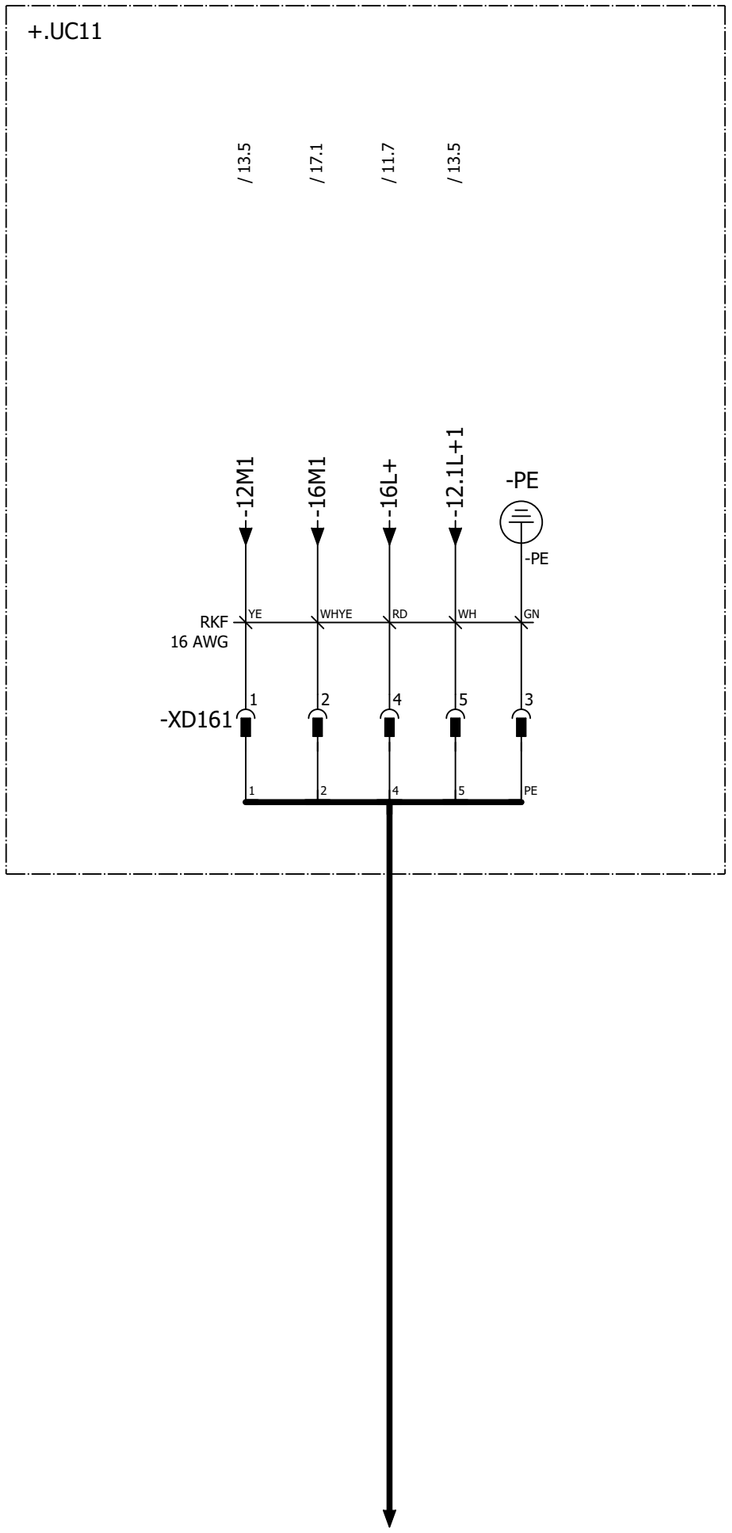

POWER IN / POWER OUT

Pin 1: 0 V UA
Pin 2: 0 V US
Pin 3: FE
Pin 4: +24 V US / 9 A
Pin 5: +24 V UA / 9 A

Pin #	WIRE	COLOR
Pin 1	-12M1	YE
Pin 2	-16M1	WHYE
Pin 3	GND	GN
Pin 4	-16L+	RD
Pin 5	-12.1L+1	WH

			Date	12/22/2022	Volvo Trucks North America	Valiant TMS	24VDC Switched Power 2	Drawing name: =2V13&EFS_EL	= V1WC4	
			Ed.	MKLEPADLO					+ V1UC11	
			Appr		Sub-Floor Members			Document type: EFS	Project nr: 22-16146	Page 25 / 614
Modification	Date	Name	Original		Replacement of / Replaced by	Scale 1:1				

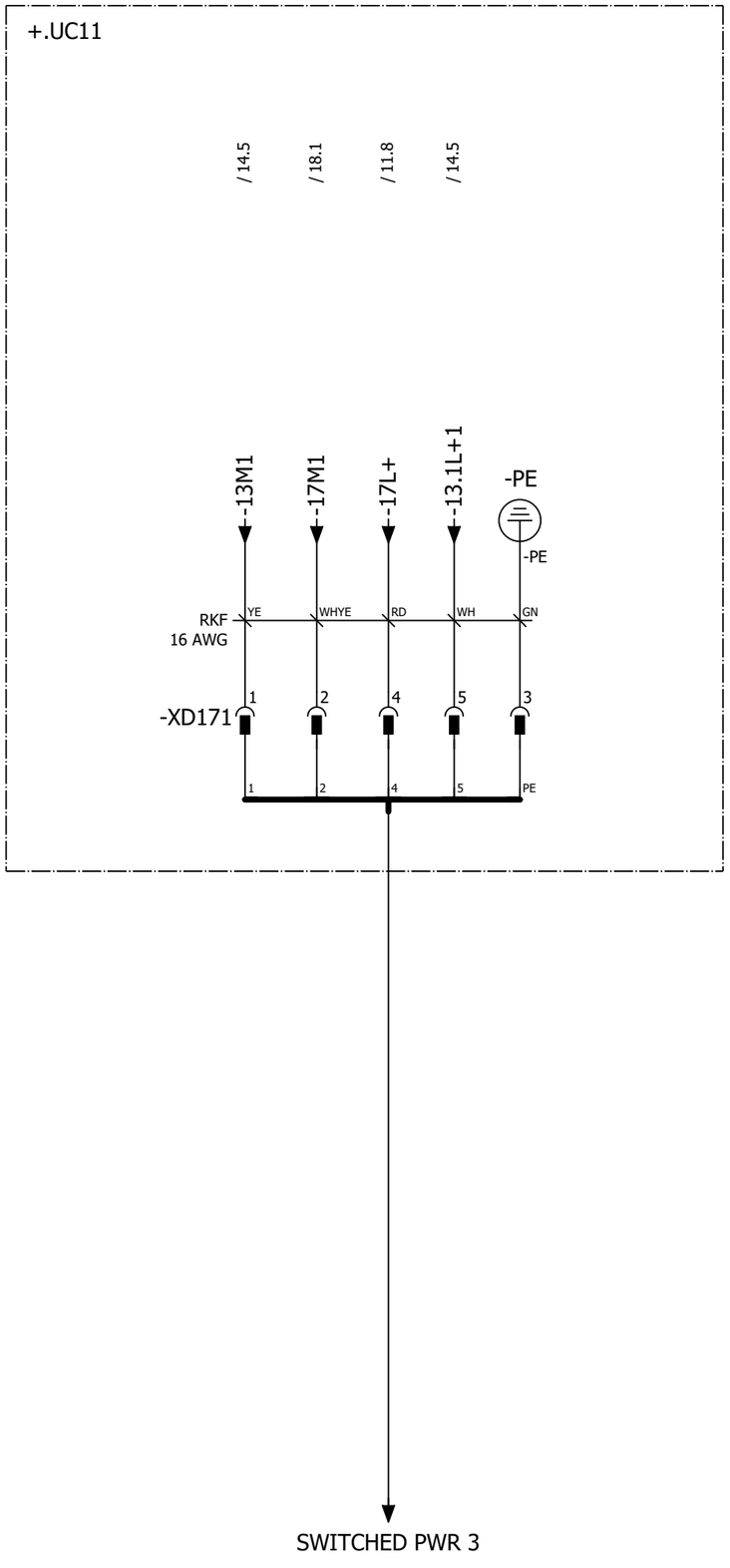

POWER IN / POWER OUT

Pin 1: 0 V UA
Pin 2: 0 V US
Pin 3: FE
Pin 4: +24 V US / 9 A
Pin 5: +24 V UA / 9 A

Pin #	WIRE	COLOR
Pin 1	-13M1	YE
Pin 2	-17M1	WHYE
Pin 3	GND	GN
Pin 4	-17L+	RD
Pin 5	-13.1L+1	WH

			Date	12/22/2022	Volvo Trucks North America	Valiant TMS	24VDC Switched Power 3	Drawing name: =2V13&EFS_EL	= V1WC4	
			Ed.	MKLEPADLO					+ V1UC11	
			Appr		Sub-Floor Members			Document type: EFS	Project nr: 22-16146	Page 26 / 614
Modification	Date	Name	Original		Replacement of / Replaced by	Scale 1:1				

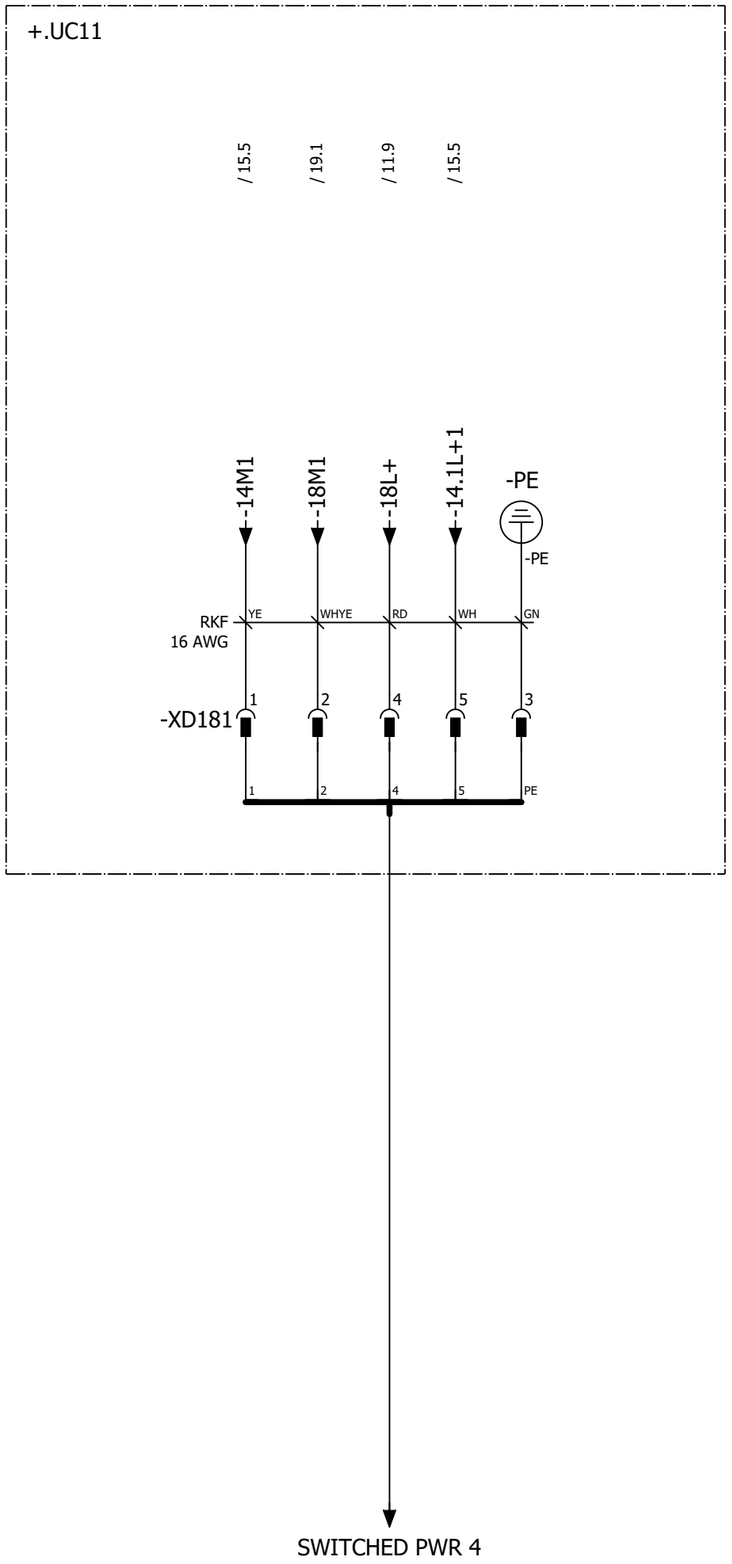

POWER IN / POWER OUT

Pin 1: 0 V UA
Pin 2: 0 V US
Pin 3: FE
Pin 4: +24 V US / 9 A
Pin 5: +24 V UA / 9 A

Pin #	WIRE	COLOR
Pin 1	-14M1	YE
Pin 2	-18M1	WHYE
Pin 3	GND	GN
Pin 4	-18L+	RD
Pin 5	-14.1L+1	WH

			Date	12/22/2022	Volvo Trucks North America	Valiant TMS	24VDC Switched Power 4	Drawing name: =2V13&EFS_EL	= V1WC4	
			Ed.	MKLEPADLO					+ V1UC11	
			Appr		Sub-Floor Members			Document type: EFS	Project nr: 22-16146	Page 27 / 614
Modification	Date	Name	Original		Replacement of / Replaced by	Scale 1:1				

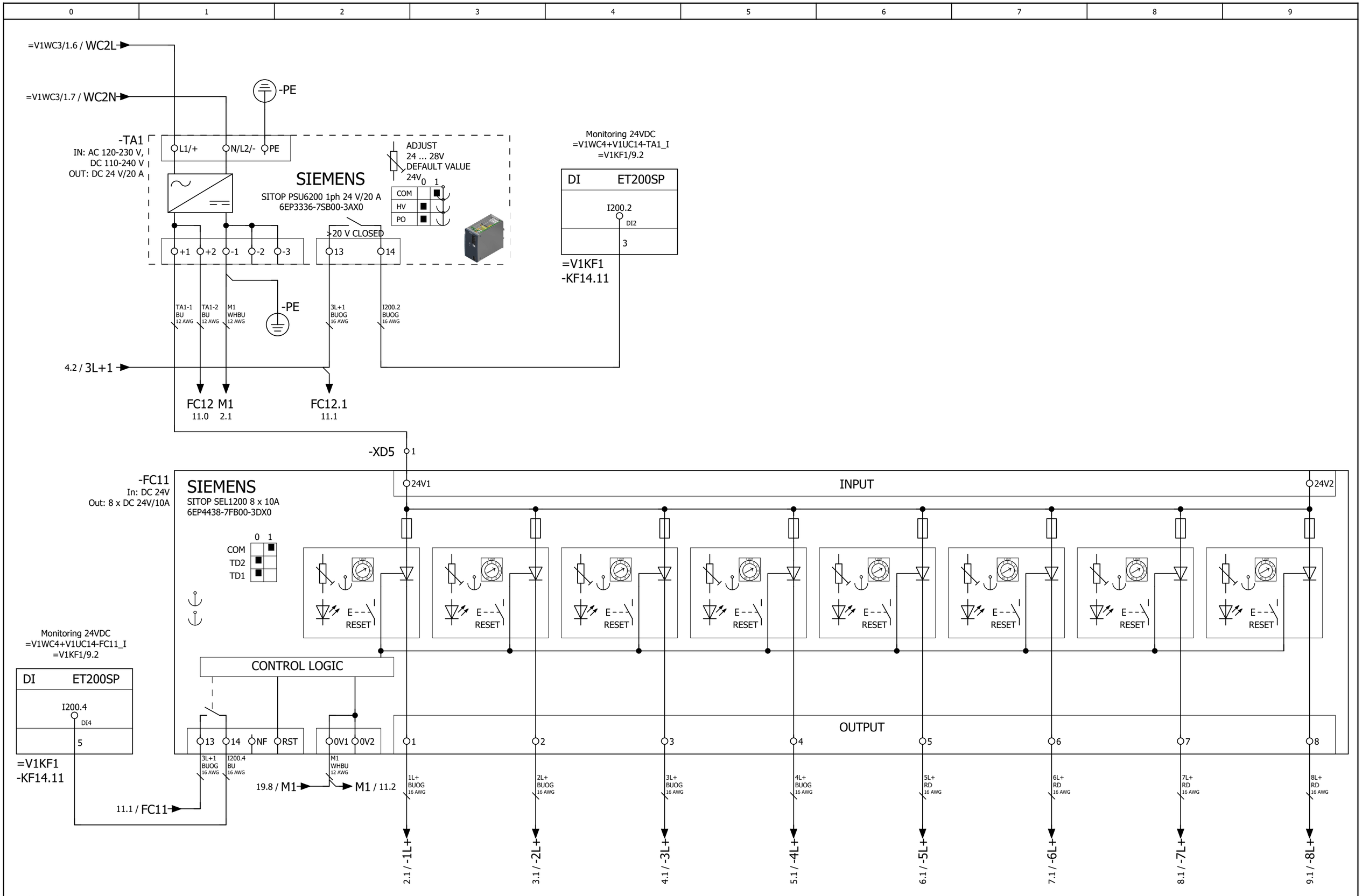

+.UC11/27

2

			Date	12/22/2022	Volvo Trucks North America	Valiant TMS	Power distribution 24VDC for Inputs	Drawing name: =2V13&EFS_EL	= V1WC4		
			Ed.	MKLEPADLO					+ V1UC14		
			Appr		Sub-Floor Members			Document type: EFS	Project nr: 22-16146	Page	1
Modification	Date	Name	Original		Replacement of	Replaced by	Scale 1:1				614

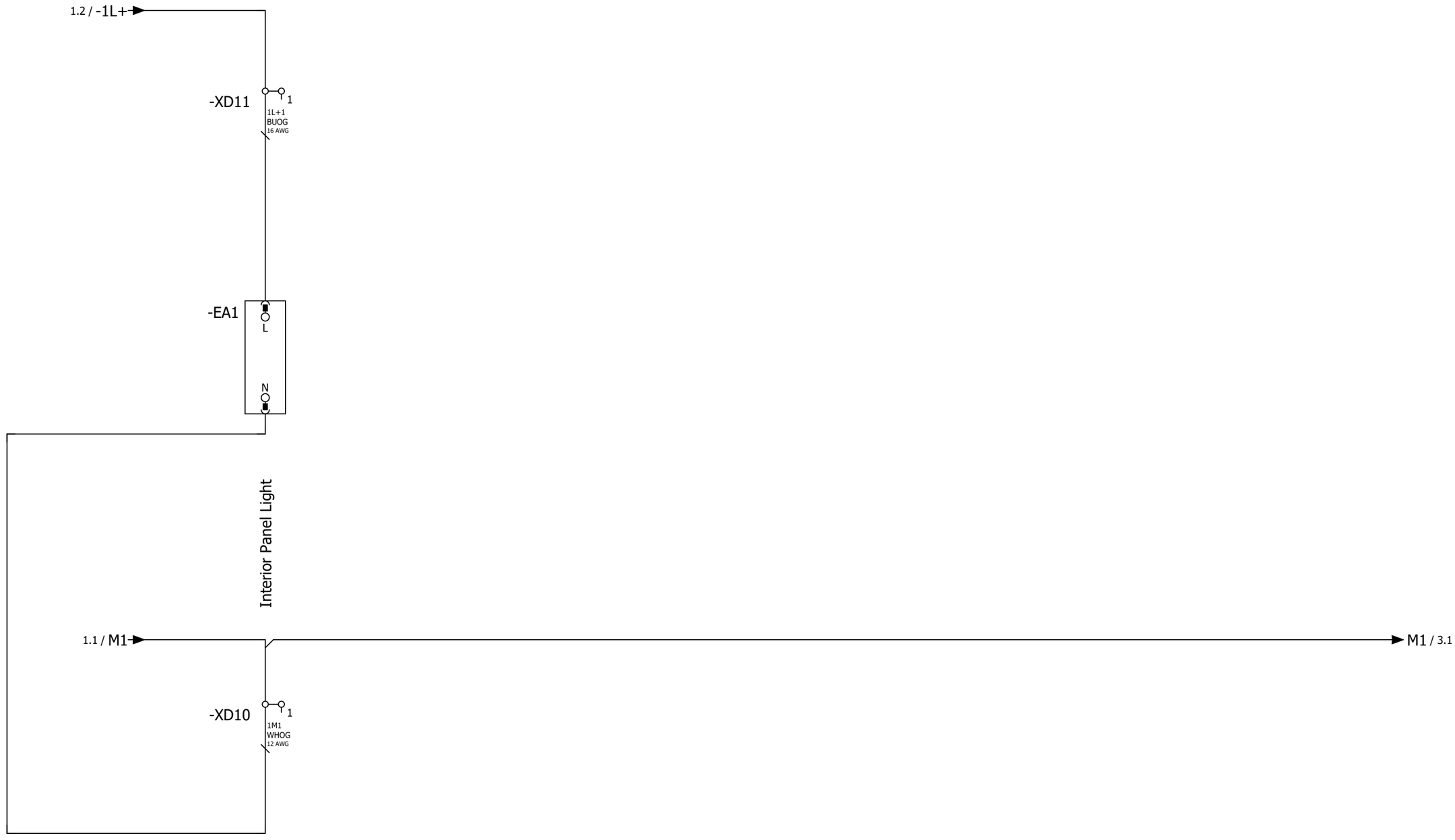

			Date	12/22/2022	Volvo Trucks North America		Valiant TMS	Power distribution 24VDC 1L+	Drawing name: =2V13&EFS_EL	= V1WC4	
			Ed.	MKLEPADLO						+ V1UC14	
			Appr		Sub-Floor Members				Document type: EFS	Project nr: 22-16146	Page 2
Modification	Date	Name	Original		Replacement of	Replaced by	Scale 1:1				614

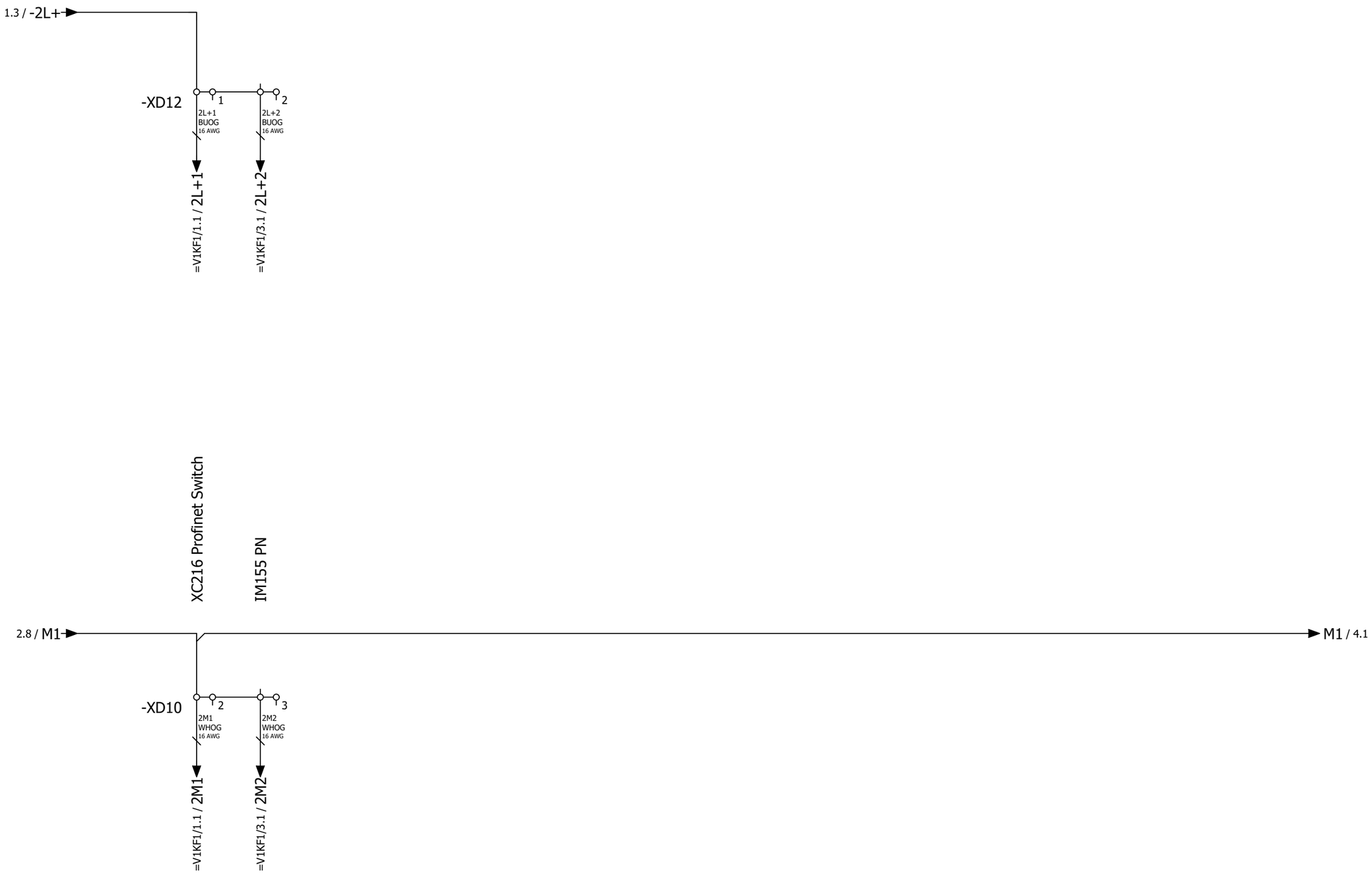

2 4

			Date	12/22/2022	Volvo Trucks North America	Valiant TMS	Power distribution 24VDC 2L+	Drawing name: =2V13&EFS_EL		= V1WC4	
			Ed.	MKLEPADLO	Sub-Floor Members					+ V1UC14	
			Appr			Scale 1:1		Document type: EFS	Project nr: 22-16146	Page	3
Modification	Date	Name	Original		Replacement of / Replaced by						614

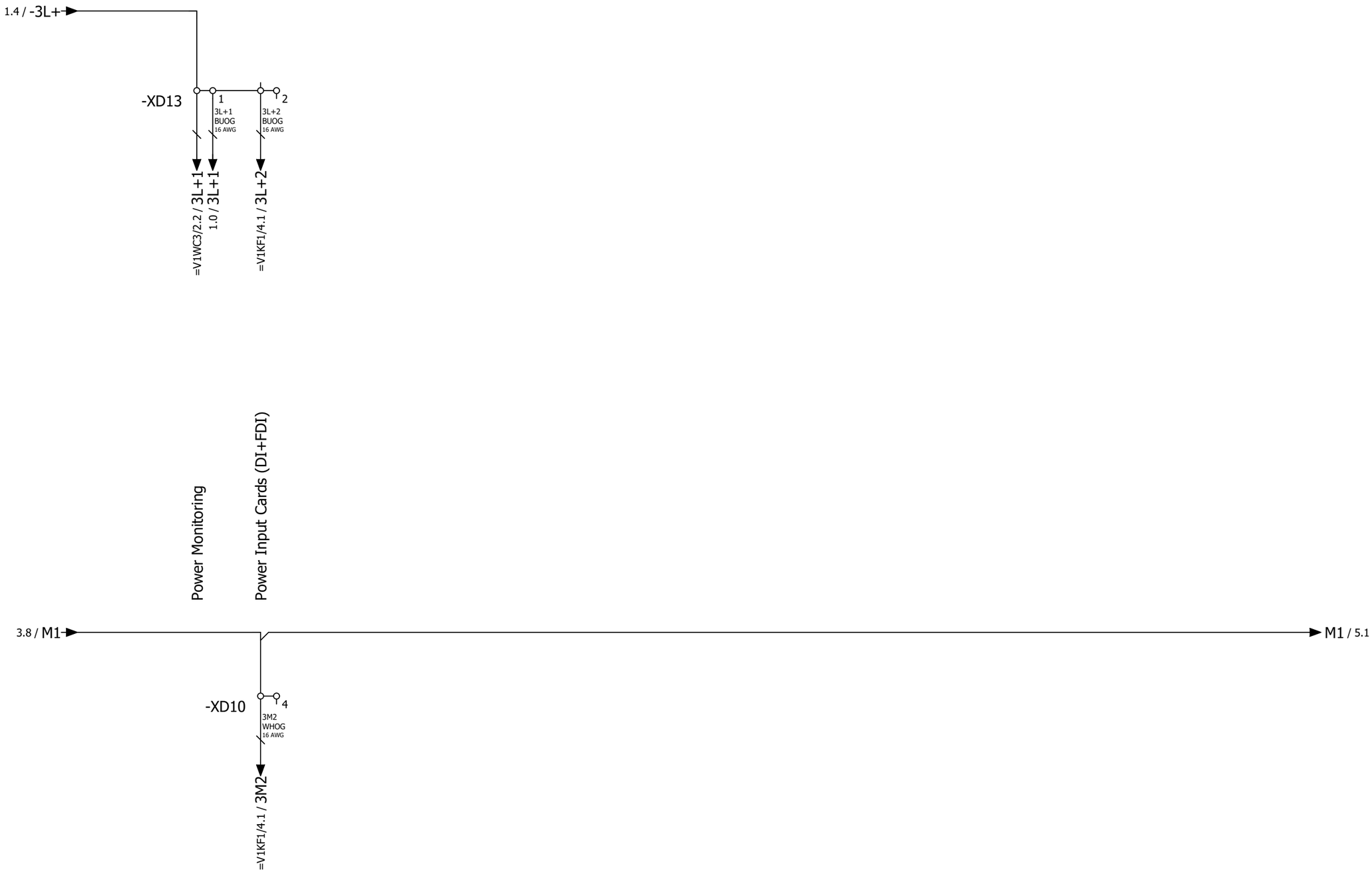

			Date	12/22/2022	Volvo Trucks North America	Valiant TMS	Power distribution 24VDC 3L+	Drawing name: =2V13&EFS_EL		= V1WC4	
			Ed.	MKLEPADLO						+ V1UC14	
			Appr		Sub-Floor Members			Document type: EFS	Project nr: 22-16146		Page 4
Modification	Date	Name	Original		Replacement of	Replaced by	Scale 1:1				614

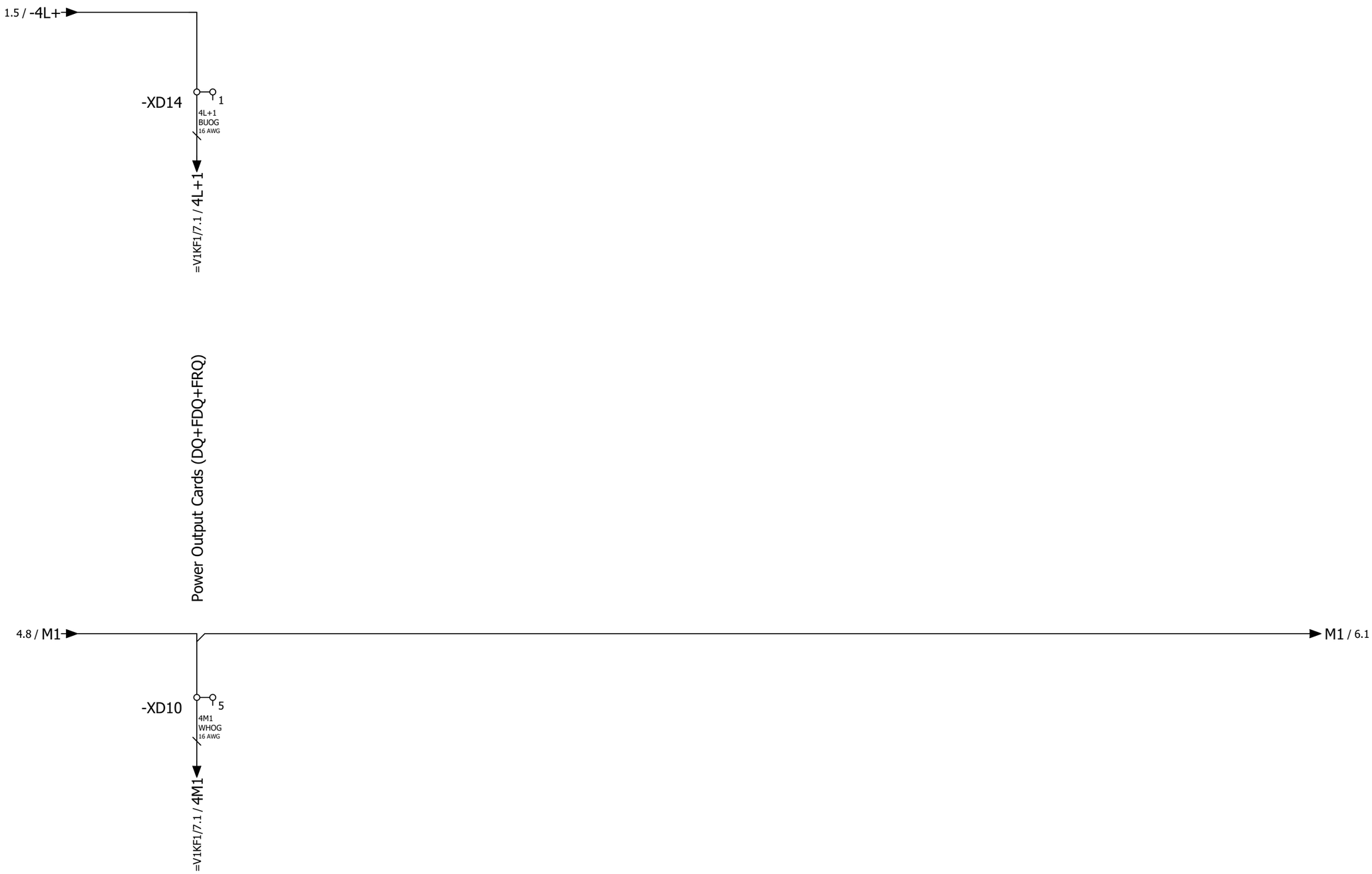

			Date	12/22/2022	Volvo Trucks North America	Valiant TMS	Power distribution 24VDC 4L+	Drawing name: =2V13&EFS_EL		= V1WC4	
			Ed.	MKLEPADLO						+ V1UC14	
			Appr		Sub-Floor Members			Document type: EFS	Project nr: 22-16146		Page 5
Modification	Date	Name	Original		Replacement of / Replaced by	Scale 1:1					614

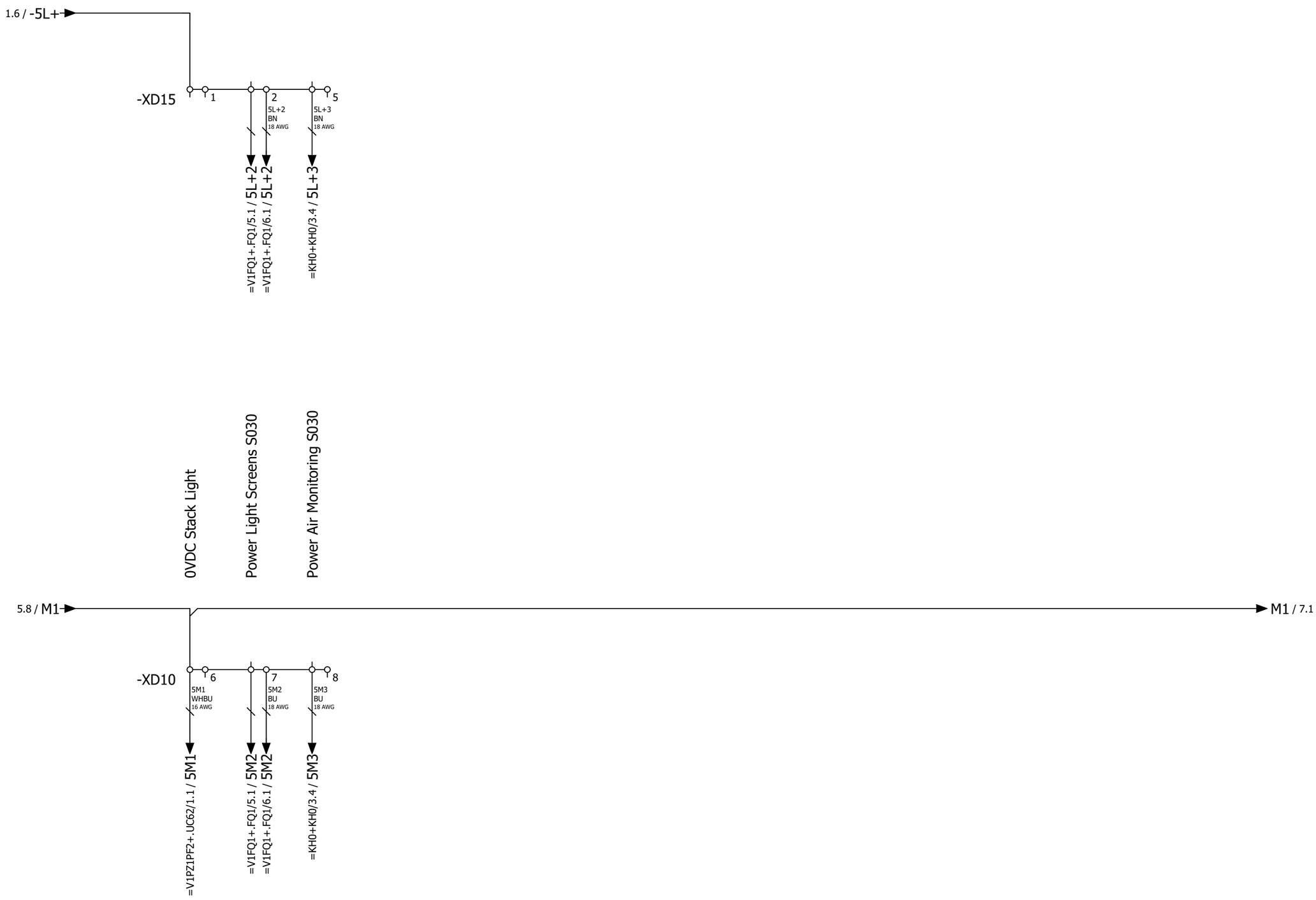

5 7

			Date	12/22/2022	Volvo Trucks North America		Valiant TMS	Power distribution 24VDC 5L+	Drawing name: =2V13&EFS_EL		= V1WC4
			Ed.	MKLEPADLO							+ V1UC14
			Appr		Sub-Floor Members				Document type: EFS	Project nr: 22-16146	Page 6
Modification	Date	Name	Original		Replacement of	Replaced by	Scale 1:1				614

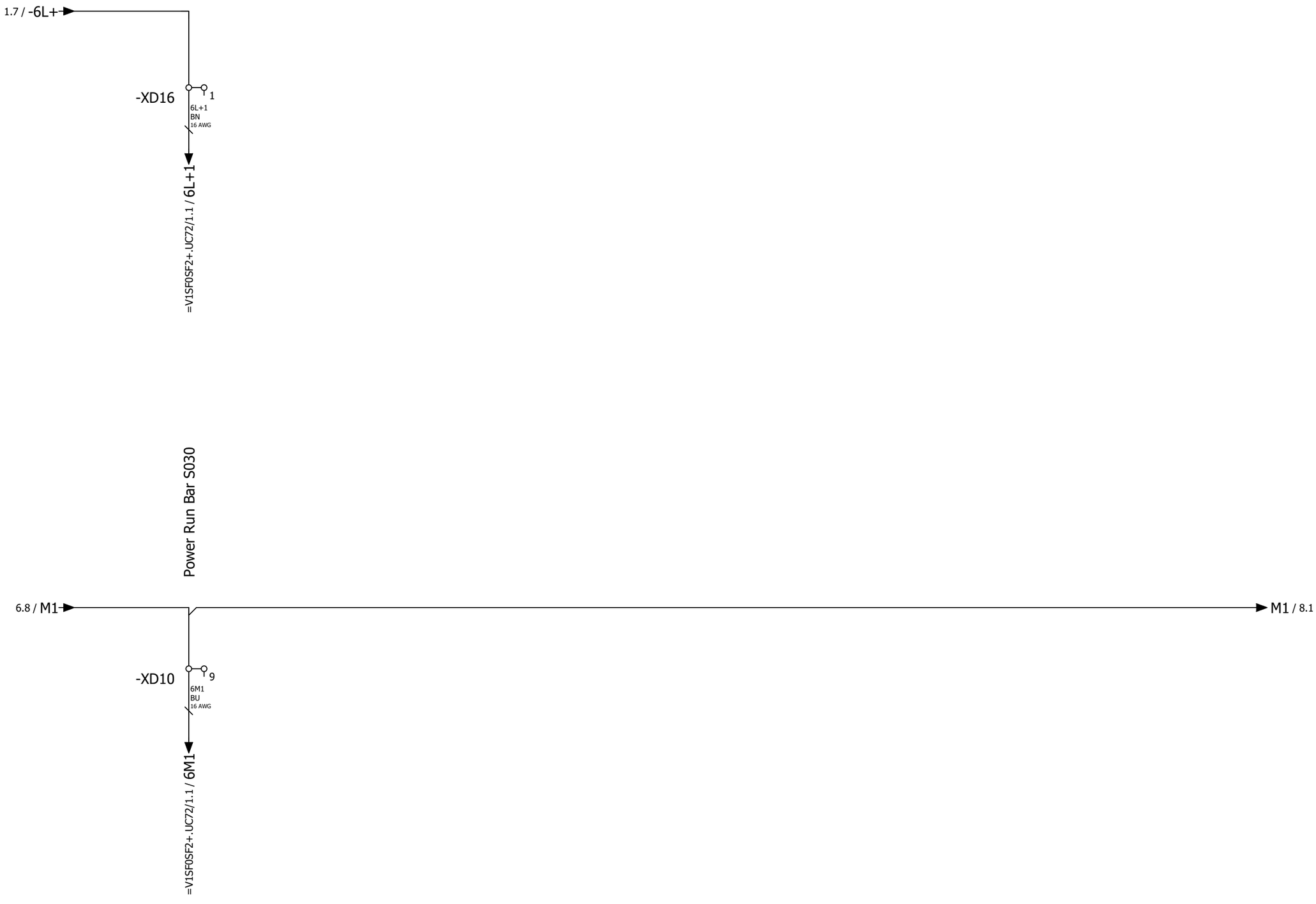

			Date	12/22/2022	Volvo Trucks North America		Valiant TMS	Power distribution 24VDC 6L+	Drawing name: =2V13&EFS_EL	= V1WC4	
			Ed.	MKLEPADLO	Sub-Floor Members					+ V1UC14	
			Appr				Scale 1:1		Document type: EFS	Project nr: 22-16146	Page 7 / 614
Modification	Date	Name	Original		Replacement of	Replaced by					

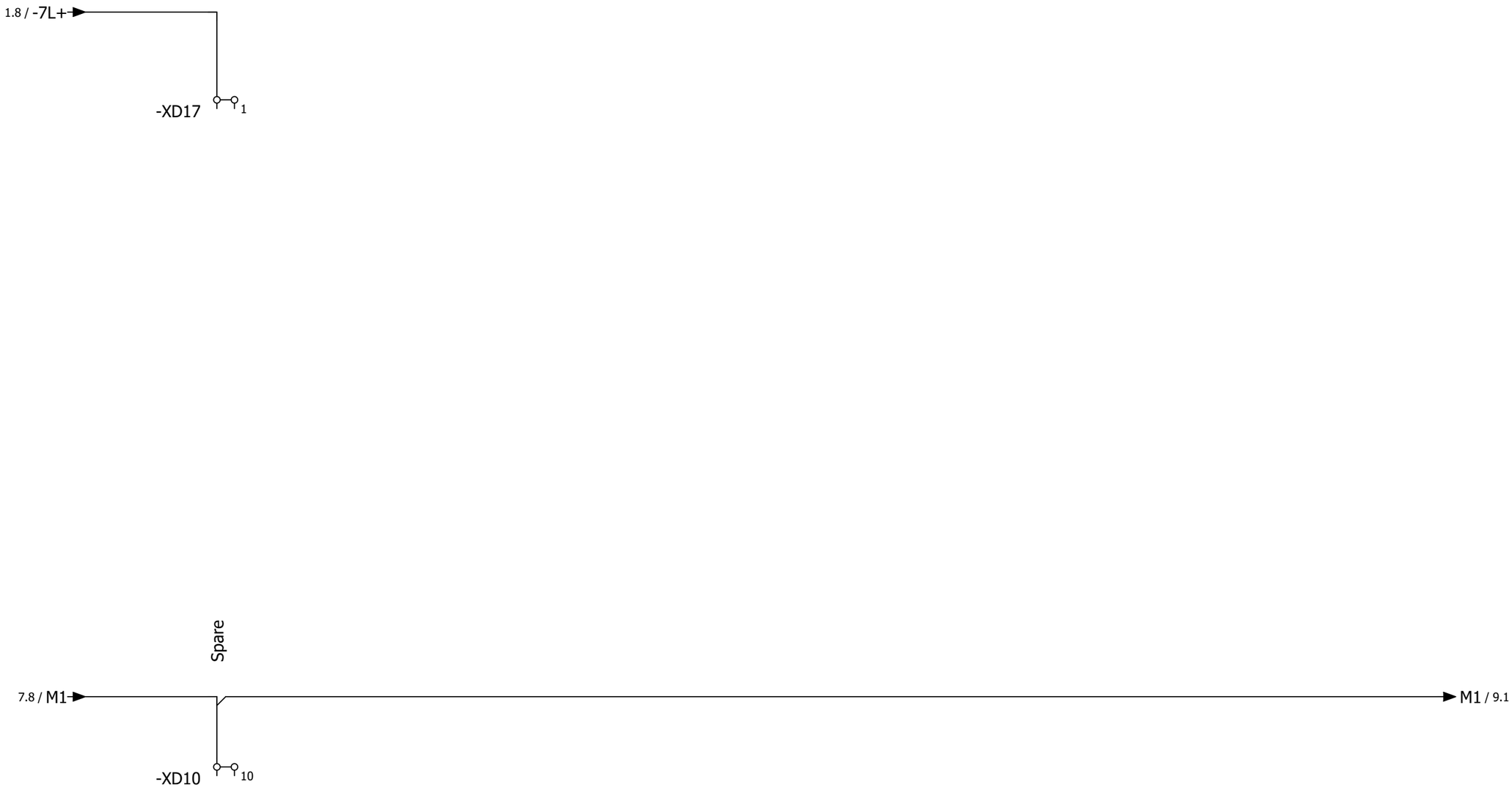

			Date	12/22/2022	Volvo Trucks North America	Valiant TMS	Power distribution 24VDC 7L+	Drawing name: =2V13&EFS_EL		= V1WC4	
			Ed.	MKLEPADLO						+ V1UC14	
			Appr		Sub-Floor Members			Document type: EFS	Project nr: 22-16146		Page 8
Modification	Date	Name	Original		Replacement of / Replaced by	Scale 1:1					614

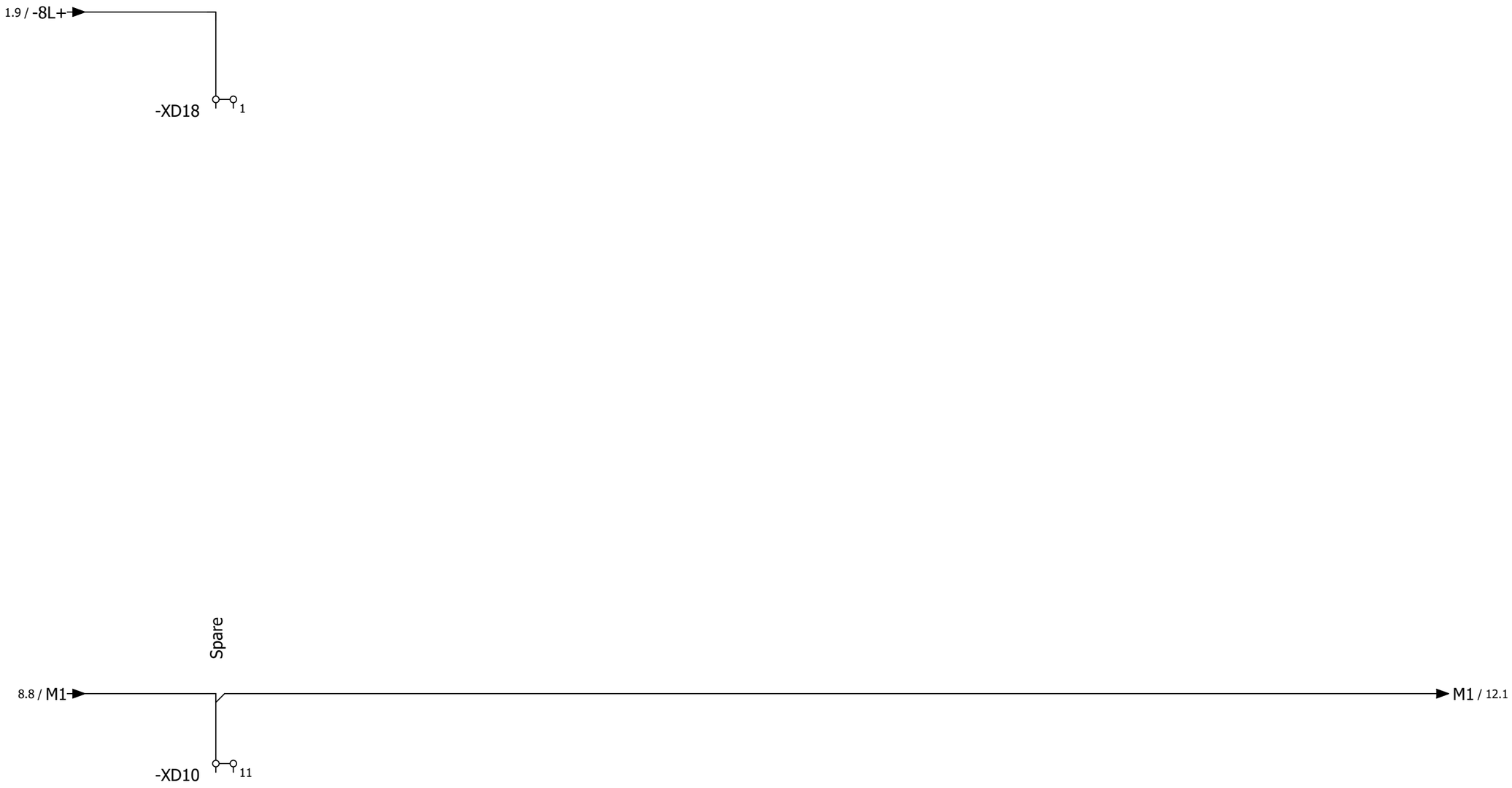

			Date	12/22/2022	Volvo Trucks North America	Valiant TMS	Power distribution 24VDC 8L+	Drawing name: =2V13&EFS_EL		= V1WC4	
			Ed.	MKLEPADLO						+ V1UC14	
			Appr		Sub-Floor Members			Document type: EFS	Project nr: 22-16146		Page 9
Modification	Date	Name	Original		Replacement of / Replaced by	Scale 1:1					614

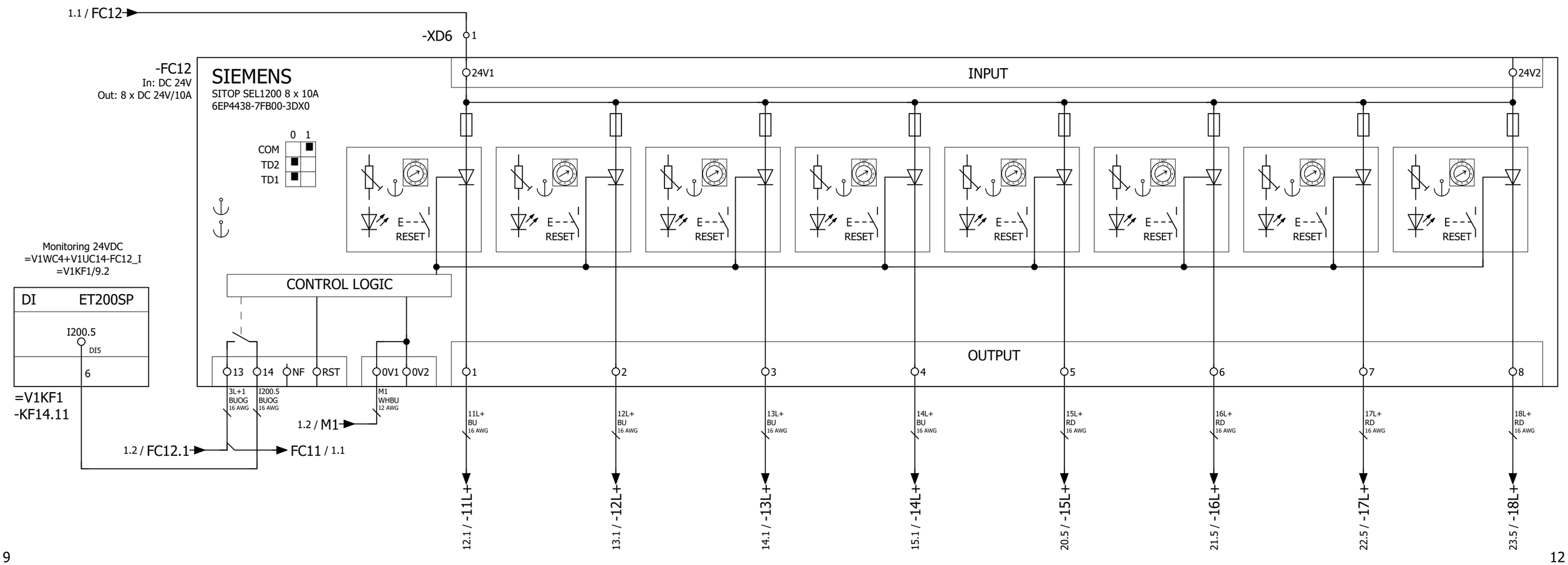

9 12

			Date	12/22/2022	Volvo Trucks North America	Valiant TMS	Power distribution 24VDC (Below Disconnect)	Drawing name: =2V13&EFS_EL	= V1WC4		
			Ed.	MKLEPADLO					+ V1UC14		
			Appr		Sub-Floor Members			Document type: EFS	Project nr: 22-16146	Page	11
Modification	Date	Name	Original		Replacement of	Replaced by	Scale 1:1				614

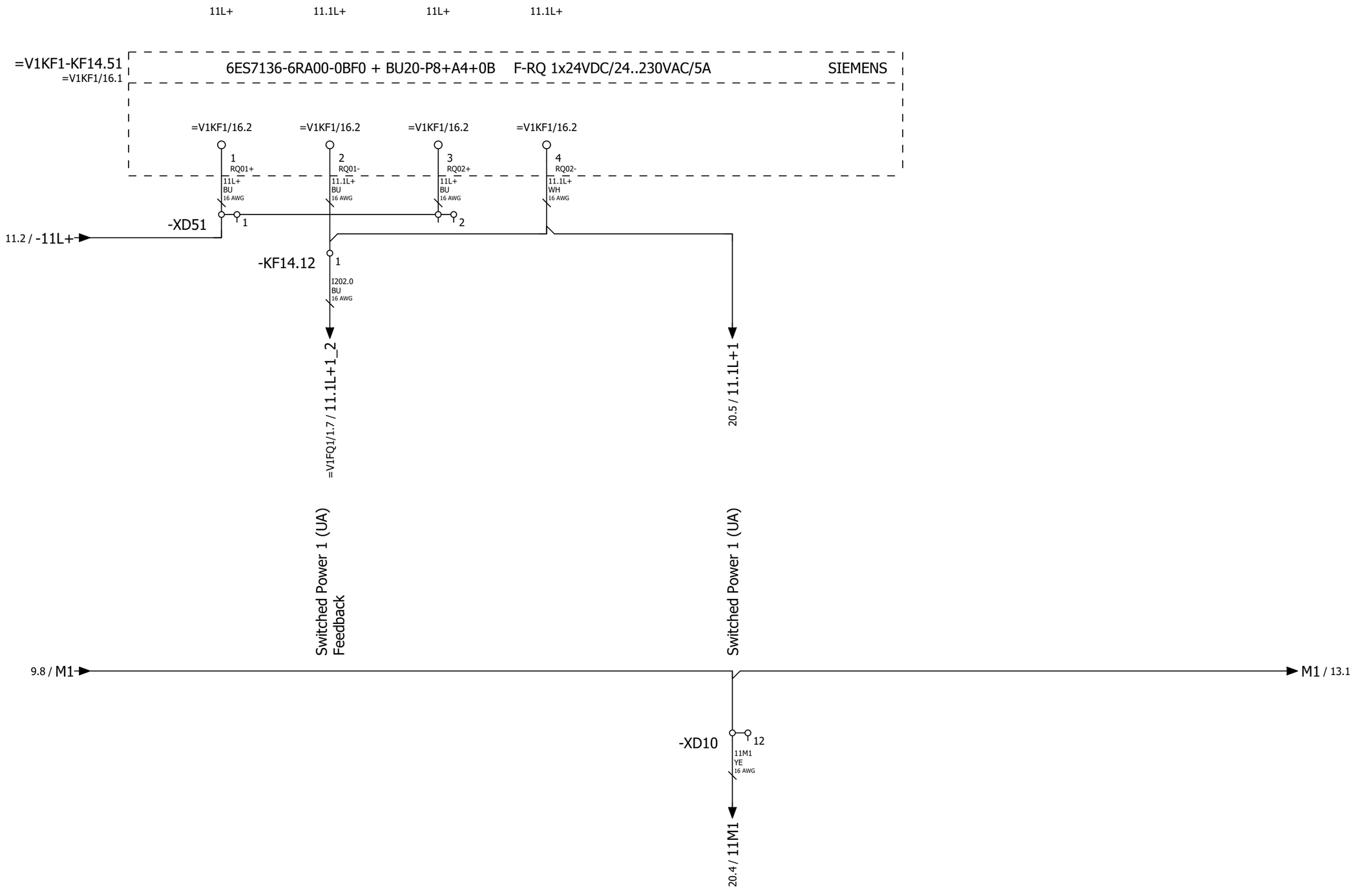

			Date	12/22/2022	Volvo Trucks North America	Valiant TMS	Power distribution 24VDC 11L+	Drawing name: =2V13&EFS_EL		= V1WC4	
			Ed.	MKLEPADLO						+ V1UC14	
			Appr		Sub-Floor Members			Document type: EFS	Project nr: 22-16146		Page 12
Modification	Date	Name	Original		Replacement of	Replaced by	Scale 1:1				614

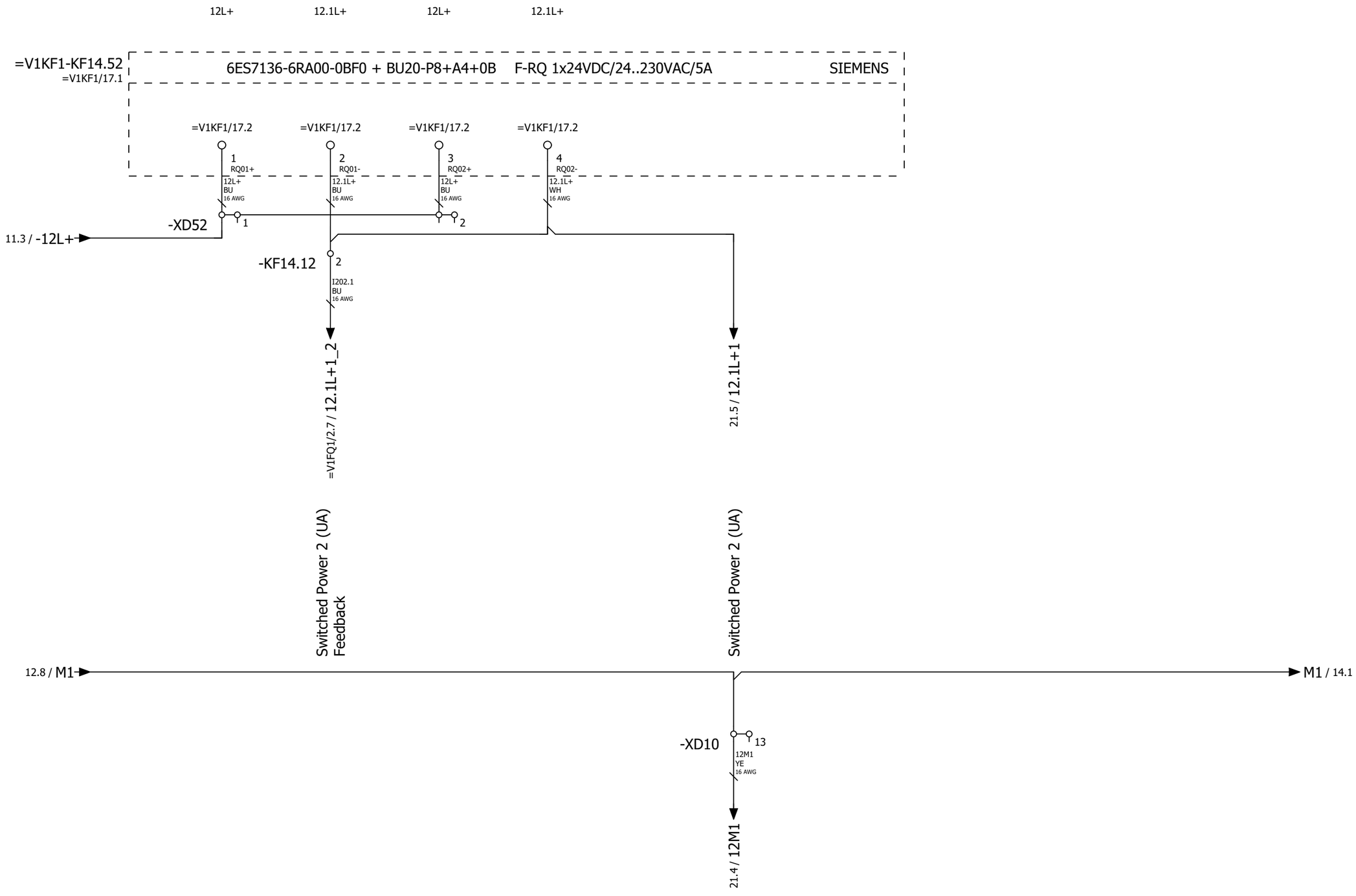

			Date	12/22/2022	Volvo Trucks North America	Valiant TMS	Power distribution 24VDC 12L+	Drawing name: =2V13&EFS_EL		= V1WC4	
			Ed.	MKLEPADLO						+ V1UC14	
			Appr		Sub-Floor Members			Document type: EFS	Project nr: 22-16146	Page	13
Modification	Date	Name	Original		Replacement of / Replaced by	Scale 1:1					614

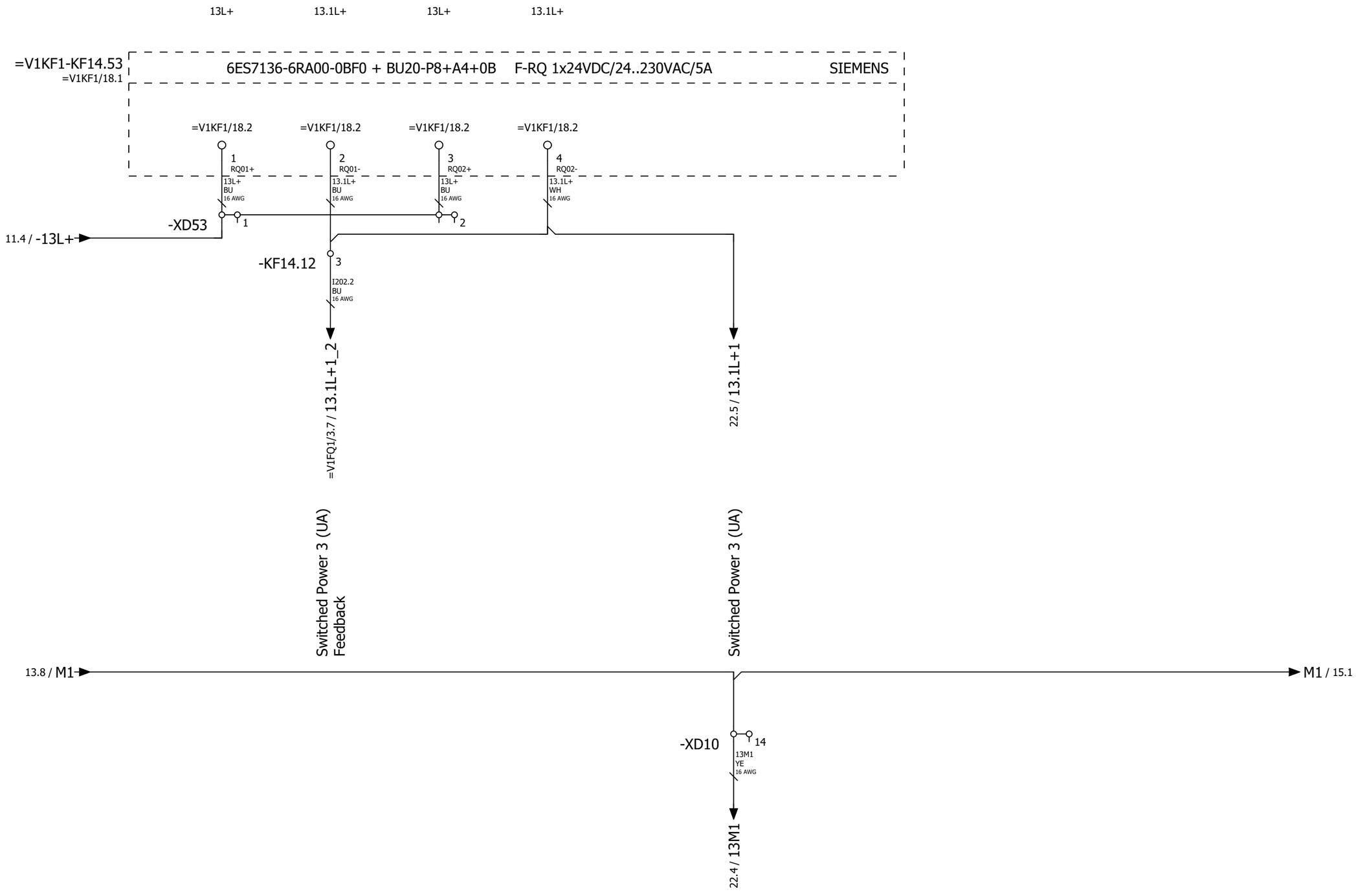

13

15

			Date	12/22/2022	Volvo Trucks North America	Valiant TMS	Power distribution 24VDC 13L+	Drawing name: =2V13&EFS_EL		= V1WC4	
			Ed.	MKLEPADLO						+ V1UC14	
			Appr		Sub-Floor Members			Document type: EFS	Project nr: 22-16146		Page 14
Modification	Date	Name	Original		Replacement of	Replaced by	Scale 1:1				614

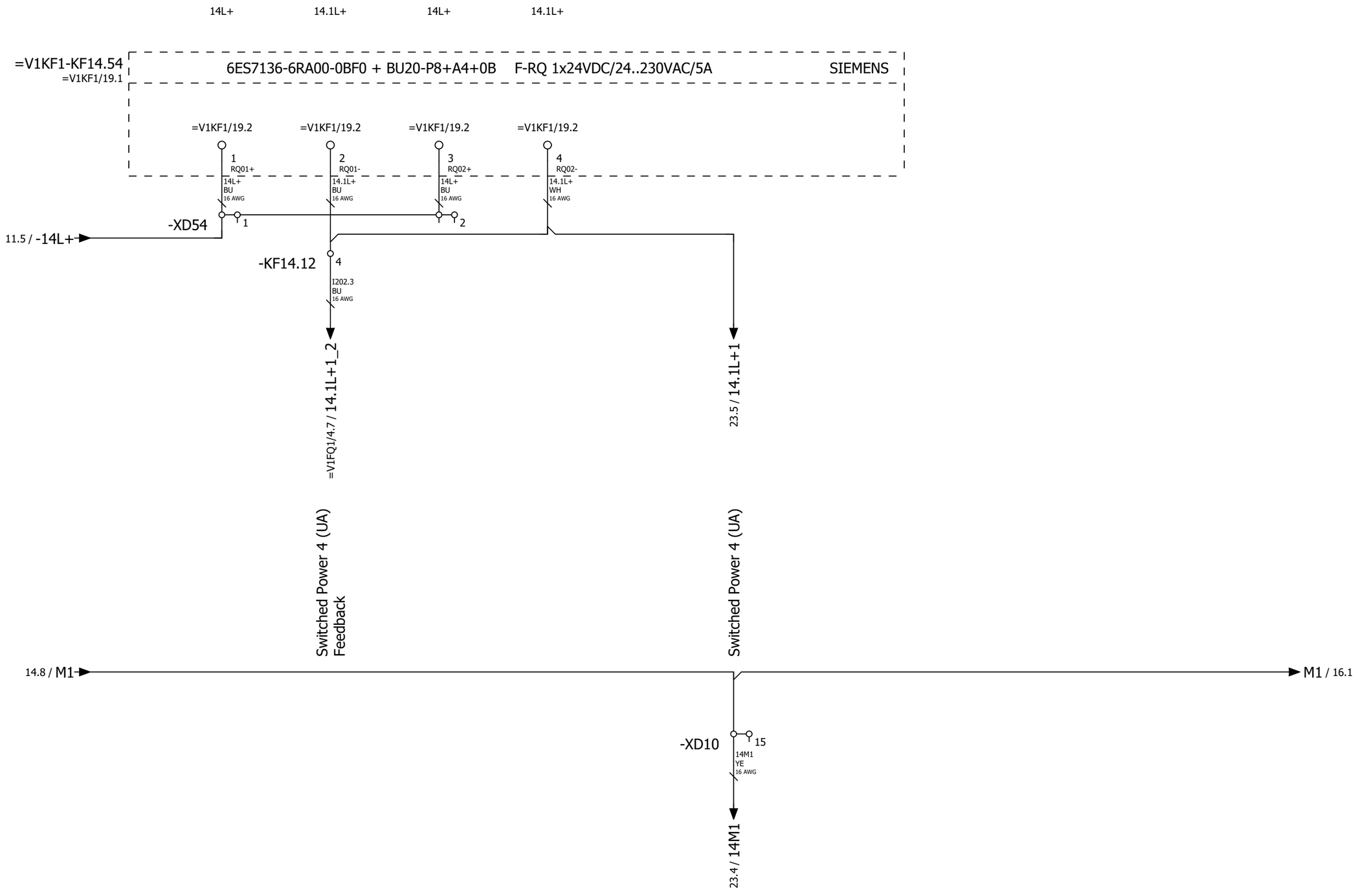

			Date	12/22/2022	Volvo Trucks North America		Valiant TMS	Power distribution 24VDC 14L+	Drawing name: =2V13&EFS_EL	= V1WC4	
			Ed.	MKLEPADLO						+ V1UC14	
			Appr		Sub-Floor Members				Document type: EFS	Project nr: 22-16146	Page 15 / 614
Modification	Date	Name	Original		Replacement of	Replaced by	Scale 1:1				

			Date	12/22/2022	Volvo Trucks North America	Valiant TMS	Power distribution 24VDC 15L+	Drawing name: =2V13&EFS_EL	= V1WC4
			Ed.	MKLEPADLO	Sub-Floor Members				+ V1UC14
			Appr			Scale 1:1		Document type: EFS / Project nr: 22-16146	Page 16 / 614
Modification	Date	Name	Original		Replacement of / Replaced by				

16

18

			Date	12/22/2022	Volvo Trucks North America	Valiant TMS	Power distribution 24VDC 16L+	Drawing name: =2V13&EFS_EL		= V1WC4	
			Ed.	MKLEPADLO						+ V1UC14	
			Appr		Sub-Floor Members			Document type: EFS	Project nr: 22-16146		Page 17
Modification	Date	Name	Original		Replacement of / Replaced by	Scale 1:1					614

17

19

			Date	12/22/2022	Volvo Trucks North America	Valiant TMS	Power distribution 24VDC 17L+	Drawing name: =2V13&EFS_EL		= V1WC4	
			Ed.	MKLEPADLO						+ V1UC14	
			Appr		Sub-Floor Members			Document type: EFS	Project nr: 22-16146	Page	18
Modification	Date	Name	Original		Replacement of / Replaced by	Scale 1:1					614

			Date	12/22/2022	Volvo Trucks North America	Valiant TMS	Power distribution 24VDC 18L+	Drawing name: =2V13&EFS_EL		= V1WC4	
			Ed.	MKLEPADLO						+ V1UC14	
			Appr		Sub-Floor Members			Document type: EFS	Project nr: 22-16146		Page 19
Modification	Date	Name	Original		Replacement of / Replaced by	Scale 1:1					614

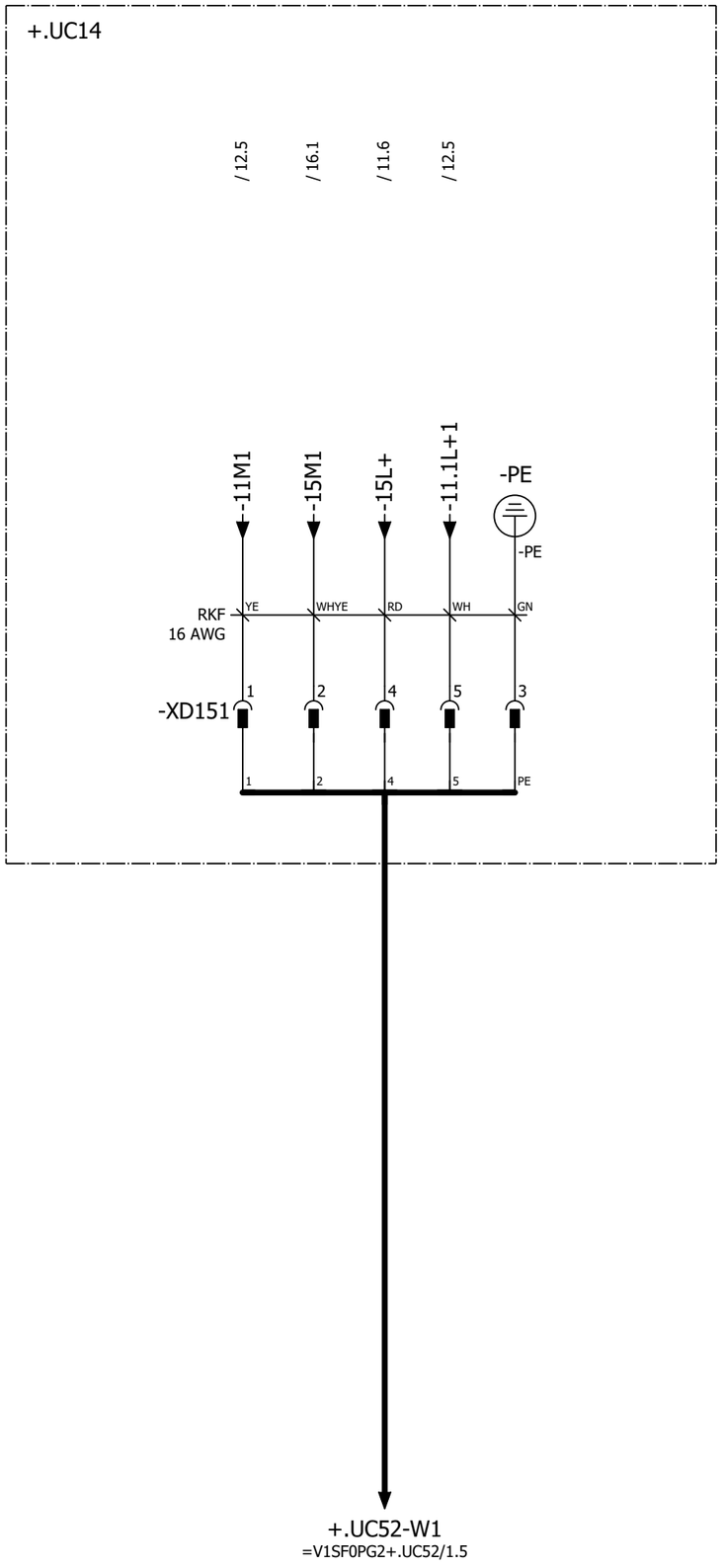

POWER IN / POWER OUT

Pin 1: 0 V UA
Pin 2: 0 V US
Pin 3: FE
Pin 4: +24 V US / 9 A
Pin 5: +24 V UA / 9 A

Pin #	WIRE	COLOR
Pin 1	-11M1	YE
Pin 2	-15M1	WHYE
Pin 3	GND	GN
Pin 4	-15L+	RD
Pin 5	-11.1L+1	WH

			Date	12/22/2022	Volvo Trucks North America	Valiant TMS	24VDC Switched Power 1	Drawing name: =2V13&EFS_EL	= V1WC4	
			Ed.	MKLEPADLO					+ V1UC14	
			Appr		Sub-Floor Members			Document type: EFS	Project nr: 22-16146	Page 20 / 614
Modification	Date	Name	Original		Replacement of / Replaced by	Scale 1:1				

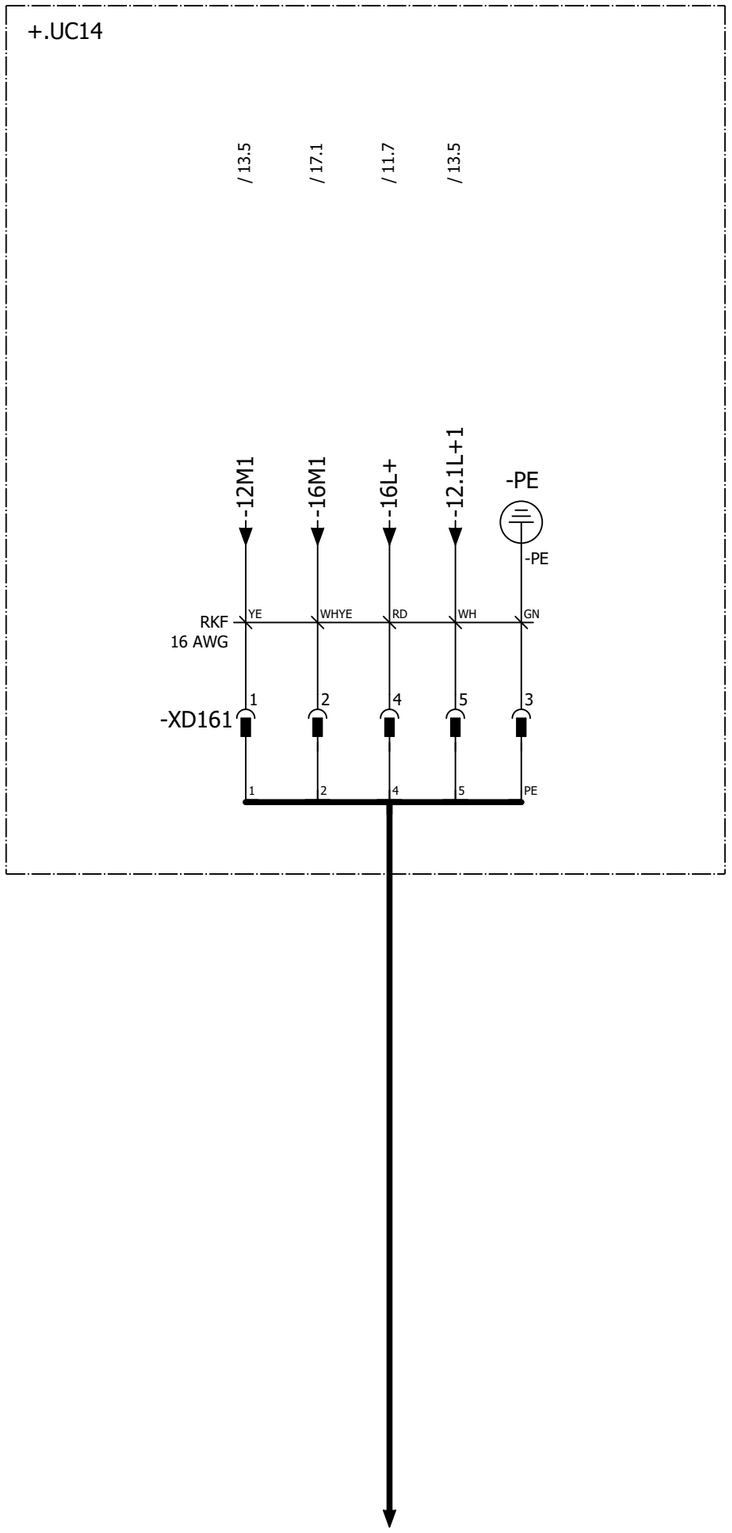

POWER IN / POWER OUT

Pin 1: 0 V UA
Pin 2: 0 V US
Pin 3: FE
Pin 4: +24 V US / 9 A
Pin 5: +24 V UA / 9 A

Pin #	WIRE	COLOR
Pin 1	-12M1	YE
Pin 2	-16M1	WHYE
Pin 3	GND	GN
Pin 4	-16L+	RD
Pin 5	-12.1L+1	WH

			Date	12/22/2022	Volvo Trucks North America	Valiant TMS	24VDC Switched Power 2	Drawing name: =2V13&EFS_EL	= V1WC4	
			Ed.	MKLEPADLO					+ V1UC14	
			Appr		Sub-Floor Members			Document type: EFS	Project nr: 22-16146	Page 21 / 614
Modification	Date	Name	Original		Replacement of / Replaced by	Scale 1:1				

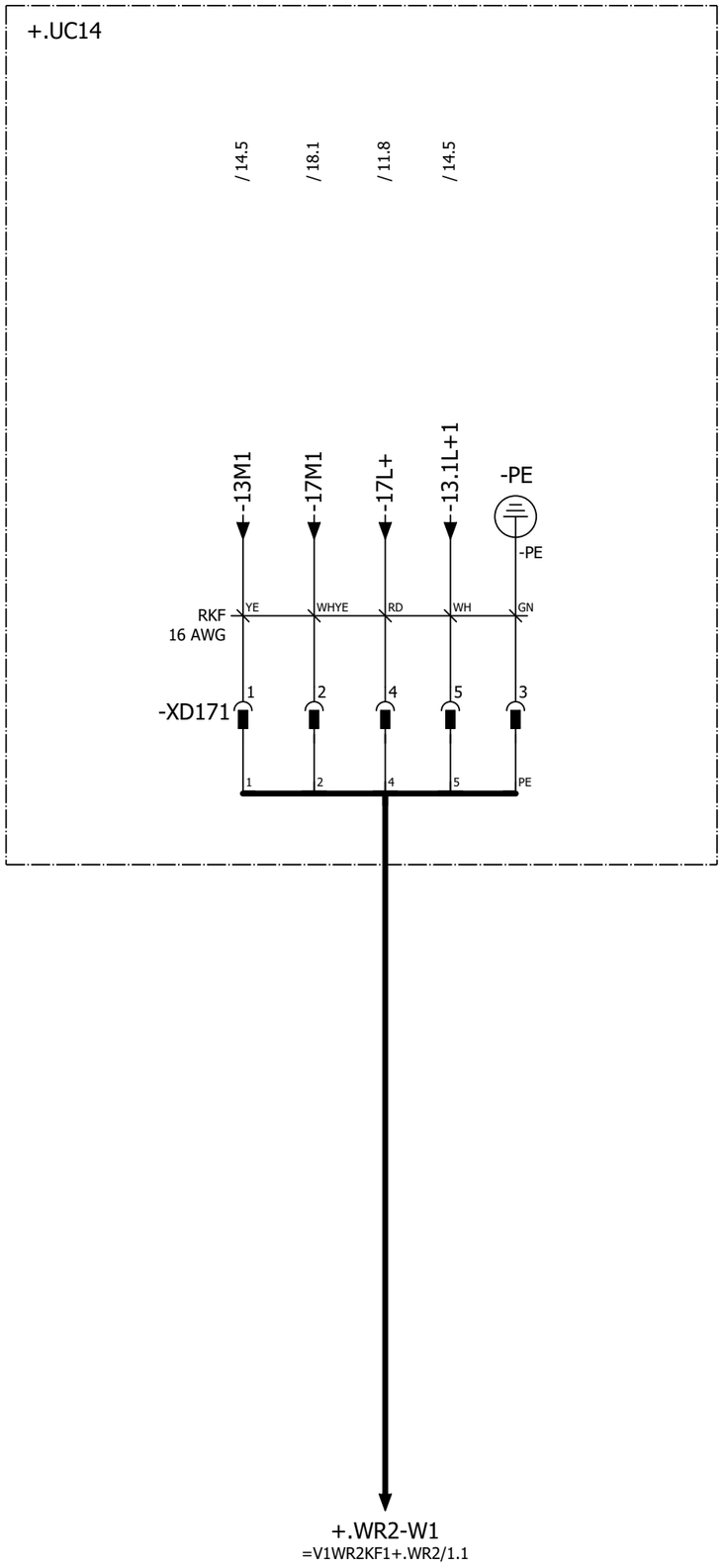

POWER IN / POWER OUT

Pin 1: 0 V UA
Pin 2: 0 V US
Pin 3: FE
Pin 4: +24 V US / 9 A
Pin 5: +24 V UA / 9 A

Pin #	WIRE	COLOR
Pin 1	-13M1	YE
Pin 2	-17M1	WHYE
Pin 3	GND	GN
Pin 4	-17L+	RD
Pin 5	-13.1L+1	WH

			Date	12/22/2022	Volvo Trucks North America		Valiant TMS	24VDC Switched Power 3	Drawing name: =2V13&EFS_EL	= V1WC4	
			Ed.	MKLEPADLO						+ V1UC14	
			Appr		Sub-Floor Members				Document type: EFS	Project nr: 22-16146	Page 22
Modification	Date	Name	Original		Replacement of	Replaced by	Scale 1:1				614

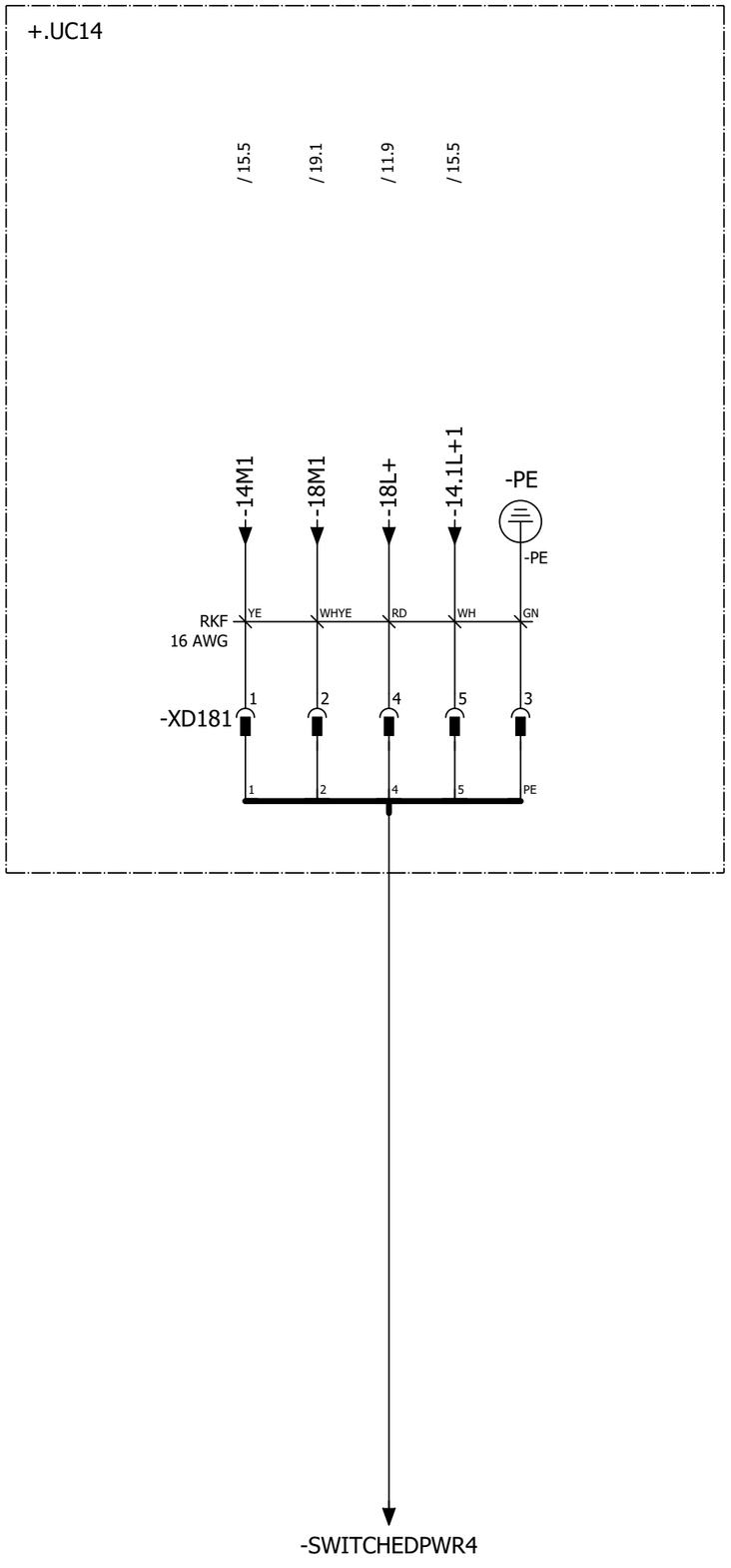

POWER IN / POWER OUT

Pin 1: 0 V UA
Pin 2: 0 V US
Pin 3: FE
Pin 4: +24 V US / 9 A
Pin 5: +24 V UA / 9 A

Pin #	WIRE	COLOR
Pin 1	-14M1	YE
Pin 2	-18M1	WHYE
Pin 3	GND	GN
Pin 4	-18L+	RD
Pin 5	-14.1L+1	WH

22

+.UC46/1

			Date	12/22/2022	Volvo Trucks North America	Valiant TMS	24VDC Switched Power 4	Drawing name: =2V13&EFS_EL	= V1WC4	
			Ed.	MKLEPADLO					+ V1UC14	
			Appr		Sub-Floor Members			Document type: EFS	Project nr: 22-16146	Page 23 / 614
Modification	Date	Name	Original		Replacement of / Replaced by	Scale 1:1				

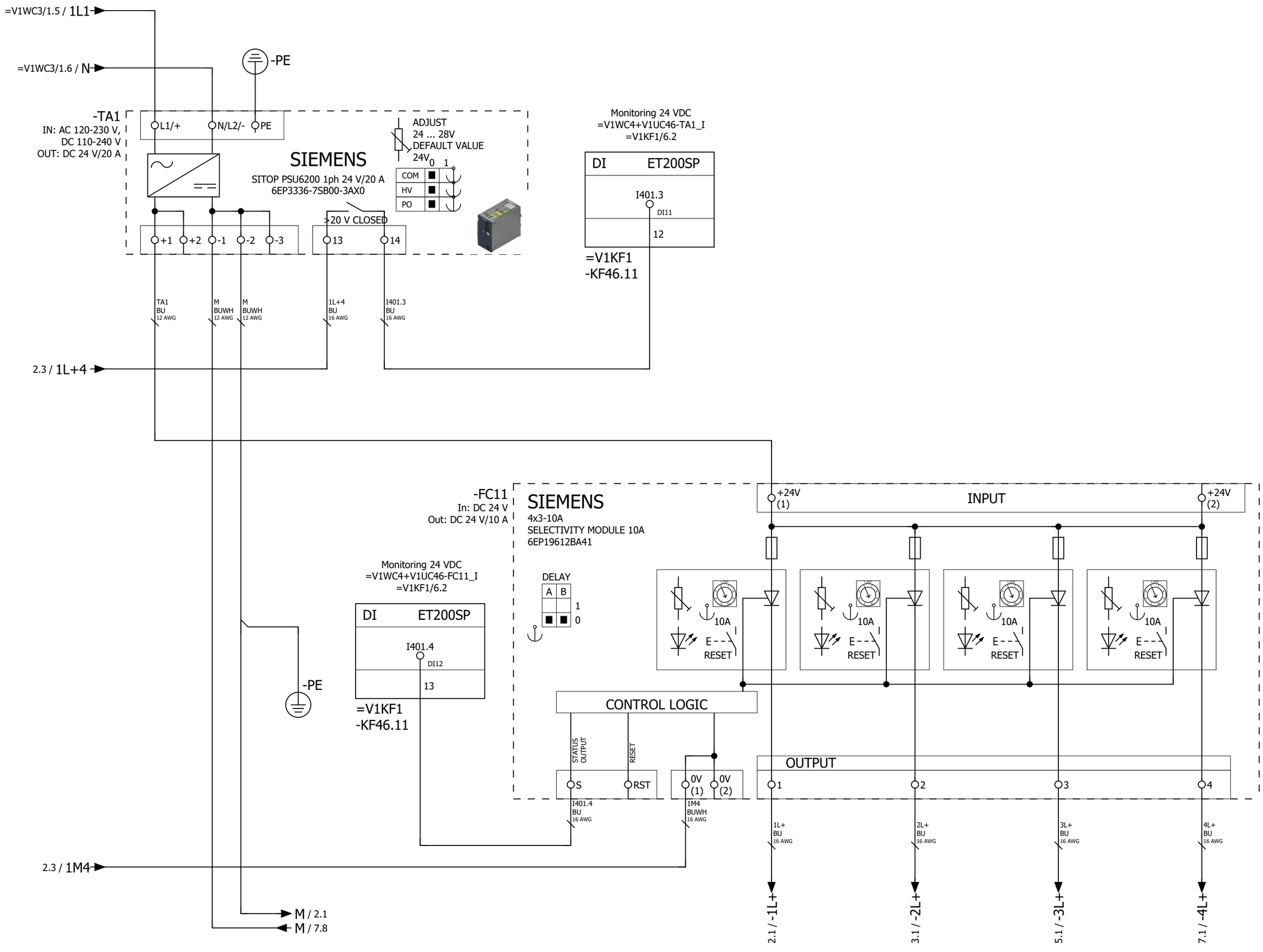

+.UC14/23

2

			Date	12/22/2022	Volvo Trucks North America	Valiant TMS	Power distribution 24VDC for Inputs	Drawing name: =2V13&EFS_EL	= V1WC4	
			Ed.	MKLEPADLO					+ V1UC46	
			Appr		Sub-Floor Members			Document type: EFS	Project nr: 22-16146	Page 1
Modification	Date	Name	Original		Replacement of	Replaced by	Scale 1:1			614

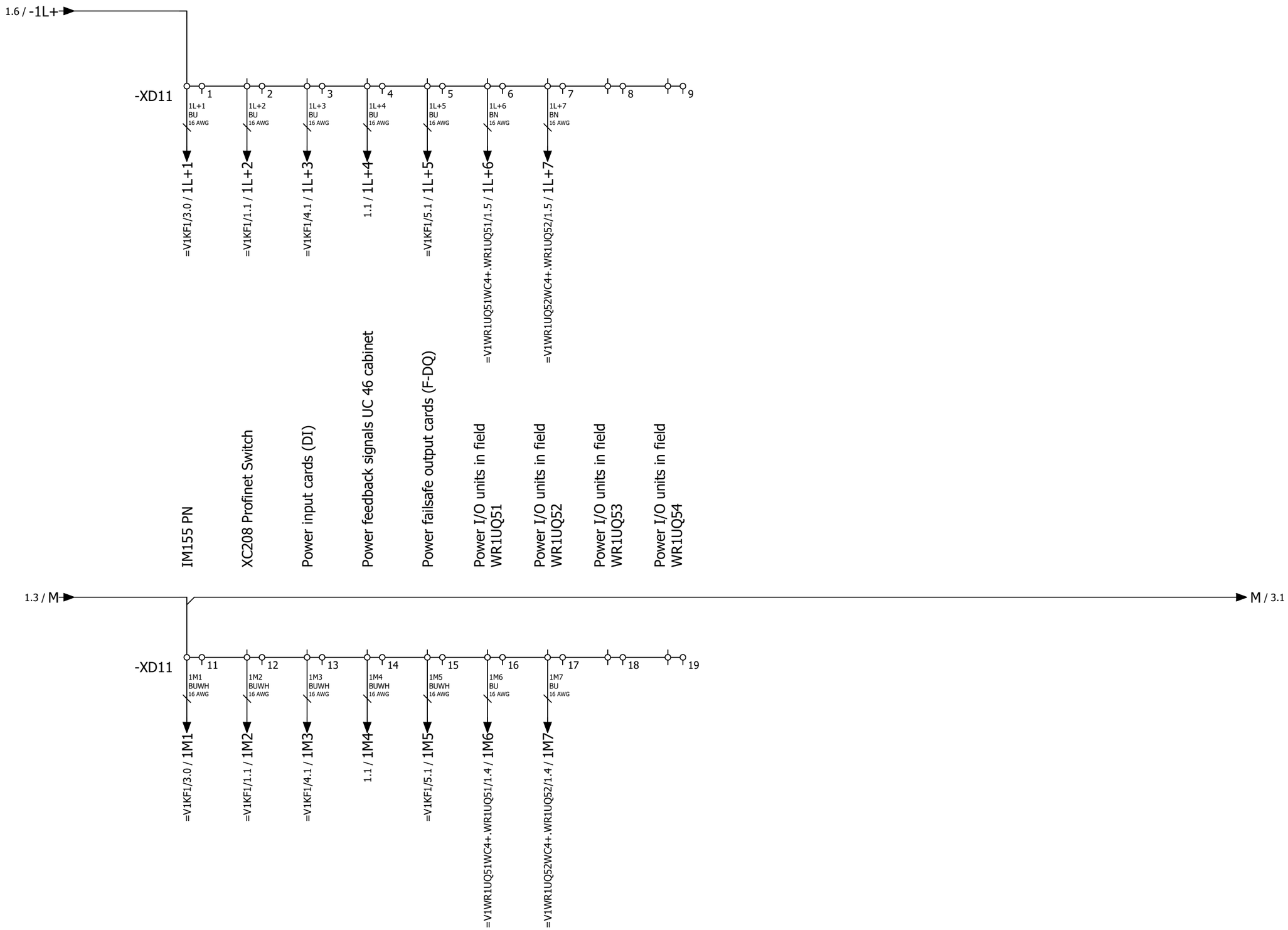

			Date	12/22/2022	Volvo Trucks North America		Valiant TMS	Power distribution 24VDC 1L+	Drawing name: =2V13&EFS_EL	= V1WC4	
			Ed.	MKLEPADLO						+ V1UC46	
			Appr		Sub-Floor Members				Document type: EFS	Project nr: 22-16146	Page 2
Modification	Date	Name	Original		Replacement of	Replaced by	Scale 1:1				614

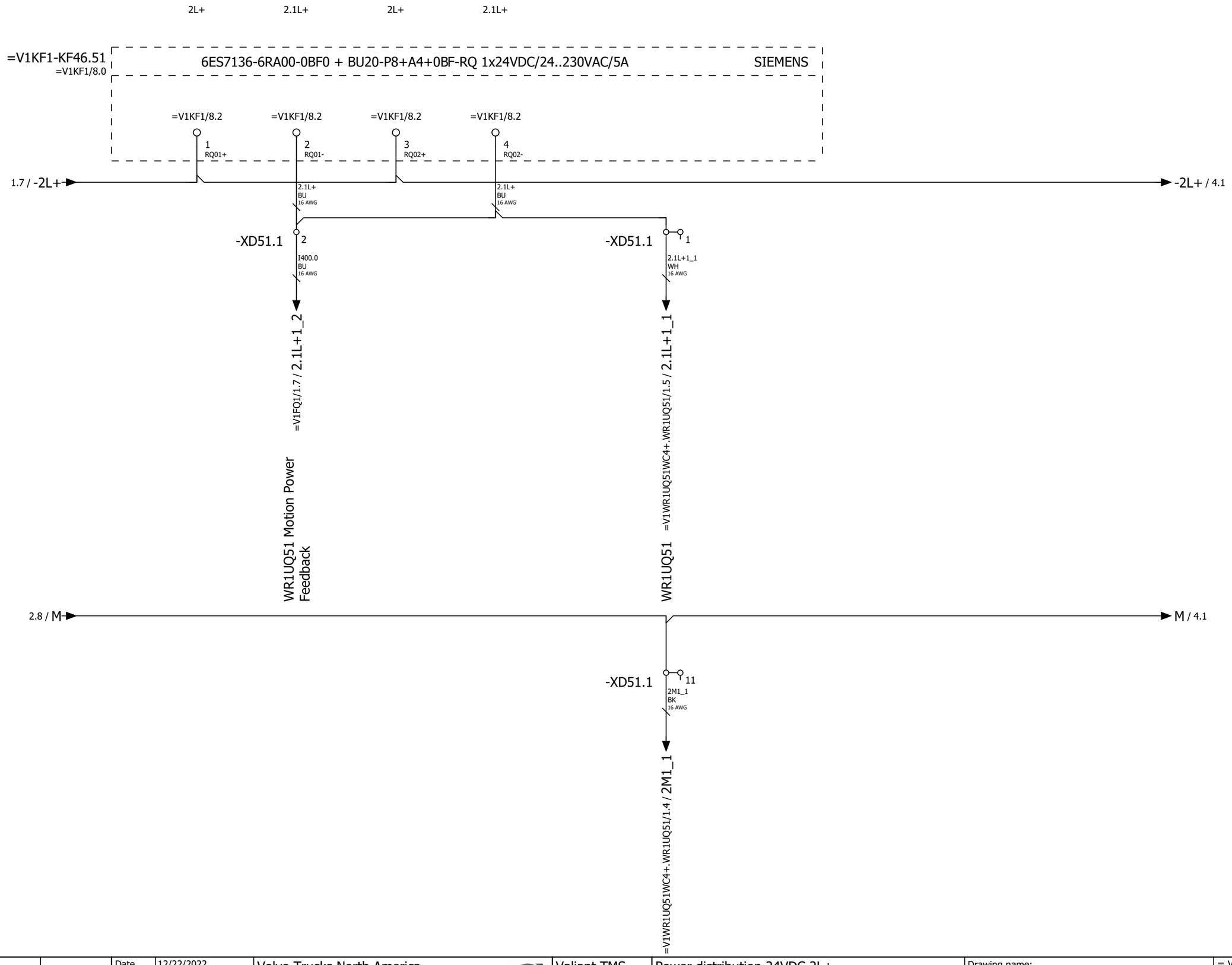

2

4

			Date	12/22/2022	Volvo Trucks North America	Valiant TMS	Power distribution 24VDC 2L+	Drawing name: =2V13&EFS_EL		= V1WC4	
			Ed.	MKLEPADLO	Sub-Floor Members					+ V1UC46	
			Appr					Document type: EFS	Project nr: 22-16146		Page 3
Modification	Date	Name	Original		Replacement of	Replaced by	Scale 1:1				614

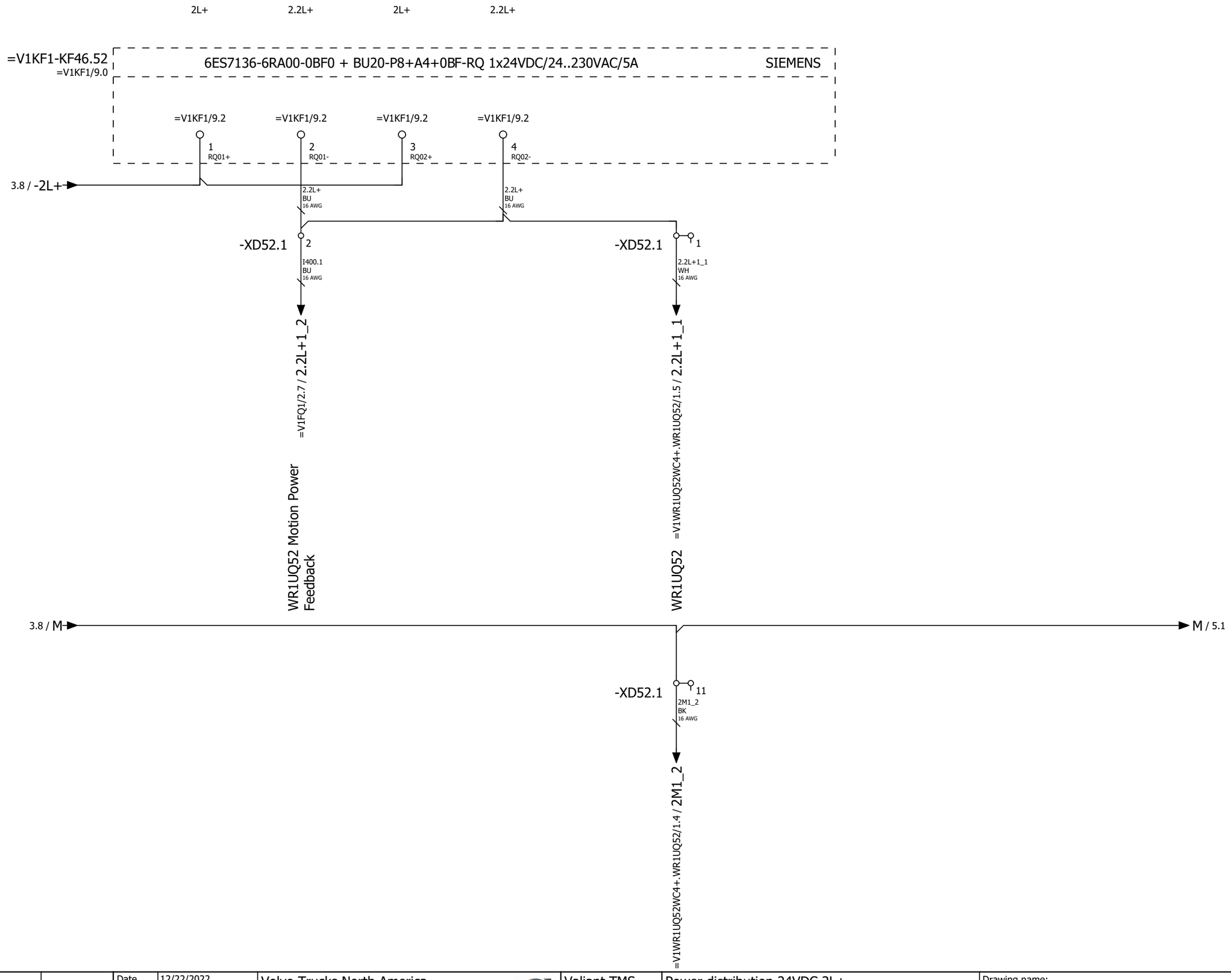

3

5

			Date	12/22/2022	Volvo Trucks North America	Valiant TMS	Power distribution 24VDC 2L+	Drawing name: =2V13&EFS_EL		= V1WC4	
			Ed.	MKLEPADLO	Sub-Floor Members					+ V1UC46	
			Appr					Document type: EFS	Project nr: 22-16146		Page 4
Modification	Date	Name	Original		Replacement of	Replaced by	Scale 1:1				614

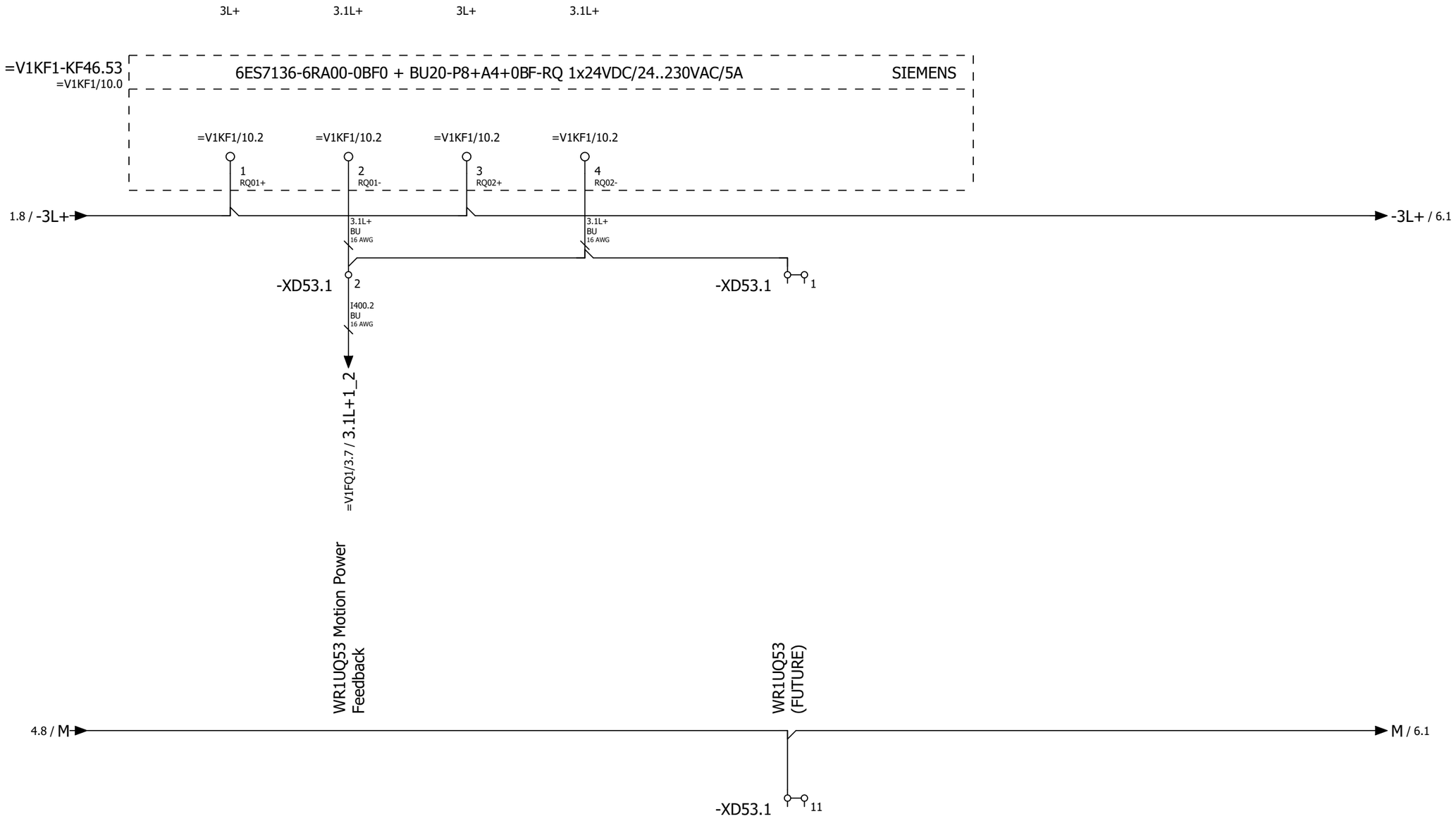

4

6

			Date	12/22/2022	Volvo Trucks North America	Valiant TMS	Power distribution 24VDC 3L+	Drawing name: =2V13&EFS_EL		= V1WC4	
			Ed.	MKLEPADLO	Sub-Floor Members					+ V1UC46	
			Appr					Document type: EFS	Project nr: 22-16146		Page 5
Modification	Date	Name	Original		Replacement of	Replaced by	Scale 1:1				614

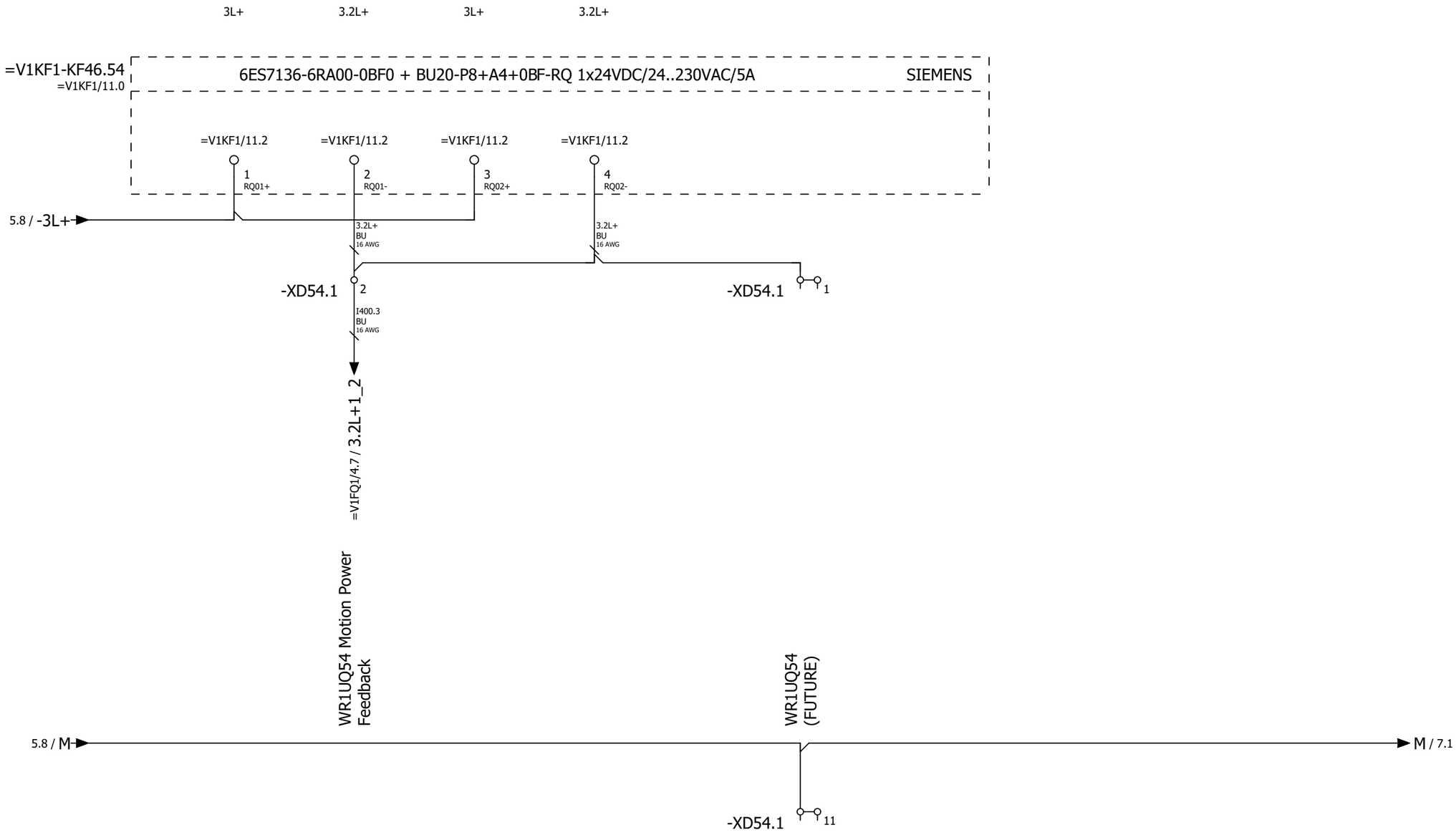

5

7

			Date	12/22/2022	Volvo Trucks North America	Valiant TMS	Power distribution 24VDC 3L+	Drawing name: =2V13&EFS_EL		= V1WC4	
			Ed.	MKLEPADLO	Sub-Floor Members					+ V1UC46	
			Appr					Document type: EFS	Project nr: 22-16146		Page 6
Modification	Date	Name	Original		Replacement of	Replaced by	Scale 1:1				614

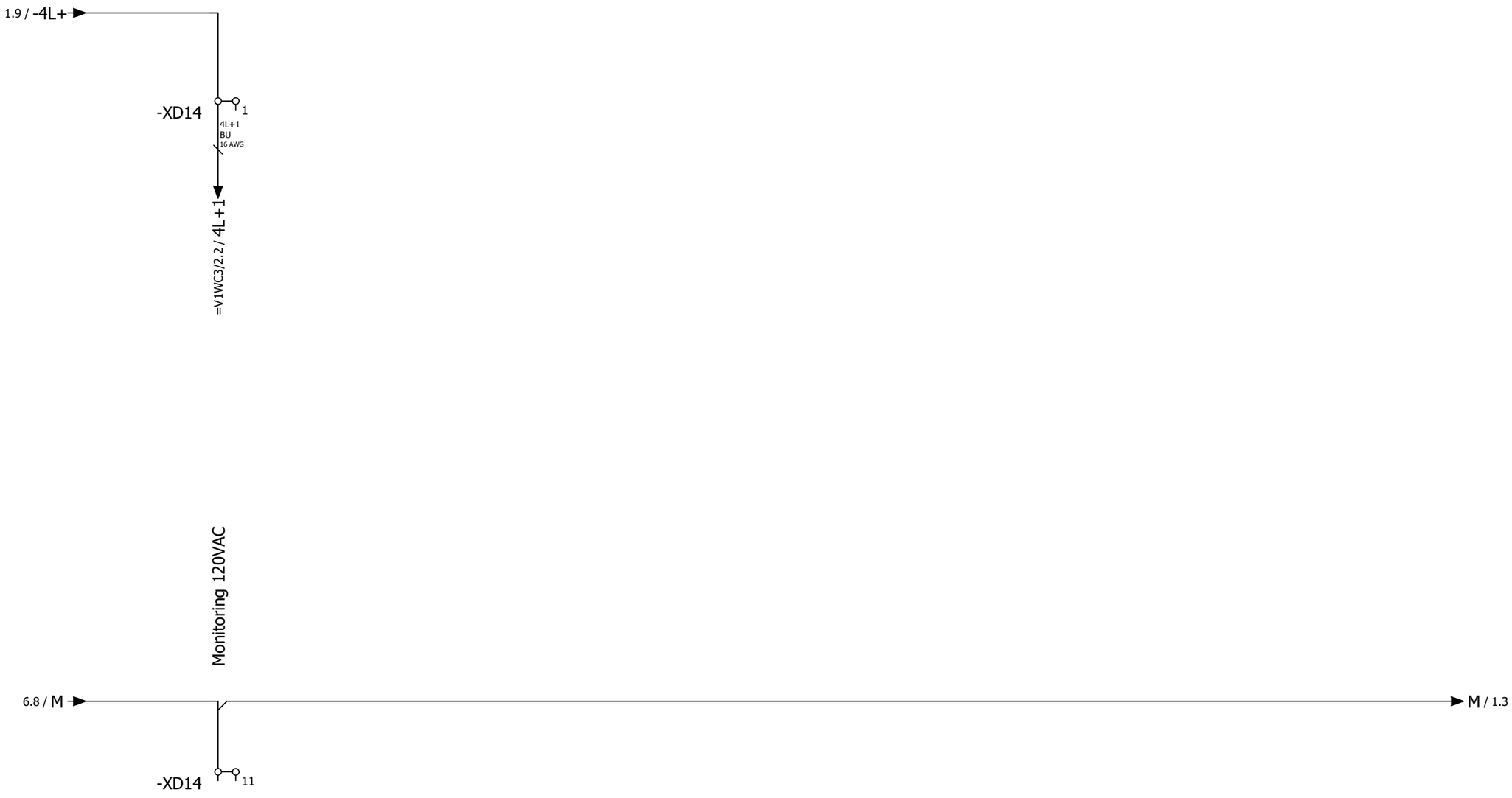

+.UC47/1

			Date	12/22/2022	Volvo Trucks North America		Valiant TMS	Power distribution 24VDC 4L+	Drawing name: =2V13&EFS_EL		= V1WC4
			Ed.	MKLEPADLO							+ V1UC46
			Appr		Sub-Floor Members				Document type: EFS	Project nr: 22-16146	Page 7
Modification	Date	Name	Original		Replacement of	Replaced by	Scale 1:1				614

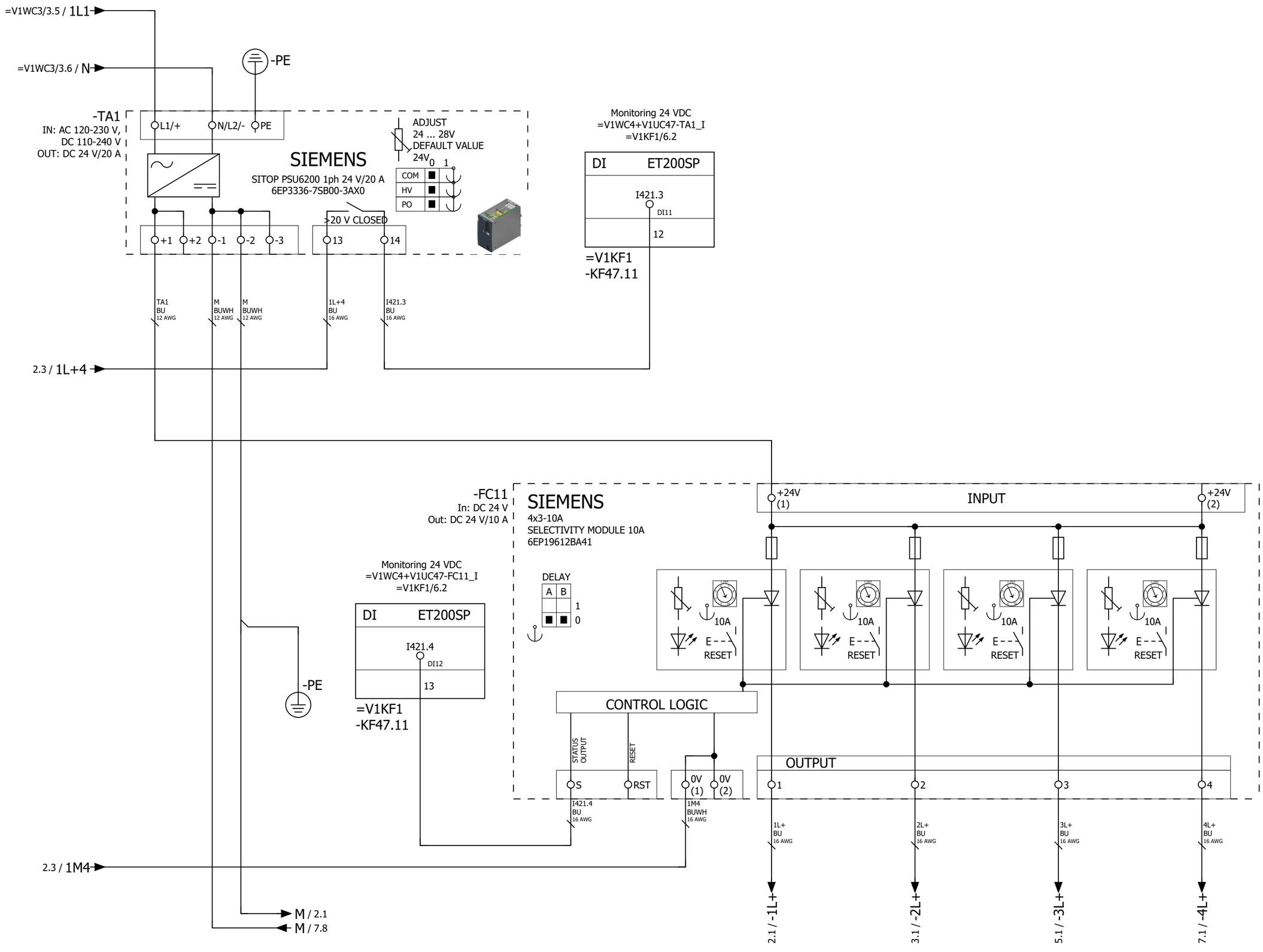

+.UC46/7

2

			Date	12/22/2022	Volvo Trucks North America	Valiant TMS	Power distribution 24VDC for Inputs	Drawing name: =2V13&EFS_EL	= V1WC4	
			Ed.	MKLEPADLO					+ V1UC47	
			Appr		Sub-Floor Members			Document type: EFS	Project nr: 22-16146	Page 1
Modification	Date	Name	Original		Replacement of	Replaced by	Scale 1:1			614

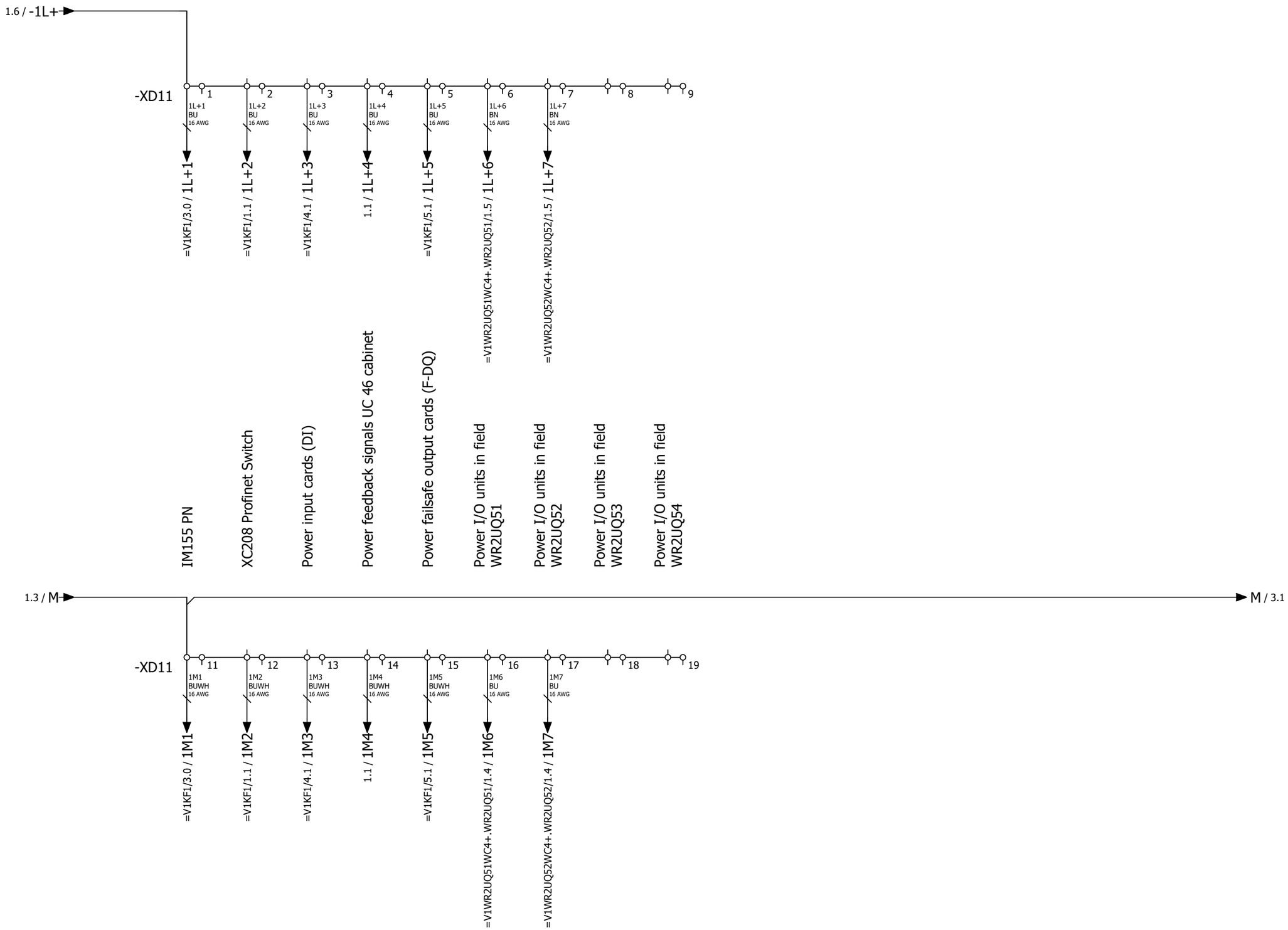

1 3

			Date	12/22/2022	Volvo Trucks North America		Valiant TMS	Power distribution 24VDC 1L+	Drawing name: =2V13&EFS_EL	= V1WC4	
			Ed.	MKLEPADLO						+ V1UC47	
			Appr		Sub-Floor Members				Document type: EFS	Project nr: 22-16146	Page 2
Modification	Date	Name	Original		Replacement of	Replaced by	Scale 1:1				614

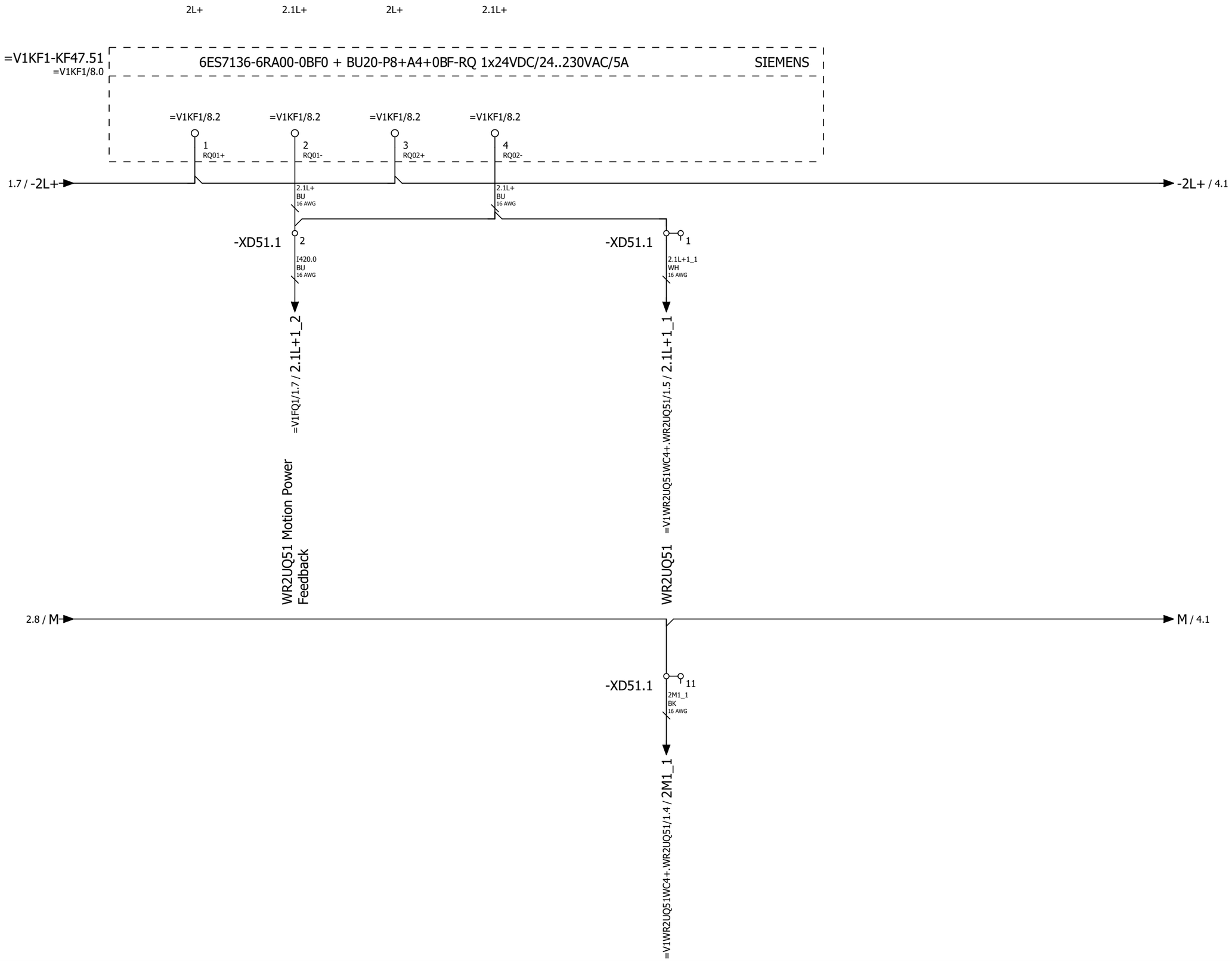

2

4

			Date	12/22/2022	Volvo Trucks North America	Valiant TMS	Power distribution 24VDC 2L+	Drawing name: =2V13&EFS_EL		= V1WC4	
			Ed.	MKLEPADLO	Sub-Floor Members					+ V1UC47	
			Appr					Document type: EFS	Project nr: 22-16146		Page 3
Modification	Date	Name	Original		Replacement of	Replaced by	Scale 1:1				614

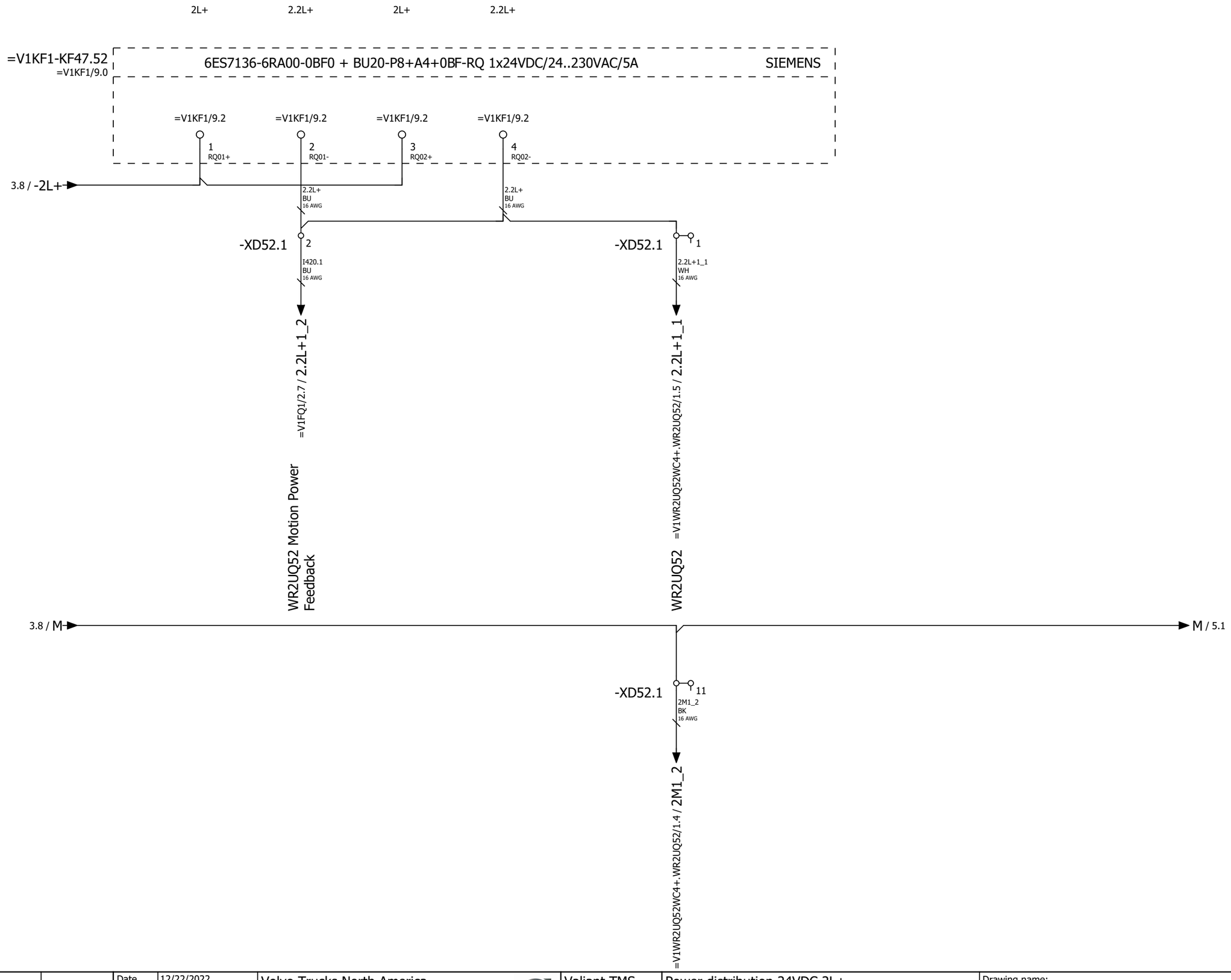

3 5

			Date	12/22/2022	Volvo Trucks North America	Valiant TMS	Power distribution 24VDC 2L+	Drawing name: =2V13&EFS_EL		= V1WC4	
			Ed.	MKLEPADLO	Sub-Floor Members					+ V1UC47	
			Appr					Document type: EFS	Project nr: 22-16146		Page 4
Modification	Date	Name	Original		Replacement of	Replaced by	Scale 1:1				614

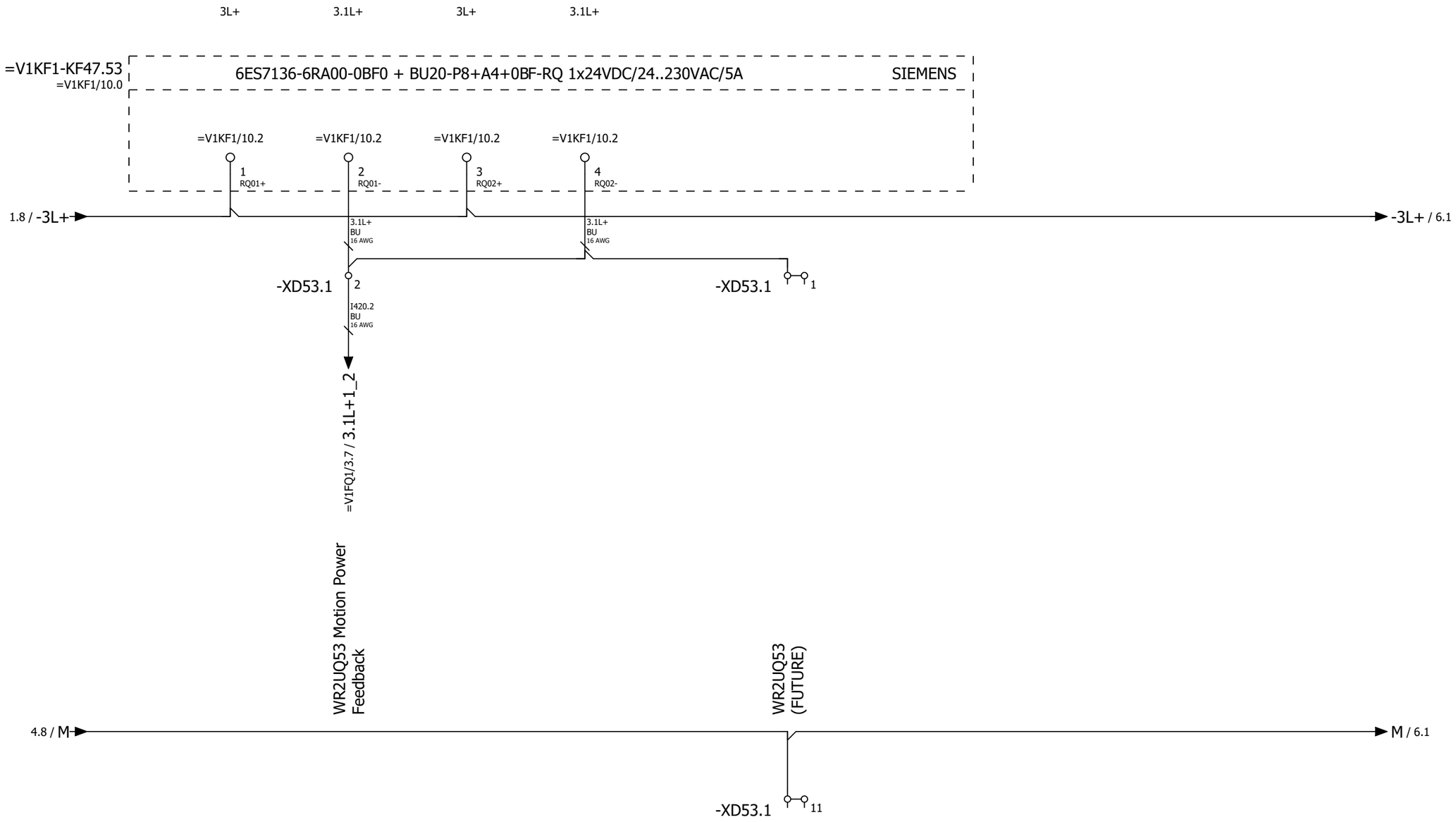

4

6

			Date	12/22/2022	Volvo Trucks North America	Valiant TMS	Power distribution 24VDC 3L+	Drawing name: =2V13&EFS_EL		= V1WC4	
			Ed.	MKLEPADLO	Sub-Floor Members					+ V1UC47	
			Appr			Scale 1:1		Document type: EFS	Project nr: 22-16146		Page 5 / 614
Modification	Date	Name	Original		Replacement of	Replaced by					

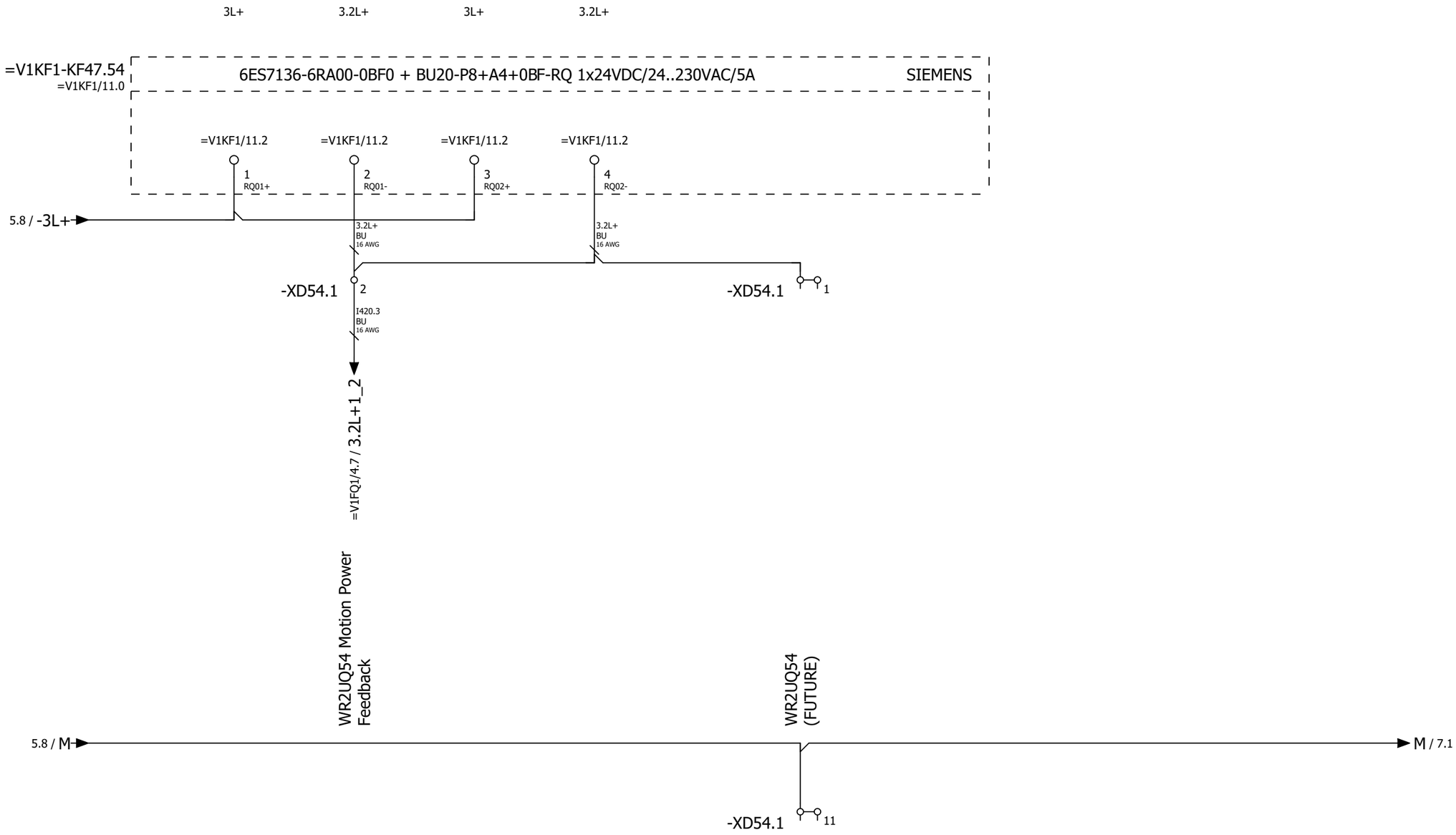

5

7

			Date	12/22/2022	Volvo Trucks North America	Valiant TMS	Power distribution 24VDC 3L+	Drawing name: =2V13&EFS_EL		= V1WC4	
			Ed.	MKLEPADLO	Sub-Floor Members					+ V1UC47	
			Appr					Document type: EFS	Project nr: 22-16146		Page 6
Modification	Date	Name	Original		Replacement of	Replaced by	Scale 1:1				614

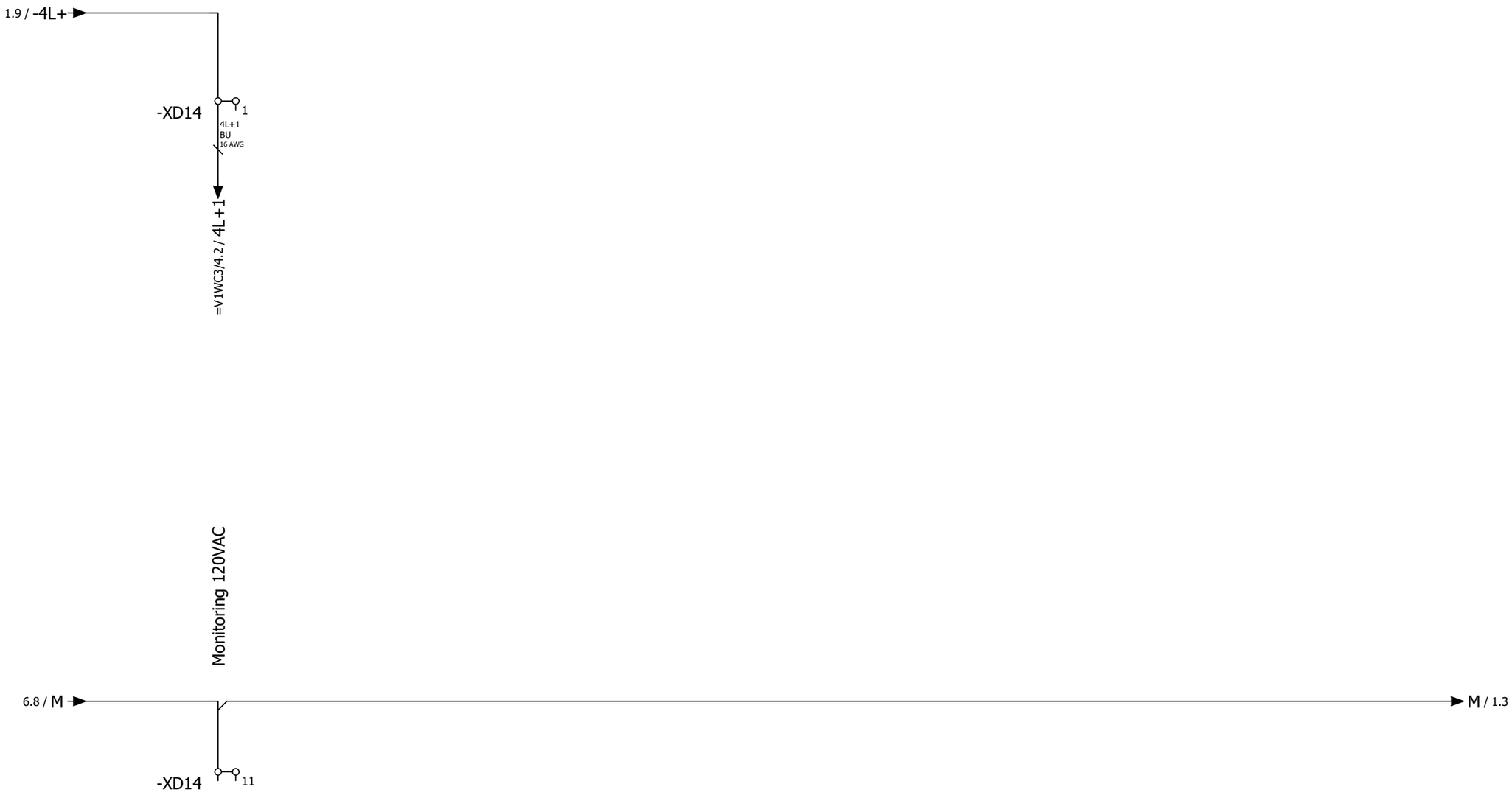

=V1WR1BG0+.WR1/1

			Date	12/22/2022	Volvo Trucks North America	Valiant TMS	Power distribution 24VDC 4L+	Drawing name: =2V13&EFS_EL		= V1WC4	
			Ed.	MKLEPADLO						+ V1UC47	
			Appr		Sub-Floor Members			Document type: EFS	Project nr: 22-16146		Page 7
Modification	Date	Name	Original		Replacement of / Replaced by	Scale 1:1					614

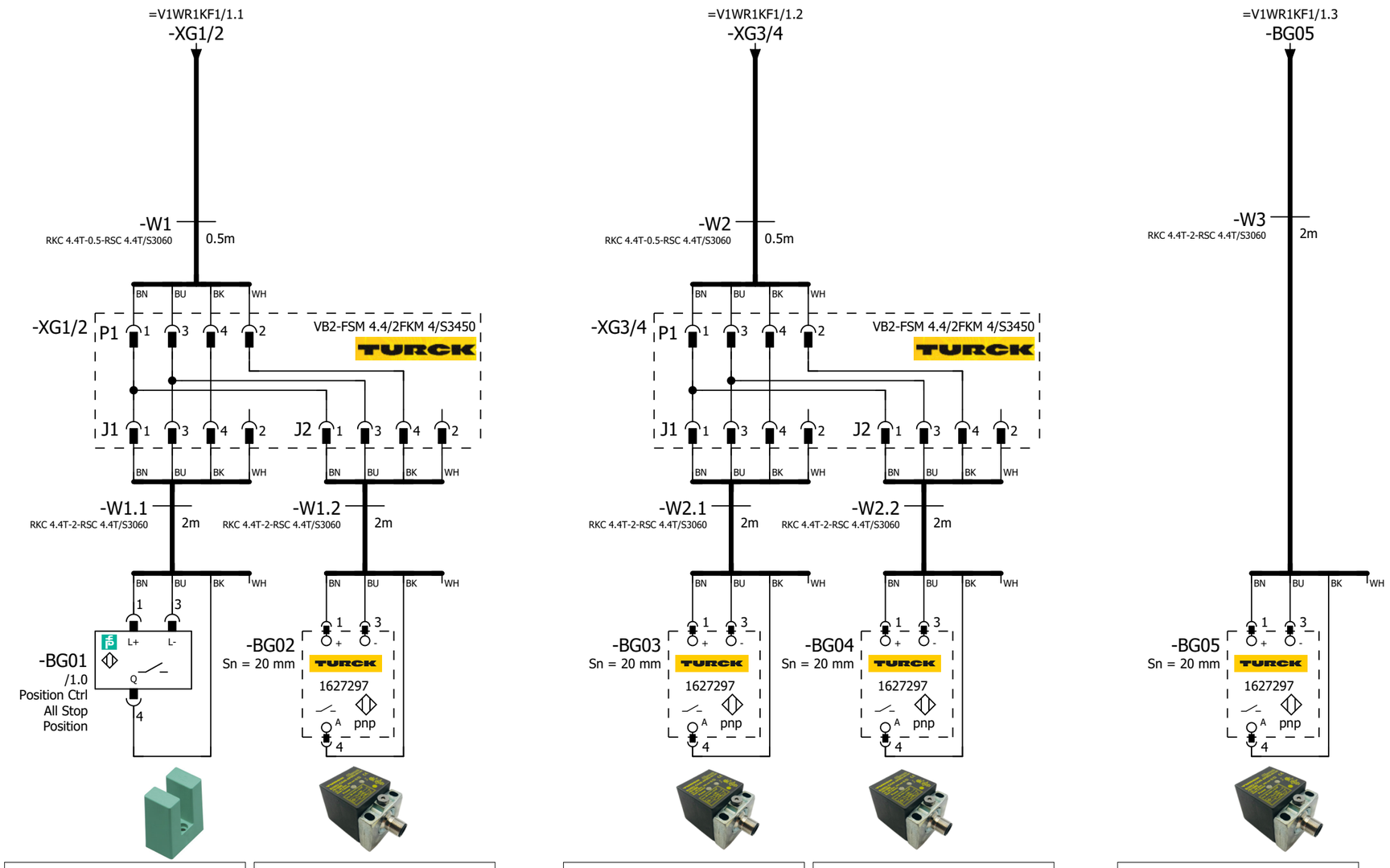

=V1WR1 -BG01 Position Ctrl All Stop Position	=V1WR1 -BG02 Position Control P1 Position	=V1WR1 -BG03 Position Control P2 Position	=V1WR1 -BG04 Position Control P3 Position	=V1WR1 -BG05 Position Control P4 Position

=V1WC4+.UC47/7

=V1WR1KF1/1

			Date	12/22/2022	Volvo Trucks North America	Valiant TMS	TURNTABLE POSITION SENSORS	Drawing name: =2V13&EFS_EL	= V1WR1BG0
			Ed.	MKLEPADLO					+ V1WR1
			Appr		Sub-Floor Members			Document type: EFS	Project nr: 22-16146
Modification	Date	Name	Original		Replacement of / Replaced by	Scale 1:1			Page 1 / 614

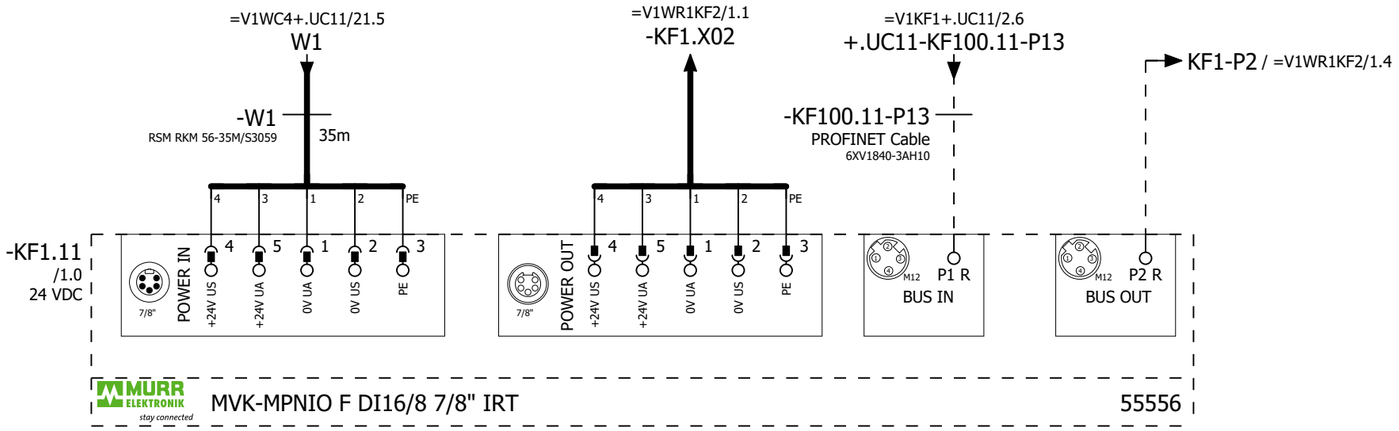

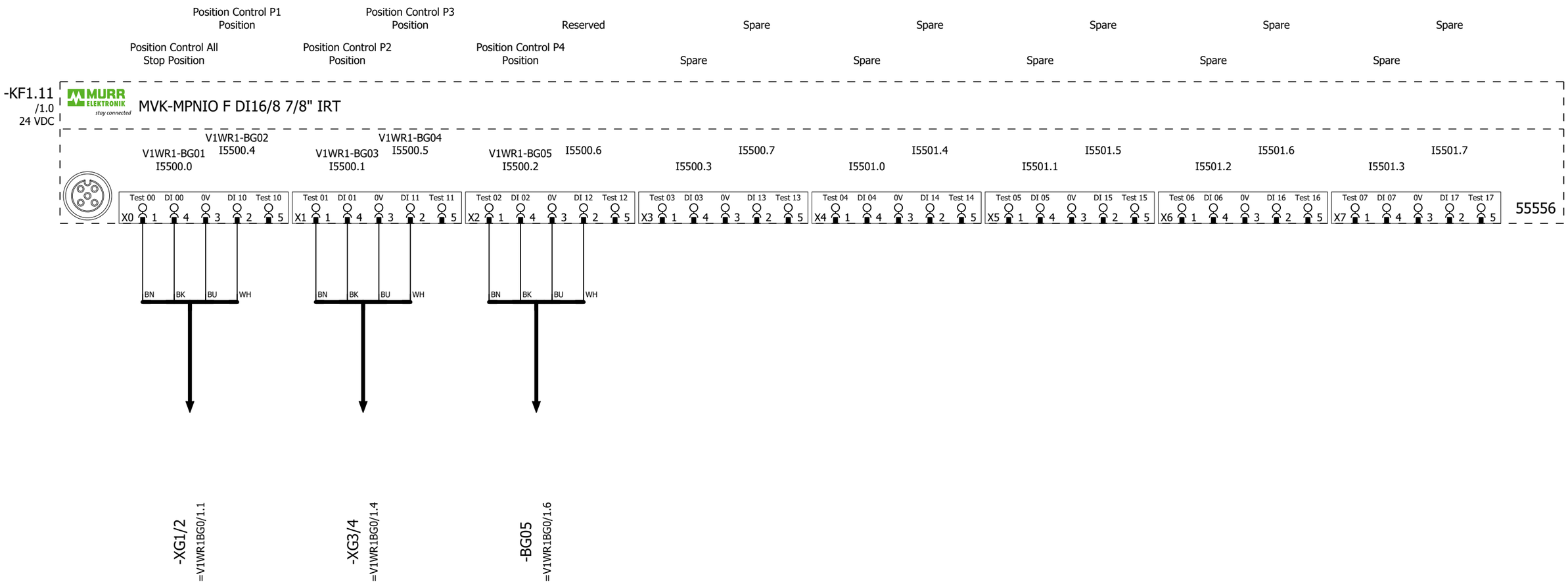

=V1WR1BG0/1

=V1WR1KF2/1

			Date	12/22/2022	Volvo Trucks North America	Valiant TMS	MURR MODULE SAFE 16 IN	Drawing name: =2V13&EFS_EL		= V1WR1KF1	
			Ed.	MKLEPADLO						+ V1WR1	
			Appr		Sub-Floor Members			Document type: EFS	Project nr: 22-16146	Page	1
Modification	Date	Name	Original		Replacement of / Replaced by	Scale 1:1					614

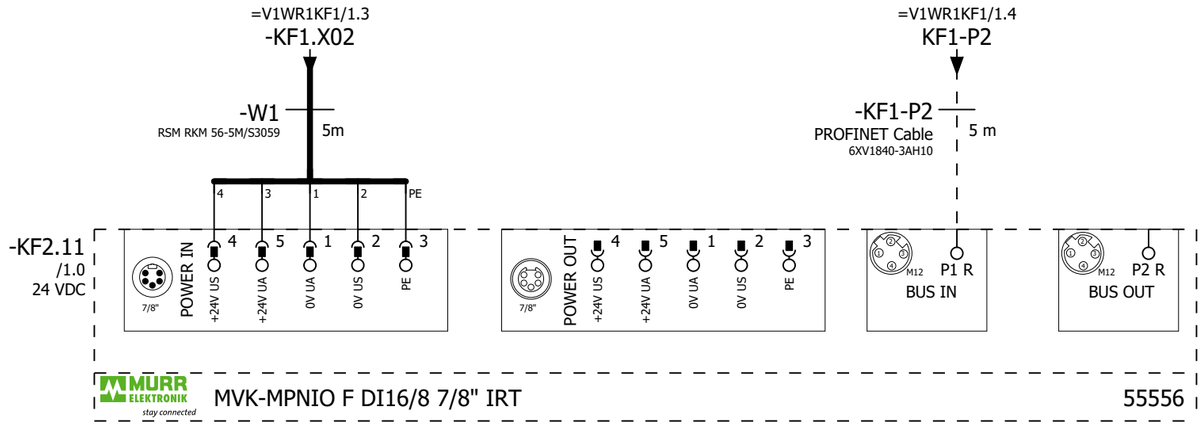

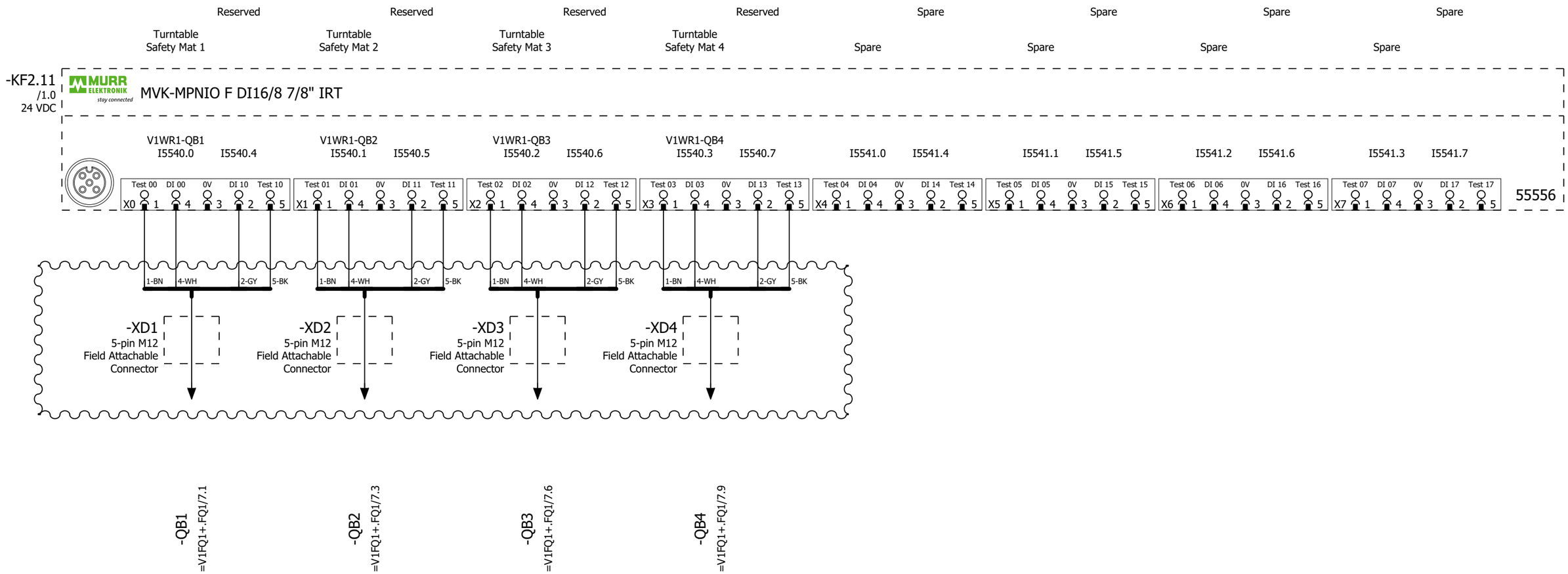

=V1WR1KF1/1

=V1WR1UQ51BG0+.WR1UQ51/1

			Date	12/22/2022	Volvo Trucks North America	Valiant TMS	MURR MODULE SAFE 16 IN	Drawing name: =2V13&EFS_EL		= V1WR1KF2	
			Ed.	MKLEPADLO						+ V1WR1	
			Appr		Sub-Floor Members			Document type: EFS	Project nr: 22-16146	Page	1
Modification	Date	Name	Original		Replacement of / Replaced by	Scale 1:1					614

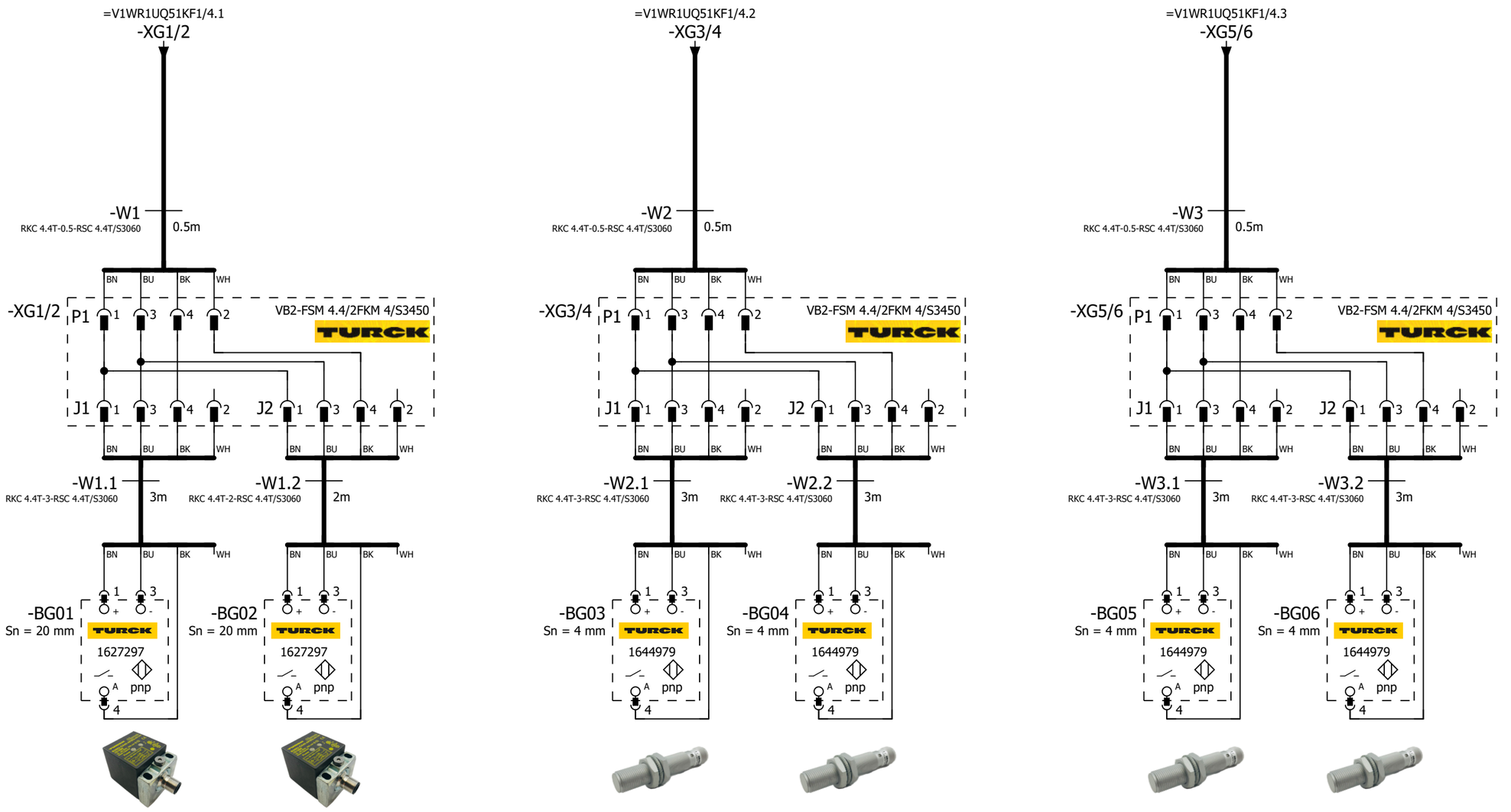

=V1WR1UQ51 -BG01 Front Long ASSY LH	=V1WR1UQ51 -BG02 Front Long ASSY LH	=V1WR1UQ51 -BG03 Front Suspension ASSY Outer LH	=V1WR1UQ51 -BG04 Front Suspension ASSY Outer LH	=V1WR1UQ51 -BG05 Front Suspension ASSY Center LH	=V1WR1UQ51 -BG06 Front Suspension ASSY Center LH

=V1WR1KF2+V1WR1/1

2

			Date	12/22/2022	Volvo Trucks North America	Valiant TMS	SENSORS	Drawing name: =2V13&EFS_EL	= V1WR1UQ51BG0	
			Ed.	MKLEPADLO					+ V1WR1UQ51	
			Appr		Sub-Floor Members			Document type: EFS	Project nr: 22-16146	Page 1 / 614
Modification	Date	Name	Original		Replacement of / Replaced by	Scale 1:1				

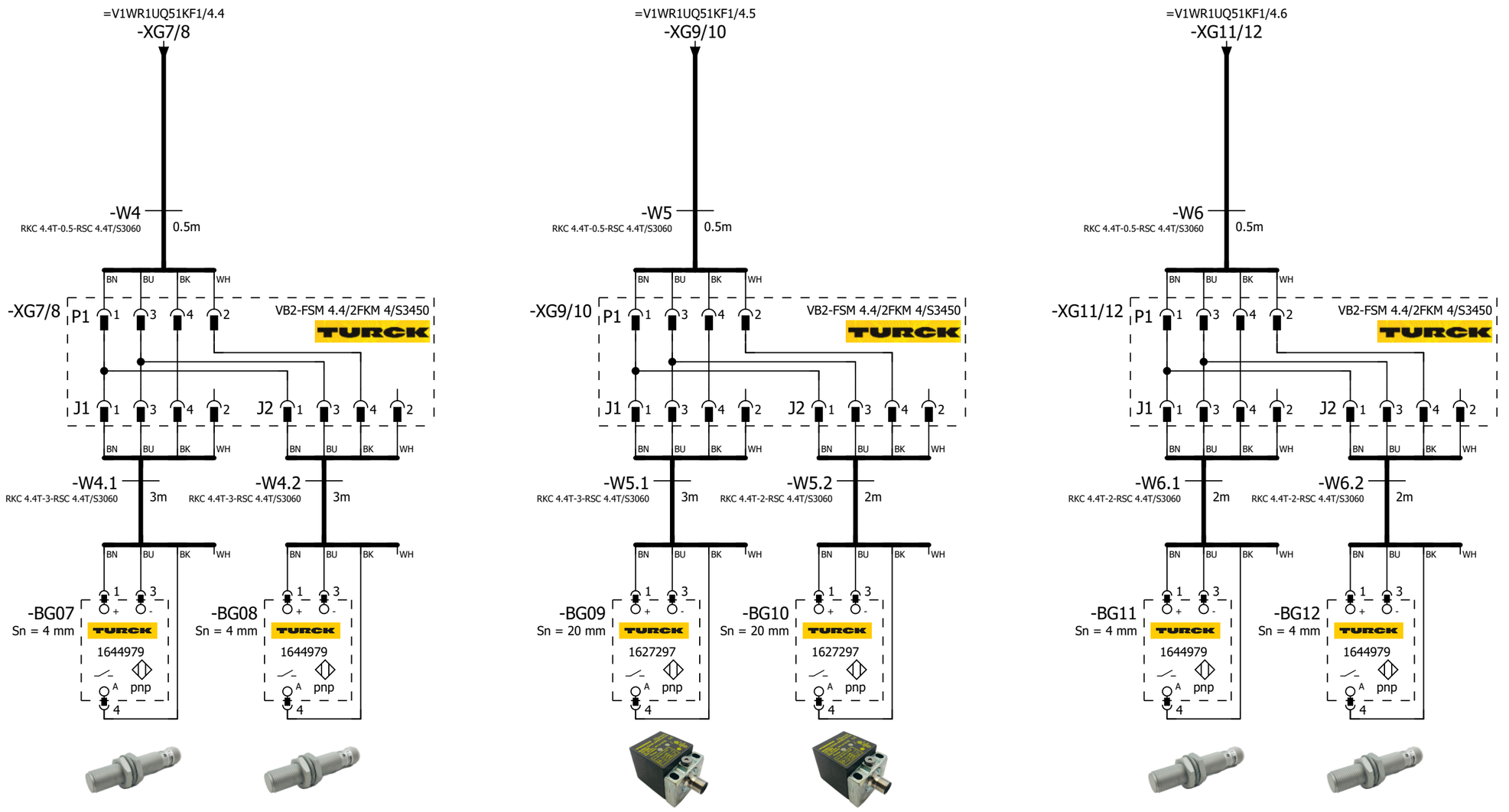

=V1WR1UQ51 -BG07 Front Suspension ASSY Inner LH	=V1WR1UQ51 -BG08 Front Suspension ASSY Inner LH	=V1WR1UQ51 -BG09 Front Long ASSY RH	=V1WR1UQ51 -BG10 Front Long ASSY RH	=V1WR1UQ51 -BG11 Front Suspension ASSY Outer RH	=V1WR1UQ51 -BG12 Front Suspension ASSY Outer RH

1 3

			Date	12/22/2022	Volvo Trucks North America	Valiant TMS	SENSORS	Drawing name: =2V13&EFS_EL	= V1WR1UQ51BG0	
			Ed.	MKLEPADLO					+ V1WR1UQ51	
			Appr		Sub-Floor Members			Document type: EFS	Project nr: 22-16146	Page 2 / 614
Modification	Date	Name	Original		Replacement of / Replaced by	Scale 1:1				

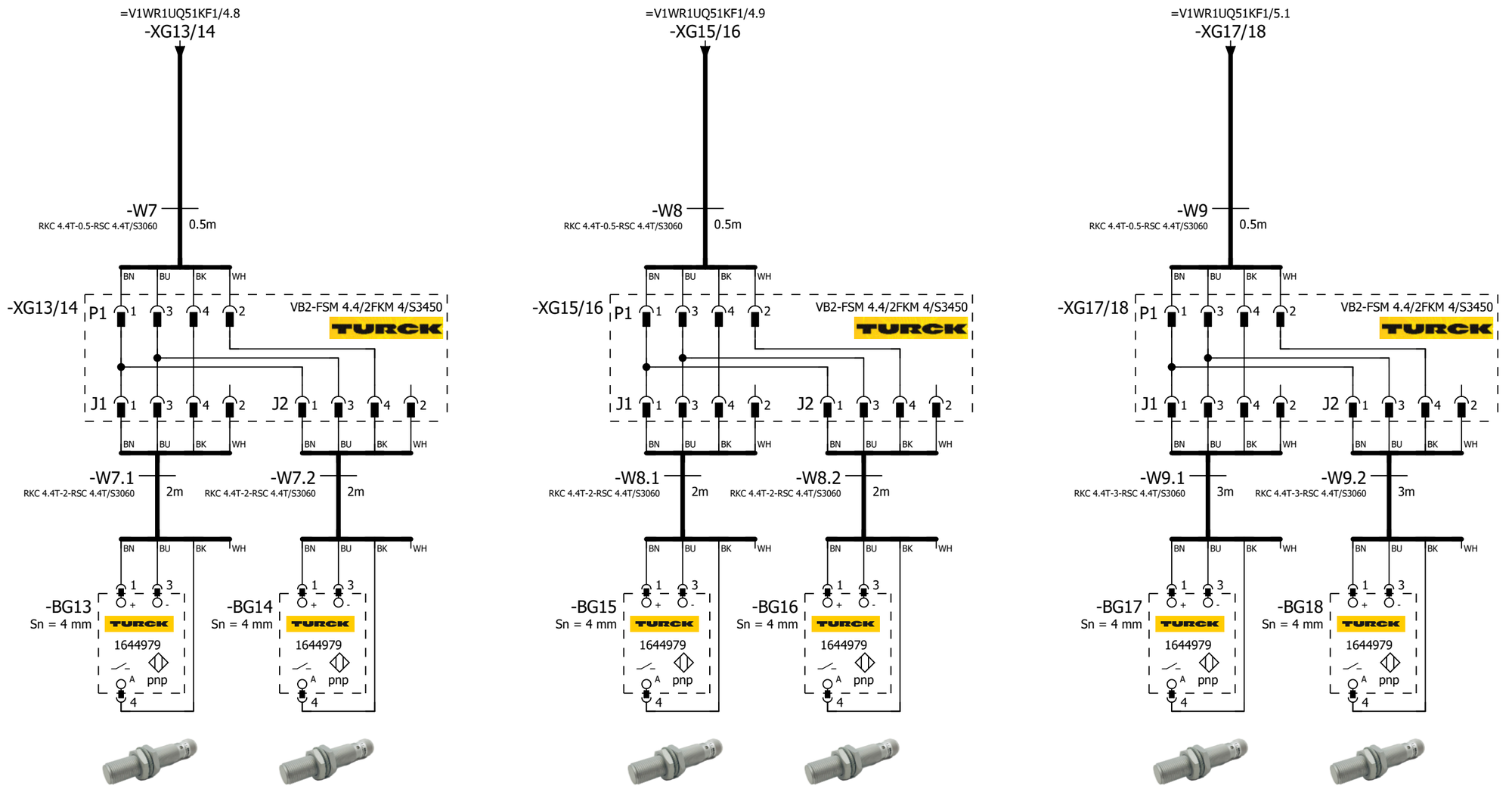

=V1WR1UQ51 -BG13 Front Suspension ASSY Center RH	=V1WR1UQ51 -BG14 Front Suspension ASSY Center RH	=V1WR1UQ51 -BG15 Front Suspension ASSY Inner RH	=V1WR1UQ51 -BG16 Front Suspension ASSY Inner RH	=V1WR1UQ51 -BG17 Vertical Outboard	=V1WR1UQ51 -BG18 Vertical Outboard

2 4

			Date	12/22/2022	Volvo Trucks North America	Valiant TMS	SENSORS	Drawing name: =2V13&EFS_EL	= V1WR1UQ51BG0
			Ed.	MKLEPADLO					+ V1WR1UQ51
			Appr		Sub-Floor Members			Document type: EFS	Project nr: 22-16146
Modification	Date	Name	Original		Replacement of / Replaced by	Scale 1:1			Page 3 / 614

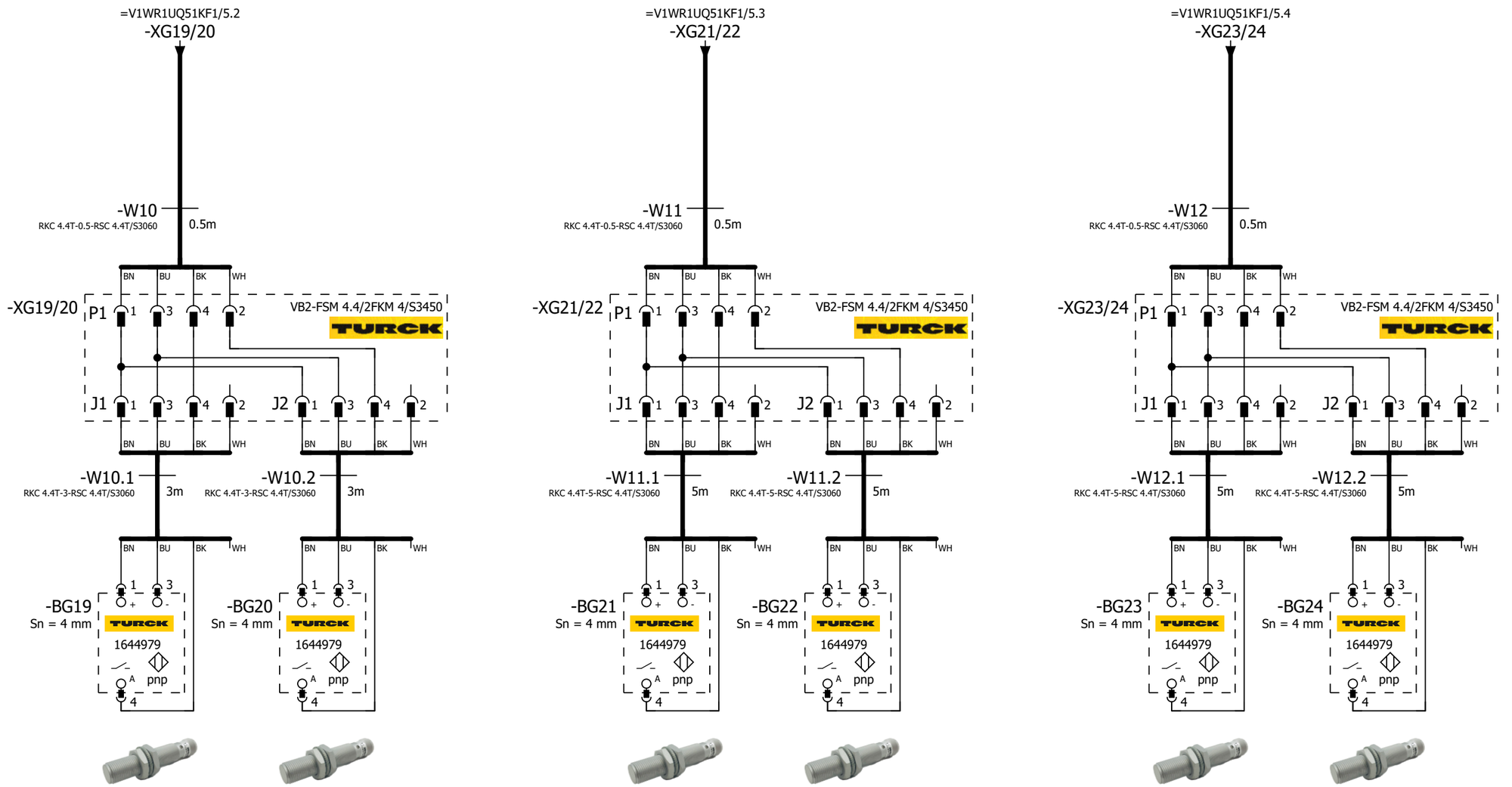

=V1WR1UQ51 -BG19 Vertical Inboard	=V1WR1UQ51 -BG20 Verical Inboard	=V1WR1UQ51 -BG21 Vertical Outboard	=V1WR1UQ51 -BG22 Vertical Outboard
=V1WR1UQ51 -BG23 Vertical Inboard	=V1WR1UQ51 -BG24 Vertical Inboard		

3

=V1WR1UQ51KF1/1

			Date	12/22/2022	Volvo Trucks North America	Valiant TMS	SENSORS	Drawing name: =2V13&EFS_EL	= V1WR1UQ51BG0	
			Ed.	MKLEPADLO					+ V1WR1UQ51	
			Appr		Sub-Floor Members			Document type: EFS	Project nr: 22-16146	Page 4 / 614
Modification	Date	Name	Original		Replacement of / Replaced by	Scale 1:1				

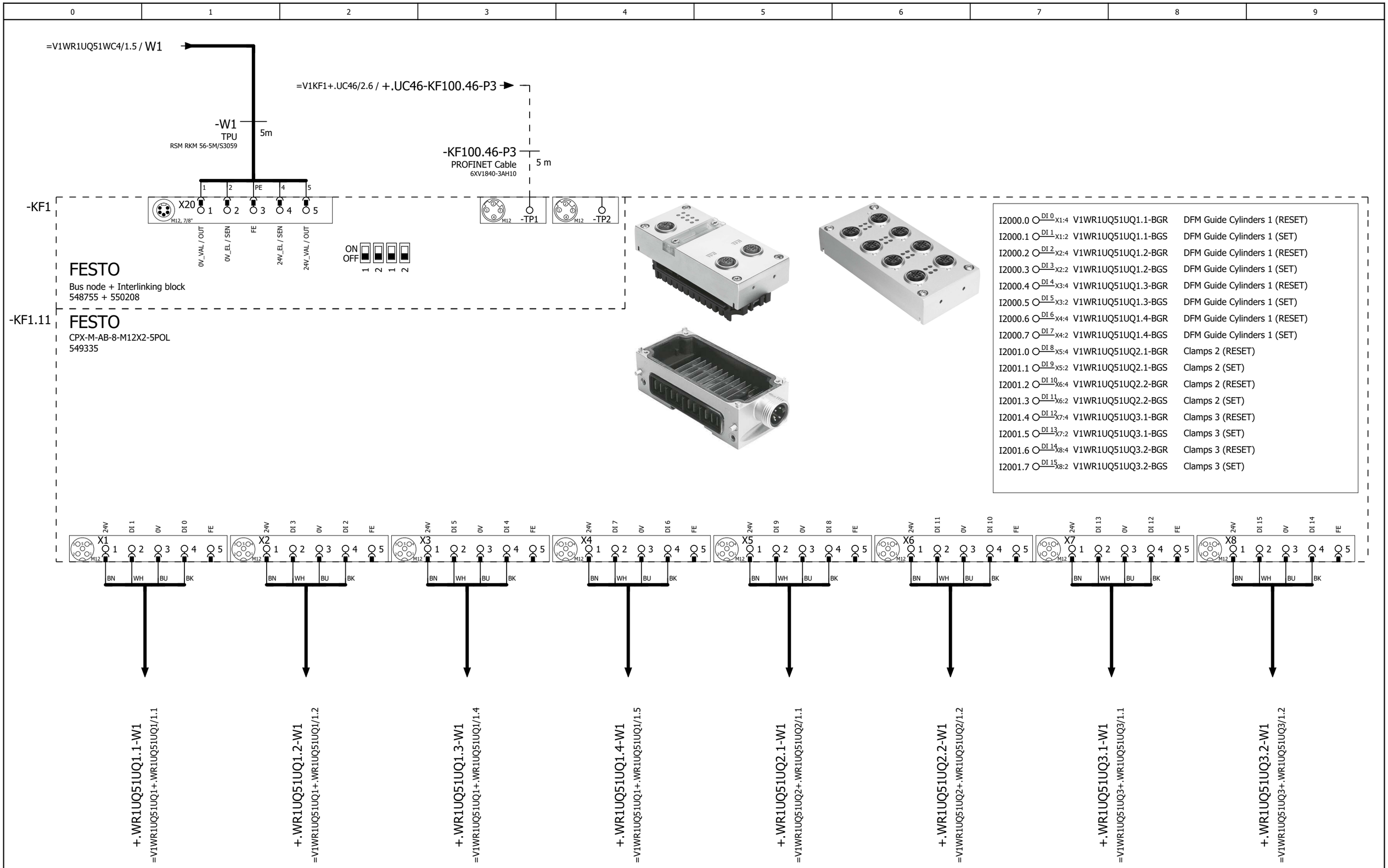

=V1WR1UQ51BG0/4

2

			Date	12/22/2022	Volvo Trucks North America	Valiant TMS	CONNECTING MOD. FOR VTSA MANIFOLD	Drawing name: =2V13&EFS_EL		= V1WR1UQ51KF1	
			Ed.	MKLEPADLO						+ V1WR1UQ51	
			Appr		Sub-Floor Members			Document type: EFS	Project nr: 22-16146		Page 1
Modification	Date	Name	Original		Replacement of / Replaced by	Scale 1:1					614

I2002.0	DI 0 X1:4	V1WR1UQ51UQ3.3-BGR	Clamps 3 (RESET)
I2002.1	DI 1 X1:2	V1WR1UQ51UQ3.3-BGS	Clamps 3 (SET)
I2002.2	DI 2 X2:4	V1WR1UQ51UQ3.4-BGR	Clamps 3 (RESET)
I2002.3	DI 3 X2:2	V1WR1UQ51UQ3.4-BGS	Clamps 3 (SET)
I2002.4	DI 4 X3:4	V1WR1UQ51UQ4.1-BGR	Shot Pins 4 (RESET)
I2002.5	DI 5 X3:2	V1WR1UQ51UQ4.1-BGS	Shot Pins 4 (SET)
I2002.6	DI 6 X4:4	V1WR1UQ51UQ4.2-BGR	Shot Pins 4 (RESET)
I2002.7	DI 7 X4:2	V1WR1UQ51UQ4.2-BGS	Shot Pins 4 (SET)
I2003.0	DI 8 X5:4	V1WR1UQ51UQ5.1-BGR	Clamps 5 (RESET)
I2003.1	DI 9 X5:2	V1WR1UQ51UQ5.1-BGS	Clamps 5 (SET)
I2003.2	DI 10 X6:4	V1WR1UQ51UQ5.2-BGR	Clamps 5 (RESET)
I2003.3	DI 11 X6:2	V1WR1UQ51UQ5.2-BGS	Clamps 5 (SET)
I2003.4	DI 12 X7:4	V1WR1UQ51UQ5.3-BGR	Clamps 5 (RESET)
I2003.5	DI 13 X7:2	V1WR1UQ51UQ5.3-BGS	Clamps 5 (SET)
I2003.6	DI 14 X8:4	V1WR1UQ51UQ5.4-BGR	Clamps 5 (RESET)
I2003.7	DI 15 X8:2	V1WR1UQ51UQ5.4-BGS	Clamps 5 (SET)

-KF1.12

FESTO
CPX-M-AB-8-M12X2-5POL
549335

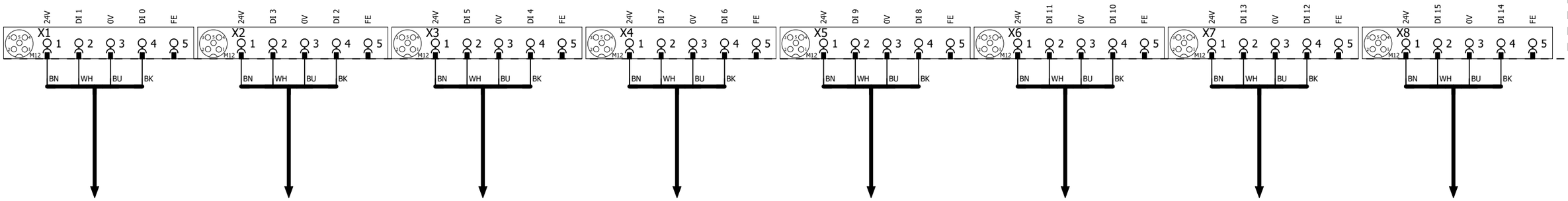

+.WR1UQ51UQ3.3-W1
=V1WR1UQ51UQ3+.WR1UQ51UQ3/1.4

+.WR1UQ51UQ3.4-W1
=V1WR1UQ51UQ3+.WR1UQ51UQ3/1.5

+.WR1UQ51UQ4.1-W1
=V1WR1UQ51UQ4+.WR1UQ51UQ4/1.1

+.WR1UQ51UQ4.2-W1
=V1WR1UQ51UQ4+.WR1UQ51UQ4/1.2

+.WR1UQ51UQ5.1-W1
=V1WR1UQ51UQ5+.WR1UQ51UQ5/5.1

+.WR1UQ51UQ5.2-W1
=V1WR1UQ51UQ5+.WR1UQ51UQ5/5.2

+.WR1UQ51UQ5.3-W1
=V1WR1UQ51UQ5+.WR1UQ51UQ5/5.4

+.WR1UQ51UQ5.4-W1
=V1WR1UQ51UQ5+.WR1UQ51UQ5/5.5

0	1	2	3	4	5	6	7	8	9

-KF1.13

FESTO

CPX-M-AB-8-M12X2-5POL
549335

I2004.0	DI 0 X1:4	V1WR1UQ51UQ5.5-BGR	Clamps 5 (RESET)
I2004.1	DI 1 X1:2	V1WR1UQ51UQ5.5-BGS	Clamps 5 (SET)
I2004.2	DI 2 X2:4	V1WR1UQ51UQ5.6-BGR	Clamps 5 (RESET)
I2004.3	DI 3 X2:2	V1WR1UQ51UQ5.6-BGS	Clamps 5 (SET)
I2004.4	DI 4 X3:4	V1WR1UQ51UQ6.1-BGR	Clamps 6 (RESET)
I2004.5	DI 5 X3:2	V1WR1UQ51UQ6.1-BGS	Clamps 6 (SET)
I2004.6	DI 6 X4:4	V1WR1UQ51UQ6.2-BGR	Clamps 6 (RESET)
I2004.7	DI 7 X4:2	V1WR1UQ51UQ6.2-BGS	Clamps 6 (SET)
I2005.0	DI 8 X5:4	V1WR1UQ51UQ6.3-BGR	Clamps 6 (RESET)
I2005.1	DI 9 X5:2	V1WR1UQ51UQ6.3-BGS	Clamps 6 (SET)
I2005.2	DI 10 X6:4	V1WR1UQ51UQ6.4-BGR	Clamps 6 (RESET)
I2005.3	DI 11 X6:2	V1WR1UQ51UQ6.4-BGS	Clamps 6 (SET)
I2005.4	DI 12 X7:4	V1WR1UQ51UQ6.5-BGR	Clamps 6 (RESET)
I2005.5	DI 13 X7:2	V1WR1UQ51UQ6.5-BGS	Clamps 6 (SET)
I2005.6	DI 14 X8:4	V1WR1UQ51UQ6.6-BGR	Clamps 6 (RESET)
I2005.7	DI 15 X8:2	V1WR1UQ51UQ6.6-BGS	Clamps 6 (SET)

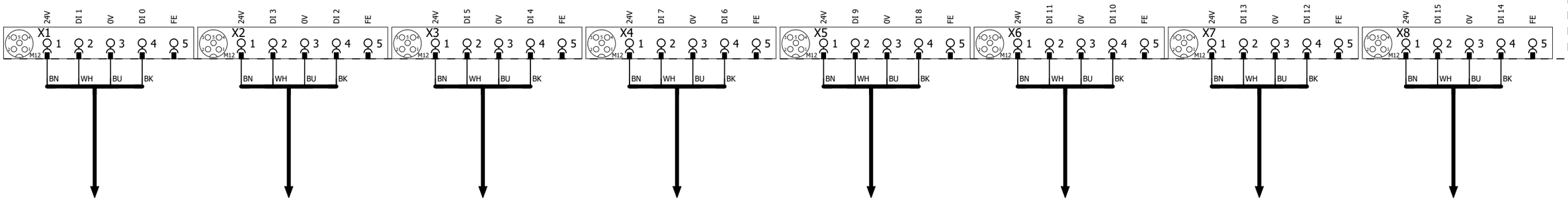

+.WR1UQ51UQ5.5-W1
=V1WR1UQ51UQ5+.WR1UQ51UQ5/5.7

+.WR1UQ51UQ5.6-W1
=V1WR1UQ51UQ5+.WR1UQ51UQ5/5.9

+.WR1UQ51UQ6.1-W1
=V1WR1UQ51UQ6+.WR1UQ51UQ6/6.1

+.WR1UQ51UQ6.2-W1
=V1WR1UQ51UQ6+.WR1UQ51UQ6/6.2

+.WR1UQ51UQ6.3-W1
=V1WR1UQ51UQ6+.WR1UQ51UQ6/6.4

+.WR1UQ51UQ6.4-W1
=V1WR1UQ51UQ6+.WR1UQ51UQ6/6.5

+.WR1UQ51UQ6.5-W1
=V1WR1UQ51UQ6+.WR1UQ51UQ6/6.7

+.WR1UQ51UQ6.6-W1
=V1WR1UQ51UQ6+.WR1UQ51UQ6/6.9

-KF1.14

FESTO

CPX-M-AB-8-M12X2-5POL
549335

I2006.0	DI 0 X1:4	V1WR1UQ51-BG01	Front Long ASSY LH
I2006.1	DI 1 X1:2	V1WR1UQ51-BG02	Front Long ASSY LH
I2006.2	DI 2 X2:4	V1WR1UQ51-BG03	Front Suspension ASSY Outer LH
I2006.3	DI 3 X2:2	V1WR1UQ51-BG04	Front Suspension ASSY Outer LH
I2006.4	DI 4 X3:4	V1WR1UQ51-BG05	Front Suspension ASSY Center LH
I2006.5	DI 5 X3:2	V1WR1UQ51-BG06	Front Suspension ASSY Center LH
I2006.6	DI 6 X4:4	V1WR1UQ51-BG07	Front Suspension ASSY Inner LH
I2006.7	DI 7 X4:2	V1WR1UQ51-BG08	Front Suspension ASSY Inner LH
I2007.0	DI 8 X5:4	V1WR1UQ51-BG09	Front Long ASSY RH
I2007.1	DI 9 X5:2	V1WR1UQ51-BG10	Front Long ASSY RH
I2007.2	DI 10 X6:4	V1WR1UQ51-BG11	Front Suspension ASSY Outer RH
I2007.3	DI 11 X6:2	V1WR1UQ51-BG12	Front Suspension ASSY Outer RH
I2007.4	DI 12 X7:4	V1WR1UQ51-BG13	Front Suspension ASSY Center RH
I2007.5	DI 13 X7:2	V1WR1UQ51-BG14	Front Suspension ASSY Center RH
I2007.6	DI 14 X8:4	V1WR1UQ51-BG15	Front Suspension ASSY Inner RH
I2007.7	DI 15 X8:2	V1WR1UQ51-BG16	Front Suspension ASSY Inner RH

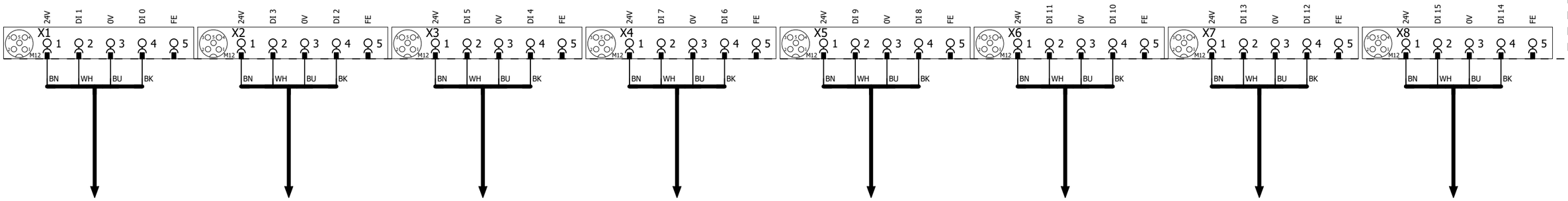

-XG1/2
=V1WR1UQ51BG0/1.1

-XG3/4
=V1WR1UQ51BG0/1.4

-XG5/6
=V1WR1UQ51BG0/1.6

-XG7/8
=V1WR1UQ51BG0/2.1

-XG9/10
=V1WR1UQ51BG0/2.4

-XG11/12
=V1WR1UQ51BG0/2.6

-XG13/14
=V1WR1UQ51BG0/3.1

-XG15/16
=V1WR1UQ51BG0/3.4

I2008.0	DI 0 X1:4	V1WR1UQ51-BG17	Vertical Outboard
I2008.1	DI 1 X1:2	V1WR1UQ51-BG18	Vertical Outboard
I2008.2	DI 2 X2:4	V1WR1UQ51-BG19	Vertical Inboard
I2008.3	DI 3 X2:2	V1WR1UQ51-BG20	Vertical Inboard
I2008.4	DI 4 X3:4	V1WR1UQ51-BG21	Vertical Outboard
I2008.5	DI 5 X3:2	V1WR1UQ51-BG22	Vertical Outboard
I2008.6	DI 6 X4:4	V1WR1UQ51-BG23	Vertical Inboard
I2008.7	DI 7 X4:2	V1WR1UQ51-BG24	Vertical Inboard
I2009.0	DI 8 X5:4	I2009.0	Spare
I2009.1	DI 9 X5:2	I2009.1	Spare
I2009.2	DI 10 X6:4	I2009.2	Spare
I2009.3	DI 11 X6:2	I2009.3	Spare
I2009.4	DI 12 X7:4	I2009.4	Spare
I2009.5	DI 13 X7:2	I2009.5	Spare
I2009.6	DI 14 X8:4	I2009.6	Spare
I2009.7	DI 15 X8:2	I2009.7	Spare

-KF1.15

FESTO

CPX-M-AB-8-M12X2-5POL

549335

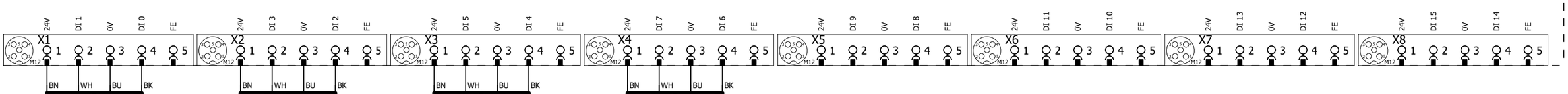

-XG17/18
=V1WR1UQ51BG0/3.6

-XG19/20
=V1WR1UQ51BG0/4.1

-XG21/22
=V1WR1UQ51BG0/4.4

-XG23/24
=V1WR1UQ51BG0/4.6

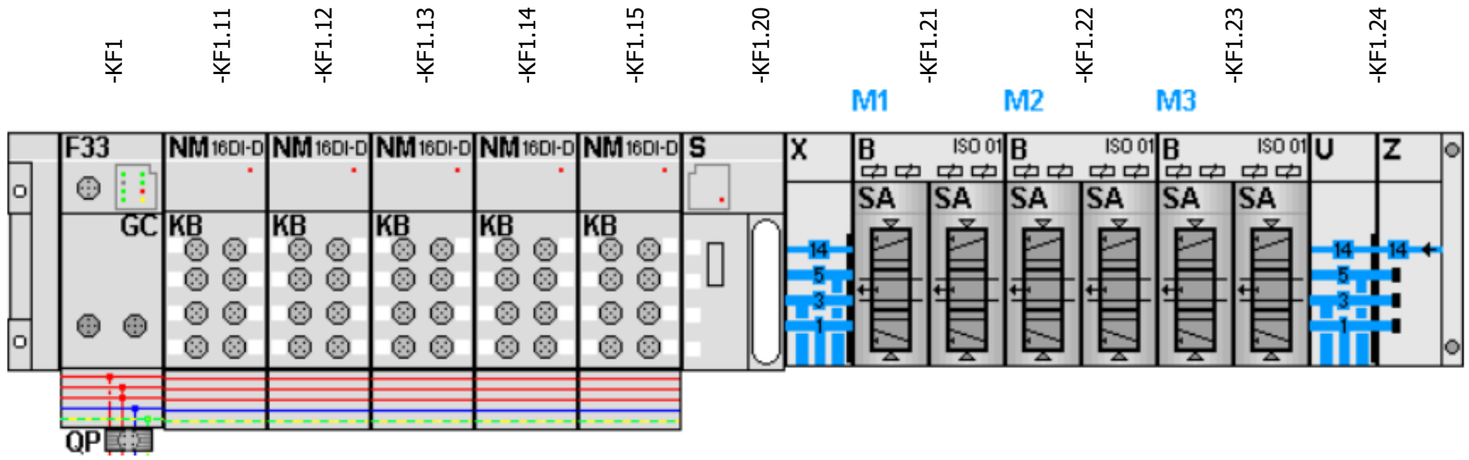

-KF1.21

=V1WR1UQ51UQ1+.WR1UQ51UQ1/1.3
=V1WR1UQ51UQ2+.WR1UQ51UQ2/1.3

FESTO

=V1WR1UQ51UQ1+.WR1UQ51UQ1/1.4	Q2000.0 DO 0 1.1	-QN1.1_Q	DFM Guide Cylinders 1 (RST)
=V1WR1UQ51UQ1+.WR1UQ51UQ1/1.4	Q2000.1 DO 1 1.2	-QN1.2_Q	DFM Guide Cylinders 1 (SET)
=V1WR1UQ51UQ2+.WR1UQ51UQ2/1.4	Q2000.2 DO 2 2.1	-QN2.1_Q	Clamps 2 (RST)
=V1WR1UQ51UQ2+.WR1UQ51UQ2/1.4	Q2000.3 DO 3 2.2	-QN2.2_Q	Clamps 2 (SET)

-KF1.22

=V1WR1UQ51UQ3+.WR1UQ51UQ3/1.3
=V1WR1UQ51UQ4+.WR1UQ51UQ4/1.3

FESTO

=V1WR1UQ51UQ3+.WR1UQ51UQ3/1.4	Q2000.4 DO 0 1.1	-QN3.1_Q	Clamps 3 (RST)
=V1WR1UQ51UQ3+.WR1UQ51UQ3/1.4	Q2000.5 DO 1 1.2	-QN3.2_Q	Clamps 3 (SET)
=V1WR1UQ51UQ4+.WR1UQ51UQ4/1.4	Q2000.6 DO 2 2.1	-QN4.1_Q	Shot Pins 4 (RST)
=V1WR1UQ51UQ4+.WR1UQ51UQ4/1.4	Q2000.7 DO 3 2.2	-QN4.2_Q	Shot Pins 4 (SET)

-KF1.23

=V1WR1UQ51UQ5+.WR1UQ51UQ5/5.3
=V1WR1UQ51UQ6+.WR1UQ51UQ6/6.3

FESTO

=V1WR1UQ51UQ5+.WR1UQ51UQ5/5.4	Q2001.0 DO 0 1.1	-QN5.1_Q	Clamps 5 (RST)
=V1WR1UQ51UQ5+.WR1UQ51UQ5/5.4	Q2001.1 DO 1 1.2	-QN5.2_Q	Clamps 5 (SET)
=V1WR1UQ51UQ6+.WR1UQ51UQ6/6.4	Q2001.2 DO 2 2.1	-QN6.1_Q	Clamps 6 (RST)
=V1WR1UQ51UQ6+.WR1UQ51UQ6/6.4	Q2001.3 DO 3 2.2	-QN6.2_Q	Clamps 6 (SET)

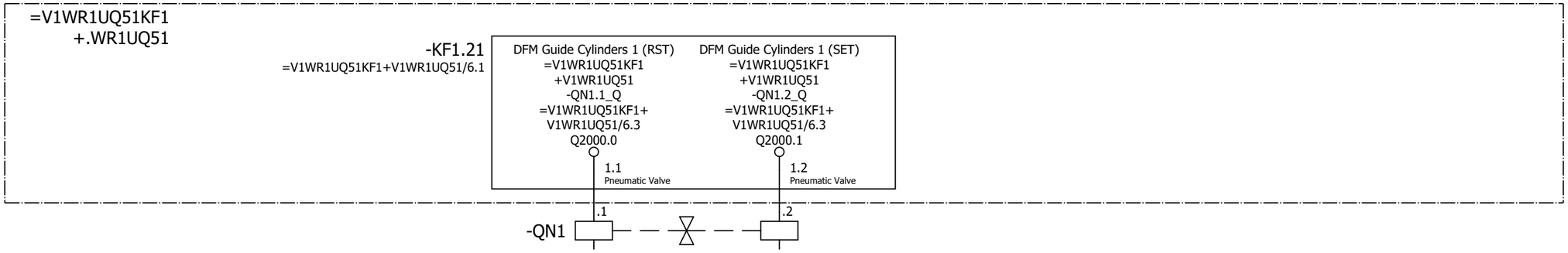

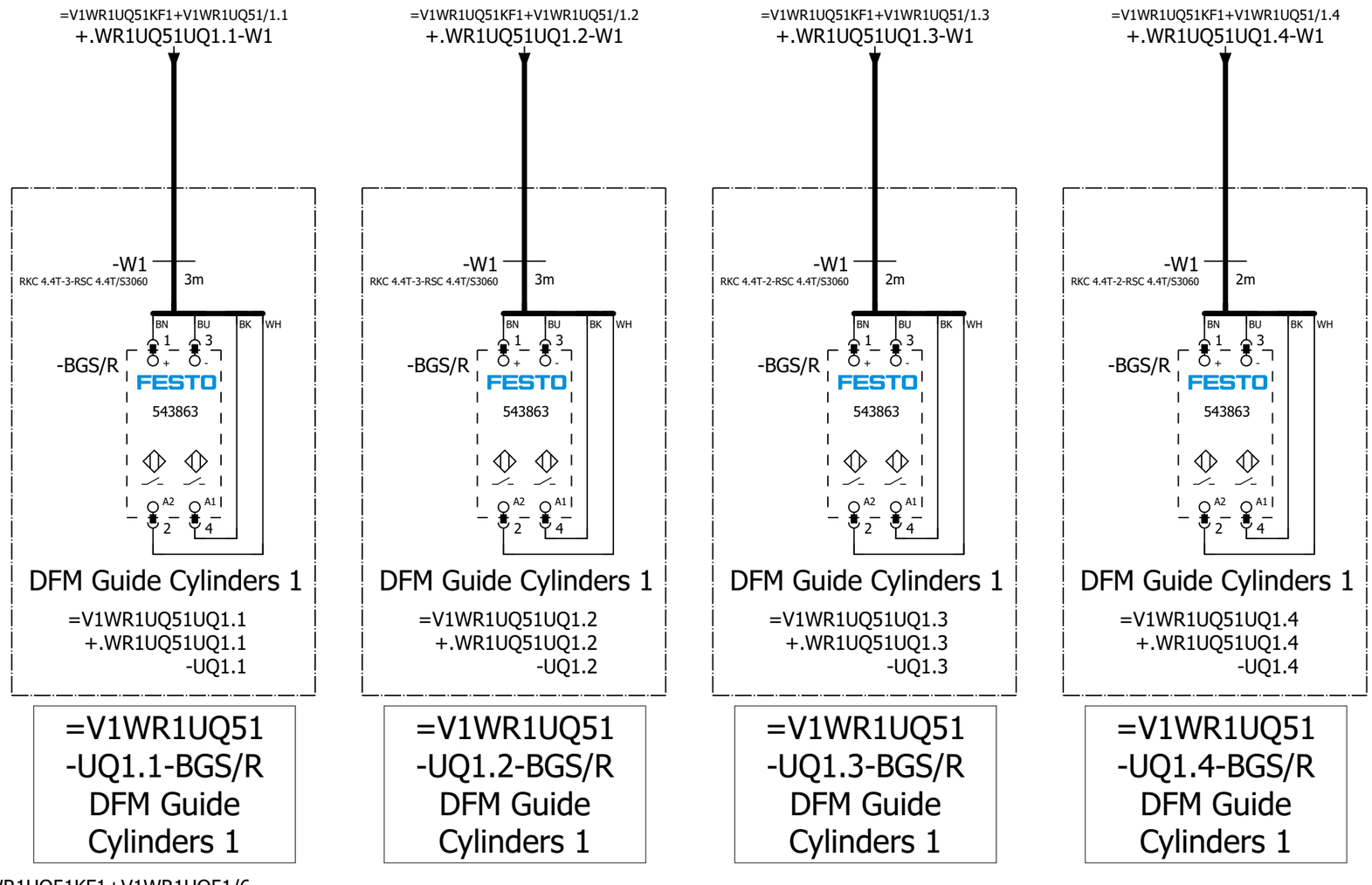

=V1WR1UQ51
-UQ1.1-BGS/R
DFM Guide
Cylinders 1

=V1WR1UQ51
-UQ1.2-BGS/R
DFM Guide
Cylinders 1

=V1WR1UQ51
-UQ1.3-BGS/R
DFM Guide
Cylinders 1

=V1WR1UQ51
-UQ1.4-BGS/R
DFM Guide
Cylinders 1

=V1WR1UQ51KF1+V1WR1UQ51/6

=V1WR1UQ51UQ2+.WR1UQ51UQ2/1

			Date	12/22/2022	Volvo Trucks North America	Valiant TMS	FESTO DQ CONNECTION QN1	Drawing name: =2V13&EFS_EL	= V1WR1UQ51UQ1		
			Ed.	MKLEPADLO					+ V1WR1UQ51UQ1		
			Appr		Sub-Floor Members			Document type: EFS	Project nr: 22-16146	Page	1
Modification	Date	Name	Original		Replacement of / Replaced by	Scale 1:1					614

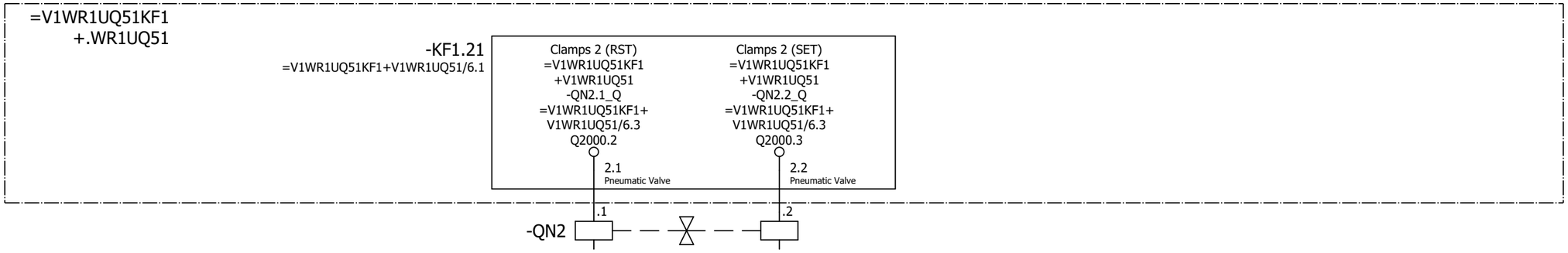

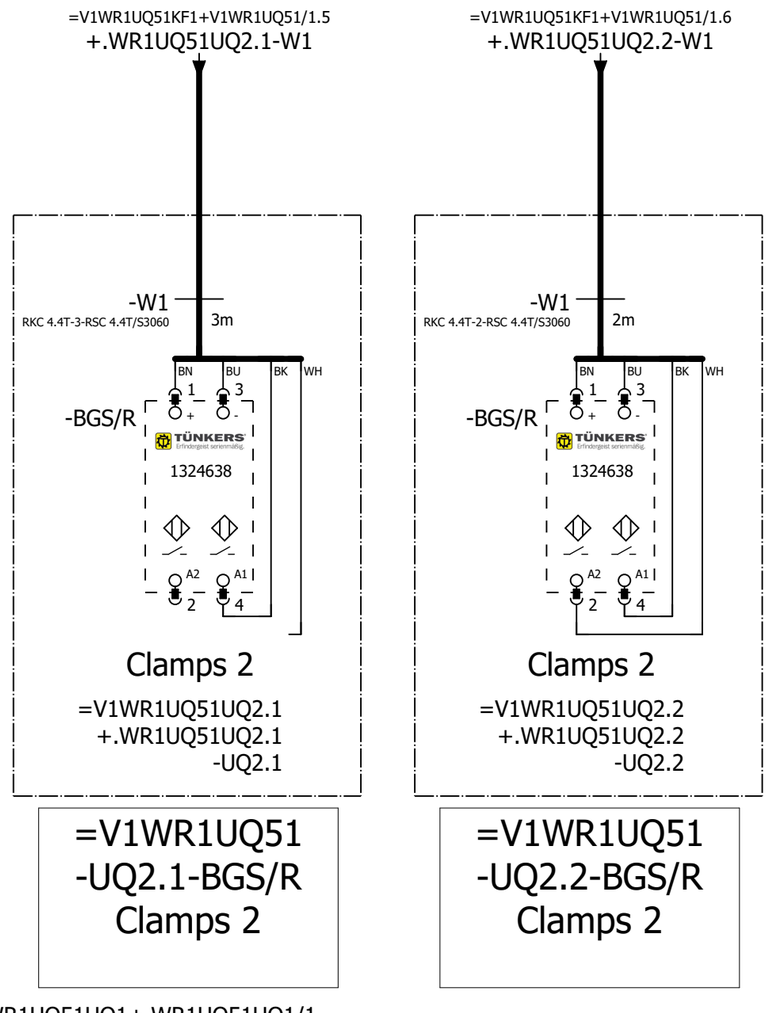

=V1WR1UQ51
-UQ2.1-BGS/R
Clamps 2

=V1WR1UQ51
-UQ2.2-BGS/R
Clamps 2

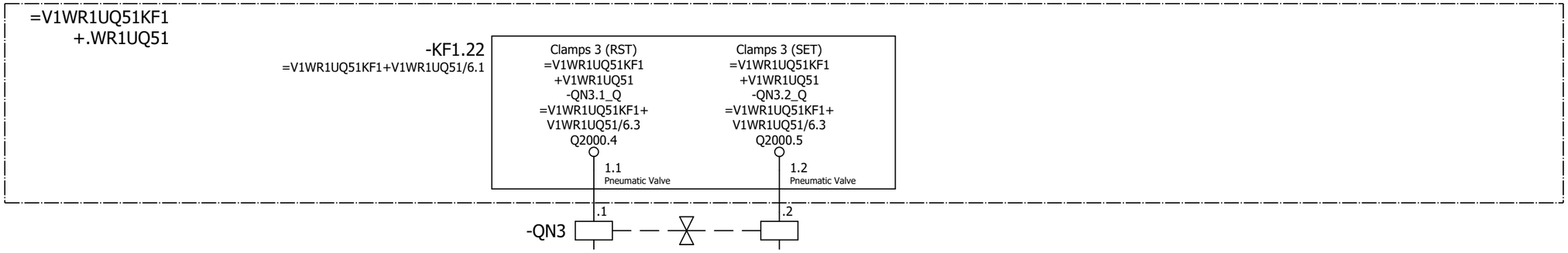

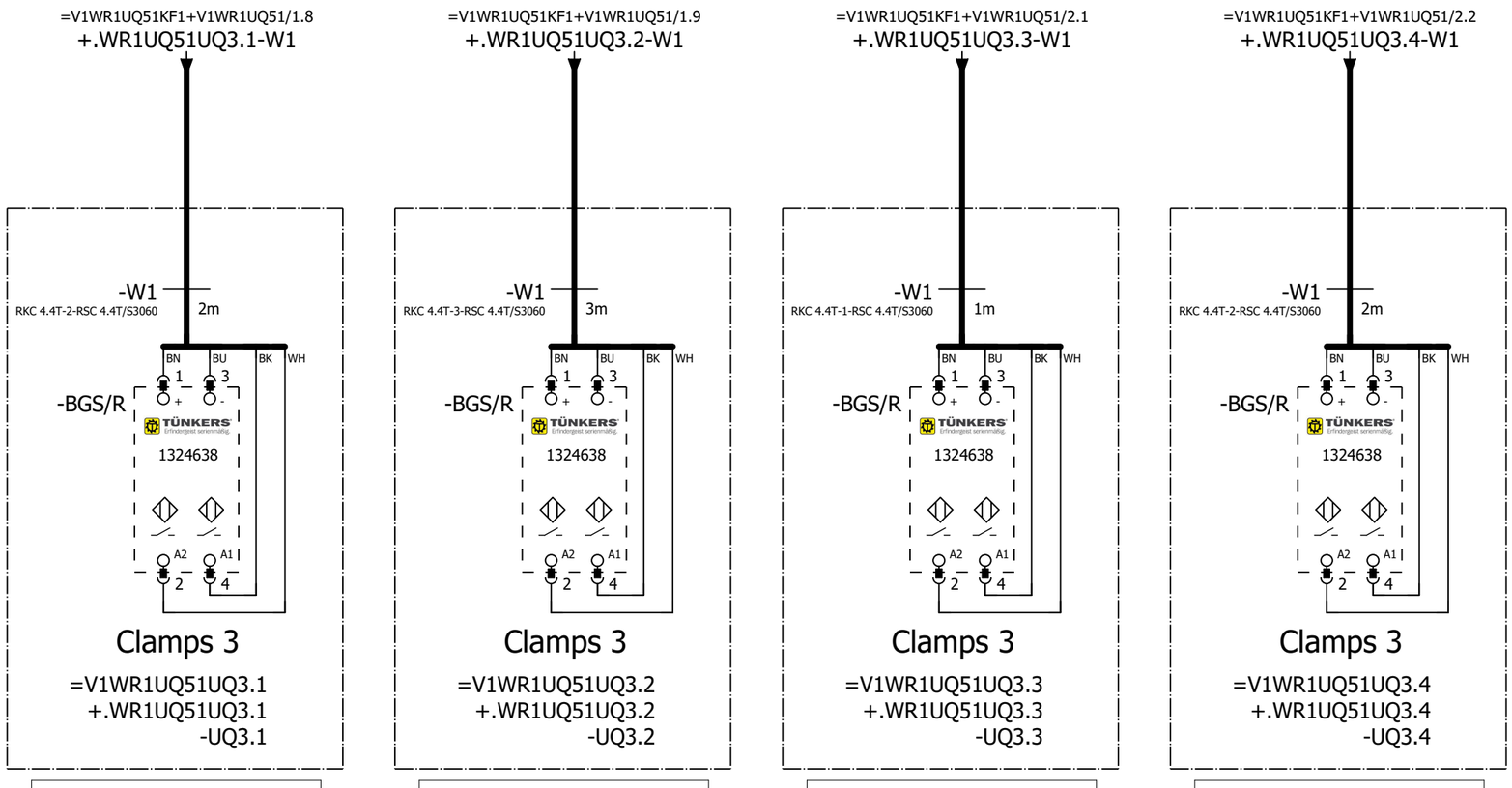

=V1WR1UQ51 -UQ3.1-BGS/R Clamps 3	=V1WR1UQ51 -UQ3.2-BGS/R Clamps 3	=V1WR1UQ51 -UQ3.3-BGS/R Clamps 3	=V1WR1UQ51 -UQ3.4-BGS/R Clamps 3

=V1WR1UQ51UQ2+.WR1UQ51UQ2/1

=V1WR1UQ51UQ4+.WR1UQ51UQ4/1

			Date	12/22/2022	Volvo Trucks North America	Valiant TMS	FESTO DQ CONNECTION QN3	Drawing name: =2V13&EFS_EL	= V1WR1UQ51UQ3	
			Ed.	MKLEPADLO					+ V1WR1UQ51UQ3	
			Appr		Sub-Floor Members			Document type: EFS	Project nr: 22-16146	Page 1
Modification	Date	Name	Original		Replacement of / Replaced by	Scale 1:1				614

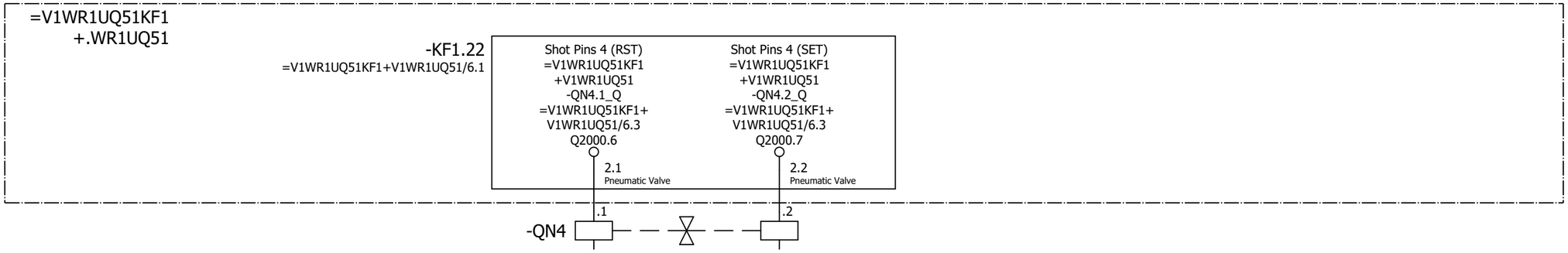

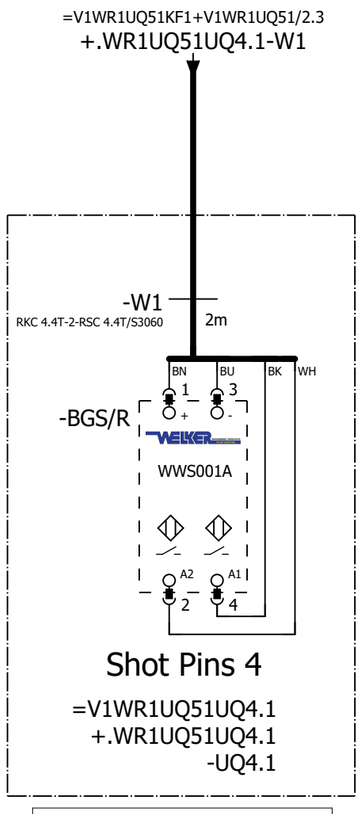

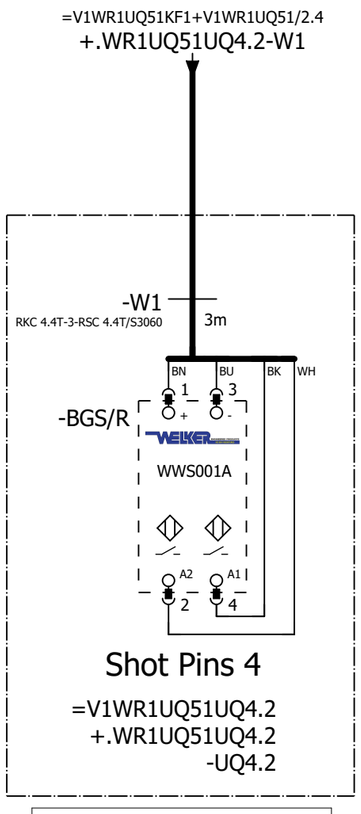

=V1WR1UQ51
-UQ4.1-BGS/R
Shot Pins 4

=V1WR1UQ51
-UQ4.2-BGS/R
Shot Pins 4

=V1WR1UQ51UQ3+.WR1UQ51UQ3/1

=V1WR1UQ51UQ5+.WR1UQ51UQ5/5

			Date	12/22/2022	Volvo Trucks North America		Valiant TMS	FESTO DQ CONNECTION QN4	Drawing name: =2V13&EFS_EL	= V1WR1UQ51UQ4	
			Ed.	MKLEPADLO						+ V1WR1UQ51UQ4	
			Appr		Sub-Floor Members				Document type: EFS	Project nr: 22-16146	Page 1
Modification	Date	Name	Original		Replacement of	Replaced by	Scale 1:1				614

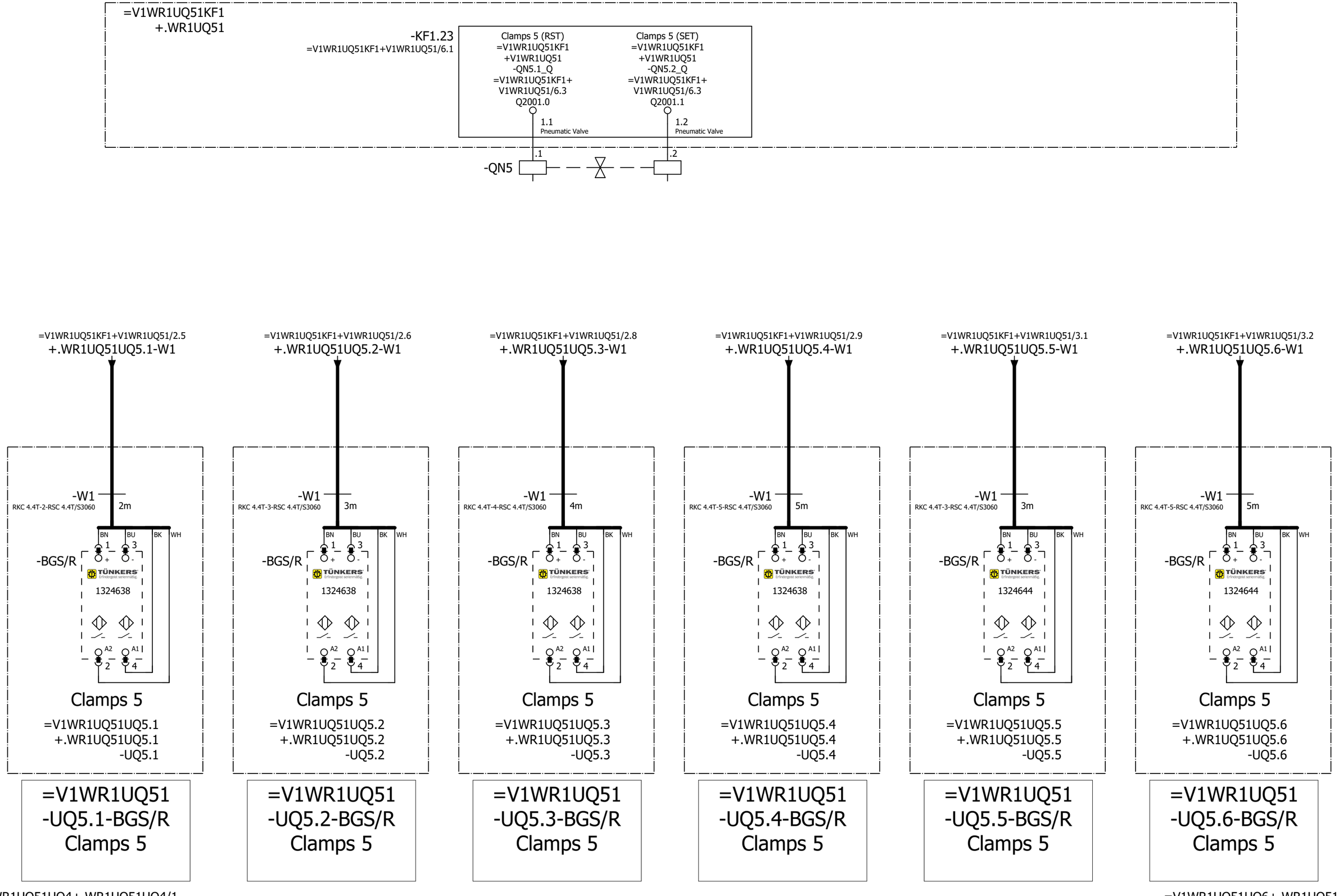

			Date	12/22/2022	Volvo Trucks North America		Valiant TMS	FESTO DQ CONNECTION QN3	Drawing name: =2V13&EFS_EL	= V1WR1UQ51UQ5	
			Ed.	MKLEPADLO						+ V1WR1UQ51UQ5	
			Appr		Sub-Floor Members				Document type: EFS	Project nr: 22-16146	Page 5
Modification	Date	Name	Original		Replacement of	Replaced by	Scale 1:1				614

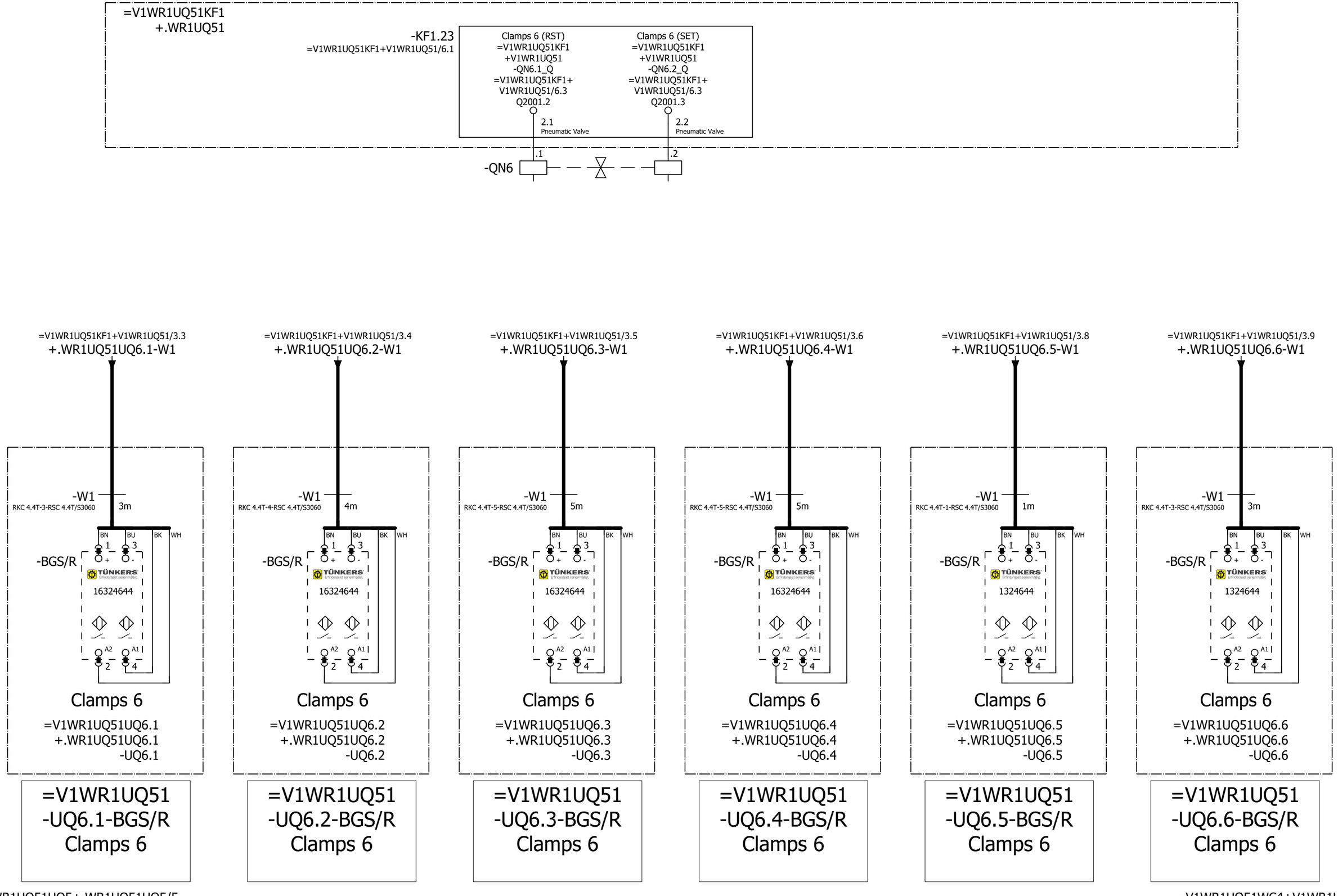

=V1WR1UQ51UQ5+.WR1UQ51UQ5/5

=V1WR1UQ51WC4+V1WR1UQ51/1

			Date	12/22/2022	Volvo Trucks North America	Valiant TMS	FESTO DQ CONNECTION QN3	Drawing name: =2V13&EFS_EL	= V1WR1UQ51UQ6		
			Ed.	MKLEPADLO					+ V1WR1UQ51UQ6		
			Appr		Sub-Floor Members			Document type: EFS	Project nr: 22-16146	Page	6
Modification	Date	Name	Original		Replacement of / Replaced by	Scale 1:1					614

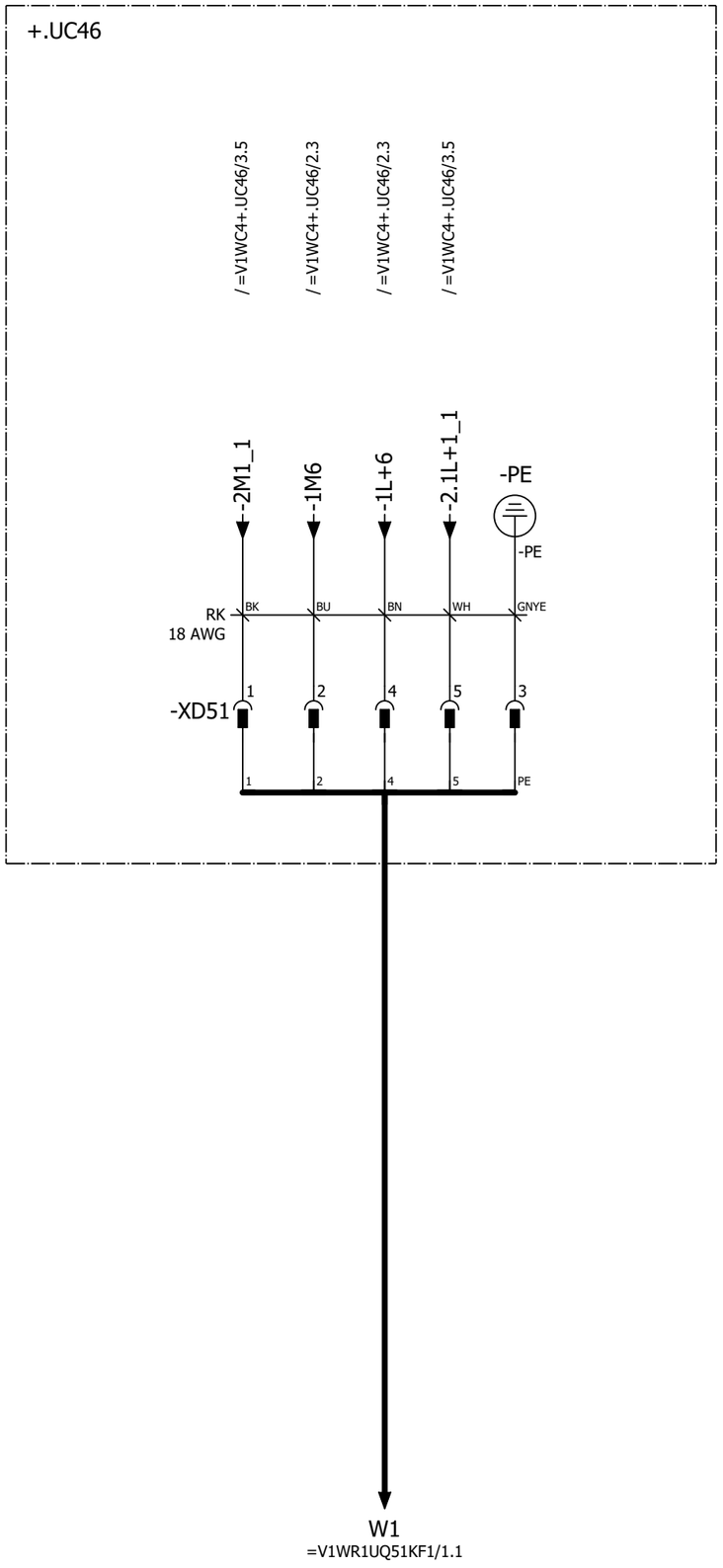

POWER IN / POWER OUT

Pin 1: 0 V UA
Pin 2: 0 V US
Pin 3: FE
Pin 4: +24 V US / 9 A
Pin 5: +24 V UA / 9 A

Pin #	WIRE	COLOR
Pin 1	2M1_1	BK
Pin 2	1M6	BU
Pin 3	PE	GNYE
Pin 4	1L+6	BN
Pin 5	2.1L+1_1	WH

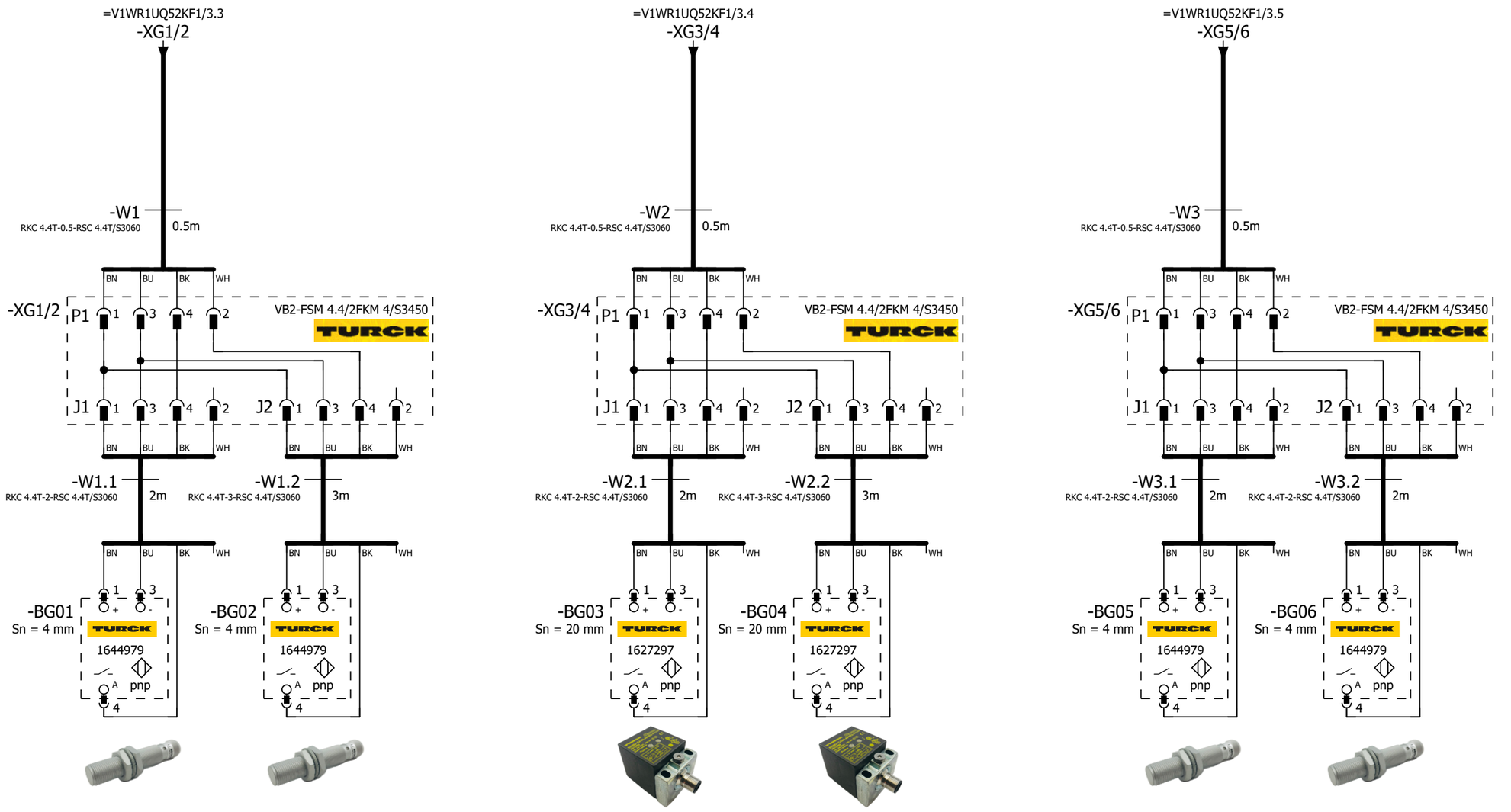

=V1WR1UQ52 -BG01 Bellow Plate LH	=V1WR1UQ52 -BG02 Bellow Plate RH	=V1WR1UQ52 -BG03 Cross Member	=V1WR1UQ52 -BG04 Cross Member	=V1WR1UQ52 -BG05 Tie Plate 01	=V1WR1UQ52 -BG06 Tie Plate 01

=V1WR1UQ51WC4+.WR1UQ51/1

2

			Date	12/22/2022	Volvo Trucks North America	Valiant TMS	SENSORS	Drawing name: =2V13&EFS_EL	= V1WR1UQ52BG0	
			Ed.	MKLEPADLO					+ V1WR1UQ52	
			Appr		Sub-Floor Members			Document type: EFS	Project nr: 22-16146	Page 1 / 614
Modification	Date	Name	Original		Replacement of / Replaced by	Scale 1:1				

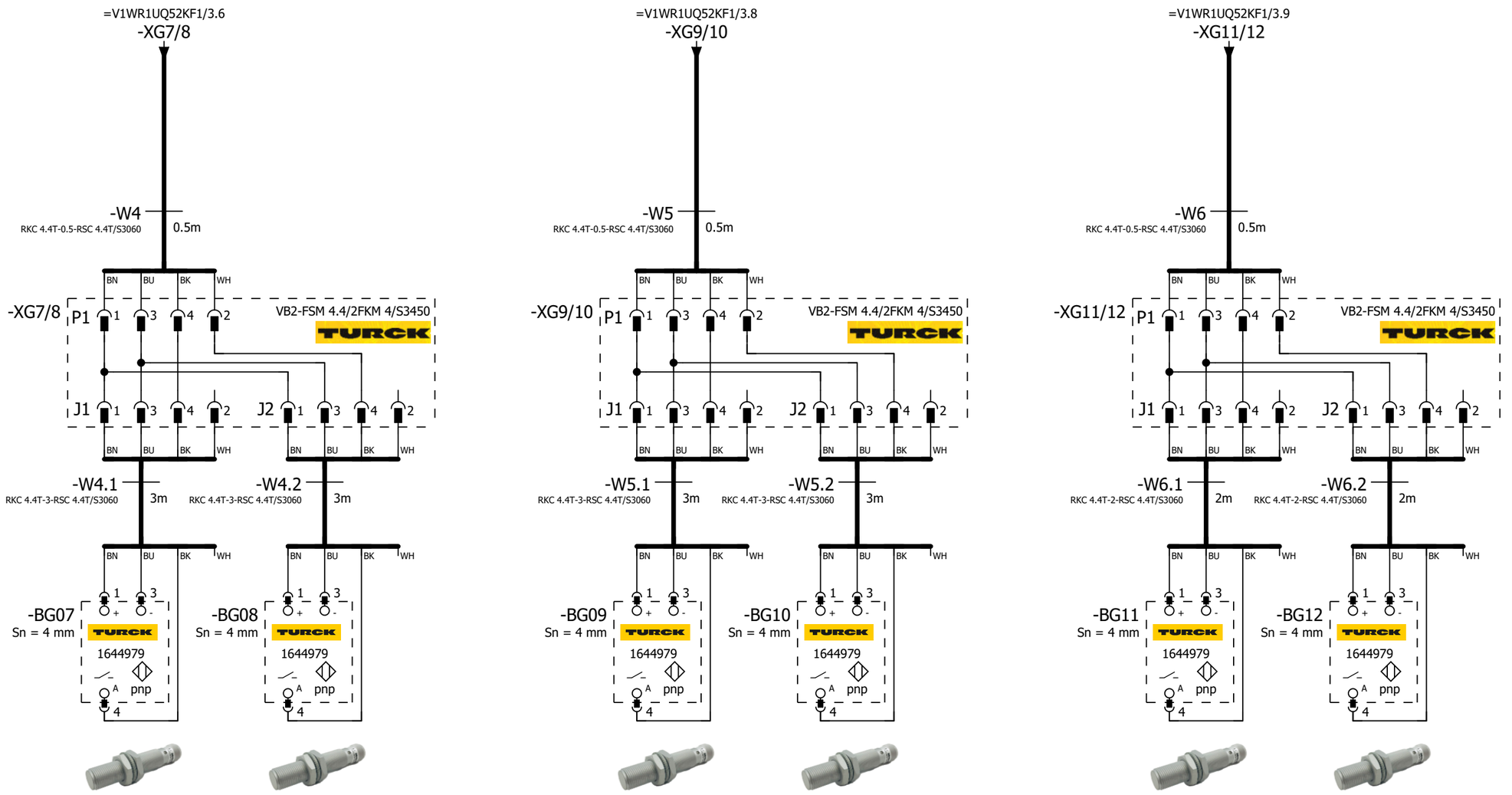

=V1WR1UQ52 -BG07 Tie Plate 02	=V1WR1UQ52 -BG08 Tie Plate 02	=V1WR1UQ52 -BG09 Tie Plate 03	=V1WR1UQ52 -BG10 Tie Plate 03
=V1WR1UQ52 -BG11 Tie Plate 04	=V1WR1UQ52 -BG12 Tie Plate 04		

1 3

			Date	12/22/2022	Volvo Trucks North America	Valiant TMS	SENSORS	Drawing name: =2V13&EFS_EL	= V1WR1UQ52BG0	
			Ed.	MKLEPADLO					+ V1WR1UQ52	
			Appr		Sub-Floor Members			Document type: EFS	Project nr: 22-16146	Page 2 / 614
Modification	Date	Name	Original		Replacement of / Replaced by	Scale 1:1				

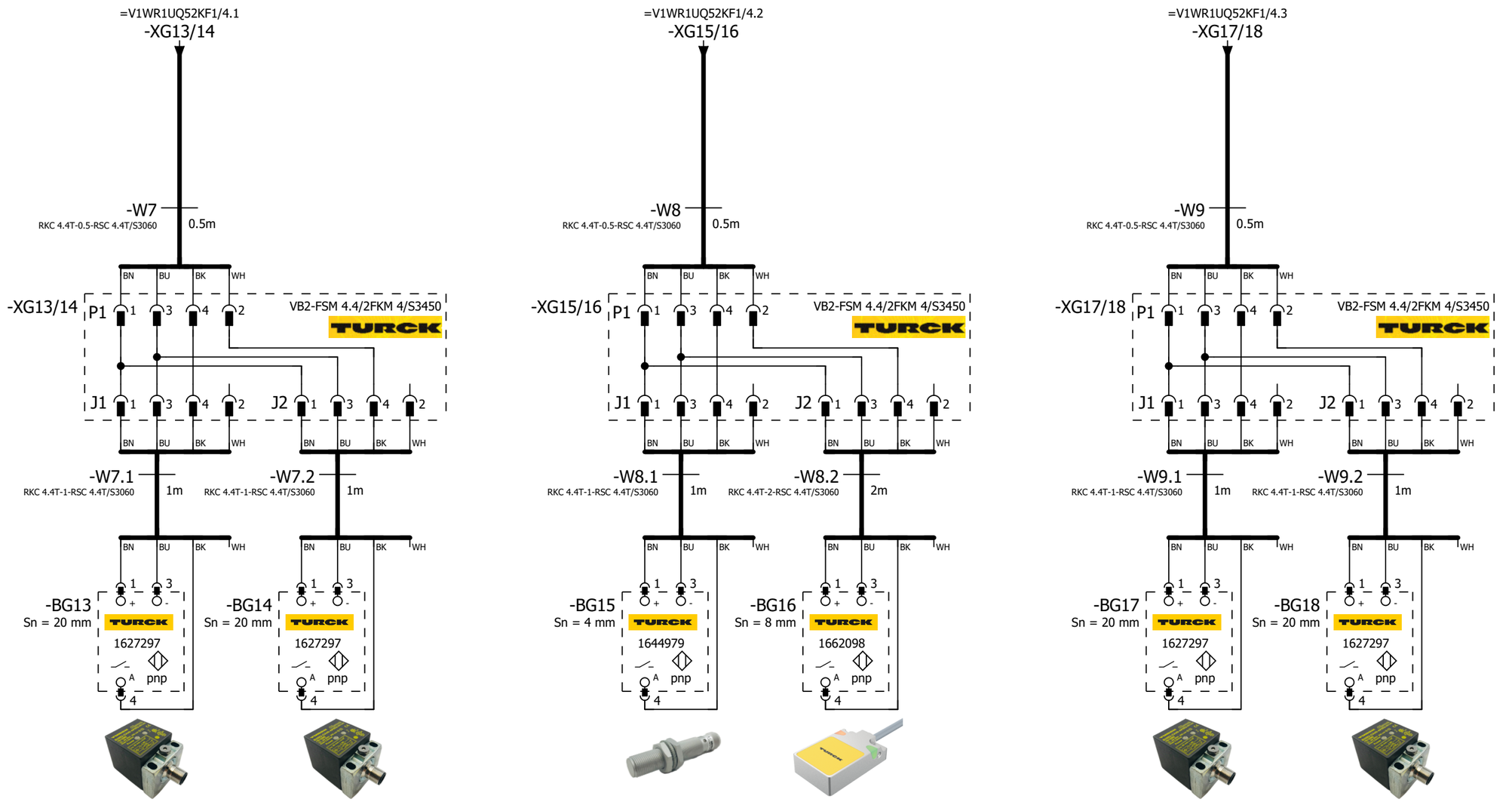

=V1WR1UQ52 -BG13 RR Shock Mount ASSY LH	=V1WR1UQ52 -BG14 RR Shock Mount ASSY LH	=V1WR1UQ52 -BG15 Vertical Inboard Outboard ASSY	=V1WR1UQ52 -BG16 Vertical Inboard Outboard ASSY	=V1WR1UQ52 -BG17 RR Shock Mount ASSY RH	=V1WR1UQ52 -BG18 RR Shock Mount ASSY RH

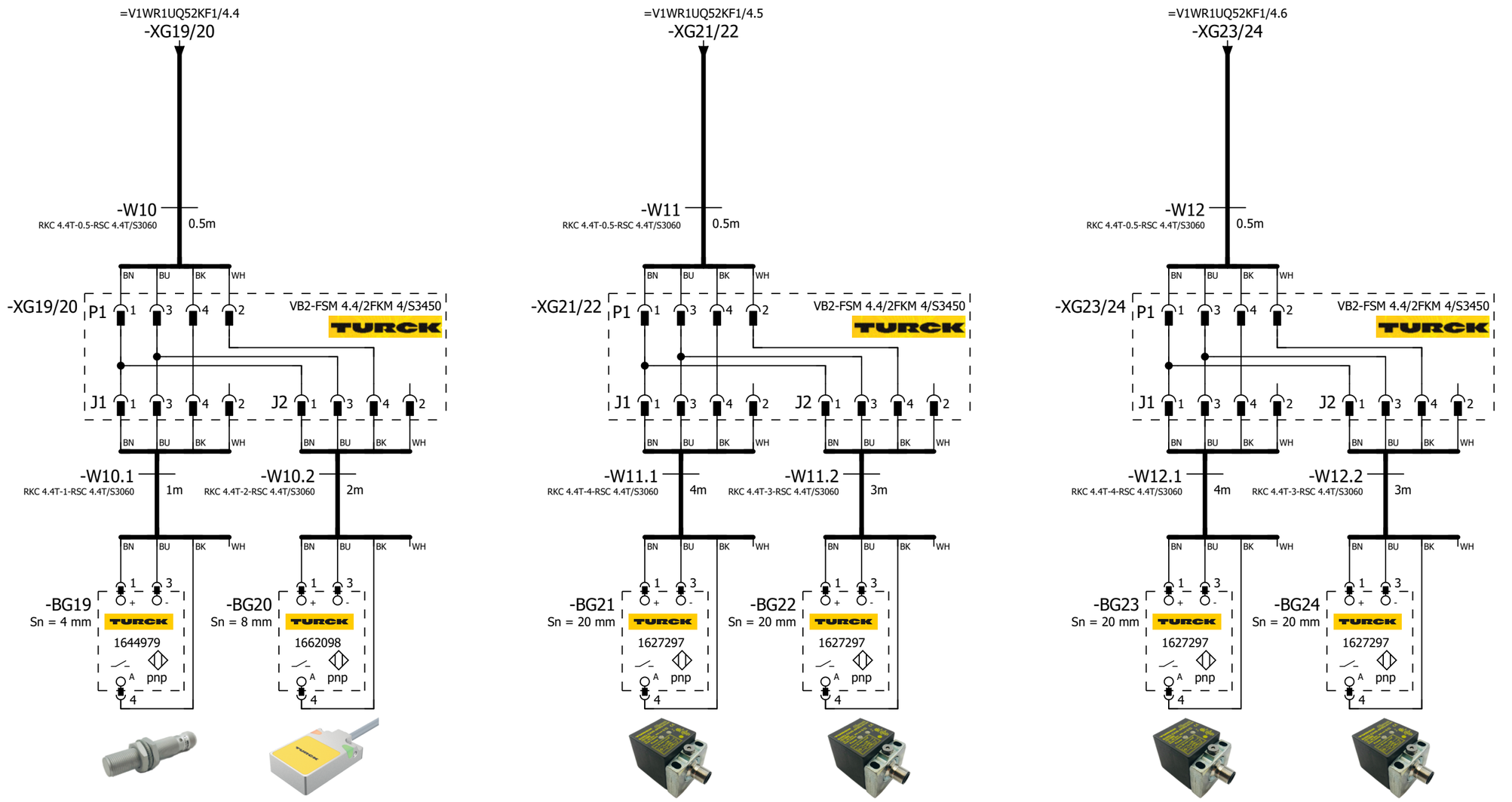

=V1WR1UQ52 -BG19 Vertical Inboard Outboard ASSY	=V1WR1UQ52 -BG20 Vertical Inboard Outboard ASSY	=V1WR1UQ52 -BG21 Cross Member	=V1WR1UQ52 -BG22 Cross Member	=V1WR1UQ52 -BG23 RR Shock Mount ASSY LH	=V1WR1UQ52 -BG24 RR Shock Mount ASSY RH

3 5

			Date	12/22/2022	Volvo Trucks North America	Valiant TMS	SENSORS	Drawing name: =2V13&EFS_EL	= V1WR1UQ52BG0	
			Ed.	MKLEPADLO					+ V1WR1UQ52	
			Appr		Sub-Floor Members			Document type: EFS	Project nr: 22-16146	Page 4 / 614
Modification	Date	Name	Original		Replacement of / Replaced by	Scale 1:1				

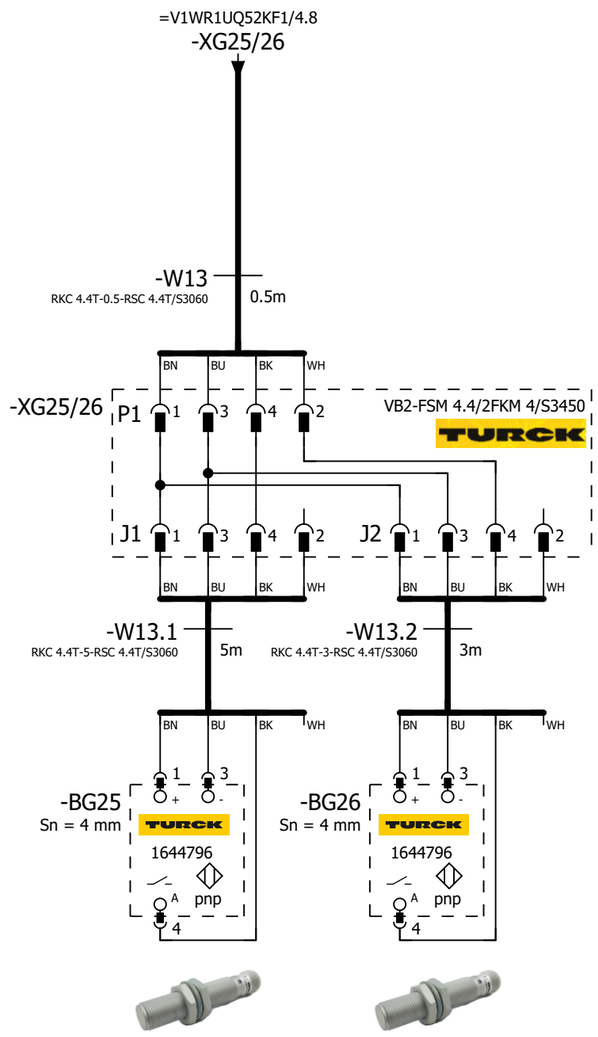

=V1WR1UQ52 -BG25 RR Shock Mount ASSY LH	=V1WR1UQ52 -BG26 RR Shock Mount ASSY RH

=V1WR1UQ52KF1/1

			Date	12/22/2022	Volvo Trucks North America	Valiant TMS	SENSORS	Drawing name: =2V13&EFS_EL		= V1WR1UQ52BG0	
			Ed.	MKLEPADLO						+ V1WR1UQ52	
			Appr		Sub-Floor Members			Document type: EFS	Project nr: 22-16146		Page 5
Modification	Date	Name	Original		Replacement of / Replaced by	Scale 1:1					614

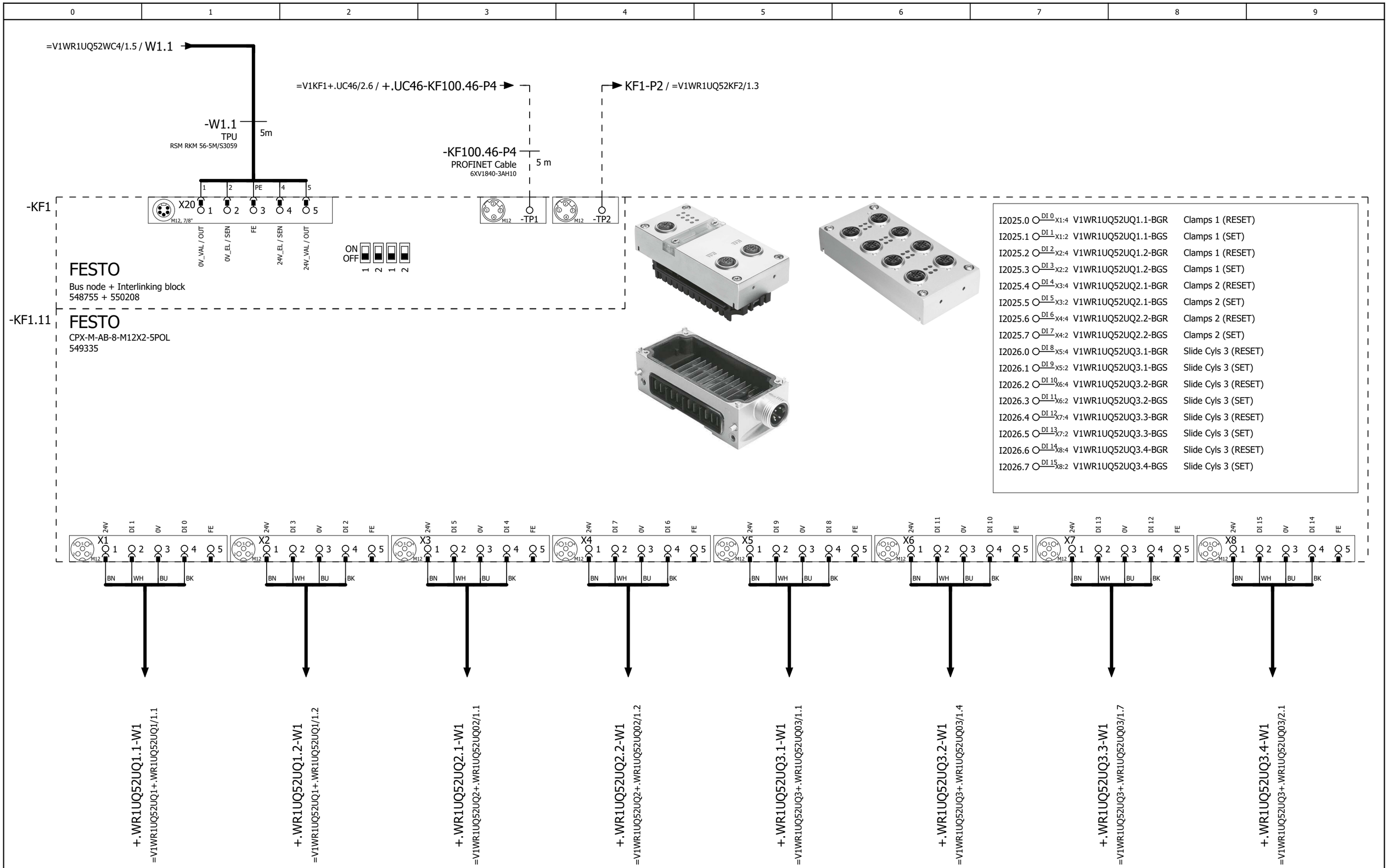

=V1WR1UQ52BG0/5

2

			Date	12/22/2022	Volvo Trucks North America	Valiant TMS	CONNECTING MOD. FOR VTSA MANIFOLD	Drawing name: =2V13&EFS_EL	= V1WR1UQ52KF1		
			Ed.	MKLEPADLO					+ V1WR1UQ52		
			Appr		Sub-Floor Members			Document type: EFS	Project nr: 22-16146	Page	1
Modification	Date	Name	Original		Replacement of	Replaced by	Scale 1:1				614

0	1	2	3	4	5	6	7	8	9

-KF1.12

FESTO
CPX-M-AB-8-M12X2-5POL
549335

I2027.0	DI 0 X1:4	V1WR1UQ52UQ4.1-BGR	Clamps 4 (RESET)
I2027.1	DI 1 X1:2	V1WR1UQ52UQ4.1-BGS	Clamps 4 (SET)
I2027.2	DI 2 X2:4	V1WR1UQ52UQ4.2-BGR	Clamps 4 (RESET)
I2027.3	DI 3 X2:2	V1WR1UQ52UQ4.2-BGS	Clamps 4 (SET)
I2027.4	DI 4 X3:4	V1WR1UQ52UQ4.3-BGR	Clamps 4 (RESET)
I2027.5	DI 5 X3:2	V1WR1UQ52UQ4.3-BGS	Clamps 4 (SET)
I2027.6	DI 6 X4:4	V1WR1UQ52UQ4.4-BGR	Clamps 4 (RESET)
I2027.7	DI 7 X4:2	V1WR1UQ52UQ4.4-BGS	Clamps 4 (SET)
I2028.0	DI 8 X5:4	V1WR1UQ52UQ5.1-BGR	Shot Pins 5 (RESET)
I2028.1	DI 9 X5:2	V1WR1UQ52UQ5.1-BGS	Shot Pins 5 (SET)
I2028.2	DI 10 X6:4	V1WR1UQ52UQ5.2-BGR	Shot Pins 5 (RESET)
I2028.3	DI 11 X6:2	V1WR1UQ52UQ5.2-BGS	Shot Pins 5 (SET)
I2028.4	DI 12 X7:4	V1WR1UQ52UQ6.1-BGR	Clamps 6 (RESET)
I2028.5	DI 13 X7:2	V1WR1UQ52UQ6.1-BGS	Clamps 6 (SET)
I2028.6	DI 14 X8:4	V1WR1UQ52UQ6.2-BGR	Clamps 6 (RESET)
I2028.7	DI 15 X8:2	V1WR1UQ52UQ6.2-BGS	Clamps 6 (SET)

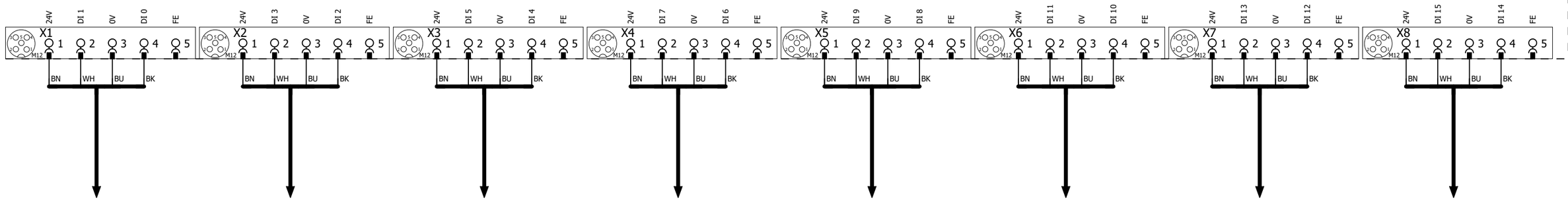

+.WR1UQ52UQ4.1-W1
=V1WR1UQ52UQ4+.WR1UQ52UQ04/1.1

+.WR1UQ52UQ4.2-W1
=V1WR1UQ52UQ4+.WR1UQ52UQ04/1.2

+.WR1UQ52UQ4.3-W1
=V1WR1UQ52UQ4+.WR1UQ52UQ04/1.4

+.WR1UQ52UQ4.4-W1
=V1WR1UQ52UQ4+.WR1UQ52UQ04/1.5

+.WR1UQ52UQ5.1-W1
=V1WR1UQ52UQ5+.WR1UQ52UQ05/1.1

+.WR1UQ52UQ5.2-W1
=V1WR1UQ52UQ5+.WR1UQ52UQ05/1.2

+.WR1UQ52UQ6.1-W1
=V1WR1UQ52UQ6+.WR1UQ52UQ06/1.1

+.WR1UQ52UQ6.2-W1
=V1WR1UQ52UQ6+.WR1UQ52UQ06/1.2

1 3

			Date	12/22/2022	Volvo Trucks North America		Valiant TMS	I/O MOD. DI16 (8 x M12) FOR VTSA-F	Drawing name: =2V13&EFS_EL		= V1WR1UQ52KF1
			Ed.	MKLEPADLO							+ V1WR1UQ52
			Appr		Sub-Floor Members				Document type: EFS	Project nr: 22-16146	Page 2
Modification	Date	Name	Original		Replacement of	Replaced by	Scale 1:1				614

I2029.0	DI 0 X1:4	V1WR1UQ52UQ6.3-BGR	Clamps 6 (RESET)
I2029.1	DI 1 X1:2	V1WR1UQ52UQ6.3-BGS	Clamps 6 (SET)
I2029.2	DI 2 X2:4	V1WR1UQ51UQ6.4-BGR	Clamps 6 (RESET)
I2029.3	DI 3 X2:2	V1WR1UQ51UQ6.4-BGS	Clamps 6 (SET)
I2029.4	DI 4 X3:4	V1WR1UQ51-BG01	Bellow Plate LH
I2029.5	DI 5 X3:2	V1WR1UQ51-BG02	Bellow Plate RH
I2029.6	DI 6 X4:4	V1WR1UQ51-BG03	Cross Member
I2029.7	DI 7 X4:2	V1WR1UQ51-BG04	Cross Member
I2030.0	DI 8 X5:4	V1WR1UQ51-BG05	Tie Plate 01
I2030.1	DI 9 X5:2	V1WR1UQ51-BG06	Tie Plate 01
I2030.2	DI 10 X6:4	V1WR1UQ51-BG07	Tie Plate 02
I2030.3	DI 11 X6:2	V1WR1UQ51-BG08	Tie Plate 02
I2030.4	DI 12 X7:4	V1WR1UQ51-BG09	Tie Plate 03
I2030.5	DI 13 X7:2	V1WR1UQ51-BG10	Tie Plate 03
I2030.6	DI 14 X8:4	V1WR1UQ51-BG11	Tie Plate 04
I2030.7	DI 15 X8:2	V1WR1UQ51-BG12	Tie Plate 04

-KF1.13

FESTO
CPX-M-AB-8-M12X2-5POL
549335

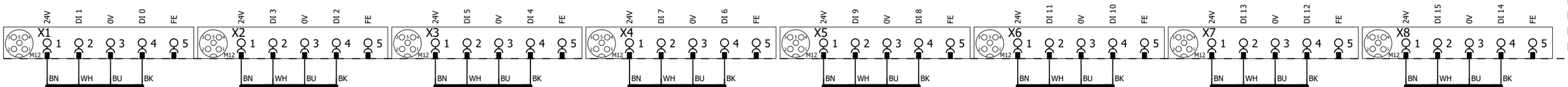

+.WR1UQ52UQ6.3-W1
=V1WR1UQ52UQ6+.WR1UQ52UQ06/1.4

+.WR1UQ52UQ6.4-W1
=V1WR1UQ52UQ6+.WR1UQ52UQ06/1.5

-XG1/2
=V1WR1UQ52BG0/1.1

-XG3/4
=V1WR1UQ52BG0/1.4

-XG5/6
=V1WR1UQ52BG0/1.6

-XG7/8
=V1WR1UQ52BG0/2.1

-XG9/10
=V1WR1UQ52BG0/2.4

-XG11/12
=V1WR1UQ52BG0/2.6

I2031.0	DI 0 X1:4	V1WR1UQ51-BG13	RR Shock Mount ASSY LH
I2031.1	DI 1 X1:2	V1WR1UQ51-BG14	RR Shock Mount ASSY LH
I2031.2	DI 2 X2:4	V1WR1UQ51-BG15	Vertical Inboard Outboard ASSY
I2031.3	DI 3 X2:2	V1WR1UQ51-BG16	Verical Inboard Outboard ASSY
I2031.4	DI 4 X3:4	V1WR1UQ51-BG17	RR Shock Mount ASSY RH
I2031.5	DI 5 X3:2	V1WR1UQ51-BG18	RR Shock Mount ASSY RH
I2031.6	DI 6 X4:4	V1WR1UQ51-BG19	Verical Inboard Outboard ASSY
I2031.7	DI 7 X4:2	V1WR1UQ51-BG20	Verical Inboard Outboard ASSY
I2032.0	DI 8 X5:4	V1WR1UQ51-BG21	Cross Member
I2032.1	DI 9 X5:2	V1WR1UQ51-BG22	Cross Member
I2032.2	DI 10 X6:4	V1WR1UQ51-BG23	RR Shock Mount ASSY LH
I2032.3	DI 11 X6:2	V1WR1UQ51-BG24	RR Shock Mount ASSY RH
I2032.4	DI 12 X7:4	V1WR1UQ51-BG25	RR Shock Mount ASSY LH
I2032.5	DI 13 X7:2	V1WR1UQ51-BG26	RR Shock Mount ASSY RH
I2032.6	DI 14 X8:4	I2032.6	Spare
I2032.7	DI 15 X8:2	I2032.7	Spare

-KF1.14

FESTO
CPX-M-AB-8-M12X2-5POL
549335

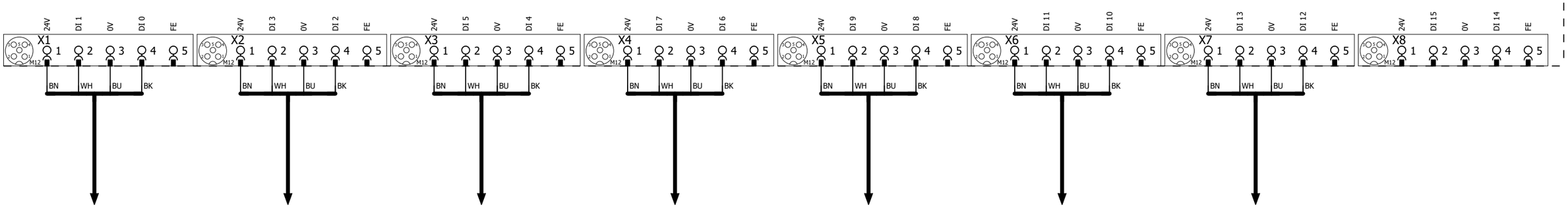

-XG13/14
=V1WR1UQ52BG0/3.1

-XG15/16
=V1WR1UQ52BG0/3.4

-XG17/18
=V1WR1UQ52BG0/3.6

-XG19/20
=V1WR1UQ52BG0/4.1

-XG21/22
=V1WR1UQ52BG0/4.4

-XG23/24
=V1WR1UQ52BG0/4.6

-XG25/26
=V1WR1UQ52BG0/5.1

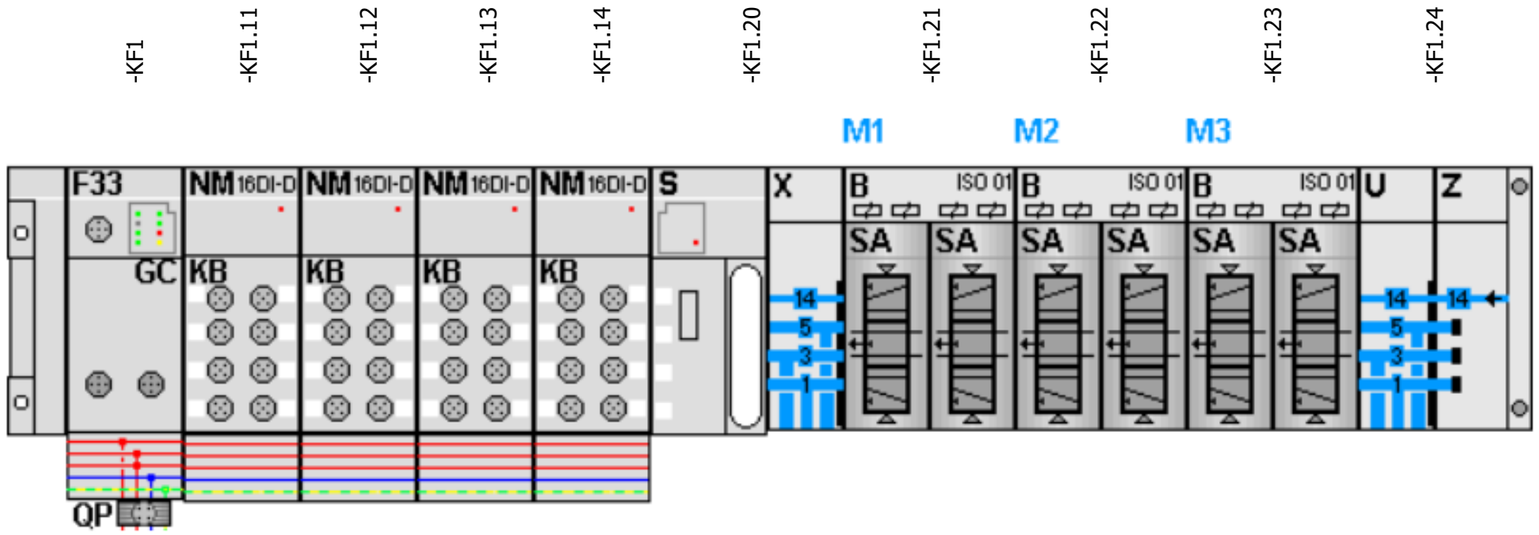

-KF1.21
=V1WR1UQ52UQ1+.WR1UQ52UQ1/1.3
=V1WR1UQ52UQ2+.WR1UQ52UQ02/1.3

FESTO

=V1WR1UQ52UQ1+.WR1UQ52UQ1/1.4	Q2025.0 DO 0 1.1	-QN1.1_Q	Clamps 1 (RST)
=V1WR1UQ52UQ1+.WR1UQ52UQ1/1.4	Q2025.1 DO 1 1.2	-QN1.2_Q	Clamps 1 (SET)
=V1WR1UQ52UQ2+.WR1UQ52UQ02/1.4	Q2025.2 DO 2 2.1	-QN2.1_Q	Clamps 2 (RST)
=V1WR1UQ52UQ2+.WR1UQ52UQ02/1.4	Q2025.3 DO 3 2.2	-QN2.2_Q	Clamps 2 (SET)

-KF1.22
=V1WR1UQ52UQ3+.WR1UQ52UQ03/1.3
=V1WR1UQ52UQ4+.WR1UQ52UQ04/1.3

FESTO

=V1WR1UQ52UQ3+.WR1UQ52UQ03/1.4	Q2025.4 DO 0 1.1	-QN3.1_Q	Slide Cyls 3 (RST)
=V1WR1UQ52UQ3+.WR1UQ52UQ03/1.4	Q2025.5 DO 1 1.2	-QN3.2_Q	Slide Cyls 3 (SET)
=V1WR1UQ52UQ4+.WR1UQ52UQ04/1.4	Q2025.6 DO 2 2.1	-QN4.1_Q	Clamps 4 (RST)
=V1WR1UQ52UQ4+.WR1UQ52UQ04/1.4	Q2025.7 DO 3 2.2	-QN4.2_Q	Clamps 4 (SET)

-KF1.23
=V1WR1UQ52UQ5+.WR1UQ52UQ05/1.3
=V1WR1UQ52UQ6+.WR1UQ52UQ06/1.3

FESTO

=V1WR1UQ52UQ5+.WR1UQ52UQ05/1.4	Q2026.0 DO 0 1.1	-QN5.1_Q	Clamps 5 (RST)
=V1WR1UQ52UQ5+.WR1UQ52UQ05/1.4	Q2026.1 DO 1 1.2	-QN5.2_Q	Clamps 5 (SET)
=V1WR1UQ52UQ6+.WR1UQ52UQ06/1.4	Q2026.2 DO 2 2.1	-QN6.1_Q	Clamps 6 (RST)
=V1WR1UQ52UQ6+.WR1UQ52UQ06/1.4	Q2026.3 DO 3 2.2	-QN6.2_Q	Clamps 6 (SET)

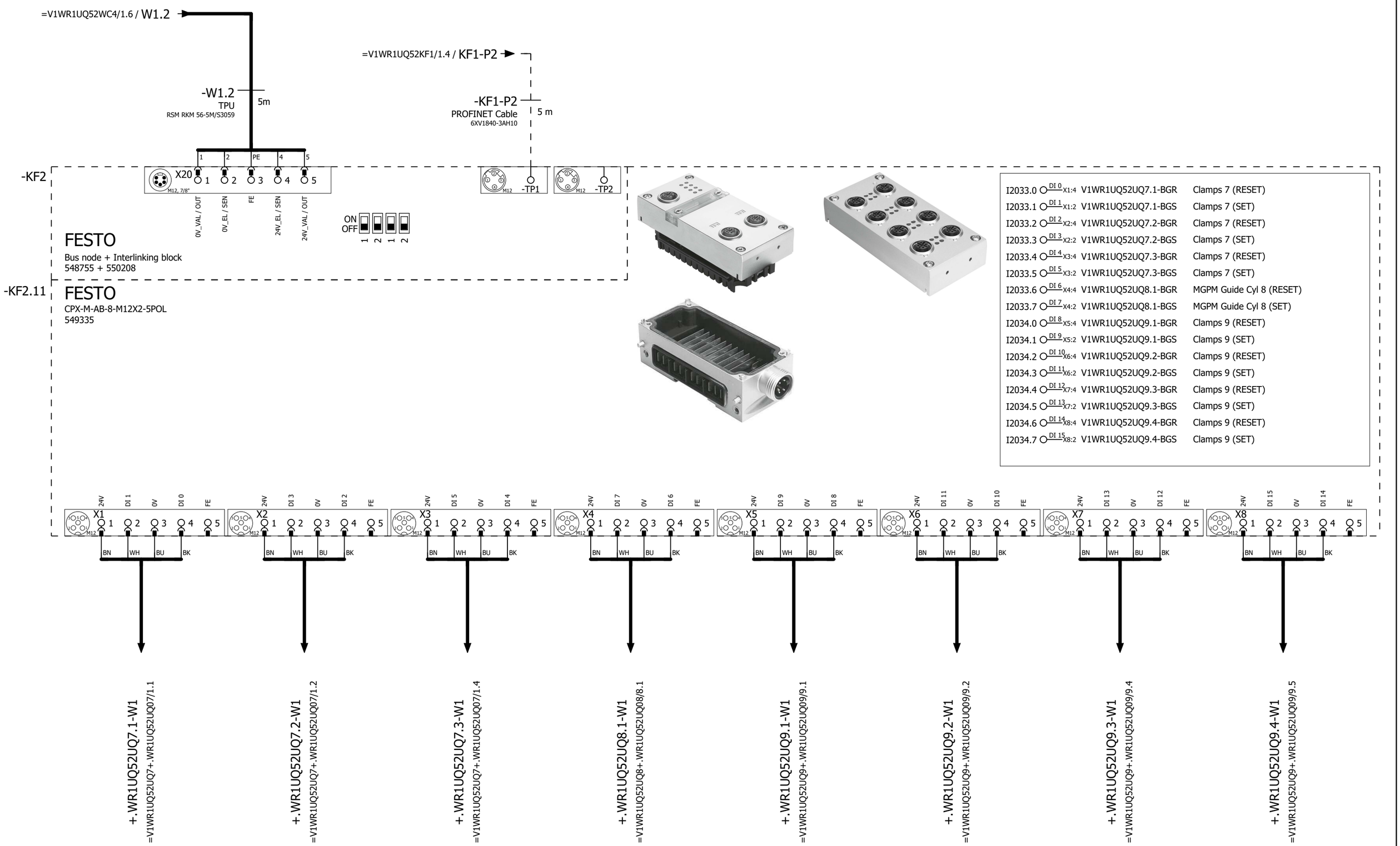

=V1WR1UQ52KF1/5

2

			Date	12/22/2022	Volvo Trucks North America	Valiant TMS	CONNECTING MOD. FOR VTSA MANIFOLD	Drawing name: =2V13&EFS_EL		= V1WR1UQ52KF2	
			Ed.	MKLEPADLO						+ V1WR1UQ52	
			Appr		Sub-Floor Members			Document type: EFS	Project nr: 22-16146		Page 1
Modification	Date	Name	Original		Replacement of / Replaced by	Scale 1:1					614

I2035.0	DI 0 X1:4	V1WR1UQ52UQ9.5-BGR	Clamps 9 (RESET)
I2035.1	DI 1 X1:2	V1WR1UQ52UQ9.5-BGS	Clamps 9 (SET)
I2035.2	DI 2 X2:4	V1WR1UQ52UQ10.1-BGR	Clamps 10 (RESET)
I2035.3	DI 3 X2:2	V1WR1UQ52UQ10.1-BGS	Clamps 10 (SET)
I2035.4	DI 4 X3:4	V1WR1UQ52UQ10.2-BGR	Clamps 10 (RESET)
I2035.5	DI 5 X3:2	V1WR1UQ52UQ10.2-BGS	Clamps 10 (SET)
I2035.6	DI 6 X4:4	V1WR1UQ52UQ10.3-BGR	Clamps 10 (RESET)
I2035.7	DI 7 X4:2	V1WR1UQ52UQ10.3-BGS	Clamps 10 (SET)
I2036.0	DI 8 X5:4	V1WR1UQ52UQ11.1-BGR	MGPM Guide Cyl 11 (RESET)
I2036.1	DI 9 X5:2	V1WR1UQ52UQ11.1-BGS	MGPM Guide Cyl 11 (SET)
I2036.2	DI 10 X6:4	V1WR1UQ52UQ12.1-BGR	Clamps 12 (RESET)
I2036.3	DI 11 X6:2	V1WR1UQ52UQ12.1-BGS	Clamps 12 (SET)
I2036.4	DI 12 X7:4	V1WR1UQ52UQ12.2-BGR	Clamps 12 (RESET)
I2036.5	DI 13 X7:2	V1WR1UQ52UQ12.2-BGS	Clamps 12 (SET)
I2036.6	DI 14 X8:4	V1WR1UQ52UQ12.3-BGR	Clamps 12 (RESET)
I2036.7	DI 15 X8:2	V1WR1UQ52UQ12.3-BGS	Clamps 12 (SET)

-KF2.12

FESTO

CPX-M-AB-8-M12X2-5POL

549335

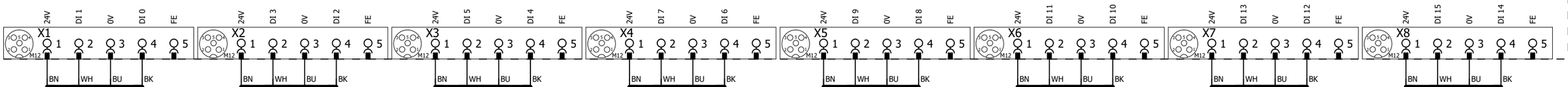

+.WR1UQ52UQ9.5-W1
=V1WR1UQ52UQ9+.WR1UQ52UQ09/9.7

+.WR1UQ52UQ10.1-W1
=V1WR1UQ52UQ10+.WR1UQ52UQ10/10.1

+.WR1UQ52UQ10.2-W1
=V1WR1UQ52UQ10+.WR1UQ52UQ10/10.2

+.WR1UQ52UQ10.3-W1
=V1WR1UQ52UQ10+.WR1UQ52UQ10/10.4

+.WR1UQ52UQ11.1-W1
=V1WR1UQ52UQ11+.WR1UQ52UQ11/11.1

+.WR1UQ52UQ12.1-W1
=V1WR1UQ52UQ12+.WR1UQ52UQ12/12.1

+.WR1UQ52UQ12.2-W1
=V1WR1UQ52UQ12+.WR1UQ52UQ12/12.2

+.WR1UQ52UQ12.3-W1
=V1WR1UQ52UQ12+.WR1UQ52UQ12/12.4

0	1	2	3	4	5	6	7	8	9

I2037.0	DI 0 X1:4	V1WR1UQ52UQ12.4-BGR	Clamps 12 (RESET)
I2037.1	DI 1 X1:2	V1WR1UQ52UQ12.4-BGS	Clamps 12 (SET)
I2037.2	DI 2 X2:4	V1WR1UQ52UQ12.5-BGR	Clamps 12 (RESET)
I2037.3	DI 3 X2:2	V1WR1UQ52UQ12.5-BGS	Clamps 12 (SET)
I2037.4	DI 4 X3:4	V1WR1UQ52UQ13.1-BGR	Clamps 13 (RESET)
I2037.5	DI 5 X3:2	V1WR1UQ52UQ13.1-BGS	Clamps 13 (SET)
I2037.6	DI 6 X4:4	V1WR1UQ52UQ13.2-BGR	Clamps 13 (RESET)
I2037.7	DI 7 X4:2	V1WR1UQ52UQ13.2-BGS	Clamps 13 (SET)
I2038.0	DI 8 X5:4	V1WR1UQ52UQ13.3-BGR	Clamps 13 (RESET)
I2038.1	DI 9 X5:2	V1WR1UQ52UQ13.3-BGS	Clamps 13 (SET)
I2038.2	DI 10 X6:4	V1WR1UQ52UQ13.4-BGR	Clamps 13 (RESET)
I2038.3	DI 11 X6:2	V1WR1UQ52UQ13.4-BGS	Clamps 13 (SET)
I2038.4	DI 12 X7:4	V1WR1UQ52UQ13.5-BGR	Clamps 13 (RESET)
I2038.5	DI 13 X7:2	V1WR1UQ52UQ13.5-BGS	Clamps 13 (SET)
I2038.6	DI 14 X8:4	V1WR1UQ52UQ13.6-BGR	Clamps 13 (RESET)
I2038.7	DI 15 X8:2	V1WR1UQ52UQ13.6-BGS	Clamps 13 (SET)

-KF2.13

FESTO

CPX-M-AB-8-M12X2-5POL

549335

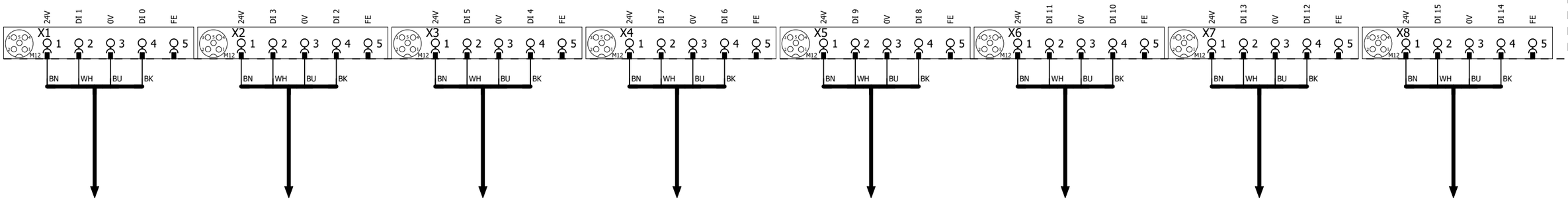

+.WR1UQ52UQ12.4-W1
=V1WR1UQ52UQ12+.WR1UQ52UQ12/12.5

+.WR1UQ52UQ12.5-W1
=V1WR1UQ52UQ12+.WR1UQ52UQ12/12.7

+.WR1UQ52UQ13.1-W1
=V1WR1UQ52UQ13+.WR1UQ52UQ13/13.1

+.WR1UQ52UQ13.2-W1
=V1WR1UQ52UQ13+.WR1UQ52UQ13/13.2

+.WR1UQ52UQ13.3-W1
=V1WR1UQ52UQ13+.WR1UQ52UQ13/13.4

+.WR1UQ52UQ13.4-W1
=V1WR1UQ52UQ13+.WR1UQ52UQ13/13.5

+.WR1UQ52UQ13.5-W1
=V1WR1UQ52UQ13+.WR1UQ52UQ13/13.7

+.WR1UQ52UQ13.6-W1
=V1WR1UQ52UQ13+.WR1UQ52UQ13/13.9

2 4

			Date	12/22/2022	Volvo Trucks North America	Valiant TMS	I/O MOD. DI16 (8 x M12) FOR VTSA-F	Drawing name: =2V13&EFS_EL		= V1WR1UQ52KF2	
			Ed.	MKLEPADLO						+ V1WR1UQ52	
			Appr		Sub-Floor Members			Document type: EFS	Project nr: 22-16146		Page 3
Modification	Date	Name	Original		Replacement of	Replaced by	Scale 1:1				614

-KF2.14

FESTO

CPX-M-AB-8-M12X2-5POL
549335

I2039.0	DI 0 X1:4	V1WR1UQ52UQ14.1-BGR	Shot Pins 14 (RESET)
I2039.1	DI 1 X1:2	V1WR1UQ52UQ14.1-BGS	Shot Pins 14 (SET)
I2039.2	DI 2 X2:4	I2039.2	Spare
I2039.3	DI 3 X2:2	I2039.3	Spare
I2039.4	DI 4 X3:4	I2039.4	Spare
I2039.5	DI 5 X3:2	I2039.5	Spare
I2039.6	DI 6 X4:4	I2039.6	Spare
I2039.7	DI 7 X4:2	I2039.7	Spare
I2040.0	DI 8 X5:4	I2040.0	Spare
I2040.1	DI 9 X5:2	I2040.1	Spare
I2040.2	DI 10 X6:4	I2040.2	Spare
I2040.3	DI 11 X6:2	I2040.3	Spare
I2040.4	DI 12 X7:4	I2040.4	Spare
I2040.5	DI 13 X7:2	I2040.5	Spare
I2040.6	DI 14 X8:4	I2040.6	Spare
I2040.7	DI 15 X8:2	I2040.7	Spare

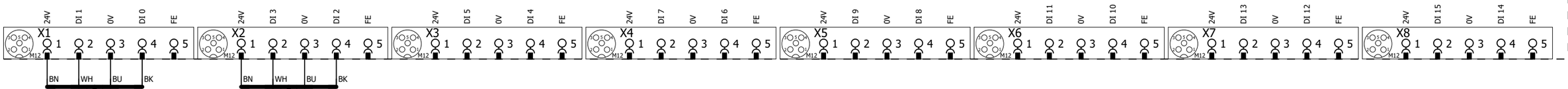

+.WR1UQ52UQ14.1-W1
=V1WR1UQ52UQ14+.WR1UQ52UQ14/14.1

+.WR1UQ52UQ14.2-W1
=V1WR1UQ52UQ14+.WR1UQ52UQ14/14.2

3 5

			Date	12/22/2022	Volvo Trucks North America	Valiant TMS	I/O MOD. DI16 (8 x M12) FOR VTSA-F	Drawing name: =2V13&EFS_EL		= V1WR1UQ52KF2	
			Ed.	MKLEPADLO						+ V1WR1UQ52	
			Appr		Sub-Floor Members			Document type: EFS	Project nr: 22-16146		Page 4
Modification	Date	Name	Original		Replacement of	Replaced by	Scale 1:1				614

-KF2.15

FESTO

CPX-M-AB-8-M12X2-5POL
549335

I2041.0	DI 0 X1:4	I2041.0	Spare
I2041.1	DI 1 X1:2	I2041.1	Spare
I2041.2	DI 2 X2:4	I2041.2	Spare
I2041.3	DI 3 X2:2	I2041.3	Spare
I2041.4	DI 4 X3:4	I2041.4	Spare
I2041.5	DI 5 X3:2	I2041.5	Spare
I2041.6	DI 6 X4:4	I2041.6	Spare
I2041.7	DI 7 X4:2	I2041.7	Spare
I2042.0	DI 8 X5:4	I2042.0	Spare
I2042.1	DI 9 X5:2	I2042.1	Spare
I2042.2	DI 10 X6:4	I2042.2	Spare
I2042.3	DI 11 X6:2	I2042.3	Spare
I2042.4	DI 12 X7:4	I2042.4	Spare
I2042.5	DI 13 X7:2	I2042.5	Spare
I2042.6	DI 14 X8:4	I2042.6	Spare
I2042.7	DI 15 X8:2	I2042.7	Spare

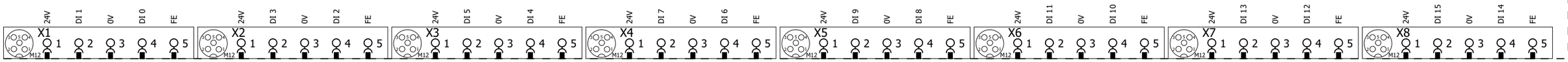

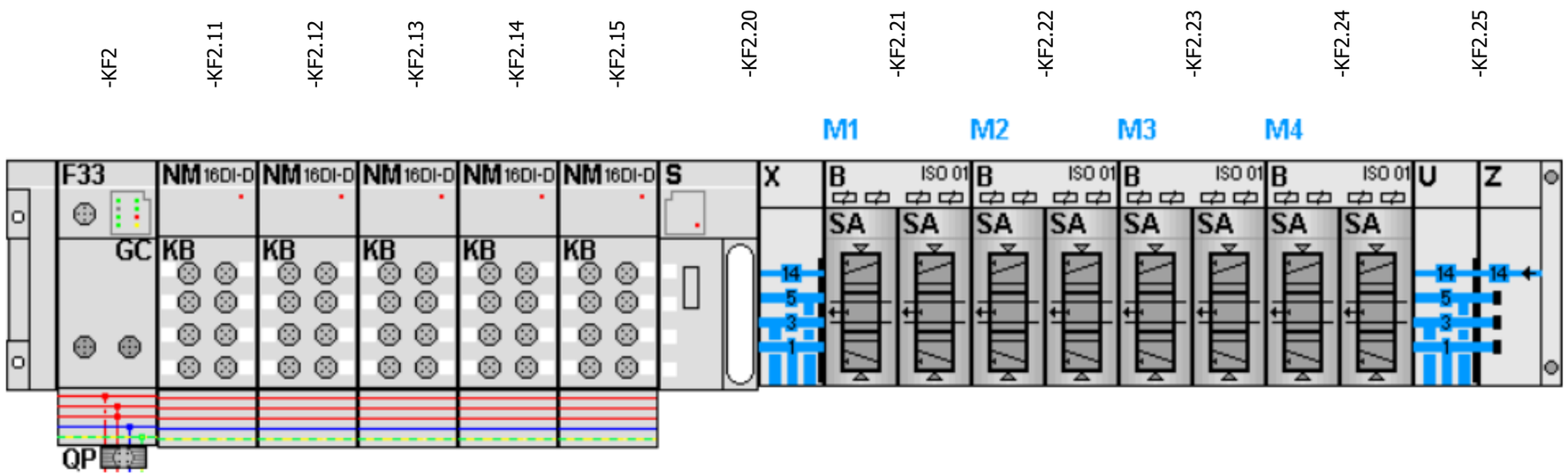

-KF2.21

=V1WR1UQ52UQ7+.WR1UQ52UQ07/1.3
=V1WR1UQ52UQ8+.WR1UQ52UQ08/8.3

FESTO

=V1WR1UQ52UQ7+.WR1UQ52UQ07/1.4	Q2026.4 DO 0 1.1	-QN1.1_Q	Clamps 7 (RST)
=V1WR1UQ52UQ7+.WR1UQ52UQ07/1.4	Q2026.5 DO 1 1.2	-QN1.2_Q	Clamps 7 (SET)
=V1WR1UQ52UQ8+.WR1UQ52UQ08/8.4	Q2026.6 DO 2 2.1	-QN2.1_Q	MGPM Guide Cyl 8 (RST)
=V1WR1UQ52UQ8+.WR1UQ52UQ08/8.4	Q2026.7 DO 3 2.2	-QN2.2_Q	MGPM Guide Cyl 8 (SET)

-KF2.22

=V1WR1UQ52UQ9+.WR1UQ52UQ09/9.3
=V1WR1UQ52UQ10+.WR1UQ52UQ10/10.3

FESTO

=V1WR1UQ52UQ9+.WR1UQ52UQ09/9.4	Q2027.0 DO 0 1.1	-QN3.1_Q	Clamps 9 (RST)
=V1WR1UQ52UQ9+.WR1UQ52UQ09/9.4	Q2027.1 DO 1 1.2	-QN3.2_Q	Clamps 9 (SET)
=V1WR1UQ52UQ10+.WR1UQ52UQ10/10.4	Q2027.2 DO 2 2.1	-QN4.1_Q	Clamps 10 (RST)
=V1WR1UQ52UQ10+.WR1UQ52UQ10/10.4	Q2027.3 DO 3 2.2	-QN4.2_Q	Clamps 10 (SET)

-KF2.23

=V1WR1UQ52UQ11+.WR1UQ52UQ11/11.3
=V1WR1UQ52UQ12+.WR1UQ52UQ12/12.3

FESTO

=V1WR1UQ52UQ11+.WR1UQ52UQ11/11.4	Q2027.4 DO 0 1.1	-QN5.1_Q	MGPM Guide Cyl 11 (RST)
=V1WR1UQ52UQ11+.WR1UQ52UQ11/11.4	Q2027.5 DO 1 1.2	-QN5.2_Q	MGPM Guide Cyl 11 (SET)
=V1WR1UQ52UQ12+.WR1UQ52UQ12/12.4	Q2027.6 DO 2 2.1	-QN6.1_Q	Clamps 12 (RST)
=V1WR1UQ52UQ12+.WR1UQ52UQ12/12.4	Q2027.7 DO 3 2.2	-QN6.2_Q	Clamps 12 (SET)

-KF2.24

=V1WR1UQ52UQ13+.WR1UQ52UQ13/13.3
=V1WR1UQ52UQ14+.WR1UQ52UQ14/14.3

FESTO

=V1WR1UQ52UQ13+.WR1UQ52UQ13/13.4	Q2028.0 DO 0 1.1	-QN7.1_Q	Clamps 13 (RST)
=V1WR1UQ52UQ13+.WR1UQ52UQ13/13.4	Q2028.1 DO 1 1.2	-QN7.2_Q	Clamps 13 (SET)
=V1WR1UQ52UQ14+.WR1UQ52UQ14/14.4	Q2028.2 DO 2 2.1	-QN8.1_Q	Shot Pins 14 (RST)
=V1WR1UQ52UQ14+.WR1UQ52UQ14/14.4	Q2028.3 DO 3 2.2	-QN8.2_Q	Shot Pins 14 (SET)

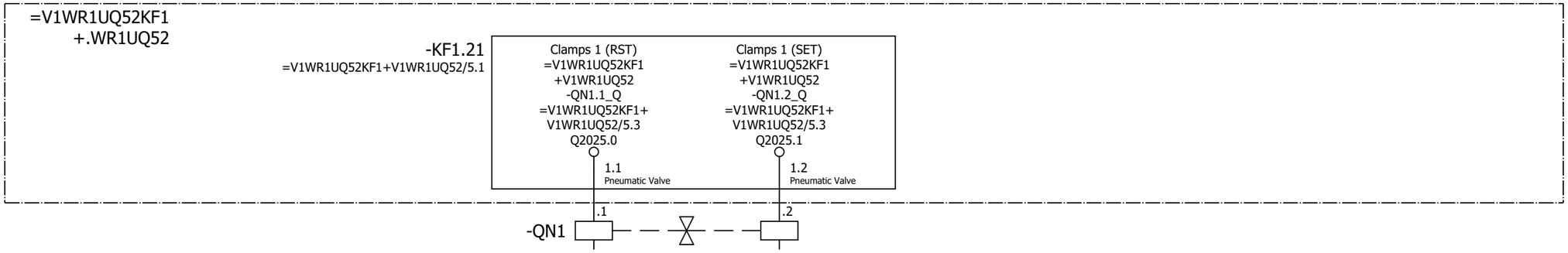

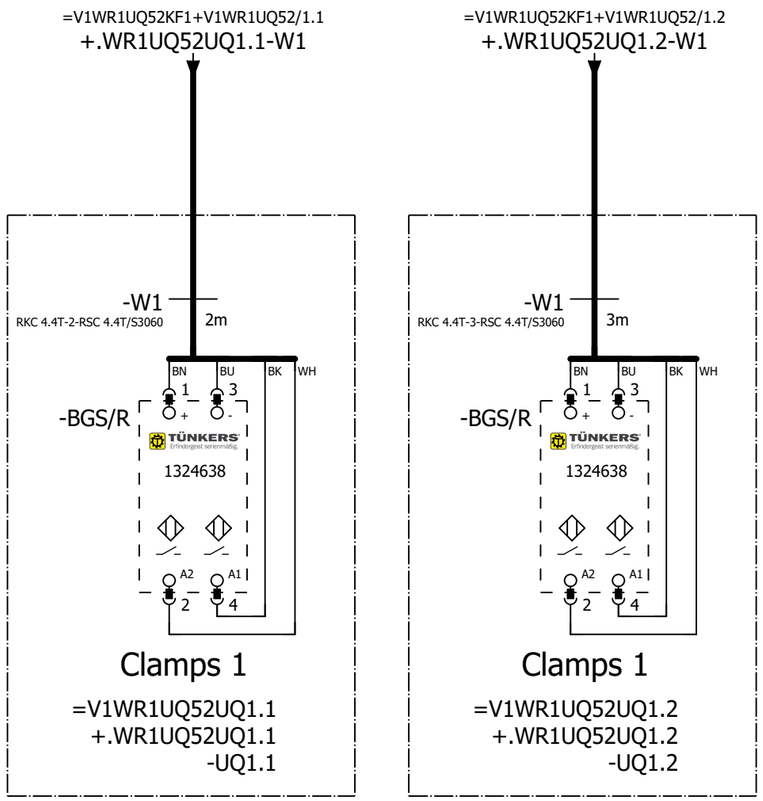

=V1WR1UQ52
-UQ1.1-BGS/R
Clamps 1

=V1WR1UQ52
-UQ1.2-BGS/R
Clamps 1

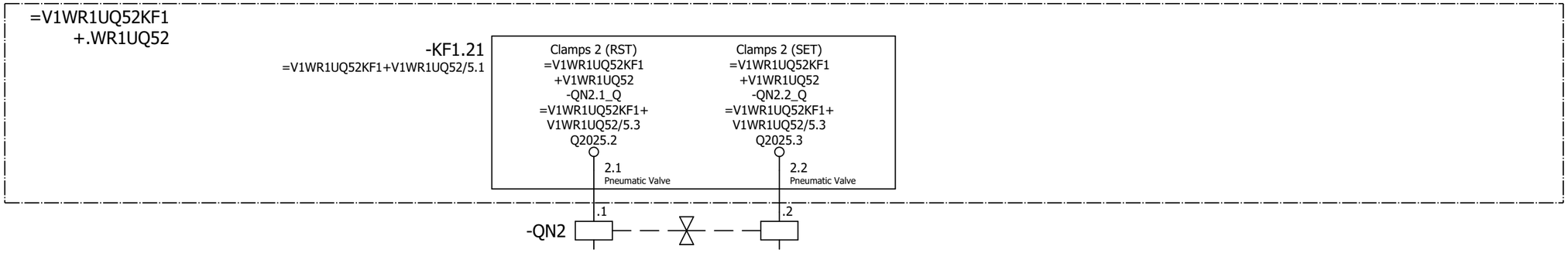

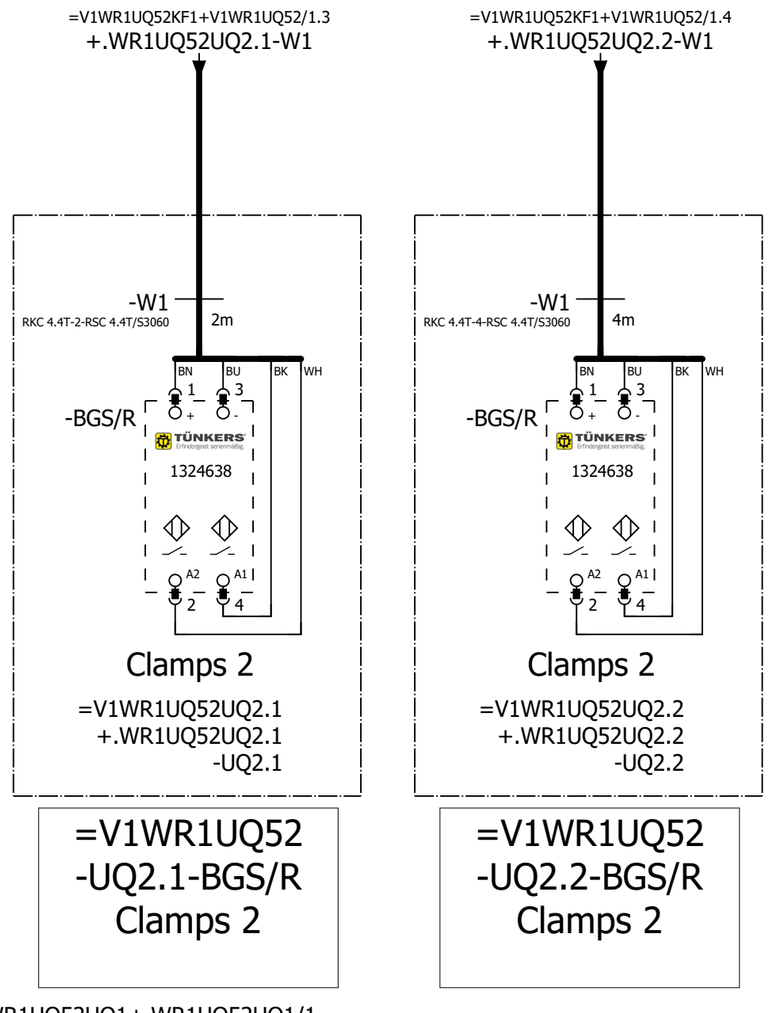

=V1WR1UQ52
-UQ2.1-BGS/R
Clamps 2

=V1WR1UQ52
-UQ2.2-BGS/R
Clamps 2

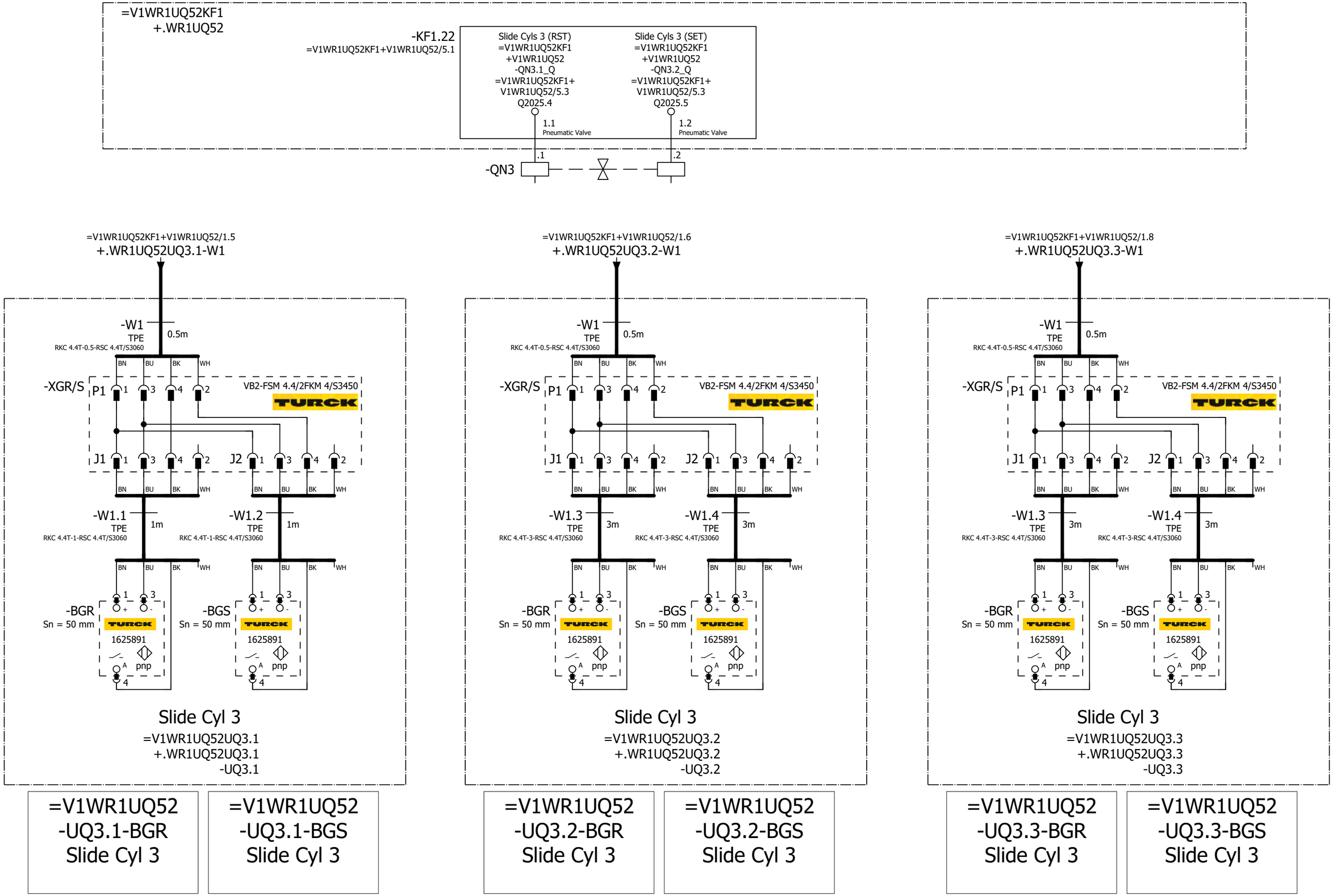

=V1WR1UQ52UQ2+.WR1UQ52UQ02/1

2

			Date	12/22/2022	Volvo Trucks North America	Valiant TMS	FESTO DQ CONNECTION QN3	Drawing name: =2V13&EFS_EL	= V1WR1UQ52UQ3		
			Ed.	MKLEPADLO					+ V1WR1UQ52UQ03		
			Appr		Sub-Floor Members			Document type: EFS	Project nr: 22-16146	Page	1
Modification	Date	Name	Original		Replacement of / Replaced by	Scale 1:1					614

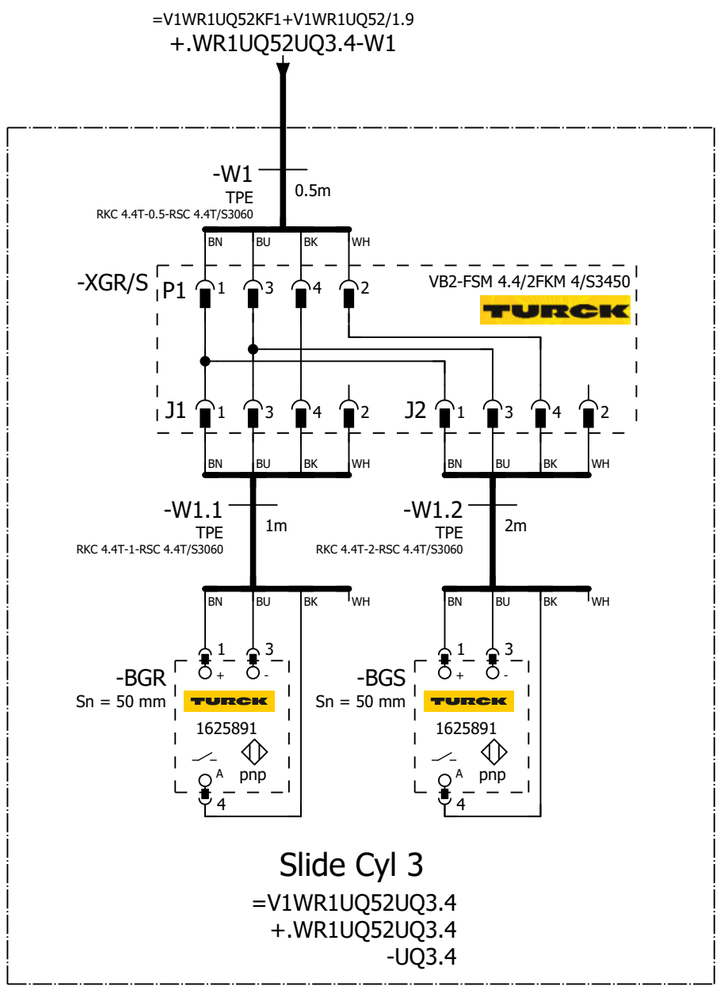

=V1WR1UQ52
-UQ3.4-BGR
Slide Cyl 3

=V1WR1UQ52
-UQ3.4-BGS
Slide Cyl 3

1

=V1WR1UQ52UQ4+.WR1UQ52UQ04/1

			Date	12/22/2022	Volvo Trucks North America	Valiant TMS	FESTO DQ CONNECTION QN3	Drawing name: =2V13&EFS_EL		= V1WR1UQ52UQ3	
			Ed.	MKLEPADLO						+ V1WR1UQ52UQ03	
			Appr		Sub-Floor Members			Document type: EFS	Project nr: 22-16146		Page 2
Modification	Date	Name	Original		Replacement of / Replaced by	Scale 1:1					614

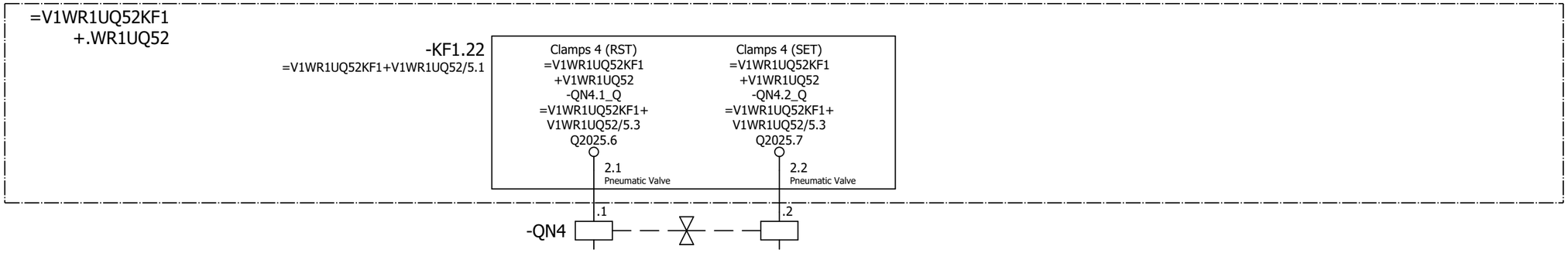

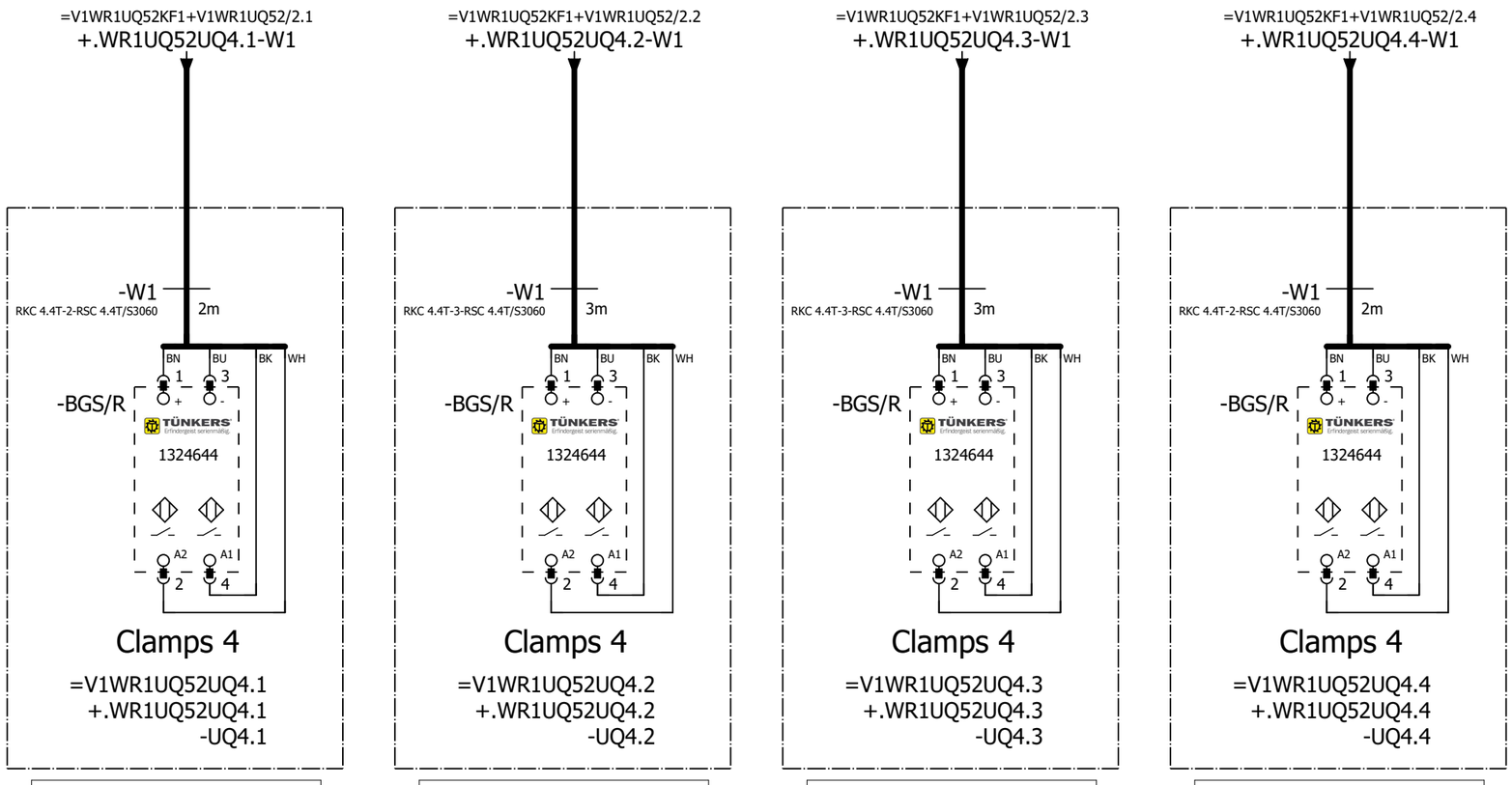

=V1WR1UQ52UQ3+.WR1UQ52UQ03/2

=V1WR1UQ52UQ5+.WR1UQ52UQ05/1

			Date	12/22/2022	Volvo Trucks North America		Valiant TMS	FESTO DQ CONNECTION QN4	Drawing name: =2V13&EFS_EL	= V1WR1UQ52UQ4	
			Ed.	MKLEPADLO						+ V1WR1UQ52UQ04	
			Appr		Sub-Floor Members				Document type: EFS	Project nr: 22-16146	Page 1
Modification	Date	Name	Original		Replacement of	Replaced by	Scale 1:1				614

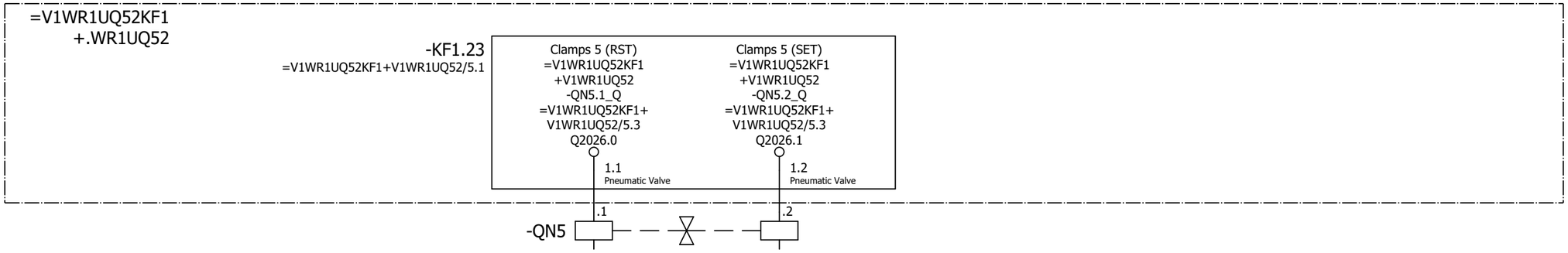

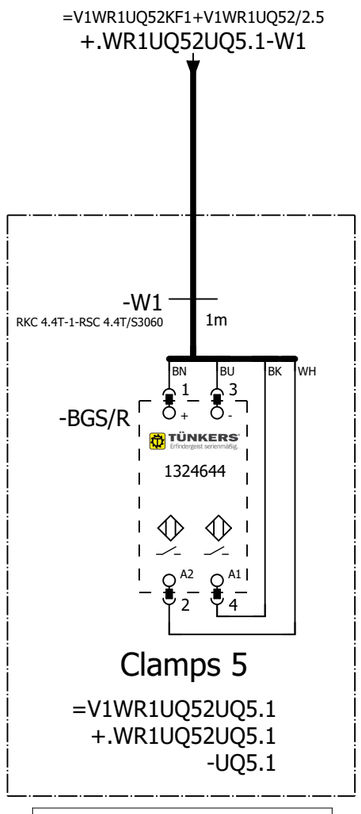

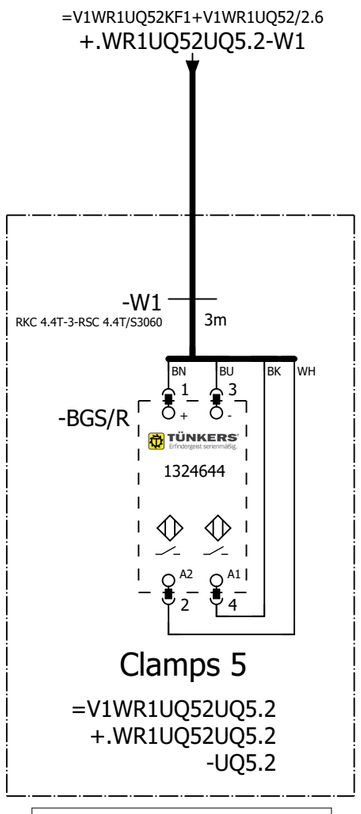

=V1WR1UQ52
-UQ5.1-BGS/R
Clamps 5

=V1WR1UQ52
-UQ5.2-BGS/R
Clamps 5

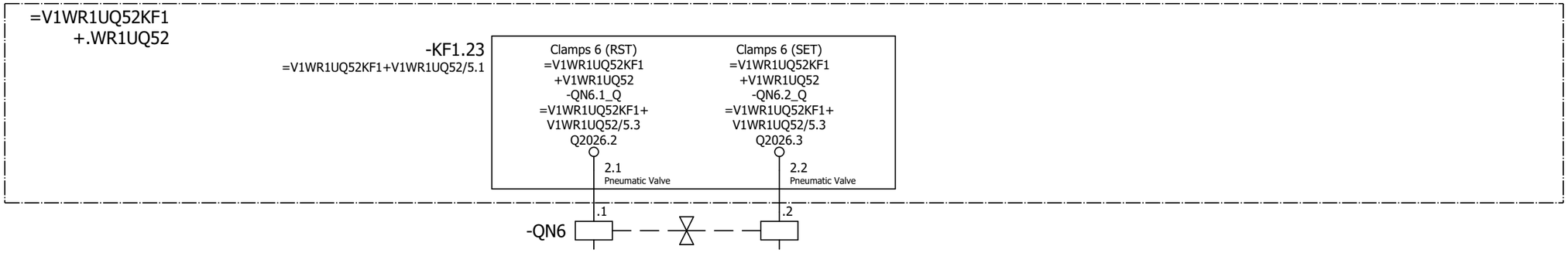

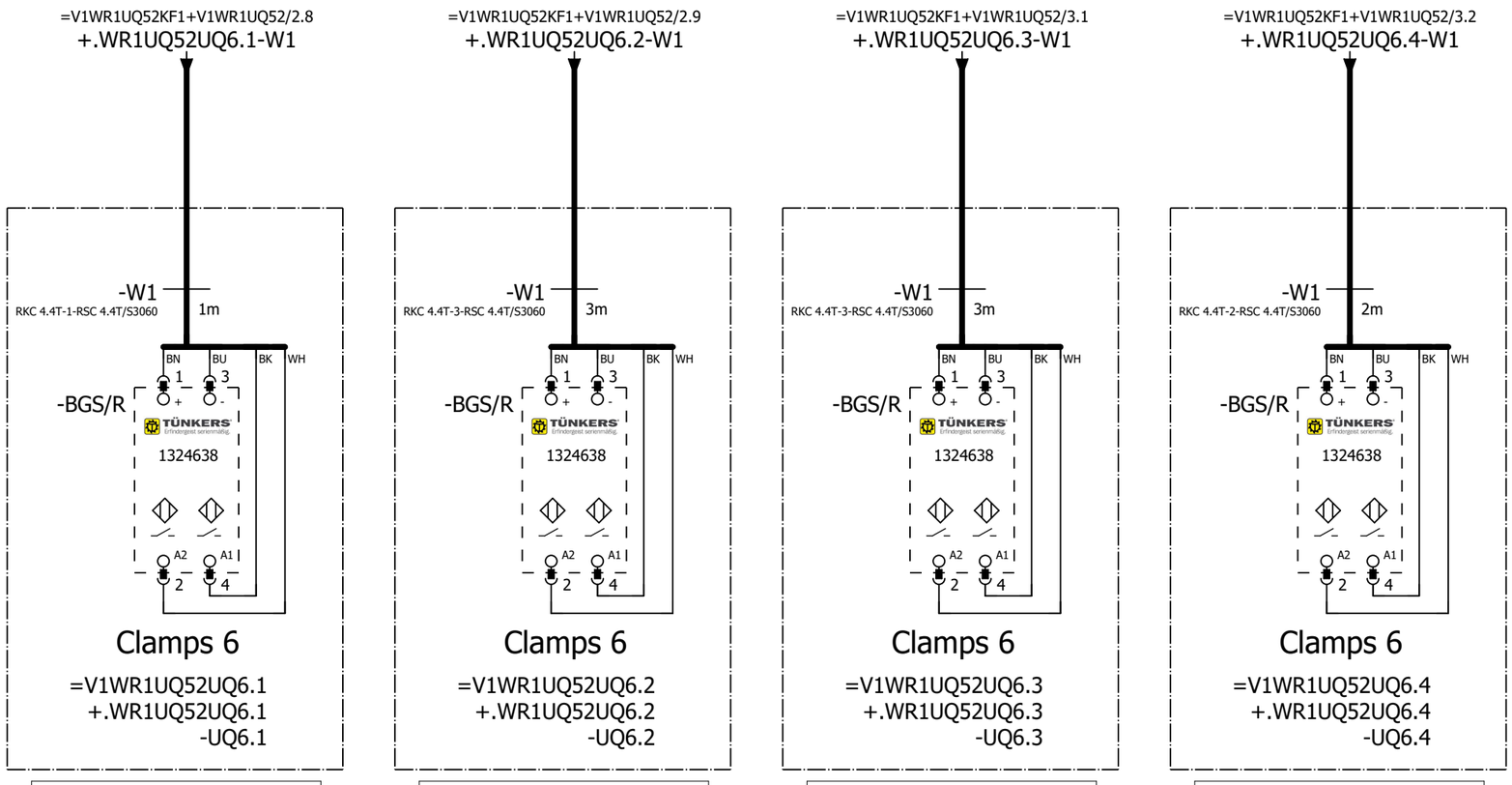

=V1WR1UQ52UQ5+.WR1UQ52UQ05/1

=V1WR1UQ52UQ7+.WR1UQ52UQ07/1

			Date	12/22/2022	Volvo Trucks North America		Valiant TMS	FESTO DQ CONNECTION QN6	Drawing name: =2V13&EFS_EL	= V1WR1UQ52UQ6	
			Ed.	MKLEPADLO						+ V1WR1UQ52UQ06	
			Appr		Sub-Floor Members				Document type: EFS	Project nr: 22-16146	Page 1
Modification	Date	Name	Original		Replacement of	Replaced by	Scale 1:1				614

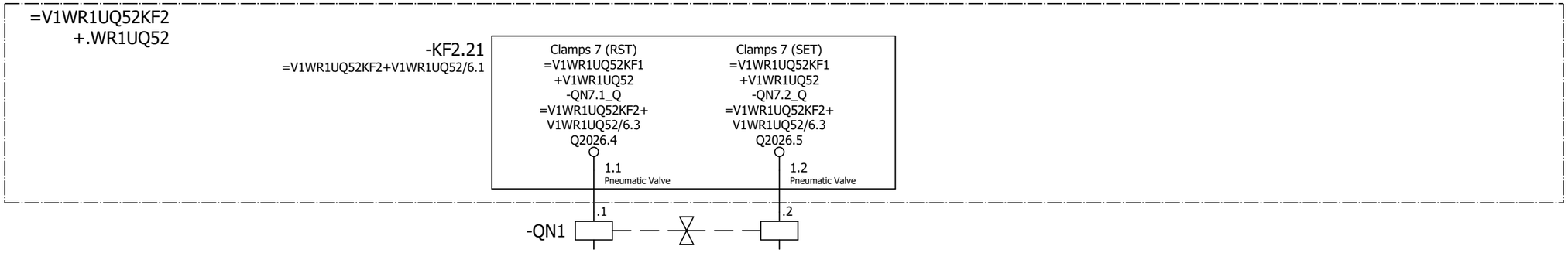

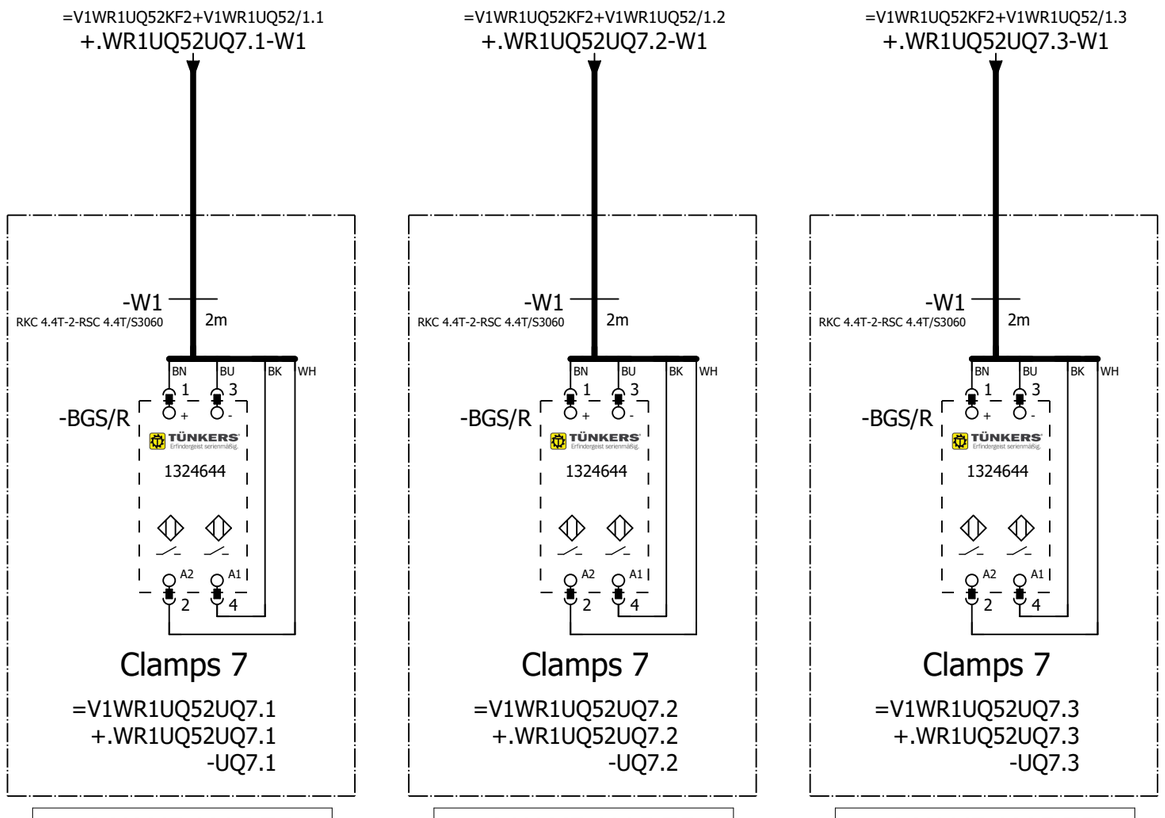

=V1WR1UQ52
-UQ7.1-BGS/R
Clamps 7

=V1WR1UQ52
-UQ7.2-BGS/R
Clamps 7

=V1WR1UQ52
-UQ7.3-BGS/R
Clamps 7

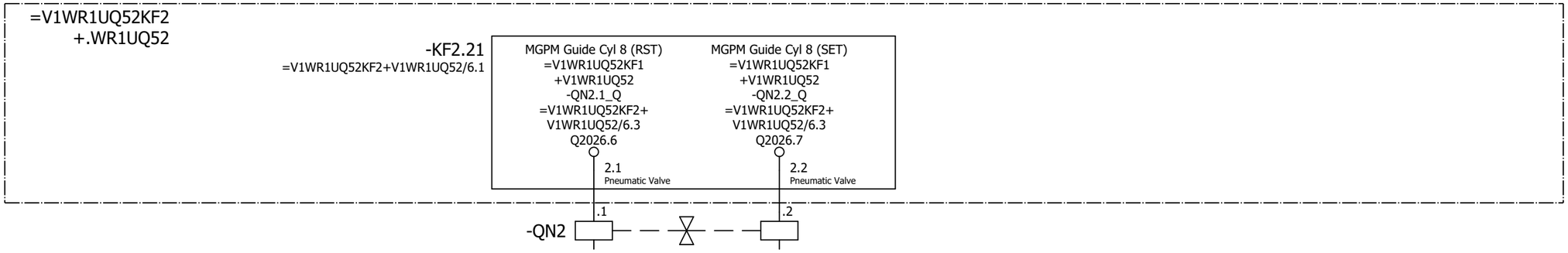

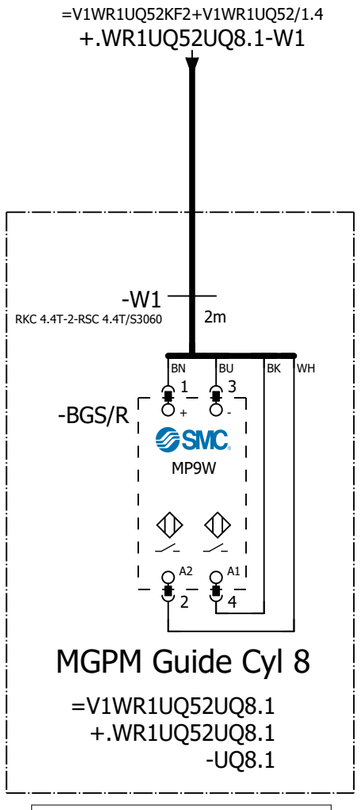

=V1WR1UQ52
-UQ8.1-BGS/R
MGPM Guide Cyl
8

=V1WR1UQ52UQ7+.WR1UQ52UQ07/1

=V1WR1UQ52UQ9+.WR1UQ52UQ09/9

			Date	12/22/2022	Volvo Trucks North America		Valiant TMS	FESTO DQ CONNECTION QN6	Drawing name: =2V13&EFS_EL	= V1WR1UQ52UQ8	
			Ed.	MKLEPADLO						+ V1WR1UQ52UQ08	
			Appr		Sub-Floor Members				Document type: EFS	Project nr: 22-16146	Page 8
Modification	Date	Name	Original		Replacement of	Replaced by	Scale 1:1				614

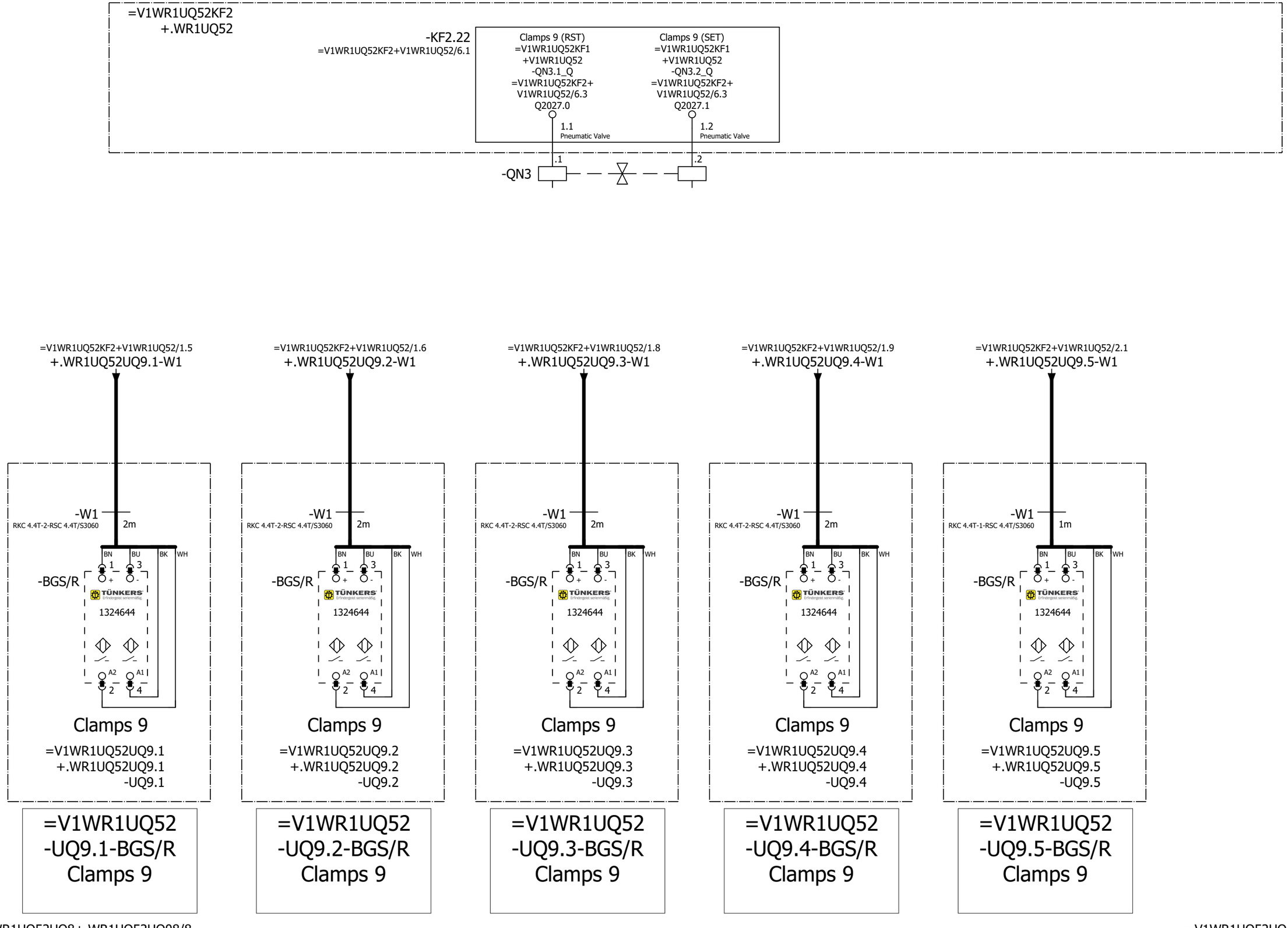

=V1WR1UQ52UQ8+.WR1UQ52UQ08/8

=V1WR1UQ52UQ10+.WR1UQ52UQ10/10

			Date	12/22/2022	Volvo Trucks North America		Valiant TMS	FESTO DQ CONNECTION QN6	Drawing name: =2V13&EFS_EL	= V1WR1UQ52UQ9	
			Ed.	MKLEPADLO						+ V1WR1UQ52UQ09	
			Appr		Sub-Floor Members				Document type: EFS	Project nr: 22-16146	Page 9 / 614
Modification	Date	Name	Original		Replacement of	Replaced by	Scale 1:1				

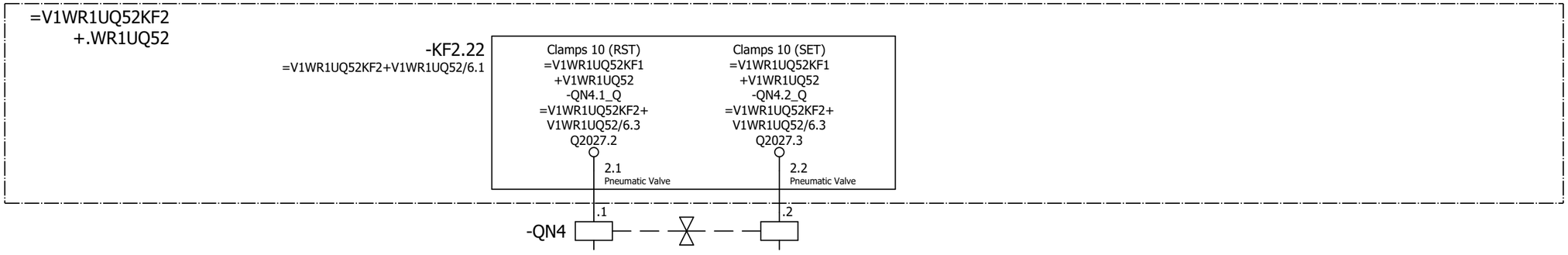

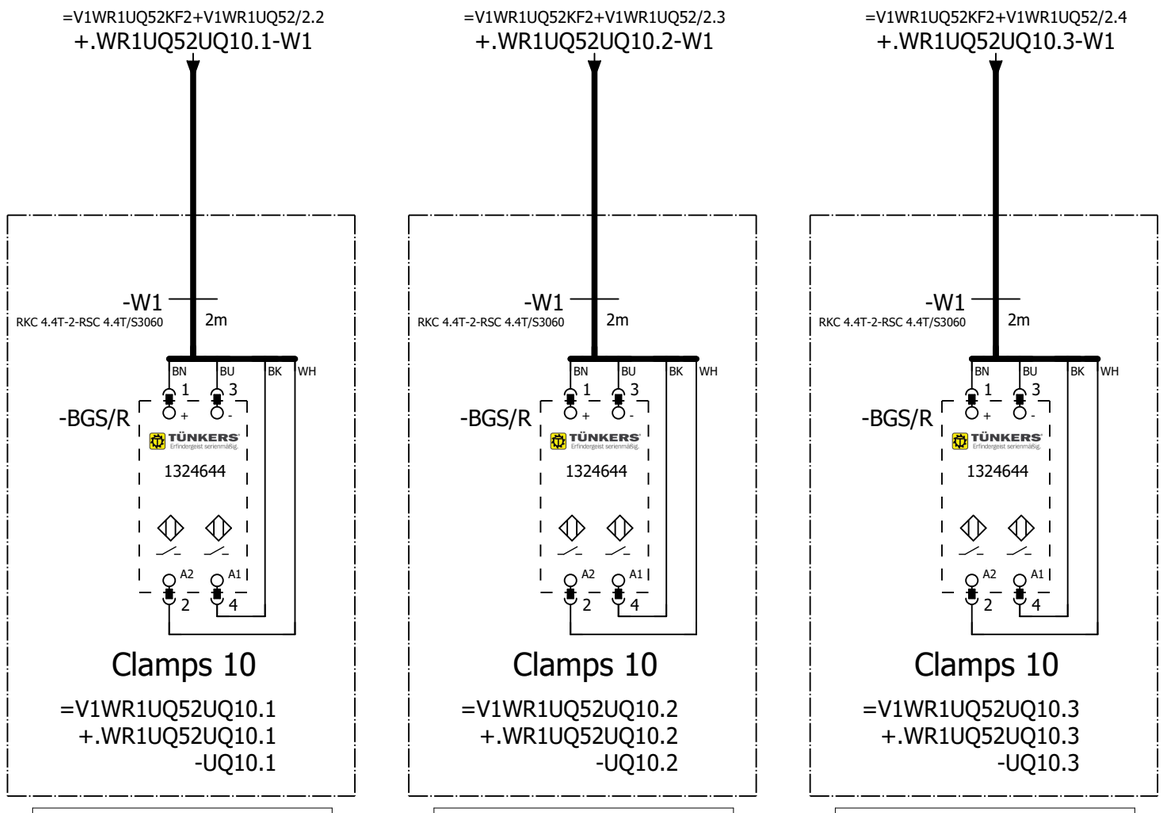

=V1WR1UQ52
-UQ10.1-BGS/R
Clamps 10

=V1WR1UQ52
-UQ10.2-BGS/R
Clamps 10

=V1WR1UQ52
-UQ10.3-BGS/R
Clamps 10

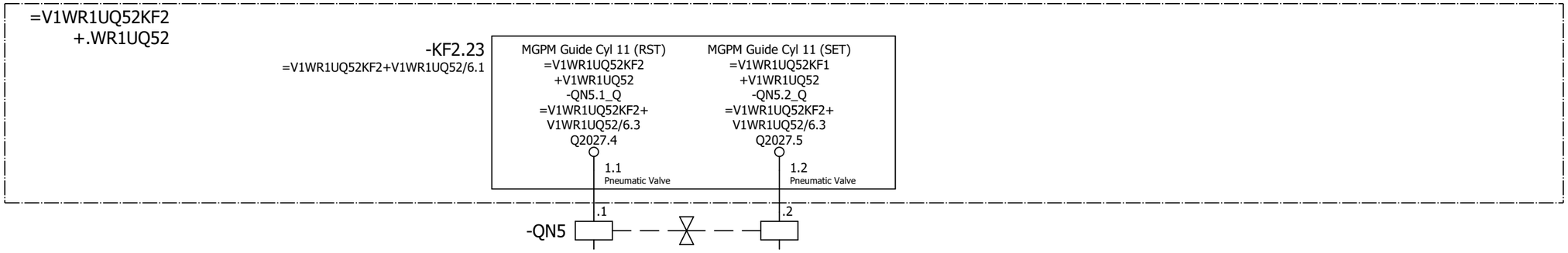

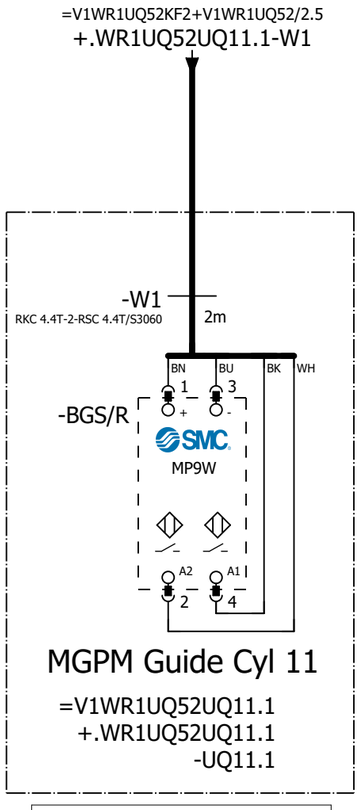

=V1WR1UQ52
-UQ11.1-BGS/R
MGPM Guide Cyl
11

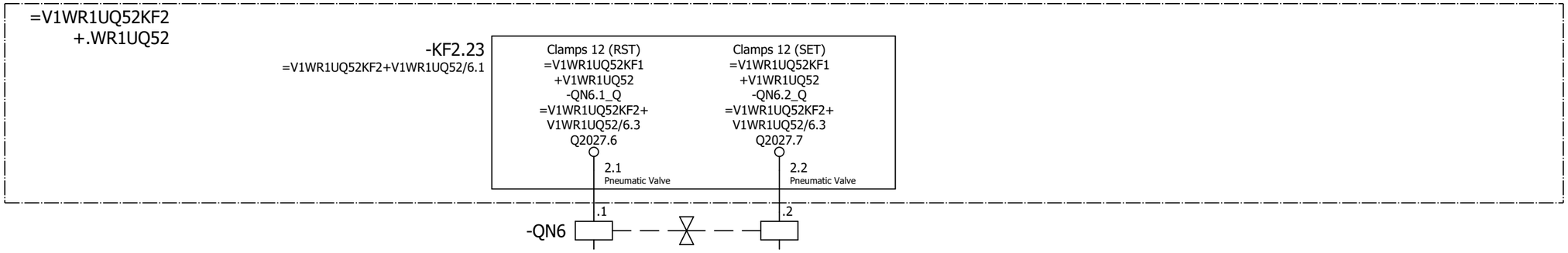

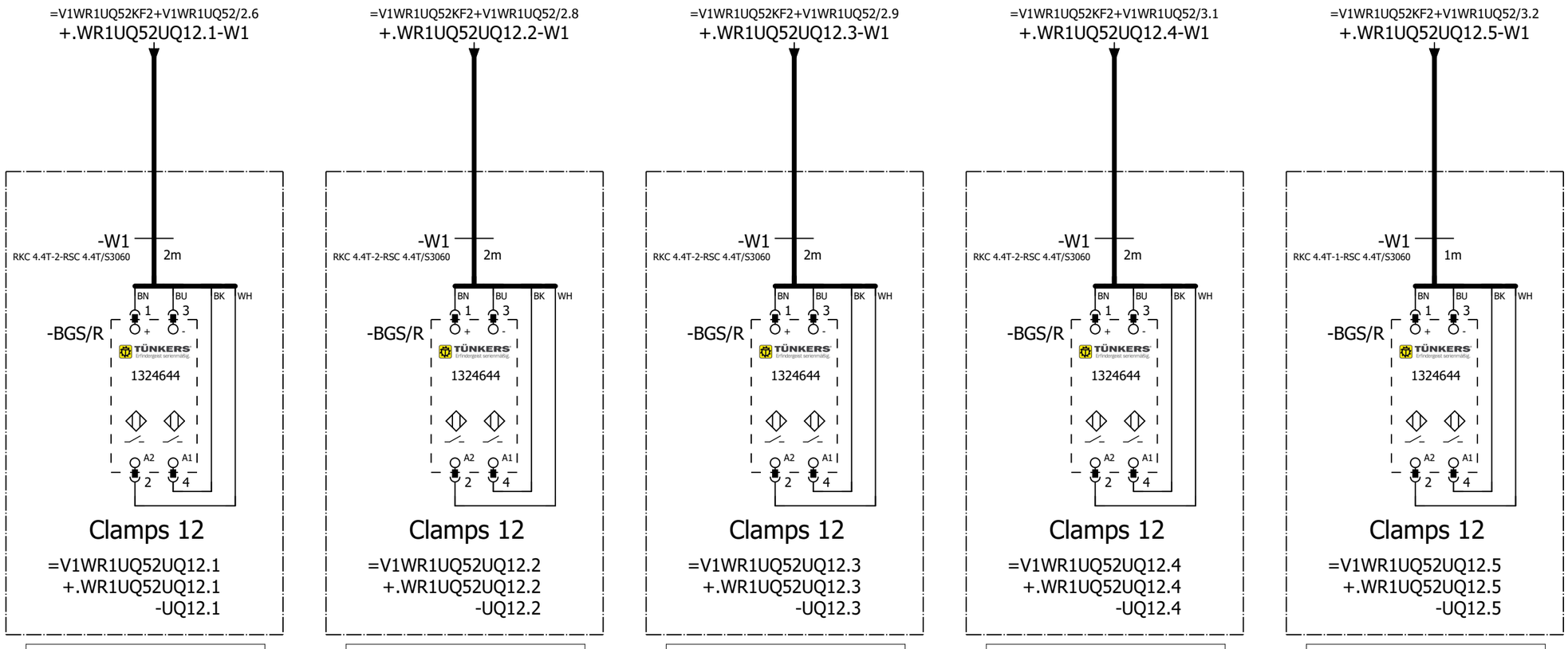

=V1WR1UQ52
-UQ12.1-BGS/R
Clamps 12

=V1WR1UQ52
-UQ12.2-BGS/R
Clamps 12

=V1WR1UQ52
-UQ12.3-BGS/R
Clamps 12

=V1WR1UQ52
-UQ12.4-BGS/R
Clamps 12

=V1WR1UQ52
-UQ12.5-BGS/R
Clamps 12

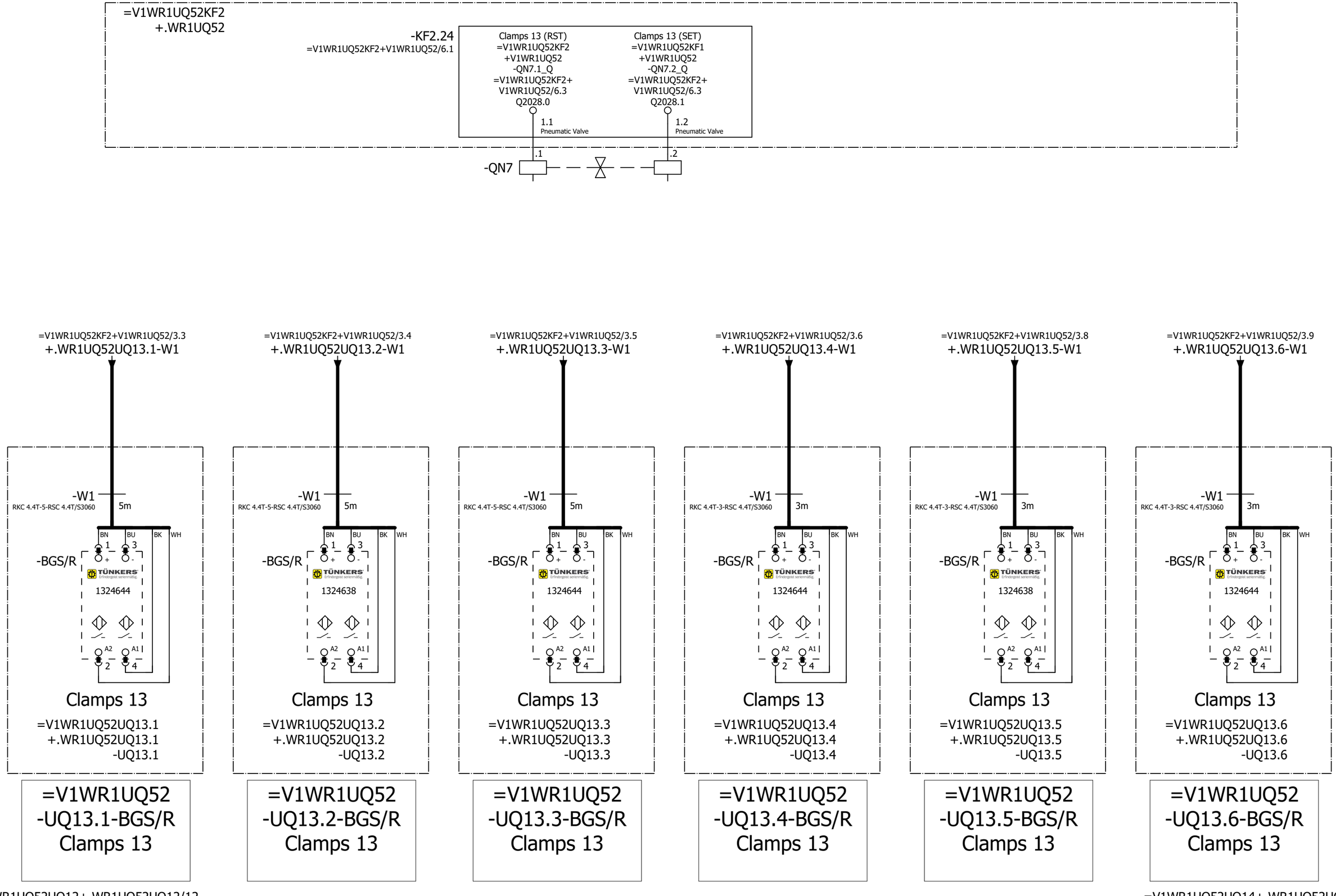

=V1WR1UQ52UQ12+.WR1UQ52UQ12/12

=V1WR1UQ52UQ14+.WR1UQ52UQ14/14

			Date	12/22/2022	Volvo Trucks North America		Valiant TMS	FESTO DQ CONNECTION QN6	Drawing name: =2V13&EFS_EL	= V1WR1UQ52UQ13	
			Ed.	MKLEPADLO						+ V1WR1UQ52UQ13	
			Appr		Sub-Floor Members				Document type: EFS	Project nr: 22-16146	Page 13 / 614
Modification	Date	Name	Original		Replacement of	Replaced by	Scale 1:1				

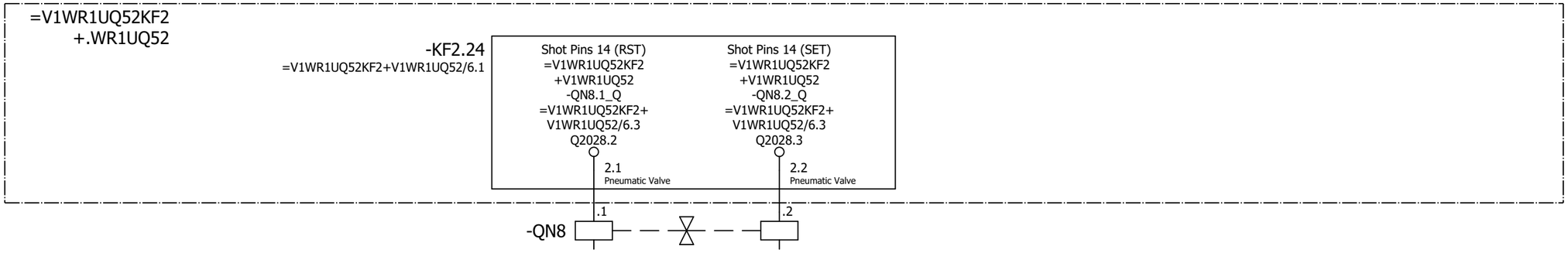

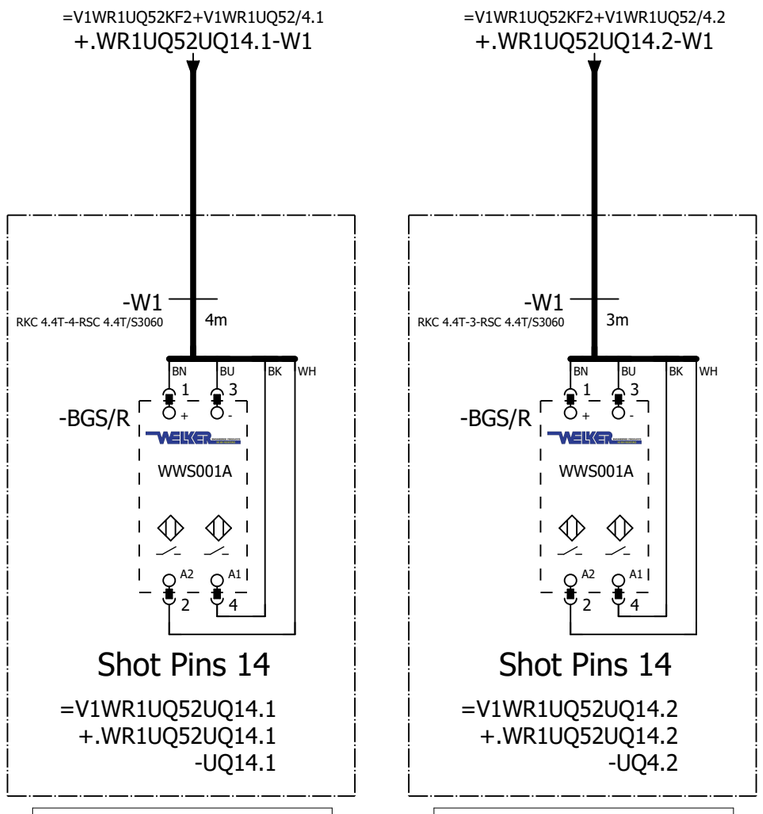

=V1WR1UQ52
-UQ14.1-BGS/R
Shot Pins 14

=V1WR1UQ52
-UQ14.2-BGS/R
Shot Pins 14

=V1WR1UQ52UQ13+.WR1UQ52UQ13/13

=V1WR1UQ52WC4+V1WR1UQ52/1

			Date	12/22/2022	Volvo Trucks North America	Valiant TMS	FESTO DQ CONNECTION QN6	Drawing name: =2V13&EFS_EL	= V1WR1UQ52UQ14		
			Ed.	MKLEPADLO					+ V1WR1UQ52UQ14		
			Appr		Sub-Floor Members			Document type: EFS	Project nr: 22-16146	Page	14
Modification	Date	Name	Original		Replacement of / Replaced by	Scale 1:1					614

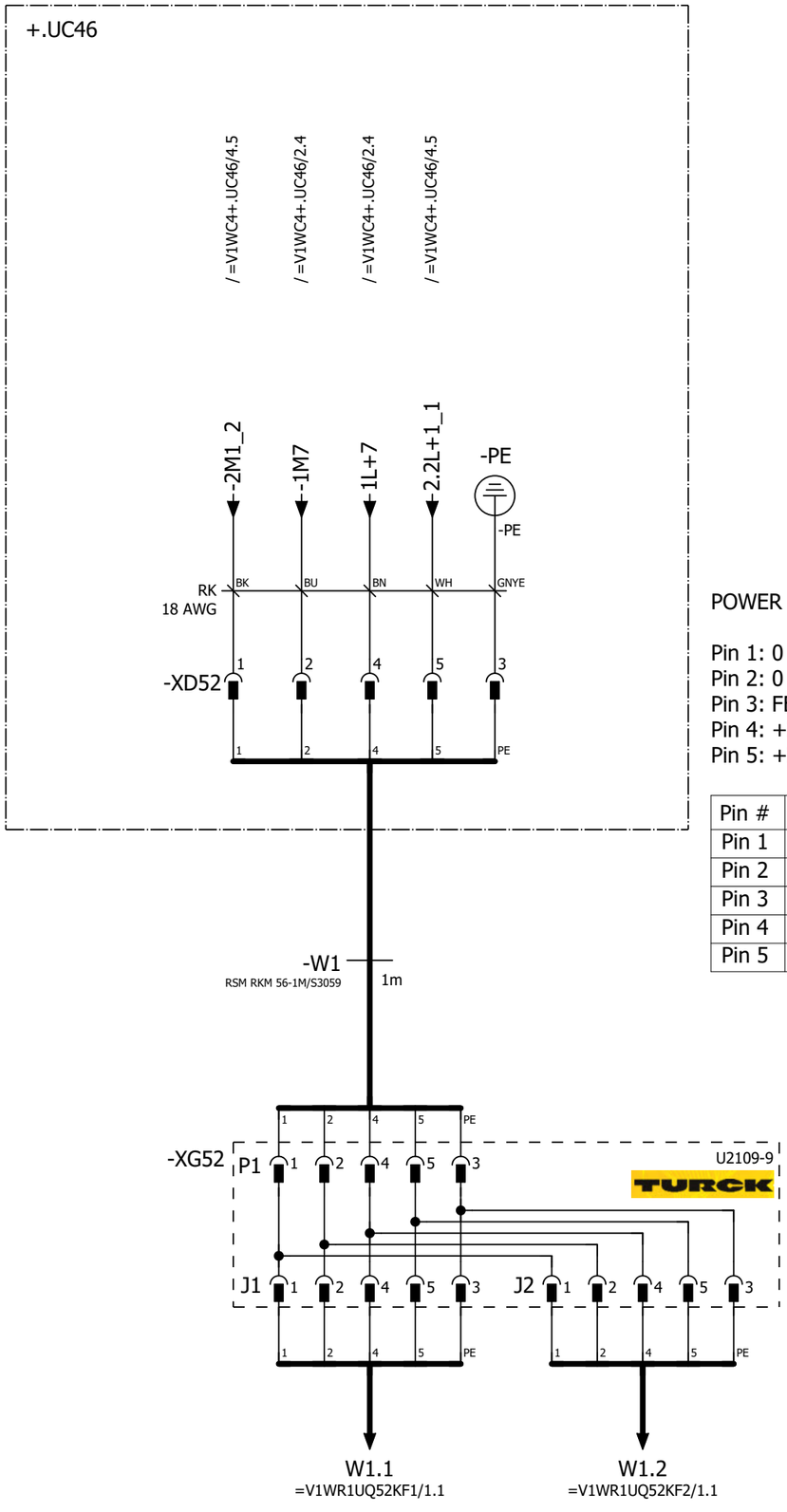

POWER IN / POWER OUT

Pin 1: 0 V UA
Pin 2: 0 V US
Pin 3: FE
Pin 4: +24 V US / 9 A
Pin 5: +24 V UA / 9 A

Pin #	WIRE	COLOR
Pin 1	2M1_1	BK
Pin 2	1M6	BU
Pin 3	PE	GNYE
Pin 4	1L+6	BN
Pin 5	2.1L+1_1	WH

=V1WR1UQ52UQ14+.WR1UQ52UQ14/14

=V1WR1WC1+.WR1UC01/1

			Date	12/22/2022	Volvo Trucks North America		Valiant TMS	24VDC	Drawing name: =2V13&EFS_EL	= V1WR1UQ52WC4	
			Ed.	MKLEPADLO						+ V1WR1UQ52	
			Appr		Sub-Floor Members				Document type: EFS	Project nr: 22-16146	Page 1
Modification	Date	Name	Original		Replacement of	Replaced by	Scale 1:1				614

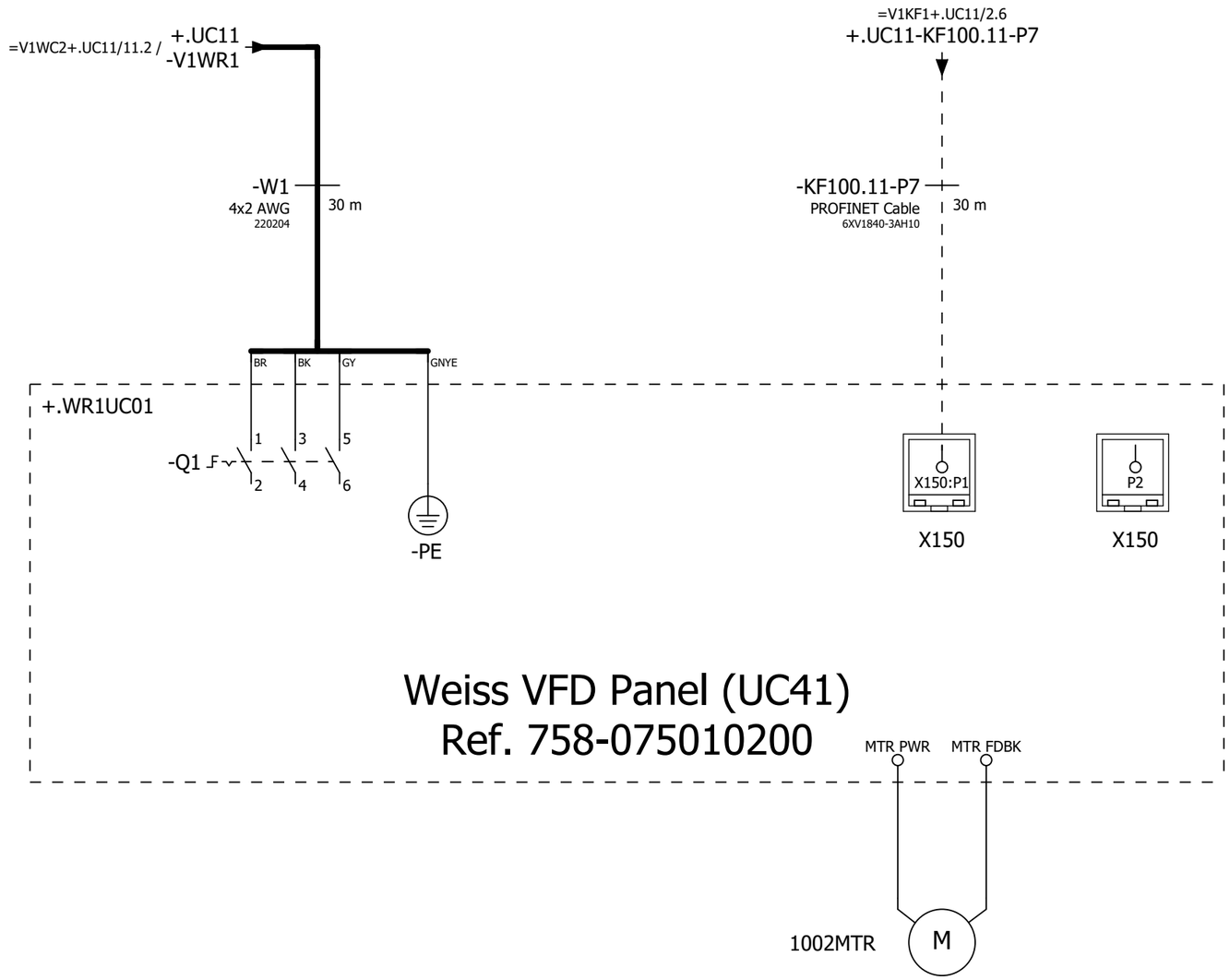

=V1WR1UQ52WC4+.WR1UQ52/1

=V1WR2BG0+.WR2/1

			Date	12/22/2022	Volvo Trucks North America		Valiant TMS	Incoming power & profinet	Drawing name: =2V13&EFS_EL	= V1WR1WC1	
			Ed.	MKLEPADLO						+ V1WR1UC01	
			Appr		Sub-Floor Members				Document type: EFS	Project nr: 22-16146	Page 1
Modification	Date	Name	Original		Replacement of	Replaced by	Scale 1:1				614

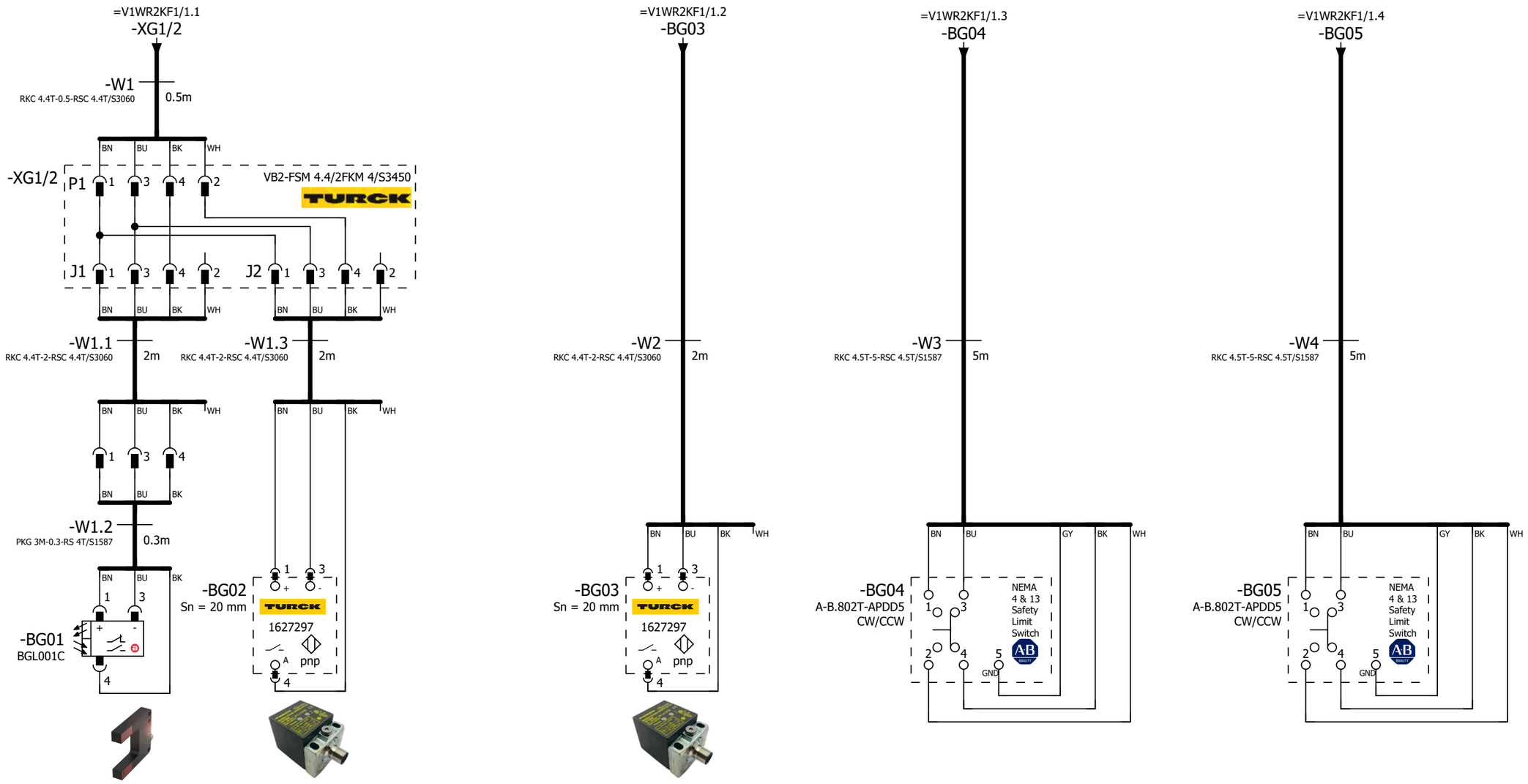

=V1WR2 -BG01 Position Control All Stop Position	=V1WR2 -BG02 Position Control P1 Position	=V1WR2 -BG03 Position Control P2 Position	=V1WR2 -BG04 Turntable Overtravel 1	=V1WR2 -BG05 Turntable Overtravel 2

=V1WR1WC1+.WR1UC01/1

2

			Date	12/22/2022	Volvo Trucks North America	Valiant TMS	TURNTABLE POSITION SENSORS	Drawing name: =2V13&EFS_EL		= V1WR2BG0	
			Ed.	MKLEPADLO						+ V1WR2	
			Appr		Sub-Floor Members			Document type: EFS	Project nr: 22-16146		Page 1
Modification	Date	Name	Original		Replacement of / Replaced by	Scale 1:1					614

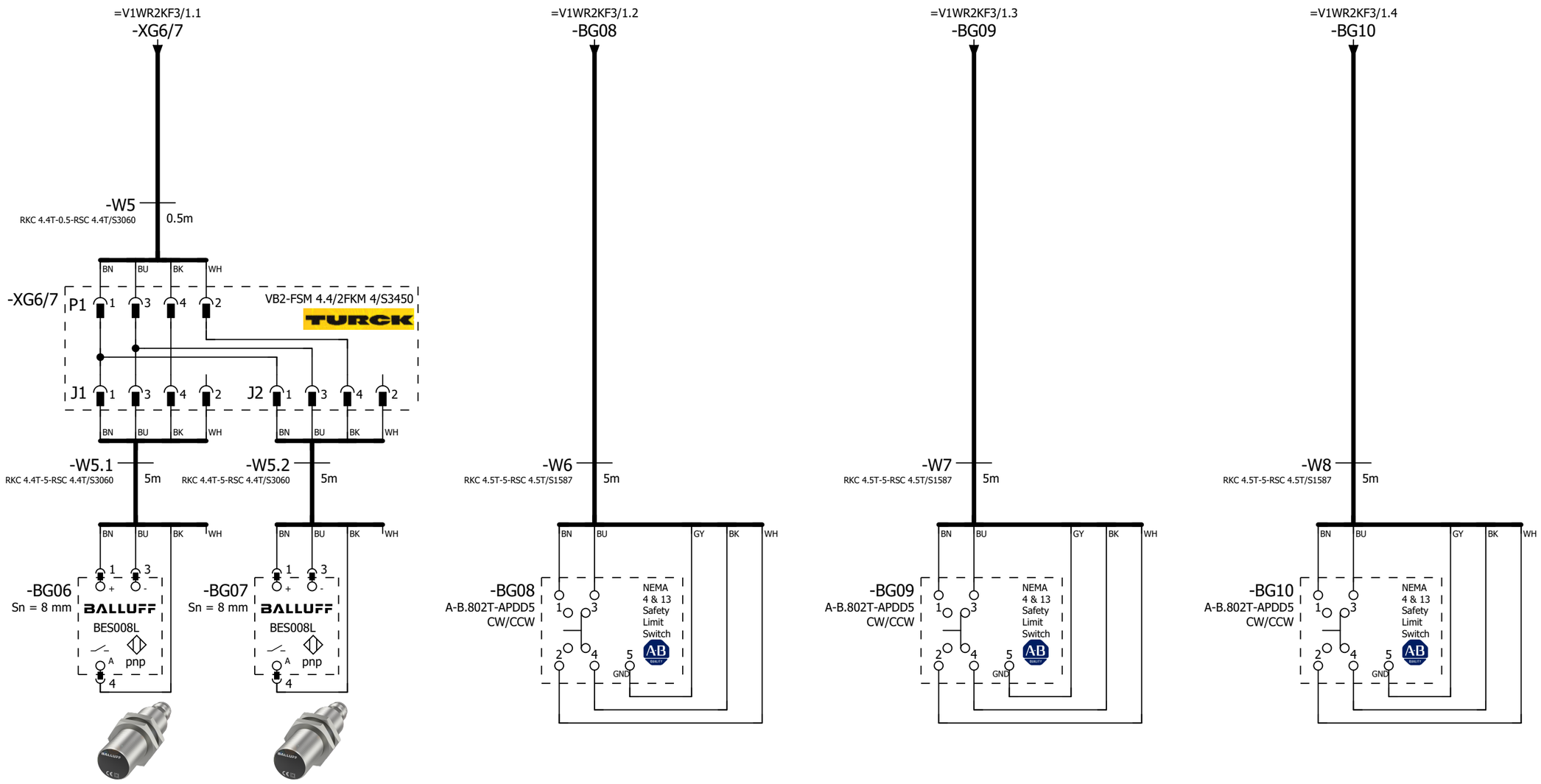

=V1WR2 -BG06 Trunnion P1 Lockout	=V1WR2 -BG07 Trunnion P2 Lockout	=V1WR2 -BG08 Trunnion P1 Overtravel 1	=V1WR2 -BG09 Trunnion P2 Overtravel 1	=V1WR2 -BG10 Trunnion P1 Overtravel 2

			Date	12/22/2022	Volvo Trucks North America		Valiant TMS	TRUNNION POSITION SENSORS	Drawing name: =2V13&EFS_EL	= V1WR2BG0	
			Ed.	MKLEPADLO						+ V1WR2	
			Appr		Sub-Floor Members				Document type: EFS	Project nr: 22-16146	Page 2 / 614
Modification	Date	Name	Original		Replacement of	Replaced by	Scale 1:1				

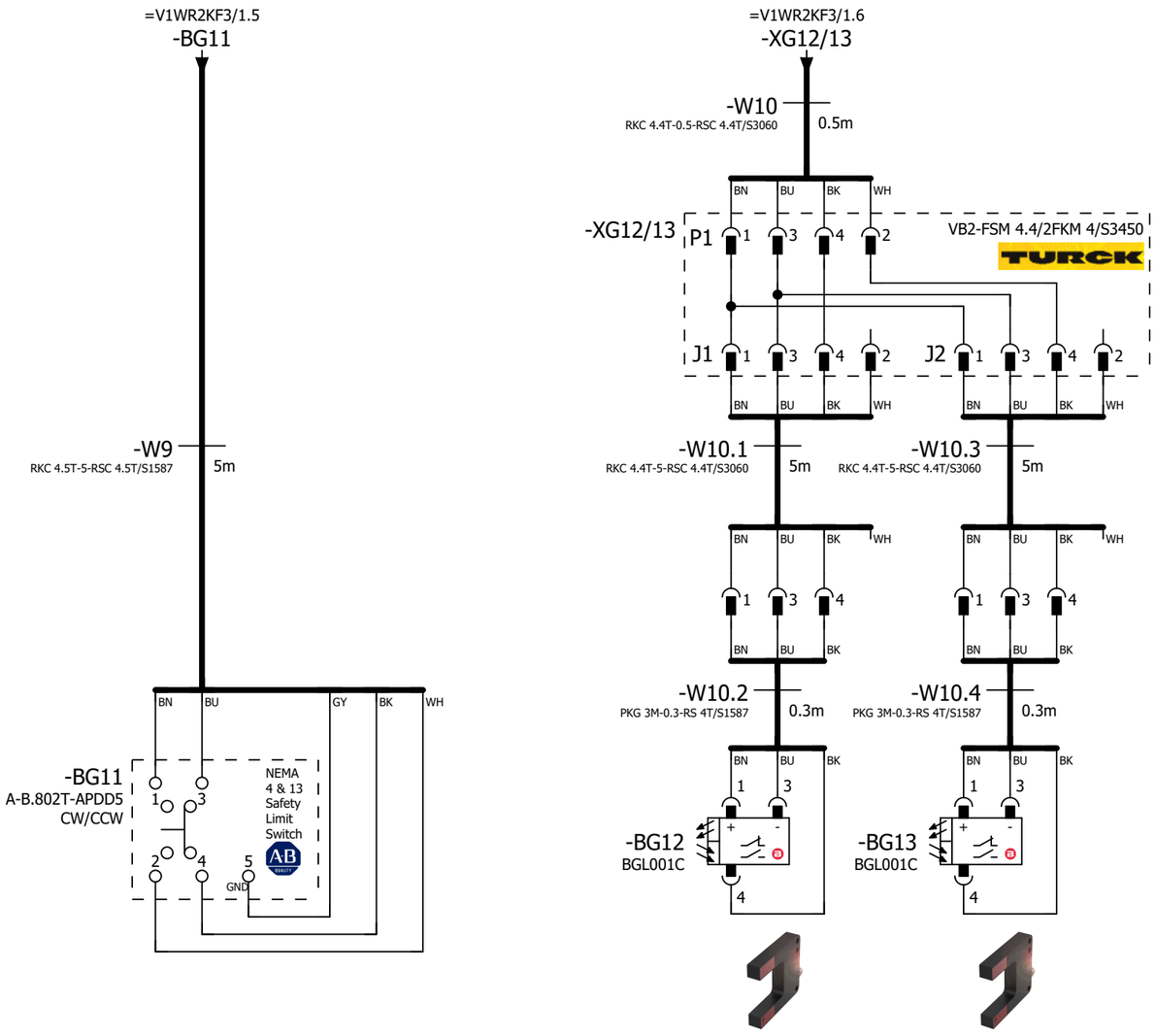

=V1WR2 -BG11 Trunnion P2 Overtravel 2	=V1WR2 -BG12 Trunnion P1 at Oper Unload	=V1WR2 -BG13 Trunnion P2 at Oper Unload

2

=V1WR2KF1/1

			Date	12/22/2022	Volvo Trucks North America		Valiant TMS	TRUNNION POSITION SENSORS	Drawing name: =2V13&EFS_EL	= V1WR2BG0	
			Ed.	MKLEPADLO						+ V1WR2	
			Appr		Sub-Floor Members				Document type: EFS	Project nr: 22-16146	Page 3
Modification	Date	Name	Original		Replacement of	Replaced by	Scale 1:1				614

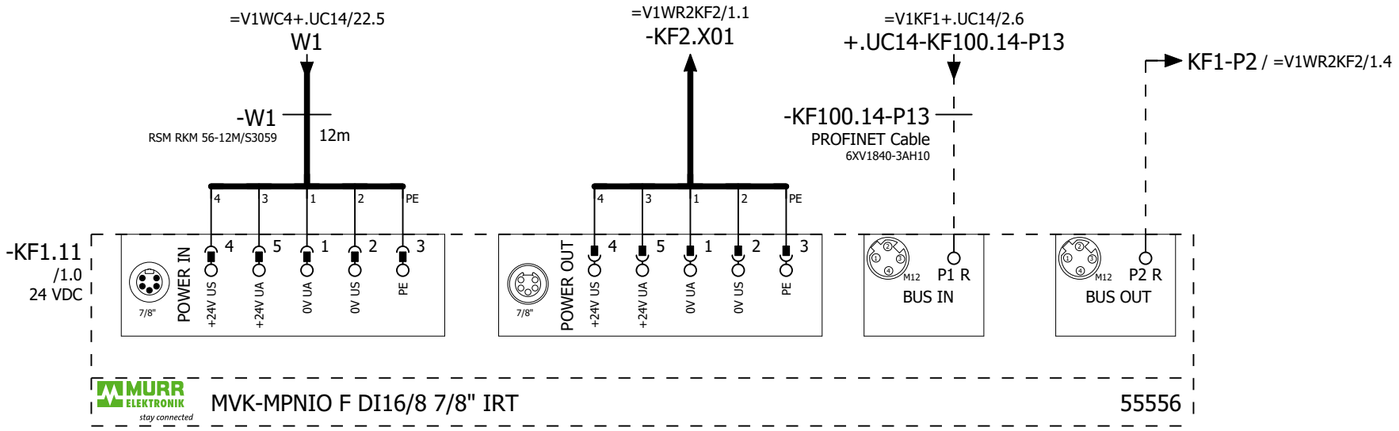

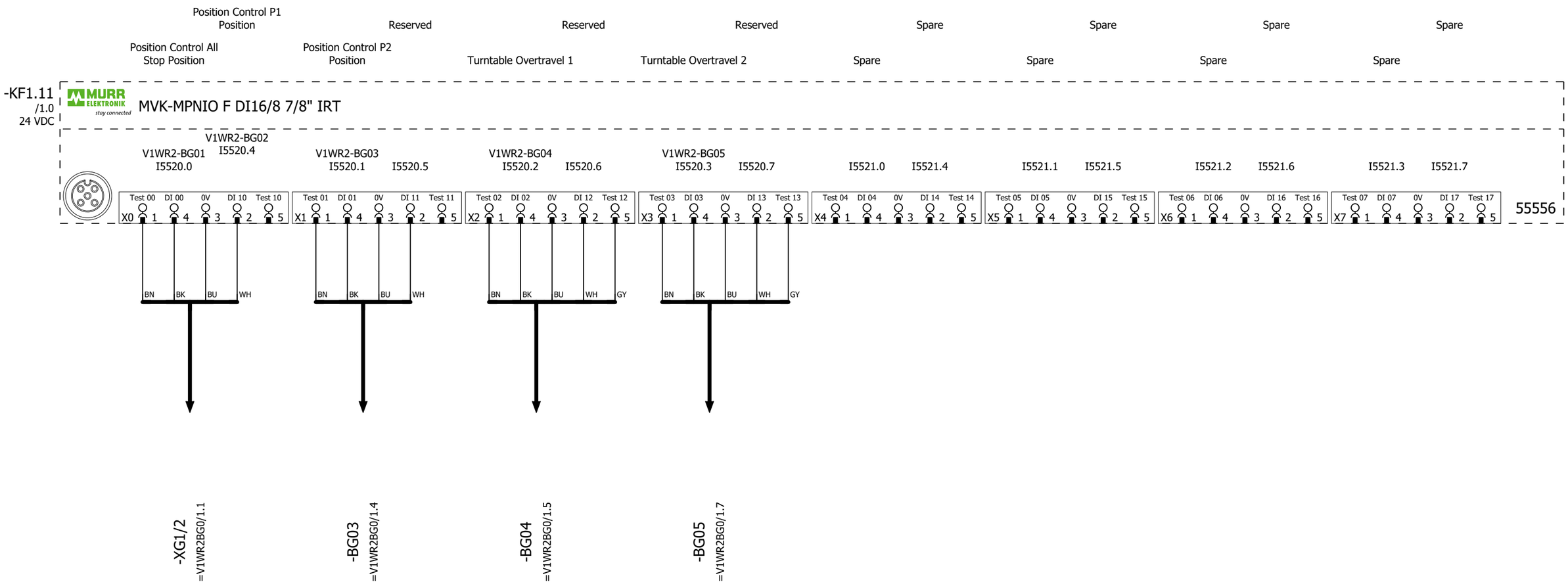

=V1WR2BG0/3

=V1WR2KF2/1

			Date	12/22/2022	Volvo Trucks North America	Valiant TMS	MURR MODULE SAFE 16 IN	Drawing name: =2V13&EFS_EL		= V1WR2KF1	
			Ed.	MKLEPADLO						+ V1WR2	
			Appr		Sub-Floor Members			Document type: EFS	Project nr: 22-16146	Page	1
Modification	Date	Name	Original		Replacement of / Replaced by	Scale 1:1					614

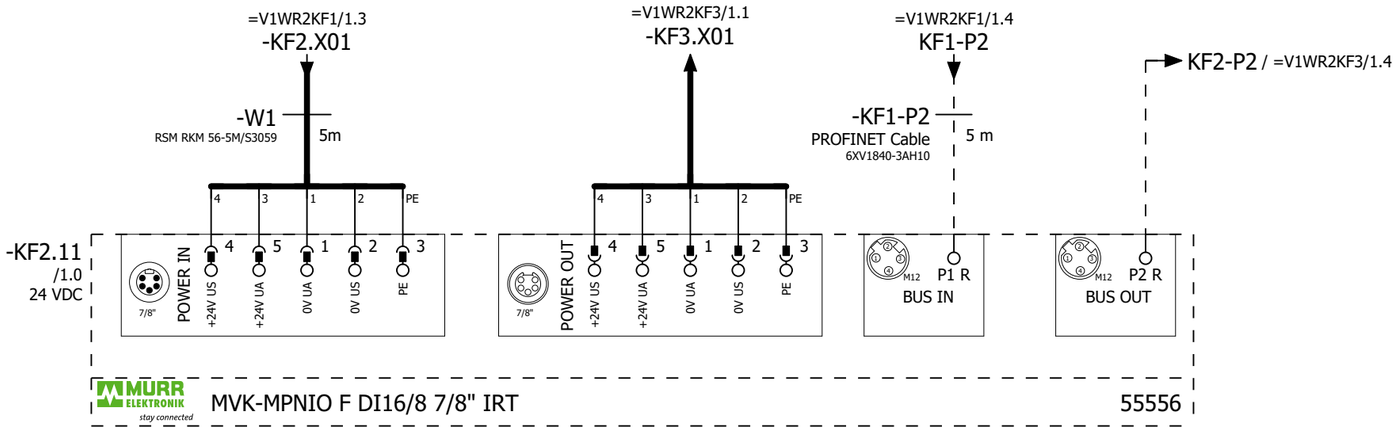

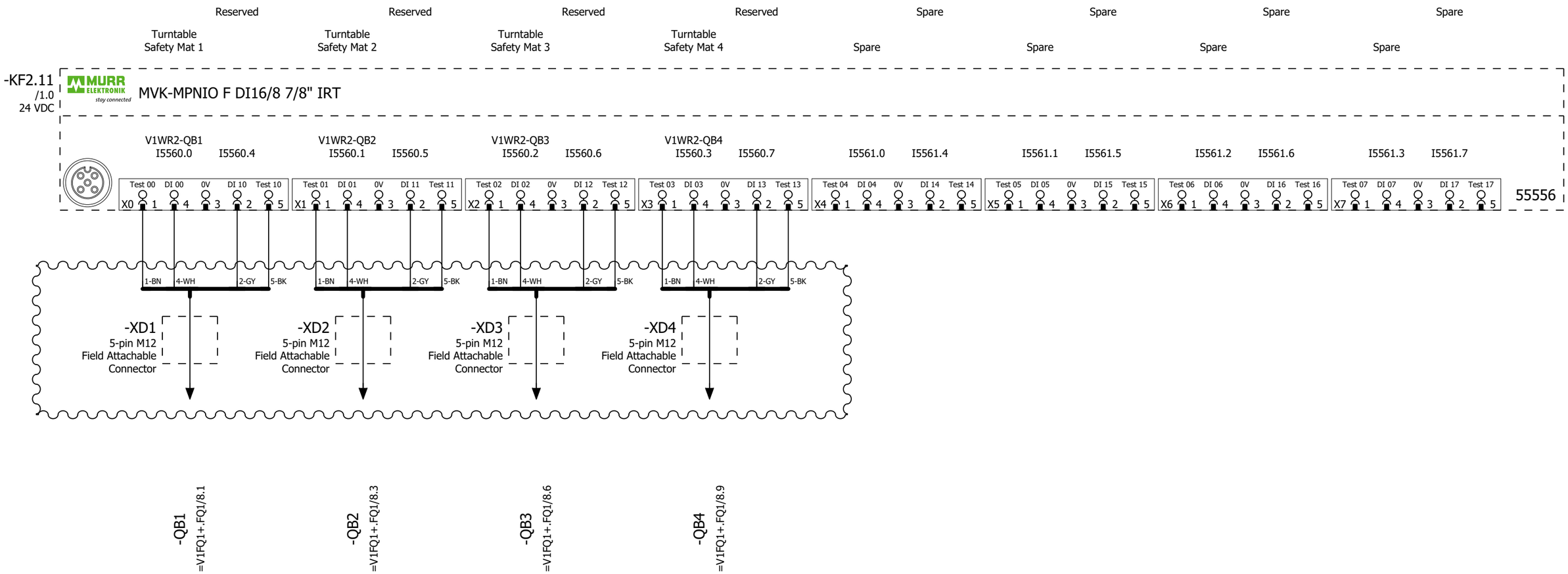

=V1WR2KF1/1

=V1WR2KF3/1

			Date	12/22/2022	Volvo Trucks North America	Valiant TMS	MURR MODULE SAFE 16 IN	Drawing name: =2V13&EFS_EL		= V1WR2KF2	
			Ed.	MKLEPADLO						+ V1WR2	
			Appr		Sub-Floor Members			Document type: EFS	Project nr: 22-16146	Page	1
Modification	Date	Name	Original		Replacement of / Replaced by	Scale 1:1					614

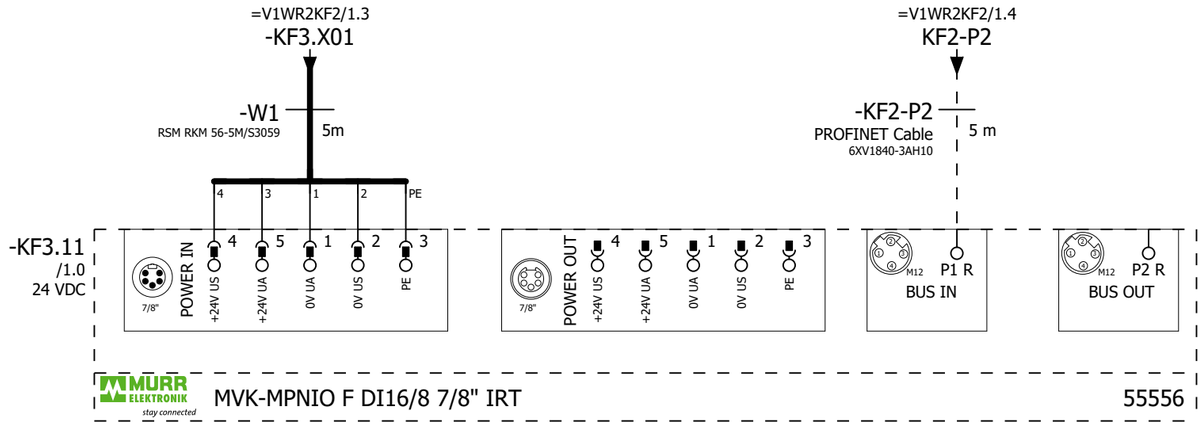

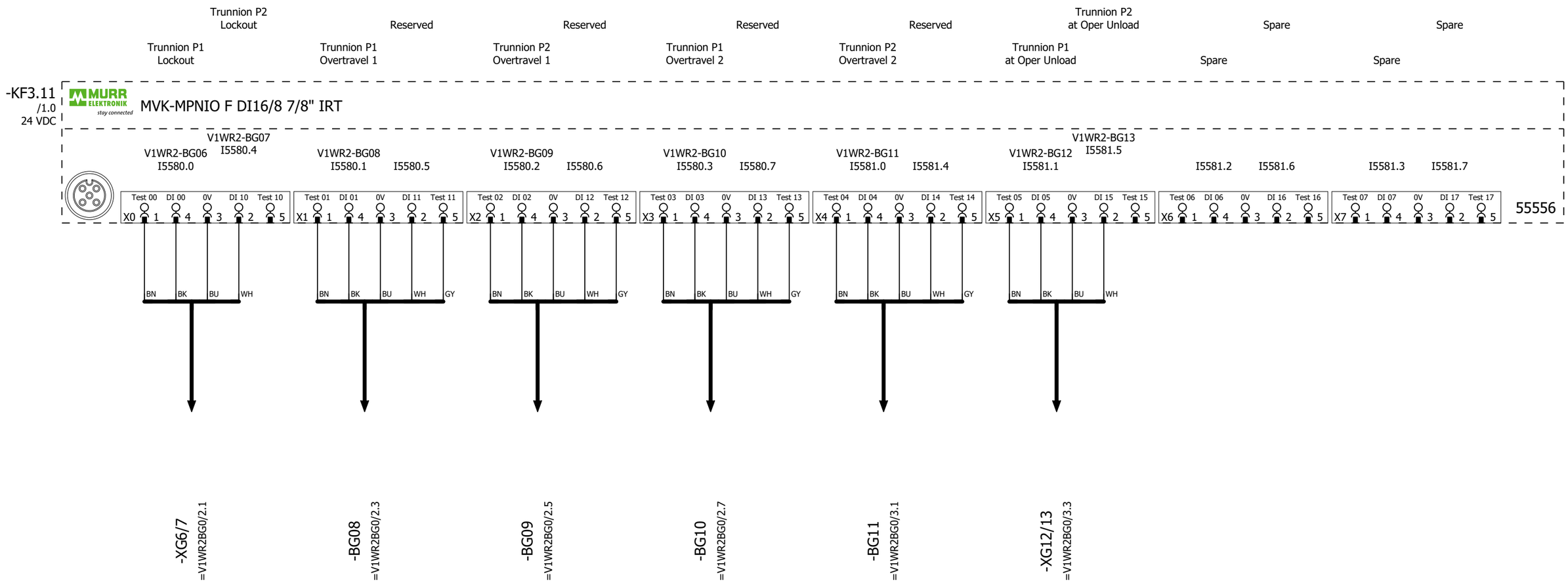

=V1WR2KF2/1

=V1WR2UQ51BG0+.WR2UQ51/1

			Date	12/22/2022	Volvo Trucks North America	Valiant TMS	MURR MODULE SAFE 16 IN	Drawing name: =2V13&EFS_EL		= V1WR2KF3	
			Ed.	MKLEPADLO						+ V1WR2	
			Appr		Sub-Floor Members			Document type: EFS	Project nr: 22-16146	Page	1
Modification	Date	Name	Original		Replacement of / Replaced by	Scale 1:1					614

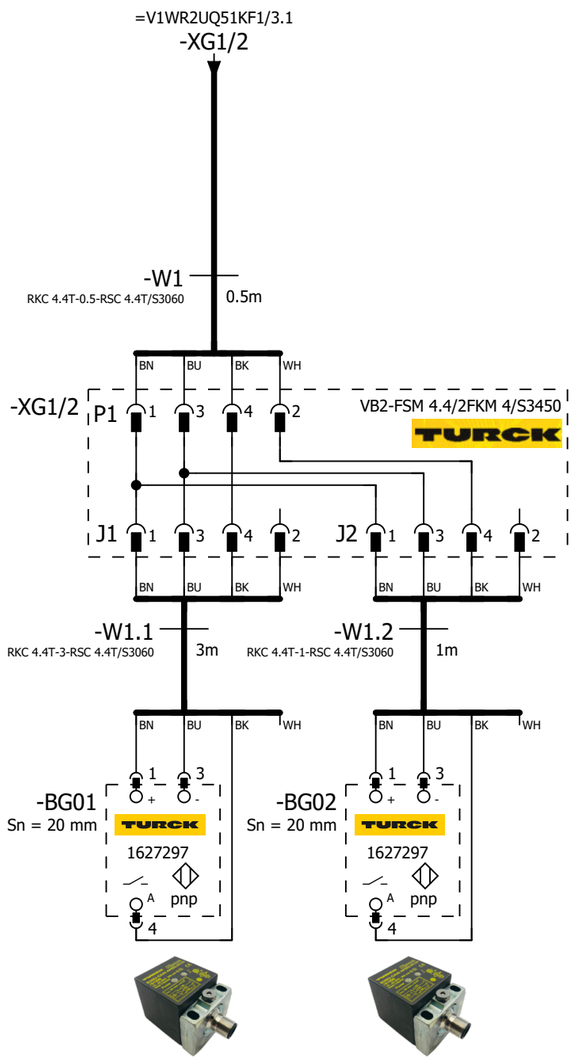

=V1WR2UQ51
-BG01
Cross Member
Rear Suspension

=V1WR2UQ51
-BG02
Cross Member
Rear Suspension

=V1WR2KF3+V1WR2/1

=V1WR2UQ51KF1/1

			Date	12/22/2022	Volvo Trucks North America		Valiant TMS	SENSORS	Drawing name: =2V13&EFS_EL	= V1WR2UQ51BG0	
			Ed.	MKLEPADLO						+ V1WR2UQ51	
			Appr		Sub-Floor Members				Document type: EFS	Project nr: 22-16146	Page 1
Modification	Date	Name	Original		Replacement of	Replaced by	Scale 1:1				614

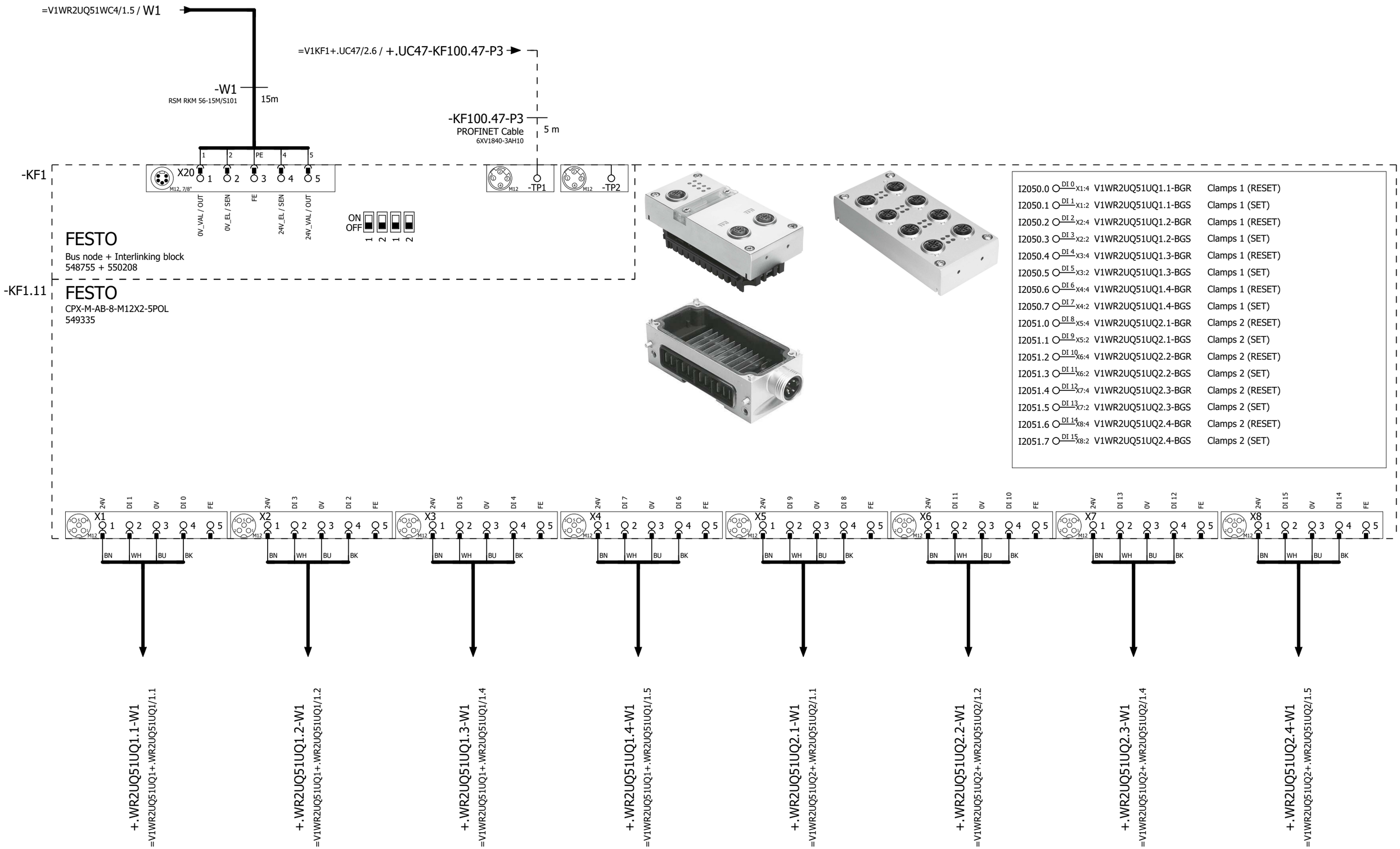

=V1WR2UQ51BG0/1

2

			Date	12/22/2022	Volvo Trucks North America	Valiant TMS	CONNECTING MOD. FOR VTSA MANIFOLD	Drawing name: =2V13&EFS_EL		= V1WR2UQ51KF1	
			Ed.	MKLEPADLO						+ V1WR2UQ51	
			Appr		Sub-Floor Members			Document type: EFS	Project nr: 22-16146		Page 1
Modification	Date	Name	Original		Replacement of / Replaced by	Scale 1:1					614

0	1	2	3	4	5	6	7	8	9

I2052.0	DI 0 X1:4	V1WR2UQ51UQ2.5-BGR	Shot Pins 2 (RESET)
I2052.1	DI 1 X1:2	V1WR2UQ51UQ2.5-BGS	Shot Pins 2 (SET)
I2052.2	DI 2 X2:4	V1WR2UQ51UQ2.6-BGR	Shot Pins 2 (RESET)
I2052.3	DI 3 X2:2	V1WR2UQ51UQ2.6-BGS	Shot Pins 2 (SET)
I2052.4	DI 4 X3:4	V1WR2UQ51UQ3.1-BGR	Clamps 3 (RESET)
I2052.5	DI 5 X3:2	V1WR2UQ51UQ3.1-BGS	Clamps 3 (SET)
I2052.6	DI 6 X4:4	V1WR2UQ51UQ3.2-BGR	Clamps 3 (RESET)
I2052.7	DI 7 X4:2	V1WR2UQ51UQ3.2-BGS	Clamps 3 (SET)
I2053.0	DI 8 X5:4	V1WR2UQ51UQ3.3-BGR	Clamps 3 (RESET)
I2053.1	DI 9 X5:2	V1WR2UQ51UQ3.3-BGS	Clamps 3 (SET)
I2053.2	DI 10 X6:4	V1WR2UQ51UQ3.4-BGR	Clamps 3 (RESET)
I2053.3	DI 11 X6:2	V1WR2UQ51UQ3.4-BGS	Clamps 3 (SET)
I2053.4	DI 12 X7:4	V1WR2UQ51UQ3.5-BGS	Clamps 3 (RESET)
I2053.5	DI 13 X7:2	V1WR2UQ51UQ3.5-BGS	Clamps 3 (SET)
I2053.6	DI 14 X8:4	V1WR2UQ51UQ3.6-BGS	Clamps 3 (RESET)
I2053.7	DI 15 X8:2	V1WR2UQ51UQ3.6-BGS	Clamps 3 (SET)

-KF1.12

FESTO
CPX-M-AB-8-M12X2-5POL
549335

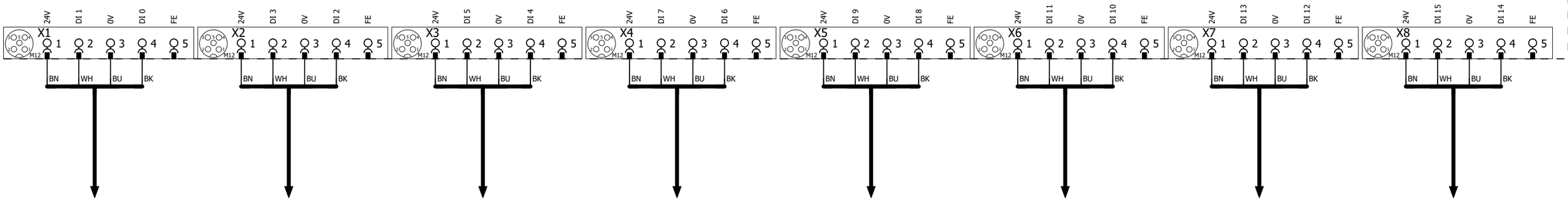

+.WR2UQ51UQ2.5-W1
=V1WR2UQ51UQ2+.WR2UQ51UQ2/1.7

+.WR2UQ51UQ2.6-W1
=V1WR2UQ51UQ2+.WR2UQ51UQ2/1.9

+.WR2UQ51UQ3.1-W1
=V1WR2UQ51UQ3+.WR2UQ51UQ3/1.1

+.WR2UQ51UQ3.2-W1
=V1WR2UQ51UQ3+.WR2UQ51UQ3/1.2

+.WR2UQ51UQ3.3-W1
=V1WR2UQ51UQ3+.WR2UQ51UQ3/1.4

+.WR2UQ51UQ3.4-W1
=V1WR2UQ51UQ3+.WR2UQ51UQ3/1.5

+.WR2UQ51UQ3.5-W1
=V1WR2UQ51UQ3+.WR2UQ51UQ3/1.7

+.WR2UQ51UQ3.6-W1
=V1WR2UQ51UQ3+.WR2UQ51UQ3/1.9

1 3

			Date	12/22/2022	Volvo Trucks North America		Valiant TMS	I/O MOD. DI16 (8 x M12) FOR VTSA-F	Drawing name: =2V13&EFS_EL		= V1WR2UQ51KF1
			Ed.	MKLEPADLO							+ V1WR2UQ51
			Appr		Sub-Floor Members				Document type: EFS	Project nr: 22-16146	Page 2
Modification	Date	Name	Original		Replacement of	Replaced by	Scale 1:1				614

I2054.0	DI 0 X1:4	V1WR2UQ51-BG01	Cross Member Rear Suspension ASSY
I2054.1	DI 1 X1:2	V1WR2UQ51-BG02	Cross Member Rear Suspension ASSY
I2054.2	DI 2 X2:4	I2054.2	Spare
I2054.3	DI 3 X2:2	I2054.3	Spare
I2054.4	DI 4 X3:4	I2054.4	Spare
I2054.5	DI 5 X3:2	I2054.5	Spare
I2054.6	DI 6 X4:4	I2054.6	Spare
I2054.7	DI 7 X4:2	I2054.7	Spare
I2055.0	DI 8 X5:4	I2055.0	Spare
I2055.1	DI 9 X5:2	I2055.1	Spare
I2055.2	DI 10 X6:4	I2055.2	Spare
I2055.3	DI 11 X6:2	I2055.3	Spare
I2055.4	DI 12 X7:4	I2055.4	Spare
I2055.5	DI 13 X7:2	I2055.5	Spare
I2055.6	DI 14 X8:4	I2055.6	Spare
I2055.7	DI 15 X8:2	I2055.7	Spare

-KF1.13

FESTO

CPX-M-AB-8-M12X2-5POL

549335

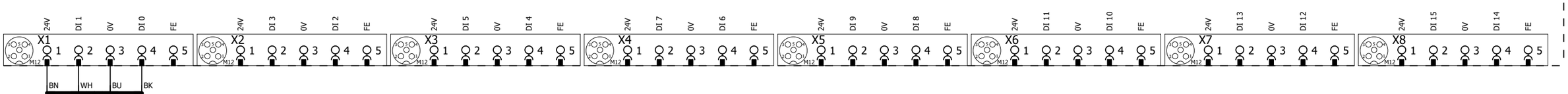

-XG1/2

=V1WR2UQ51BG0/1.1

2

4

			Date	12/22/2022	Volvo Trucks North America	Valiant TMS	I/O MOD. DI16 (8 x M12) FOR VTSA-F	Drawing name: =2V13&EFS_EL		= V1WR2UQ51KF1	
			Ed.	MKLEPADLO						+ V1WR2UQ51	
			Appr		Sub-Floor Members			Document type: EFS	Project nr: 22-16146		Page 3
Modification	Date	Name	Original		Replacement of	Replaced by	Scale 1:1				614

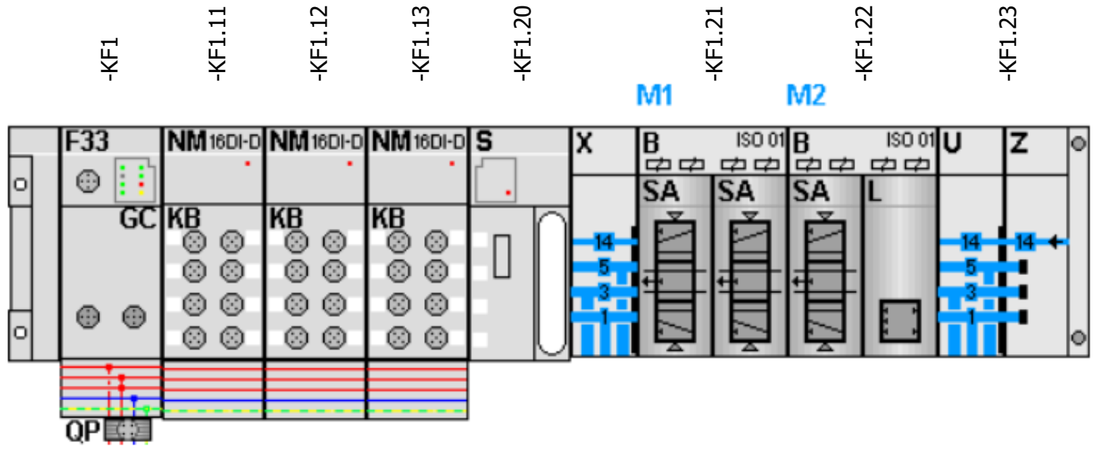

-KF1.21
=V1WR2UQ51UQ1+.WR2UQ51UQ1/1.3
=V1WR2UQ51UQ2+.WR2UQ51UQ2/1.3

FESTO

=V1WR2UQ51UQ1+.WR2UQ51UQ1/1.4	Q2050.0 DO 0 1.1	-QN1.1_Q	Clamps 1 (RST)
=V1WR2UQ51UQ1+.WR2UQ51UQ1/1.4	Q2050.1 DO 1 1.2	-QN1.2_Q	Clamps 1 (SET)
=V1WR2UQ51UQ2+.WR2UQ51UQ2/1.4	Q2050.2 DO 2 2.1	-QN2.1_Q	Clamps 2 (RST)
=V1WR2UQ51UQ2+.WR2UQ51UQ2/1.4	Q2050.3 DO 3 2.2	-QN2.2_Q	Clamps 2 (SET)

-KF1.22
=V1WR2UQ51UQ3+.WR2UQ51UQ3/1.3

FESTO

=V1WR2UQ51UQ3+.WR2UQ51UQ3/1.4	Q2050.4 DO 0 1.1	-QN3.1_Q	Clamps 3 (RST)
=V1WR2UQ51UQ3+.WR2UQ51UQ3/1.4	Q2050.5 DO 1 1.2	-QN3.2_Q	Clamps 3 (SET)
	Q2050.6 DO 2 2.1	-QN4.1_Q	Spare (SET)
	Q2050.7 DO 3 2.2	-QN4.2_Q	Spare (RST)

			Date	12/22/2022	Volvo Trucks North America		Valiant TMS	CONNECTING MOD. FOR FESTO DQ	Drawing name: =2V13&EFS_EL		= V1WR2UQ51KF1
			Ed.	MKLEPADLO							+ V1WR2UQ51
			Appr		Sub-Floor Members				Document type: EFS	Project nr: 22-16146	Page 4
Modification	Date	Name	Original		Replacement of	Replaced by	Scale 1:1				614

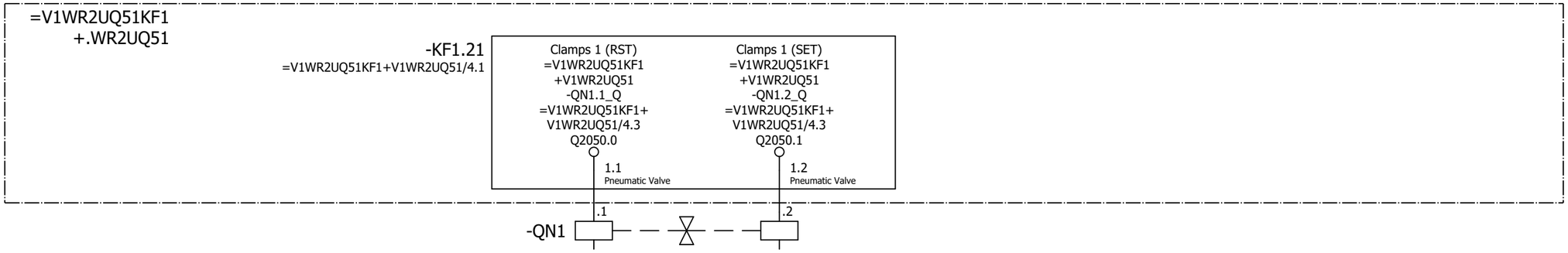

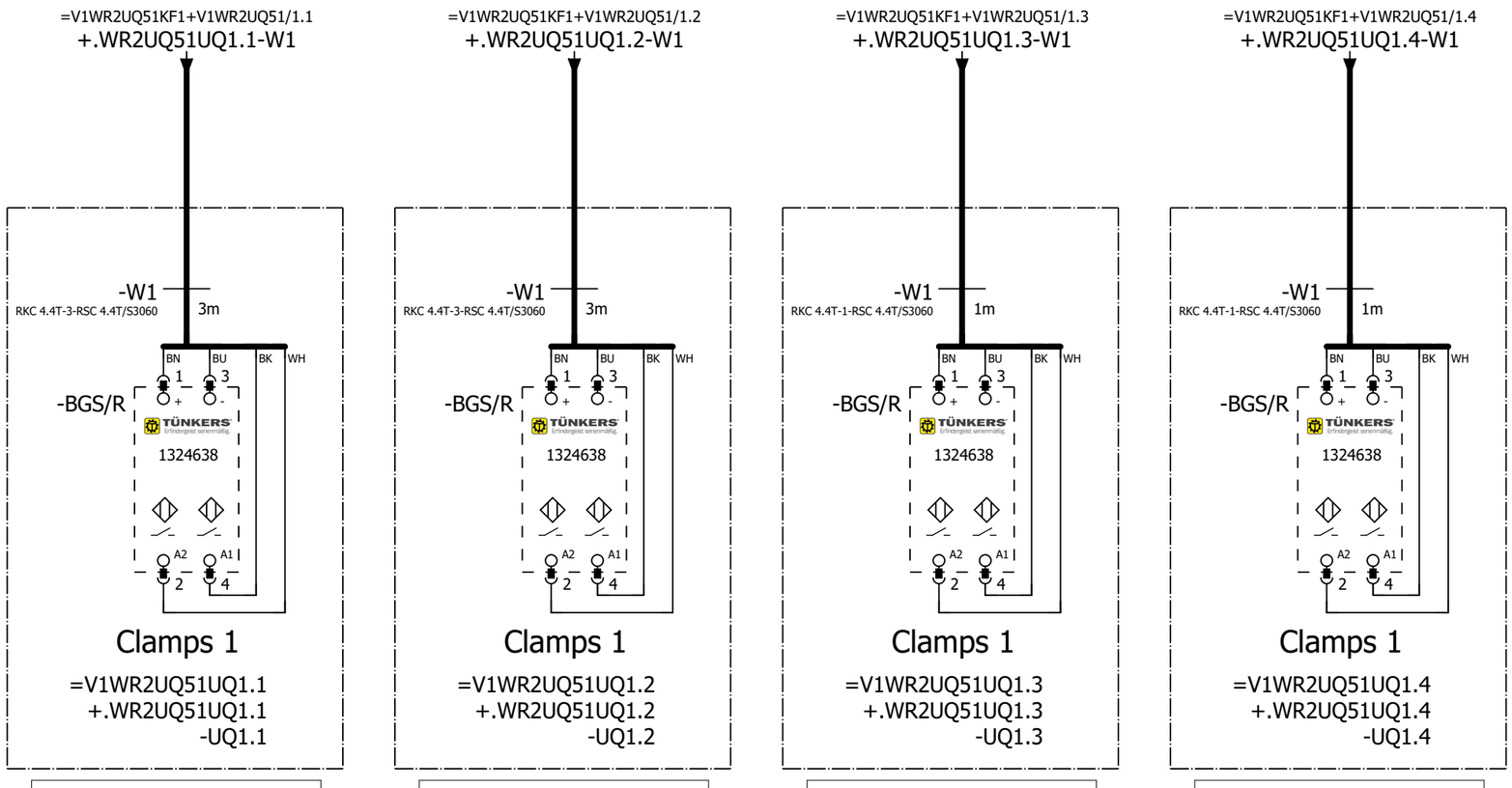

=V1WR2UQ51
-UQ1.1-BGS/R
Clamps 1

=V1WR2UQ51
-UQ1.2-BGS/R
Clamps 1

=V1WR2UQ51
-UQ1.3-BGS/R
Clamps 1

=V1WR2UQ51
-UQ1.4-BGS/R
Clamps 1

=V1WR2UQ51KF1+V1WR2UQ51/4

=V1WR2UQ51UQ2+.WR2UQ51UQ2/1

			Date	12/22/2022	Volvo Trucks North America	Valiant TMS	FESTO DQ CONNECTION QN1	Drawing name: =2V13&EFS_EL	= V1WR2UQ51UQ1	
			Ed.	MKLEPADLO					+ V1WR2UQ51UQ1	
			Appr		Sub-Floor Members			Document type: EFS	Project nr: 22-16146	Page 1
Modification	Date	Name	Original		Replacement of / Replaced by	Scale 1:1				614

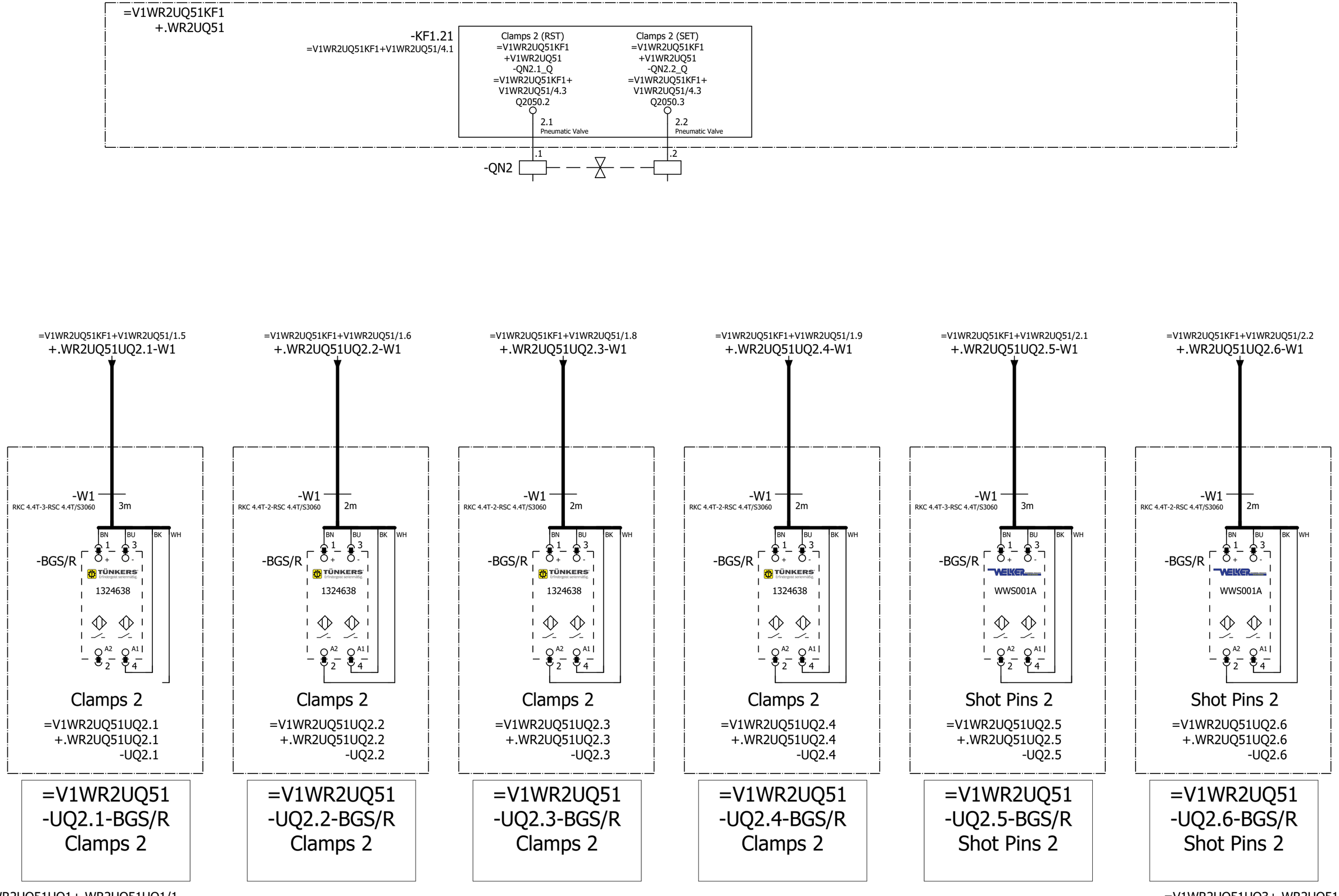

			Date	12/22/2022	Volvo Trucks North America		Valiant TMS	FESTO DQ CONNECTION QN2	Drawing name: =2V13&EFS_EL	= V1WR2UQ51UQ2	
			Ed.	MKLEPADLO						+ V1WR2UQ51UQ2	
			Appr		Sub-Floor Members				Document type: EFS	Project nr: 22-16146	Page 1
Modification	Date	Name	Original		Replacement of	Replaced by	Scale 1:1				614

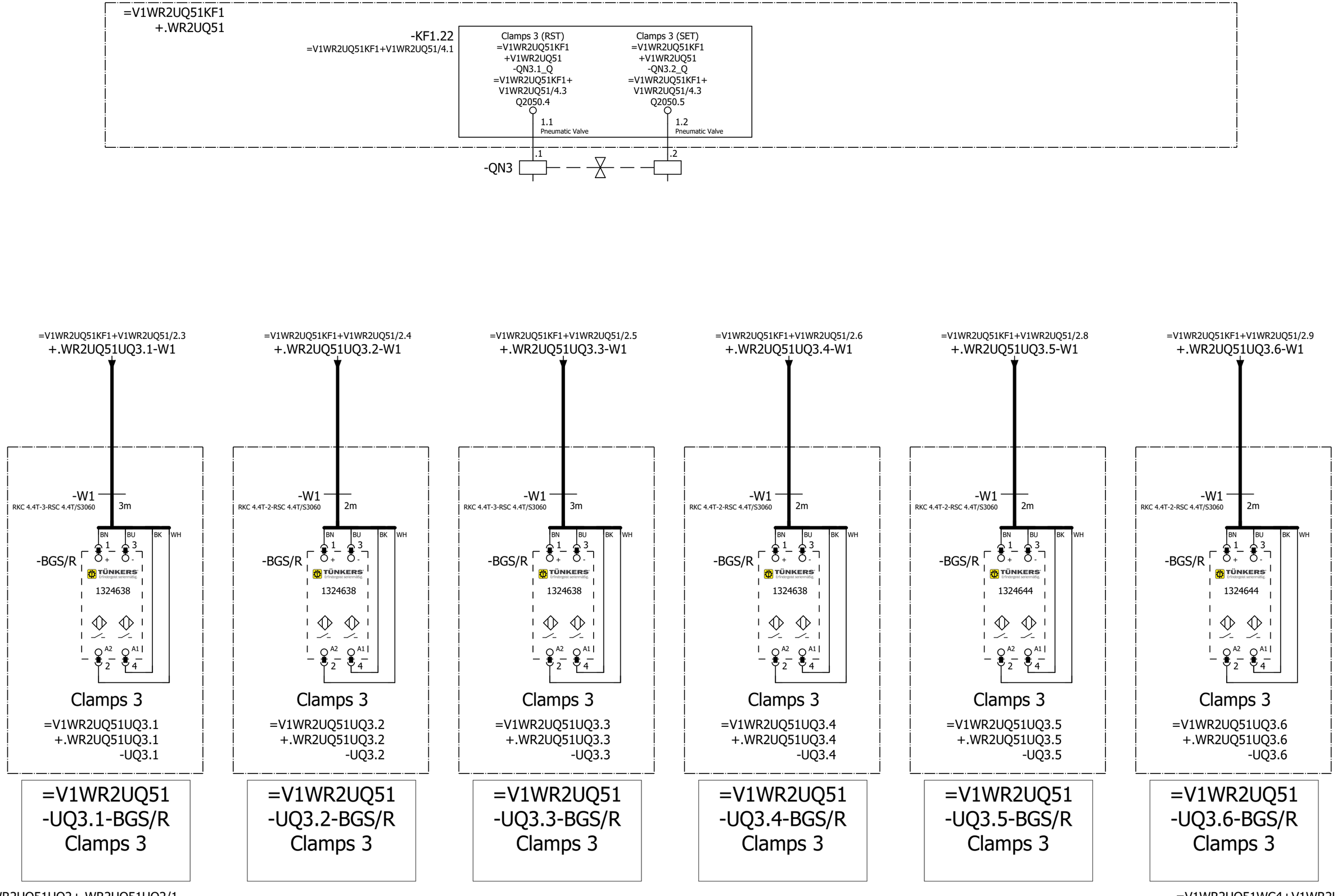

=V1WR2UQ51UQ2+.WR2UQ51UQ2/1

=V1WR2UQ51WC4+V1WR2UQ51/1

			Date	12/22/2022	Volvo Trucks North America		Valiant TMS	FESTO DQ CONNECTION QN3	Drawing name: =2V13&EFS_EL	= V1WR2UQ51UQ3	
			Ed.	MKLEPADLO						+ V1WR2UQ51UQ3	
			Appr		Sub-Floor Members				Document type: EFS	Project nr: 22-16146	Page 1
Modification	Date	Name	Original		Replacement of	Replaced by	Scale 1:1				614

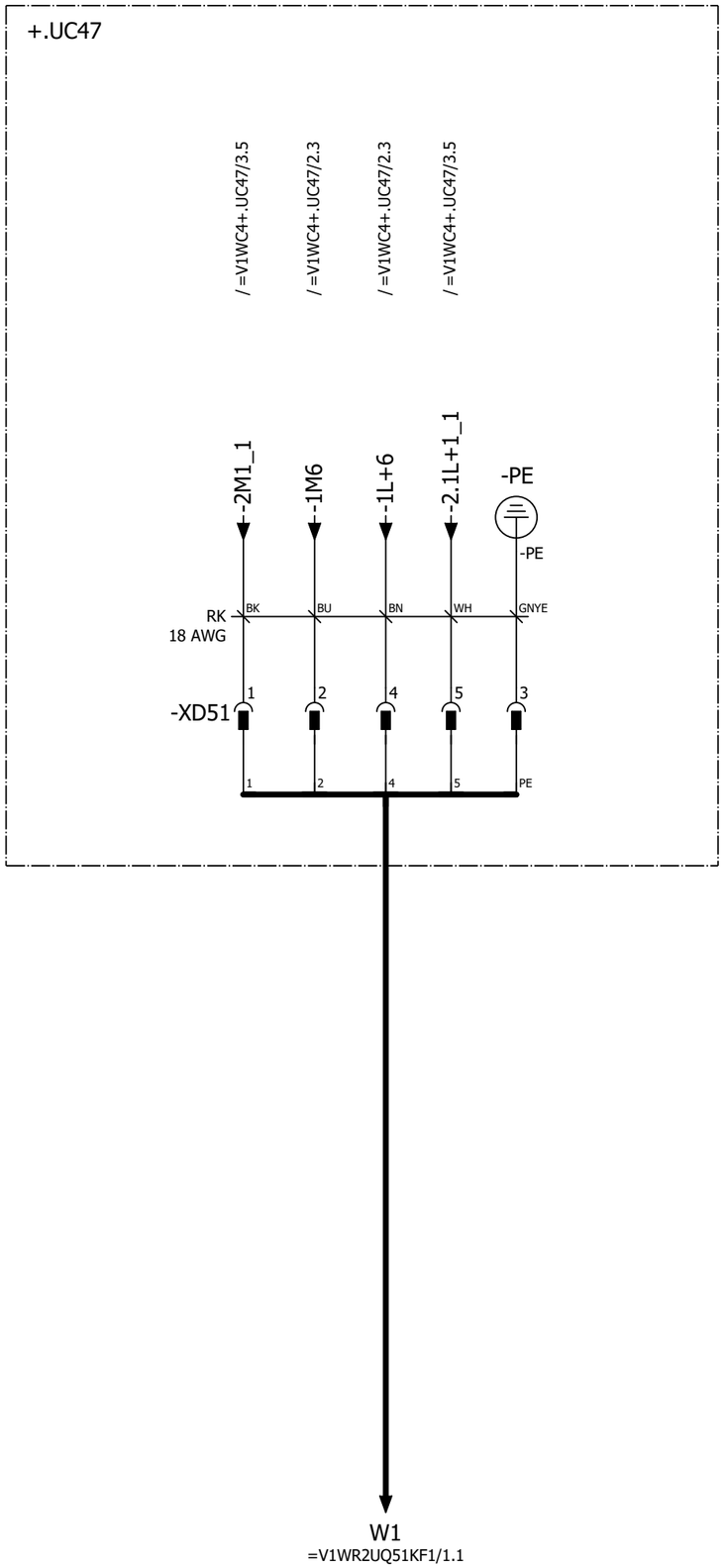

POWER IN / POWER OUT

Pin 1: 0 V UA
Pin 2: 0 V US
Pin 3: FE
Pin 4: +24 V US / 9 A
Pin 5: +24 V UA / 9 A

Pin #	WIRE	COLOR
Pin 1	2M1_1	BK
Pin 2	1M6	BU
Pin 3	PE	GNYE
Pin 4	1L+6	BN
Pin 5	2.1L+1_1	WH

=V1WR2UQ51UQ3+.WR2UQ51UQ3/1

=V1WR2UQ52BG0+.WR2UQ52/1

			Date	12/22/2022	Volvo Trucks North America	Valiant TMS	24VDC	Drawing name: =2V13&EFS_EL	= V1WR2UQ51WC4	
			Ed.	MKLEPADLO					+ V1WR2UQ51	
			Appr		Sub-Floor Members			Document type: EFS	Project nr: 22-16146	Page 1 / 614
Modification	Date	Name	Original		Replacement of / Replaced by	Scale 1:1				

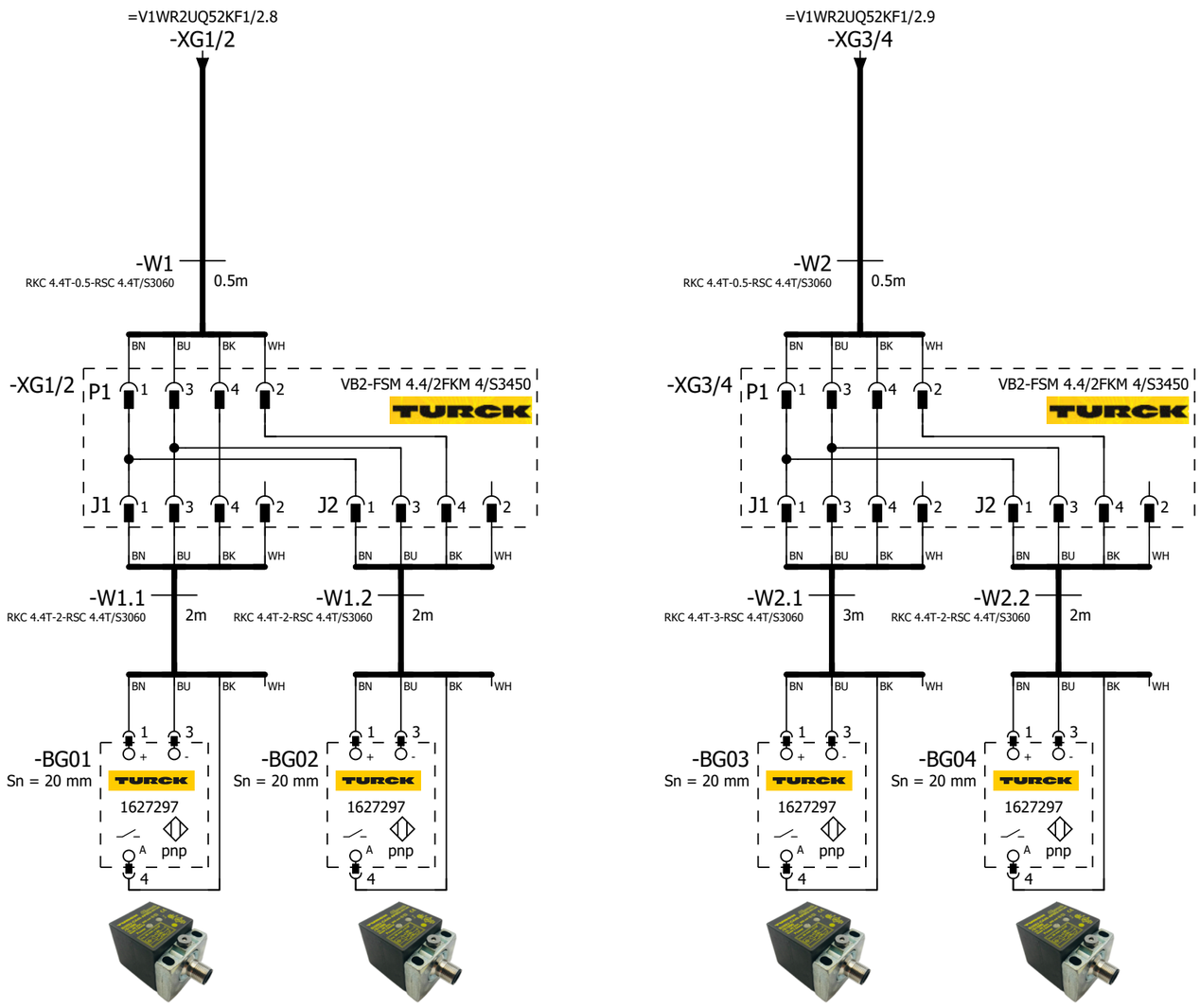

=V1WR2UQ52 -BG01 Front Suspension ASSY LH	=V1WR2UQ52 -BG02 Front Suspension ASSY LH	=V1WR2UQ52 -BG03 Front Suspension ASSY RH	=V1WR2UQ52 -BG04 Front Suspension ASSY RH

=V1WR2UQ51WC4+.WR2UQ51/1

=V1WR2UQ52KF1/1

			Date	12/22/2022	Volvo Trucks North America	Valiant TMS	SENSORS	Drawing name: =2V13&EFS_EL		= V1WR2UQ52BG0	
			Ed.	MKLEPADLO						+ V1WR2UQ52	
			Appr		Sub-Floor Members			Document type: EFS	Project nr: 22-16146		Page 1
Modification	Date	Name	Original		Replacement of / Replaced by	Scale 1:1					614

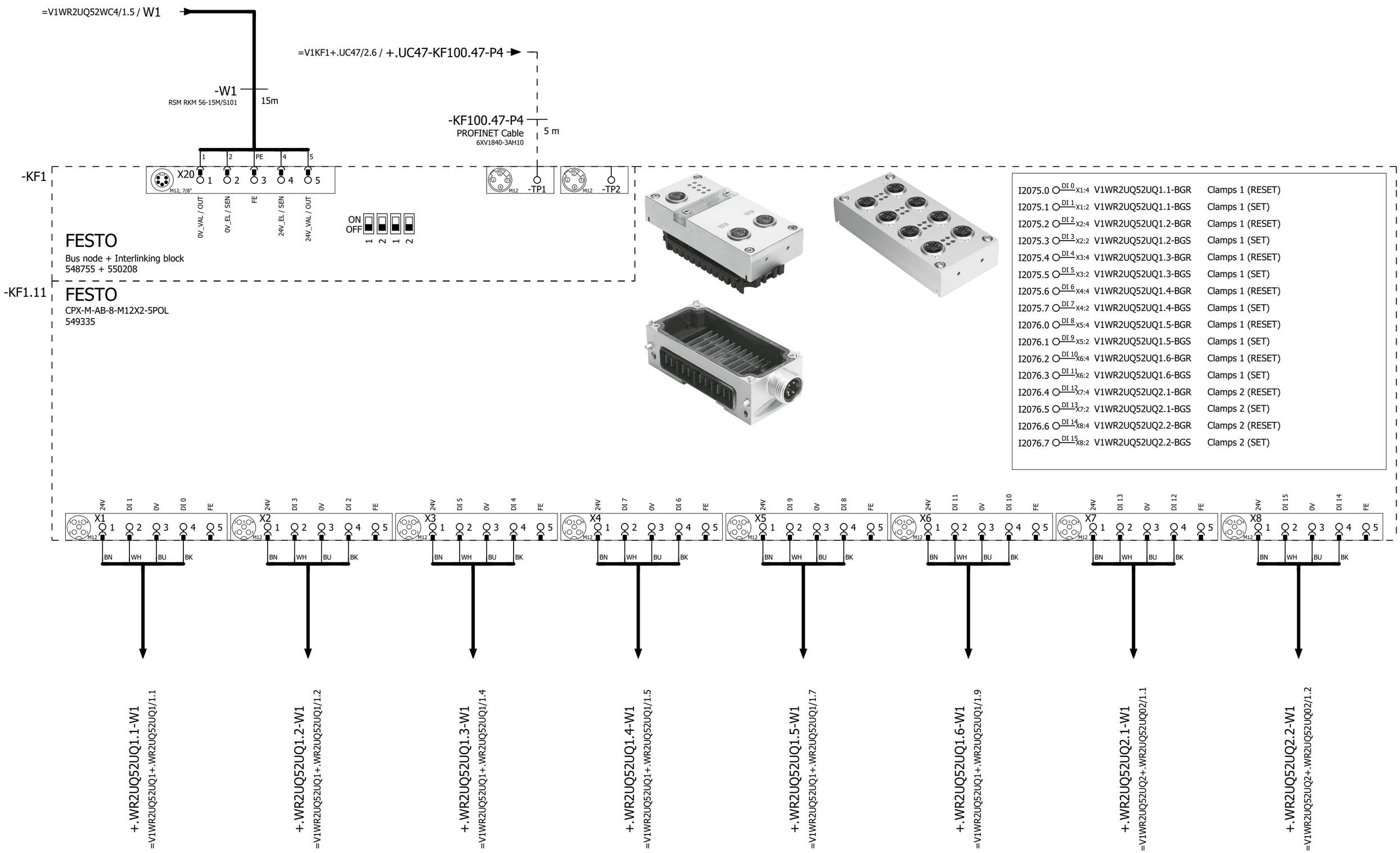

=V1WR2UQ52BG0/1

2

			Date	12/22/2022	Volvo Trucks North America	Valiant TMS	CONNECTING MOD. FOR VTSA MANIFOLD	Drawing name: =2V13&EFS_EL		= V1WR2UQ52KF1	
			Ed.	MKLEPADLO						+ V1WR2UQ52	
			Appr		Sub-Floor Members			Document type: EFS	Project nr: 22-16146		Page 1
Modification	Date	Name	Original		Replacement of / Replaced by	Scale 1:1					614

I2077.0	DI 0 X1:4	V1WR2UQ52UQ2.3-BGR	Clamps 2 (RESET)
I2077.1	DI 1 X1:2	V1WR2UQ52UQ2.3-BGS	Clamps 2 (SET)
I2077.2	DI 2 X2:4	V1WR2UQ52UQ2.4-BGR	Clamps 2 (RESET)
I2077.3	DI 3 X2:2	V1WR2UQ52UQ2.4-BGS	Clamps 2 (SET)
I2077.4	DI 4 X3:4	V1WR2UQ52UQ3.1-BGR	Clamps 3 (RESET)
I2077.5	DI 5 X3:2	V1WR2UQ52UQ3.1-BGS	Clamps 3 (SET)
I2077.6	DI 6 X4:4	V1WR2UQ52UQ3.2-BGR	Clamps 3 (RESET)
I2077.7	DI 7 X4:2	V1WR2UQ52UQ3.2-BGS	Clamps 3 (SET)
I2078.0	DI 8 X5:4	V1WR2UQ52UQ3.3-BGR	Clamps 3 (RESET)
I2078.1	DI 9 X5:2	V1WR2UQ52UQ3.3-BGS	Clamps 3 (SET)
I2078.2	DI 10 X6:4	V1WR2UQ52UQ3.4-BGR	Clamps 3 (RESET)
I2078.3	DI 11 X6:2	V1WR2UQ52UQ3.4-BGS	Clamps 3 (SET)
I2078.4	DI 12 X7:4	V1WR2UQ52-BG01	Front Suspension ASSY LH
I2078.5	DI 13 X7:2	V1WR2UQ52-BG02	Front Suspension ASSY LH
I2078.6	DI 14 X8:4	V1WR2UQ52-BG03	Front Suspension ASSY RH
I2078.7	DI 15 X8:2	V1WR2UQ52-BG04	Front Suspension ASSY RH

-KF1.12

FESTO
CPX-M-AB-8-M12X2-5POL
549335

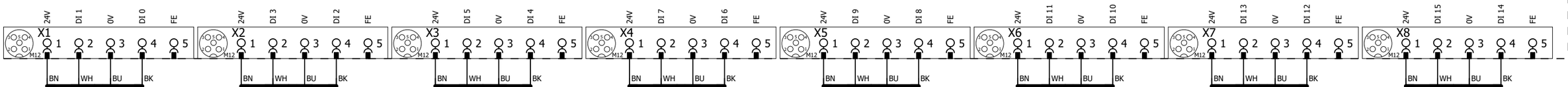

+.WR2UQ52UQ2.3-W1
=V1WR2UQ52UQ2+.WR2UQ52UQ02/1.4

+.WR2UQ52UQ2.4-W1
=V1WR2UQ52UQ2+.WR2UQ52UQ02/1.5

+.WR2UQ52UQ3.1-W1
=V1WR2UQ52UQ3+.WR2UQ52UQ03/1.1

+.WR2UQ52UQ3.2-W1
=V1WR2UQ52UQ3+.WR2UQ52UQ03/1.2

+.WR2UQ52UQ3.3-W1
=V1WR2UQ52UQ3+.WR2UQ52UQ03/1.4

+.WR2UQ52UQ3.4-W1
=V1WR2UQ52UQ3+.WR2UQ52UQ03/1.5

-XG1/2
=V1WR2UQ52BG0/1.1

-XG3/4
=V1WR2UQ52BG0/1.4

1 3

			Date	12/22/2022	Volvo Trucks North America		Valiant TMS	I/O MOD. DI16 (8 x M12) FOR VTSA-F	Drawing name: =2V13&EFS_EL	= V1WR2UQ52KF1	
			Ed.	MKLEPADLO						+ V1WR2UQ52	
			Appr		Sub-Floor Members				Document type: EFS	Project nr: 22-16146	Page 2
Modification	Date	Name	Original		Replacement of	Replaced by	Scale 1:1				614

-KF1.13

FESTO

CPX-M-AB-8-M12X2-5POL
549335

I2079.0	DI 0 X1:4	I2079.0	Spare
I2079.1	DI 1 X1:2	I2079.1	Spare
I2079.2	DI 2 X2:4	I2079.2	Spare
I2079.3	DI 3 X2:2	I2079.3	Spare
I2079.4	DI 4 X3:4	I2079.4	Spare
I2079.5	DI 5 X3:2	I2079.5	Spare
I2079.6	DI 6 X4:4	I2079.6	Spare
I2079.7	DI 7 X4:2	I2079.7	Spare
I2080.0	DI 8 X5:4	I2080.0	Spare
I2080.1	DI 9 X5:2	I2080.1	Spare
I2080.2	DI 10 X6:4	I2080.2	Spare
I2080.3	DI 11 X6:2	I2080.3	Spare
I2080.4	DI 12 X7:4	I2080.4	Spare
I2080.5	DI 13 X7:2	I2080.5	Spare
I2080.6	DI 14 X8:4	I2080.6	Spare
I2080.7	DI 15 X8:2	I2080.7	Spare

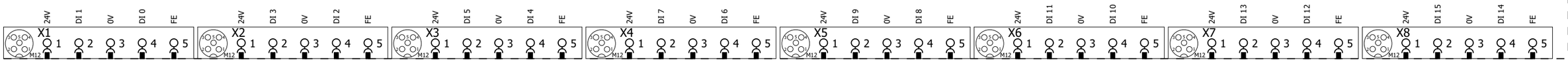

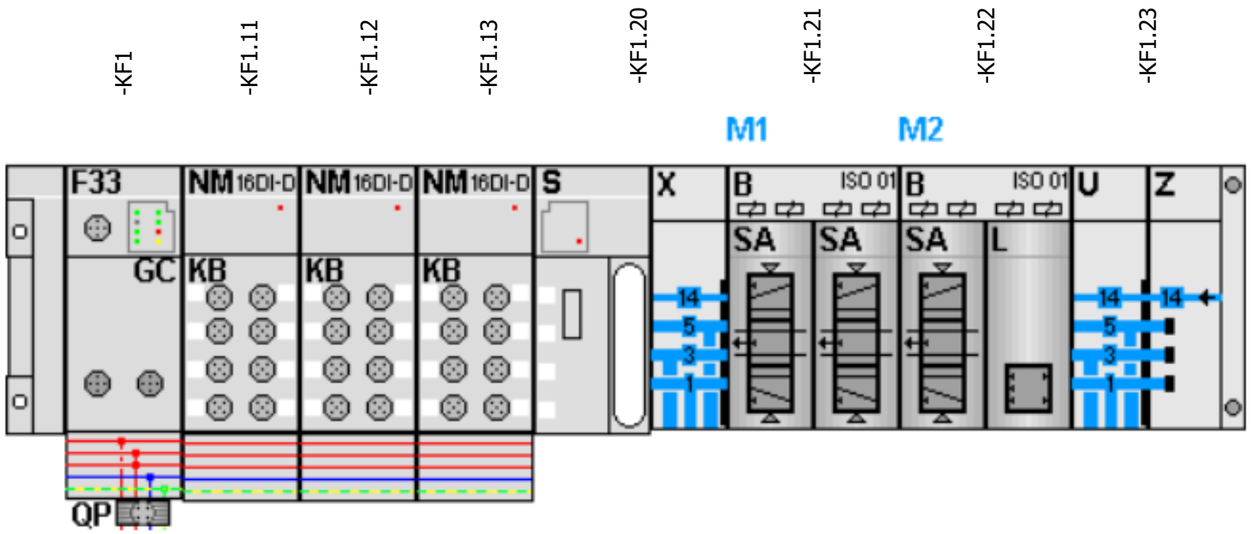

-KF1.21
=V1WR2UQ52UQ1+.WR2UQ52UQ1/1.3
=V1WR2UQ52UQ2+.WR2UQ52UQ02/1.3

FESTO

=V1WR2UQ52UQ1+.WR2UQ52UQ1/1.4	Q2075.0 DO 0 1.1	-QN1.1_Q	Clamps 1 (RST)
=V1WR2UQ52UQ1+.WR2UQ52UQ1/1.4	Q2075.1 DO 1 1.2	-QN1.2_Q	Clamps 1 (SET)
=V1WR2UQ52UQ2+.WR2UQ52UQ02/1.4	Q2075.2 DO 2 2.1	-QN2.1_Q	Clamps 2 (RST)
=V1WR2UQ52UQ2+.WR2UQ52UQ02/1.4	Q2075.3 DO 3 2.2	-QN2.2_Q	Clamps 2 (SET)

-KF1.22
=V1WR2UQ52UQ3+.WR2UQ52UQ03/1.3

FESTO

=V1WR2UQ52UQ3+.WR2UQ52UQ03/1.4	Q2075.4 DO 0 1.1	-QN3.1_Q	Clamps 3 (RST)
=V1WR2UQ52UQ3+.WR2UQ52UQ03/1.4	Q2075.5 DO 1 1.2	-QN3.2_Q	Clamps 3 (SET)
	Q2075.6 DO 2 2.1	-QN4.1_Q	Spare (SET)
	Q2075.7 DO 3 2.2	-QN4.2_Q	Spare (RST)

			Date	12/22/2022	Volvo Trucks North America		Valiant TMS	CONNECTING MOD. FOR FESTO DQ	Drawing name: =2V13&EFS_EL	= V1WR2UQ52KF1	
			Ed.	MKLEPADLO						+ V1WR2UQ52	
			Appr		Sub-Floor Members				Document type: EFS	Project nr: 22-16146	Page 4
Modification	Date	Name	Original		Replacement of	Replaced by	Scale 1:1				614

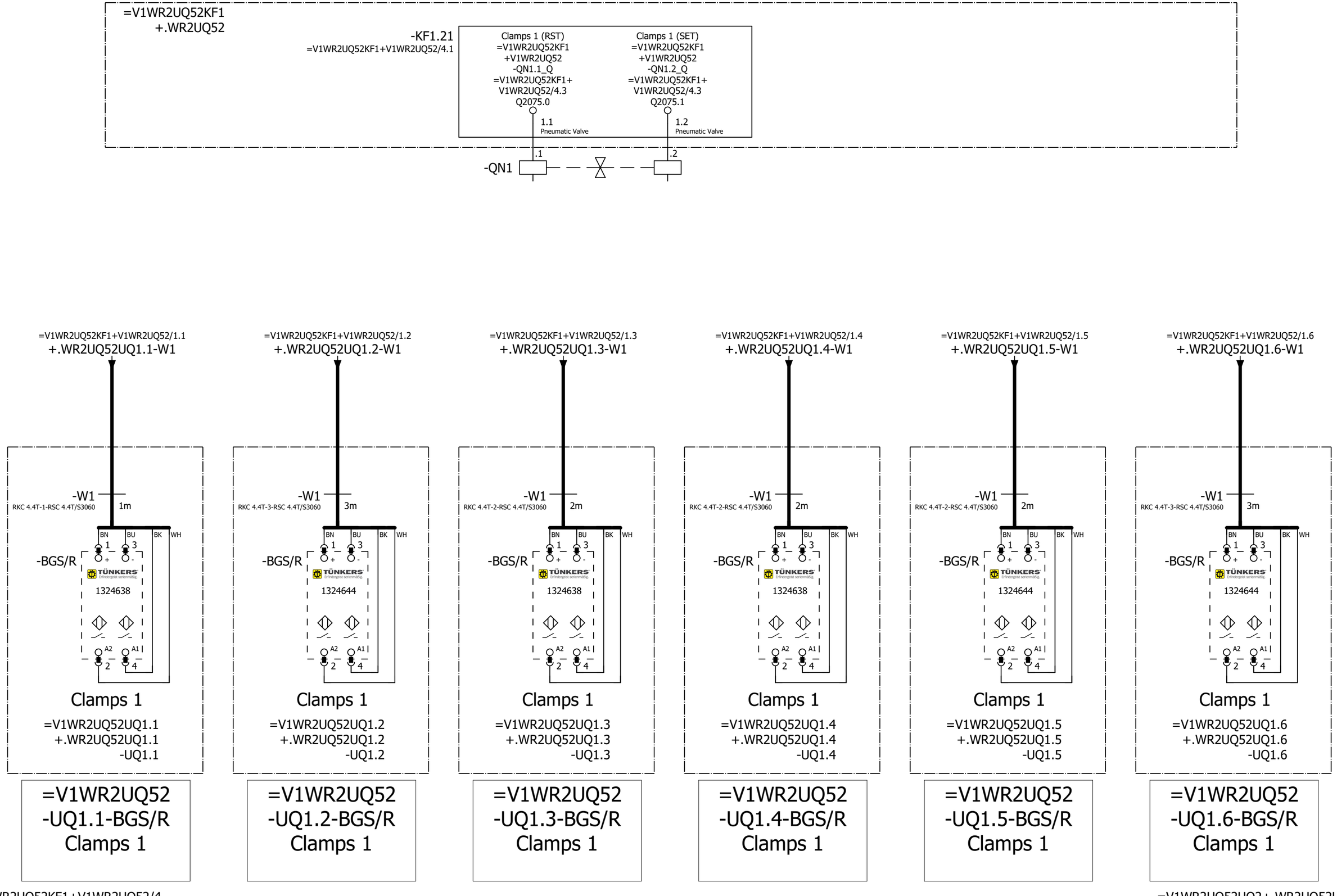

=V1WR2UQ52KF1+V1WR2UQ52/4

=V1WR2UQ52UQ2+.WR2UQ52UQ02/1

			Date	12/22/2022	Volvo Trucks North America		Valiant TMS	FESTO DQ CONNECTION QN1	Drawing name: =2V13&EFS_EL	= V1WR2UQ52UQ1	
			Ed.	MKLEPADLO						+ V1WR2UQ52UQ1	
			Appr		Sub-Floor Members				Document type: EFS	Project nr: 22-16146	Page 1
Modification	Date	Name	Original		Replacement of	Replaced by	Scale 1:1				614

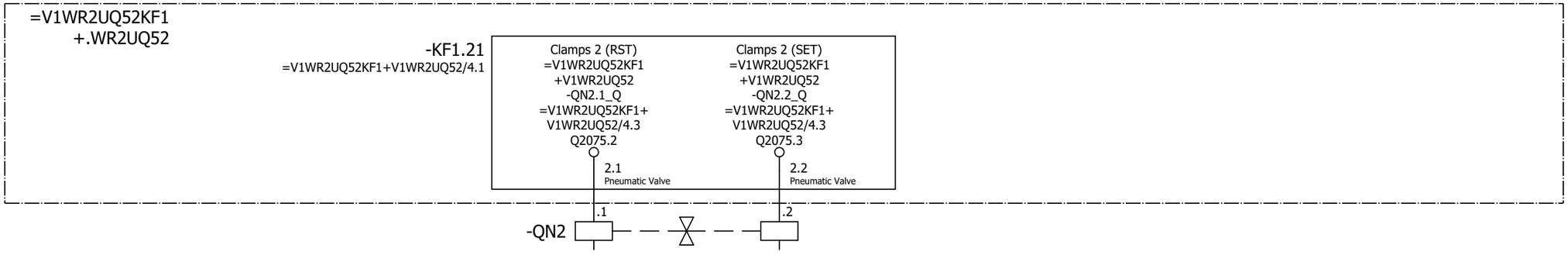

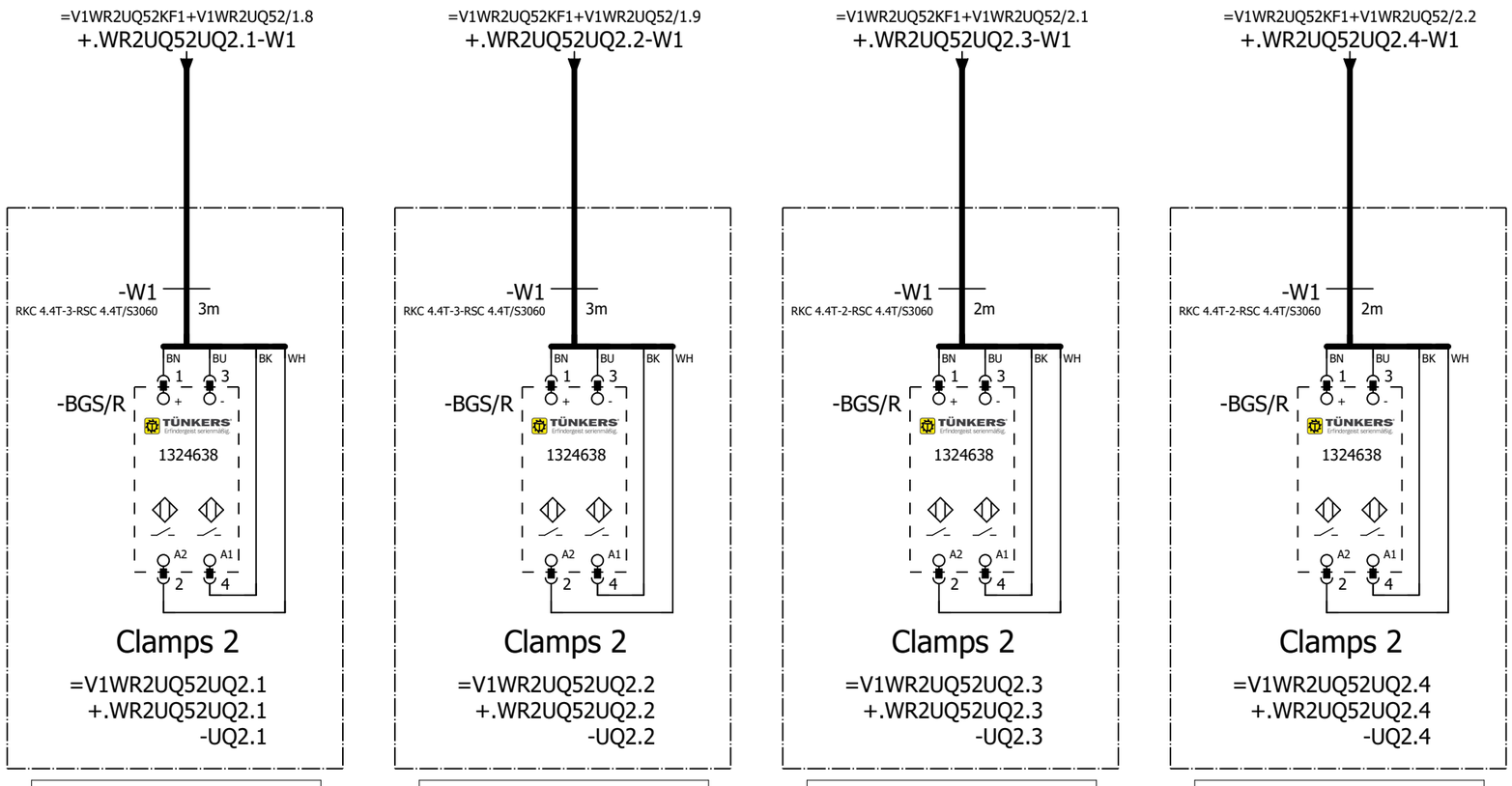

=V1WR2UQ52
-UQ2.1-BGS/R
Clamps 2

=V1WR2UQ52
-UQ2.2-BGS/R
Clamps 2

=V1WR2UQ52
-UQ2.3-BGS/R
Clamps 2

=V1WR2UQ52
-UQ2.4-BGS/R
Clamps 2

=V1WR2UQ52UQ1+.WR2UQ52UQ1/1

=V1WR2UQ52UQ3+.WR2UQ52UQ03/1

			Date	12/22/2022	Volvo Trucks North America	Valiant TMS	FESTO DQ CONNECTION QN2	Drawing name: =2V13&EFS_EL	= V1WR2UQ52UQ2	
			Ed.	MKLEPADLO					+ V1WR2UQ52UQ02	
			Appr		Sub-Floor Members			Document type: EFS	Project nr: 22-16146	Page 1
Modification	Date	Name	Original		Replacement of / Replaced by	Scale 1:1				614

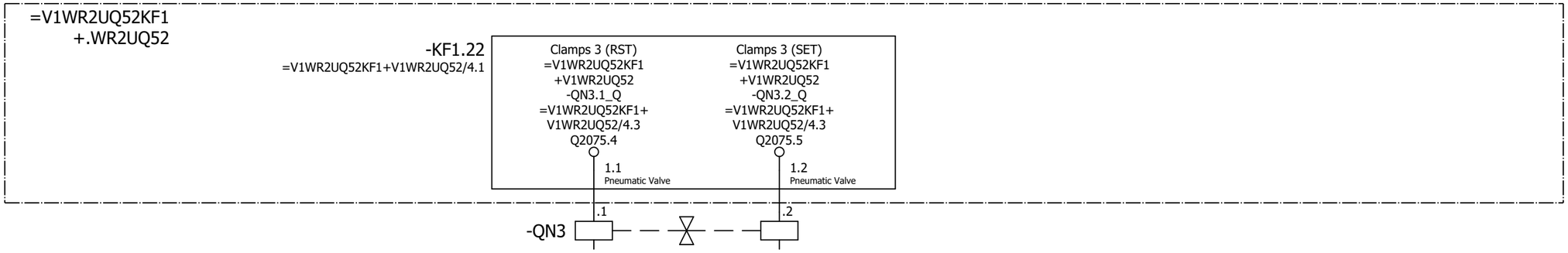

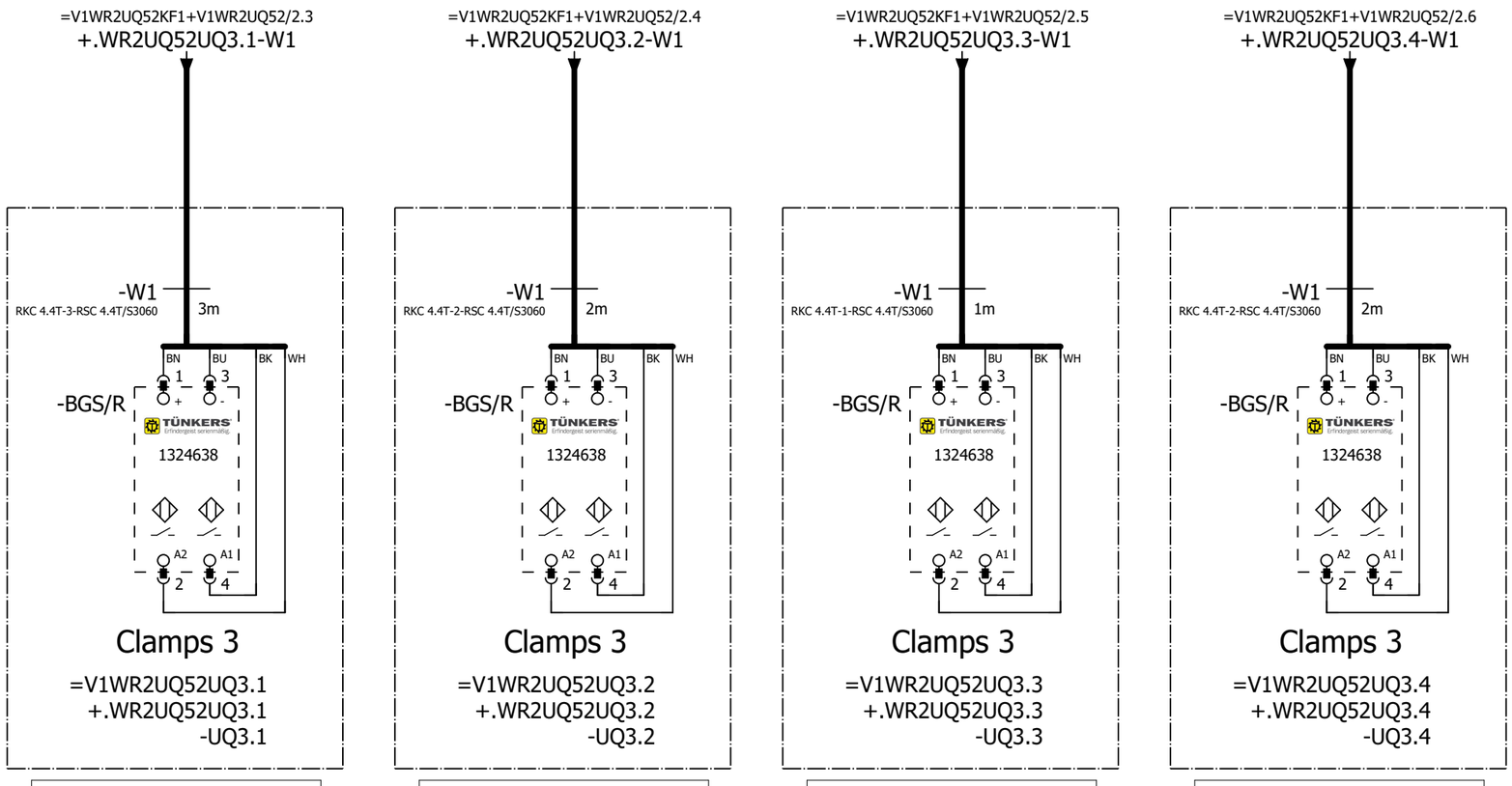

=V1WR2UQ52
-UQ3.1-BGS/R
Clamps 3

=V1WR2UQ52
-UQ3.2-BGS/R
Clamps 3

=V1WR2UQ52
-UQ3.3-BGS/R
Clamps 3

=V1WR2UQ52
-UQ3.4-BGS/R
Clamps 3

=V1WR2UQ52UQ2+.WR2UQ52UQ02/1

=V1WR2UQ52WC4+V1WR2UQ52/1

			Date	12/22/2022	Volvo Trucks North America		Valiant TMS	FESTO DQ CONNECTION QN3	Drawing name: =2V13&EFS_EL	= V1WR2UQ52UQ3	
			Ed.	MKLEPADLO						+ V1WR2UQ52UQ03	
			Appr		Sub-Floor Members				Document type: EFS	Project nr: 22-16146	Page 1
Modification	Date	Name	Original		Replacement of	Replaced by	Scale 1:1				614

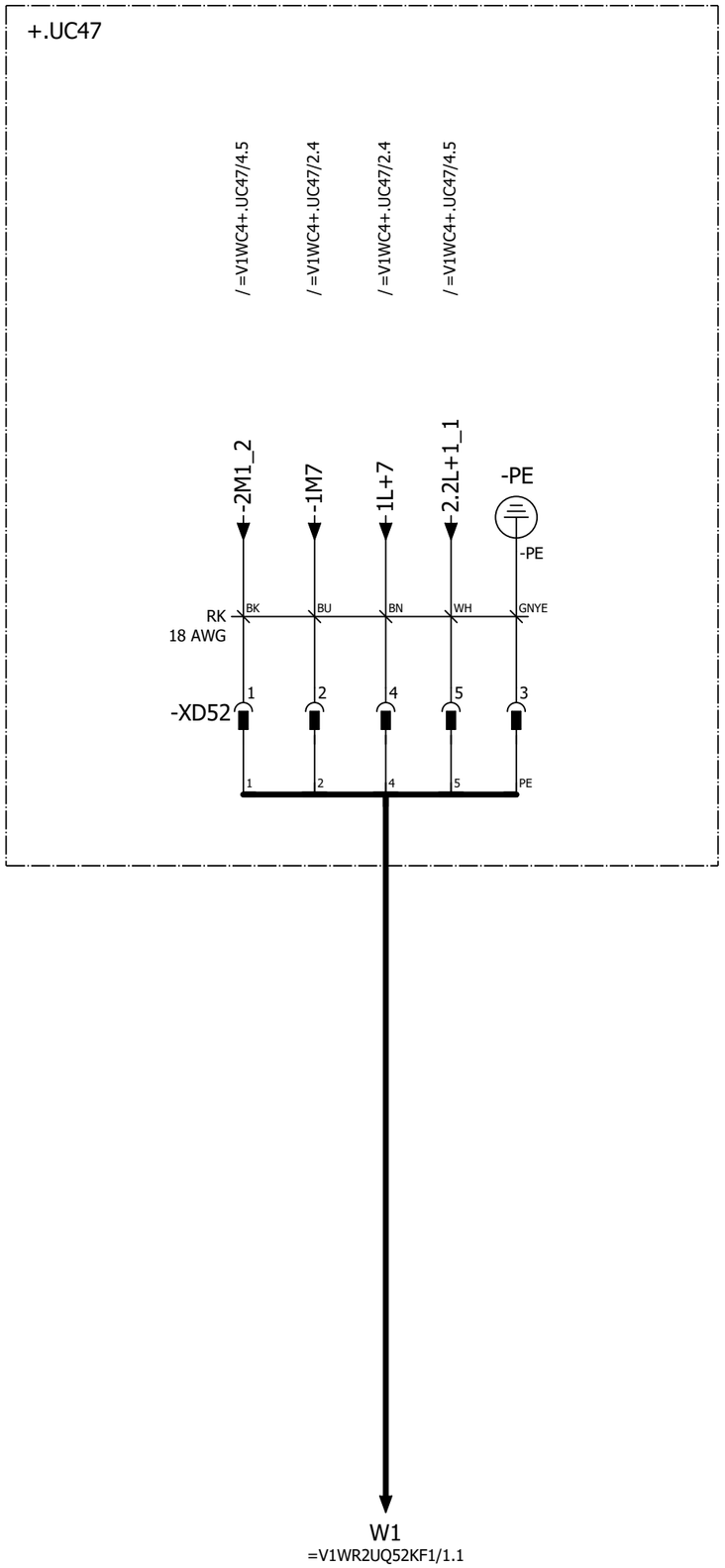

POWER IN / POWER OUT

Pin 1: 0 V UA
Pin 2: 0 V US
Pin 3: FE
Pin 4: +24 V US / 9 A
Pin 5: +24 V UA / 9 A

Pin #	WIRE	COLOR
Pin 1	2M1_1	BK
Pin 2	1M6	BU
Pin 3	PE	GNYE
Pin 4	1L+6	BN
Pin 5	2.1L+1_1	WH

=V1WR2UQ52UQ3+.WR2UQ52UQ03/1

=V1WR2WC1+.WR2UC01/1

			Date	12/22/2022	Volvo Trucks North America	Valiant TMS	24VDC	Drawing name: =2V13&EFS_EL	= V1WR2UQ52WC4	
			Ed.	MKLEPADLO					+ V1WR2UQ52	
			Appr		Sub-Floor Members			Document type: EFS	Project nr: 22-16146	Page 1 / 614
Modification	Date	Name	Original		Replacement of / Replaced by	Scale 1:1				

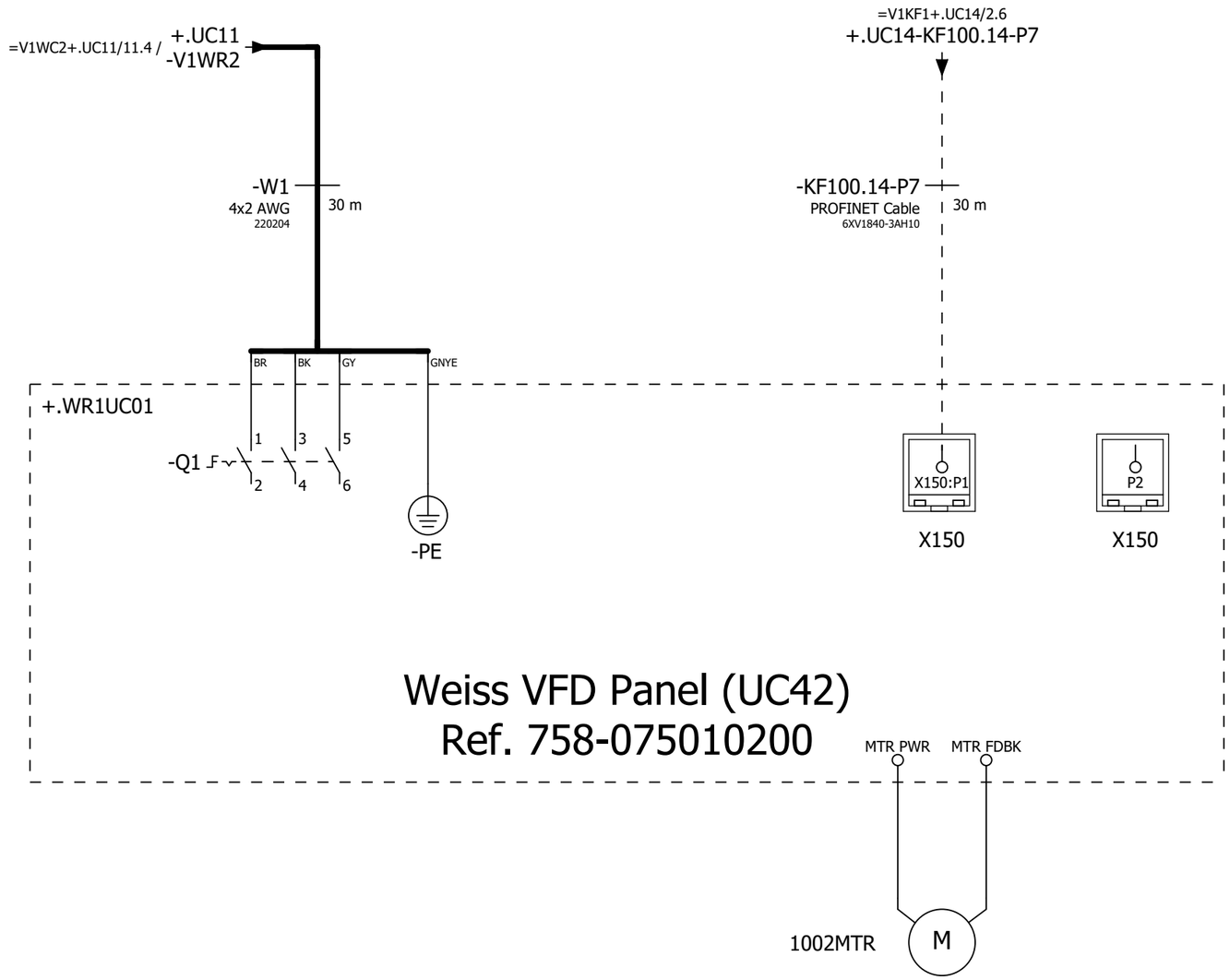

=V1WR2UQ52WC4+.WR2UQ52/1

2

			Date	12/22/2022	Volvo Trucks North America	Valiant TMS	Incoming power & profinet	Drawing name: =2V13&EFS_EL		= V1WR2WC1	
			Ed.	MKLEPADLO						+ V1WR2UC01	
			Appr		Sub-Floor Members			Document type: EFS	Project nr: 22-16146		Page 1
Modification	Date	Name	Original		Replacement of	Replaced by	Scale 1:1				614

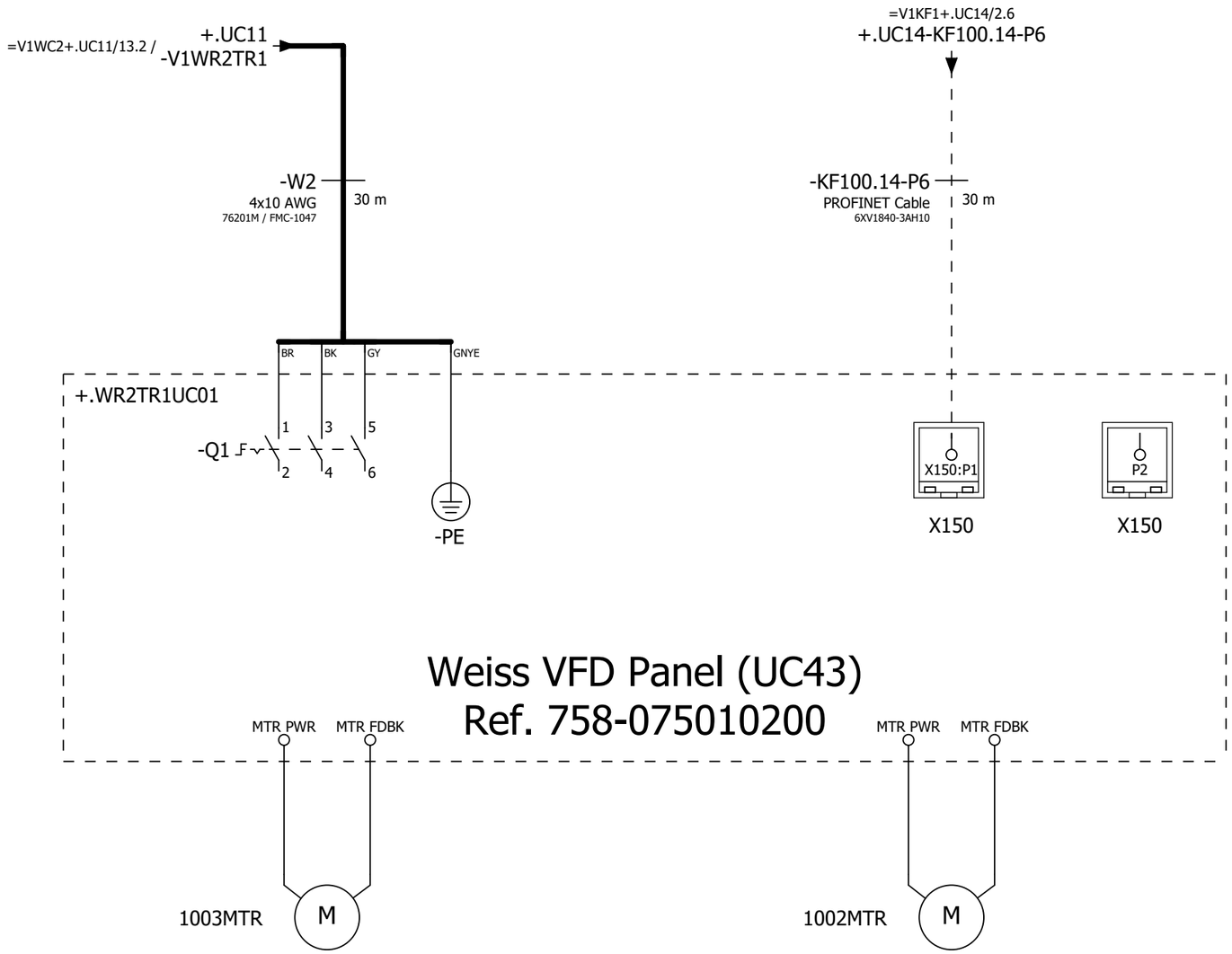

1

&ELU=KF0+UC31/1

			Date	12/22/2022	Volvo Trucks North America		Valiant TMS	Incoming power & profinet	Drawing name: =2V13&EFS_EL	= V1WR2WC1	
			Ed.	MKLEPADLO						+ V1WR2UC01	
			Appr		Sub-Floor Members				Document type: EFS	Project nr: 22-16146	Page 2 / 614
Modification	Date	Name	Original		Replacement of	Replaced by	Scale 1:1				

0	1	2	3	4	5	6	7	8	9

-UC31

&EFS=V1WR2WC1+V1WR2UC01/2

2

			Date	12/22/2022	Volvo Trucks North America		Valiant TMS	Layout UC31 MOP	Drawing name: =2V13&EFS_EL		= KF0
			Ed.	MKLEPADLO							+ UC31
			Appr		Sub-Floor Members				Document type: ELU	Project nr: 22-16146	Page 1
Modification	Date	Name	Original		Replacement of	Replaced by	Scale 1:1				614

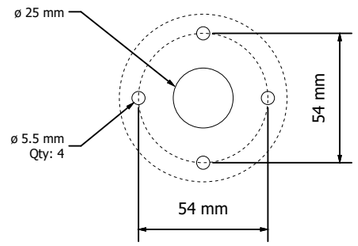

DETAIL 'B'
ABB Stack light
K70 series

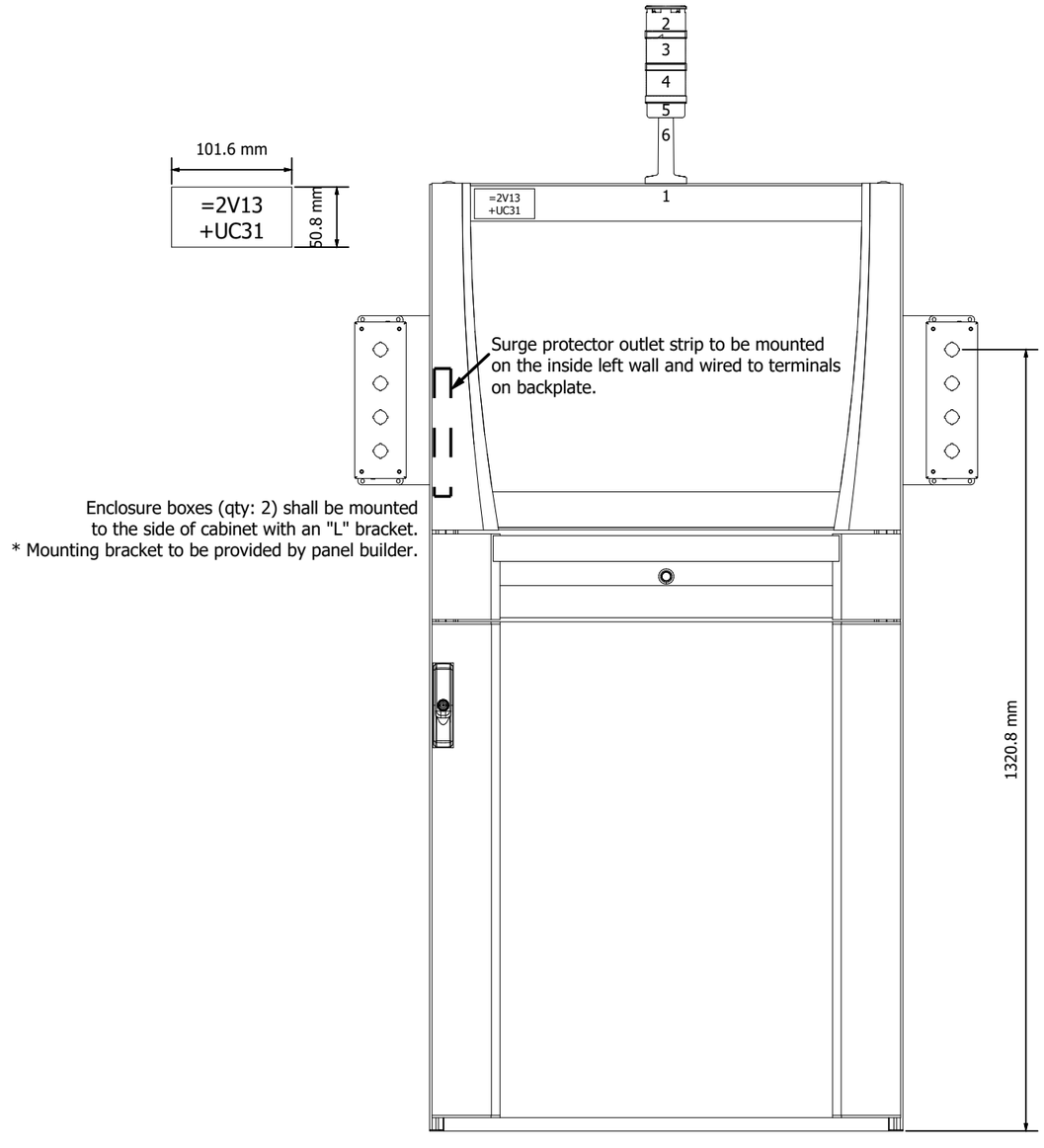

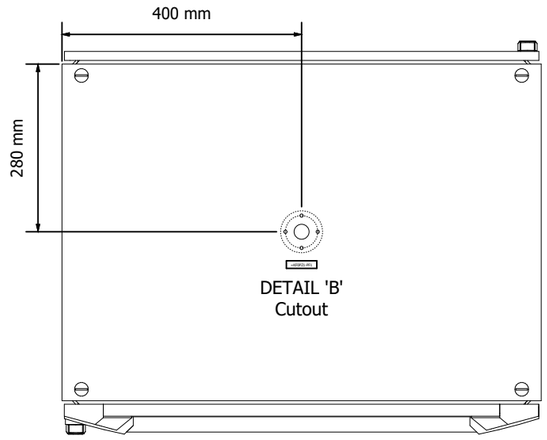

Top View
of Enclosure

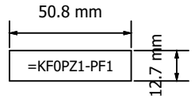

Enclosure panel shall be finished in RAL 7035 Light Grey paint.

			Date	12/22/2022	Volvo Trucks North America	Valiant TMS	Layout UC31 MOP External View	Drawing name: =2V13&EFS_EL		= KF0	
			Ed.	MKLEPADLO						+ UC31	
			Appr		Sub-Floor Members			Document type: ELU	Project nr: 22-16146		Page 2
Modification	Date	Name	Original		Replacement of / Replaced by	Scale 1:10					614

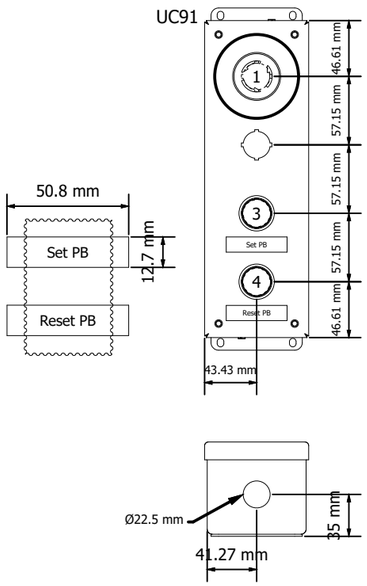

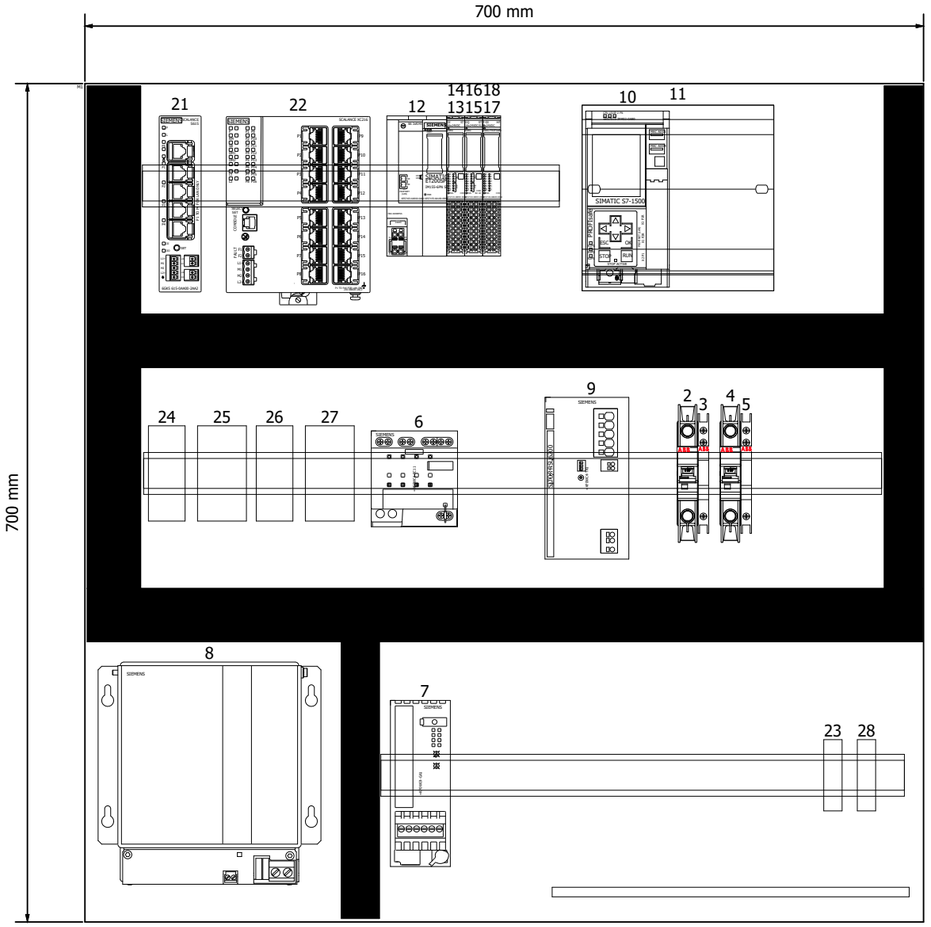

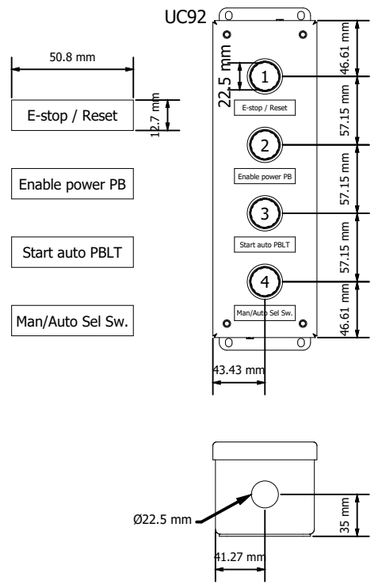

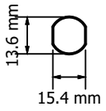

DETAIL 'B'
M12 Profinet Receptacle
Qty: 11

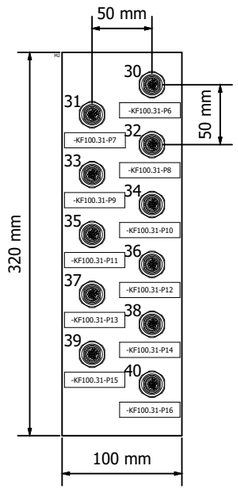

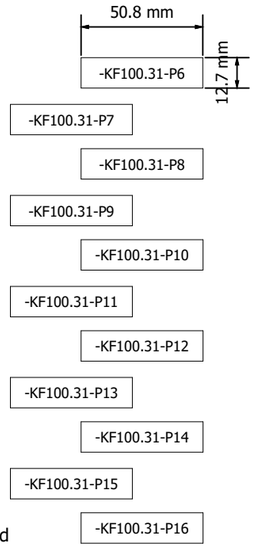

Profinet receptacle plate. Shall be mounted
to left side of subplate with a bracket.
* Mounting bracket to be provided by panel builder.

2

=V1PZ1PF1+V1UC61/1

			Date	12/22/2022	Volvo Trucks North America	Valiant TMS	Layout UC31 MOP Internal View	Drawing name: =2V13&EFS_EL		= KF0	
			Ed.	MKLEPADLO						+ UC31	
			Appr		Sub-Floor Members			Document type: ELU	Project nr: 22-16146	Page	3
Modification	Date	Name	Original		Replacement of / Replaced by	Scale 1:5					614

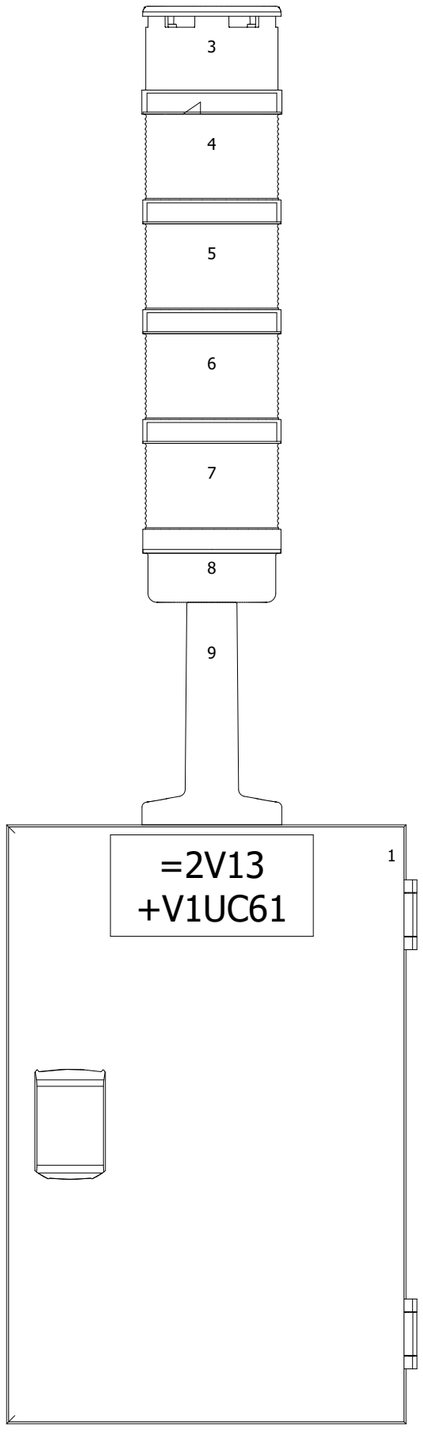

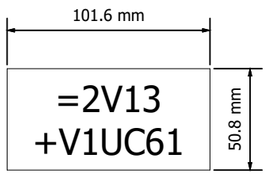

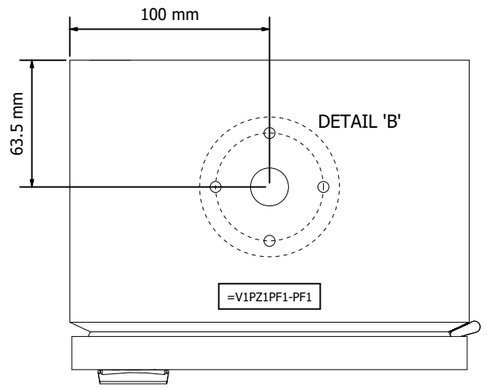

Top View
of Enclosure

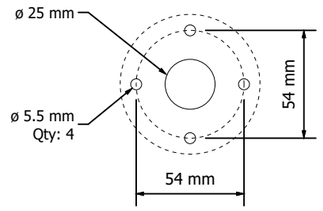

DETAIL 'B'
ABB Stack light
K70 series

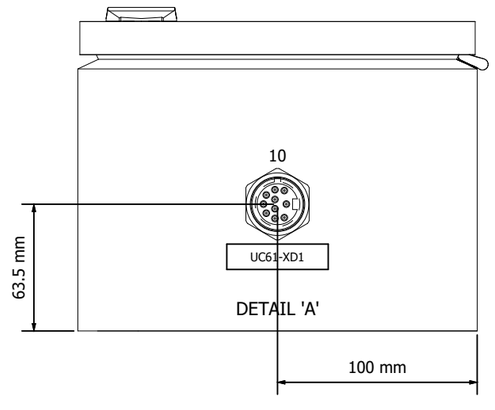

Buttom View
of Enclosure

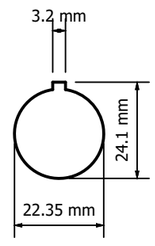

DETAIL 'A'
1-1/8" Receptacle

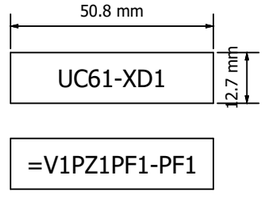

=KF0+UC31/3

2

			Date	12/22/2022	Volvo Trucks North America	Valiant TMS	Layout UC61 SL External View	Drawing name: =2V13&EFS_EL		= V1PZ1PF1	
			Ed.	MKLEPADLO						+ V1UC61	
			Appr		Sub-Floor Members			Document type: ELU	Project nr: 22-16146		Page 1
Modification	Date	Name	Original		Replacement of	Replaced by	Scale 1:3				614

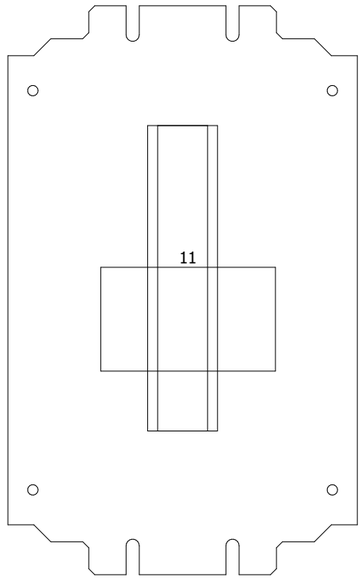

1

=V1PZ1PF2+.UC62/3

			Date	12/22/2022	Volvo Trucks North America	Valiant TMS	Layout UC61 SL Internal View	Drawing name: =2V13&EFS_EL		= V1PZ1PF1	
			Ed.	MKLEPADLO	Sub-Floor Members					+ V1UC61	
			Appr					Document type: ELU	Project nr: 22-16146	Page	2
Modification	Date	Name	Original		Replacement of	Replaced by	Scale 1:3				614

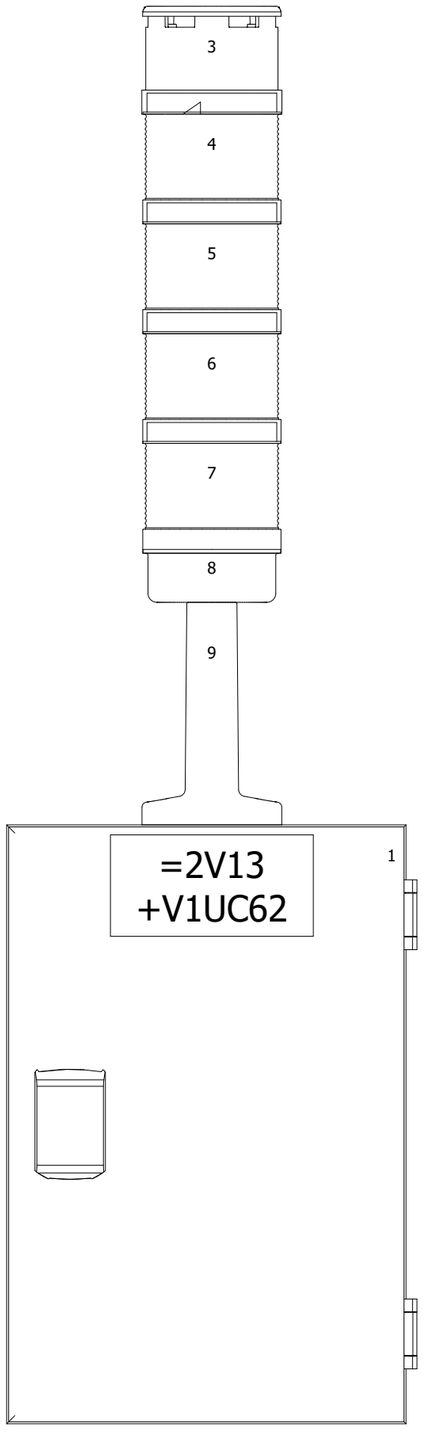

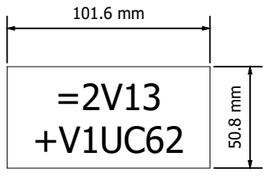

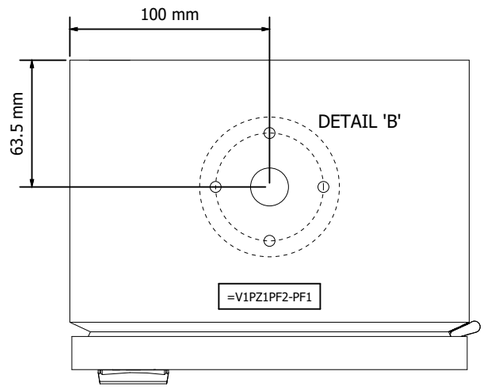

Top View
of Enclosure

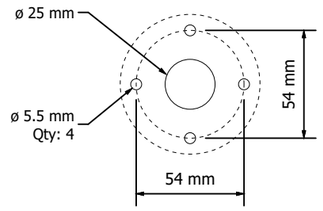

DETAIL 'B'
ABB Stack light
K70 series

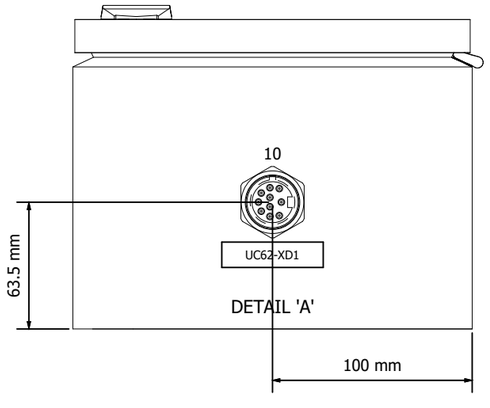

Buttom View
of Enclosure

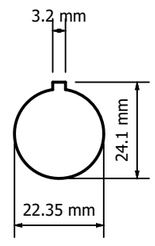

DETAIL 'A'
1-1/8" Receptacle

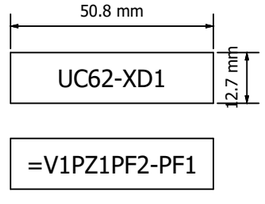

=V1PZ1PF1+.UC61/2

4

			Date	12/22/2022	Volvo Trucks North America	Valiant TMS	Layout UC62 SL External View	Drawing name: =2V13&EFS_EL		= V1PZ1PF2	
			Ed.	MKLEPADLO						+ V1UC62	
			Appr		Sub-Floor Members			Document type: ELU	Project nr: 22-16146		Page 3
Modification	Date	Name	Original		Replacement of	Replaced by	Scale 1:3				614

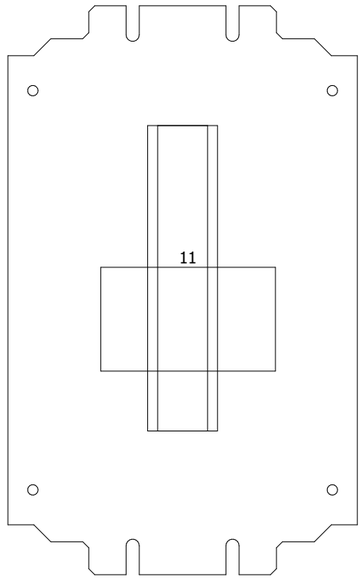

3

=V1SF0PG1+.UC51/1

			Date	12/22/2022	Volvo Trucks North America	Valiant TMS	Layout UC62 SL Internal View	Drawing name: =2V13&EFS_EL		= V1PZ1PF2	
			Ed.	MKLEPADLO						+ V1UC62	
			Appr		Sub-Floor Members			Document type: ELU	Project nr: 22-16146		Page 4
Modification	Date	Name	Original		Replacement of / Replaced by	Scale 1:3					614

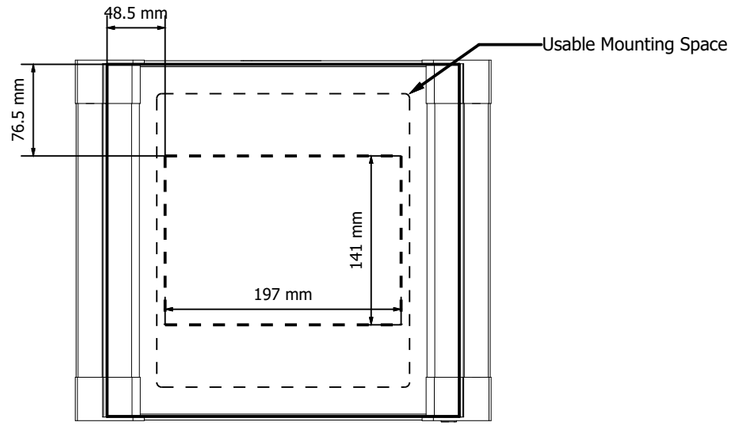

(Cutout measured from edge of removable mounting plate)

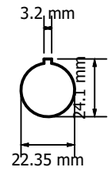

DETAIL 'A'
7/8" Receptacle

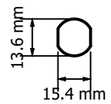

DETAIL 'B'
M12 Profinet Receptacle

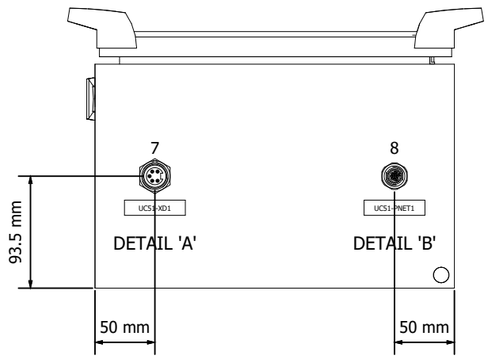

Buttom View
of Enclosure

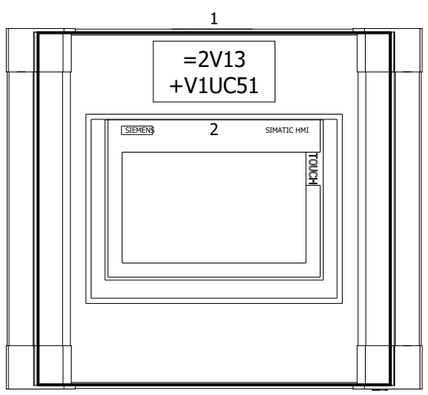

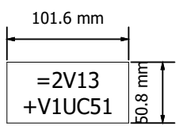

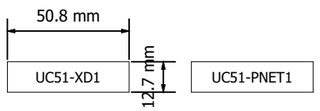

Enclosure panel shall be finished in RAL 7035 Light Grey paint.

=V1PZ1PF2+.UC62/4

=V1SF0PG2+.UC52/1

			Date	12/22/2022	Volvo Trucks North America		Valiant TMS	Layout UC51 OD External View	Drawing name: =2V13&EFS_EL	= V1SF0PG1	
			Ed.	MKLEPADLO						+ V1UC51	
			Appr		Sub-Floor Members				Document type: ELU	Project nr: 22-16146	Page 1
Modification	Date	Name	Original		Replacement of	Replaced by	Scale 1:5				614

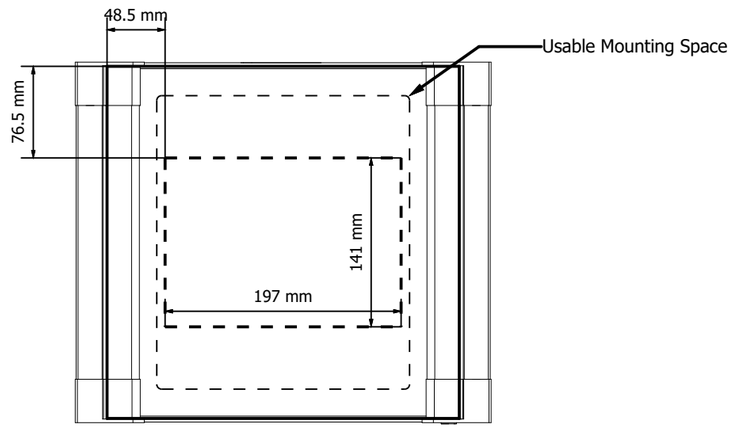

(Cutout measured from edge of removable mounting plate)

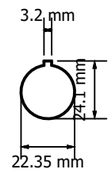

DETAIL 'A'
7/8" Receptacle

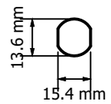

DETAIL 'B'
M12 Profinet Receptacle

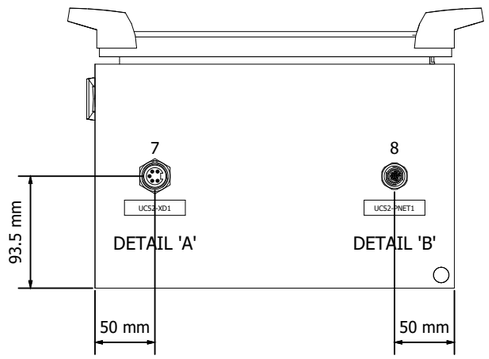

Buttom View
of Enclosure

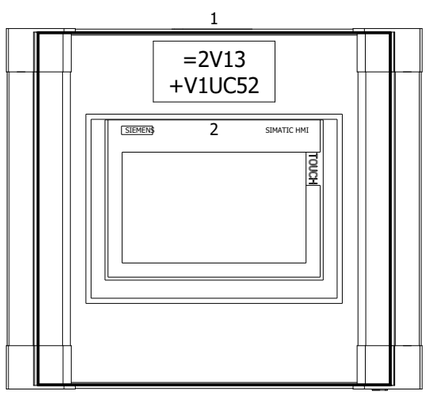

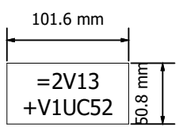

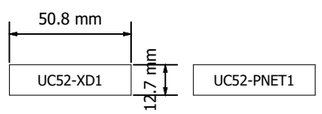

Enclosure panel shall be finished in RAL 7035 Light Grey paint.

=V1SF0PG1+.UC51/1

=V1SF0SF1+.UC71/1

			Date	12/22/2022	Volvo Trucks North America		Valiant TMS	Layout UC52 OD External View	Drawing name: =2V13&EFS_EL		= V1SF0PG2
			Ed.	MKLEPADLO							+ V1UC52
			Appr		Sub-Floor Members				Document type: ELU	Project nr: 22-16146	Page 1
Modification	Date	Name	Original		Replacement of	Replaced by	Scale 1:5				614

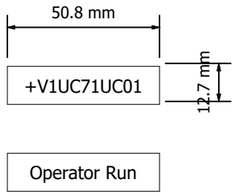

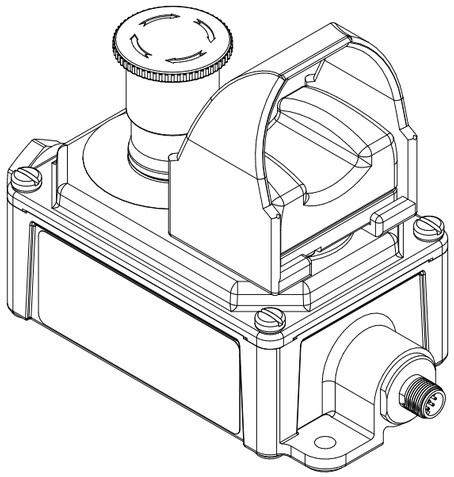

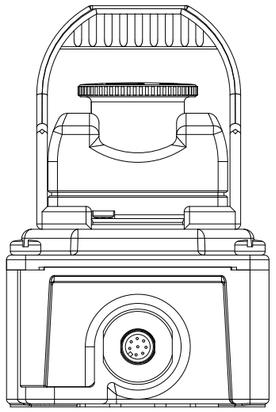

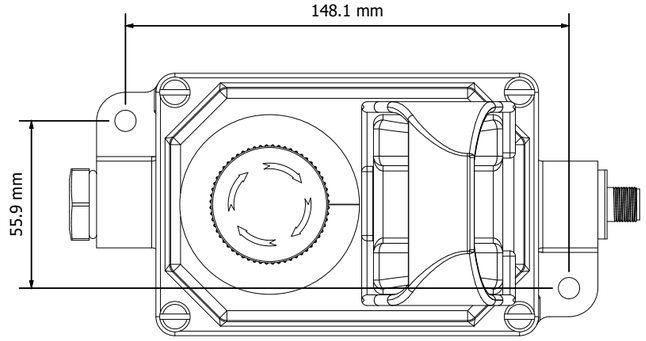

=V1SF0PG2+.UC52/1

=V1SF0SF2+.UC72/1

			Date	12/22/2022	Volvo Trucks North America	Valiant TMS	Layout UC71 RB External View	Drawing name: =2V13&EFS_EL		= V1SF0SF1	
			Ed.	MKLEPADLO						+ V1UC71	
			Appr		Sub-Floor Members			Document type: ELU	Project nr: 22-16146		Page 1
Modification	Date	Name	Original		Replacement of	Replaced by	Scale 1:2				614

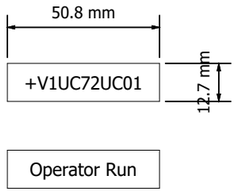

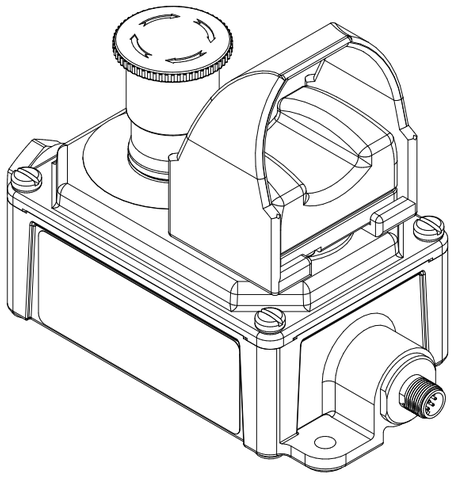

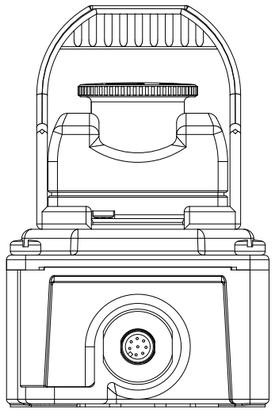

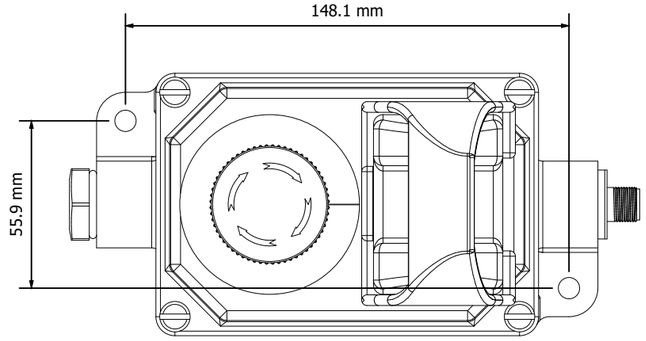

=V1SF0SF1+.UC71/1

=V1UC11+.UC11/1

			Date	12/22/2022	Volvo Trucks North America	Valiant TMS	Layout UC72 RB External View	Drawing name: =2V13&EFS_EL		= V1SF0SF2	
			Ed.	MKLEPADLO						+ V1UC72	
			Appr		Sub-Floor Members			Document type: ELU	Project nr: 22-16146		Page 1
Modification	Date	Name	Original		Replacement of	Replaced by	Scale 1:2				614

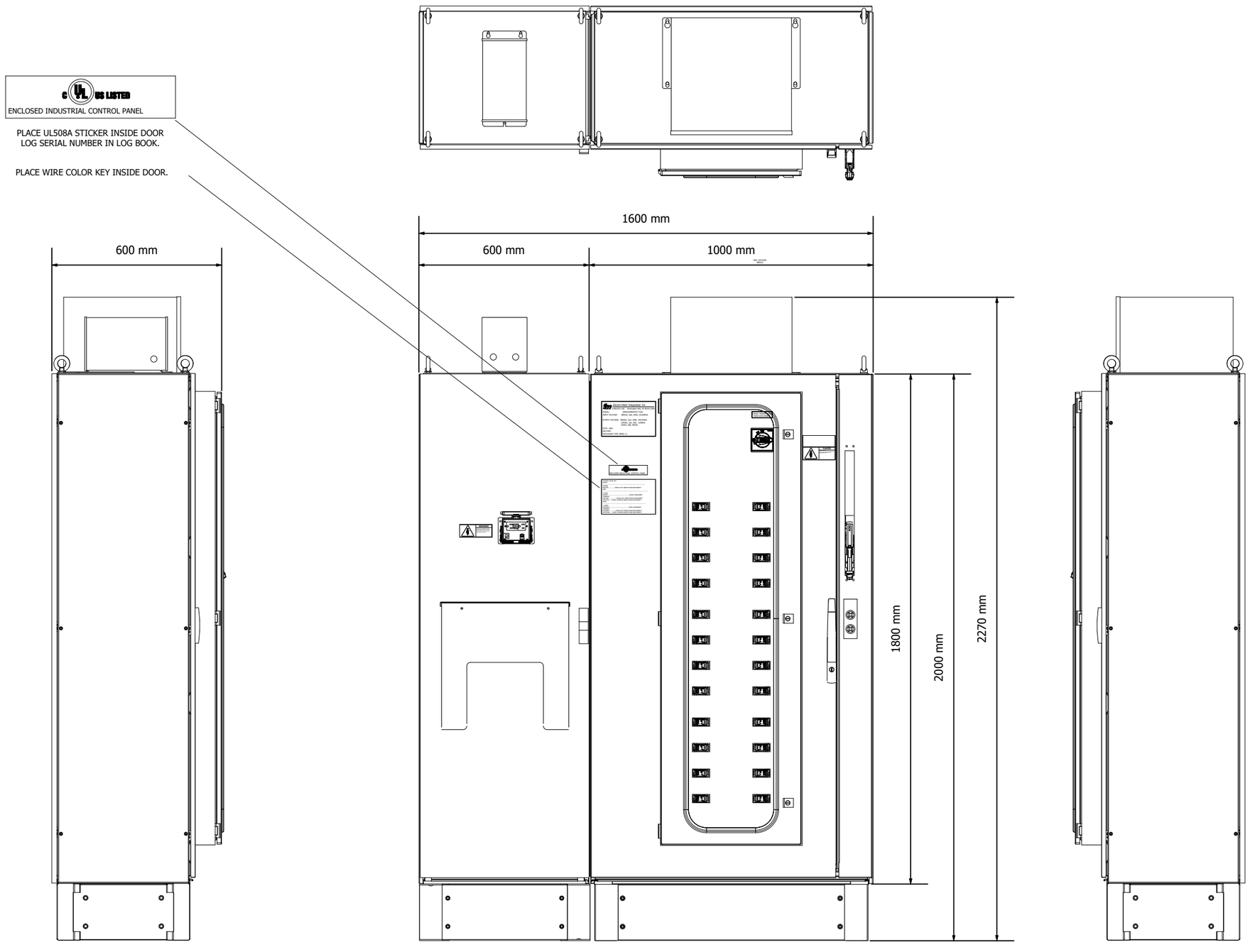

=V1SF0SF2+.UC72/1

2

			Date	12/22/2022	Volvo Trucks North America	Valiant TMS	Layout UC11 PDP External View	Drawing name: =2V13&EFS_EL	= V1UC11		
			Ed.	MKLEPADLO					+ V1UC11		
			Appr		Sub-Floor Members			Document type: ELU	Project nr: 22-16146	Page	1
Modification	Date	Name	Original		Replacement of	Replaced by	Scale 1:15				614

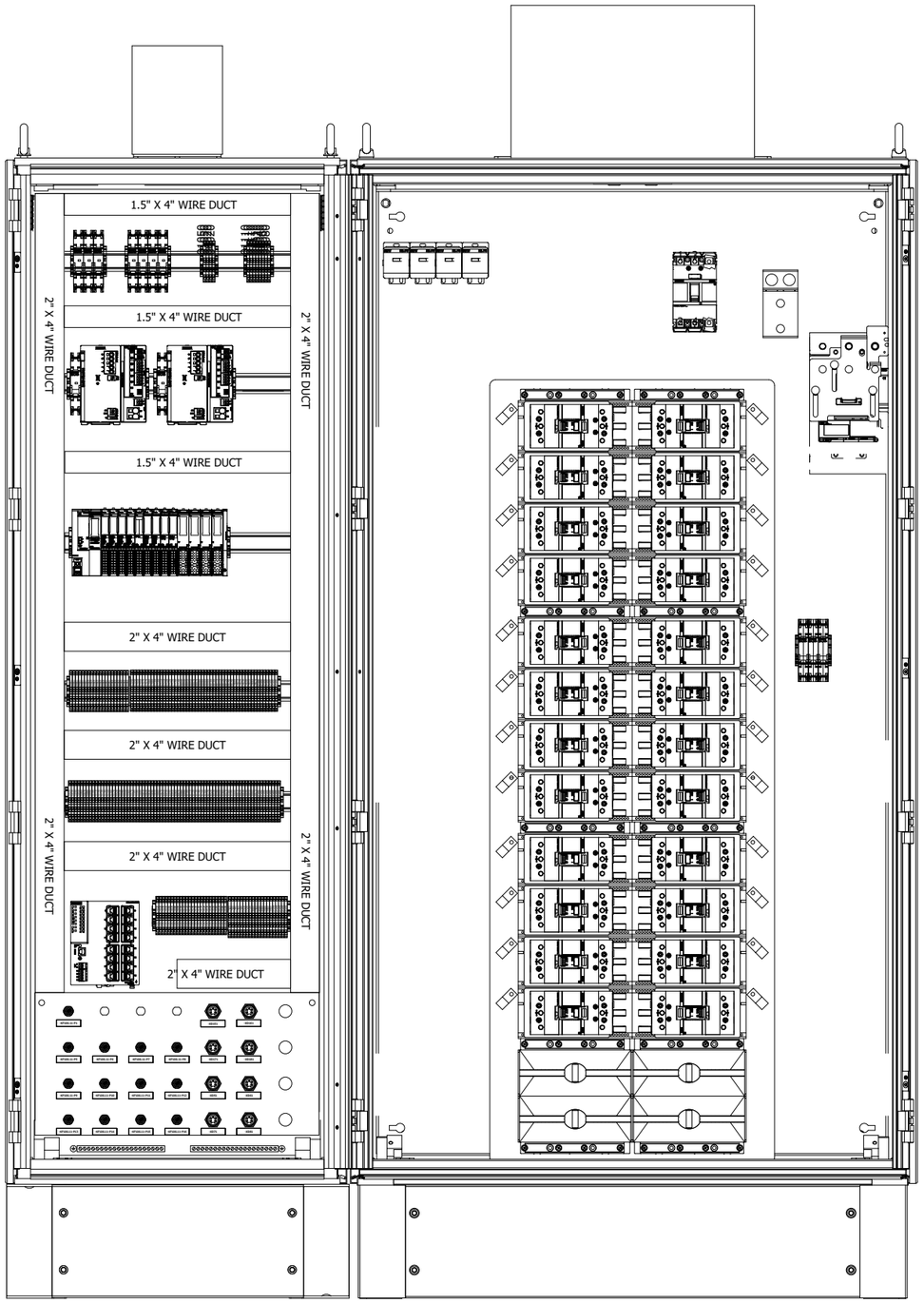

1

=V1UC14+.UC14/1

			Date	12/22/2022	Volvo Trucks North America	Valiant TMS	Layout UC11 PDP Internal View	Drawing name: =2V13&EFS_EL		= V1UC11	
			Ed.	MKLEPADLO						+ V1UC11	
			Appr		Sub-Floor Members			Document type: ELU	Project nr: 22-16146		Page 2
Modification	Date	Name	Original		Replacement of	Replaced by	Scale 1:10				614

0	1	2	3	4	5	6	7	8	9

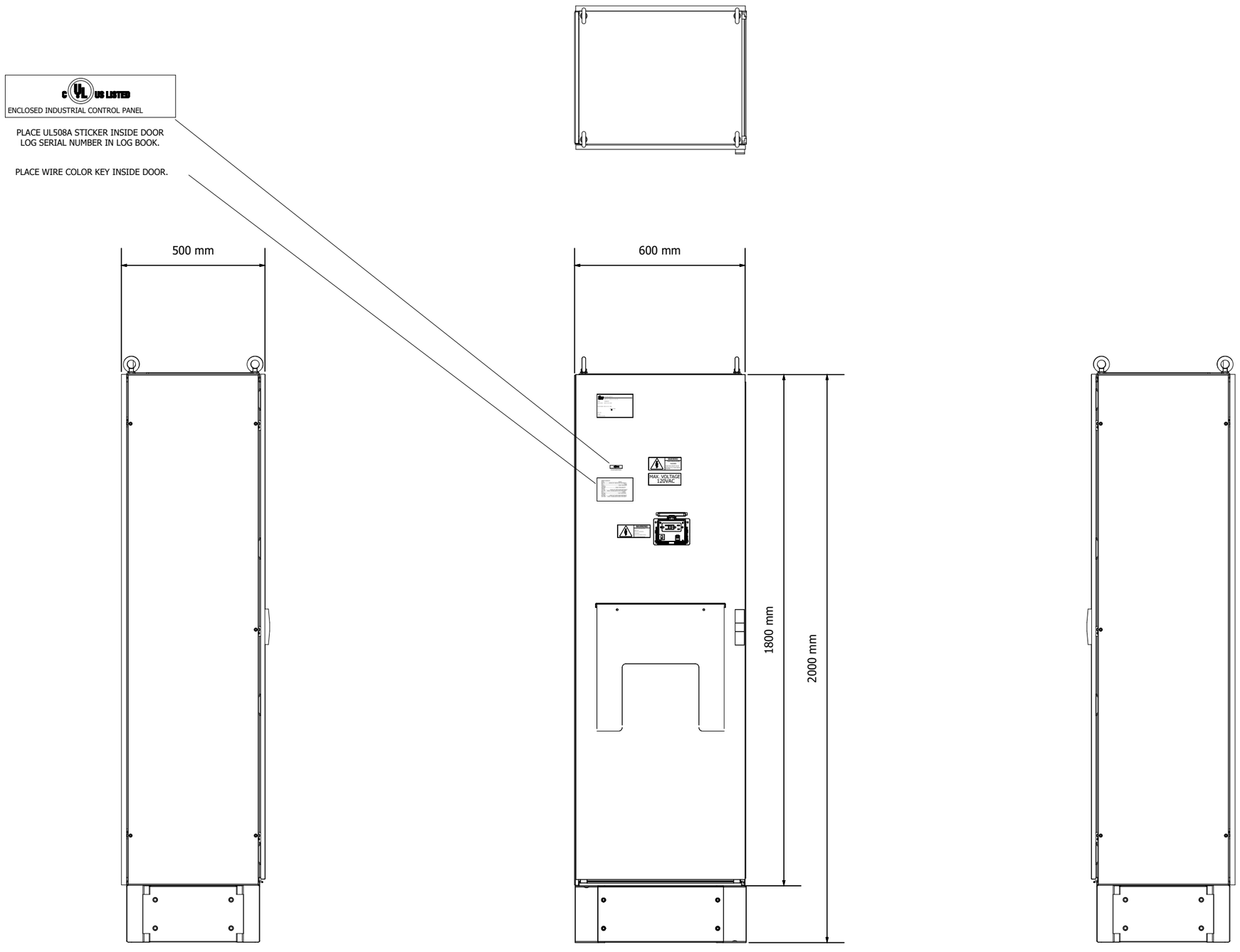

=V1UC11+.UC11/2

2

			Date	12/22/2022	Volvo Trucks North America	Valiant TMS	Layout UC14 RIO External View	Drawing name: =2V13&EFS_EL	= V1UC14	
			Ed.	MKLEPADLO					+ V1UC14	
			Appr		Sub-Floor Members			Document type: ELU	Project nr: 22-16146	Page 1
Modification	Date	Name	Original		Replacement of / Replaced by	Scale 1:15				614

0	1	2	3	4	5	6	7	8	9

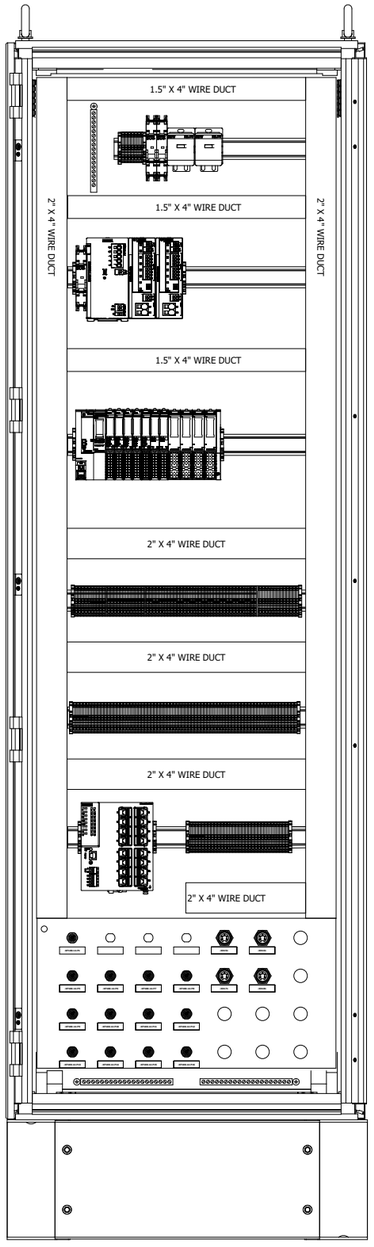

1

=V1UC46+.UC46/3

			Date	12/22/2022	Volvo Trucks North America	Valiant TMS	Layout UC14 RIO Internal View	Drawing name: =2V13&EFS_EL	= V1UC14
			Ed.	MKLEPADLO					+ V1UC14
			Appr		Sub-Floor Members			Document type: ELU	Project nr: 22-16146
Modification	Date	Name	Original		Replacement of / Replaced by	Scale 1:10			Page 2 / 614

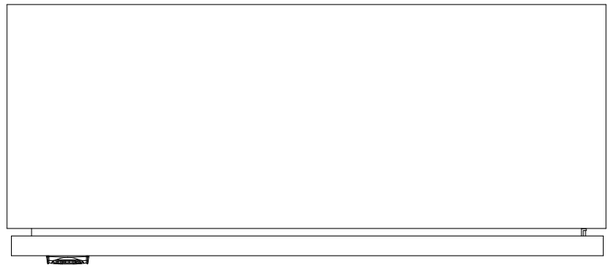

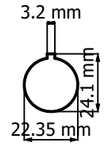

DETAIL 'A'
7/8" Receptacle

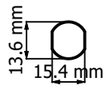

DETAIL 'B'
M12 Profinet Receptacle

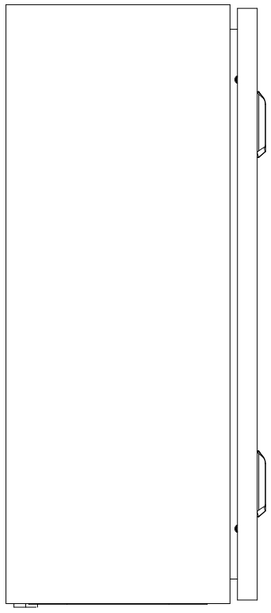

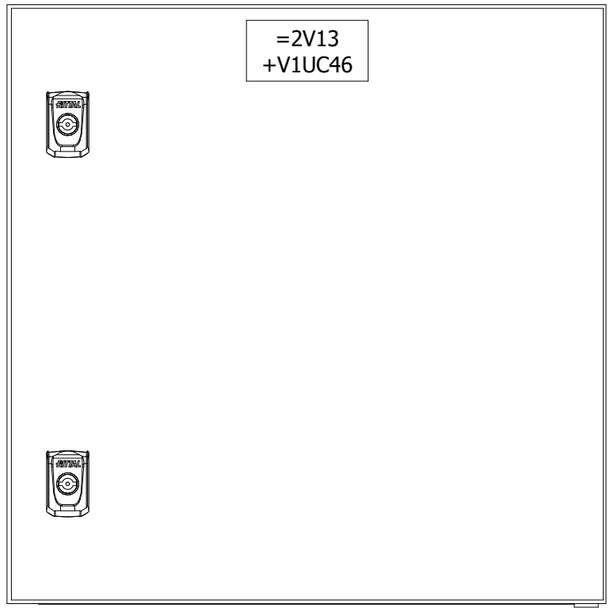

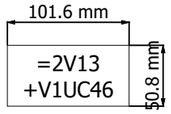

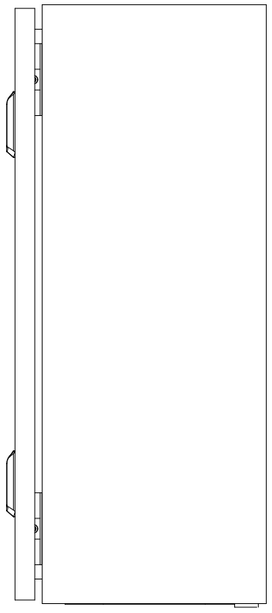

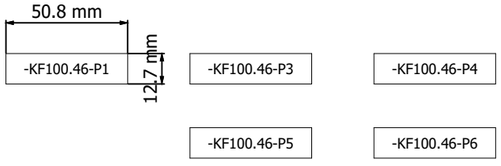

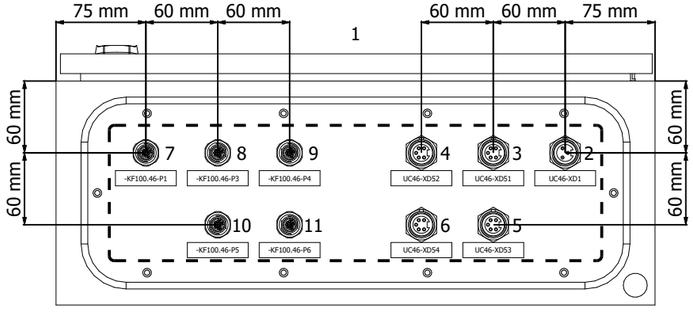

DETAIL 'B'
Cutout

DETAIL 'A'
Cutout

Buttom View
of Enclosure

UC46-XD52 | UC46-XD51 | UC46-XD1

UC46-XD54 | UC46-XD53

Enclosure panel shall be finished in RAL 7035 Light Grey paint.

=V1UC14+.UC14/2

4

			Date	12/22/2022	Volvo Trucks North America	Valiant TMS	Layout UC46 TT RIO External View	Drawing name: =2V13&EFS_EL	= V1UC46	
			Ed.	MKLEPADLO					+ V1UC46	
			Appr		Sub-Floor Members			Document type: ELU	Project nr: 22-16146	Page 3 / 614
Modification	Date	Name	Original		Replacement of / Replaced by	Scale 1:5				

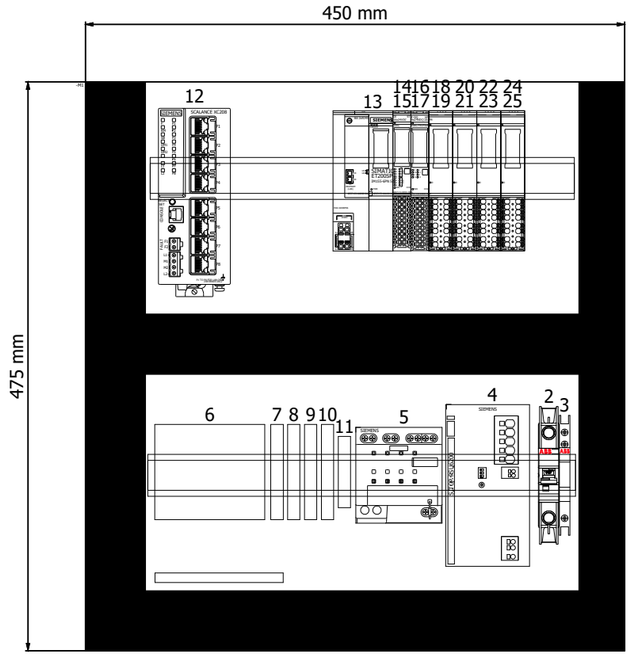

3

=V1UC47+.UC47/7

			Date	12/22/2022	Volvo Trucks North America		Valiant TMS	Layout UC46 TT RIO Internal View	Drawing name: =2V13&EFS_EL	= V1UC46	
			Ed.	MKLEPADLO						+ V1UC46	
			Appr		Sub-Floor Members				Document type: ELU	Project nr: 22-16146	Page 4
Modification	Date	Name	Original		Replacement of	Replaced by	Scale 1:5				614

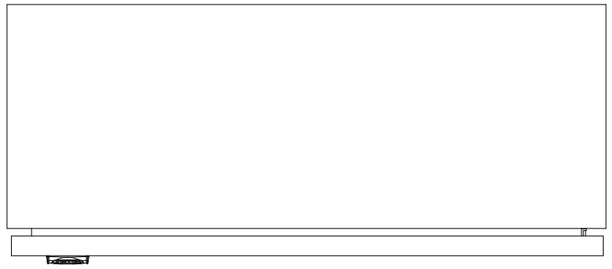

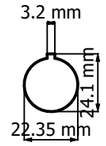

DETAIL 'A'
7/8" Receptacle

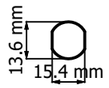

DETAIL 'B'
M12 Profinet Receptacle

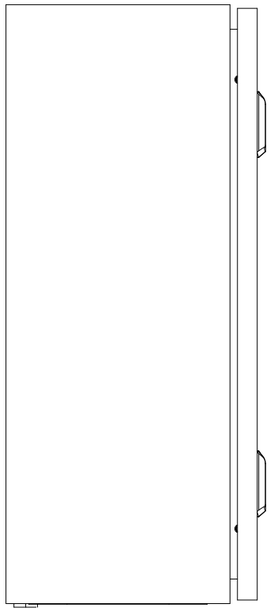

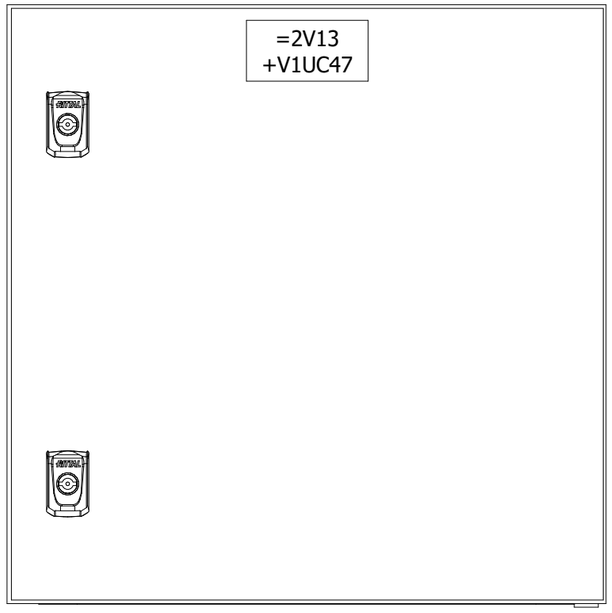

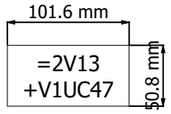

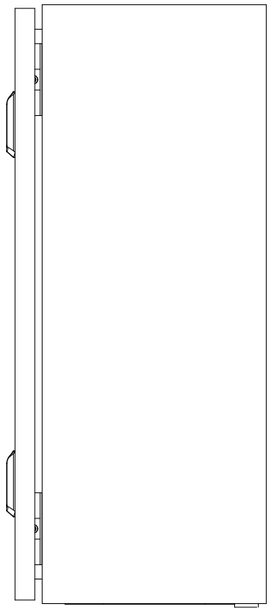

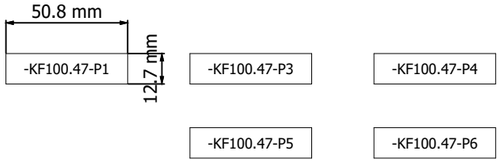

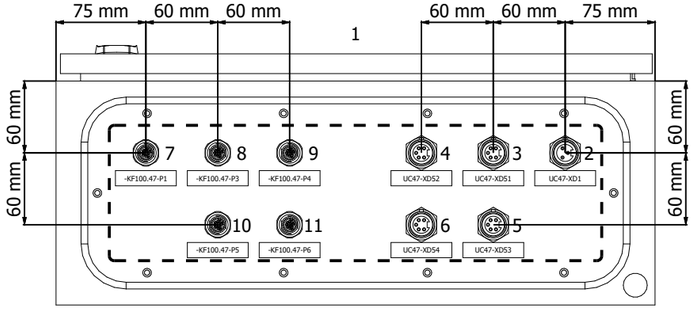

DETAIL 'B'
Cutout

DETAIL 'A'
Cutout

Buttom View
of Enclosure

UC47-XD52 UC47-XD51 UC47-XD1

UC47-XD54 UC47-XD53

Enclosure panel shall be finished in RAL 7035 Light Grey paint.

=V1UC46+.UC46/4

8

			Date	12/22/2022	Volvo Trucks North America	Valiant TMS	Layout UC47 TT RIO External View	Drawing name: =2V13&EFS_EL	= V1UC47		
			Ed.	MKLEPADLO					+ V1UC47		
			Appr		Sub-Floor Members			Document type: ELU	Project nr: 22-16146	Page	7
Modification	Date	Name	Original		Replacement of	Replaced by	Scale 1:5				614

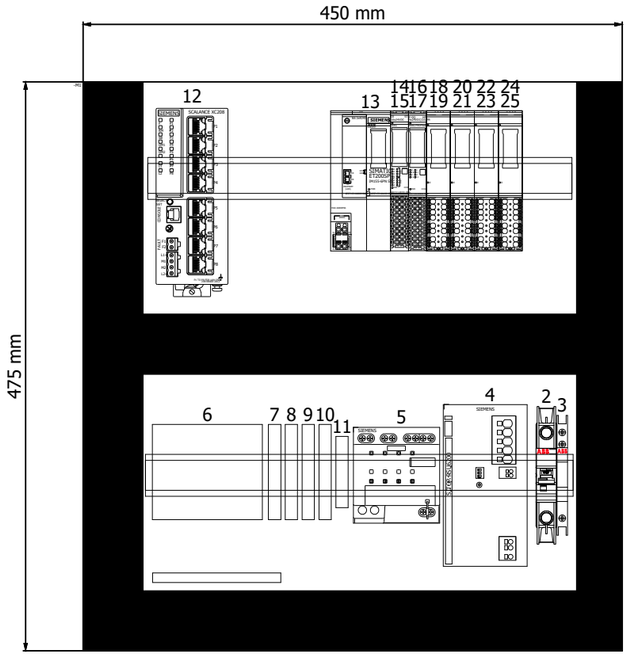

7

&EMC+/1

			Date	12/22/2022	Volvo Trucks North America	Valiant TMS	Layout UC47 TT RIO Internal View	Drawing name: =2V13&EFS_EL	= V1UC47		
			Ed.	MKLEPADLO					+ V1UC47		
			Appr		Sub-Floor Members			Document type: ELU	Project nr: 22-16146	Page	8
Modification	Date	Name	Original		Replacement of / Replaced by	Scale 1:5					614

Cable overview

F10_001_Cable

Cable name	Source (from)	Target (to)	cable type	all conductors	Conductors used	Cross-section [mm]	Length [m]	remark
=V1SF0SF1-W1	=V1KF1+V1UC11-KF11.14	=V1SF0SF1+V1UC71-SF1	CBL	8	8	24	30	
	=V1WC4+V1UC11-XD13							
	=V1KF1+V1UC11-KF11.32							
	=V1WC4+V1UC11-XD10							
=KF0KF1-KF1.31-P2	=KF0KF1+UC31-KF1.31-X1	=KF0KF1+UC31-KF31	PROFINET Cable	4	0	22		
=KF0KF1-KF100-P1	=KF0KF1+UC31-KF100.31	=KF0KF1+UC31-KF99.31	PROFINET Cable	4	1	22		
=KF0KF1-KF100.31-P2	=KF0KF1+UC31-KF1.31-X2	=KF0KF1+UC31-KF100.31	PROFINET Cable	4	0	22		
=KF0KF1-KF100.31-P3	=KF0KF1+UC31-KF1.31-X1	=KF0KF1+UC31-KF100.31	PROFINET Cable	4	0	22		
=KF0KF1-KF100.31-P4	=KF0KF1+UC31-KF100.31	=KF0KF1+UC31-PC1	PROFINET Cable	4	0	22		
=KF0KF1-KF100.31-P5	=KF0KF1+UC31-KF100.31	=KF0KF1+UC31-PC1	PROFINET Cable	4	0	22		
=KF0KF1-KF100.31-P6	=KF0KF1+UC31-KF100.31-P6	=KF0KF1+UC31-KF100.31	PROFINET Cable	4	1	22		
=KF0KF1-KF100.31-P7	=KF0KF1+UC31-KF100.31-P7	=KF0KF1+UC31-KF100.31	PROFINET Cable	4	1	22		
=KF0KF1-KF100.31-P8	=KF0KF1+UC31-KF100.31-P8	=KF0KF1+UC31-KF100.31	PROFINET Cable	4	1	22		
=KF0KF1-KF100.31-P9	=KF0KF1+UC31-KF100.31-P9	=KF0KF1+UC31-XG2	PROFINET Cable	4	1	22		
		=KF0KF1+UC31-KF100.31						
=KF0KF1-KF100.31-P10	=KF0KF1+UC31-KF100.31-P10	=KF0KF1+UC31-KF100.31	PROFINET Cable	4	1	22		
=KF0KF1-KF100.31-P11	=KF0KF1+UC31-KF100.31-P11	=KF0KF1+UC31-KF100.31	PROFINET Cable	4	1	22		
=KF0KF1-KF100.31-P12	=KF0KF1+UC31-KF100.31-P12	=KF0KF1+UC31-KF100.31	PROFINET Cable	4	1	22		
=KF0KF1-KF100.31-P13	=KF0KF1+UC31-KF100.31-P13	=KF0KF1+UC31-KF100.31	PROFINET Cable	4	1	22		
=KF0KF1-KF100.31-P14	=KF0KF1+UC31-KF100.31-P14	=KF0KF1+UC31-KF100.31	PROFINET Cable	4	1	22		
=KF0KF1-KF100.31-P15	=KF0KF1+UC31-KF100.31-P15	=KF0KF1+UC31-KF100.31	PROFINET Cable	4	1	22		
=KF0KF1-KF100.31-P16	=KF0KF1+UC31-KF100.31-P16	=KF0KF1+UC31-KF100.31	PROFINET Cable	4	1	22		
=KF0KF1-WF1	=KF0KF1+UC31-KF99.31	=KF0KF1+UC31-xx	PROFINET Cable	4	0	22		
=V1AR21KF1-KF100.11-P8	=V1AR21KF1+V1AR21UC01-XPN-X2	=V1KF1+V1UC11-KF100.11-P8	PROFINET Cable	4	0	22		
=V1AR22KF1-KF100.11-P9	=V1AR22KF1+V1AR22UC01-XPN-X2	=V1KF1+V1UC11-KF100.11-P9	PROFINET Cable	4	1	22		
=V1AR41KF1-KF100.11-P10	=V1AR41KF1+V1AR41UC01-XPN-X2	=V1KF1+V1UC11-KF100.11-P10	PROFINET Cable	4	1	22		
=V1AR41UQ41KF1-WF1	=V1AR41UQ41KF1+V1AR41UQ41-KF1-TP1	=V1AR41UQ41KF1+V1AR41UQ41-R3.CP/CS	PROFINET Cable	4	1	22		
=V1AR42KF1-KF100.14-P8	=V1AR42KF1+V1AR42UC01-XPN-X2	=V1KF1+V1UC14-KF100.14-P8	PROFINET Cable	4	1	22		
=V1AR42UQ41KF1-WF1	=V1AR42UQ41KF1+V1AR42UQ41-KF1-TP1	=V1AR42UQ41KF1+V1AR42UQ41-R3.CP/CS	PROFINET Cable	4	1	22		
=V1AR61KF1-KF100.14-P9	=V1AR61KF1+V1AR61UC01-XPN-X2	=V1KF1+V1UC14-KF100.14-P9	PROFINET Cable	4	1	22		
=V1AR62KF1-KF100.14-P10	=V1AR62KF1+V1AR62UC01-XPN-X2	=V1KF1+V1UC14-KF100.14-P10	PROFINET Cable	4	1	22		
=V1KF1-KF100.11-P1	=V1KF1+V1UC11-KF100.11-P1	=V1KF1+V1UC11-KF100.11	PROFINET Cable	4	1	22		
=V1KF1-KF100.11-P3	=V1KF1+V1UC11-KF100.11	=V1KF1+V1UC11-KF11	PROFINET Cable	4	0	22		
=V1KF1-KF100.11-P4	=V1KF1+V1UC11-KF100.11-P4	=V1KF1+V1UC11-KF100.11	PROFINET Cable	4	1	22		
=V1KF1-KF100.11-P5	=V1KF1+V1UC11-KF100.11-P5	=V1KF1+V1UC11-KF100.11	PROFINET Cable	4	1	22		
=V1KF1-KF100.11-P6	=V1KF1+V1UC11-KF100.11-P6	=V1KF1+V1UC11-KF100.11	PROFINET Cable	4	1	22		
=V1KF1-KF100.11-P7	=V1KF1+V1UC11-KF100.11-P7	=V1KF1+V1UC11-KF100.11	PROFINET Cable	4	1	22		
=V1KF1-KF100.11-P8	=V1KF1+V1UC11-KF100.11-P8	=V1KF1+V1UC11-KF100.11	PROFINET Cable	4	1	22		
=V1KF1-KF100.11-P9	=V1KF1+V1UC11-KF100.11-P9	=V1KF1+V1UC11-KF100.11	PROFINET Cable	4	1	22		
=V1KF1-KF100.11-P10	=V1KF1+V1UC11-KF100.11-P10	=V1KF1+V1UC11-KF100.11	PROFINET Cable	4	1	22		
=V1KF1-KF100.11-P11	=V1KF1+V1UC11-KF100.11-P11	=V1KF1+V1UC11-KF100.11	PROFINET Cable	4	1	22		
=V1KF1-KF100.11-P12	=V1KF1+V1UC11-KF100.11-P12	=V1KF1+V1UC11-KF100.11	PROFINET Cable	4	1	22		
=V1KF1-KF100.11-P13	=V1KF1+V1UC11-KF100.11-P13	=V1KF1+V1UC11-KF100.11	PROFINET Cable	4	1	22		
=V1KF1-KF100.11-P14	=V1KF1+V1UC11-KF100.11-P14	=V1FQ1+V1FQ1BG1-BG1-X3	PROFINET Cable	4	1	22		
		=V1KF1+V1UC11-KF100.11						

&ELU=V1UC47+V1UC47/8

			Date	12/22/2022	Volvo Trucks North America		Valiant TMS	Cable overview	Drawing name: =2V13&EFS_EL	=	
			Ed.	MKLEPADLO						+	
			Appr		Sub-Floor Members				Document type: EMC	Project nr: 22-16146	Page 1 / 614
Modification	Date	Name	Original		Replacement of	Replaced by	Scale 1:1				

Cable overview

F10_001_Cable

Cable name	Source (from)	Target (to)	cable type	all conductors	Conductors used	Cross-section [mm]	Length [m]	remark
=V1KF1-KF100.11-P15	=V1KF1+V1UC11-KF100.11-P15	=V1FQ1+V1FQ1BG2-BG2-X3	PROFINET Cable	4	1	22		
		=V1KF1+V1UC11-KF100.11						
=V1KF1-KF100.11-P16	=V1KF1+V1UC11-KF100.11-P16	=V1KF1+V1UC11-KF100.11	PROFINET Cable	4	1	22		
=V1KF1-KF100.31-P6	=KF0KF1+UC31-KF100.31-P6	=V1KF1+V1UC11-KF100.11-P1	PROFINET Cable	4	0	22		
=V1KF1-KF100.14-P1	=V1KF1+V1UC14-KF100.14-P1	=V1KF1+V1UC14-KF100.14	PROFINET Cable	4	1	22		
=V1KF1-KF100.14-P3	=V1KF1+V1UC14-KF100.14	=V1KF1+V1UC14-KF14	PROFINET Cable	4	0	22		
=V1KF1-KF100.14-P4	=V1KF1+V1UC14-KF100.14-P4	=V1KF1+V1UC14-KF100.14	PROFINET Cable	4	1	22		
=V1KF1-KF100.14-P5	=V1KF1+V1UC14-KF100.14-P5	=V1KF1+V1UC14-KF100.14	PROFINET Cable	4	1	22		
=V1KF1-KF100.14-P6	=V1KF1+V1UC14-KF100.14-P6	=V1KF1+V1UC14-KF100.14	PROFINET Cable	4	1	22		
=V1KF1-KF100.14-P7	=V1KF1+V1UC14-KF100.14-P7	=V1KF1+V1UC14-KF100.14	PROFINET Cable	4	1	22		
=V1KF1-KF100.14-P8	=V1KF1+V1UC14-KF100.14-P8	=V1KF1+V1UC14-KF100.14	PROFINET Cable	4	1	22		
=V1KF1-KF100.14-P9	=V1KF1+V1UC14-KF100.14-P9	=V1KF1+V1UC14-KF100.14	PROFINET Cable	4	1	22		
=V1KF1-KF100.14-P10	=V1KF1+V1UC14-KF100.14-P10	=V1KF1+V1UC14-KF100.14	PROFINET Cable	4	1	22		
=V1KF1-KF100.14-P11	=V1KF1+V1UC14-KF100.14-P11	=V1KF1+V1UC14-KF100.14	PROFINET Cable	4	1	22		
=V1KF1-KF100.14-P12	=V1KF1+V1UC14-KF100.14-P12	=V1KF1+V1UC14-KF100.14	PROFINET Cable	4	1	22		
=V1KF1-KF100.14-P13	=V1KF1+V1UC14-KF100.14-P13	=V1KF1+V1UC14-KF100.14	PROFINET Cable	4	1	22		
=V1KF1-KF100.14-P14	=V1KF1+V1UC14-KF100.14-P14	=V1KF1+V1UC14-KF100.14	PROFINET Cable	4	1	22		
=V1KF1-KF100.14-P15	=V1KF1+V1UC14-KF100.14-P15	=V1KF1+V1UC14-KF100.14	PROFINET Cable	4	1	22		
=V1KF1-KF100.14-P16	=V1KF1+V1UC14-KF100.14-P16	=V1KF1+V1UC14-KF100.14	PROFINET Cable	4	1	22		
=V1KF1-KF100.31-P10	=KF0KF1+UC31-KF100.31-P10	=V1KF1+V1UC14-KF100.14-P1	PROFINET Cable	4	0	22		
=V1KF1-KF100.11-P5	=V1KF1+V1UC11-KF100.11-P5	=V1KF1+V1WR1-XD1	PROFINET Cable	4	0	22	35	
	=V1KF1+V1UC46-KF100.46-P1							
=V1KF1-KF100.46-P1	=V1KF1+V1UC46-KF100.46-P1	=V1KF1+V1UC46-KF100.46	PROFINET Cable	4	1	22		
=V1KF1-KF100.46-P2	=V1KF1+V1UC46-KF100.46	=V1KF1+V1UC46-KF46	PROFINET Cable	4	0	22	1	
=V1KF1-KF100.46-P3	=V1KF1+V1UC46-KF100.46-P3	=V1KF1+V1UC46-KF100.46	PROFINET Cable	4	1	22		
=V1KF1-KF100.46-P4	=V1KF1+V1UC46-KF100.46-P4	=V1KF1+V1UC46-KF100.46	PROFINET Cable	4	1	22		
=V1KF1-KF100.46-P5	=V1KF1+V1UC46-KF100.46-P5	=V1KF1+V1UC46-KF100.46	PROFINET Cable	4	1	22		
=V1KF1-KF100.46-P6	=V1KF1+V1UC46-KF100.46-P6	=V1KF1+V1UC46-KF100.46	PROFINET Cable	4	1	22		
=V1KF1-KF100.14-P5	=V1KF1+V1UC14-KF100.14-P5	=V1KF1+V1WR2-XD1	PROFINET Cable	4	0	22	15	
	=V1KF1+V1UC47-KF100.47-P1							
=V1KF1-KF100.47-P1	=V1KF1+V1UC47-KF100.47-P1	=V1KF1+V1UC47-KF100.47	PROFINET Cable	4	1	22		
=V1KF1-KF100.47-P2	=V1KF1+V1UC47-KF100.47	=V1KF1+V1UC47-KF47	PROFINET Cable	4	0	22	1	
=V1KF1-KF100.47-P3	=V1KF1+V1UC47-KF100.47-P3	=V1KF1+V1UC47-KF100.47	PROFINET Cable	4	1	22		
=V1KF1-KF100.47-P4	=V1KF1+V1UC47-KF100.47-P4	=V1KF1+V1UC47-KF100.47	PROFINET Cable	4	1	22		
=V1KF1-KF100.47-P5	=V1KF1+V1UC47-KF100.47-P5	=V1KF1+V1UC47-KF100.47	PROFINET Cable	4	1	22		
=V1KF1-KF100.47-P6	=V1KF1+V1UC47-KF100.47-P6	=V1KF1+V1UC47-KF100.47	PROFINET Cable	4	1	22		
=V1SF0PG1-KF100.11-P12	=V1KF1+V1UC11-KF100.11-P12	=V1SF0PG1+V1UC51-PNET1	PROFINET Cable	4	1	22		
=V1SF0PG1-PNET1	=V1SF0PG1+V1UC51-PNET1	=V1SF0PG1+V1UC51-PG1	PROFINET Cable	4	0	22		
=V1SF0PG2-KF100.14-P12	=V1KF1+V1UC14-KF100.14-P12	=V1SF0PG2+V1UC52-PNET1	PROFINET Cable	4	1	22		
=V1SF0PG2-PNET1	=V1SF0PG2+V1UC52-PNET1	=V1SF0PG2+V1UC52-PG1	PROFINET Cable	4	0	22		
=V1U10U01KF1-KF100.11-P11	=V1KF1+V1UC11-KF100.11-P11	=V1U10U01KF1+V1U10U01-KF1.11	PROFINET Cable	4	0	22	25	
=V1U30U01KF1-KF100.14-P11	=V1KF1+V1UC14-KF100.14-P11	=V1U30U01KF1+V1U30U01-KF1.11	PROFINET Cable	4	0	22	10	
=V1UQ51KF1-KF100.11-P16	=V1KF1+V1UC11-KF100.11-P16	=V1UQ51KF1+V1UQ51-KF1.11	PROFINET Cable	4	0	22	35	
=V1WC1-KF100.11-P2	=V1KF1+V1UC11-KF100.11	=V1WC1+V1UC11-KF1.2	PROFINET Cable	4	1	22		
=V1WR1KF1-KF100.11-P13	=V1KF1+V1UC11-KF100.11-P13	=V1WR1KF1+V1WR1-KF1.11	PROFINET Cable	4	0	22		
=V1WR1KF2-KF1-P2	=V1WR1KF1+V1WR1-KF1.11	=V1WR1KF2+V1WR1-KF2.11	PROFINET Cable	4	0	22	5	

Cable overview

F10_001_Cable

Cable name	Source (from)	Target (to)	cable type	all conductors	Conductors used	Cross-section [mm]	Length [m]	remark
=V1WR1UQ51KF1-KF100.46-P3	=V1KF1+V1UC46-KF100.46-P3	=V1WR1UQ51KF1+V1WR1UQ51-KF1-TP1	PROFINET Cable	4	0	22	5	
=V1WR1UQ52KF1-KF100.46-P4	=V1KF1+V1UC46-KF100.46-P4	=V1WR1UQ52KF1+V1WR1UQ52-KF1-TP1	PROFINET Cable	4	0	22	5	
=V1WR1UQ52KF2-KF1-P2	=V1WR1UQ52KF1+V1WR1UQ52-KF1-TP2	=V1WR1UQ52KF2+V1WR1UQ52-KF2-TP1	PROFINET Cable	4	0	22	5	
=V1WR1WC1-KF100.11-P7	=V1KF1+V1UC11-KF100.11-P7	=V1WR1WC1+V1WR1UC01-X150	PROFINET Cable	4	0	22	30	
=V1WR2KF1-KF100.14-P13	=V1KF1+V1UC14-KF100.14-P13	=V1WR2KF1+V1WR2-KF1.11	PROFINET Cable	4	0	22		
=V1WR2KF2-KF1-P2	=V1WR2KF1+V1WR2-KF1.11	=V1WR2KF2+V1WR2-KF2.11	PROFINET Cable	4	0	22	5	
=V1WR2KF3-KF2-P2	=V1WR2KF2+V1WR2-KF2.11	=V1WR2KF3+V1WR2-KF3.11	PROFINET Cable	4	0	22	5	
=V1WR2UQ51KF1-KF100.47-P3	=V1KF1+V1UC47-KF100.47-P3	=V1WR2UQ51KF1+V1WR2UQ51-KF1-TP1	PROFINET Cable	4	0	22	5	
=V1WR2UQ52KF1-KF100.47-P4	=V1KF1+V1UC47-KF100.47-P4	=V1WR2UQ52KF1+V1WR2UQ52-KF1-TP1	PROFINET Cable	4	0	22	5	
=V1WR2WC1-KF100.14-P6	=V1KF1+V1UC14-KF100.14-P6	=V1WR2WC1+V1WR2TR1UC01-X150	PROFINET Cable	4	0	22	30	
=V1WR2WC1-KF100.14-P7	=V1KF1+V1UC14-KF100.14-P7	=V1WR2WC1+V1WR1UC01-X150	PROFINET Cable	4	0	22	30	
=V1WC1-GND1	=WC1+V1UC161-WC1	=V1WC1+V1UC161-GND	RK	1	0	2		
=V1WC1-GND1	=V1WC1+V1UC11-GND	=V1WC1+V1UC11-PE	RK	1	1	6		
=V1AR21XQ11WC1-W1			TC-ER	4	0	1	7.62	Max.
=V1AR22XQ11WC1-W1			TC-ER	4	0	1	7.62	Max.
=V1AR41XQ11WC1-W1			TC-ER	4	0	1	7.62	Max.
=V1WR1WC1-W1		=V1WR1WC1+V1WR1UC01-PE	TC-ER	4	3	2	30	
	=V1WR1+V1UC11-FC1	=V1WR1WC1+V1WR1UC01-Q1						
=V1WR2WC1-W1		=V1WR2WC1+V1WR1UC01-PE	TC-ER	4	3	2	30	
	=V1WR2+V1UC11-FC1	=V1WR2WC1+V1WR1UC01-Q1						
=V1AR61XQ21WC1-W2			TC-ER	4	0	8		
=V1AR62XQ21WC1-W2			TC-ER	4	0	8		
=KF0WC3-W1	=KF0WC3+UC31-XD1	=V1WC3+V1UC11-XD1	TC-ER	3	3	10	40	
		=V1WC3+V1UC11-PE						
=V1AR21WC1-W1		=V1AR21WC1+V1AR21UC01-PE	TC-ER	4	4	10	15	
	=V1AR21+V1UC11-FC1	=V1AR21WC1+V1AR21UC01-Q1						
=V1AR22WC1-W1		=V1AR22WC1+V1AR22UC01-PE	TC-ER	4	4	10	17	
	=V1AR22+V1UC11-FC1	=V1AR22WC1+V1AR22UC01-Q1						
=V1AR41WC1-W1		=V1AR41WC1+V1AR41UC01-PE	TC-ER	4	4	10	12	
	=V1AR41+V1UC11-FC1	=V1AR41WC1+V1AR41UC01-Q1						
=V1AR42WC1-W1		=V1AR42WC1+V1AR42UC01-PE	TC-ER	4	4	10	22	
	=V1AR42+V1UC11-FC1	=V1AR42WC1+V1AR42UC01-Q1						
=V1AR61WC1-W1		=V1AR61WC1+V1AR61UC01-PE	TC-ER	4	4	10	20	
	=V1AR61+V1UC11-FC1	=V1AR61WC1+V1AR61UC01-Q1						
=V1AR61XQ23WC1-W1	=V1AR61XQ23WC1+V1AR61XQ23UC01-XG1	=V1AR61XQ23+V1UC11-FC1	TC-ER	4	4	10	40	
=V1AR62WC1-W1		=V1AR62WC1+V1AR62UC01-PE	TC-ER	4	4	10	22	
	=V1AR62+V1UC11-FC1	=V1AR62WC1+V1AR62UC01-Q1						
=V1WC3-W1	=V1WC3+V1UC11-XD2	=V1WC3+V1UC14-XD1	TC-ER	3	3	10	30	
	=V1WC3+V1UC11-PE							
=V1WR2WC1-W2		=V1WR2WC1+V1WR2TR1UC01-PE	TC-ER	4	3	10	30	
	=V1WR2TR1+V1UC11-FC1	=V1WR2WC1+V1WR2TR1UC01-Q1						
=KH0-W1	=V1KF1+V1UC11-KF11.14	=KH0+KH0-BP1	TPE	4	4	18	12	Air supply
	=V1WC4+V1UC11-XD10							
	=V1WC4+V1UC11-XD13							

Cable overview

F10_001_Cable

Cable name	Source (from)	Target (to)	cable type	all conductors	Conductors used	Cross-section [mm]	Length [m]	remark
=KH0-W2	=V1KF1+V1UC11-KF11.14	=KH0+KH0-BP2	TPE	4	4	18	25	Air supply
	=V1WC4+V1UC11-XD10							
	=V1WC4+V1UC11-XD13							
=KH0-W3	=V1KF1+V1UC14-KF14.12	=KH0+KH0-BP3	TPE	4	4	18	12	Air supply
	=V1WC4+V1UC14-XD10							
	=V1WC4+V1UC14-XD15							
=KH3-W1	=V1KF1+V1UC11-KF11.14	=KH3+KH3-BF1	TPE	4	4	18	20	Air supply
	=V1WC4+V1UC11-XD10							
	=V1WC4+V1UC11-XD13							
=KH3-W2	=V1KF1+V1UC11-KF11.14	=KH3+KH3-BF2	TPE	4	4	18	20	Air supply
	=V1WC4+V1UC11-XD10							
	=V1WC4+V1UC11-XD13							
=V1AR41UQ41BG0-W1	=V1AR41UQ41BG0+V1AR41UQ41-XG1/2	=V1AR41UQ41KF1+V1AR41UQ41-KF1.11-X8	TPE	4	4	18	0.5	
=V1AR41UQ41BG0-W1.1	=V1AR41UQ41BG0+V1AR41UQ41-BG01	=V1AR41UQ41BG0+V1AR41UQ41-XG1/2	TPE	4	3	18	1	
=V1AR41UQ41BG0-W1.2	=V1AR41UQ41BG0+V1AR41UQ41-BG02	=V1AR41UQ41BG0+V1AR41UQ41-XG1/2	TPE	4	3	18	2	
=V1AR41UQ41BG0-W2	=V1AR41UQ41BG0+V1AR41UQ41-XG3/4	=V1AR41UQ41KF1+V1AR41UQ41-KF1.12-X1	TPE	4	4	18	0.5	
=V1AR41UQ41BG0-W2.1	=V1AR41UQ41BG0+V1AR41UQ41-BG03	=V1AR41UQ41BG0+V1AR41UQ41-XG3/4	TPE	4	3	18	3	
=V1AR41UQ41BG0-W2.2	=V1AR41UQ41BG0+V1AR41UQ41-BG04	=V1AR41UQ41BG0+V1AR41UQ41-XG3/4	TPE	4	3	18	2	
=V1AR41UQ41BG0-W3	=V1AR41UQ41BG0+V1AR41UQ41-XG5/6	=V1AR41UQ41KF1+V1AR41UQ41-KF1.12-X2	TPE	4	4	18	0.5	
=V1AR41UQ41BG0-W3.1	=V1AR41UQ41BG0+V1AR41UQ41-BG05	=V1AR41UQ41BG0+V1AR41UQ41-XG5/6	TPE	4	3	18	2	
=V1AR41UQ41BG0-W3.2	=V1AR41UQ41BG0+V1AR41UQ41-BG06	=V1AR41UQ41BG0+V1AR41UQ41-XG5/6	TPE	4	3	18	3	
=V1AR41UQ41UQ1.1-W1	=V1AR41UQ41KF1+V1AR41UQ41-KF1.11-X1	=V1AR41UQ41UQ1.1+V1AR41UQ41UQ1.1-BGS/R	TPE	4	4	18	2	
=V1AR41UQ41UQ1.2-W1	=V1AR41UQ41KF1+V1AR41UQ41-KF1.11-X2	=V1AR41UQ41UQ1.2+V1AR41UQ41UQ1.2-BGS/R	TPE	4	4	18	2	
=V1AR41UQ41UQ1.3-W1	=V1AR41UQ41KF1+V1AR41UQ41-KF1.11-X3	=V1AR41UQ41UQ1.3+V1AR41UQ41UQ1.3-BGS/R	TPE	4	4	18	3	
=V1AR41UQ41UQ1.4-W1	=V1AR41UQ41KF1+V1AR41UQ41-KF1.11-X4	=V1AR41UQ41UQ1.4+V1AR41UQ41UQ1.4-BGS/R	TPE	4	4	18	2	
=V1AR41UQ41UQ2.1-W1	=V1AR41UQ41KF1+V1AR41UQ41-KF1.11-X5	=V1AR41UQ41UQ2.1+V1AR41UQ41UQ2.1-BGS/R	TPE	4	4	18	2	
=V1AR41UQ41UQ2.2-W1	=V1AR41UQ41KF1+V1AR41UQ41-KF1.11-X6	=V1AR41UQ41UQ2.2+V1AR41UQ41UQ2.2-BGS/R	TPE	4	4	18	3	
=V1AR41UQ41UQ2.3-W1	=V1AR41UQ41KF1+V1AR41UQ41-KF1.11-X7	=V1AR41UQ41UQ2.3+V1AR41UQ41UQ2.3-BGS/R	TPE	4	4	18	2	
=V1AR42UQ41BG0-W1	=V1AR42UQ41BG0+V1AR42UQ41-XG1/2	=V1AR42UQ41KF1+V1AR42UQ41-KF1.12-X2	TPE	4	4	18	0.5	
=V1AR42UQ41BG0-W1.1	=V1AR42UQ41BG0+V1AR42UQ41-BG01	=V1AR42UQ41BG0+V1AR42UQ41-XG1/2	TPE	4	3	18	2	
=V1AR42UQ41BG0-W1.2	=V1AR42UQ41BG0+V1AR42UQ41-BG02	=V1AR42UQ41BG0+V1AR42UQ41-XG1/2	TPE	4	3	18	1	
=V1AR42UQ41BG0-W2	=V1AR42UQ41BG0+V1AR42UQ41-XG3/4	=V1AR42UQ41KF1+V1AR42UQ41-KF1.12-X3	TPE	4	4	18	0.5	
=V1AR42UQ41BG0-W2.1	=V1AR42UQ41BG0+V1AR42UQ41-BG03	=V1AR42UQ41BG0+V1AR42UQ41-XG3/4	TPE	4	3	18	2	
=V1AR42UQ41BG0-W2.2	=V1AR42UQ41BG0+V1AR42UQ41-BG04	=V1AR42UQ41BG0+V1AR42UQ41-XG3/4	TPE	4	3	18	3	
=V1AR42UQ41BG0-W3	=V1AR42UQ41BG0+V1AR42UQ41-XG5/6	=V1AR42UQ41KF1+V1AR42UQ41-KF1.12-X4	TPE	4	4	18	0.5	
=V1AR42UQ41BG0-W3.1	=V1AR42UQ41BG0+V1AR42UQ41-BG05	=V1AR42UQ41BG0+V1AR42UQ41-XG5/6	TPE	4	3	18	3	
=V1AR42UQ41BG0-W3.2	=V1AR42UQ41BG0+V1AR42UQ41-BG06	=V1AR42UQ41BG0+V1AR42UQ41-XG5/6	TPE	4	3	18	2	
=V1AR42UQ41UQ1.1-W1	=V1AR42UQ41KF1+V1AR42UQ41-KF1.11-X1	=V1AR42UQ41UQ1.1+V1AR42UQ41UQ1.1-BGS/R	TPE	4	4	18	2	
=V1AR42UQ41UQ1.2-W1	=V1AR42UQ41KF1+V1AR42UQ41-KF1.11-X2	=V1AR42UQ41UQ1.2+V1AR42UQ41UQ1.2-BGS/R	TPE	4	4	18	2	
=V1AR42UQ41UQ2.1-W1	=V1AR42UQ41KF1+V1AR42UQ41-KF1.11-X3	=V1AR42UQ41UQ2.1+V1AR42UQ41UQ2.1-BGS/R	TPE	4	4	18	3	
=V1AR42UQ41UQ2.2-W1	=V1AR42UQ41KF1+V1AR42UQ41-KF1.11-X4	=V1AR42UQ41UQ2.2+V1AR42UQ41UQ2.2-BGS/R	TPE	4	4	18	3	
=V1AR42UQ41UQ2.3-W1	=V1AR42UQ41KF1+V1AR42UQ41-KF1.11-X5	=V1AR42UQ41UQ2.3+V1AR42UQ41UQ2.3-BGS/R	TPE	4	4	18	2	

Cable overview

F10_001_Cable

Cable name	Source (from)	Target (to)	cable type	all conductors	Conductors used	Cross-section [mm]	Length [m]	remark
=V1AR42UQ41UQ2.4-W1	=V1AR42UQ41KF1+V1AR42UQ41-KF1.11-X6	=V1AR42UQ41UQ2.4+V1AR42UQ41UQ2.4-BGS/R	TPE	4	4	18	2	
=V1AR42UQ41UQ3.1-W1	=V1AR42UQ41KF1+V1AR42UQ41-KF1.11-X7	=V1AR42UQ41UQ3.1+V1AR42UQ41UQ3.1-BGS/R	TPE	4	4	18	3	
=V1AR42UQ41UQ3.2-W1	=V1AR42UQ41KF1+V1AR42UQ41-KF1.11-X8	=V1AR42UQ41UQ3.2+V1AR42UQ41UQ3.2-BGS/R	TPE	4	4	18	2	
=V1AR42UQ41UQ3.3-W1	=V1AR42UQ41KF1+V1AR42UQ41-KF1.12-X1	=V1AR42UQ41UQ3.3+V1AR42UQ41UQ3.3-BGS/R	TPE	4	4	18	2	
=V1FQ1-W11R	=V1KF1+V1UC11-KF11.31	=V1FQ1+V1FQ1-BR11-R	TPE	4	4	18	25	
	=V1WC4+V1UC11-XD10							
	=V1WC4+V1UC11-XD13							
=V1FQ1-W11T	=V1WC4+V1UC11-XD10	=V1FQ1+V1FQ1-BR11-T	TPE	4	4	18	20	
	=V1WC4+V1UC11-XD13							
=V1FQ1-W13R	=V1KF1+V1UC11-KF11.31	=V1FQ1+V1FQ1-BR13-R	TPE	4	4	18	25	
	=V1WC4+V1UC11-XD10							
	=V1WC4+V1UC11-XD13							
=V1FQ1-W13T	=V1WC4+V1UC11-XD10	=V1FQ1+V1FQ1-BR13-T	TPE	4	4	18	20	
	=V1WC4+V1UC11-XD13							
=V1FQ1-W14R	=V1KF1+V1UC14-KF14.31	=V1FQ1+V1FQ1-BR14-R	TPE	4	4	18	25	
	=V1WC4+V1UC14-XD10							
	=V1WC4+V1UC14-XD15							
=V1FQ1-W14T	=V1WC4+V1UC14-XD10	=V1FQ1+V1FQ1-BR14-T	TPE	4	4	18	20	
	=V1WC4+V1UC14-XD15							
=V1FQ1-W16R	=V1KF1+V1UC14-KF14.31	=V1FQ1+V1FQ1-BR16-R	TPE	4	4	18	25	
	=V1WC4+V1UC14-XD10							
	=V1WC4+V1UC14-XD15							
=V1FQ1-W16T	=V1WC4+V1UC14-XD10	=V1FQ1+V1FQ1-BR16-T	TPE	4	4	18	20	
	=V1WC4+V1UC14-XD15							
=V1FQ1+.WR1-W1			TPE	5	0	18	6	
=V1FQ1+.WR1-W2			TPE	5	0	18	6	
=V1FQ1+.WR1-W3			TPE	5	0	18	8	
=V1FQ1+.WR1-W4			TPE	5	0	18	8	
=V1FQ1+.WR2-W1			TPE	5	0	18	6	
=V1FQ1+.WR2-W2			TPE	5	0	18	6	
=V1FQ1+.WR2-W3			TPE	5	0	18	8	
=V1FQ1+.WR2-W4			TPE	5	0	18	8	
=V1U10U01PF1-W1.1	=V1U10U01KF1+V1U10U01-KF1.11	=V1U10U01PF1+V1U10U01-PF1-Branch1	TPE	4	4	18	5	
=V1U10U01PF1-W1.2	=V1U10U01KF1+V1U10U01-KF1.11	=V1U10U01PF1+V1U10U01-PF1-Branch2	TPE	4	4	18	5	
=V1U30U01PF1-W1.1	=V1U30U01KF1+V1U30U01-KF1.11	=V1U30U01PF1+V1U30U01-PF1-Branch1	TPE	4	4	18	5	
=V1U30U01PF1-W1.2	=V1U30U01KF1+V1U30U01-KF1.11	=V1U30U01PF1+V1U30U01-PF1-Branch2	TPE	4	4	18	5	
=V1UQ51BG0-W1	=V1UQ51BG0+V1UQ51-XG1/2	=V1UQ51KF1+V1UQ51-KF1.11	TPE	4	4	18	0.5	
=V1UQ51BG0-W1.1	=V1UQ51BG0+V1UQ51-BG01	=V1UQ51BG0+V1UQ51-XG1/2	TPE	4	3	18	3	
=V1UQ51BG0-W1.2	=V1UQ51BG0+V1UQ51-BG02	=V1UQ51BG0+V1UQ51-XG1/2	TPE	4	3	18	2	
=V1UQ51BG0-W2	=V1UQ51BG0+V1UQ51-XG3/4	=V1UQ51KF1+V1UQ51-KF1.11	TPE	4	4	18	0.5	
=V1UQ51BG0-W2.1	=V1UQ51BG0+V1UQ51-BG03	=V1UQ51BG0+V1UQ51-XG3/4	TPE	4	3	18	2	
=V1UQ51BG0-W2.2	=V1UQ51BG0+V1UQ51-BG04	=V1UQ51BG0+V1UQ51-XG3/4	TPE	4	3	18	3	

Cable overview

F10_001_Cable

Cable name	Source (from)	Target (to)	cable type	all conductors	Conductors used	Cross-section [mm]	Length [m]	remark
=V1UQ51BG0-W3	=V1UQ51BG0+V1UQ51-XG5/6	=V1UQ51KF1+V1UQ51-KF1.11	TPE	4	4	18	0.5	
=V1UQ51BG0-W3.1	=V1UQ51BG0+V1UQ51-BG05	=V1UQ51BG0+V1UQ51-XG5/6	TPE	4	3	18	3	
=V1UQ51BG0-W3.2	=V1UQ51BG0+V1UQ51-BG06	=V1UQ51BG0+V1UQ51-XG5/6	TPE	4	3	18	4	
=V1WR1BG0-W1	=V1WR1BG0+V1WR1-XG1/2	=V1WR1KF1+V1WR1-KF1.11	TPE	4	4	18	0.5	
=V1WR1BG0-W1.1	=V1WR1BG0+V1WR1-BG01	=V1WR1BG0+V1WR1-XG1/2	TPE	4	3	18	2	
=V1WR1BG0-W1.2	=V1WR1BG0+V1WR1-BG02	=V1WR1BG0+V1WR1-XG1/2	TPE	4	3	18	2	
=V1WR1BG0-W2	=V1WR1BG0+V1WR1-XG3/4	=V1WR1KF1+V1WR1-KF1.11	TPE	4	4	18	0.5	
=V1WR1BG0-W2.1	=V1WR1BG0+V1WR1-BG03	=V1WR1BG0+V1WR1-XG3/4	TPE	4	3	18	2	
=V1WR1BG0-W2.2	=V1WR1BG0+V1WR1-BG04	=V1WR1BG0+V1WR1-XG3/4	TPE	4	3	18	2	
=V1WR1BG0-W3	=V1WR1BG0+V1WR1-BG05	=V1WR1KF1+V1WR1-KF1.11	TPE	4	3	18		
=V1WR1UQ51BG0-W1	=V1WR1UQ51BG0+V1WR1UQ51-XG1/2	=V1WR1UQ51KF1+V1WR1UQ51-KF1.14-X1	TPE	4	4	18	0.5	
=V1WR1UQ51BG0-W1.1	=V1WR1UQ51BG0+V1WR1UQ51-BG01	=V1WR1UQ51BG0+V1WR1UQ51-XG1/2	TPE	4	3	18	3	
=V1WR1UQ51BG0-W1.2	=V1WR1UQ51BG0+V1WR1UQ51-BG02	=V1WR1UQ51BG0+V1WR1UQ51-XG1/2	TPE	4	3	18	2	
=V1WR1UQ51BG0-W2	=V1WR1UQ51BG0+V1WR1UQ51-XG3/4	=V1WR1UQ51KF1+V1WR1UQ51-KF1.14-X2	TPE	4	4	18	0.5	
=V1WR1UQ51BG0-W2.1	=V1WR1UQ51BG0+V1WR1UQ51-BG03	=V1WR1UQ51BG0+V1WR1UQ51-XG3/4	TPE	4	3	18	3	
=V1WR1UQ51BG0-W2.2	=V1WR1UQ51BG0+V1WR1UQ51-BG04	=V1WR1UQ51BG0+V1WR1UQ51-XG3/4	TPE	4	3	18	3	
=V1WR1UQ51BG0-W3	=V1WR1UQ51BG0+V1WR1UQ51-XG5/6	=V1WR1UQ51KF1+V1WR1UQ51-KF1.14-X3	TPE	4	4	18	0.5	
=V1WR1UQ51BG0-W3.1	=V1WR1UQ51BG0+V1WR1UQ51-BG05	=V1WR1UQ51BG0+V1WR1UQ51-XG5/6	TPE	4	3	18	3	
=V1WR1UQ51BG0-W3.2	=V1WR1UQ51BG0+V1WR1UQ51-BG06	=V1WR1UQ51BG0+V1WR1UQ51-XG5/6	TPE	4	3	18	3	
=V1WR1UQ51BG0-W4	=V1WR1UQ51BG0+V1WR1UQ51-XG7/8	=V1WR1UQ51KF1+V1WR1UQ51-KF1.14-X4	TPE	4	4	18	0.5	
=V1WR1UQ51BG0-W4.1	=V1WR1UQ51BG0+V1WR1UQ51-BG07	=V1WR1UQ51BG0+V1WR1UQ51-XG7/8	TPE	4	3	18	3	
=V1WR1UQ51BG0-W4.2	=V1WR1UQ51BG0+V1WR1UQ51-BG08	=V1WR1UQ51BG0+V1WR1UQ51-XG7/8	TPE	4	3	18	3	
=V1WR1UQ51BG0-W5	=V1WR1UQ51BG0+V1WR1UQ51-XG9/10	=V1WR1UQ51KF1+V1WR1UQ51-KF1.14-X5	TPE	4	4	18	0.5	
=V1WR1UQ51BG0-W5.1	=V1WR1UQ51BG0+V1WR1UQ51-BG09	=V1WR1UQ51BG0+V1WR1UQ51-XG9/10	TPE	4	3	18	3	
=V1WR1UQ51BG0-W5.2	=V1WR1UQ51BG0+V1WR1UQ51-BG10	=V1WR1UQ51BG0+V1WR1UQ51-XG9/10	TPE	4	3	18	2	
=V1WR1UQ51BG0-W6	=V1WR1UQ51BG0+V1WR1UQ51-XG11/12	=V1WR1UQ51KF1+V1WR1UQ51-KF1.14-X6	TPE	4	4	18	0.5	
=V1WR1UQ51BG0-W6.1	=V1WR1UQ51BG0+V1WR1UQ51-BG11	=V1WR1UQ51BG0+V1WR1UQ51-XG11/12	TPE	4	3	18	2	
=V1WR1UQ51BG0-W6.2	=V1WR1UQ51BG0+V1WR1UQ51-BG12	=V1WR1UQ51BG0+V1WR1UQ51-XG11/12	TPE	4	3	18	2	
=V1WR1UQ51BG0-W7	=V1WR1UQ51BG0+V1WR1UQ51-XG13/14	=V1WR1UQ51KF1+V1WR1UQ51-KF1.14-X7	TPE	4	4	18	0.5	
=V1WR1UQ51BG0-W7.1	=V1WR1UQ51BG0+V1WR1UQ51-BG13	=V1WR1UQ51BG0+V1WR1UQ51-XG13/14	TPE	4	3	18	2	
=V1WR1UQ51BG0-W7.2	=V1WR1UQ51BG0+V1WR1UQ51-BG14	=V1WR1UQ51BG0+V1WR1UQ51-XG13/14	TPE	4	3	18	2	
=V1WR1UQ51BG0-W8	=V1WR1UQ51BG0+V1WR1UQ51-XG15/16	=V1WR1UQ51KF1+V1WR1UQ51-KF1.14-X8	TPE	4	4	18	0.5	
=V1WR1UQ51BG0-W8.1	=V1WR1UQ51BG0+V1WR1UQ51-BG15	=V1WR1UQ51BG0+V1WR1UQ51-XG15/16	TPE	4	3	18	2	
=V1WR1UQ51BG0-W8.2	=V1WR1UQ51BG0+V1WR1UQ51-BG16	=V1WR1UQ51BG0+V1WR1UQ51-XG15/16	TPE	4	3	18	2	
=V1WR1UQ51BG0-W9	=V1WR1UQ51BG0+V1WR1UQ51-XG17/18	=V1WR1UQ51KF1+V1WR1UQ51-KF1.15-X1	TPE	4	4	18	0.5	
=V1WR1UQ51BG0-W9.1	=V1WR1UQ51BG0+V1WR1UQ51-BG17	=V1WR1UQ51BG0+V1WR1UQ51-XG17/18	TPE	4	3	18	3	
=V1WR1UQ51BG0-W9.2	=V1WR1UQ51BG0+V1WR1UQ51-BG18	=V1WR1UQ51BG0+V1WR1UQ51-XG17/18	TPE	4	3	18	3	
=V1WR1UQ51BG0-W10	=V1WR1UQ51BG0+V1WR1UQ51-XG19/20	=V1WR1UQ51KF1+V1WR1UQ51-KF1.15-X2	TPE	4	4	18	0.5	
=V1WR1UQ51BG0-W10.1	=V1WR1UQ51BG0+V1WR1UQ51-BG19	=V1WR1UQ51BG0+V1WR1UQ51-XG19/20	TPE	4	3	18	3	
=V1WR1UQ51BG0-W10.2	=V1WR1UQ51BG0+V1WR1UQ51-BG20	=V1WR1UQ51BG0+V1WR1UQ51-XG19/20	TPE	4	3	18	3	
=V1WR1UQ51BG0-W11	=V1WR1UQ51BG0+V1WR1UQ51-XG21/22	=V1WR1UQ51KF1+V1WR1UQ51-KF1.15-X3	TPE	4	4	18	0.5	
=V1WR1UQ51BG0-W11.1	=V1WR1UQ51BG0+V1WR1UQ51-BG21	=V1WR1UQ51BG0+V1WR1UQ51-XG21/22	TPE	4	3	18	5	
=V1WR1UQ51BG0-W11.2	=V1WR1UQ51BG0+V1WR1UQ51-BG22	=V1WR1UQ51BG0+V1WR1UQ51-XG21/22	TPE	4	3	18	5	
=V1WR1UQ51BG0-W12	=V1WR1UQ51BG0+V1WR1UQ51-XG23/24	=V1WR1UQ51KF1+V1WR1UQ51-KF1.15-X4	TPE	4	4	18	0.5	
=V1WR1UQ51BG0-W12.1	=V1WR1UQ51BG0+V1WR1UQ51-BG23	=V1WR1UQ51BG0+V1WR1UQ51-XG23/24	TPE	4	3	18	5	
=V1WR1UQ51BG0-W12.2	=V1WR1UQ51BG0+V1WR1UQ51-BG24	=V1WR1UQ51BG0+V1WR1UQ51-XG23/24	TPE	4	3	18	5	

Cable overview

F10_001_Cable

Cable name	Source (from)	Target (to)	cable type	all conductors	Conductors used	Cross-section [mm]	Length [m]	remark
=V1WR1UQ51UQ1.1-W1	=V1WR1UQ51KF1+V1WR1UQ51-KF1.11-X1	=V1WR1UQ51UQ1.1+V1WR1UQ51UQ1.1-BGS/R	TPE	4	4	18	3	
=V1WR1UQ51UQ1.2-W1	=V1WR1UQ51KF1+V1WR1UQ51-KF1.11-X2	=V1WR1UQ51UQ1.2+V1WR1UQ51UQ1.2-BGS/R	TPE	4	4	18	3	
=V1WR1UQ51UQ1.3-W1	=V1WR1UQ51KF1+V1WR1UQ51-KF1.11-X3	=V1WR1UQ51UQ1.3+V1WR1UQ51UQ1.3-BGS/R	TPE	4	4	18	2	
=V1WR1UQ51UQ1.4-W1	=V1WR1UQ51KF1+V1WR1UQ51-KF1.11-X4	=V1WR1UQ51UQ1.4+V1WR1UQ51UQ1.4-BGS/R	TPE	4	4	18	2	
=V1WR1UQ51UQ2.1-W1	=V1WR1UQ51KF1+V1WR1UQ51-KF1.11-X5	=V1WR1UQ51UQ2.1+V1WR1UQ51UQ2.1-BGS/R	TPE	4	3	18	3	
=V1WR1UQ51UQ2.2-W1	=V1WR1UQ51KF1+V1WR1UQ51-KF1.11-X6	=V1WR1UQ51UQ2.2+V1WR1UQ51UQ2.2-BGS/R	TPE	4	4	18	2	
=V1WR1UQ51UQ3.1-W1	=V1WR1UQ51KF1+V1WR1UQ51-KF1.11-X7	=V1WR1UQ51UQ3.1+V1WR1UQ51UQ3.1-BGS/R	TPE	4	4	18	2	
=V1WR1UQ51UQ3.2-W1	=V1WR1UQ51KF1+V1WR1UQ51-KF1.11-X8	=V1WR1UQ51UQ3.2+V1WR1UQ51UQ3.2-BGS/R	TPE	4	4	18	3	
=V1WR1UQ51UQ3.3-W1	=V1WR1UQ51KF1+V1WR1UQ51-KF1.12-X1	=V1WR1UQ51UQ3.3+V1WR1UQ51UQ3.3-BGS/R	TPE	4	4	18	1	
=V1WR1UQ51UQ3.4-W1	=V1WR1UQ51KF1+V1WR1UQ51-KF1.12-X2	=V1WR1UQ51UQ3.4+V1WR1UQ51UQ3.4-BGS/R	TPE	4	4	18	2	
=V1WR1UQ51UQ5.1-W1	=V1WR1UQ51KF1+V1WR1UQ51-KF1.12-X5	=V1WR1UQ51UQ5.1+V1WR1UQ51UQ5.1-BGS/R	TPE	4	4	18	2	
=V1WR1UQ51UQ5.2-W1	=V1WR1UQ51KF1+V1WR1UQ51-KF1.12-X6	=V1WR1UQ51UQ5.2+V1WR1UQ51UQ5.2-BGS/R	TPE	4	4	18	3	
=V1WR1UQ51UQ5.3-W1	=V1WR1UQ51KF1+V1WR1UQ51-KF1.12-X7	=V1WR1UQ51UQ5.3+V1WR1UQ51UQ5.3-BGS/R	TPE	4	4	18	4	
=V1WR1UQ51UQ5.4-W1	=V1WR1UQ51KF1+V1WR1UQ51-KF1.12-X8	=V1WR1UQ51UQ5.4+V1WR1UQ51UQ5.4-BGS/R	TPE	4	4	18	5	
=V1WR1UQ51UQ5.5-W1	=V1WR1UQ51KF1+V1WR1UQ51-KF1.13-X1	=V1WR1UQ51UQ5.5+V1WR1UQ51UQ5.5-BGS/R	TPE	4	4	18	3	
=V1WR1UQ51UQ5.6-W1	=V1WR1UQ51KF1+V1WR1UQ51-KF1.13-X2	=V1WR1UQ51UQ5.6+V1WR1UQ51UQ5.6-BGS/R	TPE	4	4	18	5	
=V1WR1UQ51UQ6.1-W1	=V1WR1UQ51KF1+V1WR1UQ51-KF1.13-X3	=V1WR1UQ51UQ6.1+V1WR1UQ51UQ6.1-BGS/R	TPE	4	4	18	3	
=V1WR1UQ51UQ6.2-W1	=V1WR1UQ51KF1+V1WR1UQ51-KF1.13-X4	=V1WR1UQ51UQ6.2+V1WR1UQ51UQ6.2-BGS/R	TPE	4	4	18	4	
=V1WR1UQ51UQ6.3-W1	=V1WR1UQ51KF1+V1WR1UQ51-KF1.13-X5	=V1WR1UQ51UQ6.3+V1WR1UQ51UQ6.3-BGS/R	TPE	4	4	18	5	
=V1WR1UQ51UQ6.4-W1	=V1WR1UQ51KF1+V1WR1UQ51-KF1.13-X6	=V1WR1UQ51UQ6.4+V1WR1UQ51UQ6.4-BGS/R	TPE	4	4	18	5	
=V1WR1UQ51UQ6.5-W1	=V1WR1UQ51KF1+V1WR1UQ51-KF1.13-X7	=V1WR1UQ51UQ6.5+V1WR1UQ51UQ6.5-BGS/R	TPE	4	4	18	1	
=V1WR1UQ51UQ6.6-W1	=V1WR1UQ51KF1+V1WR1UQ51-KF1.13-X8	=V1WR1UQ51UQ6.6+V1WR1UQ51UQ6.6-BGS/R	TPE	4	4	18	3	
=V1WR1UQ52BG0-W1	=V1WR1UQ52BG0+V1WR1UQ52-XG1/2	=V1WR1UQ52KF1+V1WR1UQ52-KF1.13-X3	TPE	4	4	18	0.5	
=V1WR1UQ52BG0-W1.1	=V1WR1UQ52BG0+V1WR1UQ52-BG01	=V1WR1UQ52BG0+V1WR1UQ52-XG1/2	TPE	4	3	18	2	
=V1WR1UQ52BG0-W1.2	=V1WR1UQ52BG0+V1WR1UQ52-BG02	=V1WR1UQ52BG0+V1WR1UQ52-XG1/2	TPE	4	3	18	3	
=V1WR1UQ52BG0-W2	=V1WR1UQ52BG0+V1WR1UQ52-XG3/4	=V1WR1UQ52KF1+V1WR1UQ52-KF1.13-X4	TPE	4	4	18	0.5	
=V1WR1UQ52BG0-W2.1	=V1WR1UQ52BG0+V1WR1UQ52-BG03	=V1WR1UQ52BG0+V1WR1UQ52-XG3/4	TPE	4	3	18	2	
=V1WR1UQ52BG0-W2.2	=V1WR1UQ52BG0+V1WR1UQ52-BG04	=V1WR1UQ52BG0+V1WR1UQ52-XG3/4	TPE	4	3	18	3	
=V1WR1UQ52BG0-W3	=V1WR1UQ52BG0+V1WR1UQ52-XG5/6	=V1WR1UQ52KF1+V1WR1UQ52-KF1.13-X5	TPE	4	4	18	0.5	
=V1WR1UQ52BG0-W3.1	=V1WR1UQ52BG0+V1WR1UQ52-BG05	=V1WR1UQ52BG0+V1WR1UQ52-XG5/6	TPE	4	3	18	2	
=V1WR1UQ52BG0-W3.2	=V1WR1UQ52BG0+V1WR1UQ52-BG06	=V1WR1UQ52BG0+V1WR1UQ52-XG5/6	TPE	4	3	18	2	
=V1WR1UQ52BG0-W4	=V1WR1UQ52BG0+V1WR1UQ52-XG7/8	=V1WR1UQ52KF1+V1WR1UQ52-KF1.13-X6	TPE	4	4	18	0.5	
=V1WR1UQ52BG0-W4.1	=V1WR1UQ52BG0+V1WR1UQ52-BG07	=V1WR1UQ52BG0+V1WR1UQ52-XG7/8	TPE	4	3	18	3	
=V1WR1UQ52BG0-W4.2	=V1WR1UQ52BG0+V1WR1UQ52-BG08	=V1WR1UQ52BG0+V1WR1UQ52-XG7/8	TPE	4	3	18	3	
=V1WR1UQ52BG0-W5	=V1WR1UQ52BG0+V1WR1UQ52-XG9/10	=V1WR1UQ52KF1+V1WR1UQ52-KF1.13-X7	TPE	4	4	18	0.5	
=V1WR1UQ52BG0-W5.1	=V1WR1UQ52BG0+V1WR1UQ52-BG09	=V1WR1UQ52BG0+V1WR1UQ52-XG9/10	TPE	4	3	18	3	
=V1WR1UQ52BG0-W5.2	=V1WR1UQ52BG0+V1WR1UQ52-BG10	=V1WR1UQ52BG0+V1WR1UQ52-XG9/10	TPE	4	3	18	3	
=V1WR1UQ52BG0-W6	=V1WR1UQ52BG0+V1WR1UQ52-XG11/12	=V1WR1UQ52KF1+V1WR1UQ52-KF1.13-X8	TPE	4	4	18	0.5	
=V1WR1UQ52BG0-W6.1	=V1WR1UQ52BG0+V1WR1UQ52-BG11	=V1WR1UQ52BG0+V1WR1UQ52-XG11/12	TPE	4	3	18	2	
=V1WR1UQ52BG0-W6.2	=V1WR1UQ52BG0+V1WR1UQ52-BG12	=V1WR1UQ52BG0+V1WR1UQ52-XG11/12	TPE	4	3	18	2	
=V1WR1UQ52BG0-W7	=V1WR1UQ52BG0+V1WR1UQ52-XG13/14	=V1WR1UQ52KF1+V1WR1UQ52-KF1.14-X1	TPE	4	4	18	0.5	
=V1WR1UQ52BG0-W7.1	=V1WR1UQ52BG0+V1WR1UQ52-BG13	=V1WR1UQ52BG0+V1WR1UQ52-XG13/14	TPE	4	3	18	1	
=V1WR1UQ52BG0-W7.2	=V1WR1UQ52BG0+V1WR1UQ52-BG14	=V1WR1UQ52BG0+V1WR1UQ52-XG13/14	TPE	4	3	18	1	
=V1WR1UQ52BG0-W8	=V1WR1UQ52BG0+V1WR1UQ52-XG15/16	=V1WR1UQ52KF1+V1WR1UQ52-KF1.14-X2	TPE	4	4	18	0.5	
=V1WR1UQ52BG0-W8.1	=V1WR1UQ52BG0+V1WR1UQ52-BG15	=V1WR1UQ52BG0+V1WR1UQ52-XG15/16	TPE	4	3	18	1	
=V1WR1UQ52BG0-W8.2	=V1WR1UQ52BG0+V1WR1UQ52-BG16	=V1WR1UQ52BG0+V1WR1UQ52-XG15/16	TPE	4	3	18	2	

Cable overview

F10_001_Cable

Cable name	Source (from)	Target (to)	cable type	all conductors	Conductors used	Cross-section [mm]	Length [m]	remark
=V1WR1UQ52BG0-W9	=V1WR1UQ52BG0+V1WR1UQ52-XG17/18	=V1WR1UQ52KF1+V1WR1UQ52-KF1.14-X3	TPE	4	4	18	0.5	
=V1WR1UQ52BG0-W9.1	=V1WR1UQ52BG0+V1WR1UQ52-BG17	=V1WR1UQ52BG0+V1WR1UQ52-XG17/18	TPE	4	3	18	1	
=V1WR1UQ52BG0-W9.2	=V1WR1UQ52BG0+V1WR1UQ52-BG18	=V1WR1UQ52BG0+V1WR1UQ52-XG17/18	TPE	4	3	18	1	
=V1WR1UQ52BG0-W10	=V1WR1UQ52BG0+V1WR1UQ52-XG19/20	=V1WR1UQ52KF1+V1WR1UQ52-KF1.14-X4	TPE	4	4	18	0.5	
=V1WR1UQ52BG0-W10.1	=V1WR1UQ52BG0+V1WR1UQ52-BG19	=V1WR1UQ52BG0+V1WR1UQ52-XG19/20	TPE	4	3	18	1	
=V1WR1UQ52BG0-W10.2	=V1WR1UQ52BG0+V1WR1UQ52-BG20	=V1WR1UQ52BG0+V1WR1UQ52-XG19/20	TPE	4	3	18	2	
=V1WR1UQ52BG0-W11	=V1WR1UQ52BG0+V1WR1UQ52-XG21/22	=V1WR1UQ52KF1+V1WR1UQ52-KF1.14-X5	TPE	4	4	18	0.5	
=V1WR1UQ52BG0-W11.1	=V1WR1UQ52BG0+V1WR1UQ52-BG21	=V1WR1UQ52BG0+V1WR1UQ52-XG21/22	TPE	4	3	18	4	
=V1WR1UQ52BG0-W11.2	=V1WR1UQ52BG0+V1WR1UQ52-BG22	=V1WR1UQ52BG0+V1WR1UQ52-XG21/22	TPE	4	3	18	3	
=V1WR1UQ52BG0-W12	=V1WR1UQ52BG0+V1WR1UQ52-XG23/24	=V1WR1UQ52KF1+V1WR1UQ52-KF1.14-X6	TPE	4	4	18	0.5	
=V1WR1UQ52BG0-W12.1	=V1WR1UQ52BG0+V1WR1UQ52-BG23	=V1WR1UQ52BG0+V1WR1UQ52-XG23/24	TPE	4	3	18	4	
=V1WR1UQ52BG0-W12.2	=V1WR1UQ52BG0+V1WR1UQ52-BG24	=V1WR1UQ52BG0+V1WR1UQ52-XG23/24	TPE	4	3	18	3	
=V1WR1UQ52BG0-W13	=V1WR1UQ52BG0+V1WR1UQ52-XG25/26	=V1WR1UQ52KF1+V1WR1UQ52-KF1.14-X7	TPE	4	4	18	0.5	
=V1WR1UQ52BG0-W13.1	=V1WR1UQ52BG0+V1WR1UQ52-BG25	=V1WR1UQ52BG0+V1WR1UQ52-XG25/26	TPE	4	3	18	5	
=V1WR1UQ52BG0-W13.2	=V1WR1UQ52BG0+V1WR1UQ52-BG26	=V1WR1UQ52BG0+V1WR1UQ52-XG25/26	TPE	4	3	18	3	
=V1WR1UQ52UQ1.1-W1	=V1WR1UQ52KF1+V1WR1UQ52-KF1.11-X1	=V1WR1UQ52UQ1.1+V1WR1UQ52UQ1.1-BGS/R	TPE	4	4	18	2	
=V1WR1UQ52UQ1.2-W1	=V1WR1UQ52KF1+V1WR1UQ52-KF1.11-X2	=V1WR1UQ52UQ1.2+V1WR1UQ52UQ1.2-BGS/R	TPE	4	4	18	3	
=V1WR1UQ52UQ2.1-W1	=V1WR1UQ52KF1+V1WR1UQ52-KF1.11-X3	=V1WR1UQ52UQ2.1+V1WR1UQ52UQ2.1-BGS/R	TPE	4	4	18	2	
=V1WR1UQ52UQ2.2-W1	=V1WR1UQ52KF1+V1WR1UQ52-KF1.11-X4	=V1WR1UQ52UQ2.2+V1WR1UQ52UQ2.2-BGS/R	TPE	4	4	18	4	
=V1WR1UQ52UQ3.1-W1	=V1WR1UQ52KF1+V1WR1UQ52-KF1.11-X5	=V1WR1UQ52UQ3.1+V1WR1UQ52UQ3.1-XGR/S	TPE	4	4	18	0.5	
=V1WR1UQ52UQ3.1-W1.1	=V1WR1UQ52UQ3.1+V1WR1UQ52UQ3.1-BGR	=V1WR1UQ52UQ3.1+V1WR1UQ52UQ3.1-XGR/S	TPE	4	3	18	1	
=V1WR1UQ52UQ3.1-W1.2	=V1WR1UQ52UQ3.1+V1WR1UQ52UQ3.1-BGS	=V1WR1UQ52UQ3.1+V1WR1UQ52UQ3.1-XGR/S	TPE	4	3	18	1	
=V1WR1UQ52UQ3.2-W1	=V1WR1UQ52KF1+V1WR1UQ52-KF1.11-X6	=V1WR1UQ52UQ3.2+V1WR1UQ52UQ3.2-XGR/S	TPE	4	4	18	0.5	
=V1WR1UQ52UQ3.2-W1.3	=V1WR1UQ52UQ3.2+V1WR1UQ52UQ3.2-BGR	=V1WR1UQ52UQ3.2+V1WR1UQ52UQ3.2-XGR/S	TPE	4	3	18	3	
=V1WR1UQ52UQ3.2-W1.4	=V1WR1UQ52UQ3.2+V1WR1UQ52UQ3.2-BGS	=V1WR1UQ52UQ3.2+V1WR1UQ52UQ3.2-XGR/S	TPE	4	3	18	3	
=V1WR1UQ52UQ3.3-W1	=V1WR1UQ52KF1+V1WR1UQ52-KF1.11-X7	=V1WR1UQ52UQ3.3+V1WR1UQ52UQ3.3-XGR/S	TPE	4	4	18	0.5	
=V1WR1UQ52UQ3.3-W1.3	=V1WR1UQ52UQ3.3+V1WR1UQ52UQ3.3-BGR	=V1WR1UQ52UQ3.3+V1WR1UQ52UQ3.3-XGR/S	TPE	4	3	18	3	
=V1WR1UQ52UQ3.3-W1.4	=V1WR1UQ52UQ3.3+V1WR1UQ52UQ3.3-BGS	=V1WR1UQ52UQ3.3+V1WR1UQ52UQ3.3-XGR/S	TPE	4	3	18	3	
=V1WR1UQ52UQ3.4-W1	=V1WR1UQ52KF1+V1WR1UQ52-KF1.11-X8	=V1WR1UQ52UQ3.4+V1WR1UQ52UQ3.4-XGR/S	TPE	4	4	18	0.5	
=V1WR1UQ52UQ3.4-W1.1	=V1WR1UQ52UQ3.4+V1WR1UQ52UQ3.4-BGR	=V1WR1UQ52UQ3.4+V1WR1UQ52UQ3.4-XGR/S	TPE	4	3	18	1	
=V1WR1UQ52UQ3.4-W1.2	=V1WR1UQ52UQ3.4+V1WR1UQ52UQ3.4-BGS	=V1WR1UQ52UQ3.4+V1WR1UQ52UQ3.4-XGR/S	TPE	4	3	18	2	
=V1WR1UQ52UQ4.1-W1	=V1WR1UQ52KF1+V1WR1UQ52-KF1.12-X1	=V1WR1UQ52UQ4.1+V1WR1UQ52UQ4.1-BGS/R	TPE	4	4	18	2	
=V1WR1UQ52UQ4.2-W1	=V1WR1UQ52KF1+V1WR1UQ52-KF1.12-X2	=V1WR1UQ52UQ4.2+V1WR1UQ52UQ4.2-BGS/R	TPE	4	4	18	3	
=V1WR1UQ52UQ4.3-W1	=V1WR1UQ52KF1+V1WR1UQ52-KF1.12-X3	=V1WR1UQ52UQ4.3+V1WR1UQ52UQ4.3-BGS/R	TPE	4	4	18	3	
=V1WR1UQ52UQ4.4-W1	=V1WR1UQ52KF1+V1WR1UQ52-KF1.12-X4	=V1WR1UQ52UQ4.4+V1WR1UQ52UQ4.4-BGS/R	TPE	4	4	18	2	
=V1WR1UQ52UQ5.1-W1	=V1WR1UQ52KF1+V1WR1UQ52-KF1.12-X5	=V1WR1UQ52UQ5.1+V1WR1UQ52UQ5.1-BGS/R	TPE	4	4	18	1	
=V1WR1UQ52UQ5.2-W1	=V1WR1UQ52KF1+V1WR1UQ52-KF1.12-X6	=V1WR1UQ52UQ5.2+V1WR1UQ52UQ5.2-BGS/R	TPE	4	4	18	3	
=V1WR1UQ52UQ6.1-W1	=V1WR1UQ52KF1+V1WR1UQ52-KF1.12-X7	=V1WR1UQ52UQ6.1+V1WR1UQ52UQ6.1-BGS/R	TPE	4	4	18	1	
=V1WR1UQ52UQ6.2-W1	=V1WR1UQ52KF1+V1WR1UQ52-KF1.12-X8	=V1WR1UQ52UQ6.2+V1WR1UQ52UQ6.2-BGS/R	TPE	4	4	18	3	
=V1WR1UQ52UQ6.3-W1	=V1WR1UQ52KF1+V1WR1UQ52-KF1.13-X1	=V1WR1UQ52UQ6.3+V1WR1UQ52UQ6.3-BGS/R	TPE	4	4	18	3	
=V1WR1UQ52UQ6.4-W1	=V1WR1UQ52KF1+V1WR1UQ52-KF1.13-X2	=V1WR1UQ52UQ6.4+V1WR1UQ52UQ6.4-BGS/R	TPE	4	4	18	2	
=V1WR1UQ52UQ7.1-W1	=V1WR1UQ52KF2+V1WR1UQ52-KF2.11-X1	=V1WR1UQ52UQ7.1+V1WR1UQ52UQ7.1-BGS/R	TPE	4	4	18	2	
=V1WR1UQ52UQ7.2-W1	=V1WR1UQ52KF2+V1WR1UQ52-KF2.11-X2	=V1WR1UQ52UQ7.2+V1WR1UQ52UQ7.2-BGS/R	TPE	4	4	18	2	
=V1WR1UQ52UQ7.3-W1	=V1WR1UQ52KF2+V1WR1UQ52-KF2.11-X3	=V1WR1UQ52UQ7.3+V1WR1UQ52UQ7.3-BGS/R	TPE	4	4	18	2	
=V1WR1UQ52UQ8.1-W1	=V1WR1UQ52KF2+V1WR1UQ52-KF2.11-X4	=V1WR1UQ52UQ8.1+V1WR1UQ52UQ8.1-BGS/R	TPE	4	4	18	2	
=V1WR1UQ52UQ9.1-W1	=V1WR1UQ52KF2+V1WR1UQ52-KF2.11-X5	=V1WR1UQ52UQ9.1+V1WR1UQ52UQ9.1-BGS/R	TPE	4	4	18	2	

Cable overview

F10_001_Cable

Cable name	Source (from)	Target (to)	cable type	all conductors	Conductors used	Cross-section [mm]	Length [m]	remark
=V1WR1UQ52UQ9.2-W1	=V1WR1UQ52KF2+V1WR1UQ52-KF2.11-X6	=V1WR1UQ52UQ9.2+V1WR1UQ52UQ9.2-BGS/R	TPE	4	4	18	2	
=V1WR1UQ52UQ9.3-W1	=V1WR1UQ52KF2+V1WR1UQ52-KF2.11-X7	=V1WR1UQ52UQ9.3+V1WR1UQ52UQ9.3-BGS/R	TPE	4	4	18	2	
=V1WR1UQ52UQ9.4-W1	=V1WR1UQ52KF2+V1WR1UQ52-KF2.11-X8	=V1WR1UQ52UQ9.4+V1WR1UQ52UQ9.4-BGS/R	TPE	4	4	18	2	
=V1WR1UQ52UQ9.5-W1	=V1WR1UQ52KF2+V1WR1UQ52-KF2.12-X1	=V1WR1UQ52UQ9.5+V1WR1UQ52UQ9.5-BGS/R	TPE	4	4	18	1	
=V1WR1UQ52UQ10.1-W1	=V1WR1UQ52KF2+V1WR1UQ52-KF2.12-X2	=V1WR1UQ52UQ10.1+V1WR1UQ52UQ10.1-BGS/R	TPE	4	4	18	2	
=V1WR1UQ52UQ10.2-W1	=V1WR1UQ52KF2+V1WR1UQ52-KF2.12-X3	=V1WR1UQ52UQ10.2+V1WR1UQ52UQ10.2-BGS/R	TPE	4	4	18	2	
=V1WR1UQ52UQ10.3-W1	=V1WR1UQ52KF2+V1WR1UQ52-KF2.12-X4	=V1WR1UQ52UQ10.3+V1WR1UQ52UQ10.3-BGS/R	TPE	4	4	18	2	
=V1WR1UQ52UQ11.1-W1	=V1WR1UQ52KF2+V1WR1UQ52-KF2.12-X5	=V1WR1UQ52UQ11.1+V1WR1UQ52UQ11.1-BGS/R	TPE	4	4	18	2	
=V1WR1UQ52UQ12.1-W1	=V1WR1UQ52KF2+V1WR1UQ52-KF2.12-X6	=V1WR1UQ52UQ12.1+V1WR1UQ52UQ12.1-BGS/R	TPE	4	4	18	2	
=V1WR1UQ52UQ12.2-W1	=V1WR1UQ52KF2+V1WR1UQ52-KF2.12-X7	=V1WR1UQ52UQ12.2+V1WR1UQ52UQ12.2-BGS/R	TPE	4	4	18	2	
=V1WR1UQ52UQ12.3-W1	=V1WR1UQ52KF2+V1WR1UQ52-KF2.12-X8	=V1WR1UQ52UQ12.3+V1WR1UQ52UQ12.3-BGS/R	TPE	4	4	18	2	
=V1WR1UQ52UQ12.4-W1	=V1WR1UQ52KF2+V1WR1UQ52-KF2.13-X1	=V1WR1UQ52UQ12.4+V1WR1UQ52UQ12.4-BGS/R	TPE	4	4	18	2	
=V1WR1UQ52UQ12.5-W1	=V1WR1UQ52KF2+V1WR1UQ52-KF2.13-X2	=V1WR1UQ52UQ12.5+V1WR1UQ52UQ12.5-BGS/R	TPE	4	4	18	1	
=V1WR1UQ52UQ13.1-W1	=V1WR1UQ52KF2+V1WR1UQ52-KF2.13-X3	=V1WR1UQ52UQ13.1+V1WR1UQ52UQ13.1-BGS/R	TPE	4	4	18	5	
=V1WR1UQ52UQ13.2-W1	=V1WR1UQ52KF2+V1WR1UQ52-KF2.13-X4	=V1WR1UQ52UQ13.2+V1WR1UQ52UQ13.2-BGS/R	TPE	4	4	18	5	
=V1WR1UQ52UQ13.3-W1	=V1WR1UQ52KF2+V1WR1UQ52-KF2.13-X5	=V1WR1UQ52UQ13.3+V1WR1UQ52UQ13.3-BGS/R	TPE	4	4	18	5	
=V1WR1UQ52UQ13.4-W1	=V1WR1UQ52KF2+V1WR1UQ52-KF2.13-X6	=V1WR1UQ52UQ13.4+V1WR1UQ52UQ13.4-BGS/R	TPE	4	4	18	3	
=V1WR1UQ52UQ13.5-W1	=V1WR1UQ52KF2+V1WR1UQ52-KF2.13-X7	=V1WR1UQ52UQ13.5+V1WR1UQ52UQ13.5-BGS/R	TPE	4	4	18	3	
=V1WR1UQ52UQ13.6-W1	=V1WR1UQ52KF2+V1WR1UQ52-KF2.13-X8	=V1WR1UQ52UQ13.6+V1WR1UQ52UQ13.6-BGS/R	TPE	4	4	18	3	
=V1WR1UQ52UQ14.1-W1	=V1WR1UQ52KF2+V1WR1UQ52-KF2.14-X1	=V1WR1UQ52UQ14.1+V1WR1UQ52UQ14.1-BGS/R	TPE	4	4	18	4	
=V1WR1UQ52UQ14.2-W1	=V1WR1UQ52KF2+V1WR1UQ52-KF2.14-X2	=V1WR1UQ52UQ14.2+V1WR1UQ52UQ14.2-BGS/R	TPE	4	4	18	3	
=V1WR2BG0-W1	=V1WR2BG0+V1WR2-XG1/2	=V1WR2KF1+V1WR2-KF1.11	TPE	4	4	18	0.5	
=V1WR2BG0-W1.1	=V1WR2BG0+V1WR2-W1.2	=V1WR2BG0+V1WR2-XG1/2	TPE	4	3	18	2	
=V1WR2BG0-W1.3	=V1WR2BG0+V1WR2-BG02	=V1WR2BG0+V1WR2-XG1/2	TPE	4	3	18	2	
=V1WR2BG0-W2	=V1WR2BG0+V1WR2-BG03	=V1WR2KF1+V1WR2-KF1.11	TPE	4	3	18		
=V1WR2BG0-W3	=V1WR2BG0+V1WR2-BG04	=V1WR2KF1+V1WR2-KF1.11	TPE	5	5	18	5	
=V1WR2BG0-W4	=V1WR2BG0+V1WR2-BG05	=V1WR2KF1+V1WR2-KF1.11	TPE	5	5	18	5	
=V1WR2BG0-W5	=V1WR2BG0+V1WR2-XG6/7	=V1WR2KF3+V1WR2-KF3.11	TPE	4	4	18	0.5	
=V1WR2BG0-W5.1	=V1WR2BG0+V1WR2-BG06	=V1WR2BG0+V1WR2-XG6/7	TPE	4	3	18	5	
=V1WR2BG0-W5.2	=V1WR2BG0+V1WR2-BG07	=V1WR2BG0+V1WR2-XG6/7	TPE	4	3	18	5	
=V1WR2BG0-W6	=V1WR2BG0+V1WR2-BG08	=V1WR2KF3+V1WR2-KF3.11	TPE	5	5	18	5	
=V1WR2BG0-W7	=V1WR2BG0+V1WR2-BG09	=V1WR2KF3+V1WR2-KF3.11	TPE	5	5	18	5	
=V1WR2BG0-W8	=V1WR2BG0+V1WR2-BG10	=V1WR2KF3+V1WR2-KF3.11	TPE	5	5	18	5	
=V1WR2BG0-W9	=V1WR2BG0+V1WR2-BG11	=V1WR2KF3+V1WR2-KF3.11	TPE	5	5	18	5	
=V1WR2BG0-W10	=V1WR2BG0+V1WR2-XG12/13	=V1WR2KF3+V1WR2-KF3.11	TPE	4	4	18	0.5	
=V1WR2BG0-W10.1	=V1WR2BG0+V1WR2-W10.2	=V1WR2BG0+V1WR2-XG12/13	TPE	4	3	18	5	
=V1WR2BG0-W10.3	=V1WR2BG0+V1WR2-W10.4	=V1WR2BG0+V1WR2-XG12/13	TPE	4	3	18	5	
=V1WR2UQ51BG0-W1	=V1WR2UQ51BG0+V1WR2UQ51-XG1/2	=V1WR2UQ51KF1+V1WR2UQ51-KF1.13-X1	TPE	4	4	18	0.5	
=V1WR2UQ51BG0-W1.1	=V1WR2UQ51BG0+V1WR2UQ51-BG01	=V1WR2UQ51BG0+V1WR2UQ51-XG1/2	TPE	4	3	18	3	
=V1WR2UQ51BG0-W1.2	=V1WR2UQ51BG0+V1WR2UQ51-BG02	=V1WR2UQ51BG0+V1WR2UQ51-XG1/2	TPE	4	3	18	1	
=V1WR2UQ51UQ1.1-W1	=V1WR2UQ51KF1+V1WR2UQ51-KF1.11-X1	=V1WR2UQ51UQ1.1+V1WR2UQ51UQ1.1-BGS/R	TPE	4	4	18	3	
=V1WR2UQ51UQ1.2-W1	=V1WR2UQ51KF1+V1WR2UQ51-KF1.11-X2	=V1WR2UQ51UQ1.2+V1WR2UQ51UQ1.2-BGS/R	TPE	4	4	18	3	
=V1WR2UQ51UQ1.3-W1	=V1WR2UQ51KF1+V1WR2UQ51-KF1.11-X3	=V1WR2UQ51UQ1.3+V1WR2UQ51UQ1.3-BGS/R	TPE	4	4	18	1	
=V1WR2UQ51UQ1.4-W1	=V1WR2UQ51KF1+V1WR2UQ51-KF1.11-X4	=V1WR2UQ51UQ1.4+V1WR2UQ51UQ1.4-BGS/R	TPE	4	4	18	1	
=V1WR2UQ51UQ2.1-W1	=V1WR2UQ51KF1+V1WR2UQ51-KF1.11-X5	=V1WR2UQ51UQ2.1+V1WR2UQ51UQ2.1-BGS/R	TPE	4	3	18	3	
=V1WR2UQ51UQ2.2-W1	=V1WR2UQ51KF1+V1WR2UQ51-KF1.11-X6	=V1WR2UQ51UQ2.2+V1WR2UQ51UQ2.2-BGS/R	TPE	4	4	18	2	

Cable overview

F10_001_Cable

Cable name	Source (from)	Target (to)	cable type	all conductors	Conductors used	Cross-section [mm]	Length [m]	remark
=V1WR2UQ51UQ2.3-W1	=V1WR2UQ51KF1+V1WR2UQ51-KF1.11-X7	=V1WR2UQ51UQ2.3+V1WR2UQ51UQ2.3-BGS/R	TPE	4	4	18	2	
=V1WR2UQ51UQ2.4-W1	=V1WR2UQ51KF1+V1WR2UQ51-KF1.11-X8	=V1WR2UQ51UQ2.4+V1WR2UQ51UQ2.4-BGS/R	TPE	4	4	18	2	
=V1WR2UQ51UQ2.5-W1	=V1WR2UQ51KF1+V1WR2UQ51-KF1.12-X1	=V1WR2UQ51UQ2.5+V1WR2UQ51UQ2.5-BGS/R	TPE	4	4	18	3	
=V1WR2UQ51UQ2.6-W1	=V1WR2UQ51KF1+V1WR2UQ51-KF1.12-X2	=V1WR2UQ51UQ2.6+V1WR2UQ51UQ2.6-BGS/R	TPE	4	4	18	2	
=V1WR2UQ51UQ3.1-W1	=V1WR2UQ51KF1+V1WR2UQ51-KF1.12-X3	=V1WR2UQ51UQ3.1+V1WR2UQ51UQ3.1-BGS/R	TPE	4	4	18	3	
=V1WR2UQ51UQ3.2-W1	=V1WR2UQ51KF1+V1WR2UQ51-KF1.12-X4	=V1WR2UQ51UQ3.2+V1WR2UQ51UQ3.2-BGS/R	TPE	4	4	18	2	
=V1WR2UQ51UQ3.3-W1	=V1WR2UQ51KF1+V1WR2UQ51-KF1.12-X5	=V1WR2UQ51UQ3.3+V1WR2UQ51UQ3.3-BGS/R	TPE	4	4	18	3	
=V1WR2UQ51UQ3.4-W1	=V1WR2UQ51KF1+V1WR2UQ51-KF1.12-X6	=V1WR2UQ51UQ3.4+V1WR2UQ51UQ3.4-BGS/R	TPE	4	4	18	2	
=V1WR2UQ51UQ3.5-W1	=V1WR2UQ51KF1+V1WR2UQ51-KF1.12-X7	=V1WR2UQ51UQ3.5+V1WR2UQ51UQ3.5-BGS/R	TPE	4	4	18	2	
=V1WR2UQ51UQ3.6-W1	=V1WR2UQ51KF1+V1WR2UQ51-KF1.12-X8	=V1WR2UQ51UQ3.6+V1WR2UQ51UQ3.6-BGS/R	TPE	4	4	18	2	
=V1WR2UQ52BG0-W1	=V1WR2UQ52BG0+V1WR2UQ52-XG1/2	=V1WR2UQ52KF1+V1WR2UQ52-KF1.12-X7	TPE	4	4	18	0.5	
=V1WR2UQ52BG0-W1.1	=V1WR2UQ52BG0+V1WR2UQ52-BG01	=V1WR2UQ52BG0+V1WR2UQ52-XG1/2	TPE	4	3	18	2	
=V1WR2UQ52BG0-W1.2	=V1WR2UQ52BG0+V1WR2UQ52-BG02	=V1WR2UQ52BG0+V1WR2UQ52-XG1/2	TPE	4	3	18	2	
=V1WR2UQ52BG0-W2	=V1WR2UQ52BG0+V1WR2UQ52-XG3/4	=V1WR2UQ52KF1+V1WR2UQ52-KF1.12-X8	TPE	4	4	18	0.5	
=V1WR2UQ52BG0-W2.1	=V1WR2UQ52BG0+V1WR2UQ52-BG03	=V1WR2UQ52BG0+V1WR2UQ52-XG3/4	TPE	4	3	18	3	
=V1WR2UQ52BG0-W2.2	=V1WR2UQ52BG0+V1WR2UQ52-BG04	=V1WR2UQ52BG0+V1WR2UQ52-XG3/4	TPE	4	3	18	2	
=V1WR2UQ52UQ1.1-W1	=V1WR2UQ52KF1+V1WR2UQ52-KF1.11-X1	=V1WR2UQ52UQ1.1+V1WR2UQ52UQ1.1-BGS/R	TPE	4	4	18	1	
=V1WR2UQ52UQ1.2-W1	=V1WR2UQ52KF1+V1WR2UQ52-KF1.11-X2	=V1WR2UQ52UQ1.2+V1WR2UQ52UQ1.2-BGS/R	TPE	4	4	18	3	
=V1WR2UQ52UQ1.3-W1	=V1WR2UQ52KF1+V1WR2UQ52-KF1.11-X3	=V1WR2UQ52UQ1.3+V1WR2UQ52UQ1.3-BGS/R	TPE	4	4	18	2	
=V1WR2UQ52UQ1.4-W1	=V1WR2UQ52KF1+V1WR2UQ52-KF1.11-X4	=V1WR2UQ52UQ1.4+V1WR2UQ52UQ1.4-BGS/R	TPE	4	4	18	2	
=V1WR2UQ52UQ1.5-W1	=V1WR2UQ52KF1+V1WR2UQ52-KF1.11-X5	=V1WR2UQ52UQ1.5+V1WR2UQ52UQ1.5-BGS/R	TPE	4	4	18	2	
=V1WR2UQ52UQ1.6-W1	=V1WR2UQ52KF1+V1WR2UQ52-KF1.11-X6	=V1WR2UQ52UQ1.6+V1WR2UQ52UQ1.6-BGS/R	TPE	4	4	18	3	
=V1WR2UQ52UQ2.1-W1	=V1WR2UQ52KF1+V1WR2UQ52-KF1.11-X7	=V1WR2UQ52UQ2.1+V1WR2UQ52UQ2.1-BGS/R	TPE	4	4	18	3	
=V1WR2UQ52UQ2.2-W1	=V1WR2UQ52KF1+V1WR2UQ52-KF1.11-X8	=V1WR2UQ52UQ2.2+V1WR2UQ52UQ2.2-BGS/R	TPE	4	4	18	3	
=V1WR2UQ52UQ2.3-W1	=V1WR2UQ52KF1+V1WR2UQ52-KF1.12-X1	=V1WR2UQ52UQ2.3+V1WR2UQ52UQ2.3-BGS/R	TPE	4	4	18	2	
=V1WR2UQ52UQ2.4-W1	=V1WR2UQ52KF1+V1WR2UQ52-KF1.12-X2	=V1WR2UQ52UQ2.4+V1WR2UQ52UQ2.4-BGS/R	TPE	4	4	18	2	
=V1WR2UQ52UQ3.1-W1	=V1WR2UQ52KF1+V1WR2UQ52-KF1.12-X3	=V1WR2UQ52UQ3.1+V1WR2UQ52UQ3.1-BGS/R	TPE	4	4	18	3	
=V1WR2UQ52UQ3.2-W1	=V1WR2UQ52KF1+V1WR2UQ52-KF1.12-X4	=V1WR2UQ52UQ3.2+V1WR2UQ52UQ3.2-BGS/R	TPE	4	4	18	2	
=V1WR2UQ52UQ3.3-W1	=V1WR2UQ52KF1+V1WR2UQ52-KF1.12-X5	=V1WR2UQ52UQ3.3+V1WR2UQ52UQ3.3-BGS/R	TPE	4	4	18	1	
=V1WR2UQ52UQ3.4-W1	=V1WR2UQ52KF1+V1WR2UQ52-KF1.12-X6	=V1WR2UQ52UQ3.4+V1WR2UQ52UQ3.4-BGS/R	TPE	4	4	18	2	
=V1WR1UQ51UQ4.1-W1	=V1WR1UQ51KF1+V1WR1UQ51-KF1.12-X3	=V1WR1UQ51UQ4.1+V1WR1UQ51UQ4.1-BGS/R	TPE	4	4	18	2	
=V1WR1UQ51UQ4.2-W1	=V1WR1UQ51KF1+V1WR1UQ51-KF1.12-X4	=V1WR1UQ51UQ4.2+V1WR1UQ51UQ4.2-BGS/R	TPE	4	4	18	3	
=V1FQ1-W12R	=V1FQ1+V1FQ1-BR11-R	=V1FQ1+V1FQ1-BR12-R	TPE	8	8	22	0.61	
=V1FQ1-W12T	=V1FQ1+V1FQ1-BR11-T	=V1FQ1+V1FQ1-BR12-T	TPE	8	8	22	0.61	
=V1FQ1-W15R	=V1FQ1+V1FQ1-BR14-R	=V1FQ1+V1FQ1-BR15-R	TPE	8	8	22	0.61	
=V1FQ1-W15T	=V1FQ1+V1FQ1-BR14-T	=V1FQ1+V1FQ1-BR15-T	TPE	8	8	22	0.61	
=V1WR2BG0-W1.2	=V1WR2BG0+V1WR2-BG01	=V1WR2BG0+V1WR2-W1.2	TPE	3	3	24	0.3	
=V1WR2BG0-W10.2	=V1WR2BG0+V1WR2-BG12	=V1WR2BG0+V1WR2-W10.2	TPE	3	3	24	0.3	
=V1WR2BG0-W10.4	=V1WR2BG0+V1WR2-BG13	=V1WR2BG0+V1WR2-W10.4	TPE	3	3	24	0.3	
=V1AR41UQ41KF1-W1	=V1AR41UQ41KF1+V1AR41UQ41-KF1-X20	=V1AR41UQ41KF1+V1AR41UQ41-R3.CP/CS	TPU	5	5	16	2	
=V1AR42UQ41KF1-W1	=V1AR42UQ41KF1+V1AR42UQ41-KF1-X20	=V1AR42UQ41KF1+V1AR42UQ41-R3.CP/CS	TPU	5	5	16	2	
=V1FQ1-W1			TPU	5	0	16	12	
=V1FQ1-W2			TPU	5	0	16	12	
=V1PZ1PF1-W1			TPU	10	0	16	30	
=V1PZ1PF2-W1			TPU	10	0	16	15	
=V1SF0PG1-W1	=V1SF0PG1+V1UC51-XD1	=V1WC4+V1UC11-XD51	TPU	5	4	16	15	

Cable overview

F10_001_Cable

Cable name	Source (from)	Target (to)	cable type	all conductors	Conductors used	Cross-section [mm]	Length [m]	remark
=V1SF0PG2-W1	=V1SF0PG2+V1UC52-XD1	=V1WC4+V1UC14-XD151	TPU	5	4	16	15	
=V1U10U01KF1-W1	=V1WC4+V1UC11-XD151	=V1U10U01KF1+V1U10U01-KF1.11	TPU	5	4	16	25	
=V1U30U01KF1-W1	=V1WC4+V1UC14-XD161	=V1U30U01KF1+V1U30U01-KF1.11	TPU	5	4	16	10	
=V1UQ51KF1-W1	=V1WC4+V1UC11-XD161	=V1UQ51KF1+V1UQ51-KF1.11	TPU	5	4	16		
=V1WC3-W1			TPU	3	0	16	32	
=V1WC3-W2			TPU	3	0	16	5	
=V1WC3-W1			TPU	3	0	16	15	
=V1WC3-W2			TPU	3	0	16	5	
=V1WR1KF1-W1	=V1WC4+V1UC11-XD61	=V1WR1KF1+V1WR1-KF1.11	TPU	5	4	16		
=V1WR1KF2-W1	=V1WR1KF1+V1WR1-KF1.11	=V1WR1KF2+V1WR1-KF2.11	TPU	5	5	16	5	
=V1WR1UQ51KF1-W1	=V1WC4+V1UC46-XD51	=V1WR1UQ51KF1+V1WR1UQ51-KF1-X20	TPU	5	5	16	5	
=V1WR1UQ52KF1-W1.1	=V1WR1UQ52KF1+V1WR1UQ52-KF1-X20	=V1WR1UQ52WC4+V1WR1UQ52-XG52	TPU	5	5	16	5	
=V1WR1UQ52KF2-W1.2	=V1WR1UQ52KF2+V1WR1UQ52-KF2-X20	=V1WR1UQ52WC4+V1WR1UQ52-XG52	TPU	5	5	16	5	
=V1WR1UQ52WC4-W1	=V1WC4+V1UC46-XD52	=V1WR1UQ52WC4+V1WR1UQ52-XG52	TPU	5	5	16	1	
=V1WR2KF1-W1	=V1WC4+V1UC14-XD171	=V1WR2KF1+V1WR2-KF1.11	TPU	5	4	16	12	
=V1WR2KF2-W1	=V1WR2KF1+V1WR2-KF1.11	=V1WR2KF2+V1WR2-KF2.11	TPU	5	5	16	5	
=V1WR2KF3-W1	=V1WR2KF2+V1WR2-KF2.11	=V1WR2KF3+V1WR2-KF3.11	TPU	5	5	16	5	
=V1WR2UQ51KF1-W1	=V1WC4+V1UC47-XD51	=V1WR2UQ51KF1+V1WR2UQ51-KF1-X20	TPU	5	5	16	15	
=V1WR2UQ52KF1-W1	=V1WC4+V1UC47-XD52	=V1WR2UQ52KF1+V1WR2UQ52-KF1-X20	TPU	5	5	16	15	
=V1SF0SF2-W1	=V1KF1+V1UC14-KF14.12	=V1SF0SF2+V1UC72-SF1	TPU	8	8	24	20	
	=V1WC4+V1UC14-XD16							
	=V1KF1+V1UC14-KF14.32							
	=V1WC4+V1UC14-XD10							

			Date	12/22/2022	Volvo Trucks North America	Valiant TMS	Cable overview	Drawing name: =2V13&EFS_EL	=	
			Ed.	MKLEPADLO					+	
			Appr		Sub-Floor Members			Document type: EMC	Project nr: 22-16146	Page 11 / 614
Modification	Date	Name	Original		Replacement of	Replaced by	Scale 1:1			

Parts list

F01_001

Device tag	Quantity	Designation	Type number	Supplier	Part number
	9	Mounting rail EN 50 022 (35x7,5)	TS 35_7,5		TS 35_7,5

&EMC/11

+UC31/1

			Date	12/22/2022	Volvo Trucks North America	Valiant TMS	Parts list : TS 35_7,5 - TS 35_7,5	Drawing name: =2V13&EFS_EL	=	
			Ed.	MKLEPADLO					+	
			Appr		Sub-Floor Members			Document type: EPB	Project nr: 22-16146	Page 1 / 614
Modification	Date	Name	Original		Replacement of / Replaced by	Scale 1:1				

Parts list

F01_001

Device tag	Quantity	Designation	Type number	Supplier	Part number
=KF0-M1	1	Ground bar kit, 5 positions.	ECGB5	SIE	US2.ECGB5
=KF0-M1	1	Wiring Duct Covers, PVC	C1.5LG6	PAN	PAN.C1.5LG6
=KF0-M1	1	Wiring Duct Covers, PVC	C1LG6	PAN	PAN.C1LG6
=KF0-M1	1	Wide Slotted Wiring Duct, PVC	G1.5X4LG6	PAN	PAN.G1.5X4LG6
=KF0-M1	1	Wide Slotted Wiring Duct, PVC	G1X4LG6	PAN	PAN.G1X4LG6
=KF0-M1	1	STAND.SECTIONAL RAIL 35MM, LENGTH 483MM	6ES5710-8MA11	Siemens AG	SIE.6ES5710-8MA11
=KF0-UC31	1	PC PC enclosure system, WHD: 800x1600x600 mm, Sheet steel	PC.5386050	RIT	RIT.5386050
=KF0-UC31	1				TS 8617.580
=KF0-UC31	1				TS 8640.003
=KF0-UC31	1				TS 8640.033
=KF0-UC91	1	Pushbutton Enclosure, Type 12, 4PB, 22.5mm holes, 10.00Hx3.25Wx2.75D, Gray, Steel	E4PBG	HOFFMAN	HOF.E4PBG
=KF0-UC91	1	Hol-Sealers Hole Seal, 1.22" diameter, Gray, Steel	ASPBG	HOFFMAN	ASPBG
=KF0-UC92	1	Pushbutton Enclosure, Type 12, 4PB, 22.5mm holes, 10.00Hx3.25Wx2.75D, Gray, Steel	E4PBG	HOFFMAN	HOF.E4PBG
=KF0-UC92	1	LEGEND PLATET KTC15-1005	KTC15-1005		ABB.1SFA616915R1005
=KF0-UC92	1	Hol-Sealers Hole Seal, 1.22" diameter, Gray, Steel	ASPBG	HOFFMAN	ASPBG
=KF0KF1-KF1.31	1	CPU 1515F-2 PN, 750KB Prog.,3MB Data	6ES7515-2FM02-0AB0	SIE	SIE.6ES7515-2FM02-0AB0
=KF0KF1-KF1.31	1	SIMATIC S7 MEMORY CARD, 2 GB	6ES7954-8LP03-0AA0	SIE	SIE.6ES7954-8LP03-0AA0
=KF0KF1-KF1.31	1	MOUNTING RAIL 160MM (6.3")	6ES7590-1AB60-0AA0	SIE	SIE.6ES7590-1AB60-0AA0
=KF0KF1-KF31	1				SIE.6ES7155-6AA01-0BN0_subassembly
=KF0KF1-KF31	1	ET200SP, SERVERMODULE	6ES7193-6PA00-0AA0		SIE.6ES7193-6PA00-0AA0
=KF0KF1-KF31.11	1	ET 200SP, DI 16x 24V DC ST, PU 1	6ES7131-6BH01-0BA0	SIE	SIE.6ES7131-6BH01-0BA0
=KF0KF1-KF31.11	1	BASEUNIT TYPE A0, BU15-P16+A0+2D	6ES7193-6BP00-0DA0	SIE	SIE.6ES7193-6BP00-0DA0
=KF0KF1-KF31.21	1	ET 200SP, DQ 16x 24V DC/0,5A ST, PU 1	6ES7132-6BH01-0BA0	SIE	SIE.6ES7132-6BH01-0BA0
=KF0KF1-KF31.21	1	BASEUNIT TYPE A0, BU15-P16+A0+2D	6ES7193-6BP00-0DA0	SIE	SIE.6ES7193-6BP00-0DA0
=KF0KF1-KF31.31	1	ET 200SP, El-Mod., F-DI 8x24VDC HF	6ES7136-6BA01-0CA0	SIE	SIE.6ES7136-6BA01-0CA0
=KF0KF1-KF31.31	1	BASEUNIT TYPE A0, BU15-P16+A0+2D	6ES7193-6BP00-0DA0	SIE	SIE.6ES7193-6BP00-0DA0
=KF0KF1-KF99.31	1	SCALANCE S615	6GK5615-0AA00-2AA2	SIE	SIE.6GK5615-0AA00-2AA2
=KF0KF1-KF100.31	1	SCALANCE XC216	6GK5216-0BA00-2AC2	SIE	SIE.6GK5216-0BA00-2AC2
=KF0KF1-KF100.31-P6	1	Profinet cable - RJ45 plug to M12 Female receptacle; 1m long	RJ45S FKSDED 423-1M	TURCK	TUR.RJ45S FKSDED 423-1M
=KF0KF1-KF100.31-P7	1	Profinet cable - RJ45 plug to M12 Female receptacle; 1m long	RJ45S FKSDED 423-1M	TURCK	TUR.RJ45S FKSDED 423-1M
=KF0KF1-KF100.31-P8	1	Profinet cable - RJ45 plug to M12 Female receptacle; 1m long	RJ45S FKSDED 423-1M	TURCK	TUR.RJ45S FKSDED 423-1M
=KF0KF1-KF100.31-P9	1	Profinet cable - RJ45 plug to M12 Female receptacle; 1m long	RJ45S FKSDED 423-1M	TURCK	TUR.RJ45S FKSDED 423-1M
=KF0KF1-KF100.31-P10	1	Profinet cable - RJ45 plug to M12 Female receptacle; 1m long	RJ45S FKSDED 423-1M	TURCK	TUR.RJ45S FKSDED 423-1M
=KF0KF1-KF100.31-P11	1	Profinet cable - RJ45 plug to M12 Female receptacle; 1m long	RJ45S FKSDED 423-1M	TURCK	TUR.RJ45S FKSDED 423-1M
=KF0KF1-KF100.31-P12	1	Profinet cable - RJ45 plug to M12 Female receptacle; 1m long	RJ45S FKSDED 423-1M	TURCK	TUR.RJ45S FKSDED 423-1M
=KF0KF1-KF100.31-P13	1	Profinet cable - RJ45 plug to M12 Female receptacle; 1m long	RJ45S FKSDED 423-1M	TURCK	TUR.RJ45S FKSDED 423-1M
=KF0KF1-KF100.31-P14	1	Profinet cable - RJ45 plug to M12 Female receptacle; 1m long	RJ45S FKSDED 423-1M	TURCK	TUR.RJ45S FKSDED 423-1M
=KF0KF1-KF100.31-P15	1	Profinet cable - RJ45 plug to M12 Female receptacle; 1m long	RJ45S FKSDED 423-1M	TURCK	TUR.RJ45S FKSDED 423-1M
=KF0KF1-KF100.31-P16	1	Profinet cable - RJ45 plug to M12 Female receptacle; 1m long	RJ45S FKSDED 423-1M	TURCK	TUR.RJ45S FKSDED 423-1M
=KF0KF1-XG1	1				4000-73000-0180000
=KF0KF1-XG2	1				4000-73000-0180000
=KF0PZ1-PF1	1	Signaling column connection element for pipe mounting incl. end cover and seal	8WD4408-0AA	SIE	SIE.8WD4408-0AA
=KF0PZ1-PF1	1	Tube with foot, tube length 100 mm, accessory for signaling columns 8WD44, D=70 mm	8WD4308-0DA	SIEMENS	SIE.8WD4308-0DA
=KF0PZ1-PF1	1	Signaling column multifunctional siren element different sounds can be set 24 V	8WD4420-0EA2		SIE.8WD4420-0EA2
=KF0PZ1-PF1	1	Signaling column continuous light element LED red, 24 V AC/DC	8WD4420-5AB	SIE	SIE.8WD4420-5AB
=KF0PZ1-PF1	1	Signaling column continuous light element LED green, 24 V AC/DC	8WD4420-5AC	SIE	SIE.8WD4420-5AC
=KF0WC3-FC1	1	Miniature Circuit Breaker - SU200 M - 1P - C - 10 A	SU201M-C10	ABB	ABB.2CDS271337R0104
=KF0WC3-FC1	1	S2C-H6RU - Auxiliary Contact	S2C-H6RU	ABB	ABB.2CDS200914R0001
=KF0WC3-FC2	1	Miniature Circuit Breaker - SU200 M - 1P - C - 10 A	SU201M-C10	ABB	ABB.2CDS271337R0104
=KF0WC3-FC2	1	S2C-H6RU - Auxiliary Contact	S2C-H6RU	ABB	ABB.2CDS200914R0001
=KF0WC4-FC11	1	4x3-10A	6EP1961-2BA41	SIE	SIE.6EP1961-2BA41
=KF0WC4-GA1	1	SITOP UPS1600	6EP4134-3AB00-2AY0		SIE.6EP4134-3AB00-2AY0
=KF0WC4-GB1	1	SITOP UPS1100	6EP4134-0GB00-0AY0	SIE	SIE.6EP4134-0GB00-0AY0
=KF0WC4-TA1	1	SITOP PSU6200 1ph 24 V/20 A	6EP3336-7SB00-3AX0		SIE.6EP3336-7SB00-3AX0

Parts list

F01_001

Device tag	Quantity	Designation	Type number	Supplier	Part number
=KF0FQ0-SF1	1	EMERGENCY STOP CE4T-10R-02	CE4T-10R-02	ABB	ABB.1SFA619550R1051
=KF0FQ0-SF1	1	LEGEND PLATET KTC15-1005	KTC15-1005		ABB.1SFA616915R1005
=KF0SF1-SF5	1	PUSHBUTTON CP1-10G-20	CP1-10G-20	ABB	ABB.1SFA619100R1022
=KF0SF1-SF6	1	PUSHBUTTON CP1-10Y-20	CP1-10Y-20	ABB	ABB.1SFA619100R1023

+UC31/1

+.UC92/1

			Date	12/22/2022	Volvo Trucks North America	Valiant TMS	Parts list : ABB.1SFA619550R1051 - ABB.1SFA619100R1023	Drawing name: =2V13&EFS_EL	=	
			Ed.	MKLEPADLO					+ UC31UC91	
			Appr		Sub-Floor Members			Document type: EPB	Project nr: 22-16146	Page 1
Modification	Date	Name	Original		Replacement of / Replaced by	Scale 1:1				614

Parts list

F01_001

Device tag	Quantity	Designation	Type number	Supplier	Part number
=KF0SF1-SF1/PF1	1	PUSHBUTTON CP1-11R-10 24V AC/DC	CP1-11R-10	ABB	ABB.1SFA619100R1111
=KF0SF1-SF2	1	PUSHBUTTON CP1-10B-20	CP1-10B-20	ABB	ABB.1SFA619100R1026
=KF0SF1-SF3/PF3	1	PUSHBUTTON CP1-11C-10	CP1-11C-10	ABB	ABB.1SFA619100R1118
=KF0SF1-SF4	1	SELECTOR SWITCH C2SS1-10B-10	C2SS1-10B-10	ABB	ABB.1SFA619200R1016

Parts list

F01_001

Device tag	Quantity	Designation	Type number	Supplier	Part number
=V1AR21XQ11WC1-XG1	1	Surface socket-outlet		ABB	ABB.2CMA193115R1000

+UC31UC92/1

+.AR22XQ11UC01/1

			Date	12/22/2022	Volvo Trucks North America	Valiant TMS	Parts list : ABB.2CMA193115R1000 - ABB.2CMA193115R1000	Drawing name: =2V13&EFS_EL	=		
			Ed.	MKLEPADLO					+ V1AR21XQ11UC01		
			Appr		Sub-Floor Members			Document type: EPB	Project nr: 22-16146	Page	1
Modification	Date	Name	Original		Replacement of / Replaced by	Scale 1:1					614

Parts list

F01_001

Device tag	Quantity	Designation	Type number	Supplier	Part number
=V1AR22XQ11WC1-XG1	1	Surface socket-outlet		ABB	ABB.2CMA193115R1000

+.AR21XQ11UC01/1

+.AR41UQ41/1

			Date	12/22/2022	Volvo Trucks North America	Valiant TMS	Parts list : ABB.2CMA193115R1000 - ABB.2CMA193115R1000	Drawing name: =2V13&EFS_EL	=	
			Ed.	MKLEPADLO					+ V1AR22XQ11UC01	
			Appr		Sub-Floor Members			Document type: EPB	Project nr: 22-16146	Page 1 / 614
Modification	Date	Name	Original		Replacement of / Replaced by	Scale 1:1				

Parts list

F01_001

Device tag	Quantity	Designation	Type number	Supplier	Part number
=V1AR41UQ41BG0-BG01	1	Inductive sensor	NI50U-CK40-AP6X2-H1141/S1590 W/BS4_A	Turck	TUR.1625891
=V1AR41UQ41BG0-BG02	1	Inductive sensor	NI50U-CK40-AP6X2-H1141/S1590 W/BS4_A	Turck	TUR.1625891
=V1AR41UQ41BG0-BG03	1	Inductive sensor	NI50U-CK40-AP6X2-H1141/S1590 W/BS4_A	Turck	TUR.1625891
=V1AR41UQ41BG0-BG04	1	Inductive sensor	NI50U-CK40-AP6X2-H1141/S1590 W/BS4_A	Turck	TUR.1625891
=V1AR41UQ41BG0-BG05	1	Inductive sensor	NI50U-CK40-AP6X2-H1141/S1590 W/BS4_A	Turck	TUR.1625891
=V1AR41UQ41BG0-BG06	1	Inductive sensor	NI50U-CK40-AP6X2-H1141/S1590 W/BS4_A	Turck	TUR.1625891
=V1AR41UQ41BG0-XG1/2	1	Y splitter	U2-30676	TURCK	TUR.VB2-FSM 4.4/2FKM 4/S3450
=V1AR41UQ41BG0-XG3/4	1	Y splitter	U2-30676	TURCK	TUR.VB2-FSM 4.4/2FKM 4/S3450
=V1AR41UQ41BG0-XG5/6	1	Y splitter	U2-30676	TURCK	TUR.VB2-FSM 4.4/2FKM 4/S3450
=V1AR41UQ41KF1-KF1	0	Bus node	CPX-FB33	FES	FES.548755
=V1AR41UQ41KF1-KF1	0	Interlinking block	CPX-M-GE-EV-S-7/8-5POL	FES	FES.550208
=V1AR41UQ41KF1-KF1.11	0	Manifold block	CPX-M-AB-8-M12X2-5POL	FES	FES.549335
=V1AR41UQ41KF1-KF1.12	0	Manifold block	CPX-M-AB-8-M12X2-5POL	FES	FES.549335

Parts list

F01_001

Device tag	Quantity	Designation	Type number	Supplier	Part number
=V1AR41UQ41UQ1.1-BGS/R	1				TUN.1324633

+V1AR41UQ41/1

+.AR41UQ41UQ1.2/1

			Date	12/22/2022	Volvo Trucks North America	Valiant TMS	Parts list : TUN.1324633 - TUN.1324633	Drawing name: =2V13&EFS_EL	=	
			Ed.	MKLEPADLO					+ V1AR41UQ41UQ1.1	
			Appr		Sub-Floor Members			Document type: EPB	Project nr: 22-16146	Page 1
Modification	Date	Name	Original		Replacement of / Replaced by	Scale 1:1				614

Parts list

F01_001

Device tag	Quantity	Designation	Type number	Supplier	Part number
=V1AR41UQ41UQ1.2-BGS/R	1				TUN.1324633

+.AR41UQ41UQ1.1/1

+.AR41UQ41UQ1.3/1

Parts list

F01_001

Device tag	Quantity	Designation	Type number	Supplier	Part number
=V1AR41UQ41UQ1.3-BGS/R	1				TUN.1324633

+.AR41UQ41UQ1.2/1

+.AR41UQ41UQ1.4/1

Parts list

F01_001

Device tag	Quantity	Designation	Type number	Supplier	Part number
=V1AR41UQ41UQ1.4-BGS/R	1				TUN.1324633

+.AR41UQ41UQ1.3/1

+.AR41UQ41UQ2.1/1

Parts list

F01_001

Device tag	Quantity	Designation	Type number	Supplier	Part number
=V1AR41UQ41UQ2.1-BGS/R	1				TUN.1324633

+.AR41UQ41UQ1.4/1

+.AR41UQ41UQ2.2/1

Parts list

F01_001

Device tag	Quantity	Designation	Type number	Supplier	Part number
=V1AR41UQ41UQ2.2-BGS/R	1				TUN.1324633

+.AR41UQ41UQ2.1/1

+.AR41UQ41UQ2.3/1

Parts list

F01_001

Device tag	Quantity	Designation	Type number	Supplier	Part number
=V1AR41UQ41UQ2.3-BGS/R	1				TUN.1324633

+.AR41UQ41UQ2.2/1

+.AR41XQ11UC01/1

Parts list

F01_001

Device tag	Quantity	Designation	Type number	Supplier	Part number
=V1AR41XQ11WC1-XG1	1	Surface socket-outlet		ABB	ABB.2CMA193115R1000

+.AR41UQ41UQ2.3/1

+.AR42UQ41/1

Parts list

F01_001

Device tag	Quantity	Designation	Type number	Supplier	Part number
=V1AR42UQ41BG0-BG01	1	Inductive sensor	NI50U-CK40-AP6X2-H1141/S1590 W/BS4_A	Turck	TUR.1625891
=V1AR42UQ41BG0-BG02	1	Inductive sensor	NI50U-CK40-AP6X2-H1141/S1590 W/BS4_A	Turck	TUR.1625891
=V1AR42UQ41BG0-BG03	1	Inductive sensor	NI50U-CK40-AP6X2-H1141/S1590 W/BS4_A	Turck	TUR.1625891
=V1AR42UQ41BG0-BG04	1	Inductive sensor	NI50U-CK40-AP6X2-H1141/S1590 W/BS4_A	Turck	TUR.1625891
=V1AR42UQ41BG0-BG05	1	Inductive sensor	NI50U-CK40-AP6X2-H1141/S1590 W/BS4_A	Turck	TUR.1625891
=V1AR42UQ41BG0-BG06	1	Inductive sensor	NI50U-CK40-AP6X2-H1141/S1590 W/BS4_A	Turck	TUR.1625891
=V1AR42UQ41BG0-XG1/2	1	Y splitter	U2-30676	TURCK	TUR.VB2-FSM 4.4/2FKM 4/S3450
=V1AR42UQ41BG0-XG3/4	1	Y splitter	U2-30676	TURCK	TUR.VB2-FSM 4.4/2FKM 4/S3450
=V1AR42UQ41BG0-XG5/6	1	Y splitter	U2-30676	TURCK	TUR.VB2-FSM 4.4/2FKM 4/S3450
=V1AR42UQ41KF1-KF1	0	Bus node	CPX-FB33	FES	FES.548755
=V1AR42UQ41KF1-KF1	0	Interlinking block	CPX-M-GE-EV-S-7/8-5POL	FES	FES.550208
=V1AR42UQ41KF1-KF1.11	0	Manifold block	CPX-M-AB-8-M12X2-5POL	FES	FES.549335
=V1AR42UQ41KF1-KF1.12	0	Manifold block	CPX-M-AB-8-M12X2-5POL	FES	FES.549335

Parts list

F01_001

Device tag	Quantity	Designation	Type number	Supplier	Part number
=V1AR42UQ41UQ1.1-BGS/R	1	4-Wire, 4-Pin, DC M12 X 1 (PNP)	WWS001A	WEL	WEL.WWS001A

+V1AR42UQ41/1

+.AR42UQ41UQ1.2/1

			Date	12/22/2022	Volvo Trucks North America	Valiant TMS	Parts list : WEL.WWS001A - WEL.WWS001A	Drawing name: =2V13&EFS_EL	=	
			Ed.	MKLEPADLO					+ V1AR42UQ41UQ1.1	
			Appr		Sub-Floor Members			Document type: EPB	Project nr: 22-16146	Page 1
Modification	Date	Name	Original		Replacement of / Replaced by	Scale 1:1				614

Parts list

F01_001

Device tag	Quantity	Designation	Type number	Supplier	Part number
=V1AR42UQ41UQ1.2-BGS/R	1	4-Wire, 4-Pin, DC M12 X 1 (PNP)	WWS001A	WEL	WEL.WWS001A

+.AR42UQ41UQ1.1/1

+.AR42UQ41UQ2.1/1

Parts list

F01_001

Device tag	Quantity	Designation	Type number	Supplier	Part number
=V1AR42UQ41UQ2.1-BGS/R	1	Inductive sensor Monitoring Kit for Power Clamps	1324638	TUNKERS	TUN.1324638

+.AR42UQ41UQ1.2/1

+.AR42UQ41UQ2.2/1

Parts list

F01_001

Device tag	Quantity	Designation	Type number	Supplier	Part number
=V1AR42UQ41UQ2.2-BGS/R	1	Inductive sensor Monitoring Kit for Power Clamps	1324638	TUNKERS	TUN.1324638

Parts list

F01_001

Device tag	Quantity	Designation	Type number	Supplier	Part number
=V1AR42UQ41UQ2.3-BGS/R	1	Inductive sensor Monitoring Kit for Power Clamps	1324638	TUNKERS	TUN.1324638

Parts list

F01_001

Device tag	Quantity	Designation	Type number	Supplier	Part number
=V1AR42UQ41UQ2.4-BGS/R	1	Inductive sensor Monitoring Kit for Power Clamps	1324638	TUNKERS	TUN.1324638

Parts list

F01_001

Device tag	Quantity	Designation	Type number	Supplier	Part number
=V1AR42UQ41UQ3.1-BGS/R	1	Inductive sensor Monitoring Kit for Power Clamps	1324638	TUNKERS	TUN.1324638

+.AR42UQ41UQ2.4/1

+.AR42UQ41UQ3.2/1

Parts list

F01_001

Device tag	Quantity	Designation	Type number	Supplier	Part number
=V1AR42UQ41UQ3.2-BGS/R	1	Inductive sensor Monitoring Kit for Power Clamps	1324638	TUNKERS	TUN.1324638

+.AR42UQ41UQ3.1/1

+.AR42UQ41UQ3.3/1

Parts list

F01_001

Device tag	Quantity	Designation	Type number	Supplier	Part number
=V1AR42UQ41UQ3.3-BGS/R	1	Inductive sensor Monitoring Kit for Power Clamps	1324644	TUNKERS	TUN.1324644

+.AR42UQ41UQ3.2/1

+.AR42XQ11UC01/1

			Date	12/22/2022	Volvo Trucks North America	Valiant TMS	Parts list : TUN.1324644 - TUN.1324644	Drawing name: =2V13&EFS_EL	=	
			Ed.	MKLEPADLO					+ V1AR42UQ41UQ3.3	
			Appr		Sub-Floor Members			Document type: EPB	Project nr: 22-16146	Page 1
Modification	Date	Name	Original		Replacement of / Replaced by	Scale 1:1				614

Parts list

F01_001

Device tag	Quantity	Designation	Type number	Supplier	Part number
=V1AR42XQ11WC1-XG1	1	Surface socket-outlet		ABB	ABB.2CMA193115R1000
=WC1-WC1	1	Golvskåp TS 8 sidskåp	TS8	RIT	RIT.SETS8205SID5
=WC1-WC1	1	TS Trim panel, sides, H: 100 mm, for W: 500 mm, RAL 7022, sheet steel	TS.8601050	RIT	RIT.8601050
=WC1-WC1	1	TS Base/plinth component, rear, H: 100 mm, for W: 1200 mm, RAL 7022, sheet steel	TS.8601200	RIT	RIT.8601200
=WC1-WC1	1	TS Side panel, screw-fastened, for TS, TS IT, for WD: 2000x500 mm, Sheet steel	TS.8105235	RIT	RIT.8105235
=WC1-WC1	1	PS Wiring plan pockets, for TS, CM, SE, PC, TP pedestal, sheet steel	TS.4115000	RIT	RIT.4115000

Parts list

F01_001

Device tag	Quantity	Designation	Type number	Supplier	Part number
=V1AR61XQ21WC1-QB1	1				SE.CH362AWC
=V1AR61XQ21WC1-QB1	1				BUS.LPJ-35SP
=V1AR61XQ21WC1-QB1	1				BUR.BDBMHC113501
=V1AR61XQ21WC1-QB1	1				NPJ6485
=V1AR61XQ21WC1-XG1	1	Surface socket-outlet		ABB	ABB.2CMA193115R1000
=WC1-WC1	1	Golvskåp TS 8 sidskåp	TS8	RIT	RIT.SETS8205SID5
=WC1-WC1	1	TS Trim panel, sides, H: 100 mm, for W: 500 mm, RAL 7022, sheet steel	TS.8601050	RIT	RIT.8601050
=WC1-WC1	1	TS Base/plinth component, rear, H: 100 mm, for W: 1200 mm, RAL 7022, sheet steel	TS.8601200	RIT	RIT.8601200
=WC1-WC1	1	TS Side panel, screw-fastened, for TS, TS IT, for WD: 2000x500 mm, Sheet steel	TS.8105235	RIT	RIT.8105235
=WC1-WC1	1	PS Wiring plan pockets, for TS, CM, SE, PC, TP pedestal, sheet steel	TS.4115000	RIT	RIT.4115000

Parts list

F01_001

Device tag	Quantity	Designation	Type number	Supplier	Part number
=V1AR61XQ23WC1-XG1	1	Surface socket-outlet		ABB	ABB.2CMA193115R1000

+.AR61XQ21UC01/1

+.AR62XQ21UC01/1

			Date	12/22/2022	Volvo Trucks North America	Valiant TMS	Parts list : ABB.2CMA193115R1000 - ABB.2CMA193115R1000	Drawing name: =2V13&EFS_EL	=	
			Ed.	MKLEPADLO					+ V1AR61XQ23UC01	
			Appr		Sub-Floor Members			Document type: EPB	Project nr: 22-16146	Page 1
Modification	Date	Name	Original		Replacement of / Replaced by	Scale 1:1				614

Parts list

F01_001

Device tag	Quantity	Designation	Type number	Supplier	Part number
=V1AR62XQ21WC1-QB1	1				SE.CH362AWC
=V1AR62XQ21WC1-QB1	1				BUS.LPJ-35SP
=V1AR62XQ21WC1-QB1	1				BUR.BDBMHC113501
=V1AR62XQ21WC1-QB1	1				NPJ6485
=V1AR62XQ21WC1-XG1	1	Surface socket-outlet		ABB	ABB.2CMA193115R1000
=WC1-WC1	1	Golvskåp TS 8 sidskåp	TS8	RIT	RIT.SETS8205SID5
=WC1-WC1	1	TS Trim panel, sides, H: 100 mm, for W: 500 mm, RAL 7022, sheet steel	TS.8601050	RIT	RIT.8601050
=WC1-WC1	1	TS Base/plinth component, rear, H: 100 mm, for W: 1200 mm, RAL 7022, sheet steel	TS.8601200	RIT	RIT.8601200
=WC1-WC1	1	TS Side panel, screw-fastened, for TS, TS IT, for WD: 2000x500 mm, Sheet steel	TS.8105235	RIT	RIT.8105235
=WC1-WC1	1	PS Wiring plan pockets, for TS, CM, SE, PC, TP pedestal, sheet steel	TS.4115000	RIT	RIT.4115000

Parts list

F01_001

Device tag	Quantity	Designation	Type number	Supplier	Part number
=V1FQ1-BR11	1	EZ-Screen System	SLSCP30-1200P44NT	BANNER	BAN.SLSCP30-1200P44NT
=V1FQ1-BR12	1	EZ-Screen System	SLSCP30-1200P88	BANNER	BAN.SLSCP30-1200P88
=V1FQ1-BR13	1	EZ-Screen System	SLSCP30-1200P44NT	BANNER	BAN.SLSCP30-1200P44NT
=V1FQ1-BR14	1	EZ-Screen System	SLSCP30-1200P44NT	BANNER	BAN.SLSCP30-1200P44NT
=V1FQ1-BR15	1	EZ-Screen System	SLSCP30-1200P88	BANNER	BAN.SLSCP30-1200P88
=V1FQ1-BR16	1	EZ-Screen System	SLSCP30-1200P44NT	BANNER	BAN.SLSCP30-1200P44NT

Parts list

F01_001

Device tag	Quantity	Designation	Type number	Supplier	Part number
=V1FQ1-BG1	1	SWITCH	MGB-L2B-PNA-R-121859	EUCHNER	EUC.MGB-L2B-PNA-R-121859
=V1FQ1-BG1	1	HANDLE	MGB-H-AA1A2-R-106049	EUCHNER	EUC.MGB-H-AA1A2-R-106049
=V1FQ1-BG1	1	MOUNTING PLATE	MGB-A-MOUNTINGPLATE-H-109491	EUCHNER	EUC.MGB-A-MOUNTINGPLATE-H-109491
=V1FQ1-BG1	1	ESCAPE RELEASE	MGB-E-A2-106051	EUCHNER	EUC.MGB-E-A2-106051

Parts list

F01_001

Device tag	Quantity	Designation	Type number	Supplier	Part number
=V1FQ1-BG2	1	SWITCH	MGB-L2B-PNA-R-121859	EUCHNER	EUC.MGB-L2B-PNA-R-121859
=V1FQ1-BG2	1	HANDLE	MGB-H-AA1A2-R-106049	EUCHNER	EUC.MGB-H-AA1A2-R-106049
=V1FQ1-BG2	1	MOUNTING PLATE	MGB-A-MOUNTINGPLATE-H-109491	EUCHNER	EUC.MGB-A-MOUNTINGPLATE-H-109491
=V1FQ1-BG2	1	ESCAPE RELEASE	MGB-E-A2-106051	EUCHNER	EUC.MGB-E-A2-106051

+.FQ1BG1/1

+.U10U01/1

			Date	12/22/2022	Volvo Trucks North America	Valiant TMS	Parts list : EUC.MGB-L2B-PNA-R-121859 - EUC.MGB-E-A2-106051	Drawing name: =2V13&EFS_EL	=	
			Ed.	MKLEPADLO					+ V1FQ1BG2	
			Appr		Sub-Floor Members			Document type: EPB	Project nr: 22-16146	Page 1
Modification	Date	Name	Original		Replacement of / Replaced by	Scale 1:1				614

Parts list

F01_001

Device tag	Quantity	Designation	Type number	Supplier	Part number
=V1U10U01KF1-KF1.11	1	MVK-MPNIO DI8 DO8 FSU	MVK-MPNIO DI8 DO8 FSU	MURR	MURR.55339
=V1U10U01PF1-PF1	1	K50L Series Daylight Visible Indicators	K50L2RGB7QP	BANNER	BAN.805371
=V1U10U01PF1-PF1	1	Mounting kit	SMB30A	BANNER	BAN.32723

Parts list

F01_001

Device tag	Quantity	Designation	Type number	Supplier	Part number
=V1U30U01KF1-KF1.11	1	MVK-MPNIO DI8 DO8 FSU	MVK-MPNIO DI8 DO8 FSU	MURR	MURR.55339
=V1U30U01PF1-PF1	1	K50L Series Daylight Visible Indicators	K50L2RGB7QP	BANNER	BAN.805371
=V1U30U01PF1-PF1	1	Mounting kit	SMB30A	BANNER	BAN.32723

Parts list

F01_001

Device tag	Quantity	Designation	Type number	Supplier	Part number
=V1AR21-FC1	1		EMPD3FBCB-025A-M	Electro-Matic	EMPD3FBCB-025A-M
=V1AR22-FC1	1		EMPD3FBCB-025A-M	Electro-Matic	EMPD3FBCB-025A-M
=V1AR41-FC1	1		EMPD3FBCB-025A-M	Electro-Matic	EMPD3FBCB-025A-M
=V1AR42-FC1	1		EMPD3FBCB-025A-M	Electro-Matic	EMPD3FBCB-025A-M
=V1AR61-FC1	1				EMPD3FBCB-015A-M
=V1AR61XQ23-FC1	1		EMPD3FBCB-060A-M	Electro-Matic	EMPD3FBCB-060A-M
=V1AR62-FC1	1				EMPD3FBCB-015A-M
=V1KF1-KF11	1				SIE.6ES7155-6AA01-0BN0_subassembly
=V1KF1-KF11	1	ET200SP, SERVERMODULE	6ES7193-6PA00-0AA0		SIE.6ES7193-6PA00-0AA0
=V1KF1-KF11.11	1	ET 200SP, DI 16x 24V DC ST, PU 1	6ES7131-6BH01-0BA0	SIE	SIE.6ES7131-6BH01-0BA0
=V1KF1-KF11.11	1	BASEUNIT TYPE A0, BU15-P16+A0+2D	6ES7193-6BP00-0DA0	SIE	SIE.6ES7193-6BP00-0DA0
=V1KF1-KF11.12	1	ET 200SP, DI 16x 24V DC ST, PU 1	6ES7131-6BH01-0BA0	SIE	SIE.6ES7131-6BH01-0BA0
=V1KF1-KF11.12	1	BASEUNIT TYPE A0, BU15-P16+A0+2D	6ES7193-6BP00-0DA0	SIE	SIE.6ES7193-6BP00-0DA0
=V1KF1-KF11.13	1	ET 200SP, DI 16x 24V DC ST, PU 1	6ES7131-6BH01-0BA0	SIE	SIE.6ES7131-6BH01-0BA0
=V1KF1-KF11.13	1	BASEUNIT TYPE A0, BU15-P16+A0+2D	6ES7193-6BP00-0DA0	SIE	SIE.6ES7193-6BP00-0DA0
=V1KF1-KF11.14	1	ET 200SP, DI 16x 24V DC ST, PU 1	6ES7131-6BH01-0BA0	SIE	SIE.6ES7131-6BH01-0BA0
=V1KF1-KF11.14	1	BASEUNIT TYPE A0, BU15-P16+A0+2D	6ES7193-6BP00-0DA0	SIE	SIE.6ES7193-6BP00-0DA0
=V1KF1-KF11.21	1	ET 200SP, DQ 16x 24V DC/0,5A ST, PU 1	6ES7132-6BH01-0BA0	SIE	SIE.6ES7132-6BH01-0BA0
=V1KF1-KF11.21	1	BASEUNIT TYPE A0, BU15-P16+A0+2D	6ES7193-6BP00-0DA0	SIE	SIE.6ES7193-6BP00-0DA0
=V1KF1-KF11.31	1	ET 200SP, El-Mod., F-DI 8x24VDC HF	6ES7136-6BA00-0CA0	SIEMENS	SIE.6ES7136-6BA00-0CA0
=V1KF1-KF11.31	1	BASEUNIT TYPE A0, BU15-P16+A0+2B	6ES7193-6BP00-0BA0	SIE	SIE.6ES7193-6BP00-0BA0
=V1KF1-KF11.32	1	ET 200SP, El-Mod., F-DI 8x24VDC HF	6ES7136-6BA00-0CA0	SIEMENS	SIE.6ES7136-6BA00-0CA0
=V1KF1-KF11.32	1	BASEUNIT TYPE A0, BU15-P16+A0+2B	6ES7193-6BP00-0BA0	SIE	SIE.6ES7193-6BP00-0BA0
=V1KF1-KF11.41	1	ET 200SP, El-Mod., F-DQ 4xDC 24V/2A	6ES7136-6DB00-0CA0		SIE.6ES7136-6DB00-0CA0
=V1KF1-KF11.41	1	BASEUNIT TYPE A0, BU15-P16+A0+2B	6ES7193-6BP00-0BA0	SIE	SIE.6ES7193-6BP00-0BA0
=V1KF1-KF11.42	1	ET 200SP, El-Mod., F-DQ 4xDC 24V/2A	6ES7136-6DB00-0CA0		SIE.6ES7136-6DB00-0CA0
=V1KF1-KF11.42	1	BASEUNIT TYPE A0, BU15-P16+A0+2B	6ES7193-6BP00-0BA0	SIE	SIE.6ES7193-6BP00-0BA0
=V1KF1-KF11.51	1	ET 200SP, F-RQ 1x24VDC/24..230VAC/5A ST	6ES7136-6RA00-0BF0		SIE.6ES7136-6RA00-0BF0
=V1KF1-KF11.51	1	BASEUNIT TYPE F0, BU20-P8+A4+0B	6ES7193-6BP20-0BF0	SIE	SIE.6ES7193-6BP20-0BF0
=V1KF1-KF11.52	1	ET 200SP, F-RQ 1x24VDC/24..230VAC/5A ST	6ES7136-6RA00-0BF0		SIE.6ES7136-6RA00-0BF0
=V1KF1-KF11.52	1	BASEUNIT TYPE F0, BU20-P8+A4+0B	6ES7193-6BP20-0BF0	SIE	SIE.6ES7193-6BP20-0BF0
=V1KF1-KF11.53	1	ET 200SP, F-RQ 1x24VDC/24..230VAC/5A ST	6ES7136-6RA00-0BF0		SIE.6ES7136-6RA00-0BF0
=V1KF1-KF11.53	1	BASEUNIT TYPE F0, BU20-P8+A4+0B	6ES7193-6BP20-0BF0	SIE	SIE.6ES7193-6BP20-0BF0
=V1KF1-KF11.54	1	ET 200SP, F-RQ 1x24VDC/24..230VAC/5A ST	6ES7136-6RA00-0BF0		SIE.6ES7136-6RA00-0BF0
=V1KF1-KF11.54	1	BASEUNIT TYPE F0, BU20-P8+A4+0B	6ES7193-6BP20-0BF0	SIE	SIE.6ES7193-6BP20-0BF0
=V1KF1-KF100.11	1	SCALANCE XC216	6GK5216-0BA00-2AC2	SIE	SIE.6GK5216-0BA00-2AC2
=V1KF1-KF100.11	1				SIE.6GK1900-0AB10
=V1WC1-FC1	1	MCCB_UL_FS125_15A_3P_65KA_TM_ FTFM	3VA5195-6ED31-0AA0	SIE	SIE.3VA5195-6ED31-0AA0
=V1WC1-KF1.1	1	BREAKER DATA SERVER, COM100	3VA9977-0TA20	SIE	SIE.3VA9977-0TA20
=V1WC1-KF1.2	1	Switched Ethernet PROFINET Module V3	7KM9300-0AE02-0AA0		SIE.7KM9300-0AE02-0AA0
=V1WC1-QB1	1	MCCB_UL_FS400_400A_3P_65KA_ETU8_LSI	3VA6340-6KP31-0AA0	SIE	SIE.3VA6340-6KP31-0AA0
=V1WC1-QB1-KF1	1	COMMUNICATION MODULE COM060	3VA9177-0TB10	SIE	SIE.3VA9177-0TB10
=V1WC1-TA1	1	Transformer	PTN102-3K	POWERTRAN	PTN102-3K
=V1WC2-A3	1	Multi-Environment Voltage Indicator and Safe-Test Point Combination Unit with Vertical Large Warning Label	R-3W2MT-LMF		GT.R-3W2MT-LMF
=V1WC2-FC1	1	MCCB_UL_FS125_20A_3P_65KA_TM_ FTFM	3VA5120-6ED31-0AA0	SIE	SIE.3VA5120-6ED31-0AA0
=V1WC2-FC1	1	SENTRON auxiliary switch Accessories for 3VA circuit breakers	3VA9978-0AA12	SIE	SIE.3VA9978-0AA12
=V1WC2-FC2	1	CIRCUIT BREAKER 10KA, 3POLE, C, 3A	5SJ4303-7HG42	SIE	SIE.5SJ4303-7HG42
=V1WC2-TA2	1	Transformer	PTN102-7.5K	POWERTRAN	PTN102-7.5K
=V1WC3-FC2	1	CIRCUIT BREAKER 240V 14KA, 1-POLE, C, 20A, D=70MM	5SJ4120-7HG41	SIE	SIE.5SJ4120-7HG41
=V1WC3-FC2	1	AUXILARY SWITCH 1NO1NC UL489	5ST3010-0HG	SIE	SIE.5ST3010-0HG
=V1WC3-FC3	1	CIRCUIT BREAKER 240V 14KA, 1-POLE, C, 10A, D=70MM	5SJ4110-7HG41	SIE	SIE.5SJ4110-7HG41
=V1WC3-FC3	1	AUXILARY SWITCH 1NO1NC UL489	5ST3010-0HG	SIE	SIE.5ST3010-0HG
=V1WC3-FC4	1	CIRCUIT BREAKER 240V 14KA, 1-POLE, C, 3A, D=70MM	5SJ4103-7HG41	SIE	SIE.5SJ4103-7HG41
=V1WC3-FC4	1	AUXILARY SWITCH 1NO1NC UL489	5ST3010-0HG	SIE	SIE.5ST3010-0HG
=V1WC3-FC5	1	CIRCUIT BREAKER 240V 14KA, 1-POLE, C, 16A, D=70MM	5SJ4116-7HG41	SIE	SIE.5SJ4116-7HG41
=V1WC3-FC6	1	CIRCUIT BREAKER 240V 14KA, 1-POLE, C, 16A, D=70MM	5SJ4116-7HG41	SIE	SIE.5SJ4116-7HG41

Parts list

F01_001

Device tag	Quantity	Designation	Type number	Supplier	Part number
=V1WC3-FC6	1	AUXILARY SWITCH 1NO1NC UL489	5ST3010-0HG	SIE	SIE.5ST3010-0HG
=V1WC3-FC7	1	CIRCUIT BREAKER 240V 14KA, 1-POLE, C, 16A, D=70MM	5SJ4116-7HG41	SIE	SIE.5SJ4116-7HG41
=V1WC3-FC7	1	AUXILARY SWITCH 1NO1NC UL489	5ST3010-0HG	SIE	SIE.5ST3010-0HG
=V1WC3-FC8	1	CIRCUIT BREAKER 240V 14KA, 1-POLE, C, 16A, D=70MM	5SJ4116-7HG41	SIE	SIE.5SJ4116-7HG41
=V1WC3-FC8	1	AUXILARY SWITCH 1NO1NC UL489	5ST3010-0HG	SIE	SIE.5ST3010-0HG
=V1WC3-FC9	1	CIRCUIT BREAKER 240V 14KA, 1-POLE, C, 6A, D=70MM	5SJ4106-7HG41	SIE	SIE.5SJ4106-7HG41
=V1WC3-FC9	1	AUXILARY SWITCH 1NO1NC UL489	5ST3010-0HG	SIE	SIE.5ST3010-0HG
=V1WC3-FC10	1	CIRCUIT BREAKER 240V 14KA, 1-POLE, C, 16A, D=70MM	5SJ4116-7HG41	SIE	SIE.5SJ4116-7HG41
=V1WC3-XG1	2	DBL175 Series Distribution Block	1SNL317510R0000	ENTRELEC	1SNL317510R0000
=V1WC3-XG2	2	DBL175 Series Distribution Block	1SNL317510R0000	ENTRELEC	1SNL317510R0000
=V1WC3-XG3	1	Panel Interface Connector with USB Type A/F to USB Type A/M [Qty: 2]; Category 5e RJ45 Jack; Hard Housing; UL Type 4; Duplex Outlet; 5 Amp Circuit Breaker	P11#2R2-K3RD5		GT_N.P-P11#2R2-K3RD5
=V1WC4-FC11	1	SITOP SEL1200 8 x 10A	6EP4438-7FB00-3DX0		SIE.6EP4438-7FB00-3DX0
=V1WC4-FC12	1	SITOP SEL1200 8 x 10A	6EP4438-7FB00-3DX0		SIE.6EP4438-7FB00-3DX0
=V1WC4-TA1	1	SITOP PSU6200 1ph 24 V/20 A	6EP3336-7SB00-3AX0		SIE.6EP3336-7SB00-3AX0
=V1WC4-TA2	1	SITOP PSU6200 1ph 24 V/20 A	6EP3336-7SB00-3AX0		SIE.6EP3336-7SB00-3AX0
=V1WR1-FC1	1		EMPD3FBCB-100A-M	Electro-Matic	EMPD3FBCB-100A-M
=V1WR2-FC1	1		EMPD3FBCB-060A-M	Electro-Matic	EMPD3FBCB-060A-M
=V1WR2TR1-FC1	1				EMPD3FBCB-30A-M
=WC1-WC1	1	Golvskåp TS 8 sidskåp	TS8	RIT	RIT.SETS8205SID5
=WC1-WC1	1	TS Trim panel, sides, H: 100 mm, for W: 500 mm, RAL 7022, sheet steel	TS.8601050	RIT	RIT.8601050
=WC1-WC1	1	TS Base/plinth component, rear, H: 100 mm, for W: 1200 mm, RAL 7022, sheet steel	TS.8601200	RIT	RIT.8601200
=WC1-WC1	1	TS Side panel, screw-fastened, for TS, TS IT, for WD: 2000x500 mm, Sheet steel	TS.8105235	RIT	RIT.8105235
=WC1-WC1	1	PS Wiring plan pockets, for TS, CM, SE, PC, TP pedestal, sheet steel	TS.4115000	RIT	RIT.4115000

Parts list

F01_001

Device tag	Quantity	Designation	Type number	Supplier	Part number
=V1KF1-KF14	1				SIE.6ES7155-6AA01-0BN0_subassembly
=V1KF1-KF14	1	ET200SP, SERVERMODULE	6ES7193-6PA00-0AA0		SIE.6ES7193-6PA00-0AA0
=V1KF1-KF14.11	1	ET 200SP, DI 16x 24V DC ST, PU 1	6ES7131-6BH01-0BA0	SIE	SIE.6ES7131-6BH01-0BA0
=V1KF1-KF14.11	1	BASEUNIT TYPE A0, BU15-P16+A0+2D	6ES7193-6BP00-0DA0	SIE	SIE.6ES7193-6BP00-0DA0
=V1KF1-KF14.12	1	ET 200SP, DI 16x 24V DC ST, PU 1	6ES7131-6BH01-0BA0	SIE	SIE.6ES7131-6BH01-0BA0
=V1KF1-KF14.12	1	BASEUNIT TYPE A0, BU15-P16+A0+2D	6ES7193-6BP00-0DA0	SIE	SIE.6ES7193-6BP00-0DA0
=V1KF1-KF14.21	1	ET 200SP, DQ 16x 24V DC/0,5A ST, PU 1	6ES7132-6BH01-0BA0	SIE	SIE.6ES7132-6BH01-0BA0
=V1KF1-KF14.21	1	BASEUNIT TYPE A0, BU15-P16+A0+2D	6ES7193-6BP00-0DA0	SIE	SIE.6ES7193-6BP00-0DA0
=V1KF1-KF14.31	1	ET 200SP, El-Mod., F-DI 8x24VDC HF	6ES7136-6BA00-0CA0	SIEMENS	SIE.6ES7136-6BA00-0CA0
=V1KF1-KF14.31	1	BASEUNIT TYPE A0, BU15-P16+A0+2B	6ES7193-6BP00-0BA0	SIE	SIE.6ES7193-6BP00-0BA0
=V1KF1-KF14.32	1	ET 200SP, El-Mod., F-DI 8x24VDC HF	6ES7136-6BA00-0CA0	SIEMENS	SIE.6ES7136-6BA00-0CA0
=V1KF1-KF14.32	1	BASEUNIT TYPE A0, BU15-P16+A0+2B	6ES7193-6BP00-0BA0	SIE	SIE.6ES7193-6BP00-0BA0
=V1KF1-KF14.41	1	ET 200SP, El-Mod., F-DQ 4xDC 24V/2A	6ES7136-6DB00-0CA0		SIE.6ES7136-6DB00-0CA0
=V1KF1-KF14.41	1	BASEUNIT TYPE A0, BU15-P16+A0+2B	6ES7193-6BP00-0BA0	SIE	SIE.6ES7193-6BP00-0BA0
=V1KF1-KF14.42	1	ET 200SP, El-Mod., F-DQ 4xDC 24V/2A	6ES7136-6DB00-0CA0		SIE.6ES7136-6DB00-0CA0
=V1KF1-KF14.42	1	BASEUNIT TYPE A0, BU15-P16+A0+2B	6ES7193-6BP00-0BA0	SIE	SIE.6ES7193-6BP00-0BA0
=V1KF1-KF14.51	1	ET 200SP, F-RQ 1x24VDC/24..230VAC/5A ST	6ES7136-6RA00-0BF0		SIE.6ES7136-6RA00-0BF0
=V1KF1-KF14.51	1	BASEUNIT TYPE F0, BU20-P8+A4+0B	6ES7193-6BP20-0BF0	SIE	SIE.6ES7193-6BP20-0BF0
=V1KF1-KF14.52	1	ET 200SP, F-RQ 1x24VDC/24..230VAC/5A ST	6ES7136-6RA00-0BF0		SIE.6ES7136-6RA00-0BF0
=V1KF1-KF14.52	1	BASEUNIT TYPE F0, BU20-P8+A4+0B	6ES7193-6BP20-0BF0	SIE	SIE.6ES7193-6BP20-0BF0
=V1KF1-KF14.53	1	ET 200SP, F-RQ 1x24VDC/24..230VAC/5A ST	6ES7136-6RA00-0BF0		SIE.6ES7136-6RA00-0BF0
=V1KF1-KF14.53	1	BASEUNIT TYPE F0, BU20-P8+A4+0B	6ES7193-6BP20-0BF0	SIE	SIE.6ES7193-6BP20-0BF0
=V1KF1-KF14.54	1	ET 200SP, F-RQ 1x24VDC/24..230VAC/5A ST	6ES7136-6RA00-0BF0		SIE.6ES7136-6RA00-0BF0
=V1KF1-KF14.54	1	BASEUNIT TYPE F0, BU20-P8+A4+0B	6ES7193-6BP20-0BF0	SIE	SIE.6ES7193-6BP20-0BF0
=V1KF1-KF100.14	1	SCALANCE XC216	6GK5216-0BA00-2AC2	SIE	SIE.6GK5216-0BA00-2AC2
=V1KF1-KF100.14	1				SIE.6GK1900-0AB10
=V1WC3-FC1	1	CIRCUIT BREAKER 240V 14KA, 1-POLE, C, 16A, D=70MM	5SJ4116-7HG41	SIE	SIE.5SJ4116-7HG41
=V1WC3-FC1	1	AUXILARY SWITCH 1NO1NC UL489	5ST3010-0HG	SIE	SIE.5ST3010-0HG
=V1WC3-FC2	1	CIRCUIT BREAKER 240V 14KA, 1-POLE, C, 3A, D=70MM	5SJ4103-7HG41	SIE	SIE.5SJ4103-7HG41
=V1WC3-FC2	1	AUXILARY SWITCH 1NO1NC UL489	5ST3010-0HG	SIE	SIE.5ST3010-0HG
=V1WC3-FC3	1	CIRCUIT BREAKER 240V 14KA, 1-POLE, C, 16A, D=70MM	5SJ4116-7HG41	SIE	SIE.5SJ4116-7HG41
=V1WC3-XG2	1	Panel Interface Connector with USB Type A/F to USB Type A/M [Qty: 2]; Category 5e RJ45 Panel Mount Housing; UL Type 4; Duplex Outlet; 5 Amp Circuit Breaker	RJ45 Panel Mount		GT_N.P-P11#2R2-K3RD5
=V1WC4-FC11	1	SITOP SEL1200 8 x 10A	6EP4438-7FB00-3DX0		SIE.6EP4438-7FB00-3DX0
=V1WC4-FC12	1	SITOP SEL1200 8 x 10A	6EP4438-7FB00-3DX0		SIE.6EP4438-7FB00-3DX0
=V1WC4-TA1	1	SITOP PSU6200 1ph 24 V/20 A	6EP3336-7SB00-3AX0		SIE.6EP3336-7SB00-3AX0

Parts list

F01_001

Device tag	Quantity	Designation	Type number	Supplier	Part number
=V1KF1-KF46	1				SIE.6ES7155-6AA01-0BN0_subassembly
=V1KF1-KF46	1	ET200SP, SERVERMODULE	6ES7193-6PA00-0AA0		SIE.6ES7193-6PA00-0AA0
=V1KF1-KF46.11	1	ET 200SP, DI 16x 24V DC ST, PU 1	6ES7131-6BH01-0BA0	SIE	SIE.6ES7131-6BH01-0BA0
=V1KF1-KF46.11	1	BASEUNIT TYPE A0, BU15-P16+A0+2D	6ES7193-6BP00-0DA0	SIE	SIE.6ES7193-6BP00-0DA0
=V1KF1-KF46.41	1	ET 200SP, El-Mod., F-DQ 4xDC 24V/2A	6ES7136-6DB00-0CA0		SIE.6ES7136-6DB00-0CA0
=V1KF1-KF46.41	1	BASEUNIT TYPE A0, BU15-P16+A0+2D	6ES7193-6BP00-0DA0	SIE	SIE.6ES7193-6BP00-0DA0
=V1KF1-KF46.51	1	ET 200SP, F-RQ 1x24VDC/24..230VAC/5A ST	6ES7136-6RA00-0BF0		SIE.6ES7136-6RA00-0BF0
=V1KF1-KF46.51	1	BASEUNIT TYPE F0, BU20-P8+A4+0B	6ES7193-6BP20-0BF0	SIE	SIE.6ES7193-6BP20-0BF0
=V1KF1-KF46.52	1	ET 200SP, F-RQ 1x24VDC/24..230VAC/5A ST	6ES7136-6RA00-0BF0		SIE.6ES7136-6RA00-0BF0
=V1KF1-KF46.52	1	BASEUNIT TYPE F0, BU20-P8+A4+0B	6ES7193-6BP20-0BF0	SIE	SIE.6ES7193-6BP20-0BF0
=V1KF1-KF46.53	1	ET 200SP, F-RQ 1x24VDC/24..230VAC/5A ST	6ES7136-6RA00-0BF0		SIE.6ES7136-6RA00-0BF0
=V1KF1-KF46.53	1	BASEUNIT TYPE F0, BU20-P8+A4+0B	6ES7193-6BP20-0BF0	SIE	SIE.6ES7193-6BP20-0BF0
=V1KF1-KF46.54	1	ET 200SP, F-RQ 1x24VDC/24..230VAC/5A ST	6ES7136-6RA00-0BF0		SIE.6ES7136-6RA00-0BF0
=V1KF1-KF46.54	1	BASEUNIT TYPE F0, BU20-P8+A4+0B	6ES7193-6BP20-0BF0	SIE	SIE.6ES7193-6BP20-0BF0
=V1KF1-KF100.46	1	SCALANCE XC208	6GK5208-0BA00-2AC2	SIE	SIE.6GK5208-0BA00-2AC2
=V1KF1-KF100.46-P1	1	Profinet cable - RJ45 plug to M12 Female receptacle; 1m long	RJ45S FKSDED 423-1M	TURCK	TUR.RJ45S FKSDED 423-1M
=V1KF1-KF100.46-P3	1	Profinet cable - RJ45 plug to M12 Female receptacle; 1m long	RJ45S FKSDED 423-1M	TURCK	TUR.RJ45S FKSDED 423-1M
=V1KF1-KF100.46-P4	1	Profinet cable - RJ45 plug to M12 Female receptacle; 1m long	RJ45S FKSDED 423-1M	TURCK	TUR.RJ45S FKSDED 423-1M
=V1KF1-KF100.46-P5	1	Profinet cable - RJ45 plug to M12 Female receptacle; 1m long	RJ45S FKSDED 423-1M	TURCK	TUR.RJ45S FKSDED 423-1M
=V1KF1-KF100.46-P6	1	Profinet cable - RJ45 plug to M12 Female receptacle; 1m long	RJ45S FKSDED 423-1M	TURCK	TUR.RJ45S FKSDED 423-1M
=V1KF1-UC01	1	Compact enclosure AX	AX.1050000		RIT.1050000
=V1UC46-M1	1	Ground bar kit, 5 positions.	ECGB5	SIE	US2.ECGB5
=V1UC46-M1	1	Wiring Duct Covers, PVC	C1.5LG6	PAN	PAN.C1.5LG6
=V1UC46-M1	1	Wiring Duct Covers, PVC	C2LG6	PAN	PAN.C2LG6
=V1UC46-M1	1	Wide Slotted Wiring Duct, PVC	G1.5X4LG6	PAN	PAN.G1.5X4LG6
=V1UC46-M1	1	Wide Slotted Wiring Duct, PVC	G2X4LG6	PAN	PAN.G2X4LG6
=V1UC46-M1	1	STAND.SECTIONAL RAIL 35MM, LENGTH 483MM	6ES5710-8MA11	Siemens AG	SIE.6ES5710-8MA11
=V1WC3-FC1	1	Miniature Circuit Breaker - SU200 M - 1P - C - 10 A	SU201M-C10	ABB	ABB.2CDS271337R0104
=V1WC3-FC1	1	S2C-H6RU - Auxiliary Contact	S2C-H6RU	ABB	ABB.2CDS200914R0001
=V1WC3-XD1	1	RECEPTACLE MINI 3P MALE 1M	RSF 36-1M W/LN	TURCK	TUR.RSF 36-1M W/LN
=V1WC4-FC11	1	4x3-10A	6EP1961-2BA41	SIE	SIE.6EP1961-2BA41
=V1WC4-TA1	1	SITOP PSU6200 1ph 24 V/20 A	6EP3336-7SB00-3AX0		SIE.6EP3336-7SB00-3AX0
=V1WC4-XD51	1	RECEPTACLE MINI 5P FEMALE 1M	RKF 50-1M/NPT	TURCK	TUR.RKF 50-1M/NPT
=V1WC4-XD52	1	RECEPTACLE MINI 5P FEMALE 1M	RKF 50-1M/NPT	TURCK	TUR.RKF 50-1M/NPT
=V1WC4-XD53	1	RECEPTACLE MINI 5P FEMALE 1M	RKF 50-1M/NPT	TURCK	TUR.RKF 50-1M/NPT
=V1WC4-XD54	1	RECEPTACLE MINI 5P FEMALE 1M	RKF 50-1M/NPT	TURCK	TUR.RKF 50-1M/NPT

Parts list

F01_001

Device tag	Quantity	Designation	Type number	Supplier	Part number
=V1KF1-KF47	1				SIE.6ES7155-6AA01-0BN0_subassembly
=V1KF1-KF47	1	ET200SP, SERVERMODULE	6ES7193-6PA00-0AA0		SIE.6ES7193-6PA00-0AA0
=V1KF1-KF47.11	1	ET 200SP, DI 16x 24V DC ST, PU 1	6ES7131-6BH01-0BA0	SIE	SIE.6ES7131-6BH01-0BA0
=V1KF1-KF47.11	1	BASEUNIT TYPE A0, BU15-P16+A0+2D	6ES7193-6BP00-0DA0	SIE	SIE.6ES7193-6BP00-0DA0
=V1KF1-KF47.41	1	ET 200SP, El-Mod., F-DQ 4xDC 24V/2A	6ES7136-6DB00-0CA0		SIE.6ES7136-6DB00-0CA0
=V1KF1-KF47.41	1	BASEUNIT TYPE A0, BU15-P16+A0+2D	6ES7193-6BP00-0DA0	SIE	SIE.6ES7193-6BP00-0DA0
=V1KF1-KF47.51	1	ET 200SP, F-RQ 1x24VDC/24..230VAC/5A ST	6ES7136-6RA00-0BF0		SIE.6ES7136-6RA00-0BF0
=V1KF1-KF47.51	1	BASEUNIT TYPE F0, BU20-P8+A4+0B	6ES7193-6BP20-0BF0	SIE	SIE.6ES7193-6BP20-0BF0
=V1KF1-KF47.52	1	ET 200SP, F-RQ 1x24VDC/24..230VAC/5A ST	6ES7136-6RA00-0BF0		SIE.6ES7136-6RA00-0BF0
=V1KF1-KF47.52	1	BASEUNIT TYPE F0, BU20-P8+A4+0B	6ES7193-6BP20-0BF0	SIE	SIE.6ES7193-6BP20-0BF0
=V1KF1-KF47.53	1	ET 200SP, F-RQ 1x24VDC/24..230VAC/5A ST	6ES7136-6RA00-0BF0		SIE.6ES7136-6RA00-0BF0
=V1KF1-KF47.53	1	BASEUNIT TYPE F0, BU20-P8+A4+0B	6ES7193-6BP20-0BF0	SIE	SIE.6ES7193-6BP20-0BF0
=V1KF1-KF47.54	1	ET 200SP, F-RQ 1x24VDC/24..230VAC/5A ST	6ES7136-6RA00-0BF0		SIE.6ES7136-6RA00-0BF0
=V1KF1-KF47.54	1	BASEUNIT TYPE F0, BU20-P8+A4+0B	6ES7193-6BP20-0BF0	SIE	SIE.6ES7193-6BP20-0BF0
=V1KF1-KF100.47	1	SCALANCE XC208	6GK5208-0BA00-2AC2	SIE	SIE.6GK5208-0BA00-2AC2
=V1KF1-KF100.47-P1	1	Profinet cable - RJ45 plug to M12 Female receptacle; 1m long	RJ45S FKSDED 423-1M	TURCK	TUR.RJ45S FKSDED 423-1M
=V1KF1-KF100.47-P3	1	Profinet cable - RJ45 plug to M12 Female receptacle; 1m long	RJ45S FKSDED 423-1M	TURCK	TUR.RJ45S FKSDED 423-1M
=V1KF1-KF100.47-P4	1	Profinet cable - RJ45 plug to M12 Female receptacle; 1m long	RJ45S FKSDED 423-1M	TURCK	TUR.RJ45S FKSDED 423-1M
=V1KF1-KF100.47-P5	1	Profinet cable - RJ45 plug to M12 Female receptacle; 1m long	RJ45S FKSDED 423-1M	TURCK	TUR.RJ45S FKSDED 423-1M
=V1KF1-KF100.47-P6	1	Profinet cable - RJ45 plug to M12 Female receptacle; 1m long	RJ45S FKSDED 423-1M	TURCK	TUR.RJ45S FKSDED 423-1M
=V1KF1-UC01	1	Compact enclosure AX	AX.1050000		RIT.1050000
=V1UC47-M1	1	Ground bar kit, 5 positions.	ECGB5	SIE	US2.ECGB5
=V1UC47-M1	1	Wiring Duct Covers, PVC	C1.5LG6	PAN	PAN.C1.5LG6
=V1UC47-M1	1	Wiring Duct Covers, PVC	C2LG6	PAN	PAN.C2LG6
=V1UC47-M1	1	Wide Slotted Wiring Duct, PVC	G1.5X4LG6	PAN	PAN.G1.5X4LG6
=V1UC47-M1	1	Wide Slotted Wiring Duct, PVC	G2X4LG6	PAN	PAN.G2X4LG6
=V1UC47-M1	1	STAND.SECTIONAL RAIL 35MM, LENGTH 483MM	6ES5710-8MA11	Siemens AG	SIE.6ES5710-8MA11
=V1WC3-FC1	1	Miniature Circuit Breaker - SU200 M - 1P - C - 10 A	SU201M-C10	ABB	ABB.2CDS271337R0104
=V1WC3-FC1	1	S2C-H6RU - Auxiliary Contact	S2C-H6RU	ABB	ABB.2CDS200914R0001
=V1WC3-XD1	1	RECEPTACLE MINI 3P MALE 1M	RSF 36-1M W/LN	TURCK	TUR.RSF 36-1M W/LN
=V1WC4-FC11	1	4x3-10A	6EP1961-2BA41	SIE	SIE.6EP1961-2BA41
=V1WC4-TA1	1	SITOP PSU6200 1ph 24 V/20 A	6EP3336-7SB00-3AX0		SIE.6EP3336-7SB00-3AX0
=V1WC4-XD51	1	RECEPTACLE MINI 5P FEMALE 1M	RKF 50-1M/NPT	TURCK	TUR.RKF 50-1M/NPT
=V1WC4-XD52	1	RECEPTACLE MINI 5P FEMALE 1M	RKF 50-1M/NPT	TURCK	TUR.RKF 50-1M/NPT
=V1WC4-XD53	1	RECEPTACLE MINI 5P FEMALE 1M	RKF 50-1M/NPT	TURCK	TUR.RKF 50-1M/NPT
=V1WC4-XD54	1	RECEPTACLE MINI 5P FEMALE 1M	RKF 50-1M/NPT	TURCK	TUR.RKF 50-1M/NPT

Parts list

F01_001

Device tag	Quantity	Designation	Type number	Supplier	Part number
=V1SF0PG1-PG1	1	SIMATIC HMI TP700 COMFORT	6AV2124-0GC01-0AX0	SIE	SIE.6AV2124-0GC01-0AX0
=V1SF0PG1-PG1	1	SIMATIC HMI SD MEMORY CARD 2 GB	6AV2181-8XP00-0AX0	SIE	SIE.6AV2181-8XP00-0AX0
=V1SF0PG1-PNET1	1	Profinet cable - RJ45 plug to M12 Female receptacle; 0.5m long	RJ45S FKSDED 423-0.5M	TURCK	TUR.RJ45S FKSDED 423-0.5M
=V1SF0PG1-UC01	1	Compact enclosure AX	AX.6315150	RIT	RIT.6315150
=V1SF0PG1-UC01	1	Accessory bag, for AX	AX.5051300	RIT	RIT.5051300
=V1SF0PG1-UC01	1	Mounting plate, for AX	AX.5051368	RIT	RIT.5051368
=V1SF0PG1-XD1	1	RECEPTACLE MINI 5P MALE 1M	RSF 50-1M/NPT	TURCK	TUR.RSF 50-1M/NPT

Parts list

F01_001

Device tag	Quantity	Designation	Type number	Supplier	Part number
=V1SF0PG2-PG1	1	SIMATIC HMI TP700 COMFORT	6AV2124-0GC01-0AX0	SIE	SIE.6AV2124-0GC01-0AX0
=V1SF0PG2-PG1	1	SIMATIC HMI SD MEMORY CARD 2 GB	6AV2181-8XP00-0AX0	SIE	SIE.6AV2181-8XP00-0AX0
=V1SF0PG2-PNET1	1	Profinet cable - RJ45 plug to M12 Female receptacle; 0.5m long	RJ45S FKSDED 423-0.5M	TURCK	TUR.RJ45S FKSDED 423-0.5M
=V1SF0PG2-UC01	1	Compact enclosure AX	AX.6315150	RIT	RIT.6315150
=V1SF0PG2-UC01	1	Accessory bag, for AX	AX.5051300	RIT	RIT.5051300
=V1SF0PG2-UC01	1	Mounting plate, for AX	AX.5051368	RIT	RIT.5051368
=V1SF0PG2-XD1	1	RECEPTACLE MINI 5P MALE 1M	RSF 50-1M/NPT	TURCK	TUR.RSF 50-1M/NPT

Parts list

F01_001

Device tag	Quantity	Designation	Type number	Supplier	Part number
=V1PZ1PF1-PF1	1	Signaling column connection element for pipe mounting incl. end cover and seal	8WD4408-0AA	SIE	SIE.8WD4408-0AA
=V1PZ1PF1-PF1	1	Tube with foot, tube length 100 mm, accessory for signaling columns 8WD44, D=70 mm	8WD4308-0DA	SIEMENS	SIE.8WD4308-0DA
=V1PZ1PF1-PF1	1	Signaling column multifunctional siren element different sounds can be set 24 V	8WD4420-0EA2		SIE.8WD4420-0EA2
=V1PZ1PF1-PF1	1	Signaling column continuous light element LED red, 24 V AC/DC	8WD4420-5AB	SIE	SIE.8WD4420-5AB
=V1PZ1PF1-PF1	1	Signaling column continuous light element LED green, 24 V AC/DC	8WD4420-5AC	SIE	SIE.8WD4420-5AC
=V1PZ1PF1-PF1	1	Signaling column continuous light element LED yellow, 24 V AC/DC	8WD4420-5AD	SIE	SIE.8WD4420-5AD
=V1PZ1PF1-PF1	1	Signaling column continuous light element LED blue, 24 V AC/DC	8WD4420-5AF	SIE	SIE.8WD4420-5AF
=V1PZ1PF1-UC01	1	Small enclosures KX	KX.1574000		RIT.1574000
=V1PZ1PF1-XD1	1	RECEPTACLE 1-1/8" MINIFAST 10P MALE 2M	RSF 106-2M/14.5/NPT/CS16486	TURCK	TUR.RSF 106-2M/14.5/NPT/CS16486

Parts list

F01_001

Device tag	Quantity	Designation	Type number	Supplier	Part number
=V1PZ1PF2-PF1	1	Signaling column connection element for pipe mounting incl. end cover and seal	8WD4408-0AA	SIE	SIE.8WD4408-0AA
=V1PZ1PF2-PF1	1	Tube with foot, tube length 100 mm, accessory for signaling columns 8WD44, D=70 mm	8WD4308-0DA	SIEMENS	SIE.8WD4308-0DA
=V1PZ1PF2-PF1	1	Signaling column multifunctional siren element different sounds can be set 24 V	8WD4420-0EA2		SIE.8WD4420-0EA2
=V1PZ1PF2-PF1	1	Signaling column continuous light element LED red, 24 V AC/DC	8WD4420-5AB	SIE	SIE.8WD4420-5AB
=V1PZ1PF2-PF1	1	Signaling column continuous light element LED green, 24 V AC/DC	8WD4420-5AC	SIE	SIE.8WD4420-5AC
=V1PZ1PF2-PF1	1	Signaling column continuous light element LED yellow, 24 V AC/DC	8WD4420-5AD	SIE	SIE.8WD4420-5AD
=V1PZ1PF2-PF1	1	Signaling column continuous light element LED blue, 24 V AC/DC	8WD4420-5AF	SIE	SIE.8WD4420-5AF
=V1PZ1PF2-UC01	1	Small enclosures KX	KX.1574000		RIT.1574000
=V1PZ1PF2-XD1	1	RECEPTACLE 1-1/8" MINIFAST 10P MALE 2M	RSF 106-2M/14.5/NPT/CS16486	TURCK	TUR.RSF 106-2M/14.5/NPT/CS16486

Parts list

F01_001

Device tag	Quantity	Designation	Type number	Supplier	Part number
=V1SF0SF1-SF1	1	Push-to-Stop, Twist-to-Release Electro-Mechanical Push Buttons	SSA-EBM Series	BANNER	BAN.SSA-EBM-12EB1Q8OTBB

+.UC62/1

+.UC72/1

			Date	12/22/2022	Volvo Trucks North America		Valiant TMS	Parts list : BAN.SSA-EBM-12EB1Q8OTBB - BAN.SSA-EBM-12EB1Q8OTBB	Drawing name: =2V13&EFS_EL	=	
			Ed.	MKLEPADLO						+ V1UC71	
			Appr		Sub-Floor Members				Document type: EPB	Project nr: 22-16146	Page 1
Modification	Date	Name	Original		Replacement of	Replaced by	Scale 1:1				614

Parts list

F01_001

Device tag	Quantity	Designation	Type number	Supplier	Part number
=V1SF0SF2-SF1	1	Push-to-Stop, Twist-to-Release Electro-Mechanical Push Buttons	SSA-EBM Series	BANNER	BAN.SSA-EBM-12EB1Q8OTBB

+.UC71/1

+.UC161/1

			Date	12/22/2022	Volvo Trucks North America		Valiant TMS	Parts list : BAN.SSA-EBM-12EB1Q8OTBB - BAN.SSA-EBM-12EB1Q8OTBB	Drawing name: =2V13&EFS_EL	=	
			Ed.	MKLEPADLO						+ V1UC72	
			Appr		Sub-Floor Members				Document type: EPB	Project nr: 22-16146	Page 1 / 614
Modification	Date	Name	Original		Replacement of	Replaced by	Scale 1:1				

Parts list

F01_001

Device tag	Quantity	Designation	Type number	Supplier	Part number
=V1WC2-XG1	1	3P DISTRIBUTION BLOCK 1 LINE / 4 LOAD	MB-231-03	SYNDEVCO	MB-231-03
=V1WC2-XG2	1	3P GROUND BLOCK 3 LINE / 3 LOAD	STGS-3D-3D	SYNDEVCO	STGS-3D-3D
=WC1-WC1	1	Golvskåp TS 8 sidskåp	TS8	RIT	RIT.SETS8205SID5
=WC1-WC1	1	TS Trim panel, sides, H: 100 mm, for W: 500 mm, RAL 7022, sheet steel	TS.8601050	RIT	RIT.8601050
=WC1-WC1	1	TS Base/plinth component, rear, H: 100 mm, for W: 1200 mm, RAL 7022, sheet steel	TS.8601200	RIT	RIT.8601200
=WC1-WC1	1	TS Side panel, screw-fastened, for TS, TS IT, for WD: 2000x500 mm, Sheet steel	TS.8105235	RIT	RIT.8105235
=WC1-WC1	1	PS Wiring plan pockets, for TS, CM, SE, PC, TP pedestal, sheet steel	TS.4115000	RIT	RIT.4115000

Parts list

F01_001

Device tag	Quantity	Designation	Type number	Supplier	Part number
=V1UQ51BG0-BG01	1	Inductive sensor	BI20U-CA40-AP6X2-H1141/S1590W/BS2.0	Turck	TUR.1627297
=V1UQ51BG0-BG02	1	Inductive sensor	BI20U-CA40-AP6X2-H1141/S1590W/BS2.0	Turck	TUR.1627297
=V1UQ51BG0-BG03	1	Inductive sensor	BI20U-CA40-AP6X2-H1141/S1590W/BS2.0	Turck	TUR.1627297
=V1UQ51BG0-BG04	1	Inductive sensor	BI20U-CA40-AP6X2-H1141/S1590W/BS2.0	Turck	TUR.1627297
=V1UQ51BG0-BG05	1	Inductive sensor	BI20U-CA40-AP6X2-H1141/S1590W/BS2.0	Turck	TUR.1627297
=V1UQ51BG0-BG06	1	Inductive sensor	BI20U-CA40-AP6X2-H1141/S1590W/BS2.0	Turck	TUR.1627297
=V1UQ51BG0-XG1/2	1	Y splitter	U2-30676	TURCK	TUR.VB2-FSM 4.4/2FKM 4/S3450
=V1UQ51BG0-XG3/4	1	Y splitter	U2-30676	TURCK	TUR.VB2-FSM 4.4/2FKM 4/S3450
=V1UQ51BG0-XG5/6	1	Y splitter	U2-30676	TURCK	TUR.VB2-FSM 4.4/2FKM 4/S3450
=V1UQ51KF1-KF1.11	1	MVK-MPNIO DIO16 IRT 7/8" 5pin	MVK-MPNIO DIO16	MURR	MURR.55530

Parts list

F01_001

Device tag	Quantity	Designation	Type number	Supplier	Part number
=V1FQ1-QB1	1				A-B.440F-M2036HYNN
=V1FQ1-QB2	1				A-B.440F-M2036HYNN
=V1FQ1-QB3	1				A-B.440F-M2036HYNN
=V1FQ1-QB4	1				A-B.440F-M2036HYNN
=V1WR1BG0-BG01	1	Inductive slot sensor	SJ15-E2-V1-Y40122	P+F	P+F.SJ15-E2-V1-Y40122
=V1WR1BG0-BG02	1	Inductive sensor	BI20U-CA40-AP6X2-H1141/S1590W/BS2.0	Turck	TUR.1627297
=V1WR1BG0-BG03	1	Inductive sensor	BI20U-CA40-AP6X2-H1141/S1590W/BS2.0	Turck	TUR.1627297
=V1WR1BG0-BG04	1	Inductive sensor	BI20U-CA40-AP6X2-H1141/S1590W/BS2.0	Turck	TUR.1627297
=V1WR1BG0-BG05	1	Inductive sensor	BI20U-CA40-AP6X2-H1141/S1590W/BS2.0	Turck	TUR.1627297
=V1WR1BG0-XG1/2	1	Y splitter	U2-30676	TURCK	TUR.VB2-FSM 4.4/2FKM 4/S3450
=V1WR1BG0-XG3/4	1	Y splitter	U2-30676	TURCK	TUR.VB2-FSM 4.4/2FKM 4/S3450
=V1WR1KF1-KF1.11	1	Field bus, decentralized peripheral - digital I/O module	MVK-MPNIO F DI16/8 7/8" IRT		MURR.55556
=V1WR1KF2-KF2.11	1	Field bus, decentralized peripheral - digital I/O module	MVK-MPNIO F DI16/8 7/8" IRT		MURR.55556
=V1WR1KF2-XD1	1				TUR.BS 8251-0/PG9
=V1WR1KF2-XD2	1				TUR.BS 8251-0/PG9
=V1WR1KF2-XD3	1				TUR.BS 8251-0/PG9
=V1WR1KF2-XD4	1				TUR.BS 8251-0/PG9

Parts list

F01_001

Device tag	Quantity	Designation	Type number	Supplier	Part number
=V1WR1UQ51BG0-BG01	1	Inductive sensor	BI20U-CA40-AP6X2-H1141/S1590W/BS2.0	Turck	TUR.1627297
=V1WR1UQ51BG0-BG02	1	Inductive sensor	BI20U-CA40-AP6X2-H1141/S1590W/BS2.0	Turck	TUR.1627297
=V1WR1UQ51BG0-BG03	1	Inductive sensor	BI4U-MT12E-AP6X-H1141/S1589	Turck	TUR.1644979
=V1WR1UQ51BG0-BG04	1	Inductive sensor	BI4U-MT12E-AP6X-H1141/S1589	Turck	TUR.1644979
=V1WR1UQ51BG0-BG05	1	Inductive sensor	BI4U-MT12E-AP6X-H1141/S1589	Turck	TUR.1644979
=V1WR1UQ51BG0-BG06	1	Inductive sensor	BI4U-MT12E-AP6X-H1141/S1589	Turck	TUR.1644979
=V1WR1UQ51BG0-BG07	1	Inductive sensor	BI4U-MT12E-AP6X-H1141/S1589	Turck	TUR.1644979
=V1WR1UQ51BG0-BG08	1	Inductive sensor	BI4U-MT12E-AP6X-H1141/S1589	Turck	TUR.1644979
=V1WR1UQ51BG0-BG09	1	Inductive sensor	BI20U-CA40-AP6X2-H1141/S1590W/BS2.0	Turck	TUR.1627297
=V1WR1UQ51BG0-BG10	1	Inductive sensor	BI20U-CA40-AP6X2-H1141/S1590W/BS2.0	Turck	TUR.1627297
=V1WR1UQ51BG0-BG11	1	Inductive sensor	BI4U-MT12E-AP6X-H1141/S1589	Turck	TUR.1644979
=V1WR1UQ51BG0-BG12	1	Inductive sensor	BI4U-MT12E-AP6X-H1141/S1589	Turck	TUR.1644979
=V1WR1UQ51BG0-BG13	1	Inductive sensor	BI4U-MT12E-AP6X-H1141/S1589	Turck	TUR.1644979
=V1WR1UQ51BG0-BG14	1	Inductive sensor	BI4U-MT12E-AP6X-H1141/S1589	Turck	TUR.1644979
=V1WR1UQ51BG0-BG15	1	Inductive sensor	BI4U-MT12E-AP6X-H1141/S1589	Turck	TUR.1644979
=V1WR1UQ51BG0-BG16	1	Inductive sensor	BI4U-MT12E-AP6X-H1141/S1589	Turck	TUR.1644979
=V1WR1UQ51BG0-BG17	1	Inductive sensor	BI4U-MT12E-AP6X-H1141/S1589	Turck	TUR.1644979
=V1WR1UQ51BG0-BG18	1	Inductive sensor	BI4U-MT12E-AP6X-H1141/S1589	Turck	TUR.1644979
=V1WR1UQ51BG0-BG19	1	Inductive sensor	BI4U-MT12E-AP6X-H1141/S1589	Turck	TUR.1644979
=V1WR1UQ51BG0-BG20	1	Inductive sensor	BI4U-MT12E-AP6X-H1141/S1589	Turck	TUR.1644979
=V1WR1UQ51BG0-BG21	1	Inductive sensor	BI4U-MT12E-AP6X-H1141/S1589	Turck	TUR.1644979
=V1WR1UQ51BG0-BG22	1	Inductive sensor	BI4U-MT12E-AP6X-H1141/S1589	Turck	TUR.1644979
=V1WR1UQ51BG0-BG23	1	Inductive sensor	BI4U-MT12E-AP6X-H1141/S1589	Turck	TUR.1644979
=V1WR1UQ51BG0-BG24	1	Inductive sensor	BI4U-MT12E-AP6X-H1141/S1589	Turck	TUR.1644979
=V1WR1UQ51BG0-XG1/2	1	Y splitter	U2-30676	TURCK	TUR.VB2-FSM 4.4/2FKM 4/S3450
=V1WR1UQ51BG0-XG3/4	1	Y splitter	U2-30676	TURCK	TUR.VB2-FSM 4.4/2FKM 4/S3450
=V1WR1UQ51BG0-XG5/6	1	Y splitter	U2-30676	TURCK	TUR.VB2-FSM 4.4/2FKM 4/S3450
=V1WR1UQ51BG0-XG7/8	1	Y splitter	U2-30676	TURCK	TUR.VB2-FSM 4.4/2FKM 4/S3450
=V1WR1UQ51BG0-XG9/10	1	Y splitter	U2-30676	TURCK	TUR.VB2-FSM 4.4/2FKM 4/S3450
=V1WR1UQ51BG0-XG11/12	1	Y splitter	U2-30676	TURCK	TUR.VB2-FSM 4.4/2FKM 4/S3450
=V1WR1UQ51BG0-XG13/14	1	Y splitter	U2-30676	TURCK	TUR.VB2-FSM 4.4/2FKM 4/S3450
=V1WR1UQ51BG0-XG15/16	1	Y splitter	U2-30676	TURCK	TUR.VB2-FSM 4.4/2FKM 4/S3450
=V1WR1UQ51BG0-XG17/18	1	Y splitter	U2-30676	TURCK	TUR.VB2-FSM 4.4/2FKM 4/S3450
=V1WR1UQ51BG0-XG19/20	1	Y splitter	U2-30676	TURCK	TUR.VB2-FSM 4.4/2FKM 4/S3450
=V1WR1UQ51BG0-XG21/22	1	Y splitter	U2-30676	TURCK	TUR.VB2-FSM 4.4/2FKM 4/S3450
=V1WR1UQ51BG0-XG23/24	1	Y splitter	U2-30676	TURCK	TUR.VB2-FSM 4.4/2FKM 4/S3450
=V1WR1UQ51KF1-KF1	0	Bus node	CPX-FB33	FES	FES.548755
=V1WR1UQ51KF1-KF1	0	Interlinking block	CPX-M-GE-EV-S-7/8-5POL	FES	FES.550208
=V1WR1UQ51KF1-KF1.11	0	Manifold block	CPX-M-AB-8-M12X2-5POL	FES	FES.549335
=V1WR1UQ51KF1-KF1.12	0	Manifold block	CPX-M-AB-8-M12X2-5POL	FES	FES.549335
=V1WR1UQ51KF1-KF1.13	0	Manifold block	CPX-M-AB-8-M12X2-5POL	FES	FES.549335
=V1WR1UQ51KF1-KF1.14	0	Manifold block	CPX-M-AB-8-M12X2-5POL	FES	FES.549335
=V1WR1UQ51KF1-KF1.15	0	Manifold block	CPX-M-AB-8-M12X2-5POL	FES	FES.549335

Parts list

F01_001

Device tag	Quantity	Designation	Type number	Supplier	Part number
=V1WR1UQ51UQ1.1-BGS/R	1	Proximity Sensor	SME-8M-DS-24V-K-5,0-OE	FES	FES.543863

+V1WR1UQ51/1

+.WR1UQ51UQ1.2/1

			Date	12/22/2022	Volvo Trucks North America	Valiant TMS	Parts list : FES.543863 - FES.543863	Drawing name: =2V13&EFS_EL	=	
			Ed.	MKLEPADLO					+ V1WR1UQ51UQ1.1	
			Appr		Sub-Floor Members			Document type: EPB	Project nr: 22-16146	Page 1 / 614
Modification	Date	Name	Original		Replacement of / Replaced by	Scale 1:1				

Parts list

F01_001

Device tag	Quantity	Designation	Type number	Supplier	Part number
=V1WR1UQ51UQ1.2-BGS/R	1	Proximity Sensor	SME-8M-DS-24V-K-5,0-OE	FES	FES.543863

+.WR1UQ51UQ1.1/1

+.WR1UQ51UQ1.3/1

Parts list

F01_001

Device tag	Quantity	Designation	Type number	Supplier	Part number
=V1WR1UQ51UQ1.3-BGS/R	1	Proximity Sensor	SME-8M-DS-24V-K-5,0-OE	FES	FES.543863

+.WR1UQ51UQ1.2/1

+.WR1UQ51UQ1.4/1

Parts list

F01_001

Device tag	Quantity	Designation	Type number	Supplier	Part number
=V1WR1UQ51UQ1.4-BGS/R	1	Proximity Sensor	SME-8M-DS-24V-K-5,0-OE	FES	FES.543863

+.WR1UQ51UQ1.3/1

+.WR1UQ51UQ2.1/1

Parts list

F01_001

Device tag	Quantity	Designation	Type number	Supplier	Part number
=V1WR1UQ51UQ2.1-BGS/R	1	Inductive sensor Monitoring Kit for Power Clamps	1324638	TUNKERS	TUN.1324638

+.WR1UQ51UQ1.4/1

+.WR1UQ51UQ2.2/1

Parts list

F01_001

Device tag	Quantity	Designation	Type number	Supplier	Part number
=V1WR1UQ51UQ2.2-BGS/R	1	Inductive sensor Monitoring Kit for Power Clamps	1324638	TUNKERS	TUN.1324638

+.WR1UQ51UQ2.1/1

+.WR1UQ51UQ3.1/1

Parts list

F01_001

Device tag	Quantity	Designation	Type number	Supplier	Part number
=V1WR1UQ51UQ3.1-BGS/R	1	Inductive sensor Monitoring Kit for Power Clamps	1324638	TUNKERS	TUN.1324638

+.WR1UQ51UQ2.2/1

+.WR1UQ51UQ3.2/1

Parts list

F01_001

Device tag	Quantity	Designation	Type number	Supplier	Part number
=V1WR1UQ51UQ3.2-BGS/R	1	Inductive sensor Monitoring Kit for Power Clamps	1324638	TUNKERS	TUN.1324638

+.WR1UQ51UQ3.1/1

+.WR1UQ51UQ3.3/1

Parts list

F01_001

Device tag	Quantity	Designation	Type number	Supplier	Part number
=V1WR1UQ51UQ3.3-BGS/R	1	Inductive sensor Monitoring Kit for Power Clamps	1324638	TUNKERS	TUN.1324638

+.WR1UQ51UQ3.2/1

+.WR1UQ51UQ3.4/1

Parts list

F01_001

Device tag	Quantity	Designation	Type number	Supplier	Part number
=V1WR1UQ51UQ3.4-BGS/R	1	Inductive sensor Monitoring Kit for Power Clamps	1324638	TUNKERS	TUN.1324638

+.WR1UQ51UQ3.3/1

+.WR1UQ51UQ4.1/1

Parts list

F01_001

Device tag	Quantity	Designation	Type number	Supplier	Part number
=V1WR1UQ51UQ4.1-BGS/R	1	4-Wire, 4-Pin, DC M12 X 1 (PNP)	WWS001A	WEL	WEL.WWS001A

+.WR1UQ51UQ3.4/1

+.WR1UQ51UQ4.2/1

Parts list

F01_001

Device tag	Quantity	Designation	Type number	Supplier	Part number
=V1WR1UQ51UQ4.2-BGS/R	1	4-Wire, 4-Pin, DC M12 X 1 (PNP)	WWS001A	WEL	WEL.WWS001A

+.WR1UQ51UQ4.1/1

+.WR1UQ51UQ5.1/1

Parts list

F01_001

Device tag	Quantity	Designation	Type number	Supplier	Part number
=V1WR1UQ51UQ5.1-BGS/R	1	Inductive sensor Monitoring Kit for Power Clamps	1324638	TUNKERS	TUN.1324638

+.WR1UQ51UQ4.2/1

+.WR1UQ51UQ5.2/1

Parts list

F01_001

Device tag	Quantity	Designation	Type number	Supplier	Part number
=V1WR1UQ51UQ5.2-BGS/R	1	Inductive sensor Monitoring Kit for Power Clamps	1324638	TUNKERS	TUN.1324638

+.WR1UQ51UQ5.1/1

+.WR1UQ51UQ5.3/1

Parts list

F01_001

Device tag	Quantity	Designation	Type number	Supplier	Part number
=V1WR1UQ51UQ5.3-BGS/R	1	Inductive sensor Monitoring Kit for Power Clamps	1324638	TUNKERS	TUN.1324638

+.WR1UQ51UQ5.2/1

+.WR1UQ51UQ5.4/1

Parts list

F01_001

Device tag	Quantity	Designation	Type number	Supplier	Part number
=V1WR1UQ51UQ5.4-BGS/R	1	Inductive sensor Monitoring Kit for Power Clamps	1324638	TUNKERS	TUN.1324638

Parts list

F01_001

Device tag	Quantity	Designation	Type number	Supplier	Part number
=V1WR1UQ51UQ5.5-BGS/R	1	Inductive sensor Monitoring Kit for Power Clamps	1324644	TUNKERS	TUN.1324644

+.WR1UQ51UQ5.4/1

+.WR1UQ51UQ5.6/1

Parts list

F01_001

Device tag	Quantity	Designation	Type number	Supplier	Part number
=V1WR1UQ51UQ5.6-BGS/R	1	Inductive sensor Monitoring Kit for Power Clamps	1324644	TUNKERS	TUN.1324644

+.WR1UQ51UQ5.5/1

+.WR1UQ51UQ6.1/1

Parts list

F01_001

Device tag	Quantity	Designation	Type number	Supplier	Part number
=V1WR1UQ51UQ6.1-BGS/R	1				TUN.16324644

+.WR1UQ51UQ5.6/1

+.WR1UQ51UQ6.2/1

Parts list

F01_001

Device tag	Quantity	Designation	Type number	Supplier	Part number
=V1WR1UQ51UQ6.2-BGS/R	1				TUN.16324644

+.WR1UQ51UQ6.1/1

+.WR1UQ51UQ6.3/1

Parts list

F01_001

Device tag	Quantity	Designation	Type number	Supplier	Part number
=V1WR1UQ51UQ6.3-BGS/R	1				TUN.16324644

+.WR1UQ51UQ6.2/1

+.WR1UQ51UQ6.4/1

Parts list

F01_001

Device tag	Quantity	Designation	Type number	Supplier	Part number
=V1WR1UQ51UQ6.4-BGS/R	1				TUN.16324644

Parts list

F01_001

Device tag	Quantity	Designation	Type number	Supplier	Part number
=V1WR1UQ51UQ6.5-BGS/R	1	Inductive sensor Monitoring Kit for Power Clamps	1324644	TUNKERS	TUN.1324644

+.WR1UQ51UQ6.4/1

+.WR1UQ51UQ6.6/1

Parts list

F01_001

Device tag	Quantity	Designation	Type number	Supplier	Part number
=V1WR1UQ51UQ6.6-BGS/R	1	Inductive sensor Monitoring Kit for Power Clamps	1324644	TUNKERS	TUN.1324644

Parts list

F01_001

Device tag	Quantity	Designation	Type number	Supplier	Part number
=V1WR1UQ52BG0-BG01	1	Inductive sensor	BI4U-MT12E-AP6X-H1141/S1589	Turck	TUR.1644979
=V1WR1UQ52BG0-BG02	1	Inductive sensor	BI4U-MT12E-AP6X-H1141/S1589	Turck	TUR.1644979
=V1WR1UQ52BG0-BG03	1	Inductive sensor	BI20U-CA40-AP6X2-H1141/S1590W/BS2.0	Turck	TUR.1627297
=V1WR1UQ52BG0-BG04	1	Inductive sensor	BI20U-CA40-AP6X2-H1141/S1590W/BS2.0	Turck	TUR.1627297
=V1WR1UQ52BG0-BG05	1	Inductive sensor	BI4U-MT12E-AP6X-H1141/S1589	Turck	TUR.1644979
=V1WR1UQ52BG0-BG06	1	Inductive sensor	BI4U-MT12E-AP6X-H1141/S1589	Turck	TUR.1644979
=V1WR1UQ52BG0-BG07	1	Inductive sensor	BI4U-MT12E-AP6X-H1141/S1589	Turck	TUR.1644979
=V1WR1UQ52BG0-BG08	1	Inductive sensor	BI4U-MT12E-AP6X-H1141/S1589	Turck	TUR.1644979
=V1WR1UQ52BG0-BG09	1	Inductive sensor	BI4U-MT12E-AP6X-H1141/S1589	Turck	TUR.1644979
=V1WR1UQ52BG0-BG10	1	Inductive sensor	BI4U-MT12E-AP6X-H1141/S1589	Turck	TUR.1644979
=V1WR1UQ52BG0-BG11	1	Inductive sensor	BI4U-MT12E-AP6X-H1141/S1589	Turck	TUR.1644979
=V1WR1UQ52BG0-BG12	1	Inductive sensor	BI4U-MT12E-AP6X-H1141/S1589	Turck	TUR.1644979
=V1WR1UQ52BG0-BG13	1	Inductive sensor	BI20U-CA40-AP6X2-H1141/S1590W/BS2.0	Turck	TUR.1627297
=V1WR1UQ52BG0-BG14	1	Inductive sensor	BI20U-CA40-AP6X2-H1141/S1590W/BS2.0	Turck	TUR.1627297
=V1WR1UQ52BG0-BG15	1	Inductive sensor	BI4U-MT12E-AP6X-H1141/S1589	Turck	TUR.1644979
=V1WR1UQ52BG0-BG16	1	Inductive sensor	BI20U-CA40-AP6X2-H1141/S1590W/BS2.0	Turck	TUR.1627297
=V1WR1UQ52BG0-BG17	1	Inductive sensor	BI20U-CA40-AP6X2-H1141/S1590W/BS2.0	Turck	TUR.1627297
=V1WR1UQ52BG0-BG18	1	Inductive sensor	BI20U-CA40-AP6X2-H1141/S1590W/BS2.0	Turck	TUR.1627297
=V1WR1UQ52BG0-BG19	1	Inductive sensor	BI4U-MT12E-AP6X-H1141/S1589	Turck	TUR.1644979
=V1WR1UQ52BG0-BG20	1	Inductive sensor	BI20U-CA40-AP6X2-H1141/S1590W/BS2.0	Turck	TUR.1627297
=V1WR1UQ52BG0-BG21	1	Inductive sensor	BI20U-CA40-AP6X2-H1141/S1590W/BS2.0	Turck	TUR.1627297
=V1WR1UQ52BG0-BG22	1	Inductive sensor	BI20U-CA40-AP6X2-H1141/S1590W/BS2.0	Turck	TUR.1627297
=V1WR1UQ52BG0-BG23	1	Inductive sensor	BI20U-CA40-AP6X2-H1141/S1590W/BS2.0	Turck	TUR.1627297
=V1WR1UQ52BG0-BG24	1	Inductive sensor	BI20U-CA40-AP6X2-H1141/S1590W/BS2.0	Turck	TUR.1627297
=V1WR1UQ52BG0-BG25	1	Inductive sensor	BI4U-MT12E-AP6X2-H1141/S1610	Turck	TUR.1644796
=V1WR1UQ52BG0-BG26	1	Inductive sensor	BI4U-MT12E-AP6X2-H1141/S1610	Turck	TUR.1644796
=V1WR1UQ52BG0-XG1/2	1	Y splitter	U2-30676	TURCK	TUR.VB2-FSM 4.4/2FKM 4/S3450
=V1WR1UQ52BG0-XG3/4	1	Y splitter	U2-30676	TURCK	TUR.VB2-FSM 4.4/2FKM 4/S3450
=V1WR1UQ52BG0-XG5/6	1	Y splitter	U2-30676	TURCK	TUR.VB2-FSM 4.4/2FKM 4/S3450
=V1WR1UQ52BG0-XG7/8	1	Y splitter	U2-30676	TURCK	TUR.VB2-FSM 4.4/2FKM 4/S3450
=V1WR1UQ52BG0-XG9/10	1	Y splitter	U2-30676	TURCK	TUR.VB2-FSM 4.4/2FKM 4/S3450
=V1WR1UQ52BG0-XG11/12	1	Y splitter	U2-30676	TURCK	TUR.VB2-FSM 4.4/2FKM 4/S3450
=V1WR1UQ52BG0-XG13/14	1	Y splitter	U2-30676	TURCK	TUR.VB2-FSM 4.4/2FKM 4/S3450
=V1WR1UQ52BG0-XG15/16	1	Y splitter	U2-30676	TURCK	TUR.VB2-FSM 4.4/2FKM 4/S3450
=V1WR1UQ52BG0-XG17/18	1	Y splitter	U2-30676	TURCK	TUR.VB2-FSM 4.4/2FKM 4/S3450
=V1WR1UQ52BG0-XG19/20	1	Y splitter	U2-30676	TURCK	TUR.VB2-FSM 4.4/2FKM 4/S3450
=V1WR1UQ52BG0-XG21/22	1	Y splitter	U2-30676	TURCK	TUR.VB2-FSM 4.4/2FKM 4/S3450
=V1WR1UQ52BG0-XG23/24	1	Y splitter	U2-30676	TURCK	TUR.VB2-FSM 4.4/2FKM 4/S3450
=V1WR1UQ52BG0-XG25/26	1	Y splitter	U2-30676	TURCK	TUR.VB2-FSM 4.4/2FKM 4/S3450
=V1WR1UQ52KF1-KF1	0	Bus node	CPX-FB33	FES	FES.548755
=V1WR1UQ52KF1-KF1	0	Interlinking block	CPX-M-GE-EV-S-7/8-5POL	FES	FES.550208
=V1WR1UQ52KF1-KF1.11	0	Manifold block	CPX-M-AB-8-M12X2-5POL	FES	FES.549335
=V1WR1UQ52KF1-KF1.12	0	Manifold block	CPX-M-AB-8-M12X2-5POL	FES	FES.549335
=V1WR1UQ52KF1-KF1.13	0	Manifold block	CPX-M-AB-8-M12X2-5POL	FES	FES.549335
=V1WR1UQ52KF1-KF1.14	0	Manifold block	CPX-M-AB-8-M12X2-5POL	FES	FES.549335
=V1WR1UQ52KF2-KF2	0	Bus node	CPX-FB33	FES	FES.548755
=V1WR1UQ52KF2-KF2	0	Interlinking block	CPX-M-GE-EV-S-7/8-5POL	FES	FES.550208
=V1WR1UQ52KF2-KF2.11	0	Manifold block	CPX-M-AB-8-M12X2-5POL	FES	FES.549335
=V1WR1UQ52KF2-KF2.12	0	Manifold block	CPX-M-AB-8-M12X2-5POL	FES	FES.549335
=V1WR1UQ52KF2-KF2.13	0	Manifold block	CPX-M-AB-8-M12X2-5POL	FES	FES.549335
=V1WR1UQ52KF2-KF2.14	0	Manifold block	CPX-M-AB-8-M12X2-5POL	FES	FES.549335
=V1WR1UQ52KF2-KF2.15	0	Manifold block	CPX-M-AB-8-M12X2-5POL	FES	FES.549335
=V1WR1UQ52WC4-XG52	1	TEE, 5-PIN MINI, STANDARD KEYWAY	RSM-2RKM 50	TURCK	TUR.RSM-2RKM 50

Parts list

F01_001

Device tag	Quantity	Designation	Type number	Supplier	Part number
=V1WR1UQ52UQ1.1-BGS/R	1	Inductive sensor Monitoring Kit for Power Clamps	1324638	TUNKERS	TUN.1324638

+V1WR1UQ52/1

+.WR1UQ52UQ1.2/1

Parts list

F01_001

Device tag	Quantity	Designation	Type number	Supplier	Part number
=V1WR1UQ52UQ1.2-BGS/R	1	Inductive sensor Monitoring Kit for Power Clamps	1324638	TUNKERS	TUN.1324638

+.WR1UQ52UQ1.1/1

+.WR1UQ52UQ2.1/1

Parts list

F01_001

Device tag	Quantity	Designation	Type number	Supplier	Part number
=V1WR1UQ52UQ2.1-BGS/R	1	Inductive sensor Monitoring Kit for Power Clamps	1324638	TUNKERS	TUN.1324638

+.WR1UQ52UQ1.2/1

+.WR1UQ52UQ2.2/1

Parts list

F01_001

Device tag	Quantity	Designation	Type number	Supplier	Part number
=V1WR1UQ52UQ2.2-BGS/R	1	Inductive sensor Monitoring Kit for Power Clamps	1324638	TUNKERS	TUN.1324638

+.WR1UQ52UQ2.1/1

+.WR1UQ52UQ3.1/1

Parts list

F01_001

Device tag	Quantity	Designation	Type number	Supplier	Part number
=V1WR1UQ52UQ3.1-BGR	1	Inductive sensor	NI50U-CK40-AP6X2-H1141/S1590 W/BS4_A	Turck	TUR.1625891
=V1WR1UQ52UQ3.1-BGS	1	Inductive sensor	NI50U-CK40-AP6X2-H1141/S1590 W/BS4_A	Turck	TUR.1625891
=V1WR1UQ52UQ3.1-XGR/S	1	Y splitter	U2-30676	TURCK	TUR.VB2-FSM 4.4/2FKM 4/S3450

+.WR1UQ52UQ2.2/1

+.WR1UQ52UQ3.2/1

Parts list

F01_001

Device tag	Quantity	Designation	Type number	Supplier	Part number
=V1WR1UQ52UQ3.2-BGR	1	Inductive sensor	NI50U-CK40-AP6X2-H1141/S1590 W/BS4_A	Turck	TUR.1625891
=V1WR1UQ52UQ3.2-BGS	1	Inductive sensor	NI50U-CK40-AP6X2-H1141/S1590 W/BS4_A	Turck	TUR.1625891
=V1WR1UQ52UQ3.2-XGR/S	1	Y splitter	U2-30676	TURCK	TUR.VB2-FSM 4.4/2FKM 4/S3450

Parts list

F01_001

Device tag	Quantity	Designation	Type number	Supplier	Part number
=V1WR1UQ52UQ3.3-BGR	1	Inductive sensor	NI50U-CK40-AP6X2-H1141/S1590 W/BS4_A	Turck	TUR.1625891
=V1WR1UQ52UQ3.3-BGS	1	Inductive sensor	NI50U-CK40-AP6X2-H1141/S1590 W/BS4_A	Turck	TUR.1625891
=V1WR1UQ52UQ3.3-XGR/S	1	Y splitter	U2-30676	TURCK	TUR.VB2-FSM 4.4/2FKM 4/S3450

Parts list

F01_001

Device tag	Quantity	Designation	Type number	Supplier	Part number
=V1WR1UQ52UQ3.4-BGR	1	Inductive sensor	NI50U-CK40-AP6X2-H1141/S1590 W/BS4_A	Turck	TUR.1625891
=V1WR1UQ52UQ3.4-BGS	1	Inductive sensor	NI50U-CK40-AP6X2-H1141/S1590 W/BS4_A	Turck	TUR.1625891
=V1WR1UQ52UQ3.4-XGR/S	1	Y splitter	U2-30676	TURCK	TUR.VB2-FSM 4.4/2FKM 4/S3450

Parts list

F01_001

Device tag	Quantity	Designation	Type number	Supplier	Part number
=V1WR1UQ52UQ4.1-BGS/R	1	Inductive sensor Monitoring Kit for Power Clamps	1324644	TUNKERS	TUN.1324644

+.WR1UQ52UQ3.4/1

+.WR1UQ52UQ4.2/1

Parts list

F01_001

Device tag	Quantity	Designation	Type number	Supplier	Part number
=V1WR1UQ52UQ4.2-BGS/R	1	Inductive sensor Monitoring Kit for Power Clamps	1324644	TUNKERS	TUN.1324644

+.WR1UQ52UQ4.1/1

+.WR1UQ52UQ4.3/1

Parts list

F01_001

Device tag	Quantity	Designation	Type number	Supplier	Part number
=V1WR1UQ52UQ4.3-BGS/R	1	Inductive sensor Monitoring Kit for Power Clamps	1324644	TUNKERS	TUN.1324644

Parts list

F01_001

Device tag	Quantity	Designation	Type number	Supplier	Part number
=V1WR1UQ52UQ4.4-BGS/R	1	Inductive sensor Monitoring Kit for Power Clamps	1324644	TUNKERS	TUN.1324644

+.WR1UQ52UQ4.3/1

+.WR1UQ52UQ5.1/1

Parts list

F01_001

Device tag	Quantity	Designation	Type number	Supplier	Part number
=V1WR1UQ52UQ5.1-BGS/R	1	Inductive sensor Monitoring Kit for Power Clamps	1324644	TUNKERS	TUN.1324644

+.WR1UQ52UQ4.4/1

+.WR1UQ52UQ5.2/1

Parts list

F01_001

Device tag	Quantity	Designation	Type number	Supplier	Part number
=V1WR1UQ52UQ5.2-BGS/R	1	Inductive sensor Monitoring Kit for Power Clamps	1324644	TUNKERS	TUN.1324644

+.WR1UQ52UQ5.1/1

+.WR1UQ52UQ6.1/1

Parts list

F01_001

Device tag	Quantity	Designation	Type number	Supplier	Part number
=V1WR1UQ52UQ6.1-BGS/R	1	Inductive sensor Monitoring Kit for Power Clamps	1324638	TUNKERS	TUN.1324638

+.WR1UQ52UQ5.2/1

+.WR1UQ52UQ6.2/1

Parts list

F01_001

Device tag	Quantity	Designation	Type number	Supplier	Part number
=V1WR1UQ52UQ6.2-BGS/R	1	Inductive sensor Monitoring Kit for Power Clamps	1324638	TUNKERS	TUN.1324638

+.WR1UQ52UQ6.1/1

+.WR1UQ52UQ6.3/1

Parts list

F01_001

Device tag	Quantity	Designation	Type number	Supplier	Part number
=V1WR1UQ52UQ6.3-BGS/R	1	Inductive sensor Monitoring Kit for Power Clamps	1324638	TUNKERS	TUN.1324638

+.WR1UQ52UQ6.2/1

+.WR1UQ52UQ6.4/1

Parts list

F01_001

Device tag	Quantity	Designation	Type number	Supplier	Part number
=V1WR1UQ52UQ6.4-BGS/R	1	Inductive sensor Monitoring Kit for Power Clamps	1324638	TUNKERS	TUN.1324638

+.WR1UQ52UQ6.3/1

+.WR1UQ52UQ7.1/1

Parts list

F01_001

Device tag	Quantity	Designation	Type number	Supplier	Part number
=V1WR1UQ52UQ7.1-BGS/R	1	Inductive sensor Monitoring Kit for Power Clamps	1324644	TUNKERS	TUN.1324644

+.WR1UQ52UQ6.4/1

+.WR1UQ52UQ7.2/1

Parts list

F01_001

Device tag	Quantity	Designation	Type number	Supplier	Part number
=V1WR1UQ52UQ7.2-BGS/R	1	Inductive sensor Monitoring Kit for Power Clamps	1324644	TUNKERS	TUN.1324644

+.WR1UQ52UQ7.1/1

+.WR1UQ52UQ7.3/1

Parts list

F01_001

Device tag	Quantity	Designation	Type number	Supplier	Part number
=V1WR1UQ52UQ7.3-BGS/R	1	Inductive sensor Monitoring Kit for Power Clamps	1324644	TUNKERS	TUN.1324644

+.WR1UQ52UQ7.2/1

+.WR1UQ52UQ8.1/1

			Date	12/22/2022	Volvo Trucks North America		Valiant TMS	Parts list : TUN.1324644 - TUN.1324644	Drawing name: =2V13&EFS_EL	= + V1WR1UQ52UQ7.3	
			Ed.	MKLEPADLO							
			Appr		Sub-Floor Members				Document type: EPB	Project nr: 22-16146	Page 1 / 614
Modification	Date	Name	Original		Replacement of	Replaced by	Scale 1:1				

Parts list

F01_001

Device tag	Quantity	Designation	Type number	Supplier	Part number
=V1WR1UQ52UQ8.1-BGS/R	1				SMC.M9PW

+.WR1UQ52UQ7.3/1

+.WR1UQ52UQ9.1/1

Parts list

F01_001

Device tag	Quantity	Designation	Type number	Supplier	Part number
=V1WR1UQ52UQ9.1-BGS/R	1	Inductive sensor Monitoring Kit for Power Clamps	1324644	TUNKERS	TUN.1324644

+.WR1UQ52UQ8.1/1

+.WR1UQ52UQ9.2/1

Parts list

F01_001

Device tag	Quantity	Designation	Type number	Supplier	Part number
=V1WR1UQ52UQ9.2-BGS/R	1	Inductive sensor Monitoring Kit for Power Clamps	1324644	TUNKERS	TUN.1324644

+.WR1UQ52UQ9.1/1

+.WR1UQ52UQ9.3/1

Parts list

F01_001

Device tag	Quantity	Designation	Type number	Supplier	Part number
=V1WR1UQ52UQ9.3-BGS/R	1	Inductive sensor Monitoring Kit for Power Clamps	1324644	TUNKERS	TUN.1324644

+.WR1UQ52UQ9.2/1

+.WR1UQ52UQ9.4/1

Parts list

F01_001

Device tag	Quantity	Designation	Type number	Supplier	Part number
=V1WR1UQ52UQ9.4-BGS/R	1	Inductive sensor Monitoring Kit for Power Clamps	1324644	TUNKERS	TUN.1324644

+.WR1UQ52UQ9.3/1

+.WR1UQ52UQ9.5/1

Parts list

F01_001

Device tag	Quantity	Designation	Type number	Supplier	Part number
=V1WR1UQ52UQ9.5-BGS/R	1	Inductive sensor Monitoring Kit for Power Clamps	1324644	TUNKERS	TUN.1324644

+.WR1UQ52UQ9.4/1

+.WR1UQ52UQ10.1/1

Parts list

F01_001

Device tag	Quantity	Designation	Type number	Supplier	Part number
=V1WR1UQ52UQ10.1-BGS/R	1	Inductive sensor Monitoring Kit for Power Clamps	1324644	TUNKERS	TUN.1324644

+.WR1UQ52UQ9.5/1

+.WR1UQ52UQ10.2/1

Parts list

F01_001

Device tag	Quantity	Designation	Type number	Supplier	Part number
=V1WR1UQ52UQ10.2-BGS/R	1	Inductive sensor Monitoring Kit for Power Clamps	1324644	TUNKERS	TUN.1324644

Parts list

F01_001

Device tag	Quantity	Designation	Type number	Supplier	Part number
=V1WR1UQ52UQ10.3-BGS/R	1	Inductive sensor Monitoring Kit for Power Clamps	1324644	TUNKERS	TUN.1324644

+.WR1UQ52UQ10.2/1

+.WR1UQ52UQ11.1/1

Parts list

F01_001

Device tag	Quantity	Designation	Type number	Supplier	Part number
=V1WR1UQ52UQ11.1-BGS/R	1				SMC.M9PW

+.WR1UQ52UQ10.3/1

+.WR1UQ52UQ12.1/1

Parts list

F01_001

Device tag	Quantity	Designation	Type number	Supplier	Part number
=V1WR1UQ52UQ12.1-BGS/R	1	Inductive sensor Monitoring Kit for Power Clamps	1324644	TUNKERS	TUN.1324644

+.WR1UQ52UQ11.1/1

+.WR1UQ52UQ12.2/1

Parts list

F01_001

Device tag	Quantity	Designation	Type number	Supplier	Part number
=V1WR1UQ52UQ12.2-BGS/R	1	Inductive sensor Monitoring Kit for Power Clamps	1324644	TUNKERS	TUN.1324644

Parts list

F01_001

Device tag	Quantity	Designation	Type number	Supplier	Part number
=V1WR1UQ52UQ12.3-BGS/R	1	Inductive sensor Monitoring Kit for Power Clamps	1324644	TUNKERS	TUN.1324644

+.WR1UQ52UQ12.2/1

+.WR1UQ52UQ12.4/1

Parts list

F01_001

Device tag	Quantity	Designation	Type number	Supplier	Part number
=V1WR1UQ52UQ12.4-BGS/R	1	Inductive sensor Monitoring Kit for Power Clamps	1324644	TUNKERS	TUN.1324644

+.WR1UQ52UQ12.3/1

+.WR1UQ52UQ12.5/1

Parts list

F01_001

Device tag	Quantity	Designation	Type number	Supplier	Part number
=V1WR1UQ52UQ12.5-BGS/R	1	Inductive sensor Monitoring Kit for Power Clamps	1324644	TUNKERS	TUN.1324644

+.WR1UQ52UQ12.4/1

+.WR1UQ52UQ13.1/1

Parts list

F01_001

Device tag	Quantity	Designation	Type number	Supplier	Part number
=V1WR1UQ52UQ13.1-BGS/R	1	Inductive sensor Monitoring Kit for Power Clamps	1324644	TUNKERS	TUN.1324644

Parts list

F01_001

Device tag	Quantity	Designation	Type number	Supplier	Part number
=V1WR1UQ52UQ13.2-BGS/R	1	Inductive sensor Monitoring Kit for Power Clamps	1324638	TUNKERS	TUN.1324638

+.WR1UQ52UQ13.1/1

+.WR1UQ52UQ13.3/1

Parts list

F01_001

Device tag	Quantity	Designation	Type number	Supplier	Part number
=V1WR1UQ52UQ13.3-BGS/R	1	Inductive sensor Monitoring Kit for Power Clamps	1324644	TUNKERS	TUN.1324644

+.WR1UQ52UQ13.2/1

+.WR1UQ52UQ13.4/1

Parts list

F01_001

Device tag	Quantity	Designation	Type number	Supplier	Part number
=V1WR1UQ52UQ13.4-BGS/R	1	Inductive sensor Monitoring Kit for Power Clamps	1324644	TUNKERS	TUN.1324644

+.WR1UQ52UQ13.3/1

+.WR1UQ52UQ13.5/1

Parts list

F01_001

Device tag	Quantity	Designation	Type number	Supplier	Part number
=V1WR1UQ52UQ13.5-BGS/R	1	Inductive sensor Monitoring Kit for Power Clamps	1324638	TUNKERS	TUN.1324638

+.WR1UQ52UQ13.4/1

+.WR1UQ52UQ13.6/1

Parts list

F01_001

Device tag	Quantity	Designation	Type number	Supplier	Part number
=V1WR1UQ52UQ13.6-BGS/R	1	Inductive sensor Monitoring Kit for Power Clamps	1324644	TUNKERS	TUN.1324644

+.WR1UQ52UQ13.5/1

+.WR1UQ52UQ14.1/1

Parts list

F01_001

Device tag	Quantity	Designation	Type number	Supplier	Part number
=V1WR1UQ52UQ14.1-BGS/R	1	4-Wire, 4-Pin, DC M12 X 1 (PNP)	WWS001A	WEL	WEL.WWS001A

+.WR1UQ52UQ13.6/1

+.WR1UQ52UQ14.2/1

Parts list

F01_001

Device tag	Quantity	Designation	Type number	Supplier	Part number
=V1WR1UQ52UQ14.2-BGS/R	1	4-Wire, 4-Pin, DC M12 X 1 (PNP)	WWS001A	WEL	WEL.WWS001A

+.WR1UQ52UQ14.1/1

+.WR2/1

Parts list

F01_001

Device tag	Quantity	Designation	Type number	Supplier	Part number
=V1FQ1-QB1	1				A-B.440F-M2036HYNN
=V1FQ1-QB2	1				A-B.440F-M2036HYNN
=V1FQ1-QB3	1				A-B.440F-M2036HYNN
=V1FQ1-QB4	1				A-B.440F-M2036HYNN
=V1WR2BG0-BG01	1	Slot sensor, Through-beam	BGL 30A-005-S49		BAL.BGL001C
=V1WR2BG0-BG02	1	Inductive sensor	BI20U-CA40-AP6X2-H1141/S1590W/BS2.0	Turck	TUR.1627297
=V1WR2BG0-BG03	1	Inductive sensor	BI20U-CA40-AP6X2-H1141/S1590W/BS2.0	Turck	TUR.1627297
=V1WR2BG0-BG04	0	NEMA Safety Limit Switch - NEMA Type 4 & 13 Oiltight Construction	802T-APDD5	A-B	A-B.802T-APDD5
=V1WR2BG0-BG05	0	NEMA Safety Limit Switch - NEMA Type 4 & 13 Oiltight Construction	802T-APDD5	A-B	A-B.802T-APDD5
=V1WR2BG0-BG06	1	Inductive Sensors	BES M18MI-PSC80B-S04G		BAL.BES008L
=V1WR2BG0-BG07	1	Inductive Sensors	BES M18MI-PSC80B-S04G		BAL.BES008L
=V1WR2BG0-BG08	0	NEMA Safety Limit Switch - NEMA Type 4 & 13 Oiltight Construction	802T-APDD5	A-B	A-B.802T-APDD5
=V1WR2BG0-BG09	0	NEMA Safety Limit Switch - NEMA Type 4 & 13 Oiltight Construction	802T-APDD5	A-B	A-B.802T-APDD5
=V1WR2BG0-BG10	0	NEMA Safety Limit Switch - NEMA Type 4 & 13 Oiltight Construction	802T-APDD5	A-B	A-B.802T-APDD5
=V1WR2BG0-BG11	0	NEMA Safety Limit Switch - NEMA Type 4 & 13 Oiltight Construction	802T-APDD5	A-B	A-B.802T-APDD5
=V1WR2BG0-BG12	1	Slot sensor, Through-beam	BGL 30A-005-S49		BAL.BGL001C
=V1WR2BG0-BG13	1	Slot sensor, Through-beam	BGL 30A-005-S49		BAL.BGL001C
=V1WR2BG0-XG1/2	1	Y splitter	U2-30676	TURCK	TUR.VB2-FSM 4.4/2FKM 4/S3450
=V1WR2BG0-XG6/7	1	Y splitter	U2-30676	TURCK	TUR.VB2-FSM 4.4/2FKM 4/S3450
=V1WR2BG0-XG12/13	1	Y splitter	U2-30676	TURCK	TUR.VB2-FSM 4.4/2FKM 4/S3450
=V1WR2KF1-KF1.11	1	Field bus, decentralized peripheral - digital I/O module	MVK-MPNIO F DI16/8 7/8" IRT		MURR.55556
=V1WR2KF2-KF2.11	1	Field bus, decentralized peripheral - digital I/O module	MVK-MPNIO F DI16/8 7/8" IRT		MURR.55556
=V1WR2KF2-XD1	1				TUR.BS 8251-0/PG9
=V1WR2KF2-XD2	1				TUR.BS 8251-0/PG9
=V1WR2KF2-XD3	1				TUR.BS 8251-0/PG9
=V1WR2KF2-XD4	1				TUR.BS 8251-0/PG9
=V1WR2KF3-KF3.11	1	Field bus, decentralized peripheral - digital I/O module	MVK-MPNIO F DI16/8 7/8" IRT		MURR.55556

Parts list

F01_001

Device tag	Quantity	Designation	Type number	Supplier	Part number
=V1WR2UQ51BG0-BG01	1	Inductive sensor	BI20U-CA40-AP6X2-H1141/S1590W/BS2.0	Turck	TUR.1627297
=V1WR2UQ51BG0-BG02	1	Inductive sensor	BI20U-CA40-AP6X2-H1141/S1590W/BS2.0	Turck	TUR.1627297
=V1WR2UQ51BG0-XG1/2	1	Y splitter	U2-30676	TURCK	TUR.VB2-FSM 4.4/2FKM 4/S3450
=V1WR2UQ51KF1-KF1	0	Bus node	CPX-FB33	FES	FES.548755
=V1WR2UQ51KF1-KF1	0	Interlinking block	CPX-M-GE-EV-S-7/8-5POL	FES	FES.550208
=V1WR2UQ51KF1-KF1.11	0	Manifold block	CPX-M-AB-8-M12X2-5POL	FES	FES.549335
=V1WR2UQ51KF1-KF1.12	0	Manifold block	CPX-M-AB-8-M12X2-5POL	FES	FES.549335
=V1WR2UQ51KF1-KF1.13	0	Manifold block	CPX-M-AB-8-M12X2-5POL	FES	FES.549335

Parts list

F01_001

Device tag	Quantity	Designation	Type number	Supplier	Part number
=V1WR2UQ51UQ1.1-BGS/R	1	Inductive sensor Monitoring Kit for Power Clamps	1324638	TUNKERS	TUN.1324638

+V1WR2UQ51/1

+.WR2UQ51UQ1.2/1

			Date	12/22/2022	Volvo Trucks North America	Valiant TMS	Parts list : TUN.1324638 - TUN.1324638	Drawing name: =2V13&EFS_EL	=	
			Ed.	MKLEPADLO					+ V1WR2UQ51UQ1.1	
			Appr		Sub-Floor Members			Document type: EPB	Project nr: 22-16146	Page 1
Modification	Date	Name	Original		Replacement of / Replaced by	Scale 1:1				614

Parts list

F01_001

Device tag	Quantity	Designation	Type number	Supplier	Part number
=V1WR2UQ51UQ1.2-BGS/R	1	Inductive sensor Monitoring Kit for Power Clamps	1324638	TUNKERS	TUN.1324638

+.WR2UQ51UQ1.1/1

+.WR2UQ51UQ1.3/1

Parts list

F01_001

Device tag	Quantity	Designation	Type number	Supplier	Part number
=V1WR2UQ51UQ1.3-BGS/R	1	Inductive sensor Monitoring Kit for Power Clamps	1324638	TUNKERS	TUN.1324638

+.WR2UQ51UQ1.2/1

+.WR2UQ51UQ1.4/1

Parts list

F01_001

Device tag	Quantity	Designation	Type number	Supplier	Part number
=V1WR2UQ51UQ1.4-BGS/R	1	Inductive sensor Monitoring Kit for Power Clamps	1324638	TUNKERS	TUN.1324638

+.WR2UQ51UQ1.3/1

+.WR2UQ51UQ2.1/1

Parts list

F01_001

Device tag	Quantity	Designation	Type number	Supplier	Part number
=V1WR2UQ51UQ2.1-BGS/R	1	Inductive sensor Monitoring Kit for Power Clamps	1324638	TUNKERS	TUN.1324638

+.WR2UQ51UQ1.4/1

+.WR2UQ51UQ2.2/1

Parts list

F01_001

Device tag	Quantity	Designation	Type number	Supplier	Part number
=V1WR2UQ51UQ2.2-BGS/R	1	Inductive sensor Monitoring Kit for Power Clamps	1324638	TUNKERS	TUN.1324638

+.WR2UQ51UQ2.1/1

+.WR2UQ51UQ2.3/1

Parts list

F01_001

Device tag	Quantity	Designation	Type number	Supplier	Part number
=V1WR2UQ51UQ2.3-BGS/R	1	Inductive sensor Monitoring Kit for Power Clamps	1324638	TUNKERS	TUN.1324638

+.WR2UQ51UQ2.2/1

+.WR2UQ51UQ2.4/1

Parts list

F01_001

Device tag	Quantity	Designation	Type number	Supplier	Part number
=V1WR2UQ51UQ2.4-BGS/R	1	Inductive sensor Monitoring Kit for Power Clamps	1324638	TUNKERS	TUN.1324638

+.WR2UQ51UQ2.3/1

+.WR2UQ51UQ2.5/1

Parts list

F01_001

Device tag	Quantity	Designation	Type number	Supplier	Part number
=V1WR2UQ51UQ2.5-BGS/R	1	4-Wire, 4-Pin, DC M12 X 1 (PNP)	WWS001A	WEL	WEL.WWS001A

+.WR2UQ51UQ2.4/1

+.WR2UQ51UQ2.6/1

Parts list

F01_001

Device tag	Quantity	Designation	Type number	Supplier	Part number
=V1WR2UQ51UQ2.6-BGS/R	1	4-Wire, 4-Pin, DC M12 X 1 (PNP)	WWS001A	WEL	WEL.WWS001A

+.WR2UQ51UQ2.5/1

+.WR2UQ51UQ3.1/1

Parts list

F01_001

Device tag	Quantity	Designation	Type number	Supplier	Part number
=V1WR2UQ51UQ3.1-BGS/R	1	Inductive sensor Monitoring Kit for Power Clamps	1324638	TUNKERS	TUN.1324638

+.WR2UQ51UQ2.6/1

+.WR2UQ51UQ3.2/1

Parts list

F01_001

Device tag	Quantity	Designation	Type number	Supplier	Part number
=V1WR2UQ51UQ3.2-BGS/R	1	Inductive sensor Monitoring Kit for Power Clamps	1324638	TUNKERS	TUN.1324638

Parts list

F01_001

Device tag	Quantity	Designation	Type number	Supplier	Part number
=V1WR2UQ51UQ3.3-BGS/R	1	Inductive sensor Monitoring Kit for Power Clamps	1324638	TUNKERS	TUN.1324638

+.WR2UQ51UQ3.2/1

+.WR2UQ51UQ3.4/1

Parts list

F01_001

Device tag	Quantity	Designation	Type number	Supplier	Part number
=V1WR2UQ51UQ3.4-BGS/R	1	Inductive sensor Monitoring Kit for Power Clamps	1324638	TUNKERS	TUN.1324638

Parts list

F01_001

Device tag	Quantity	Designation	Type number	Supplier	Part number
=V1WR2UQ51UQ3.5-BGS/R	1	Inductive sensor Monitoring Kit for Power Clamps	1324644	TUNKERS	TUN.1324644

+.WR2UQ51UQ3.4/1

+.WR2UQ51UQ3.6/1

Parts list

F01_001

Device tag	Quantity	Designation	Type number	Supplier	Part number
=V1WR2UQ51UQ3.6-BGS/R	1	Inductive sensor Monitoring Kit for Power Clamps	1324644	TUNKERS	TUN.1324644

+.WR2UQ51UQ3.5/1

+.WR2UQ52/1

Parts list

F01_001

Device tag	Quantity	Designation	Type number	Supplier	Part number
=V1WR2UQ52BG0-BG01	1	Inductive sensor	BI20U-CA40-AP6X2-H1141/S1590W/BS2.0	Turck	TUR.1627297
=V1WR2UQ52BG0-BG02	1	Inductive sensor	BI20U-CA40-AP6X2-H1141/S1590W/BS2.0	Turck	TUR.1627297
=V1WR2UQ52BG0-BG03	1	Inductive sensor	BI20U-CA40-AP6X2-H1141/S1590W/BS2.0	Turck	TUR.1627297
=V1WR2UQ52BG0-BG04	1	Inductive sensor	BI20U-CA40-AP6X2-H1141/S1590W/BS2.0	Turck	TUR.1627297
=V1WR2UQ52BG0-XG1/2	1	Y splitter	U2-30676	TURCK	TUR.VB2-FSM 4.4/2FKM 4/S3450
=V1WR2UQ52BG0-XG3/4	1	Y splitter	U2-30676	TURCK	TUR.VB2-FSM 4.4/2FKM 4/S3450
=V1WR2UQ52KF1-KF1	0	Bus node	CPX-FB33	FES	FES.548755
=V1WR2UQ52KF1-KF1	0	Interlinking block	CPX-M-GE-EV-S-7/8-5POL	FES	FES.550208
=V1WR2UQ52KF1-KF1.11	0	Manifold block	CPX-M-AB-8-M12X2-5POL	FES	FES.549335
=V1WR2UQ52KF1-KF1.12	0	Manifold block	CPX-M-AB-8-M12X2-5POL	FES	FES.549335
=V1WR2UQ52KF1-KF1.13	0	Manifold block	CPX-M-AB-8-M12X2-5POL	FES	FES.549335

Parts list

F01_001

Device tag	Quantity	Designation	Type number	Supplier	Part number
=V1WR2UQ52UQ1.1-BGS/R	1	Inductive sensor Monitoring Kit for Power Clamps	1324638	TUNKERS	TUN.1324638

+V1WR2UQ52/1

+.WR2UQ52UQ1.2/1

			Date	12/22/2022	Volvo Trucks North America	Valiant TMS	Parts list : TUN.1324638 - TUN.1324638	Drawing name: =2V13&EFS_EL	=	
			Ed.	MKLEPADLO					+ V1WR2UQ52UQ1.1	
			Appr		Sub-Floor Members			Document type: EPB	Project nr: 22-16146	Page 1
Modification	Date	Name	Original		Replacement of / Replaced by	Scale 1:1				614

Parts list

F01_001

Device tag	Quantity	Designation	Type number	Supplier	Part number
=V1WR2UQ52UQ1.2-BGS/R	1	Inductive sensor Monitoring Kit for Power Clamps	1324644	TUNKERS	TUN.1324644

+.WR2UQ52UQ1.1/1

+.WR2UQ52UQ1.3/1

Parts list

F01_001

Device tag	Quantity	Designation	Type number	Supplier	Part number
=V1WR2UQ52UQ1.3-BGS/R	1	Inductive sensor Monitoring Kit for Power Clamps	1324638	TUNKERS	TUN.1324638

+.WR2UQ52UQ1.2/1

+.WR2UQ52UQ1.4/1

Parts list

F01_001

Device tag	Quantity	Designation	Type number	Supplier	Part number
=V1WR2UQ52UQ1.4-BGS/R	1	Inductive sensor Monitoring Kit for Power Clamps	1324638	TUNKERS	TUN.1324638

+.WR2UQ52UQ1.3/1

+.WR2UQ52UQ1.5/1

Parts list

F01_001

Device tag	Quantity	Designation	Type number	Supplier	Part number
=V1WR2UQ52UQ1.5-BGS/R	1	Inductive sensor Monitoring Kit for Power Clamps	1324644	TUNKERS	TUN.1324644

Parts list

F01_001

Device tag	Quantity	Designation	Type number	Supplier	Part number
=V1WR2UQ52UQ1.6-BGS/R	1	Inductive sensor Monitoring Kit for Power Clamps	1324644	TUNKERS	TUN.1324644

+.WR2UQ52UQ1.5/1

+.WR2UQ52UQ2.1/1

Parts list

F01_001

Device tag	Quantity	Designation	Type number	Supplier	Part number
=V1WR2UQ52UQ2.1-BGS/R	1	Inductive sensor Monitoring Kit for Power Clamps	1324638	TUNKERS	TUN.1324638

+.WR2UQ52UQ1.6/1

+.WR2UQ52UQ2.2/1

Parts list

F01_001

Device tag	Quantity	Designation	Type number	Supplier	Part number
=V1WR2UQ52UQ2.2-BGS/R	1	Inductive sensor Monitoring Kit for Power Clamps	1324638	TUNKERS	TUN.1324638

+.WR2UQ52UQ2.1/1

+.WR2UQ52UQ2.3/1

Parts list

F01_001

Device tag	Quantity	Designation	Type number	Supplier	Part number
=V1WR2UQ52UQ2.3-BGS/R	1	Inductive sensor Monitoring Kit for Power Clamps	1324638	TUNKERS	TUN.1324638

+.WR2UQ52UQ2.2/1

+.WR2UQ52UQ2.4/1

Parts list

F01_001

Device tag	Quantity	Designation	Type number	Supplier	Part number
=V1WR2UQ52UQ2.4-BGS/R	1	Inductive sensor Monitoring Kit for Power Clamps	1324638	TUNKERS	TUN.1324638

+.WR2UQ52UQ2.3/1

+.WR2UQ52UQ3.1/1

Parts list

F01_001

Device tag	Quantity	Designation	Type number	Supplier	Part number
=V1WR2UQ52UQ3.1-BGS/R	1	Inductive sensor Monitoring Kit for Power Clamps	1324638	TUNKERS	TUN.1324638

+.WR2UQ52UQ2.4/1

+.WR2UQ52UQ3.2/1

Parts list

F01_001

Device tag	Quantity	Designation	Type number	Supplier	Part number
=V1WR2UQ52UQ3.2-BGS/R	1	Inductive sensor Monitoring Kit for Power Clamps	1324638	TUNKERS	TUN.1324638

+.WR2UQ52UQ3.1/1

+.WR2UQ52UQ3.3/1

Parts list

F01_001

Device tag	Quantity	Designation	Type number	Supplier	Part number
=V1WR2UQ52UQ3.3-BGS/R	1	Inductive sensor Monitoring Kit for Power Clamps	1324638	TUNKERS	TUN.1324638

Parts list

F01_001

Device tag	Quantity	Designation	Type number	Supplier	Part number
=V1WR2UQ52UQ3.4-BGS/R	1	Inductive sensor Monitoring Kit for Power Clamps	1324638	TUNKERS	TUN.1324638

Terminal line-up diagram

F12_001

Part number					
Mounting rail			Strip label	End angle rear	End plate

Terminal					
Part number	Type number	Cross-section	Terminal label	Jumper	Cover

=KF0KF1+UC31-PC1

	DVI	

&EPB+V1WR2UQ52UQ3.4/1

2

			Date	12/22/2022	Volvo Trucks North America		Valiant TMS	Terminal line-up diagram =KF0KF1+UC31-PC1	Drawing name: =2V13&EFS_EL	=	
			Ed.	MKLEPADLO						+	
			Appr		Sub-Floor Members				Document type: ETT	Project nr: 22-16146	Page 1
Modification	Date	Name	Original		Replacement of	Replaced by	Scale 1:1				614

Terminal line-up diagram

F12_001

Part number					
Mounting rail			Strip label	End angle rear	End plate

Terminal					
Part number	Type number	Cross-section	Terminal label	Jumper	Cover

=KF0KF1+UC31-PH1

DVI

1

3

			Date	12/22/2022	Volvo Trucks North America	Valiant TMS	Terminal line-up diagram =KF0KF1+UC31-PH1	Drawing name: =2V13&EFS_EL	=
			Ed.	MKLEPADLO					+
			Appr		Sub-Floor Members			Document type: ETT	Project nr: 22-16146	Page 2 / 614
Modification	Date	Name	Original		Replacement of / Replaced by	Scale 1:1			

Terminal line-up diagram

F12_001

Part number					
Mounting rail			Strip label	End angle rear	End plate

Terminal					
Part number	Type number	Cross-section	Terminal label	Jumper	Cover
WEI.1608510000	ZDU 2.5	2.5			
WEI.1608740000	ZAP/TW 1				
WEI.9540000000	ZEW 35				
WEI.1608520000	ZDU 2.5 BL	2.5 mm²			
WEI.1608520000	ZDU 2.5 BL	2.5 mm²			

=KF0WC3+UC31-XD1

'	L1	
'	N	
'		
'	PE	
'		

2 4

			Date	12/22/2022	Volvo Trucks North America	Valiant TMS	Terminal line-up diagram =KF0WC3+UC31-XD1	Drawing name: =2V13&EFS_EL	=
			Ed.	MKLEPADLO					+
			Appr		Sub-Floor Members			Document type: ETT	Project nr: 22-16146	Page 3
Modification	Date	Name	Original		Replacement of	Replaced by	Scale 1:1			614

Terminal line-up diagram

F12_001

Part number					
Mounting rail			Strip label	End angle rear	End plate

Terminal					
Part number	Type number	Cross-section	Terminal label	Jumper	Cover
WEI.1608510000	ZDU 2.5	2.5			
WEI.1608740000	ZAP/TW 1				
WEI.9540000000	ZEW 35				
WEI.1608520000	ZDU 2.5 BL	2.5 mm²			
WEI.1608520000	ZDU 2.5 BL	2.5 mm²			

=KF0WC3+UC31-XD2

'	1L1	
'	N	
'		
'	PE	
'		

3

5

			Date	12/22/2022	Volvo Trucks North America	Valiant TMS	Terminal line-up diagram =KF0WC3+UC31-XD2	Drawing name: =2V13&EFS_EL	=
			Ed.	MKLEPADLO					+
			Appr		Sub-Floor Members			Document type: ETT	Project nr: 22-16146	Page 4
Modification	Date	Name	Original		Replacement of	Replaced by	Scale 1:1		614

Terminal line-up diagram

F12_001

Part number					
Mounting rail			Strip label	End angle rear	End plate

Terminal					
Part number	Type number	Cross-section	Terminal label	Jumper	Cover
WEI.8731720000	ZTR 2.5/3AN	2.5			
WEI.1608800000	ZAP/TW 3				
WEI.9540000000	ZEW 35				
WEI.8731720000	ZTR 2.5/3AN	2.5			
WEI.8731720000	ZTR 2.5/3AN	2.5			
WEI.8731720000	ZTR 2.5/3AN	2.5			
WEI.8731720000	ZTR 2.5/3AN	2.5			
WEI.8731720000	ZTR 2.5/3AN	2.5			

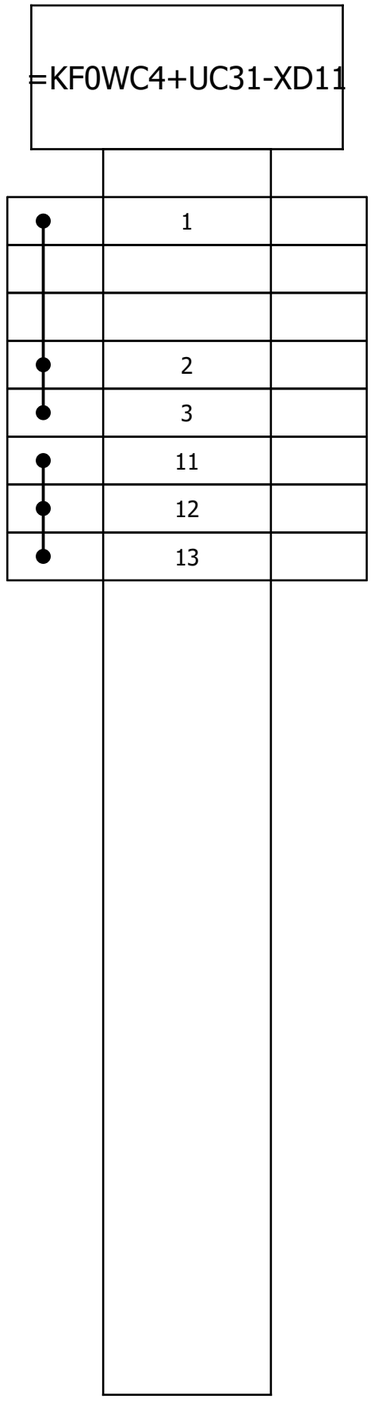

Terminal line-up diagram

F12_001

Part number					
Mounting rail			Strip label	End angle rear	End plate

Terminal					
Part number	Type number	Cross-section	Terminal label	Jumper	Cover
WEI.8731720000	ZTR 2.5/3AN	2.5			
WEI.1608800000	ZAP/TW 3				
WEI.9540000000	ZEW 35				
WEI.8731720000	ZTR 2.5/3AN	2.5			
WEI.8731720000	ZTR 2.5/3AN	2.5			
WEI.8731720000	ZTR 2.5/3AN	2.5			
WEI.8731720000	ZTR 2.5/3AN	2.5			
WEI.8731720000	ZTR 2.5/3AN	2.5			
WEI.8731720000	ZTR 2.5/3AN	2.5			
WEI.8731720000	ZTR 2.5/3AN	2.5			

=KF0WC4+UC31-XD12

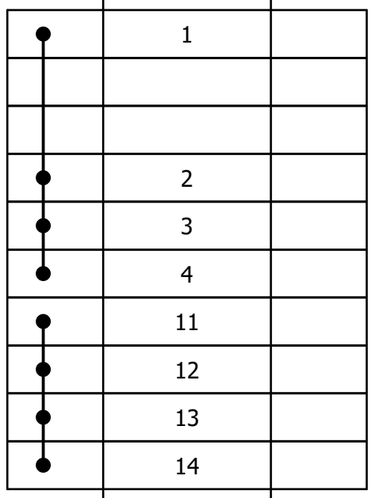

Terminal line-up diagram

F12_001

Part number					
Mounting rail			Strip label	End angle rear	End plate

Terminal					
Part number	Type number	Cross-section	Terminal label	Jumper	Cover
WEI.8731720000	ZTR 2.5/3AN	2.5			
WEI.1608800000	ZAP/TW 3				
WEI.9540000000	ZEW 35				
WEI.8731720000	ZTR 2.5/3AN	2.5			
WEI.8731720000	ZTR 2.5/3AN	2.5			
WEI.8731720000	ZTR 2.5/3AN	2.5			
WEI.8731720000	ZTR 2.5/3AN	2.5			
WEI.8731720000	ZTR 2.5/3AN	2.5			

=KF0WC4+UC31-XD13

	1	
	2	
	3	
	11	
	12	
	13	

6

8

			Date	12/22/2022	Volvo Trucks North America	Valiant TMS	Terminal line-up diagram =KF0WC4+UC31-XD13	Drawing name: =2V13&EFS_EL	=	
			Ed.	MKLEPADLO					+	
			Appr		Sub-Floor Members			Document type: ETT	Project nr: 22-16146	Page 7 / 614
Modification	Date	Name	Original		Replacement of / Replaced by	Scale 1:1				

Terminal line-up diagram

F12_001

Part number					
Mounting rail			Strip label	End angle rear	End plate

Terminal					
Part number	Type number	Cross-section	Terminal label	Jumper	Cover
WEI.8731720000	ZTR 2.5/3AN	2.5			
WEI.1608800000	ZAP/TW 3				
WEI.9540000000	ZEW 35				
WEI.8731720000	ZTR 2.5/3AN	2.5			
WEI.8731720000	ZTR 2.5/3AN	2.5			
WEI.8731720000	ZTR 2.5/3AN	2.5			
WEI.8731720000	ZTR 2.5/3AN	2.5			
WEI.8731720000	ZTR 2.5/3AN	2.5			
WEI.8731720000	ZTR 2.5/3AN	2.5			
WEI.8731720000	ZTR 2.5/3AN	2.5			

=KF0WC4+UC31-XD14

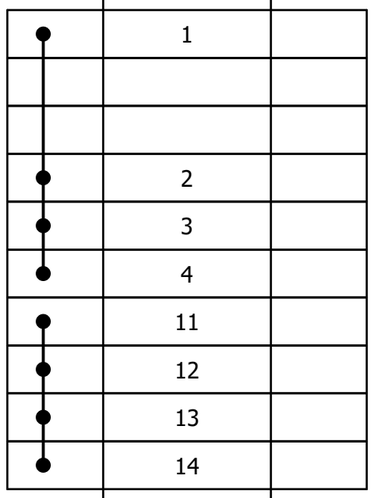

Terminal line-up diagram

F12_001

Part number					
Mounting rail			Strip label	End angle rear	End plate

Terminal					
Part number	Type number	Cross-section	Terminal label	Jumper	Cover

=V1WC1+V1UC11-PE

'	PE	

8

10

			Date	12/22/2022	Volvo Trucks North America	Valiant TMS	Terminal line-up diagram =V1WC1+V1UC11-PE	Drawing name: =2V13&EFS_EL	=
			Ed.	MKLEPADLO					+
			Appr		Sub-Floor Members			Document type: ETT	Project nr: 22-16146	Page 9
Modification	Date	Name	Original		Replacement of	Replaced by	Scale 1:1		614

Terminal line-up diagram

F12_001

Part number					
Mounting rail			Strip label	End angle rear	End plate
Terminal					
Part number	Type number	Cross-section	Terminal label	Jumper	Cover
1SNK705012R0000	ZK2.5-4P	2.5			
1SNK705012R0000	ZK2.5-4P	2.5			
1SNK705012R0000	ZK2.5-4P	2.5			
1SNK705012R0000	ZK2.5-4P	2.5			
1SNK705012R0000	ZK2.5-4P	2.5			
1SNK705012R0000	ZK2.5-4P	2.5			
1SNK705012R0000	ZK2.5-4P	2.5			
1SNK705012R0000	ZK2.5-4P	2.5			
1SNK705012R0000	ZK2.5-4P	2.5			
1SNK705012R0000	ZK2.5-4P	2.5			
1SNK705012R0000	ZK2.5-4P	2.5			
1SNK705012R0000	ZK2.5-4P	2.5			
1SNK705012R0000	ZK2.5-4P	2.5			
1SNK705012R0000	ZK2.5-4P	2.5			
1SNK705012R0000	ZK2.5-4P	2.5			
1SNK705012R0000	ZK2.5-4P	2.5			

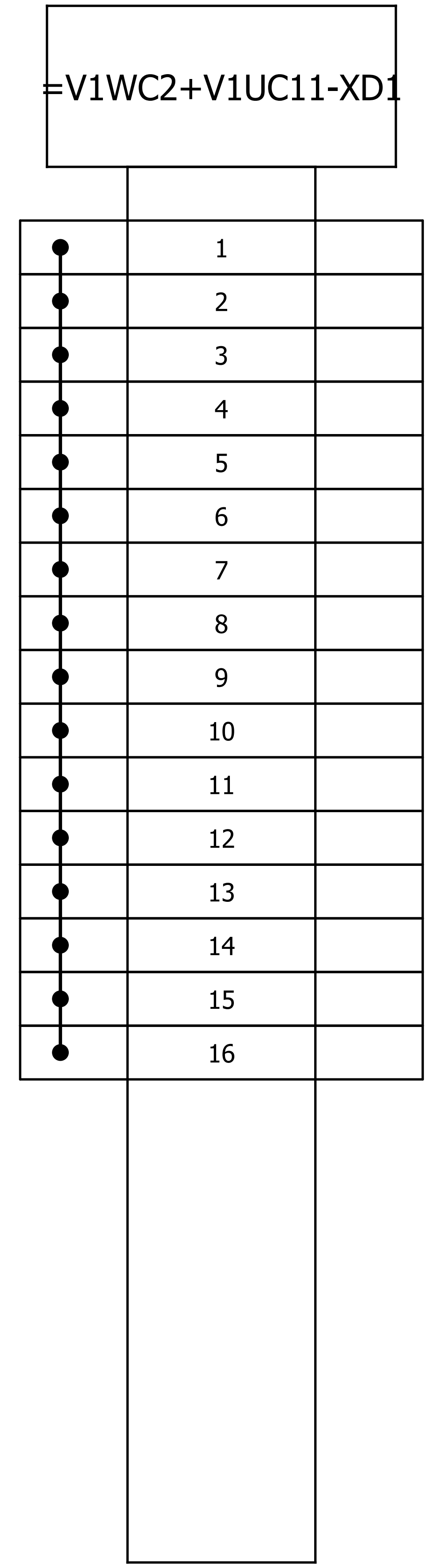

9

11

Terminal line-up diagram

F12_001

Part number					
Mounting rail			Strip label	End angle rear	End plate

Terminal					
Part number	Type number	Cross-section	Terminal label	Jumper	Cover
1SNK705012R0000	ZK2.5-4P	2.5			
1SNK705012R0000	ZK2.5-4P	2.5			
1SNK705012R0000	ZK2.5-4P	2.5			
1SNK705012R0000	ZK2.5-4P	2.5			
1SNK705012R0000	ZK2.5-4P	2.5			
1SNK705012R0000	ZK2.5-4P	2.5			
1SNK705012R0000	ZK2.5-4P	2.5			
1SNK705012R0000	ZK2.5-4P	2.5			

=V1WC2+V1UC11-XD2

	1	
	2	
	3	
	4	
	5	
	6	
	7	
	8	

Terminal line-up diagram

F12_001

Part number					
Mounting rail			Strip label	End angle rear	End plate

Terminal					
Part number	Type number	Cross-section	Terminal label	Jumper	Cover
1SNK705012R0000	ZK2.5-4P	2.5			
1SNK705012R0000	ZK2.5-4P	2.5			
1SNK705012R0000	ZK2.5-4P	2.5			
1SNK705012R0000	ZK2.5-4P	2.5			
1SNK705012R0000	ZK2.5-4P	2.5			

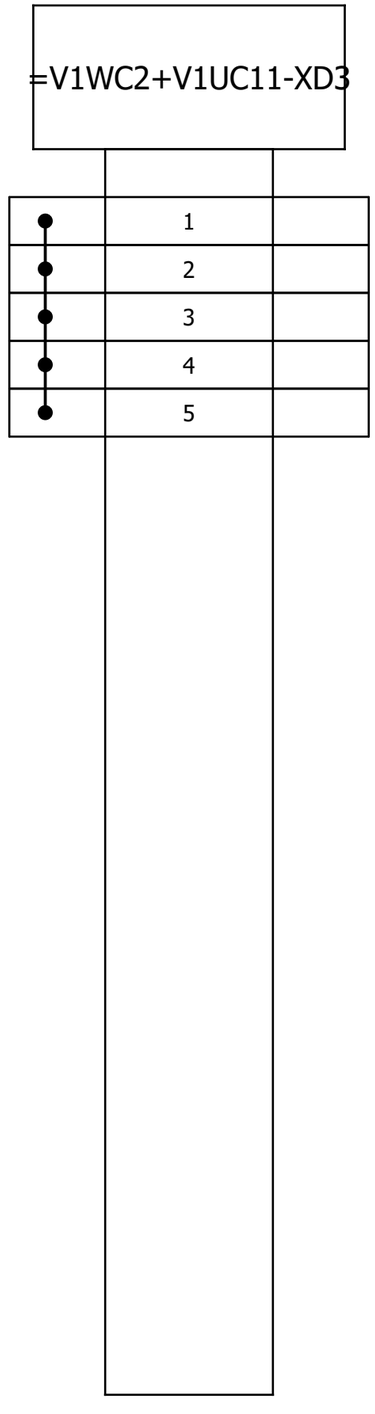

Terminal line-up diagram

F12_001

Part number					
Mounting rail			Strip label	End angle rear	End plate

Terminal					
Part number	Type number	Cross-section	Terminal label	Jumper	Cover
1SNK706012R0000	ZK4-4P	4			
1SNK706012R0000	ZK4-4P	4			
1SNK706012R0000	ZK4-4P	4			
1SNK706012R0000	ZK4-4P	4			

=V1WC3+V1UC11-XD1

'	1	
'	2	
'	3	
'	4	

12

14

			Date	12/22/2022	Volvo Trucks North America		Valiant TMS	Terminal line-up diagram =V1WC3+V1UC11-XD1	Drawing name: =2V13&EFS_EL	=	
			Ed.	MKLEPADLO						+	
			Appr		Sub-Floor Members				Document type: ETT	Project nr: 22-16146	Page 13 / 614
Modification	Date	Name	Original		Replacement of	Replaced by	Scale 1:1				

Terminal line-up diagram

F12_001

Part number					
Mounting rail			Strip label	End angle rear	End plate

=V1WC3+V1UC11-XD2

Terminal					
Part number	Type number	Cross-section	Terminal label	Jumper	Cover
1SNK706012R0000	ZK4-4P	4			
1SNK706012R0000	ZK4-4P	4			
1SNK706012R0000	ZK4-4P	4			
1SNK706012R0000	ZK4-4P	4			
1SNK706012R0000	ZK4-4P	4			
1SNK706012R0000	ZK4-4P	4			
1SNK706012R0000	ZK4-4P	4			
1SNK706012R0000	ZK4-4P	4			

'	1	
'	2	
'	3	
'	4	
'	5	
'	6	
'	7	
'	8	

Terminal line-up diagram

F12_001

Part number					
Mounting rail			Strip label	End angle rear	End plate

Terminal					
Part number	Type number	Cross-section	Terminal label	Jumper	Cover
1SNK705012R0000	ZK2.5-4P	2.5			
1SNK705012R0000	ZK2.5-4P	2.5			
1SNK705012R0000	ZK2.5-4P	2.5			
1SNK705012R0000	ZK2.5-4P	2.5			
1SNK705012R0000	ZK2.5-4P	2.5			
1SNK705012R0000	ZK2.5-4P	2.5			
1SNK705012R0000	ZK2.5-4P	2.5			
1SNK705012R0000	ZK2.5-4P	2.5			

=V1WC3+V1UC11-XD3

	1	
	2	
	3	
	4	
	5	
	6	
	7	
	8	

Terminal line-up diagram

F12_001

Part number					
Mounting rail			Strip label	End angle rear	End plate

=V1WC4+V1UC11-KF11.14

Terminal					
Part number	Type number	Cross-section	Terminal label	Jumper	Cover
1SNK705012R0000	ZK2.5-4P	2.5			
1SNK705012R0000	ZK2.5-4P	2.5			
1SNK705012R0000	ZK2.5-4P	2.5			
1SNK705012R0000	ZK2.5-4P	2.5			

'	1	
'	2	
'	3	
'	4	

Terminal line-up diagram

F12_001

Part number					
Mounting rail			Strip label	End angle rear	End plate

Terminal					
Part number	Type number	Cross-section	Terminal label	Jumper	Cover
1SNK705012R0000	ZK2.5-4P	2.5			

=V1WC4+V1UC11-XD5

'	1	

16

18

			Date	12/22/2022	Volvo Trucks North America	Valiant TMS	Terminal line-up diagram =V1WC4+V1UC11-XD5	Drawing name: =2V13&EFS_EL	=
			Ed.	MKLEPADLO	Sub-Floor Members				+
			Appr					Document type: ETT	Project nr: 22-16146
Modification	Date	Name	Original		Replacement of	Replaced by	Scale 1:1		Page 17 / 614

Terminal line-up diagram

F12_001

Part number					
Mounting rail			Strip label	End angle rear	End plate

Terminal					
Part number	Type number	Cross-section	Terminal label	Jumper	Cover
1SNK705012R0000	ZK2.5-4P	2.5			

=V1WC4+V1UC11-XD6

'	1	

17

19

			Date	12/22/2022	Volvo Trucks North America	Valiant TMS	Terminal line-up diagram =V1WC4+V1UC11-XD6	Drawing name: =2V13&EFS_EL	=
			Ed.	MKLEPADLO	Sub-Floor Members				+
			Appr					Document type: ETT	Project nr: 22-16146
Modification	Date	Name	Original		Replacement of	Replaced by	Scale 1:1		Page 18 / 614

Terminal line-up diagram

F12_001

Part number					
Mounting rail			Strip label	End angle rear	End plate

=V1WC4+V1UC11-XD10

Terminal					
Part number	Type number	Cross-section	Terminal label	Jumper	Cover
1SNK705012R0000	ZK2.5-4P	2.5			
1SNK705012R0000	ZK2.5-4P	2.5			
1SNK705012R0000	ZK2.5-4P	2.5			
1SNK705012R0000	ZK2.5-4P	2.5			
1SNK705012R0000	ZK2.5-4P	2.5			
1SNK705012R0000	ZK2.5-4P	2.5			
1SNK705012R0000	ZK2.5-4P	2.5			
1SNK705012R0000	ZK2.5-4P	2.5			
1SNK705012R0000	ZK2.5-4P	2.5			
1SNK705012R0000	ZK2.5-4P	2.5			
1SNK705012R0000	ZK2.5-4P	2.5			
1SNK705012R0000	ZK2.5-4P	2.5			
1SNK705012R0000	ZK2.5-4P	2.5			
1SNK705012R0000	ZK2.5-4P	2.5			
1SNK705012R0000	ZK2.5-4P	2.5			
1SNK705012R0000	ZK2.5-4P	2.5			
1SNK705012R0000	ZK2.5-4P	2.5			
1SNK705012R0000	ZK2.5-4P	2.5			
1SNK705012R0000	ZK2.5-4P	2.5			
1SNK705012R0000	ZK2.5-4P	2.5			
1SNK705012R0000	ZK2.5-4P	2.5			

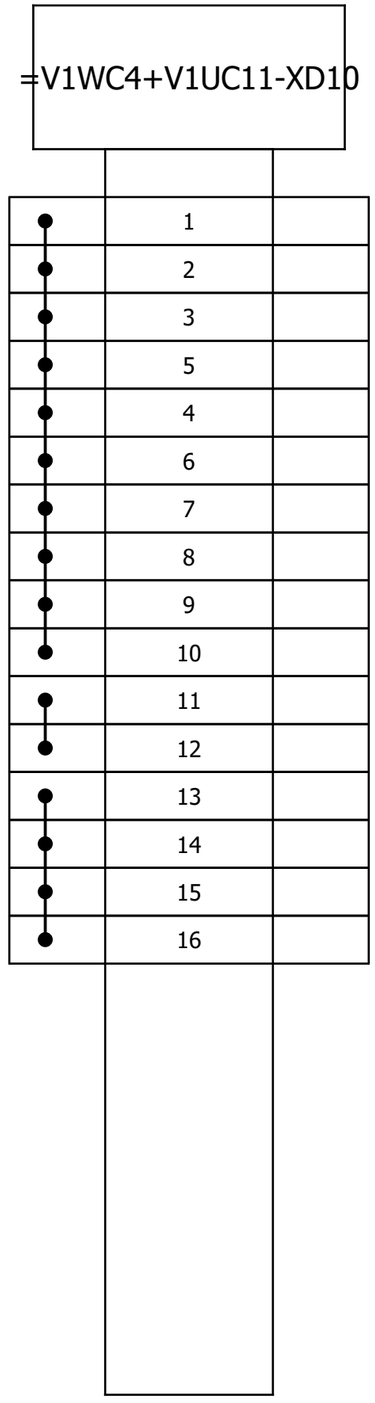

Terminal line-up diagram

F12_001

Part number					
Mounting rail			Strip label	End angle rear	End plate

Terminal					
Part number	Type number	Cross-section	Terminal label	Jumper	Cover
1SNK705012R0000	ZK2.5-4P	2.5			

=V1WC4+V1UC11-XD11

'	1	

19

21

			Date	12/22/2022	Volvo Trucks North America	Valiant TMS	Terminal line-up diagram =V1WC4+V1UC11-XD11	Drawing name: =2V13&EFS_EL	=
			Ed.	MKLEPADLO	Sub-Floor Members				+
			Appr					Document type: ETT	Project nr: 22-16146
Modification	Date	Name	Original		Replacement of	Replaced by	Scale 1:1		Page 20 / 614

Terminal line-up diagram

F12_001

Part number					
Mounting rail			Strip label	End angle rear	End plate

Terminal					
Part number	Type number	Cross-section	Terminal label	Jumper	Cover
1SNK705012R0000	ZK2.5-4P	2.5			
1SNK705012R0000	ZK2.5-4P	2.5			

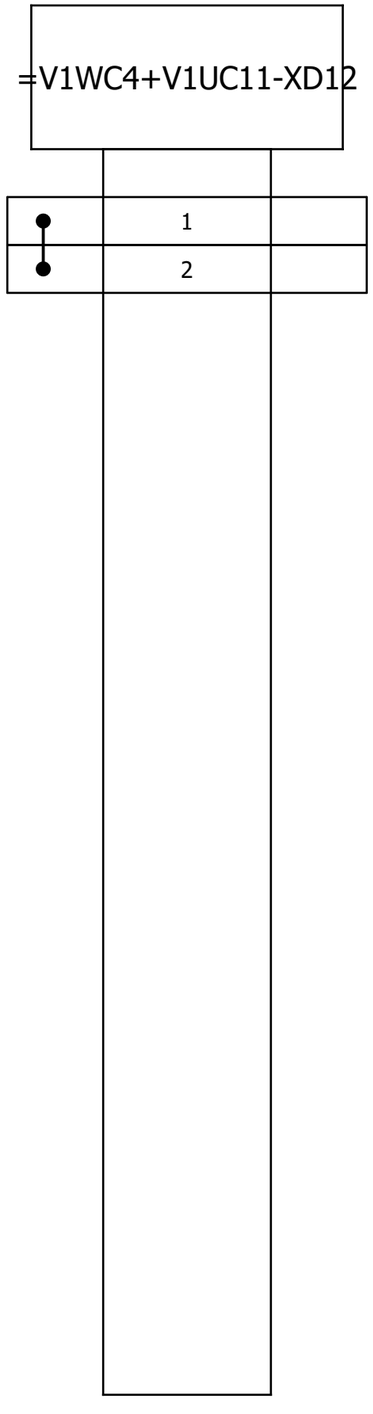

Terminal line-up diagram

F12_001

Part number					
Mounting rail			Strip label	End angle rear	End plate

Terminal					
Part number	Type number	Cross-section	Terminal label	Jumper	Cover
1SNK705012R0000	ZK2.5-4P	2.5			
1SNK705012R0000	ZK2.5-4P	2.5			
1SNK705012R0000	ZK2.5-4P	2.5			
1SNK705012R0000	ZK2.5-4P	2.5			
1SNK705012R0000	ZK2.5-4P	2.5			
1SNK705012R0000	ZK2.5-4P	2.5			
1SNK705012R0000	ZK2.5-4P	2.5			
1SNK705012R0000	ZK2.5-4P	2.5			
1SNK705012R0000	ZK2.5-4P	2.5			

=V1WC4+V1UC11-XD13

	1	
	2	
	3	
	4	
	5	
	6	
	7	
	8	
	9	

			Date	12/22/2022	Volvo Trucks North America		Valiant TMS	Terminal line-up diagram =V1WC4+V1UC11-XD13	Drawing name: =2V13&EFS_EL	=	
			Ed.	MKLEPADLO						+	
			Appr		Sub-Floor Members				Document type: ETT	Project nr: 22-16146	Page 22
Modification	Date	Name	Original		Replacement of	Replaced by	Scale 1:1				614

Terminal line-up diagram

F12_001

Part number					
Mounting rail			Strip label	End angle rear	End plate

Terminal					
Part number	Type number	Cross-section	Terminal label	Jumper	Cover
1SNK705012R0000	ZK2.5-4P	2.5			
1SNK705012R0000	ZK2.5-4P	2.5			

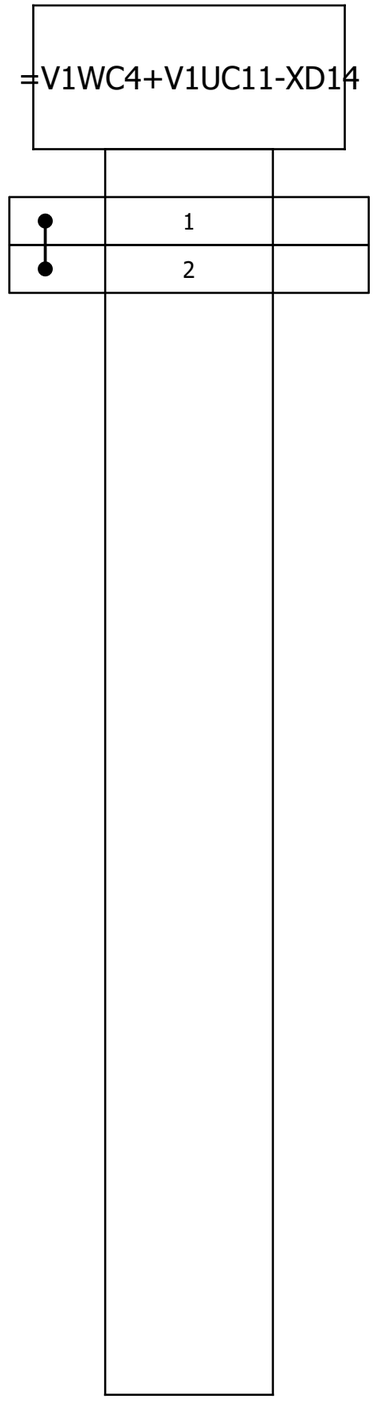

Terminal line-up diagram

F12_001

Part number					
Mounting rail			Strip label	End angle rear	End plate

Terminal					
Part number	Type number	Cross-section	Terminal label	Jumper	Cover
1SNK705012R0000	ZK2.5-4P	2.5			
1SNK705012R0000	ZK2.5-4P	2.5			
1SNK705012R0000	ZK2.5-4P	2.5			
1SNK705012R0000	ZK2.5-4P	2.5			
1SNK705012R0000	ZK2.5-4P	2.5			
1SNK705012R0000	ZK2.5-4P	2.5			
1SNK705012R0000	ZK2.5-4P	2.5			
1SNK705012R0000	ZK2.5-4P	2.5			

=V1WC4+V1UC11-XD20

	1	
	2	
	3	
	4	
	5	
	6	
	7	
	8	

			Date	12/22/2022	Volvo Trucks North America	Valiant TMS	Terminal line-up diagram =V1WC4+V1UC11-XD20	Drawing name: =2V13&EFS_EL	=		
			Ed.	MKLEPADLO					+		
			Appr		Sub-Floor Members			Document type: ETT	Project nr: 22-16146	Page	24
Modification	Date	Name	Original		Replacement of / Replaced by	Scale 1:1					614

Terminal line-up diagram

F12_001

Part number					
Mounting rail			Strip label	End angle rear	End plate

Terminal					
Part number	Type number	Cross-section	Terminal label	Jumper	Cover
1SNK705012R0000	ZK2.5-4P	2.5			
1SNK705012R0000	ZK2.5-4P	2.5			

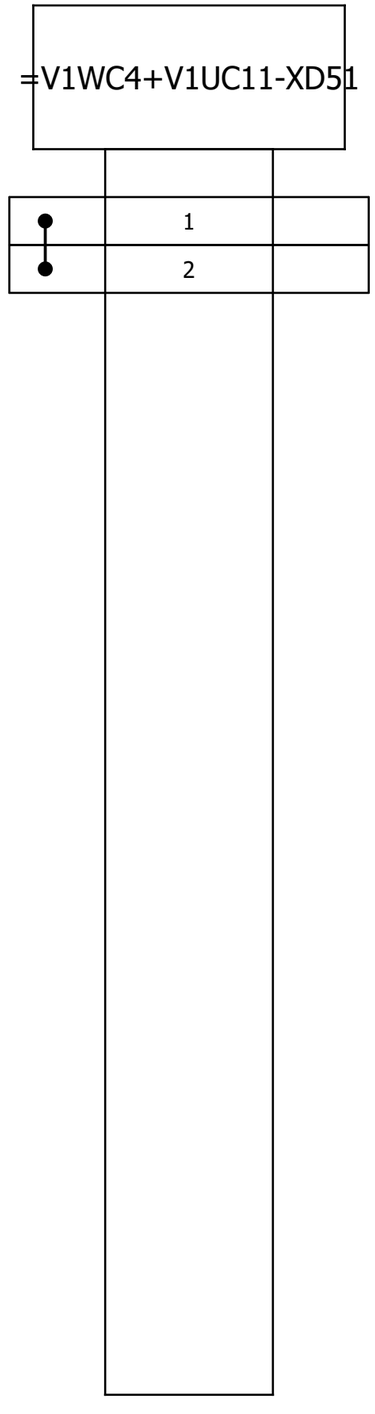

Terminal line-up diagram

F12_001

Part number					
Mounting rail			Strip label	End angle rear	End plate

Terminal					
Part number	Type number	Cross-section	Terminal label	Jumper	Cover
1SNK705012R0000	ZK2.5-4P	2.5			
1SNK705012R0000	ZK2.5-4P	2.5			

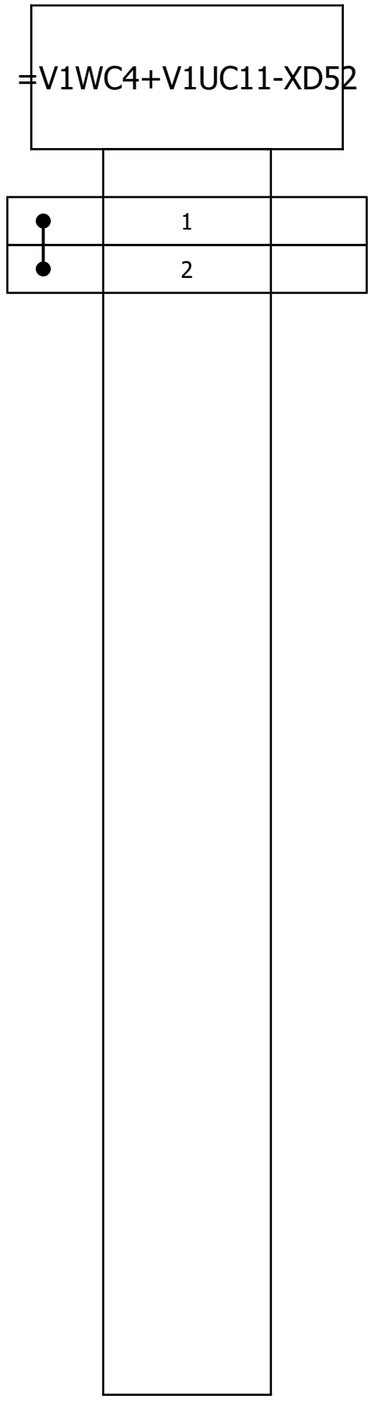

Terminal line-up diagram

F12_001

Part number					
Mounting rail			Strip label	End angle rear	End plate
Terminal					
Part number	Type number	Cross-section	Terminal label	Jumper	Cover
1SNK705012R0000	ZK2.5-4P	2.5			
1SNK705012R0000	ZK2.5-4P	2.5			

=V1WC4+V1UC11-XD53

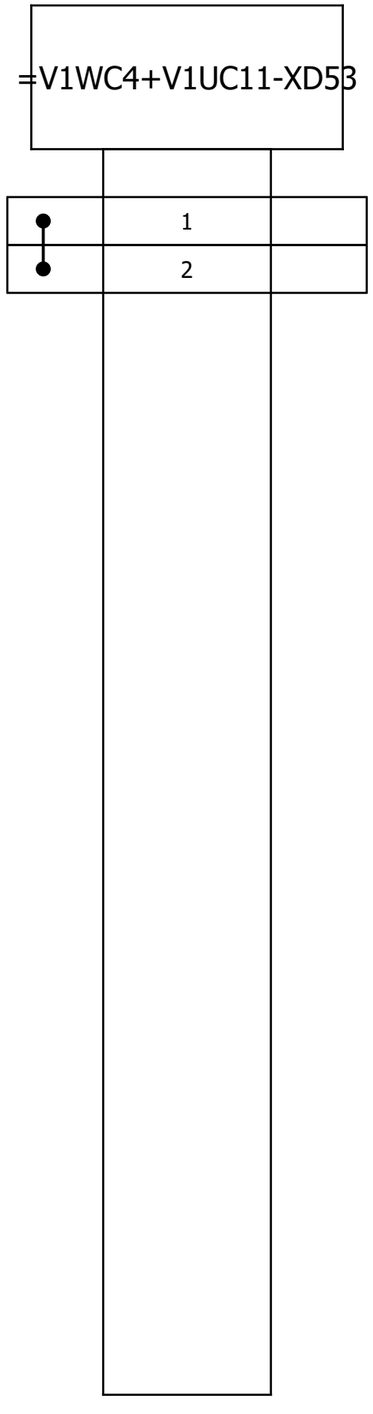

			Date	12/22/2022	Volvo Trucks North America		Valiant TMS	Terminal line-up diagram =V1WC4+V1UC11-XD53	Drawing name: =2V13&EFS_EL	=	
			Ed.	MKLEPADLO						+	
			Appr		Sub-Floor Members				Document type: ETT	Project nr: 22-16146	Page 27
Modification	Date	Name	Original		Replacement of	Replaced by	Scale 1:1				614

Terminal line-up diagram

F12_001

Part number					
Mounting rail			Strip label	End angle rear	End plate

Terminal					
Part number	Type number	Cross-section	Terminal label	Jumper	Cover
1SNK705012R0000	ZK2.5-4P	2.5			
1SNK705012R0000	ZK2.5-4P	2.5			

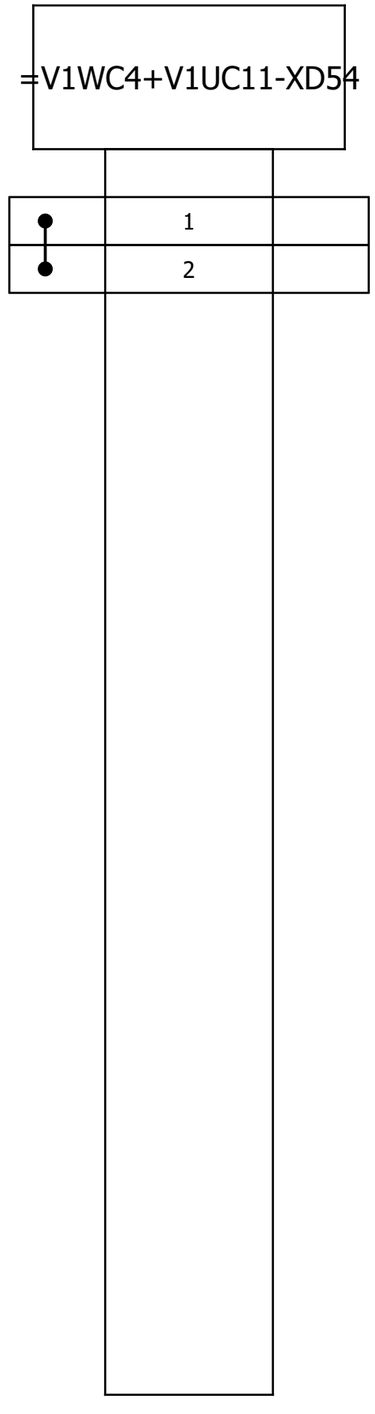

Terminal line-up diagram

F12_001

Part number					
Mounting rail			Strip label	End angle rear	End plate

Terminal					
Part number	Type number	Cross-section	Terminal label	Jumper	Cover
WEI.1608510000	ZDU 2.5	2.5			
WEI.1608740000	ZAP/TW 1				
WEI.9540000000	ZEW 35				
WEI.1608520000	ZDU 2.5 BL	2.5 mm²			
WEI.1608520000	ZDU 2.5 BL	2.5 mm²			

=V1WC3+V1UC14-XD1

'	1	
'	2	
'		
'	3	
'		

28

30

			Date	12/22/2022	Volvo Trucks North America	Valiant TMS	Terminal line-up diagram =V1WC3+V1UC14-XD1	Drawing name: =2V13&EFS_EL	=
			Ed.	MKLEPADLO					+
			Appr		Sub-Floor Members			Document type: ETT	Project nr: 22-16146	Page 29
Modification	Date	Name	Original		Replacement of	Replaced by	Scale 1:1			614

Terminal line-up diagram

F12_001

Part number					
Mounting rail			Strip label	End angle rear	End plate

Terminal					
Part number	Type number	Cross-section	Terminal label	Jumper	Cover
WEI.8731720000	ZTR 2.5/3AN	2.5			
WEI.8731720000	ZTR 2.5/3AN	2.5			
WEI.8731720000	ZTR 2.5/3AN	2.5			
WEI.8731720000	ZTR 2.5/3AN	2.5			

=V1WC4+V1UC14-KF14.12

'	1	
'	2	
'	3	
'	4	

29

31

			Date	12/22/2022	Volvo Trucks North America	Valiant TMS	Terminal line-up diagram =V1WC4+V1UC14-KF14.12	Drawing name: =2V13&EFS_EL	=
			Ed.	MKLEPADLO					+
			Appr		Sub-Floor Members			Document type: ETT	Project nr: 22-16146
Modification	Date	Name	Original		Replacement of	Replaced by	Scale 1:1		Page 30 / 614

Terminal line-up diagram

F12_001

Part number					
Mounting rail			Strip label	End angle rear	End plate

Terminal					
Part number	Type number	Cross-section	Terminal label	Jumper	Cover

=V1WC4+V1UC14-XD5

'	1	

30

32

			Date	12/22/2022	Volvo Trucks North America	Valiant TMS	Terminal line-up diagram =V1WC4+V1UC14-XD5	Drawing name: =2V13&EFS_EL	=
			Ed.	MKLEPADLO					+
			Appr		Sub-Floor Members			Document type: ETT	Project nr: 22-16146	Page 31
Modification	Date	Name	Original		Replacement of	Replaced by	Scale 1:1			614

Terminal line-up diagram

F12_001

Part number					
Mounting rail			Strip label	End angle rear	End plate

Terminal					
Part number	Type number	Cross-section	Terminal label	Jumper	Cover

=V1WC4+V1UC14-XD6

'	1	

			Date	12/22/2022	Volvo Trucks North America		Valiant TMS	Terminal line-up diagram =V1WC4+V1UC14-XD6	Drawing name: =2V13&EFS_EL	=	
			Ed.	MKLEPADLO						+	
			Appr		Sub-Floor Members				Document type: ETT	Project nr: 22-16146	Page 32
Modification	Date	Name	Original		Replacement of	Replaced by	Scale 1:1				614

Terminal line-up diagram

F12_001

Part number					
Mounting rail			Strip label	End angle rear	End plate

=V1WC4+V1UC14-XD10

Terminal					
Part number	Type number	Cross-section	Terminal label	Jumper	Cover
WEI.8731720000	ZTR 2.5/3AN	2.5			
WEI.8731720000	ZTR 2.5/3AN	2.5			
WEI.8731720000	ZTR 2.5/3AN	2.5			
WEI.8731720000	ZTR 2.5/3AN	2.5			
WEI.8731720000	ZTR 2.5/3AN	2.5			
WEI.8731720000	ZTR 2.5/3AN	2.5			
WEI.8731720000	ZTR 2.5/3AN	2.5			
WEI.8731720000	ZTR 2.5/3AN	2.5			
WEI.8731720000	ZTR 2.5/3AN	2.5			
WEI.8731720000	ZTR 2.5/3AN	2.5			
WEI.8731720000	ZTR 2.5/3AN	2.5			
WEI.8731720000	ZTR 2.5/3AN	2.5			
WEI.8731720000	ZTR 2.5/3AN	2.5			
WEI.8731720000	ZTR 2.5/3AN	2.5			
WEI.8731720000	ZTR 2.5/3AN	2.5			
WEI.8731720000	ZTR 2.5/3AN	2.5			
WEI.8731720000	ZTR 2.5/3AN	2.5			
WEI.8731720000	ZTR 2.5/3AN	2.5			
WEI.8731720000	ZTR 2.5/3AN	2.5			

	1	
	2	
	4	
	3	
	5	
	6	
	7	
	8	
	9	
	10	
	11	
	12	
	13	
	14	
	15	
	16	
	17	
	18	
	19	

Terminal line-up diagram

F12_001

Part number					
Mounting rail			Strip label	End angle rear	End plate

Terminal					
Part number	Type number	Cross-section	Terminal label	Jumper	Cover
WEI.8731720000	ZTR 2.5/3AN	2.5			

=V1WC4+V1UC14-XD11

'	1	

33

35

			Date	12/22/2022	Volvo Trucks North America	Valiant TMS	Terminal line-up diagram =V1WC4+V1UC14-XD11	Drawing name: =2V13&EFS_EL	=
			Ed.	MKLEPADLO	Sub-Floor Members				+
			Appr					Document type: ETT	Project nr: 22-16146
Modification	Date	Name	Original		Replacement of / Replaced by	Scale 1:1			Page 34 / 614

Terminal line-up diagram

F12_001

Part number					
Mounting rail			Strip label	End angle rear	End plate
Terminal					
Part number	Type number	Cross-section	Terminal label	Jumper	Cover
WEI.8731720000	ZTR 2.5/3AN	2.5			
WEI.8731720000	ZTR 2.5/3AN	2.5			

=V1WC4+V1UC14-XD12

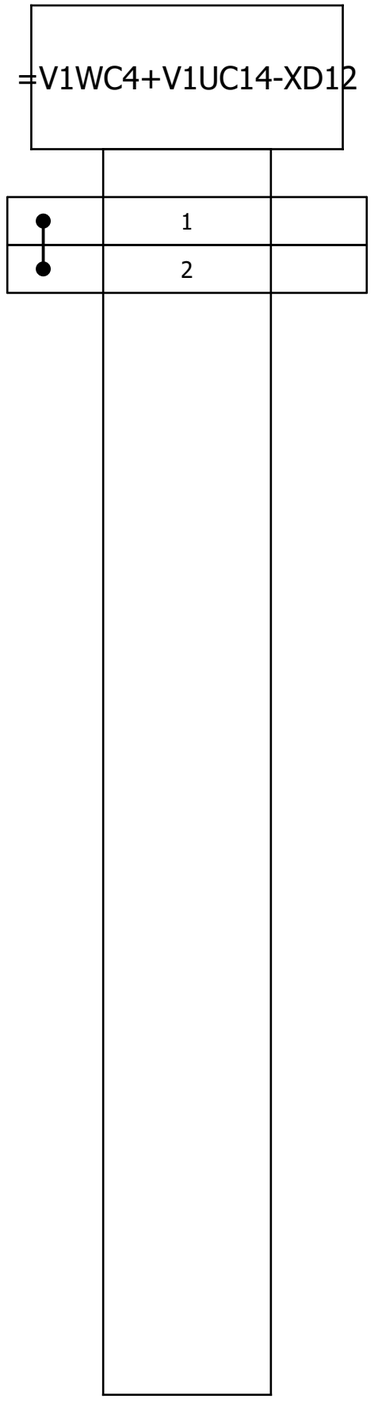

			Date	12/22/2022	Volvo Trucks North America		Valiant TMS	Terminal line-up diagram =V1WC4+V1UC14-XD12	Drawing name: =2V13&EFS_EL	=	
			Ed.	MKLEPADLO						+	
			Appr		Sub-Floor Members				Document type: ETT	Project nr: 22-16146	Page 35 / 614
Modification	Date	Name	Original		Replacement of	Replaced by	Scale 1:1				

Terminal line-up diagram

F12_001

Part number					
Mounting rail			Strip label	End angle rear	End plate

Terminal					
Part number	Type number	Cross-section	Terminal label	Jumper	Cover
WEI.8731720000	ZTR 2.5/3AN	2.5			
WEI.8731720000	ZTR 2.5/3AN	2.5			

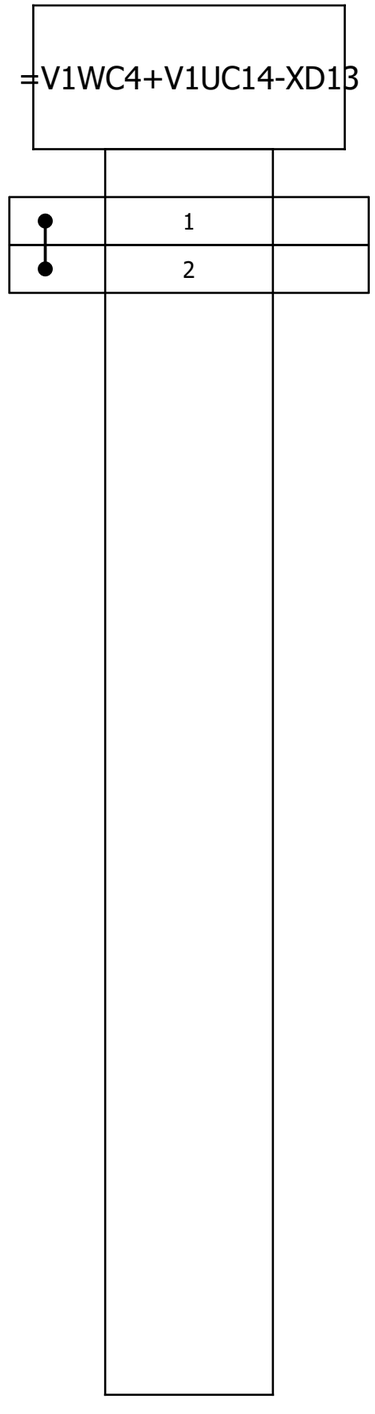

			Date	12/22/2022	Volvo Trucks North America		Valiant TMS	Terminal line-up diagram =V1WC4+V1UC14-XD13	Drawing name: =2V13&EFS_EL	=	
			Ed.	MKLEPADLO						+	
			Appr		Sub-Floor Members				Document type: ETT	Project nr: 22-16146	Page 36
Modification	Date	Name	Original		Replacement of	Replaced by	Scale 1:1				614

Terminal line-up diagram

F12_001

Part number					
Mounting rail			Strip label	End angle rear	End plate

Terminal					
Part number	Type number	Cross-section	Terminal label	Jumper	Cover
WEI.8731720000	ZTR 2.5/3AN	2.5			

=V1WC4+V1UC14-XD14

'	1	

36

38

			Date	12/22/2022	Volvo Trucks North America	Valiant TMS	Terminal line-up diagram =V1WC4+V1UC14-XD14	Drawing name: =2V13&EFS_EL	=
			Ed.	MKLEPADLO	Sub-Floor Members				+
			Appr					Document type: ETT	Project nr: 22-16146
Modification	Date	Name	Original		Replacement of	Replaced by	Scale 1:1		Page 37 / 614

Terminal line-up diagram

F12_001

Part number					
Mounting rail			Strip label	End angle rear	End plate

Terminal					
Part number	Type number	Cross-section	Terminal label	Jumper	Cover
WEI.8731720000	ZTR 2.5/3AN	2.5			
WEI.8731720000	ZTR 2.5/3AN	2.5			
WEI.8731720000	ZTR 2.5/3AN	2.5			

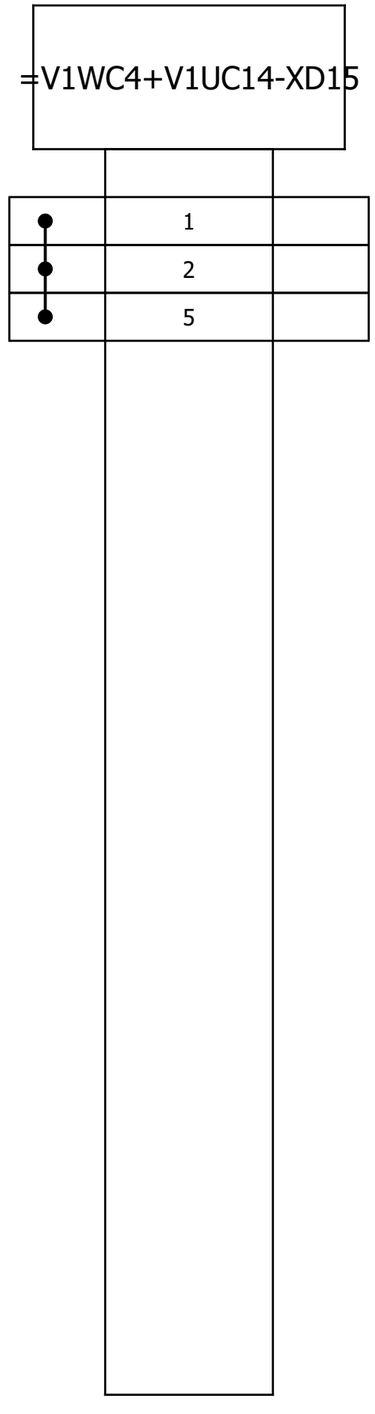

Terminal line-up diagram

F12_001

Part number					
Mounting rail			Strip label	End angle rear	End plate

=V1WC4+V1UC14-XD16

Terminal					
Part number	Type number	Cross-section	Terminal label	Jumper	Cover
WEI.8731720000	ZTR 2.5/3AN	2.5			

'	1	

			Date	12/22/2022	Volvo Trucks North America	Valiant TMS	Terminal line-up diagram =V1WC4+V1UC14-XD16	Drawing name: =2V13&EFS_EL	=	
			Ed.	MKLEPADLO					+	
			Appr		Sub-Floor Members			Document type: ETT	Project nr: 22-16146	Page 39
Modification	Date	Name	Original		Replacement of / Replaced by	Scale 1:1				614

Terminal line-up diagram

F12_001

Part number					
Mounting rail			Strip label	End angle rear	End plate

Terminal					
Part number	Type number	Cross-section	Terminal label	Jumper	Cover
WEI.8731720000	ZTR 2.5/3AN	2.5			

=V1WC4+V1UC14-XD17

'	1	

			Date	12/22/2022	Volvo Trucks North America	Valiant TMS	Terminal line-up diagram =V1WC4+V1UC14-XD17	Drawing name: =2V13&EFS_EL	=	
			Ed.	MKLEPADLO					+	
			Appr		Sub-Floor Members			Document type: ETT	Project nr: 22-16146	Page 40 / 614
Modification	Date	Name	Original		Replacement of / Replaced by	Scale 1:1				

Terminal line-up diagram

F12_001

Part number					
Mounting rail			Strip label	End angle rear	End plate

Terminal					
Part number	Type number	Cross-section	Terminal label	Jumper	Cover
WEI.8731720000	ZTR 2.5/3AN	2.5			

=V1WC4+V1UC14-XD18

'	1	

			Date	12/22/2022	Volvo Trucks North America	Valiant TMS	Terminal line-up diagram =V1WC4+V1UC14-XD18	Drawing name: =2V13&EFS_EL	=	
			Ed.	MKLEPADLO	Sub-Floor Members				+	
			Appr					Document type: ETT	Project nr: 22-16146	Page 41 / 614
Modification	Date	Name	Original		Replacement of / Replaced by	Scale 1:1				

Terminal line-up diagram

F12_001

Part number					
Mounting rail			Strip label	End angle rear	End plate
Terminal					
Part number	Type number	Cross-section	Terminal label	Jumper	Cover
WEI.8731720000	ZTR 2.5/3AN	2.5			
WEI.8731720000	ZTR 2.5/3AN	2.5			

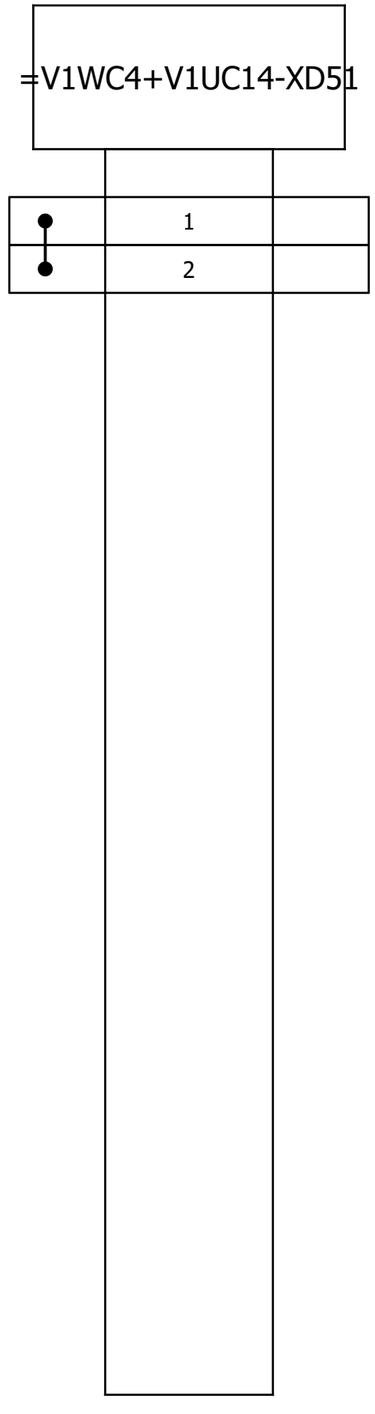

			Date	12/22/2022	Volvo Trucks North America	Valiant TMS	Terminal line-up diagram =V1WC4+V1UC14-XD51	Drawing name: =2V13&EFS_EL	=		
			Ed.	MKLEPADLO					+		
			Appr		Sub-Floor Members			Document type: ETT	Project nr: 22-16146	Page	42
Modification	Date	Name	Original		Replacement of / Replaced by	Scale 1:1					614

Terminal line-up diagram

F12_001

Part number					
Mounting rail			Strip label	End angle rear	End plate

Terminal					
Part number	Type number	Cross-section	Terminal label	Jumper	Cover
WEI.8731720000	ZTR 2.5/3AN	2.5			
WEI.8731720000	ZTR 2.5/3AN	2.5			

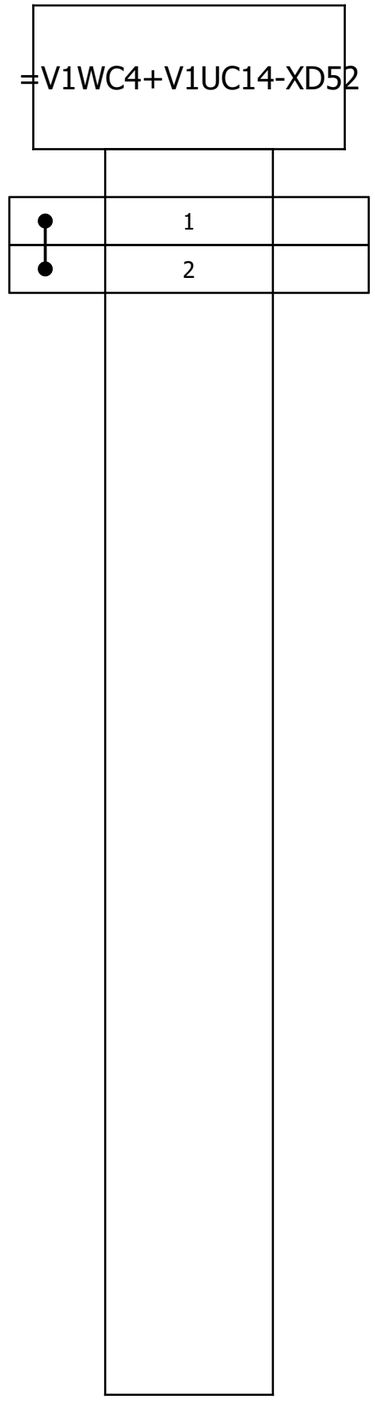

Terminal line-up diagram

F12_001

Part number					
Mounting rail			Strip label	End angle rear	End plate

Terminal					
Part number	Type number	Cross-section	Terminal label	Jumper	Cover
WEI.8731720000	ZTR 2.5/3AN	2.5			
WEI.8731720000	ZTR 2.5/3AN	2.5			

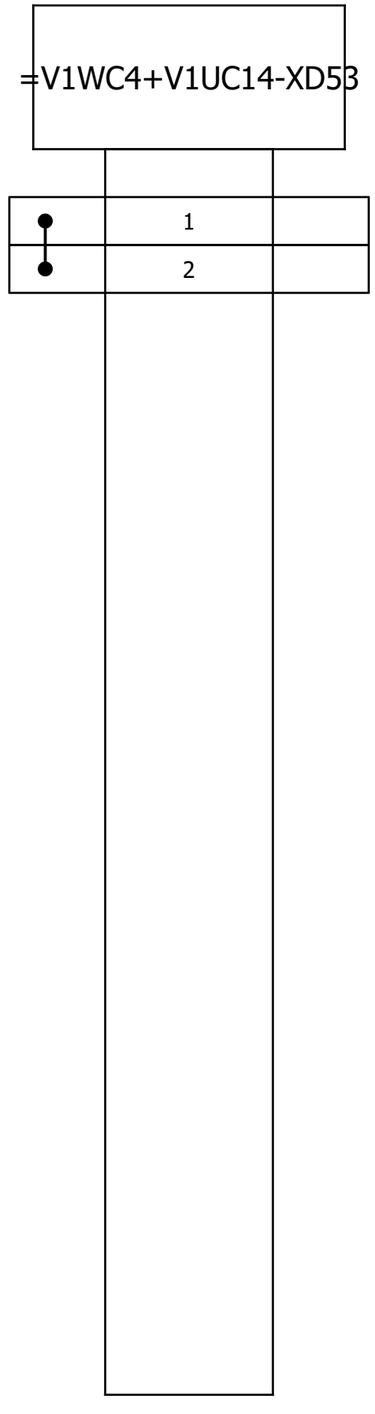

Terminal line-up diagram

F12_001

Part number					
Mounting rail			Strip label	End angle rear	End plate

Terminal					
Part number	Type number	Cross-section	Terminal label	Jumper	Cover
WEI.8731720000	ZTR 2.5/3AN	2.5			
WEI.8731720000	ZTR 2.5/3AN	2.5			

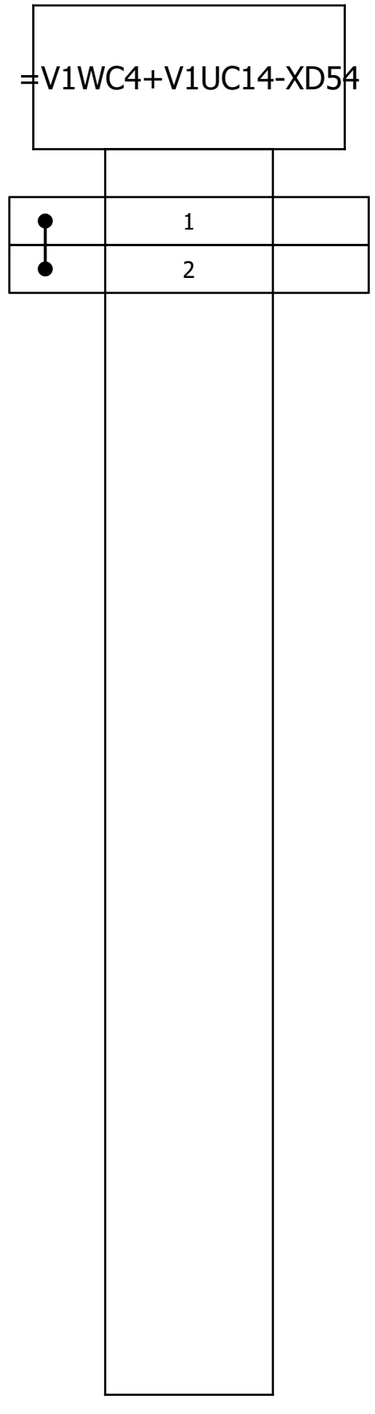

Terminal line-up diagram

F12_001

Part number					
Mounting rail			Strip label	End angle rear	End plate

=V1WC4+V1UC46-XD11

Terminal					
Part number	Type number	Cross-section	Terminal label	Jumper	Cover
WEI.8731720000	ZTR 2.5/3AN	2.5			
WEI.8731720000	ZTR 2.5/3AN	2.5			
WEI.8731720000	ZTR 2.5/3AN	2.5			
WEI.8731720000	ZTR 2.5/3AN	2.5			
WEI.8731720000	ZTR 2.5/3AN	2.5			
WEI.8731720000	ZTR 2.5/3AN	2.5			
WEI.8731720000	ZTR 2.5/3AN	2.5			
WEI.8731720000	ZTR 2.5/3AN	2.5			
WEI.8731720000	ZTR 2.5/3AN	2.5			
WEI.8731720000	ZTR 2.5/3AN	2.5			
WEI.8731720000	ZTR 2.5/3AN	2.5			
WEI.8731720000	ZTR 2.5/3AN	2.5			
WEI.8731720000	ZTR 2.5/3AN	2.5			
WEI.8731720000	ZTR 2.5/3AN	2.5			
WEI.1608800000	ZAP/TW 3				
WEI.8731720000	ZTR 2.5/3AN	2.5			
WEI.1608800000	ZAP/TW 3				
WEI.8731720000	ZTR 2.5/3AN	2.5			
WEI.1608800000	ZAP/TW 3				
WEI.8731720000	ZTR 2.5/3AN	2.5			
WEI.1608800000	ZAP/TW 3				
WEI.8731720000	ZTR 2.5/3AN	2.5			
WEI.1608800000	ZAP/TW 3				

1	
2	
3	
4	
5	
6	
7	
8	
9	
11	
12	
13	
14	
15	
16	
17	
18	
19	

			Date	12/22/2022	Volvo Trucks North America	Valiant TMS	Terminal line-up diagram =V1WC4+V1UC46-XD11	Drawing name: =2V13&EFS_EL	=		
			Ed.	MKLEPADLO					+		
			Appr		Sub-Floor Members			Document type: ETT	Project nr: 22-16146	Page	46
Modification	Date	Name	Original		Replacement of / Replaced by	Scale 1:1					614

Terminal line-up diagram

F12_001

Part number					
Mounting rail			Strip label	End angle rear	End plate

Terminal					
Part number	Type number	Cross-section	Terminal label	Jumper	Cover
WEI.1608510000	ZDU 2.5	2.5			
WEI.1608740000	ZAP/TW 1				
WEI.8731720000	ZTR 2.5/3AN	2.5			

=V1WC4+V1UC46-XD14

'	1	
'		
'	11	

46

48

			Date	12/22/2022	Volvo Trucks North America	Valiant TMS	Terminal line-up diagram =V1WC4+V1UC46-XD14	Drawing name: =2V13&EFS_EL	=
			Ed.	MKLEPADLO	Sub-Floor Members				+
			Appr					Document type: ETT	Project nr: 22-16146
Modification	Date	Name	Original		Replacement of / Replaced by	Scale 1:1			Page 47 / 614

Terminal line-up diagram

F12_001

Part number					
Mounting rail			Strip label	End angle rear	End plate

Terminal					
Part number	Type number	Cross-section	Terminal label	Jumper	Cover
WEI.8731720000	ZTR 2.5/3AN	2.5			
WEI.8731720000	ZTR 2.5/3AN	2.5			
WEI.8731720000	ZTR 2.5/3AN	2.5			

=V1WC4+V1UC46-XD51.1

'	1	
'	2	
'	11	

			Date	12/22/2022	Volvo Trucks North America	Valiant TMS	Terminal line-up diagram =V1WC4+V1UC46-XD51.1	Drawing name: =2V13&EFS_EL	=	
			Ed.	MKLEPADLO	Sub-Floor Members				+	
			Appr					Document type: ETT	Project nr: 22-16146	Page 48 / 614
Modification	Date	Name	Original		Replacement of	Replaced by	Scale 1:1			

Terminal line-up diagram

F12_001

Part number					
Mounting rail			Strip label	End angle rear	End plate

Terminal					
Part number	Type number	Cross-section	Terminal label	Jumper	Cover
WEI.8731720000	ZTR 2.5/3AN	2.5			
WEI.8731720000	ZTR 2.5/3AN	2.5			
WEI.8731720000	ZTR 2.5/3AN	2.5			

=V1WC4+V1UC46-XD52.1

'	1	
'	2	
'	11	

Terminal line-up diagram

F12_001

Part number					
Mounting rail			Strip label	End angle rear	End plate

=V1WC4+V1UC46-XD53.1

Terminal					
Part number	Type number	Cross-section	Terminal label	Jumper	Cover
WEI.8731720000	ZTR 2.5/3AN	2.5			
WEI.8731720000	ZTR 2.5/3AN	2.5			
WEI.8731720000	ZTR 2.5/3AN	2.5			

'	1	
'	2	
'	11	

Terminal line-up diagram

F12_001

Part number					
Mounting rail			Strip label	End angle rear	End plate

Terminal					
Part number	Type number	Cross-section	Terminal label	Jumper	Cover
WEI.8731720000	ZTR 2.5/3AN	2.5			
WEI.8731720000	ZTR 2.5/3AN	2.5			
WEI.8731720000	ZTR 2.5/3AN	2.5			

=V1WC4+V1UC46-XD54.1

'	1	
'	2	
'	11	

Terminal line-up diagram

F12_001

Part number					
Mounting rail			Strip label	End angle rear	End plate

=V1WC4+V1UC47-XD11

Terminal					
Part number	Type number	Cross-section	Terminal label	Jumper	Cover
WEI.8731720000	ZTR 2.5/3AN	2.5			
WEI.8731720000	ZTR 2.5/3AN	2.5			
WEI.8731720000	ZTR 2.5/3AN	2.5			
WEI.8731720000	ZTR 2.5/3AN	2.5			
WEI.8731720000	ZTR 2.5/3AN	2.5			
WEI.8731720000	ZTR 2.5/3AN	2.5			
WEI.8731720000	ZTR 2.5/3AN	2.5			
WEI.8731720000	ZTR 2.5/3AN	2.5			
WEI.8731720000	ZTR 2.5/3AN	2.5			
WEI.8731720000	ZTR 2.5/3AN	2.5			
WEI.8731720000	ZTR 2.5/3AN	2.5			
WEI.8731720000	ZTR 2.5/3AN	2.5			
WEI.8731720000	ZTR 2.5/3AN	2.5			
WEI.8731720000	ZTR 2.5/3AN	2.5			
WEI.1608800000	ZAP/TW 3				
WEI.8731720000	ZTR 2.5/3AN	2.5			
WEI.1608800000	ZAP/TW 3				
WEI.8731720000	ZTR 2.5/3AN	2.5			
WEI.1608800000	ZAP/TW 3				
WEI.8731720000	ZTR 2.5/3AN	2.5			
WEI.1608800000	ZAP/TW 3				
WEI.8731720000	ZTR 2.5/3AN	2.5			
WEI.1608800000	ZAP/TW 3				

1	
2	
3	
4	
5	
6	
7	
8	
9	
11	
12	
13	
14	
15	
16	
17	
18	
19	

			Date	12/22/2022	Volvo Trucks North America		Valiant TMS	Terminal line-up diagram =V1WC4+V1UC47-XD11	Drawing name: =2V13&EFS_EL	=	
			Ed.	MKLEPADLO						+	
			Appr		Sub-Floor Members				Document type: ETT	Project nr: 22-16146	Page 52
Modification	Date	Name	Original		Replacement of	Replaced by	Scale 1:1				614

Terminal line-up diagram

F12_001

Part number					
Mounting rail			Strip label	End angle rear	End plate

Terminal					
Part number	Type number	Cross-section	Terminal label	Jumper	Cover
WEI.1608510000	ZDU 2.5	2.5			
WEI.1608740000	ZAP/TW 1				
WEI.8731720000	ZTR 2.5/3AN	2.5			

=V1WC4+V1UC47-XD14

'	1	
'		
'	11	

52

54

			Date	12/22/2022	Volvo Trucks North America	Valiant TMS	Terminal line-up diagram =V1WC4+V1UC47-XD14	Drawing name: =2V13&EFS_EL	=
			Ed.	MKLEPADLO	Sub-Floor Members				+
			Appr					Document type: ETT	Project nr: 22-16146
Modification	Date	Name	Original		Replacement of	Replaced by	Scale 1:1		Page 53 / 614

Terminal line-up diagram

F12_001

Part number					
Mounting rail			Strip label	End angle rear	End plate

Terminal					
Part number	Type number	Cross-section	Terminal label	Jumper	Cover
WEI.8731720000	ZTR 2.5/3AN	2.5			
WEI.8731720000	ZTR 2.5/3AN	2.5			
WEI.8731720000	ZTR 2.5/3AN	2.5			

=V1WC4+V1UC47-XD51.1

'	1	
'	2	
'	11	

Terminal line-up diagram

F12_001

Part number					
Mounting rail			Strip label	End angle rear	End plate

Terminal					
Part number	Type number	Cross-section	Terminal label	Jumper	Cover
WEI.8731720000	ZTR 2.5/3AN	2.5			
WEI.8731720000	ZTR 2.5/3AN	2.5			
WEI.8731720000	ZTR 2.5/3AN	2.5			

=V1WC4+V1UC47-XD52.1

'	1	
'	2	
'	11	

Terminal line-up diagram

F12_001

Part number					
Mounting rail			Strip label	End angle rear	End plate

=V1WC4+V1UC47-XD53.1

Terminal					
Part number	Type number	Cross-section	Terminal label	Jumper	Cover
WEI.8731720000	ZTR 2.5/3AN	2.5			
WEI.8731720000	ZTR 2.5/3AN	2.5			
WEI.8731720000	ZTR 2.5/3AN	2.5			

'	1	
'	2	
'	11	

			Date	12/22/2022	Volvo Trucks North America	Valiant TMS	Terminal line-up diagram =V1WC4+V1UC47-XD53.1	Drawing name: =2V13&EFS_EL	=	
			Ed.	MKLEPADLO					+	
			Appr		Sub-Floor Members			Document type: ETT	Project nr: 22-16146	Page 56 / 614
Modification	Date	Name	Original		Replacement of / Replaced by	Scale 1:1				

Terminal line-up diagram

F12_001

Part number					
Mounting rail			Strip label	End angle rear	End plate

Terminal					
Part number	Type number	Cross-section	Terminal label	Jumper	Cover
WEI.8731720000	ZTR 2.5/3AN	2.5			
WEI.8731720000	ZTR 2.5/3AN	2.5			
WEI.8731720000	ZTR 2.5/3AN	2.5			

=V1WC4+V1UC47-XD54.1

'	1	
'	2	
'	11	

Terminal line-up diagram

F12_001

Part number					
Mounting rail			Strip label	End angle rear	End plate

=V1PZ1PF1+V1UC61-XD11

Terminal					
Part number	Type number	Cross-section	Terminal label	Jumper	Cover
WEI.1608520000	ZDU 2.5 BL	2.5 mm²			
WEI.1608740000	ZAP/TW 1				
WEI.9540000000	ZEW 35				
WEI.1608520000	ZDU 2.5 BL	2.5 mm²			
WEI.1608520000	ZDU 2.5 BL	2.5 mm²			
WEI.1608520000	ZDU 2.5 BL	2.5 mm²			
WEI.1608520000	ZDU 2.5 BL	2.5 mm²			
WEI.1608520000	ZDU 2.5 BL	2.5 mm²			
WEI.1608520000	ZDU 2.5 BL	2.5 mm²			
WEI.1608520000	ZDU 2.5 BL	2.5 mm²			
WEI.1608520000	ZDU 2.5 BL	2.5 mm²			

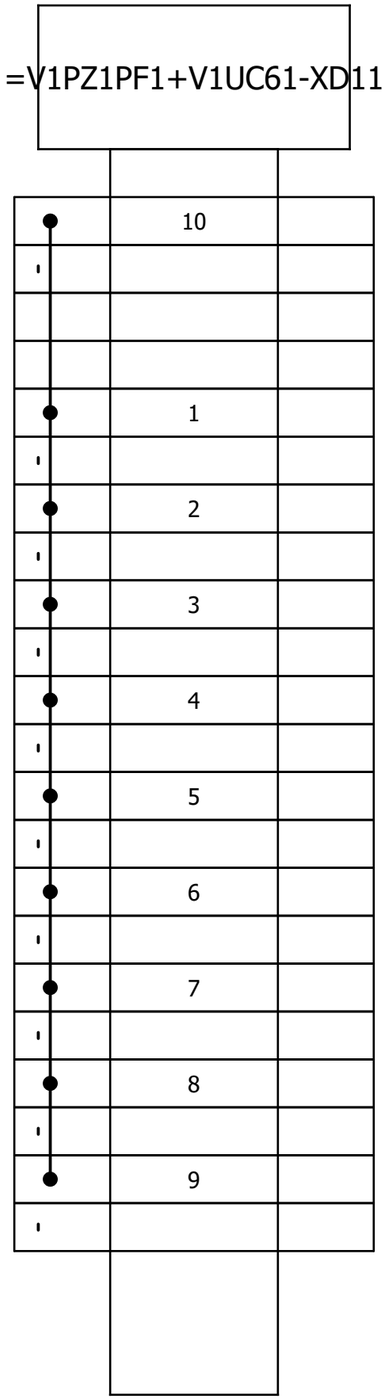

			Date	12/22/2022	Volvo Trucks North America	Valiant TMS	Terminal line-up diagram =V1PZ1PF1+V1UC61-XD11	Drawing name: =2V13&EFS_EL	=		
			Ed.	MKLEPADLO					+		
			Appr		Sub-Floor Members			Document type: ETT	Project nr: 22-16146	Page	58
Modification	Date	Name	Original		Replacement of / Replaced by	Scale 1:1					614

Terminal line-up diagram

F12_001

Part number					
Mounting rail			Strip label	End angle rear	End plate

Terminal					
Part number	Type number	Cross-section	Terminal label	Jumper	Cover
WEI.1608520000	ZDU 2.5 BL	2.5 mm²			
WEI.1608740000	ZAP/TW 1				
WEI.9540000000	ZEW 35				
WEI.1608520000	ZDU 2.5 BL	2.5 mm²			
WEI.1608520000	ZDU 2.5 BL	2.5 mm²			
WEI.1608520000	ZDU 2.5 BL	2.5 mm²			
WEI.1608520000	ZDU 2.5 BL	2.5 mm²			
WEI.1608520000	ZDU 2.5 BL	2.5 mm²			
WEI.1608520000	ZDU 2.5 BL	2.5 mm²			
WEI.1608520000	ZDU 2.5 BL	2.5 mm²			
WEI.1608520000	ZDU 2.5 BL	2.5 mm²			

=V1PZ1PF2+V1UC62-XD11

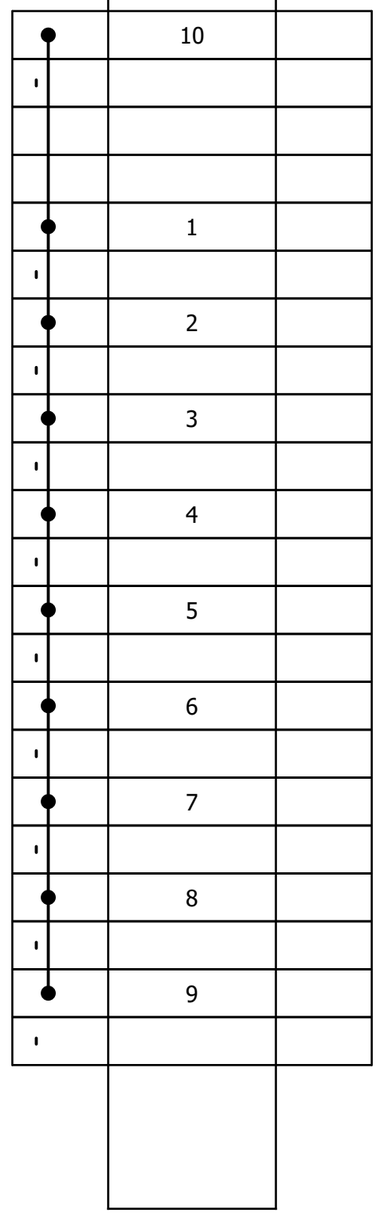

&EXX/1

			Date	12/22/2022	Volvo Trucks North America	Valiant TMS	Terminal line-up diagram =V1PZ1PF2+V1UC62-XD11	Drawing name: =2V13&EFS_EL	=		
			Ed.	MKLEPADLO					+		
			Appr		Sub-Floor Members			Document type: ETT	Project nr: 22-16146	Page	59
Modification	Date	Name	Original		Replacement of	Replaced by	Scale 1:1				614

Summarized parts list

F02_001

Order number	Quantity	Description Designation	Type number Part number	Manufacturer Supplier	Unit price	Total price	Pos
	9 Piece	Mounting rail EN 50 022 (35x7,5)	TS 35_7,5 TS 35_7,5		0.00	0.00	
	0					0.00	
ECGB5	3 Piece	Ground bar kit, 5 positions.	ECGB5 US2.ECGB5	SIE SIE	0.00	0.00	
C1.5LG6	3 ft	Wiring Duct Covers, PVC	C1.5LG6 PAN.C1.5LG6	PAN PAN	0.00	0.00	
C1LG6	1 ft	Wiring Duct Covers, PVC	C1LG6 PAN.C1LG6	PAN PAN	0.00	0.00	
G1.5X4LG6	3 ft	Wide Slotted Wiring Duct, PVC	G1.5X4LG6 PAN.G1.5X4LG6	PAN PAN	0.00	0.00	
G1X4LG6	1 ft	Wide Slotted Wiring Duct, PVC	G1X4LG6 PAN.G1X4LG6	PAN PAN	0.00	0.00	
6ES5710-8MA11	3	STAND.SECTIONAL RAIL 35MM, LENGTH 483MM	6ES5710-8MA11 SIE.6ES5710-8MA11	SIE Siemens AG	0.00	0.00	
5386050	1 pc(s).	PC PC enclosure system, WHD: 800x1600x600 mm, Sheet steel	PC.5386050 RIT.5386050	RIT RIT	0.00	0.00	
	1		TS 8617.580		0.00	0.00	
	1		TS 8640.003		0.00	0.00	
	1		TS 8640.033		0.00	0.00	
E4PBG	2 piece	Pushbutton Enclosure, Type 12, 4PB, 22.5mm holes, 10.00Hx3.25Wx2.75D, Gray, Steel	E4PBG WOE.E4PBG	HOFFMAN HOFFMAN	0.00	0.00	
ASPBG	2 piece	Hol-Sealers Hole Seal, 1.22" diameter, Gray, Steel	ASPBG ASPBG	HOFFMAN HOFFMAN	0.00	0.00	
1SFA616915R1005	2 Piece	LEGEND PLATET KTC15-1005	KTC15-1005 ABB.1SFA616915R1005	ABB	0.00	0.00	
1SFA619550R1051	1 PCE	EMERGENCY STOP CE4T-10R-02	CE4T-10R-02 ABB.1SFA619550R1051	ABB ABB	0.00	0.00	
6ES7515-2FM02-0AB0	1	CPU 1515F-2 PN, 750KB Prog.,3MB Data	6ES7515-2FM02-0AB0 SIE.6ES7515-2FM02-0AB0	SIE SIE	0.00	0.00	
6ES7590-1AB60-0AA0	1	MOUNTING RAIL 160MM (6.3")	6ES7590-1AB60-0AA0 SIE.6ES7590-1AB60-0AA0	SIE SIE	0.00	0.00	
6ES7155-6AA01-0BN0	5	ET 200SP, IM155-6PN ST INCL. BA 2XRJ45	6ES7155-6AA01-0BN0 SIE.6ES7155-6AA01-0BN0	SIE SIE	0.00	0.00	

Summarized parts list

F02_001

Order number	Quantity	Description Designation	Type number Part number	Manufacturer Supplier	Unit price	Total price	Pos
6ES7131-6BH01-0BA0	9	ET 200SP, DI 16x 24V DC ST, PU 1	6ES7131-6BH01-0BA0 SIE.6ES7131-6BH01-0BA0	SIE SIE	0.00	0.00	
6ES7132-6BH01-0BA0	3	ET 200SP, DQ 16x 24V DC/0,5A ST, PU 1	6ES7132-6BH01-0BA0 SIE.6ES7132-6BH01-0BA0	SIE SIE	0.00	0.00	
6ES7136-6BA01-0CA0	1	ET 200SP, El-Mod., F-DI 8x24VDC HF	6ES7136-6BA01-0CA0 SIE.6ES7136-6BA01-0CA0	SIE SIE	0.00	0.00	
6GK5615-0AA00-2AA2	1	SCALANCE S615	6GK5615-0AA00-2AA2 SIE.6GK5615-0AA00-2AA2	SIE SIE	0.00	0.00	
6GK5216-0BA00-2AC2	3	SCALANCE XC216	6GK5216-0BA00-2AC2 SIE.6GK5216-0BA00-2AC2	SIE SIE	0.00	0.00	
RJ45S FKSDED 423-1M	68	Profinet cable - RJ45 plug to M12 Female receptacle; 1m long	RJ45S FKSDED 423-1M TUR.RJ45S FKSDED 423-1M	TURCK TURCK	0.00	0.00	
	2		4000-73000-0180000		0.00	0.00	
8WD4408-0AA	3 piece	Signaling column connection element for pipe mounting incl. end sleeve and seal	8WD4408-0AA SIE.8WD4408-0AA	SIE SIE	0.00	0.00	
8WD4420-0EA2	3 piece	Signaling column multifunctional siren element different sounds can be set 220 V	8WD4420-0EA2 SIE.8WD4420-0EA2	SIE	0.00	0.00	
8WD4420-5AB	3 piece	Signaling column continuous light element LED red, 24 V AC/DC	8WD4420-5AB SIE.8WD4420-5AB	SIE SIE	0.00	0.00	
8WD4420-5AC	3 piece	Signaling column continuous light element LED green, 24 V AC/DC	8WD4420-5AC SIE.8WD4420-5AC	SIE SIE	0.00	0.00	
1SFA619100R1022	1 PCE	PUSHBUTTON CP1-10G-20	CP1-10G-20 ABB.1SFA619100R1022	ABB ABB	0.00	0.00	
1SFA619100R1023	1 PCE	PUSHBUTTON CP1-10Y-20	CP1-10Y-20 ABB.1SFA619100R1023	ABB ABB	0.00	0.00	
1SFA619100R1111	1 PCE	PUSHBUTTON CP1-11R-10 24V AC/DC	CP1-11R-10 ABB.1SFA619100R1111	ABB ABB	0.00	0.00	
1SFA619100R1026	1 PCE	PUSHBUTTON CP1-10B-20	CP1-10B-20 ABB.1SFA619100R1026	ABB ABB	0.00	0.00	
1SFA619100R1118	1 PCE	PUSHBUTTON CP1-11C-10	CP1-11C-10 ABB.1SFA619100R1118	ABB ABB	0.00	0.00	
1SFA619200R1016	1 PCE	SELECTOR SWITCH C2SS1-10B-10	C2SS1-10B-10 ABB.1SFA619200R1016	ABB ABB	0.00	0.00	
2CDS271337R0104	4 PCE	Miniature Circuit Breaker - SU200 M - 1P - C - 10 A	SU201M-C10 ABB.2CDS271337R0104	ABB ABB	0.00	0.00	
6EP19612BA41	3	4x3-10A	6EP1961-2BA41 SIE.6EP1961-2BA41	SIE SIE	0.00	0.00	

Summarized parts list

F02_001

Order number	Quantity	Description Designation	Type number Part number	Manufacturer Supplier	Unit price	Total price	Pos
6EP4134-3AB00-2AY0	1	SITOP UPS1600	6EP4134-3AB00-2AY0 SIE.6EP4134-3AB00-2AY0	SIE	0.00	0.00	
6EP4134-0GB00-0AY0	1	SITOP UPS1100	6EP4134-0GB00-0AY0 SIE.6EP4134-0GB00-0AY0	SIE SIE	0.00	0.00	
6EP3336-7SB00-3AX0	6	SITOP PSU6200 1ph 24 V/20 A	6EP3336-7SB00-3AX0 SIE.6EP3336-7SB00-3AX0	SIE	0.00	0.00	
EMPD3FBCB-025A-M	4		EMPD3FBCB-025A-M EMPD3FBCB-025A-M	Electro-Matic Electro-Matic	0.00	0.00	
2CMA193115R1000	7	Surface socket-outlet	ABB.2CMA193115R1000	ABB ABB	0.00	0.00	
1625891	20 piece	Inductive sensor	NI50U-CK40-AP6X2-H1141/S1590 W/BS4_A TUR.1625891	TUR Turck	0.00	0.00	
VB2-FSM 4.4/2FKM 4/S3450	46	Y splitter	U2-30676 TUR.VB2-FSM 4.4/2FKM 4/S3450	TURCK TURCK	0.00	0.00	
548755	0	Bus node	CPX-FB33 FES.548755	FES FES	0.00	0.00	
550208	0	Interlinking block	CPX-M-GE-EV-S-7/8-5POL FES.550208	FES FES	0.00	0.00	
549335	0	Manifold block	CPX-M-AB-8-M12X2-5POL FES.549335	FES FES	0.00	0.00	
	7		TUN.1324633			0.00	
WWS001A	8	4-Wire, 4-Pin, DC M12 X 1 (PNP)	WWS001A WEL.WWS001A	WEL WEL	0.00	0.00	
1324638	49 piece	Inductive sensor Monitoring Kit for Power Clamps	1324638 TUN.1324638	TUNKERS TUNKERS	0.00	0.00	
1324644	36 piece	Inductive sensor Monitoring Kit for Power Clamps	1324644 TUN.1324644	TUNKERS TUNKERS	0.00	0.00	
	2		EMPD3FBCB-015A-M			0.00	
	2		SE.CH362AWC			0.00	
	2		BUS.LPJ-35SP			0.00	
	2		NPJ6485			0.00	
EMPD3FBCB-060A-M	2		EMPD3FBCB-060A-M EMPD3FBCB-060A-M	Electro-Matic Electro-Matic	0.00	0.00	

Summarized parts list

F02_001

Order number	Quantity	Description Designation	Type number Part number	Manufacturer Supplier	Unit price	Total price	Pos
SLSCP30-1200P44NT	4	EZ-Screen System	SLSCP30-1200P44NT BAN.SLSCP30-1200P44NT	BANNER BANNER	0.00	0.00	
SLSCP30-1200P88	2	EZ-Screen System	SLSCP30-1200P88 BAN.SLSCP30-1200P88	BANNER BANNER	0.00	0.00	
MGB-L2B-PNA-R-121859	3 Piece	SWITCH	MGB-L2B-PNA-R-121859 EUC.MGB-L2B-PNA-R-121859	EUCHNER EUCHNER	0.00	0.00	
MGB-H-AA1A2-R-106049	2 Piece	HANDLE	MGB-H-AA1A2-R-106049 EUC.MGB-H-AA1A2-R-106049	EUCHNER EUCHNER	0.00	0.00	
MGB-A-MOUNTINGPLATE-H-109491	2 Piece	MOUNTING PLATE	MGB-A-MOUNTINGPLATE-H-109491 EUC.MGB-A-MOUNTINGPLATE-H-109491	EUCHNER EUCHNER	0.00	0.00	
MGB-E-A2-106051	2 Piece	ESCAPE RELEASE	MGB-E-A2-106051 EUC.MGB-E-A2-106051	EUCHNER EUCHNER	0.00	0.00	
	8		A-B.440F-M2036HYNN			0.00	
6ES7193-6BP00-0DA0	6	BASEUNIT TYPE A0, BU15-P16+A0+2D	6ES7193-6BP00-0DA0 SIE.6ES7193-6BP00-0DA0	SIE SIE	0.00	0.00	
6ES7136-6BA00-0CA0	4	ET 200SP, El-Mod., F-DI 8x24VDC HF	6ES7136-6BA00-0CA0 SIE.6ES7136-6BA00-0CA0	SIE SIEMENS	0.00	0.00	
6ES7136-6DB00-0CA0	6	ET 200SP, El-Mod., F-DQ 4xDC 24V/2A	6ES7136-6DB00-0CA0 SIE.6ES7136-6DB00-0CA0	SIE	0.00	0.00	
6ES7136-6RA00-0BF0	16	ET 200SP, F-RQ 1x24VDC/24..230VAC/5A ST	6ES7136-6RA00-0BF0 SIE.6ES7136-6RA00-0BF0	SIE	0.00	0.00	
6ES7193-6BP20-0BF0	8	BASEUNIT TYPE F0, BU20-P8+A4+0B	6ES7193-6BP20-0BF0 SIE.6ES7193-6BP20-0BF0	SIE SIE	0.00	0.00	
	2		SIE.6GK1900-0AB10			0.00	
6GK5208-0BA00-2AC2	2	SCALANCE XC208	6GK5208-0BA00-2AC2 SIE.6GK5208-0BA00-2AC2	SIE SIE	0.00	0.00	
1050000	2 piece	Compact enclosure AX	AX.1050000 RIT.1050000	RIT	0.00	0.00	
8WD4420-5AD	2 piece	Signaling column continuous light element LED yellow, 24 V AC/DC	8WD4420-5AD SIE.8WD4420-5AD	SIE SIE	0.00	0.00	
8WD4420-5AF	2 piece	Signaling column continuous light element LED blue, 24 V AC/DC	8WD4420-5AF SIE.8WD4420-5AF	SIE SIE	0.00	0.00	
1574000	2 piece	Small enclosures KX	KX.1574000 RIT.1574000	RIT	0.00	0.00	
RSF 106-2M/14.5/NPT/CS16486	2	RECEPTACLE 1-1/8" MINIFAST 10P MALE 2M	RSF 106-2M/14.5/NPT/CS16486 TUR.RSF 106-2M/14.5/NPT/CS16486	TURCK TURCK	0.00	0.00	

Summarized parts list

F02_001

Order number	Quantity	Description Designation	Type number Part number	Manufacturer Supplier	Unit price	Total price	Pos
6AV2124-0GC01-0AX0	2	SIMATIC HMI TP700 COMFORT	6AV2124-0GC01-0AX0 SIE.6AV2124-0GC01-0AX0	SIE SIE	0.00	0.00	
RJ45S FKSDED 423-0.5M	4	Profinet cable - RJ45 plug to M12 Female receptacle; 0.5m long	RJ45S FKSDED 423-0.5M TUR.RJ45S FKSDED 423-0.5M	TURCK TURCK	0.00	0.00	
6315150	2 piece	Compact enclosure AX	AX.6315150 RIT.6315150	RIT RIT	0.00	0.00	
5051300	2 pc(s).	Accessory bag, for AX	AX.5051300 RIT.5051300	RIT RIT	0.00	0.00	
5051368	2 pc(s).	Mounting plate, for AX	AX.5051368 RIT.5051368	RIT RIT	0.00	0.00	
RSF 50-1M/NPT	2	RECEPTACLE MINI 5P MALE 1M	RSF 50-1M/NPT TUR.RSF 50-1M/NPT	TURCK TURCK	0.00	0.00	
SSA-EBM-12EB1Q8OTBB	2 piece	Push-to-Stop, Twist-to-Release Electro-Mechanical Push Buttons	SSA-EBM Series BAN.SSA-EBM-12EB1Q8OTBB	BANNER BANNER	0.00	0.00	
55339	2 Piece	MVK-MPNIO DI8 DO8 FSU	MVK-MPNIO DI8 DO8 FSU MURR.55339	MURR MURR	0.00	0.00	
805371	2 piece	K50L Series Daylight Visible Indicators	K50L2RGB7QP BAN.805371	BANNER BANNER	0.00	0.00	
SMB30A	2	Mounting kit	SMB30A BAN.32723	BANNER BANNER	0.00	0.00	
C2LG6	2 ft	Wiring Duct Covers, PVC	C2LG6 PAN.C2LG6	PAN PAN	0.00	0.00	
G2X4LG6	2 ft	Wide Slotted Wiring Duct, PVC	G2X4LG6 PAN.G2X4LG6	PAN PAN	0.00	0.00	
1627297	34 piece	Inductive sensor	BI20U-CA40-AP6X2-H1141/S1590W/BS2.0 TUR.1627297	TUR Turck	0.00	0.00	
55530	1 Piece	MVK-MPNIO DIO16 IRT 7/8" 5pin	MVK-MPNIO DIO16 MURR.55530	MURR MURR	0.00	0.00	
3VA5195-6ED31-0AA0	1	MCCB_UL_FS125_15A_3P_65KA_TM_ FTFM	3VA5195-6ED31-0AA0 SIE.3VA5195-6ED31-0AA0	SIE SIE	0.00	0.00	
3VA9977-0TA20	1	BREAKER DATA SERVER, COM100	3VA9977-0TA20 SIE.3VA9977-0TA20	SIE SIE	0.00	0.00	
7KM9300-0AE02-0AA0	1 Piece	Switched Ethernet PROFINET Module V3	7KM9300-0AE02-0AA0 SIE.7KM9300-0AE02-0AA0	SIE	0.00	0.00	
3VA6340-6KP31-0AA0	1	MCCB_UL_FS400_400A_3P_65KA_ETU8_LSI	3VA6340-6KP31-0AA0 SIE.3VA6340-6KP31-0AA0	SIE SIE	0.00	0.00	
3VA9177-0TB10	1	COMMUNICATION MODULE COM060	3VA9177-0TB10 SIE.3VA9177-0TB10	SIE SIE	0.00	0.00	

Summarized parts list

F02_001

Order number	Quantity	Description Designation	Type number Part number	Manufacturer Supplier	Unit price	Total price	Pos
PTN102-3K	1 Piece	Transformer	PTN102-3K PTN102-3K	POWERTRAN POWERTRAN	0.00	0.00	
R-3W2MT-LMF	1 piece	Multi-Environment Voltage Indicator and Safe-Test Point Combination R-3W2MT-LMF	R-3W2MT-LMF GT.R-3W2MT-LMF	GT GT_N	0.00	0.00	
3VA5120-6ED31-0AA0	1	MCCB_UL_FS125_20A_3P_65KA_TM_ FTFM	3VA5120-6ED31-0AA0 SIE.3VA5120-6ED31-0AA0	SIE SIE	0.00	0.00	
5SJ4303-7HG42	1	CIRCUIT BREAKER 10KA, 3POLE, C, 3A	5SJ4303-7HG42 SIE.5SJ4303-7HG42	SIE SIE	0.00	0.00	
PTN102-7.5K	1 Piece	Transformer	PTN102-7.5K PTN102-7.5K	POWERTRAN POWERTRAN	0.00	0.00	
MB-231-03	1	3P DISTRIBUTION BLOCK 1 LINE / 4 LOAD	MB-231-03 MB-231-03	SYNDEVCO SYNDEVCO	0.00	0.00	
STGS-3D-3D	1	3P GROUND BLOCK 3 LINE / 3 LOAD	STGS-3D-3D STGS-3D-3D	SYNDEVCO SYNDEVCO	0.00	0.00	
5SJ4120-7HG41	1	CIRCUIT BREAKER 240V 14KA, 1-POLE, C, 20A, D=70MM	5SJ4120-7HG41 SIE.5SJ4120-7HG41	SIE SIE	0.00	0.00	
5ST3010-0HG	9	AUXILARY SWITCH 1NO1NC UL489	5ST3010-0HG SIE.5ST3010-0HG	SIE SIE	0.00	0.00	
5SJ4110-7HG41	1	CIRCUIT BREAKER 240V 14KA, 1-POLE, C, 10A, D=70MM	5SJ4110-7HG41 SIE.5SJ4110-7HG41	SIE SIE	0.00	0.00	
5SJ4103-7HG41	2	CIRCUIT BREAKER 240V 14KA, 1-POLE, C, 3A, D=70MM	5SJ4103-7HG41 SIE.5SJ4103-7HG41	SIE SIE	0.00	0.00	
5SJ4116-7HG41	7	CIRCUIT BREAKER 240V 14KA, 1-POLE, C, 16A, D=70MM	5SJ4116-7HG41 SIE.5SJ4116-7HG41	SIE SIE	0.00	0.00	
5SJ4106-7HG41	1	CIRCUIT BREAKER 240V 14KA, 1-POLE, C, 6A, D=70MM	5SJ4106-7HG41 SIE.5SJ4106-7HG41	SIE SIE	0.00	0.00	
1SNL317510R0000	4	DBL175 Series Distribution Block	1SNL317510R0000 1SNL317510R0000	ENTRELEC ENTRELEC	0.00	0.00	
P-P11#2R2-K3RD5	2 piece	Panel Interface Connector with USB Type A/F to USB Type A/M [QT: 2]; Panel Mount Housing; UL Type 4; Duplex Outlet; 5 Amp Circuit Breaker	P-P11#2R2-K3RD5 GT.P-P11#2R2-K3RD5	GT_N GT_N	0.00	0.00	
RSF 36-1M W/LN	2	RECEPTACLE MINI 3P MALE 1M	RSF 36-1M W/LN TUR.RSF 36-1M W/LN	TURCK TURCK	0.00	0.00	
6EP4438-7FB00-3DX0	4	SITOP SEL1200 8 x 10A	6EP4438-7FB00-3DX0 SIE.6EP4438-7FB00-3DX0	SIE	0.00	0.00	
RKF 50-1M/NPT	8	RECEPTACLE MINI 5P FEMALE 1M	RKF 50-1M/NPT TUR.RKF 50-1M/NPT	TURCK TURCK	0.00	0.00	
EMPD3FBCB-100A-M	1		EMPD3FBCB-100A-M EMPD3FBCB-100A-M	Electro-Matic Electro-Matic	0.00	0.00	

Summarized parts list

F02_001

Order number	Quantity	Description Designation	Type number Part number	Manufacturer Supplier	Unit price	Total price	Pos
SJ15-E2-V1-Y40122	1 Piece	Inductive slot sensor	SJ15-E2-V1-Y40122 P+F.SJ15-E2-V1-Y40122	P+F P+F	0.00	0.00	
55556	5 Piece	Field bus, decentralized peripheral - digital I/O module	MVK-MPNIO F DI16/8 7/8" IRT MURR.55556	MURR	0.00	0.00	
	8		TUR.BS 8251-0/PG9			0.00	
1644979	32 piece	Inductive sensor	BI4U-MT12E-AP6X-H1141/S1589 TUR.1644979	TUR Turck	0.00	0.00	
543863	4	Proximity Sensor	SME-8M-DS-24V-K-5,0-OE FES.543863	FES FES	0.00	0.00	
	4		TUN.16324644			0.00	
1644796	2 piece	Inductive sensor	BI4U-MT12E-AP6X2-H1141/S1610 TUR.1644796	TUR Turck	0.00	0.00	
	2		SMC.M9PW			0.00	
U2109-9	1 piece	TEE, 5-PIN MINI, STANDARD KEYWAY	RSM-2RKM 50 TUR.RSM-2RKM 50	TURCK TURCK	0.00	0.00	
BGL001C	3 piece	Slot sensor, Through-beam	BGL 30A-005-S49 BAL.BGL001C	BAL	0.00	0.00	
802T-APDD5	0	NEMA Safety Limit Switch - NEMA Type 4 & 13 Oiltight Construction	802T-APDD5 A-B.802T-APDD5	A-B A-B	0.00	0.00	
BES008L	2 Stück	Inductive Sensors	BES M18MI-PSC80B-S04G BAL.BES008L	BAL	0.00	0.00	
	1		EMPD3FBCB-30A-M			0.00	
SETS8205SID5	5	Golvskåp TS 8 sidskåp	TS8 RIT.SETS8205SID5	RIT RIT	0.00	0.00	

Terminal-strip overview

F14_001

Terminal strip	Terminal strip definition text	Terminals					Graphical page of terminal diagrams
		first	last	Total PE	Total N	Total number	
=KF0KF1+UC31-PC1		DVI		0	0	4	
=KF0KF1+UC31-PH1		DVI	DVI	0	0	1	
=KF0WC3+UC31-XD1		L1	PE	0	0	5	
=KF0WC3+UC31-XD2		1L1	PE	0	0	5	
=KF0WC4+UC31-XD11		1	13	0	0	6	
=KF0WC4+UC31-XD12		1	14	0	0	8	
=KF0WC4+UC31-XD13		1	13	0	0	6	
=KF0WC4+UC31-XD14		1	14	0	0	8	

Terminal-strip overview

F14_001

Terminal strip	Terminal strip definition text	Terminals					Graphical page of terminal diagrams
		first	last	Total PE	Total N	Total number	
=V1WC1+V1UC11-PE		PE	PE	0	0	1	
=V1WC2+V1UC11-XD1		1	16	0	0	16	
=V1WC2+V1UC11-XD2		1	8	0	0	8	
=V1WC2+V1UC11-XD3		1	5	0	0	5	
=V1WC3+V1UC11-XD1		1	4	0	0	4	
=V1WC3+V1UC11-XD2		1	8	0	0	8	
=V1WC3+V1UC11-XD3		1	8	0	0	8	
=V1WC4+V1UC11-KF11.14		1	4	0	0	4	
=V1WC4+V1UC11-XD5		1	1	0	0	1	
=V1WC4+V1UC11-XD6		1	1	0	0	1	
=V1WC4+V1UC11-XD10		1	16	0	0	16	
=V1WC4+V1UC11-XD11		1	1	0	0	1	
=V1WC4+V1UC11-XD12		1	2	0	0	2	
=V1WC4+V1UC11-XD13		1	9	0	0	9	
=V1WC4+V1UC11-XD14		1	2	0	0	2	
=V1WC4+V1UC11-XD20		1	8	0	0	8	
=V1WC4+V1UC11-XD51		1	2	0	0	2	
=V1WC4+V1UC11-XD52		1	2	0	0	2	
=V1WC4+V1UC11-XD53		1	2	0	0	2	
=V1WC4+V1UC11-XD54		1	2	0	0	2	

Terminal-strip overview

F14_001

Terminal strip	Terminal strip definition text	Terminals					Graphical page of terminal diagrams
		first	last	Total PE	Total N	Total number	
=V1WC3+V1UC14-XD1		1	3	0	0	5	
=V1WC4+V1UC14-KF14.12		1	4	0	0	4	
=V1WC4+V1UC14-XD5		1	1	0	0	1	
=V1WC4+V1UC14-XD6		1	1	0	0	1	
=V1WC4+V1UC14-XD10		1	19	0	0	19	
=V1WC4+V1UC14-XD11		1	1	0	0	1	
=V1WC4+V1UC14-XD12		1	2	0	0	2	
=V1WC4+V1UC14-XD13		1	2	0	0	2	
=V1WC4+V1UC14-XD14		1	1	0	0	1	
=V1WC4+V1UC14-XD15		1	5	0	0	3	
=V1WC4+V1UC14-XD16		1	1	0	0	1	
=V1WC4+V1UC14-XD17		1	1	0	0	1	
=V1WC4+V1UC14-XD18		1	1	0	0	1	
=V1WC4+V1UC14-XD51		1	2	0	0	2	
=V1WC4+V1UC14-XD52		1	2	0	0	2	
=V1WC4+V1UC14-XD53		1	2	0	0	2	
=V1WC4+V1UC14-XD54		1	2	0	0	2	

Terminal-strip overview

F14_001

Terminal strip	Terminal strip definition text	Terminals					Graphical page of terminal diagrams
		first	last	Total PE	Total N	Total number	
=V1WC4+V1UC46-XD11		1	19	0	0	18	
=V1WC4+V1UC46-XD14		1	11	0	0	3	
=V1WC4+V1UC46-XD51.1		1	11	0	0	3	
=V1WC4+V1UC46-XD52.1		1	11	0	0	3	
=V1WC4+V1UC46-XD53.1		1	11	0	0	3	
=V1WC4+V1UC46-XD54.1		1	11	0	0	3	

Terminal-strip overview

F14_001

Terminal strip	Terminal strip definition text	Terminals					Graphical page of terminal diagrams
		first	last	Total PE	Total N	Total number	
=V1WC4+V1UC47-XD11		1	19	0	0	18	
=V1WC4+V1UC47-XD14		1	11	0	0	3	
=V1WC4+V1UC47-XD51.1		1	11	0	0	3	
=V1WC4+V1UC47-XD52.1		1	11	0	0	3	
=V1WC4+V1UC47-XD53.1		1	11	0	0	3	
=V1WC4+V1UC47-XD54.1		1	11	0	0	3	

Terminal-strip overview

F14_001

Terminal strip	Terminal strip definition text	Terminals					Graphical page of terminal diagrams
		first	last	Total PE	Total N	Total number	
=V1PZ1PF1+V1UC61-XD11		10	9	0	0	20	

Terminal-strip overview

F14_001

Terminal strip	Terminal strip definition text	Terminals					Graphical page of terminal diagrams
		first	last	Total PE	Total N	Total number	
=V1PZ1PF2+V1UC62-XD11		10	9	0	0	20	

			Date	12/22/2022	Volvo Trucks North America	Valiant TMS	Terminal-strip overview : =V1PZ1PF2+V1UC62-XD11 - =V1PZ1PF2+V1UC62-XD11	Drawing name: =2V13&EFS_EL	=		
			Ed.	MKLEPADLO	Sub-Floor Members				+		
			Appr			Scale 1:1		Document type: EYY	Project nr: 22-16146	Page	7
Modification	Date	Name	Original		Replacement of / Replaced by						614

1	2	3	4	5	6	7	8	9	10

MODIFIED DRAWINGS NOT REVISED IN THE ORIGINAL				DRAWINGS FOR REVISION			REPLACE AFTER REV. BY ORIGINAL		
DATE	SIGN.	DRAWING NR:	SHEET NR:	DATE	SIGN.	REV. AV	DATE	SIGN.	REV.

&EYY/7

2

			Date	12/22/2022	Volvo Trucks North America	Valiant TMS	Amendment page	Drawing name: =2V13&EFS_EL	=
			Ed.	MKLEPADLO					+
			Appr		Sub-Floor Members			Document type: EAZ	Project nr: 22-16146
Modification	Date	Name	Original		Replacement of / Replaced by	Scale 1:10			Page 1 / 614

1	2	3	4	5	6	7	8	9	10

LATEST REVISION

REV.	DATE	SIGN.	DRAWING NR:	SHEET NR:
1	2022-11-03	KMAFFRE	&EFS=V1WC2+V1UC11	11

1 3

			Date	12/22/2022	Volvo Trucks North America	Valiant TMS	Amendment page	Drawing name: =2V13&EFS_EL	=	
			Ed.	MKLEPADLO					+	
			Appr		Sub-Floor Members			Document type: EAZ	Project nr: 22-16146	Page 2 / 614
Modification	Date	Name	Original		Replacement of / Replaced by	Scale 1:10				

1	2	3	4	5	6	7	8	9	10

LATEST REVISION

REV.	DATE	SIGN.	DRAWING NR:	SHEET NR:
2	2022-11-09	KMAFFRE	&EFS=V1WR2BG0+V1WR2	1,2,3
2	2022-11-09	KMAFFRE	&EFS=V1WR1KF1+V1WR1	1
2	2022-11-09	KMAFFRE	&EFS=V1WR1KF2+V1WR1	1
2	2022-11-09	KMAFFRE	&EFS=V1WR2KF1+V1WR2	1
2	2022-11-09	KMAFFRE	&EFS=V1WR2KF2+V1WR2	1
2	2022-11-09	KMAFFRE	&EFS=V1WR2KF3+V1WR2	1

1	2	3	4	5	6	7	8	9	10

LATEST REVISION

REV.	DATE	SIGN.	DRAWING NR:	SHEET NR:
3	2022-11-18	KMAFFRE	&EFS=KH3+KH3	1,2
3	2022-11-18	KMAFFRE	&EFS=V1KF1+V1UC11	12
3	2022-11-18	KMAFFRE	&EFS=V1WC4+V1UC11	5
3	2022-11-18	KMAFFRE	&EFS=V1KF1+V1UC14	10
3	2022-11-18	KMAFFRE	&EFS=V1WC4+V1UC14	8

1	2	3	4	5	6	7	8	9	10

LATEST REVISION

REV.	DATE	SIGN.	DRAWING NR:	SHEET NR:
4	2022-12-14	MKLEPADLO	&EFS=V1WR1KF2+V1WR1	1,2,3
4	2022-12-14	MKLEPADLO	&EFS=V1WR2KF2+V1WR2	1
4	2022-12-20	KMAFFRE	&EFS=KF0SF1+UC31	1
4	2022-12-20	KMAFFRE	&EFS=KF0KF1+UC31	21
4	2022-12-20	KMAFFRE	&ELU=KF0+UC31	3

4

			Date	12/22/2022	Volvo Trucks North America	Valiant TMS	Amendment page	Drawing name: =2V13&EFS_EL	=
			Ed.	MKLEPADLO					+
			Appr		Sub-Floor Members			Document type: EAZ	Project nr: 22-16146
Modification	Date	Name	Original		Replacement of / Replaced by	Scale 1:10			Page 5 / 614