QTY.	MATERIAL	QTY
1	PIAB VAC CHECK VALVE (PT# X1041 VT1)	4
2	PIAB VAC CUP (PT# DB35 X 90P.5E.G40M)	4
3	PIAB VACUSTAT (PT# 31.16.063)	2
4	CROUZET MANOSTAT (PT# 80-502-160) & BASES (PT# 81-532-001)	1
5	FESTO VUWG-L18-M52-R-G14 VALVE	1
6	SMC BUTTON SWITCH (VM130-N01-33A)	2
7	SMC SWITCH (PT# NVM830-N01-13)	1
8	GREEN LIGHT (PT# VR3100-N01G)	1
9	UNIFIED PENDANT (PT# 99028)	4

GENERAL NOTES:
1. ALL WORK TO COMPLY WITH THE LATEST EDITION OF THE FOLLOWING:
* S16-01 LIMIT STATES DESIGN FOR STEEL STRUCTURES
* THE OCCUPATIONAL HEALTH AND SAFETY ACT REGULATIONS FOR INDUSTRIAL
* ESTABLISHMENTS (R.R.O. 1990, REG 851)
* ASME B30.20 BELOW THE HOOK LIFTING DEVICES
2. STRUCTURAL STEEL
* FLAT & ROUND BAR: CSA G40.21
* TUBE: CSA G40.21 GRADE 350W (50W)
* PLATE: CSA G40.21 GRADE 300W (44W)
3. TUBE BENDING
* ALL TUBE BENDING SHALL BE CARRIED OUT WITH A POWERED MANDREL BENDER
* MIN BEND RADIUS FOR:
  7/8" DIA - 1.0" R
  1" DIA - 2.63" RAD
  1 1/4" DIA - 3.22" RAD
4. WELDING SHALL CONFORM WITH THE LATEST REVISION OF THE FOLLOWING STANDARDS:
* SCA W47.1-09, W48-06 (R2011) & W59-13
* ELECTRODES SHALL BE E49XX (E70XX)
* MINIMUM 1/8" CONTINUOUS FILLET OR CJP BUTT WELDS U.N.O.
5. BOLTING:
* ALL BOLTS SHALL BE SAE J429 GR 5 MINIMUM.
6. CAP ALL OPEN ENDS, REMOVE ALL BURRS & SHARP CORNERS.
7. LOADS
* PART: 60 lbs
* TOOL: 32 lbs
* IMPACT FACTOR: 1.25 OBS 4.1.5.11.(1)
8. ALLOWABLE STRESS: F-ALL=FY/3 ASME B30.20 s20-1.2.2
9. DRAWING IS FOR STRUCTURAL REVIEW ONLY

VAC SPECS:

1. **SPREADBEAM CAPACITY:**
   - **SELF LOADING CAPACITY**
   - **SELF DOOR LIFTING CAPACITY**
2. **VACUUM:**
   - **20 MAX**

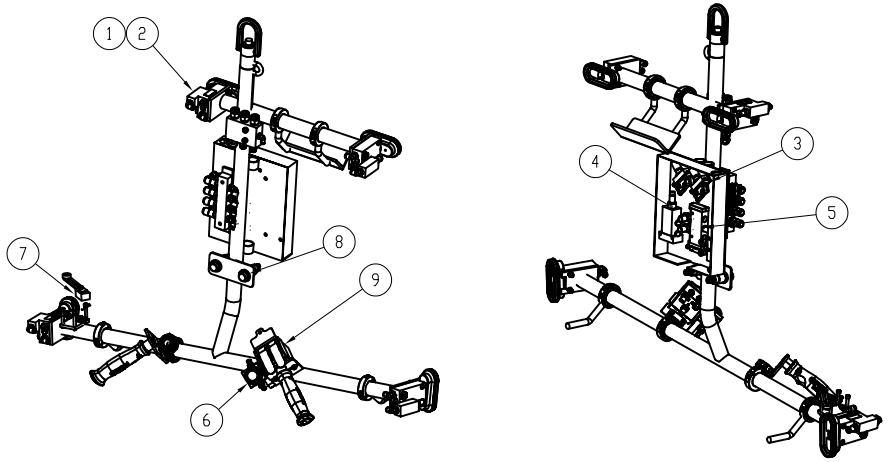

COLTECH DESIGN INC.
1180 MIDWAY BLVD., U6
MISSISSAUGA ONT.

DO NOT MAKE MANUAL CHANGES

IMPERIAL

UNLESS OTHERWISE SPECIFIED DIM'S ARE IN INCHES

UNLESS OTHERWISE SPECIFIED THIS DOCUMENT IS IN ACCORDANCE WITH ASME Y14.5M - 1994 AS AMENDED BY THE GLOBAL DIMENSIONING AND TOLERANCING ADDENDUM-1997

SAFETY HAS BEEN GIVEN CONSIDERATION IN THIS DESIGN

DO NOT SCALE DRAWING

BREAK OR DEBURR EDGES UNLESS OTHERWISE SPECIFIED ACCORDING TO KNOWLEDGE AND EXPERIENCE OF MANUFACTURER

PLANT:
LEC: -- FACT: -- DEPT. NO: -- SCALE: --
MACH NO: 10270-1 OP NO: -- STATION: --
TOOL NAME: DRIVER_SIDE_TRUCK_DOOR_TOOL
DESCRIPTION: LOAD_PARTS_FROM_RACK_TO_BODY
PART NAME: DRIVER_SIDE_TRUCK_DOOR
PART NO: MODEL: --
DESIGNED BY: R. ROCK DATE: (YYYYMMDD) 20231212
DRAWN BY: RR & RA DATE: (YYYYMMDD) 20231212
CHECKED BY: C. ARTHUR DATE: (YYYYMMDD) 20231212
ENG APPROVED: S. LUCIER DATE: (YYYYMMDD) 20240103
SHEET SIZE: CAD SHEETNO: 03 OF 03 WORK ORDER NO:
DRAWING NO: 10270-1 SUFFIX: ITEM TYPE: ASSY

PLANE OF PROJECTION NEEDS TO BE MARKED BY A DIRECTION ARROW.

N_PART	P_LEC	P_DATE
DRAWING NO.	L.E.C.	DATE (DDMMYYYY)

ENGINEERING PRINTS USED