Valiant TMS

Company / customer	Volvo Trucks NA
Project description	P6700 Framing - Cell 2V01, KF1
drawing number	22-16152
Commission	Volvo Trucks North America
Manufacturer (company)	Valiant TMS
Project name	=2V01&EFS_EL_KF1
Type	P6700 Framing - Cell 2V01, KF1

Created on 3/7/2022
Edit date 1/24/2023 by (short name) MKLEPADLO Number of pages 1630

			Date	1/24/2023	Volvo Trucks North America	Valiant TMS	Title page / cover sheet	Drawing name: =2V01&EFS-EL_KF1	=
			Ed.	MKLEPADLO	P6700 Framing - Cell 2V01, KF1				+
			Appr			Scale 1:1		Document type: EAA / Project nr: 22-16152	Page 1 / 1630
Modification	Date	Name	Original		Replacement of / Replaced by				

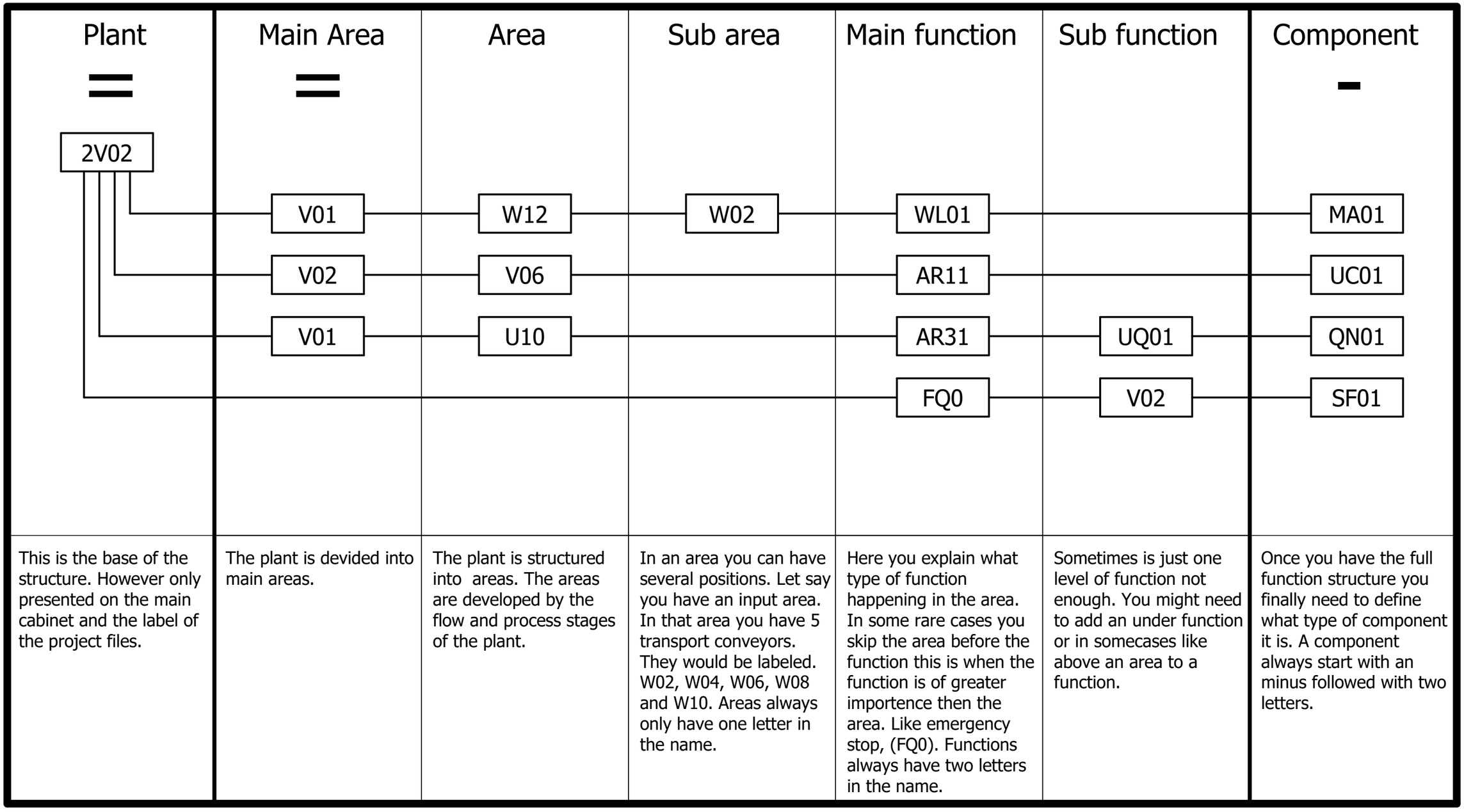

This is the base of the structure. However only presented on the main cabinet and the label of the project files.	The plant is devided into main areas.	The plant is structured into areas. The areas are developed by the flow and process stages of the plant.	In an area you can have several positions. Let say you have an input area. In that area you have 5 transport conveyors. They would be labeled. W02, W04, W06, W08 and W10. Areas always only have one letter in the name.	Here you explain what type of function happening in the area. In some rare cases you skip the area before the function this is when the function is of greater importence then the area. Like emergency stop, (FQ0). Functions always have two letters in the name.	Sometimes is just one level of function not enough. You might need to add an under function or in somecases like above an area to a function.	Once you have the full function structure you finally need to define what type of component it is. A component always start with an minus followed with two letters.

			Date	1/24/2023	Volvo Trucks North America		Valiant TMS	Project structure	Drawing name: =2V01&EFS-EL_KF1	=	
			Ed.	MKLEPADLO						+	
			Appr		P6700 Framing - Cell 2V01, KF1				Document type: EAA	Project nr: 22-16152	Page 2
Modification	Date	Name	Original		Replacement of	Replaced by	Scale 1:1				1630

1. VLN letter codes.
• Our interpretation of IEC 81346-2 is presented in the Excel document: “F01_VLN_Interpretation__81346-2”

2. Wire color coding.
• Based on: "F01_VTNA_Equipment_Standards_Version_2021"

Description	**Color**	**IEC 60204**	**Minimum area**
Power circuits 480/120 VAC	Black	bk	14 AWG
Control circuits 120 VAC	Red	rd	16 AWG
Control circuits before main disconnect (internally supplied)	Yellow	ye	14 AWG
Control circuits before main disconnect (externally supplied)	Orange	og	14 AWG
Control circuits 24 VDC	Blue	bu	16 AWG
DC circuits before main disconnect (positive)	Blue/Orange	buog	16 AWG
DC circuits before main disconnect (common)	White/Orange	whog	16 AWG
Protective conductor PE (Earth)	Green/Yellow	gnye	14 AWG
Neutral	White	wh	14 AWG

Purpose

This document is made to avoid any misconcenptions about the standards we have to uphold regarding equipment grounding connections in compliance with the electrical regulations contained in NEC 250.119.

Fundemental principles

All equipment bonding connections originate from one grounding block, which is mounted either on the outside or directly on the main cabinet. This block is then connected with a minimum size 6 AWG green/yellow wire from the main cabinets grounding bar, this wire is labled (GND1).

From this block a network of green/yellow wiring is spread across the plant. At every bonding connection point a 10 AWG wire composed of a tapp-off clamp as well as a cableharness is used to connect the surface to the bonding network.

Equipment Bonding example

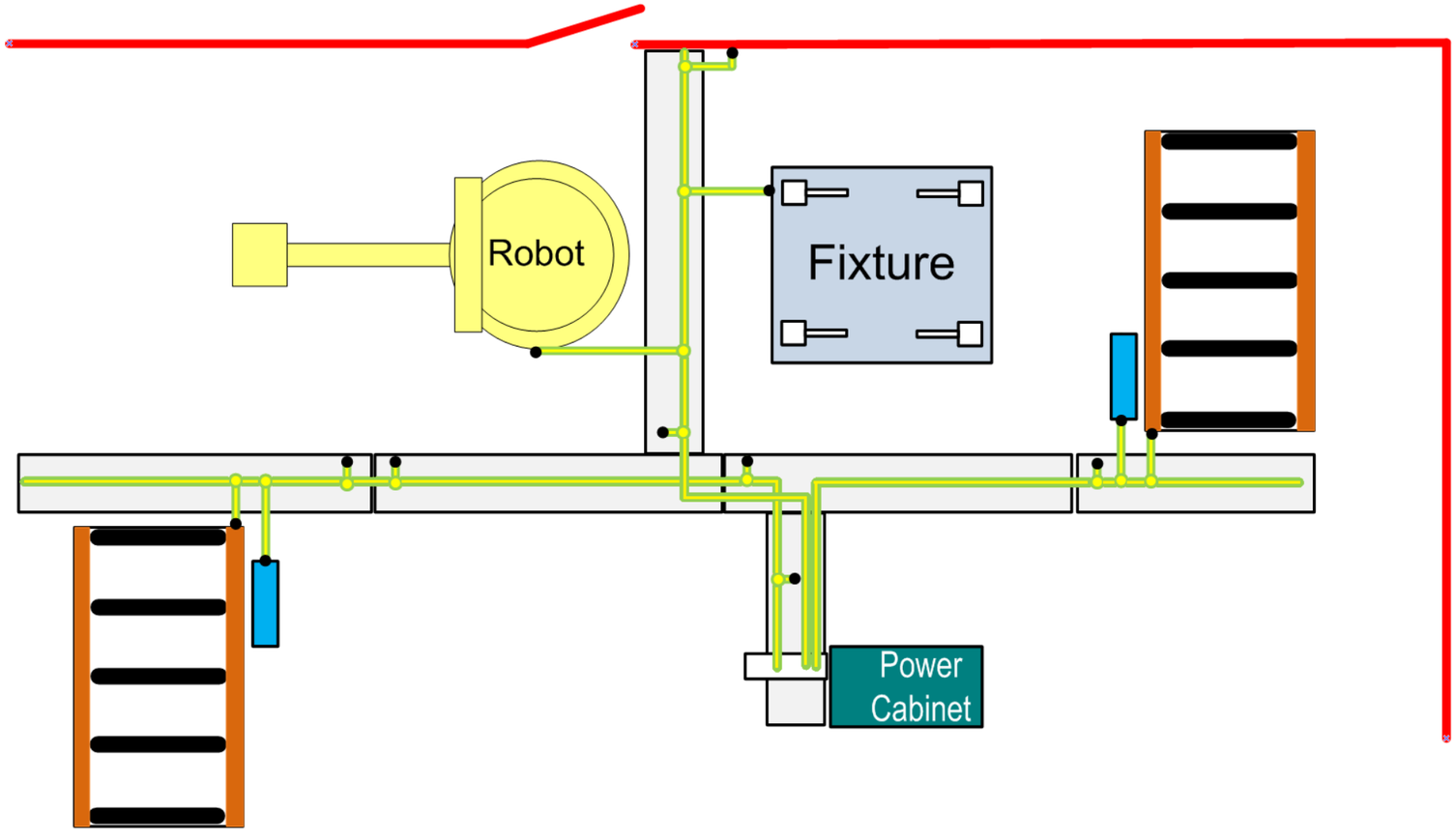

			Date	1/24/2023	Volvo Trucks North America		Valiant TMS	Equipment Bonding policy	Drawing name: =2V01&EFS-EL_KF1	=	
			Ed.	MKLEPADLO						+	
			Appr		P6700 Framing - Cell 2V01, KF1		Scale 1:1		Document type: EAA	Project nr: 22-16152	Page 4 / 1630
Modification	Date	Name	Original		Replacement of	Replaced by					

PLC Card Naming:

The following chart shall be used to cross-reference the naming of PLC cards in PDP & RIO enclosures. This chart is generic and not every enclosure will exist in this package.

Enc Type	Number	Slot 1	Slot 2	Slot 3	Slot 4	Slot 5	Slot 6	Slot 7	Slot 8	Slot 9	Slot 10	Slot 11	Slot 12	Slot 13	Slot 14
PDP	**UC11 PDP1**														
	UC11	KF11.11	KF11.12	KF11.13	KF11.14	KF11.31	KF11.32	KF11.21	KF11.41	KF11.42	KF11.51	KF11.52	KF11.53	KF11.54	
		DI x16	DI x16	DI x16	DI x16	F-DI x 8	F-DI x 8	DQ x16	F-DQ x 4	F-DQ x 4	F-RQ x 1	F-RQ x 1	F-RQ x 1	F-RQ x 1	
		IB 50..51	IB 52..53	IB 54..55	IB 56..57	IB 5050..5055	IB 5056..5061		IB 5062..5066	IB 5067..5071	IB 5072	IB 5073	IB 5074	IB 5075	
						QB 5050..5053	QB 5056..5059	QB 50..51	QB 5062..5066	QB 5067..5071					
	UC12 PDP2														
	UC12	KF12.11	KF12.12	KF12.13	KF12.14	KF12.31	KF12.32	KF12.21	KF12.41	KF12.42	KF12.51	KF12.52	KF12.53	KF12.54	
		DI x16	DI x16	DI x16	DI x16	F-DI x 8	F-DI x 8	DQ x16	F-DQ x 4	F-DQ x 4	F-RQ x 1	F-RQ x 1	F-RQ x 1	F-RQ x 1	
		IB 80..81	IB 82..83	IB 84..85	IB 86..87	IB 5080..5085	IB 5086..5091		IB 5092..5096	IB 5097..5101	IB 5102	IB 5103	IB 5104	IB 5105	
						QB 5080..5083	QB 5086..5089	QB 80..81	QB 5092..5096	QB 5097..5101					
	UC13 PDP3														
	UC13	KF13.11	KF13.12	KF13.13	KF13.14	KF13.31	KF13.32	KF13.21	KF13.41	KF13.42	KF13.51	KF13.52	KF13.53	KF13.54	
		DI x16	DI x16	DI x16	DI x16	F-DI x 8	F-DI x 8	DQ x16	F-DQ x 4	F-DQ x 4	F-RQ x 1	F-RQ x 1	F-RQ x 1	F-RQ x 1	
		IB 110..111	IB 112..113	IB 114..115	IB 116..117	IB 5110..5115	IB 5116..5121		IB 5122..5126	IB 5127..5131	IB 5132	IB 5133	IB 5134	IB 5135	
						QB 5110..5113	QB 5116..5119	QB 110..111	QB 5122..5126	QB 5127..5131					
RIO	**UC14 RIO1**														
	UC14	KF14.11	KF14.12	KF14.31	KF14.32	KF14.21	KF14.41	KF14.42	KF14.51	KF14.52	KF14.53	KF14.54			
		DI x16	DI x16	F-DI x 8	F-DI x 8	DQ x16	F-DQ x 4	F-DQ x 4	F-RQ x 1	F-RQ x 1	F-RQ x 1	F-RQ x 1			
		IB 200..201	IB 202..203	IB 5200..5205	IB 5206..5211		IB 5212..5216	IB 5217..5221	IB 5222	IB 5223	IB 5224	IB 5225			
				QB 5200..5203	QB 5206..5209	QB 200..201	QB 5212..5216	QB 5217..5221							
	UC15 RIO2														
	UC15	KF15.11	KF15.12	KF15.31	KF15.32	KF15.21	KF15.41	KF15.42	KF15.51	KF15.52	KF15.53	KF15.54			
		DI x16	DI x16	F-DI x 8	F-DI x 8	DQ x16	F-DQ x 4	F-DQ x 4	F-RQ x 1	F-RQ x 1	F-RQ x 1	F-RQ x 1			
		IB 230..231	IB 232..233	IB 5230..5235	IB 5236..5241		IB 5242..5246	IB 5247..5251	IB 5252	IB 5253	IB 5254	IB 5255			
				QB 5230..5233	QB 5236..5239	QB 230..231	QB 5242..5246	QB 5247..5251							
	UC16 RIO3														
	UC16	KF16.11	KF16.12	KF16.31	KF16.32	KF16.21	KF16.41	KF16.42	KF16.51	KF16.52	KF16.53	KF16.54			
		DI x16	DI x16	F-DI x 8	F-DI x 8	DQ x16	F-DQ x 4	F-DQ x 4	F-RQ x 1	F-RQ x 1	F-RQ x 1	F-RQ x 1			
		IB 260..261	IB 262..263	IB 5260..5265	IB 5266..5271		IB 5272..5276	IB 5277..5281	IB 5282	IB 5283	IB 5284	IB 5285			
				QB 5260..5263	QB 5266..5269	QB 260..261	QB 5272..5276	QB 5287..5281							
	UC17 RIO4														
	UC17	KF17.11	KF17.12	KF17.31	KF17.32	KF17.21	KF17.41	KF17.42	KF17.51	KF17.52	KF17.53	KF17.54			
		DI x16	DI x16	F-DI x 8	F-DI x 8	DQ x16	F-DQ x 4	F-DQ x 4	F-RQ x 1	F-RQ x 1	F-RQ x 1	F-RQ x 1			
		IB 290..291	IB 292..293	IB 5290..5295	IB 5296..5301		IB 5302..5306	IB 5307..5311	IB 5312	IB 5313	IB 5314	IB 5315			
				QB 5290..5293	QB 5296..5299	QB 290..291	QB 5302..5306	QB 5307..5311							

			Date	1/24/2023	Volvo Trucks North America	Valiant TMS	PLC Card Naming	Drawing name: =2V01&EFS-EL_KF1	=
			Ed.	MKLEPADLO					+
			Appr		P6700 Framing - Cell 2V01, KF1			Document type: EAA / Project nr: 22-16152	Page 5 / 1630
Modification	Date	Name	Original		Replacement of / Replaced by	Scale 1:1			

Table of contents

Column X: An automatically generated page was edited F06_001

Page	Page description	supplementary page field	Date	Edited by	X
&EAA/1	Title page / cover sheet		1/19/2023	MKLEPADLO	
&EAA/2	Project structure		12/19/2022	MKLEPADLO	
&EAA/3	Letter codes/colors		12/19/2022	MKLEPADLO	
&EAA/4	Equipment Bonding policy		12/19/2022	MKLEPADLO	
&EAA/5	PLC Card Naming		12/19/2022	MKLEPADLO	
&EAB/1	Table of contents : &EAA/1 - &EAB/28		1/20/2023	MKLEPADLO	
&EAB/2	Table of contents : &EAB/29 - &EFS=KF0KF1+UC31/10		1/20/2023	MKLEPADLO	
&EAB/3	Table of contents : &EFS=KF0KF1+UC31/11 - &EFS=V1AR11UQ41BG0+V1AR11UQ41/1		1/19/2023	MKLEPADLO	
&EAB/4	Table of contents : &EFS=V1AR11UQ41KF1+V1AR11UQ41/1 - &EFS=V1AR31XQ41WC4+V1AR31XQ41UC01/1		1/20/2023	MKLEPADLO	
&EAB/5	Table of contents : &EFS=V1AR41KF1+V1AR41UC01/1 - &EFS=V1GL13UQ51KF2+V1GL13UQ51/1		1/19/2023	MKLEPADLO	
&EAB/6	Table of contents : &EFS=V1GL13UQ51KF2+V1GL13UQ51/2 - &EFS=V1KF1+V1UC11/10		1/19/2023	MKLEPADLO	
&EAB/7	Table of contents : &EFS=V1KF1+V1UC11/11 - &EFS=V1KF1+V1UC32/1		1/19/2023	MKLEPADLO	
&EAB/8	Table of contents : &EFS=V1KF1+V1UC32/2 - &EFS=V1UQ53UQ1+V1UQ53UQ1/1		1/20/2023	MKLEPADLO	
&EAB/9	Table of contents : &EFS=V1UQ53UQ2+V1UQ53UQ2/1 - &EFS=V1WC3+V1UC12/3		1/19/2023	MKLEPADLO	
&EAB/10	Table of contents : &EFS=V1WC3+V1UC12/4 - &EFS=V1WC4+V1UC12/5		1/19/2023	MKLEPADLO	
&EAB/11	Table of contents : &EFS=V1WC4+V1UC12/6 - &EFS=V2AR21WC1+V2AR21UC01/1		1/19/2023	MKLEPADLO	
&EAB/12	Table of contents : &EFS=V2AR21XQ11WC1+V2AR21XQ11UC01/1 - &EFS=V2AR31UQ42UQ2+V2AR31UQ42UQ2/1		1/19/2023	MKLEPADLO	
&EAB/13	Table of contents : &EFS=V2AR31UQ42UQ3+V2AR31UQ42UQ3/1 - &EFS=V2AR32XQ41UQ1+V2AR32XQ41UQ1/1		1/19/2023	MKLEPADLO	
&EAB/14	Table of contents : &EFS=V2AR32XQ41WC1+V2AR32XQ41UC01/1 - &EFS=V2AR42UQ42UQ2+V2AR42UQ42UQ2/1		1/20/2023	MKLEPADLO	
&EAB/15	Table of contents : &EFS=V2AR42WC1+V2AR42UC01/1 - &EFS=V2AR43UQ43KF1+V2AR43UQ43/3		1/20/2023	MKLEPADLO	
&EAB/16	Table of contents : &EFS=V2AR43UQ43KF1+V2AR43UQ43/4 - &EFS=V2AR44UQ42UQ8+V2AR44UQ42UQ8/1		1/20/2023	MKLEPADLO	
&EAB/17	Table of contents : &EFS=V2AR44UQ42UQ9+V2AR44UQ42UQ9/1 - &EFS=V2GL15UQ51BG0+V2GL15UQ51/1		1/20/2023	MKLEPADLO	
&EAB/18	Table of contents : &EFS=V2GL15UQ51BG0+V2GL15UQ51/2 - &EFS=V2GL17UQ51UQ8+V2GL17UQ51UQ8/1		1/19/2023	MKLEPADLO	
&EAB/19	Table of contents : &EFS=V2GL17WC1+V2GL17UC01/1 - &EFS=V2KF1+V2UC15/2		1/20/2023	MKLEPADLO	
&EAB/20	Table of contents : &EFS=V2KF1+V2UC15/3 - &EFS=V2SF0PG1+V2UC32/1		1/20/2023	MKLEPADLO	
&EAB/21	Table of contents : &EFS=V2SF0PG1+V2UC32/2 - &EFS=V2UQ52BG0+V2UQ52/1		1/19/2023	MKLEPADLO	
&EAB/22	Table of contents : &EFS=V2UQ52KF1+V2UQ52/1 - &EFS=V2WC4+V2UC14/15		1/20/2023	MKLEPADLO	
&EAB/23	Table of contents : &EFS=V2WC4+V2UC14/16 - &EFS=V2WC4+V2UC32/3		1/20/2023	MKLEPADLO	
&EAB/24	Table of contents : &EFS=V2WC4+V2UC33/1 - &ELU=V2SF0PG2+V2UC33/2		1/20/2023	MKLEPADLO	
&EAB/25	Table of contents : &ELU=V2UC14+V2UC14/1 - &EMA=V1AR31UQ41BG0+V1AR31UQ41/3		1/20/2023	MKLEPADLO	
&EAB/26	Table of contents : &EMA=V1AR31UQ41BG0+V1AR31UQ41/4 - &EMA=V1UL1UQ1.4+V1UL1UQ1.4/1		1/20/2023	MKLEPADLO	
&EAB/27	Table of contents : &EMA=V1UL1UQ2.1+V1UL1UQ2.1/1 - &EMA=V1WC1+V1UC11/1		1/20/2023	MKLEPADLO	
&EAB/28	Table of contents : &EMA=V1WC1+V1UC12/1 - &EMA=V2AR31UQ42BG0+V2AR31UQ42/9		1/20/2023	MKLEPADLO	

			Date	1/24/2023	Volvo Trucks North America	Valiant TMS	Table of contents : &EAA/1 - &EAB/28	Drawing name: =2V01&EFS-EL_KF1	=
			Ed.	MKLEPADLO					+
			Appr		P6700 Framing - Cell 2V01, KF1			Document type: EAB	Project nr: 22-16152
Modification	Date	Name	Original		Replacement of / Replaced by	Scale 1:1			Page 1 / 1630

Table of contents

Column X: An automatically generated page was edited

F06_001

Page	Page description	supplementary page field	Date	Edited by	X
&EAB/29	Table of contents : &EMA=V2AR31UQ42KF1+V2AR31UQ42/1 - &EMA=V2AR32UQ41UQ7.1+V2AR32UQ41UQ7.1/1		1/20/2023	MKLEPADLO	
&EAB/30	Table of contents : &EMA=V2AR32UQ41UQ7.2+V2AR32UQ41UQ7.2/1 - &EMA=V2AR41UQ41UQ4.3+V2AR41UQ41UQ4.3/1		1/20/2023	MKLEPADLO	
&EAB/31	Table of contents : &EMA=V2AR41UQ41UQ4.4+V2AR41UQ41UQ4.4/1 - &EMA=V2AR43UQ41UQ1.2+V2AR43UQ41UQ1.2/1		1/20/2023	MKLEPADLO	
&EAB/32	Table of contents : &EMA=V2AR43UQ41UQ2.1+V2AR43UQ41UQ2.1/1 - &EMA=V2AR43UQ43BG0+V2AR43UQ43/3		1/20/2023	MKLEPADLO	
&EAB/33	Table of contents : &EMA=V2AR43UQ43KF1+V2AR43UQ43/1 - &EMA=V2AR44UQ42UQ1.1+V2AR44UQ42UQ1.1/1		1/20/2023	MKLEPADLO	
&EAB/34	Table of contents : &EMA=V2AR44UQ42UQ2.1+V2AR44UQ42UQ2.1/1 - &EMA=V2UQ31BG0+V2UQ31/2		1/20/2023	MKLEPADLO	
&EAB/35	Table of contents : &EMA=V2UQ31BG0+V2UQ31/3 - &EMA=V2UQ31UQ16.1+V2UQ31UQ16.1/1		1/20/2023	MKLEPADLO	
&EAB/36	Table of contents : &EMA=V2UQ31UQ17.1+V2UQ31UQ17.1/1 - &EPB+KH0/1		1/20/2023	MKLEPADLO	
&EAB/37	Table of contents : &EPB+UC31/1 - &EPB+V1AR41UQ41UQ2.1/1		1/20/2023	MKLEPADLO	
&EAB/38	Table of contents : &EPB+V1AR41UQ41UQ2.2/1 - &EPB+V1UC12/2		1/20/2023	MKLEPADLO	
&EAB/39	Table of contents : &EPB+V1UC32/1 - &EPB+V2AR24XQ11UC01/1		1/20/2023	MKLEPADLO	
&EAB/40	Table of contents : &EPB+V2AR31UQ41/1 - &EPB+V2AR32UQ41UQ3.3/1		1/20/2023	MKLEPADLO	
&EAB/41	Table of contents : &EPB+V2AR32UQ41UQ4.1/1 - &EPB+V2AR41XQ11UC01/1		1/20/2023	MKLEPADLO	
&EAB/42	Table of contents : &EPB+V2AR42UQ41/1 - &EPB+V2AR43UQ42UQ6.2/1		1/20/2023	MKLEPADLO	
&EAB/43	Table of contents : &EPB+V2AR43UQ42UQ6.3/1 - &EPB+V2AR44UQ42UQ2.2/1		1/20/2023	MKLEPADLO	
&EAB/44	Table of contents : &EPB+V2AR44UQ42UQ3.1/1 - &EPB+V2FQ1BG10/1		1/20/2023	MKLEPADLO	
&EAB/45	Table of contents : &EPB+V2FQ1BG11/1 - &EPB+V2UC161/1		1/20/2023	MKLEPADLO	
&EAB/46	Table of contents : &EPB+V2UC162/1 - &EPB+V2WL2UC01/1		1/20/2023	MKLEPADLO	
&EAB/47	Table of contents : &EPB+V2WL3KF1/1 - &ETT/29		1/20/2023	MKLEPADLO	
&EAB/48	Table of contents : &ETT/30 - &ETT/62		1/20/2023	MKLEPADLO	
&EAB/49	Table of contents : &ETT/63 - &EXX/8		1/20/2023	MKLEPADLO	
&EAB/50	Table of contents : &EXX/9 - &EAZ/2		1/20/2023	MKLEPADLO	
&EFS=FQ0V1SF1S01+V1UC32/1	Emergency stop +V1SF1S01UC32		1/19/2023	MKLEPADLO	
&EFS=FQ0V2SF1S01+V2UC32/1	Emergency stop +V2SF1S01UC32		1/19/2023	MKLEPADLO	
&EFS=FQ0V2SF2S01+V2UC33/1	Emergency stop +V2SF2S01UC33		1/19/2023	MKLEPADLO	
&EFS=KF0FQ0+UC31/1	Operating box UC91 MOP		1/19/2023	MKLEPADLO	
&EFS=KF0KF1+UC31/1	CPU 1517-F-3PN/DP, Failsafe		1/19/2023	MKLEPADLO	
&EFS=KF0KF1+UC31/2	Cell interface S615		1/19/2023	MKLEPADLO	
&EFS=KF0KF1+UC31/3	Switch, Scalance XC216		1/19/2023	MKLEPADLO	
&EFS=KF0KF1+UC31/4	PN/PN Module		1/20/2023	MKLEPADLO	
&EFS=KF0KF1+UC31/5	ET200S Cross-reference Input module		1/20/2023	MKLEPADLO	
&EFS=KF0KF1+UC31/6	MOP, PC		1/19/2023	MKLEPADLO	
&EFS=KF0KF1+UC31/10	Network overview		1/19/2023	MKLEPADLO	

			Date	1/24/2023	Volvo Trucks North America	Valiant TMS	Table of contents : &EAB/29 - &EFS=KF0KF1+UC31/10	Drawing name: =2V01&EFS-EL_KF1	=
			Ed.	MKLEPADLO					+
			Appr		P6700 Framing - Cell 2V01, KF1			Document type: EAB	Project nr: 22-16152
Modification	Date	Name	Original		Replacement of / Replaced by	Scale 1:1			Page 2 / 1630

Table of contents

Column X: An automatically generated page was edited

F06_001

Page	Page description	supplementary page field	Date	Edited by	X
&EFS=KF0KF1+UC31/11	IM 155 PN		1/19/2023	MKLEPADLO	
&EFS=KF0KF1+UC31/12	ET200S Wiring DI		1/19/2023	MKLEPADLO	
&EFS=KF0KF1+UC31/14	ET200S Wiring DO		1/19/2023	MKLEPADLO	
&EFS=KF0KF1+UC31/18	ET200S Wiring F-DI		1/19/2023	MKLEPADLO	
&EFS=KF0KF1+UC31/21	ET200S Cross-reference Input module		1/19/2023	MKLEPADLO	
&EFS=KF0KF1+UC31/41	ET200S Cross-reference Output module		1/19/2023	MKLEPADLO	
&EFS=KF0KF1+UC31/81	ET200S Cross-reference Safe input module		1/19/2023	MKLEPADLO	
&EFS=KF0PZ1+UC31/1	Indication column		1/19/2023	MKLEPADLO	
&EFS=KF0SF1+UC31/1	Operating box UC91 MOP		1/19/2023	MKLEPADLO	
&EFS=KF0SF1+UC31/2	Operating box UC92 MOP		1/19/2023	MKLEPADLO	
&EFS=KF0WC3+UC31/1	Incomming power supply 120 VAC		1/19/2023	MKLEPADLO	
&EFS=KF0WC3+UC31/2	Outlet PLC 120VAC		1/19/2023	MKLEPADLO	
&EFS=KF0WC3+UC31/3	Monitoring 120VAC		1/19/2023	MKLEPADLO	
&EFS=KF0WC4+UC31/1	Power distribution 24VDC		1/19/2023	MKLEPADLO	
&EFS=KF0WC4+UC31/2	Power distribution, UPS		1/19/2023	MKLEPADLO	
&EFS=KF0WC4+UC31/3	Power distribution 24VDC 1L+		1/19/2023	MKLEPADLO	
&EFS=KF0WC4+UC31/4	Power distribution 24VDC 2L+		1/19/2023	MKLEPADLO	
&EFS=KF0WC4+UC31/5	Power distribution 24VDC 3L+		1/19/2023	MKLEPADLO	
&EFS=KF0WC4+UC31/6	Power distribution 24VDC 4L+		1/19/2023	MKLEPADLO	
&EFS=KH0+KH0/1	Incoming air supply (Main)		1/19/2023	MKLEPADLO	
&EFS=KH0+KH0/2	Incoming air supply (S010 Media Panel)		1/19/2023	MKLEPADLO	
&EFS=KH0+KH0/3	Incoming air supply (S030 Fixture)		1/19/2023	MKLEPADLO	
&EFS=KH0+KH0/4	Incoming air supply (S040 Fixture)		1/19/2023	MKLEPADLO	
&EFS=KH0+KH0/5	Incoming air supply (GL13 At Unload)		1/19/2023	MKLEPADLO	
&EFS=KH0+KH0/6	Incoming air supply (GL14 At Unload)		1/19/2023	MKLEPADLO	
&EFS=KH0+KH0/7	Incoming air supply (GL15 At Unload)		1/19/2023	MKLEPADLO	
&EFS=KH0+KH0/8	Incoming air supply (GL16 At Unload)		1/19/2023	MKLEPADLO	
&EFS=KH0+KH0/9	Incoming air supply (GL17 At Unload)		1/19/2023	MKLEPADLO	
&EFS=KH0+KH0/10	Incoming air supply (GL18 At Unload)		1/19/2023	MKLEPADLO	
&EFS=KH3+KH3/1	Incoming water supply (Filter)		1/19/2023	MKLEPADLO	
&EFS=KH3+KH3/2	Incoming water supply		1/19/2023	MKLEPADLO	
&EFS=V1AR11KF1+V1AR11UC01/1	Incoming Profinet		1/19/2023	MKLEPADLO	
&EFS=V1AR11UQ41BG0+V1AR11UQ41/1	SENSORS		1/19/2023	MKLEPADLO	

			Date	1/24/2023	Volvo Trucks North America		Valiant TMS	Table of contents : &EFS=KF0KF1+UC31/11 - &EFS=V1AR11UQ41BG0+V1AR11UQ41/1	Drawing name: =2V01&EFS-EL_KF1	=	
			Ed.	MKLEPADLO						+	
			Appr		P6700 Framing - Cell 2V01, KF1				Document type: EAB	Project nr: 22-16152	Page 3
Modification	Date	Name	Original		Replacement of	Replaced by	Scale 1:1				1630

Table of contents

Column X: An automatically generated page was edited

F06_001

Page	Page description	supplementary page field	Date	Edited by	X
&EFS=V1AR11UQ41KF1+V1AR11UQ41/1	24VDC SUPPLY AND PROFINET HANDLING MODULE		1/19/2023	MKLEPADLO	
&EFS=V1AR11UQ41KF1+V1AR11UQ41/2	CONNECTING MOD. FOR MPA MANIFOLD		1/19/2023	MKLEPADLO	
&EFS=V1AR11UQ41KF1+V1AR11UQ41/3	I/O MOD. DI16 (8 x M12) FOR MPA		1/19/2023	MKLEPADLO	
&EFS=V1AR11UQ41KF1+V1AR11UQ41/4	I/O MOD. DI16 (8 x M12) FOR MPA		1/19/2023	MKLEPADLO	
&EFS=V1AR11UQ41KF1+V1AR11UQ41/5	CONNECTING MOD. FOR FESTO DQ		1/19/2023	MKLEPADLO	
&EFS=V1AR11UQ41UQ1+V1AR11UQ41UQ1/1	FESTO DQ CONNECTION QN1		1/19/2023	MKLEPADLO	
&EFS=V1AR11UQ41UQ2+V1AR11UQ41UQ2/1	FESTO DQ CONNECTION QN2		1/19/2023	MKLEPADLO	
&EFS=V1AR11UQ41UQ3+V1AR11UQ41UQ3/1	FESTO DQ CONNECTION QN3		1/19/2023	MKLEPADLO	
&EFS=V1AR11UQ41UQ4+V1AR11UQ41UQ4/1	FESTO DQ CONNECTION QN4		1/19/2023	MKLEPADLO	
&EFS=V1AR11UQ41UQ5+V1AR11UQ41UQ5/1	FESTO DQ CONNECTION QN5		1/19/2023	MKLEPADLO	
&EFS=V1AR11UQ41UQ6+V1AR11UQ41UQ6/1	FESTO DQ CONNECTION QN6		1/20/2023	MKLEPADLO	
&EFS=V1AR11UQ41UQ7+V1AR11UQ41UQ7/1	FESTO DQ CONNECTION QN7		1/20/2023	MKLEPADLO	
&EFS=V1AR11UQ41UQ8+V1AR11UQ41UQ8/1	FESTO DQ CONNECTION QN8		1/20/2023	MKLEPADLO	
&EFS=V1AR11UQ41UQ9+V1AR11UQ41UQ9/1	FESTO DQ CONNECTION QN9		1/20/2023	MKLEPADLO	
&EFS=V1AR11UQ41UQ10+V1AR11UQ41UQ10/1	FESTO DQ CONNECTION QN10		1/19/2023	MKLEPADLO	
&EFS=V1AR11WC1+V1AR11UC01/1	Incoming power		1/19/2023	MKLEPADLO	
&EFS=V1AR21KF1+V1AR21UC01/1	Incoming Profinet		1/19/2023	MKLEPADLO	
&EFS=V1AR21WC1+V1AR21UC01/1	Incoming power		1/19/2023	MKLEPADLO	
&EFS=V1AR21XQ11WC1+V1AR21XQ11UC01/1	Incoming power		1/19/2023	MKLEPADLO	
&EFS=V1AR31KF1+V1AR31UC01/1	Incoming Profinet		1/19/2023	MKLEPADLO	
&EFS=V1AR31UQ41BG0+V1AR31UQ41/1	SENSORS		1/19/2023	MKLEPADLO	
&EFS=V1AR31UQ41KF1+V1AR31UQ41/1	24VDC SUPPLY AND PROFINET HANDLING MODULE		1/19/2023	MKLEPADLO	
&EFS=V1AR31UQ41KF1+V1AR31UQ41/2	CONNECTING MOD. FOR MPA MANIFOLD		1/19/2023	MKLEPADLO	
&EFS=V1AR31UQ41KF1+V1AR31UQ41/3	I/O MOD. DI16 (8 x M12) FOR MPA		1/19/2023	MKLEPADLO	
&EFS=V1AR31UQ41KF1+V1AR31UQ41/4	CONNECTING MOD. FOR FESTO DQ		1/19/2023	MKLEPADLO	
&EFS=V1AR31UQ41UQ1+V1AR31UQ41UQ1/1	FESTO DQ CONNECTION QN1		1/19/2023	MKLEPADLO	
&EFS=V1AR31UQ41UQ2+V1AR31UQ41UQ2/1	FESTO DQ CONNECTION QN2		1/19/2023	MKLEPADLO	
&EFS=V1AR31WC1+V1AR31UC01/1	Incoming power		1/19/2023	MKLEPADLO	
&EFS=V1AR31XQ41KF1+V1AR31XQ41/1	CONNECTING MOD. FOR VTSA MANIFOLD		1/19/2023	MKLEPADLO	
&EFS=V1AR31XQ41KF1+V1AR31XQ41/2	CONNECTING MOD. FOR FESTO DQ		1/19/2023	MKLEPADLO	
&EFS=V1AR31XQ41UQ1+V1AR31XQ41UQ1/1	FESTO DQ CONNECTION QN1		1/19/2023	MKLEPADLO	
&EFS=V1AR31XQ41WC1+V1AR31XQ41UC01/1	Incoming power		1/19/2023	MKLEPADLO	
&EFS=V1AR31XQ41WC4+V1AR31XQ41UC01/1	24VDC		1/19/2023	MKLEPADLO	

			Date	1/24/2023	Volvo Trucks North America	Valiant TMS	Table of contents : &EFS=V1AR11UQ41KF1+V1AR11UQ41/1 - &EFS=V1AR31XQ41WC4+V1AR31XQ41UC01/1	Drawing name: =2V01&EFS-EL_KF1	=
			Ed.	MKLEPADLO					+
			Appr		P6700 Framing - Cell 2V01, KF1	Scale 1:1		Document type: EAB	Project nr: 22-16152
Modification	Date	Name	Original		Replacement of / Replaced by				Page 4 / 1630

Table of contents

Column X: An automatically generated page was edited

F06_001

Page	Page description	supplementary page field	Date	Edited by	X
&EFS=V1AR41KF1+V1AR41UC01/1	Incoming Profinet		1/19/2023	MKLEPADLO	
&EFS=V1AR41UQ41BG0+V1AR41UQ41/1	SENSORS		1/19/2023	MKLEPADLO	
&EFS=V1AR41UQ41KF1+V1AR41UQ41/1	24VDC SUPPLY AND PROFINET HANDLING MODULE		1/19/2023	MKLEPADLO	
&EFS=V1AR41UQ41KF1+V1AR41UQ41/2	CONNECTING MOD. FOR MPA MANIFOLD		1/19/2023	MKLEPADLO	
&EFS=V1AR41UQ41KF1+V1AR41UQ41/3	I/O MOD. DI16 (8 x M12) FOR MPA		1/19/2023	MKLEPADLO	
&EFS=V1AR41UQ41KF1+V1AR41UQ41/4	I/O MOD. DI16 (8 x M12) FOR MPA		1/19/2023	MKLEPADLO	
&EFS=V1AR41UQ41KF1+V1AR41UQ41/5	CONNECTING MOD. FOR FESTO DQ		1/19/2023	MKLEPADLO	
&EFS=V1AR41UQ41UQ1+V1AR41UQ41UQ1/1	FESTO DQ CONNECTION QN1		1/19/2023	MKLEPADLO	
&EFS=V1AR41UQ41UQ2+V1AR41UQ41UQ2/1	FESTO DQ CONNECTION QN2		1/19/2023	MKLEPADLO	
&EFS=V1AR41UQ41UQ3+V1AR41UQ41UQ3/1	FESTO DQ CONNECTION QN3		1/19/2023	MKLEPADLO	
&EFS=V1AR41UQ41UQ4+V1AR41UQ41UQ4/1	FESTO DQ CONNECTION QN4		1/19/2023	MKLEPADLO	
&EFS=V1AR41WC1+V1AR41UC01/1	Incoming power		1/19/2023	MKLEPADLO	
&EFS=V1AR41XQ11WC1+V1AR41XQ11UC01/1	Incoming power		1/19/2023	MKLEPADLO	
&EFS=V1FQ1+V1FQ1/1	Door lock sensor -BG1		1/19/2023	MKLEPADLO	
&EFS=V1FQ1+V1FQ1/2	Door lock sensor -BG2		1/19/2023	MKLEPADLO	
&EFS=V1FQ1+V1FQ1/3	Door lock sensor -BG6		1/19/2023	MKLEPADLO	
&EFS=V1FQ1+V1FQ1/4	Door lock sensor -BG7		1/19/2023	MKLEPADLO	
&EFS=V1FQ1+V1FQ1/10	2V01/2V04 S150 Conveyor Light Curtain		1/19/2023	MKLEPADLO	
&EFS=V1FQ1+V1FQ1/11	S020 Light Curtains 1&2		1/19/2023	MKLEPADLO	
&EFS=V1FQ1+V1FQ1/12	S030/035 Light Curtains 1		1/19/2023	MKLEPADLO	
&EFS=V1FQ1+V1UC11/1	Safety power monitoring RQ - KF11.51		1/19/2023	MKLEPADLO	
&EFS=V1FQ1+V1UC11/2	Safety power monitoring RQ - KF11.52		1/19/2023	MKLEPADLO	
&EFS=V1FQ1+V1UC11/3	Safety power monitoring RQ - KF11.53		1/19/2023	MKLEPADLO	
&EFS=V1FQ1+V1UC11/4	Safety power monitoring RQ - KF11.54		1/19/2023	MKLEPADLO	
&EFS=V1FQ1+V1UC12/1	Safety power monitoring RQ - KF12.51		1/19/2023	MKLEPADLO	
&EFS=V1FQ1+V1UC12/2	Safety power monitoring RQ - KF12.52		1/19/2023	MKLEPADLO	
&EFS=V1FQ1+V1UC12/3	Safety power monitoring RQ - KF12.53		1/19/2023	MKLEPADLO	
&EFS=V1FQ1+V1UC12/4	Safety power monitoring RQ - KF12.54		1/19/2023	MKLEPADLO	
&EFS=V1GL13KF2+V1GL13KF2/1	RFID Communication Module		1/19/2023	MKLEPADLO	
&EFS=V1GL13KF2+V1GL13KF2/10	G120D Control Unit		1/19/2023	MKLEPADLO	
&EFS=V1GL13UQ51BG0+V1GL13UQ51/1	SENSORS		1/19/2023	MKLEPADLO	
&EFS=V1GL13UQ51BG0+V1GL13UQ51/2	SENSORS		1/19/2023	MKLEPADLO	
&EFS=V1GL13UQ51KF2+V1GL13UQ51/1	CONNECTING MOD. FOR VTSA MANIFOLD		1/19/2023	MKLEPADLO	

			Date	1/24/2023	Volvo Trucks North America	Valiant TMS	Table of contents : &EFS=V1AR41KF1+V1AR41UC01/1 - &EFS=V1GL13UQ51KF2+V1GL13UQ51/1	Drawing name: =2V01&EFS-EL_KF1	=
			Ed.	MKLEPADLO					+
			Appr		P6700 Framing - Cell 2V01, KF1			Document type: EAB	Project nr: 22-16152
Modification	Date	Name	Original		Replacement of / Replaced by	Scale 1:1			Page 5 / 1630

Table of contents

Column X: An automatically generated page was edited

F06_001

Page	Page description	supplementary page field	Date	Edited by	X
&EFS=V1GL13UQ51KF2+V1GL13UQ51/2	I/O MOD. DI16 (8 x M12) FOR VTSA-F		1/19/2023	MKLEPADLO	
&EFS=V1GL13UQ51KF2+V1GL13UQ51/3	I/O MOD. DI16 (8 x M12) FOR VTSA-F		1/19/2023	MKLEPADLO	
&EFS=V1GL13UQ51KF2+V1GL13UQ51/4	I/O MOD. DI16 (8 x M12) FOR VTSA-F		1/19/2023	MKLEPADLO	
&EFS=V1GL13UQ51KF2+V1GL13UQ51/5	CONNECTING MOD. FOR FESTO DQ		1/19/2023	MKLEPADLO	
&EFS=V1GL13UQ51UQ5+V1GL13UQ51UQ5/1	FESTO DQ CONNECTION QN1		1/19/2023	MKLEPADLO	
&EFS=V1GL13UQ51UQ6+V1GL13UQ51UQ6/1	FESTO DQ CONNECTION QN2		1/19/2023	MKLEPADLO	
&EFS=V1GL13UQ51UQ7+V1GL13UQ51UQ7/1	FESTO DQ CONNECTION QN3		1/19/2023	MKLEPADLO	
&EFS=V1GL13WC1+V1GL13UC01/1	Incoming power		1/19/2023	MKLEPADLO	
&EFS=V1GL14KF2+V1GL14KF2/10	G120D Control Unit		1/19/2023	MKLEPADLO	
&EFS=V1GL14UQ51BG0+V1GL14UQ51/1	SENSORS		1/19/2023	MKLEPADLO	
&EFS=V1GL14UQ51BG0+V1GL14UQ51/2	SENSORS		1/19/2023	MKLEPADLO	
&EFS=V1GL14UQ51KF2+V1GL14UQ51/1	CONNECTING MOD. FOR VTSA MANIFOLD		1/19/2023	MKLEPADLO	
&EFS=V1GL14UQ51KF2+V1GL14UQ51/2	I/O MOD. DI16 (8 x M12) FOR VTSA-F		1/19/2023	MKLEPADLO	
&EFS=V1GL14UQ51KF2+V1GL14UQ51/3	I/O MOD. DI16 (8 x M12) FOR VTSA-F		1/19/2023	MKLEPADLO	
&EFS=V1GL14UQ51KF2+V1GL14UQ51/4	CONNECTING MOD. FOR FESTO DQ		1/19/2023	MKLEPADLO	
&EFS=V1GL14UQ51UQ3+V1GL14UQ51UQ3/1	FESTO DQ CONNECTION QN1		1/19/2023	MKLEPADLO	
&EFS=V1GL14UQ51UQ4+V1GL14UQ51UQ4/1	FESTO DQ CONNECTION QN2		1/19/2023	MKLEPADLO	
&EFS=V1GL14UQ51UQ5+V1GL14UQ51UQ5/1	FESTO DQ CONNECTION QN3		1/19/2023	MKLEPADLO	
&EFS=V1GL14UQ51UQ8+V1GL14UQ51UQ8/1	FESTO DQ CONNECTION QN4		1/19/2023	MKLEPADLO	
&EFS=V1GL14WC1+V1GL14UC01/1	Incoming power		1/19/2023	MKLEPADLO	
&EFS=V1GM11GM1WC1+V1GM11UC01/1	Incoming power		1/19/2023	MKLEPADLO	
&EFS=V1GM11GM2WC1+V1GM11UC01/1	Incoming power		1/19/2023	MKLEPADLO	
&EFS=V1GM11WL1WC1+V1GM11UC01/1	Incoming power		1/19/2023	MKLEPADLO	
&EFS=V1KF1+V1UC11/1	Switch, Scalance X216		1/19/2023	MKLEPADLO	
&EFS=V1KF1+V1UC11/2	Network Overview		1/19/2023	MKLEPADLO	
&EFS=V1KF1+V1UC11/3	IM 155 PN		1/19/2023	MKLEPADLO	
&EFS=V1KF1+V1UC11/4	ET200S Wiring DI		1/19/2023	MKLEPADLO	
&EFS=V1KF1+V1UC11/5	ET200S Wiring DI		1/19/2023	MKLEPADLO	
&EFS=V1KF1+V1UC11/6	ET200S Wiring F-DI		1/19/2023	MKLEPADLO	
&EFS=V1KF1+V1UC11/7	ET200S Wiring DQ		1/19/2023	MKLEPADLO	
&EFS=V1KF1+V1UC11/8	ET200S Wiring F-DQ		1/19/2023	MKLEPADLO	
&EFS=V1KF1+V1UC11/9	ET200S DI Overview KF11.11		1/19/2023	MKLEPADLO	
&EFS=V1KF1+V1UC11/10	ET200S DI Overview KF11.12		1/19/2023	MKLEPADLO	

			Date	1/24/2023	Volvo Trucks North America	Valiant TMS	Table of contents : &EFS=V1GL13UQ51KF2+V1GL13UQ51/2 - &EFS=V1KF1+V1UC11/10	Drawing name: =2V01&EFS-EL_KF1	=
			Ed.	MKLEPADLO					+
			Appr		P6700 Framing - Cell 2V01, KF1	Scale 1:1		Document type: EAB	Project nr: 22-16152
Modification	Date	Name	Original		Replacement of / Replaced by				Page 6 / 1630

Table of contents

Column X: An automatically generated page was edited

F06_001

Page	Page description	supplementary page field	Date	Edited by	X
&EFS=V1KF1+V1UC11/11	ET200S DI Overview KF11.13		1/19/2023	MKLEPADLO	
&EFS=V1KF1+V1UC11/12	ET200S DI Overview KF11.14		1/19/2023	MKLEPADLO	
&EFS=V1KF1+V1UC11/13	ET200S DQ Overview KF11.21		1/19/2023	MKLEPADLO	
&EFS=V1KF1+V1UC11/14	ET200S F-DI Overview KF11.31		1/19/2023	MKLEPADLO	
&EFS=V1KF1+V1UC11/15	ET200S F-DI Overview KF11.32		1/19/2023	MKLEPADLO	
&EFS=V1KF1+V1UC11/16	ET200S F-DQ Overview KF11.41		1/19/2023	MKLEPADLO	
&EFS=V1KF1+V1UC11/17	ET200S F-DQ Overview KF11.42		1/19/2023	MKLEPADLO	
&EFS=V1KF1+V1UC11/18	ET200S F-RQ Overview KF11.51		1/19/2023	MKLEPADLO	
&EFS=V1KF1+V1UC11/19	ET200S F-RQ Overview KF11.52		1/19/2023	MKLEPADLO	
&EFS=V1KF1+V1UC11/20	ET200S F-RQ Overview KF11.53		1/19/2023	MKLEPADLO	
&EFS=V1KF1+V1UC11/21	ET200S F-RQ Overview KF11.54		1/19/2023	MKLEPADLO	
&EFS=V1KF1+V1UC12/1	Switch, Scalance X216		1/19/2023	MKLEPADLO	
&EFS=V1KF1+V1UC12/2	Network Overview		1/19/2023	MKLEPADLO	
&EFS=V1KF1+V1UC12/3	IM 155 PN		1/19/2023	MKLEPADLO	
&EFS=V1KF1+V1UC12/4	ET200S Wiring DI		1/19/2023	MKLEPADLO	
&EFS=V1KF1+V1UC12/5	ET200S Wiring DI		1/19/2023	MKLEPADLO	
&EFS=V1KF1+V1UC12/6	ET200S Wiring F-DI		1/19/2023	MKLEPADLO	
&EFS=V1KF1+V1UC12/7	ET200S Wiring DQ		1/19/2023	MKLEPADLO	
&EFS=V1KF1+V1UC12/8	ET200S Wiring F-DQ		1/19/2023	MKLEPADLO	
&EFS=V1KF1+V1UC12/9	ET200S DI Overview KF12.11		1/19/2023	MKLEPADLO	
&EFS=V1KF1+V1UC12/10	ET200S DI Overview KF12.12		1/19/2023	MKLEPADLO	
&EFS=V1KF1+V1UC12/11	ET200S DI Overview KF12.13		1/19/2023	MKLEPADLO	
&EFS=V1KF1+V1UC12/12	ET200S DI Overview KF12.14		1/19/2023	MKLEPADLO	
&EFS=V1KF1+V1UC12/13	ET200S DQ Overview KF12.21		1/19/2023	MKLEPADLO	
&EFS=V1KF1+V1UC12/14	ET200S F-DI Overview KF12.31		1/19/2023	MKLEPADLO	
&EFS=V1KF1+V1UC12/15	ET200S F-DI Overview KF12.32		1/19/2023	MKLEPADLO	
&EFS=V1KF1+V1UC12/16	ET200S F-DQ Overview KF12.41		1/19/2023	MKLEPADLO	
&EFS=V1KF1+V1UC12/17	ET200S F-DQ Overview KF12.42		1/19/2023	MKLEPADLO	
&EFS=V1KF1+V1UC12/18	ET200S F-RQ Overview KF12.51		1/19/2023	MKLEPADLO	
&EFS=V1KF1+V1UC12/19	ET200S F-RQ Overview KF12.52		1/19/2023	MKLEPADLO	
&EFS=V1KF1+V1UC12/20	ET200S F-RQ Overview KF12.53		1/19/2023	MKLEPADLO	
&EFS=V1KF1+V1UC12/21	ET200S F-RQ Overview KF12.54		1/19/2023	MKLEPADLO	
&EFS=V1KF1+V1UC32/1	IM 155 PN		1/19/2023	MKLEPADLO	

			Date	1/24/2023	Volvo Trucks North America	Valiant TMS	Table of contents : &EFS=V1KF1+V1UC11/11 - &EFS=V1KF1+V1UC32/1	Drawing name: =2V01&EFS-EL_KF1	=
			Ed.	MKLEPADLO					+
			Appr		P6700 Framing - Cell 2V01, KF1			Document type: EAB	Project nr: 22-16152
Modification	Date	Name	Original		Replacement of / Replaced by	Scale 1:1			Page 7 / 1630

Table of contents

Column X: An automatically generated page was edited

F06_001

Page	Page description	supplementary page field	Date	Edited by	X
&EFS=V1KF1+V1UC32/2	ET200S Wiring DI		1/19/2023	MKLEPADLO	
&EFS=V1KF1+V1UC32/3	ET200S Wiring DO		1/19/2023	MKLEPADLO	
&EFS=V1KF1+V1UC32/4	ET200S Wiring F-DI		1/19/2023	MKLEPADLO	
&EFS=V1KF1+V1UC32/5	ET200S Cross-reference Input module		1/19/2023	MKLEPADLO	
&EFS=V1KF1+V1UC32/6	ET200S Cross-reference Output module		1/19/2023	MKLEPADLO	
&EFS=V1KF1+V1UC32/7	ET200S Cross-reference Safe input module		1/19/2023	MKLEPADLO	
&EFS=V1PZ1PF1+V1UC61/1	S020 Indication column		1/20/2023	MKLEPADLO	
&EFS=V1SF0PG1+V1UC32/1	TP1500: SOP Display		1/19/2023	MKLEPADLO	
&EFS=V1SF0PG1+V1UC32/2	Operating box SOP		1/19/2023	MKLEPADLO	
&EFS=V1SF0PG2+V1UC51/1	TP700: S020 Display		1/19/2023	MKLEPADLO	
&EFS=V1SF0SF1+V1UC71/1	S020 Operating box RB		1/19/2023	MKLEPADLO	
&EFS=V1U20FQ1+V1U20/1	S020 Lift Assist Safety Switch		1/19/2023	MKLEPADLO	
&EFS=V1U20U01KF1+V1U20U01/10	MURR MODULE 8 IN/ 8 OUT		1/19/2023	MKLEPADLO	
&EFS=V1U20U01PF1+V1U20U01/2	Station Dome Light		1/19/2023	MKLEPADLO	
&EFS=V1UL1KF1+V1UL1/1	MURR MODULE 16 IN		1/19/2023	MKLEPADLO	
&EFS=V1UL1KF2+V1UL1/1	MURR MODULE 16 IN		1/19/2023	MKLEPADLO	
&EFS=V1UL1UQ1+V1UL1UQ1/1	FESTO DQ CONNECTION QN1		1/19/2023	MKLEPADLO	
&EFS=V1UL1UQ2+V1UL1UQ2/1	FESTO DQ CONNECTION QN2		1/19/2023	MKLEPADLO	
&EFS=V1UL1UQ3+V1UL1UQ3/1	FESTO DQ CONNECTION QN3		1/19/2023	MKLEPADLO	
&EFS=V1UL1UQ4+V1UL1UQ4/1	FESTO DQ CONNECTION QN4		1/19/2023	MKLEPADLO	
&EFS=V1UQ31BG0+V1UQ31/1	SENSORS		1/19/2023	MKLEPADLO	
&EFS=V1UQ31KF1+V1UQ31/1	CONNECTING MOD. FOR VTSA MANIFOLD		1/19/2023	MKLEPADLO	
&EFS=V1UQ31KF1+V1UQ31/2	CONNECTING MOD. FOR FESTO DQ		1/19/2023	MKLEPADLO	
&EFS=V1UQ31UQ1+V1UQ31UQ1/1	FESTO DQ CONNECTION QN1		1/19/2023	MKLEPADLO	
&EFS=V1UQ31UQ2+V1UQ31UQ2/1	FESTO DQ CONNECTION QN2		1/19/2023	MKLEPADLO	
&EFS=V1UQ51BG0+V1UQ51/1	SENSORS		1/19/2023	MKLEPADLO	
&EFS=V1UQ51KF1+V1UQ51/1	MURR MODULE 16 IN		1/19/2023	MKLEPADLO	
&EFS=V1UQ53BG0+V1UQ53/1	SENSORS		1/19/2023	MKLEPADLO	
&EFS=V1UQ53BG0+V1UQ53/2	SENSORS		1/19/2023	MKLEPADLO	
&EFS=V1UQ53KF1+V1UQ53/1	CONNECTING MOD. FOR VTSA MANIFOLD		1/19/2023	MKLEPADLO	
&EFS=V1UQ53KF1+V1UQ53/2	I/O MOD. DI16 (8 x M12) FOR VTSA-F		1/19/2023	MKLEPADLO	
&EFS=V1UQ53KF1+V1UQ53/3	CONNECTING MOD. FOR FESTO DQ		1/19/2023	MKLEPADLO	
&EFS=V1UQ53UQ1+V1UQ53UQ1/1	FESTO DQ CONNECTION QN1		1/19/2023	MKLEPADLO	

			Date	1/24/2023	Volvo Trucks North America	Valiant TMS	Table of contents : &EFS=V1KF1+V1UC32/2 - &EFS=V1UQ53UQ1+V1UQ53UQ1/1	Drawing name: =2V01&EFS-EL_KF1	=
			Ed.	MKLEPADLO					+
			Appr		P6700 Framing - Cell 2V01, KF1			Document type: EAB	Project nr: 22-16152
Modification	Date	Name	Original		Replacement of / Replaced by	Scale 1:1			Page 8 / 1630

Table of contents

Column X: An automatically generated page was edited

F06_001

Page	Page description	supplementary page field	Date	Edited by	X
&EFS=V1UQ53UQ2+V1UQ53UQ2/1	FESTO DQ CONNECTION QN2		1/19/2023	MKLEPADLO	
&EFS=V1UQ53UQ3+V1UQ53UQ3/1	FESTO DQ CONNECTION QN3		1/19/2023	MKLEPADLO	
&EFS=V1UQ53UQ4+V1UQ53UQ4/1	FESTO DQ CONNECTION QN4		1/19/2023	MKLEPADLO	
&EFS=V1UQ53UQ5+V1UQ53UQ5/1	FESTO DQ CONNECTION QN5		1/19/2023	MKLEPADLO	
&EFS=V1WC1+V1UC11/1	Incoming power supply 480 VAC		1/19/2023	MKLEPADLO	
&EFS=V1WC1+V1UC12/1	Incoming power supply 480 VAC		1/19/2023	MKLEPADLO	
&EFS=V1WC2+V1UC11/10	Power distribution 480 VAC		1/19/2023	MKLEPADLO	
&EFS=V1WC2+V1UC11/11	Power distribution 480 VAC		1/19/2023	MKLEPADLO	
&EFS=V1WC2+V1UC11/12	Power distribution 480 VAC		1/19/2023	MKLEPADLO	
&EFS=V1WC2+V1UC11/13	Power distribution 480 VAC		1/19/2023	MKLEPADLO	
&EFS=V1WC2+V1UC11/14	Power distribution 480 VAC		1/19/2023	MKLEPADLO	
&EFS=V1WC2+V1UC11/15	Power distribution 480 VAC		1/19/2023	MKLEPADLO	
&EFS=V1WC2+V1UC11/16	Power distribution 480 VAC		1/19/2023	MKLEPADLO	
&EFS=V1WC2+V1UC11/41	Power distribution 480 VAC monitoring		1/19/2023	MKLEPADLO	
&EFS=V1WC2+V1UC11/42	Power distribution 480 VAC monitoring		1/19/2023	MKLEPADLO	
&EFS=V1WC2+V1UC11/43	Power distribution 480 VAC monitoring		1/19/2023	MKLEPADLO	
&EFS=V1WC2+V1UC12/10	Power distribution 480 VAC		1/19/2023	MKLEPADLO	
&EFS=V1WC2+V1UC12/11	Power distribution 480 VAC		1/19/2023	MKLEPADLO	
&EFS=V1WC2+V1UC12/12	Power distribution 480 VAC		1/19/2023	MKLEPADLO	
&EFS=V1WC2+V1UC12/13	Power distribution 480 VAC		1/19/2023	MKLEPADLO	
&EFS=V1WC2+V1UC12/14	Power distribution 480 VAC		1/19/2023	MKLEPADLO	
&EFS=V1WC2+V1UC12/15	Power distribution 480 VAC		1/19/2023	MKLEPADLO	
&EFS=V1WC2+V1UC12/16	Power distribution 480 VAC		1/19/2023	MKLEPADLO	
&EFS=V1WC2+V1UC12/41	Power distribution 480 VAC monitoring		1/19/2023	MKLEPADLO	
&EFS=V1WC2+V1UC12/42	Power distribution 480 VAC monitoring		1/19/2023	MKLEPADLO	
&EFS=V1WC2+V1UC12/43	Power distribution 480 VAC monitoring		1/19/2023	MKLEPADLO	
&EFS=V1WC3+V1UC11/1	Power Distribution 120 VAC (Above Disconnect)		1/19/2023	MKLEPADLO	
&EFS=V1WC3+V1UC11/2	Power Distribution 120 VAC (Below Disconnect)		1/19/2023	MKLEPADLO	
&EFS=V1WC3+V1UC11/3	Power Distribution 120 VAC (Below Disconnect)		1/19/2023	MKLEPADLO	
&EFS=V1WC3+V1UC11/4	Power distribution 120 VAC monitoring (Above Disconnect)		1/19/2023	MKLEPADLO	
&EFS=V1WC3+V1UC12/1	Power Distribution 120 VAC (Above Disconnect)		1/19/2023	MKLEPADLO	
&EFS=V1WC3+V1UC12/2	Power Distribution 120 VAC (Below Disconnect)		1/19/2023	MKLEPADLO	
&EFS=V1WC3+V1UC12/3	Power Distribution 120 VAC (Below Disconnect)		1/19/2023	MKLEPADLO	

			Date	1/24/2023	Volvo Trucks North America	Valiant TMS	Table of contents : &EFS=V1UQ53UQ2+V1UQ53UQ2/1 - &EFS=V1WC3+V1UC12/3	Drawing name: =2V01&EFS-EL_KF1	=
			Ed.	MKLEPADLO					+
			Appr		P6700 Framing - Cell 2V01, KF1			Document type: EAB	Project nr: 22-16152
Modification	Date	Name	Original		Replacement of / Replaced by	Scale 1:1			Page 9 / 1630

Table of contents

Column X: An automatically generated page was edited

F06_001

Page	Page description	supplementary page field	Date	Edited by	X
&EFS=V1WC3+V1UC12/4	Power distribution 120 VAC monitoring (Above Disconnect)		1/19/2023	MKLEPADLO	
&EFS=V1WC4+V1UC11/1	Power distribution 24VDC (Above Disconnect)		1/19/2023	MKLEPADLO	
&EFS=V1WC4+V1UC11/2	Power distribution 24VDC HL+		1/19/2023	MKLEPADLO	
&EFS=V1WC4+V1UC11/3	Power distribution 24VDC 1L+		1/19/2023	MKLEPADLO	
&EFS=V1WC4+V1UC11/4	Power distribution 24VDC 2L+		1/19/2023	MKLEPADLO	
&EFS=V1WC4+V1UC11/5	Power distribution 24VDC 3L+		1/19/2023	MKLEPADLO	
&EFS=V1WC4+V1UC11/6	Power distribution 24VDC 4L+		1/19/2023	MKLEPADLO	
&EFS=V1WC4+V1UC11/7	Power distribution 24VDC 5L+		1/19/2023	MKLEPADLO	
&EFS=V1WC4+V1UC11/8	Power distribution 24VDC 6L+		1/19/2023	MKLEPADLO	
&EFS=V1WC4+V1UC11/9	Power distribution 24VDC 7L+		1/19/2023	MKLEPADLO	
&EFS=V1WC4+V1UC11/10	Power distribution 24VDC 8L+		1/19/2023	MKLEPADLO	
&EFS=V1WC4+V1UC11/11	Power distribution 24VDC (Below Disconnect)		1/19/2023	MKLEPADLO	
&EFS=V1WC4+V1UC11/12	Power distribution 24VDC 11L+		1/19/2023	MKLEPADLO	
&EFS=V1WC4+V1UC11/13	Power distribution 24VDC 12L+		1/19/2023	MKLEPADLO	
&EFS=V1WC4+V1UC11/14	Power distribution 24VDC 13L+		1/19/2023	MKLEPADLO	
&EFS=V1WC4+V1UC11/15	Power distribution 24VDC 14L+		1/19/2023	MKLEPADLO	
&EFS=V1WC4+V1UC11/16	Power distribution 24VDC 15L+		1/19/2023	MKLEPADLO	
&EFS=V1WC4+V1UC11/17	Power distribution 24VDC 16L+		1/19/2023	MKLEPADLO	
&EFS=V1WC4+V1UC11/18	Power distribution 24VDC 17L+		1/19/2023	MKLEPADLO	
&EFS=V1WC4+V1UC11/19	Power distribution 24VDC 18L+		1/19/2023	MKLEPADLO	
&EFS=V1WC4+V1UC11/20	24VDC Unswitched Power 1		1/19/2023	MKLEPADLO	
&EFS=V1WC4+V1UC11/21	24VDC Unswitched Power 2		1/19/2023	MKLEPADLO	
&EFS=V1WC4+V1UC11/22	24VDC Unswitched Power 3		1/19/2023	MKLEPADLO	
&EFS=V1WC4+V1UC11/23	24VDC Unswitched Power 4		1/19/2023	MKLEPADLO	
&EFS=V1WC4+V1UC11/24	24VDC Switched Power 1		1/19/2023	MKLEPADLO	
&EFS=V1WC4+V1UC11/25	24VDC Switched Power 2		1/19/2023	MKLEPADLO	
&EFS=V1WC4+V1UC11/26	24VDC Switched Power 3		1/19/2023	MKLEPADLO	
&EFS=V1WC4+V1UC11/27	24VDC Switched Power 4		1/19/2023	MKLEPADLO	
&EFS=V1WC4+V1UC12/1	Power distribution 24VDC (Above Disconnect)		1/19/2023	MKLEPADLO	
&EFS=V1WC4+V1UC12/2	Power distribution 24VDC HL+		1/19/2023	MKLEPADLO	
&EFS=V1WC4+V1UC12/3	Power distribution 24VDC 1L+		1/19/2023	MKLEPADLO	
&EFS=V1WC4+V1UC12/4	Power distribution 24VDC 2L+		1/19/2023	MKLEPADLO	
&EFS=V1WC4+V1UC12/5	Power distribution 24VDC 3L+		1/19/2023	MKLEPADLO	

			Date	1/24/2023	Volvo Trucks North America	Valiant TMS	Table of contents : &EFS=V1WC3+V1UC12/4 - &EFS=V1WC4+V1UC12/5	Drawing name: =2V01&EFS-EL_KF1	=
			Ed.	MKLEPADLO					+
			Appr		P6700 Framing - Cell 2V01, KF1			Document type: EAB	Project nr: 22-16152
Modification	Date	Name	Original		Replacement of / Replaced by	Scale 1:1			Page 10 / 1630

Table of contents

Column X: An automatically generated page was edited

F06_001

Page	Page description	supplementary page field	Date	Edited by	X
&EFS=V1WC4+V1UC12/6	Power distribution 24VDC 4L+		1/19/2023	MKLEPADLO	
&EFS=V1WC4+V1UC12/7	Power distribution 24VDC 5L+		1/19/2023	MKLEPADLO	
&EFS=V1WC4+V1UC12/8	Power distribution 24VDC 6L+		1/19/2023	MKLEPADLO	
&EFS=V1WC4+V1UC12/9	Power distribution 24VDC 7L+		1/19/2023	MKLEPADLO	
&EFS=V1WC4+V1UC12/10	Power distribution 24VDC 8L+		1/19/2023	MKLEPADLO	
&EFS=V1WC4+V1UC12/11	Power distribution 24VDC (Below Disconnect)		1/19/2023	MKLEPADLO	
&EFS=V1WC4+V1UC12/12	Power distribution 24VDC 11L+		1/19/2023	MKLEPADLO	
&EFS=V1WC4+V1UC12/13	Power distribution 24VDC 12L+		1/19/2023	MKLEPADLO	
&EFS=V1WC4+V1UC12/14	Power distribution 24VDC 13L+		1/19/2023	MKLEPADLO	
&EFS=V1WC4+V1UC12/15	Power distribution 24VDC 14L+		1/19/2023	MKLEPADLO	
&EFS=V1WC4+V1UC12/16	Power distribution 24VDC 15L+		1/19/2023	MKLEPADLO	
&EFS=V1WC4+V1UC12/17	Power distribution 24VDC 16L+		1/19/2023	MKLEPADLO	
&EFS=V1WC4+V1UC12/18	Power distribution 24VDC 17L+		1/19/2023	MKLEPADLO	
&EFS=V1WC4+V1UC12/19	Power distribution 24VDC 18L+		1/19/2023	MKLEPADLO	
&EFS=V1WC4+V1UC12/20	24VDC Unswitched Power 1		1/19/2023	MKLEPADLO	
&EFS=V1WC4+V1UC12/21	24VDC Unswitched Power 2		1/19/2023	MKLEPADLO	
&EFS=V1WC4+V1UC12/22	24VDC Unswitched Power 3		1/19/2023	MKLEPADLO	
&EFS=V1WC4+V1UC12/23	24VDC Unswitched Power 4		1/19/2023	MKLEPADLO	
&EFS=V1WC4+V1UC12/24	24VDC Switched Power 1		1/19/2023	MKLEPADLO	
&EFS=V1WC4+V1UC12/25	24VDC Switched Power 2		1/19/2023	MKLEPADLO	
&EFS=V1WC4+V1UC12/26	24VDC Switched Power 3		1/19/2023	MKLEPADLO	
&EFS=V1WC4+V1UC12/27	24VDC Switched Power 4		1/19/2023	MKLEPADLO	
&EFS=V1WC4+V1UC32/1	Incomming power supply 24 VDC		1/19/2023	MKLEPADLO	
&EFS=V1WC4+V1UC32/2	Power distribution 24VDC 1L+		1/19/2023	MKLEPADLO	
&EFS=V1WC4+V1UC32/3	Monitoring 24VDC		1/19/2023	MKLEPADLO	
&EFS=V1WL2WL1KF1+V1WL2KF1/10	G120D Control Unit		1/19/2023	MKLEPADLO	
&EFS=V1WL2WL1WC1+V1WL2UC01/1	Incoming power		1/19/2023	MKLEPADLO	
&EFS=V1WL3GM1KF1+V1WL3KF1/10	G120D Control Unit		1/19/2023	MKLEPADLO	
&EFS=V1WL3GM1WC1+V1WL3UC01/1	Incoming power		1/19/2023	MKLEPADLO	
&EFS=V1WL3WL1KF1+V1WL3KF1/10	G120D Control Unit		1/19/2023	MKLEPADLO	
&EFS=V1WL3WL1WC1+V1WL3UC01/1	Incoming power		1/19/2023	MKLEPADLO	
&EFS=V2AR21KF1+V2AR21UC01/1	Incoming Profinet		1/19/2023	MKLEPADLO	
&EFS=V2AR21WC1+V2AR21UC01/1	Incoming power		1/19/2023	MKLEPADLO	

			Date	1/24/2023	Volvo Trucks North America	Valiant TMS	Table of contents : &EFS=V1WC4+V1UC12/6 - &EFS=V2AR21WC1+V2AR21UC01/1	Drawing name: =2V01&EFS-EL_KF1	=
			Ed.	MKLEPADLO					+
			Appr		P6700 Framing - Cell 2V01, KF1			Document type: EAB	Project nr: 22-16152
Modification	Date	Name	Original		Replacement of	Replaced by	Scale 1:1		Page 11 / 1630

Table of contents

Column X: An automatically generated page was edited

F06_001

Page	Page description	supplementary page field	Date	Edited by	X
&EFS=V2AR21XQ11WC1+V2AR21XQ11UC01/1	Incoming power		1/19/2023	MKLEPADLO	
&EFS=V2AR22KF1+V2AR22UC01/1	Incoming Profinet		1/19/2023	MKLEPADLO	
&EFS=V2AR22WC1+V2AR22UC01/1	Incoming power		1/19/2023	MKLEPADLO	
&EFS=V2AR22XQ11WC1+V2AR22XQ11UC01/1	Incoming power		1/19/2023	MKLEPADLO	
&EFS=V2AR23KF1+V2AR23UC01/1	Incoming Profinet		1/19/2023	MKLEPADLO	
&EFS=V2AR23WC1+V2AR23UC01/1	Incoming power		1/19/2023	MKLEPADLO	
&EFS=V2AR23XQ11WC1+V2AR23XQ11UC01/1	Incoming power		1/19/2023	MKLEPADLO	
&EFS=V2AR24KF1+V2AR24UC01/1	Incoming Profinet		1/19/2023	MKLEPADLO	
&EFS=V2AR24WC1+V2AR24UC01/1	Incoming power		1/19/2023	MKLEPADLO	
&EFS=V2AR24XQ11WC1+V2AR24XQ11UC01/1	Incoming power		1/19/2023	MKLEPADLO	
&EFS=V2AR31KF1+V2AR31UC01/1	Incoming Profinet		1/19/2023	MKLEPADLO	
&EFS=V2AR31UQ41BG0+V2AR31UQ41/1	SENSORS		1/19/2023	MKLEPADLO	
&EFS=V2AR31UQ41KF1+V2AR31UQ41/1	24VDC SUPPLY AND PROFINET HANDLING MODULE		1/19/2023	MKLEPADLO	
&EFS=V2AR31UQ41KF1+V2AR31UQ41/2	CONNECTING MOD. FOR MPA MANIFOLD		1/19/2023	MKLEPADLO	
&EFS=V2AR31UQ41KF1+V2AR31UQ41/3	I/O MOD. DI16 (8 x M12) FOR MPA		1/19/2023	MKLEPADLO	
&EFS=V2AR31UQ41KF1+V2AR31UQ41/4	I/O MOD. DI16 (8 x M12) FOR MPA		1/19/2023	MKLEPADLO	
&EFS=V2AR31UQ41KF1+V2AR31UQ41/5	CONNECTING MOD. FOR FESTO DQ		1/19/2023	MKLEPADLO	
&EFS=V2AR31UQ41UQ1+V2AR31UQ41UQ1/1	FESTO DQ CONNECTION QN1		1/19/2023	MKLEPADLO	
&EFS=V2AR31UQ41UQ2+V2AR31UQ41UQ2/1	FESTO DQ CONNECTION QN2		1/19/2023	MKLEPADLO	
&EFS=V2AR31UQ41UQ3+V2AR31UQ41UQ3/1	FESTO DQ CONNECTION QN3		1/19/2023	MKLEPADLO	
&EFS=V2AR31UQ41UQ4+V2AR31UQ41UQ4/1	FESTO DQ CONNECTION QN4		1/19/2023	MKLEPADLO	
&EFS=V2AR31UQ41UQ5+V2AR31UQ41UQ5/1	FESTO DQ CONNECTION QN5		1/19/2023	MKLEPADLO	
&EFS=V2AR31UQ41UQ6+V2AR31UQ41UQ6/1	FESTO DQ CONNECTION QN6		1/19/2023	MKLEPADLO	
&EFS=V2AR31UQ41UQ7+V2AR31UQ41UQ7/1	FESTO DQ CONNECTION QN7		1/19/2023	MKLEPADLO	
&EFS=V2AR31UQ41UQ8+V2AR31UQ41UQ8/1	FESTO DQ CONNECTION QN8		1/19/2023	MKLEPADLO	
&EFS=V2AR31UQ42BG0+V2AR31UQ42/1	SENSORS		1/19/2023	MKLEPADLO	
&EFS=V2AR31UQ42KF1+V2AR31UQ42/1	24VDC SUPPLY AND PROFINET HANDLING MODULE		1/19/2023	MKLEPADLO	
&EFS=V2AR31UQ42KF1+V2AR31UQ42/2	CONNECTING MOD. FOR MPA MANIFOLD		1/19/2023	MKLEPADLO	
&EFS=V2AR31UQ42KF1+V2AR31UQ42/3	I/O MOD. DI16 (8 x M12) FOR MPA		1/19/2023	MKLEPADLO	
&EFS=V2AR31UQ42KF1+V2AR31UQ42/4	I/O MOD. DI16 (8 x M12) FOR MPA		1/19/2023	MKLEPADLO	
&EFS=V2AR31UQ42KF1+V2AR31UQ42/5	CONNECTING MOD. FOR FESTO DQ		1/19/2023	MKLEPADLO	
&EFS=V2AR31UQ42UQ1+V2AR31UQ42UQ1/1	FESTO DQ CONNECTION QN1		1/19/2023	MKLEPADLO	
&EFS=V2AR31UQ42UQ2+V2AR31UQ42UQ2/1	FESTO DQ CONNECTION QN2		1/19/2023	MKLEPADLO	

			Date	1/24/2023	Volvo Trucks North America	Valiant TMS	Table of contents : &EFS=V2AR21XQ11WC1+V2AR21XQ11UC01/1 - &EFS=V2AR31UQ42UQ2+V2AR31UQ42UQ2/1	Drawing name: =2V01&EFS-EL_KF1	=
			Ed.	MKLEPADLO					+
			Appr		P6700 Framing - Cell 2V01, KF1			Document type: EAB	Project nr: 22-16152
Modification	Date	Name	Original		Replacement of / Replaced by	Scale 1:1			Page 12 / 1630

Table of contents

Column X: An automatically generated page was edited

F06_001

Page	Page description	supplementary page field	Date	Edited by	X
&EFS=V2AR31UQ42UQ3+V2AR31UQ42UQ3/1	FESTO DQ CONNECTION QN3		1/19/2023	MKLEPADLO	
&EFS=V2AR31UQ42UQ4+V2AR31UQ42UQ4/1	FESTO DQ CONNECTION QN4		1/19/2023	MKLEPADLO	
&EFS=V2AR31WC1+V2AR31UC01/1	Incoming power		1/19/2023	MKLEPADLO	
&EFS=V2AR31XQ41KF1+V2AR31XQ41/1	CONNECTING MOD. FOR VTSA MANIFOLD		1/19/2023	MKLEPADLO	
&EFS=V2AR31XQ41KF1+V2AR31XQ41/2	CONNECTING MOD. FOR FESTO DQ		1/19/2023	MKLEPADLO	
&EFS=V2AR31XQ41UQ1+V2AR31XQ41UQ1/1	FESTO DQ CONNECTION QN1		1/19/2023	MKLEPADLO	
&EFS=V2AR31XQ41WC1+V2AR31XQ41UC01/1	Incoming power		1/19/2023	MKLEPADLO	
&EFS=V2AR32KF1+V2AR32UC01/1	Incoming Profinet		1/19/2023	MKLEPADLO	
&EFS=V2AR32UQ41BG0+V2AR32UQ41/1	SENSORS		1/19/2023	MKLEPADLO	
&EFS=V2AR32UQ41KF1+V2AR32UQ41/1	24VDC SUPPLY AND PROFINET HANDLING MODULE		1/19/2023	MKLEPADLO	
&EFS=V2AR32UQ41KF1+V2AR32UQ41/2	CONNECTING MOD. FOR MPA MANIFOLD		1/19/2023	MKLEPADLO	
&EFS=V2AR32UQ41KF1+V2AR32UQ41/3	I/O MOD. DI16 (8 x M12) FOR MPA		1/19/2023	MKLEPADLO	
&EFS=V2AR32UQ41KF1+V2AR32UQ41/4	I/O MOD. DI16 (8 x M12) FOR MPA		1/19/2023	MKLEPADLO	
&EFS=V2AR32UQ41KF1+V2AR32UQ41/5	CONNECTING MOD. FOR FESTO DQ		1/19/2023	MKLEPADLO	
&EFS=V2AR32UQ41UQ1+V2AR32UQ41UQ1/1	FESTO DQ CONNECTION QN1		1/19/2023	MKLEPADLO	
&EFS=V2AR32UQ41UQ2+V2AR32UQ41UQ2/1	FESTO DQ CONNECTION QN2		1/19/2023	MKLEPADLO	
&EFS=V2AR32UQ41UQ3+V2AR32UQ41UQ3/1	FESTO DQ CONNECTION QN3		1/19/2023	MKLEPADLO	
&EFS=V2AR32UQ41UQ4+V2AR32UQ41UQ4/1	FESTO DQ CONNECTION QN4		1/19/2023	MKLEPADLO	
&EFS=V2AR32UQ41UQ5+V2AR32UQ41UQ5/1	FESTO DQ CONNECTION QN5		1/19/2023	MKLEPADLO	
&EFS=V2AR32UQ41UQ6+V2AR32UQ41UQ6/1	FESTO DQ CONNECTION QN6		1/19/2023	MKLEPADLO	
&EFS=V2AR32UQ41UQ7+V2AR32UQ41UQ7/1	FESTO DQ CONNECTION QN7		1/19/2023	MKLEPADLO	
&EFS=V2AR32UQ41UQ8+V2AR32UQ41UQ8/1	FESTO DQ CONNECTION QN8		1/19/2023	MKLEPADLO	
&EFS=V2AR32UQ42BG0+V2AR32UQ42/1	SENSORS		1/19/2023	MKLEPADLO	
&EFS=V2AR32UQ42KF1+V2AR32UQ42/1	24VDC SUPPLY AND PROFINET HANDLING MODULE		1/19/2023	MKLEPADLO	
&EFS=V2AR32UQ42KF1+V2AR32UQ42/2	CONNECTING MOD. FOR MPA MANIFOLD		1/19/2023	MKLEPADLO	
&EFS=V2AR32UQ42KF1+V2AR32UQ42/3	I/O MOD. DI16 (8 x M12) FOR MPA		1/19/2023	MKLEPADLO	
&EFS=V2AR32UQ42KF1+V2AR32UQ42/4	CONNECTING MOD. FOR FESTO DQ		1/19/2023	MKLEPADLO	
&EFS=V2AR32UQ42UQ1+V2AR32UQ42UQ1/1	FESTO DQ CONNECTION QN1		1/19/2023	MKLEPADLO	
&EFS=V2AR32UQ42UQ2+V2AR32UQ42UQ2/1	FESTO DQ CONNECTION QN2		1/19/2023	MKLEPADLO	
&EFS=V2AR32WC1+V2AR32UC01/1	Incoming power		1/19/2023	MKLEPADLO	
&EFS=V2AR32XQ41KF1+V2AR32XQ41/1	CONNECTING MOD. FOR VTSA MANIFOLD		1/19/2023	MKLEPADLO	
&EFS=V2AR32XQ41KF1+V2AR32XQ41/2	CONNECTING MOD. FOR FESTO DQ		1/19/2023	MKLEPADLO	
&EFS=V2AR32XQ41UQ1+V2AR32XQ41UQ1/1	FESTO DQ CONNECTION QN1		1/19/2023	MKLEPADLO	

			Date	1/24/2023	Volvo Trucks North America	Valiant TMS	Table of contents : &EFS=V2AR31UQ42UQ3+V2AR31UQ42UQ3/1 - &EFS=V2AR32XQ41UQ1+V2AR32XQ41UQ1/1	Drawing name: =2V01&EFS-EL_KF1	=
			Ed.	MKLEPADLO					+
			Appr		P6700 Framing - Cell 2V01, KF1	Scale 1:1		Document type: EAB	Project nr: 22-16152
Modification	Date	Name	Original		Replacement of / Replaced by				Page 13 / 1630

Table of contents

Column X: An automatically generated page was edited

F06_001

Page	Page description	supplementary page field	Date	Edited by	X
&EFS=V2AR32XQ41WC1+V2AR32XQ41UC01/1	Incoming power		1/19/2023	MKLEPADLO	
&EFS=V2AR41KF1+V2AR41UC01/1	Incoming Profinet		1/19/2023	MKLEPADLO	
&EFS=V2AR41UQ41BG0+V2AR41UQ41/1	SENSORS		1/19/2023	MKLEPADLO	
&EFS=V2AR41UQ41KF1+V2AR41UQ41/1	24VDC SUPPLY AND PROFINET HANDLING MODULE		1/19/2023	MKLEPADLO	
&EFS=V2AR41UQ41KF1+V2AR41UQ41/2	CONNECTING MOD. FOR MPA MANIFOLD		1/19/2023	MKLEPADLO	
&EFS=V2AR41UQ41KF1+V2AR41UQ41/3	I/O MOD. DI16 (8 x M12) FOR MPA		1/19/2023	MKLEPADLO	
&EFS=V2AR41UQ41KF1+V2AR41UQ41/4	I/O MOD. DI16 (8 x M12) FOR MPA		1/19/2023	MKLEPADLO	
&EFS=V2AR41UQ41KF1+V2AR41UQ41/5	CONNECTING MOD. FOR FESTO DQ		1/19/2023	MKLEPADLO	
&EFS=V2AR41UQ41UQ1+V2AR41UQ41UQ1/1	FESTO DQ CONNECTION QN1		1/19/2023	MKLEPADLO	
&EFS=V2AR41UQ41UQ2+V2AR41UQ41UQ2/1	FESTO DQ CONNECTION QN2		1/19/2023	MKLEPADLO	
&EFS=V2AR41UQ41UQ3+V2AR41UQ41UQ3/1	FESTO DQ CONNECTION QN3		1/19/2023	MKLEPADLO	
&EFS=V2AR41UQ41UQ4+V2AR41UQ41UQ4/1	FESTO DQ CONNECTION QN4		1/19/2023	MKLEPADLO	
&EFS=V2AR41UQ41UQ5+V2AR41UQ41UQ5/1	FESTO DQ CONNECTION QN5		1/19/2023	MKLEPADLO	
&EFS=V2AR41UQ41UQ6+V2AR41UQ41UQ6/1	FESTO DQ CONNECTION QN6		1/20/2023	MKLEPADLO	
&EFS=V2AR41UQ41UQ7+V2AR41UQ41UQ7/1	FESTO DQ CONNECTION QN7		1/19/2023	MKLEPADLO	
&EFS=V2AR41UQ41UQ8+V2AR41UQ41UQ8/1	FESTO DQ CONNECTION QN8		1/20/2023	MKLEPADLO	
&EFS=V2AR41WC1+V2AR41UC01/1	Incoming power		1/19/2023	MKLEPADLO	
&EFS=V2AR41XQ11WC1+V2AR41XQ11UC01/1	Incoming power		1/19/2023	MKLEPADLO	
&EFS=V2AR42KF1+V2AR42UC01/1	Incoming Profinet		1/19/2023	MKLEPADLO	
&EFS=V2AR42UQ41BG0+V2AR42UQ41/1	SENSORS		1/19/2023	MKLEPADLO	
&EFS=V2AR42UQ41KF1+V2AR42UQ41/1	24VDC SUPPLY AND PROFINET HANDLING MODULE		1/19/2023	MKLEPADLO	
&EFS=V2AR42UQ41KF1+V2AR42UQ41/2	CONNECTING MOD. FOR MPA MANIFOLD		1/19/2023	MKLEPADLO	
&EFS=V2AR42UQ41KF1+V2AR42UQ41/3	I/O MOD. DI16 (8 x M12) FOR MPA		1/19/2023	MKLEPADLO	
&EFS=V2AR42UQ41KF1+V2AR42UQ41/4	CONNECTING MOD. FOR FESTO DQ		1/19/2023	MKLEPADLO	
&EFS=V2AR42UQ41UQ1+V2AR42UQ41UQ1/1	FESTO DQ CONNECTION QN1		1/19/2023	MKLEPADLO	
&EFS=V2AR42UQ41UQ2+V2AR42UQ41UQ2/1	FESTO DQ CONNECTION QN2		1/19/2023	MKLEPADLO	
&EFS=V2AR42UQ42BG0+V2AR42UQ42/1	SENSORS		1/19/2023	MKLEPADLO	
&EFS=V2AR42UQ42KF1+V2AR42UQ42/1	24VDC SUPPLY AND PROFINET HANDLING MODULE		1/19/2023	MKLEPADLO	
&EFS=V2AR42UQ42KF1+V2AR42UQ42/2	CONNECTING MOD. FOR MPA MANIFOLD		1/19/2023	MKLEPADLO	
&EFS=V2AR42UQ42KF1+V2AR42UQ42/3	I/O MOD. DI16 (8 x M12) FOR MPA		1/19/2023	MKLEPADLO	
&EFS=V2AR42UQ42KF1+V2AR42UQ42/4	CONNECTING MOD. FOR FESTO DQ		1/19/2023	MKLEPADLO	
&EFS=V2AR42UQ42UQ1+V2AR42UQ42UQ1/1	FESTO DQ CONNECTION QN1		1/19/2023	MKLEPADLO	
&EFS=V2AR42UQ42UQ2+V2AR42UQ42UQ2/1	FESTO DQ CONNECTION QN2		1/19/2023	MKLEPADLO	

Table of contents

Column X: An automatically generated page was edited

F06_001

Page	Page description	supplementary page field	Date	Edited by	X
&EFS=V2AR42WC1+V2AR42UC01/1	Incoming power		1/19/2023	MKLEPADLO	
&EFS=V2AR42XQ11WC1+V2AR42XQ11UC01/1	Incoming power		1/19/2023	MKLEPADLO	
&EFS=V2AR43KF1+V2AR43UC01/1	Incoming Profinet		1/19/2023	MKLEPADLO	
&EFS=V2AR43UQ41BG0+V2AR43UQ41/1	SENSORS		1/19/2023	MKLEPADLO	
&EFS=V2AR43UQ41KF1+V2AR43UQ41/1	24VDC SUPPLY AND PROFINET HANDLING MODULE		1/19/2023	MKLEPADLO	
&EFS=V2AR43UQ41KF1+V2AR43UQ41/2	CONNECTING MOD. FOR MPA MANIFOLD		1/19/2023	MKLEPADLO	
&EFS=V2AR43UQ41KF1+V2AR43UQ41/3	I/O MOD. DI16 (8 x M12) FOR MPA		1/19/2023	MKLEPADLO	
&EFS=V2AR43UQ41KF1+V2AR43UQ41/4	I/O MOD. DI16 (8 x M12) FOR MPA		1/19/2023	MKLEPADLO	
&EFS=V2AR43UQ41KF1+V2AR43UQ41/5	CONNECTING MOD. FOR FESTO DQ		1/19/2023	MKLEPADLO	
&EFS=V2AR43UQ41UQ1+V2AR43UQ41UQ1/1	FESTO DQ CONNECTION QN1		1/19/2023	MKLEPADLO	
&EFS=V2AR43UQ41UQ2+V2AR43UQ41UQ2/1	FESTO DQ CONNECTION QN2		1/19/2023	MKLEPADLO	
&EFS=V2AR43UQ41UQ3+V2AR43UQ41UQ3/1	FESTO DQ CONNECTION QN3		1/20/2023	MKLEPADLO	
&EFS=V2AR43UQ41UQ4+V2AR43UQ41UQ4/1	FESTO DQ CONNECTION QN4		1/19/2023	MKLEPADLO	
&EFS=V2AR43UQ42BG0+V2AR43UQ42/1	SENSORS		1/19/2023	MKLEPADLO	
&EFS=V2AR43UQ42KF1+V2AR43UQ42/1	24VDC SUPPLY AND PROFINET HANDLING MODULE		1/19/2023	MKLEPADLO	
&EFS=V2AR43UQ42KF1+V2AR43UQ42/2	CONNECTING MOD. FOR MPA MANIFOLD		1/19/2023	MKLEPADLO	
&EFS=V2AR43UQ42KF1+V2AR43UQ42/3	I/O MOD. DI16 (8 x M12) FOR MPA		1/19/2023	MKLEPADLO	
&EFS=V2AR43UQ42KF1+V2AR43UQ42/4	I/O MOD. DI16 (8 x M12) FOR MPA		1/19/2023	MKLEPADLO	
&EFS=V2AR43UQ42KF1+V2AR43UQ42/5	CONNECTING MOD. FOR FESTO DQ		1/19/2023	MKLEPADLO	
&EFS=V2AR43UQ42UQ1+V2AR43UQ42UQ1/1	FESTO DQ CONNECTION QN1		1/19/2023	MKLEPADLO	
&EFS=V2AR43UQ42UQ2+V2AR43UQ42UQ2/1	FESTO DQ CONNECTION QN2		1/19/2023	MKLEPADLO	
&EFS=V2AR43UQ42UQ3+V2AR43UQ42UQ3/1	FESTO DQ CONNECTION QN3		1/20/2023	MKLEPADLO	
&EFS=V2AR43UQ42UQ4+V2AR43UQ42UQ4/1	FESTO DQ CONNECTION QN4		1/19/2023	MKLEPADLO	
&EFS=V2AR43UQ42UQ5+V2AR43UQ42UQ5/1	FESTO DQ CONNECTION QN5		1/19/2023	MKLEPADLO	
&EFS=V2AR43UQ42UQ6+V2AR43UQ42UQ6/1	FESTO DQ CONNECTION QN6		1/19/2023	MKLEPADLO	
&EFS=V2AR43UQ42UQ7+V2AR43UQ42UQ7/1	FESTO DQ CONNECTION QN7		1/19/2023	MKLEPADLO	
&EFS=V2AR43UQ42UQ8+V2AR43UQ42UQ8/1	FESTO DQ CONNECTION QN8		1/19/2023	MKLEPADLO	
&EFS=V2AR43UQ42UQ9+V2AR43UQ42UQ9/1	FESTO DQ CONNECTION QN9		1/19/2023	MKLEPADLO	
&EFS=V2AR43UQ42UQ10+V2AR43UQ42UQ10/1	FESTO DQ CONNECTION QN10		1/19/2023	MKLEPADLO	
&EFS=V2AR43UQ43BG0+V2AR43UQ43/1	SENSORS		1/19/2023	MKLEPADLO	
&EFS=V2AR43UQ43KF1+V2AR43UQ43/1	24VDC SUPPLY AND PROFINET HANDLING MODULE		1/19/2023	MKLEPADLO	
&EFS=V2AR43UQ43KF1+V2AR43UQ43/2	CONNECTING MOD. FOR MPA MANIFOLD		1/19/2023	MKLEPADLO	
&EFS=V2AR43UQ43KF1+V2AR43UQ43/3	I/O MOD. DI16 (8 x M12) FOR MPA		1/19/2023	MKLEPADLO	

Table of contents

Column X: An automatically generated page was edited

F06_001

Page	Page description	supplementary page field	Date	Edited by	X
&EFS=V2AR43UQ43KF1+V2AR43UQ43/4	I/O MOD. DI16 (8 x M12) FOR MPA		1/19/2023	MKLEPADLO	
&EFS=V2AR43UQ43KF1+V2AR43UQ43/5	CONNECTING MOD. FOR FESTO DQ		1/19/2023	MKLEPADLO	
&EFS=V2AR43UQ43UQ1+V2AR43UQ43UQ1/1	FESTO DQ CONNECTION QN1		1/19/2023	MKLEPADLO	
&EFS=V2AR43UQ43UQ2+V2AR43UQ43UQ2/1	FESTO DQ CONNECTION QN2		1/19/2023	MKLEPADLO	
&EFS=V2AR43UQ43UQ3+V2AR43UQ43UQ3/1	FESTO DQ CONNECTION QN3		1/20/2023	MKLEPADLO	
&EFS=V2AR43UQ43UQ4+V2AR43UQ43UQ4/1	FESTO DQ CONNECTION QN4		1/19/2023	MKLEPADLO	
&EFS=V2AR43WC1+V2AR43UC01/1	Incoming power		1/19/2023	MKLEPADLO	
&EFS=V2AR43XQ11WC1+V2AR43XQ11UC01/1	Incoming power		1/19/2023	MKLEPADLO	
&EFS=V2AR44KF1+V2AR44UC01/1	Incoming Profinet		1/19/2023	MKLEPADLO	
&EFS=V2AR44UQ41BG0+V2AR44UQ41/1	SENSORS		1/19/2023	MKLEPADLO	
&EFS=V2AR44UQ41KF1+V2AR44UQ41/1	24VDC SUPPLY AND PROFINET HANDLING MODULE		1/19/2023	MKLEPADLO	
&EFS=V2AR44UQ41KF1+V2AR44UQ41/2	CONNECTING MOD. FOR MPA MANIFOLD		1/19/2023	MKLEPADLO	
&EFS=V2AR44UQ41KF1+V2AR44UQ41/3	I/O MOD. DI16 (8 x M12) FOR MPA		1/19/2023	MKLEPADLO	
&EFS=V2AR44UQ41KF1+V2AR44UQ41/4	I/O MOD. DI16 (8 x M12) FOR MPA		1/19/2023	MKLEPADLO	
&EFS=V2AR44UQ41KF1+V2AR44UQ41/5	CONNECTING MOD. FOR FESTO DQ		1/19/2023	MKLEPADLO	
&EFS=V2AR44UQ41UQ1+V2AR44UQ41UQ1/1	FESTO DQ CONNECTION QN1		1/19/2023	MKLEPADLO	
&EFS=V2AR44UQ41UQ2+V2AR44UQ41UQ2/1	FESTO DQ CONNECTION QN2		1/19/2023	MKLEPADLO	
&EFS=V2AR44UQ41UQ3+V2AR44UQ41UQ3/1	FESTO DQ CONNECTION QN3		1/20/2023	MKLEPADLO	
&EFS=V2AR44UQ41UQ4+V2AR44UQ41UQ4/1	FESTO DQ CONNECTION QN4		1/19/2023	MKLEPADLO	
&EFS=V2AR44UQ42BG0+V2AR44UQ42/1	SENSORS		1/19/2023	MKLEPADLO	
&EFS=V2AR44UQ42KF1+V2AR44UQ42/1	24VDC SUPPLY AND PROFINET HANDLING MODULE		1/19/2023	MKLEPADLO	
&EFS=V2AR44UQ42KF1+V2AR44UQ42/2	CONNECTING MOD. FOR MPA MANIFOLD		1/19/2023	MKLEPADLO	
&EFS=V2AR44UQ42KF1+V2AR44UQ42/3	I/O MOD. DI16 (8 x M12) FOR MPA		1/19/2023	MKLEPADLO	
&EFS=V2AR44UQ42KF1+V2AR44UQ42/4	I/O MOD. DI16 (8 x M12) FOR MPA		1/19/2023	MKLEPADLO	
&EFS=V2AR44UQ42KF1+V2AR44UQ42/5	CONNECTING MOD. FOR FESTO DQ		1/19/2023	MKLEPADLO	
&EFS=V2AR44UQ42UQ1+V2AR44UQ42UQ1/1	FESTO DQ CONNECTION QN1		1/19/2023	MKLEPADLO	
&EFS=V2AR44UQ42UQ2+V2AR44UQ42UQ2/1	FESTO DQ CONNECTION QN2		1/19/2023	MKLEPADLO	
&EFS=V2AR44UQ42UQ3+V2AR44UQ42UQ3/1	FESTO DQ CONNECTION QN3		1/20/2023	MKLEPADLO	
&EFS=V2AR44UQ42UQ4+V2AR44UQ42UQ4/1	FESTO DQ CONNECTION QN4		1/19/2023	MKLEPADLO	
&EFS=V2AR44UQ42UQ5+V2AR44UQ42UQ5/1	FESTO DQ CONNECTION QN5		1/19/2023	MKLEPADLO	
&EFS=V2AR44UQ42UQ6+V2AR44UQ42UQ6/1	FESTO DQ CONNECTION QN6		1/19/2023	MKLEPADLO	
&EFS=V2AR44UQ42UQ7+V2AR44UQ42UQ7/1	FESTO DQ CONNECTION QN7		1/19/2023	MKLEPADLO	
&EFS=V2AR44UQ42UQ8+V2AR44UQ42UQ8/1	FESTO DQ CONNECTION QN8		1/19/2023	MKLEPADLO	

			Date	1/24/2023	Volvo Trucks North America	Valiant TMS	Table of contents : &EFS=V2AR43UQ43KF1+V2AR43UQ43/4 - &EFS=V2AR44UQ42UQ8+V2AR44UQ42UQ8/1	Drawing name: =2V01&EFS-EL_KF1	=
			Ed.	MKLEPADLO					+
			Appr		P6700 Framing - Cell 2V01, KF1	Scale 1:1		Document type: EAB	Project nr: 22-16152
Modification	Date	Name	Original		Replacement of / Replaced by				Page 16 / 1630

Table of contents

Column X: An automatically generated page was edited

F06_001

Page	Page description	supplementary page field	Date	Edited by	X
&EFS=V2AR44UQ42UQ9+V2AR44UQ42UQ9/1	FESTO DQ CONNECTION QN9		1/19/2023	MKLEPADLO	
&EFS=V2AR44UQ42UQ10+V2AR44UQ42UQ10/1	FESTO DQ CONNECTION QN10		1/19/2023	MKLEPADLO	
&EFS=V2AR44UQ43BG0+V2AR44UQ43/1	SENSORS		1/19/2023	MKLEPADLO	
&EFS=V2AR44UQ43KF1+V2AR44UQ43/1	24VDC SUPPLY AND PROFINET HANDLING MODULE		1/19/2023	MKLEPADLO	
&EFS=V2AR44UQ43KF1+V2AR44UQ43/2	CONNECTING MOD. FOR MPA MANIFOLD		1/19/2023	MKLEPADLO	
&EFS=V2AR44UQ43KF1+V2AR44UQ43/3	I/O MOD. DI16 (8 x M12) FOR MPA		1/19/2023	MKLEPADLO	
&EFS=V2AR44UQ43KF1+V2AR44UQ43/4	I/O MOD. DI16 (8 x M12) FOR MPA		1/19/2023	MKLEPADLO	
&EFS=V2AR44UQ43KF1+V2AR44UQ43/5	CONNECTING MOD. FOR FESTO DQ		1/19/2023	MKLEPADLO	
&EFS=V2AR44UQ43UQ1+V2AR44UQ43UQ1/1	FESTO DQ CONNECTION QN1		1/19/2023	MKLEPADLO	
&EFS=V2AR44UQ43UQ2+V2AR44UQ43UQ2/1	FESTO DQ CONNECTION QN2		1/19/2023	MKLEPADLO	
&EFS=V2AR44UQ43UQ3+V2AR44UQ43UQ3/1	FESTO DQ CONNECTION QN3		1/20/2023	MKLEPADLO	
&EFS=V2AR44UQ43UQ4+V2AR44UQ43UQ4/1	FESTO DQ CONNECTION QN4		1/19/2023	MKLEPADLO	
&EFS=V2AR44WC1+V2AR44UC01/1	Incoming power		1/19/2023	MKLEPADLO	
&EFS=V2AR44XQ11WC1+V2AR44XQ11UC01/1	Incoming power		1/19/2023	MKLEPADLO	
&EFS=V2FQ1+V2FQ1/1	Door lock sensor -BG3		1/19/2023	MKLEPADLO	
&EFS=V2FQ1+V2FQ1/2	Door lock sensor -BG4		1/20/2023	MKLEPADLO	
&EFS=V2FQ1+V2FQ1/3	Door lock sensor -BG5		1/19/2023	MKLEPADLO	
&EFS=V2FQ1+V2FQ1/4	Door lock sensor -BG8		1/19/2023	MKLEPADLO	
&EFS=V2FQ1+V2FQ1/5	Door lock sensor -BG9		1/19/2023	MKLEPADLO	
&EFS=V2FQ1+V2FQ1/6	Door lock sensor -BG10		1/19/2023	MKLEPADLO	
&EFS=V2FQ1+V2FQ1/7	Door lock sensor -BG11		1/19/2023	MKLEPADLO	
&EFS=V2FQ1+V2FQ1/8	Door lock sensor -BG12		1/19/2023	MKLEPADLO	
&EFS=V2FQ1+V2FQ1/10	S050/055 Light Curtain 1		1/19/2023	MKLEPADLO	
&EFS=V2FQ1+V2UC14/1	Safety power monitoring RQ - KF14.51		1/19/2023	MKLEPADLO	
&EFS=V2FQ1+V2UC14/2	Safety power monitoring RQ - KF14.52		1/19/2023	MKLEPADLO	
&EFS=V2FQ1+V2UC14/3	Safety power monitoring RQ - KF14.53		1/19/2023	MKLEPADLO	
&EFS=V2FQ1+V2UC14/4	Safety power monitoring RQ - KF14.54		1/19/2023	MKLEPADLO	
&EFS=V2FQ1+V2UC15/1	Safety power monitoring RQ - KF15.51		1/19/2023	MKLEPADLO	
&EFS=V2FQ1+V2UC15/2	Safety power monitoring RQ - KF15.52		1/19/2023	MKLEPADLO	
&EFS=V2FQ1+V2UC15/3	Safety power monitoring RQ - KF15.53		1/19/2023	MKLEPADLO	
&EFS=V2FQ1+V2UC15/4	Safety power monitoring RQ - KF15.54		1/19/2023	MKLEPADLO	
&EFS=V2GL15KF2+V2GL15KF2/10	G120D Control Unit		1/19/2023	MKLEPADLO	
&EFS=V2GL15UQ51BG0+V2GL15UQ51/1	SENSORS		1/19/2023	MKLEPADLO	

			Date	1/24/2023	Volvo Trucks North America	Valiant TMS	Table of contents : &EFS=V2AR44UQ42UQ9+V2AR44UQ42UQ9/1 - &EFS=V2GL15UQ51BG0+V2GL15UQ51/1	Drawing name: =2V01&EFS-EL_KF1	=
			Ed.	MKLEPADLO					+
			Appr		P6700 Framing - Cell 2V01, KF1	Scale 1:1		Document type: EAB	Project nr: 22-16152
Modification	Date	Name	Original		Replacement of / Replaced by				Page 17 / 1630

Table of contents

Column X: An automatically generated page was edited

F06_001

Page	Page description	supplementary page field	Date	Edited by	X
&EFS=V2GL15UQ51BG0+V2GL15UQ51/2	SENSORS		1/19/2023	MKLEPADLO	
&EFS=V2GL15UQ51KF2+V2GL15UQ51/1	CONNECTING MOD. FOR VTSA MANIFOLD		1/19/2023	MKLEPADLO	
&EFS=V2GL15UQ51KF2+V2GL15UQ51/2	I/O MOD. DI16 (8 x M12) FOR VTSA-F		1/19/2023	MKLEPADLO	
&EFS=V2GL15UQ51KF2+V2GL15UQ51/3	I/O MOD. DI16 (8 x M12) FOR VTSA-F		1/19/2023	MKLEPADLO	
&EFS=V2GL15UQ51KF2+V2GL15UQ51/4	CONNECTING MOD. FOR FESTO DQ		1/19/2023	MKLEPADLO	
&EFS=V2GL15UQ51UQ3+V2GL15UQ51UQ3/1	FESTO DQ CONNECTION QN1		1/19/2023	MKLEPADLO	
&EFS=V2GL15UQ51UQ4+V2GL15UQ51UQ4/1	FESTO DQ CONNECTION QN2		1/19/2023	MKLEPADLO	
&EFS=V2GL15UQ51UQ5+V2GL15UQ51UQ5/1	FESTO DQ CONNECTION QN3		1/19/2023	MKLEPADLO	
&EFS=V2GL15UQ51UQ8+V2GL15UQ51UQ8/1	FESTO DQ CONNECTION QN4		1/19/2023	MKLEPADLO	
&EFS=V2GL15WC1+V2GL15UC01/1	Incoming power		1/19/2023	MKLEPADLO	
&EFS=V2GL16KF2+V2GL16KF2/10	G120D Control Unit		1/19/2023	MKLEPADLO	
&EFS=V2GL16UQ51BG0+V2GL16UQ51/1	SENSORS		1/19/2023	MKLEPADLO	
&EFS=V2GL16UQ51BG0+V2GL16UQ51/2	SENSORS		1/19/2023	MKLEPADLO	
&EFS=V2GL16UQ51KF2+V2GL16UQ51/1	CONNECTING MOD. FOR VTSA MANIFOLD		1/19/2023	MKLEPADLO	
&EFS=V2GL16UQ51KF2+V2GL16UQ51/2	I/O MOD. DI16 (8 x M12) FOR VTSA-F		1/19/2023	MKLEPADLO	
&EFS=V2GL16UQ51KF2+V2GL16UQ51/3	I/O MOD. DI16 (8 x M12) FOR VTSA-F		1/19/2023	MKLEPADLO	
&EFS=V2GL16UQ51KF2+V2GL16UQ51/4	CONNECTING MOD. FOR FESTO DQ		1/19/2023	MKLEPADLO	
&EFS=V2GL16UQ51UQ3+V2GL16UQ51UQ3/1	FESTO DQ CONNECTION QN1		1/19/2023	MKLEPADLO	
&EFS=V2GL16UQ51UQ4+V2GL16UQ51UQ4/1	FESTO DQ CONNECTION QN2		1/19/2023	MKLEPADLO	
&EFS=V2GL16UQ51UQ5+V2GL16UQ51UQ5/1	FESTO DQ CONNECTION QN3		1/19/2023	MKLEPADLO	
&EFS=V2GL16UQ51UQ8+V2GL16UQ51UQ8/1	FESTO DQ CONNECTION QN4		1/19/2023	MKLEPADLO	
&EFS=V2GL16WC1+V2GL16UC01/1	Incoming power		1/19/2023	MKLEPADLO	
&EFS=V2GL17KF2+V2GL17KF2/10	G120D Control Unit		1/19/2023	MKLEPADLO	
&EFS=V2GL17UQ51BG0+V2GL17UQ51/1	SENSORS		1/19/2023	MKLEPADLO	
&EFS=V2GL17UQ51BG0+V2GL17UQ51/2	SENSORS		1/19/2023	MKLEPADLO	
&EFS=V2GL17UQ51KF2+V2GL17UQ51/1	CONNECTING MOD. FOR VTSA MANIFOLD		1/19/2023	MKLEPADLO	
&EFS=V2GL17UQ51KF2+V2GL17UQ51/2	I/O MOD. DI16 (8 x M12) FOR VTSA-F		1/19/2023	MKLEPADLO	
&EFS=V2GL17UQ51KF2+V2GL17UQ51/3	I/O MOD. DI16 (8 x M12) FOR VTSA-F		1/19/2023	MKLEPADLO	
&EFS=V2GL17UQ51KF2+V2GL17UQ51/4	CONNECTING MOD. FOR FESTO DQ		1/19/2023	MKLEPADLO	
&EFS=V2GL17UQ51UQ3+V2GL17UQ51UQ3/1	FESTO DQ CONNECTION QN1		1/19/2023	MKLEPADLO	
&EFS=V2GL17UQ51UQ4+V2GL17UQ51UQ4/1	FESTO DQ CONNECTION QN2		1/19/2023	MKLEPADLO	
&EFS=V2GL17UQ51UQ5+V2GL17UQ51UQ5/1	FESTO DQ CONNECTION QN3		1/19/2023	MKLEPADLO	
&EFS=V2GL17UQ51UQ8+V2GL17UQ51UQ8/1	FESTO DQ CONNECTION QN4		1/19/2023	MKLEPADLO	

			Date	1/24/2023	Volvo Trucks North America	Valiant TMS	Table of contents : &EFS=V2GL15UQ51BG0+V2GL15UQ51/2 - &EFS=V2GL17UQ51UQ8+V2GL17UQ51UQ8/1	Drawing name: =2V01&EFS-EL_KF1	=
			Ed.	MKLEPADLO					+
			Appr		P6700 Framing - Cell 2V01, KF1			Document type: EAB	Project nr: 22-16152
Modification	Date	Name	Original		Replacement of / Replaced by	Scale 1:1			Page 18 / 1630

Table of contents

Column X: An automatically generated page was edited

F06_001

Page	Page description	supplementary page field	Date	Edited by	X
&EFS=V2GL17WC1+V2GL17UC01/1	Incoming power		1/19/2023	MKLEPADLO	
&EFS=V2GL18KF2+V2GL18KF2/10	G120D Control Unit		1/19/2023	MKLEPADLO	
&EFS=V2GL18UQ51BG0+V2GL18UQ51/1	SENSORS		1/19/2023	MKLEPADLO	
&EFS=V2GL18UQ51BG0+V2GL18UQ51/2	SENSORS		1/19/2023	MKLEPADLO	
&EFS=V2GL18UQ51KF2+V2GL18UQ51/1	CONNECTING MOD. FOR VTSA MANIFOLD		1/19/2023	MKLEPADLO	
&EFS=V2GL18UQ51KF2+V2GL18UQ51/2	I/O MOD. DI16 (8 x M12) FOR VTSA-F		1/19/2023	MKLEPADLO	
&EFS=V2GL18UQ51KF2+V2GL18UQ51/3	I/O MOD. DI16 (8 x M12) FOR VTSA-F		1/19/2023	MKLEPADLO	
&EFS=V2GL18UQ51KF2+V2GL18UQ51/4	CONNECTING MOD. FOR FESTO DQ		1/19/2023	MKLEPADLO	
&EFS=V2GL18UQ51UQ3+V2GL18UQ51UQ3/1	FESTO DQ CONNECTION QN1		1/19/2023	MKLEPADLO	
&EFS=V2GL18UQ51UQ4+V2GL18UQ51UQ4/1	FESTO DQ CONNECTION QN2		1/19/2023	MKLEPADLO	
&EFS=V2GL18UQ51UQ5+V2GL18UQ51UQ5/1	FESTO DQ CONNECTION QN3		1/19/2023	MKLEPADLO	
&EFS=V2GL18UQ51UQ8+V2GL18UQ51UQ8/1	FESTO DQ CONNECTION QN4		1/19/2023	MKLEPADLO	
&EFS=V2GL18WC1+V2GL18UC01/1	Incoming power		1/19/2023	MKLEPADLO	
&EFS=V2KF1+V2UC14/1	Switch, Scalance XC216		1/19/2023	MKLEPADLO	
&EFS=V2KF1+V2UC14/2	Network Overview		1/20/2023	MKLEPADLO	
&EFS=V2KF1+V2UC14/3	IM 155 PN		1/19/2023	MKLEPADLO	
&EFS=V2KF1+V2UC14/4	ET200S Wiring DI		1/19/2023	MKLEPADLO	
&EFS=V2KF1+V2UC14/5	ET200S Wiring F-DI		1/19/2023	MKLEPADLO	
&EFS=V2KF1+V2UC14/6	ET200S Wiring DQ		1/19/2023	MKLEPADLO	
&EFS=V2KF1+V2UC14/7	ET200S Wiring F-DQ		1/19/2023	MKLEPADLO	
&EFS=V2KF1+V2UC14/8	ET200S DI Overview KF14.11		1/19/2023	MKLEPADLO	
&EFS=V2KF1+V2UC14/9	ET200S DI Overview KF14.12		1/19/2023	MKLEPADLO	
&EFS=V2KF1+V2UC14/10	ET200S DQ Overview KF14.21		1/19/2023	MKLEPADLO	
&EFS=V2KF1+V2UC14/11	ET200S F-DI Overview KF14.31		1/19/2023	MKLEPADLO	
&EFS=V2KF1+V2UC14/12	ET200S F-DI Overview KF14.32		1/19/2023	MKLEPADLO	
&EFS=V2KF1+V2UC14/13	ET200S F-DQ Overview KF14.41		1/19/2023	MKLEPADLO	
&EFS=V2KF1+V2UC14/14	ET200S F-DQ Overview KF14.42		1/19/2023	MKLEPADLO	
&EFS=V2KF1+V2UC14/15	ET200S F-RQ Overview KF14.51		1/19/2023	MKLEPADLO	
&EFS=V2KF1+V2UC14/16	ET200S F-RQ Overview KF14.52		1/19/2023	MKLEPADLO	
&EFS=V2KF1+V2UC14/17	ET200S F-RQ Overview KF14.53		1/19/2023	MKLEPADLO	
&EFS=V2KF1+V2UC14/18	ET200S F-RQ Overview KF14.54		1/19/2023	MKLEPADLO	
&EFS=V2KF1+V2UC15/1	Switch, Scalance XC216		1/19/2023	MKLEPADLO	
&EFS=V2KF1+V2UC15/2	Network Overview		1/19/2023	MKLEPADLO	

			Date	1/24/2023	Volvo Trucks North America	Valiant TMS	Table of contents : &EFS=V2GL17WC1+V2GL17UC01/1 - &EFS=V2KF1+V2UC15/2	Drawing name: =2V01&EFS-EL_KF1	=
			Ed.	MKLEPADLO					+
			Appr		P6700 Framing - Cell 2V01, KF1			Document type: EAB	Project nr: 22-16152
Modification	Date	Name	Original		Replacement of / Replaced by	Scale 1:1			Page 19 / 1630

Table of contents

Column X: An automatically generated page was edited

F06_001

Page	Page description	supplementary page field	Date	Edited by	X
&EFS=V2KF1+V2UC15/3	IM 155 PN		1/19/2023	MKLEPADLO	
&EFS=V2KF1+V2UC15/4	ET200S Wiring DI		1/19/2023	MKLEPADLO	
&EFS=V2KF1+V2UC15/5	ET200S Wiring F-DI		1/19/2023	MKLEPADLO	
&EFS=V2KF1+V2UC15/6	ET200S Wiring DQ		1/19/2023	MKLEPADLO	
&EFS=V2KF1+V2UC15/7	ET200S Wiring F-DQ		1/19/2023	MKLEPADLO	
&EFS=V2KF1+V2UC15/8	ET200S DI Overview KF15.11		1/19/2023	MKLEPADLO	
&EFS=V2KF1+V2UC15/9	ET200S DI Overview KF15.12		1/19/2023	MKLEPADLO	
&EFS=V2KF1+V2UC15/10	ET200S DQ Overview KF15.21		1/19/2023	MKLEPADLO	
&EFS=V2KF1+V2UC15/11	ET200S F-DI Overview KF15.31		1/19/2023	MKLEPADLO	
&EFS=V2KF1+V2UC15/12	ET200S F-DI Overview KF15.32		1/19/2023	MKLEPADLO	
&EFS=V2KF1+V2UC15/13	ET200S F-DQ Overview KF15.41		1/19/2023	MKLEPADLO	
&EFS=V2KF1+V2UC15/14	ET200S F-DQ Overview KF15.42		1/19/2023	MKLEPADLO	
&EFS=V2KF1+V2UC15/15	ET200S F-RQ Overview KF15.51		1/19/2023	MKLEPADLO	
&EFS=V2KF1+V2UC15/16	ET200S F-RQ Overview KF15.52		1/19/2023	MKLEPADLO	
&EFS=V2KF1+V2UC15/17	ET200S F-RQ Overview KF15.53		1/19/2023	MKLEPADLO	
&EFS=V2KF1+V2UC15/18	ET200S F-RQ Overview KF15.54		1/19/2023	MKLEPADLO	
&EFS=V2KF1+V2UC32/1	IM 155 PN		1/19/2023	MKLEPADLO	
&EFS=V2KF1+V2UC32/2	ET200S Wiring DI		1/19/2023	MKLEPADLO	
&EFS=V2KF1+V2UC32/3	ET200S Wiring DO		1/19/2023	MKLEPADLO	
&EFS=V2KF1+V2UC32/4	ET200S Wiring F-DI		1/19/2023	MKLEPADLO	
&EFS=V2KF1+V2UC32/5	ET200S Cross-reference Input module		1/19/2023	MKLEPADLO	
&EFS=V2KF1+V2UC32/6	ET200S Cross-reference Output module		1/19/2023	MKLEPADLO	
&EFS=V2KF1+V2UC32/7	ET200S Cross-reference Safe input module		1/19/2023	MKLEPADLO	
&EFS=V2KF1+V2UC33/1	IM 155 PN		1/19/2023	MKLEPADLO	
&EFS=V2KF1+V2UC33/2	ET200S Wiring DI		1/19/2023	MKLEPADLO	
&EFS=V2KF1+V2UC33/3	ET200S Wiring DO		1/19/2023	MKLEPADLO	
&EFS=V2KF1+V2UC33/4	ET200S Wiring F-DI		1/19/2023	MKLEPADLO	
&EFS=V2KF1+V2UC33/5	ET200S Cross-reference Input module		1/19/2023	MKLEPADLO	
&EFS=V2KF1+V2UC33/6	ET200S Cross-reference Output module		1/19/2023	MKLEPADLO	
&EFS=V2KF1+V2UC33/7	ET200S Cross-reference Safe input module		1/19/2023	MKLEPADLO	
&EFS=V2KF1+V2UC81/1	SINAMICS S120 Control Unit		1/20/2023	MKLEPADLO	
&EFS=V2PZ1PF1+V2UC61/1	V2 Zone Indication column		1/20/2023	MKLEPADLO	
&EFS=V2SF0PG1+V2UC32/1	TP1500: SOP Display		1/19/2023	MKLEPADLO	

			Date	1/24/2023	Volvo Trucks North America	Valiant TMS	Table of contents : &EFS=V2KF1+V2UC15/3 - &EFS=V2SF0PG1+V2UC32/1	Drawing name: =2V01&EFS-EL_KF1	=
			Ed.	MKLEPADLO					+
			Appr		P6700 Framing - Cell 2V01, KF1			Document type: EAB	Project nr: 22-16152
Modification	Date	Name	Original		Replacement of / Replaced by	Scale 1:1			Page 20 / 1630

Table of contents

Column X: An automatically generated page was edited

F06_001

Page	Page description	supplementary page field	Date	Edited by	X
&EFS=V2SF0PG1+V2UC32/2	Operating box SOP		1/19/2023	MKLEPADLO	
&EFS=V2SF0PG2+V2UC33/1	TP1500: SOP Display		1/19/2023	MKLEPADLO	
&EFS=V2SF0PG2+V2UC33/2	Operating box SOP		1/19/2023	MKLEPADLO	
&EFS=V2UQ31BG0+V2UQ31/1	SENSORS		1/19/2023	MKLEPADLO	
&EFS=V2UQ31BG0+V2UQ31/2	SENSORS		1/19/2023	MKLEPADLO	
&EFS=V2UQ31KF1+V2UQ31/1	CONNECTING MOD. FOR VTSA MANIFOLD		1/19/2023	MKLEPADLO	
&EFS=V2UQ31KF1+V2UQ31/2	I/O MOD. DI16 (8 x M12) FOR VTSA-F		1/19/2023	MKLEPADLO	
&EFS=V2UQ31KF1+V2UQ31/3	CONNECTING MOD. FOR FESTO DQ		1/19/2023	MKLEPADLO	
&EFS=V2UQ31KF2+V2UQ31/1	CONNECTING MOD. FOR VTSA MANIFOLD		1/19/2023	MKLEPADLO	
&EFS=V2UQ31KF2+V2UQ31/2	I/O MOD. DI16 (8 x M12) FOR VTSA-F		1/19/2023	MKLEPADLO	
&EFS=V2UQ31KF2+V2UQ31/3	CONNECTING MOD. FOR FESTO DQ		1/19/2023	MKLEPADLO	
&EFS=V2UQ31UQ1+V2UQ31UQ1/1	FESTO DQ CONNECTION QN1		1/19/2023	MKLEPADLO	
&EFS=V2UQ31UQ2+V2UQ31UQ2/1	FESTO DQ CONNECTION QN2		1/19/2023	MKLEPADLO	
&EFS=V2UQ31UQ3+V2UQ31UQ3/1	FESTO DQ CONNECTION QN3		1/19/2023	MKLEPADLO	
&EFS=V2UQ31UQ4+V2UQ31UQ4/1	FESTO DQ CONNECTION QN4		1/19/2023	MKLEPADLO	
&EFS=V2UQ31UQ5+V2UQ31UQ5/1	FESTO DQ CONNECTION QN5		1/19/2023	MKLEPADLO	
&EFS=V2UQ31UQ6+V2UQ31UQ6/1	FESTO DQ CONNECTION QN6		1/19/2023	MKLEPADLO	
&EFS=V2UQ31UQ7+V2UQ31UQ7/1	FESTO DQ CONNECTION QN7		1/19/2023	MKLEPADLO	
&EFS=V2UQ31UQ8+V2UQ31UQ8/1	FESTO DQ CONNECTION QN8		1/19/2023	MKLEPADLO	
&EFS=V2UQ31UQ9+V2UQ31UQ9/1	FESTO DQ CONNECTION QN9		1/19/2023	MKLEPADLO	
&EFS=V2UQ31UQ10+V2UQ31UQ10/1	FESTO DQ CONNECTION QN10		1/19/2023	MKLEPADLO	
&EFS=V2UQ31UQ11+V2UQ31UQ11/1	FESTO DQ CONNECTION QN11		1/19/2023	MKLEPADLO	
&EFS=V2UQ31UQ12+V2UQ31UQ12/1	FESTO DQ CONNECTION QN12		1/19/2023	MKLEPADLO	
&EFS=V2UQ31UQ13+V2UQ31UQ13/1	FESTO DQ CONNECTION QN13		1/19/2023	MKLEPADLO	
&EFS=V2UQ31UQ14+V2UQ31UQ14/1	FESTO DQ CONNECTION QN14		1/19/2023	MKLEPADLO	
&EFS=V2UQ31UQ15+V2UQ31UQ15/1	FESTO DQ CONNECTION QN15		1/19/2023	MKLEPADLO	
&EFS=V2UQ31UQ16+V2UQ31UQ16/1	FESTO DQ CONNECTION QN16		1/19/2023	MKLEPADLO	
&EFS=V2UQ31UQ17+V2UQ31UQ17/1	FESTO DQ CONNECTION QN17		1/19/2023	MKLEPADLO	
&EFS=V2UQ31UQ18+V2UQ31UQ18/1	FESTO DQ CONNECTION QN18		1/19/2023	MKLEPADLO	
&EFS=V2UQ31WC4+V2UQ31/1	24VDC		1/19/2023	MKLEPADLO	
&EFS=V2UQ51BG0+V2UQ51/1	SENSORS		1/19/2023	MKLEPADLO	
&EFS=V2UQ51KF1+V2UQ51/1	MURR MODULE 16 IN		1/19/2023	MKLEPADLO	
&EFS=V2UQ52BG0+V2UQ52/1	SENSORS		1/19/2023	MKLEPADLO	

			Date	1/24/2023	Volvo Trucks North America	Valiant TMS	Table of contents : &EFS=V2SF0PG1+V2UC32/2 - &EFS=V2UQ52BG0+V2UQ52/1	Drawing name: =2V01&EFS-EL_KF1	=
			Ed.	MKLEPADLO					+
			Appr		P6700 Framing - Cell 2V01, KF1			Document type: EAB	Project nr: 22-16152
Modification	Date	Name	Original		Replacement of / Replaced by	Scale 1:1			Page 21 / 1630

Table of contents

Column X: An automatically generated page was edited

F06_001

Page	Page description	supplementary page field	Date	Edited by	X
&EFS=V2UQ52KF1+V2UQ52/1	MURR MODULE 16 IN		1/19/2023	MKLEPADLO	
&EFS=V2UQ53BG0+V2UQ53/1	SENSORS		1/19/2023	MKLEPADLO	
&EFS=V2UQ53KF1+V2UQ53/1	MURR MODULE 16 IN		1/19/2023	MKLEPADLO	
&EFS=V2UQ54BG0+V2UQ54/1	SENSORS		1/19/2023	MKLEPADLO	
&EFS=V2UQ54KF1+V2UQ54/1	MURR MODULE 16 IN		1/19/2023	MKLEPADLO	
&EFS=V2WC1+V2UC81/1	Incoming servo power supply 480 VAC		1/20/2023	MKLEPADLO	
&EFS=V2WC1+V2UC161/1	Incoming weld power supply 480 VAC		1/19/2023	MKLEPADLO	
&EFS=V2WC1+V2UC162/1	Incoming weld power supply 480 VAC		1/19/2023	MKLEPADLO	
&EFS=V2WC1+V2UC163/1	Incoming weld power supply 480 VAC		1/19/2023	MKLEPADLO	
&EFS=V2WC2+V2UC81/1	Power distribution 480 VAC		1/20/2023	MKLEPADLO	
&EFS=V2WC2+V2UC81/2	Power distribution 480 VAC		1/20/2023	MKLEPADLO	
&EFS=V2WC2+V2UC81/3	Power distribution 480 VAC		1/19/2023	MKLEPADLO	
&EFS=V2WC2+V2UC161/10	Weld power distribution 480 VAC		1/19/2023	MKLEPADLO	
&EFS=V2WC2+V2UC162/10	Weld power distribution 480 VAC		1/19/2023	MKLEPADLO	
&EFS=V2WC2+V2UC163/10	Weld power distribution 480 VAC		1/19/2023	MKLEPADLO	
&EFS=V2WC3+V2UC14/1	Power distribution 120 VAC		1/19/2023	MKLEPADLO	
&EFS=V2WC3+V2UC14/2	Monitoring 120VAC		1/19/2023	MKLEPADLO	
&EFS=V2WC3+V2UC15/1	Power distribution 120 VAC		1/19/2023	MKLEPADLO	
&EFS=V2WC3+V2UC15/2	Monitoring 120VAC		1/19/2023	MKLEPADLO	
&EFS=V2WC4+V2UC14/1	Power distribution 24VDC for Inputs		1/19/2023	MKLEPADLO	
&EFS=V2WC4+V2UC14/2	Power distribution 24VDC 1L+		1/19/2023	MKLEPADLO	
&EFS=V2WC4+V2UC14/3	Power distribution 24VDC 2L+		1/19/2023	MKLEPADLO	
&EFS=V2WC4+V2UC14/4	Power distribution 24VDC 3L+		1/19/2023	MKLEPADLO	
&EFS=V2WC4+V2UC14/5	Power distribution 24VDC 4L+		1/19/2023	MKLEPADLO	
&EFS=V2WC4+V2UC14/6	Power distribution 24VDC 5L+		1/19/2023	MKLEPADLO	
&EFS=V2WC4+V2UC14/7	Power distribution 24VDC 6L+		1/19/2023	MKLEPADLO	
&EFS=V2WC4+V2UC14/8	Power distribution 24VDC 7L+		1/19/2023	MKLEPADLO	
&EFS=V2WC4+V2UC14/9	Power distribution 24VDC 8L+		1/19/2023	MKLEPADLO	
&EFS=V2WC4+V2UC14/11	Power distribution 24VDC (Below Disconnect)		1/19/2023	MKLEPADLO	
&EFS=V2WC4+V2UC14/12	Power distribution 24VDC 11L+		1/19/2023	MKLEPADLO	
&EFS=V2WC4+V2UC14/13	Power distribution 24VDC 12L+		1/19/2023	MKLEPADLO	
&EFS=V2WC4+V2UC14/14	Power distribution 24VDC 13L+		1/19/2023	MKLEPADLO	
&EFS=V2WC4+V2UC14/15	Power distribution 24VDC 14L+		1/19/2023	MKLEPADLO	

			Date	1/24/2023	Volvo Trucks North America	Valiant TMS	Table of contents : &EFS=V2UQ52KF1+V2UQ52/1 - &EFS=V2WC4+V2UC14/15	Drawing name: =2V01&EFS-EL_KF1	=
			Ed.	MKLEPADLO					+
			Appr		P6700 Framing - Cell 2V01, KF1			Document type: EAB	Project nr: 22-16152
Modification	Date	Name	Original		Replacement of	Replaced by	Scale 1:1		Page 22 / 1630

Table of contents

Column X: An automatically generated page was edited

F06_001

Page	Page description	supplementary page field	Date	Edited by	X
&EFS=V2WC4+V2UC14/16	Power distribution 24VDC 15L+		1/19/2023	MKLEPADLO	
&EFS=V2WC4+V2UC14/17	Power distribution 24VDC 16L+		1/19/2023	MKLEPADLO	
&EFS=V2WC4+V2UC14/18	Power distribution 24VDC 17L+		1/19/2023	MKLEPADLO	
&EFS=V2WC4+V2UC14/19	Power distribution 24VDC 18L+		1/19/2023	MKLEPADLO	
&EFS=V2WC4+V2UC14/20	24VDC Switched Power 1		1/19/2023	MKLEPADLO	
&EFS=V2WC4+V2UC14/21	24VDC Switched Power 2		1/19/2023	MKLEPADLO	
&EFS=V2WC4+V2UC14/22	24VDC Switched Power 3		1/19/2023	MKLEPADLO	
&EFS=V2WC4+V2UC14/23	24VDC Switched Power 4		1/19/2023	MKLEPADLO	
&EFS=V2WC4+V2UC15/1	Power distribution 24VDC for Inputs		1/19/2023	MKLEPADLO	
&EFS=V2WC4+V2UC15/2	Power distribution 24VDC 1L+		1/19/2023	MKLEPADLO	
&EFS=V2WC4+V2UC15/3	Power distribution 24VDC 2L+		1/19/2023	MKLEPADLO	
&EFS=V2WC4+V2UC15/4	Power distribution 24VDC 3L+		1/19/2023	MKLEPADLO	
&EFS=V2WC4+V2UC15/5	Power distribution 24VDC 4L+		1/19/2023	MKLEPADLO	
&EFS=V2WC4+V2UC15/6	Power distribution 24VDC 5L+		1/19/2023	MKLEPADLO	
&EFS=V2WC4+V2UC15/7	Power distribution 24VDC 6L+		1/19/2023	MKLEPADLO	
&EFS=V2WC4+V2UC15/8	Power distribution 24VDC 7L+		1/19/2023	MKLEPADLO	
&EFS=V2WC4+V2UC15/9	Power distribution 24VDC 8L+		1/19/2023	MKLEPADLO	
&EFS=V2WC4+V2UC15/11	Power distribution 24VDC (Below Disconnect)		1/19/2023	MKLEPADLO	
&EFS=V2WC4+V2UC15/12	Power distribution 24VDC 11L+		1/19/2023	MKLEPADLO	
&EFS=V2WC4+V2UC15/13	Power distribution 24VDC 12L+		1/19/2023	MKLEPADLO	
&EFS=V2WC4+V2UC15/14	Power distribution 24VDC 13L+		1/19/2023	MKLEPADLO	
&EFS=V2WC4+V2UC15/15	Power distribution 24VDC 14L+		1/19/2023	MKLEPADLO	
&EFS=V2WC4+V2UC15/16	Power distribution 24VDC 15L+		1/19/2023	MKLEPADLO	
&EFS=V2WC4+V2UC15/17	Power distribution 24VDC 16L+		1/19/2023	MKLEPADLO	
&EFS=V2WC4+V2UC15/18	Power distribution 24VDC 17L+		1/19/2023	MKLEPADLO	
&EFS=V2WC4+V2UC15/19	Power distribution 24VDC 18L+		1/19/2023	MKLEPADLO	
&EFS=V2WC4+V2UC15/20	24VDC Switched Power 1		1/19/2023	MKLEPADLO	
&EFS=V2WC4+V2UC15/21	24VDC Switched Power 2		1/19/2023	MKLEPADLO	
&EFS=V2WC4+V2UC15/22	24VDC Switched Power 3		1/19/2023	MKLEPADLO	
&EFS=V2WC4+V2UC15/23	24VDC Switched Power 4		1/19/2023	MKLEPADLO	
&EFS=V2WC4+V2UC32/1	Incomming power supply 24 VDC		1/19/2023	MKLEPADLO	
&EFS=V2WC4+V2UC32/2	Power distribution 24VDC 1L+		1/19/2023	MKLEPADLO	
&EFS=V2WC4+V2UC32/3	Monitoring 24VDC		1/19/2023	MKLEPADLO	

			Date	1/24/2023	Volvo Trucks North America	Valiant TMS	Table of contents : &EFS=V2WC4+V2UC14/16 - &EFS=V2WC4+V2UC32/3	Drawing name: =2V01&EFS-EL_KF1	=	
			Ed.	MKLEPADLO					+	
			Appr		P6700 Framing - Cell 2V01, KF1			Document type: EAB	Project nr: 22-16152	Page 23
Modification	Date	Name	Original		Replacement of / Replaced by	Scale 1:1				1630

Table of contents

Column X: An automatically generated page was edited

F06_001

Page	Page description	supplementary page field	Date	Edited by	X
&EFS=V2WC4+V2UC33/1	Incomming power supply 24 VDC		1/19/2023	MKLEPADLO	
&EFS=V2WC4+V2UC33/2	Power distribution 24VDC 1L+		1/19/2023	MKLEPADLO	
&EFS=V2WC4+V2UC33/3	Monitoring 24VDC		1/19/2023	MKLEPADLO	
&EFS=V2WC4+V2UC81/1	24VDC Power		1/20/2023	MKLEPADLO	
&EFS=V2WL1WL1KF1+V2WL1KF1/10	G120D Control Unit		1/19/2023	MKLEPADLO	
&EFS=V2WL1WL1WC1+V2WL1UC01/1	Incoming power		1/19/2023	MKLEPADLO	
&EFS=V2WL2GM1KF1+V2WL2KF1/10	G120D Control Unit		1/19/2023	MKLEPADLO	
&EFS=V2WL2GM1WC1+V2WL2UC01/1	Incoming power		1/19/2023	MKLEPADLO	
&EFS=V2WL2WL1KF1+V2WL2KF1/10	G120D Control Unit		1/19/2023	MKLEPADLO	
&EFS=V2WL2WL1WC1+V2WL2UC01/1	Incoming power		1/19/2023	MKLEPADLO	
&EFS=V2WL3WL1KF1+V2WL3KF1/10	G120D Control Unit		1/19/2023	MKLEPADLO	
&EFS=V2WL3WL1WC1+V2WL3UC01/1	Incoming power		1/19/2023	MKLEPADLO	
&EFS=V2WL4WL1KF1+V2WL4KF1/10	G120D Control Unit		1/19/2023	MKLEPADLO	
&EFS=V2WL4WL1WC1+V2WL4UC01/1	Incoming power		1/19/2023	MKLEPADLO	
&ELU=KF0+UC31/1	Layout UC31 MOP		1/18/2023	MKLEPADLO	
&ELU=KF0+UC31/2	Layout UC31 MOP External View		12/19/2022	MKLEPADLO	
&ELU=KF0+UC31/3	Layout UC31 MOP Internal View		12/19/2022	MKLEPADLO	
&ELU=V1PZ1PF1+V1UC61/1	Layout UC61 SL External View		1/20/2023	MKLEPADLO	
&ELU=V1PZ1PF1+V1UC61/2	Layout UC61 SL Internal View		12/19/2022	MKLEPADLO	
&ELU=V1SF0PG1+V1UC32/1	Layout UC32 SOP External View		12/19/2022	MKLEPADLO	
&ELU=V1SF0PG1+V1UC32/2	Layout UC32 SOP Internal View		12/19/2022	MKLEPADLO	
&ELU=V1SF0PG2+V1UC51/1	Layout UC51 OD External View		12/19/2022	MKLEPADLO	
&ELU=V1SF0SF1+V1UC71/1	Layout UC71 RB External View		12/19/2022	MKLEPADLO	
&ELU=V1UC11+V1UC11/1	Layout UC11 PDP External View		12/19/2022	MKLEPADLO	
&ELU=V1UC11+V1UC11/2	Layout UC11 PDP Internal View		12/19/2022	MKLEPADLO	
&ELU=V1UC12+V1UC12/1	Layout UC12 PDP External View		12/19/2022	MKLEPADLO	
&ELU=V1UC12+V1UC12/2	Layout UC12 PDP Internal View		12/19/2022	MKLEPADLO	
&ELU=V2PZ1PF1+V2UC61/1	Layout UC61 SL External View		1/20/2023	MKLEPADLO	
&ELU=V2PZ1PF1+V2UC61/2	Layout UC61 SL Internal View		12/19/2022	MKLEPADLO	
&ELU=V2SF0PG1+V2UC32/1	Layout UC32 SOP External View		12/19/2022	MKLEPADLO	
&ELU=V2SF0PG1+V2UC32/2	Layout UC32 SOP Internal View		12/19/2022	MKLEPADLO	
&ELU=V2SF0PG2+V2UC33/1	Layout UC33 SOP External View		12/19/2022	MKLEPADLO	
&ELU=V2SF0PG2+V2UC33/2	Layout UC33 SOP Internal View		12/19/2022	MKLEPADLO	

			Date	1/24/2023	Volvo Trucks North America		Valiant TMS	Table of contents : &EFS=V2WC4+V2UC33/1 - &ELU=V2SF0PG2+V2UC33/2	Drawing name: =2V01&EFS-EL_KF1	=	
			Ed.	MKLEPADLO						+	
			Appr		P6700 Framing - Cell 2V01, KF1		Scale 1:1		Document type: EAB	Project nr: 22-16152	Page 24 / 1630
Modification	Date	Name	Original		Replacement of	Replaced by					

Table of contents

Column X: An automatically generated page was edited

F06_001

Page	Page description	supplementary page field	Date	Edited by	X
&ELU=V2UC14+V2UC14/1	Layout UC14 RIO External View		12/19/2022	MKLEPADLO	
&ELU=V2UC14+V2UC14/2	Layout UC14 RIO Internal Controls View		12/19/2022	MKLEPADLO	
&ELU=V2UC15+V2UC15/1	Layout UC15 RIO External View		12/19/2022	MKLEPADLO	
&ELU=V2UC15+V2UC15/2	Layout UC15 RIO Internal Controls View		12/19/2022	MKLEPADLO	
&ELU=V2UC81+V2UC81/1	Layout UC81 Servo Panel External View		1/20/2023	MKLEPADLO	
&ELU=V2UC81+V2UC81/2	Layout UC81 Servo Panel Internal View		1/19/2023	MKLEPADLO	
&EMA=KH0+KH0/1	Cable diagram =KH0+KH0-W1		1/19/2023	MKLEPADLO	
&EMA=KH3+KH3/1	Cable diagram =KH3+KH3-W1		1/19/2023	MKLEPADLO	
&EMA=KH3+KH3/2	Cable diagram =KH3+KH3-W2		1/19/2023	MKLEPADLO	
&EMA=V1AR11UQ41BG0+V1AR11UQ41/1	Cable diagram =V1AR11UQ41BG0+V1AR11UQ41-W1		1/19/2023	MKLEPADLO	
&EMA=V1AR11UQ41BG0+V1AR11UQ41/2	Cable diagram =V1AR11UQ41BG0+V1AR11UQ41-W1.1		1/19/2023	MKLEPADLO	
&EMA=V1AR11UQ41BG0+V1AR11UQ41/3	Cable diagram =V1AR11UQ41BG0+V1AR11UQ41-W1.2		1/19/2023	MKLEPADLO	
&EMA=V1AR11UQ41KF1+V1AR11UQ41/1	Cable diagram =V1AR11UQ41KF1+V1AR11UQ41-W1		1/19/2023	MKLEPADLO	
&EMA=V1AR11UQ41KF1+V1AR11UQ41/2	Cable diagram =V1AR11UQ41KF1+V1AR11UQ41-WF1		1/19/2023	MKLEPADLO	
&EMA=V1AR11UQ41UQ1.1+V1AR11UQ41UQ1.1/1	Cable diagram =V1AR11UQ41UQ1.1+V1AR11UQ41UQ1.1-W1		1/19/2023	MKLEPADLO	
&EMA=V1AR11UQ41UQ1.2+V1AR11UQ41UQ1.2/1	Cable diagram =V1AR11UQ41UQ1.2+V1AR11UQ41UQ1.2-W1		1/19/2023	MKLEPADLO	
&EMA=V1AR11UQ41UQ2.1+V1AR11UQ41UQ2.1/1	Cable diagram =V1AR11UQ41UQ2.1+V1AR11UQ41UQ2.1-W1		1/19/2023	MKLEPADLO	
&EMA=V1AR11UQ41UQ2.2+V1AR11UQ41UQ2.2/1	Cable diagram =V1AR11UQ41UQ2.2+V1AR11UQ41UQ2.2-W1		1/19/2023	MKLEPADLO	
&EMA=V1AR11UQ41UQ3.1+V1AR11UQ41UQ3.1/1	Cable diagram =V1AR11UQ41UQ3.1+V1AR11UQ41UQ3.1-W1		1/19/2023	MKLEPADLO	
&EMA=V1AR11UQ41UQ3.2+V1AR11UQ41UQ3.2/1	Cable diagram =V1AR11UQ41UQ3.2+V1AR11UQ41UQ3.2-W1		1/19/2023	MKLEPADLO	
&EMA=V1AR11UQ41UQ4.1+V1AR11UQ41UQ4.1/1	Cable diagram =V1AR11UQ41UQ4.1+V1AR11UQ41UQ4.1-W1		1/19/2023	MKLEPADLO	
&EMA=V1AR11UQ41UQ4.2+V1AR11UQ41UQ4.2/1	Cable diagram =V1AR11UQ41UQ4.2+V1AR11UQ41UQ4.2-W1		1/19/2023	MKLEPADLO	
&EMA=V1AR11UQ41UQ5.1+V1AR11UQ41UQ5.1/1	Cable diagram =V1AR11UQ41UQ5.1+V1AR11UQ41UQ5.1-W1		1/19/2023	MKLEPADLO	
&EMA=V1AR11UQ41UQ5.2+V1AR11UQ41UQ5.2/1	Cable diagram =V1AR11UQ41UQ5.2+V1AR11UQ41UQ5.2-W1		1/19/2023	MKLEPADLO	
&EMA=V1AR11UQ41UQ6.1+V1AR11UQ41UQ6.1/1	Cable diagram =V1AR11UQ41UQ6.1+V1AR11UQ41UQ6.1-W1		1/19/2023	MKLEPADLO	
&EMA=V1AR11UQ41UQ7.1+V1AR11UQ41UQ7.1/1	Cable diagram =V1AR11UQ41UQ7.1+V1AR11UQ41UQ7.1-W1		1/19/2023	MKLEPADLO	
&EMA=V1AR11UQ41UQ8.1+V1AR11UQ41UQ8.1/1	Cable diagram =V1AR11UQ41UQ8.1+V1AR11UQ41UQ8.1-W1		1/19/2023	MKLEPADLO	
&EMA=V1AR11UQ41UQ9.1+V1AR11UQ41UQ9.1/1	Cable diagram =V1AR11UQ41UQ9.1+V1AR11UQ41UQ9.1-W1		1/19/2023	MKLEPADLO	
&EMA=V1AR11WC1+V1AR11UC01/1	Cable diagram =V1AR11WC1+V1AR11UC01-W1		1/19/2023	MKLEPADLO	
&EMA=V1AR21WC1+V1AR21UC01/1	Cable diagram =V1AR21WC1+V1AR21UC01-W1		1/19/2023	MKLEPADLO	
&EMA=V1AR31UQ41BG0+V1AR31UQ41/1	Cable diagram =V1AR31UQ41BG0+V1AR31UQ41-W1		1/19/2023	MKLEPADLO	
&EMA=V1AR31UQ41BG0+V1AR31UQ41/2	Cable diagram =V1AR31UQ41BG0+V1AR31UQ41-W1.1		1/19/2023	MKLEPADLO	
&EMA=V1AR31UQ41BG0+V1AR31UQ41/3	Cable diagram =V1AR31UQ41BG0+V1AR31UQ41-W1.2		1/19/2023	MKLEPADLO	

			Date	1/24/2023	Volvo Trucks North America	Valiant TMS	Table of contents : &ELU=V2UC14+V2UC14/1 - &EMA=V1AR31UQ41BG0+V1AR31UQ41/3	Drawing name: =2V01&EFS-EL_KF1	=
			Ed.	MKLEPADLO					+
			Appr		P6700 Framing - Cell 2V01, KF1			Document type: EAB	Project nr: 22-16152
Modification	Date	Name	Original		Replacement of / Replaced by	Scale 1:1			Page 25 / 1630

Table of contents

Column X: An automatically generated page was edited F06_001

Page	Page description	supplementary page field	Date	Edited by	X
&EMA=V1AR31UQ41BG0+V1AR31UQ41/4	Cable diagram =V1AR31UQ41BG0+V1AR31UQ41-W2		1/19/2023	MKLEPADLO	
&EMA=V1AR31UQ41BG0+V1AR31UQ41/5	Cable diagram =V1AR31UQ41BG0+V1AR31UQ41-W2.1		1/19/2023	MKLEPADLO	
&EMA=V1AR31UQ41BG0+V1AR31UQ41/6	Cable diagram =V1AR31UQ41BG0+V1AR31UQ41-W2.2		1/19/2023	MKLEPADLO	
&EMA=V1AR31UQ41BG0+V1AR31UQ41/7	Cable diagram =V1AR31UQ41BG0+V1AR31UQ41-W3		1/19/2023	MKLEPADLO	
&EMA=V1AR31UQ41KF1+V1AR31UQ41/1	Cable diagram =V1AR31UQ41KF1+V1AR31UQ41-W1		1/19/2023	MKLEPADLO	
&EMA=V1AR31UQ41KF1+V1AR31UQ41/2	Cable diagram =V1AR31UQ41KF1+V1AR31UQ41-WF1		1/19/2023	MKLEPADLO	
&EMA=V1AR31UQ41UQ1.1+V1AR31UQ41UQ1.1/1	Cable diagram =V1AR31UQ41UQ1.1+V1AR31UQ41UQ1.1-W1		1/19/2023	MKLEPADLO	
&EMA=V1AR31UQ41UQ1.2+V1AR31UQ41UQ1.2/1	Cable diagram =V1AR31UQ41UQ1.2+V1AR31UQ41UQ1.2-W1		1/19/2023	MKLEPADLO	
&EMA=V1AR31UQ41UQ1.3+V1AR31UQ41UQ1.3/1	Cable diagram =V1AR31UQ41UQ1.3+V1AR31UQ41UQ1.3-W1		1/19/2023	MKLEPADLO	
&EMA=V1AR31XQ41UQ1.1+V1AR31XQ41UQ1.1/1	Cable diagram =V1AR31XQ41UQ1.1+V1AR31XQ41UQ1.1-W1		1/19/2023	MKLEPADLO	
&EMA=V1AR31XQ41UQ1.1+V1AR31XQ41UQ1.1/2	Cable diagram =V1AR31XQ41UQ1.1+V1AR31XQ41UQ1.1-W1.1		1/19/2023	MKLEPADLO	
&EMA=V1AR31XQ41UQ1.1+V1AR31XQ41UQ1.1/3	Cable diagram =V1AR31XQ41UQ1.1+V1AR31XQ41UQ1.1-W1.2		1/19/2023	MKLEPADLO	
&EMA=V1AR41UQ41BG0+V1AR41UQ41/1	Cable diagram =V1AR41UQ41BG0+V1AR41UQ41-W1		1/19/2023	MKLEPADLO	
&EMA=V1AR41UQ41BG0+V1AR41UQ41/2	Cable diagram =V1AR41UQ41BG0+V1AR41UQ41-W1.1		1/19/2023	MKLEPADLO	
&EMA=V1AR41UQ41BG0+V1AR41UQ41/3	Cable diagram =V1AR41UQ41BG0+V1AR41UQ41-W1.2		1/19/2023	MKLEPADLO	
&EMA=V1AR41UQ41KF1+V1AR41UQ41/1	Cable diagram =V1AR41UQ41KF1+V1AR41UQ41-W1		1/19/2023	MKLEPADLO	
&EMA=V1AR41UQ41KF1+V1AR41UQ41/2	Cable diagram =V1AR41UQ41KF1+V1AR41UQ41-WF1		1/19/2023	MKLEPADLO	
&EMA=V1AR41UQ41UQ1.1+V1AR41UQ41UQ1.1/1	Cable diagram =V1AR41UQ41UQ1.1+V1AR41UQ41UQ1.1-W1		1/19/2023	MKLEPADLO	
&EMA=V1AR41UQ41UQ1.2+V1AR41UQ41UQ1.2/1	Cable diagram =V1AR41UQ41UQ1.2+V1AR41UQ41UQ1.2-W1		1/19/2023	MKLEPADLO	
&EMA=V1AR41UQ41UQ2.1+V1AR41UQ41UQ2.1/1	Cable diagram =V1AR41UQ41UQ2.1+V1AR41UQ41UQ2.1-W1		1/19/2023	MKLEPADLO	
&EMA=V1AR41UQ41UQ2.2+V1AR41UQ41UQ2.2/1	Cable diagram =V1AR41UQ41UQ2.2+V1AR41UQ41UQ2.2-W1		1/19/2023	MKLEPADLO	
&EMA=V1AR41UQ41UQ2.3+V1AR41UQ41UQ2.3/1	Cable diagram =V1AR41UQ41UQ2.3+V1AR41UQ41UQ2.3-W1		1/19/2023	MKLEPADLO	
&EMA=V1AR41UQ41UQ2.4+V1AR41UQ41UQ2.4/1	Cable diagram =V1AR41UQ41UQ2.4+V1AR41UQ41UQ2.4-W1		1/19/2023	MKLEPADLO	
&EMA=V1AR41UQ41UQ2.5+V1AR41UQ41UQ2.5/1	Cable diagram =V1AR41UQ41UQ2.5+V1AR41UQ41UQ2.5-W1		1/19/2023	MKLEPADLO	
&EMA=V1AR41UQ41UQ3.1+V1AR41UQ41UQ3.1/1	Cable diagram =V1AR41UQ41UQ3.1+V1AR41UQ41UQ3.1-W1		1/19/2023	MKLEPADLO	
&EMA=V1AR41UQ41UQ3.2+V1AR41UQ41UQ3.2/1	Cable diagram =V1AR41UQ41UQ3.2+V1AR41UQ41UQ3.2-W1		1/19/2023	MKLEPADLO	
&EMA=V1AR41UQ41UQ4.1+V1AR41UQ41UQ4.1/1	Cable diagram =V1AR41UQ41UQ4.1+V1AR41UQ41UQ4.1-W1		1/19/2023	MKLEPADLO	
&EMA=V1AR41UQ41UQ4.2+V1AR41UQ41UQ4.2/1	Cable diagram =V1AR41UQ41UQ4.2+V1AR41UQ41UQ4.2-W1		1/19/2023	MKLEPADLO	
&EMA=V1UL1KF2+V1UL1/1	Cable diagram =V1UL1KF2+V1UL1-W2		1/19/2023	MKLEPADLO	
&EMA=V1UL1UQ1.1+V1UL1UQ1.1/1	Cable diagram =V1UL1UQ1.1+V1UL1UQ1.1-W1		1/19/2023	MKLEPADLO	
&EMA=V1UL1UQ1.2+V1UL1UQ1.2/1	Cable diagram =V1UL1UQ1.2+V1UL1UQ1.2-W1		1/19/2023	MKLEPADLO	
&EMA=V1UL1UQ1.3+V1UL1UQ1.3/1	Cable diagram =V1UL1UQ1.3+V1UL1UQ1.3-W1		1/19/2023	MKLEPADLO	
&EMA=V1UL1UQ1.4+V1UL1UQ1.4/1	Cable diagram =V1UL1UQ1.4+V1UL1UQ1.4-W1		1/19/2023	MKLEPADLO	

			Date	1/24/2023	Volvo Trucks North America	Valiant TMS	Table of contents : &EMA=V1AR31UQ41BG0+V1AR31UQ41/4 - &EMA=V1UL1UQ1.4+V1UL1UQ1.4/1	Drawing name: =2V01&EFS-EL_KF1	=
			Ed.	MKLEPADLO					+
			Appr		P6700 Framing - Cell 2V01, KF1	Scale 1:1		Document type: EAB	Project nr: 22-16152
Modification	Date	Name	Original		Replacement of / Replaced by				Page 26 / 1630

Table of contents

Column X: An automatically generated page was edited

F06_001

Page	Page description	supplementary page field	Date	Edited by	X
&EMA=V1UL1UQ2.1+V1UL1UQ2.1/1	Cable diagram =V1UL1UQ2.1+V1UL1UQ2.1-W1		1/19/2023	MKLEPADLO	
&EMA=V1UL1UQ2.2+V1UL1UQ2.2/1	Cable diagram =V1UL1UQ2.2+V1UL1UQ2.2-W1		1/19/2023	MKLEPADLO	
&EMA=V1UL1UQ3.1+V1UL1UQ3.1/1	Cable diagram =V1UL1UQ3.1+V1UL1UQ3.1-W1		1/19/2023	MKLEPADLO	
&EMA=V1UL1UQ3.2+V1UL1UQ3.2/1	Cable diagram =V1UL1UQ3.2+V1UL1UQ3.2-W1		1/19/2023	MKLEPADLO	
&EMA=V1UL1UQ4.1+V1UL1UQ4.1/1	Cable diagram =V1UL1UQ4.1+V1UL1UQ4.1-W1		1/19/2023	MKLEPADLO	
&EMA=V1UL1UQ4.2+V1UL1UQ4.2/1	Cable diagram =V1UL1UQ4.2+V1UL1UQ4.2-W1		1/19/2023	MKLEPADLO	
&EMA=V1UQ31BG0+V1UQ31/1	Cable diagram =V1UQ31BG0+V1UQ31-W1		1/19/2023	MKLEPADLO	
&EMA=V1UQ31BG0+V1UQ31/2	Cable diagram =V1UQ31BG0+V1UQ31-W2		1/19/2023	MKLEPADLO	
&EMA=V1UQ31UQ1.1+V1UQ31UQ1.1/1	Cable diagram =V1UQ31UQ1.1+V1UQ31UQ1.1-W1		1/19/2023	MKLEPADLO	
&EMA=V1UQ31UQ1.2+V1UQ31UQ1.2/1	Cable diagram =V1UQ31UQ1.2+V1UQ31UQ1.2-W1		1/19/2023	MKLEPADLO	
&EMA=V1UQ31UQ1.3+V1UQ31UQ1.3/1	Cable diagram =V1UQ31UQ1.3+V1UQ31UQ1.3-W1		1/19/2023	MKLEPADLO	
&EMA=V1UQ31UQ1.4+V1UQ31UQ1.4/1	Cable diagram =V1UQ31UQ1.4+V1UQ31UQ1.4-W1		1/19/2023	MKLEPADLO	
&EMA=V1UQ31UQ2.1+V1UQ31UQ2.1/1	Cable diagram =V1UQ31UQ2.1+V1UQ31UQ2.1-W1		1/19/2023	MKLEPADLO	
&EMA=V1UQ31UQ2.2+V1UQ31UQ2.2/1	Cable diagram =V1UQ31UQ2.2+V1UQ31UQ2.2-W1		1/19/2023	MKLEPADLO	
&EMA=V1UQ51BG0+V1UQ51/1	Cable diagram =V1UQ51BG0+V1UQ51-W1		1/19/2023	MKLEPADLO	
&EMA=V1UQ51BG0+V1UQ51/2	Cable diagram =V1UQ51BG0+V1UQ51-W2		1/19/2023	MKLEPADLO	
&EMA=V1UQ53BG0+V1UQ53/1	Cable diagram =V1UQ53BG0+V1UQ53-W1		1/19/2023	MKLEPADLO	
&EMA=V1UQ53BG0+V1UQ53/2	Cable diagram =V1UQ53BG0+V1UQ53-W2		1/19/2023	MKLEPADLO	
&EMA=V1UQ53BG0+V1UQ53/3	Cable diagram =V1UQ53BG0+V1UQ53-W2.1		1/19/2023	MKLEPADLO	
&EMA=V1UQ53BG0+V1UQ53/4	Cable diagram =V1UQ53BG0+V1UQ53-W2.2		1/19/2023	MKLEPADLO	
&EMA=V1UQ53BG0+V1UQ53/5	Cable diagram =V1UQ53BG0+V1UQ53-W3		1/19/2023	MKLEPADLO	
&EMA=V1UQ53BG0+V1UQ53/6	Cable diagram =V1UQ53BG0+V1UQ53-W3.1		1/19/2023	MKLEPADLO	
&EMA=V1UQ53BG0+V1UQ53/7	Cable diagram =V1UQ53BG0+V1UQ53-W3.2		1/19/2023	MKLEPADLO	
&EMA=V1UQ53BG0+V1UQ53/8	Cable diagram =V1UQ53BG0+V1UQ53-W4		1/19/2023	MKLEPADLO	
&EMA=V1UQ53BG0+V1UQ53/9	Cable diagram =V1UQ53BG0+V1UQ53-W4.1		1/19/2023	MKLEPADLO	
&EMA=V1UQ53BG0+V1UQ53/10	Cable diagram =V1UQ53BG0+V1UQ53-W4.2		1/19/2023	MKLEPADLO	
&EMA=V1UQ53BG0+V1UQ53/11	Cable diagram =V1UQ53BG0+V1UQ53-W5		1/19/2023	MKLEPADLO	
&EMA=V1UQ53BG0+V1UQ53/12	Cable diagram =V1UQ53BG0+V1UQ53-W5.1		1/19/2023	MKLEPADLO	
&EMA=V1UQ53BG0+V1UQ53/13	Cable diagram =V1UQ53BG0+V1UQ53-W5.2		1/19/2023	MKLEPADLO	
&EMA=V1UQ53UQ5.1+V1UQ53UQ5.1/1	Cable diagram =V1UQ53UQ5.1+V1UQ53UQ5.1-W1		1/19/2023	MKLEPADLO	
&EMA=V1UQ53UQ5.1+V1UQ53UQ5.1/2	Cable diagram =V1UQ53UQ5.1+V1UQ53UQ5.1-W1.1		1/19/2023	MKLEPADLO	
&EMA=V1UQ53UQ5.1+V1UQ53UQ5.1/3	Cable diagram =V1UQ53UQ5.1+V1UQ53UQ5.1-W1.2		1/19/2023	MKLEPADLO	
&EMA=V1WC1+V1UC11/1	Cable diagram =V1WC1+V1UC11-GND1		1/19/2023	MKLEPADLO	

			Date	1/24/2023	Volvo Trucks North America	Valiant TMS	Table of contents : &EMA=V1UL1UQ2.1+V1UL1UQ2.1/1 - &EMA=V1WC1+V1UC11/1	Drawing name: =2V01&EFS-EL_KF1	=
			Ed.	MKLEPADLO					+
			Appr		P6700 Framing - Cell 2V01, KF1	Scale 1:1		Document type: EAB	Project nr: 22-16152
Modification	Date	Name	Original		Replacement of / Replaced by				Page 27 / 1630

Table of contents

Column X: An automatically generated page was edited F06_001

Page	Page description	supplementary page field	Date	Edited by	X
&EMA=V1WC1+V1UC12/1	Cable diagram =V1WC1+V1UC12-GND1		1/19/2023	MKLEPADLO	
&EMA=V2AR31UQ41BG0+V2AR31UQ41/1	Cable diagram =V2AR31UQ41BG0+V2AR31UQ41-W1		1/19/2023	MKLEPADLO	
&EMA=V2AR31UQ41BG0+V2AR31UQ41/2	Cable diagram =V2AR31UQ41BG0+V2AR31UQ41-W1.1		1/19/2023	MKLEPADLO	
&EMA=V2AR31UQ41BG0+V2AR31UQ41/3	Cable diagram =V2AR31UQ41BG0+V2AR31UQ41-W1.2		1/19/2023	MKLEPADLO	
&EMA=V2AR31UQ41BG0+V2AR31UQ41/4	Cable diagram =V2AR31UQ41BG0+V2AR31UQ41-W2		1/19/2023	MKLEPADLO	
&EMA=V2AR31UQ41BG0+V2AR31UQ41/5	Cable diagram =V2AR31UQ41BG0+V2AR31UQ41-W2.1		1/19/2023	MKLEPADLO	
&EMA=V2AR31UQ41BG0+V2AR31UQ41/6	Cable diagram =V2AR31UQ41BG0+V2AR31UQ41-W2.2		1/19/2023	MKLEPADLO	
&EMA=V2AR31UQ41BG0+V2AR31UQ41/7	Cable diagram =V2AR31UQ41BG0+V2AR31UQ41-W3		1/19/2023	MKLEPADLO	
&EMA=V2AR31UQ41KF1+V2AR31UQ41/1	Cable diagram =V2AR31UQ41KF1+V2AR31UQ41-W1		1/19/2023	MKLEPADLO	
&EMA=V2AR31UQ41KF1+V2AR31UQ41/2	Cable diagram =V2AR31UQ41KF1+V2AR31UQ41-WF1		1/19/2023	MKLEPADLO	
&EMA=V2AR31UQ41UQ1.1+V2AR31UQ41UQ1.1/1	Cable diagram =V2AR31UQ41UQ1.1+V2AR31UQ41UQ1.1-W1		1/19/2023	MKLEPADLO	
&EMA=V2AR31UQ41UQ2.1+V2AR31UQ41UQ2.1/1	Cable diagram =V2AR31UQ41UQ2.1+V2AR31UQ41UQ2.1-W1		1/19/2023	MKLEPADLO	
&EMA=V2AR31UQ41UQ2.2+V2AR31UQ41UQ2.2/1	Cable diagram =V2AR31UQ41UQ2.2+V2AR31UQ41UQ2.2-W1		1/19/2023	MKLEPADLO	
&EMA=V2AR31UQ41UQ2.3+V2AR31UQ41UQ2.3/1	Cable diagram =V2AR31UQ41UQ2.3+V2AR31UQ41UQ2.3-W1		1/19/2023	MKLEPADLO	
&EMA=V2AR31UQ41UQ2.4+V2AR31UQ41UQ2.4/1	Cable diagram =V2AR31UQ41UQ2.4+V2AR31UQ41UQ2.4-W1		1/19/2023	MKLEPADLO	
&EMA=V2AR31UQ41UQ3.1+V2AR31UQ41UQ3.1/1	Cable diagram =V2AR31UQ41UQ3.1+V2AR31UQ41UQ3.1-W1		1/19/2023	MKLEPADLO	
&EMA=V2AR31UQ41UQ3.2+V2AR31UQ41UQ3.2/1	Cable diagram =V2AR31UQ41UQ3.2+V2AR31UQ41UQ3.2-W1		1/19/2023	MKLEPADLO	
&EMA=V2AR31UQ41UQ3.3+V2AR31UQ41UQ3.3/1	Cable diagram =V2AR31UQ41UQ3.3+V2AR31UQ41UQ3.3-W1		1/19/2023	MKLEPADLO	
&EMA=V2AR31UQ41UQ4.1+V2AR31UQ41UQ4.1/1	Cable diagram =V2AR31UQ41UQ4.1+V2AR31UQ41UQ4.1-W1		1/19/2023	MKLEPADLO	
&EMA=V2AR31UQ41UQ5.1+V2AR31UQ41UQ5.1/1	Cable diagram =V2AR31UQ41UQ5.1+V2AR31UQ41UQ5.1-W1		1/19/2023	MKLEPADLO	
&EMA=V2AR31UQ41UQ5.2+V2AR31UQ41UQ5.2/1	Cable diagram =V2AR31UQ41UQ5.2+V2AR31UQ41UQ5.2-W1		1/19/2023	MKLEPADLO	
&EMA=V2AR31UQ41UQ6.1+V2AR31UQ41UQ6.1/1	Cable diagram =V2AR31UQ41UQ6.1+V2AR31UQ41UQ6.1-W1		1/19/2023	MKLEPADLO	
&EMA=V2AR31UQ41UQ7.1+V2AR31UQ41UQ7.1/1	Cable diagram =V2AR31UQ41UQ7.1+V2AR31UQ41UQ7.1-W1		1/19/2023	MKLEPADLO	
&EMA=V2AR31UQ41UQ7.2+V2AR31UQ41UQ7.2/1	Cable diagram =V2AR31UQ41UQ7.2+V2AR31UQ41UQ7.2-W1		1/19/2023	MKLEPADLO	
&EMA=V2AR31UQ42BG0+V2AR31UQ42/1	Cable diagram =V2AR31UQ42BG0+V2AR31UQ42-W1		1/19/2023	MKLEPADLO	
&EMA=V2AR31UQ42BG0+V2AR31UQ42/2	Cable diagram =V2AR31UQ42BG0+V2AR31UQ42-W1.1		1/19/2023	MKLEPADLO	
&EMA=V2AR31UQ42BG0+V2AR31UQ42/3	Cable diagram =V2AR31UQ42BG0+V2AR31UQ42-W1.2		1/19/2023	MKLEPADLO	
&EMA=V2AR31UQ42BG0+V2AR31UQ42/4	Cable diagram =V2AR31UQ42BG0+V2AR31UQ42-W2		1/19/2023	MKLEPADLO	
&EMA=V2AR31UQ42BG0+V2AR31UQ42/5	Cable diagram =V2AR31UQ42BG0+V2AR31UQ42-W2.1		1/19/2023	MKLEPADLO	
&EMA=V2AR31UQ42BG0+V2AR31UQ42/6	Cable diagram =V2AR31UQ42BG0+V2AR31UQ42-W2.2		1/19/2023	MKLEPADLO	
&EMA=V2AR31UQ42BG0+V2AR31UQ42/7	Cable diagram =V2AR31UQ42BG0+V2AR31UQ42-W3		1/19/2023	MKLEPADLO	
&EMA=V2AR31UQ42BG0+V2AR31UQ42/8	Cable diagram =V2AR31UQ42BG0+V2AR31UQ42-W3.1		1/19/2023	MKLEPADLO	
&EMA=V2AR31UQ42BG0+V2AR31UQ42/9	Cable diagram =V2AR31UQ42BG0+V2AR31UQ42-W3.2		1/19/2023	MKLEPADLO	

			Date	1/24/2023	Volvo Trucks North America	Valiant TMS	Table of contents : &EMA=V1WC1+V1UC12/1 - &EMA=V2AR31UQ42BG0+V2AR31UQ42/9	Drawing name: =2V01&EFS-EL_KF1	=
			Ed.	MKLEPADLO					+
			Appr		P6700 Framing - Cell 2V01, KF1			Document type: EAB	Project nr: 22-16152
Modification	Date	Name	Original		Replacement of / Replaced by	Scale 1:1			Page 28 / 1630

Table of contents

Column X: An automatically generated page was edited F06_001

Page	Page description	supplementary page field	Date	Edited by	X
&EMA=V2AR31UQ42KF1+V2AR31UQ42/1	Cable diagram =V2AR31UQ42KF1+V2AR31UQ42-W1		1/19/2023	MKLEPADLO	
&EMA=V2AR31UQ42KF1+V2AR31UQ42/2	Cable diagram =V2AR31UQ42KF1+V2AR31UQ42-WF1		1/19/2023	MKLEPADLO	
&EMA=V2AR31UQ42UQ1.1+V2AR31UQ42UQ1.1/1	Cable diagram =V2AR31UQ42UQ1.1+V2AR31UQ42UQ1.1-W1		1/19/2023	MKLEPADLO	
&EMA=V2AR31UQ42UQ1.2+V2AR31UQ42UQ1.2/1	Cable diagram =V2AR31UQ42UQ1.2+V2AR31UQ42UQ1.2-W1		1/19/2023	MKLEPADLO	
&EMA=V2AR31UQ42UQ2.1+V2AR31UQ42UQ2.1/1	Cable diagram =V2AR31UQ42UQ2.1+V2AR31UQ42UQ2.1-W1		1/19/2023	MKLEPADLO	
&EMA=V2AR31UQ42UQ2.2+V2AR31UQ42UQ2.2/1	Cable diagram =V2AR31UQ42UQ2.2+V2AR31UQ42UQ2.2-W1		1/19/2023	MKLEPADLO	
&EMA=V2AR31UQ42UQ3.1+V2AR31UQ42UQ3.1/1	Cable diagram =V2AR31UQ42UQ3.1+V2AR31UQ42UQ3.1-W1		1/19/2023	MKLEPADLO	
&EMA=V2AR31UQ42UQ3.2+V2AR31UQ42UQ3.2/1	Cable diagram =V2AR31UQ42UQ3.2+V2AR31UQ42UQ3.2-W1		1/19/2023	MKLEPADLO	
&EMA=V2AR31XQ41UQ1.1+V2AR31XQ41UQ1.1/1	Cable diagram =V2AR31XQ41UQ1.1+V2AR31XQ41UQ1.1-W1		1/19/2023	MKLEPADLO	
&EMA=V2AR31XQ41UQ1.1+V2AR31XQ41UQ1.1/2	Cable diagram =V2AR31XQ41UQ1.1+V2AR31XQ41UQ1.1-W1.1		1/19/2023	MKLEPADLO	
&EMA=V2AR31XQ41UQ1.1+V2AR31XQ41UQ1.1/3	Cable diagram =V2AR31XQ41UQ1.1+V2AR31XQ41UQ1.1-W1.2		1/19/2023	MKLEPADLO	
&EMA=V2AR32UQ41BG0+V2AR32UQ41/1	Cable diagram =V2AR32UQ41BG0+V2AR32UQ41-W1		1/19/2023	MKLEPADLO	
&EMA=V2AR32UQ41BG0+V2AR32UQ41/2	Cable diagram =V2AR32UQ41BG0+V2AR32UQ41-W1.1		1/19/2023	MKLEPADLO	
&EMA=V2AR32UQ41BG0+V2AR32UQ41/3	Cable diagram =V2AR32UQ41BG0+V2AR32UQ41-W1.2		1/19/2023	MKLEPADLO	
&EMA=V2AR32UQ41BG0+V2AR32UQ41/4	Cable diagram =V2AR32UQ41BG0+V2AR32UQ41-W2		1/19/2023	MKLEPADLO	
&EMA=V2AR32UQ41BG0+V2AR32UQ41/5	Cable diagram =V2AR32UQ41BG0+V2AR32UQ41-W2.1		1/19/2023	MKLEPADLO	
&EMA=V2AR32UQ41BG0+V2AR32UQ41/6	Cable diagram =V2AR32UQ41BG0+V2AR32UQ41-W2.2		1/19/2023	MKLEPADLO	
&EMA=V2AR32UQ41BG0+V2AR32UQ41/7	Cable diagram =V2AR32UQ41BG0+V2AR32UQ41-W3		1/19/2023	MKLEPADLO	
&EMA=V2AR32UQ41KF1+V2AR32UQ41/1	Cable diagram =V2AR32UQ41KF1+V2AR32UQ41-W1		1/19/2023	MKLEPADLO	
&EMA=V2AR32UQ41KF1+V2AR32UQ41/2	Cable diagram =V2AR32UQ41KF1+V2AR32UQ41-WF1		1/19/2023	MKLEPADLO	
&EMA=V2AR32UQ41UQ1.1+V2AR32UQ41UQ1.1/1	Cable diagram =V2AR32UQ41UQ1.1+V2AR32UQ41UQ1.1-W1		1/19/2023	MKLEPADLO	
&EMA=V2AR32UQ41UQ2.1+V2AR32UQ41UQ2.1/1	Cable diagram =V2AR32UQ41UQ2.1+V2AR32UQ41UQ2.1-W1		1/19/2023	MKLEPADLO	
&EMA=V2AR32UQ41UQ2.2+V2AR32UQ41UQ2.2/1	Cable diagram =V2AR32UQ41UQ2.2+V2AR32UQ41UQ2.2-W1		1/19/2023	MKLEPADLO	
&EMA=V2AR32UQ41UQ2.3+V2AR32UQ41UQ2.3/1	Cable diagram =V2AR32UQ41UQ2.3+V2AR32UQ41UQ2.3-W1		1/19/2023	MKLEPADLO	
&EMA=V2AR32UQ41UQ2.4+V2AR32UQ41UQ2.4/1	Cable diagram =V2AR32UQ41UQ2.4+V2AR32UQ41UQ2.4-W1		1/19/2023	MKLEPADLO	
&EMA=V2AR32UQ41UQ3.1+V2AR32UQ41UQ3.1/1	Cable diagram =V2AR32UQ41UQ3.1+V2AR32UQ41UQ3.1-W1		1/19/2023	MKLEPADLO	
&EMA=V2AR32UQ41UQ3.2+V2AR32UQ41UQ3.2/1	Cable diagram =V2AR32UQ41UQ3.2+V2AR32UQ41UQ3.2-W1		1/19/2023	MKLEPADLO	
&EMA=V2AR32UQ41UQ3.3+V2AR32UQ41UQ3.3/1	Cable diagram =V2AR32UQ41UQ3.3+V2AR32UQ41UQ3.3-W1		1/19/2023	MKLEPADLO	
&EMA=V2AR32UQ41UQ4.1+V2AR32UQ41UQ4.1/1	Cable diagram =V2AR32UQ41UQ4.1+V2AR32UQ41UQ4.1-W1		1/19/2023	MKLEPADLO	
&EMA=V2AR32UQ41UQ5.1+V2AR32UQ41UQ5.1/1	Cable diagram =V2AR32UQ41UQ5.1+V2AR32UQ41UQ5.1-W1		1/19/2023	MKLEPADLO	
&EMA=V2AR32UQ41UQ5.2+V2AR32UQ41UQ5.2/1	Cable diagram =V2AR32UQ41UQ5.2+V2AR32UQ41UQ5.2-W1		1/19/2023	MKLEPADLO	
&EMA=V2AR32UQ41UQ6.1+V2AR32UQ41UQ6.1/1	Cable diagram =V2AR32UQ41UQ6.1+V2AR32UQ41UQ6.1-W1		1/19/2023	MKLEPADLO	
&EMA=V2AR32UQ41UQ7.1+V2AR32UQ41UQ7.1/1	Cable diagram =V2AR32UQ41UQ7.1+V2AR32UQ41UQ7.1-W1		1/19/2023	MKLEPADLO	

			Date	1/24/2023	Volvo Trucks North America	Valiant TMS	Table of contents : &EMA=V2AR31UQ42KF1+V2AR31UQ42/1 - &EMA=V2AR32UQ41UQ7.1+V2AR32UQ41UQ7.1/1	Drawing name: =2V01&EFS-EL_KF1	=
			Ed.	MKLEPADLO					+
			Appr		P6700 Framing - Cell 2V01, KF1			Document type: EAB	Project nr: 22-16152
Modification	Date	Name	Original		Replacement of / Replaced by	Scale 1:1			Page 29 / 1630

Table of contents

Column X: An automatically generated page was edited F06_001

Page	Page description	supplementary page field	Date	Edited by	X
&EMA=V2AR32UQ41UQ7.2+V2AR32UQ41UQ7.2/1	Cable diagram =V2AR32UQ41UQ7.2+V2AR32UQ41UQ7.2-W1		1/19/2023	MKLEPADLO	
&EMA=V2AR32UQ42BG0+V2AR32UQ42/1	Cable diagram =V2AR32UQ42BG0+V2AR32UQ42-W1		1/19/2023	MKLEPADLO	
&EMA=V2AR32UQ42BG0+V2AR32UQ42/2	Cable diagram =V2AR32UQ42BG0+V2AR32UQ42-W1.1		1/19/2023	MKLEPADLO	
&EMA=V2AR32UQ42BG0+V2AR32UQ42/3	Cable diagram =V2AR32UQ42BG0+V2AR32UQ42-W1.2		1/19/2023	MKLEPADLO	
&EMA=V2AR32UQ42BG0+V2AR32UQ42/4	Cable diagram =V2AR32UQ42BG0+V2AR32UQ42-W2		1/19/2023	MKLEPADLO	
&EMA=V2AR32UQ42BG0+V2AR32UQ42/5	Cable diagram =V2AR32UQ42BG0+V2AR32UQ42-W2.1		1/19/2023	MKLEPADLO	
&EMA=V2AR32UQ42BG0+V2AR32UQ42/6	Cable diagram =V2AR32UQ42BG0+V2AR32UQ42-W2.2		1/19/2023	MKLEPADLO	
&EMA=V2AR32UQ42BG0+V2AR32UQ42/7	Cable diagram =V2AR32UQ42BG0+V2AR32UQ42-W3		1/19/2023	MKLEPADLO	
&EMA=V2AR32UQ42KF1+V2AR32UQ42/1	Cable diagram =V2AR32UQ42KF1+V2AR32UQ42-W1		1/19/2023	MKLEPADLO	
&EMA=V2AR32UQ42KF1+V2AR32UQ42/2	Cable diagram =V2AR32UQ42KF1+V2AR32UQ42-WF1		1/19/2023	MKLEPADLO	
&EMA=V2AR32UQ42UQ1.1+V2AR32UQ42UQ1.1/1	Cable diagram =V2AR32UQ42UQ1.1+V2AR32UQ42UQ1.1-W1		1/19/2023	MKLEPADLO	
&EMA=V2AR32UQ42UQ1.2+V2AR32UQ42UQ1.2/1	Cable diagram =V2AR32UQ42UQ1.2+V2AR32UQ42UQ1.2-W1		1/19/2023	MKLEPADLO	
&EMA=V2AR32UQ42UQ2.1+V2AR32UQ42UQ2.1/1	Cable diagram =V2AR32UQ42UQ2.1+V2AR32UQ42UQ2.1-W1		1/19/2023	MKLEPADLO	
&EMA=V2AR32UQ42UQ2.2+V2AR32UQ42UQ2.2/1	Cable diagram =V2AR32UQ42UQ2.2+V2AR32UQ42UQ2.2-W1		1/19/2023	MKLEPADLO	
&EMA=V2AR32XQ41UQ1.1+V2AR32XQ41UQ1.1/1	Cable diagram =V2AR32XQ41UQ1.1+V2AR32XQ41UQ1.1-W1		1/19/2023	MKLEPADLO	
&EMA=V2AR32XQ41UQ1.1+V2AR32XQ41UQ1.1/2	Cable diagram =V2AR32XQ41UQ1.1+V2AR32XQ41UQ1.1-W1.1		1/19/2023	MKLEPADLO	
&EMA=V2AR32XQ41UQ1.1+V2AR32XQ41UQ1.1/3	Cable diagram =V2AR32XQ41UQ1.1+V2AR32XQ41UQ1.1-W1.2		1/19/2023	MKLEPADLO	
&EMA=V2AR41UQ41BG0+V2AR41UQ41/1	Cable diagram =V2AR41UQ41BG0+V2AR41UQ41-W1		1/19/2023	MKLEPADLO	
&EMA=V2AR41UQ41BG0+V2AR41UQ41/2	Cable diagram =V2AR41UQ41BG0+V2AR41UQ41-W1.1		1/19/2023	MKLEPADLO	
&EMA=V2AR41UQ41BG0+V2AR41UQ41/3	Cable diagram =V2AR41UQ41BG0+V2AR41UQ41-W1.2		1/19/2023	MKLEPADLO	
&EMA=V2AR41UQ41KF1+V2AR41UQ41/1	Cable diagram =V2AR41UQ41KF1+V2AR41UQ41-W1		1/19/2023	MKLEPADLO	
&EMA=V2AR41UQ41KF1+V2AR41UQ41/2	Cable diagram =V2AR41UQ41KF1+V2AR41UQ41-WF1		1/19/2023	MKLEPADLO	
&EMA=V2AR41UQ41UQ1.1+V2AR41UQ41UQ1.1/1	Cable diagram =V2AR41UQ41UQ1.1+V2AR41UQ41UQ1.1-W1		1/19/2023	MKLEPADLO	
&EMA=V2AR41UQ41UQ1.2+V2AR41UQ41UQ1.2/1	Cable diagram =V2AR41UQ41UQ1.2+V2AR41UQ41UQ1.2-W1		1/19/2023	MKLEPADLO	
&EMA=V2AR41UQ41UQ1.3+V2AR41UQ41UQ1.3/1	Cable diagram =V2AR41UQ41UQ1.3+V2AR41UQ41UQ1.3-W1		1/19/2023	MKLEPADLO	
&EMA=V2AR41UQ41UQ1.4+V2AR41UQ41UQ1.4/1	Cable diagram =V2AR41UQ41UQ1.4+V2AR41UQ41UQ1.4-W1		1/19/2023	MKLEPADLO	
&EMA=V2AR41UQ41UQ2.1+V2AR41UQ41UQ2.1/1	Cable diagram =V2AR41UQ41UQ2.1+V2AR41UQ41UQ2.1-W1		1/19/2023	MKLEPADLO	
&EMA=V2AR41UQ41UQ2.2+V2AR41UQ41UQ2.2/1	Cable diagram =V2AR41UQ41UQ2.2+V2AR41UQ41UQ2.2-W1		1/19/2023	MKLEPADLO	
&EMA=V2AR41UQ41UQ3.1+V2AR41UQ41UQ3.1/1	Cable diagram =V2AR41UQ41UQ3.1+V2AR41UQ41UQ3.1-W1		1/19/2023	MKLEPADLO	
&EMA=V2AR41UQ41UQ3.2+V2AR41UQ41UQ3.2/1	Cable diagram =V2AR41UQ41UQ3.2+V2AR41UQ41UQ3.2-W1		1/19/2023	MKLEPADLO	
&EMA=V2AR41UQ41UQ4.1+V2AR41UQ41UQ4.1/1	Cable diagram =V2AR41UQ41UQ4.1+V2AR41UQ41UQ4.1-W1		1/19/2023	MKLEPADLO	
&EMA=V2AR41UQ41UQ4.2+V2AR41UQ41UQ4.2/1	Cable diagram =V2AR41UQ41UQ4.2+V2AR41UQ41UQ4.2-W1		1/19/2023	MKLEPADLO	
&EMA=V2AR41UQ41UQ4.3+V2AR41UQ41UQ4.3/1	Cable diagram =V2AR41UQ41UQ4.3+V2AR41UQ41UQ4.3-W1		1/19/2023	MKLEPADLO	

			Date	1/24/2023	Volvo Trucks North America	Valiant TMS	Table of contents : &EMA=V2AR32UQ41UQ7.2+V2AR32UQ41UQ7.2/1 - &EMA=V2AR41UQ41UQ4.3+V2AR41UQ41UQ4.3/1	Drawing name: =2V01&EFS-EL_KF1	=	
			Ed.	MKLEPADLO					+	
			Appr		P6700 Framing - Cell 2V01, KF1	Scale 1:1		Document type: EAB	Project nr: 22-16152	Page 30 / 1630
Modification	Date	Name	Original		Replacement of / Replaced by					

Table of contents

Column X: An automatically generated page was edited

F06_001

Page	Page description	supplementary page field	Date	Edited by	X
&EMA=V2AR41UQ41UQ4.4+V2AR41UQ41UQ4.4/1	Cable diagram =V2AR41UQ41UQ4.4+V2AR41UQ41UQ4.4-W1		1/19/2023	MKLEPADLO	
&EMA=V2AR41UQ41UQ5.1+V2AR41UQ41UQ5.1/1	Cable diagram =V2AR41UQ41UQ5.1+V2AR41UQ41UQ5.1-W1		1/19/2023	MKLEPADLO	
&EMA=V2AR41UQ41UQ5.2+V2AR41UQ41UQ5.2/1	Cable diagram =V2AR41UQ41UQ5.2+V2AR41UQ41UQ5.2-W1		1/19/2023	MKLEPADLO	
&EMA=V2AR41UQ41UQ6.1+V2AR41UQ41UQ6.1/1	Cable diagram =V2AR41UQ41UQ6.1+V2AR41UQ41UQ6.1-W1		1/19/2023	MKLEPADLO	
&EMA=V2AR41UQ41UQ7.1+V2AR41UQ41UQ7.1/1	Cable diagram =V2AR41UQ41UQ7.1+V2AR41UQ41UQ7.1-W1		1/19/2023	MKLEPADLO	
&EMA=V2AR41UQ41UQ7.2+V2AR41UQ41UQ7.2/1	Cable diagram =V2AR41UQ41UQ7.2+V2AR41UQ41UQ7.2-W1		1/19/2023	MKLEPADLO	
&EMA=V2AR41UQ41UQ8.1+V2AR41UQ41UQ8.1/1	Cable diagram =V2AR41UQ41UQ8.1+V2AR41UQ41UQ8.1-W1		1/19/2023	MKLEPADLO	
&EMA=V2AR42UQ41BG0+V2AR42UQ41/1	Cable diagram =V2AR42UQ41BG0+V2AR42UQ41-W1		1/19/2023	MKLEPADLO	
&EMA=V2AR42UQ41BG0+V2AR42UQ41/2	Cable diagram =V2AR42UQ41BG0+V2AR42UQ41-W1.1		1/19/2023	MKLEPADLO	
&EMA=V2AR42UQ41BG0+V2AR42UQ41/3	Cable diagram =V2AR42UQ41BG0+V2AR42UQ41-W1.2		1/19/2023	MKLEPADLO	
&EMA=V2AR42UQ41KF1+V2AR42UQ41/1	Cable diagram =V2AR42UQ41KF1+V2AR42UQ41-W1		1/19/2023	MKLEPADLO	
&EMA=V2AR42UQ41KF1+V2AR42UQ41/2	Cable diagram =V2AR42UQ41KF1+V2AR42UQ41-WF1		1/19/2023	MKLEPADLO	
&EMA=V2AR42UQ41UQ1.1+V2AR42UQ41UQ1.1/1	Cable diagram =V2AR42UQ41UQ1.1+V2AR42UQ41UQ1.1-W1		1/19/2023	MKLEPADLO	
&EMA=V2AR42UQ41UQ1.2+V2AR42UQ41UQ1.2/1	Cable diagram =V2AR42UQ41UQ1.2+V2AR42UQ41UQ1.2-W1		1/19/2023	MKLEPADLO	
&EMA=V2AR42UQ41UQ1.3+V2AR42UQ41UQ1.3/1	Cable diagram =V2AR42UQ41UQ1.3+V2AR42UQ41UQ1.3-W1		1/19/2023	MKLEPADLO	
&EMA=V2AR42UQ41UQ1.4+V2AR42UQ41UQ1.4/1	Cable diagram =V2AR42UQ41UQ1.4+V2AR42UQ41UQ1.4-W1		1/19/2023	MKLEPADLO	
&EMA=V2AR42UQ42BG0+V2AR42UQ42/1	Cable diagram =V2AR42UQ42BG0+V2AR42UQ42-W1		1/19/2023	MKLEPADLO	
&EMA=V2AR42UQ42BG0+V2AR42UQ42/2	Cable diagram =V2AR42UQ42BG0+V2AR42UQ42-W1.1		1/19/2023	MKLEPADLO	
&EMA=V2AR42UQ42BG0+V2AR42UQ42/3	Cable diagram =V2AR42UQ42BG0+V2AR42UQ42-W1.2		1/19/2023	MKLEPADLO	
&EMA=V2AR42UQ42KF1+V2AR42UQ42/1	Cable diagram =V2AR42UQ42KF1+V2AR42UQ42-W1		1/19/2023	MKLEPADLO	
&EMA=V2AR42UQ42KF1+V2AR42UQ42/2	Cable diagram =V2AR42UQ42KF1+V2AR42UQ42-WF1		1/19/2023	MKLEPADLO	
&EMA=V2AR42UQ42UQ1.1+V2AR42UQ42UQ1.1/1	Cable diagram =V2AR42UQ42UQ1.1+V2AR42UQ42UQ1.1-W1		1/19/2023	MKLEPADLO	
&EMA=V2AR42UQ42UQ1.2+V2AR42UQ42UQ1.2/1	Cable diagram =V2AR42UQ42UQ1.2+V2AR42UQ42UQ1.2-W1		1/19/2023	MKLEPADLO	
&EMA=V2AR42UQ42UQ1.3+V2AR42UQ42UQ1.3/1	Cable diagram =V2AR42UQ42UQ1.3+V2AR42UQ42UQ1.3-W1		1/19/2023	MKLEPADLO	
&EMA=V2AR42UQ42UQ1.4+V2AR42UQ42UQ1.4/1	Cable diagram =V2AR42UQ42UQ1.4+V2AR42UQ42UQ1.4-W1		1/19/2023	MKLEPADLO	
&EMA=V2AR42UQ42UQ1.5+V2AR42UQ42UQ1.5/1	Cable diagram =V2AR42UQ42UQ1.5+V2AR42UQ42UQ1.5-W1		1/19/2023	MKLEPADLO	
&EMA=V2AR43UQ41BG0+V2AR43UQ41/1	Cable diagram =V2AR43UQ41BG0+V2AR43UQ41-W1		1/19/2023	MKLEPADLO	
&EMA=V2AR43UQ41BG0+V2AR43UQ41/2	Cable diagram =V2AR43UQ41BG0+V2AR43UQ41-W1.1		1/19/2023	MKLEPADLO	
&EMA=V2AR43UQ41BG0+V2AR43UQ41/3	Cable diagram =V2AR43UQ41BG0+V2AR43UQ41-W1.2		1/19/2023	MKLEPADLO	
&EMA=V2AR43UQ41KF1+V2AR43UQ41/1	Cable diagram =V2AR43UQ41KF1+V2AR43UQ41-W1		1/19/2023	MKLEPADLO	
&EMA=V2AR43UQ41KF1+V2AR43UQ41/2	Cable diagram =V2AR43UQ41KF1+V2AR43UQ41-WF1		1/19/2023	MKLEPADLO	
&EMA=V2AR43UQ41UQ1.1+V2AR43UQ41UQ1.1/1	Cable diagram =V2AR43UQ41UQ1.1+V2AR43UQ41UQ1.1-W1		1/19/2023	MKLEPADLO	
&EMA=V2AR43UQ41UQ1.2+V2AR43UQ41UQ1.2/1	Cable diagram =V2AR43UQ41UQ1.2+V2AR43UQ41UQ1.2-W1		1/19/2023	MKLEPADLO	

			Date	1/24/2023	Volvo Trucks North America		Valiant TMS	Table of contents : &EMA=V2AR41UQ41UQ4.4+V2AR41UQ41UQ4.4/1 - &EMA=V2AR43UQ41UQ1.2+V2AR43UQ41UQ1.2/1	Drawing name: =2V01&EFS-EL_KF1	=
			Ed.	MKLEPADLO						+
			Appr		P6700 Framing - Cell 2V01, KF1		Scale 1:1		Document type: EAB	Project nr: 22-16152
Modification	Date	Name	Original		Replacement of	Replaced by				Page 31 / 1630

Table of contents

Column X: An automatically generated page was edited F06_001

Page	Page description	supplementary page field	Date	Edited by	X
&EMA=V2AR43UQ41UQ2.1+V2AR43UQ41UQ2.1/1	Cable diagram =V2AR43UQ41UQ2.1+V2AR43UQ41UQ2.1-W1		1/19/2023	MKLEPADLO	
&EMA=V2AR43UQ41UQ2.2+V2AR43UQ41UQ2.2/1	Cable diagram =V2AR43UQ41UQ2.2+V2AR43UQ41UQ2.2-W1		1/19/2023	MKLEPADLO	
&EMA=V2AR43UQ41UQ2.3+V2AR43UQ41UQ2.3/1	Cable diagram =V2AR43UQ41UQ2.3+V2AR43UQ41UQ2.3-W1		1/19/2023	MKLEPADLO	
&EMA=V2AR43UQ41UQ3.1+V2AR43UQ41UQ3.1/1	Cable diagram =V2AR43UQ41UQ3.1+V2AR43UQ41UQ3.1-W1		1/19/2023	MKLEPADLO	
&EMA=V2AR43UQ41UQ4.1+V2AR43UQ41UQ4.1/1	Cable diagram =V2AR43UQ41UQ4.1+V2AR43UQ41UQ4.1-W1		1/19/2023	MKLEPADLO	
&EMA=V2AR43UQ41UQ4.2+V2AR43UQ41UQ4.2/1	Cable diagram =V2AR43UQ41UQ4.2+V2AR43UQ41UQ4.2-W1		1/19/2023	MKLEPADLO	
&EMA=V2AR43UQ41UQ4.3+V2AR43UQ41UQ4.3/1	Cable diagram =V2AR43UQ41UQ4.3+V2AR43UQ41UQ4.3-W1		1/19/2023	MKLEPADLO	
&EMA=V2AR43UQ42BG0+V2AR43UQ42/1	Cable diagram =V2AR43UQ42BG0+V2AR43UQ42-W1		1/19/2023	MKLEPADLO	
&EMA=V2AR43UQ42BG0+V2AR43UQ42/2	Cable diagram =V2AR43UQ42BG0+V2AR43UQ42-W1.1		1/19/2023	MKLEPADLO	
&EMA=V2AR43UQ42BG0+V2AR43UQ42/3	Cable diagram =V2AR43UQ42BG0+V2AR43UQ42-W1.2		1/19/2023	MKLEPADLO	
&EMA=V2AR43UQ42BG0+V2AR43UQ42/4	Cable diagram =V2AR43UQ42BG0+V2AR43UQ42-W2		1/19/2023	MKLEPADLO	
&EMA=V2AR43UQ42KF1+V2AR43UQ42/1	Cable diagram =V2AR43UQ42KF1+V2AR43UQ42-W1		1/19/2023	MKLEPADLO	
&EMA=V2AR43UQ42KF1+V2AR43UQ42/2	Cable diagram =V2AR43UQ42KF1+V2AR43UQ42-WF1		1/19/2023	MKLEPADLO	
&EMA=V2AR43UQ42UQ1.1+V2AR43UQ42UQ1.1/1	Cable diagram =V2AR43UQ42UQ1.1+V2AR43UQ42UQ1.1-W1		1/19/2023	MKLEPADLO	
&EMA=V2AR43UQ42UQ2.1+V2AR43UQ42UQ2.1/1	Cable diagram =V2AR43UQ42UQ2.1+V2AR43UQ42UQ2.1-W1		1/19/2023	MKLEPADLO	
&EMA=V2AR43UQ42UQ2.2+V2AR43UQ42UQ2.2/1	Cable diagram =V2AR43UQ42UQ2.2+V2AR43UQ42UQ2.2-W1		1/19/2023	MKLEPADLO	
&EMA=V2AR43UQ42UQ3.1+V2AR43UQ42UQ3.1/1	Cable diagram =V2AR43UQ42UQ3.1+V2AR43UQ42UQ3.1-W1		1/19/2023	MKLEPADLO	
&EMA=V2AR43UQ42UQ4.1+V2AR43UQ42UQ4.1/1	Cable diagram =V2AR43UQ42UQ4.1+V2AR43UQ42UQ4.1-W1		1/19/2023	MKLEPADLO	
&EMA=V2AR43UQ42UQ4.2+V2AR43UQ42UQ4.2/1	Cable diagram =V2AR43UQ42UQ4.2+V2AR43UQ42UQ4.2-W1		1/19/2023	MKLEPADLO	
&EMA=V2AR43UQ42UQ5.1+V2AR43UQ42UQ5.1/1	Cable diagram =V2AR43UQ42UQ5.1+V2AR43UQ42UQ5.1-W1		1/19/2023	MKLEPADLO	
&EMA=V2AR43UQ42UQ5.2+V2AR43UQ42UQ5.2/1	Cable diagram =V2AR43UQ42UQ5.2+V2AR43UQ42UQ5.2-W1		1/19/2023	MKLEPADLO	
&EMA=V2AR43UQ42UQ6.1+V2AR43UQ42UQ6.1/1	Cable diagram =V2AR43UQ42UQ6.1+V2AR43UQ42UQ6.1-W1		1/19/2023	MKLEPADLO	
&EMA=V2AR43UQ42UQ6.2+V2AR43UQ42UQ6.2/1	Cable diagram =V2AR43UQ42UQ6.2+V2AR43UQ42UQ6.2-W1		1/19/2023	MKLEPADLO	
&EMA=V2AR43UQ42UQ6.3+V2AR43UQ42UQ6.3/1	Cable diagram =V2AR43UQ42UQ6.3+V2AR43UQ42UQ6.3-W1		1/19/2023	MKLEPADLO	
&EMA=V2AR43UQ42UQ7.1+V2AR43UQ42UQ7.1/1	Cable diagram =V2AR43UQ42UQ7.1+V2AR43UQ42UQ7.1-W1		1/19/2023	MKLEPADLO	
&EMA=V2AR43UQ42UQ7.2+V2AR43UQ42UQ7.2/1	Cable diagram =V2AR43UQ42UQ7.2+V2AR43UQ42UQ7.2-W1		1/19/2023	MKLEPADLO	
&EMA=V2AR43UQ42UQ8.1+V2AR43UQ42UQ8.1/1	Cable diagram =V2AR43UQ42UQ8.1+V2AR43UQ42UQ8.1-W1		1/19/2023	MKLEPADLO	
&EMA=V2AR43UQ42UQ8.2+V2AR43UQ42UQ8.2/1	Cable diagram =V2AR43UQ42UQ8.2+V2AR43UQ42UQ8.2-W1		1/19/2023	MKLEPADLO	
&EMA=V2AR43UQ42UQ9.1+V2AR43UQ42UQ9.1/1	Cable diagram =V2AR43UQ42UQ9.1+V2AR43UQ42UQ9.1-W1		1/19/2023	MKLEPADLO	
&EMA=V2AR43UQ42UQ9.2+V2AR43UQ42UQ9.2/1	Cable diagram =V2AR43UQ42UQ9.2+V2AR43UQ42UQ9.2-W1		1/19/2023	MKLEPADLO	
&EMA=V2AR43UQ43BG0+V2AR43UQ43/1	Cable diagram =V2AR43UQ43BG0+V2AR43UQ43-W1		1/19/2023	MKLEPADLO	
&EMA=V2AR43UQ43BG0+V2AR43UQ43/2	Cable diagram =V2AR43UQ43BG0+V2AR43UQ43-W1.1		1/19/2023	MKLEPADLO	
&EMA=V2AR43UQ43BG0+V2AR43UQ43/3	Cable diagram =V2AR43UQ43BG0+V2AR43UQ43-W1.2		1/19/2023	MKLEPADLO	

			Date	1/24/2023	Volvo Trucks North America	Valiant TMS	Table of contents : &EMA=V2AR43UQ41UQ2.1+V2AR43UQ41UQ2.1/1 - &EMA=V2AR43UQ43BG0+V2AR43UQ43/3	Drawing name: =2V01&EFS-EL_KF1	=
			Ed.	MKLEPADLO					+
			Appr		P6700 Framing - Cell 2V01, KF1			Document type: EAB	Project nr: 22-16152
Modification	Date	Name	Original		Replacement of / Replaced by	Scale 1:1			Page 32 / 1630

Table of contents

Column X: An automatically generated page was edited F06_001

Page	Page description	supplementary page field	Date	Edited by	X
&EMA=V2AR43UQ43KF1+V2AR43UQ43/1	Cable diagram =V2AR43UQ43KF1+V2AR43UQ43-W1		1/19/2023	MKLEPADLO	
&EMA=V2AR43UQ43KF1+V2AR43UQ43/2	Cable diagram =V2AR43UQ43KF1+V2AR43UQ43-WF1		1/19/2023	MKLEPADLO	
&EMA=V2AR43UQ43UQ1.1+V2AR43UQ43UQ1.1/1	Cable diagram =V2AR43UQ43UQ1.1+V2AR43UQ43UQ1.1-W1		1/19/2023	MKLEPADLO	
&EMA=V2AR43UQ43UQ2.1+V2AR43UQ43UQ2.1/1	Cable diagram =V2AR43UQ43UQ2.1+V2AR43UQ43UQ2.1-W1		1/19/2023	MKLEPADLO	
&EMA=V2AR43UQ43UQ2.2+V2AR43UQ43UQ2.2/1	Cable diagram =V2AR43UQ43UQ2.2+V2AR43UQ43UQ2.2-W1		1/19/2023	MKLEPADLO	
&EMA=V2AR43UQ43UQ2.3+V2AR43UQ43UQ2.3/1	Cable diagram =V2AR43UQ43UQ2.3+V2AR43UQ43UQ2.3-W1		1/19/2023	MKLEPADLO	
&EMA=V2AR43UQ43UQ3.1+V2AR43UQ43UQ3.1/1	Cable diagram =V2AR43UQ43UQ3.1+V2AR43UQ43UQ3.1-W1		1/19/2023	MKLEPADLO	
&EMA=V2AR43UQ43UQ4.1+V2AR43UQ43UQ4.1/1	Cable diagram =V2AR43UQ43UQ4.1+V2AR43UQ43UQ4.1-W1		1/19/2023	MKLEPADLO	
&EMA=V2AR43UQ43UQ4.2+V2AR43UQ43UQ4.2/1	Cable diagram =V2AR43UQ43UQ4.2+V2AR43UQ43UQ4.2-W1		1/19/2023	MKLEPADLO	
&EMA=V2AR43UQ43UQ4.3+V2AR43UQ43UQ4.3/1	Cable diagram =V2AR43UQ43UQ4.3+V2AR43UQ43UQ4.3-W1		1/19/2023	MKLEPADLO	
&EMA=V2AR43UQ43UQ4.4+V2AR43UQ43UQ4.4/1	Cable diagram =V2AR43UQ43UQ4.4+V2AR43UQ43UQ4.4-W1		1/19/2023	MKLEPADLO	
&EMA=V2AR43UQ43UQ4.5+V2AR43UQ43UQ4.5/1	Cable diagram =V2AR43UQ43UQ4.5+V2AR43UQ43UQ4.5-W1		1/19/2023	MKLEPADLO	
&EMA=V2AR44UQ41BG0+V2AR44UQ41/1	Cable diagram =V2AR44UQ41BG0+V2AR44UQ41-W1		1/19/2023	MKLEPADLO	
&EMA=V2AR44UQ41BG0+V2AR44UQ41/2	Cable diagram =V2AR44UQ41BG0+V2AR44UQ41-W1.1		1/19/2023	MKLEPADLO	
&EMA=V2AR44UQ41BG0+V2AR44UQ41/3	Cable diagram =V2AR44UQ41BG0+V2AR44UQ41-W1.2		1/19/2023	MKLEPADLO	
&EMA=V2AR44UQ41KF1+V2AR44UQ41/1	Cable diagram =V2AR44UQ41KF1+V2AR44UQ41-W1		1/19/2023	MKLEPADLO	
&EMA=V2AR44UQ41KF1+V2AR44UQ41/2	Cable diagram =V2AR44UQ41KF1+V2AR44UQ41-WF1		1/19/2023	MKLEPADLO	
&EMA=V2AR44UQ41UQ1.1+V2AR44UQ41UQ1.1/1	Cable diagram =V2AR44UQ41UQ1.1+V2AR44UQ41UQ1.1-W1		1/19/2023	MKLEPADLO	
&EMA=V2AR44UQ41UQ1.2+V2AR44UQ41UQ1.2/1	Cable diagram =V2AR44UQ41UQ1.2+V2AR44UQ41UQ1.2-W1		1/19/2023	MKLEPADLO	
&EMA=V2AR44UQ41UQ2.1+V2AR44UQ41UQ2.1/1	Cable diagram =V2AR44UQ41UQ2.1+V2AR44UQ41UQ2.1-W1		1/19/2023	MKLEPADLO	
&EMA=V2AR44UQ41UQ2.2+V2AR44UQ41UQ2.2/1	Cable diagram =V2AR44UQ41UQ2.2+V2AR44UQ41UQ2.2-W1		1/19/2023	MKLEPADLO	
&EMA=V2AR44UQ41UQ2.3+V2AR44UQ41UQ2.3/1	Cable diagram =V2AR44UQ41UQ2.3+V2AR44UQ41UQ2.3-W1		1/19/2023	MKLEPADLO	
&EMA=V2AR44UQ41UQ3.1+V2AR44UQ41UQ3.1/1	Cable diagram =V2AR44UQ41UQ3.1+V2AR44UQ41UQ3.1-W1		1/19/2023	MKLEPADLO	
&EMA=V2AR44UQ41UQ4.1+V2AR44UQ41UQ4.1/1	Cable diagram =V2AR44UQ41UQ4.1+V2AR44UQ41UQ4.1-W1		1/19/2023	MKLEPADLO	
&EMA=V2AR44UQ41UQ4.2+V2AR44UQ41UQ4.2/1	Cable diagram =V2AR44UQ41UQ4.2+V2AR44UQ41UQ4.2-W1		1/19/2023	MKLEPADLO	
&EMA=V2AR44UQ41UQ4.3+V2AR44UQ41UQ4.3/1	Cable diagram =V2AR44UQ41UQ4.3+V2AR44UQ41UQ4.3-W1		1/19/2023	MKLEPADLO	
&EMA=V2AR44UQ42BG0+V2AR44UQ42/1	Cable diagram =V2AR44UQ42BG0+V2AR44UQ42-W1		1/19/2023	MKLEPADLO	
&EMA=V2AR44UQ42BG0+V2AR44UQ42/2	Cable diagram =V2AR44UQ42BG0+V2AR44UQ42-W1.1		1/19/2023	MKLEPADLO	
&EMA=V2AR44UQ42BG0+V2AR44UQ42/3	Cable diagram =V2AR44UQ42BG0+V2AR44UQ42-W1.2		1/19/2023	MKLEPADLO	
&EMA=V2AR44UQ42BG0+V2AR44UQ42/4	Cable diagram =V2AR44UQ42BG0+V2AR44UQ42-W2		1/19/2023	MKLEPADLO	
&EMA=V2AR44UQ42KF1+V2AR44UQ42/1	Cable diagram =V2AR44UQ42KF1+V2AR44UQ42-W1		1/19/2023	MKLEPADLO	
&EMA=V2AR44UQ42KF1+V2AR44UQ42/2	Cable diagram =V2AR44UQ42KF1+V2AR44UQ42-WF1		1/19/2023	MKLEPADLO	
&EMA=V2AR44UQ42UQ1.1+V2AR44UQ42UQ1.1/1	Cable diagram =V2AR44UQ42UQ1.1+V2AR44UQ42UQ1.1-W1		1/19/2023	MKLEPADLO	

Table of contents

Column X: An automatically generated page was edited

F06_001

Page	Page description	supplementary page field	Date	Edited by	X
&EMA=V2AR44UQ42UQ2.1+V2AR44UQ42UQ2.1/1	Cable diagram =V2AR44UQ42UQ2.1+V2AR44UQ42UQ2.1-W1		1/19/2023	MKLEPADLO	
&EMA=V2AR44UQ42UQ2.2+V2AR44UQ42UQ2.2/1	Cable diagram =V2AR44UQ42UQ2.2+V2AR44UQ42UQ2.2-W1		1/19/2023	MKLEPADLO	
&EMA=V2AR44UQ42UQ3.1+V2AR44UQ42UQ3.1/1	Cable diagram =V2AR44UQ42UQ3.1+V2AR44UQ42UQ3.1-W1		1/19/2023	MKLEPADLO	
&EMA=V2AR44UQ42UQ4.1+V2AR44UQ42UQ4.1/1	Cable diagram =V2AR44UQ42UQ4.1+V2AR44UQ42UQ4.1-W1		1/19/2023	MKLEPADLO	
&EMA=V2AR44UQ42UQ4.2+V2AR44UQ42UQ4.2/1	Cable diagram =V2AR44UQ42UQ4.2+V2AR44UQ42UQ4.2-W1		1/19/2023	MKLEPADLO	
&EMA=V2AR44UQ42UQ5.1+V2AR44UQ42UQ5.1/1	Cable diagram =V2AR44UQ42UQ5.1+V2AR44UQ42UQ5.1-W1		1/19/2023	MKLEPADLO	
&EMA=V2AR44UQ42UQ5.2+V2AR44UQ42UQ5.2/1	Cable diagram =V2AR44UQ42UQ5.2+V2AR44UQ42UQ5.2-W1		1/19/2023	MKLEPADLO	
&EMA=V2AR44UQ42UQ6.1+V2AR44UQ42UQ6.1/1	Cable diagram =V2AR44UQ42UQ6.1+V2AR44UQ42UQ6.1-W1		1/19/2023	MKLEPADLO	
&EMA=V2AR44UQ42UQ6.2+V2AR44UQ42UQ6.2/1	Cable diagram =V2AR44UQ42UQ6.2+V2AR44UQ42UQ6.2-W1		1/19/2023	MKLEPADLO	
&EMA=V2AR44UQ42UQ6.3+V2AR44UQ42UQ6.3/1	Cable diagram =V2AR44UQ42UQ6.3+V2AR44UQ42UQ6.3-W1		1/19/2023	MKLEPADLO	
&EMA=V2AR44UQ42UQ7.1+V2AR44UQ42UQ7.1/1	Cable diagram =V2AR44UQ42UQ7.1+V2AR44UQ42UQ7.1-W1		1/19/2023	MKLEPADLO	
&EMA=V2AR44UQ42UQ7.2+V2AR44UQ42UQ7.2/1	Cable diagram =V2AR44UQ42UQ7.2+V2AR44UQ42UQ7.2-W1		1/19/2023	MKLEPADLO	
&EMA=V2AR44UQ42UQ8.1+V2AR44UQ42UQ8.1/1	Cable diagram =V2AR44UQ42UQ8.1+V2AR44UQ42UQ8.1-W1		1/19/2023	MKLEPADLO	
&EMA=V2AR44UQ42UQ8.2+V2AR44UQ42UQ8.2/1	Cable diagram =V2AR44UQ42UQ8.2+V2AR44UQ42UQ8.2-W1		1/19/2023	MKLEPADLO	
&EMA=V2AR44UQ42UQ9.1+V2AR44UQ42UQ9.1/1	Cable diagram =V2AR44UQ42UQ9.1+V2AR44UQ42UQ9.1-W1		1/19/2023	MKLEPADLO	
&EMA=V2AR44UQ42UQ9.2+V2AR44UQ42UQ9.2/1	Cable diagram =V2AR44UQ42UQ9.2+V2AR44UQ42UQ9.2-W1		1/19/2023	MKLEPADLO	
&EMA=V2AR44UQ43BG0+V2AR44UQ43/1	Cable diagram =V2AR44UQ43BG0+V2AR44UQ43-W1		1/19/2023	MKLEPADLO	
&EMA=V2AR44UQ43BG0+V2AR44UQ43/2	Cable diagram =V2AR44UQ43BG0+V2AR44UQ43-W1.1		1/19/2023	MKLEPADLO	
&EMA=V2AR44UQ43BG0+V2AR44UQ43/3	Cable diagram =V2AR44UQ43BG0+V2AR44UQ43-W1.2		1/19/2023	MKLEPADLO	
&EMA=V2AR44UQ43KF1+V2AR44UQ43/1	Cable diagram =V2AR44UQ43KF1+V2AR44UQ43-W1		1/19/2023	MKLEPADLO	
&EMA=V2AR44UQ43KF1+V2AR44UQ43/2	Cable diagram =V2AR44UQ43KF1+V2AR44UQ43-WF1		1/19/2023	MKLEPADLO	
&EMA=V2AR44UQ43UQ1.1+V2AR44UQ43UQ1.1/1	Cable diagram =V2AR44UQ43UQ1.1+V2AR44UQ43UQ1.1-W1		1/19/2023	MKLEPADLO	
&EMA=V2AR44UQ43UQ2.1+V2AR44UQ43UQ2.1/1	Cable diagram =V2AR44UQ43UQ2.1+V2AR44UQ43UQ2.1-W1		1/19/2023	MKLEPADLO	
&EMA=V2AR44UQ43UQ2.2+V2AR44UQ43UQ2.2/1	Cable diagram =V2AR44UQ43UQ2.2+V2AR44UQ43UQ2.2-W1		1/19/2023	MKLEPADLO	
&EMA=V2AR44UQ43UQ2.3+V2AR44UQ43UQ2.3/1	Cable diagram =V2AR44UQ43UQ2.3+V2AR44UQ43UQ2.3-W1		1/19/2023	MKLEPADLO	
&EMA=V2AR44UQ43UQ3.1+V2AR44UQ43UQ3.1/1	Cable diagram =V2AR44UQ43UQ3.1+V2AR44UQ43UQ3.1-W1		1/19/2023	MKLEPADLO	
&EMA=V2AR44UQ43UQ4.1+V2AR44UQ43UQ4.1/1	Cable diagram =V2AR44UQ43UQ4.1+V2AR44UQ43UQ4.1-W1		1/19/2023	MKLEPADLO	
&EMA=V2AR44UQ43UQ4.2+V2AR44UQ43UQ4.2/1	Cable diagram =V2AR44UQ43UQ4.2+V2AR44UQ43UQ4.2-W1		1/19/2023	MKLEPADLO	
&EMA=V2AR44UQ43UQ4.3+V2AR44UQ43UQ4.3/1	Cable diagram =V2AR44UQ43UQ4.3+V2AR44UQ43UQ4.3-W1		1/19/2023	MKLEPADLO	
&EMA=V2AR44UQ43UQ4.4+V2AR44UQ43UQ4.4/1	Cable diagram =V2AR44UQ43UQ4.4+V2AR44UQ43UQ4.4-W1		1/19/2023	MKLEPADLO	
&EMA=V2AR44UQ43UQ4.5+V2AR44UQ43UQ4.5/1	Cable diagram =V2AR44UQ43UQ4.5+V2AR44UQ43UQ4.5-W1		1/19/2023	MKLEPADLO	
&EMA=V2UQ31BG0+V2UQ31/1	Cable diagram =V2UQ31BG0+V2UQ31-W1		1/19/2023	MKLEPADLO	
&EMA=V2UQ31BG0+V2UQ31/2	Cable diagram =V2UQ31BG0+V2UQ31-W1.1		1/19/2023	MKLEPADLO	

			Date	1/24/2023	Volvo Trucks North America	Valiant TMS	Table of contents : &EMA=V2AR44UQ42UQ2.1+V2AR44UQ42UQ2.1/1 - &EMA=V2UQ31BG0+V2UQ31/2	Drawing name: =2V01&EFS-EL_KF1	=
			Ed.	MKLEPADLO					+
			Appr		P6700 Framing - Cell 2V01, KF1	Scale 1:1		Document type: EAB	Project nr: 22-16152
Modification	Date	Name	Original		Replacement of / Replaced by				Page 34 / 1630

Table of contents

Column X: An automatically generated page was edited

F06_001

Page	Page description	supplementary page field	Date	Edited by	X
&EMA=V2UQ31BG0+V2UQ31/3	Cable diagram =V2UQ31BG0+V2UQ31-W1.2		1/19/2023	MKLEPADLO	
&EMA=V2UQ31BG0+V2UQ31/4	Cable diagram =V2UQ31BG0+V2UQ31-W2		1/19/2023	MKLEPADLO	
&EMA=V2UQ31BG0+V2UQ31/5	Cable diagram =V2UQ31BG0+V2UQ31-W2.1		1/19/2023	MKLEPADLO	
&EMA=V2UQ31BG0+V2UQ31/6	Cable diagram =V2UQ31BG0+V2UQ31-W2.2		1/19/2023	MKLEPADLO	
&EMA=V2UQ31BG0+V2UQ31/7	Cable diagram =V2UQ31BG0+V2UQ31-W3		1/19/2023	MKLEPADLO	
&EMA=V2UQ31BG0+V2UQ31/8	Cable diagram =V2UQ31BG0+V2UQ31-W3.1		1/19/2023	MKLEPADLO	
&EMA=V2UQ31BG0+V2UQ31/9	Cable diagram =V2UQ31BG0+V2UQ31-W3.2		1/19/2023	MKLEPADLO	
&EMA=V2UQ31BG0+V2UQ31/10	Cable diagram =V2UQ31BG0+V2UQ31-W4		1/19/2023	MKLEPADLO	
&EMA=V2UQ31BG0+V2UQ31/11	Cable diagram =V2UQ31BG0+V2UQ31-W4.1		1/19/2023	MKLEPADLO	
&EMA=V2UQ31BG0+V2UQ31/12	Cable diagram =V2UQ31BG0+V2UQ31-W4.2		1/19/2023	MKLEPADLO	
&EMA=V2UQ31KF1+V2UQ31/1	Cable diagram =V2UQ31KF1+V2UQ31-W1.1		1/19/2023	MKLEPADLO	
&EMA=V2UQ31KF2+V2UQ31/1	Cable diagram =V2UQ31KF2+V2UQ31-W1.2		1/19/2023	MKLEPADLO	
&EMA=V2UQ31KF2+V2UQ31/2	Cable diagram =V2UQ31KF2+V2UQ31-WF2		1/19/2023	MKLEPADLO	
&EMA=V2UQ31UQ1.1+V2UQ31UQ1.1/1	Cable diagram =V2UQ31UQ1.1+V2UQ31UQ1.1-W1		1/19/2023	MKLEPADLO	
&EMA=V2UQ31UQ1.2+V2UQ31UQ1.2/1	Cable diagram =V2UQ31UQ1.2+V2UQ31UQ1.2-W1		1/19/2023	MKLEPADLO	
&EMA=V2UQ31UQ1.3+V2UQ31UQ1.3/1	Cable diagram =V2UQ31UQ1.3+V2UQ31UQ1.3-W1		1/19/2023	MKLEPADLO	
&EMA=V2UQ31UQ2.1+V2UQ31UQ2.1/1	Cable diagram =V2UQ31UQ2.1+V2UQ31UQ2.1-W1		1/19/2023	MKLEPADLO	
&EMA=V2UQ31UQ3.1+V2UQ31UQ3.1/1	Cable diagram =V2UQ31UQ3.1+V2UQ31UQ3.1-W1		1/19/2023	MKLEPADLO	
&EMA=V2UQ31UQ4.1+V2UQ31UQ4.1/1	Cable diagram =V2UQ31UQ4.1+V2UQ31UQ4.1-W1		1/19/2023	MKLEPADLO	
&EMA=V2UQ31UQ5.1+V2UQ31UQ5.1/1	Cable diagram =V2UQ31UQ5.1+V2UQ31UQ5.1-W1		1/19/2023	MKLEPADLO	
&EMA=V2UQ31UQ6.1+V2UQ31UQ6.1/1	Cable diagram =V2UQ31UQ6.1+V2UQ31UQ6.1-W1		1/19/2023	MKLEPADLO	
&EMA=V2UQ31UQ7.1+V2UQ31UQ7.1/1	Cable diagram =V2UQ31UQ7.1+V2UQ31UQ7.1-W1		1/19/2023	MKLEPADLO	
&EMA=V2UQ31UQ8.1+V2UQ31UQ8.1/1	Cable diagram =V2UQ31UQ8.1+V2UQ31UQ8.1-W1		1/19/2023	MKLEPADLO	
&EMA=V2UQ31UQ9.1+V2UQ31UQ9.1/1	Cable diagram =V2UQ31UQ9.1+V2UQ31UQ9.1-W1		1/19/2023	MKLEPADLO	
&EMA=V2UQ31UQ10.1+V2UQ31UQ10.1/1	Cable diagram =V2UQ31UQ10.1+V2UQ31UQ10.1-W1		1/19/2023	MKLEPADLO	
&EMA=V2UQ31UQ10.2+V2UQ31UQ10.2/1	Cable diagram =V2UQ31UQ10.2+V2UQ31UQ10.2-W1		1/19/2023	MKLEPADLO	
&EMA=V2UQ31UQ10.3+V2UQ31UQ10.3/1	Cable diagram =V2UQ31UQ10.3+V2UQ31UQ10.3-W1		1/19/2023	MKLEPADLO	
&EMA=V2UQ31UQ11.1+V2UQ31UQ11.1/1	Cable diagram =V2UQ31UQ11.1+V2UQ31UQ11.1-W1		1/19/2023	MKLEPADLO	
&EMA=V2UQ31UQ12.1+V2UQ31UQ12.1/1	Cable diagram =V2UQ31UQ12.1+V2UQ31UQ12.1-W1		1/19/2023	MKLEPADLO	
&EMA=V2UQ31UQ13.1+V2UQ31UQ13.1/1	Cable diagram =V2UQ31UQ13.1+V2UQ31UQ13.1-W1		1/19/2023	MKLEPADLO	
&EMA=V2UQ31UQ14.1+V2UQ31UQ14.1/1	Cable diagram =V2UQ31UQ14.1+V2UQ31UQ14.1-W1		1/19/2023	MKLEPADLO	
&EMA=V2UQ31UQ15.1+V2UQ31UQ15.1/1	Cable diagram =V2UQ31UQ15.1+V2UQ31UQ15.1-W1		1/19/2023	MKLEPADLO	
&EMA=V2UQ31UQ16.1+V2UQ31UQ16.1/1	Cable diagram =V2UQ31UQ16.1+V2UQ31UQ16.1-W1		1/19/2023	MKLEPADLO	

			Date	1/24/2023	Volvo Trucks North America	Valiant TMS	Table of contents : &EMA=V2UQ31BG0+V2UQ31/3 - &EMA=V2UQ31UQ16.1+V2UQ31UQ16.1/1	Drawing name: =2V01&EFS-EL_KF1	=
			Ed.	MKLEPADLO					+
			Appr		P6700 Framing - Cell 2V01, KF1			Document type: EAB	Project nr: 22-16152
Modification	Date	Name	Original		Replacement of / Replaced by	Scale 1:1			Page 35 / 1630

Table of contents

Column X: An automatically generated page was edited

F06_001

Page	Page description	supplementary page field	Date	Edited by	X
&EMA=V2UQ31UQ17.1+V2UQ31UQ17.1/1	Cable diagram =V2UQ31UQ17.1+V2UQ31UQ17.1-W1		1/19/2023	MKLEPADLO	
&EMA=V2UQ31UQ18.1+V2UQ31UQ18.1/1	Cable diagram =V2UQ31UQ18.1+V2UQ31UQ18.1-W1		1/19/2023	MKLEPADLO	
&EMA=V2UQ51BG0+V2UQ51/1	Cable diagram =V2UQ51BG0+V2UQ51-W1		1/19/2023	MKLEPADLO	
&EMA=V2UQ51BG0+V2UQ51/2	Cable diagram =V2UQ51BG0+V2UQ51-W2		1/19/2023	MKLEPADLO	
&EMA=V2UQ52BG0+V2UQ52/1	Cable diagram =V2UQ52BG0+V2UQ52-W1		1/19/2023	MKLEPADLO	
&EMA=V2UQ52BG0+V2UQ52/2	Cable diagram =V2UQ52BG0+V2UQ52-W2		1/19/2023	MKLEPADLO	
&EMA=V2UQ53BG0+V2UQ53/1	Cable diagram =V2UQ53BG0+V2UQ53-W1		1/19/2023	MKLEPADLO	
&EMA=V2UQ53BG0+V2UQ53/2	Cable diagram =V2UQ53BG0+V2UQ53-W2		1/19/2023	MKLEPADLO	
&EMA=V2UQ54BG0+V2UQ54/1	Cable diagram =V2UQ54BG0+V2UQ54-W1		1/19/2023	MKLEPADLO	
&EMA=V2UQ54BG0+V2UQ54/2	Cable diagram =V2UQ54BG0+V2UQ54-W2		1/19/2023	MKLEPADLO	
&EMC/1	Cable overview		1/20/2023	MKLEPADLO	
&EMC/2	Cable overview		1/20/2023	MKLEPADLO	
&EMC/3	Cable overview		1/20/2023	MKLEPADLO	
&EMC/4	Cable overview		1/20/2023	MKLEPADLO	
&EMC/5	Cable overview		1/20/2023	MKLEPADLO	
&EMC/6	Cable overview		1/20/2023	MKLEPADLO	
&EMC/7	Cable overview		1/20/2023	MKLEPADLO	
&EMC/8	Cable overview		1/20/2023	MKLEPADLO	
&EMC/9	Cable overview		1/20/2023	MKLEPADLO	
&EMC/10	Cable overview		1/20/2023	MKLEPADLO	
&EMC/11	Cable overview		1/20/2023	MKLEPADLO	
&EMC/12	Cable overview		1/20/2023	MKLEPADLO	
&EMC/13	Cable overview		1/20/2023	MKLEPADLO	
&EMC/14	Cable overview		1/20/2023	MKLEPADLO	
&EMC/15	Cable overview		1/20/2023	MKLEPADLO	
&EMC/16	Cable overview		1/20/2023	MKLEPADLO	
&EMC/17	Cable overview		1/20/2023	MKLEPADLO	
&EMC/18	Cable overview		1/20/2023	MKLEPADLO	
&EMC/19	Cable overview		1/20/2023	MKLEPADLO	
&EMC/20	Cable overview		1/20/2023	MKLEPADLO	
&EMC/21	Cable overview		1/20/2023	MKLEPADLO	
&EPB/1	Parts list : TS 35_7,5 - TS 35_7,5		1/19/2023	MKLEPADLO	
&EPB+KH0/1	Parts list : TUR.BS 8251-0/PG9 - TUR.BS 8251-0/PG9		1/20/2023	MKLEPADLO	

			Date	1/24/2023	Volvo Trucks North America	Valiant TMS	Table of contents : &EMA=V2UQ31UQ17.1+V2UQ31UQ17.1/1 - &EPB+KH0/1	Drawing name: =2V01&EFS-EL_KF1	=
			Ed.	MKLEPADLO					+
			Appr		P6700 Framing - Cell 2V01, KF1			Document type: EAB	Project nr: 22-16152
Modification	Date	Name	Original		Replacement of / Replaced by	Scale 1:1			Page 36 / 1630

Table of contents

Column X: An automatically generated page was edited

F06_001

Page	Page description	supplementary page field	Date	Edited by	X
&EPB+UC31/1	Parts list : US2.ECGB5 - SIE.6EP1961-2BA41		1/19/2023	MKLEPADLO	
&EPB+UC31/2	Parts list : SIE.6EP4134-3AB00-2AY0 - SIE.6EP3336-7SB00-3AX0		1/19/2023	MKLEPADLO	
&EPB+UC31UC91/1	Parts list : ABB.1SFA619550R1051 - ABB.1SFA619100R1023		1/19/2023	MKLEPADLO	
&EPB+UC31UC92/1	Parts list : ABB.1SFA619100R1111 - ABB.1SFA619200R1016		1/19/2023	MKLEPADLO	
&EPB+UC32/1	Parts list : ABB.1SFA619550R1051 - ABB.1SFA616915R1005		1/19/2023	MKLEPADLO	
&EPB+UC33/1	Parts list : ABB.1SFA619550R1051 - ABB.1SFA616915R1005		1/19/2023	MKLEPADLO	
&EPB+V1AR11UQ41/1	Parts list : TUR.NI50U-CK40-AP6X2-H1141/S1590 W/BS4 - FES.549335		1/19/2023	MKLEPADLO	
&EPB+V1AR11UQ41UQ1.1/1	Parts list : TUN.1324638 - TUN.1324638		1/19/2023	MKLEPADLO	
&EPB+V1AR11UQ41UQ1.2/1	Parts list : TUN.1324638 - TUN.1324638		1/19/2023	MKLEPADLO	
&EPB+V1AR11UQ41UQ2.1/1	Parts list : TUN.1324638 - TUN.1324638		1/19/2023	MKLEPADLO	
&EPB+V1AR11UQ41UQ2.2/1	Parts list : TUN.1324638 - TUN.1324638		1/19/2023	MKLEPADLO	
&EPB+V1AR11UQ41UQ3.1/1	Parts list : TUN.1324638 - TUN.1324638		1/19/2023	MKLEPADLO	
&EPB+V1AR11UQ41UQ3.2/1	Parts list : TUN.1324638 - TUN.1324638		1/19/2023	MKLEPADLO	
&EPB+V1AR11UQ41UQ4.1/1	Parts list : TUN.1324638 - TUN.1324638		1/19/2023	MKLEPADLO	
&EPB+V1AR11UQ41UQ4.2/1	Parts list : TUN.1324638 - TUN.1324638		1/19/2023	MKLEPADLO	
&EPB+V1AR11UQ41UQ5.1/1	Parts list : TUN.1324638 - TUN.1324638		1/19/2023	MKLEPADLO	
&EPB+V1AR11UQ41UQ5.2/1	Parts list : TUN.1324638 - TUN.1324638		1/19/2023	MKLEPADLO	
&EPB+V1AR11UQ41UQ6.1/1	Parts list : IFM.PN7094 - IFM.PN7094		1/19/2023	MKLEPADLO	
&EPB+V1AR11UQ41UQ7.1/1	Parts list : IFM.PN7094 - IFM.PN7094		1/19/2023	MKLEPADLO	
&EPB+V1AR11UQ41UQ8.1/1	Parts list : IFM.PN7094 - IFM.PN7094		1/19/2023	MKLEPADLO	
&EPB+V1AR11UQ41UQ9.1/1	Parts list : IFM.PN7094 - IFM.PN7094		1/19/2023	MKLEPADLO	
&EPB+V1AR21XQ11UC01/1	Parts list : ABB.2CMA193115R1000 - RIT.4115000		1/20/2023	MKLEPADLO	
&EPB+V1AR31UQ41/1	Parts list : TUR.NI50U-CK40-AP6X2-H1141/S1590 W/BS4 - FES.549335		1/19/2023	MKLEPADLO	
&EPB+V1AR31UQ41UQ1.1/1	Parts list : TUN.1324638 - TUN.1324638		1/19/2023	MKLEPADLO	
&EPB+V1AR31UQ41UQ1.2/1	Parts list : TUN.1324638 - TUN.1324638		1/19/2023	MKLEPADLO	
&EPB+V1AR31UQ41UQ1.3/1	Parts list : TUN.1324638 - TUN.1324638		1/19/2023	MKLEPADLO	
&EPB+V1AR31XQ41/1	Parts list : FES.548755 - FES.549335		1/19/2023	MKLEPADLO	
&EPB+V1AR31XQ41UC01/1	Parts list : TUR.RSM-2RKM 50 - TUR.RSM-2RKM 50		1/19/2023	MKLEPADLO	
&EPB+V1AR31XQ41UQ1.1/1	Parts list : TUR.1627205 - TUR.VB2-FSM 4.4/2FKM 4/S3450		1/19/2023	MKLEPADLO	
&EPB+V1AR41UQ41/1	Parts list : TUR.NI50U-CK40-AP6X2-H1141/S1590 W/BS4 - FES.549335		1/19/2023	MKLEPADLO	
&EPB+V1AR41UQ41UQ1.1/1	Parts list : WEL.WWS001A - WEL.WWS001A		1/19/2023	MKLEPADLO	
&EPB+V1AR41UQ41UQ1.2/1	Parts list : WEL.WWS001A - WEL.WWS001A		1/19/2023	MKLEPADLO	
&EPB+V1AR41UQ41UQ2.1/1	Parts list : TUN.1324644 - TUN.1324644		1/19/2023	MKLEPADLO	

			Date	1/24/2023	Volvo Trucks North America	Valiant TMS	Table of contents : &EPB+UC31/1 - &EPB+V1AR41UQ41UQ2.1/1	Drawing name: =2V01&EFS-EL_KF1	=
			Ed.	MKLEPADLO					+
			Appr		P6700 Framing - Cell 2V01, KF1			Document type: EAB	Project nr: 22-16152
Modification	Date	Name	Original		Replacement of	Replaced by	Scale 1:1		Page 37 / 1630

Table of contents

Column X: An automatically generated page was edited

F06_001

Page	Page description	supplementary page field	Date	Edited by	X
&EPB+V1AR41UQ41UQ2.2/1	Parts list : TUN.1324644 - TUN.1324644		1/19/2023	MKLEPADLO	
&EPB+V1AR41UQ41UQ2.3/1	Parts list : TUN.1324644 - TUN.1324644		1/19/2023	MKLEPADLO	
&EPB+V1AR41UQ41UQ2.4/1	Parts list : TUN.1324638 - TUN.1324638		1/19/2023	MKLEPADLO	
&EPB+V1AR41UQ41UQ2.5/1	Parts list : TUN.1324638 - TUN.1324638		1/19/2023	MKLEPADLO	
&EPB+V1AR41UQ41UQ3.1/1	Parts list : TUN.1324638 - TUN.1324638		1/19/2023	MKLEPADLO	
&EPB+V1AR41UQ41UQ3.2/1	Parts list : TUN.1324638 - TUN.1324638		1/19/2023	MKLEPADLO	
&EPB+V1AR41UQ41UQ4.1/1	Parts list : WEL.L3 - WEL.L3		1/19/2023	MKLEPADLO	
&EPB+V1AR41UQ41UQ4.2/1	Parts list : WEL.L3 - WEL.L3		1/19/2023	MKLEPADLO	
&EPB+V1AR41XQ11UC01/1	Parts list : ABB.2CMA193115R1000 - RIT.4115000		1/20/2023	MKLEPADLO	
&EPB+V1FQ1/1	Parts list : BAN.SLSCP30-1200P44NT - BAN.SLSCP30-1200P44NT		1/19/2023	MKLEPADLO	
&EPB+V1FQ1BG1/1	Parts list : EUC.MGB-L2B-PNA-R-121859 - EUC.MGB-E-A2-106051		1/19/2023	MKLEPADLO	
&EPB+V1FQ1BG2/1	Parts list : EUC.MGB-L2B-PNA-R-121859 - EUC.MGB-E-A2-106051		1/19/2023	MKLEPADLO	
&EPB+V1FQ1BG6/1	Parts list : EUC.MGB-L2B-PNA-L-121863 - EUC.MGB-E-A2-106051		1/19/2023	MKLEPADLO	
&EPB+V1FQ1BG7/1	Parts list : EUC.MGB-L2B-PNA-R-121859 - EUC.MGB-E-A2-106051		1/19/2023	MKLEPADLO	
&EPB+V1GL13KF2/1	Parts list : SIE.6GT2801-2BA10 - SIE.6GT2002-0JE10		1/19/2023	MKLEPADLO	
&EPB+V1GL13UC01/1	Parts list : SIE.6SL3525-0PE17-5AA1 - EM.EM3BMHANQ4SDCG10		1/19/2023	MKLEPADLO	
&EPB+V1GL13UQ51/1	Parts list : TUR.1644741 - FES.549335		1/19/2023	MKLEPADLO	
&EPB+V1GL13UQ51UQ5.1/1	Parts list : TUR.16447411 - TUR.VB2-FSM 4.4/2FKM 4/S3450		1/19/2023	MKLEPADLO	
&EPB+V1GL13UQ51UQ6.1/1	Parts list : TUR.16447411 - TUR.VB2-FSM 4.4/2FKM 4/S3450		1/19/2023	MKLEPADLO	
&EPB+V1GL13UQ51UQ7.1/1	Parts list : TUR.16447411 - TUR.VB2-FSM 4.4/2FKM 4/S3450		1/19/2023	MKLEPADLO	
&EPB+V1GL14KF2/1	Parts list : SIE.6SL3544-0FB21-1FA0 - SIE.6SL3544-0FB21-1FA0		1/19/2023	MKLEPADLO	
&EPB+V1GL14UC01/1	Parts list : SIE.6SL3525-0PE17-5AA1 - EM.EM3BMHANQ4SDCG10		1/19/2023	MKLEPADLO	
&EPB+V1GL14UQ51/1	Parts list : TUR.1644741 - FES.549335		1/19/2023	MKLEPADLO	
&EPB+V1GL14UQ51UQ3.1/1	Parts list : TUR.16447411 - TUR.VB2-FSM 4.4/2FKM 4/S3450		1/19/2023	MKLEPADLO	
&EPB+V1GL14UQ51UQ4.1/1	Parts list : TUR.16447411 - TUR.VB2-FSM 4.4/2FKM 4/S3450		1/19/2023	MKLEPADLO	
&EPB+V1GL14UQ51UQ5.1/1	Parts list : TUR.16447411 - TUR.VB2-FSM 4.4/2FKM 4/S3450		1/19/2023	MKLEPADLO	
&EPB+V1GM11UC01/1	Parts list : SIE.6SL3525-0PE17-5AA1 - SIE.6SL3525-0PE23-0AA1		1/19/2023	MKLEPADLO	
&EPB+V1U20/1	Parts list : A-B.802T-AMP - A-B.802T-AMP		1/19/2023	MKLEPADLO	
&EPB+V1U20U01/1	Parts list : MURR.55339 - BAN.32723		1/19/2023	MKLEPADLO	
&EPB+V1UC11/1	Parts list : EMPD3FBCB-025A-M - SIE.5ST3010-0HG		1/19/2023	MKLEPADLO	
&EPB+V1UC11/2	Parts list : SIE.5SJ4116-7HG41 - RIT.4115000		1/19/2023	MKLEPADLO	
&EPB+V1UC12/1	Parts list : EMPD3FBCB-025A-M - SIE.5ST3010-0HG		1/19/2023	MKLEPADLO	
&EPB+V1UC12/2	Parts list : SIE.5SJ4116-7HG41 - RIT.4115000		1/19/2023	MKLEPADLO	

			Date	1/24/2023	Volvo Trucks North America	Valiant TMS	Table of contents : &EPB+V1AR41UQ41UQ2.2/1 - &EPB+V1UC12/2	Drawing name: =2V01&EFS-EL_KF1	=
			Ed.	MKLEPADLO					+
			Appr		P6700 Framing - Cell 2V01, KF1			Document type: EAB	Project nr: 22-16152
Modification	Date	Name	Original		Replacement of	Replaced by	Scale 1:1		Page 38 / 1630

Table of contents

Column X: An automatically generated page was edited

F06_001

Page	Page description	supplementary page field	Date	Edited by	X
&EPB+V1UC32/1	Parts list : SIE.6ES7155-6AA01-0BN0_subassembly - TUR.RSF 50-1M/NPT		1/19/2023	MKLEPADLO	
&EPB+V1UC51/1	Parts list : SIE.6AV2124-0GC01-0AX0 - TUR.RSF 50-1M/NPT		1/19/2023	MKLEPADLO	
&EPB+V1UC61/1	Parts list : SIE.8WD4408-0AA - TUR.RSF 106-2M/14.5/NPT/CS16486		1/19/2023	MKLEPADLO	
&EPB+V1UC71/1	Parts list : BAN.SSA-EBM-12EB1Q8OTBB - BAN.SSA-EBM-12EB1Q8OTBB		1/19/2023	MKLEPADLO	
&EPB+V1UL1/1	Parts list : MURR.55530 - MURR.55530		1/19/2023	MKLEPADLO	
&EPB+V1UL1UQ1.1/1	Parts list : P+F.284395 - P+F.284395		1/19/2023	MKLEPADLO	
&EPB+V1UL1UQ1.2/1	Parts list : TUN.1324638 - TUN.1324638		1/19/2023	MKLEPADLO	
&EPB+V1UL1UQ1.3/1	Parts list : TUN.1324638 - TUN.1324638		1/19/2023	MKLEPADLO	
&EPB+V1UL1UQ1.4/1	Parts list : P+F.284395 - P+F.284395		1/19/2023	MKLEPADLO	
&EPB+V1UL1UQ2.1/1	Parts list : P+F.284395 - P+F.284395		1/19/2023	MKLEPADLO	
&EPB+V1UL1UQ2.2/1	Parts list : P+F.284395 - P+F.284395		1/19/2023	MKLEPADLO	
&EPB+V1UL1UQ3.1/1	Parts list : P+F.284395 - P+F.284395		1/19/2023	MKLEPADLO	
&EPB+V1UL1UQ3.2/1	Parts list : P+F.284395 - P+F.284395		1/19/2023	MKLEPADLO	
&EPB+V1UL1UQ4.1/1	Parts list : WEL.L3 - WEL.L3		1/19/2023	MKLEPADLO	
&EPB+V1UL1UQ4.2/1	Parts list : WEL.L3 - WEL.L3		1/19/2023	MKLEPADLO	
&EPB+V1UQ31/1	Parts list : TUR.BI20U-CA40-AP6X2-H1141/S1590W/BS2.0 - FES.549335		1/19/2023	MKLEPADLO	
&EPB+V1UQ31UQ1.1/1	Parts list : TUN.1324644 - TUN.1324644		1/19/2023	MKLEPADLO	
&EPB+V1UQ31UQ1.2/1	Parts list : TUN.1324644 - TUN.1324644		1/19/2023	MKLEPADLO	
&EPB+V1UQ31UQ1.3/1	Parts list : TUN.1324644 - TUN.1324644		1/19/2023	MKLEPADLO	
&EPB+V1UQ31UQ1.4/1	Parts list : TUN.1324644 - TUN.1324644		1/19/2023	MKLEPADLO	
&EPB+V1UQ31UQ2.1/1	Parts list : TUN.1324644 - TUN.1324644		1/19/2023	MKLEPADLO	
&EPB+V1UQ31UQ2.2/1	Parts list : TUN.1324644 - TUN.1324644		1/19/2023	MKLEPADLO	
&EPB+V1UQ51/1	Parts list : TUR.BI20U-CA40-AP6X2-H1141/S1590W/BS2.0 - MURR.55530		1/19/2023	MKLEPADLO	
&EPB+V1UQ53/1	Parts list : BAN.73260 - FES.549335		1/19/2023	MKLEPADLO	
&EPB+V1UQ53UQ5.1/1	Parts list : TUR.1644797 - TUR.VB2-FSM 4.4/2FKM 4/S3450		1/19/2023	MKLEPADLO	
&EPB+V1WL2KF1/1	Parts list : SIE.6SL3546-0FB21-1FA0 - SIE.6SL3546-0FB21-1FA0		1/19/2023	MKLEPADLO	
&EPB+V1WL2UC01/1	Parts list : SIE.6SL3525-0PE23-0AA1 - EM.EM3BMHANQ4SDCG10		1/19/2023	MKLEPADLO	
&EPB+V1WL3KF1/1	Parts list : SIE.6SL3544-0FB21-1FA0 - SIE.6SL3546-0FB21-1FA0		1/19/2023	MKLEPADLO	
&EPB+V1WL3UC01/1	Parts list : SIE.6SL3525-0PE25-5AA1 - E-M.EM3BMHANQ4CG1012		1/19/2023	MKLEPADLO	
&EPB+V2AR21XQ11UC01/1	Parts list : ABB.2CMA193115R1000 - ABB.2CMA193115R1000		1/20/2023	MKLEPADLO	
&EPB+V2AR22XQ11UC01/1	Parts list : ABB.2CMA193115R1000 - ABB.2CMA193115R1000		1/20/2023	MKLEPADLO	
&EPB+V2AR23XQ11UC01/1	Parts list : ABB.2CMA193115R1000 - ABB.2CMA193115R1000		1/20/2023	MKLEPADLO	
&EPB+V2AR24XQ11UC01/1	Parts list : ABB.2CMA193115R1000 - ABB.2CMA193115R1000		1/20/2023	MKLEPADLO	

Table of contents

Column X: An automatically generated page was edited

F06_001

Page	Page description	supplementary page field	Date	Edited by	X
&EPB+V2AR31UQ41/1	Parts list : TUR.NI50U-CK40-AP6X2-H1141/S1590 W/BS4 - FES.549335		1/19/2023	MKLEPADLO	
&EPB+V2AR31UQ41UQ1.1/1	Parts list : WEL.L3 - WEL.L3		1/19/2023	MKLEPADLO	
&EPB+V2AR31UQ41UQ2.1/1	Parts list : TUN.1324638 - TUN.1324638		1/19/2023	MKLEPADLO	
&EPB+V2AR31UQ41UQ2.2/1	Parts list : TUN.1324638 - TUN.1324638		1/19/2023	MKLEPADLO	
&EPB+V2AR31UQ41UQ2.3/1	Parts list : TUN.1324638 - TUN.1324638		1/19/2023	MKLEPADLO	
&EPB+V2AR31UQ41UQ2.4/1	Parts list : TUN.1324638 - TUN.1324638		1/19/2023	MKLEPADLO	
&EPB+V2AR31UQ41UQ3.1/1	Parts list : TUN.1324638 - TUN.1324638		1/19/2023	MKLEPADLO	
&EPB+V2AR31UQ41UQ3.2/1	Parts list : TUN.1324638 - TUN.1324638		1/19/2023	MKLEPADLO	
&EPB+V2AR31UQ41UQ3.3/1	Parts list : TUN.1324638 - TUN.1324638		1/19/2023	MKLEPADLO	
&EPB+V2AR31UQ41UQ4.1/1	Parts list : WEL.WWS001A - WEL.WWS001A		1/19/2023	MKLEPADLO	
&EPB+V2AR31UQ41UQ5.1/1	Parts list : TUN.1324638 - TUN.1324638		1/19/2023	MKLEPADLO	
&EPB+V2AR31UQ41UQ5.2/1	Parts list : TUN.1324638 - TUN.1324638		1/19/2023	MKLEPADLO	
&EPB+V2AR31UQ41UQ6.1/1	Parts list : WEL.WWS001A - WEL.WWS001A		1/19/2023	MKLEPADLO	
&EPB+V2AR31UQ41UQ7.1/1	Parts list : TUN.1324638 - TUN.1324638		1/19/2023	MKLEPADLO	
&EPB+V2AR31UQ41UQ7.2/1	Parts list : TUN.1324638 - TUN.1324638		1/19/2023	MKLEPADLO	
&EPB+V2AR31UQ42/1	Parts list : TUR.NI50U-CK40-AP6X2-H1141/S1590 W/BS4 - FES.549335		1/19/2023	MKLEPADLO	
&EPB+V2AR31UQ42UQ1.1/1	Parts list : TUN.1324638 - TUN.1324638		1/19/2023	MKLEPADLO	
&EPB+V2AR31UQ42UQ1.2/1	Parts list : TUN.1324638 - TUN.1324638		1/19/2023	MKLEPADLO	
&EPB+V2AR31UQ42UQ2.1/1	Parts list : TUN.1324638 - TUN.1324638		1/19/2023	MKLEPADLO	
&EPB+V2AR31UQ42UQ2.2/1	Parts list : TUN.1324638 - TUN.1324638		1/19/2023	MKLEPADLO	
&EPB+V2AR31UQ42UQ3.1/1	Parts list : TUN.1324638 - TUN.1324638		1/19/2023	MKLEPADLO	
&EPB+V2AR31UQ42UQ3.2/1	Parts list : TUN.1324638 - TUN.1324638		1/19/2023	MKLEPADLO	
&EPB+V2AR31XQ41/1	Parts list : FES.548755 - FES.549335		1/19/2023	MKLEPADLO	
&EPB+V2AR31XQ41UQ1.1/1	Parts list : TUR.1627205 - TUR.VB2-FSM 4.4/2FKM 4/S3450		1/19/2023	MKLEPADLO	
&EPB+V2AR32UQ41/1	Parts list : TUR.NI50U-CK40-AP6X2-H1141/S1590 W/BS4 - FES.549335		1/19/2023	MKLEPADLO	
&EPB+V2AR32UQ41UQ1.1/1	Parts list : WEL.L3 - WEL.L3		1/19/2023	MKLEPADLO	
&EPB+V2AR32UQ41UQ2.1/1	Parts list : TUN.1324638 - TUN.1324638		1/19/2023	MKLEPADLO	
&EPB+V2AR32UQ41UQ2.2/1	Parts list : TUN.1324638 - TUN.1324638		1/19/2023	MKLEPADLO	
&EPB+V2AR32UQ41UQ2.3/1	Parts list : TUN.1324638 - TUN.1324638		1/19/2023	MKLEPADLO	
&EPB+V2AR32UQ41UQ2.4/1	Parts list : TUN.1324638 - TUN.1324638		1/19/2023	MKLEPADLO	
&EPB+V2AR32UQ41UQ3.1/1	Parts list : TUN.1324638 - TUN.1324638		1/19/2023	MKLEPADLO	
&EPB+V2AR32UQ41UQ3.2/1	Parts list : TUN.1324638 - TUN.1324638		1/19/2023	MKLEPADLO	
&EPB+V2AR32UQ41UQ3.3/1	Parts list : TUN.1324638 - TUN.1324638		1/19/2023	MKLEPADLO	

			Date	1/24/2023	Volvo Trucks North America	Valiant TMS	Table of contents : &EPB+V2AR31UQ41/1 - &EPB+V2AR32UQ41UQ3.3/1	Drawing name: =2V01&EFS-EL_KF1	=
			Ed.	MKLEPADLO					+
			Appr		P6700 Framing - Cell 2V01, KF1			Document type: EAB	Project nr: 22-16152
Modification	Date	Name	Original		Replacement of	Replaced by	Scale 1:1		Page 40 / 1630

Table of contents

Column X: An automatically generated page was edited

F06_001

Page	Page description	supplementary page field	Date	Edited by	X
&EPB+V2AR32UQ41UQ4.1/1	Parts list : WEL.WWS001A - WEL.WWS001A		1/19/2023	MKLEPADLO	
&EPB+V2AR32UQ41UQ5.1/1	Parts list : TUN.1324638 - TUN.1324638		1/19/2023	MKLEPADLO	
&EPB+V2AR32UQ41UQ5.2/1	Parts list : TUN.1324638 - TUN.1324638		1/19/2023	MKLEPADLO	
&EPB+V2AR32UQ41UQ6.1/1	Parts list : WEL.WWS001A - WEL.WWS001A		1/19/2023	MKLEPADLO	
&EPB+V2AR32UQ41UQ7.1/1	Parts list : TUN.1324638 - TUN.1324638		1/19/2023	MKLEPADLO	
&EPB+V2AR32UQ41UQ7.2/1	Parts list : TUN.1324638 - TUN.1324638		1/19/2023	MKLEPADLO	
&EPB+V2AR32UQ42/1	Parts list : TUR.NI50U-CK40-AP6X2-H1141/S1590 W/BS4 - FES.549335		1/19/2023	MKLEPADLO	
&EPB+V2AR32UQ42UQ1.1/1	Parts list : TUN.1324638 - TUN.1324638		1/19/2023	MKLEPADLO	
&EPB+V2AR32UQ42UQ1.2/1	Parts list : TUN.1324638 - TUN.1324638		1/19/2023	MKLEPADLO	
&EPB+V2AR32UQ42UQ2.1/1	Parts list : TUN.1324638 - TUN.1324638		1/19/2023	MKLEPADLO	
&EPB+V2AR32UQ42UQ2.2/1	Parts list : TUN.1324638 - TUN.1324638		1/19/2023	MKLEPADLO	
&EPB+V2AR32XQ41/1	Parts list : FES.548755 - FES.549335		1/19/2023	MKLEPADLO	
&EPB+V2AR32XQ41UQ1.1/1	Parts list : TUR.1627205 - TUR.VB2-FSM 4.4/2FKM 4/S3450		1/19/2023	MKLEPADLO	
&EPB+V2AR41UQ41/1	Parts list : TUR.NI50U-CK40-AP6X2-H1141/S1590 W/BS4 - FES.549335		1/19/2023	MKLEPADLO	
&EPB+V2AR41UQ41UQ1.1/1	Parts list : WEL.WWS001A - WEL.WWS001A		1/19/2023	MKLEPADLO	
&EPB+V2AR41UQ41UQ1.2/1	Parts list : WEL.WWS001A - WEL.WWS001A		1/19/2023	MKLEPADLO	
&EPB+V2AR41UQ41UQ1.3/1	Parts list : WEL.WWS001A - WEL.WWS001A		1/19/2023	MKLEPADLO	
&EPB+V2AR41UQ41UQ1.4/1	Parts list : WEL.WWS001A - WEL.WWS001A		1/19/2023	MKLEPADLO	
&EPB+V2AR41UQ41UQ2.1/1	Parts list : TUN.1324638 - TUN.1324638		1/19/2023	MKLEPADLO	
&EPB+V2AR41UQ41UQ2.2/1	Parts list : TUN.1324638 - TUN.1324638		1/19/2023	MKLEPADLO	
&EPB+V2AR41UQ41UQ3.1/1	Parts list : TUN.1324638 - TUN.1324638		1/19/2023	MKLEPADLO	
&EPB+V2AR41UQ41UQ3.2/1	Parts list : TUN.1324638 - TUN.1324638		1/19/2023	MKLEPADLO	
&EPB+V2AR41UQ41UQ4.1/1	Parts list : TUN.1324638 - TUN.1324638		1/19/2023	MKLEPADLO	
&EPB+V2AR41UQ41UQ4.2/1	Parts list : TUN.1324638 - TUN.1324638		1/19/2023	MKLEPADLO	
&EPB+V2AR41UQ41UQ4.3/1	Parts list : TUN.1324638 - TUN.1324638		1/19/2023	MKLEPADLO	
&EPB+V2AR41UQ41UQ4.4/1	Parts list : TUN.1324638 - TUN.1324638		1/19/2023	MKLEPADLO	
&EPB+V2AR41UQ41UQ5.1/1	Parts list : TUN.1324644 - TUN.1324644		1/19/2023	MKLEPADLO	
&EPB+V2AR41UQ41UQ5.2/1	Parts list : TUN.1324644 - TUN.1324644		1/19/2023	MKLEPADLO	
&EPB+V2AR41UQ41UQ6.1/1	Parts list : IFM.PN7094 - IFM.PN7094		1/19/2023	MKLEPADLO	
&EPB+V2AR41UQ41UQ7.1/1	Parts list : TUN.1324638 - TUN.1324638		1/19/2023	MKLEPADLO	
&EPB+V2AR41UQ41UQ7.2/1	Parts list : TUN.1324638 - TUN.1324638		1/19/2023	MKLEPADLO	
&EPB+V2AR41UQ41UQ8.1/1	Parts list : IFM.PN7094 - IFM.PN7094		1/19/2023	MKLEPADLO	
&EPB+V2AR41XQ11UC01/1	Parts list : ABB.2CMA193115R1000 - RIT.4115000		1/20/2023	MKLEPADLO	

			Date	1/24/2023	Volvo Trucks North America	Valiant TMS	Table of contents : &EPB+V2AR32UQ41UQ4.1/1 - &EPB+V2AR41XQ11UC01/1	Drawing name: =2V01&EFS-EL_KF1	=
			Ed.	MKLEPADLO					+
			Appr		P6700 Framing - Cell 2V01, KF1			Document type: EAB	Project nr: 22-16152
Modification	Date	Name	Original		Replacement of	Replaced by	Scale 1:1		Page 41 / 1630

Table of contents

Column X: An automatically generated page was edited

F06_001

Page	Page description	supplementary page field	Date	Edited by	X
&EPB+V2AR42UQ41/1	Parts list : TUR.NI50U-CK40-AP6X2-H1141/S1590 W/BS4 - FES.549335		1/19/2023	MKLEPADLO	
&EPB+V2AR42UQ41UQ1.1/1	Parts list : TUN.1324638 - TUN.1324638		1/19/2023	MKLEPADLO	
&EPB+V2AR42UQ41UQ1.2/1	Parts list : TUN.1324638 - TUN.1324638		1/19/2023	MKLEPADLO	
&EPB+V2AR42UQ41UQ1.3/1	Parts list : TUN.1324638 - TUN.1324638		1/19/2023	MKLEPADLO	
&EPB+V2AR42UQ41UQ1.4/1	Parts list : TUN.1324638 - TUN.1324638		1/19/2023	MKLEPADLO	
&EPB+V2AR42UQ42/1	Parts list : TUR.NI50U-CK40-AP6X2-H1141/S1590 W/BS4 - FES.549335		1/19/2023	MKLEPADLO	
&EPB+V2AR42UQ42UQ1.1/1	Parts list : TUN.1324638 - TUN.1324638		1/19/2023	MKLEPADLO	
&EPB+V2AR42UQ42UQ1.2/1	Parts list : TUN.1324638 - TUN.1324638		1/19/2023	MKLEPADLO	
&EPB+V2AR42UQ42UQ1.3/1	Parts list : TUN.1324638 - TUN.1324638		1/19/2023	MKLEPADLO	
&EPB+V2AR42UQ42UQ1.4/1	Parts list : TUN.1324638 - TUN.1324638		1/19/2023	MKLEPADLO	
&EPB+V2AR42UQ42UQ1.5/1	Parts list : TUN.1324638 - TUN.1324638		1/19/2023	MKLEPADLO	
&EPB+V2AR42XQ11UC01/1	Parts list : ABB.2CMA193115R1000 - ABB.2CMA193115R1000		1/20/2023	MKLEPADLO	
&EPB+V2AR43UQ41/1	Parts list : TUR.NI50U-CK40-AP6X2-H1141/S1590 W/BS4 - FES.549335		1/19/2023	MKLEPADLO	
&EPB+V2AR43UQ41UQ1.1/1	Parts list : WEL.WWS001A - WEL.WWS001A		1/19/2023	MKLEPADLO	
&EPB+V2AR43UQ41UQ1.2/1	Parts list : WEL.WWS001A - WEL.WWS001A		1/19/2023	MKLEPADLO	
&EPB+V2AR43UQ41UQ2.1/1	Parts list : TUN.1324638 - TUN.1324638		1/19/2023	MKLEPADLO	
&EPB+V2AR43UQ41UQ2.2/1	Parts list : TUN.1324638 - TUN.1324638		1/19/2023	MKLEPADLO	
&EPB+V2AR43UQ41UQ2.3/1	Parts list : TUN.1324638 - TUN.1324638		1/19/2023	MKLEPADLO	
&EPB+V2AR43UQ41UQ3.1/1	Parts list : IFM.PN7094 - IFM.PN7094		1/19/2023	MKLEPADLO	
&EPB+V2AR43UQ41UQ4.1/1	Parts list : TUN.1324638 - TUN.1324638		1/19/2023	MKLEPADLO	
&EPB+V2AR43UQ41UQ4.2/1	Parts list : TUN.1324638 - TUN.1324638		1/19/2023	MKLEPADLO	
&EPB+V2AR43UQ41UQ4.3/1	Parts list : TUN.1324638 - TUN.1324638		1/19/2023	MKLEPADLO	
&EPB+V2AR43UQ42/1	Parts list : TUR.NI50U-CK40-AP6X2-H1141/S1590 W/BS4 - FES.549335		1/19/2023	MKLEPADLO	
&EPB+V2AR43UQ42UQ1.1/1	Parts list : WEL.WWS001A - WEL.WWS001A		1/19/2023	MKLEPADLO	
&EPB+V2AR43UQ42UQ2.1/1	Parts list : TUN.1324644 - TUN.1324644		1/19/2023	MKLEPADLO	
&EPB+V2AR43UQ42UQ2.2/1	Parts list : TUN.1324644 - TUN.1324644		1/19/2023	MKLEPADLO	
&EPB+V2AR43UQ42UQ3.1/1	Parts list : IFM.PN7094 - IFM.PN7094		1/19/2023	MKLEPADLO	
&EPB+V2AR43UQ42UQ4.1/1	Parts list : TUN.1324638 - TUN.1324638		1/19/2023	MKLEPADLO	
&EPB+V2AR43UQ42UQ4.2/1	Parts list : TUN.1324638 - TUN.1324638		1/19/2023	MKLEPADLO	
&EPB+V2AR43UQ42UQ5.1/1	Parts list : TUN.1324638 - TUN.1324638		1/19/2023	MKLEPADLO	
&EPB+V2AR43UQ42UQ5.2/1	Parts list : TUN.1324638 - TUN.1324638		1/19/2023	MKLEPADLO	
&EPB+V2AR43UQ42UQ6.1/1	Parts list : TUN.1324638 - TUN.1324638		1/19/2023	MKLEPADLO	
&EPB+V2AR43UQ42UQ6.2/1	Parts list : TUN.1324638 - TUN.1324638		1/19/2023	MKLEPADLO	

			Date	1/24/2023	Volvo Trucks North America	Valiant TMS	Table of contents : &EPB+V2AR42UQ41/1 - &EPB+V2AR43UQ42UQ6.2/1	Drawing name: =2V01&EFS-EL_KF1	=		
			Ed.	MKLEPADLO					+		
			Appr		P6700 Framing - Cell 2V01, KF1			Document type: EAB	Project nr: 22-16152	Page	42
Modification	Date	Name	Original		Replacement of	Replaced by	Scale 1:1				1630

Table of contents

Column X: An automatically generated page was edited

F06_001

Page	Page description	supplementary page field	Date	Edited by	X
&EPB+V2AR43UQ42UQ6.3/1	Parts list : TUN.1324638 - TUN.1324638		1/19/2023	MKLEPADLO	
&EPB+V2AR43UQ42UQ7.1/1	Parts list : TUN.1324638 - TUN.1324638		1/19/2023	MKLEPADLO	
&EPB+V2AR43UQ42UQ7.2/1	Parts list : TUN.1324638 - TUN.1324638		1/19/2023	MKLEPADLO	
&EPB+V2AR43UQ42UQ8.1/1	Parts list : TUN.1324638 - TUN.1324638		1/19/2023	MKLEPADLO	
&EPB+V2AR43UQ42UQ8.2/1	Parts list : TUN.1324638 - TUN.1324638		1/19/2023	MKLEPADLO	
&EPB+V2AR43UQ42UQ9.1/1	Parts list : TUN.1324638 - TUN.1324638		1/19/2023	MKLEPADLO	
&EPB+V2AR43UQ42UQ9.2/1	Parts list : TUN.1324638 - TUN.1324638		1/19/2023	MKLEPADLO	
&EPB+V2AR43UQ43/1	Parts list : TUR.NI50U-CK40-AP6X2-H1141/S1590 W/BS4 - FES.549335		1/19/2023	MKLEPADLO	
&EPB+V2AR43UQ43UQ1.1/1	Parts list : WEL.WWS001A - WEL.WWS001A		1/19/2023	MKLEPADLO	
&EPB+V2AR43UQ43UQ2.1/1	Parts list : TUN.1324638 - TUN.1324638		1/19/2023	MKLEPADLO	
&EPB+V2AR43UQ43UQ2.2/1	Parts list : TUN.1324638 - TUN.1324638		1/19/2023	MKLEPADLO	
&EPB+V2AR43UQ43UQ2.3/1	Parts list : TUN.1324638 - TUN.1324638		1/19/2023	MKLEPADLO	
&EPB+V2AR43UQ43UQ3.1/1	Parts list : IFM.PN7094 - IFM.PN7094		1/19/2023	MKLEPADLO	
&EPB+V2AR43UQ43UQ4.1/1	Parts list : TUN.1324638 - TUN.1324638		1/19/2023	MKLEPADLO	
&EPB+V2AR43UQ43UQ4.2/1	Parts list : TUN.1324638 - TUN.1324638		1/19/2023	MKLEPADLO	
&EPB+V2AR43UQ43UQ4.3/1	Parts list : TUN.1324638 - TUN.1324638		1/19/2023	MKLEPADLO	
&EPB+V2AR43UQ43UQ4.4/1	Parts list : TUN.1324638 - TUN.1324638		1/19/2023	MKLEPADLO	
&EPB+V2AR43UQ43UQ4.5/1	Parts list : TUN.1324638 - TUN.1324638		1/19/2023	MKLEPADLO	
&EPB+V2AR43XQ11UC01/1	Parts list : ABB.2CMA193115R1000 - RIT.4115000		1/20/2023	MKLEPADLO	
&EPB+V2AR44UQ41/1	Parts list : TUR.NI50U-CK40-AP6X2-H1141/S1590 W/BS4 - FES.549335		1/19/2023	MKLEPADLO	
&EPB+V2AR44UQ41UQ1.1/1	Parts list : WEL.WWS001A - WEL.WWS001A		1/19/2023	MKLEPADLO	
&EPB+V2AR44UQ41UQ1.2/1	Parts list : WEL.WWS001A - WEL.WWS001A		1/19/2023	MKLEPADLO	
&EPB+V2AR44UQ41UQ2.1/1	Parts list : TUN.1324638 - TUN.1324638		1/19/2023	MKLEPADLO	
&EPB+V2AR44UQ41UQ2.2/1	Parts list : TUN.1324638 - TUN.1324638		1/19/2023	MKLEPADLO	
&EPB+V2AR44UQ41UQ2.3/1	Parts list : TUN.1324638 - TUN.1324638		1/19/2023	MKLEPADLO	
&EPB+V2AR44UQ41UQ3.1/1	Parts list : IFM.PN7094 - IFM.PN7094		1/19/2023	MKLEPADLO	
&EPB+V2AR44UQ41UQ4.1/1	Parts list : TUN.1324638 - TUN.1324638		1/19/2023	MKLEPADLO	
&EPB+V2AR44UQ41UQ4.2/1	Parts list : TUN.1324638 - TUN.1324638		1/19/2023	MKLEPADLO	
&EPB+V2AR44UQ41UQ4.3/1	Parts list : TUN.1324638 - TUN.1324638		1/19/2023	MKLEPADLO	
&EPB+V2AR44UQ42/1	Parts list : TUR.NI50U-CK40-AP6X2-H1141/S1590 W/BS4 - FES.549335		1/19/2023	MKLEPADLO	
&EPB+V2AR44UQ42UQ1.1/1	Parts list : WEL.WWS001A - WEL.WWS001A		1/19/2023	MKLEPADLO	
&EPB+V2AR44UQ42UQ2.1/1	Parts list : TUN.1324644 - TUN.1324644		1/19/2023	MKLEPADLO	
&EPB+V2AR44UQ42UQ2.2/1	Parts list : TUN.1324644 - TUN.1324644		1/19/2023	MKLEPADLO	

			Date	1/24/2023	Volvo Trucks North America		Valiant TMS	Table of contents : &EPB+V2AR43UQ42UQ6.3/1 - &EPB+V2AR44UQ42UQ2.2/1	Drawing name: =2V01&EFS-EL_KF1	=	
			Ed.	MKLEPADLO						+	
			Appr		P6700 Framing - Cell 2V01, KF1				Document type: EAB	Project nr: 22-16152	Page 43
Modification	Date	Name	Original		Replacement of	Replaced by	Scale 1:1				1630

Table of contents

Column X: An automatically generated page was edited

F06_001

Page	Page description	supplementary page field	Date	Edited by	X
&EPB+V2AR44UQ42UQ3.1/1	Parts list : IFM.PN7094 - IFM.PN7094		1/19/2023	MKLEPADLO	
&EPB+V2AR44UQ42UQ4.1/1	Parts list : TUN.1324638 - TUN.1324638		1/19/2023	MKLEPADLO	
&EPB+V2AR44UQ42UQ4.2/1	Parts list : TUN.1324638 - TUN.1324638		1/19/2023	MKLEPADLO	
&EPB+V2AR44UQ42UQ5.1/1	Parts list : TUN.1324638 - TUN.1324638		1/19/2023	MKLEPADLO	
&EPB+V2AR44UQ42UQ5.2/1	Parts list : TUN.1324638 - TUN.1324638		1/19/2023	MKLEPADLO	
&EPB+V2AR44UQ42UQ6.1/1	Parts list : TUN.1324638 - TUN.1324638		1/19/2023	MKLEPADLO	
&EPB+V2AR44UQ42UQ6.2/1	Parts list : TUN.1324638 - TUN.1324638		1/19/2023	MKLEPADLO	
&EPB+V2AR44UQ42UQ6.3/1	Parts list : TUN.1324638 - TUN.1324638		1/19/2023	MKLEPADLO	
&EPB+V2AR44UQ42UQ7.1/1	Parts list : TUN.1324638 - TUN.1324638		1/19/2023	MKLEPADLO	
&EPB+V2AR44UQ42UQ7.2/1	Parts list : TUN.1324638 - TUN.1324638		1/19/2023	MKLEPADLO	
&EPB+V2AR44UQ42UQ8.1/1	Parts list : TUN.1324638 - TUN.1324638		1/19/2023	MKLEPADLO	
&EPB+V2AR44UQ42UQ8.2/1	Parts list : TUN.1324638 - TUN.1324638		1/19/2023	MKLEPADLO	
&EPB+V2AR44UQ42UQ9.1/1	Parts list : TUN.1324638 - TUN.1324638		1/19/2023	MKLEPADLO	
&EPB+V2AR44UQ42UQ9.2/1	Parts list : TUN.1324638 - TUN.1324638		1/19/2023	MKLEPADLO	
&EPB+V2AR44UQ43/1	Parts list : TUR.NI50U-CK40-AP6X2-H1141/S1590 W/BS4 - FES.549335		1/19/2023	MKLEPADLO	
&EPB+V2AR44UQ43UQ1.1/1	Parts list : WEL.WWS001A - WEL.WWS001A		1/19/2023	MKLEPADLO	
&EPB+V2AR44UQ43UQ2.1/1	Parts list : TUN.1324638 - TUN.1324638		1/19/2023	MKLEPADLO	
&EPB+V2AR44UQ43UQ2.2/1	Parts list : TUN.1324638 - TUN.1324638		1/19/2023	MKLEPADLO	
&EPB+V2AR44UQ43UQ2.3/1	Parts list : TUN.1324638 - TUN.1324638		1/19/2023	MKLEPADLO	
&EPB+V2AR44UQ43UQ3.1/1	Parts list : IFM.PN7094 - IFM.PN7094		1/19/2023	MKLEPADLO	
&EPB+V2AR44UQ43UQ4.1/1	Parts list : TUN.1324638 - TUN.1324638		1/19/2023	MKLEPADLO	
&EPB+V2AR44UQ43UQ4.2/1	Parts list : TUN.1324638 - TUN.1324638		1/19/2023	MKLEPADLO	
&EPB+V2AR44UQ43UQ4.3/1	Parts list : TUN.1324638 - TUN.1324638		1/19/2023	MKLEPADLO	
&EPB+V2AR44UQ43UQ4.4/1	Parts list : TUN.1324638 - TUN.1324638		1/19/2023	MKLEPADLO	
&EPB+V2AR44UQ43UQ4.5/1	Parts list : TUN.1324638 - TUN.1324638		1/19/2023	MKLEPADLO	
&EPB+V2AR44XQ11UC01/1	Parts list : ABB.2CMA193115R1000 - ABB.2CMA193115R1000		1/20/2023	MKLEPADLO	
&EPB+V2FQ1/1	Parts list : BAN.SLSCP30-1200P44NT - BAN.SLSCP30-1200P44NT		1/19/2023	MKLEPADLO	
&EPB+V2FQ1BG3/1	Parts list : EUC.MGB-L2B-PNA-R-121859 - EUC.MGB-E-A2-106051		1/19/2023	MKLEPADLO	
&EPB+V2FQ1BG4/1	Parts list : EUC.MGB-L2B-PNA-L-121863 - EUC.MGB-E-A2-106051		1/19/2023	MKLEPADLO	
&EPB+V2FQ1BG5/1	Parts list : EUC.MGB-L2B-PNA-R-121859 - EUC.MGB-E-A2-106051		1/19/2023	MKLEPADLO	
&EPB+V2FQ1BG8/1	Parts list : EUC.MGB-L2B-PNA-R-121859 - EUC.MGB-E-A2-106051		1/19/2023	MKLEPADLO	
&EPB+V2FQ1BG9/1	Parts list : EUC.MGB-L2B-PNA-L-121863 - EUC.MGB-E-A2-106051		1/19/2023	MKLEPADLO	
&EPB+V2FQ1BG10/1	Parts list : EUC.MGB-L2B-PNA-L-121863 - EUC.MGB-E-A2-106051		1/19/2023	MKLEPADLO	

			Date	1/24/2023	Volvo Trucks North America	Valiant TMS	Table of contents : &EPB+V2AR44UQ42UQ3.1/1 - &EPB+V2FQ1BG10/1	Drawing name: =2V01&EFS-EL_KF1	=
			Ed.	MKLEPADLO					+
			Appr		P6700 Framing - Cell 2V01, KF1			Document type: EAB	Project nr: 22-16152
Modification	Date	Name	Original		Replacement of	Replaced by	Scale 1:1		Page 44 / 1630

Table of contents

Column X: An automatically generated page was edited

F06_001

Page	Page description	supplementary page field	Date	Edited by	X
&EPB+V2FQ1BG11/1	Parts list : EUC.MGB-L2B-PNA-R-121859 - EUC.MGB-E-A2-106051		1/19/2023	MKLEPADLO	
&EPB+V2FQ1BG12/1	Parts list : EUC.MGB-L2B-PNA-R-121859 - EUC.MGB-E-A2-106051		1/19/2023	MKLEPADLO	
&EPB+V2GL15KF2/1	Parts list : SIE.6SL3544-0FB21-1FA0 - SIE.6SL3544-0FB21-1FA0		1/19/2023	MKLEPADLO	
&EPB+V2GL15UC01/1	Parts list : SIE.6SL3525-0PE17-5AA1 - EM.EM3BMHANQ4SDCG10		1/19/2023	MKLEPADLO	
&EPB+V2GL15UQ51/1	Parts list : TUR.1644741 - FES.549335		1/19/2023	MKLEPADLO	
&EPB+V2GL15UQ51UQ3.1/1	Parts list : TUR.16447411 - TUR.VB2-FSM 4.4/2FKM 4/S3450		1/19/2023	MKLEPADLO	
&EPB+V2GL15UQ51UQ4.1/1	Parts list : TUR.16447411 - TUR.VB2-FSM 4.4/2FKM 4/S3450		1/19/2023	MKLEPADLO	
&EPB+V2GL15UQ51UQ5.1/1	Parts list : TUR.16447411 - TUR.VB2-FSM 4.4/2FKM 4/S3450		1/19/2023	MKLEPADLO	
&EPB+V2GL16KF2/1	Parts list : SIE.6SL3544-0FB21-1FA0 - SIE.6SL3544-0FB21-1FA0		1/19/2023	MKLEPADLO	
&EPB+V2GL16UC01/1	Parts list : SIE.6SL3525-0PE17-5AA1 - EM.EM3BMHANQ4SDCG10		1/19/2023	MKLEPADLO	
&EPB+V2GL16UQ51/1	Parts list : TUR.1644741 - FES.549335		1/19/2023	MKLEPADLO	
&EPB+V2GL16UQ51UQ3.1/1	Parts list : TUR.16447411 - TUR.VB2-FSM 4.4/2FKM 4/S3450		1/19/2023	MKLEPADLO	
&EPB+V2GL16UQ51UQ4.1/1	Parts list : TUR.16447411 - TUR.VB2-FSM 4.4/2FKM 4/S3450		1/19/2023	MKLEPADLO	
&EPB+V2GL16UQ51UQ5.1/1	Parts list : TUR.16447411 - TUR.VB2-FSM 4.4/2FKM 4/S3450		1/19/2023	MKLEPADLO	
&EPB+V2GL17KF2/1	Parts list : SIE.6SL3544-0FB21-1FA0 - SIE.6SL3544-0FB21-1FA0		1/19/2023	MKLEPADLO	
&EPB+V2GL17UC01/1	Parts list : SIE.6SL3525-0PE17-5AA1 - EM.EM3BMHANQ4SDCG10		1/19/2023	MKLEPADLO	
&EPB+V2GL17UQ51/1	Parts list : TUR.1644741 - FES.549335		1/19/2023	MKLEPADLO	
&EPB+V2GL17UQ51UQ3.1/1	Parts list : TUR.16447411 - TUR.VB2-FSM 4.4/2FKM 4/S3450		1/19/2023	MKLEPADLO	
&EPB+V2GL17UQ51UQ4.1/1	Parts list : TUR.16447411 - TUR.VB2-FSM 4.4/2FKM 4/S3450		1/19/2023	MKLEPADLO	
&EPB+V2GL17UQ51UQ5.1/1	Parts list : TUR.16447411 - TUR.VB2-FSM 4.4/2FKM 4/S3450		1/19/2023	MKLEPADLO	
&EPB+V2GL18KF2/1	Parts list : SIE.6SL3544-0FB21-1FA0 - SIE.6SL3544-0FB21-1FA0		1/19/2023	MKLEPADLO	
&EPB+V2GL18UC01/1	Parts list : SIE.6SL3525-0PE17-5AA1 - EM.EM3BMHANQ4SDCG10		1/19/2023	MKLEPADLO	
&EPB+V2GL18UQ51/1	Parts list : TUR.1644741 - FES.549335		1/19/2023	MKLEPADLO	
&EPB+V2GL18UQ51UQ3.1/1	Parts list : TUR.16447411 - TUR.VB2-FSM 4.4/2FKM 4/S3450		1/19/2023	MKLEPADLO	
&EPB+V2GL18UQ51UQ4.1/1	Parts list : TUR.16447411 - TUR.VB2-FSM 4.4/2FKM 4/S3450		1/19/2023	MKLEPADLO	
&EPB+V2GL18UQ51UQ5.1/1	Parts list : TUR.16447411 - TUR.VB2-FSM 4.4/2FKM 4/S3450		1/19/2023	MKLEPADLO	
&EPB+V2UC14/1	Parts list : SIE.6ES7155-6AA01-0BN0_subassembly - TUR.RSM-2RKM 50		1/19/2023	MKLEPADLO	
&EPB+V2UC15/1	Parts list : SIE.6ES7155-6AA01-0BN0_subassembly - SIE.6EP3336-7SB00-3AX0		1/19/2023	MKLEPADLO	
&EPB+V2UC32/1	Parts list : SIE.6ES7155-6AA01-0BN0_subassembly - TUR.RSF 50-1M/NPT		1/19/2023	MKLEPADLO	
&EPB+V2UC33/1	Parts list : SIE.6ES7155-6AA01-0BN0_subassembly - TUR.RSF 50-1M/NPT		1/19/2023	MKLEPADLO	
&EPB+V2UC61/1	Parts list : SIE.8WD4408-0AA - TUR.RSF 106-2M/14.5/NPT/CS16486		1/19/2023	MKLEPADLO	
&EPB+V2UC81/1	Parts list : SIE.6SL3040-1MA01-0AA0 - TUR.RSF 50-3M/NPT		1/20/2023	MKLEPADLO	
&EPB+V2UC161/1	Parts list : CPB-E2G06-03 - RIT.4115000		1/19/2023	MKLEPADLO	

			Date	1/24/2023	Volvo Trucks North America	Valiant TMS	Table of contents : &EPB+V2FQ1BG11/1 - &EPB+V2UC161/1	Drawing name: =2V01&EFS-EL_KF1	=
			Ed.	MKLEPADLO					+
			Appr		P6700 Framing - Cell 2V01, KF1			Document type: EAB	Project nr: 22-16152
Modification	Date	Name	Original		Replacement of	Replaced by	Scale 1:1		Page 45 / 1630

Table of contents

Column X: An automatically generated page was edited

F06_001

Page	Page description	supplementary page field	Date	Edited by	X
&EPB+V2UC162/1	Parts list : CPB-E2G06-03 - RIT.4115000		1/19/2023	MKLEPADLO	
&EPB+V2UC163/1	Parts list : CPB-E2G06-03 - RIT.4115000		1/19/2023	MKLEPADLO	
&EPB+V2UQ31/1	Parts list : TUR.BI20U-CA40-AP6X2-H1141/S1590W/BS2.0 - TUR.RSM-2RKM 50		1/19/2023	MKLEPADLO	
&EPB+V2UQ31UQ1.1/1	Parts list : TUN.1324644 - TUN.1324644		1/19/2023	MKLEPADLO	
&EPB+V2UQ31UQ1.2/1	Parts list : TUN.1324644 - TUN.1324644		1/19/2023	MKLEPADLO	
&EPB+V2UQ31UQ1.3/1	Parts list : TUN.1324644 - TUN.1324644		1/19/2023	MKLEPADLO	
&EPB+V2UQ31UQ2.1/1	Parts list : TUN.1324644 - TUN.1324644		1/19/2023	MKLEPADLO	
&EPB+V2UQ31UQ3.1/1	Parts list : TUN.1324644 - TUN.1324644		1/19/2023	MKLEPADLO	
&EPB+V2UQ31UQ4.1/1	Parts list : TUN.1324644 - TUN.1324644		1/19/2023	MKLEPADLO	
&EPB+V2UQ31UQ5.1/1	Parts list : TUN.1324644 - TUN.1324644		1/19/2023	MKLEPADLO	
&EPB+V2UQ31UQ6.1/1	Parts list : TUN.1324644 - TUN.1324644		1/19/2023	MKLEPADLO	
&EPB+V2UQ31UQ7.1/1	Parts list : TUN.1324644 - TUN.1324644		1/19/2023	MKLEPADLO	
&EPB+V2UQ31UQ8.1/1	Parts list : TUN.1324644 - TUN.1324644		1/19/2023	MKLEPADLO	
&EPB+V2UQ31UQ9.1/1	Parts list : TUN.1324644 - TUN.1324644		1/19/2023	MKLEPADLO	
&EPB+V2UQ31UQ10.1/1	Parts list : TUN.1324644 - TUN.1324644		1/19/2023	MKLEPADLO	
&EPB+V2UQ31UQ10.2/1	Parts list : TUN.1324644 - TUN.1324644		1/19/2023	MKLEPADLO	
&EPB+V2UQ31UQ10.3/1	Parts list : TUN.1324644 - TUN.1324644		1/19/2023	MKLEPADLO	
&EPB+V2UQ31UQ11.1/1	Parts list : TUN.1324644 - TUN.1324644		1/19/2023	MKLEPADLO	
&EPB+V2UQ31UQ12.1/1	Parts list : TUN.1324644 - TUN.1324644		1/19/2023	MKLEPADLO	
&EPB+V2UQ31UQ13.1/1	Parts list : TUN.1324644 - TUN.1324644		1/19/2023	MKLEPADLO	
&EPB+V2UQ31UQ14.1/1	Parts list : TUN.1324644 - TUN.1324644		1/19/2023	MKLEPADLO	
&EPB+V2UQ31UQ15.1/1	Parts list : TUN.1324644 - TUN.1324644		1/19/2023	MKLEPADLO	
&EPB+V2UQ31UQ16.1/1	Parts list : TUN.1324644 - TUN.1324644		1/19/2023	MKLEPADLO	
&EPB+V2UQ31UQ17.1/1	Parts list : TUN.1324644 - TUN.1324644		1/19/2023	MKLEPADLO	
&EPB+V2UQ31UQ18.1/1	Parts list : TUN.1324644 - TUN.1324644		1/19/2023	MKLEPADLO	
&EPB+V2UQ51/1	Parts list : TUR.BI20U-CA40-AP6X2-H1141/S1590W/BS2.0 - MURR.55530		1/19/2023	MKLEPADLO	
&EPB+V2UQ52/1	Parts list : TUR.BI20U-CA40-AP6X2-H1141/S1590W/BS2.0 - MURR.55530		1/19/2023	MKLEPADLO	
&EPB+V2UQ53/1	Parts list : TUR.BI20U-CA40-AP6X2-H1141/S1590W/BS2.0 - MURR.55530		1/19/2023	MKLEPADLO	
&EPB+V2UQ54/1	Parts list : TUR.BI20U-CA40-AP6X2-H1141/S1590W/BS2.0 - MURR.55530		1/19/2023	MKLEPADLO	
&EPB+V2WL1KF1/1	Parts list : SIE.6SL3546-0FB21-1FA0 - SIE.6SL3546-0FB21-1FA0		1/19/2023	MKLEPADLO	
&EPB+V2WL1UC01/1	Parts list : SIE.6SL3525-0PE23-0AA1 - EM.EM3BMHANQ4SDCG10		1/19/2023	MKLEPADLO	
&EPB+V2WL2KF1/1	Parts list : SIE.6SL3544-0FB21-1FA0 - SIE.6SL3546-0FB21-1FA0		1/19/2023	MKLEPADLO	
&EPB+V2WL2UC01/1	Parts list : SIE.6SL3525-0PE25-5AA1 - E-M.EM3BMHANQ4CG1012		1/19/2023	MKLEPADLO	

			Date	1/24/2023	Volvo Trucks North America	Valiant TMS	Table of contents : &EPB+V2UC162/1 - &EPB+V2WL2UC01/1	Drawing name: =2V01&EFS-EL_KF1	=
			Ed.	MKLEPADLO					+
			Appr		P6700 Framing - Cell 2V01, KF1			Document type: EAB	Project nr: 22-16152
Modification	Date	Name	Original		Replacement of	Replaced by	Scale 1:1		Page 46 / 1630

Table of contents

Column X: An automatically generated page was edited

F06_001

Page	Page description	supplementary page field	Date	Edited by	X
&EPB+V2WL3KF1/1	Parts list : SIE.6SL3546-0FB21-1FA0 - SIE.6SL3546-0FB21-1FA0		1/19/2023	MKLEPADLO	
&EPB+V2WL3UC01/1	Parts list : SIE.6SL3525-0PE23-0AA1 - EM.EM3BMHANQ4SDCG10		1/19/2023	MKLEPADLO	
&EPB+V2WL4KF1/1	Parts list : SIE.6SL3546-0FB21-1FA0 - SIE.6SL3546-0FB21-1FA0		1/19/2023	MKLEPADLO	
&EPB+V2WL4UC01/1	Parts list : SIE.6SL3525-0PE23-0AA1 - EM.EM3BMHANQ4SDCG10		1/19/2023	MKLEPADLO	
&ETT/1	Terminal line-up diagram =KF0KF1+UC31-PC1		1/19/2023	MKLEPADLO	
&ETT/2	Terminal line-up diagram =KF0KF1+UC31-PH1		1/19/2023	MKLEPADLO	
&ETT/3	Terminal line-up diagram =KF0WC3+UC31-XD1		1/19/2023	MKLEPADLO	
&ETT/4	Terminal line-up diagram =KF0WC3+UC31-XD2		1/19/2023	MKLEPADLO	
&ETT/5	Terminal line-up diagram =KF0WC4+UC31-XD11		1/19/2023	MKLEPADLO	
&ETT/6	Terminal line-up diagram =KF0WC4+UC31-XD12		1/19/2023	MKLEPADLO	
&ETT/7	Terminal line-up diagram =KF0WC4+UC31-XD13		1/19/2023	MKLEPADLO	
&ETT/8	Terminal line-up diagram =KF0WC4+UC31-XD14		1/19/2023	MKLEPADLO	
&ETT/9	Terminal line-up diagram =V1WC1+V1UC11-PE		1/19/2023	MKLEPADLO	
&ETT/10	Terminal line-up diagram =V1WC2+V1UC11-XD1		1/19/2023	MKLEPADLO	
&ETT/11	Terminal line-up diagram =V1WC2+V1UC11-XD2		1/19/2023	MKLEPADLO	
&ETT/12	Terminal line-up diagram =V1WC2+V1UC11-XD3		1/19/2023	MKLEPADLO	
&ETT/13	Terminal line-up diagram =V1WC3+V1UC11-XD1		1/19/2023	MKLEPADLO	
&ETT/14	Terminal line-up diagram =V1WC3+V1UC11-XD2		1/19/2023	MKLEPADLO	
&ETT/15	Terminal line-up diagram =V1WC3+V1UC11-XD3		1/19/2023	MKLEPADLO	
&ETT/16	Terminal line-up diagram =V1WC4+V1UC11-KF11.14		1/19/2023	MKLEPADLO	
&ETT/17	Terminal line-up diagram =V1WC4+V1UC11-XD5		1/19/2023	MKLEPADLO	
&ETT/18	Terminal line-up diagram =V1WC4+V1UC11-XD6		1/19/2023	MKLEPADLO	
&ETT/19	Terminal line-up diagram =V1WC4+V1UC11-XD10		1/19/2023	MKLEPADLO	
&ETT/20	Terminal line-up diagram =V1WC4+V1UC11-XD11		1/19/2023	MKLEPADLO	
&ETT/21	Terminal line-up diagram =V1WC4+V1UC11-XD12		1/19/2023	MKLEPADLO	
&ETT/22	Terminal line-up diagram =V1WC4+V1UC11-XD13		1/19/2023	MKLEPADLO	
&ETT/23	Terminal line-up diagram =V1WC4+V1UC11-XD14		1/19/2023	MKLEPADLO	
&ETT/24	Terminal line-up diagram =V1WC4+V1UC11-XD20		1/19/2023	MKLEPADLO	
&ETT/25	Terminal line-up diagram =V1WC4+V1UC11-XD51		1/19/2023	MKLEPADLO	
&ETT/26	Terminal line-up diagram =V1WC4+V1UC11-XD52		1/19/2023	MKLEPADLO	
&ETT/27	Terminal line-up diagram =V1WC4+V1UC11-XD53		1/19/2023	MKLEPADLO	
&ETT/28	Terminal line-up diagram =V1WC4+V1UC11-XD54		1/19/2023	MKLEPADLO	
&ETT/29	Terminal line-up diagram =V1WC1+V1UC12-PE		1/19/2023	MKLEPADLO	

			Date	1/24/2023	Volvo Trucks North America	Valiant TMS	Table of contents : &EPB+V2WL3KF1/1 - &ETT/29	Drawing name: =2V01&EFS-EL_KF1	=
			Ed.	MKLEPADLO					+
			Appr		P6700 Framing - Cell 2V01, KF1			Document type: EAB	Project nr: 22-16152
Modification	Date	Name	Original		Replacement of	Replaced by	Scale 1:1		Page 47 / 1630

Table of contents

Column X: An automatically generated page was edited

F06_001

Page	Page description	supplementary page field	Date	Edited by	X
&ETT/30	Terminal line-up diagram =V1WC2+V1UC12-XD1		1/19/2023	MKLEPADLO	
&ETT/31	Terminal line-up diagram =V1WC2+V1UC12-XD2		1/19/2023	MKLEPADLO	
&ETT/32	Terminal line-up diagram =V1WC2+V1UC12-XD3		1/19/2023	MKLEPADLO	
&ETT/33	Terminal line-up diagram =V1WC3+V1UC12-XD1		1/19/2023	MKLEPADLO	
&ETT/34	Terminal line-up diagram =V1WC3+V1UC12-XD2		1/19/2023	MKLEPADLO	
&ETT/35	Terminal line-up diagram =V1WC3+V1UC12-XD3		1/19/2023	MKLEPADLO	
&ETT/36	Terminal line-up diagram =V1WC4+V1UC12-KF12.14		1/19/2023	MKLEPADLO	
&ETT/37	Terminal line-up diagram =V1WC4+V1UC12-XD5		1/19/2023	MKLEPADLO	
&ETT/38	Terminal line-up diagram =V1WC4+V1UC12-XD6		1/19/2023	MKLEPADLO	
&ETT/39	Terminal line-up diagram =V1WC4+V1UC12-XD10		1/19/2023	MKLEPADLO	
&ETT/40	Terminal line-up diagram =V1WC4+V1UC12-XD11		1/19/2023	MKLEPADLO	
&ETT/41	Terminal line-up diagram =V1WC4+V1UC12-XD12		1/19/2023	MKLEPADLO	
&ETT/42	Terminal line-up diagram =V1WC4+V1UC12-XD13		1/19/2023	MKLEPADLO	
&ETT/43	Terminal line-up diagram =V1WC4+V1UC12-XD14		1/19/2023	MKLEPADLO	
&ETT/44	Terminal line-up diagram =V1WC4+V1UC12-XD20		1/19/2023	MKLEPADLO	
&ETT/45	Terminal line-up diagram =V1WC4+V1UC12-XD51		1/19/2023	MKLEPADLO	
&ETT/46	Terminal line-up diagram =V1WC4+V1UC12-XD52		1/19/2023	MKLEPADLO	
&ETT/47	Terminal line-up diagram =V1WC4+V1UC12-XD53		1/19/2023	MKLEPADLO	
&ETT/48	Terminal line-up diagram =V1WC4+V1UC12-XD54		1/19/2023	MKLEPADLO	
&ETT/49	Terminal line-up diagram =V1WC4+V1UC32-XD11		1/19/2023	MKLEPADLO	
&ETT/50	Terminal line-up diagram =V1PZ1PF1+V1UC61-XD11		1/19/2023	MKLEPADLO	
&ETT/51	Terminal line-up diagram =V2WC3+V2UC14-XD1		1/19/2023	MKLEPADLO	
&ETT/52	Terminal line-up diagram =V2WC4+V2UC14-KF14.12		1/19/2023	MKLEPADLO	
&ETT/53	Terminal line-up diagram =V2WC4+V2UC14-XD5		1/19/2023	MKLEPADLO	
&ETT/54	Terminal line-up diagram =V2WC4+V2UC14-XD6		1/19/2023	MKLEPADLO	
&ETT/55	Terminal line-up diagram =V2WC4+V2UC14-XD10		1/19/2023	MKLEPADLO	
&ETT/56	Terminal line-up diagram =V2WC4+V2UC14-XD11		1/19/2023	MKLEPADLO	
&ETT/57	Terminal line-up diagram =V2WC4+V2UC14-XD12		1/19/2023	MKLEPADLO	
&ETT/58	Terminal line-up diagram =V2WC4+V2UC14-XD13		1/19/2023	MKLEPADLO	
&ETT/59	Terminal line-up diagram =V2WC4+V2UC14-XD14		1/19/2023	MKLEPADLO	
&ETT/60	Terminal line-up diagram =V2WC4+V2UC14-XD15		1/19/2023	MKLEPADLO	
&ETT/61	Terminal line-up diagram =V2WC4+V2UC14-XD16		1/19/2023	MKLEPADLO	
&ETT/62	Terminal line-up diagram =V2WC4+V2UC14-XD17		1/19/2023	MKLEPADLO	

			Date	1/24/2023	Volvo Trucks North America	Valiant TMS	Table of contents : &ETT/30 - &ETT/62	Drawing name: =2V01&EFS-EL_KF1	=	
			Ed.	MKLEPADLO					+	
			Appr		P6700 Framing - Cell 2V01, KF1			Document type: EAB	Project nr: 22-16152	Page 48
Modification	Date	Name	Original		Replacement of / Replaced by	Scale 1:1				1630

Table of contents

Column X: An automatically generated page was edited

F06_001

Page	Page description	supplementary page field	Date	Edited by	X
&ETT/63	Terminal line-up diagram =V2WC4+V2UC14-XD18		1/19/2023	MKLEPADLO	
&ETT/64	Terminal line-up diagram =V2WC4+V2UC14-XD51		1/19/2023	MKLEPADLO	
&ETT/65	Terminal line-up diagram =V2WC4+V2UC14-XD52		1/19/2023	MKLEPADLO	
&ETT/66	Terminal line-up diagram =V2WC4+V2UC14-XD53		1/19/2023	MKLEPADLO	
&ETT/67	Terminal line-up diagram =V2WC4+V2UC14-XD54		1/19/2023	MKLEPADLO	
&ETT/68	Terminal line-up diagram =V2WC3+V2UC15-XD1		1/19/2023	MKLEPADLO	
&ETT/69	Terminal line-up diagram =V2WC4+V2UC15-KF15.12		1/19/2023	MKLEPADLO	
&ETT/70	Terminal line-up diagram =V2WC4+V2UC15-XD5		1/19/2023	MKLEPADLO	
&ETT/71	Terminal line-up diagram =V2WC4+V2UC15-XD6		1/19/2023	MKLEPADLO	
&ETT/72	Terminal line-up diagram =V2WC4+V2UC15-XD10		1/19/2023	MKLEPADLO	
&ETT/73	Terminal line-up diagram =V2WC4+V2UC15-XD11		1/19/2023	MKLEPADLO	
&ETT/74	Terminal line-up diagram =V2WC4+V2UC15-XD12		1/19/2023	MKLEPADLO	
&ETT/75	Terminal line-up diagram =V2WC4+V2UC15-XD13		1/19/2023	MKLEPADLO	
&ETT/76	Terminal line-up diagram =V2WC4+V2UC15-XD14		1/19/2023	MKLEPADLO	
&ETT/77	Terminal line-up diagram =V2WC4+V2UC15-XD15		1/19/2023	MKLEPADLO	
&ETT/78	Terminal line-up diagram =V2WC4+V2UC15-XD16		1/19/2023	MKLEPADLO	
&ETT/79	Terminal line-up diagram =V2WC4+V2UC15-XD17		1/19/2023	MKLEPADLO	
&ETT/80	Terminal line-up diagram =V2WC4+V2UC15-XD18		1/19/2023	MKLEPADLO	
&ETT/81	Terminal line-up diagram =V2WC4+V2UC15-XD51		1/19/2023	MKLEPADLO	
&ETT/82	Terminal line-up diagram =V2WC4+V2UC15-XD52		1/19/2023	MKLEPADLO	
&ETT/83	Terminal line-up diagram =V2WC4+V2UC15-XD53		1/19/2023	MKLEPADLO	
&ETT/84	Terminal line-up diagram =V2WC4+V2UC15-XD54		1/19/2023	MKLEPADLO	
&ETT/85	Terminal line-up diagram =V2WC4+V2UC32-XD11		1/19/2023	MKLEPADLO	
&ETT/86	Terminal line-up diagram =V2WC4+V2UC33-XD11		1/19/2023	MKLEPADLO	
&ETT/87	Terminal line-up diagram =V2PZ1PF1+V2UC61-XD11		1/19/2023	MKLEPADLO	
&EXX/1	Summarized parts list : TS 35_7,5 - SIE.6ES7193-6BP00-0DA0		1/19/2023	MKLEPADLO	
&EXX/2	Summarized parts list : SIE.6ES7132-6BH01-0BA0 - ABB.1SFA619200R1016		1/19/2023	MKLEPADLO	
&EXX/3	Summarized parts list : ABB.2CDS271337R0104 - TUR.RSM-2RKM 50		1/20/2023	MKLEPADLO	
&EXX/4	Summarized parts list : WEL.WWS001A - A-B.802T-AP		1/19/2023	MKLEPADLO	
&EXX/5	Summarized parts list : BAN.71959 - RIT.5051300		1/20/2023	MKLEPADLO	
&EXX/6	Summarized parts list : RIT.5051375 - SIE.3VA9977-0TA20		1/19/2023	MKLEPADLO	
&EXX/7	Summarized parts list : SIE.7KM9300-0AE02-0AA0 - ABB.2CDS271517R0357		1/19/2023	MKLEPADLO	
&EXX/8	Summarized parts list : EMPD3FBCB-015A-M - SIE.6SL3120-2TE13-0AD0		1/20/2023	MKLEPADLO	

			Date	1/24/2023	Volvo Trucks North America	Valiant TMS	Table of contents : &ETT/63 - &EXX/8	Drawing name: =2V01&EFS-EL_KF1	=
			Ed.	MKLEPADLO					+
			Appr		P6700 Framing - Cell 2V01, KF1			Document type: EAB	Project nr: 22-16152
Modification	Date	Name	Original		Replacement of / Replaced by	Scale 1:1			Page 49 / 1630

Table of contents

Column X: An automatically generated page was edited

F06_001

Page	Page description	supplementary page field	Date	Edited by	X
&EXX/9	Summarized parts list : SIE.6SL3120-1TE13-0AD0 - RIT.SETS8205SID5		1/20/2023	MKLEPADLO	
&EYY/1	Terminal-strip overview : =KF0KF1+UC31-PC1 - =KF0WC4+UC31-XD14		1/19/2023	MKLEPADLO	
&EYY/2	Terminal-strip overview : =V1WC1+V1UC11-PE - =V1WC4+V1UC11-XD54		1/19/2023	MKLEPADLO	
&EYY/3	Terminal-strip overview : =V1WC1+V1UC12-PE - =V1WC4+V1UC12-XD54		1/19/2023	MKLEPADLO	
&EYY/4	Terminal-strip overview : =V1WC4+V1UC32-XD11 - =V1WC4+V1UC32-XD11		1/19/2023	MKLEPADLO	
&EYY/5	Terminal-strip overview : =V1PZ1PF1+V1UC61-XD11 - =V1PZ1PF1+V1UC61-XD11		1/19/2023	MKLEPADLO	
&EYY/6	Terminal-strip overview : =V2WC3+V2UC14-XD1 - =V2WC4+V2UC14-XD54		1/19/2023	MKLEPADLO	
&EYY/7	Terminal-strip overview : =V2WC3+V2UC15-XD1 - =V2WC4+V2UC15-XD54		1/19/2023	MKLEPADLO	
&EYY/8	Terminal-strip overview : =V2WC4+V2UC32-XD11 - =V2WC4+V2UC32-XD11		1/19/2023	MKLEPADLO	
&EYY/9	Terminal-strip overview : =V2WC4+V2UC33-XD11 - =V2WC4+V2UC33-XD11		1/19/2023	MKLEPADLO	
&EYY/10	Terminal-strip overview : =V2PZ1PF1+V2UC61-XD11 - =V2PZ1PF1+V2UC61-XD11		1/19/2023	MKLEPADLO	
&EAZ/1	Amendment page		12/19/2022	MKLEPADLO	
&EAZ/2	Amendment page		12/19/2022	MKLEPADLO	

			Date	1/24/2023	Volvo Trucks North America	Valiant TMS	Table of contents : &EXX/9 - &EAZ/2	Drawing name: =2V01&EFS-EL_KF1	=
			Ed.	MKLEPADLO					+
			Appr		P6700 Framing - Cell 2V01, KF1			Document type: EAB	Project nr: 22-16152
Modification	Date	Name	Original		Replacement of / Replaced by	Scale 1:1			Page 50 / 1630

0	1	2	3	4	5	6	7	8	9

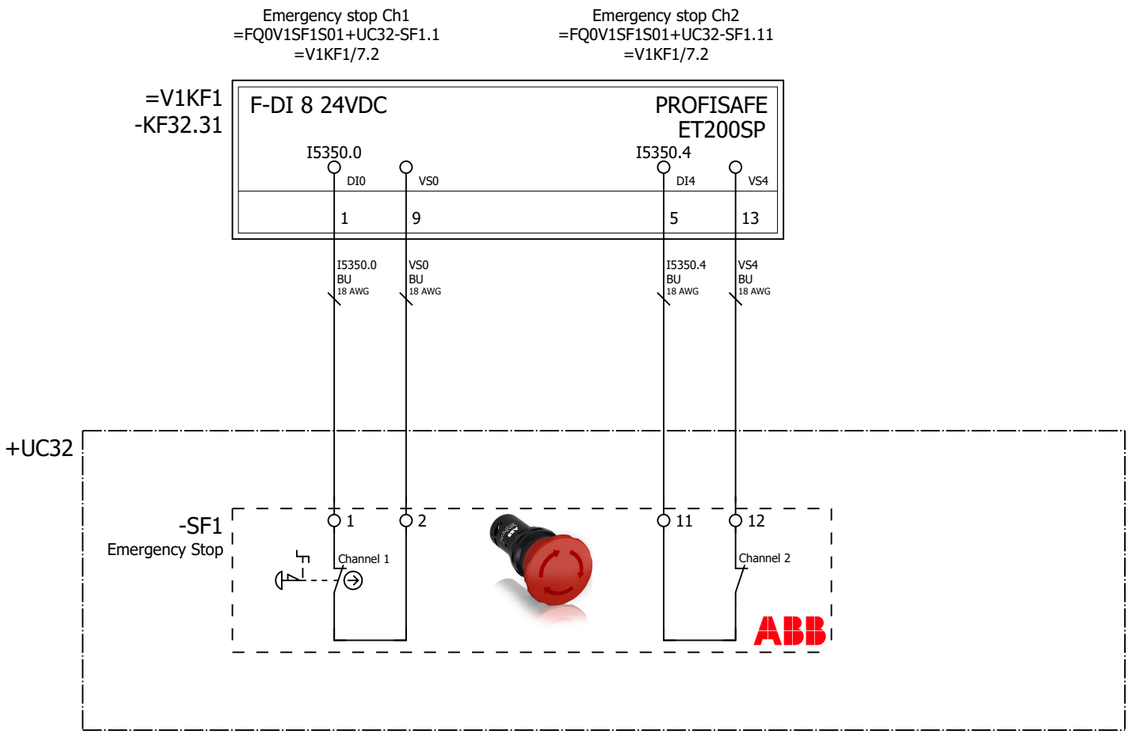

&EAB+/50

=FQ0V2SF1S01+V2UC32/1

			Date	1/24/2023	Volvo Trucks North America	Valiant TMS	Emergency stop +V1SF1S01UC32	Drawing name: =2V01&EFS-EL_KF1	= FQ0V1SF1S01
			Ed.	MKLEPADLO					+ V1UC32
			Appr		P6700 Framing - Cell 2V01, KF1	Scale 1:1		Document type: EFS	Project nr: 22-16152
Modification	Date	Name	Original		Replacement of	Replaced by			Page 1 / 1630

0	1	2	3	4	5	6	7	8	9

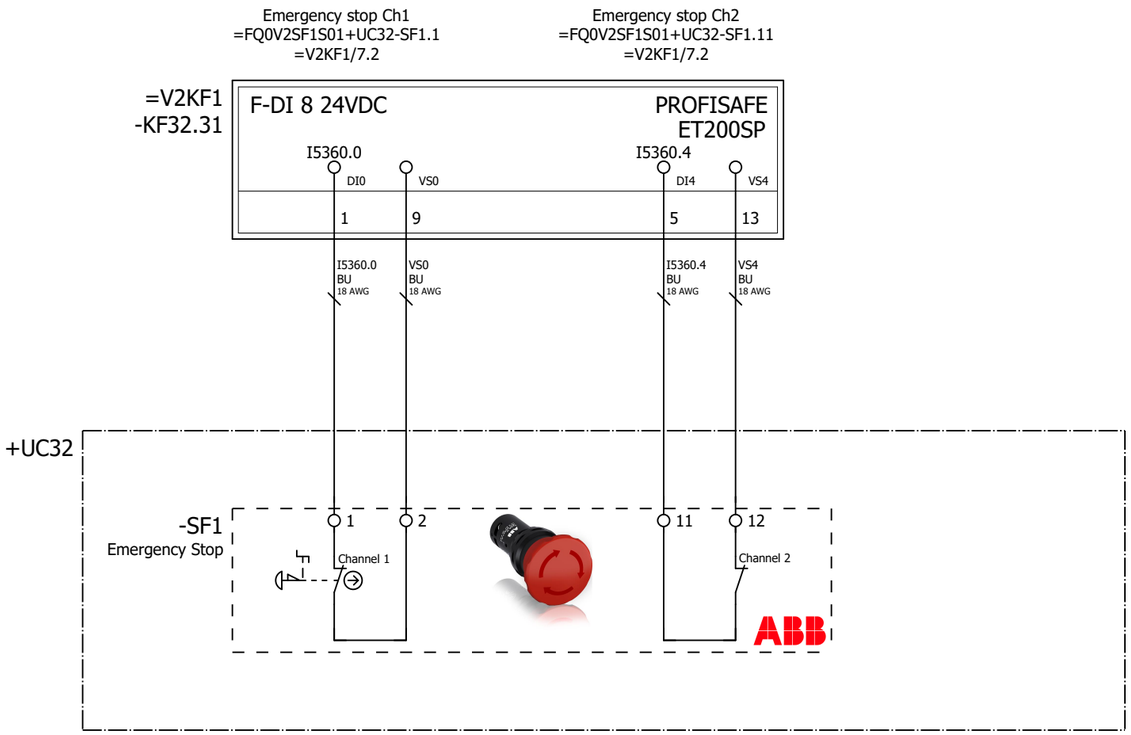

=FQ0V1SF1S01+V1UC32/1

=FQ0V2SF2S01+.UC33/1

			Date	1/24/2023	Volvo Trucks North America	Valiant TMS	Emergency stop +V2SF1S01UC32	Drawing name: =2V01&EFS-EL_KF1	= FQ0V2SF1S01
			Ed.	MKLEPADLO					+ V2UC32
			Appr		P6700 Framing - Cell 2V01, KF1	Scale 1:1		Document type: EFS	Project nr: 22-16152
Modification	Date	Name	Original		Replacement of	Replaced by			Page 1 / 1630

0	1	2	3	4	5	6	7	8	9

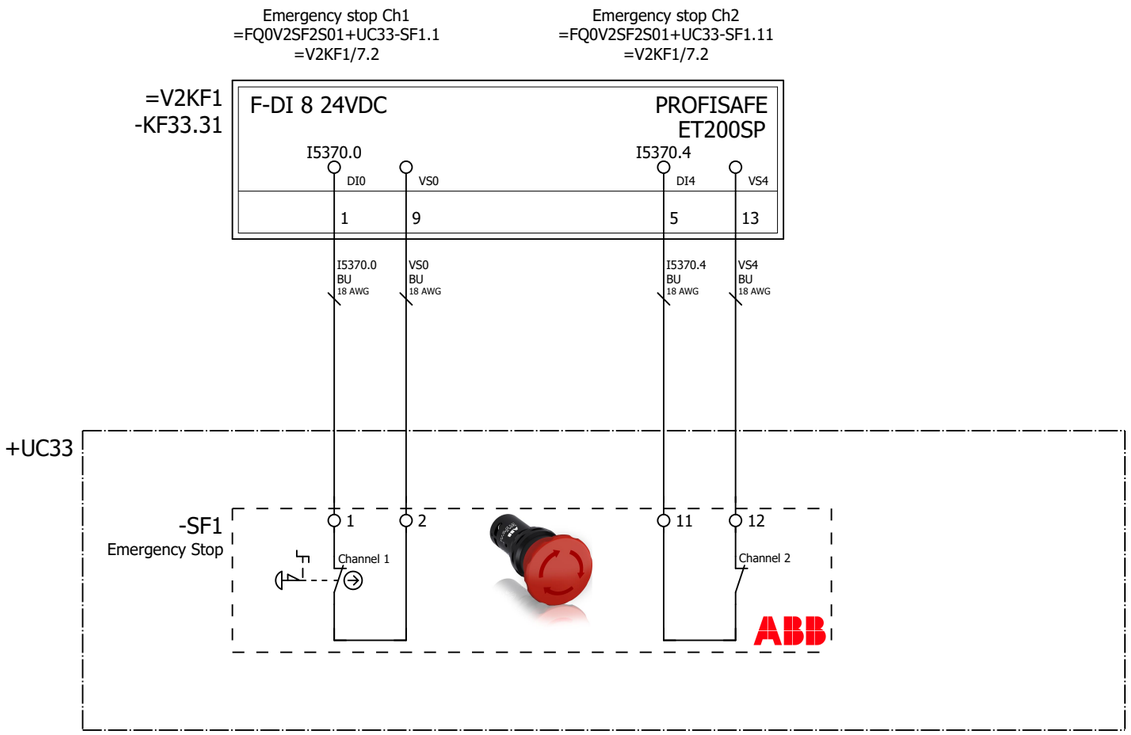

=FQ0V2SF1S01+.UC32/1

=KF0FQ0+UC31/1

			Date	1/24/2023	Volvo Trucks North America	Valiant TMS	Emergency stop +V2SF2S01UC33	Drawing name: =2V01&EFS-EL_KF1	= FQ0V2SF2S01
			Ed.	MKLEPADLO					+ V2UC33
			Appr		P6700 Framing - Cell 2V01, KF1			Document type: EFS	Project nr: 22-16152
Modification	Date	Name	Original		Replacement of	Replaced by	Scale 1:1		Page 1 / 1630

0	1	2	3	4	5	6	7	8	9

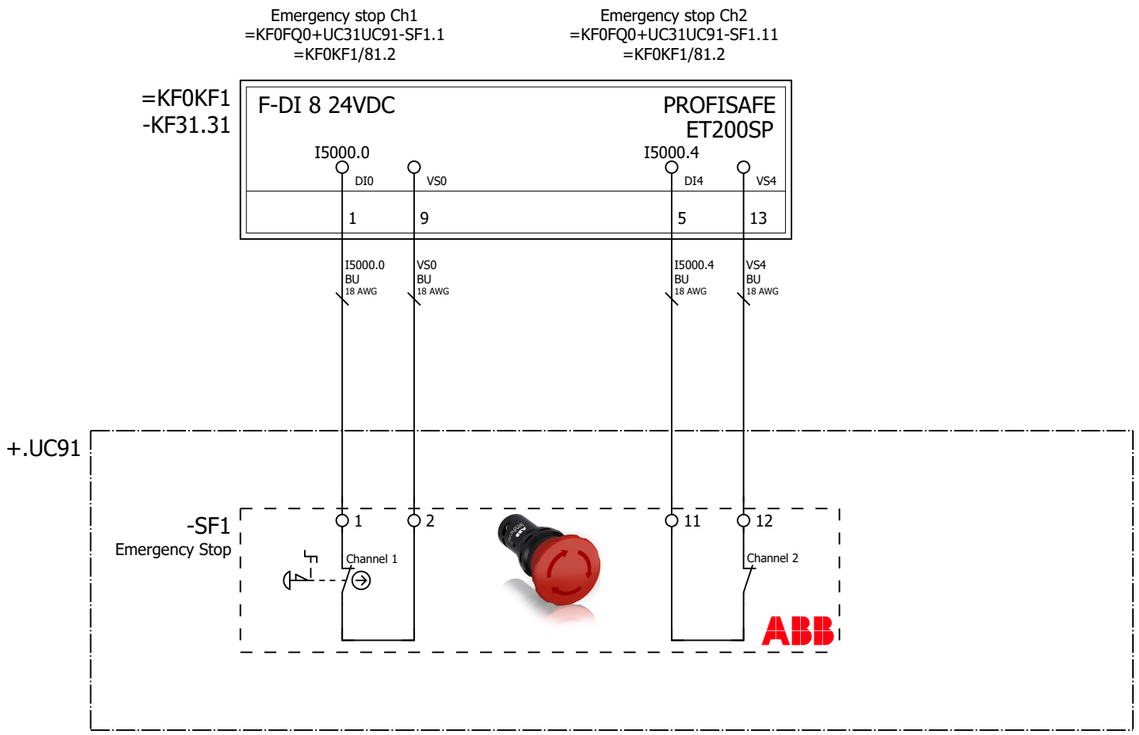

=FQ0V2SF2S01+V2UC33/1 =KF0KF1/1

			Date	1/24/2023	Volvo Trucks North America	Valiant TMS	Operating box UC91 MOP	Drawing name: =2V01&EFS-EL_KF1	= KF0FQ0
			Ed.	MKLEPADLO					+ UC31
			Appr		P6700 Framing - Cell 2V01, KF1			Document type: EFS	Project nr: 22-16152
Modification	Date	Name	Original		Replacement of / Replaced by	Scale 1:1			Page 1 / 1630

0	1	2	3	4	5	6	7	8	9

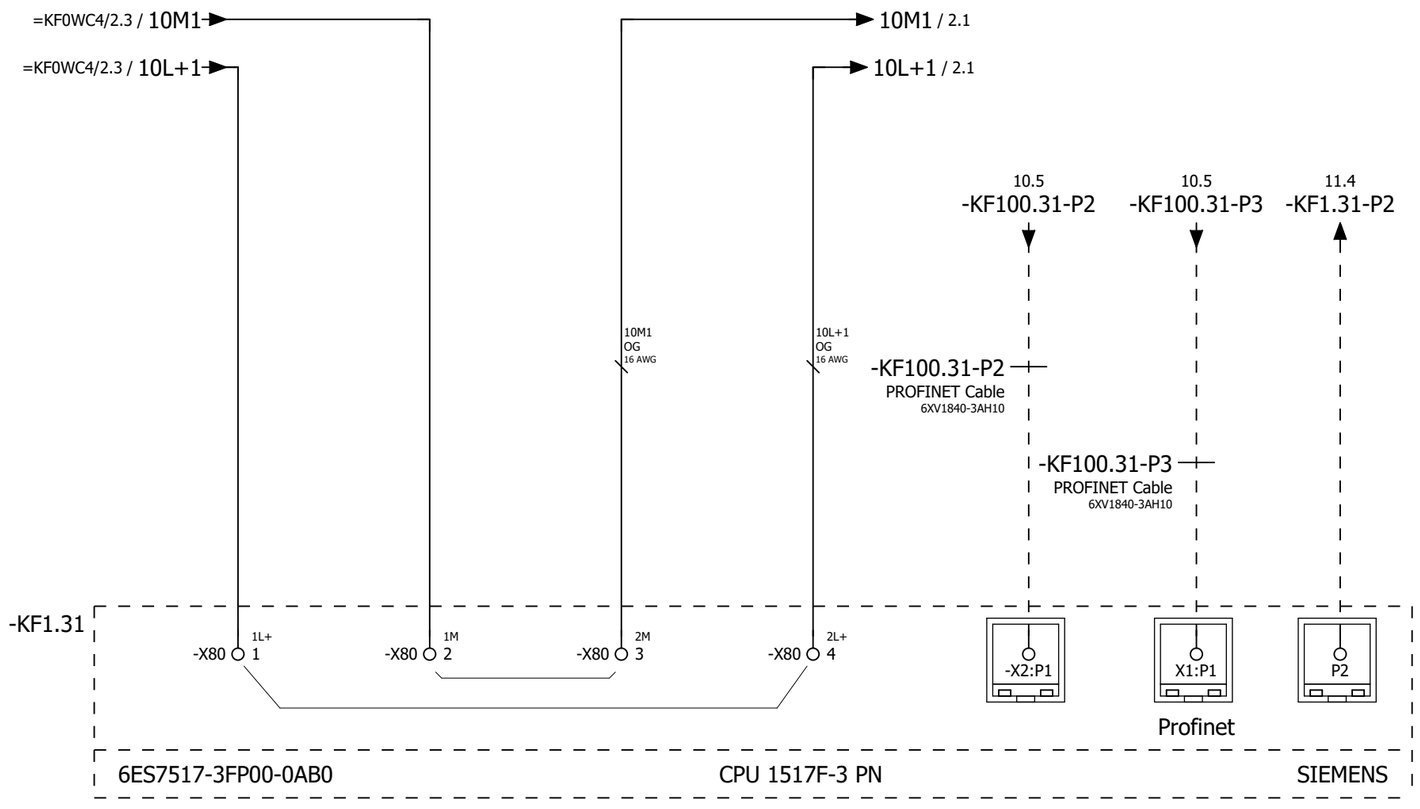

=KF0FQ0/1

2

			Date	1/24/2023	Volvo Trucks North America	Valiant TMS	CPU 1517-F-3PN/DP, Failsafe	Drawing name: =2V01&EFS-EL_KF1	= KF0KF1
			Ed.	MKLEPADLO					+ UC31
			Appr		P6700 Framing - Cell 2V01, KF1	Scale 1:1		Document type: EFS	Project nr: 22-16152
Modification	Date	Name	Original		Replacement of	Replaced by			Page 1 / 1630

0	1	2	3	4	5	6	7	8	9

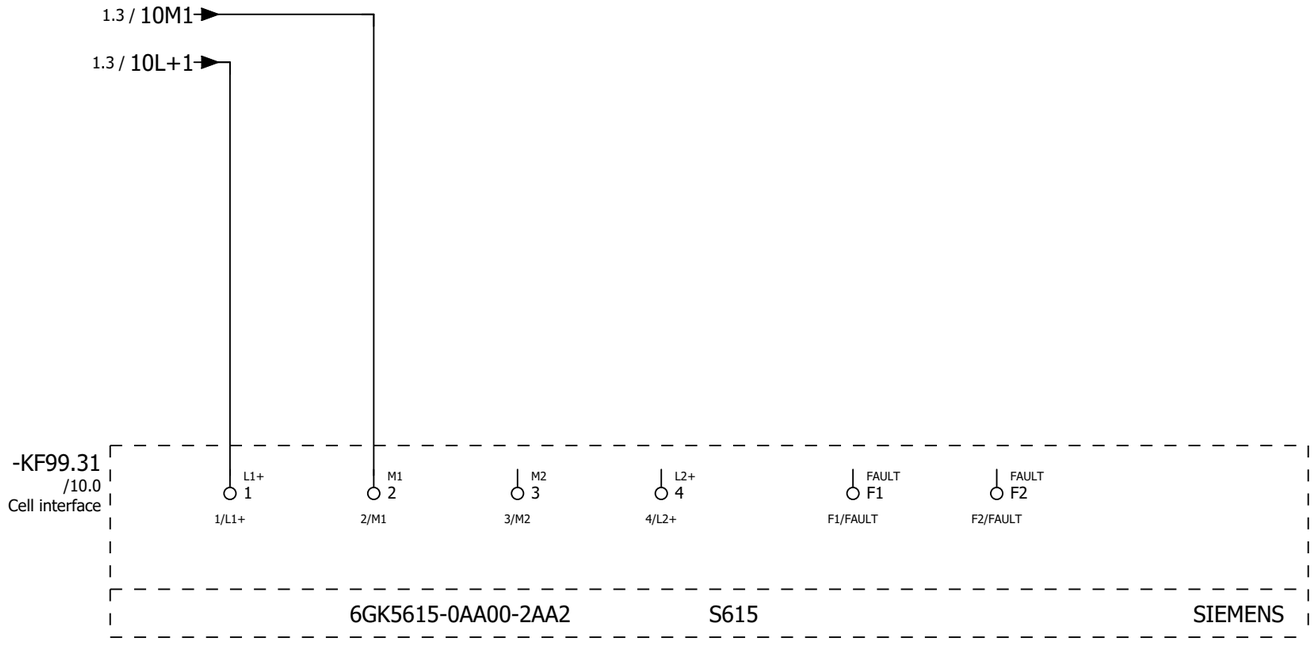

1 3

			Date	1/24/2023	Volvo Trucks North America		Valiant TMS	Cell interface S615	Drawing name: =2V01&EFS-EL_KF1	= KF0KF1
			Ed.	MKLEPADLO						+ UC31
			Appr		P6700 Framing - Cell 2V01, KF1		Scale 1:1		Document type: EFS	Project nr: 22-16152
Modification	Date	Name	Original		Replacement of	Replaced by				Page 2 / 1630

0	1	2	3	4	5	6	7	8	9

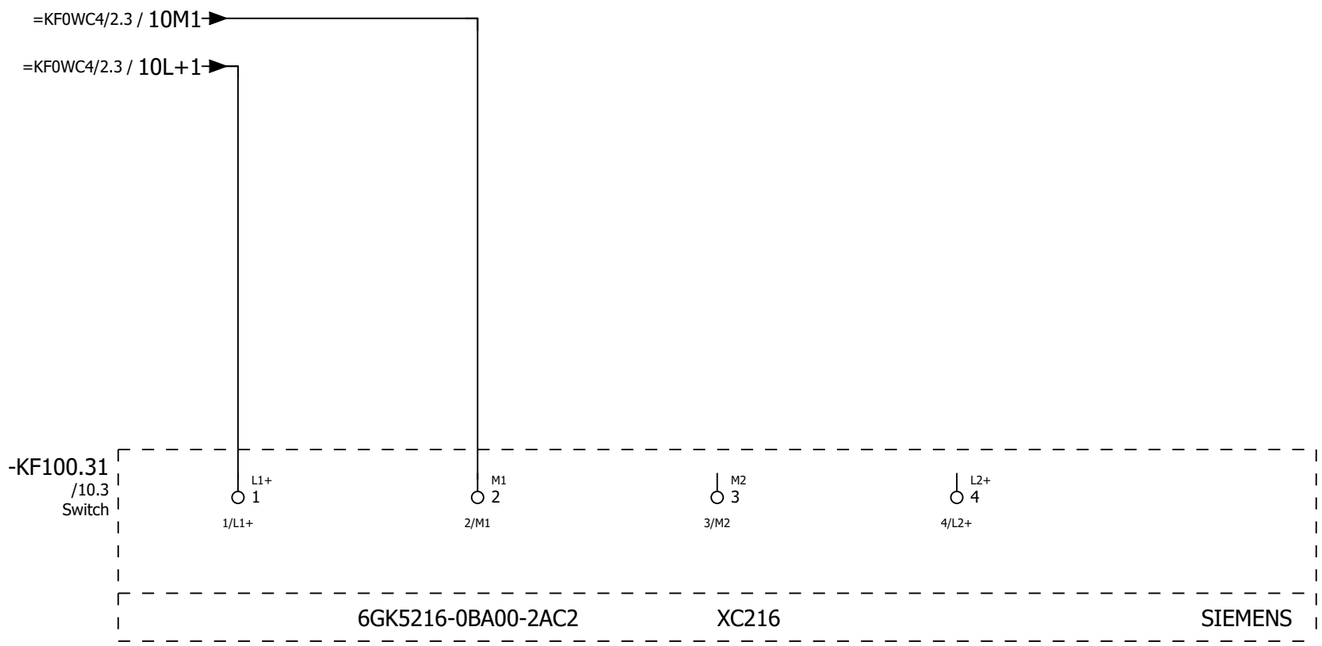

2 4

			Date	1/24/2023	Volvo Trucks North America	Valiant TMS	Switch, Scalance XC216	Drawing name: =2V01&EFS-EL_KF1		= KF0KF1	
			Ed.	MKLEPADLO						+ UC31	
			Appr		P6700 Framing - Cell 2V01, KF1			Document type: EFS	Project nr: 22-16152	Page	3
Modification	Date	Name	Original		Replacement of / Replaced by	Scale 1:1					1630

-KF98.31
/5.0
=2W3+UC34 Conveyor
SIE.6ES7158-3AD10-0XA0
SIE.6ES7193-6AR00-0AA0

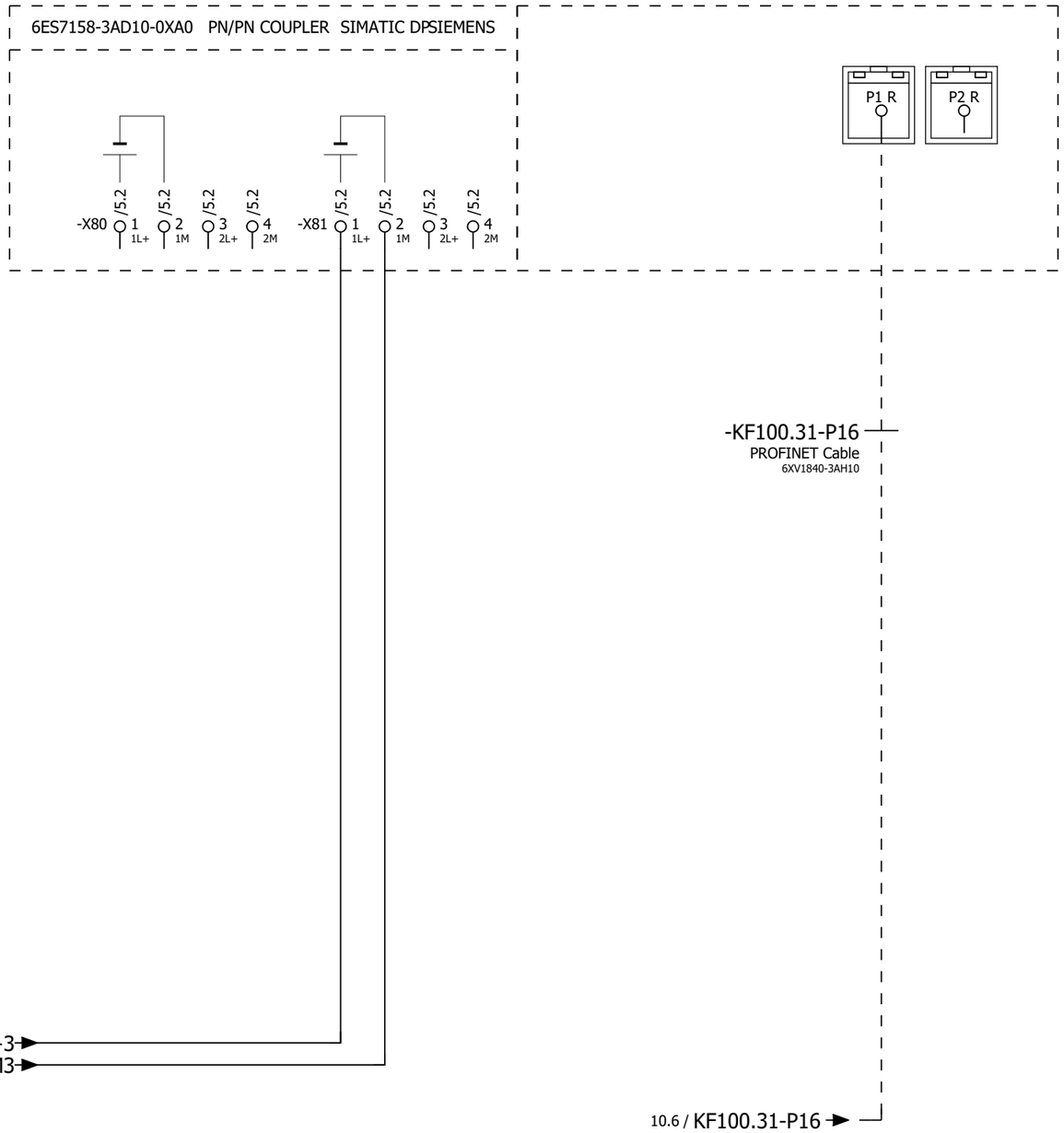

3 5

			Date	1/24/2023	Volvo Trucks North America		Valiant TMS	PN/PN Module	Drawing name: =2V01&EFS-EL_KF1	= KF0KF1	
			Ed.	MKLEPADLO						+ UC31	
			Appr		P6700 Framing - Cell 2V01, KF1		Scale 1:1		Document type: EFS	Project nr: 22-16152	Page 4 / 1630
Modification	Date	Name	Original		Replacement of	Replaced by					

0	1	2	3	4	5	6	7	8	9

-KF98.31
=2V01+V1UC31 MOP1

SIMATIC DP SIEMENS
PN/PN COUPLER

-K1
X1-S1
X1P1 R
PN
X1P2 R
PN
SIE.6ES7193-6AF00-0AA0

-K2
X1-S2
X2P1 R
PN
X2P2 R
PN
SIE.6ES7193-6AF00-0AA0

-X80:1 1L+		/4.3
-X80:2 1M		/4.3
-X80:3 2L+		/4.3
-X80:4 2M		/4.4
-X81:1 1L+		/4.4
-X81:2 1M		/4.4
-X81:3 2L+		/4.4
-X81:4 2M		/4.5

6ES7158-3AD10-0XA0

4 6

			Date	1/24/2023	Volvo Trucks North America	Valiant TMS	ET200S Cross-reference Input module	Drawing name: =2V01&EFS-EL_KF1	= KF0KF1
			Ed.	MKLEPADLO					+ UC31
			Appr		P6700 Framing - Cell 2V01, KF1			Document type: EFS / Project nr: 22-16152	Page 5
Modification	Date	Name	Original		Replacement of / Replaced by	Scale 1:1			1630

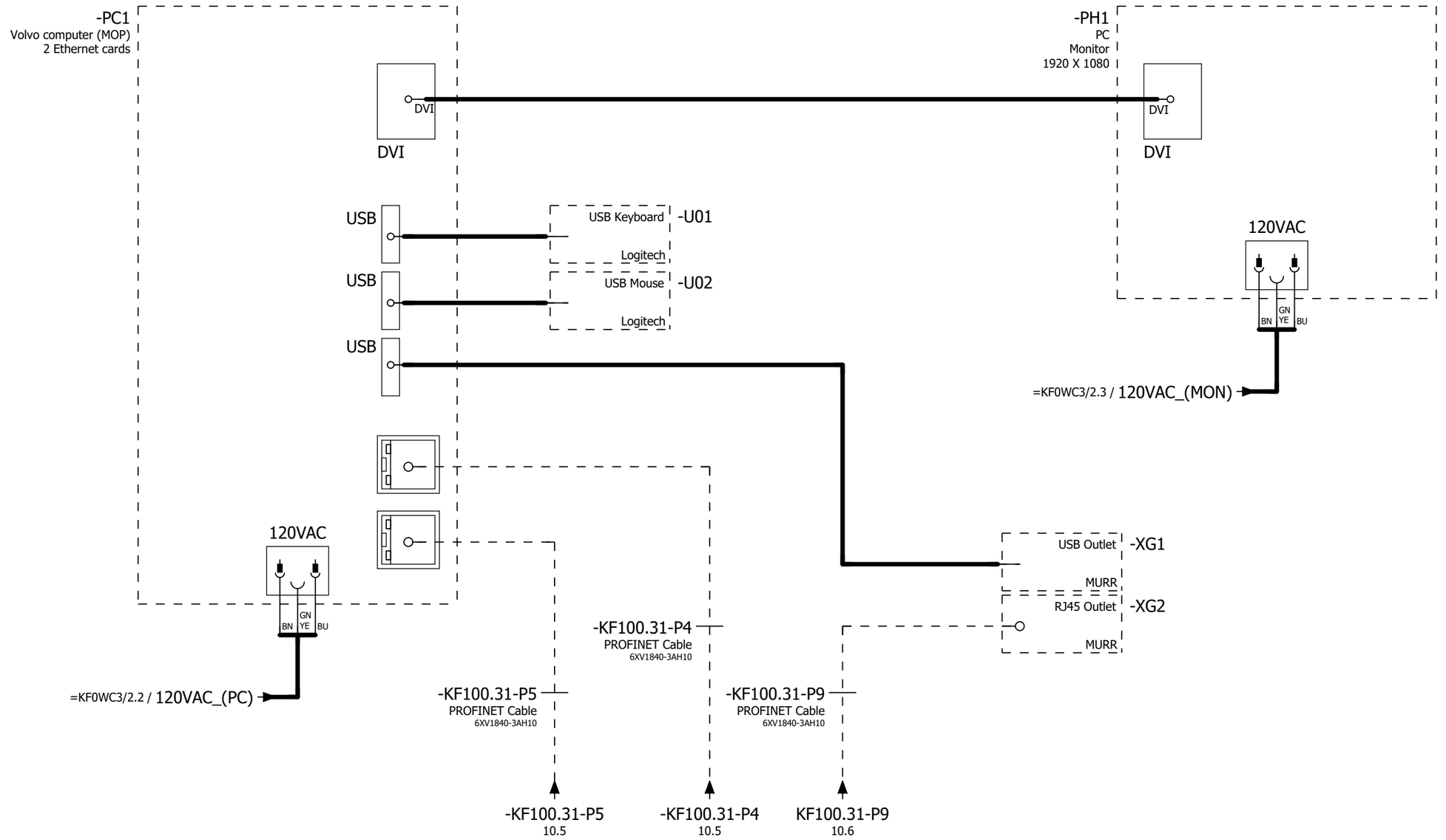

5 10

			Date	1/24/2023	Volvo Trucks North America		Valiant TMS	MOP, PC	Drawing name: =2V01&EFS-EL_KF1	= KF0KF1	
			Ed.	MKLEPADLO						+ UC31	
			Appr		P6700 Framing - Cell 2V01, KF1		Scale 1:1		Document type: EFS	Project nr: 22-16152	Page 6 / 1630
Modification	Date	Name	Original		Replacement of	Replaced by					

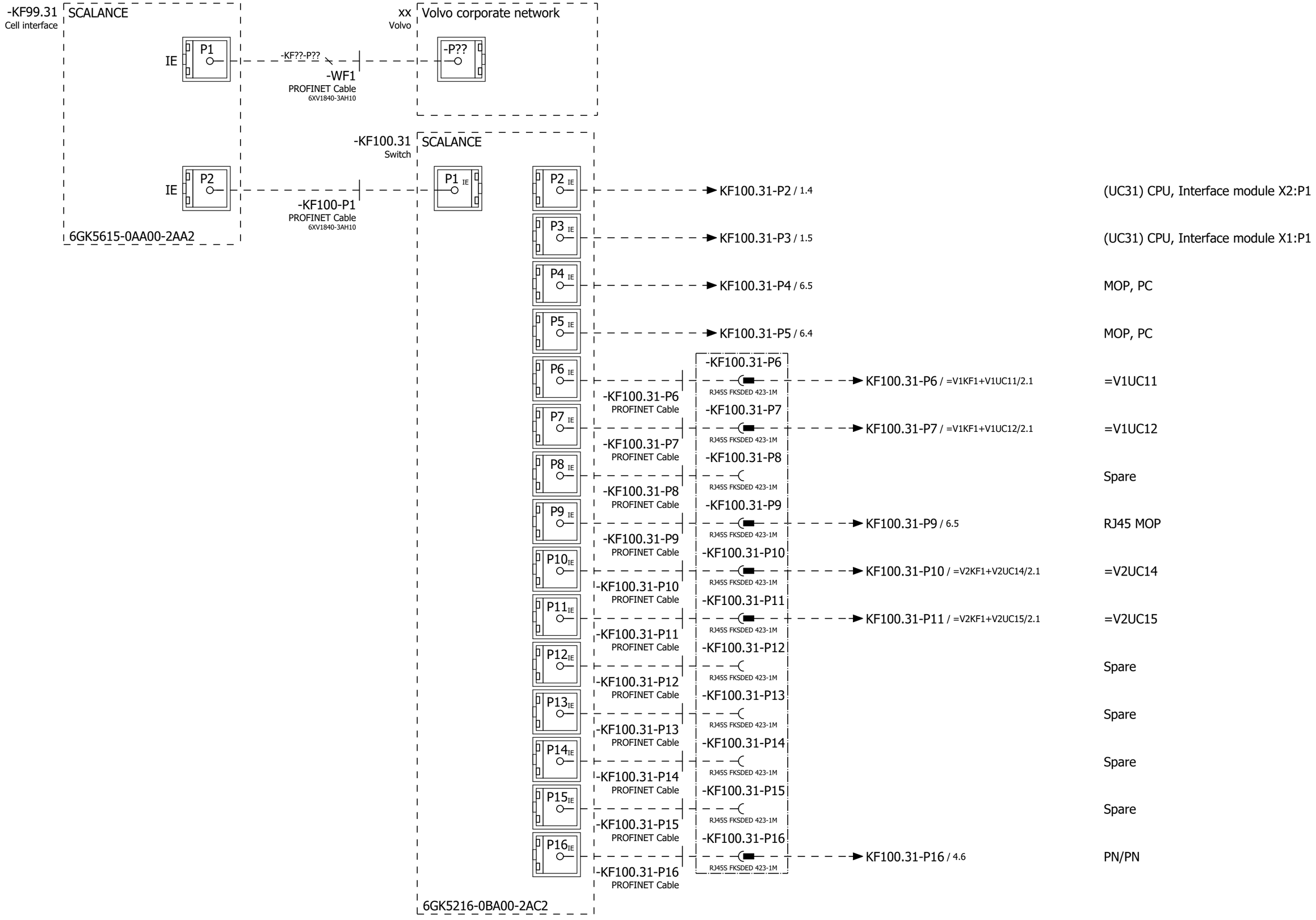

			Date	1/24/2023	Volvo Trucks North America		Valiant TMS	Network overview	Drawing name: =2V01&EFS-EL_KF1	= KF0KF1	
			Ed.	MKLEPADLO						+ UC31	
			Appr		P6700 Framing - Cell 2V01, KF1		Scale 1:1		Document type: EFS	Project nr: 22-16152	Page 10
Modification	Date	Name	Original		Replacement of	Replaced by					1630

0	1	2	3	4	5	6	7	8	9

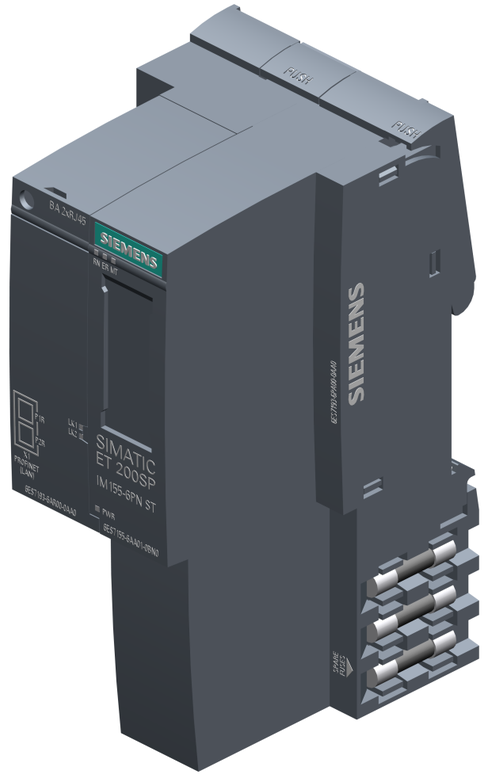

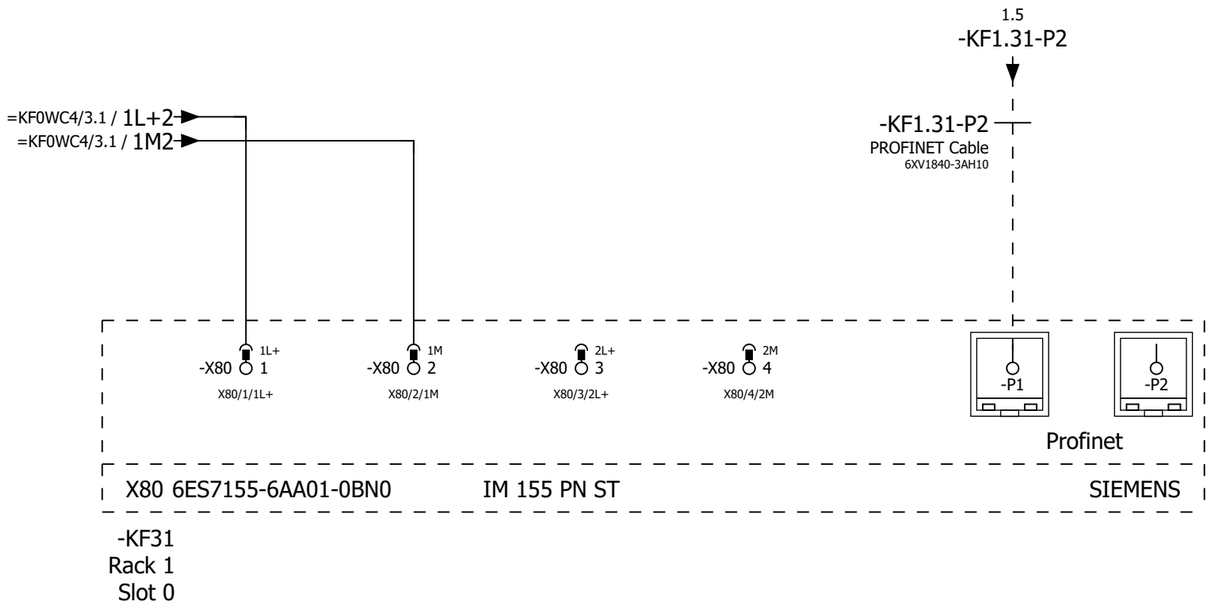

			Date	1/24/2023	Volvo Trucks North America	Valiant TMS	IM 155 PN	Drawing name: =2V01&EFS-EL_KF1	= KF0KF1
			Ed.	MKLEPADLO					+ UC31
			Appr		P6700 Framing - Cell 2V01, KF1			Document type: EFS	Project nr: 22-16152
Modification	Date	Name	Original		Replacement of	Replaced by	Scale 1:1		Page 11 / 1630

0	1	2	3	4	5	6	7	8	9

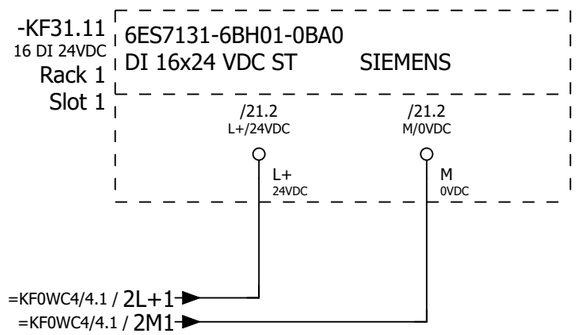

			Date	1/24/2023	Volvo Trucks North America	Valiant TMS	ET200S Wiring DI	Drawing name: =2V01&EFS-EL_KF1	= KF0KF1	
			Ed.	MKLEPADLO					+ UC31	
			Appr		P6700 Framing - Cell 2V01, KF1			Document type: EFS	Project nr: 22-16152	Page 12
Modification	Date	Name	Original		Replacement of	Replaced by	Scale 1:1			1630

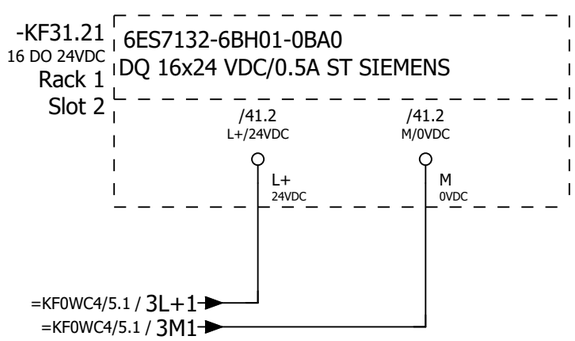

			Date	1/24/2023	Volvo Trucks North America		Valiant TMS	ET200S Wiring DO	Drawing name: =2V01&EFS-EL_KF1	= KF0KF1	
			Ed.	MKLEPADLO						+ UC31	
			Appr		P6700 Framing - Cell 2V01, KF1				Document type: EFS	Project nr: 22-16152	Page 14
Modification	Date	Name	Original		Replacement of	Replaced by	Scale 1:1				1630

0	1	2	3	4	5	6	7	8	9

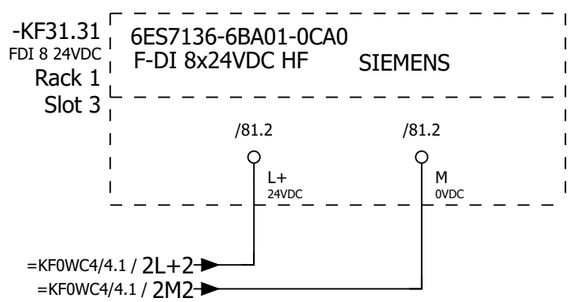

			Date	1/24/2023	Volvo Trucks North America	Valiant TMS	ET200S Wiring F-DI	Drawing name: =2V01&EFS-EL_KF1	= KF0KF1	
			Ed.	MKLEPADLO					+ UC31	
			Appr		P6700 Framing - Cell 2V01, KF1			Document type: EFS	Project nr: 22-16152	Page 18
Modification	Date	Name	Original		Replacement of	Replaced by	Scale 1:1			1630

0	1	2	3	4	5	6	7	8	9

-KF31.11

ET 200SP SIEMENS
DI 16x24 VDC ST

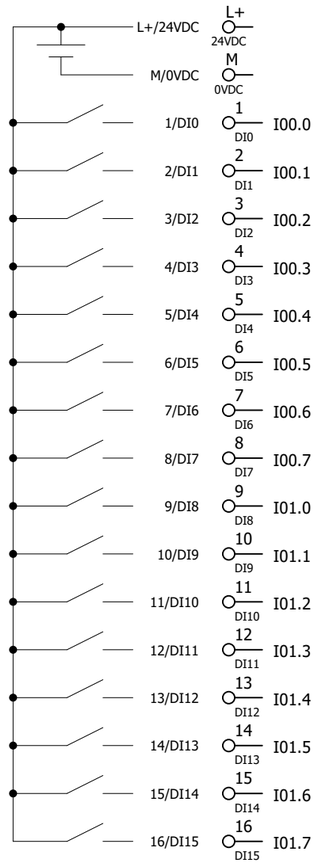

6ES7131-6BH01-0BA0

/12.1			
/12.2			
=KF0SF1/2.2	=KF0SF1+UC31UC92-SF1_I	Emergency stop tripped/reset PB	
=KF0SF1/2.5	=KF0SF1+UC31UC92-SF2_I	Enable power PB	
=KF0SF1/2.7	=KF0SF1+UC31UC92-SF3_I	Start auto PB	
=KF0SF1/2.7	=KF0SF1+UC31UC92-SF4_I	Man/Auto Sel Switch	
=KF0SF1/1.5	=KF0SF1+UC31UC91-SF5	Set PB	
=KF0SF1/1.2	=KF0SF1+UC31UC91-SF6	Reset PB	
	I00.6	Spare	
	I00.7	Spare	
=KF0WC4/2.6	=KF0WC4-GA1.1	UPS Battery	
=KF0WC4/2.7	=KF0WC4-GA1.2	UPS Alarm	
=KF0WC3/3.2	=KF0WC3+UC31-FC1	Monitoring 120 VAC	
=KF0WC3/3.4	=KF0WC3+UC31-FC2	Monitoring 120 VAC	
=KF0WC4/1.3	=KF0WC4+UC31-FC11_I	Monitoring 24 VDC	
	I01.5	Spare	
	I01.6	Spare	
	I01.7	Spare	

			Date	1/24/2023	Volvo Trucks North America		Valiant TMS	ET200S Cross-reference Input module	Drawing name: =2V01&EFS-EL_KF1	= KF0KF1
			Ed.	MKLEPADLO						+ UC31
			Appr		P6700 Framing - Cell 2V01, KF1				Document type: EFS	Project nr: 22-16152
Modification	Date	Name	Original		Replacement of	Replaced by	Scale 1:1			Page 21 / 1630

-KF31.21

ET 200SP SIEMENS
DQ 16x24 VDC/0.5A ST

L+/24VDC	L+ 24VDC		/14.1		
M/0VDC	M 0VDC		/14.2		
1/DQ0	1 DQ0	Q00.0	=KF0SF1/2.3	=KF0SF1+UC31UC92-PF1_Q	Emergency stop tripped/reset LT
2/DQ1	2 DQ1	Q00.1	=KF0SF1/2.8	=KF0SF1+UC31UC92-PF3_Q	Start auto LT
3/DQ2	3 DQ2	Q00.2		Q00.2	Spare
4/DQ3	4 DQ3	Q00.3		Q00.3	Spare
5/DQ4	5 DQ4	Q00.4		Q00.4	Spare
6/DQ5	6 DQ5	Q00.5		Q00.5	Spare
7/DQ6	7 DQ6	Q00.6		Q00.6	Spare
8/DQ7	8 DQ7	Q00.7		Q00.7	Spare
9/DQ8	9 DQ8	Q01.0	=KF0PZ1/1.3	=KF0PZ1+UC31-PF1_1	Indication column Green
10/DQ9	10 DQ9	Q01.1	=KF0PZ1/1.3	=KF0PZ1+UC31-PF1_2	Indication column Red
11/DQ10	11 DQ10	Q01.2	=KF0PZ1/1.4	=KF0PZ1+UC31-PF1_3	Indication column Siren
12/DQ11	12 DQ11	Q01.3		Q01.3	Spare
13/DQ12	13 DQ12	Q01.4		Q01.4	Spare
14/DQ13	14 DQ13	Q01.5		Q01.5	Spare
15/DQ14	15 DQ14	Q01.6		Q01.6	Spare
16/DQ15	16 DQ15	Q01.7		Q01.7	Spare

6ES7132-6BH01-0BA0

			Date	1/24/2023	Volvo Trucks North America	Valiant TMS	ET200S Cross-reference Output module	Drawing name: =2V01&EFS-EL_KF1	= KF0KF1	
			Ed.	MKLEPADLO					+ UC31	
			Appr		P6700 Framing - Cell 2V01, KF1	Scale 1:1		Document type: EFS	Project nr: 22-16152	Page 41 / 1630
Modification	Date	Name	Original		Replacement of / Replaced by					

0	1	2	3	4	5	6	7	8	9

-KF31.31
/18.0

ET 200SP SIEMENS
F-DI 8x24VDC HF

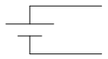

	L+ 24VDC	/18.1			
	M 0VDC	/18.2			
I5000.0	1 DI0	=KF0FQ0/1.3	=KF0FQ0+UC31UC91-SF1.1	Emergency stop Ch1	
	9 VS0	=KF0FQ0/1.3			
I5000.1	2 DI1		I5000.1	Spare	
	10 VS1				
I5000.2	3 DI2		I5000.2	Spare	
	11 VS2				
I5000.3	4 DI3		I5000.3	Spare	
	12 VS3				
I5000.4	5 DI4	=KF0FQ0/1.4	=KF0FQ0+UC31UC91-SF1.11	Emergency stop Ch2	
	13 VS4	=KF0FQ0/1.4			
I5000.5	6 DI5		I5000.5	Spare	
	14 VS5				
I5000.6	7 DI6		I5000.6	Spare	
	15 VS6				
I5000.7	8 DI7		I5000.7	Spare	
	16 VS7				

6ES7136-6BA01-0CA0

			Date	1/24/2023	Volvo Trucks North America	Valiant TMS	ET200S Cross-reference Safe input module	Drawing name: =2V01&EFS-EL_KF1	= KF0KF1
			Ed.	MKLEPADLO					+ UC31
			Appr		P6700 Framing - Cell 2V01, KF1			Document type: EFS	Project nr: 22-16152
Modification	Date	Name	Original		Replacement of / Replaced by	Scale 1:1			Page 81 / 1630

0	1	2	3	4	5	6	7	8	9

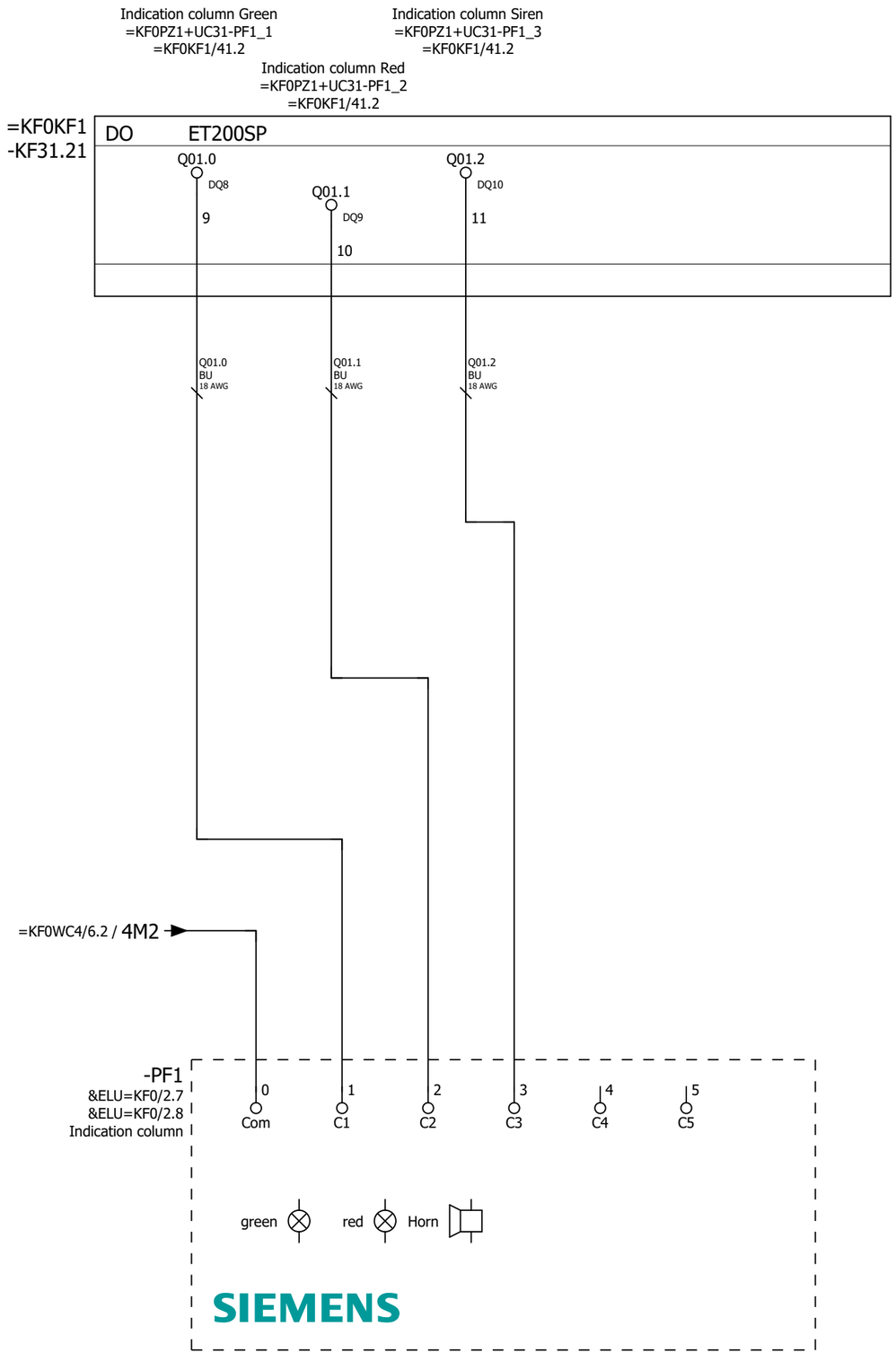

=KF0KF1/81

=KF0SF1/1

			Date	1/24/2023	Volvo Trucks North America	Valiant TMS	Indication column	Drawing name: =2V01&EFS-EL_KF1	= KF0PZ1
			Ed.	MKLEPADLO					+ UC31
			Appr		P6700 Framing - Cell 2V01, KF1	Scale 1:1		Document type: EFS	Project nr: 22-16152
Modification	Date	Name	Original		Replacement of	Replaced by			Page 1 / 1630

Reset PB
=KF0SF1+UC31UC91-SF6
=KF0KF1/21.2

DI	ET200SP
I00.5 DI5	
6	

=KF0KF1
-KF31.11

I00.5
BU
18 AWG

Set PB
=KF0SF1+UC31UC91-SF5
=KF0KF1/21.2

DI	ET200SP
I00.4 DI4	
5	

=KF0KF1
-KF31.11

I00.4
BU
18 AWG

+.UC91

-SF6
&ELU=KF0/3.0
&ELU=KF0/3.1
CP1-10Y-20
Reset PB

1SFA619100R1023

-SF5
&ELU=KF0/3.0
CP1-10G-20
Set PB

1SFA619100R1022

=KF0WC4/6.2 / 4L+2

=KF0PZ1/1

2

			Date	1/24/2023	Volvo Trucks North America	Valiant TMS	Operating box UC91 MOP	Drawing name: =2V01&EFS-EL_KF1	= KF0SF1
			Ed.	MKLEPADLO					+ UC31
			Appr		P6700 Framing - Cell 2V01, KF1			Document type: EFS	Project nr: 22-16152
Modification	Date	Name	Original		Replacement of	Replaced by	Scale 1:1		Page 1 / 1630

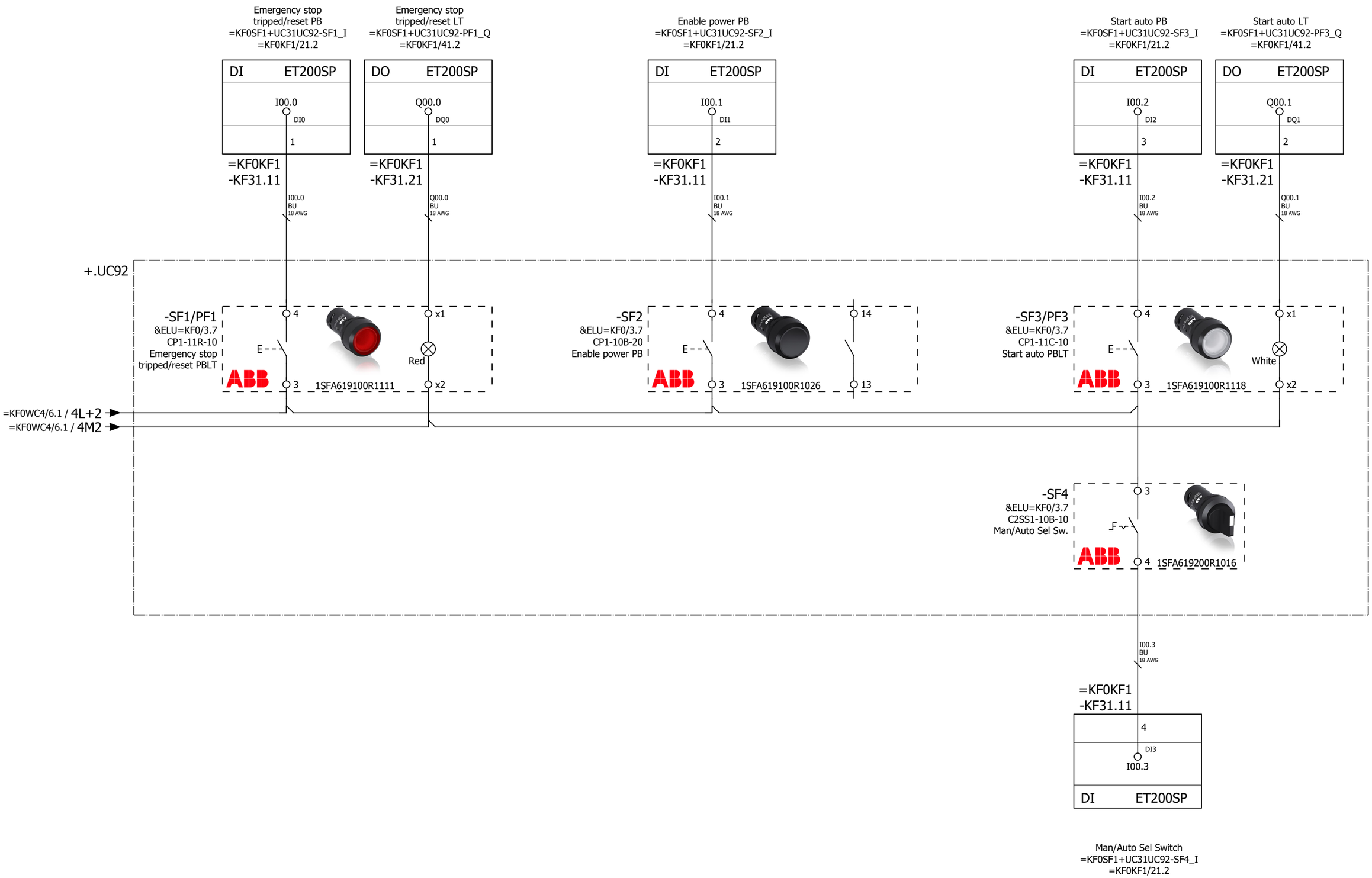

1

=KF0WC3/1

			Date	1/24/2023	Volvo Trucks North America	Valiant TMS	Operating box UC92 MOP	Drawing name: =2V01&EFS-EL_KF1	= KF0SF1	
			Ed.	MKLEPADLO					+ UC31	
			Appr		P6700 Framing - Cell 2V01, KF1			Document type: EFS	Project nr: 22-16152	Page 2
Modification	Date	Name	Original		Replacement of	Replaced by	Scale 1:1			1630

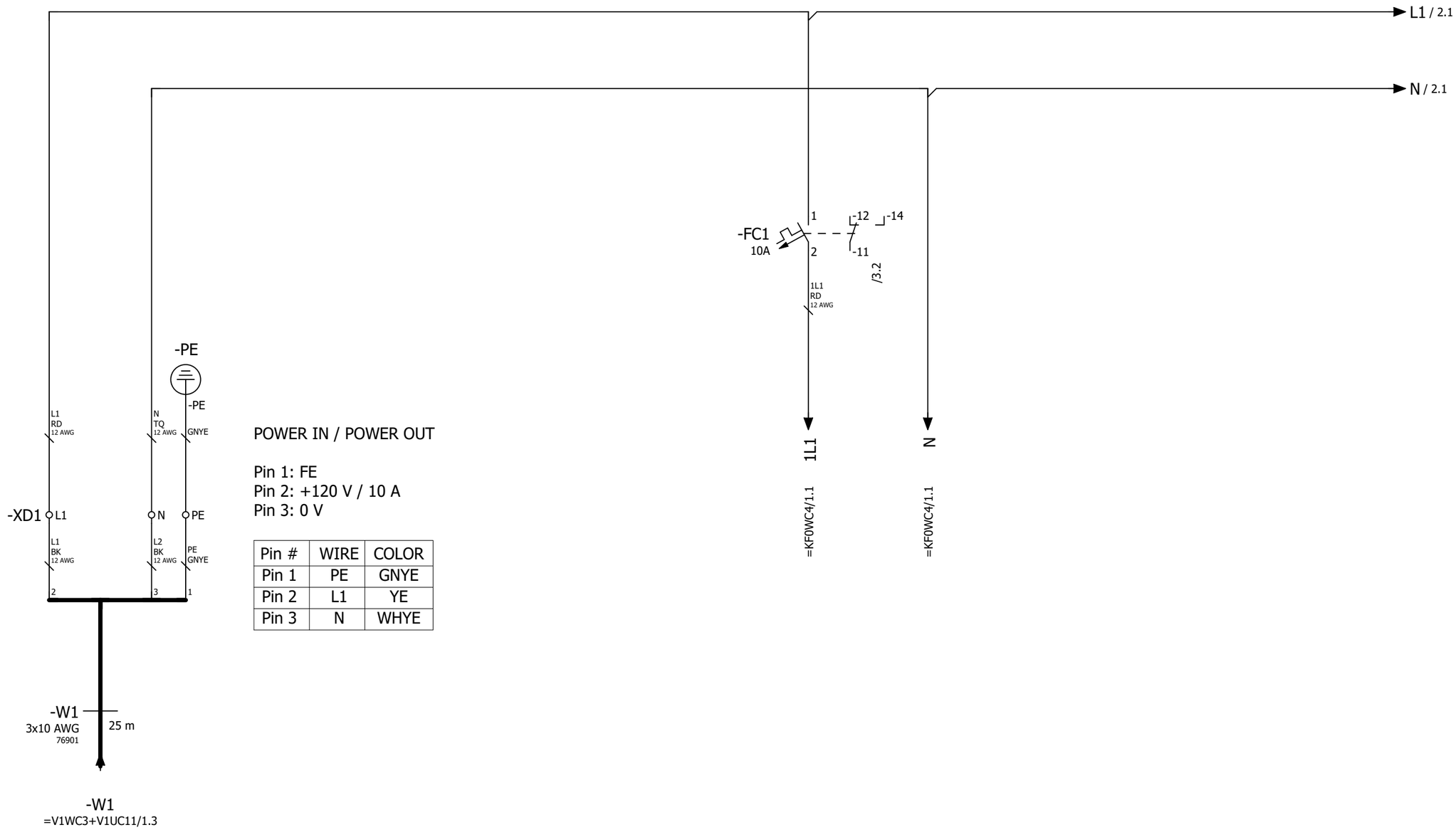

POWER IN / POWER OUT

Pin 1: FE
Pin 2: +120 V / 10 A
Pin 3: 0 V

Pin #	WIRE	COLOR
Pin 1	PE	GNYE
Pin 2	L1	YE
Pin 3	N	WHYE

Power
Distribution
24 VDC
Power Supply

=KF0SF1/2

2

			Date	1/24/2023	Volvo Trucks North America	Valiant TMS	Incomming power supply 120 VAC	Drawing name: =2V01&EFS-EL_KF1	= KF0WC3	
			Ed.	MKLEPADLO					+ UC31	
			Appr		P6700 Framing - Cell 2V01, KF1			Document type: EFS	Project nr: 22-16152	Page 1
Modification	Date	Name	Original		Replacement of / Replaced by	Scale 1:1				1630

0	1	2	3	4	5	6	7	8	9

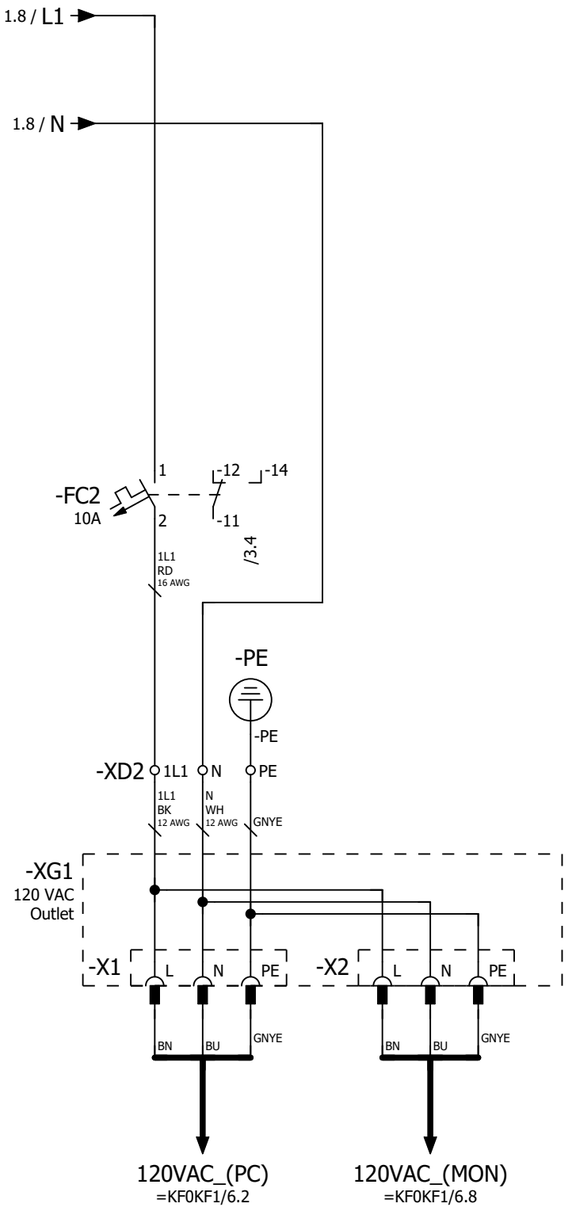

1 3

			Date	1/24/2023	Volvo Trucks North America		Valiant TMS	Outlet PLC 120VAC	Drawing name: =2V01&EFS-EL_KF1	= KF0WC3	
			Ed.	MKLEPADLO						+ UC31	
			Appr		P6700 Framing - Cell 2V01, KF1				Document type: EFS	Project nr: 22-16152	Page 2
Modification	Date	Name	Original		Replacement of	Replaced by	Scale 1:1				1630

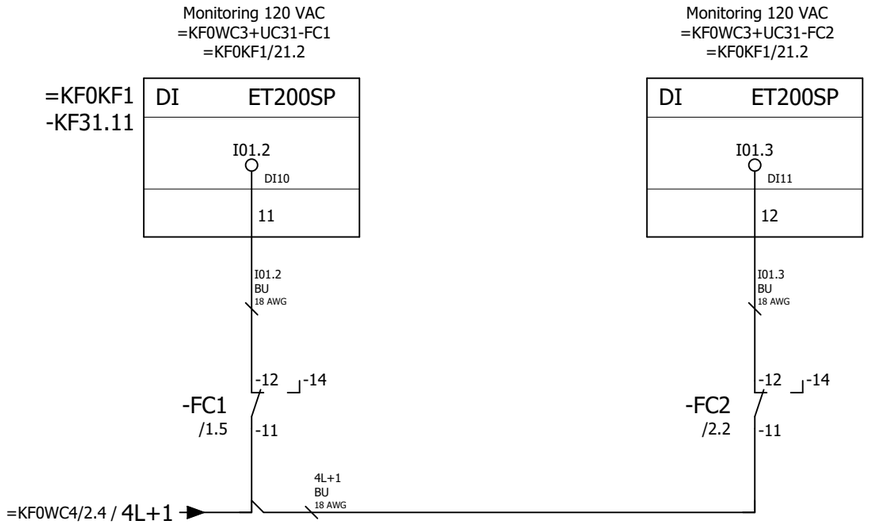

			Date	1/24/2023	Volvo Trucks North America	Valiant TMS	Monitoring 120VAC	Drawing name: =2V01&EFS-EL_KF1	= KF0WC3	
			Ed.	MKLEPADLO					+ UC31	
			Appr		P6700 Framing - Cell 2V01, KF1			Document type: EFS	Project nr: 22-16152	Page 3
Modification	Date	Name	Original		Replacement of / Replaced by	Scale 1:1				1630

0	1	2	3	4	5	6	7	8	9

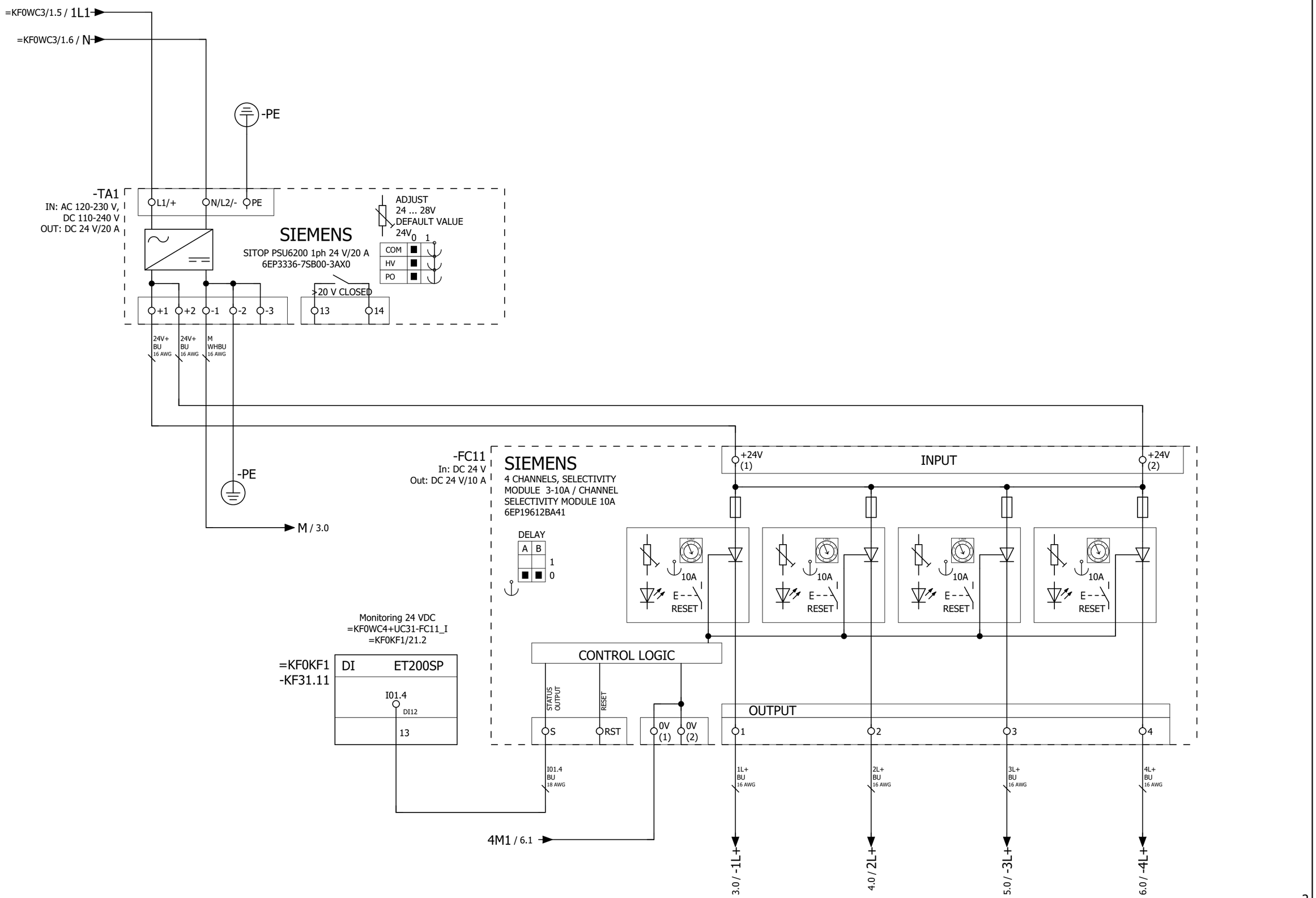

=KF0WC3/3

2

			Date	1/24/2023	Volvo Trucks North America	Valiant TMS	Power distribution 24VDC	Drawing name: =2V01&EFS-EL_KF1	= KF0WC4
			Ed.	MKLEPADLO					+ UC31
			Appr		P6700 Framing - Cell 2V01, KF1			Document type: EFS	Project nr: 22-16152
Modification	Date	Name	Original		Replacement of	Replaced by	Scale 1:1		Page 1 / 1630

0	1	2	3	4	5	6	7	8	9

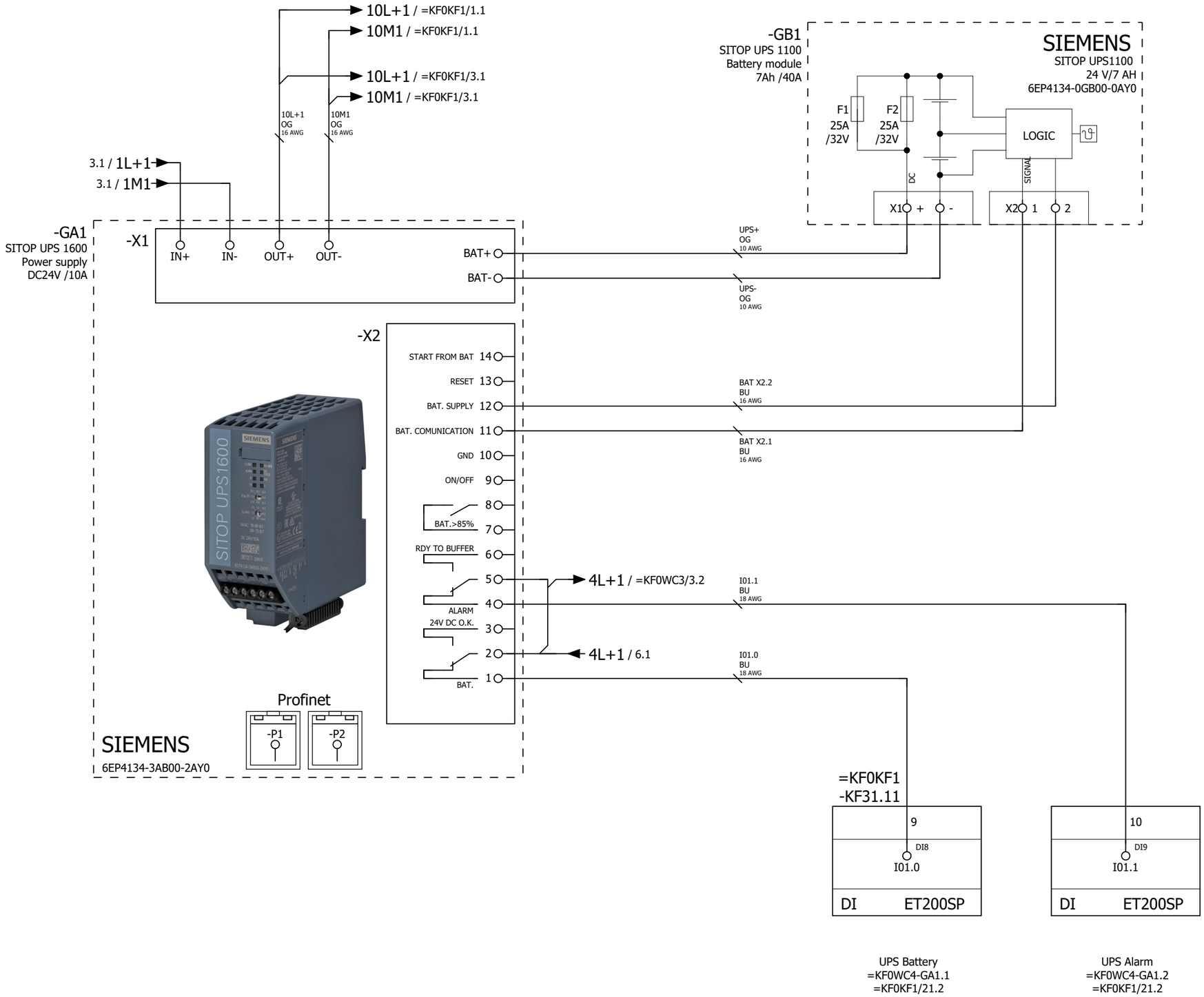

1 3

			Date	1/24/2023	Volvo Trucks North America		Valiant TMS	Power distribution, UPS	Drawing name: =2V01&EFS-EL_KF1	= KF0WC4
			Ed.	MKLEPADLO						+ UC31
			Appr		P6700 Framing - Cell 2V01, KF1		Scale 1:1		Document type: EFS	Project nr: 22-16152
Modification	Date	Name	Original		Replacement of	Replaced by				Page 2 / 1630

0	1	2	3	4	5	6	7	8	9

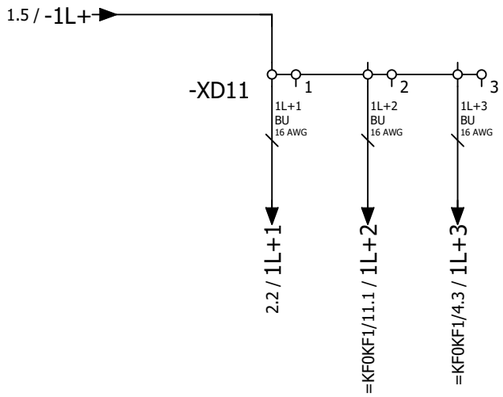

2 4

			Date	1/24/2023	Volvo Trucks North America		Valiant TMS	Power distribution 24VDC 1L+	Drawing name: =2V01&EFS-EL_KF1	= KF0WC4
			Ed.	MKLEPADLO						+ UC31
			Appr		P6700 Framing - Cell 2V01, KF1		Scale 1:1		Document type: EFS	Project nr: 22-16152
Modification	Date	Name	Original		Replacement of	Replaced by				Page 3 / 1630

0	1	2	3	4	5	6	7	8	9

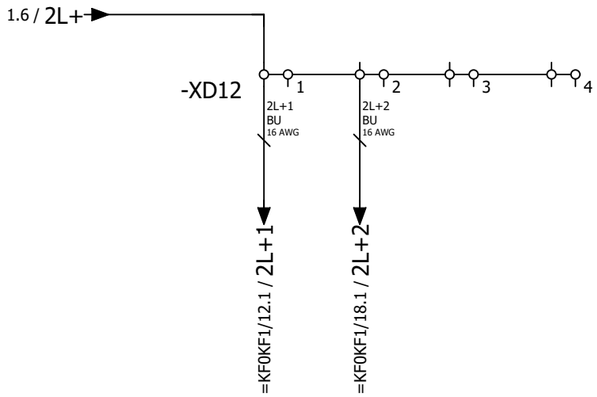

Power input cards (DI)

Power failsafe input cards (F-DI)

Spare

Spare

3

5

			Date	1/24/2023	Volvo Trucks North America	Valiant TMS	Power distribution 24VDC 2L+	Drawing name: =2V01&EFS-EL_KF1	= KF0WC4
			Ed.	MKLEPADLO					+ UC31
			Appr		P6700 Framing - Cell 2V01, KF1	Scale 1:1		Document type: EFS	Project nr: 22-16152
Modification	Date	Name	Original		Replacement of	Replaced by			Page 4 / 1630

0	1	2	3	4	5	6	7	8	9

1.7 / -3L+

-XD13

1 2 3

3L+1
BU
16 AWG

=KF0KF1/14.1 / 3L+1

Output cards (DO)

Spare

Spare

4.8 / M

M / 6.0

-XD13

11 12 13

3M1
WHBU
16 AWG

=KF0KF1/14.1 / 3M1

4 6

			Date	1/24/2023	Volvo Trucks North America		Valiant TMS	Power distribution 24VDC 3L+	Drawing name: =2V01&EFS-EL_KF1		= KF0WC4
			Ed.	MKLEPADLO							+ UC31
			Appr		P6700 Framing - Cell 2V01, KF1				Document type: EFS	Project nr: 22-16152	Page 5
Modification	Date	Name	Original		Replacement of	Replaced by	Scale 1:1				1630

0	1	2	3	4	5	6	7	8	9

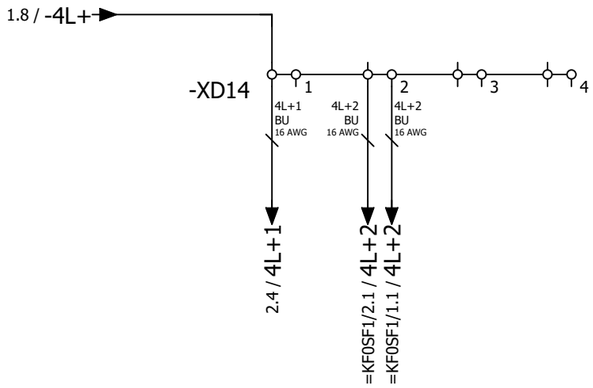

Signals inside cabinet

Signals operating boxes

Spare

Spare

=KH0+KH0/1

			Date	1/24/2023	Volvo Trucks North America	Valiant TMS	Power distribution 24VDC 4L+	Drawing name: =2V01&EFS-EL_KF1	= KF0WC4
			Ed.	MKLEPADLO					+ UC31
			Appr		P6700 Framing - Cell 2V01, KF1			Document type: EFS	Project nr: 22-16152
Modification	Date	Name	Original		Replacement of	Replaced by	Scale 1:1		Page 6 / 1630

0	1	2	3	4	5	6	7	8	9

=V1KF1+V1UC11

Monitoring Main AIR On
=KH0-BP1_I
=V1KF1+V1UC11/12.2

DI ET200SP

I57.1
DI9

10

-KF11.14

I57.1
BUOG
16 AWG

=V1WC4+V1UC11/5.4 / 3L+7

=V1WC4+V1UC11/5.4 / 3M7

-KF11.14
10

bn wh bu bk

-W2
RKC 4.4T-20-RSC 4.4T/S3060
20m

BN WH BU BK

-W1-XD2
5-pin M12
Field Attachable
Connector
BS 8251-0/PG9

1-BN 4-BK 2-WH 3-BU

NEBS-L1G4-K-5-LE4
4x26AWG
5m

-W1

BN 26 AWG BK 26 AWG WH 26 AWG BU 26 AWG

-W1-XD1

1 2 3 4

1 2 3 4

BN +24V DC power supply
BK Output A
WH Output B
BU 0V DC

PNP NPN PNP NPN

p1

FESTO

-BP1

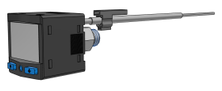

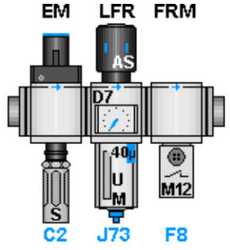

See drawing:
=2V01&MFS-PNEU_KF1

=KF0WC4+UC31/6

2

			Date	1/24/2023	Volvo Trucks North America		Valiant TMS	Incoming air supply (Main)	Drawing name: =2V01&EFS-EL_KF1	= KH0
			Ed.	MKLEPADLO						+ KH0
			Appr		P6700 Framing - Cell 2V01, KF1				Document type: EFS	Project nr: 22-16152	Page 1
Modification	Date	Name	Original		Replacement of	Replaced by	Scale 1:1				1630

0	1	2	3	4	5	6	7	8	9

=V1KF1+V1UC12

Monitoring S010 Media Panel AIR On
=KH0-BP2_I
=V1KF1+V1UC12/12.2

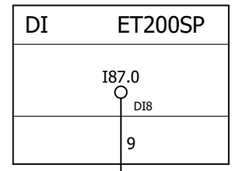

I87.0
BUOG
16 AWG

=V1WC4+V1UC12/5.4 / 3L+7

=V1WC4+V1UC12/5.4 / 3M7

-KF12.14
9

bn wh bu bk

-W2
RKC 4.4T-20-RSC 4.4T/S3060
20m

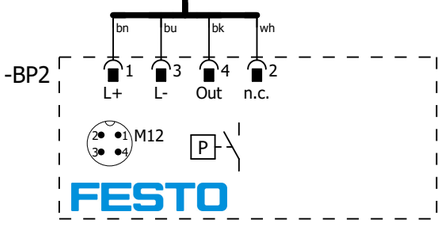

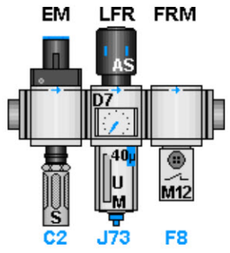

See drawing:
=2V01&MFS-PNEU_KF1

1

3

			Date	1/24/2023	Volvo Trucks North America	Valiant TMS	Incoming air supply (S010 Media Panel)	Drawing name: =2V01&EFS-EL_KF1	= KH0
			Ed.	MKLEPADLO					+ KH0
			Appr		P6700 Framing - Cell 2V01, KF1			Document type: EFS	Project nr: 22-16152
Modification	Date	Name	Original		Replacement of / Replaced by	Scale 1:1			Page 2 / 1630

0	1	2	3	4	5	6	7	8	9

=V1KF1+V1UC11

Monitoring S030 AIR On
=KH0-BP3_I
=V1KF1+V1UC11/12.2

DI	ET200SP
I57.2 DI10	
11	

-KF11.14

I57.2
BUOG
16 AWG

=V1WC4+V1UC11/5.3 / 3L+6

=V1WC4+V1UC11/5.3 / 3M6

-KF11.14
11

bn wh bu bk

-W3
RKC 4.4T-20-RSC 4.4T/S3060
20m

bn bu bk wh

-BP3
1 L+
3 L-
4 Out
2 n.c.
M12
P
FESTO

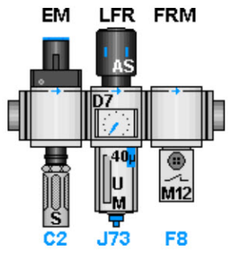

See drawing:
=2V01&MFS-PNEU_KF1

2

4

			Date	1/24/2023	Volvo Trucks North America		Valiant TMS	Incoming air supply (S030 Fixture)	Drawing name: =2V01&EFS-EL_KF1	= KH0	
			Ed.	MKLEPADLO						+ KH0	
			Appr		P6700 Framing - Cell 2V01, KF1		Scale 1:1		Document type: EFS	Project nr: 22-16152	Page 3
Modification	Date	Name	Original		Replacement of	Replaced by					1630

0	1	2	3	4	5	6	7	8	9

=V1KF1+V1UC11

Monitoring S040 AIR On
=KH0-BP4_I
=V1KF1+V1UC11/12.2

DI	ET200SP
I57.3 DI11	
12	

-KF11.14

I57.3
BUOG
16 AWG

=V1WC4+V1UC11/5.3 / 3L+6

=V1WC4+V1UC11/5.3 / 3M6

-KF11.14
12

bn wh bu bk

-W4
RKC 4.4T-10-RSC 4.4T/S3060
10m

bn bu bk wh

-BP4
1 L+
3 L-
4 Out
2 n.c.
M12
P

FESTO

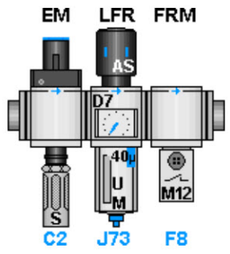

See drawing:
=2V01&MFS-PNEU_KF1

3

5

			Date	1/24/2023	Volvo Trucks North America	Valiant TMS	Incoming air supply (S040 Fixture)	Drawing name: =2V01&EFS-EL_KF1	= KH0
			Ed.	MKLEPADLO					+ KH0
			Appr		P6700 Framing - Cell 2V01, KF1			Document type: EFS	Project nr: 22-16152
Modification	Date	Name	Original		Replacement of / Replaced by	Scale 1:1			Page 4 / 1630

0	1	2	3	4	5	6	7	8	9

=V1KF1+V1UC12

Monitoring GL13 At Unload Conveyor AIR On
=KH0-BP5_I
=V1KF1+V1UC12/12.2

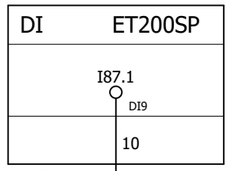

I87.1
BUOG
16 AWG

=V1WC4+V1UC12/5.4 / 3L+8

=V1WC4+V1UC12/5.4 / 3M8

-KF12.14
10

bn wh bu bk

See drawing:
=2V01&MFS-PNEU_KF1

-W5
RKC 4.4T-XX-RSC 4.4T/S3060
XXm

bn bu bk wh

-BP5
1 L+
3 L-
4 Out
2 n.c.
M12
P

FESTO

4

6

			Date	1/24/2023	Volvo Trucks North America	Valiant TMS	Incoming air supply (GL13 At Unload)	Drawing name: =2V01&EFS-EL_KF1	= KH0
			Ed.	MKLEPADLO					+ KH0
			Appr		P6700 Framing - Cell 2V01, KF1			Document type: EFS	Project nr: 22-16152
Modification	Date	Name	Original		Replacement of / Replaced by	Scale 1:1			Page 5 / 1630

0	1	2	3	4	5	6	7	8	9

=V1KF1+V1UC12

Monitoring GL14 At Unload Conveyor AIR On
=KH0-BP6_I
=V1KF1+V1UC12/12.2

DI ET200SP

I87.2
DI10

11

-KF12.14

I87.2
BUOG
16 AWG

=V1WC4+V1UC12/5.4 / 3L+8

=V1WC4+V1UC12/5.4 / 3M8

-KF12.14
11

bn wh bu bk

-W6
RKC 4.4T-XX-RSC 4.4T/S3060
XXm

bn bu bk wh

-BP6
1 L+
3 L-
4 Out
2 n.c.
M12
P

FESTO

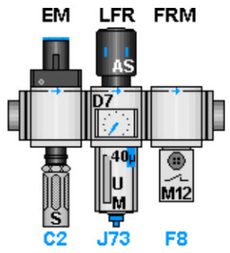

See drawing:
=2V01&MFS-PNEU_KF1

5

7

			Date	1/24/2023	Volvo Trucks North America	Valiant TMS	Incoming air supply (GL14 At Unload)	Drawing name: =2V01&EFS-EL_KF1	= KH0
			Ed.	MKLEPADLO					+ KH0
			Appr		P6700 Framing - Cell 2V01, KF1			Document type: EFS	Project nr: 22-16152
Modification	Date	Name	Original		Replacement of / Replaced by	Scale 1:1			Page 6 / 1630

0	1	2	3	4	5	6	7	8	9

=V2KF1+V2UC15

Monitoring GL15 At Unload Conveyor AIR On
=KH0-BP7_I
=V2KF1+V2UC15/9.2

DI ET200SP

I233.0
DI8

9

-KF15.12

I233.0
BUOG
16 AWG

=V2WC4+V2UC15/6.1 / 5L+1

=V2WC4+V2UC15/6.1 / 5M1

-KF15.12
9

bn wh bu bk

-W7
RKC 4.4T-XX-RSC 4.4T/S3060
XXm

bn bu bk wh

-BP7
1 L+
3 L-
4 Out
2 n.c.
M12
P

FESTO

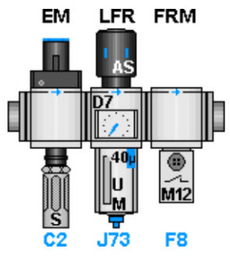

See drawing:
=2V01&MFS-PNEU_KF1

6

8

			Date	1/24/2023	Volvo Trucks North America		Valiant TMS	Incoming air supply (GL15 At Unload)	Drawing name: =2V01&EFS-EL_KF1	= KH0	
			Ed.	MKLEPADLO						+ KH0	
			Appr		P6700 Framing - Cell 2V01, KF1		Scale 1:1		Document type: EFS	Project nr: 22-16152	Page 7 / 1630
Modification	Date	Name	Original		Replacement of	Replaced by					

=V2KF1+V2UC14

Monitoring GL16 At Unload Conveyor AIR On
=KH0-BP8_I
=V2KF1+V2UC14/9.2

=V2WC4+V2UC14/6.1 / 5L+1

=V2WC4+V2UC14/6.1 / 5M1

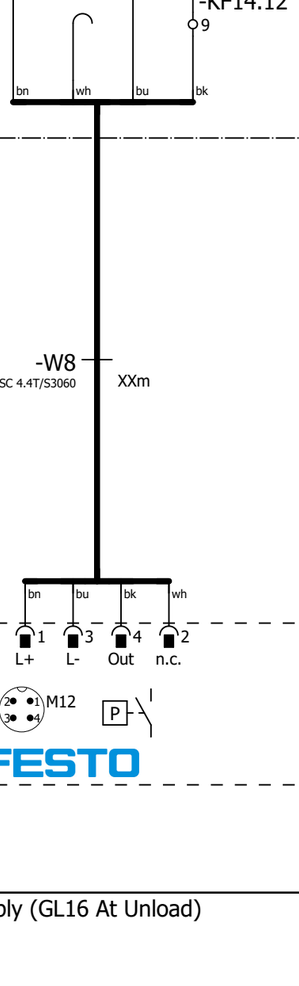

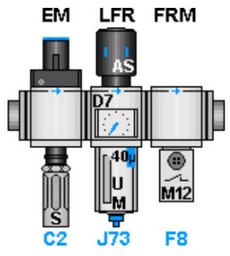

See drawing:
=2V01&MFS-PNEU_KF1

			Date	1/24/2023	Volvo Trucks North America	Valiant TMS	Incoming air supply (GL16 At Unload)	Drawing name: =2V01&EFS-EL_KF1	= KH0
			Ed.	MKLEPADLO					+ KH0
			Appr		P6700 Framing - Cell 2V01, KF1			Document type: EFS	Project nr: 22-16152
Modification	Date	Name	Original		Replacement of / Replaced by	Scale 1:1			Page 8 / 1630

0	1	2	3	4	5	6	7	8	9

=V2KF1+V2UC15

Monitoring GL17 At Unload Conveyor AIR On
=KH0-BP9_I
=V2KF1+V2UC15/9.2

DI ET200SP

I233.1
DI9

10

-KF15.12

I233.1
BUOG
16 AWG

=V2WC4+V2UC15/6.2 / 5L+1

=V2WC4+V2UC15/6.2 / 5M1

-KF15.12
10

bn wh bu bk

-W9
RKC 4.4T-XX-RSC 4.4T/S3060
XXm

bn bu bk wh

-BP9
1 L+
3 L-
4 Out
2 n.c.
M12
P

FESTO

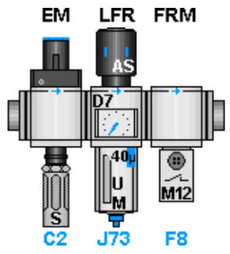

See drawing:
=2V01&MFS-PNEU_KF1

8

10

			Date	1/24/2023	Volvo Trucks North America	Valiant TMS	Incoming air supply (GL17 At Unload)	Drawing name: =2V01&EFS-EL_KF1	= KH0
			Ed.	MKLEPADLO					+ KH0
			Appr		P6700 Framing - Cell 2V01, KF1			Document type: EFS	Project nr: 22-16152
Modification	Date	Name	Original		Replacement of / Replaced by	Scale 1:1			Page 9 / 1630

0	1	2	3	4	5	6	7	8	9

=V2KF1+V2UC14

Monitoring GL18 At Unload Conveyor AIR On
=KH0-BP10_I
=V2KF1+V2UC14/9.2

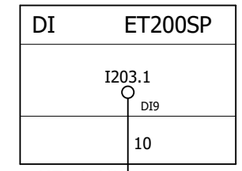

I203.1
BUOG
16 AWG

=V2WC4+V2UC14/6.2 / 5L+1

=V2WC4+V2UC14/6.2 / 5M1

-KF14.12
10

bn wh bu bk

-W10
RKC 4.4T-XX-RSC 4.4T/S3060
XXm

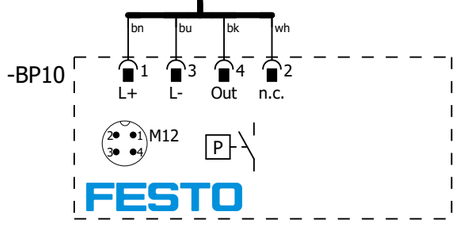

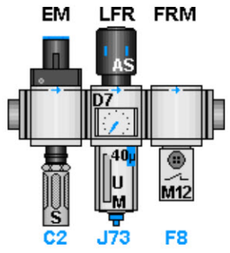

See drawing:
=2V01&MFS-PNEU_KF1

9

=KH3+KH3/1

			Date	1/24/2023	Volvo Trucks North America	Valiant TMS	Incoming air supply (GL18 At Unload)	Drawing name: =2V01&EFS-EL_KF1	= KH0
			Ed.	MKLEPADLO					+ KH0
			Appr		P6700 Framing - Cell 2V01, KF1			Document type: EFS	Project nr: 22-16152
Modification	Date	Name	Original		Replacement of	Replaced by	Scale 1:1		Page 10 / 1630

0	1	2	3	4	5	6	7	8	9

=V1KF1+V1UC11

Monitoring Main Water Filter Dirty
=KH3-BF1_I
=V1KF1+V1UC11/12.2

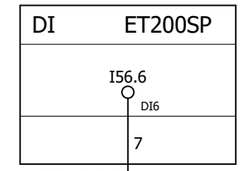

I56.6
BUOG
16 AWG

=V1WC4+V1UC11/5.3 / 3L+5

=V1WC4+V1UC11/5.3 / 3M5

-KF11.14
7

bn wh bu bk

-W1
RKC 4.4T-20-RSC 4.4T/S3060
20m

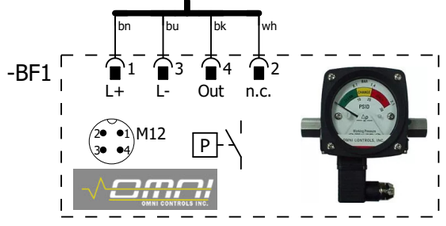

See drawing:
=2V01&MFS-WATER_KF1

=KH0+KH0/10

2

			Date	1/24/2023	Volvo Trucks North America	Valiant TMS	Incoming water supply (Filter)	Drawing name: =2V01&EFS-EL_KF1	= KH3
			Ed.	MKLEPADLO					+ KH3
			Appr		P6700 Framing - Cell 2V01, KF1			Document type: EFS	Project nr: 22-16152
Modification	Date	Name	Original		Replacement of / Replaced by	Scale 1:1			Page 1 / 1630

0	1	2	3	4	5	6	7	8	9

=V1KF1+V1UC11

Monitoring Main Water On
=KH3-BF2_I
=V1KF1+V1UC11/12.2

DI ET200SP

I56.7
DI7

8

-KF11.14

I56.7
BUOG
16 AWG

=V1WC4+V1UC11/5.3 / 3L+5

=V1WC4+V1UC11/5.3 / 3M5

-KF11.14
8

bn wh bu bk

-W2
RKC 4.4T-20-RSC 4.4T/S3060
20m

bn bu bk wh

-BF2
1 L+
3 L-
4 Out
2 n.c.

M12

TURCK

See drawing:
=2V01&MFS-WATER_KF1

1

=V1AR11KF1+V1AR11UC01/1

			Date	1/24/2023	Volvo Trucks North America	Valiant TMS	Incoming water supply	Drawing name: =2V01&EFS-EL_KF1	= KH3
			Ed.	MKLEPADLO					+ KH3
			Appr		P6700 Framing - Cell 2V01, KF1			Document type: EFS	Project nr: 22-16152
Modification	Date	Name	Original		Replacement of / Replaced by	Scale 1:1			Page 2 / 1630

0	1	2	3	4	5	6	7	8	9

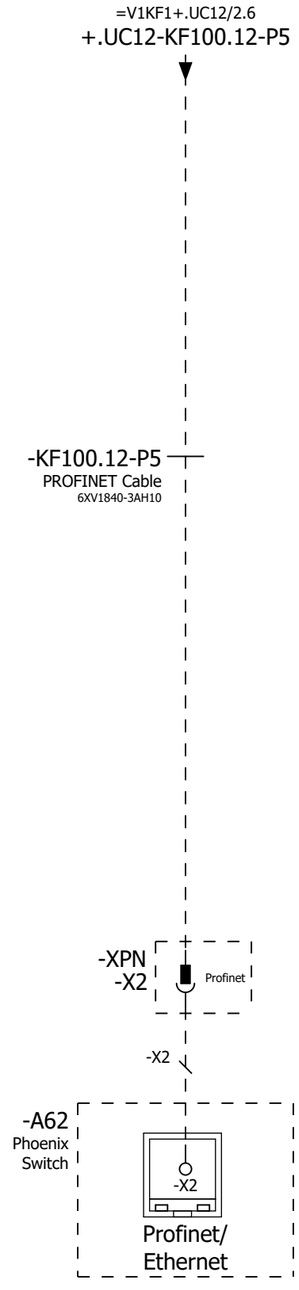

=KH3+KH3/2

=V1AR11UQ41BG0+.AR11UQ41/1

			Date	1/24/2023	Volvo Trucks North America	Valiant TMS	Incoming Profinet	Drawing name: =2V01&EFS-EL_KF1	= V1AR11KF1
			Ed.	MKLEPADLO					+ V1AR11UC01
			Appr		P6700 Framing - Cell 2V01, KF1	Scale 1:1		Document type: EFS	Project nr: 22-16152
Modification	Date	Name	Original		Replacement of	Replaced by			Page 1 / 1630

0	1	2	3	4	5	6	7	8	9

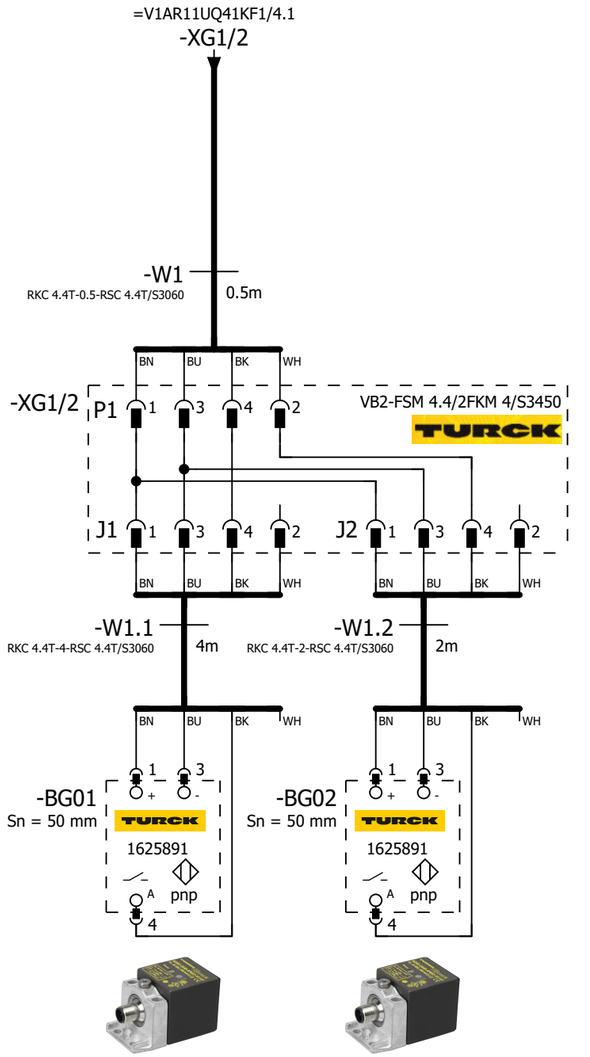

=V1AR11UQ41 -BG01 Common Part Present	=V1AR11UQ41 -BG02 Common Part Present

=V1AR11KF1+.AR11UC01/1

=V1AR11UQ41KF1/1

			Date	1/24/2023	Volvo Trucks North America		Valiant TMS	SENSORS	Drawing name: =2V01&EFS-EL_KF1	= V1AR11UQ41BG0
			Ed.	MKLEPADLO						+ V1AR11UQ41
			Appr		P6700 Framing - Cell 2V01, KF1				Document type: EFS	Project nr: 22-16152	Page 1
Modification	Date	Name	Original		Replacement of	Replaced by	Scale 1:1				1630

0	1	2	3	4	5	6	7	8	9

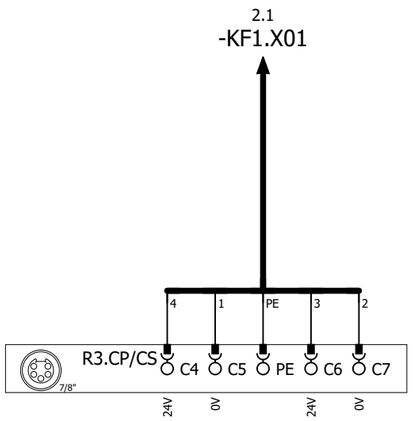

DC 24V (OUT)

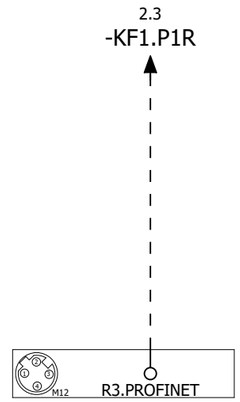

R3.ETHERNET

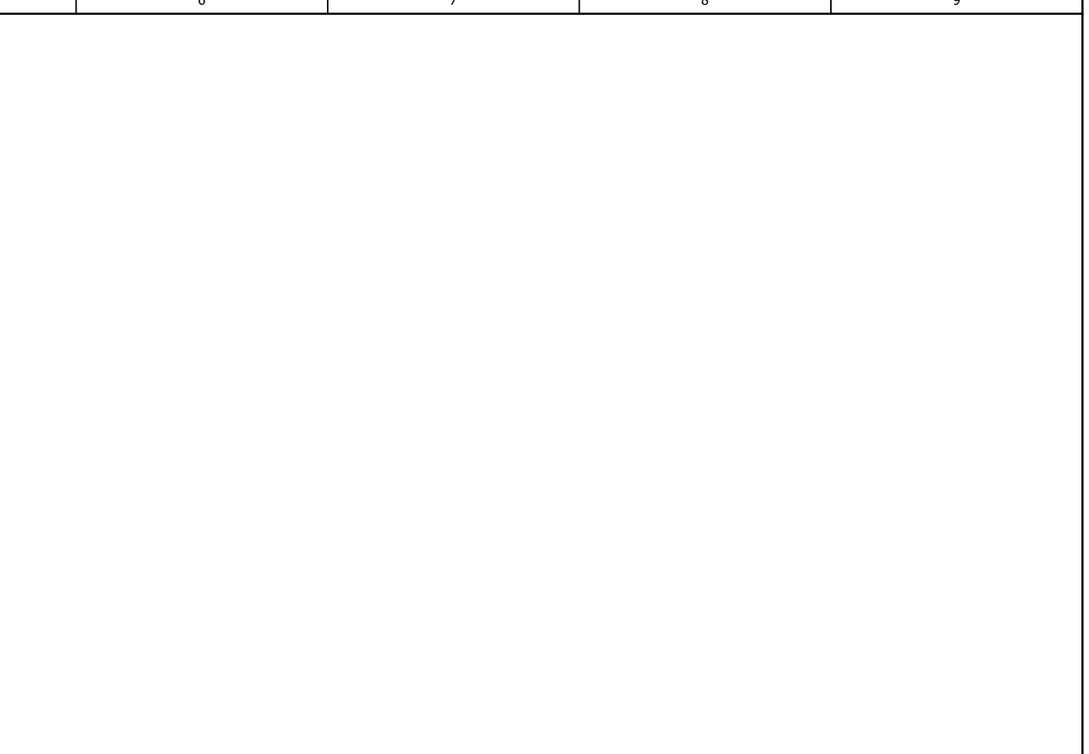

=V1AR11UQ41BG0/1

2

			Date	1/24/2023	Volvo Trucks North America	Valiant TMS	24VDC SUPPLY AND PROFINET HANDLING MODULE	Drawing name: =2V01&EFS-EL_KF1	= V1AR11UQ41KF1
			Ed.	MKLEPADLO					+ V1AR11UQ41
			Appr		P6700 Framing - Cell 2V01, KF1	Scale 1:1		Document type: EFS	Project nr: 22-16152
Modification	Date	Name	Original		Replacement of / Replaced by				Page 1 / 1630

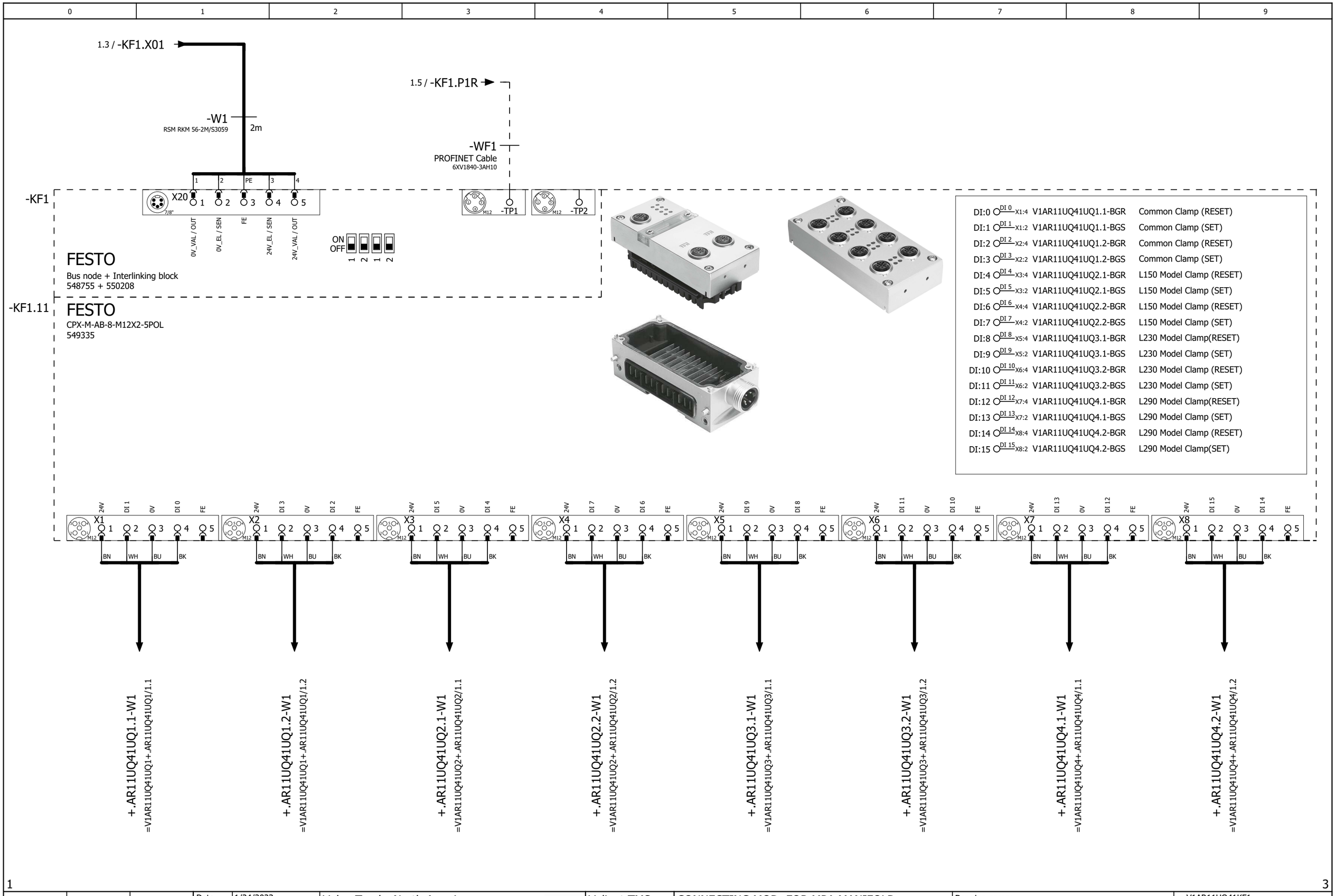

1 3

			Date	1/24/2023	Volvo Trucks North America	Valiant TMS	CONNECTING MOD. FOR MPA MANIFOLD	Drawing name: =2V01&EFS-EL_KF1	= V1AR11UQ41KF1 + V1AR11UQ41
			Ed.	MKLEPADLO	P6700 Framing - Cell 2V01, KF1			Document type: EFS	Project nr: 22-16152
			Appr						Page 2
Modification	Date	Name	Original		Replacement of / Replaced by	Scale 1:1			1630

0	1	2	3	4	5	6	7	8	9

-KF1.12

FESTO

CPX-M-AB-8-M12X2-5POL

549335

DI:16	DI 0 X1:4	V1AR11UQ41UQ5.1-BGR	L320 Model Clamp (RESET)
DI:17	DI 1 X1:2	V1AR11UQ41UQ5.1-BGS	L320 Model Clamp (SET)
DI:18	DI 2 X2:4	V1AR11UQ41UQ5.2-BGR	L320 Model Clamp (RESET)
DI:19	DI 3 X2:2	V1AR11UQ41UQ5.2-BGS	L320 Model Clamp (SET)
DI:20	DI 4 X3:4	V1AR11UQ41UQ6.1-BGR	Common Vaccum (SET)
DI:21	DI 5 X3:2	DI:21	Spare
DI:22	DI 6 X4:4	V1AR11UQ41UQ7.1-BGR	L230 Model Vaccum (SET)
DI:23	DI 7 X4:2	DI:23	Spare
DI:24	DI 8 X5:4	V1AR11UQ41UQ8.1-BGR	L290 Model Vaccum (SET)
DI:25	DI 9 X5:2	DI:25	Spare
DI:26	DI 10 X6:4	V1AR11UQ41UQ9.1-BGR	L320 Model Vaccum (SET)
DI:27	DI 11 X6:2	DI:27	Spare
DI:28	DI 12 X7:4	DI:28	Spare
DI:29	DI 13 X7:2	DI:29	Spare
DI:30	DI 14 X8:4	DI:30	Spare
DI:31	DI 15 X8:2	DI:31	Spare

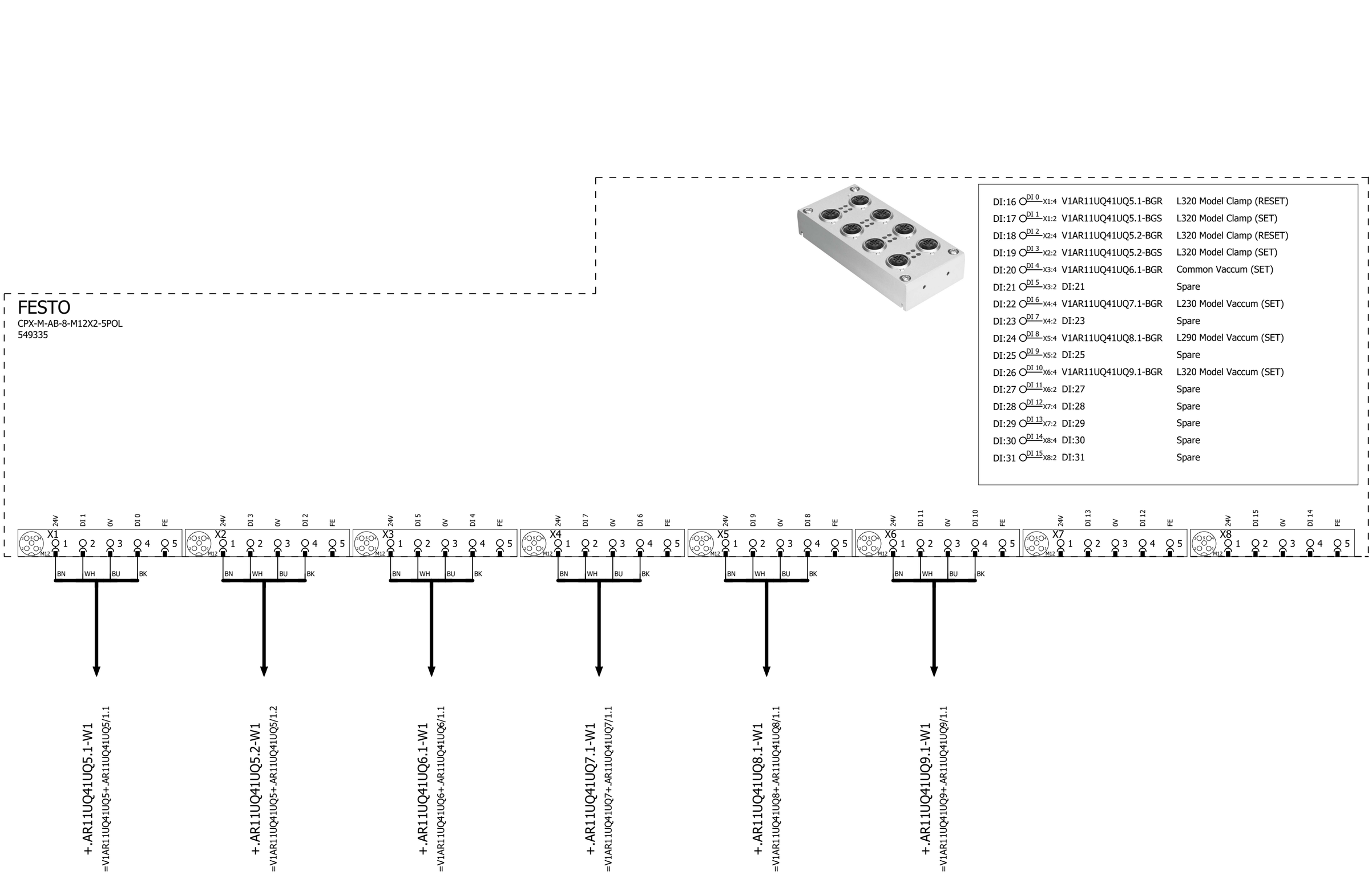

2 4

			Date	1/24/2023	Volvo Trucks North America	Valiant TMS	I/O MOD. DI16 (8 x M12) FOR MPA	Drawing name: =2V01&EFS-EL_KF1	= V1AR11UQ41KF1
			Ed.	MKLEPADLO					+ V1AR11UQ41
			Appr		P6700 Framing - Cell 2V01, KF1	Scale 1:1		Document type: EFS	Project nr: 22-16152
Modification	Date	Name	Original		Replacement of / Replaced by				Page 3 / 1630

0	1	2	3	4	5	6	7	8	9

-KF1.13

FESTO

CPX-M-AB-8-M12X2-5POL

549335

DI:32	DI 0 X1:4	V1AR11UQ41-BG01	Common Part Present
DI:33	DI 1 X1:2	V1AR11UQ41-BG02	Common Part Present
DI:34	DI 2 X2:4	DI:34	Spare
DI:35	DI 3 X2:2	DI:35	Spare
DI:36	DI 4 X3:4	DI:36	Spare
DI:37	DI 5 X3:2	DI:37	Spare
DI:38	DI 6 X4:4	DI:38	Spare
DI:39	DI 7 X4:2	DI:39	Spare
DI:40	DI 8 X5:4	DI:40	Spare
DI:41	DI 9 X5:2	DI:41	Spare
DI:42	DI 10 X6:4	DI:42	Spare
DI:43	DI 11 X6:2	DI:43	Spare
DI:44	DI 12 X7:4	DI:44	Spare
DI:45	DI 13 X7:2	DI:45	Spare
DI:46	DI 14 X8:4	DI:46	Spare
DI:47	DI 15 X8:2	DI:47	Spare

-XG1/2

=V1AR11UQ41BG0/1.1

3 5

			Date	1/24/2023	Volvo Trucks North America	Valiant TMS	I/O MOD. DI16 (8 x M12) FOR MPA	Drawing name: =2V01&EFS-EL_KF1	= V1AR11UQ41KF1
			Ed.	MKLEPADLO					+ V1AR11UQ41
			Appr		P6700 Framing - Cell 2V01, KF1			Document type: EFS	Project nr: 22-16152
Modification	Date	Name	Original		Replacement of / Replaced by	Scale 1:1			Page 4 / 1630

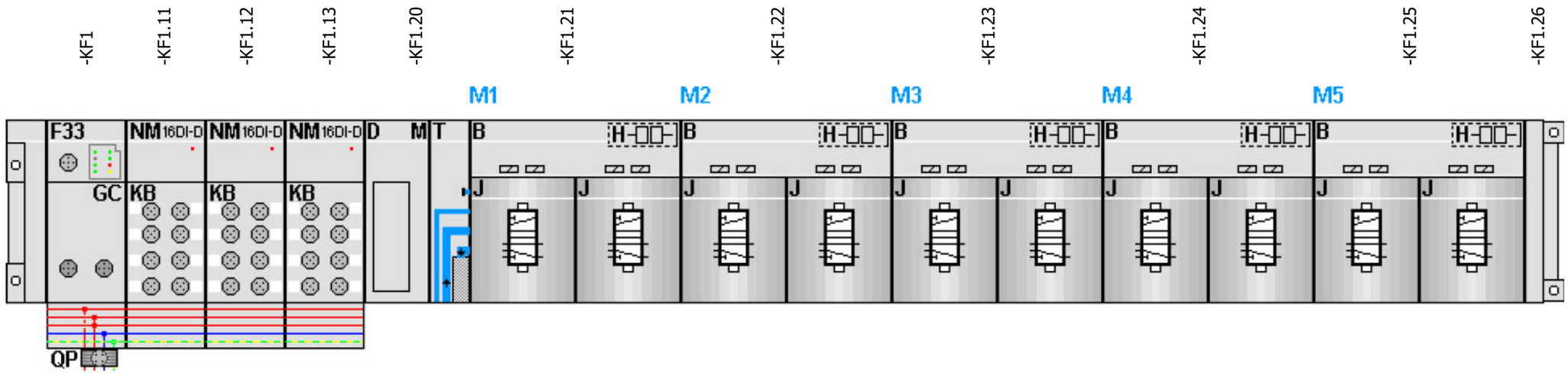

-KF1.21
=V1AR11UQ41UQ1+.AR11UQ41UQ1/1.3
=V1AR11UQ41UQ2+.AR11UQ41UQ2/1.3

FESTO

=V1AR11UQ41UQ1+.AR11UQ41UQ1/1.4	DO:0 DO 0 1.1	-QN1.1_Q	Common Clamps (RST)
=V1AR11UQ41UQ1+.AR11UQ41UQ1/1.4	DO:1 DO 1 1.2	-QN1.2_Q	Common Clamps (SET)
=V1AR11UQ41UQ2+.AR11UQ41UQ2/1.4	DO:2 DO 2 2.1	-QN2.1_Q	L150 Model Clamps (RST)
=V1AR11UQ41UQ2+.AR11UQ41UQ2/1.4	DO:3 DO 3 2.2	-QN2.2_Q	L150 Model Clamps (SET)

-KF1.22
=V1AR11UQ41UQ3+.AR11UQ41UQ3/1.3
=V1AR11UQ41UQ4+.AR11UQ41UQ4/1.3

FESTO

=V1AR11UQ41UQ3+.AR11UQ41UQ3/1.4	DO:4 DO 4 1.1	-QN3.1_Q	L230 Model Clamps (RST)
=V1AR11UQ41UQ3+.AR11UQ41UQ3/1.4	DO:5 DO 5 1.2	-QN3.2_Q	L230 Model Clamps (SET)
=V1AR11UQ41UQ4+.AR11UQ41UQ4/1.4	DO:6 DO 6 2.1	-QN4.1_Q	L290 Model Clamps (RST)
=V1AR11UQ41UQ4+.AR11UQ41UQ4/1.4	DO:7 DO 7 2.2	-QN4.2_Q	L290 Model Clamp (SET)

-KF1.23
=V1AR11UQ41UQ5+.AR11UQ41UQ5/1.3
=V1AR11UQ41UQ6+.AR11UQ41UQ6/1.3

FESTO

=V1AR11UQ41UQ5+.AR11UQ41UQ5/1.4	DO:8 DO 8 1.1	-QN5.1_Q	L320 Model Clamps (RST)
=V1AR11UQ41UQ5+.AR11UQ41UQ5/1.4	DO:9 DO 9 1.2	-QN5.2_Q	L320 Model Clamps (SET)
=V1AR11UQ41UQ6+.AR11UQ41UQ6/1.4	DO:10 DO 10 2.1	-QN6.1_Q	Common Vacuums (RST)
=V1AR11UQ41UQ6+.AR11UQ41UQ6/1.4	DO:11 DO 11 2.2	-QN6.2_Q	Common Vacuums (SET)

-KF1.24
=V1AR11UQ41UQ7+.AR11UQ41UQ7/1.3
=V1AR11UQ41UQ8+.AR11UQ41UQ8/1.3

FESTO

=V1AR11UQ41UQ7+.AR11UQ41UQ7/1.4	DO:12 DO 12 1.1	-QN7.1_Q	L230 Model Vacuums (RST)
=V1AR11UQ41UQ7+.AR11UQ41UQ7/1.4	DO:13 DO 13 1.2	-QN7.2_Q	L230 Model Vacuums (SET)
=V1AR11UQ41UQ8+.AR11UQ41UQ8/1.4	DO:14 DO 14 2.1	-QN8.1_Q	L290 Model Vacuums (RST)
=V1AR11UQ41UQ8+.AR11UQ41UQ8/1.4	DO:15 DO 15 2.2	-QN8.2_Q	L290 Model Vacuums (SET)

-KF1.25
=V1AR11UQ41UQ9+.AR11UQ41UQ9/1.3
=V1AR11UQ41UQ10+.AR11UQ41UQ10/1.3

FESTO

=V1AR11UQ41UQ9+.AR11UQ41UQ9/1.4	DO:16 DO 16 1.1	-QN9.1_Q	L320 Model Vacuums (RST)
=V1AR11UQ41UQ9+.AR11UQ41UQ9/1.4	DO:17 DO 17 1.2	-QN9.2_Q	L320 Model Vacuums (SET)
=V1AR11UQ41UQ10+.AR11UQ41UQ10/1.4	DO:18 DO 18 2.1	-QN10.1_Q	Spare (RST)
=V1AR11UQ41UQ10+.AR11UQ41UQ10/1.4	DO:19 DO 19 2.2	-QN10.2_Q	Spare (SET)

4

=V1AR11UQ41UQ1+.AR11UQ41UQ1/1

			Date	1/24/2023	Volvo Trucks North America	Valiant TMS	CONNECTING MOD. FOR FESTO DQ	Drawing name: =2V01&EFS-EL_KF1	= V1AR11UQ41KF1 + V1AR11UQ41
			Ed.	MKLEPADLO	P6700 Framing - Cell 2V01, KF1				
			Appr					Document type: EFS	Project nr: 22-16152
Modification	Date	Name	Original		Replacement of / Replaced by	Scale 1:1			Page 5 / 1630

0	1	2	3	4	5	6	7	8	9

=V1AR11UQ41KF1
+.AR11UQ41

-KF1.21
=V1AR11UQ41KF1+V1AR11UQ41/5.1

Common Clamps (RST)
=V1AR11UQ41KF1
+V1AR11UQ41
-QN1.1_Q
=V1AR11UQ41KF1
+V1AR11UQ41/5.3
DO:0

Common Clamps (SET)
=V1AR11UQ41KF1
+V1AR11UQ41
-QN1.2_Q
=V1AR11UQ41KF1
+V1AR11UQ41/5.3
DO:1

1.1 Pneumatic Valve
1.2 Pneumatic Valve

-QN1 .1 .2

=V1AR11UQ41KF1+V1AR11UQ41/2.1
+.AR11UQ41UQ1.1-W1

-W1 3m
RKC 4.4T-3-RSC 4.4T/S3060

-BGS/R
BN 1 + BU 3 - BK WH
TÜNKERS
1324638
A2 2 A1 4

Common Clamp
=V1AR11UQ41UQ1.1
+.AR11UQ41UQ1.1
-UQ1.1

=V1AR11UQ41
-UQ1.1-BGS/R
Common
Clamp

=V1AR11UQ41KF1+V1AR11UQ41/2.2
+.AR11UQ41UQ1.2-W1

-W1 3m
RKC 4.4T-3-RSC 4.4T/S3060

-BGS/R
BN 1 + BU 3 - BK WH
TÜNKERS
1324638
A2 2 A1 4

Common Clamp
=V1AR11UQ41UQ1.2
+.AR11UQ41UQ1.2
-UQ1.2

=V1AR11UQ41
-UQ1.2-BGS/R
Common
Clamp

=V1AR11UQ41KF1+V1AR11UQ41/5

=V1AR11UQ41UQ2+.AR11UQ41UQ2/1

			Date	1/24/2023	Volvo Trucks North America		Valiant TMS	FESTO DQ CONNECTION QN1	Drawing name: =2V01&EFS-EL_KF1	= V1AR11UQ41UQ1
			Ed.	MKLEPADLO						+ V1AR11UQ41UQ1
			Appr		P6700 Framing - Cell 2V01, KF1				Document type: EFS	Project nr: 22-16152
Modification	Date	Name	Original		Replacement of	Replaced by	Scale 1:1			Page 1 / 1630

0	1	2	3	4	5	6	7	8	9

=V1AR11UQ41KF1
+.AR11UQ41

-KF1.21
=V1AR11UQ41KF1+V1AR11UQ41/5.1

L150 Model Clamps (RST)
=V1AR11UQ41KF1
+V1AR11UQ41
-QN2.1_Q
=V1AR11UQ41KF1
+V1AR11UQ41/5.3
DO:2

L150 Model Clamps (SET)
=V1AR11UQ41KF1
+V1AR11UQ41
-QN2.2_Q
=V1AR11UQ41KF1
+V1AR11UQ41/5.3
DO:3

2.1 Pneumatic Valve

2.2 Pneumatic Valve

-QN2 .1 .2

=V1AR11UQ41KF1+V1AR11UQ41/2.3
+.AR11UQ41UQ2.1-W1

=V1AR11UQ41KF1+V1AR11UQ41/2.4
+.AR11UQ41UQ2.2-W1

-W1 2m
RKC 4.4T-2-RSC 4.4T/S3060
BN BU BK WH
-BGS/R
1 3
TÜNKERS
1324638
A2 A1
2 4

L150 Model Clamp
=V1AR11UQ41UQ2.1
+.AR11UQ41UQ2.1
-UQ2.1

L150 Model Clamp
=V1AR11UQ41UQ2.2
+.AR11UQ41UQ2.2
-UQ2.2

=V1AR11UQ41
-UQ2.1-BGS/R
L150 Model
Clamp

=V1AR11UQ41
-UQ2.2-BGS/R
L150 Model
Clamp

=V1AR11UQ41UQ1+.AR11UQ41UQ1/1

=V1AR11UQ41UQ3+.AR11UQ41UQ3/1

			Date	1/24/2023	Volvo Trucks North America	Valiant TMS	FESTO DQ CONNECTION QN2	Drawing name: =2V01&EFS-EL_KF1	= V1AR11UQ41UQ2
			Ed.	MKLEPADLO					+ V1AR11UQ41UQ2
			Appr		P6700 Framing - Cell 2V01, KF1			Document type: EFS	Project nr: 22-16152
Modification	Date	Name	Original		Replacement of / Replaced by	Scale 1:1			Page 1 / 1630

0	1	2	3	4	5	6	7	8	9

=V1AR11UQ41KF1
+.AR11UQ41

-KF1.22
=V1AR11UQ41KF1+V1AR11UQ41/5.1

L230 Model Clamps (RST)
=V1AR11UQ41KF1
+V1AR11UQ41
-QN3.1_Q
=V1AR11UQ41KF1
+V1AR11UQ41/5.3
DO:4

L230 Model Clamps (SET)
=V1AR11UQ41KF1
+V1AR11UQ41
-QN3.2_Q
=V1AR11UQ41KF1
+V1AR11UQ41/5.3
DO:5

1.1 Pneumatic Valve

1.2 Pneumatic Valve

-QN3 .1 .2

=V1AR11UQ41KF1+V1AR11UQ41/2.5
+.AR11UQ41UQ3.1-W1

-W1 1m
RKC 4.4T-1-RSC 4.4T/S3060

BN BU BK WH

-BGS/R
1 3
TÜNKERS
1324638
A2 A1
2 4

L230 Model Clamp
=V1AR11UQ41UQ3.1
+.AR11UQ41UQ3.1
-UQ3.1

=V1AR11UQ41
-UQ3.1-BGS/R
L230 Model
Clamp

=V1AR11UQ41KF1+V1AR11UQ41/2.6
+.AR11UQ41UQ3.2-W1

-W1 1m
RKC 4.4T-1-RSC 4.4T/S3060

BN BU BK WH

-BGS/R
1 3
TÜNKERS
1324638
A2 A1
2 4

L230 Model Clamp
=V1AR11UQ41UQ3.2
+.AR11UQ41UQ3.2
-UQ3.2

=V1AR11UQ41
-UQ3.2-BGS/R
L230 Model
Clamp

=V1AR11UQ41UQ2+.AR11UQ41UQ2/1

=V1AR11UQ41UQ4+.AR11UQ41UQ4/1

			Date	1/24/2023	Volvo Trucks North America		Valiant TMS	FESTO DQ CONNECTION QN3	Drawing name: =2V01&EFS-EL_KF1	= V1AR11UQ41UQ3
			Ed.	MKLEPADLO						+ V1AR11UQ41UQ3
			Appr		P6700 Framing - Cell 2V01, KF1				Document type: EFS	Project nr: 22-16152
Modification	Date	Name	Original		Replacement of	Replaced by	Scale 1:1			Page 1 / 1630

0	1	2	3	4	5	6	7	8	9

=V1AR11UQ41KF1
+.AR11UQ41

-KF1.22
=V1AR11UQ41KF1+V1AR11UQ41/5.1

L290 Model Clamps (RST)
=V1AR11UQ41KF1
+V1AR11UQ41
-QN4.1_Q
=V1AR11UQ41KF1
+V1AR11UQ41/5.3
DO:6

L290 Model Clamp (SET)
=V1AR11UQ41KF1
+V1AR11UQ41
-QN4.2_Q
=V1AR11UQ41KF1
+V1AR11UQ41/5.3
DO:7

2.1 Pneumatic Valve

2.2 Pneumatic Valve

-QN4 .1 .2

=V1AR11UQ41KF1+V1AR11UQ41/2.8
+.AR11UQ41UQ4.1-W1

-W1
RKC 4.4T-2-RSC 4.4T/S3060
2m

BN BU BK WH

-BGS/R
1 3
+ -
TÜNKERS
1324638
A2 A1
2 4

L290 Model Clamp
=V1AR11UQ41UQ4.1
+.AR11UQ41UQ4.1
-UQ4.1

=V1AR11UQ41
-UQ4.1-BGS/R
L290 Model
Clamp

=V1AR11UQ41KF1+V1AR11UQ41/2.9
+.AR11UQ41UQ4.2-W1

-W1
RKC 4.4T-2-RSC 4.4T/S3060
2m

BN BU BK WH

-BGS/R
1 3
+ -
TÜNKERS
1324638
A2 A1
2 4

L290 Model Clamp
=V1AR11UQ41UQ4.2
+.AR11UQ41UQ4.2
-UQ4.2

=V1AR11UQ41
-UQ4.2-BGS/R
L290 Model
Clamp

=V1AR11UQ41UQ3+.AR11UQ41UQ3/1

=V1AR11UQ41UQ5+.AR11UQ41UQ5/1

			Date	1/24/2023	Volvo Trucks North America		Valiant TMS	FESTO DQ CONNECTION QN4	Drawing name: =2V01&EFS-EL_KF1	= V1AR11UQ41UQ4
			Ed.	MKLEPADLO						+ V1AR11UQ41UQ4
			Appr		P6700 Framing - Cell 2V01, KF1				Document type: EFS	Project nr: 22-16152
Modification	Date	Name	Original		Replacement of	Replaced by	Scale 1:1			Page 1 / 1630

0	1	2	3	4	5	6	7	8	9

=V1AR11UQ41KF1
+.AR11UQ41

-KF1.23
=V1AR11UQ41KF1+V1AR11UQ41/5.1

L320 Model Clamps (RST)
=V1AR11UQ41KF1
+V1AR11UQ41
-QN5.1_Q
=V1AR11UQ41KF1
+V1AR11UQ41/5.3
DO:8

L320 Model Clamps (SET)
=V1AR11UQ41KF1
+V1AR11UQ41
-QN5.2_Q
=V1AR11UQ41KF1
+V1AR11UQ41/5.3
DO:9

1.1 Pneumatic Valve

1.2 Pneumatic Valve

-QN5 .1 .2

=V1AR11UQ41KF1+V1AR11UQ41/3.1
+.AR11UQ41UQ5.1-W1

-W1
RKC 4.4T-2-RSC 4.4T/S3060
2m

BN BU BK WH

-BGS/R
1 3
+ -
TÜNKERS
1324638
A2 A1
2 4

L320 Model Clamp
=V1AR11UQ41UQ5.1
+.AR11UQ41UQ5.1
-UQ5.1

=V1AR11UQ41
-UQ5.1-BGS/R
L320 Model
Clamp

=V1AR11UQ41KF1+V1AR11UQ41/3.2
+.AR11UQ41UQ5.2-W1

-W1
RKC 4.4T-2-RSC 4.4T/S3060
2m

BN BU BK WH

-BGS/R
1 3
+ -
TÜNKERS
1324638
A2 A1
2 4

L320 Model Clamp
=V1AR11UQ41UQ5.2
+.AR11UQ41UQ5.2
-UQ5.2

=V1AR11UQ41
-UQ5.2-BGS/R
L320 Model
Clamp

=V1AR11UQ41UQ4+.AR11UQ41UQ4/1

=V1AR11UQ41UQ6+.AR11UQ41UQ6/1

			Date	1/24/2023	Volvo Trucks North America		Valiant TMS	FESTO DQ CONNECTION QN5	Drawing name: =2V01&EFS-EL_KF1	= V1AR11UQ41UQ5
			Ed.	MKLEPADLO						+ V1AR11UQ41UQ5
			Appr		P6700 Framing - Cell 2V01, KF1				Document type: EFS	Project nr: 22-16152
Modification	Date	Name	Original		Replacement of	Replaced by	Scale 1:1			Page 1 / 1630

0	1	2	3	4	5	6	7	8	9

=V1AR11UQ41KF1
+.AR11UQ41

-KF1.23
=V1AR11UQ41KF1+V1AR11UQ41/5.1

Common Vacuums (RST)	Common Vacuums (SET)
=V1AR11UQ41KF1	=V1AR11UQ41KF1
+V1AR11UQ41	+V1AR11UQ41
-QN6.1_Q	-QN6.2_Q
=V1AR11UQ41KF1	=V1AR11UQ41KF1
+V1AR11UQ41/5.3	+V1AR11UQ41/5.3
DO:10	DO:11
2.1 Pneumatic Valve	2.2 Pneumatic Valve

-QN6 .1 .2

=V1AR11UQ41KF1+V1AR11UQ41/3.3
+.AR11UQ41UQ6.1-W1

-W1
RKC 4.4T-1-RSC 4.4T/S3060
1m

BN BU WH WN

-BGS/R
/1.0
Mb= -1-10 bar
1 L+ 3 L- 4 Out 1/ IO-Link 2 Out 2
18-30 V VDC
M12
PN7094

Common Vacuums

=V1AR11UQ41UQ6.1
+.AR11UQ41UQ6.1
-UQ6.1

=V1AR11UQ41
-UQ6.1-BGS/R
Common
Vacuums

=V1AR11UQ41UQ5+.AR11UQ41UQ5/1

=V1AR11UQ41UQ7+.AR11UQ41UQ7/1

			Date	1/24/2023	Volvo Trucks North America	Valiant TMS	FESTO DQ CONNECTION QN6	Drawing name: =2V01&EFS-EL_KF1	= V1AR11UQ41UQ6
			Ed.	MKLEPADLO					+ V1AR11UQ41UQ6
			Appr		P6700 Framing - Cell 2V01, KF1	Scale 1:1		Document type: EFS	Project nr: 22-16152
Modification	Date	Name	Original		Replacement of	Replaced by			Page 1 / 1630

0	1	2	3	4	5	6	7	8	9

=V1AR11UQ41KF1
+.AR11UQ41

-KF1.24
=V1AR11UQ41KF1+V1AR11UQ41/5.1

L230 Model Vacuums (RST)
=V1AR11UQ41KF1
+V1AR11UQ41
-QN7.1_Q
=V1AR11UQ41KF1
+V1AR11UQ41/5.3
DO:12

L230 Model Vacuums (SET)
=V1AR11UQ41KF1
+V1AR11UQ41
-QN7.2_Q
=V1AR11UQ41KF1
+V1AR11UQ41/5.3
DO:13

1.1 Pneumatic Valve

1.2 Pneumatic Valve

-QN7 .1 .2

=V1AR11UQ41KF1+V1AR11UQ41/3.4
+.AR11UQ41UQ7.1-W1

-W1
RKC 4.4T-1-RSC 4.4T/S3060
1m

BN BU WH WN

-BGS/R
/1.0
Mb= -1-10 bar

1 L+ 3 L- 4 Out 1/ IO-Link 2 Out 2

18-30 V VDC

M12

PN7094

L230 Model Vacuums

=V1AR11UQ41UQ7.1
+.AR11UQ41UQ7.1
-UQ7.1

=V1AR11UQ41 -UQ7.1-BGS/R L230 Model Vacuums

=V1AR11UQ41UQ6+.AR11UQ41UQ6/1

=V1AR11UQ41UQ8+.AR11UQ41UQ8/1

			Date	1/24/2023	Volvo Trucks North America	Valiant TMS	FESTO DQ CONNECTION QN7	Drawing name: =2V01&EFS-EL_KF1	= V1AR11UQ41UQ7
			Ed.	MKLEPADLO					+ V1AR11UQ41UQ7
			Appr		P6700 Framing - Cell 2V01, KF1			Document type: EFS	Project nr: 22-16152
Modification	Date	Name	Original		Replacement of	Replaced by	Scale 1:1		Page 1 / 1630

0	1	2	3	4	5	6	7	8	9

=V1AR11UQ41KF1
+.AR11UQ41

-KF1.24
=V1AR11UQ41KF1+V1AR11UQ41/5.1

L290 Model Vacuums (RST)	L290 Model Vacuums (SET)
=V1AR11UQ41KF1	=V1AR11UQ41KF1
+V1AR11UQ41	+V1AR11UQ41
-QN8.1_Q	-QN8.2_Q
=V1AR11UQ41KF1	=V1AR11UQ41KF1
+V1AR11UQ41/5.3	+V1AR11UQ41/5.3
DO:14	DO:15
2.1 Pneumatic Valve	2.2 Pneumatic Valve

-QN8 .1 .2

=V1AR11UQ41KF1+V1AR11UQ41/3.5
+.AR11UQ41UQ8.1-W1

-W1
RKC 4.4T-1-RSC 4.4T/S3060
1m

BN BU WH WN

-BGS/R
/1.0
Mb= -1-10 bar

1 L+ 3 L- 4 Out 1/ IO-Link 2 Out 2
18-30 V VDC
M12
PN7094

L290 Model Vacuums

=V1AR11UQ41UQ8.1
+.AR11UQ41UQ8.1
-UQ8.1

=V1AR11UQ41 -UQ8.1-BGS/R L290 Model Vacuums

=V1AR11UQ41UQ7+.AR11UQ41UQ7/1

=V1AR11UQ41UQ9+.AR11UQ41UQ9/1

			Date	1/24/2023	Volvo Trucks North America	Valiant TMS	FESTO DQ CONNECTION QN8	Drawing name: =2V01&EFS-EL_KF1	= V1AR11UQ41UQ8
			Ed.	MKLEPADLO					+ V1AR11UQ41UQ8
			Appr		P6700 Framing - Cell 2V01, KF1			Document type: EFS	Project nr: 22-16152
Modification	Date	Name	Original		Replacement of	Replaced by	Scale 1:1		Page 1 / 1630

0	1	2	3	4	5	6	7	8	9

=V1AR11UQ41KF1
+.AR11UQ41

-KF1.25
=V1AR11UQ41KF1+V1AR11UQ41/5.1

L320 Model Vacuums (RST)
=V1AR11UQ41KF1
+V1AR11UQ41
-QN9.1_Q
=V1AR11UQ41KF1
+V1AR11UQ41/5.3
DO:16

L320 Model Vacuums (SET)
=V1AR11UQ41KF1
+V1AR11UQ41
-QN9.2_Q
=V1AR11UQ41KF1
+V1AR11UQ41/5.3
DO:17

1.1 Pneumatic Valve

1.2 Pneumatic Valve

-QN9 .1 .2

=V1AR11UQ41KF1+V1AR11UQ41/3.6
+.AR11UQ41UQ9.1-W1

-W1
RKC 4.4T-1-RSC 4.4T/S3060
1m

BN BU WH WN

-BGS/R
/1.0
Mb= -1-10 bar

1 L+ 3 L- 4 Out 1/ IO-Link 2 Out 2

18-30 V VDC

M12

PN7094

L320 Model Vacuums

=V1AR11UQ41UQ9.1
+.AR11UQ41UQ9.1
-UQ9.1

=V1AR11UQ41 -UQ9.1-BGS/R L320 Model Vacuums

=V1AR11UQ41UQ8+.AR11UQ41UQ8/1

=V1AR11UQ41UQ10+.AR11UQ41UQ10/1

			Date	1/24/2023	Volvo Trucks North America	Valiant TMS	FESTO DQ CONNECTION QN9	Drawing name: =2V01&EFS-EL_KF1	= V1AR11UQ41UQ9
			Ed.	MKLEPADLO					+ V1AR11UQ41UQ9
			Appr		P6700 Framing - Cell 2V01, KF1			Document type: EFS	Project nr: 22-16152
Modification	Date	Name	Original		Replacement of	Replaced by	Scale 1:1		Page 1 / 1630

0	1	2	3	4	5	6	7	8	9

=V1AR11UQ41KF1
+.AR11UQ41

-KF1.25
=V1AR11UQ41KF1+V1AR11UQ41/5.1

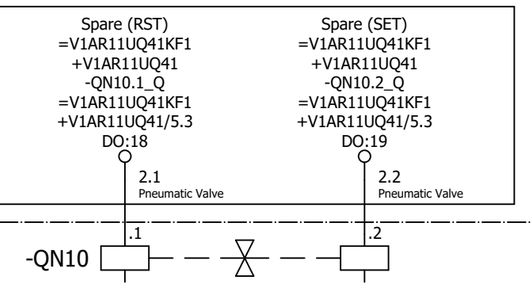

=V1AR11UQ41UQ9+.AR11UQ41UQ9/1

=V1AR11WC1+.AR11UC01/1

			Date	1/24/2023	Volvo Trucks North America	Valiant TMS	FESTO DQ CONNECTION QN10	Drawing name: =2V01&EFS-EL_KF1	= V1AR11UQ41UQ10
			Ed.	MKLEPADLO					+ V1AR11UQ41UQ10
			Appr		P6700 Framing - Cell 2V01, KF1			Document type: EFS / Project nr: 22-16152	Page 1 / 1630
Modification	Date	Name	Original		Replacement of / Replaced by	Scale 1:1			

0	1	2	3	4	5	6	7	8	9

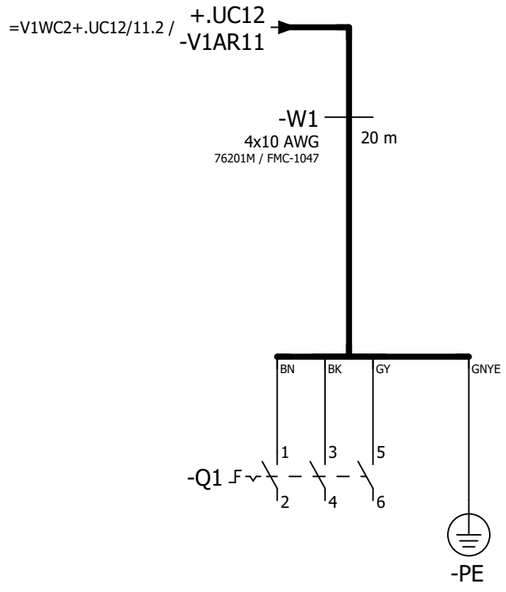

=V1AR11UQ41UQ10+.AR11UQ41UQ10/1

=V1AR21KF1+.AR21UC01/1

			Date	1/24/2023	Volvo Trucks North America		Valiant TMS	Incoming power	Drawing name: =2V01&EFS-EL_KF1	= V1AR11WC1
			Ed.	MKLEPADLO						+ V1AR11UC01
			Appr		P6700 Framing - Cell 2V01, KF1				Document type: EFS / Project nr: 22-16152	Page 1
Modification	Date	Name	Original		Replacement of	Replaced by	Scale 1:1			1630

0	1	2	3	4	5	6	7	8	9

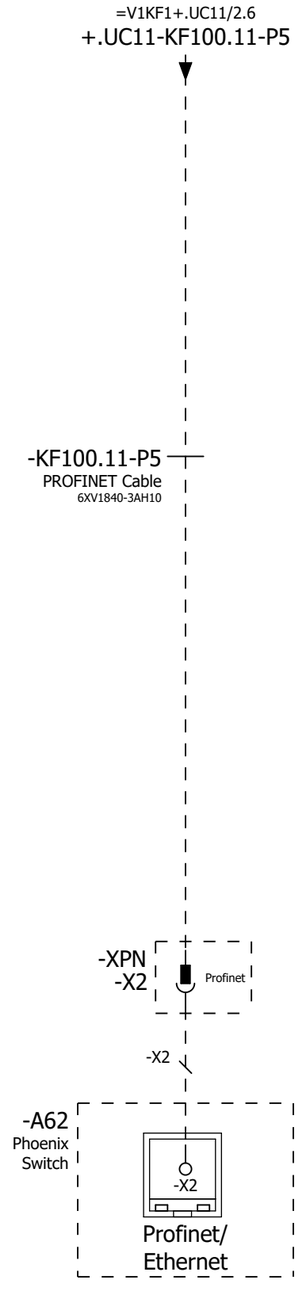

=V1AR11WC1+.AR11UC01/1

=V1AR21WC1/1

			Date	1/24/2023	Volvo Trucks North America	Valiant TMS	Incoming Profinet	Drawing name: =2V01&EFS-EL_KF1	= V1AR21KF1	
			Ed.	MKLEPADLO					+ V1AR21UC01	
			Appr		P6700 Framing - Cell 2V01, KF1	Scale 1:1		Document type: EFS	Project nr: 22-16152	Page 1 / 1630
Modification	Date	Name	Original		Replacement of	Replaced by				

0	1	2	3	4	5	6	7	8	9

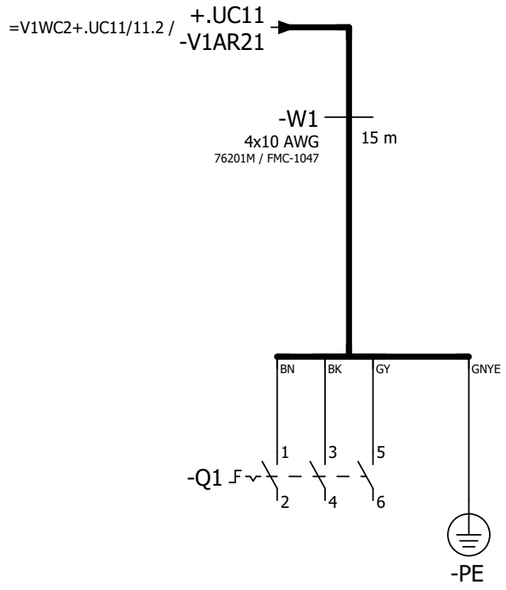

=V1AR21KF1/1

=V1AR21XQ11WC1+.AR21XQ11UC01/1

			Date	1/24/2023	Volvo Trucks North America	Valiant TMS	Incoming power	Drawing name: =2V01&EFS-EL_KF1	= V1AR21WC1
			Ed.	MKLEPADLO					+ V1AR21UC01
			Appr		P6700 Framing - Cell 2V01, KF1			Document type: EFS / Project nr: 22-16152	Page 1
Modification	Date	Name	Original		Replacement of / Replaced by	Scale 1:1			1630

0	1	2	3	4	5	6	7	8	9

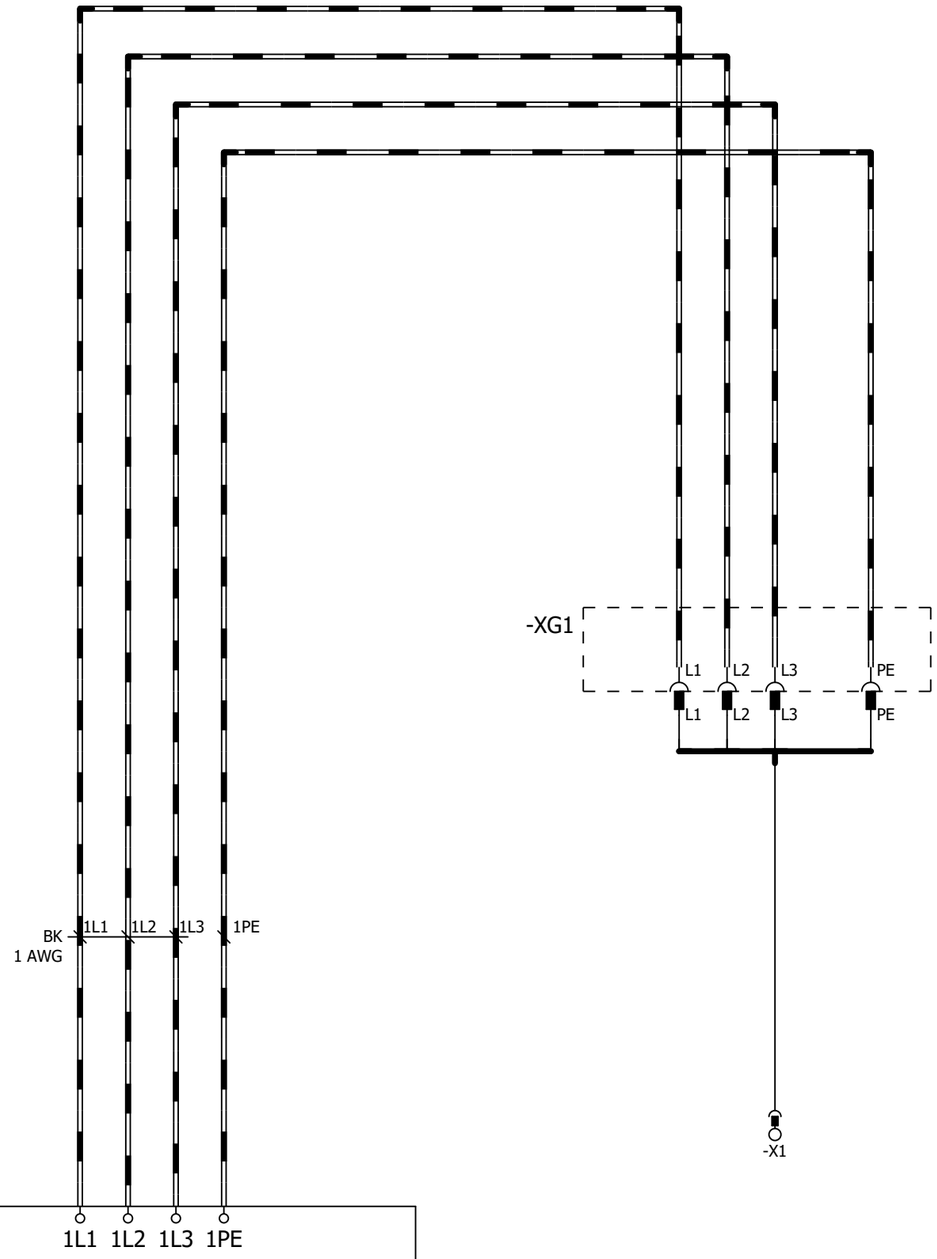

480VAC TN-S 3 PHASE 60Hz
Fed from: .....
short circuit protection: .....
Over current: .....
cable type: 1 AWG

IkMax =.....kA
IkMin = ...kA
Z: ..... mΩ.

=V1AR21WC1+.AR21UC01/1

=V1AR31KF1+.AR31UC01/1

			Date	1/24/2023	Volvo Trucks North America		Valiant TMS	Incoming power	Drawing name: =2V01&EFS-EL_KF1	= V1AR21XQ11WC1
			Ed.	MKLEPADLO						+ V1AR21XQ11UC01
			Appr		P6700 Framing - Cell 2V01, KF1				Document type: EFS	Project nr: 22-16152
Modification	Date	Name	Original		Replacement of	Replaced by	Scale 1:1			Page 1 / 1630

0	1	2	3	4	5	6	7	8	9

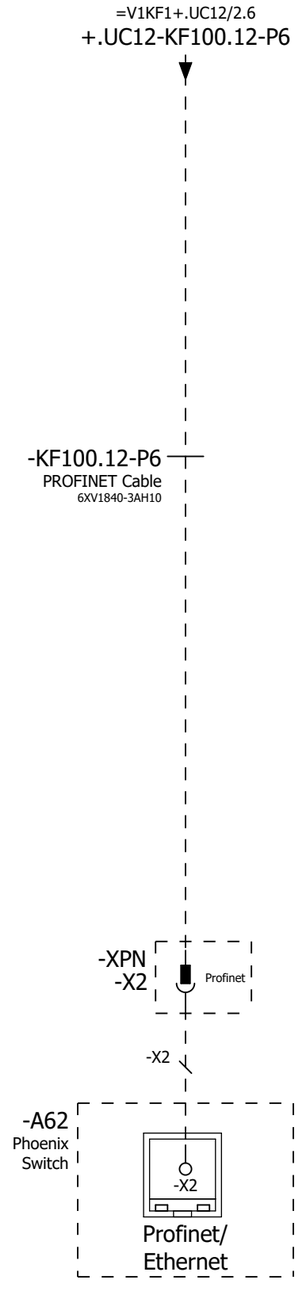

=V1AR21XQ11WC1+.AR21XQ11UC01/1

=V1AR31UQ41BG0+.AR31UQ41/1

			Date	1/24/2023	Volvo Trucks North America	Valiant TMS	Incoming Profinet	Drawing name: =2V01&EFS-EL_KF1	= V1AR31KF1
			Ed.	MKLEPADLO					+ V1AR31UC01
			Appr		P6700 Framing - Cell 2V01, KF1			Document type: EFS / Project nr: 22-16152	Page 1
Modification	Date	Name	Original		Replacement of / Replaced by	Scale 1:1			1630

0	1	2	3	4	5	6	7	8	9

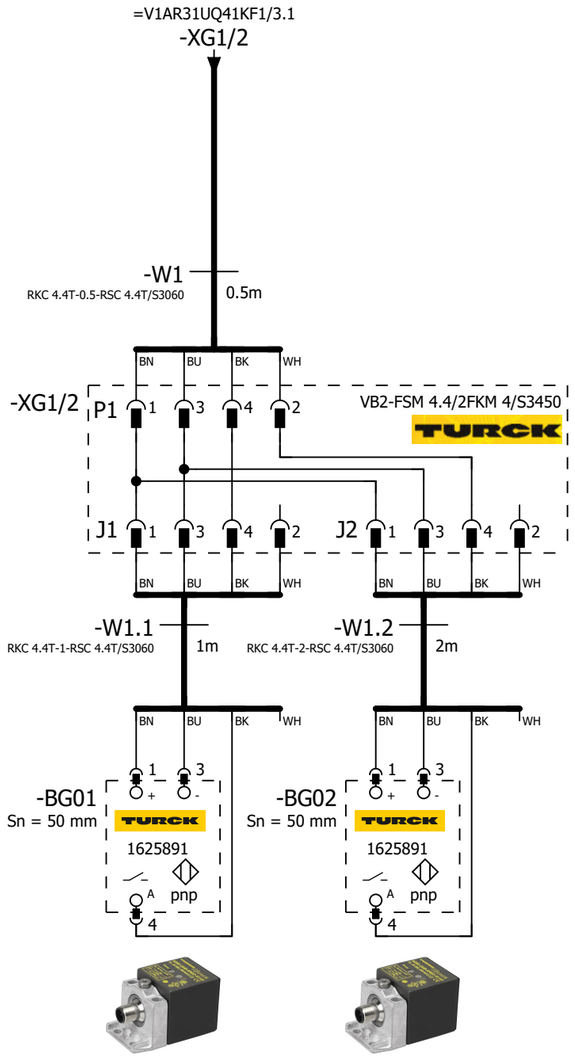

=V1AR31UQ41
-BG01
Common
Part Present

=V1AR31UQ41
-BG02
Common
Part Present

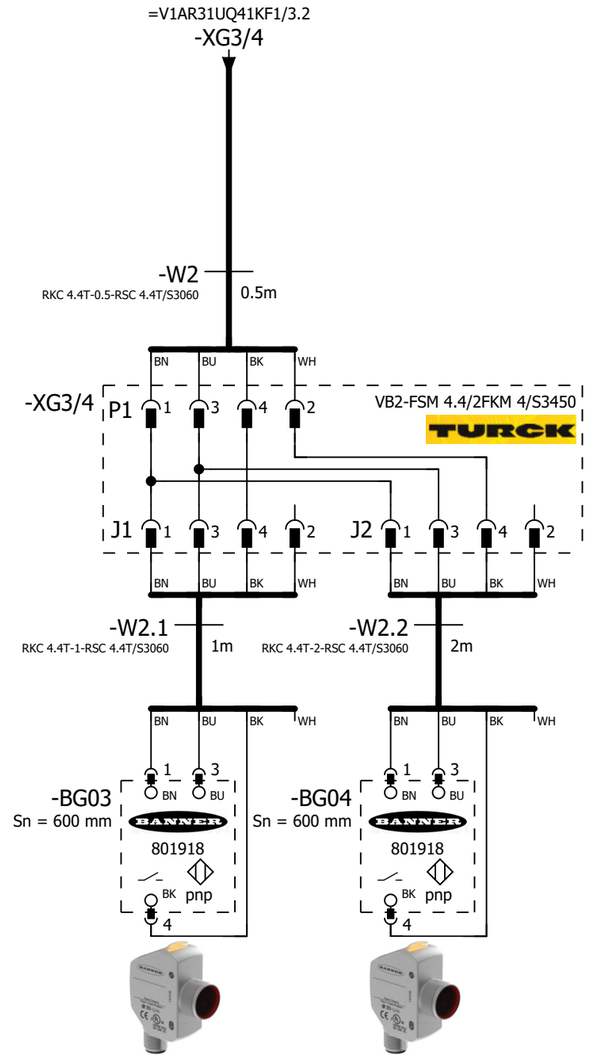

=V1AR31UQ41
-BG03
Position Control

=V1AR31UQ41
-BG04
Position Control

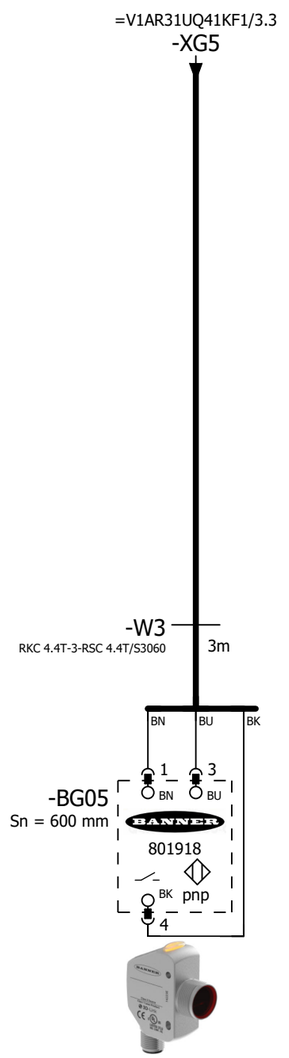

=V1AR31UQ41
-BG05
Position Control

=V1AR31KF1+.AR31UC01/1

=V1AR31UQ41KF1/1

			Date	1/24/2023	Volvo Trucks North America		Valiant TMS	SENSORS	Drawing name: =2V01&EFS-EL_KF1	= V1AR31UQ41BG0
			Ed.	MKLEPADLO						+ V1AR31UQ41
			Appr		P6700 Framing - Cell 2V01, KF1				Document type: EFS	Project nr: 22-16152	Page 1
Modification	Date	Name	Original		Replacement of	Replaced by	Scale 1:1				1630

0	1	2	3	4	5	6	7	8	9

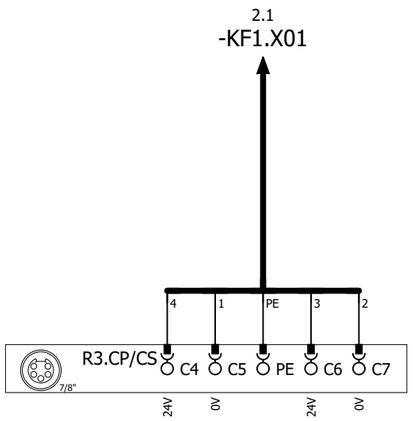

DC 24V (OUT)

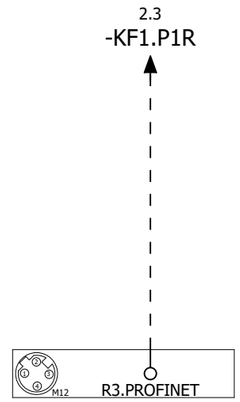

R3.ETHERNET

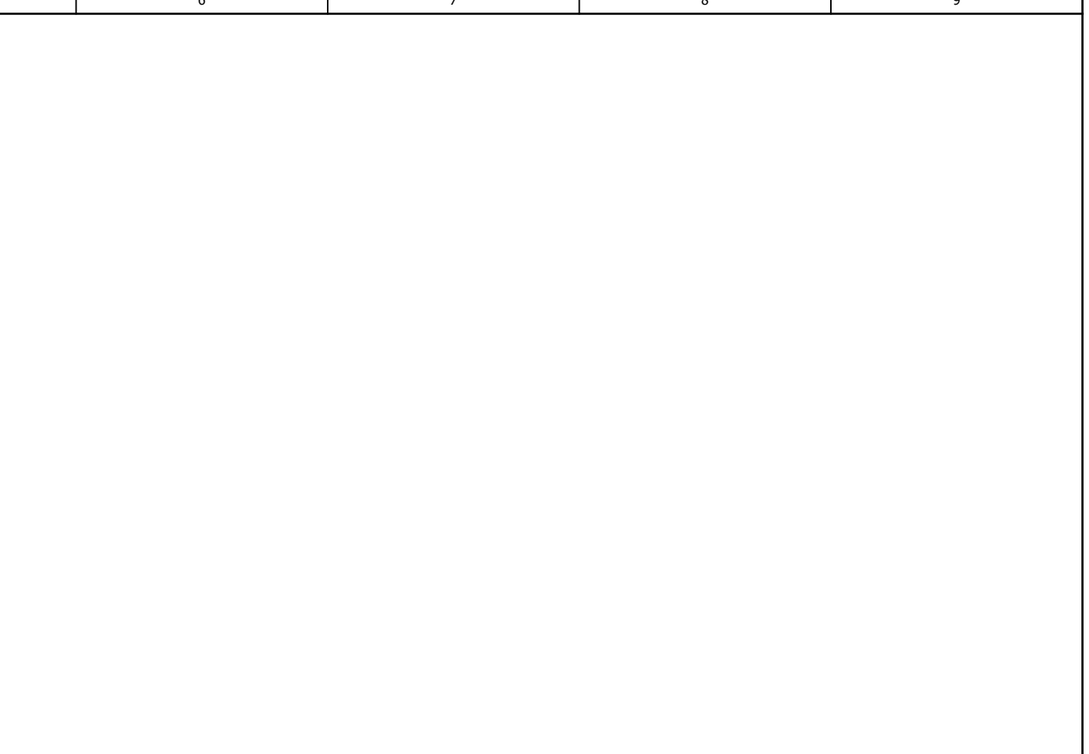

=V1AR31UQ41BG0/1

2

			Date	1/24/2023	Volvo Trucks North America	Valiant TMS	24VDC SUPPLY AND PROFINET HANDLING MODULE	Drawing name: =2V01&EFS-EL_KF1	= V1AR31UQ41KF1
			Ed.	MKLEPADLO					+ V1AR31UQ41
			Appr		P6700 Framing - Cell 2V01, KF1	Scale 1:1		Document type: EFS	Project nr: 22-16152
Modification	Date	Name	Original		Replacement of / Replaced by				Page 1 / 1630

0	1	2	3	4	5	6	7	8	9

1.3 / -KF1.X01

-W1
RSM RKM 56-2M/S3059
2m

1.5 / -KF1.P1R

-WF1
PROFINET Cable
6XV1840-3AH10

-KF1

X20 7/8" 1 2 PE 3 4 5
0V_VAL / OUT
0V_EL / SEN
FE
24V_EL / SEN
24V_VAL / OUT

ON
OFF
1 2 1 2

M12 -TP1
M12 -TP2

FESTO
Bus node + Interlinking block
548755 + 550208

DI 0	DI 0 X1:4	V1AR31UQ41UQ1.1-BGR	Common Clamp (RESET)
DI:1	DI 1 X1:2	V1AR31UQ41UQ1.1-BGS	Common Clamp (SET)
DI:2	DI 2 X2:4	V1AR31UQ41UQ1.2-BGR	Common Clamp (RESET)
DI:3	DI 3 X2:2	V1AR31UQ41UQ1.2-BGS	Common Clamp (SET)
DI:4	DI 4 X3:4	V1AR31UQ41UQ1.3-BGR	Common Clamp (RESET)
DI:5	DI 5 X3:2	V1AR31UQ41UQ1.3-BGS	Common Clamp (SET)
DI:6	DI 6 X4:4	DI:6	Spare
DI:7	DI 7 X4:2	DI:7	Spare
DI:8	DI 8 X5:4	DI:8	Spare
DI:9	DI 9 X5:2	DI:9	Spare
DI:10	DI 10 X6:4	DI:10	Spare
DI:11	DI 11 X6:2	DI:11	Spare
DI:12	DI 12 X7:4	DI:12	Spare
DI:13	DI 13 X7:2	DI:13	Spare
DI:14	DI 14 X8:4	DI:14	Spare
DI:15	DI 15 X8:2	DI:15	Spare

-KF1.11

FESTO
CPX-M-AB-8-M12X2-5POL
549335

X1 X2 X3 X4 X5 X6 X7 X8
M12
24V DI 1 0V DI 0 FE
24V DI 3 0V DI 2 FE
24V DI 5 0V DI 4 FE
24V DI 7 0V DI 6 FE
24V DI 9 0V DI 8 FE
24V DI 11 0V DI 10 FE
24V DI 13 0V DI 12 FE
24V DI 15 0V DI 14 FE
1 2 3 4 5
BN WH BU BK

+.AR31UQ41UQ1.1-W1
=V1AR31UQ41UQ1+.AR31UQ41UQ1/1.1

+.AR31UQ41UQ1.2-W1
=V1AR31UQ41UQ1+.AR31UQ41UQ1/1.2

+.AR31UQ41UQ1.3-W1
=V1AR31UQ41UQ1+.AR31UQ41UQ1/1.4

1 3

			Date	1/24/2023	Volvo Trucks North America		Valiant TMS	CONNECTING MOD. FOR MPA MANIFOLD	Drawing name: =2V01&EFS-EL_KF1	= V1AR31UQ41KF1	
			Ed.	MKLEPADLO						+ V1AR31UQ41	
			Appr		P6700 Framing - Cell 2V01, KF1		Scale 1:1		Document type: EFS	Project nr: 22-16152	Page 2
Modification	Date	Name	Original		Replacement of	Replaced by					1630

0	1	2	3	4	5	6	7	8	9

-KF1.12

FESTO
CPX-M-AB-8-M12X2-5POL
549335

DI:16	DI 0 X1:4	V1AR31UQ41-BG01	Common Part Present
DI:17	DI 1 X1:2	V1AR31UQ41-BG02	Common Part Present
DI:18	DI 2 X2:4	V1AR31UQ41-BG03	Position Control
DI:19	DI 3 X2:2	V1AR31UQ41-BG04	Position Control
DI:20	DI 4 X3:4	V1AR31UQ41-BG05	Position Control
DI:21	DI 5 X3:2	DI:21	Spare
DI:22	DI 6 X4:4	DI:22	Spare
DI:23	DI 7 X4:2	DI:23	Spare
DI:24	DI 8 X5:4	DI:24	Spare
DI:25	DI 9 X5:2	DI:25	Spare
DI:26	DI 10 X6:4	DI:26	Spare
DI:27	DI 11 X6:2	DI:27	Spare
DI:28	DI 12 X7:4	DI:28	Spare
DI:29	DI 13 X7:2	DI:29	Spare
DI:30	DI 14 X8:4	DI:30	Spare
DI:31	DI 15 X8:2	DI:31	Spare

-XG1/2
=V1AR31UQ41BG0/1.1

-XG3/4
=V1AR31UQ41BG0/1.4

-XG5
=V1AR31UQ41BG0/1.6

2

4

			Date	1/24/2023	Volvo Trucks North America	Valiant TMS	I/O MOD. DI16 (8 x M12) FOR MPA	Drawing name: =2V01&EFS-EL_KF1	= V1AR31UQ41KF1
			Ed.	MKLEPADLO					+ V1AR31UQ41
			Appr		P6700 Framing - Cell 2V01, KF1			Document type: EFS	Project nr: 22-16152
Modification	Date	Name	Original		Replacement of / Replaced by	Scale 1:1			Page 3 / 1630

0	1	2	3	4	5	6	7	8	9

-KF1 -KF1.11 -KF1.12 -KF1.20 -KF1.21 -KF1.22

M1

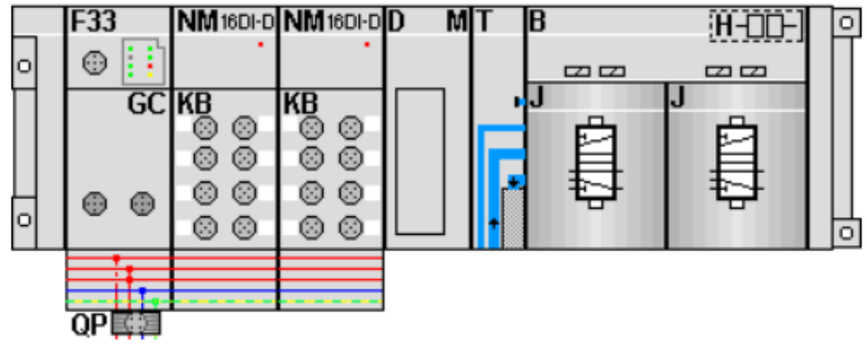

-KF1.21
=V1AR31UQ41UQ1+.AR31UQ41UQ1/1.3
=V1AR31UQ41UQ2+.AR31UQ41UQ2/1.3

FESTO

=V1AR31UQ41UQ1+.AR31UQ41UQ1/1.4	DO:0 DO 0 1.1	-QN1.1_Q	Common Clamps (RST)
=V1AR31UQ41UQ1+.AR31UQ41UQ1/1.4	DO:1 DO 1 1.2	-QN1.2_Q	Common Clamps (SET)
=V1AR31UQ41UQ2+.AR31UQ41UQ2/1.4	DO:2 DO 2 2.1	-QN2.1_Q	Spare (RST)
=V1AR31UQ41UQ2+.AR31UQ41UQ2/1.4	DO:3 DO 3 2.2	-QN2.2_Q	Spare (SET)

=V1AR31UQ41UQ1+.AR31UQ41UQ1/1

			Date	1/24/2023	Volvo Trucks North America	Valiant TMS	CONNECTING MOD. FOR FESTO DQ	Drawing name: =2V01&EFS-EL_KF1	= V1AR31UQ41KF1
			Ed.	MKLEPADLO					+ V1AR31UQ41
			Appr		P6700 Framing - Cell 2V01, KF1			Document type: EFS / Project nr: 22-16152	Page 4
Modification	Date	Name	Original		Replacement of / Replaced by	Scale 1:1			1630

0	1	2	3	4	5	6	7	8	9

=V1AR31UQ41KF1
+.AR31UQ41

-KF1.21
=V1AR31UQ41KF1+V1AR31UQ41/4.1

Common Clamps (RST)
=V1AR31UQ41KF1
+V1AR31UQ41
-QN1.1_Q
=V1AR31UQ41KF1
+V1AR31UQ41/4.3
DO:0

Common Clamps (SET)
=V1AR31UQ41KF1
+V1AR31UQ41
-QN1.2_Q
=V1AR31UQ41KF1
+V1AR31UQ41/4.3
DO:1

1.1
Pneumatic Valve

1.2
Pneumatic Valve

-QN1 .1 .2

=V1AR31UQ41KF1+V1AR31UQ41/2.1
+.AR31UQ41UQ1.1-W1

=V1AR31UQ41KF1+V1AR31UQ41/2.2
+.AR31UQ41UQ1.2-W1

=V1AR31UQ41KF1+V1AR31UQ41/2.3
+.AR31UQ41UQ1.3-W1

-W1
RKC 4.4T-3-RSC 4.4T/S3060
3m

BN BU BK WH

-BGS/R
1 3
+ -
TÜNKERS
1324638
A2 A1
2 4

Common Clamp
=V1AR31UQ41UQ1.1
+.AR31UQ41UQ1.1
-UQ1.1

Common Clamp
=V1AR31UQ41UQ1.2
+.AR31UQ41UQ1.2
-UQ1.2

Common Clamp
=V1AR31UQ41UQ1.3
+.AR31UQ41UQ1.3
-UQ1.3

=V1AR31UQ41
-UQ1.1-BGS/R
Common
Clamp

=V1AR31UQ41
-UQ1.2-BGS/R
Common
Clamp

=V1AR31UQ41
-UQ1.3-BGS/R
Common
Clamp

=V1AR31UQ41KF1+V1AR31UQ41/4

=V1AR31UQ41UQ2+.AR31UQ41UQ2/1

			Date	1/24/2023	Volvo Trucks North America		Valiant TMS	FESTO DQ CONNECTION QN1	Drawing name: =2V01&EFS-EL_KF1	= V1AR31UQ41UQ1
			Ed.	MKLEPADLO						+ V1AR31UQ41UQ1
			Appr		P6700 Framing - Cell 2V01, KF1				Document type: EFS	Project nr: 22-16152
Modification	Date	Name	Original		Replacement of	Replaced by	Scale 1:1			Page 1 / 1630

0	1	2	3	4	5	6	7	8	9

=V1AR31UQ41KF1
+.AR31UQ41

-KF1.21
=V1AR31UQ41KF1+V1AR31UQ41/4.1

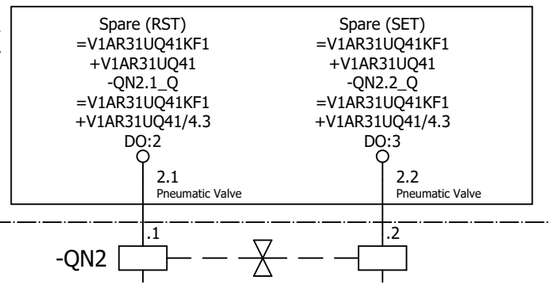

=V1AR31UQ41UQ1+.AR31UQ41UQ1/1

=V1AR31WC1+.AR31UC01/1

			Date	1/24/2023	Volvo Trucks North America	Valiant TMS	FESTO DQ CONNECTION QN2	Drawing name: =2V01&EFS-EL_KF1	= V1AR31UQ41UQ2
			Ed.	MKLEPADLO					+ V1AR31UQ41UQ2
			Appr		P6700 Framing - Cell 2V01, KF1	Scale 1:1		Document type: EFS / Project nr: 22-16152	Page 1 / 1630
Modification	Date	Name	Original		Replacement of / Replaced by				

0	1	2	3	4	5	6	7	8	9

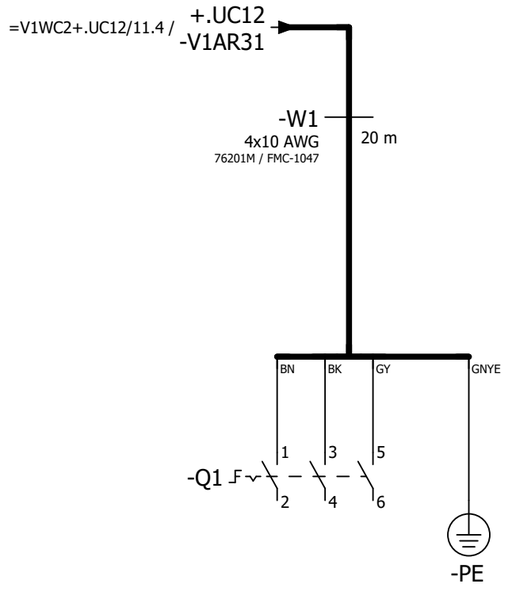

=V1AR31UQ41UQ2+.AR31UQ41UQ2/1

=V1AR31XQ41KF1+.AR31XQ41/1

			Date	1/24/2023	Volvo Trucks North America		Valiant TMS	Incoming power	Drawing name: =2V01&EFS-EL_KF1	= V1AR31WC1
			Ed.	MKLEPADLO						+ V1AR31UC01
			Appr		P6700 Framing - Cell 2V01, KF1				Document type: EFS	Project nr: 22-16152
Modification	Date	Name	Original		Replacement of	Replaced by	Scale 1:1			Page 1 / 1630

0	1	2	3	4	5	6	7	8	9

=V1AR31XQ41WC4+.AR31XQ41UC01/1.5 / -W1.1

-W1.1
RSM RKM 56-1M/S3059
1m

Robot Media Panel / -KF1

-KF1
PROFINET Cable
6XV1840-3AH10

-KF1
/1.3

X20 M12, 7/8" 1 2 PE 4 5
0V_VAL / OUT
0V_EL / SEN
FE
24V_EL / SEN
24V_VAL / OUT

ON
OFF
1 2 1 2

M12 -TP1
M12 -TP2

FESTO
Bus node + Interlinking block
548755 + 550208

-KF1.11
FESTO
CPX-M-AB-8-M12X2-5POL
549335

DI:96	DI 0 X1:4	V1AR31XQ41UQ1.1-BGR	Cylinder (RESET)						
DI:97	DI 1 X1:2	V1AR31XQ41UQ1.1-BGS	Cylinder (SET)						
DI:98	DI 2 X2:4	DI:98	Spare						
DI:99	DI 3 X2:2	DI:99	Spare						
DI:100	DI 4 X3:4	DI:100	Spare						
DI:101	DI 5 X3:2	DI:101	Spare						
DI:102	DI 6 X4:4	DI:102	Spare						
DI:103	DI 7 X4:2	DI:103	Spare						
DI:104	DI 8 X5:4	DI:104	Spare						
DI:105	DI 9 X5:2	DI:105	Spare						
DI:106	DI 10 X6:4	DI:106	Spare						
DI:107	DI 11 X6:2	DI:107	Spare						
DI:108	DI 12 X7:4	DI:108	Spare						
DI:109	DI 13 X7:2	DI:109	Spare						
DI:110	DI 14 X8:4	DI:110	Spare						
DI:111	DI 15 X8:2	DI:111	Spare						

X1 M12 24V DI 1 0V DI 0 FE 1 2 3 4 5
X2 M12 24V DI 3 0V DI 2 FE 1 2 3 4 5
X3 M12 24V DI 5 0V DI 4 FE 1 2 3 4 5
X4 M12 24V DI 7 0V DI 6 FE 1 2 3 4 5
X5 M12 24V DI 9 0V DI 8 FE 1 2 3 4 5
X6 M12 24V DI 11 0V DI 10 FE 1 2 3 4 5
X7 M12 24V DI 13 0V DI 12 FE 1 2 3 4 5
X8 M12 24V DI 15 0V DI 14 FE 1 2 3 4 5

BN WH BU BK

+.AR31XQ41UQ1-XG1/2
=V1AR31XQ41UQ1+.AR31XQ41UQ1/1.1

=V1AR31WC1+.AR31UC01/1

2

			Date	1/24/2023	Volvo Trucks North America	Valiant TMS	CONNECTING MOD. FOR VTSA MANIFOLD	Drawing name: =2V01&EFS-EL_KF1	= V1AR31XQ41KF1
			Ed.	MKLEPADLO					+ V1AR31XQ41
			Appr		P6700 Framing - Cell 2V01, KF1			Document type: EFS	Project nr: 22-16152
Modification	Date	Name	Original		Replacement of / Replaced by	Scale 1:1			Page 1 / 1630

-KF1 -KF1.11 -KF1.20 -KF1.21 -KF1.22 -KF1.23

M1

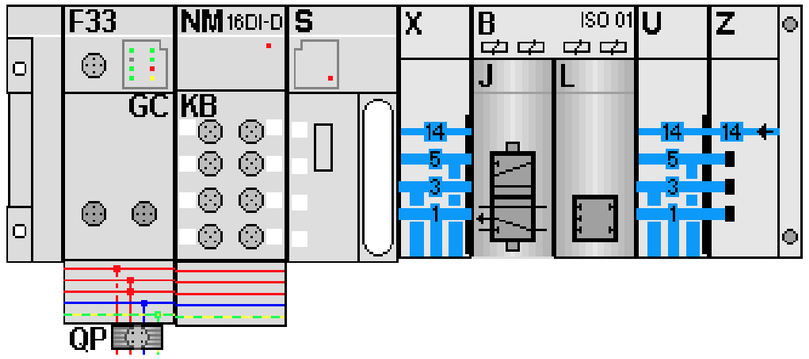

-KF1.21
=V1AR31XQ41UQ1+.AR31XQ41UQ1/1.3

FESTO

=V1AR31XQ41UQ1+.AR31XQ41UQ1/1.4	DO:32 DO 0 1.1	-QN1.1_Q	Cylinder (RST)
=V1AR31XQ41UQ1+.AR31XQ41UQ1/1.4	DO:33 DO 1 1.2	-QN1.2_Q	Cylinder (SET)
	DO:34 DO 2 2.1	-QN2.1_Q	Spare (RST)
	DO:35 DO 3 2.2	-QN2.2_Q	Spare (SET)

1

=V1AR31XQ41UQ1+.AR31XQ41UQ1/1

			Date	1/24/2023	Volvo Trucks North America	Valiant TMS	CONNECTING MOD. FOR FESTO DQ	Drawing name: =2V01&EFS-EL_KF1	= V1AR31XQ41KF1
			Ed.	MKLEPADLO					+ V1AR31XQ41
			Appr		P6700 Framing - Cell 2V01, KF1			Document type: EFS	Project nr: 22-16152
Modification	Date	Name	Original		Replacement of / Replaced by	Scale 1:1			Page 2 / 1630

0	1	2	3	4	5	6	7	8	9

=V1AR31XQ41KF1
+.AR31XQ41

-KF1.21
=V1AR31XQ41KF1+V1AR31XQ41/2.1

Cylinder (RST)
=V1AR31XQ41KF1
+V1AR31XQ41
-QN1.1_Q
=V1AR31XQ41KF1
+V1AR31XQ41/2.3
DO:32

Cylinder (SET)
=V1AR31XQ41KF1
+V1AR31XQ41
-QN1.2_Q
=V1AR31XQ41KF1
+V1AR31XQ41/2.3
DO:33

1.1 Pneumatic Valve
1.2 Pneumatic Valve

-QN1 .1 .2

=V1AR31XQ41KF1+V1AR31XQ41/1.1
-XG1/2

-W1
RKC 4.4T-0.5-RSC 4.4T/S3060
0.5m
BN BU BK WH

-XG1/2 P1 1 3 4 2
VB2-FSM 4.4/2FKM 4/S3450
TURCK

J1 1 3 4 2
J2 1 3 4 2
BN BU BK WH

-W1.1
RKC 4.4T-0.5-RSC 4.4T/S3060
0.5m
-W1.2
RKC 4.4T-0.5-RSC 4.4T/S3060
0.5m
BN BU BK WH

-BGR
Sn = 2 mm
TURCK
1627205
pnp
1 3 A 4

-BGS
Sn = 2 mm
TURCK
1627205
pnp
1 3 A 4

Cylinder
=V1AR31XQ41UQ1.1
+.AR31XQ41UQ1.1
-UQ1.1

=V1AR31XQ41
-UQ1.1-BGR
Cylinder

=V1AR31XQ41
-UQ1.1-BGS
Cylinder

=V1AR31XQ41KF1+V1AR31XQ41/2

=V1AR31XQ41WC1+.AR31XQ41UC01/1

			Date	1/24/2023	Volvo Trucks North America	Valiant TMS	FESTO DQ CONNECTION QN1	Drawing name: =2V01&EFS-EL_KF1	= V1AR31XQ41UQ1
			Ed.	MKLEPADLO	P6700 Framing - Cell 2V01, KF1				+ V1AR31XQ41UQ1
			Appr			Scale 1:1		Document type: EFS	Project nr: 22-16152
Modification	Date	Name	Original		Replacement of	Replaced by			Page 1 / 1630

0	1	2	3	4	5	6	7	8	9

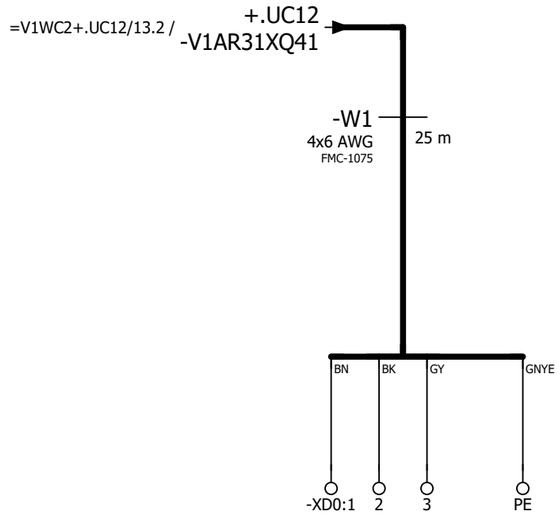

=V1AR31XQ41UQ1+.AR31XQ41UQ1/1

=V1AR31XQ41WC4/1

			Date	1/24/2023	Volvo Trucks North America		Valiant TMS	Incoming power	Drawing name: =2V01&EFS-EL_KF1	= V1AR31XQ41WC1
			Ed.	MKLEPADLO						+ V1AR31XQ41UC01
			Appr		P6700 Framing - Cell 2V01, KF1		Scale 1:1		Document type: EFS	Project nr: 22-16152
Modification	Date	Name	Original		Replacement of	Replaced by				Page 1 / 1630

0	1	2	3	4	5	6	7	8	9

+V1UC12

-SWITCHEDPWR4 / =V1WC4+.UC12/27.5

-W1
RSM RKM 56-25M/S3059
25m

-XG51
P1 1 2 4 5 3
J1 1 2 4 5 3
J2 1 2 4 5 3
1 2 4 5 PE
RSM-2RKM 50
TURCK

+.AR31XQ41-W1.1
=V1AR31XQ41KF1+V1AR31XQ41/1.1

+V2AR32XQ41-W1.2
=V2AR32XQ41KF1+V2AR32XQ41/1.1

=V1AR31XQ41WC1/1

=V1AR41KF1+.AR41UC01/1

			Date	1/24/2023	Volvo Trucks North America	Valiant TMS	24VDC	Drawing name: =2V01&EFS-EL_KF1	= V1AR31XQ41WC4
			Ed.	MKLEPADLO					+ V1AR31XQ41UC01
			Appr		P6700 Framing - Cell 2V01, KF1	Scale 1:1		Document type: EFS	Project nr: 22-16152
Modification	Date	Name	Original		Replacement of	Replaced by			Page 1 / 1630

0	1	2	3	4	5	6	7	8	9

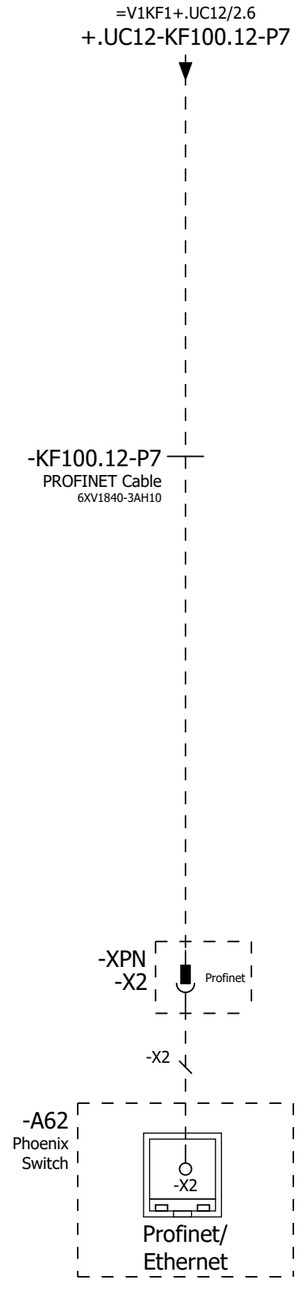

=V1AR31XQ41WC4+.AR31XQ41UC01/1

=V1AR41UQ41BG0+.AR41UQ41/1

			Date	1/24/2023	Volvo Trucks North America	Valiant TMS	Incoming Profinet	Drawing name: =2V01&EFS-EL_KF1	= V1AR41KF1
			Ed.	MKLEPADLO					+ V1AR41UC01
			Appr		P6700 Framing - Cell 2V01, KF1			Document type: EFS	Project nr: 22-16152
Modification	Date	Name	Original		Replacement of / Replaced by	Scale 1:1			Page 1 / 1630

0	1	2	3	4	5	6	7	8	9

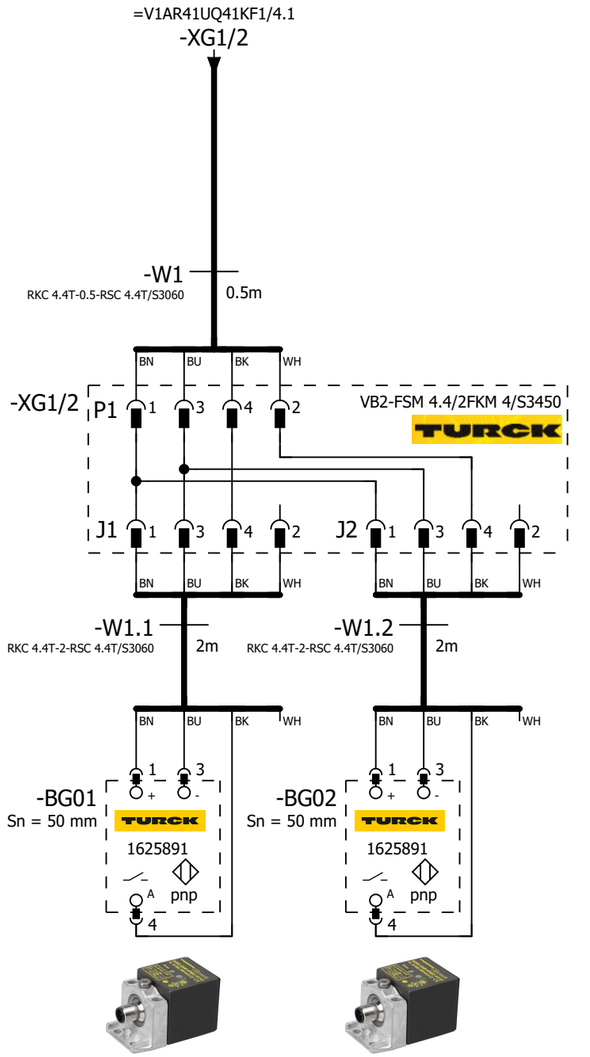

=V1AR41UQ41 -BG01 Common Part Present	=V1AR41UQ41 -BG02 Common Part Present

=V1AR41KF1+.AR41UC01/1

=V1AR41UQ41KF1/1

			Date	1/24/2023	Volvo Trucks North America		Valiant TMS	SENSORS	Drawing name: =2V01&EFS-EL_KF1	= V1AR41UQ41BG0
			Ed.	MKLEPADLO						+ V1AR41UQ41
			Appr		P6700 Framing - Cell 2V01, KF1				Document type: EFS	Project nr: 22-16152	Page 1
Modification	Date	Name	Original		Replacement of	Replaced by	Scale 1:1				1630

0	1	2	3	4	5	6	7	8	9

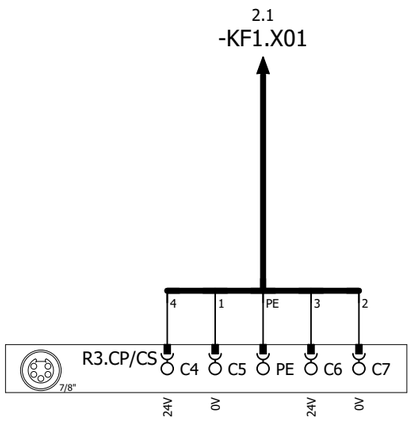

DC 24V (OUT)

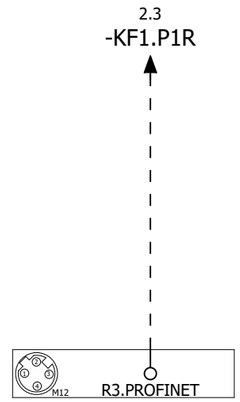

R3.ETHERNET

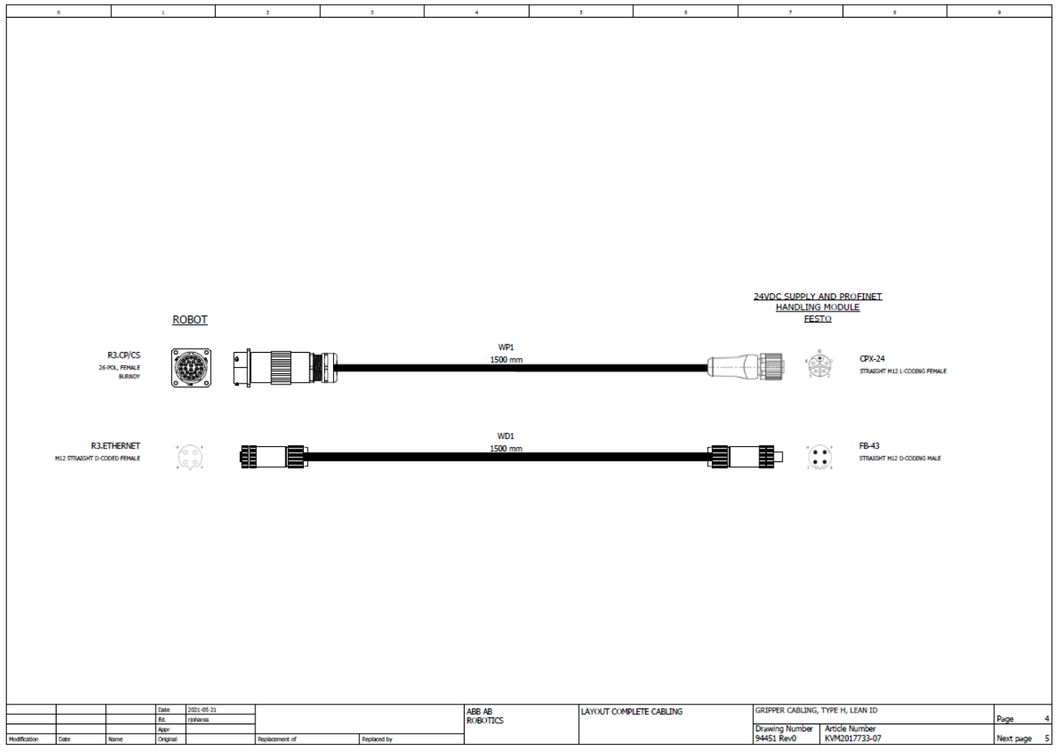

=V1AR41UQ41BG0/1

2

			Date	1/24/2023	Volvo Trucks North America	Valiant TMS	24VDC SUPPLY AND PROFINET HANDLING MODULE	Drawing name: =2V01&EFS-EL_KF1	= V1AR41UQ41KF1
			Ed.	MKLEPADLO					+ V1AR41UQ41
			Appr		P6700 Framing - Cell 2V01, KF1	Scale 1:1		Document type: EFS	Project nr: 22-16152
Modification	Date	Name	Original		Replacement of / Replaced by				Page 1 / 1630

0	1	2	3	4	5	6	7	8	9

1.3 / -KF1.X01

-W1
RSM RKM 56-2M/S3059
2m

1.5 / -KF1.P1R

-WF1
PROFINET Cable
6XV1840-3AH10

-KF1

X20 7/8" 1 2 3 4 5
1 2 PE 3 4
0V_VAL / OUT
0V_EL / SEN
FE
24V_EL / SEN
24V_VAL / OUT

ON
OFF
1 2 1 2

M12 -TP1
M12 -TP2

FESTO
Bus node + Interlinking block
548755 + 550208

DI:0	DI 0 X1:4	V1AR41UQ41UQ1.1-BGR	Common Shot Pin (RESET)
DI:1	DI 1 X1:2	V1AR41UQ41UQ1.1-BGS	Common Shot Pin (SET)
DI:2	DI 2 X2:4	V1AR41UQ41UQ1.2-BGR	Common Shot Pin (RESET)
DI:3	DI 3 X2:2	V1AR41UQ41UQ1.2-BGS	Common Shot Pin (SET)
DI:4	DI 4 X3:4	V1AR41UQ41UQ2.1-BGR	Common Clamp 1 (RESET)
DI:5	DI 5 X3:2	V1AR41UQ41UQ2.1-BGS	Common Clamp 1 (SET)
DI:6	DI 6 X4:4	V1AR41UQ41UQ2.2-BGR	Common Clamp 1 (RESET)
DI:7	DI 7 X4:2	V1AR41UQ41UQ2.2-BGS	Common Clamp 1 (SET)
DI:8	DI 8 X5:4	V1AR41UQ41UQ2.3-BGR	Common Clamp 1 (RESET)
DI:9	DI 9 X5:2	V1AR41UQ41UQ2.3-BGS	Common Clamp 1 (SET)
DI:10	DI 10 X6:4	V1AR41UQ41UQ2.4-BGR	Common Clamp 1 (RESET)
DI:11	DI 11 X6:2	V1AR41UQ41UQ2.4-BGS	Common Clamp 1 (SET)
DI:12	DI 12 X7:4	V1AR41UQ41UQ2.5-BGR	Common Clamp 1 (RESET)
DI:13	DI 13 X7:2	V1AR41UQ41UQ2.5-BGS	Common Clamp 1 (SET)
DI:14	DI 14 X8:4	V1AR41UQ41UQ3.1-BGR	Common Clamp 2 (RESET)
DI:15	DI 15 X8:2	V1AR41UQ41UQ3.1-BGS	Common Clamp 2 (SET)

-KF1.11

FESTO
CPX-M-AB-8-M12X2-5POL
549335

X1 M12: 24V DI 1 0V DI 0 FE — 1 2 3 4 5 — BN WH BU BK
X2 M12: 24V DI 3 0V DI 2 FE — 1 2 3 4 5 — BN WH BU BK
X3 M12: 24V DI 5 0V DI 4 FE — 1 2 3 4 5 — BN WH BU BK
X4 M12: 24V DI 7 0V DI 6 FE — 1 2 3 4 5 — BN WH BU BK
X5 M12: 24V DI 9 0V DI 8 FE — 1 2 3 4 5 — BN WH BU BK
X6 M12: 24V DI 11 0V DI 10 FE — 1 2 3 4 5 — BN WH BU BK
X7 M12: 24V DI 13 0V DI 12 FE — 1 2 3 4 5 — BN WH BU BK
X8 M12: 24V DI 15 0V DI 14 FE — 1 2 3 4 5 — BN WH BU BK

+.AR41UQ41UQ1.1-W1
=V1AR41UQ41UQ1+.AR41UQ41UQ1/1.1

+.AR41UQ41UQ1.2-W1
=V1AR41UQ41UQ1+.AR41UQ41UQ1/1.2

+.AR41UQ41UQ2.1-W1
=V1AR41UQ41UQ2+.AR41UQ41UQ2/1.1

+.AR41UQ41UQ2.2-W1
=V1AR41UQ41UQ2+.AR41UQ41UQ2/1.2

+.AR41UQ41UQ2.3-W1
=V1AR41UQ41UQ2+.AR41UQ41UQ2/1.4

+.AR41UQ41UQ2.4-W1
=V1AR41UQ41UQ2+.AR41UQ41UQ2/1.5

+.AR41UQ41UQ2.5-W1
=V1AR41UQ41UQ2+.AR41UQ41UQ2/1.7

+.AR41UQ41UQ3.1-W1
=V1AR41UQ41UQ3+.AR41UQ41UQ3/1.1

1 3

			Date	1/24/2023	Volvo Trucks North America		Valiant TMS	CONNECTING MOD. FOR MPA MANIFOLD	Drawing name: =2V01&EFS-EL_KF1	= V1AR41UQ41KF1
			Ed.	MKLEPADLO						+ V1AR41UQ41
			Appr		P6700 Framing - Cell 2V01, KF1		Scale 1:1		Document type: EFS	Project nr: 22-16152
Modification	Date	Name	Original		Replacement of	Replaced by				Page 2 / 1630

0	1	2	3	4	5	6	7	8	9

-KF1.12

FESTO

CPX-M-AB-8-M12X2-5POL

549335

DI:16	DI 0 X1:4	V1AR41UQ41UQ3.2-BGR	Common Clamp 2 (RESET)
DI:17	DI 1 X1:2	V1AR41UQ41UQ3.2-BGS	Common Clamp 2 (SET)
DI:18	DI 2 X2:4	V1AR41UQ41UQ4.1-BGR	Part Positioner (RESET)
DI:19	DI 3 X2:2	V1AR41UQ41UQ4.1-BGS	Part Positioner (SET)
DI:20	DI 4 X3:4	V1AR41UQ41UQ4.2-BGR	Part Positioner (RESET)
DI:21	DI 5 X3:2	V1AR41UQ41UQ4.2-BGS	Part Positioner (SET)
DI:22	DI 6 X4:4	DI:22	Spare
DI:23	DI 7 X4:2	DI:23	Spare
DI:24	DI 8 X5:4	DI:24	Spare
DI:25	DI 9 X5:2	DI:25	Spare
DI:26	DI 10 X6:4	DI:26	Spare
DI:27	DI 11 X6:2	DI:27	Spare
DI:28	DI 12 X7:4	DI:28	Spare
DI:29	DI 13 X7:2	DI:29	Spare
DI:30	DI 14 X8:4	DI:30	Spare
DI:31	DI 15 X8:2	DI:31	Spare

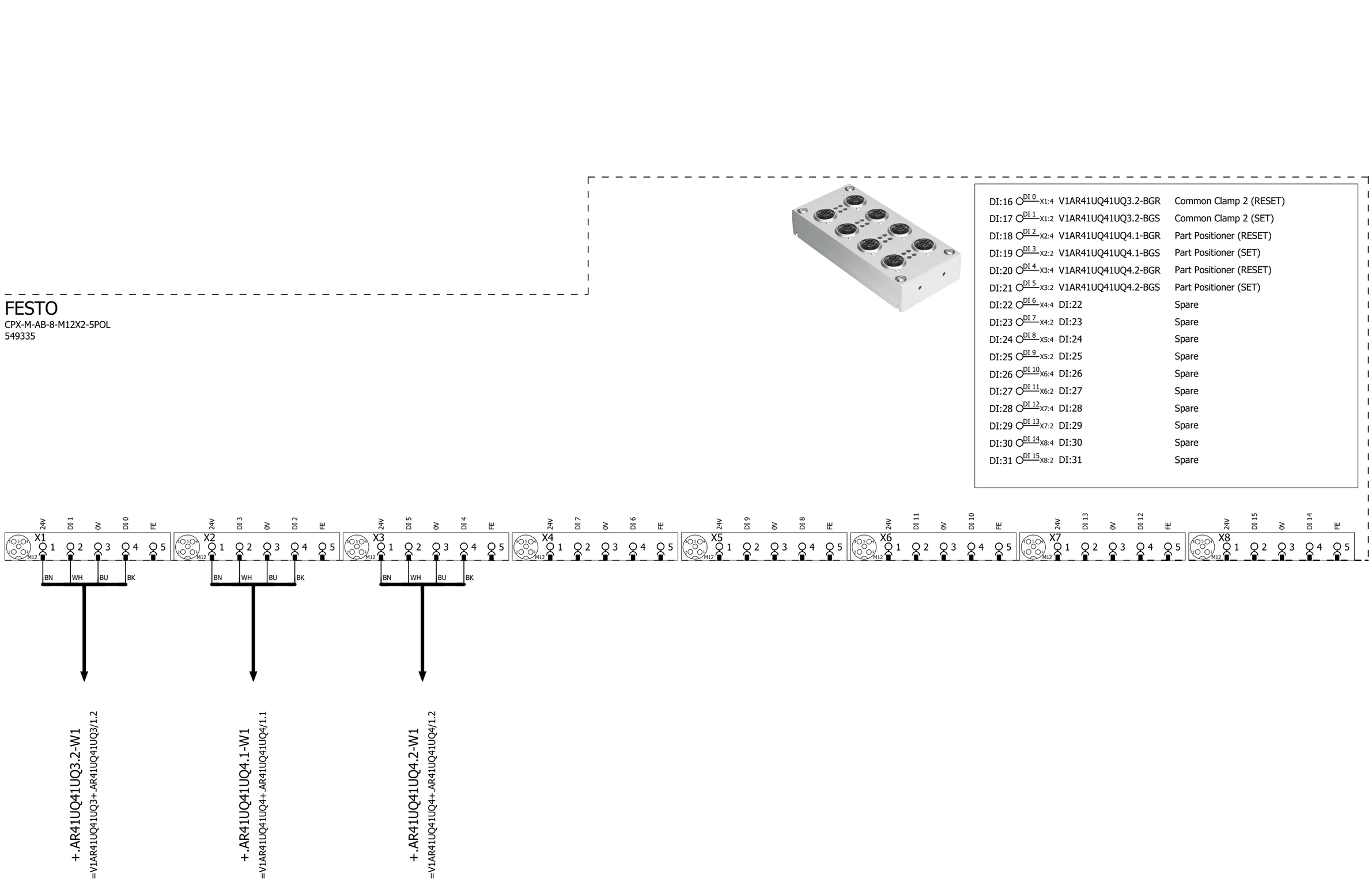

			Date	1/24/2023	Volvo Trucks North America	Valiant TMS	I/O MOD. DI16 (8 x M12) FOR MPA	Drawing name: =2V01&EFS-EL_KF1	= V1AR41UQ41KF1
			Ed.	MKLEPADLO					+ V1AR41UQ41
			Appr		P6700 Framing - Cell 2V01, KF1			Document type: EFS	Project nr: 22-16152
Modification	Date	Name	Original		Replacement of / Replaced by	Scale 1:1			Page 3 / 1630

0	1	2	3	4	5	6	7	8	9

-KF1.13

FESTO
CPX-M-AB-8-M12X2-5POL
549335

DI:32	DI 0 X1:4	V1AR41UQ41-BG01 Common Part Present
DI:33	DI 1 X1:2	V1AR41UQ41-BG02 Common Part Present
DI:34	DI 2 X2:4	DI:34 Spare
DI:35	DI 3 X2:2	DI:35 Spare
DI:36	DI 4 X3:4	DI:36 Spare
DI:37	DI 5 X3:2	DI:37 Spare
DI:38	DI 6 X4:4	DI:38 Spare
DI:39	DI 7 X4:2	DI:39 Spare
DI:40	DI 8 X5:4	DI:40 Spare
DI:41	DI 9 X5:2	DI:41 Spare
DI:42	DI 10 X6:4	DI:42 Spare
DI:43	DI 11 X6:2	DI:43 Spare
DI:44	DI 12 X7:4	DI:44 Spare
DI:45	DI 13 X7:2	DI:45 Spare
DI:46	DI 14 X8:4	DI:46 Spare
DI:47	DI 15 X8:2	DI:47 Spare

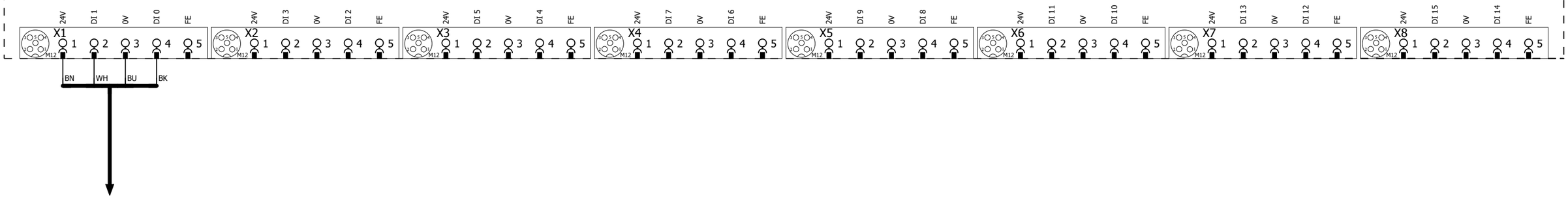

-XG1/2
=V1AR41UQ41BG0/1.1

3 5

			Date	1/24/2023	Volvo Trucks North America		Valiant TMS	I/O MOD. DI16 (8 x M12) FOR MPA	Drawing name: =2V01&EFS-EL_KF1	= V1AR41UQ41KF1
			Ed.	MKLEPADLO						+ V1AR41UQ41
			Appr		P6700 Framing - Cell 2V01, KF1				Document type: EFS	Project nr: 22-16152
Modification	Date	Name	Original		Replacement of	Replaced by	Scale 1:1			Page 4 / 1630

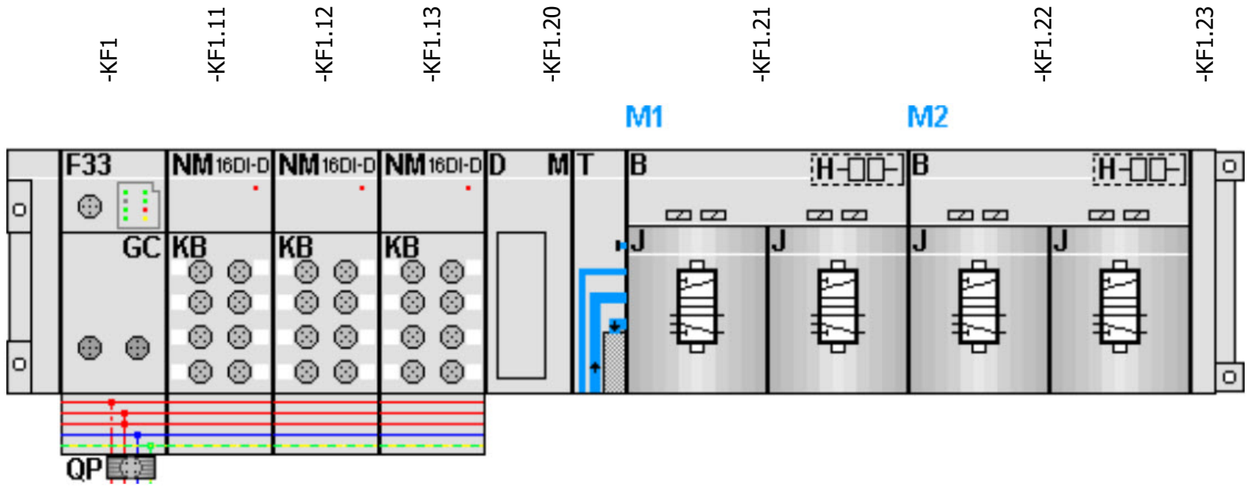

-KF1.21
=V1AR41UQ41UQ1+.AR41UQ41UQ1/1.3
=V1AR41UQ41UQ2+.AR41UQ41UQ2/1.3

FESTO

=V1AR41UQ41UQ1+.AR41UQ41UQ1/1.4	DO:0	DO 0 1.1	-QN1.1_Q	Common Shot Pins (RST)
=V1AR41UQ41UQ1+.AR41UQ41UQ1/1.4	DO:1	DO 1 1.2	-QN1.2_Q	Common Shot Pins (SET)
=V1AR41UQ41UQ2+.AR41UQ41UQ2/1.4	DO:2	DO 2 2.1	-QN2.1_Q	Common Clamps 1 (RST)
=V1AR41UQ41UQ2+.AR41UQ41UQ2/1.4	DO:3	DO 3 2.2	-QN2.2_Q	Common Clamps 1 (SET)

-KF1.22
=V1AR41UQ41UQ3+.AR41UQ41UQ3/1.3
=V1AR41UQ41UQ4+.AR41UQ41UQ4/1.3

FESTO

=V1AR41UQ41UQ3+.AR41UQ41UQ3/1.4	DO:4	DO 4 1.1	-QN3.1_Q	Common Clamps 2 (RST)
=V1AR41UQ41UQ3+.AR41UQ41UQ3/1.4	DO:5	DO 5 1.2	-QN3.2_Q	Common Clamps 2 (SET)
=V1AR41UQ41UQ4+.AR41UQ41UQ4/1.4	DO:6	DO 6 2.1	-QN4.1_Q	Part Positioners (RST)
=V1AR41UQ41UQ4+.AR41UQ41UQ4/1.4	DO:7	DO 7 2.2	-QN4.2_Q	Part Positioners (SET)

			Date	1/24/2023	Volvo Trucks North America	Valiant TMS	CONNECTING MOD. FOR FESTO DQ	Drawing name: =2V01&EFS-EL_KF1	= V1AR41UQ41KF1	
			Ed.	MKLEPADLO					+ V1AR41UQ41	
			Appr		P6700 Framing - Cell 2V01, KF1			Document type: EFS	Project nr: 22-16152	Page 5
Modification	Date	Name	Original		Replacement of / Replaced by	Scale 1:1				1630

0	1	2	3	4	5	6	7	8	9

=V1AR41UQ41KF1
+.AR41UQ41

-KF1.21
=V1AR41UQ41KF1+V1AR41UQ41/5.1

Common Shot Pins (RST)
=V1AR41UQ41KF1
+V1AR41UQ41
-QN1.1_Q
=V1AR41UQ41KF1
+V1AR41UQ41/5.3
DO:0

Common Shot Pins (SET)
=V1AR41UQ41KF1
+V1AR41UQ41
-QN1.2_Q
=V1AR41UQ41KF1
+V1AR41UQ41/5.3
DO:1

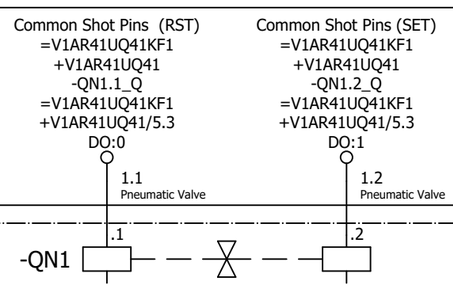

=V1AR41UQ41KF1+V1AR41UQ41/2.1
+.AR41UQ41UQ1.1-W1

=V1AR41UQ41KF1+V1AR41UQ41/2.2
+.AR41UQ41UQ1.2-W1

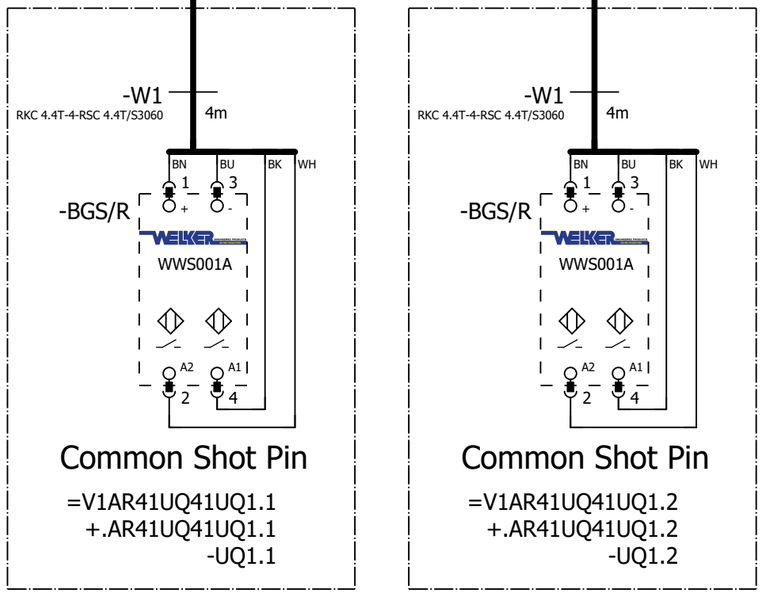

=V1AR41UQ41
-UQ1.1-BGS/R
Common
Shot Pin

=V1AR41UQ41
-UQ1.2-BGS/R
Common
Shot Pin

=V1AR41UQ41KF1+V1AR41UQ41/5

=V1AR41UQ41UQ2+.AR41UQ41UQ2/1

			Date	1/24/2023	Volvo Trucks North America	Valiant TMS	FESTO DQ CONNECTION QN1	Drawing name: =2V01&EFS-EL_KF1	= V1AR41UQ41UQ1
			Ed.	MKLEPADLO					+ V1AR41UQ41UQ1
			Appr		P6700 Framing - Cell 2V01, KF1			Document type: EFS	Project nr: 22-16152
Modification	Date	Name	Original		Replacement of / Replaced by	Scale 1:1			Page 1 / 1630

0	1	2	3	4	5	6	7	8	9

=V1AR41UQ41KF1
+.AR41UQ41

-KF1.21
=V1AR41UQ41KF1+V1AR41UQ41/5.1

Common Clamps 1 (RST)
=V1AR41UQ41KF1
+V1AR41UQ41
-QN2.1_Q
=V1AR41UQ41KF1
+V1AR41UQ41/5.3
DO:2

Common Clamps 1 (SET)
=V1AR41UQ41KF1
+V1AR41UQ41
-QN2.2_Q
=V1AR41UQ41KF1
+V1AR41UQ41/5.3
DO:3

2.1 Pneumatic Valve
2.2 Pneumatic Valve

-QN2 .1 .2

=V1AR41UQ41KF1+V1AR41UQ41/2.3
+.AR41UQ41UQ2.1-W1

-W1 RKC 4.4T-2-RSC 4.4T/S3060 2m

-BGS/R BN BU BK WH 1 3 TÜNKERS 1324644 A2 A1 2 4

Common Clamp 1
=V1AR41UQ41UQ2.1
+.AR41UQ41UQ2.1
-UQ2.1

=V1AR41UQ41
-UQ2.1-BGS/R
Common
Clamp 1

=V1AR41UQ41KF1+V1AR41UQ41/2.4
+.AR41UQ41UQ2.2-W1

-W1 RKC 4.4T-4-RSC 4.4T/S3060 4m

-BGS/R BN BU BK WH 1 3 TÜNKERS 1324644 A2 A1 2 4

Common Clamp 1
=V1AR41UQ41UQ2.2
+.AR41UQ41UQ2.2
-UQ2.2

=V1AR41UQ41
-UQ2.2-BGS/R
Common
Clamp 1

=V1AR41UQ41KF1+V1AR41UQ41/2.5
+.AR41UQ41UQ2.3-W1

-W1 RKC 4.4T-4-RSC 4.4T/S3060 4m

-BGS/R BN BU BK WH 1 3 TÜNKERS 1324644 A2 A1 2 4

Common Clamp 1
=V1AR41UQ41UQ2.3
+.AR41UQ41UQ2.3
-UQ2.3

=V1AR41UQ41
-UQ2.3-BGS/R
Common
Clamp 1

=V1AR41UQ41KF1+V1AR41UQ41/2.6
+.AR41UQ41UQ2.4-W1

-W1 RKC 4.4T-4-RSC 4.4T/S3060 4m

-BGS/R BN BU BK WH 1 3 TÜNKERS 1324638 A2 A1 2 4

Common Clamp 1
=V1AR41UQ41UQ2.4
+.AR41UQ41UQ2.4
-UQ2.4

=V1AR41UQ41
-UQ2.4-BGS/R
Common
Clamp 1

=V1AR41UQ41KF1+V1AR41UQ41/2.8
+.AR41UQ41UQ2.5-W1

-W1 RKC 4.4T-2-RSC 4.4T/S3060 2m

-BGS/R BN BU BK WH 1 3 TÜNKERS 1324638 A2 A1 2 4

Common Clamp 1
=V1AR41UQ41UQ2.5
+.AR41UQ41UQ2.5
-UQ2.5

=V1AR41UQ41
-UQ2.5-BGS/R
Common
Clamp 1

=V1AR41UQ41UQ1+.AR41UQ41UQ1/1

=V1AR41UQ41UQ3+.AR41UQ41UQ3/1

			Date	1/24/2023	Volvo Trucks North America	Valiant TMS	FESTO DQ CONNECTION QN2	Drawing name: =2V01&EFS-EL_KF1
			Ed.	MKLEPADLO				= V1AR41UQ41UQ2
			Appr		P6700 Framing - Cell 2V01, KF1			+ V1AR41UQ41UQ2
Modification	Date	Name	Original		Replacement of / Replaced by	Scale 1:1		Document type: EFS / Project nr: 22-16152 / Page 1 / 1630

0	1	2	3	4	5	6	7	8	9

=V1AR41UQ41KF1
+.AR41UQ41

-KF1.22
=V1AR41UQ41KF1+V1AR41UQ41/5.1

Common Clamps 2 (RST)
=V1AR41UQ41KF1
+V1AR41UQ41
-QN3.1_Q
=V1AR41UQ41KF1
+V1AR41UQ41/5.3
DO:4

Common Clamps 2 (SET)
=V1AR41UQ41KF1
+V1AR41UQ41
-QN3.2_Q
=V1AR41UQ41KF1
+V1AR41UQ41/5.3
DO:5

1.1 Pneumatic Valve

1.2 Pneumatic Valve

-QN3 .1 .2

=V1AR41UQ41KF1+V1AR41UQ41/2.9
+.AR41UQ41UQ3.1-W1

-W1 4m
RKC 4.4T-4-RSC 4.4T/S3060

BN BU BK WH
1 3
-BGS/R
TÜNKERS
1324638
A2 A1
2 4

Common Clamp 2
=V1AR41UQ41UQ3.1
+.AR41UQ41UQ3.1
-UQ3.1

=V1AR41UQ41
-UQ3.1-BGS/R
Common
Clamp 2

=V1AR41UQ41KF1+V1AR41UQ41/3.1
+.AR41UQ41UQ3.2-W1

-W1 2m
RKC 4.4T-2-RSC 4.4T/S3060

BN BU BK WH
1 3
-BGS/R
TÜNKERS
1324638
A2 A1
2 4

Common Clamp 2
=V1AR41UQ41UQ3.2
+.AR41UQ41UQ3.2
-UQ3.2

=V1AR41UQ41
-UQ3.2-BGS/R
Common
Clamp 2

=V1AR41UQ41UQ2+.AR41UQ41UQ2/1

=V1AR41UQ41UQ4+.AR41UQ41UQ4/1

			Date	1/24/2023	Volvo Trucks North America	Valiant TMS	FESTO DQ CONNECTION QN3	Drawing name: =2V01&EFS-EL_KF1	= V1AR41UQ41UQ3
			Ed.	MKLEPADLO					+ V1AR41UQ41UQ3
			Appr		P6700 Framing - Cell 2V01, KF1			Document type: EFS	Project nr: 22-16152
Modification	Date	Name	Original		Replacement of / Replaced by	Scale 1:1			Page 1 / 1630

0	1	2	3	4	5	6	7	8	9

=V1AR41UQ41KF1
+.AR41UQ41

-KF1.22
=V1AR41UQ41KF1+V1AR41UQ41/5.1

Part Positioners (RST)
=V1AR41UQ41KF1
+V1AR41UQ41
-QN4.1_Q
=V1AR41UQ41KF1
+V1AR41UQ41/5.3
DO:6

Part Positioners (SET)
=V1AR41UQ41KF1
+V1AR41UQ41
-QN4.2_Q
=V1AR41UQ41KF1
+V1AR41UQ41/5.3
DO:7

2.1
Pneumatic Valve

2.2
Pneumatic Valve

-QN4 .1 .2

=V1AR41UQ41KF1+V1AR41UQ41/3.2
+.AR41UQ41UQ4.1-W1

-W1
RKC 4.4T-4-RSC 4.4T/S3060
4m

BN BU BK WH

-BGS/R
1 3
+ -
WELKER
SWITCH L3
A2 A1
2 4

Part Positioner
=V1AR41UQ41UQ4.1
+.AR41UQ41UQ4.1
-UQ4.1

=V1AR41UQ41
-UQ4.1-BGS/R
Part Positioner

=V1AR41UQ41KF1+V1AR41UQ41/3.3
+.AR41UQ41UQ4.2-W1

-W1
RKC 4.4T-4-RSC 4.4T/S3060
4m

BN BU BK WH

-BGS/R
1 3
+ -
WELKER
SWITCH L3
A2 A1
2 4

Part Positioner
=V1AR41UQ41UQ4.2
+.AR41UQ41UQ4.2
-UQ4.2

=V1AR41UQ41
-UQ4.2-BGS/R
Part Positioner

=V1AR41UQ41UQ3+.AR41UQ41UQ3/1

=V1AR41WC1+.AR41UC01/1

			Date	1/24/2023	Volvo Trucks North America		Valiant TMS	FESTO DQ CONNECTION QN4	Drawing name: =2V01&EFS-EL_KF1	= V1AR41UQ41UQ4
			Ed.	MKLEPADLO						+ V1AR41UQ41UQ4
			Appr		P6700 Framing - Cell 2V01, KF1				Document type: EFS	Project nr: 22-16152
Modification	Date	Name	Original		Replacement of	Replaced by	Scale 1:1			Page 1 / 1630

0	1	2	3	4	5	6	7	8	9

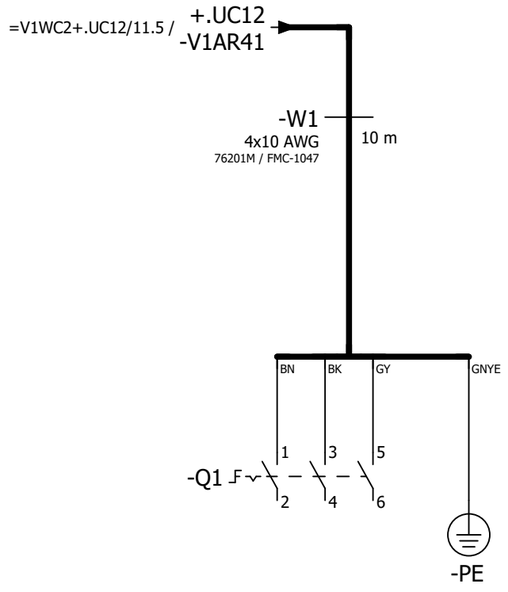

=V1AR41UQ41UQ4+.AR41UQ41UQ4/1

=V1AR41XQ11WC1+.AR41XQ11UC01/1

			Date	1/24/2023	Volvo Trucks North America		Valiant TMS	Incoming power	Drawing name: =2V01&EFS-EL_KF1	= V1AR41WC1
			Ed.	MKLEPADLO						+ V1AR41UC01
			Appr		P6700 Framing - Cell 2V01, KF1				Document type: EFS	Project nr: 22-16152
Modification	Date	Name	Original		Replacement of	Replaced by	Scale 1:1			Page 1 / 1630

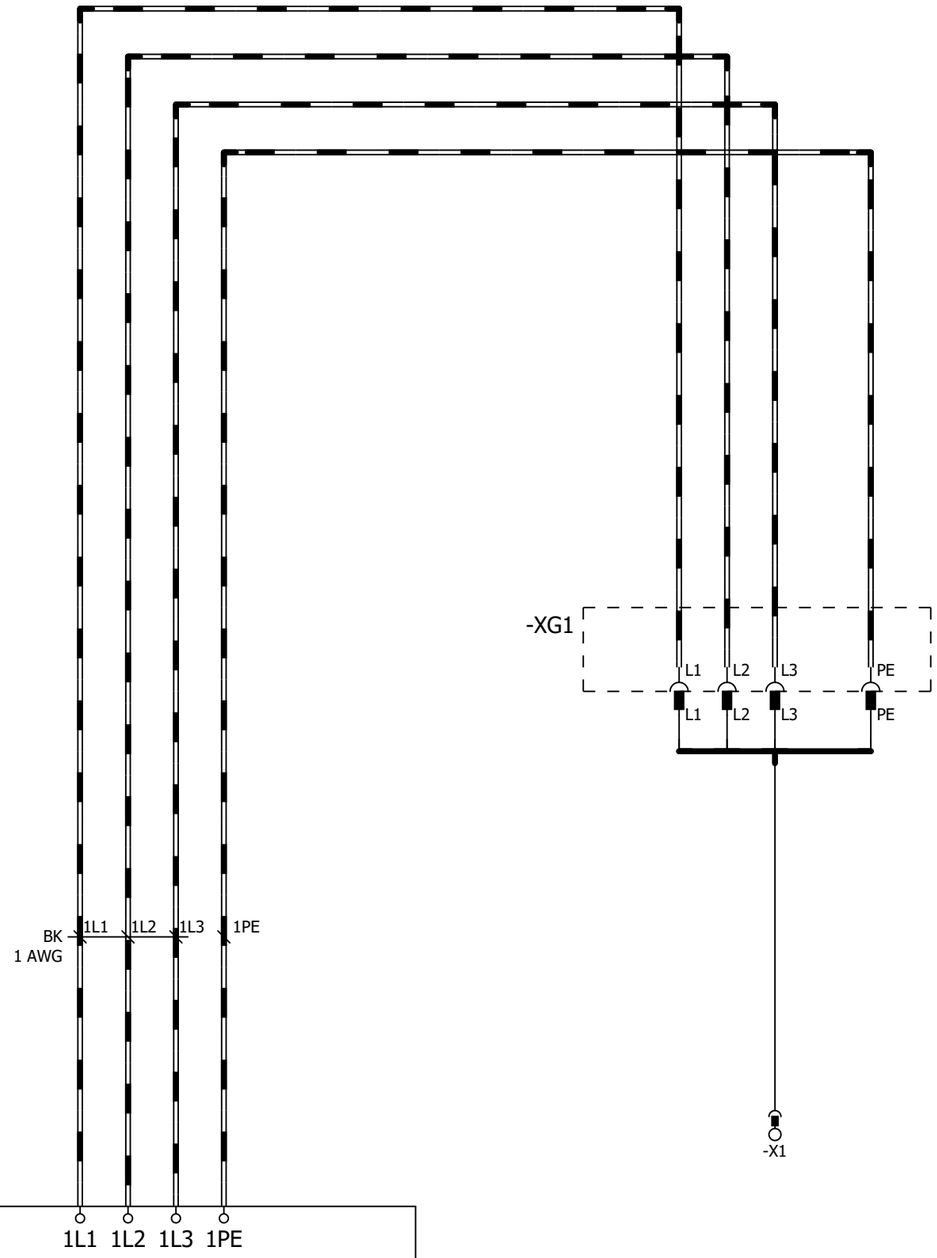

480VAC TN-S 3 PHASE 60Hz
Fed from: .....
short circuit protection: .....
Over current: .....
cable type: 1 AWG

IkMax =.....kA
IkMin = ...kA
Z: ..... mΩ.

=V1AR41WC1+.AR41UC01/1

=V1FQ1+.FQ1/1

			Date	1/24/2023	Volvo Trucks North America		Valiant TMS	Incoming power	Drawing name: =2V01&EFS-EL_KF1	= V1AR41XQ11WC1
			Ed.	MKLEPADLO						+ V1AR41XQ11UC01
			Appr		P6700 Framing - Cell 2V01, KF1				Document type: EFS	Project nr: 22-16152
Modification	Date	Name	Original		Replacement of	Replaced by	Scale 1:1			Page 1 / 1630

=V1KF1+V1UC11

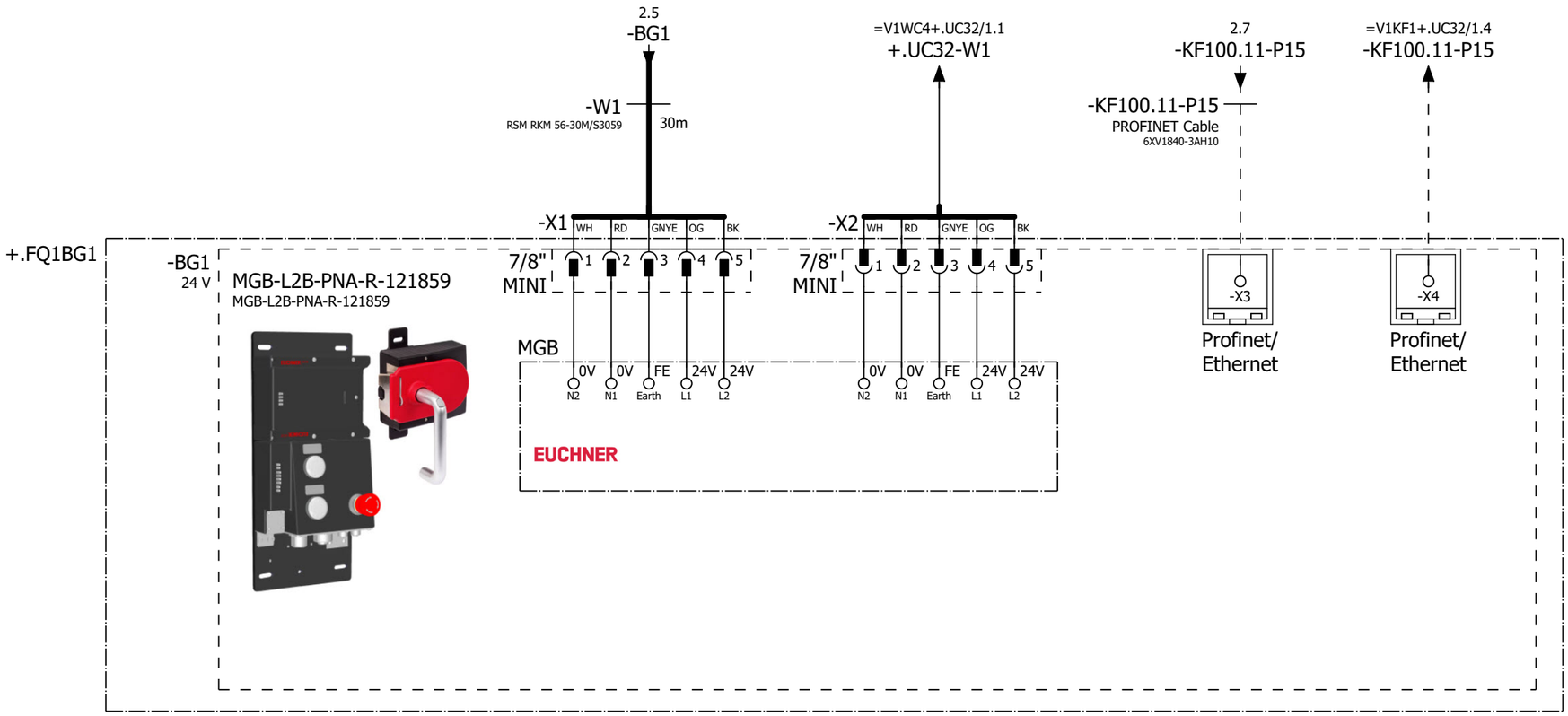

=V1AR41XQ11WC1+.AR41XQ11UC01/1

2

			Date	1/24/2023	Volvo Trucks North America	Valiant TMS	Door lock sensor -BG1	Drawing name: =2V01&EFS-EL_KF1	= V1FQ1
			Ed.	MKLEPADLO					+ V1FQ1
			Appr		P6700 Framing - Cell 2V01, KF1	Scale 1:1		Document type: EFS	Project nr: 22-16152
Modification	Date	Name	Original		Replacement of	Replaced by			Page 1 / 1630

=V1KF1+V1UC11

=V1WC4+.UC11/20.5
+.FQ1-BG2

=V1KF1+.UC11/2.6
-KF100.11-P15

-KF100.11-P15
PROFINET Cable
6XV1840-3AH10

1.3
-BG1

1.6
-KF100.11-P15

-W2
RSM RKM 56-12M/S3059
12m

+.FQ1BG2

-BG2
24 V
MGB-L2B-PNA-R-121859
MGB-L2B-PNA-R-121859

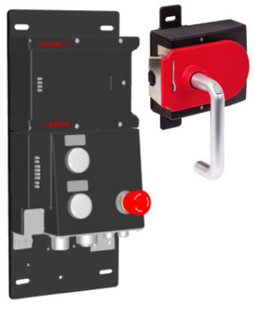

-X1 WH RD GNYE OG BK
7/8" MINI 1 2 3 4 5

-X2 WH RD GNYE OG BK
7/8" MINI 1 2 3 4 5

MGB
0V 0V FE 24V 24V
N2 N1 Earth L1 L2

EUCHNER

-X3
Profinet/
Ethernet

-X4
Profinet/
Ethernet

1 3

			Date	1/24/2023	Volvo Trucks North America	Valiant TMS	Door lock sensor -BG2	Drawing name: =2V01&EFS-EL_KF1	= V1FQ1
			Ed.	MKLEPADLO					+ V1FQ1
			Appr		P6700 Framing - Cell 2V01, KF1	Scale 1:1		Document type: EFS	Project nr: 22-16152
Modification	Date	Name	Original		Replacement of	Replaced by			Page 2 / 1630

0	1	2	3	4	5	6	7	8	9

=V1KF1+V1UC12

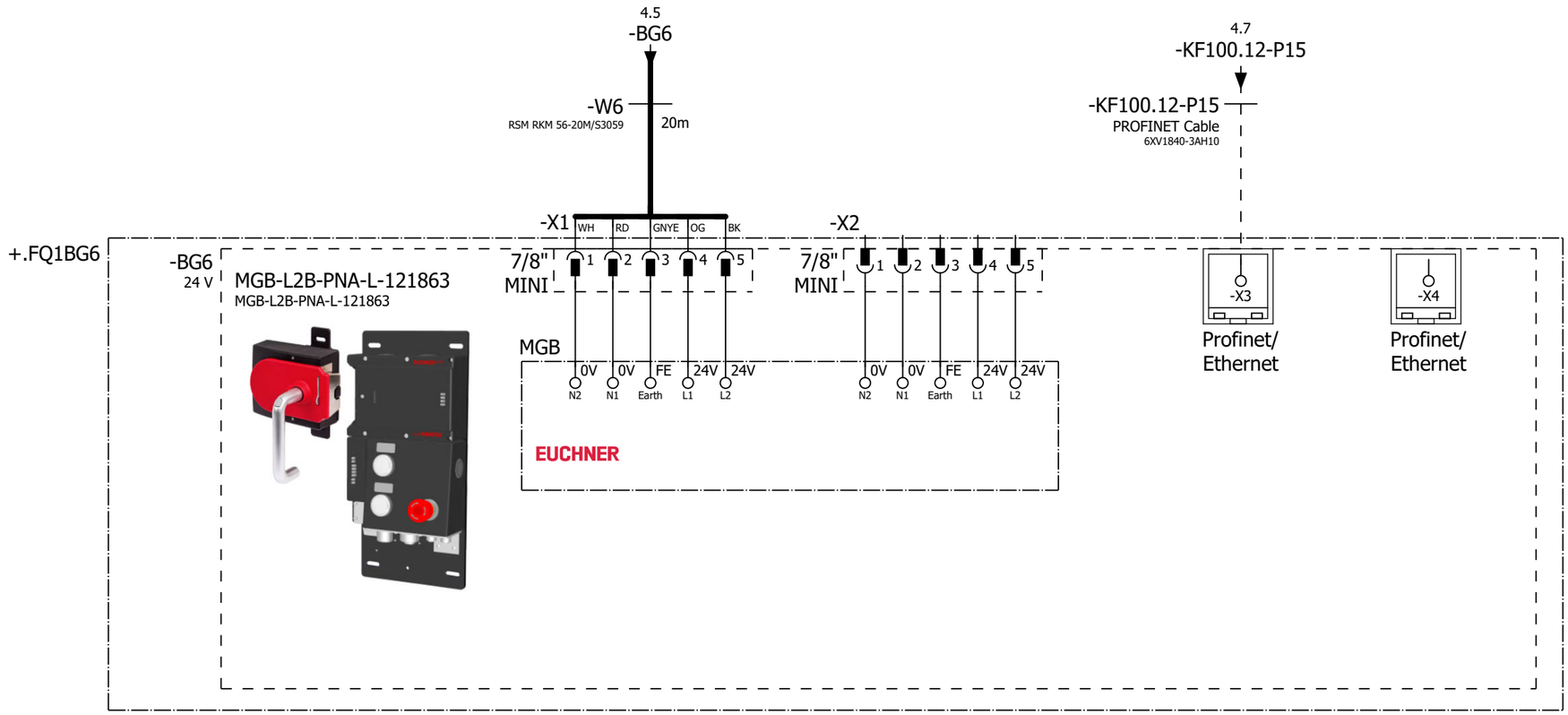

2 4

			Date	1/24/2023	Volvo Trucks North America	Valiant TMS	Door lock sensor -BG6	Drawing name: =2V01&EFS-EL_KF1	= V1FQ1
			Ed.	MKLEPADLO					+ V1FQ1
			Appr		P6700 Framing - Cell 2V01, KF1	Scale 1:1		Document type: EFS	Project nr: 22-16152
Modification	Date	Name	Original		Replacement of	Replaced by			Page 3 / 1630

=V1KF1+V1UC12

=V1WC4+.UC12/20.5
+.FQ1-BG7

=V1KF1+.UC12/2.6
-KF100.12-P15

-KF100.12-P15
PROFINET Cable
6XV1840-3AH10

-W4
RSM RKM 56-20M/S3059
20m

3.3
-BG6

3.6
-KF100.12-P15

+.FQ1BG7

-BG7
24 V

MGB-L2B-PNA-R-121859
MGB-L2B-PNA-R-121859

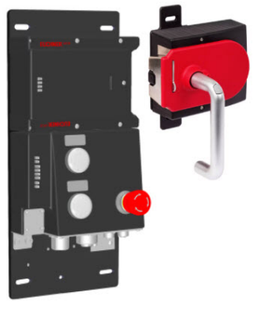

-X1 WH RD GNYE OG BK
7/8" MINI 1 2 3 4 5

-X2 WH RD GNYE OG BK
7/8" MINI 1 2 3 4 5

MGB
0V 0V FE 24V 24V
N2 N1 Earth L1 L2

EUCHNER

-X3
Profinet/
Ethernet

-X4
Profinet/
Ethernet

3

10

			Date	1/24/2023	Volvo Trucks North America	Valiant TMS	Door lock sensor -BG7	Drawing name: =2V01&EFS-EL_KF1	= V1FQ1	
			Ed.	MKLEPADLO					+ V1FQ1	
			Appr		P6700 Framing - Cell 2V01, KF1	Scale 1:1		Document type: EFS	Project nr: 22-16152	Page 4 / 1630
Modification	Date	Name	Original		Replacement of	Replaced by				

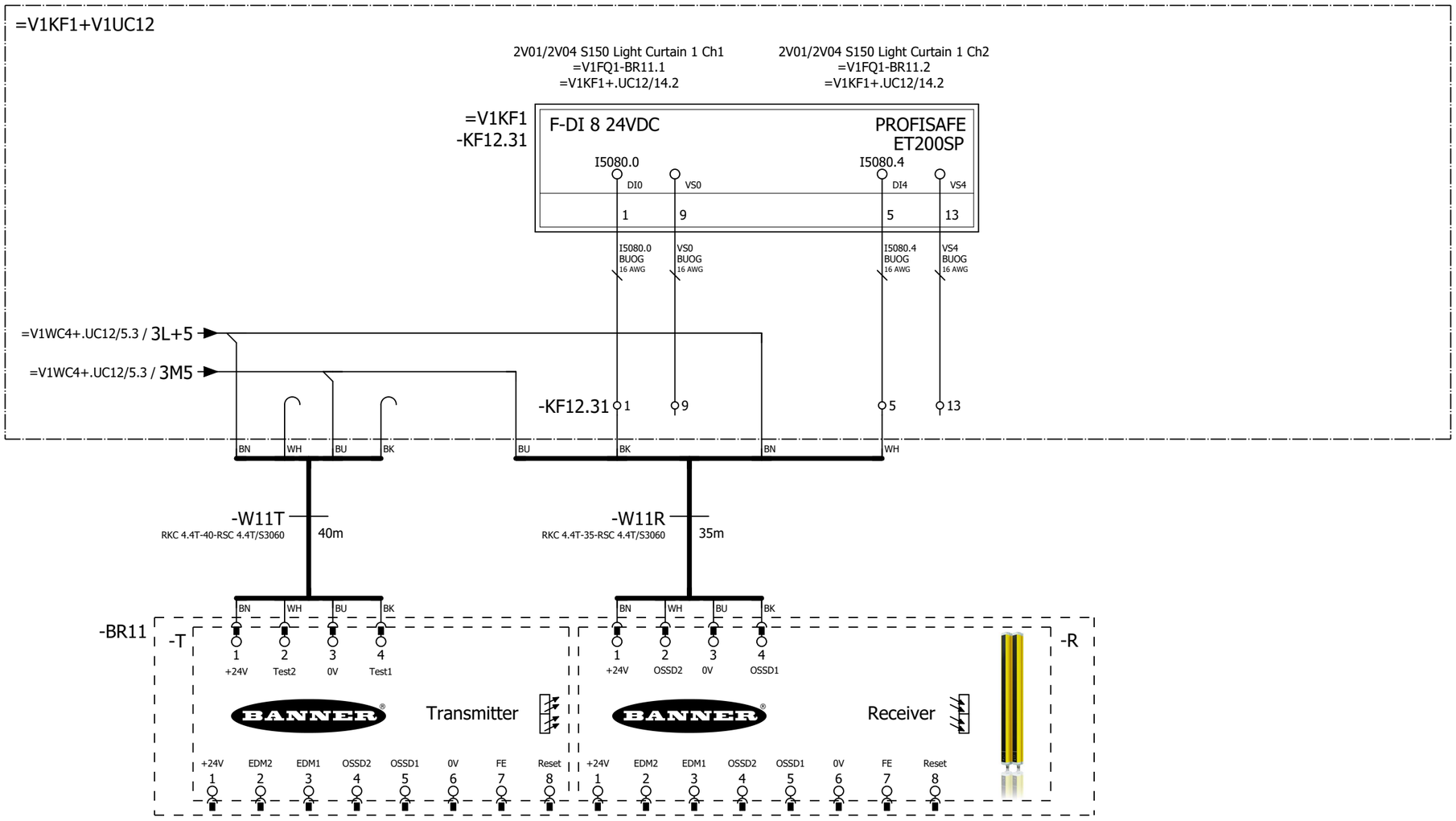

			Date	1/24/2023	Volvo Trucks North America	Valiant TMS	2V01/2V04 S150 Conveyor Light Curtain	Drawing name: =2V01&EFS-EL_KF1	= V1FQ1	
			Ed.	MKLEPADLO					+ V1FQ1	
			Appr		P6700 Framing - Cell 2V01, KF1	Scale 1:1		Document type: EFS	Project nr: 22-16152	Page 10 / 1630
Modification	Date	Name	Original		Replacement of	Replaced by				

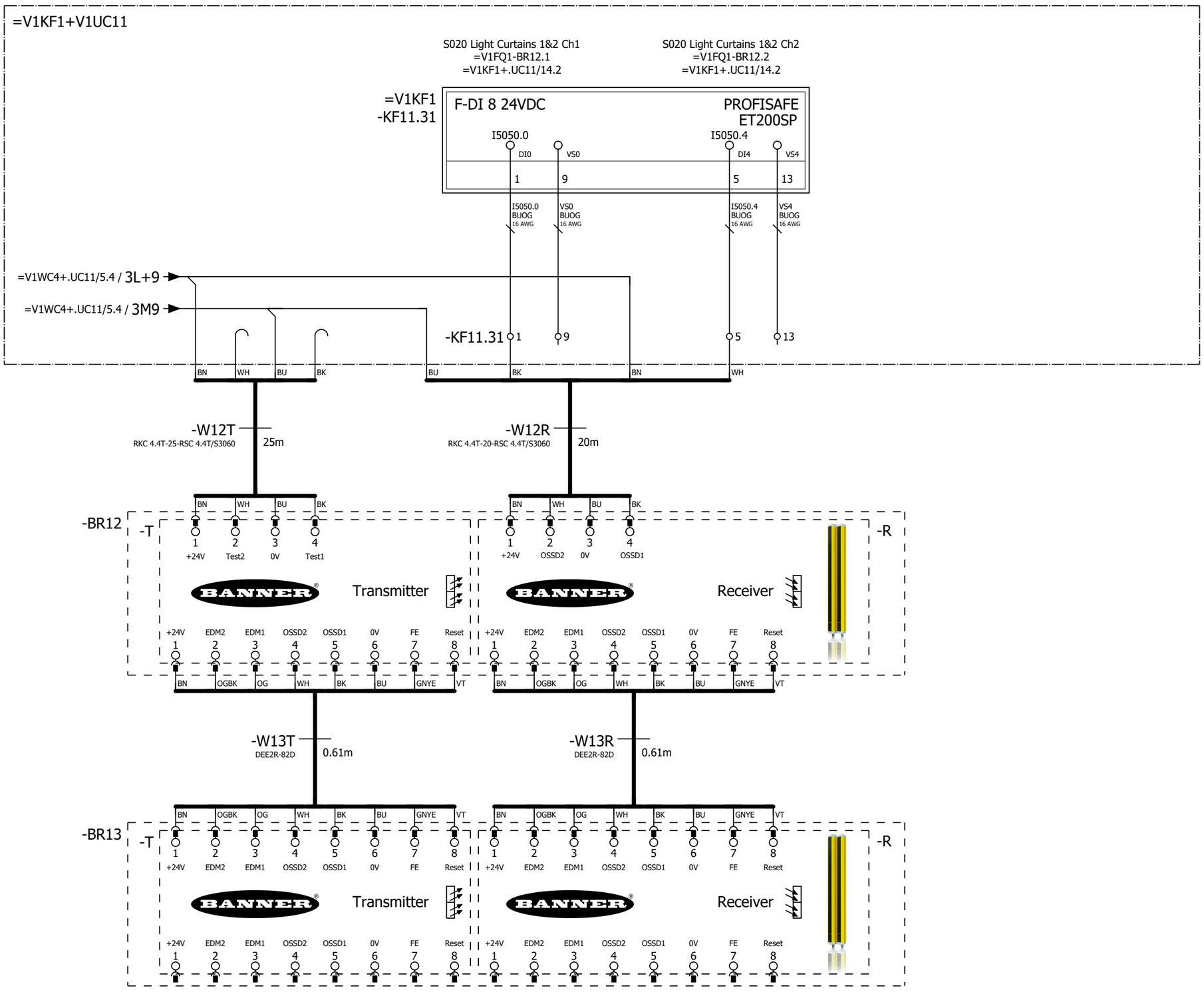

10 12

			Date	1/24/2023	Volvo Trucks North America	Valiant TMS	S020 Light Curtains 1&2	Drawing name: =2V01&EFS-EL_KF1	= V1FQ1
			Ed.	MKLEPADLO					+ V1FQ1
			Appr		P6700 Framing - Cell 2V01, KF1	Scale 1:1		Document type: EFS	Project nr: 22-16152
Modification	Date	Name	Original		Replacement of	Replaced by			Page 11 / 1630

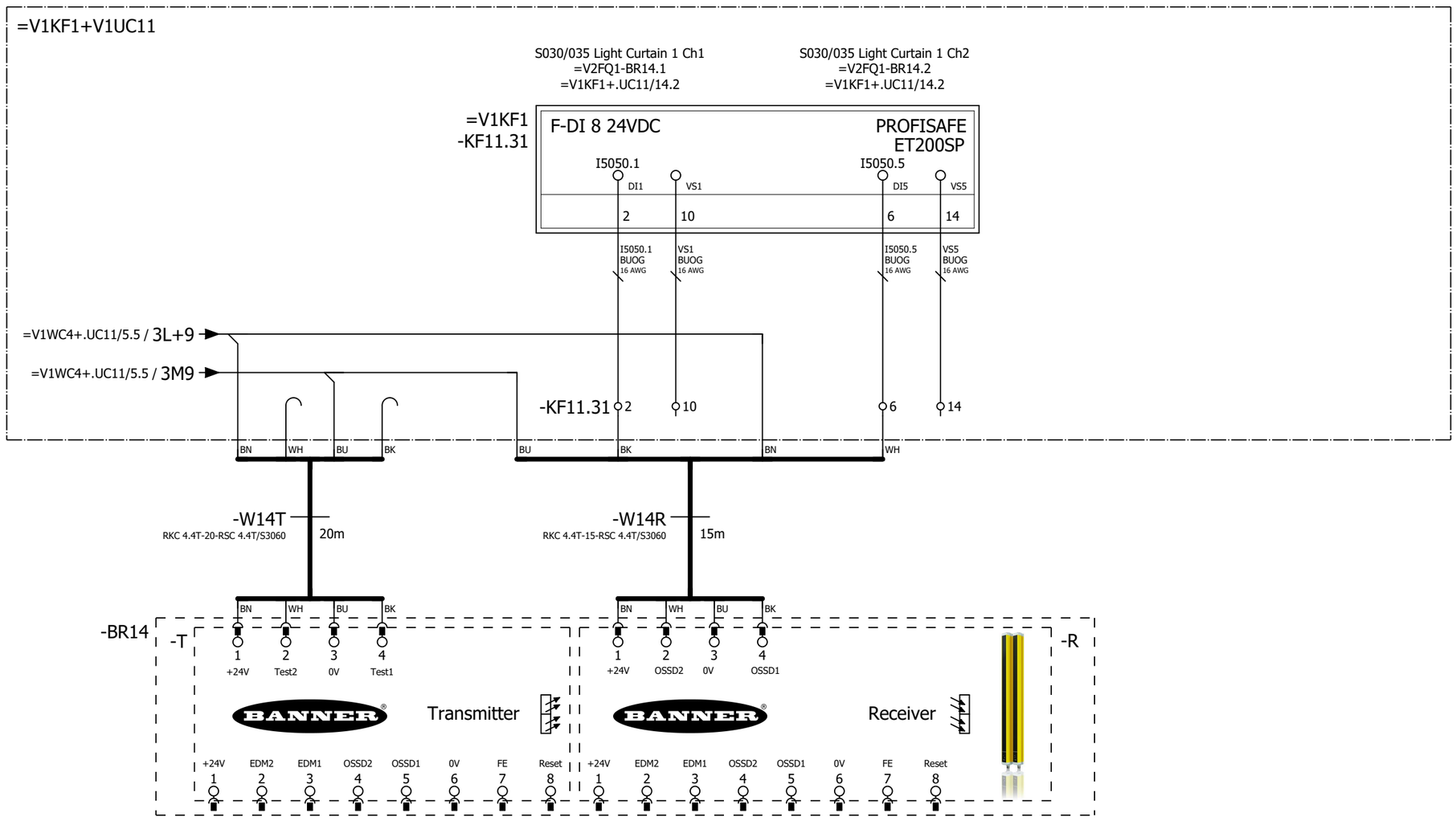

			Date	1/24/2023	Volvo Trucks North America	Valiant TMS	S030/035 Light Curtains 1	Drawing name: =2V01&EFS-EL_KF1	= V1FQ1	
			Ed.	MKLEPADLO					+ V1FQ1	
			Appr		P6700 Framing - Cell 2V01, KF1	Scale 1:1		Document type: EFS	Project nr: 22-16152	Page 12 / 1630
Modification	Date	Name	Original		Replacement of	Replaced by				

Switched Power 1 11.1L+
-KF11.51
=V1KF1/16.2

=V1KF1
-KF11.41

F 4DO 24 DC PROFISAFE
ET200SP

Q5062.0 QX.0
DQ-P0 DQ-M0
1 9

Q5062.0
BU
16 AWG

QX.0
BU
16 AWG

=V1KF1/18.2 Switched Power 1 11.1L+P
=V1KF1/18.2 SPARE
=V1KF1/18.2 Switched Power 1 11.1L+M
=V1KF1/18.2 SPARE

=V1KF1
-KF11.51
=V1KF1/18.1

F-RQ 1x24VDC/24..230VAC/5A PROFISAFE
ET200SP

9 IN P
10 OUT P
11 IN M
12 OUT M

Monitoring Safety contactors 11.1L+
-KF11.51RQ
=V1KF1/12.2

=V1KF1
-KF11.14

DI ET200SP
I56.0
DI0
1

=V1WC4/12.2 / -11.1L+1_2

+.FQ1/12

2

			Date	1/24/2023	Volvo Trucks North America		Valiant TMS	Safety power monitoring RQ - KF11.51	Drawing name: =2V01&EFS-EL_KF1	= V1FQ1
			Ed.	MKLEPADLO						+ V1UC11
			Appr		P6700 Framing - Cell 2V01, KF1		Scale 1:1		Document type: EFS	Project nr: 22-16152
Modification	Date	Name	Original		Replacement of	Replaced by				Page 1 / 1630

Switched Power 2 12.1L+
-KF11.52
=V1KF1/16.2

=V1KF1
-KF11.41

F 4DO 24 DC PROFISAFE
ET200SP

Q5062.1 QX.1

DQ-P1 DQ-M1

2 10

Q5062.1
BU
16 AWG

QX.1
BU
16 AWG

=V1KF1/19.2
Switched Power 2 12.1L+P

=V1KF1/19.2
SPARE

=V1KF1/19.2
Switched Power 2 12.1L+M

=V1KF1/19.2
SPARE

=V1KF1
-KF11.52
=V1KF1/19.1

F-RQ 1x24VDC/24..230VAC/5A PROFISAFE
ET200SP

9 IN P | 10 OUT P | 11 IN M | 12 OUT M

Monitoring Safety contactors 12.1L+
-KF11.52RQ
=V1KF1/12.2

=V1KF1
-KF11.14

DI ET200SP

I56.1
DI1

2

=V1WC4/13.2 / -12.1L+1_2

1 3

			Date	1/24/2023	Volvo Trucks North America	Valiant TMS	Safety power monitoring RQ - KF11.52	Drawing name: =2V01&EFS-EL_KF1	= V1FQ1	
			Ed.	MKLEPADLO					+ V1UC11	
			Appr		P6700 Framing - Cell 2V01, KF1	Scale 1:1		Document type: EFS	Project nr: 22-16152	Page 2 / 1630
Modification	Date	Name	Original		Replacement of	Replaced by				

Switched Power 3 13.1L+
-KF11.53
=V1KF1/16.2

=V1KF1/20.2
Switched Power 3 13.1L+P

=V1KF1/20.2
SPARE

=V1KF1/20.2
Switched Power 3 13.1L+M

=V1KF1/20.2
SPARE

Monitoring Safety contactors 13.1L+
-KF11.53RQ
=V1KF1/12.2

=V1KF1
-KF11.41

F 4DO 24 DC PROFISAFE
ET200SP

Q5062.2 QX.2

DQ-P2 DQ-M2

3 11

=V1KF1
-KF11.53
=V1KF1/20.1

F-RQ 1x24VDC/24..230VAC/5A PROFISAFE
ET200SP

9 IN P | 10 OUT P | 11 IN M | 12 OUT M

Q5062.2
BU
16 AWG

QX.2
BU
16 AWG

=V1KF1
-KF11.14

DI ET200SP

I56.2

DI2

3

=V1WC4/14.2 / -13.1L+1_2

			Date	1/24/2023	Volvo Trucks North America	Valiant TMS	Safety power monitoring RQ - KF11.53	Drawing name: =2V01&EFS-EL_KF1	= V1FQ1	
			Ed.	MKLEPADLO					+ V1UC11	
			Appr		P6700 Framing - Cell 2V01, KF1	Scale 1:1		Document type: EFS	Project nr: 22-16152	Page 3 / 1630
Modification	Date	Name	Original		Replacement of	Replaced by				

Switched Power 4 14.1L+
-KF11.54
=V1KF1/16.2

=V1KF1
-KF11.41

F 4DO 24 DC PROFISAFE
ET200SP

Q5062.3 QX.3

DQ-P3 DQ-M3

4 12

Q5062.3
BU
16 AWG

QX.3
BU
16 AWG

=V1KF1/21.2
Switched Power 4 14.1L+P

=V1KF1/21.2
SPARE

=V1KF1/21.2
Switched Power 4 14.1L+M

=V1KF1/21.2
SPARE

=V1KF1
-KF11.54
=V1KF1/21.1

F-RQ 1x24VDC/24..230VAC/5A PROFISAFE
ET200SP

9 IN P | 10 OUT P | 11 IN M | 12 OUT M

Monitoring Safety contactors 14.1L+
-KF11.54RQ
=V1KF1/12.2

=V1KF1
-KF11.14

DI ET200SP

I56.3

DI3

4

=V1WC4/15.2 / -14.1L+1_2

			Date	1/24/2023	Volvo Trucks North America	Valiant TMS	Safety power monitoring RQ - KF11.54	Drawing name: =2V01&EFS-EL_KF1	= V1FQ1	
			Ed.	MKLEPADLO					+ V1UC11	
			Appr		P6700 Framing - Cell 2V01, KF1	Scale 1:1		Document type: EFS	Project nr: 22-16152	Page 4 / 1630
Modification	Date	Name	Original		Replacement of / Replaced by					

Switched Power 1 11.1L+
-KF12.51
=V1KF1/16.2

=V1KF1
-KF12.41

F 4DO 24 DC PROFISAFE
ET200SP

Q5092.0 QX.0
DQ-P0 DQ-M0
1 9

Q5092.0
BU
16 AWG

QX.0
BU
16 AWG

=V1KF1/18.2 Switched Power 1 11.1L+P
=V1KF1/18.2 SPARE
=V1KF1/18.2 Switched Power 1 11.1L+M
=V1KF1/18.2 SPARE

=V1KF1
-KF12.51
=V1KF1/18.1

F-RQ 1x24VDC/24..230VAC/5A PROFISAFE
ET200SP

9 IN P
10 OUT P
11 IN M
12 OUT M

Monitoring Safety contactors 11.1L+
-KF12.51RQ
=V1KF1/12.2

=V1KF1
-KF12.14

DI ET200SP
I86.0
DI0
1

=V1WC4/12.2 / -11.1L+1_2

+.UC11/4

			Date	1/24/2023	Volvo Trucks North America	Valiant TMS	Safety power monitoring RQ - KF12.51	Drawing name: =2V01&EFS-EL_KF1	= V1FQ1
			Ed.	MKLEPADLO					+ V1UC12
			Appr		P6700 Framing - Cell 2V01, KF1	Scale 1:1		Document type: EFS	Project nr: 22-16152
Modification	Date	Name	Original		Replacement of	Replaced by			Page 1 / 1630

Switched Power 2 12.1L+
-KF12.52
=V1KF1/16.2

=V1KF1
-KF12.41

F 4DO 24 DC PROFISAFE
ET200SP

Q5092.1 QX.1

DQ-P1 DQ-M1

2 10

Q5092.1
BU
16 AWG

QX.1
BU
16 AWG

=V1KF1/19.2
Switched Power 2 12.1L+P

=V1KF1/19.2
SPARE

=V1KF1/19.2
Switched Power 2 12.1L+M

=V1KF1/19.2
SPARE

=V1KF1
-KF12.52
=V1KF1/19.1

F-RQ 1x24VDC/24..230VAC/5A PROFISAFE
ET200SP

9 IN P
10 OUT P
11 IN M
12 OUT M

Monitoring Safety contactors 12.1L+
-KF12.52RQ
=V1KF1/12.2

=V1KF1
-KF12.14

DI ET200SP

I86.1
DI1

2

=V1WC4/13.2 / -12.1L+1_2

			Date	1/24/2023	Volvo Trucks North America	Valiant TMS	Safety power monitoring RQ - KF12.52	Drawing name: =2V01&EFS-EL_KF1	= V1FQ1	
			Ed.	MKLEPADLO					+ V1UC12	
			Appr		P6700 Framing - Cell 2V01, KF1			Document type: EFS	Project nr: 22-16152	Page 2
Modification	Date	Name	Original		Replacement of / Replaced by	Scale 1:1				1630

Switched Power 3 13.1L+
-KF12.53
=V1KF1/16.2

=V1KF1
-KF12.41

F 4DO 24 DC PROFISAFE
ET200SP

Q5092.2 QX.2

DQ-P2 DQ-M2

3 11

Q5092.2
BU
16 AWG

QX.2
BU
16 AWG

=V1KF1/20.2
Switched Power 3 13.1L+P

=V1KF1/20.2
SPARE

=V1KF1/20.2
Switched Power 3 13.1L+M

=V1KF1/20.2
SPARE

=V1KF1
-KF12.53
=V1KF1/20.1

F-RQ 1x24VDC/24..230VAC/5A PROFISAFE
ET200SP

9 IN P | 10 OUT P | 11 IN M | 12 OUT M

Monitoring Safety contactors 13.1L+
-KF12.53RQ
=V1KF1/12.2

=V1KF1
-KF12.14

DI ET200SP

I86.2
DI2

3

=V1WC4/14.2 / -13.1L+1_2

2 4

			Date	1/24/2023	Volvo Trucks North America	Valiant TMS	Safety power monitoring RQ - KF12.53	Drawing name: =2V01&EFS-EL_KF1	= V1FQ1	
			Ed.	MKLEPADLO					+ V1UC12	
			Appr		P6700 Framing - Cell 2V01, KF1			Document type: EFS	Project nr: 22-16152	Page 3
Modification	Date	Name	Original		Replacement of / Replaced by	Scale 1:1				1630

Switched Power 4 14.1L+
-KF12.54
=V1KF1/16.2

=V1KF1
-KF12.41

F 4DO 24 DC PROFISAFE
ET200SP

Q5092.3 QX.3

DQ-P3 DQ-M3

4 12

Q5092.3
BU
16 AWG

QX.3
BU
16 AWG

=V1KF1/21.2
Switched Power 4 14.1L+P

=V1KF1/21.2
SPARE

=V1KF1/21.2
Switched Power 4 14.1L+M

=V1KF1/21.2
SPARE

=V1KF1
-KF12.54
=V1KF1/21.1

F-RQ 1x24VDC/24..230VAC/5A PROFISAFE
ET200SP

9 IN P
10 OUT P
11 IN M
12 OUT M

Monitoring Safety contactors 14.1L+
-KF12.54RQ
=V1KF1/12.2

=V1KF1
-KF12.14

DI ET200SP

I86.3
DI3

4

=V1WC4/15.2 / -14.1L+1_2

3

=V1GL13KF2+.GL13KF2/1

			Date	1/24/2023	Volvo Trucks North America	Valiant TMS	Safety power monitoring RQ - KF12.54	Drawing name: =2V01&EFS-EL_KF1	= V1FQ1	
			Ed.	MKLEPADLO					+ V1UC12	
			Appr		P6700 Framing - Cell 2V01, KF1	Scale 1:1		Document type: EFS	Project nr: 22-16152	Page 4 / 1630
Modification	Date	Name	Original		Replacement of / Replaced by					

0	1	2	3	4	5	6	7	8	9

-BZ02

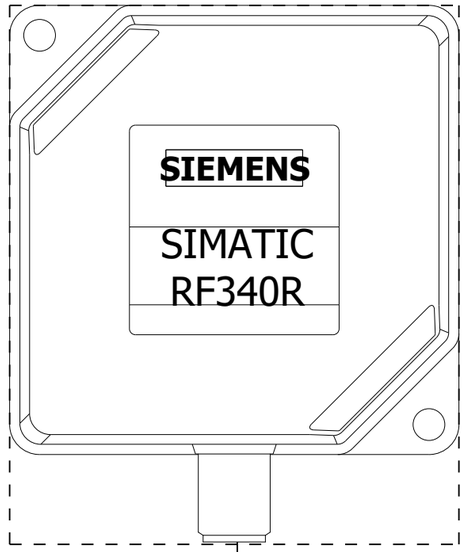

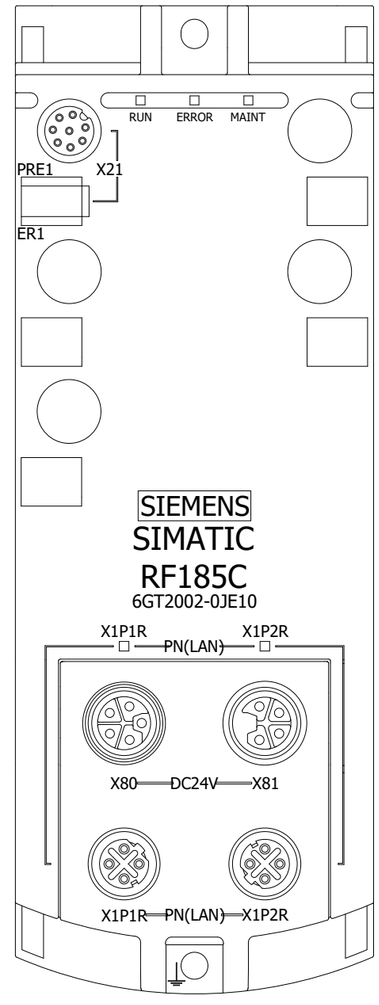

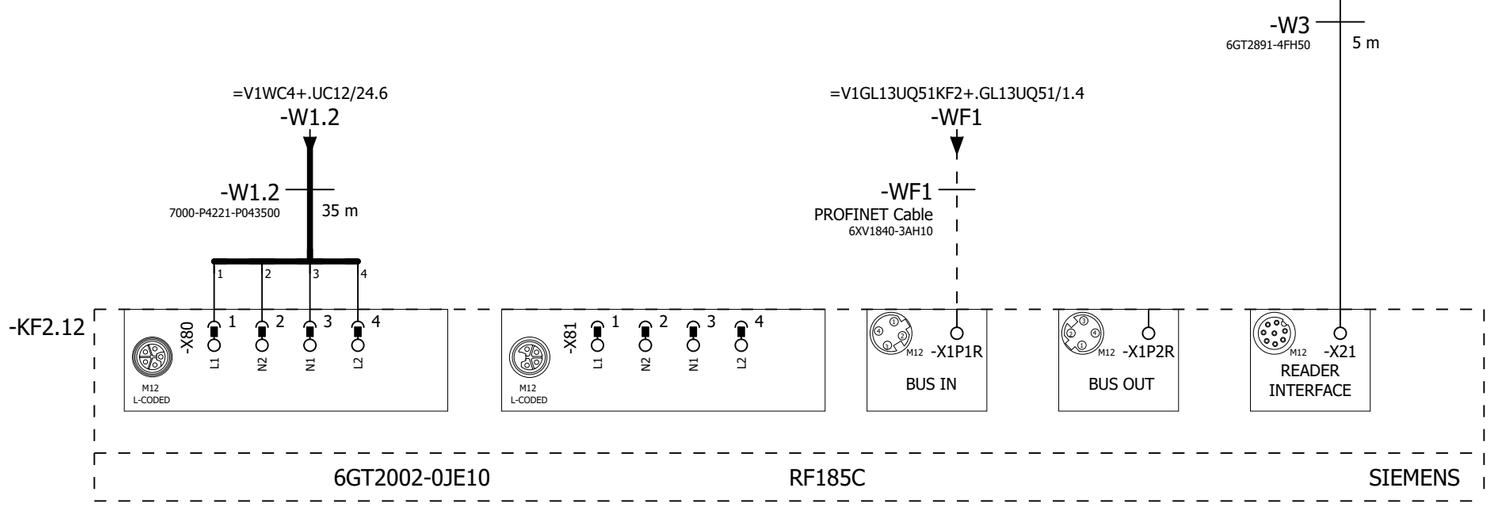

=V1FQ1+.UC12/4

10

			Date	1/24/2023	Volvo Trucks North America	Valiant TMS	RFID Communication Module	Drawing name: =2V01&EFS-EL_KF1	= V1GL13KF2
			Ed.	MKLEPADLO					+ V1GL13KF2
			Appr		P6700 Framing - Cell 2V01, KF1	Scale 1:1		Document type: EFS	Project nr: 22-16152
Modification	Date	Name	Original		Replacement of	Replaced by			Page 1 / 1630

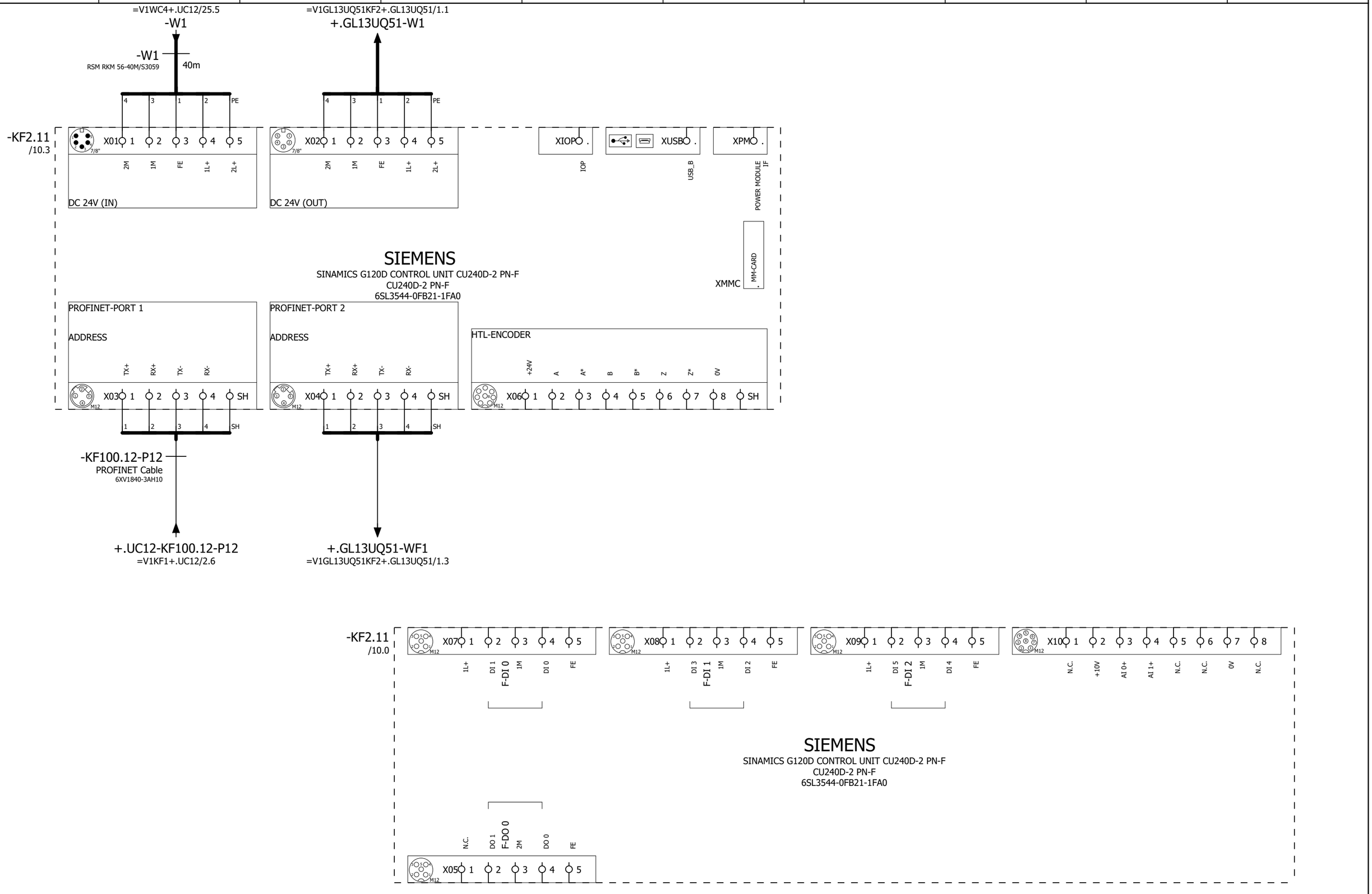

1

=V1GL13UQ51BG0+.GL13UQ51/1

			Date	1/24/2023	Volvo Trucks North America	Valiant TMS	G120D Control Unit	Drawing name: =2V01&EFS-EL_KF1	= V1GL13KF2
			Ed.	MKLEPADLO	P6700 Framing - Cell 2V01, KF1				+ V1GL13KF2
			Appr					Document type: EFS	Project nr: 22-16152
Modification	Date	Name	Original		Replacement of / Replaced by	Scale 1:1			Page 10 / 1630

0	1	2	3	4	5	6	7	8	9

=V1GL13UQ51KF2/2.1
-BG10

-W6
RKC 4.4T-XX-RSC 4.4T/S3060
XXm

BN BU BK WH

-BG10
Sn = 8 mm
TURCK
1644741
pnp

=V1GL13UQ51
-BG10
Pallet Present at
Pre-Unload Sta #5

=V1GL13UQ51KF2/2.2
-XG11/13

-W7
RKC 4.4T-XX-RSC 4.4T/S3060
XXm

-XG11/13 P1 VB2-FSM 4.4/2FKM 4/S3450
TURCK
J1
J2

-W7.1
RKC 4.4T-XX-RSC 4.4T/S3060
XXm

-W7.2
RKC 4.4T-XX-RSC 4.4T/S3060
XXm

-BG11
Sn = 8 mm
TURCK
1644741
pnp

-BG13
Sn = 1000 mm
BANNER
71959
pnp

=V1GL13UQ51
-BG11
Pallet Present at
Unload Sta #6

=V1GL13UQ51
-BG13
Part Present
At Unload

=V1GL13UQ51KF2/2.3
-XG14/18

-W8
RKC 4.4T-XX-RSC 4.4T/S3060
XXm

-XG14/18 P1 VB2-FSM 4.4/2FKM 4/S3450
TURCK
J1
J2

-W8.1
RKC 4.4T-XX-RSC 4.4T/S3060
XXm

-W8.2
RKC 4.4T-XX-RSC 4.4T/S3060
XXm

-BG14
Sn = 8 mm
TURCK
1644741
pnp

-BG18
Sn = 8 mm
TURCK
1644741
pnp

=V1GL13UQ51
-BG14
Pallet Clear Of
Unload

=V1GL13UQ51
-BG18
Drive Overtorque
Sensor

=V1GL13KF2+.GL13KF2/10

2

			Date	1/24/2023	Volvo Trucks North America		Valiant TMS	SENSORS	Drawing name: =2V01&EFS-EL_KF1	= V1GL13UQ51BG0
			Ed.	MKLEPADLO						+ V1GL13UQ51
			Appr		P6700 Framing - Cell 2V01, KF1		Scale 1:1		Document type: EFS	Project nr: 22-16152
Modification	Date	Name	Original		Replacement of	Replaced by				Page 1 / 1630

0	1	2	3	4	5	6	7	8	9

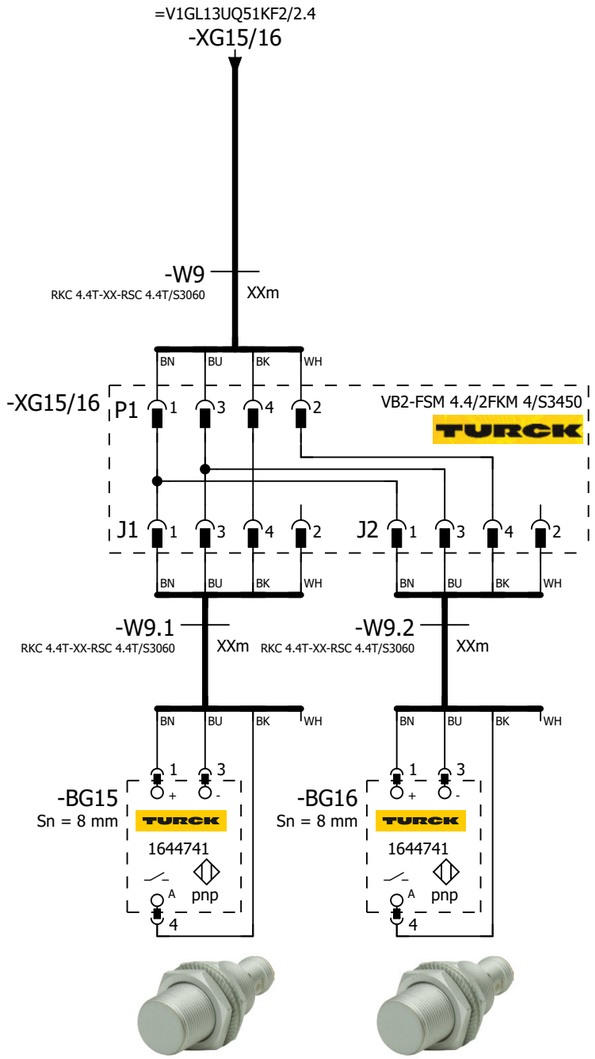

=V1GL13UQ51
-BG15
Pallet Present at
Mid-Stop#4 Sta#7

=V1GL13UQ51
-BG16
Pallet Clear Of
Mid-Stop #4

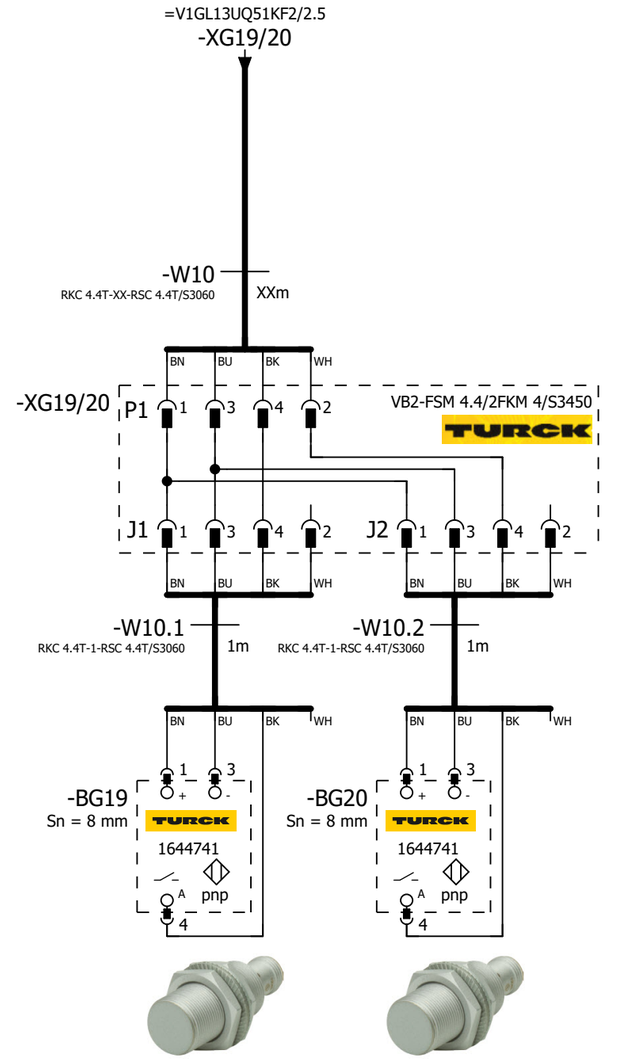

=V1GL13UQ51
-BG19
Chain Tension
Alert On Take-up

=V1GL13UQ51
-BG20
Broken Chain
Alert On Take-up

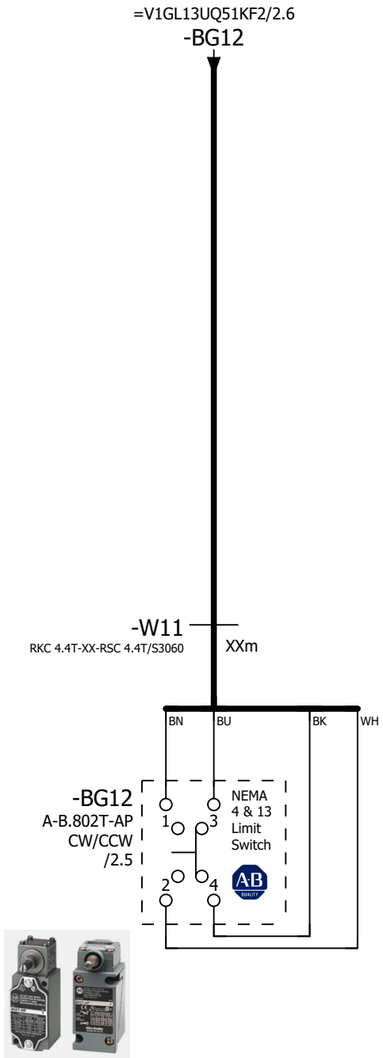

=V1GL13UQ51
-BG12
Part Overtravel

1

=V1GL13UQ51KF2/1

			Date	1/24/2023	Volvo Trucks North America	Valiant TMS	SENSORS	Drawing name: =2V01&EFS-EL_KF1	= V1GL13UQ51BG0
			Ed.	MKLEPADLO					+ V1GL13UQ51
			Appr		P6700 Framing - Cell 2V01, KF1			Document type: EFS	Project nr: 22-16152
Modification	Date	Name	Original		Replacement of / Replaced by	Scale 1:1			Page 2 / 1630

0	1	2	3	4	5	6	7	8	9

=V1GL13KF2+.GL13KF2/10.2 / W1

-W1
RSM RKM 56-5M/S3059
5m

=V1GL13KF2+.GL13KF2/10.2 / -WF1

-WF1
PROFINET Cable
6XV1840-3AH10

+.GL13KF2-WF1 / =V1GL13KF2+.GL13KF2/1.4

-KF2

X20 M12, 7/8" 1 2 PE 4 5
0V_VAL / OUT
0V_EL / SEN
FE
24V_EL / SEN
24V_VAL / OUT

ON
OFF
1 2 1 2

-TP1 M12
-TP2 M12

FESTO
Bus node + Interlinking block
548755 + 550208

I2200.0	DI 0 X1:4	V1GL13UQ51UQ5.1-BGR	Pallet Stop Station #5 Pre-Unload (RESET)
I2200.1	DI 1 X1:2	V1GL13UQ51UQ5.1-BGS	Pallet Stop Station #5 Pre-Unload (SET)
I2200.2	DI 2 X2:4	V1GL13UQ51UQ6.1-BGR	Pallet Stop Station #6 Unload (RESET)
I2200.3	DI 3 X2:2	V1GL13UQ51UQ6.1-BGS	Pallet Stop Station #6 Unload (SET)
I2200.4	DI 4 X3:4	V1GL13UQ51UQ7.1-BGR	Pallet Stop Station #6 Mid-Stop #4 (RESET)
I2200.5	DI 5 X3:2	V1GL13UQ51UQ7.1-BGS	Pallet Stop Station #7 Mid-Stop #4 (SET)
I2200.6	DI 6 X4:4	I2200.6	SPARE
I2200.7	DI 7 X4:2	I2200.7	SPARE
I2201.0	DI 8 X5:4	I2201.0	SPARE
I2201.1	DI 9 X5:2	I2201.1	SPARE
I2201.2	DI 10 X6:4	I2201.2	SPARE
I2201.3	DI 11 X6:2	I2201.3	SPARE
I2201.4	DI 12 X7:4	I2201.4	SPARE
I2201.5	DI 13 X7:2	I2201.5	SPARE
I2201.6	DI 14 X8:4	I2201.6	SPARE
I2201.7	DI 15 X8:2	I2201.7	SPARE

-KF2.11

FESTO
CPX-M-AB-8-M12X2-5POL
549335

X1 M12: 24V 1 | DI 1 2 | 0V 3 | DI 0 4 | FE 5 — BN WH BU BK
X2 M12: 24V 1 | DI 3 2 | 0V 3 | DI 2 4 | FE 5 — BN WH BU BK
X3 M12: 24V 1 | DI 5 2 | 0V 3 | DI 4 4 | FE 5 — BN WH BU BK
X4 M12: 24V 1 | DI 7 2 | 0V 3 | DI 6 4 | FE 5
X5 M12: 24V 1 | DI 9 2 | 0V 3 | DI 8 4 | FE 5
X6 M12: 24V 1 | DI 11 2 | 0V 3 | DI 10 4 | FE 5
X7 M12: 24V 1 | DI 13 2 | 0V 3 | DI 12 4 | FE 5
X8 M12: 24V 1 | DI 15 2 | 0V 3 | DI 14 4 | FE 5

+.GL13UQ51UQ5.1-W1
=V1GL13UQ51UQ5+.GL13UQ51UQ5/1.1

+.GL13UQ51UQ6.1-W1
=V1GL13UQ51UQ6+.GL13UQ51UQ6/1.1

+.GL13UQ51UQ7.1-W1
=V1GL13UQ51UQ7+.GL13UQ51UQ7/1.1

=V1GL13UQ51BG0/2

			Date	1/24/2023	Volvo Trucks North America	Valiant TMS	CONNECTING MOD. FOR VTSA MANIFOLD	Drawing name: =2V01&EFS-EL_KF1	= V1GL13UQ51KF2
			Ed.	MKLEPADLO					+ V1GL13UQ51
			Appr		P6700 Framing - Cell 2V01, KF1			Document type: EFS	Project nr: 22-16152
Modification	Date	Name	Original		Replacement of	Replaced by	Scale 1:1		Page 1 / 1630

0	1	2	3	4	5	6	7	8	9

-KF2.12

FESTO

CPX-M-AB-8-M12X2-5POL
549335

I2202.0	DI 0 X1:4	V1GL13UQ51-BG10	Sensor Pallet Present at Pre-Unload Sta #5
I2202.1	DI 1 X1:2	I2202.1	SPARE
I2202.2	DI 2 X2:4	V1GL13UQ51-BG11	Sensor Pallet Present at Unload Sta #6
I2202.3	DI 3 X2:2	V1GL13UQ51-BG13	Sensor Part Present At Unload
I2202.4	DI 4 X3:4	V1GL13UQ51-BG14	Sensor Pallet Clear Of Unload
I2202.5	DI 5 X3:2	V1GL13UQ51-BG18	Sensor Drive Overtorque Sensor
I2202.6	DI 6 X4:4	V1GL13UQ51-BG15	Sensor Pallet Present at Mid-Stop #4 Sta #7
I2202.7	DI 7 X4:2	V1GL13UQ51-BG16	Sensor Pallet Clear Of Mid-Stop #4
I2203.0	DI 8 X5:4	V1GL13UQ51-BG19	Sensor Chain Tension Alert On Take-up
I2203.1	DI 9 X5:2	V1GL13UQ51-BG20	Sensor Broken Chain Alert On Take-up
I2203.2	DI 10 X6:4	V1GL13UQ51-BG12	Part Overtravel N.O.
I2203.3	DI 11 X6:2	V1GL13UQ51-BG12	Part Overtravel N.C.
I2203.4	DI 12 X7:4	I2203.4	SPARE
I2203.5	DI 13 X7:2	I2203.5	SPARE
I2203.6	DI 14 X8:4	I2203.6	SPARE
I2203.7	DI 15 X8:2	I2203.7	SPARE

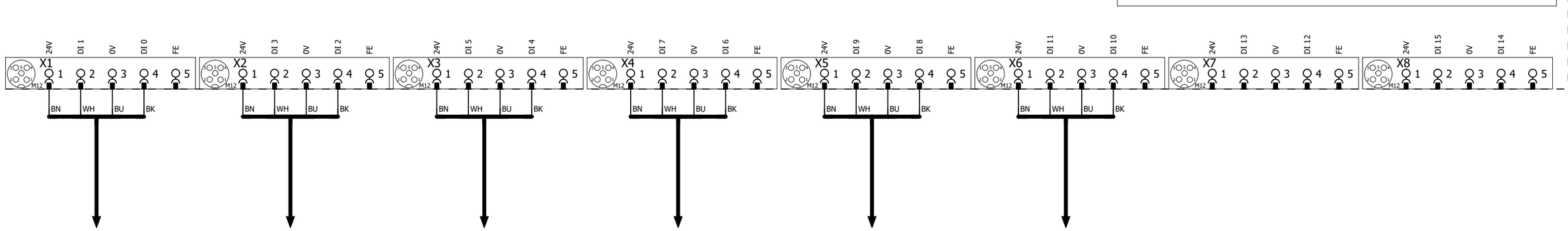

-BG10
=V1GL13UQ51BG0/1.1

-XG11/13
=V1GL13UQ51BG0/1.4

-XG14/18
=V1GL13UQ51BG0/1.6

-XG15/16
=V1GL13UQ51BG0/2.1

-XG19/20
=V1GL13UQ51BG0/2.4

-BG12
=V1GL13UQ51BG0/2.6

1 3

			Date	1/24/2023	Volvo Trucks North America	Valiant TMS	I/O MOD. DI16 (8 x M12) FOR VTSA-F	Drawing name: =2V01&EFS-EL_KF1	= V1GL13UQ51KF2
			Ed.	MKLEPADLO					+ V1GL13UQ51
			Appr		P6700 Framing - Cell 2V01, KF1	Scale 1:1		Document type: EFS	Project nr: 22-16152
Modification	Date	Name	Original		Replacement of	Replaced by			Page 2 / 1630

0	1	2	3	4	5	6	7	8	9

-KF2.13

FESTO

CPX-M-AB-8-M12X2-5POL

549335

I2204.0	DI 0 X1:4	I2204.0	SPARE
I2204.1	DI 1 X1:2	I2204.1	SPARE
I2204.2	DI 2 X2:4	I2204.2	SPARE
I2204.3	DI 3 X2:2	I2204.3	SPARE
I2204.4	DI 4 X3:4	I2204.4	SPARE
I2204.5	DI 5 X3:2	I2204.5	SPARE
I2204.6	DI 6 X4:4	I2204.6	SPARE
I2204.7	DI 7 X4:2	I2204.7	SPARE
I2205.0	DI 8 X5:4	I2205.0	SPARE
I2205.1	DI 9 X5:2	I2205.1	SPARE
I2205.2	DI 10 X6:4	I2205.2	SPARE
I2205.3	DI 11 X6:2	I2205.3	SPARE
I2205.4	DI 12 X7:4	I2205.4	SPARE
I2205.5	DI 13 X7:2	I2205.5	SPARE
I2205.6	DI 14 X8:4	I2205.6	SPARE
I2205.7	DI 15 X8:2	I2205.7	SPARE

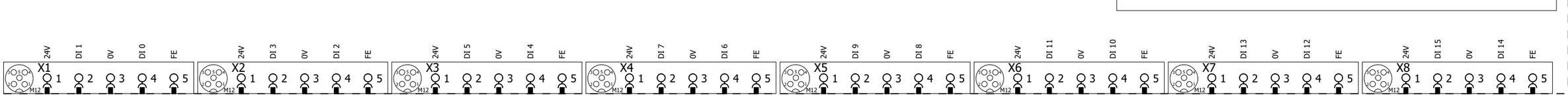

2 4

			Date	1/24/2023	Volvo Trucks North America	Valiant TMS	I/O MOD. DI16 (8 x M12) FOR VTSA-F	Drawing name: =2V01&EFS-EL_KF1	= V1GL13UQ51KF2	
			Ed.	MKLEPADLO					+ V1GL13UQ51	
			Appr		P6700 Framing - Cell 2V01, KF1	Scale 1:1		Document type: EFS	Project nr: 22-16152	Page 3
Modification	Date	Name	Original		Replacement of	Replaced by				1630

0	1	2	3	4	5	6	7	8	9

-KF2.14

FESTO

CPX-M-AB-8-M12X2-5POL

549335

I2206.0	DI 0 X1:4	I2206.0	SPARE
I2206.1	DI 1 X1:2	I2206.1	SPARE
I2206.2	DI 2 X2:4	I2206.2	SPARE
I2206.3	DI 3 X2:2	I2206.3	SPARE
I2206.4	DI 4 X3:4	I2206.4	SPARE
I2206.5	DI 5 X3:2	I2206.5	SPARE
I2206.6	DI 6 X4:4	I2206.6	SPARE
I2206.7	DI 7 X4:2	I2206.7	SPARE
I2207.0	DI 8 X5:4	I2207.0	SPARE
I2207.1	DI 9 X5:2	I2207.1	SPARE
I2207.2	DI 10 X6:4	I2207.2	SPARE
I2207.3	DI 11 X6:2	I2207.3	SPARE
I2207.4	DI 12 X7:4	I2207.4	SPARE
I2207.5	DI 13 X7:2	I2207.5	SPARE
I2207.6	DI 14 X8:4	I2207.6	SPARE
I2207.7	DI 15 X8:2	I2207.7	SPARE

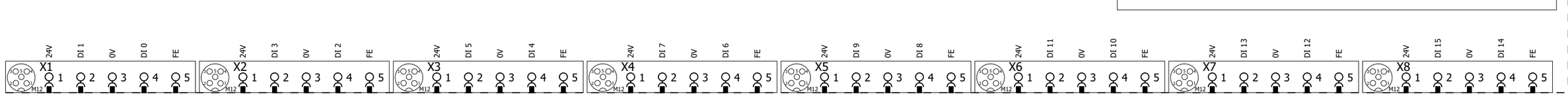

3 5

			Date	1/24/2023	Volvo Trucks North America	Valiant TMS	I/O MOD. DI16 (8 x M12) FOR VTSA-F	Drawing name: =2V01&EFS-EL_KF1	= V1GL13UQ51KF2
			Ed.	MKLEPADLO					+ V1GL13UQ51
			Appr		P6700 Framing - Cell 2V01, KF1			Document type: EFS	Project nr: 22-16152
Modification	Date	Name	Original		Replacement of / Replaced by	Scale 1:1			Page 4 / 1630

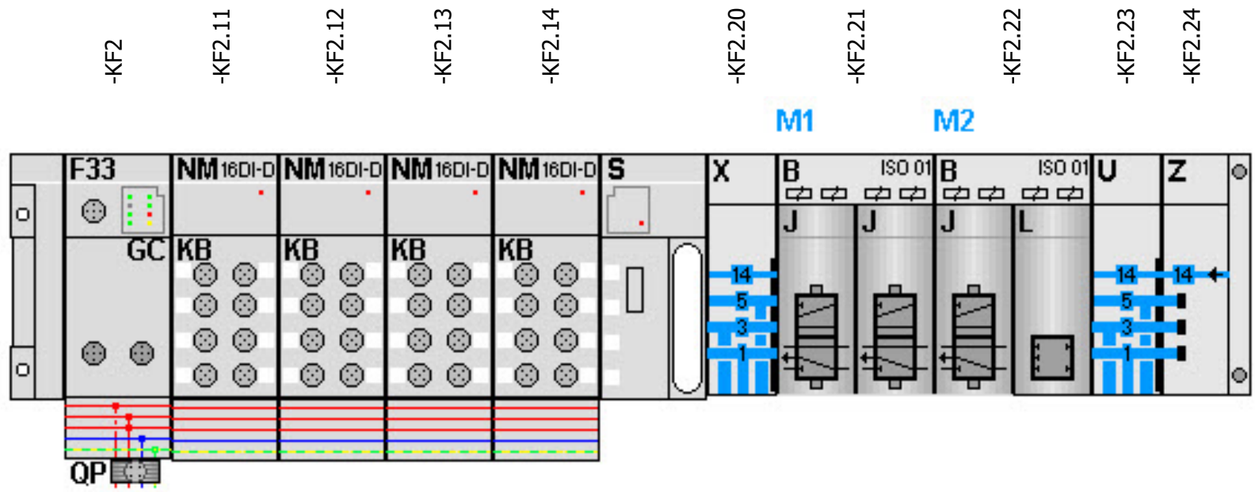

-KF2.21
=V1GL13UQ51UQ5+.GL13UQ51UQ5/1.3
=V1GL13UQ51UQ6+.GL13UQ51UQ6/1.3

FESTO

=V1GL13UQ51UQ5+.GL13UQ51UQ5/1.4	Q2200.0 DO 0 1.1	-QN1.1_Q	Pallet Stop Station #5 Pre-Unload (RST)
=V1GL13UQ51UQ5+.GL13UQ51UQ5/1.4	Q2200.1 DO 1 1.2	-QN1.2_Q	Pallet Stop Station #5 Pre-Unload (SET)
=V1GL13UQ51UQ6+.GL13UQ51UQ6/1.4	Q2200.2 DO 2 2.1	-QN2.1_Q	Pallet Stop Station #6 Unload (RST)
=V1GL13UQ51UQ6+.GL13UQ51UQ6/1.4	Q2200.3 DO 3 2.2	-QN2.2_Q	Pallet Stop Station #6 Unload (SET)

-KF2.22
=V1GL13UQ51UQ7+.GL13UQ51UQ7/1.3

FESTO

=V1GL13UQ51UQ7+.GL13UQ51UQ7/1.4	Q2200.4 DO 0 1.1	-QN3.1_Q	Pallet Stop Station #7 Mid-Stop #4 (RST)
=V1GL13UQ51UQ7+.GL13UQ51UQ7/1.4	Q2200.5 DO 1 1.2	-QN3.2_Q	Pallet Stop Station #7 Mid-Stop #4 (SET)
	Q2200.6 DO 2 2.1	-QN4.1_Q	Spare
	Q2200.7 DO 3 2.2	-QN4.2_Q	Spare

			Date	1/24/2023	Volvo Trucks North America	Valiant TMS	CONNECTING MOD. FOR FESTO DQ	Drawing name: =2V01&EFS-EL_KF1	= V1GL13UQ51KF2
			Ed.	MKLEPADLO					+ V1GL13UQ51
			Appr		P6700 Framing - Cell 2V01, KF1			Document type: EFS	Project nr: 22-16152
Modification	Date	Name	Original		Replacement of / Replaced by	Scale 1:1			Page 5 / 1630

0	1	2	3	4	5	6	7	8	9

=V1GL13UQ51KF2
+.GL13UQ51

-KF2.21
=V1GL13UQ51KF2+V1GL13UQ51/5.1

Pallet Stop Station #5 Pre-Unload (RST) =V1GL13UQ51KF1 +V1GL13UQ51 -QN1.1_Q =V1GL13UQ51KF2 +V1GL13UQ51/5.3 Q2200.0	Pallet Stop Station #5 Pre-Unload (SET) =V1GL13UQ51KF1 +V1GL13UQ51 -QN1.2_Q =V1GL13UQ51KF2 +V1GL13UQ51/5.3 Q2200.1
1.1 Pneumatic Valve	1.2 Pneumatic Valve

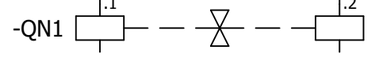

=V1GL13UQ51KF2+V1GL13UQ51/1.1
+.GL13UQ51UQ5.1-W1

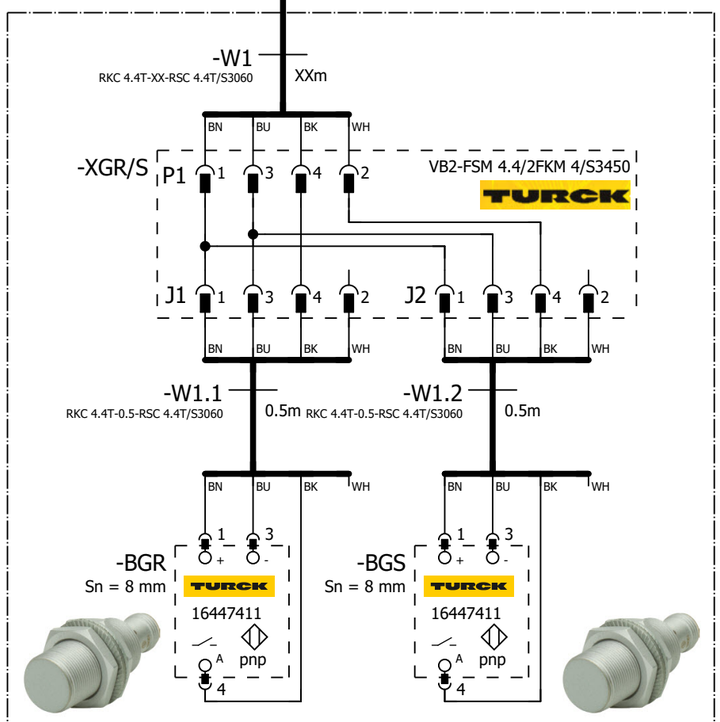

Pallet Stop Station #5 Pre-Unload
=V1GL13UQ51UQ5.1
+.GL13UQ51UQ5.1
-UQ5.1

=V1GL13UQ51 -UQ5.1-BGR Pallet Stop Station #5 Pre-Unload	=V1GL13UQ51 -UQ5.1-BGS Pallet Stop Station #5 Pre-Unload

=V1GL13UQ51KF2+V1GL13UQ51/5

=V1GL13UQ51UQ6+.GL13UQ51UQ6/1

			Date	1/24/2023	Volvo Trucks North America	Valiant TMS	FESTO DQ CONNECTION QN1	Drawing name: =2V01&EFS-EL_KF1	= V1GL13UQ51UQ5
			Ed.	MKLEPADLO					+ V1GL13UQ51UQ5
			Appr		P6700 Framing - Cell 2V01, KF1			Document type: EFS	Project nr: 22-16152
Modification	Date	Name	Original		Replacement of / Replaced by	Scale 1:1			Page 1 / 1630

0	1	2	3	4	5	6	7	8	9

=V1GL13UQ51KF2
+.GL13UQ51

-KF2.21
=V1GL13UQ51KF2+V1GL13UQ51/5.1

Pallet Stop Station #6 Unload (RST)	Pallet Stop Station #6 Unload (SET)
=V1GL13UQ51KF1	=V1GL13UQ51KF1
+V1GL13UQ51	+V1GL13UQ51
-QN2.1_Q	-QN2.2_Q
=V1GL13UQ51KF2	=V1GL13UQ51KF2
+V1GL13UQ51/5.3	+V1GL13UQ51/5.3
Q2200.2	Q2200.3
2.1 Pneumatic Valve	2.2 Pneumatic Valve

-QN2 .1 .2

=V1GL13UQ51KF2+V1GL13UQ51/1.2
+.GL13UQ51UQ6.1-W1

-W1
RKC 4.4T-XX-RSC 4.4T/S3060
XXm

BN BU BK WH

-XGR/S P1 1 3 4 2 VB2-FSM 4.4/2FKM 4/S3450 TURCK

J1 1 3 4 2 J2 1 3 4 2

BN BU BK WH BN BU BK WH

-W1.1
RKC 4.4T-0.5-RSC 4.4T/S3060
0.5m

-W1.2
RKC 4.4T-0.5-RSC 4.4T/S3060
0.5m

BN BU BK WH BN BU BK WH

-BGR
Sn = 8 mm
TURCK
16447411
pnp

-BGS
Sn = 8 mm
TURCK
16447411
pnp

Pallet Stop Station #6 Unload
=V1GL13UQ51UQ6.1
+.GL13UQ51UQ6.1
-UQ6.1

=V1GL13UQ51
-UQ6.1-BGR
Pallet Stop Station
#6 Unload

=V1GL13UQ51
-UQ6.1-BGS
Pallet Stop Station
#6 Unload

=V1GL13UQ51UQ5+.GL13UQ51UQ5/1

=V1GL13UQ51UQ7+.GL13UQ51UQ7/1

			Date	1/24/2023	Volvo Trucks North America	Valiant TMS	FESTO DQ CONNECTION QN2	Drawing name: =2V01&EFS-EL_KF1	= V1GL13UQ51UQ6
			Ed.	MKLEPADLO					+ V1GL13UQ51UQ6
			Appr		P6700 Framing - Cell 2V01, KF1			Document type: EFS	Project nr: 22-16152
Modification	Date	Name	Original		Replacement of / Replaced by	Scale 1:1			Page 1 / 1630

0	1	2	3	4	5	6	7	8	9

=V1GL13UQ51KF2
+.GL13UQ51

-KF2.22
=V1GL13UQ51KF2+V1GL13UQ51/5.1

Pallet Stop Station #7 Mid-Stop #4 (RST) =V1GL13UQ51KF1 +V1GL13UQ51 -QN3.1_Q =V1GL13UQ51KF2 +V1GL13UQ51/5.3 Q2200.4	Pallet Stop Station #7 Mid-Stop #4 (SET) =V1GL11UQ51KF1 +V1GL11UQ51 -QN3.2_Q =V1GL13UQ51KF2 +V1GL13UQ51/5.3 Q2200.5
1.1 Pneumatic Valve	1.2 Pneumatic Valve

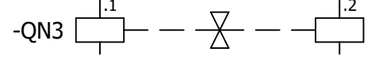

=V1GL13UQ51KF2+V1GL13UQ51/1.3
+.GL13UQ51UQ7.1-W1

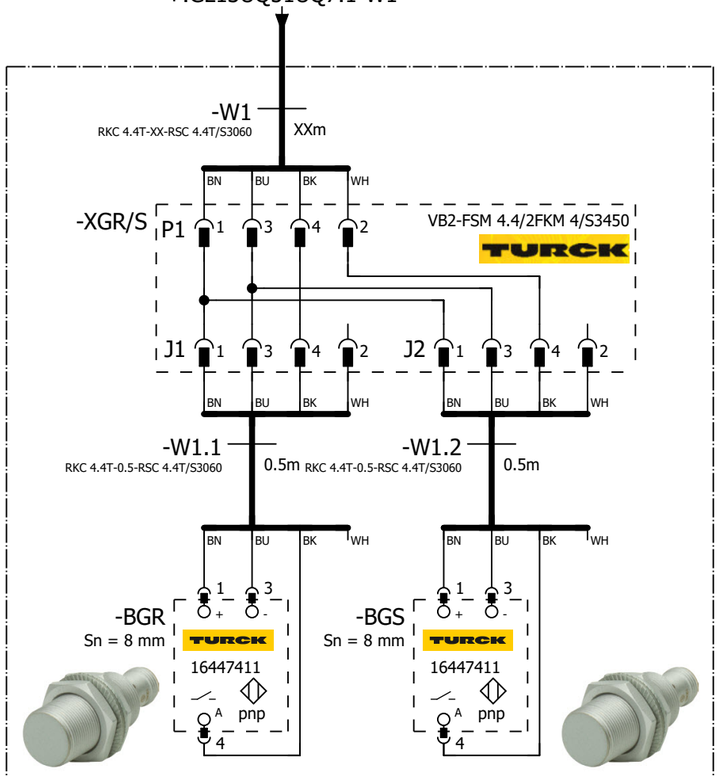

Pallet Stop Station #7 Mid-Stop #4
=V1GL13UQ51UQ7.1
+.GL13UQ51UQ7.1
-UQ7.1

=V1GL13UQ51 -UQ7.1-BGR Pallet Stop Station #7 Mid-Stop #4	=V1GL13UQ51 -UQ7.1-BGS Pallet Stop Station #7 Mid-Stop #4

=V1GL13UQ51UQ6+.GL13UQ51UQ6/1

=V1GL13WC1+.GL13UC01/1

			Date	1/24/2023	Volvo Trucks North America	Valiant TMS	FESTO DQ CONNECTION QN3	Drawing name: =2V01&EFS-EL_KF1	= V1GL13UQ51UQ7
			Ed.	MKLEPADLO					+ V1GL13UQ51UQ7
			Appr		P6700 Framing - Cell 2V01, KF1			Document type: EFS	Project nr: 22-16152
Modification	Date	Name	Original		Replacement of / Replaced by	Scale 1:1			Page 1 / 1630

0	1	2	3	4	5	6	7	8	9

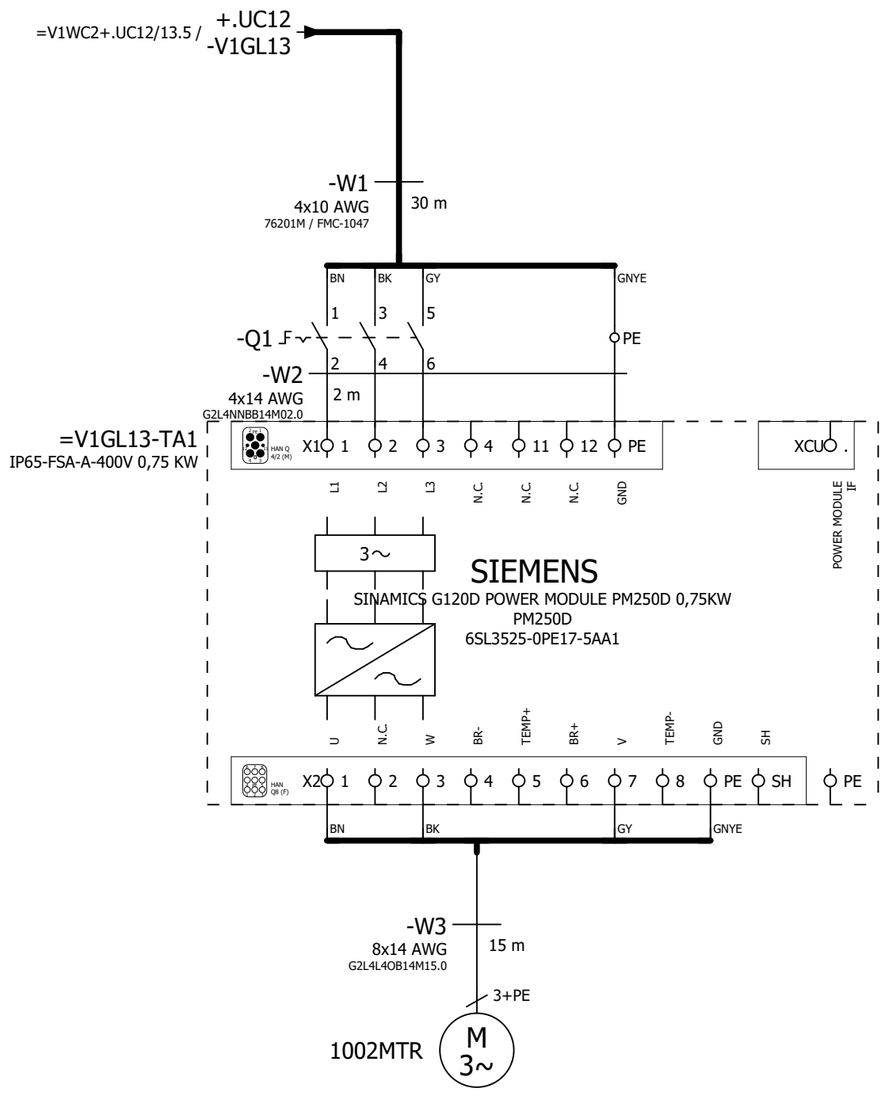

=V1GL13UQ51UQ7+.GL13UQ51UQ7/1

=V1GL14KF2+.GL14KF2/10

			Date	1/24/2023	Volvo Trucks North America	Valiant TMS	Incoming power	Drawing name: =2V01&EFS-EL_KF1	= V1GL13WC1
			Ed.	MKLEPADLO					+ V1GL13UC01
			Appr		P6700 Framing - Cell 2V01, KF1	Scale 1:1		Document type: EFS / Project nr: 22-16152	Page 1 / 1630
Modification	Date	Name	Original		Replacement of / Replaced by				

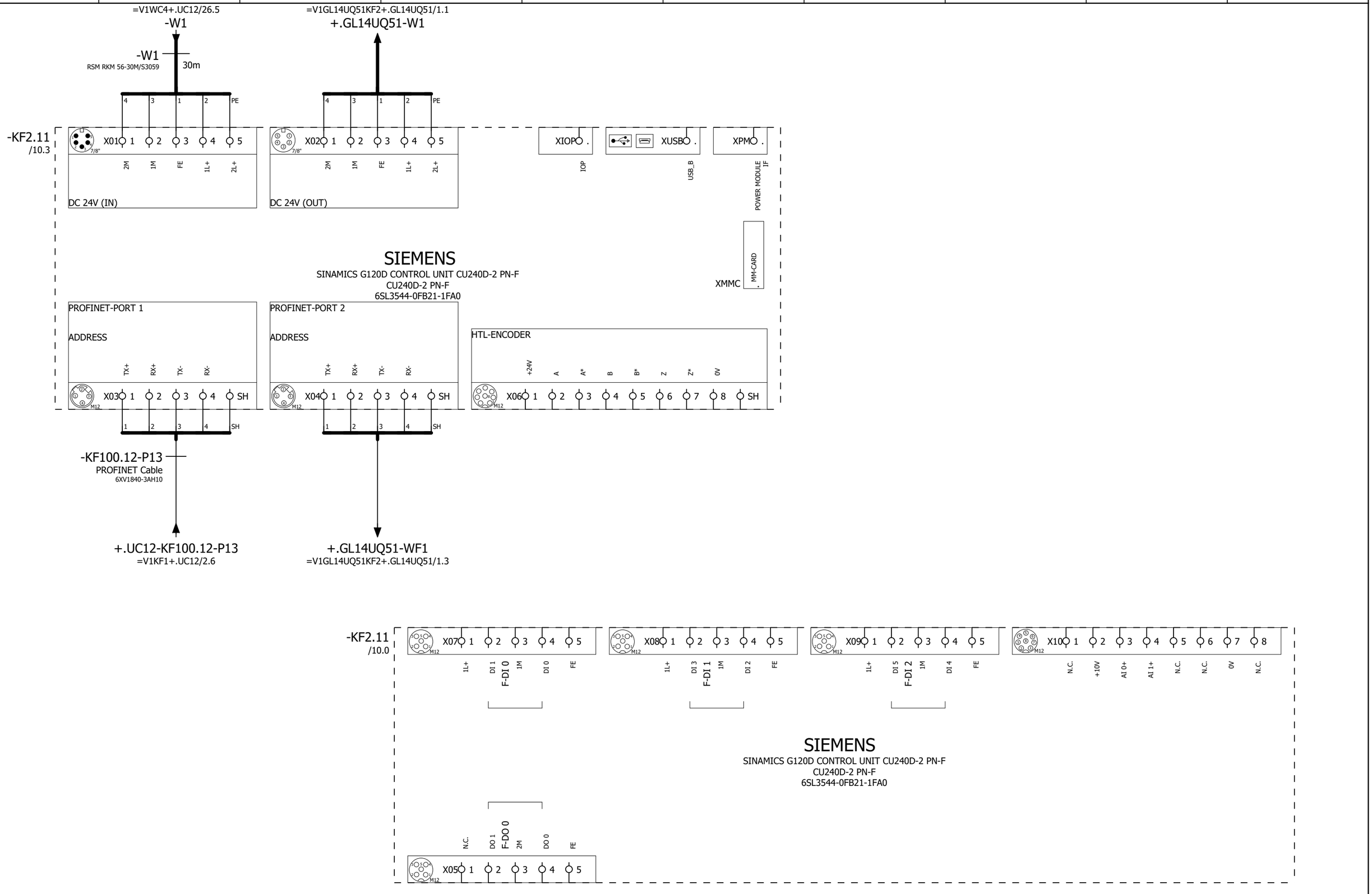

=V1GL13WC1+.GL13UC01/1

=V1GL14UQ51BG0+.GL14UQ51/1

			Date	1/24/2023	Volvo Trucks North America	Valiant TMS	G120D Control Unit	Drawing name: =2V01&EFS-EL_KF1	= V1GL14KF2
			Ed.	MKLEPADLO	P6700 Framing - Cell 2V01, KF1				+ V1GL14KF2
			Appr					Document type: EFS	Project nr: 22-16152
Modification	Date	Name	Original		Replacement of / Replaced by	Scale 1:1			Page 10 / 1630

0	1	2	3	4	5	6	7	8	9

=V1GL14UQ51KF2/2.1
-BG05

-W5
RKC 4.4T-XX-RSC 4.4T/S3060
XXm

BN BU BK WH

-BG05
Sn = 8 mm
TURCK
1644741
pnp

=V1GL14UQ51
-BG05
Pallet Present at
Pre-Unload Sta #3

=V1GL14UQ51KF2/2.2
-XG6/17

-W6
RKC 4.4T-XX-RSC 4.4T/S3060
XXm

-XG6/17 P1 VB2-FSM 4.4/2FKM 4/S3450
TURCK
J1
J2

-W6.1
RKC 4.4T-XX-RSC 4.4T/S3060
XXm

-W6.2
RKC 4.4T-XX-RSC 4.4T/S3060
XXm

-BG06
Sn = 8 mm
TURCK
1644741
pnp

-BG17
Sn = 1000 mm
BANNER
71959
pnp

=V1GL14UQ51
-BG06
Pallet Present at
Unload Sta #4

=V1GL14UQ51
-BG17
Part Present
At Unload

=V1GL14UQ51KF2/2.3
-XG7/12

-W7
RKC 4.4T-XX-RSC 4.4T/S3060
XXm

-XG7/12 P1 VB2-FSM 4.4/2FKM 4/S3450
TURCK
J1
J2

-W7.1
RKC 4.4T-XX-RSC 4.4T/S3060
XXm

-W7.2
RKC 4.4T-XX-RSC 4.4T/S3060
XXm

-BG07
Sn = 8 mm
TURCK
1644741
pnp

-BG12
Sn = 8 mm
TURCK
1644741
pnp

=V1GL14UQ51
-BG07
Pallet Present at
Accum Zone 4-5

=V1GL14UQ51
-BG12
Drive Overtorque
Sensor

=V1GL14KF2+.GL14KF2/10

			Date	1/24/2023	Volvo Trucks North America	Valiant TMS	SENSORS	Drawing name: =2V01&EFS-EL_KF1	= V1GL14UQ51BG0
			Ed.	MKLEPADLO					+ V1GL14UQ51
			Appr		P6700 Framing - Cell 2V01, KF1			Document type: EFS	Project nr: 22-16152 / Page 1 / 1630
Modification	Date	Name	Original		Replacement of / Replaced by	Scale 1:1			

0	1	2	3	4	5	6	7	8	9

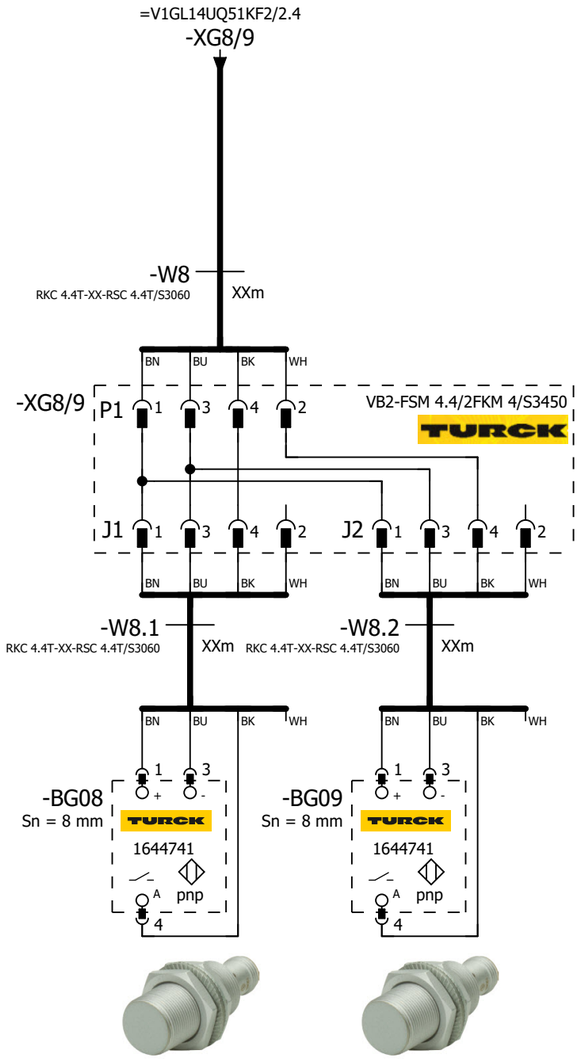

=V1GL14UQ51
-BG08
Pallet Present at
Mid-Stop Sta #5

=V1GL14UQ51
-BG09
Pallet Present at
Accum Zone 5-6

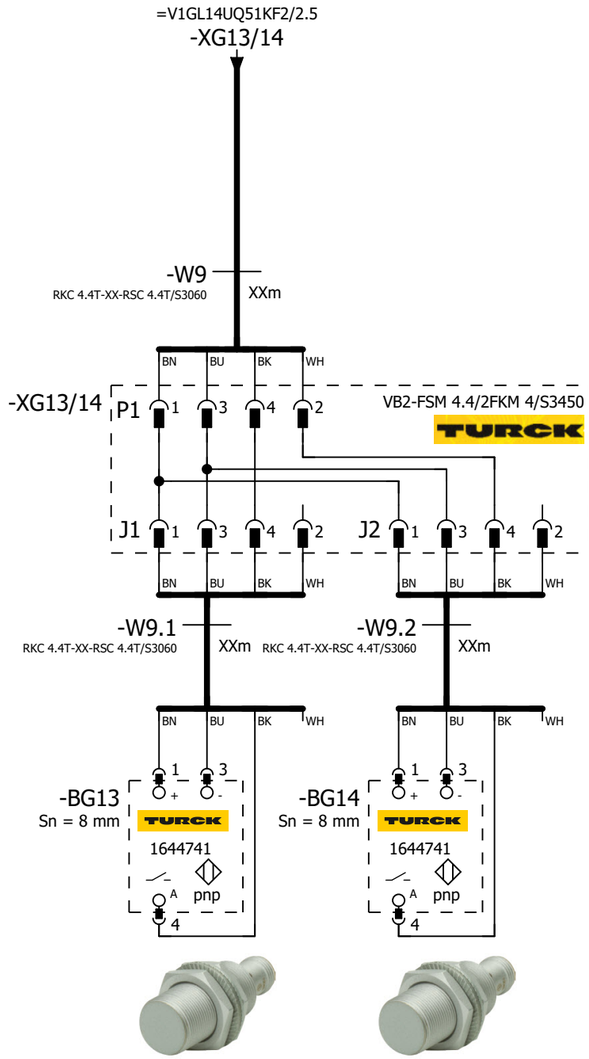

=V1GL14UQ51
-BG13
Chain Tension
Alert On Take-up

=V1GL14UQ51
-BG14
Broken Chain Alert
On Take-up

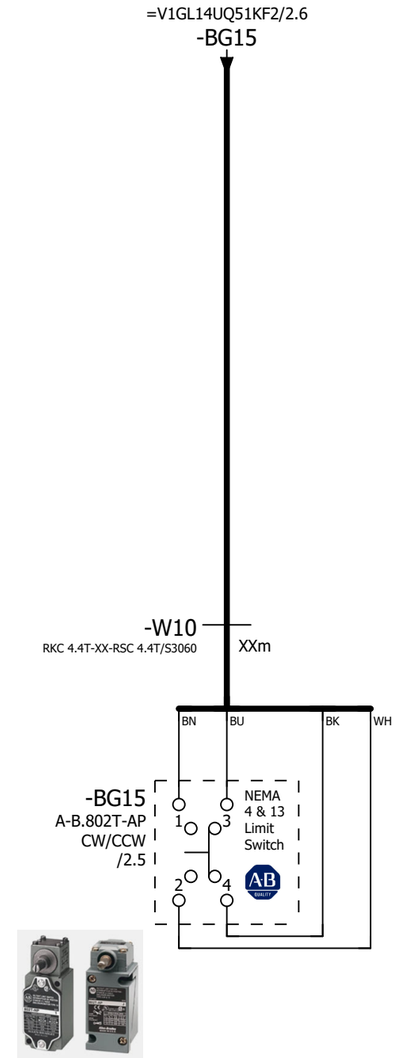

=V1GL14UQ51
-BG15
Part Overtravel

1

=V1GL14UQ51KF2/1

			Date	1/24/2023	Volvo Trucks North America	Valiant TMS	SENSORS	Drawing name: =2V01&EFS-EL_KF1	= V1GL14UQ51BG0
			Ed.	MKLEPADLO					+ V1GL14UQ51
			Appr		P6700 Framing - Cell 2V01, KF1			Document type: EFS	Project nr: 22-16152
Modification	Date	Name	Original		Replacement of / Replaced by	Scale 1:1			Page 2 / 1630

0	1	2	3	4	5	6	7	8	9

=V1GL14KF2+.GL14KF2/10.2 / W1

-W1
RSM RKM 56-5M/S3059
5m

=V1GL14KF2+.GL14KF2/10.2 / -WF1

-WF1
PROFINET Cable
6XV1840-3AH10

-KF2

X20 M12, 7/8" 1 2 PE 4 5

0V_VAL / OUT | 0V_EL / SEN | FE | 24V_EL / SEN | 24V_VAL / OUT

M12 -TP1 M12 -TP2

ON
OFF
1 2 1 2

FESTO
Bus node + Interlinking block
548755 + 550208

I2250.0	DI 0 X1:4	V1GL14UQ51UQ3.1-BGR	Pallet Stop Station #3 Pre-Unload (RESET)
I2250.1	DI 1 X1:2	V1GL14UQ51UQ3.1-BGS	Pallet Stop Station #3 Pre-Unload (SET)
I2250.2	DI 2 X2:4	V1GL14UQ51UQ4.1-BGR	Pallet Stop Station #4 Unload (RESET)
I2250.3	DI 3 X2:2	V1GL14UQ51UQ4.1-BGS	Pallet Stop Station #4 Unload (SET)
I2250.4	DI 4 X3:4	V1GL14UQ51UQ5.1-BGR	Pallet Stop Station #5 Mid-Stop (RESET)
I2250.5	DI 5 X3:2	V1GL14UQ51UQ5.1-BGS	Pallet Stop Station #5 Mid-Stop (SET)
I2250.6	DI 6 X4:4	I2250.6	SPARE
I2250.7	DI 7 X4:2	I2250.7	SPARE
I2251.0	DI 8 X5:4	I2251.0	SPARE
I2251.1	DI 9 X5:2	I2251.1	SPARE
I2251.2	DI 10 X6:4	I2251.2	SPARE
I2251.3	DI 11 X6:2	I2251.3	SPARE
I2251.4	DI 12 X7:4	I2251.4	SPARE
I2251.5	DI 13 X7:2	I2251.5	SPARE
I2251.6	DI 14 X8:4	I2251.6	SPARE
I2251.7	DI 15 X8:2	I2251.7	SPARE

-KF2.11

FESTO
CPX-M-AB-8-M12X2-5POL
549335

X1 M12: 24V | DI 1 | 0V | DI 0 | FE — 1 2 3 4 5 — BN WH BU BK
X2 M12: 24V | DI 3 | 0V | DI 2 | FE — 1 2 3 4 5 — BN WH BU BK
X3 M12: 24V | DI 5 | 0V | DI 4 | FE — 1 2 3 4 5 — BN WH BU BK
X4 M12: 24V | DI 7 | 0V | DI 6 | FE — 1 2 3 4 5
X5 M12: 24V | DI 9 | 0V | DI 8 | FE — 1 2 3 4 5
X6 M12: 24V | DI 11 | 0V | DI 10 | FE — 1 2 3 4 5
X7 M12: 24V | DI 13 | 0V | DI 12 | FE — 1 2 3 4 5
X8 M12: 24V | DI 15 | 0V | DI 14 | FE — 1 2 3 4 5

+.GL14UQ51UQ3.1-W1
=V1GL14UQ51UQ3+.GL14UQ51UQ3/1.1

+.GL14UQ51UQ4.1-W1
=V1GL14UQ51UQ4+.GL14UQ51UQ4/1.1

+.GL14UQ51UQ5.1-W1
=V1GL14UQ51UQ5+.GL14UQ51UQ5/1.1

=V1GL14UQ51BG0/2

2

			Date	1/24/2023	Volvo Trucks North America	Valiant TMS	CONNECTING MOD. FOR VTSA MANIFOLD	Drawing name: =2V01&EFS-EL_KF1	= V1GL14UQ51KF2	
			Ed.	MKLEPADLO					+ V1GL14UQ51	
			Appr		P6700 Framing - Cell 2V01, KF1			Document type: EFS	Project nr: 22-16152	Page 1
Modification	Date	Name	Original		Replacement of	Replaced by	Scale 1:1			1630

0	1	2	3	4	5	6	7	8	9

-KF2.12

FESTO

CPX-M-AB-8-M12X2-5POL

549335

I2252.0 DI 0 X1:4	V1GL14UQ51-BG05	Sensor Pallet Present at Pre-Unload Sta #3
I2252.1 DI 1 X1:2	I2252.1	SPARE
I2252.2 DI 2 X2:4	V1GL14UQ51-BG06	Sensor Pallet Present at Unload Sta #4
I2252.3 DI 3 X2:2	V1GL14UQ51-BG17	Sensor Part Present At Unload
I2252.4 DI 4 X3:4	V1GL14UQ51-BG07	Sensor Pallet Present at Accum Zone 4-5
I2252.5 DI 5 X3:2	V1GL14UQ51-BG12	Sensor Drive Overtorque
I2252.6 DI 6 X4:4	V1GL14UQ51-BG08	Sensor Pallet Present at Mid-Stop Sta #5
I2252.7 DI 7 X4:2	V1GL14UQ51-BG09	Sensor Pallet Present at Accum Zone 5-6
I2253.0 DI 8 X5:4	V1GL14UQ51-BG13	Sensor Chain Tension Alert On Take-up
I2253.1 DI 9 X5:2	V1GL14UQ51-BG14	Sensor Broken Chain Alert On Take-up
I2253.2 DI 10 X6:4	V1GL14UQ51-BG15	Part Overtravel N.O.
I2253.3 DI 11 X6:2	V1GL14UQ51-BG15	Part Overtravel N.C.
I2253.4 DI 12 X7:4	I2253.4	SPARE
I2253.5 DI 13 X7:2	I2253.5	SPARE
I2253.6 DI 14 X8:4	I2253.6	SPARE
I2253.7 DI 15 X8:2	I2253.7	SPARE

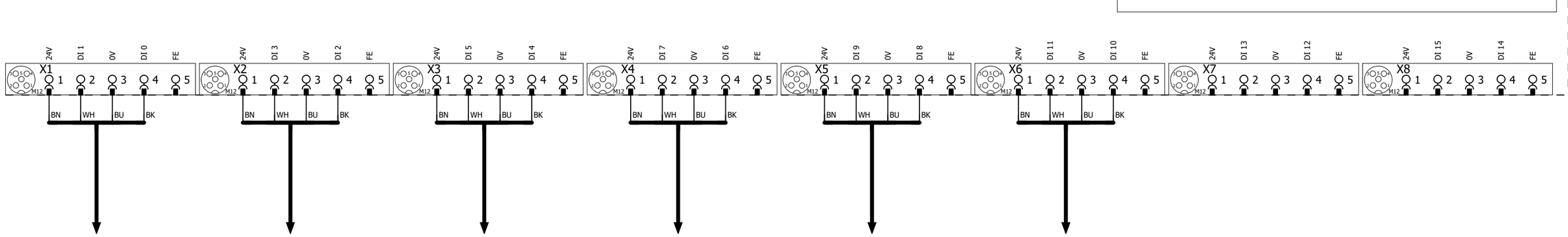

1 3

			Date	1/24/2023	Volvo Trucks North America		Valiant TMS	I/O MOD. DI16 (8 x M12) FOR VTSA-F	Drawing name: =2V01&EFS-EL_KF1	= V1GL14UQ51KF2
			Ed.	MKLEPADLO						+ V1GL14UQ51
			Appr		P6700 Framing - Cell 2V01, KF1		Scale 1:1		Document type: EFS	Project nr: 22-16152	Page 2
Modification	Date	Name	Original		Replacement of	Replaced by				1630

0	1	2	3	4	5	6	7	8	9

-KF2.13

FESTO

CPX-M-AB-8-M12X2-5POL

549335

I2254.0	DI 0 X1:4	I2254.0	SPARE
I2254.1	DI 1 X1:2	I2254.1	SPARE
I2254.2	DI 2 X2:4	I2254.2	SPARE
I2254.3	DI 3 X2:2	I2254.3	SPARE
I2254.4	DI 4 X3:4	I2254.4	SPARE
I2254.5	DI 5 X3:2	I2254.5	SPARE
I2254.6	DI 6 X4:4	I2254.6	SPARE
I2254.7	DI 7 X4:2	I2254.7	SPARE
I2255.0	DI 8 X5:4	I2255.0	SPARE
I2255.1	DI 9 X5:2	I2255.1	SPARE
I2255.2	DI 10 X6:4	I2255.2	SPARE
I2255.3	DI 11 X6:2	I2255.3	SPARE
I2255.4	DI 12 X7:4	I2255.4	SPARE
I2255.5	DI 13 X7:2	I2255.5	SPARE
I2255.6	DI 14 X8:4	I2255.6	SPARE
I2255.7	DI 15 X8:2	I2255.7	SPARE

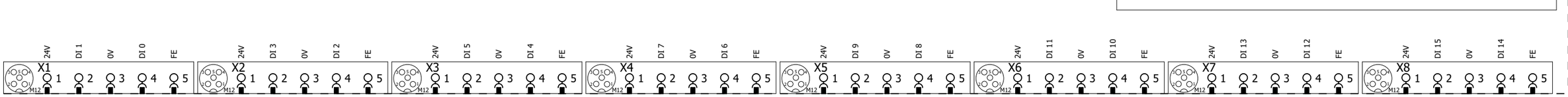

2 4

			Date	1/24/2023	Volvo Trucks North America	Valiant TMS	I/O MOD. DI16 (8 x M12) FOR VTSA-F	Drawing name: =2V01&EFS-EL_KF1	= V1GL14UQ51KF2	
			Ed.	MKLEPADLO					+ V1GL14UQ51	
			Appr		P6700 Framing - Cell 2V01, KF1	Scale 1:1		Document type: EFS	Project nr: 22-16152	Page 3
Modification	Date	Name	Original		Replacement of / Replaced by					1630

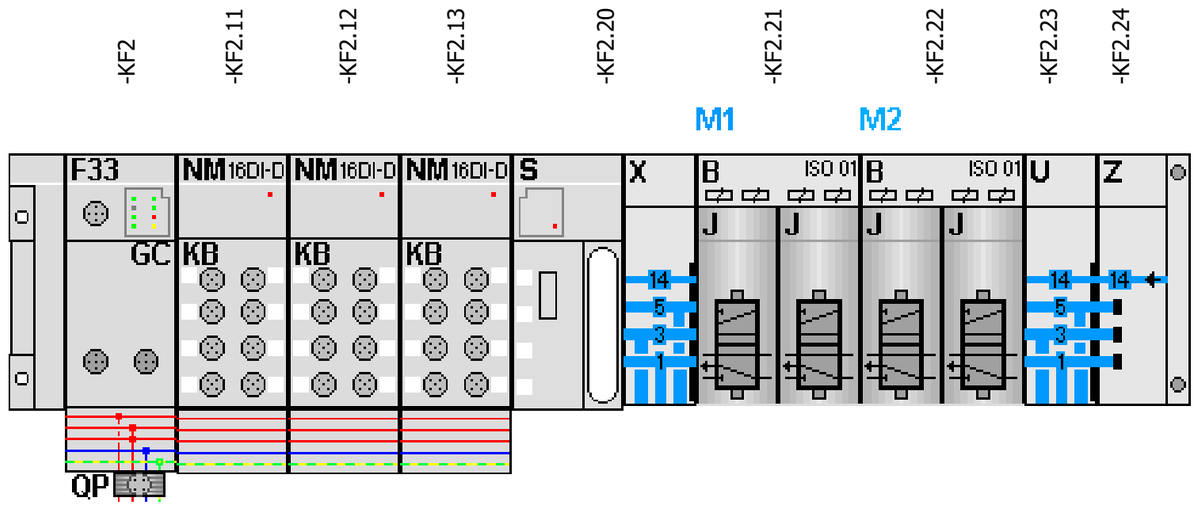

-KF2.21
=V1GL14UQ51UQ3+.GL14UQ51UQ3/1.3
=V1GL14UQ51UQ4+.GL14UQ51UQ4/1.3

FESTO

=V1GL14UQ51UQ3+.GL14UQ51UQ3/1.4	Q2250.0 DO 0 1.1	-QN1.1_Q	Pallet Stop Station #3 Pre-Unload (RST)
=V1GL14UQ51UQ3+.GL14UQ51UQ3/1.4	Q2250.1 DO 1 1.2	-QN1.2_Q	Pallet Stop Station #3 Pre-Unload (SET)
=V1GL14UQ51UQ4+.GL14UQ51UQ4/1.4	Q2250.2 DO 2 2.1	-QN2.1_Q	Pallet Stop Station #4 Unload (RST)
=V1GL14UQ51UQ4+.GL14UQ51UQ4/1.4	Q2250.3 DO 3 2.2	-QN2.2_Q	Pallet Stop Station #4 Unload (SET)

-KF2.22
=V1GL14UQ51UQ5+.GL14UQ51UQ5/1.3
=V1GL14UQ51UQ8+.GL14UQ51UQ8/1.3

FESTO

=V1GL14UQ51UQ5+.GL14UQ51UQ5/1.4	Q2250.4 DO 0 1.1	-QN3.1_Q	Pallet Stop Station #5 Mid-Stop (RST)
=V1GL14UQ51UQ5+.GL14UQ51UQ5/1.4	Q2250.5 DO 1 1.2	-QN3.2_Q	Pallet Stop Station #5 Mid-Stop (SET)
=V1GL14UQ51UQ8+.GL14UQ51UQ8/1.4	Q2250.6 DO 2 2.1	-QN4.1_Q	Spare (RST)
=V1GL14UQ51UQ8+.GL14UQ51UQ8/1.4	Q2250.7 DO 3 2.2	-QN4.2_Q	Spare (SET)

			Date	1/24/2023	Volvo Trucks North America	Valiant TMS	CONNECTING MOD. FOR FESTO DQ	Drawing name: =2V01&EFS-EL_KF1	= V1GL14UQ51KF2
			Ed.	MKLEPADLO					+ V1GL14UQ51
			Appr		P6700 Framing - Cell 2V01, KF1			Document type: EFS	Project nr: 22-16152
Modification	Date	Name	Original		Replacement of / Replaced by	Scale 1:1			Page 4 / 1630

0	1	2	3	4	5	6	7	8	9

=V1GL14UQ51KF2
+.GL14UQ51

-KF2.21
=V1GL14UQ51KF2+V1GL14UQ51/4.1

Pallet Stop
Station #3 Pre-Unload (RST)
=V1GL14UQ51KF1
+V1GL14UQ51
-QN1.1_Q
=V1GL14UQ51KF2
+V1GL14UQ51/4.3
Q2250.0

Pallet Stop
Station #3 Pre-Unload (SET)
=V1GL14UQ51KF1
+V1GL14UQ51
-QN1.2_Q
=V1GL14UQ51KF2
+V1GL14UQ51/4.3
Q2250.1

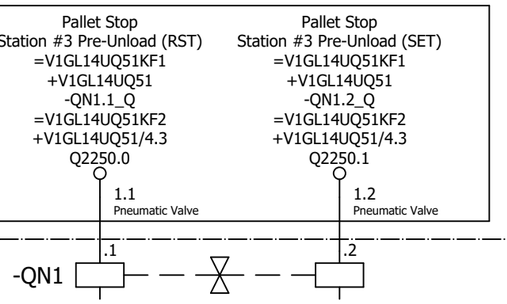

=V1GL14UQ51KF2+V1GL14UQ51/1.1
+.GL14UQ51UQ3.1-W1

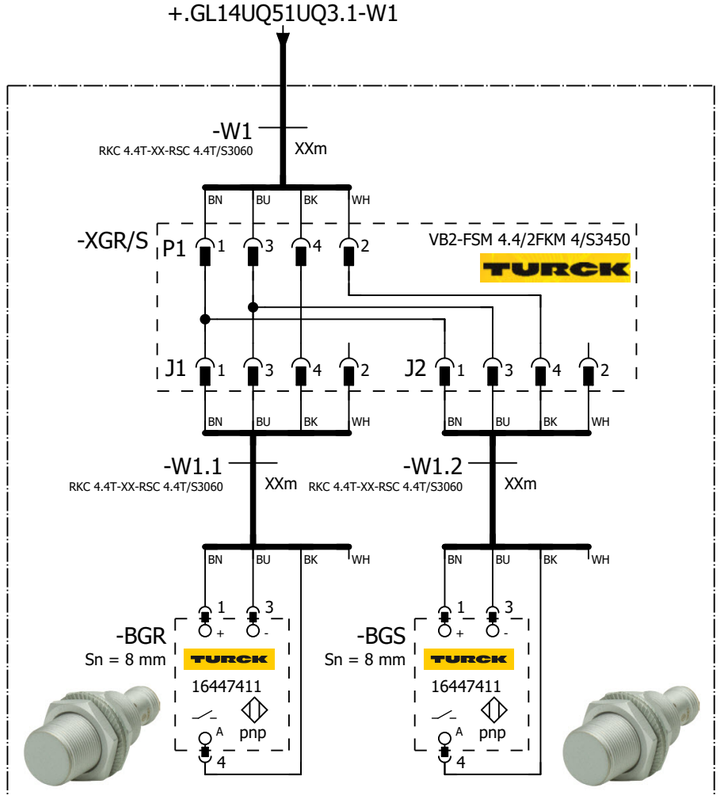

Pallet Stop Station #3 Pre-Unload
=V1GL14UQ51UQ3.1
+.GL14UQ51UQ3.1
-UQ3.1

=V1GL14UQ51
-UQ3.1-BGR
Pallet Stop Station
#3 Pre-Unload

=V1GL14UQ51
-UQ3.1-BGS
Pallet Stop Station
#3 Pre-Unload

=V1GL14UQ51KF2+V1GL14UQ51/4

=V1GL14UQ51UQ4+.GL14UQ51UQ4/1

			Date	1/24/2023	Volvo Trucks North America	Valiant TMS	FESTO DQ CONNECTION QN1	Drawing name: =2V01&EFS-EL_KF1	= V1GL14UQ51UQ3
			Ed.	MKLEPADLO					+ V1GL14UQ51UQ3
			Appr		P6700 Framing - Cell 2V01, KF1			Document type: EFS	Project nr: 22-16152
Modification	Date	Name	Original		Replacement of	Replaced by	Scale 1:1		Page 1 / 1630

0	1	2	3	4	5	6	7	8	9

=V1GL14UQ51KF2
+.GL14UQ51

-KF2.21
=V1GL14UQ51KF2+V1GL14UQ51/4.1

Pallet Stop Station #4 Unload (RST)	Pallet Stop Station #4 Unload (SET)
=V1GL14UQ51KF1	=V1GL14UQ51KF1
+V1GL14UQ51	+V1GL14UQ51
-QN2.1_Q	-QN2.2_Q
=V1GL14UQ51KF2	=V1GL14UQ51KF2
+V1GL14UQ51/4.3	+V1GL14UQ51/4.3
Q2250.2	Q2250.3
2.1 Pneumatic Valve	2.2 Pneumatic Valve

-QN2 .1 .2

=V1GL14UQ51KF2+V1GL14UQ51/1.2
+.GL14UQ51UQ4.1-W1

-W1
RKC 4.4T-XX-RSC 4.4T/S3060
XXm

BN BU BK WH

-XGR/S P1 1 3 4 2 VB2-FSM 4.4/2FKM 4/S3450 TURCK

J1 1 3 4 2 J2 1 3 4 2

BN BU BK WH

-W1.1
RKC 4.4T-XX-RSC 4.4T/S3060
XXm

-W1.2
RKC 4.4T-XX-RSC 4.4T/S3060
XXm

BN BU BK WH

1 3

-BGR
Sn = 8 mm
TURCK
16447411
pnp
A
4

-BGS
Sn = 8 mm
TURCK
16447411
pnp
A
4

Pallet Stop Station #4 Unload
=V1GL14UQ51UQ4.1
+.GL14UQ51UQ4.1
-UQ4.1

=V1GL14UQ51
-UQ4.1-BGR
Pallet Stop Station
#4 Unload

=V1GL14UQ51
-UQ4.1-BGS
Pallet Stop Station
#4 Unload

=V1GL14UQ51UQ3+.GL14UQ51UQ3/1

=V1GL14UQ51UQ5+.GL14UQ51UQ5/1

			Date	1/24/2023	Volvo Trucks North America	Valiant TMS	FESTO DQ CONNECTION QN2	Drawing name: =2V01&EFS-EL_KF1	= V1GL14UQ51UQ4
			Ed.	MKLEPADLO					+ V1GL14UQ51UQ4
			Appr		P6700 Framing - Cell 2V01, KF1			Document type: EFS	Project nr: 22-16152
Modification	Date	Name	Original		Replacement of	Replaced by	Scale 1:1		Page 1 / 1630

0	1	2	3	4	5	6	7	8	9

=V1GL14UQ51KF2
+.GL14UQ51

-KF2.22
=V1GL14UQ51KF2+V1GL14UQ51/4.1

Pallet Stop Station #5 Mid-Stop (RST)	Pallet Stop Station #5 Mid-Stop (SET)
=V1GL14UQ51KF1	=V1GL14UQ51KF1
+V1GL14UQ51	+V1GL14UQ51
-QN3.1_Q	-QN3.2_Q
=V1GL14UQ51KF2	=V1GL14UQ51KF2
+V1GL14UQ51/4.3	+V1GL14UQ51/4.3
Q2250.4	Q2250.5
1.1 Pneumatic Valve	1.2 Pneumatic Valve

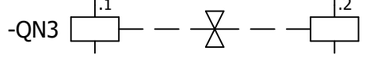

=V1GL14UQ51KF2+V1GL14UQ51/1.3
+.GL14UQ51UQ5.1-W1

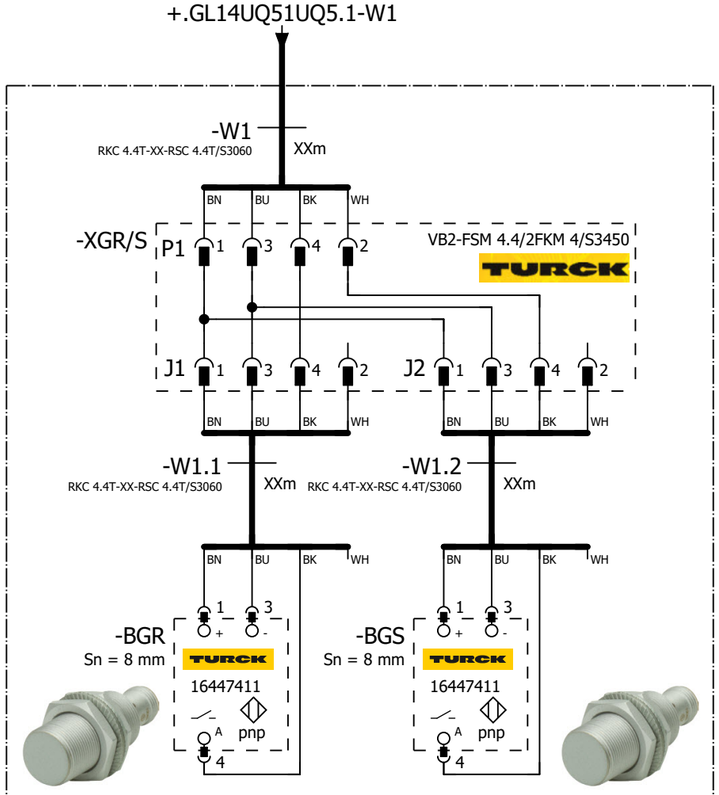

Pallet Stop Station #5 Mid-Stop
=V1GL14UQ51UQ5.1
+.GL14UQ51UQ5.1
-UQ5.1

=V1GL14UQ51 -UQ5.1-BGR Pallet Stop Station #5 Mid-Stop	=V1GL14UQ51 -UQ5.1-BGS Pallet Stop Station #5 Mid-Stop

=V1GL14UQ51UQ4+.GL14UQ51UQ4/1

=V1GL14UQ51UQ8+.GL14UQ51UQ8/1

			Date	1/24/2023	Volvo Trucks North America	Valiant TMS	FESTO DQ CONNECTION QN3	Drawing name: =2V01&EFS-EL_KF1	= V1GL14UQ51UQ5
			Ed.	MKLEPADLO					+ V1GL14UQ51UQ5
			Appr		P6700 Framing - Cell 2V01, KF1			Document type: EFS	Project nr: 22-16152
Modification	Date	Name	Original		Replacement of / Replaced by	Scale 1:1			Page 1 / 1630

0	1	2	3	4	5	6	7	8	9

=V1GL14UQ51KF2
+.GL14UQ51

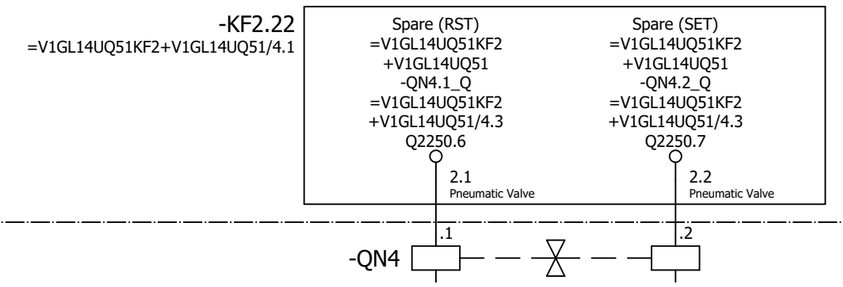

=V1GL14UQ51UQ5+.GL14UQ51UQ5/1

=V1GL14WC1+.GL14UC01/1

			Date	1/24/2023	Volvo Trucks North America	Valiant TMS	FESTO DQ CONNECTION QN4	Drawing name: =2V01&EFS-EL_KF1	= V1GL14UQ51UQ8
			Ed.	MKLEPADLO					+ V1GL14UQ51UQ8
			Appr		P6700 Framing - Cell 2V01, KF1	Scale 1:1		Document type: EFS / Project nr: 22-16152	Page 1 / 1630
Modification	Date	Name	Original		Replacement of / Replaced by				

0	1	2	3	4	5	6	7	8	9

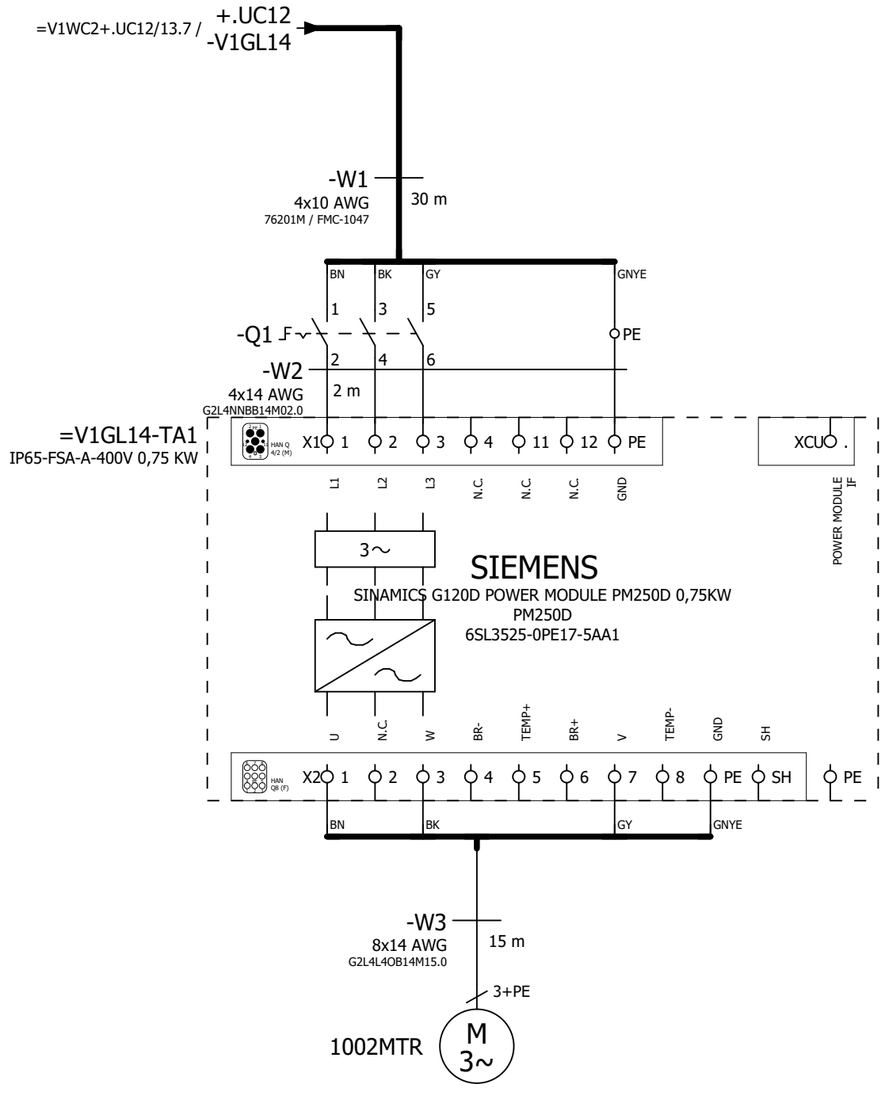

=V1GL14UQ51UQ8+.GL14UQ51UQ8/1

=V1GM11GM1WC1+.GM11UC01/1

			Date	1/24/2023	Volvo Trucks North America		Valiant TMS	Incoming power	Drawing name: =2V01&EFS-EL_KF1	= V1GL14WC1
			Ed.	MKLEPADLO						+ V1GL14UC01
			Appr		P6700 Framing - Cell 2V01, KF1				Document type: EFS	Project nr: 22-16152
Modification	Date	Name	Original		Replacement of	Replaced by	Scale 1:1			Page 1 / 1630

0	1	2	3	4	5	6	7	8	9

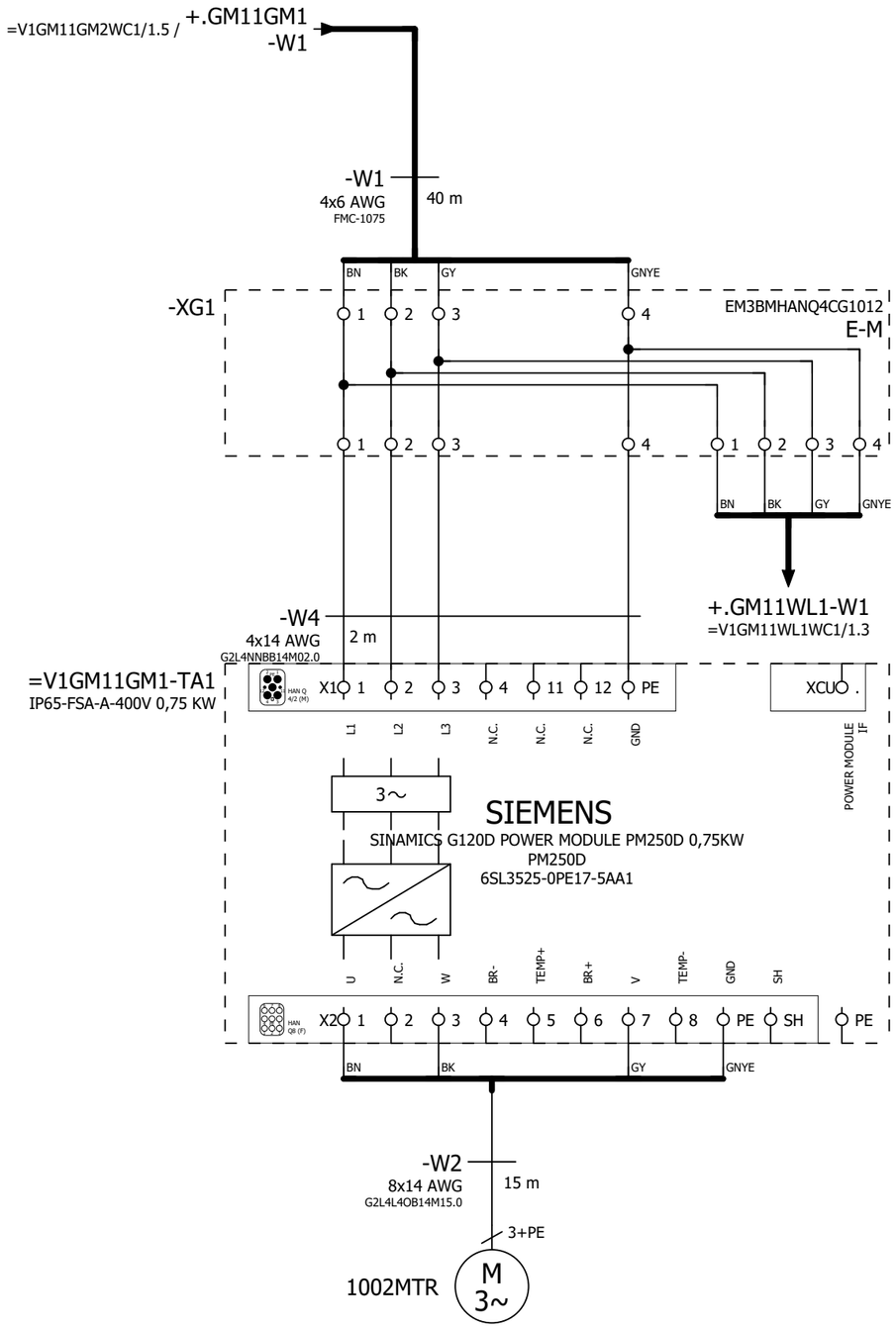

=V1GL14WC1+.GL14UC01/1

=V1GM11GM2WC1/1

			Date	1/24/2023	Volvo Trucks North America		Valiant TMS	Incoming power	Drawing name: =2V01&EFS-EL_KF1	= V1GM11GM1WC1
			Ed.	MKLEPADLO						+ V1GM11UC01
			Appr		P6700 Framing - Cell 2V01, KF1				Document type: EFS	Project nr: 22-16152
Modification	Date	Name	Original		Replacement of	Replaced by	Scale 1:1			Page 1 / 1630

0	1	2	3	4	5	6	7	8	9

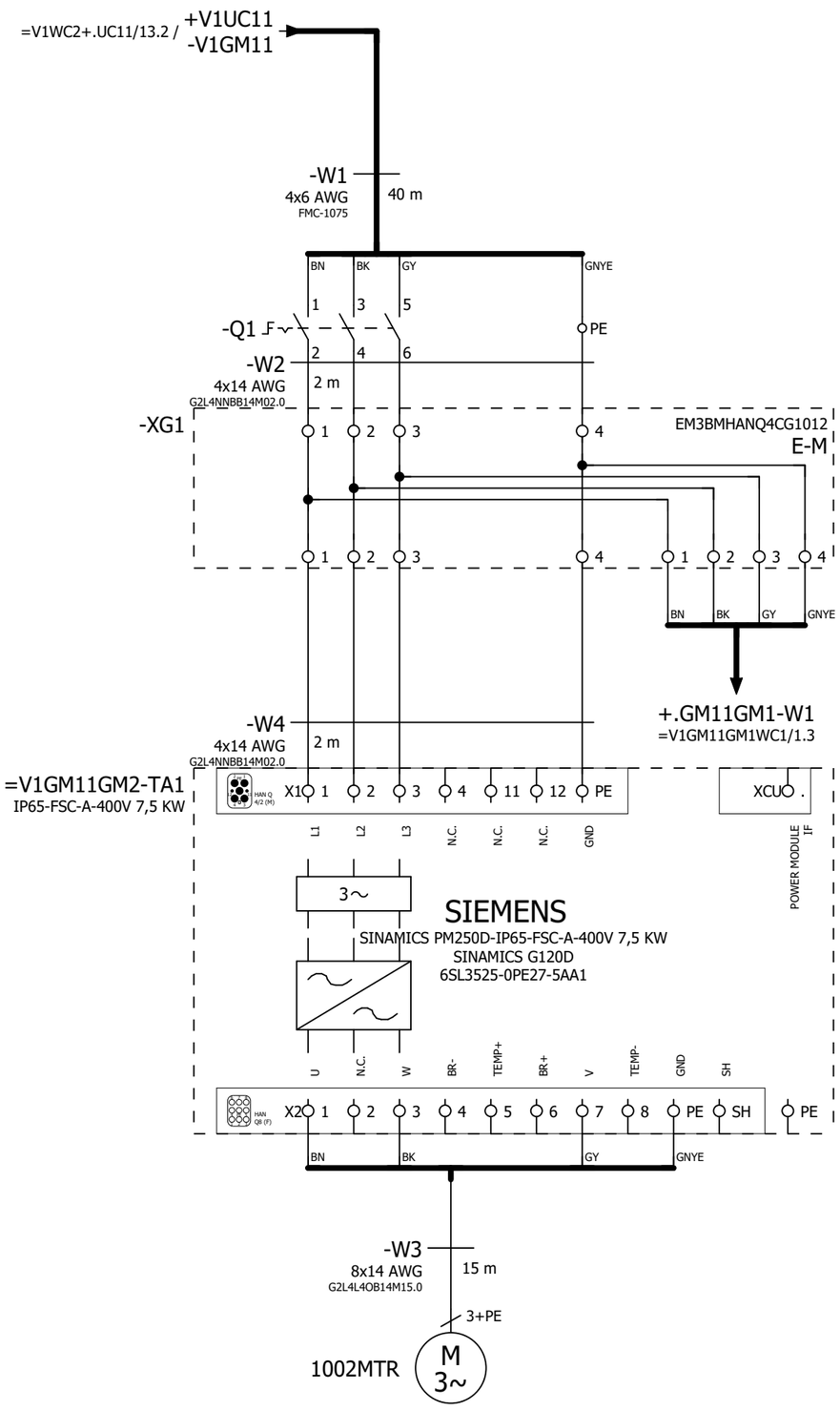

=V1GM11GM1WC1/1

=V1GM11WL1WC1/1

			Date	1/24/2023	Volvo Trucks North America		Valiant TMS	Incoming power	Drawing name: =2V01&EFS-EL_KF1	= V1GM11GM2WC1
			Ed.	MKLEPADLO						+ V1GM11UC01
			Appr		P6700 Framing - Cell 2V01, KF1				Document type: EFS	Project nr: 22-16152
Modification	Date	Name	Original		Replacement of	Replaced by	Scale 1:1			Page 1 / 1630

0	1	2	3	4	5	6	7	8	9

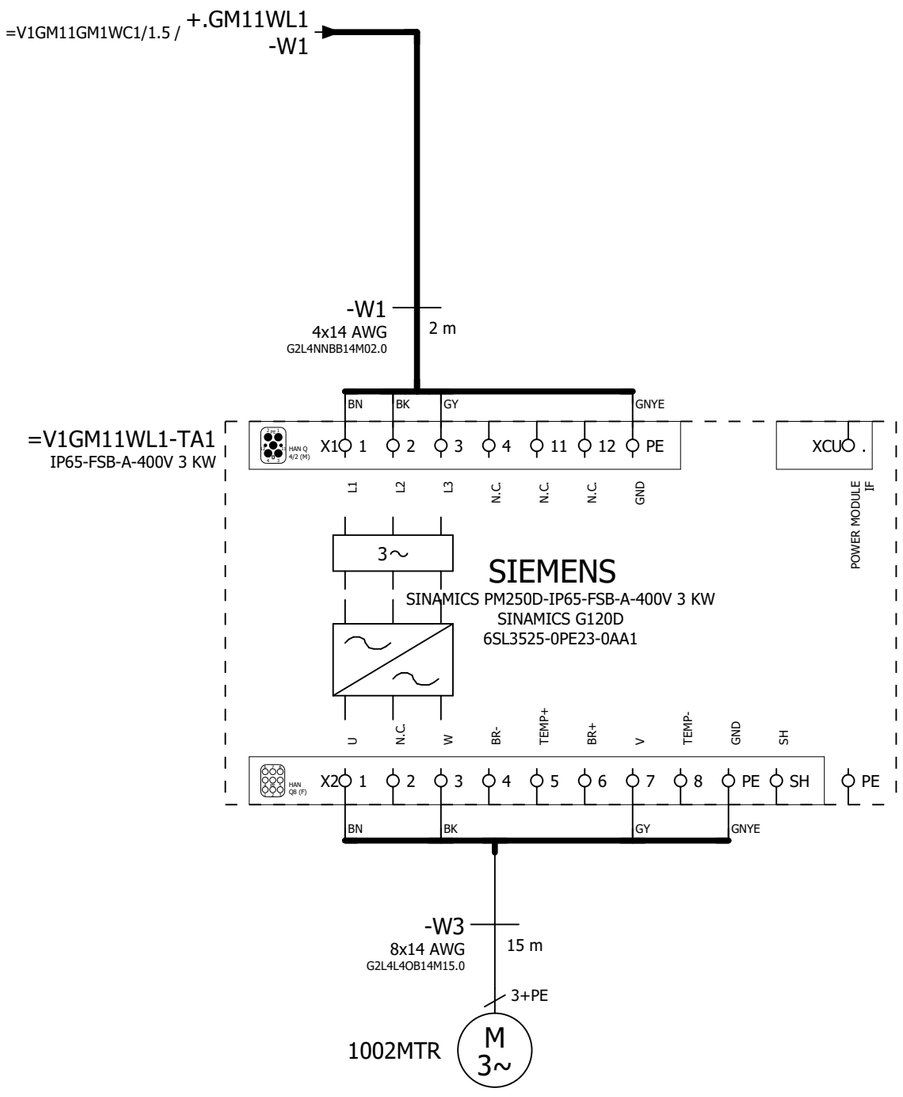

=V1GM11GM2WC1/1

=V1KF1+.UC11/1

			Date	1/24/2023	Volvo Trucks North America		Valiant TMS	Incoming power	Drawing name: =2V01&EFS-EL_KF1	= V1GM11WL1WC1
			Ed.	MKLEPADLO						+ V1GM11UC01
			Appr		P6700 Framing - Cell 2V01, KF1				Document type: EFS	Project nr: 22-16152
Modification	Date	Name	Original		Replacement of	Replaced by	Scale 1:1			Page 1 / 1630

0	1	2	3	4	5	6	7	8	9

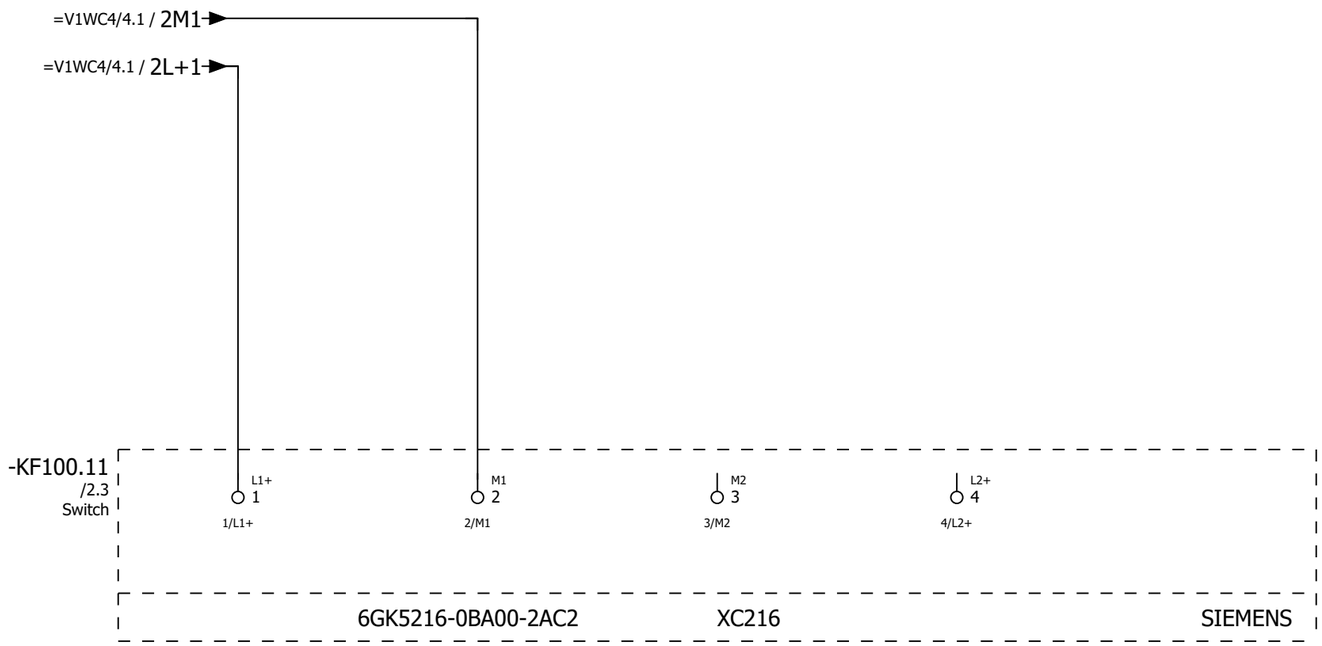

=V1GM11WL1WC1+.GM11UC01/1

2

			Date	1/24/2023	Volvo Trucks North America	Valiant TMS	Switch, Scalance X216	Drawing name: =2V01&EFS-EL_KF1	= V1KF1
			Ed.	MKLEPADLO					+ V1UC11
			Appr		P6700 Framing - Cell 2V01, KF1			Document type: EFS	Project nr: 22-16152
Modification	Date	Name	Original		Replacement of	Replaced by	Scale 1:1		Page 1 / 1630

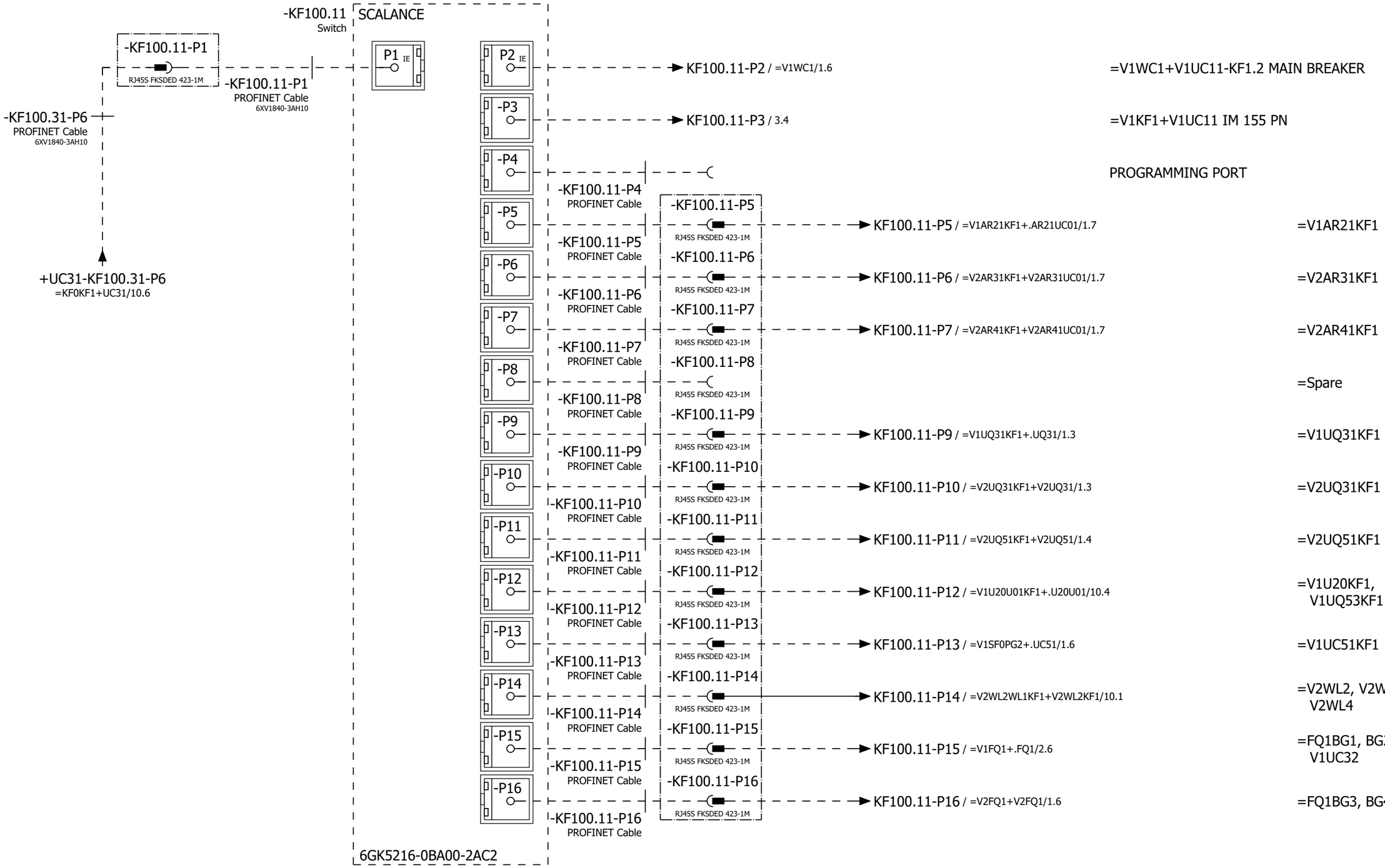

			Date	1/24/2023	Volvo Trucks North America	Valiant TMS	Network Overview	Drawing name: =2V01&EFS-EL_KF1	= V1KF1
			Ed.	MKLEPADLO					+ V1UC11
			Appr		P6700 Framing - Cell 2V01, KF1			Document type: EFS	Project nr: 22-16152
Modification	Date	Name	Original		Replacement of / Replaced by	Scale 1:1			Page 2 / 1630

0	1	2	3	4	5	6	7	8	9

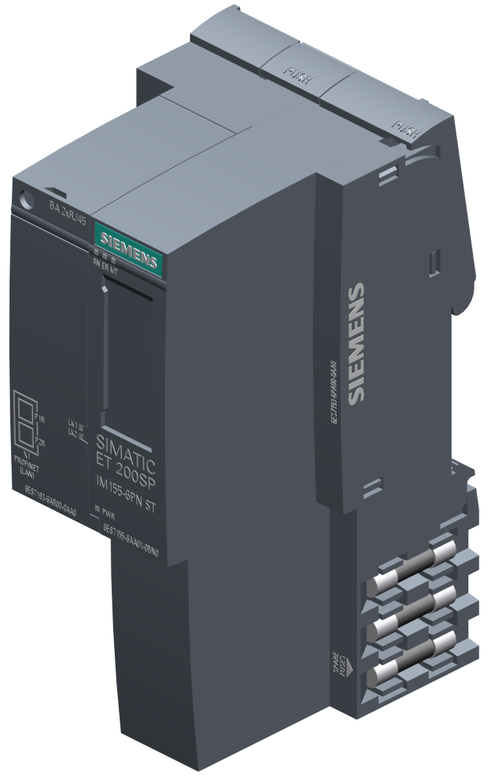

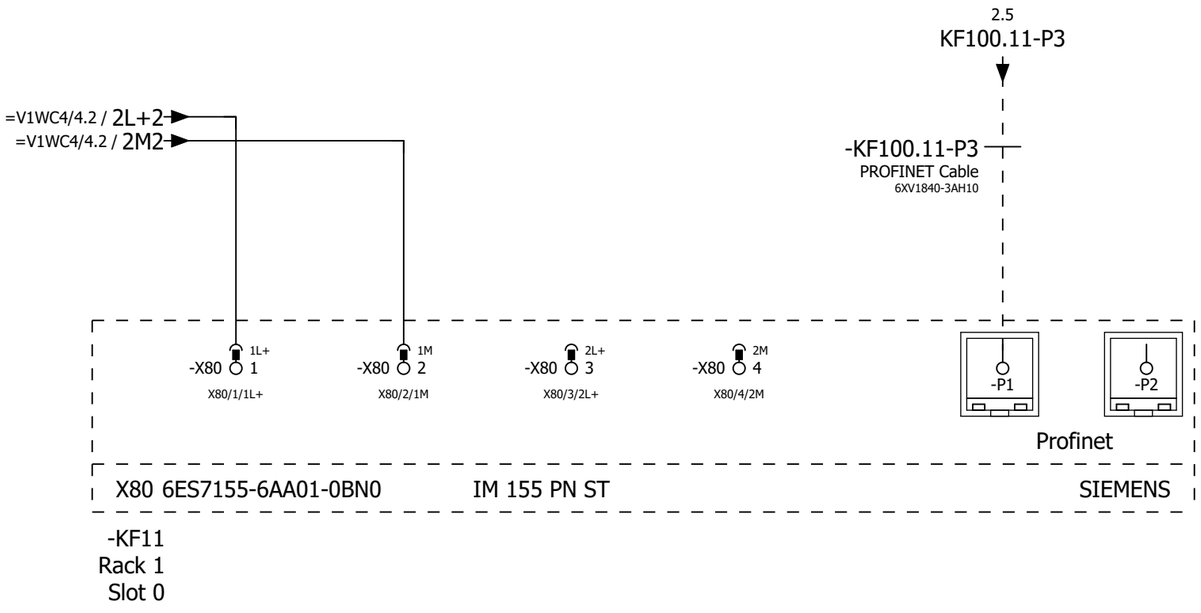

			Date	1/24/2023	Volvo Trucks North America	Valiant TMS	IM 155 PN	Drawing name: =2V01&EFS-EL_KF1	= V1KF1	
			Ed.	MKLEPADLO					+ V1UC11	
			Appr		P6700 Framing - Cell 2V01, KF1			Document type: EFS	Project nr: 22-16152	Page 3
Modification	Date	Name	Original		Replacement of	Replaced by	Scale 1:1			1630

0	1	2	3	4	5	6	7	8	9

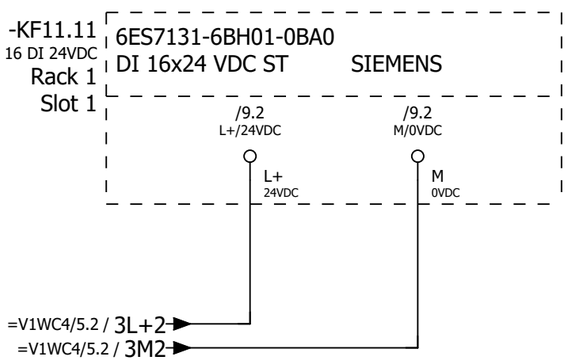

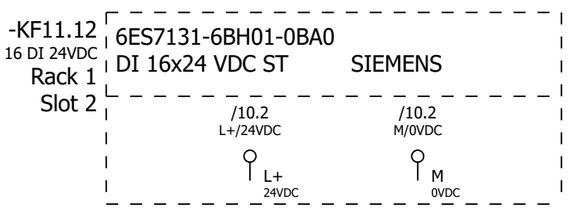

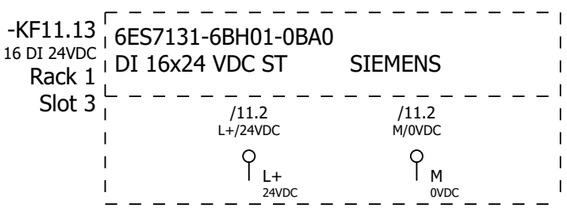

			Date	1/24/2023	Volvo Trucks North America	Valiant TMS	ET200S Wiring DI	Drawing name: =2V01&EFS-EL_KF1	= V1KF1
			Ed.	MKLEPADLO					+ V1UC11
			Appr		P6700 Framing - Cell 2V01, KF1			Document type: EFS	Project nr: 22-16152
Modification	Date	Name	Original		Replacement of / Replaced by	Scale 1:1			Page 4 / 1630

0	1	2	3	4	5	6	7	8	9

-KF11.14
16 DI 24VDC
Rack 1
Slot 4

6ES7131-6BH01-0BA0
DI 16x24 VDC ST SIEMENS

/12.2	/12.2
L+/24VDC	M/0VDC
L+ 24VDC	M 0VDC

4 6

			Date	1/24/2023	Volvo Trucks North America		Valiant TMS	ET200S Wiring DI	Drawing name: =2V01&EFS-EL_KF1	= V1KF1
			Ed.	MKLEPADLO						+ V1UC11
			Appr		P6700 Framing - Cell 2V01, KF1		Scale 1:1		Document type: EFS	Project nr: 22-16152
Modification	Date	Name	Original		Replacement of	Replaced by				Page 5 / 1630

0	1	2	3	4	5	6	7	8	9

-KF11.31
FDI 8 24VDC
Rack 1
Slot 5

6ES7136-6BA00-0CA0
F-DI 8x24VDC HF SIEMENS

/14.2 L+ 24VDC

/14.2 M 0VDC

-KF11.32
FDI 8 24VDC
Rack 1
Slot 6

6ES7136-6BA00-0CA0
F-DI 8x24VDC HF SIEMENS

/15.2 L+ 24VDC

/15.2 M 0VDC

5 7

			Date	1/24/2023	Volvo Trucks North America	Valiant TMS	ET200S Wiring F-DI	Drawing name: =2V01&EFS-EL_KF1	= V1KF1
			Ed.	MKLEPADLO					+ V1UC11
			Appr		P6700 Framing - Cell 2V01, KF1			Document type: EFS	Project nr: 22-16152
Modification	Date	Name	Original		Replacement of	Replaced by	Scale 1:1		Page 6 / 1630

0	1	2	3	4	5	6	7	8	9

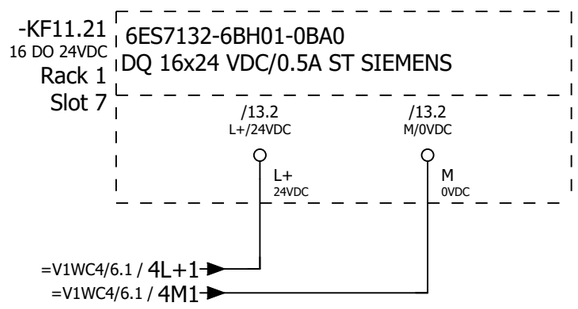

			Date	1/24/2023	Volvo Trucks North America	Valiant TMS	ET200S Wiring DQ	Drawing name: =2V01&EFS-EL_KF1	= V1KF1	
			Ed.	MKLEPADLO					+ V1UC11	
			Appr		P6700 Framing - Cell 2V01, KF1			Document type: EFS	Project nr: 22-16152	Page 7
Modification	Date	Name	Original		Replacement of / Replaced by	Scale 1:1				1630

-KF11.41
=V1FQ1/1.0
=V1FQ1/2.0
=V1FQ1/3.0
=V1FQ1/4.0
/16.1
FDO 4 24VDC
Rack 1
Slot 8

6ES7136-6DB00-0CA0 + BU15-P16+A0+2B F-DQ 4X24VDC/2A PM HF SIEMENS

/16.2 L+ 24VDC

/16.2 M 0VDC

-KF11.42
/17.1
FDO 4 24VDC
Rack 1
Slot 9

6ES7136-6DB00-0CA0 + BU15-P16+A0+2B F-DQ 4X24VDC/2A PM HF SIEMENS

/17.2 L+ 24VDC

/17.2 M 0VDC

			Date	1/24/2023	Volvo Trucks North America	Valiant TMS	ET200S Wiring F-DQ	Drawing name: =2V01&EFS-EL_KF1	= V1KF1	
			Ed.	MKLEPADLO					+ V1UC11	
			Appr		P6700 Framing - Cell 2V01, KF1			Document type: EFS	Project nr: 22-16152	Page 8
Modification	Date	Name	Original		Replacement of	Replaced by	Scale 1:1			1630

0	1	2	3	4	5	6	7	8	9

-KF11.11
/4.0

ET 200SP SIEMENS
DI 16x24 VDC ST

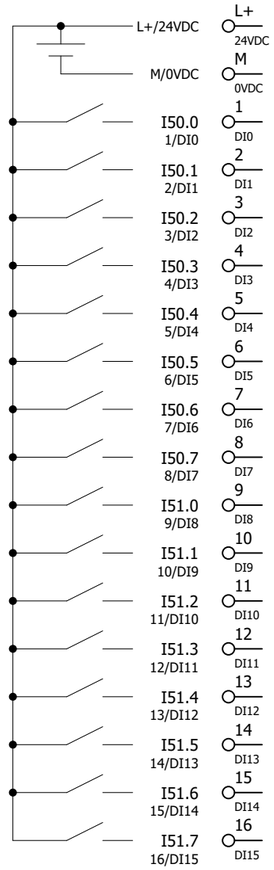

6ES7131-6BH01-0BA0

/4.1			
/4.2			
=V1WC2/41.2	I50.0	SPARE	
=V1WC2/41.3	=V1UC11-FC1	Monitoring 480 VAC	
=V1WC4/1.4	=V1WC4+V1UC11-TA1_I	Monitoring 24VDC	
=V1WC4/11.4	=V1WC4+V1UC11-TA2_I	Monitoring 24VDC	
=V1WC4/1.0	=V1WC4+V1UC11-FC11_I	Monitoring 24VDC	
=V1WC4/11.0	=V1WC4+V1UC11-FC12_I	Monitoring 24VDC	
=V1WC2/41.7	I50.6	SPARE	
=V1WC2/41.8	I50.7	SPARE	
=V1WC2/41.2	I51.0	SPARE	
=V1WC2/41.3	I51.1	SPARE	
=V1WC2/41.4	I51.2	SPARE	
=V1WC2/41.4	I51.3	SPARE	
=V1WC2/41.5	I51.4	SPARE	
=V1WC2/41.6	I51.5	SPARE	
=V1WC2/41.7	I51.6	SPARE	
=V1WC2/41.8	I51.7	SPARE	

8 10

			Date	1/24/2023	Volvo Trucks North America		Valiant TMS	ET200S DI Overview KF11.11	Drawing name: =2V01&EFS-EL_KF1	= V1KF1	
			Ed.	MKLEPADLO						+ V1UC11	
			Appr		P6700 Framing - Cell 2V01, KF1		Scale 1:1		Document type: EFS	Project nr: 22-16152	Page 9
Modification	Date	Name	Original		Replacement of	Replaced by					1630

0	1	2	3	4	5	6	7	8	9

-KF11.12
/4.3

ET 200SP SIEMENS
DI 16x24 VDC ST

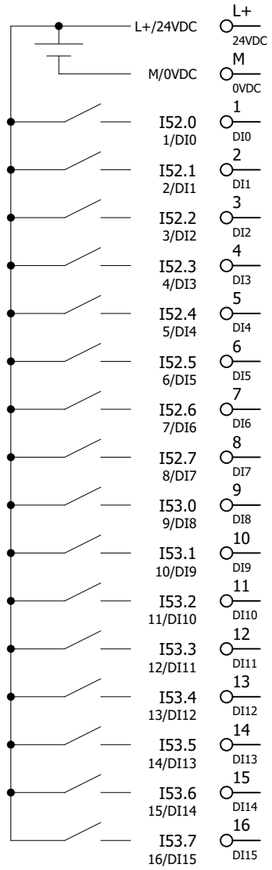

/4.3			
/4.4			
=V1WC2/42.2	=V1AR21-FC1	Monitoring 480 VAC	
=V1WC2/42.3	=V2AR21-FC1	Monitoring 480 VAC	
=V1WC2/42.4	=V2AR23-FC1	Monitoring 480 VAC	
=V1WC2/42.4	=V2AR31-FC1	Monitoring 480 VAC	
=V1WC2/42.5	=V2AR41-FC1	Monitoring 480 VAC	
=V1WC2/42.6	=V2AR43-FC1	Monitoring 480 VAC	
=V1WC2/42.7	=V2GL16-FC1	Monitoring 480 VAC	
=V1WC2/42.8	=V2GL18-FC1	Monitoring 480 VAC	
=V1WC2/42.2	=V1GM11-FC1	Monitoring 480 VAC	
=V1WC2/42.3	=V2AR31XQ41-FC1	Monitoring 480 VAC	
=V1WC2/42.4	=V2UC81-FC1	Monitoring 480 VAC	
=V1WC2/42.4	I53.3	SPARE	
=V1WC2/42.5	I53.4	SPARE	
=V1WC2/42.6	I53.5	SPARE	
=V1WC2/42.7	I53.6	SPARE	
=V1WC2/42.8	I53.7	SPARE	

6ES7131-6BH01-0BA0

			Date	1/24/2023	Volvo Trucks North America	Valiant TMS	ET200S DI Overview KF11.12	Drawing name: =2V01&EFS-EL_KF1	= V1KF1
			Ed.	MKLEPADLO					+ V1UC11
			Appr		P6700 Framing - Cell 2V01, KF1			Document type: EFS	Project nr: 22-16152
Modification	Date	Name	Original		Replacement of / Replaced by	Scale 1:1			Page 10 / 1630

0	1	2	3	4	5	6	7	8	9

-KF11.13
/4.5

ET 200SP SIEMENS
DI 16x24 VDC ST

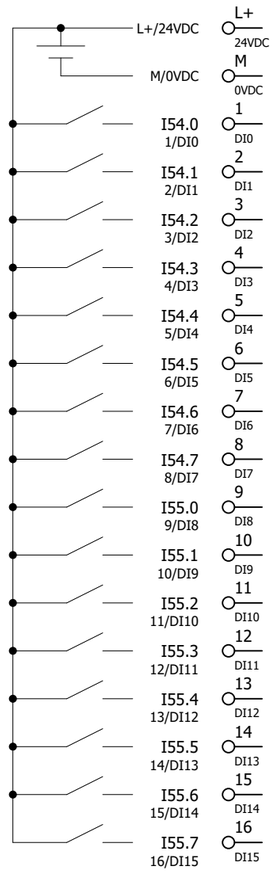

L+/24VDC	L+ 24VDC	/4.6	
M/0VDC	M 0VDC	/4.7	
I54.0 1/DI0	1 DI0	=V1WC2/43.2	I54.0 SPARE
I54.1 2/DI1	2 DI1	=V1WC2/43.3	I54.1 SPARE
I54.2 3/DI2	3 DI2	=V1WC2/43.4	I54.2 SPARE
I54.3 4/DI3	4 DI3	=V1WC2/43.4	I54.3 SPARE
I54.4 5/DI4	5 DI4	=V1WC2/43.5	I54.4 SPARE
I54.5 6/DI5	6 DI5	=V1WC2/43.6	I54.5 SPARE
I54.6 7/DI6	7 DI6	=V1WC2/43.7	I54.6 SPARE
I54.7 8/DI7	8 DI7	=V1WC2/43.8	I54.7 SPARE
I55.0 9/DI8	9 DI8	=V1WC3/4.2	=V1WC3+V1UC11-FC2 Monitoring 120 VAC
I55.1 10/DI9	10 DI9	=V1WC3/4.3	=V1WC3+V1UC11-FC3 Monitoring 120 VAC
I55.2 11/DI10	11 DI10	=V1WC3/4.4	=V1WC3+V1UC11-FC4 Monitoring 120 VAC
I55.3 12/DI11	12 DI11	=V1WC3/4.4	=V1WC3+V1UC11-FC6 Monitoring 120 VAC
I55.4 13/DI12	13 DI12	=V1WC3/4.5	=V1WC3+V1UC11-FC7 Monitoring 120 VAC
I55.5 14/DI13	14 DI13	=V1WC3/4.6	=V1WC3+V1UC11-FC8 Monitoring 120 VAC
I55.6 15/DI14	15 DI14	=V1WC3/4.7	=V1WC3+V1UC11-FC9 Monitoring 120 VAC
I55.7 16/DI15	16 DI15	=V1WC3/4.8	I55.7 SPARE

6ES7131-6BH01-0BA0

10 12

			Date	1/24/2023	Volvo Trucks North America	Valiant TMS	ET200S DI Overview KF11.13	Drawing name: =2V01&EFS-EL_KF1	= V1KF1
			Ed.	MKLEPADLO					+ V1UC11
			Appr		P6700 Framing - Cell 2V01, KF1			Document type: EFS	Project nr: 22-16152
Modification	Date	Name	Original		Replacement of	Replaced by	Scale 1:1		Page 11 / 1630

0	1	2	3	4	5	6	7	8	9

-KF11.14
/5.0

ET 200SP SIEMENS
DI 16x24 VDC ST

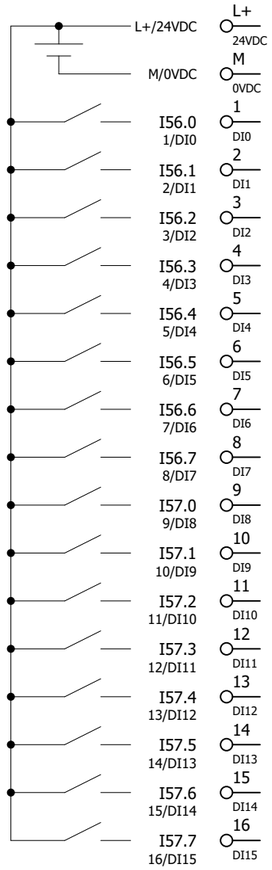

	/5.1		
	/5.2		
	=V1FQ1/1.8	-KF11.51RQ	Monitoring Safety contactors 11.1L+
	=V1FQ1/2.8	-KF11.52RQ	Monitoring Safety contactors 12.1L+
	=V1FQ1/3.8	-KF11.53RQ	Monitoring Safety contactors 13.1L+
	=V1FQ1/4.8	-KF11.54RQ	Monitoring Safety contactors 14.1L+
		I56.4	SPARE
		I56.5	SPARE
	=KH3+KH3/1.6	=KH3-BF1_I	Monitoring Main Water Filter Dirty
	=KH3+KH3/2.6	=KH3-BF2_I	Monitoring Main Water On
		I57.0	SPARE
	=KH0+KH0/1.6	=KH0-BP1_I	Monitoring Main AIR On
	=KH0+KH0/3.6	=KH0-BP3_I	Monitoring S030 AIR On
	=KH0+KH0/4.6	=KH0-BP4_I	Monitoring S040 AIR On
		I57.4	SPARE
		I57.5	SPARE
	=V1SF0SF1+.UC71/1.1	=V1SF0SF1+V1UC71-SF1.1	S020 Operator Run Button 1
		I57.7	SPARE

6ES7131-6BH01-0BA0

11 13

			Date	1/24/2023	Volvo Trucks North America	Valiant TMS	ET200S DI Overview KF11.14	Drawing name: =2V01&EFS-EL_KF1	= V1KF1
			Ed.	MKLEPADLO					+ V1UC11
			Appr		P6700 Framing - Cell 2V01, KF1			Document type: EFS	Project nr: 22-16152
Modification	Date	Name	Original		Replacement of / Replaced by	Scale 1:1			Page 12 / 1630

0	1	2	3	4	5	6	7	8	9

-KF11.21
/7.1
16 DO 24VDC

ET 200SP SIEMENS
DQ 16x24 VDC/0.5A ST

L+/24VDC	L+ 24VDC	/7.1			
M/0VDC	M 0VDC	/7.2			
Q50.0 1/DQ0	1 DQ0	=V1PZ1PF1+.UC61/1.3	=V1PZ1PF1+UC61-PF1_1	S020 Indication column Blue	
Q50.1 2/DQ1	2 DQ1	=V1PZ1PF1+.UC61/1.4	=V1PZ1PF1+UC61-PF1_2	S020 Indication column Green	
Q50.2 3/DQ2	3 DQ2	=V1PZ1PF1+.UC61/1.4	=V1PZ1PF1+UC61-PF1_3	S020 Indication column Yellow	
Q50.3 4/DQ3	4 DQ3	=V1PZ1PF1+.UC61/1.5	=V1PZ1PF1+UC61-PF1_4	S020 Indication column Red	
Q50.4 5/DQ4	5 DQ4	=V1PZ1PF1+.UC61/1.6	=V1PZ1PF1+UC61-PF1_5	S020 Indication column Siren	
Q50.5 6/DQ5	6 DQ5		Q50.5	SPARE	
Q50.6 7/DQ6	7 DQ6		Q50.6	SPARE	
Q50.7 8/DQ7	8 DQ7		Q50.7	SPARE	
Q51.0 9/DQ8	9 DQ8		Q51.0	SPARE	
Q51.1 10/DQ9	10 DQ9		Q51.1	SPARE	
Q51.2 11/DQ10	11 DQ10		Q51.2	SPARE	
Q51.3 12/DQ11	12 DQ11		Q51.3	SPARE	
Q51.4 13/DQ12	13 DQ12		Q51.4	SPARE	
Q51.5 14/DQ13	14 DQ13		Q51.5	SPARE	
Q51.6 15/DQ14	15 DQ14		Q51.6	SPARE	
Q51.7 16/DQ15	16 DQ15		Q51.7	SPARE	

6ES7132-6BH01-0BA0

			Date	1/24/2023	Volvo Trucks North America	Valiant TMS	ET200S DQ Overview KF11.21	Drawing name: =2V01&EFS-EL_KF1	= V1KF1	
			Ed.	MKLEPADLO					+ V1UC11	
			Appr		P6700 Framing - Cell 2V01, KF1			Document type: EFS	Project nr: 22-16152	Page 13
Modification	Date	Name	Original		Replacement of / Replaced by	Scale 1:1				1630

0	1	2	3	4	5	6	7	8	9

-KF11.31
/6.0

ET 200SP SIEMENS
F-DI 8x24VDC HF

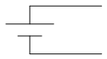

	L+ 24VDC	/6.1			
	M 0VDC	/6.2			
I5050.0	1 DI0	=V1FQ1+.FQ1/11.3	=V1FQ1-BR12.1	S020 Light Curtains 1&2 Ch1	
	9 VS0	=V1FQ1+.FQ1/11.3			
I5050.1	2 DI1	=V1FQ1+.FQ1/12.3	=V2FQ1-BR14.1	S030/035 Light Curtain 1 Ch1	
	10 VS1	=V1FQ1+.FQ1/12.3			
I5050.2	3 DI2	=V1U20FQ1+.U20/1.3	=V1U20FQ1-BG01	S020 Lift Assist Clear Ch1	
	11 VS2	=V1U20FQ1+.U20/1.3			
I5050.3	4 DI3		I5050.3	SPARE	
	12 VS3				
I5050.4	5 DI4	=V1FQ1+.FQ1/11.4	=V1FQ1-BR12.2	S020 Light Curtains 1&2 Ch2	
	13 VS4	=V1FQ1+.FQ1/11.5			
I5050.5	6 DI5	=V1FQ1+.FQ1/12.4	=V2FQ1-BR14.2	S030/035 Light Curtain 1 Ch2	
	14 VS5	=V1FQ1+.FQ1/12.5			
I5050.6	7 DI6	=V1U20FQ1+.U20/1.4	=V1U20FQ1-BG01	S020 Lift Assist Clear Ch2	
	15 VS6	=V1U20FQ1+.U20/1.5			
I5050.7	8 DI7		I5050.7	SPARE	
	16 VS7				

6ES7136-6BA00-0CA0

13 15

			Date	1/24/2023	Volvo Trucks North America	Valiant TMS	ET200S F-DI Overview KF11.31	Drawing name: =2V01&EFS-EL_KF1	= V1KF1
			Ed.	MKLEPADLO					+ V1UC11
			Appr		P6700 Framing - Cell 2V01, KF1			Document type: EFS	Project nr: 22-16152
Modification	Date	Name	Original		Replacement of	Replaced by	Scale 1:1		Page 14 / 1630

0	1	2	3	4	5	6	7	8	9

-KF11.32
/6.3

ET 200SP SIEMENS
F-DI 8x24VDC HF

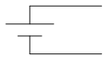

	L+ 24VDC	/6.3			
	M 0VDC	/6.4			
I5056.0	1 DI0	=V1SF0SF1+.UC71/1.5	=V1SF0SF1+V1UC71-SF1.4	S020 Operator Emergency Stop 1 Ch1	
	9 VS0	=V1SF0SF1+.UC71/1.5			
I5056.1	2 DI1		I5056.1	SPARE	
	10 VS1				
I5056.2	3 DI2		I5056.2	SPARE	
	11 VS2				
I5056.3	4 DI3		I5056.3	SPARE	
	12 VS3				
I5056.4	5 DI4	=V1SF0SF1+.UC71/1.6	=V1SF0SF1+V1UC71-SF1.6	S020 Operator Emergency Stop 1 Ch2	
	13 VS4	=V1SF0SF1+.UC71/1.6			
I5056.5	6 DI5		I5056.5	SPARE	
	14 VS5				
I5056.6	7 DI6		I5056.6	SPARE	
	15 VS6				
I5056.7	8 DI7		I5056.7	SPARE	
	16 VS7				

6ES7136-6BA00-0CA0

			Date	1/24/2023	Volvo Trucks North America	Valiant TMS	ET200S F-DI Overview KF11.32	Drawing name: =2V01&EFS-EL_KF1	= V1KF1
			Ed.	MKLEPADLO					+ V1UC11
			Appr		P6700 Framing - Cell 2V01, KF1			Document type: EFS	Project nr: 22-16152
Modification	Date	Name	Original		Replacement of / Replaced by	Scale 1:1			Page 15 / 1630

0	1	2	3	4	5	6	7	8	9

-KF11.41
/8.0

ET 200SP SIEMENS
F-DQ 4X24VDC/2A PM HF

/8.1
/8.2

Q5062.0	1 DQ-P0	=V1FQ1/1.1	-KF11.51	Switched Power 1 11.1L+	
Q5062.0	5				
QX.0	9 DQ-M0				
QX.0	13				
Q5062.1	2 DQ-P1	=V1FQ1/2.1	-KF11.52	Switched Power 2 12.1L+	
Q5062.1	6				
QX.1	10 DQ-M1				
QX.1	14				
Q5062.2	3 DQ-P2	=V1FQ1/3.1	-KF11.53	Switched Power 3 13.1L+	
Q5062.2	7				
QX.2	11 DQ-M2				
QX.2	15				
Q5062.3	4 DQ-P3	=V1FQ1/4.1	-KF11.54	Switched Power 4 14.1L+	
Q5062.3	8				
QX.3	12 DQ-M3				
QX.3	16				

6ES7136-6DB00-0CA0 + BU15-P16+A0+2B

15 17

			Date	1/24/2023	Volvo Trucks North America	Valiant TMS	ET200S F-DQ Overview KF11.41	Drawing name: =2V01&EFS-EL_KF1	= V1KF1
			Ed.	MKLEPADLO					+ V1UC11
			Appr		P6700 Framing - Cell 2V01, KF1			Document type: EFS	Project nr: 22-16152
Modification	Date	Name	Original		Replacement of	Replaced by	Scale 1:1		Page 16 / 1630

0	1	2	3	4	5	6	7	8	9

-KF11.42
/8.5

ET 200SP SIEMENS
F-DQ 4X24VDC/2A PM HF

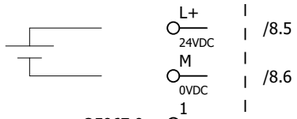

Q5067.0	Q5067.0	SPARE
Q5067.1	Q5067.1	SPARE
Q5067.2	Q5067.2	SPARE
Q5067.3	Q5067.3	SPARE

6ES7136-6DB00-0CA0 + BU15-P16+A0+2B

			Date	1/24/2023	Volvo Trucks North America	Valiant TMS	ET200S F-DQ Overview KF11.42	Drawing name: =2V01&EFS-EL_KF1	= V1KF1
			Ed.	MKLEPADLO					+ V1UC11
			Appr		P6700 Framing - Cell 2V01, KF1			Document type: EFS	Project nr: 22-16152
Modification	Date	Name	Original		Replacement of	Replaced by	Scale 1:1		Page 17 / 1630

0	1	2	3	4	5	6	7	8	9

-KF11.51
=V1FQ1/1.2
=V1WC4/12.1

ET 200SP SIEMENS
F-RQ 1x24VDC/24..230VAC/5A

Q5072.0	1 RQ01+	=V1WC4/12.2	11L+	
	2 RQ01-	=V1WC4/12.2	11.1L+	
Q5072.1	3 RQ02+	=V1WC4/12.3	11L+	
	4 RQ02-	=V1WC4/12.4	11.1L+	
	9 IN P	=V1FQ1/1.3	Switched Power 1 11.1L+P	
	10 OUT P	=V1FQ1/1.4	SPARE	
	11 IN M	=V1FQ1/1.4	Switched Power 1 11.1L+M	
	12 OUT M	=V1FQ1/1.5	SPARE	
	1A AUX			
	2A AUX			
	3A AUX			
	4A AUX			

6ES7136-6RA00-0BF0 + BU20-P8+A4+0B

			Date	1/24/2023	Volvo Trucks North America	Valiant TMS	ET200S F-RQ Overview KF11.51	Drawing name: =2V01&EFS-EL_KF1	= V1KF1
			Ed.	MKLEPADLO					+ V1UC11
			Appr		P6700 Framing - Cell 2V01, KF1			Document type: EFS	Project nr: 22-16152
Modification	Date	Name	Original		Replacement of / Replaced by	Scale 1:1			Page 18 / 1630

0	1	2	3	4	5	6	7	8	9

-KF11.52
=V1FQ1/2.2
=V1WC4/13.1

ET 200SP SIEMENS
F-RQ 1x24VDC/24..230VAC/5A

Q5073.0	1 RQ01+	=V1WC4/13.2	12L+	
	2 RQ01-	=V1WC4/13.2	12.1L+	
Q5073.1	3 RQ02+	=V1WC4/13.3	12L+	
	4 RQ02-	=V1WC4/13.4	12.1L+	
	9 IN P	=V1FQ1/2.3	Switched Power 2 12.1L+P	
	10 OUT P	=V1FQ1/2.4	SPARE	
	11 IN M	=V1FQ1/2.4	Switched Power 2 12.1L+M	
	12 OUT M	=V1FQ1/2.5	SPARE	
	1A AUX			
	2A AUX			
	3A AUX			
	4A AUX			

6ES7136-6RA00-0BF0 + BU20-P8+A4+0B

			Date	1/24/2023	Volvo Trucks North America		Valiant TMS	ET200S F-RQ Overview KF11.52	Drawing name: =2V01&EFS-EL_KF1	= V1KF1	
			Ed.	MKLEPADLO						+ V1UC11	
			Appr		P6700 Framing - Cell 2V01, KF1		Scale 1:1		Document type: EFS	Project nr: 22-16152	Page 19 / 1630
Modification	Date	Name	Original		Replacement of	Replaced by					

0	1	2	3	4	5	6	7	8	9

-KF11.53
=V1FQ1/3.2
=V1WC4/14.1

ET 200SP SIEMENS
F-RQ 1x24VDC/24..230VAC/5A

Q5074.0	1 RQ01+	=V1WC4/14.2	13L+	
	2 RQ01-	=V1WC4/14.2	13.1L+	
Q5074.1	3 RQ02+	=V1WC4/14.3	13L+	
	4 RQ02-	=V1WC4/14.4	13.1L+	
	9 IN P	=V1FQ1/3.3	Switched Power 3 13.1L+P	
	10 OUT P	=V1FQ1/3.4	SPARE	
	11 IN M	=V1FQ1/3.4	Switched Power 3 13.1L+M	
	12 OUT M	=V1FQ1/3.5	SPARE	
	1A AUX			
	2A AUX			
	3A AUX			
	4A AUX			

6ES7136-6RA00-0BF0 + BU20-P8+A4+0B

			Date	1/24/2023	Volvo Trucks North America	Valiant TMS	ET200S F-RQ Overview KF11.53	Drawing name: =2V01&EFS-EL_KF1	= V1KF1
			Ed.	MKLEPADLO					+ V1UC11
			Appr		P6700 Framing - Cell 2V01, KF1			Document type: EFS	Project nr: 22-16152
Modification	Date	Name	Original		Replacement of / Replaced by	Scale 1:1			Page 20 / 1630

0	1	2	3	4	5	6	7	8	9

-KF11.54
=V1FQ1/4.2
=V1WC4/15.1

ET 200SP SIEMENS
F-RQ 1x24VDC/24..230VAC/5A

Q5075.0	1 RQ01+	=V1WC4/15.2	14L+	
	2 RQ01-	=V1WC4/15.2	14.1L+	
Q5075.1	3 RQ02+	=V1WC4/15.3	14L+	
	4 RQ02-	=V1WC4/15.4	14.1L+	
	9 IN P	=V1FQ1/4.3	Switched Power 4 14.1L+P	
	10 OUT P	=V1FQ1/4.4	SPARE	
	11 IN M	=V1FQ1/4.4	Switched Power 4 14.1L+M	
	12 OUT M	=V1FQ1/4.5	SPARE	
	1A AUX			
	2A AUX			
	3A AUX			
	4A AUX			

6ES7136-6RA00-0BF0 + BU20-P8+A4+0B

			Date	1/24/2023	Volvo Trucks North America		Valiant TMS	ET200S F-RQ Overview KF11.54	Drawing name: =2V01&EFS-EL_KF1	= V1KF1
			Ed.	MKLEPADLO						+ V1UC11
			Appr		P6700 Framing - Cell 2V01, KF1		Scale 1:1		Document type: EFS	Project nr: 22-16152
Modification	Date	Name	Original		Replacement of	Replaced by				Page 21 / 1630

0	1	2	3	4	5	6	7	8	9

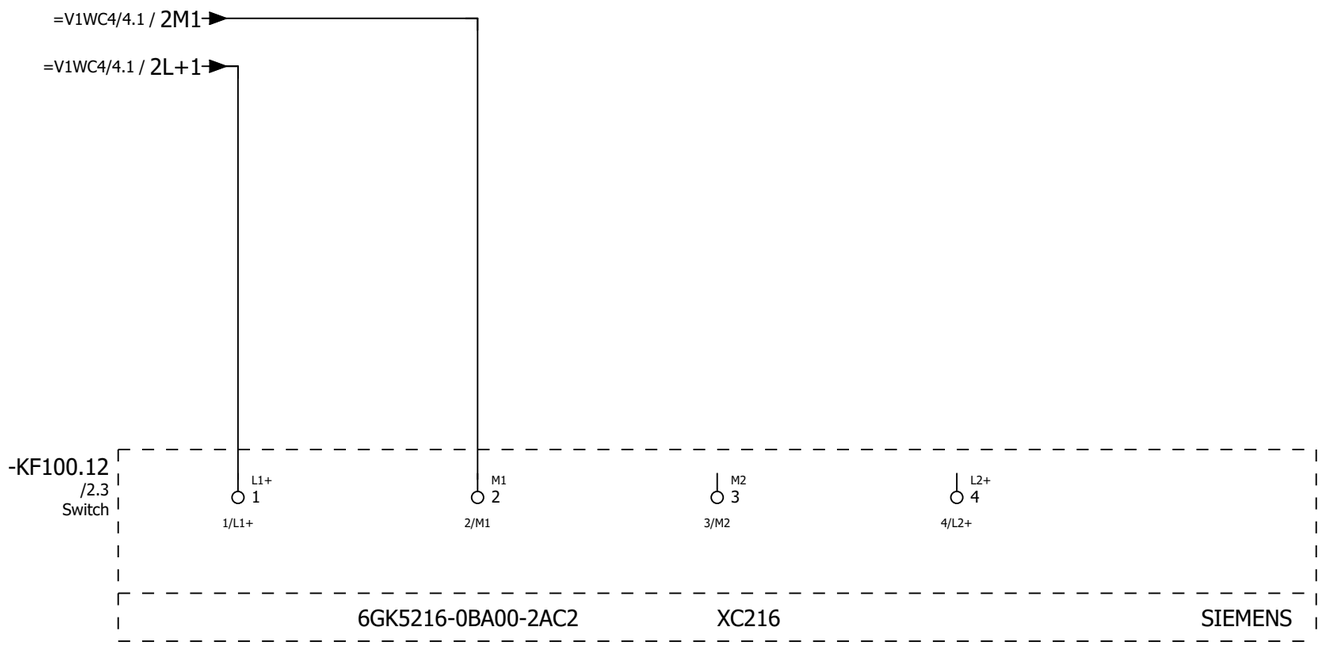

+.UC11/21

2

			Date	1/24/2023	Volvo Trucks North America	Valiant TMS	Switch, Scalance X216	Drawing name: =2V01&EFS-EL_KF1	= V1KF1
			Ed.	MKLEPADLO					+ V1UC12
			Appr		P6700 Framing - Cell 2V01, KF1			Document type: EFS	Project nr: 22-16152
Modification	Date	Name	Original		Replacement of / Replaced by	Scale 1:1			Page 1 / 1630

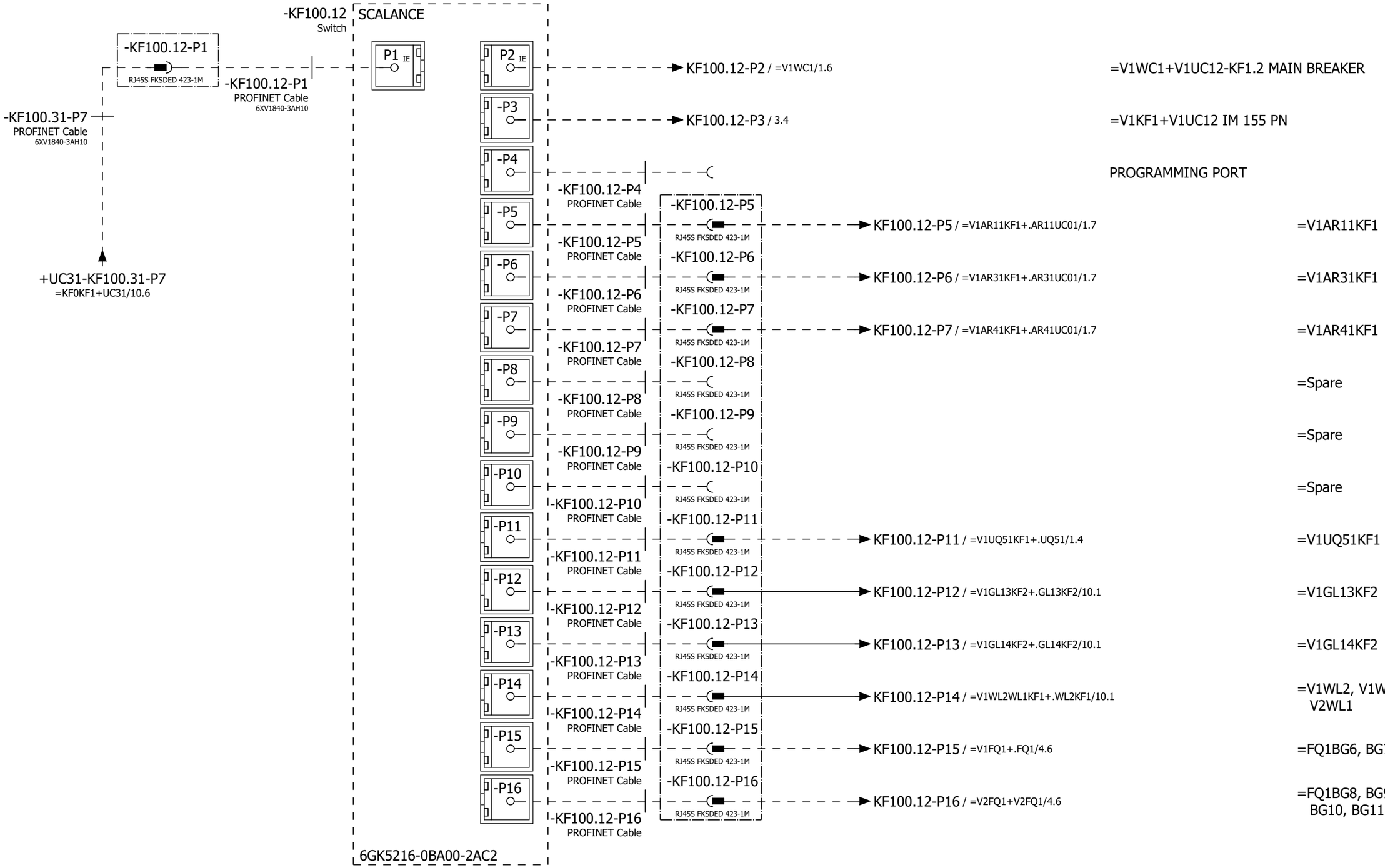

			Date	1/24/2023	Volvo Trucks North America		Valiant TMS	Network Overview	Drawing name: =2V01&EFS-EL_KF1	= V1KF1
			Ed.	MKLEPADLO						+ V1UC12
			Appr		P6700 Framing - Cell 2V01, KF1				Document type: EFS	Project nr: 22-16152
Modification	Date	Name	Original		Replacement of	Replaced by	Scale 1:1			Page 2 / 1630

0	1	2	3	4	5	6	7	8	9

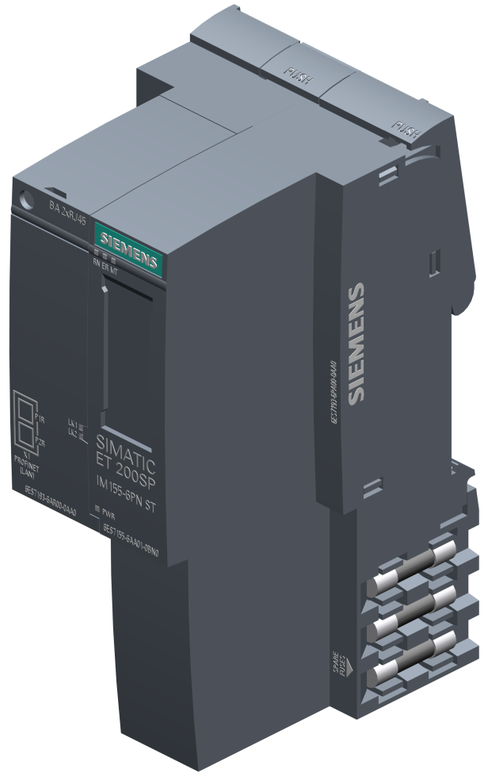

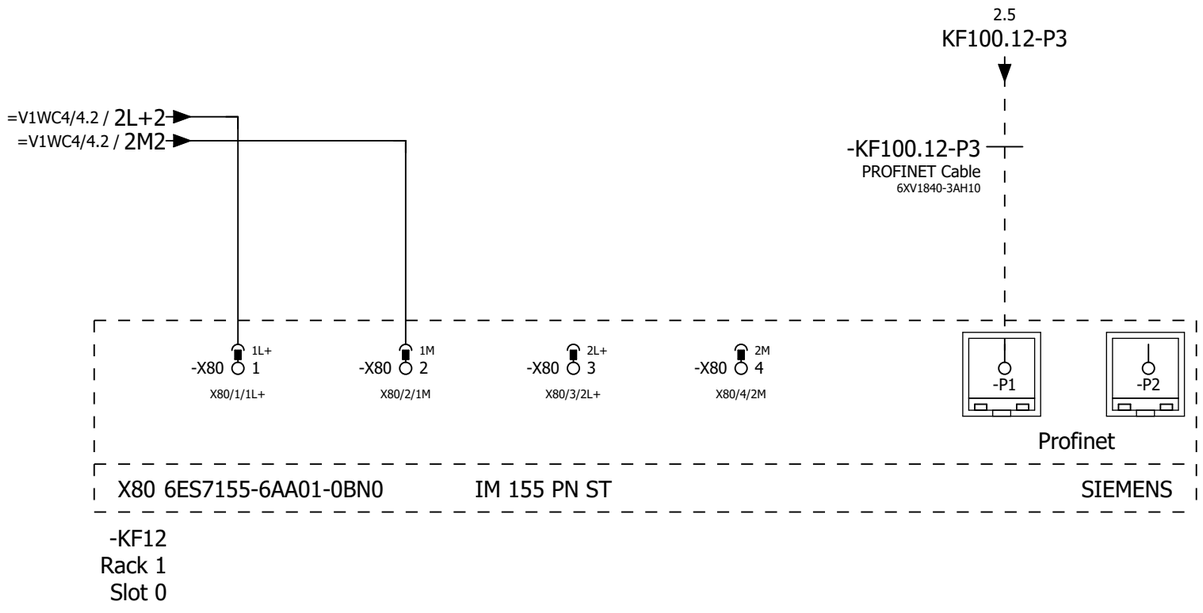

2 4

			Date	1/24/2023	Volvo Trucks North America	Valiant TMS	IM 155 PN	Drawing name: =2V01&EFS-EL_KF1	= V1KF1
			Ed.	MKLEPADLO					+ V1UC12
			Appr		P6700 Framing - Cell 2V01, KF1			Document type: EFS	Project nr: 22-16152
Modification	Date	Name	Original		Replacement of	Replaced by	Scale 1:1		Page 3 / 1630

0	1	2	3	4	5	6	7	8	9

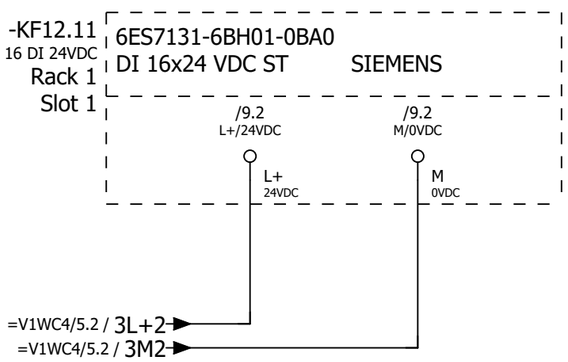

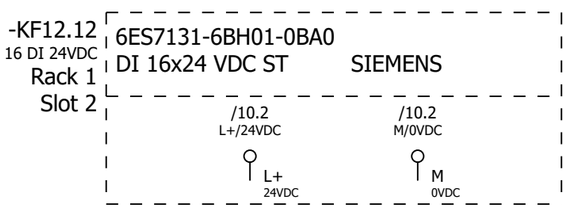

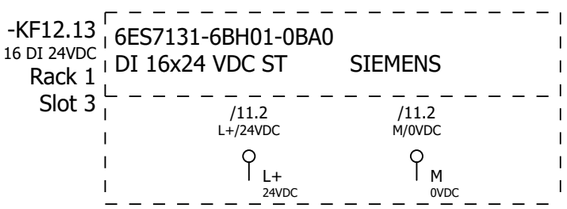

			Date	1/24/2023	Volvo Trucks North America	Valiant TMS	ET200S Wiring DI	Drawing name: =2V01&EFS-EL_KF1	= V1KF1
			Ed.	MKLEPADLO					+ V1UC12
			Appr		P6700 Framing - Cell 2V01, KF1			Document type: EFS	Project nr: 22-16152
Modification	Date	Name	Original		Replacement of / Replaced by	Scale 1:1			Page 4 / 1630

0	1	2	3	4	5	6	7	8	9

-KF12.14
16 DI 24VDC
Rack 1
Slot 4

6ES7131-6BH01-0BA0
DI 16x24 VDC ST SIEMENS

/12.2
L+/24VDC
L+
24VDC

/12.2
M/0VDC
M
0VDC

4 6

			Date	1/24/2023	Volvo Trucks North America	Valiant TMS	ET200S Wiring DI	Drawing name: =2V01&EFS-EL_KF1	= V1KF1
			Ed.	MKLEPADLO					+ V1UC12
			Appr		P6700 Framing - Cell 2V01, KF1			Document type: EFS	Project nr: 22-16152
Modification	Date	Name	Original		Replacement of	Replaced by	Scale 1:1		Page 5 / 1630

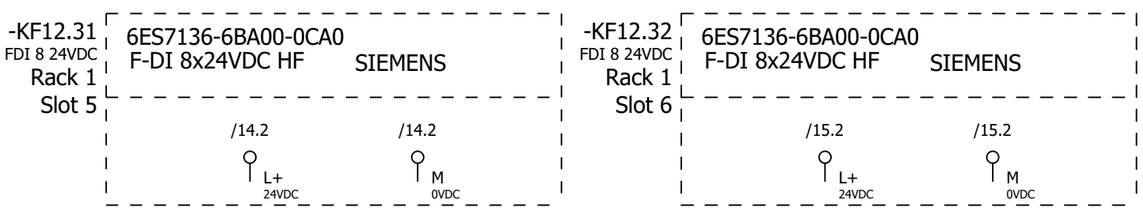

5 7

			Date	1/24/2023	Volvo Trucks North America	Valiant TMS	ET200S Wiring F-DI	Drawing name: =2V01&EFS-EL_KF1		= V1KF1	
			Ed.	MKLEPADLO						+ V1UC12	
			Appr		P6700 Framing - Cell 2V01, KF1			Document type: EFS	Project nr: 22-16152	Page	6
Modification	Date	Name	Original		Replacement of / Replaced by	Scale 1:1					1630

0	1	2	3	4	5	6	7	8	9

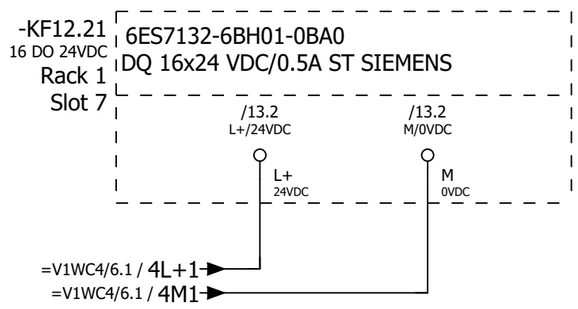

			Date	1/24/2023	Volvo Trucks North America	Valiant TMS	ET200S Wiring DQ	Drawing name: =2V01&EFS-EL_KF1	= V1KF1	
			Ed.	MKLEPADLO					+ V1UC12	
			Appr		P6700 Framing - Cell 2V01, KF1			Document type: EFS	Project nr: 22-16152	Page 7
Modification	Date	Name	Original		Replacement of / Replaced by	Scale 1:1				1630

0	1	2	3	4	5	6	7	8	9

-KF12.41
=V1FQ1/1.0
=V1FQ1/2.0
=V1FQ1/3.0
=V1FQ1/4.0
/16.1
FDO 4 24VDC
Rack 1
Slot 8

6ES7136-6DB00-0CA0 + BU15-P16+A0+2B F-DQ 4X24VDC/2A PM HF SIEMENS

/16.2 L+ 24VDC

/16.2 M 0VDC

-KF12.42
/17.1
FDO 4 24VDC
Rack 1
Slot 9

6ES7136-6DB00-0CA0 + BU15-P16+A0+2B F-DQ 4X24VDC/2A PM HF SIEMENS

/17.2 L+ 24VDC

/17.2 M 0VDC

			Date	1/24/2023	Volvo Trucks North America	Valiant TMS	ET200S Wiring F-DQ	Drawing name: =2V01&EFS-EL_KF1	= V1KF1
			Ed.	MKLEPADLO					+ V1UC12
			Appr		P6700 Framing - Cell 2V01, KF1			Document type: EFS	Project nr: 22-16152
Modification	Date	Name	Original		Replacement of	Replaced by	Scale 1:1		Page 8 / 1630

0	1	2	3	4	5	6	7	8	9

-KF12.11
/4.0

ET 200SP SIEMENS
DI 16x24 VDC ST

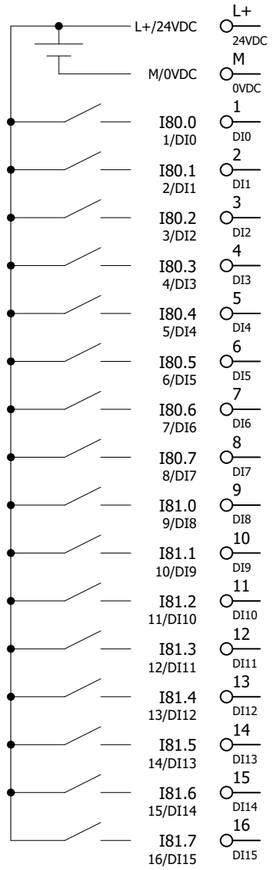

/4.1			
/4.2			
=V1WC2/41.2	I80.0	SPARE	
=V1WC2/41.3	=V1UC12-FC1	Monitoring 480 VAC	
=V1WC4/1.4	=V1WC4+V1UC12-TA1_I	Monitoring 24VDC	
=V1WC4/11.4	=V1WC4+V1UC12-TA2_I	Monitoring 24VDC	
=V1WC4/1.0	=V1WC4+V1UC12-FC11_I	Monitoring 24VDC	
=V1WC4/11.0	=V1WC4+V1UC12-FC12_I	Monitoring 24VDC	
=V1WC2/41.7	I80.6	SPARE	
=V1WC2/41.8	I80.7	SPARE	
=V1WC2/41.2	I81.0	SPARE	
=V1WC2/41.3	I81.1	SPARE	
=V1WC2/41.4	I81.2	SPARE	
=V1WC2/41.4	I81.3	SPARE	
=V1WC2/41.5	I81.4	SPARE	
=V1WC2/41.6	I81.5	SPARE	
=V1WC2/41.7	I81.6	SPARE	
=V1WC2/41.8	I81.7	SPARE	

6ES7131-6BH01-0BA0

0	1	2	3	4	5	6	7	8	9

-KF12.12
/4.3

ET 200SP SIEMENS
DI 16x24 VDC ST

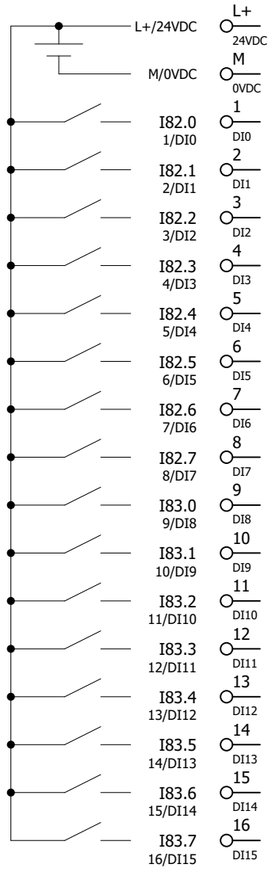

/4.3			
/4.4			
=V1WC2/42.2	=V1AR11-FC1	Monitoring 480 VAC	
=V1WC2/42.3	=V1AR31-FC1	Monitoring 480 VAC	
=V1WC2/42.4	=V1AR41-FC1	Monitoring 480 VAC	
=V1WC2/42.4	=V2AR22-FC1	Monitoring 480 VAC	
=V1WC2/42.5	=V2AR24-FC1	Monitoring 480 VAC	
=V1WC2/42.6	=V2AR32-FC1	Monitoring 480 VAC	
=V1WC2/42.7	=V2AR42-FC1	Monitoring 480 VAC	
=V1WC2/42.8	=V2AR44-FC1	Monitoring 480 VAC	
=V1WC2/42.2	=V1AR31XQ41-FC1	Monitoring 480 VAC	
=V1WC2/42.3	=V2AR32XQ41-FC1	Monitoring 480 VAC	
=V1WC2/42.4	=V1GL13-FC1	Monitoring 480 VAC	
=V1WC2/42.4	=V1GL14-FC1	Monitoring 480 VAC	
=V1WC2/42.5	=V2GL15-FC1	Monitoring 480 VAC	
=V1WC2/42.6	=V2GL17-FC1	Monitoring 480 VAC	
=V1WC2/42.7	=V1WL2-FC1	Monitoring 480 VAC	
=V1WC2/42.8	=V1WL3-FC1	Monitoring 480 VAC	

6ES7131-6BH01-0BA0

0	1	2	3	4	5	6	7	8	9

-KF12.13
/4.5

ET 200SP SIEMENS
DI 16x24 VDC ST

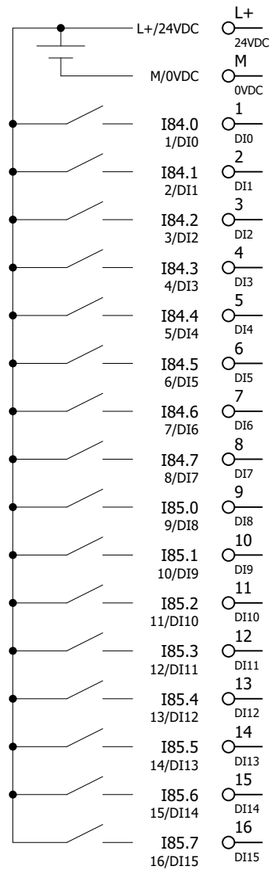

/4.6			
/4.7			
=V1WC2/43.2	=V2WL1-FC1	Monitoring 480 VAC	
=V1WC2/43.3	=V2WL2-FC1	Monitoring 480 VAC	
=V1WC2/43.4	=V2WL3-FC1	Monitoring 480 VAC	
=V1WC2/43.4	=V2WL4-FC1	Monitoring 480 VAC	
=V1WC2/43.5	I84.4	SPARE	
=V1WC2/43.6	I84.5	SPARE	
=V1WC2/43.7	I84.6	SPARE	
=V1WC2/43.8	I84.7	SPARE	
=V1WC3/4.2	=V1WC3+V1UC12-FC2	Monitoring 120 VAC	
=V1WC3/4.3	=V1WC3+V1UC12-FC3	Monitoring 120 VAC	
=V1WC3/4.4	=V1WC3+V1UC12-FC4	Monitoring 120 VAC	
=V1WC3/4.4	=V1WC3+V1UC12-FC6	Monitoring 120 VAC	
=V1WC3/4.5	=V1WC3+V1UC12-FC7	Monitoring 120 VAC	
=V1WC3/4.6	=V1WC3+V1UC12-FC8	Monitoring 120 VAC	
=V1WC3/4.7	=V1WC3+V1UC12-FC9	Monitoring 120 VAC	
=V1WC3/4.8	I85.7	SPARE	

6ES7131-6BH01-0BA0

			Date	1/24/2023	Volvo Trucks North America	Valiant TMS	ET200S DI Overview KF12.13	Drawing name: =2V01&EFS-EL_KF1	= V1KF1
			Ed.	MKLEPADLO					+ V1UC12
			Appr		P6700 Framing - Cell 2V01, KF1			Document type: EFS	Project nr: 22-16152
Modification	Date	Name	Original		Replacement of / Replaced by	Scale 1:1			Page 11 / 1630

0	1	2	3	4	5	6	7	8	9

-KF12.14
/5.0

ET 200SP SIEMENS
DI 16x24 VDC ST

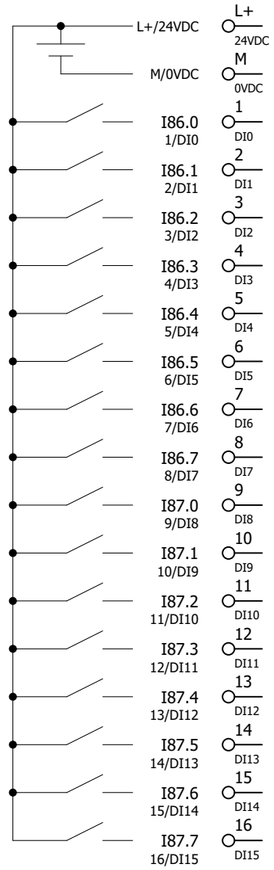

L+/24VDC	L+ 24VDC	/5.1	
M/0VDC	M 0VDC	/5.2	
I86.0 1/DI0	1 DI0	=V1FQ1/1.8	-KF12.51RQ Monitoring Safety contactors 11.1L+
I86.1 2/DI1	2 DI1	=V1FQ1/2.8	-KF12.52RQ Monitoring Safety contactors 12.1L+
I86.2 3/DI2	3 DI2	=V1FQ1/3.8	-KF12.53RQ Monitoring Safety contactors 13.1L+
I86.3 4/DI3	4 DI3	=V1FQ1/4.8	-KF12.54RQ Monitoring Safety contactors 14.1L+
I86.4 5/DI4	5 DI4		I86.4 SPARE
I86.5 6/DI5	6 DI5		I86.5 SPARE
I86.6 7/DI6	7 DI6		I86.6 SPARE
I86.7 8/DI7	8 DI7		I86.7 SPARE
I87.0 9/DI8	9 DI8	=KH0+KH0/2.6	=KH0-BP2_I Monitoring S010 Media Panel AIR On
I87.1 10/DI9	10 DI9	=KH0+KH0/5.6	=KH0-BP5_I Monitoring GL13 At Unload Conveyor AIR On
I87.2 11/DI10	11 DI10	=KH0+KH0/6.6	=KH0-BP6_I Monitoring GL14 At Unload Conveyor AIR On
I87.3 12/DI11	12 DI11		I87.3 SPARE
I87.4 13/DI12	13 DI12		I87.4 SPARE
I87.5 14/DI13	14 DI13		I87.5 SPARE
I87.6 15/DI14	15 DI14		I87.6 SPARE
I87.7 16/DI15	16 DI15		I87.7 SPARE

6ES7131-6BH01-0BA0

			Date	1/24/2023	Volvo Trucks North America	Valiant TMS	ET200S DI Overview KF12.14	Drawing name: =2V01&EFS-EL_KF1	= V1KF1
			Ed.	MKLEPADLO					+ V1UC12
			Appr		P6700 Framing - Cell 2V01, KF1			Document type: EFS	Project nr: 22-16152
Modification	Date	Name	Original		Replacement of / Replaced by	Scale 1:1			Page 12 / 1630

0	1	2	3	4	5	6	7	8	9

-KF12.21
/7.1
16 DO 24VDC

ET 200SP SIEMENS
DQ 16x24 VDC/0.5A ST

L+/24VDC	L+ 24VDC	/7.1			
M/0VDC	M 0VDC	/7.2			
Q80.0 1/DQ0	1 DQ0		Q80.0	SPARE	
Q80.1 2/DQ1	2 DQ1		Q80.1	SPARE	
Q80.2 3/DQ2	3 DQ2		Q80.2	SPARE	
Q80.3 4/DQ3	4 DQ3		Q80.3	SPARE	
Q80.4 5/DQ4	5 DQ4		Q80.4	SPARE	
Q80.5 6/DQ5	6 DQ5		Q80.5	SPARE	
Q80.6 7/DQ6	7 DQ6		Q80.6	SPARE	
Q80.7 8/DQ7	8 DQ7		Q80.7	SPARE	
Q81.0 9/DQ8	9 DQ8		Q81.0	SPARE	
Q81.1 10/DQ9	10 DQ9		Q81.1	SPARE	
Q81.2 11/DQ10	11 DQ10		Q81.2	SPARE	
Q81.3 12/DQ11	12 DQ11		Q81.3	SPARE	
Q81.4 13/DQ12	13 DQ12		Q81.4	SPARE	
Q81.5 14/DQ13	14 DQ13		Q81.5	SPARE	
Q81.6 15/DQ14	15 DQ14		Q81.6	SPARE	
Q81.7 16/DQ15	16 DQ15		Q81.7	SPARE	

6ES7132-6BH01-0BA0

			Date	1/24/2023	Volvo Trucks North America	Valiant TMS	ET200S DQ Overview KF12.21	Drawing name: =2V01&EFS-EL_KF1	= V1KF1	
			Ed.	MKLEPADLO					+ V1UC12	
			Appr		P6700 Framing - Cell 2V01, KF1	Scale 1:1		Document type: EFS	Project nr: 22-16152	Page 13 / 1630
Modification	Date	Name	Original		Replacement of	Replaced by				

0	1	2	3	4	5	6	7	8	9

-KF12.31
/6.0

ET 200SP SIEMENS
F-DI 8x24VDC HF

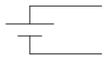

	L+ 24VDC	/6.1			
	M 0VDC	/6.2			
I5080.0	1 DI0	=V1FQ1+.FQ1/10.3	=V1FQ1-BR11.1	2V01/2V04 S150 Light Curtain 1 Ch1	
	9 VS0	=V1FQ1+.FQ1/10.3			
I5080.1	2 DI1		I5080.1	SPARE	
	10 VS1				
I5080.2	3 DI2		I5080.2	SPARE	
	11 VS2				
I5080.3	4 DI3		I5080.3	SPARE	
	12 VS3				
I5080.4	5 DI4	=V1FQ1+.FQ1/10.4	=V1FQ1-BR11.2	2V01/2V04 S150 Light Curtain 1 Ch2	
	13 VS4	=V1FQ1+.FQ1/10.5			
I5080.5	6 DI5		I5080.5	SPARE	
	14 VS5				
I5080.6	7 DI6		I5080.6	SPARE	
	15 VS6				
I5080.7	8 DI7		I5080.7	SPARE	
	16 VS7				

6ES7136-6BA00-0CA0

			Date	1/24/2023	Volvo Trucks North America		Valiant TMS	ET200S F-DI Overview KF12.31	Drawing name: =2V01&EFS-EL_KF1	= V1KF1
			Ed.	MKLEPADLO						+ V1UC12
			Appr		P6700 Framing - Cell 2V01, KF1		Scale 1:1		Document type: EFS	Project nr: 22-16152
Modification	Date	Name	Original		Replacement of	Replaced by				Page 14 / 1630

0	1	2	3	4	5	6	7	8	9

-KF12.32
/6.3

ET 200SP SIEMENS
F-DI 8x24VDC HF

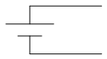

	L+ 24VDC	/6.3		
	M 0VDC	/6.4		
I5086.0	1 DI0		I5086.0	SPARE
	9 VS0			
I5086.1	2 DI1		I5086.1	SPARE
	10 VS1			
I5086.2	3 DI2		I5086.2	SPARE
	11 VS2			
I5086.3	4 DI3		I5086.3	SPARE
	12 VS3			
I5086.4	5 DI4		I5086.4	SPARE
	13 VS4			
I5086.5	6 DI5		I5086.5	SPARE
	14 VS5			
I5086.6	7 DI6		I5086.6	SPARE
	15 VS6			
I5086.7	8 DI7		I5086.7	SPARE
	16 VS7			

6ES7136-6BA00-0CA0

			Date	1/24/2023	Volvo Trucks North America	Valiant TMS	ET200S F-DI Overview KF12.32	Drawing name: =2V01&EFS-EL_KF1	= V1KF1
			Ed.	MKLEPADLO					+ V1UC12
			Appr		P6700 Framing - Cell 2V01, KF1			Document type: EFS	Project nr: 22-16152
Modification	Date	Name	Original		Replacement of / Replaced by	Scale 1:1			Page 15 / 1630

0	1	2	3	4	5	6	7	8	9

-KF12.41
/8.0

ET 200SP SIEMENS
F-DQ 4X24VDC/2A PM HF

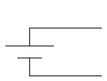

/8.1
/8.2

Q5092.0	1 DQ-P0	=V1FQ1/1.1	-KF12.51	Switched Power 1 11.1L+	
Q5092.0	5				
QX.0	9 DQ-M0				
QX.0	13				
Q5092.1	2 DQ-P1	=V1FQ1/2.1	-KF12.52	Switched Power 2 12.1L+	
Q5092.1	6				
QX.1	10 DQ-M1				
QX.1	14				
Q5092.2	3 DQ-P2	=V1FQ1/3.1	-KF12.53	Switched Power 3 13.1L+	
Q5092.2	7				
QX.2	11 DQ-M2				
QX.2	15				
Q5092.3	4 DQ-P3	=V1FQ1/4.1	-KF12.54	Switched Power 4 14.1L+	
Q5092.3	8				
QX.3	12 DQ-M3				
QX.3	16				

6ES7136-6DB00-0CA0 + BU15-P16+A0+2B

15 17

			Date	1/24/2023	Volvo Trucks North America	Valiant TMS	ET200S F-DQ Overview KF12.41	Drawing name: =2V01&EFS-EL_KF1	= V1KF1
			Ed.	MKLEPADLO					+ V1UC12
			Appr		P6700 Framing - Cell 2V01, KF1			Document type: EFS	Project nr: 22-16152
Modification	Date	Name	Original		Replacement of	Replaced by	Scale 1:1		Page 16 / 1630

0	1	2	3	4	5	6	7	8	9

-KF12.42
/8.5

ET 200SP SIEMENS
F-DQ 4X24VDC/2A PM HF

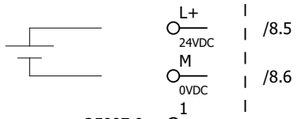

Q5097.0	Q5097.0	SPARE
Q5097.1	Q5097.1	SPARE
Q5097.2	Q5097.2	SPARE
Q5097.3	Q5097.3	SPARE

6ES7136-6DB00-0CA0 + BU15-P16+A0+2B

16 18

			Date	1/24/2023	Volvo Trucks North America	Valiant TMS	ET200S F-DQ Overview KF12.42	Drawing name: =2V01&EFS-EL_KF1	= V1KF1
			Ed.	MKLEPADLO					+ V1UC12
			Appr		P6700 Framing - Cell 2V01, KF1			Document type: EFS	Project nr: 22-16152
Modification	Date	Name	Original		Replacement of	Replaced by	Scale 1:1		Page 17 / 1630

0	1	2	3	4	5	6	7	8	9

-KF12.51
=V1FQ1/1.2
=V1WC4/12.1

ET 200SP SIEMENS
F-RQ 1x24VDC/24..230VAC/5A

Q5102.0	1 RQ01+	=V1WC4/12.2	11L+	
	2 RQ01-	=V1WC4/12.2	11.1L+	
Q5102.1	3 RQ02+	=V1WC4/12.3	11L+	
	4 RQ02-	=V1WC4/12.4	11.1L+	
	9 IN P	=V1FQ1/1.3	Switched Power 1 11.1L+P	
	10 OUT P	=V1FQ1/1.4	SPARE	
	11 IN M	=V1FQ1/1.4	Switched Power 1 11.1L+M	
	12 OUT M	=V1FQ1/1.5	SPARE	
	1A AUX			
	2A AUX			
	3A AUX			
	4A AUX			

6ES7136-6RA00-0BF0 + BU20-P8+A4+0B

			Date	1/24/2023	Volvo Trucks North America	Valiant TMS	ET200S F-RQ Overview KF12.51	Drawing name: =2V01&EFS-EL_KF1	= V1KF1
			Ed.	MKLEPADLO					+ V1UC12
			Appr		P6700 Framing - Cell 2V01, KF1			Document type: EFS	Project nr: 22-16152
Modification	Date	Name	Original		Replacement of / Replaced by	Scale 1:1			Page 18 / 1630

0	1	2	3	4	5	6	7	8	9

-KF12.52
=V1FQ1/2.2
=V1WC4/13.1

ET 200SP SIEMENS
F-RQ 1x24VDC/24..230VAC/5A

Q5103.0	1 RQ01+	=V1WC4/13.2	12L+	
	2 RQ01-	=V1WC4/13.2	12.1L+	
Q5103.1	3 RQ02+	=V1WC4/13.3	12L+	
	4 RQ02-	=V1WC4/13.4	12.1L+	
	9 IN P	=V1FQ1/2.3	Switched Power 2 12.1L+P	
	10 OUT P	=V1FQ1/2.4	SPARE	
	11 IN M	=V1FQ1/2.4	Switched Power 2 12.1L+M	
	12 OUT M	=V1FQ1/2.5	SPARE	
	1A AUX			
	2A AUX			
	3A AUX			
	4A AUX			

6ES7136-6RA00-0BF0 + BU20-P8+A4+0B

			Date	1/24/2023	Volvo Trucks North America	Valiant TMS	ET200S F-RQ Overview KF12.52	Drawing name: =2V01&EFS-EL_KF1	= V1KF1
			Ed.	MKLEPADLO					+ V1UC12
			Appr		P6700 Framing - Cell 2V01, KF1			Document type: EFS / Project nr: 22-16152	Page 19 / 1630
Modification	Date	Name	Original		Replacement of / Replaced by	Scale 1:1			

0	1	2	3	4	5	6	7	8	9

-KF12.53
=V1FQ1/3.2
=V1WC4/14.1

ET 200SP SIEMENS
F-RQ 1x24VDC/24..230VAC/5A

Q5104.0	1 RQ01+	=V1WC4/14.2	13L+	
	2 RQ01-	=V1WC4/14.2	13.1L+	
Q5104.1	3 RQ02+	=V1WC4/14.3	13L+	
	4 RQ02-	=V1WC4/14.4	13.1L+	
	9 IN P	=V1FQ1/3.3	Switched Power 3 13.1L+P	
	10 OUT P	=V1FQ1/3.4	SPARE	
	11 IN M	=V1FQ1/3.4	Switched Power 3 13.1L+M	
	12 OUT M	=V1FQ1/3.5	SPARE	
	1A AUX			
	2A AUX			
	3A AUX			
	4A AUX			

6ES7136-6RA00-0BF0 + BU20-P8+A4+0B

			Date	1/24/2023	Volvo Trucks North America		Valiant TMS	ET200S F-RQ Overview KF12.53	Drawing name: =2V01&EFS-EL_KF1	= V1KF1	
			Ed.	MKLEPADLO						+ V1UC12	
			Appr		P6700 Framing - Cell 2V01, KF1		Scale 1:1		Document type: EFS	Project nr: 22-16152	Page 20 / 1630
Modification	Date	Name	Original		Replacement of	Replaced by					

0	1	2	3	4	5	6	7	8	9

-KF12.54
=V1FQ1/4.2
=V1WC4/15.1

ET 200SP SIEMENS
F-RQ 1x24VDC/24..230VAC/5A

Q5105.0	1 RQ01+	=V1WC4/15.2	14L+
	2 RQ01-	=V1WC4/15.2	14.1L+
Q5105.1	3 RQ02+	=V1WC4/15.3	14L+
	4 RQ02-	=V1WC4/15.4	14.1L+
	9 IN P	=V1FQ1/4.3	Switched Power 4 14.1L+P
	10 OUT P	=V1FQ1/4.4	SPARE
	11 IN M	=V1FQ1/4.4	Switched Power 4 14.1L+M
	12 OUT M	=V1FQ1/4.5	SPARE
	1A AUX		
	2A AUX		
	3A AUX		
	4A AUX		

6ES7136-6RA00-0BF0 + BU20-P8+A4+0B

			Date	1/24/2023	Volvo Trucks North America	Valiant TMS	ET200S F-RQ Overview KF12.54	Drawing name: =2V01&EFS-EL_KF1	= V1KF1
			Ed.	MKLEPADLO					+ V1UC12
			Appr		P6700 Framing - Cell 2V01, KF1			Document type: EFS / Project nr: 22-16152	Page 21
Modification	Date	Name	Original		Replacement of / Replaced by	Scale 1:1			1630

0	1	2	3	4	5	6	7	8	9

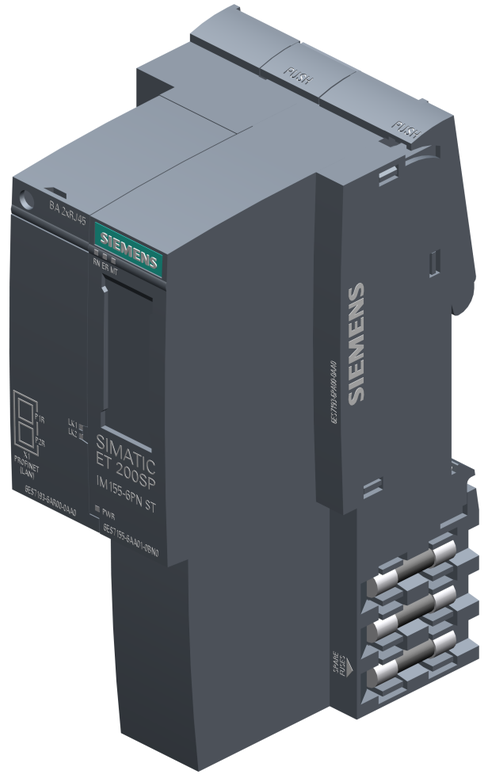

=V1FQ1+.FQ1/1.7
+.FQ1-KF100.11-P15

-KF100.11-P15
PROFINET Cable
6XV1840-3AH10

UC32-PNET1

-PNET1
PROFINET Cable
6XV1840-3AH10

=V1SF0PG1/1.6
-KF32-P2

=V1WC4/2.1 / 1L+1_1
=V1WC4/2.1 / 1M1_1

-X80 1L+ 1 X80/1/1L+
-X80 1M 2 X80/2/1M
-X80 2L+ 3 X80/3/2L+
-X80 2M 4 X80/4/2M
-P1
-P2
Profinet

X80 6ES7155-6AA01-0BN0 IM 155 PN ST SIEMENS

-KF32
Rack 1
Slot 0

+.UC12/21

2

			Date	1/24/2023	Volvo Trucks North America		Valiant TMS	IM 155 PN	Drawing name: =2V01&EFS-EL_KF1	= V1KF1
			Ed.	MKLEPADLO						+ V1UC32
			Appr		P6700 Framing - Cell 2V01, KF1				Document type: EFS	Project nr: 22-16152	Page 1
Modification	Date	Name	Original		Replacement of	Replaced by	Scale 1:1				1630

0	1	2	3	4	5	6	7	8	9

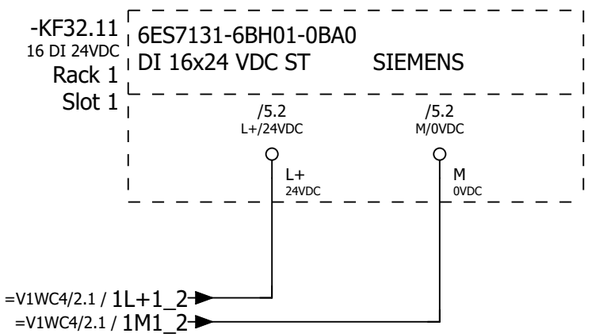

1 3

			Date	1/24/2023	Volvo Trucks North America		Valiant TMS	ET200S Wiring DI	Drawing name: =2V01&EFS-EL_KF1	= V1KF1	
			Ed.	MKLEPADLO						+ V1UC32	
			Appr		P6700 Framing - Cell 2V01, KF1		Scale 1:1		Document type: EFS	Project nr: 22-16152	Page 2
Modification	Date	Name	Original		Replacement of	Replaced by					1630

0	1	2	3	4	5	6	7	8	9

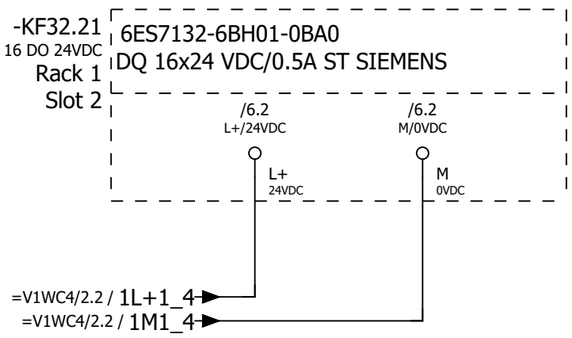

			Date	1/24/2023	Volvo Trucks North America	Valiant TMS	ET200S Wiring DO	Drawing name: =2V01&EFS-EL_KF1	= V1KF1	
			Ed.	MKLEPADLO					+ V1UC32	
			Appr		P6700 Framing - Cell 2V01, KF1			Document type: EFS	Project nr: 22-16152	Page 3
Modification	Date	Name	Original		Replacement of	Replaced by	Scale 1:1			1630

0	1	2	3	4	5	6	7	8	9

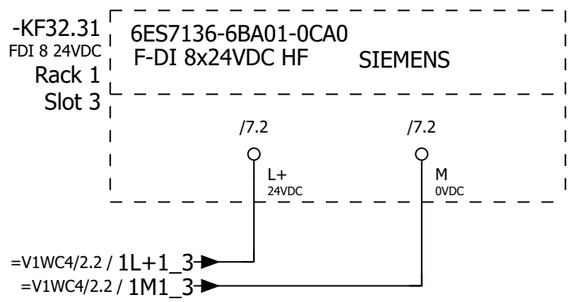

3 5

			Date	1/24/2023	Volvo Trucks North America		Valiant TMS	ET200S Wiring F-DI	Drawing name: =2V01&EFS-EL_KF1	= V1KF1	
			Ed.	MKLEPADLO						+ V1UC32	
			Appr		P6700 Framing - Cell 2V01, KF1		Scale 1:1		Document type: EFS	Project nr: 22-16152	Page 4
Modification	Date	Name	Original		Replacement of	Replaced by					1630

-KF32.11

ET 200SP SIEMENS
DI 16x24 VDC ST

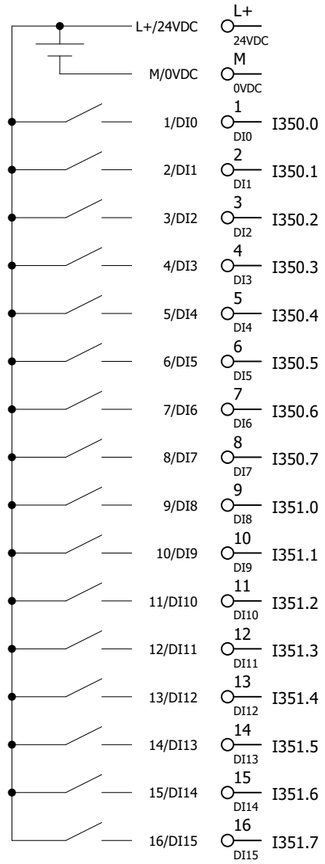

6ES7131-6BH01-0BA0

/2.1			
/2.2			
	I350.0	Spare	
	I350.1	Spare	
=V1SF0PG1/2.7	=V1SF1+V1UC32-SF3_4	Start auto PB	
	I350.3	Spare	
=V1SF0PG1/2.5	=V1SF1+V1UC32-SF1_4	Set PB	
=V1SF0PG1/2.2	=V1SF1+V1UC32-SF2_4	Reset PB	
	I350.6	Spare	
	I350.7	Spare	
=V1WC4/3.2	=V1WC4+V1UC32-FC1	Monitoring 24 VDC	
=V1WC4/3.4	=V1WC4+V1UC32-FC2	Monitoring 24 VDC	
	I351.2	Spare	
	I351.3	Spare	
	I351.4	Spare	
	I351.5	Spare	
	I351.6	Spare	
	I351.7	Spare	

0	1	2	3	4	5	6	7	8	9

-KF32.21

ET 200SP SIEMENS
DQ 16x24 VDC/0.5A ST

L+/24VDC	L+ 24VDC		/3.1		
M/0VDC	M 0VDC		/3.2		
1/DQ0	1 DQ0	Q350.0		Q350.0	Spare
2/DQ1	2 DQ1	Q350.1	=V1SF0PG1/2.8	=V1SF1+V1UC32-PF3_Q	Start auto LT
3/DQ2	3 DQ2	Q350.2		Q350.2	Spare
4/DQ3	4 DQ3	Q350.3		Q350.3	Spare
5/DQ4	5 DQ4	Q350.4		Q350.4	Spare
6/DQ5	6 DQ5	Q350.5		Q350.5	Spare
7/DQ6	7 DQ6	Q350.6		Q350.6	Spare
8/DQ7	8 DQ7	Q350.7		Q350.7	Spare
9/DQ8	9 DQ8	Q351.0		Q351.0	Spare
10/DQ9	10 DQ9	Q351.1		Q351.1	Spare
11/DQ10	11 DQ10	Q351.2		Q351.2	Spare
12/DQ11	12 DQ11	Q351.3		Q351.3	Spare
13/DQ12	13 DQ12	Q351.4		Q351.4	Spare
14/DQ13	14 DQ13	Q351.5		Q351.5	Spare
15/DQ14	15 DQ14	Q351.6		Q351.6	Spare
16/DQ15	16 DQ15	Q351.7		Q351.7	Spare

6ES7132-6BH01-0BA0

			Date	1/24/2023	Volvo Trucks North America	Valiant TMS	ET200S Cross-reference Output module	Drawing name: =2V01&EFS-EL_KF1	= V1KF1		
			Ed.	MKLEPADLO					+ V1UC32		
			Appr		P6700 Framing - Cell 2V01, KF1	Scale 1:1		Document type: EFS	Project nr: 22-16152	Page	6
Modification	Date	Name	Original		Replacement of	Replaced by					1630

0	1	2	3	4	5	6	7	8	9

-KF32.31
/4.0

ET 200SP SIEMENS
F-DI 8x24VDC HF

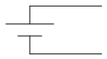

	L+ 24VDC	/4.1			
	M 0VDC	/4.2			
I5350.0	1 DI0	=FQ0V1SF1S01/1.3	=FQ0V1SF1S01+UC32-SF1.1	Emergency stop Ch1	
	9 VS0	=FQ0V1SF1S01/1.3			
I5350.1	2 DI1		I5350.1	Spare	
	10 VS1				
I5350.2	3 DI2		I5350.2	Spare	
	11 VS2				
I5350.3	4 DI3		I5350.3	Spare	
	12 VS3				
I5350.4	5 DI4	=FQ0V1SF1S01/1.4	=FQ0V1SF1S01+UC32-SF1.11	Emergency stop Ch2	
	13 VS4	=FQ0V1SF1S01/1.4			
I5350.5	6 DI5		I5350.5	Spare	
	14 VS5				
I5350.6	7 DI6		I5350.6	Spare	
	15 VS6				
I5350.7	8 DI7		I5350.7	Spare	
	16 VS7				

6ES7136-6BA01-0CA0

			Date	1/24/2023	Volvo Trucks North America	Valiant TMS	ET200S Cross-reference Safe input module	Drawing name: =2V01&EFS-EL_KF1	= V1KF1	
			Ed.	MKLEPADLO					+ V1UC32	
			Appr		P6700 Framing - Cell 2V01, KF1			Document type: EFS	Project nr: 22-16152	Page 7 / 1630
Modification	Date	Name	Original		Replacement of	Replaced by	Scale 1:1			

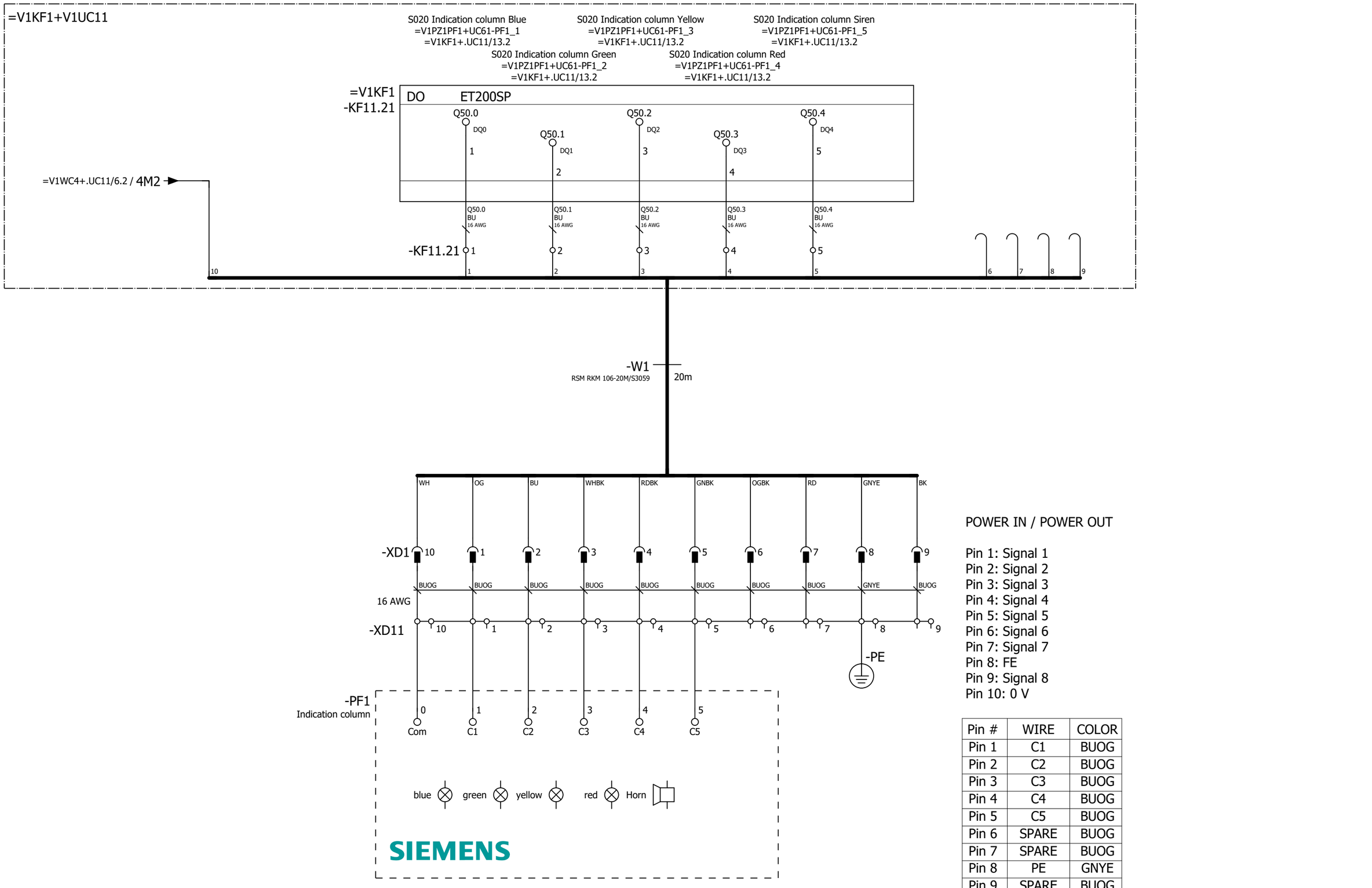

POWER IN / POWER OUT

Pin 1: Signal 1
Pin 2: Signal 2
Pin 3: Signal 3
Pin 4: Signal 4
Pin 5: Signal 5
Pin 6: Signal 6
Pin 7: Signal 7
Pin 8: FE
Pin 9: Signal 8
Pin 10: 0 V

Pin #	WIRE	COLOR
Pin 1	C1	BUOG
Pin 2	C2	BUOG
Pin 3	C3	BUOG
Pin 4	C4	BUOG
Pin 5	C5	BUOG
Pin 6	SPARE	BUOG
Pin 7	SPARE	BUOG
Pin 8	PE	GNYE
Pin 9	SPARE	BUOG
Pin 10	COM	BUOG

=V1KF1+.UC32/7

=V1SF0PG1+.UC32/1

			Date	1/24/2023	Volvo Trucks North America	Valiant TMS	S020 Indication column
			Ed.	MKLEPADLO			
			Appr		P6700 Framing - Cell 2V01, KF1	Scale 1:1	
Modification	Date	Name	Original		Replacement of	Replaced by	

Drawing name: =2V01&EFS-EL_KF1	= V1PZ1PF1
	+ V1UC61
Document type: EFS	Project nr: 22-16152
Page	1
	1630

0	1	2	3	4	5	6	7	8	9

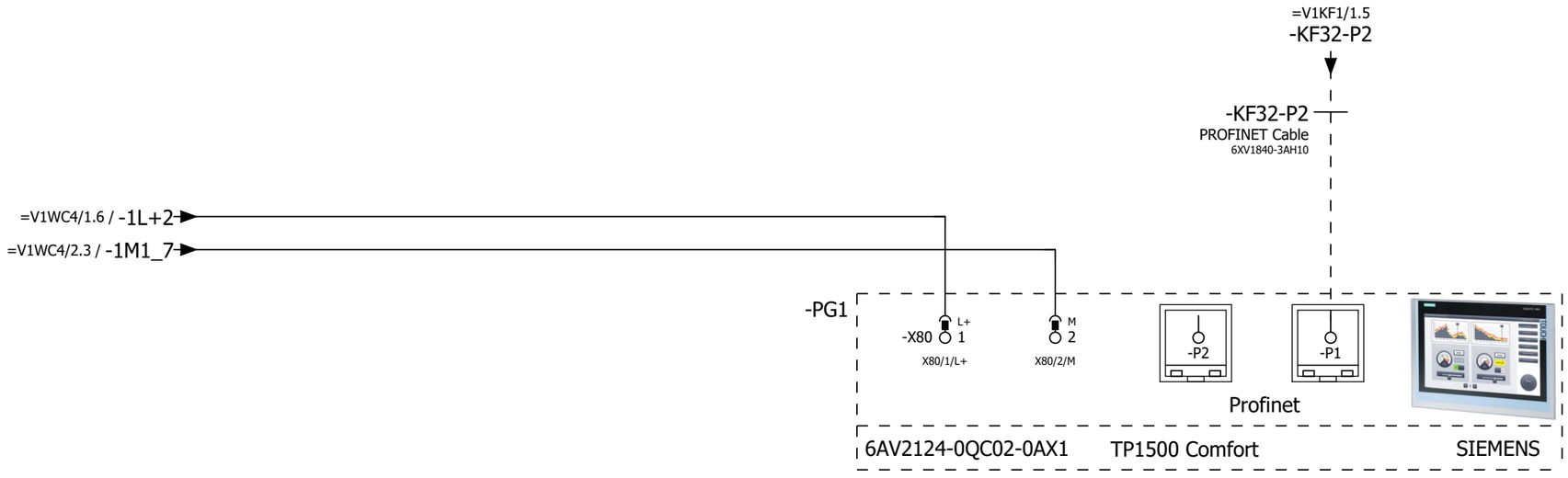

=V1PZ1PF1+.UC61/1

2

			Date	1/24/2023	Volvo Trucks North America	Valiant TMS	TP1500: SOP Display	Drawing name: =2V01&EFS-EL_KF1	= V1SF0PG1
			Ed.	MKLEPADLO					+ V1UC32
			Appr		P6700 Framing - Cell 2V01, KF1	Scale 1:1		Document type: EFS	Project nr: 22-16152
Modification	Date	Name	Original		Replacement of	Replaced by			Page 1 / 1630

Reset PB
=V1SF1+V1UC32-SF2_4
=V1KF1/5.2

DI	ET200SP
I350.5 DI5	
6	

=V1KF1
-KF32.11
I350.5
BU
18 AWG

Set PB
=V1SF1+V1UC32-SF1_4
=V1KF1/5.2

DI	ET200SP
I350.4 DI4	
5	

I350.4
BU
18 AWG

Start auto PB
=V1SF1+V1UC32-SF3_4
=V1KF1/5.2

DI	ET200SP
I350.2 DI2	
3	

I350.2
BU
18 AWG

Start auto LT
=V1SF1+V1UC32-PF3_Q
=V1KF1/6.2

DO	ET200SP
Q350.1 DQ1	
2	

=V1KF1
-KF32.21
Q350.1
BU
18 AWG

-SF2
&ELU/1.3
&ELU/1.3
CP1-10Y-20
Reset PB
4 E 3 1SFA619100R1023 14 13

-SF1
&ELU/1.2
&ELU/1.2
CP1-10G-20
Set PB
4 E 3 1SFA619100R1022 14 13

-SF3/PF3
&ELU/1.3
&ELU/1.3
CP1-11C-10
Start auto PBLT
4 E 3 1SFA619100R1118 x1 White x2

=V1WC4/2.3 / 1L+1_5
=V1WC4/2.3 / 1M1_5

1

=V1SF0PG2+.UC51/1

			Date	1/24/2023	Volvo Trucks North America	Valiant TMS	Operating box SOP	Drawing name: =2V01&EFS-EL_KF1	= V1SF0PG1
			Ed.	MKLEPADLO					+ V1UC32
			Appr		P6700 Framing - Cell 2V01, KF1			Document type: EFS / Project nr: 22-16152	Page 2
Modification	Date	Name	Original		Replacement of / Replaced by	Scale 1:1			1630

0	1	2	3	4	5	6	7	8	9

Pin #	WIRE	COLOR
Pin 1	N/C	BK
Pin 2	M	BU
Pin 3	PE	GNYE
Pin 4	L+	BN
Pin 5	N/C	WH

POWER IN / POWER OUT

Pin 1: 0 V UA
Pin 2: 0 V US
Pin 3: FE
Pin 4: +24 V US / 9 A
Pin 5: +24 V UA / 9 A

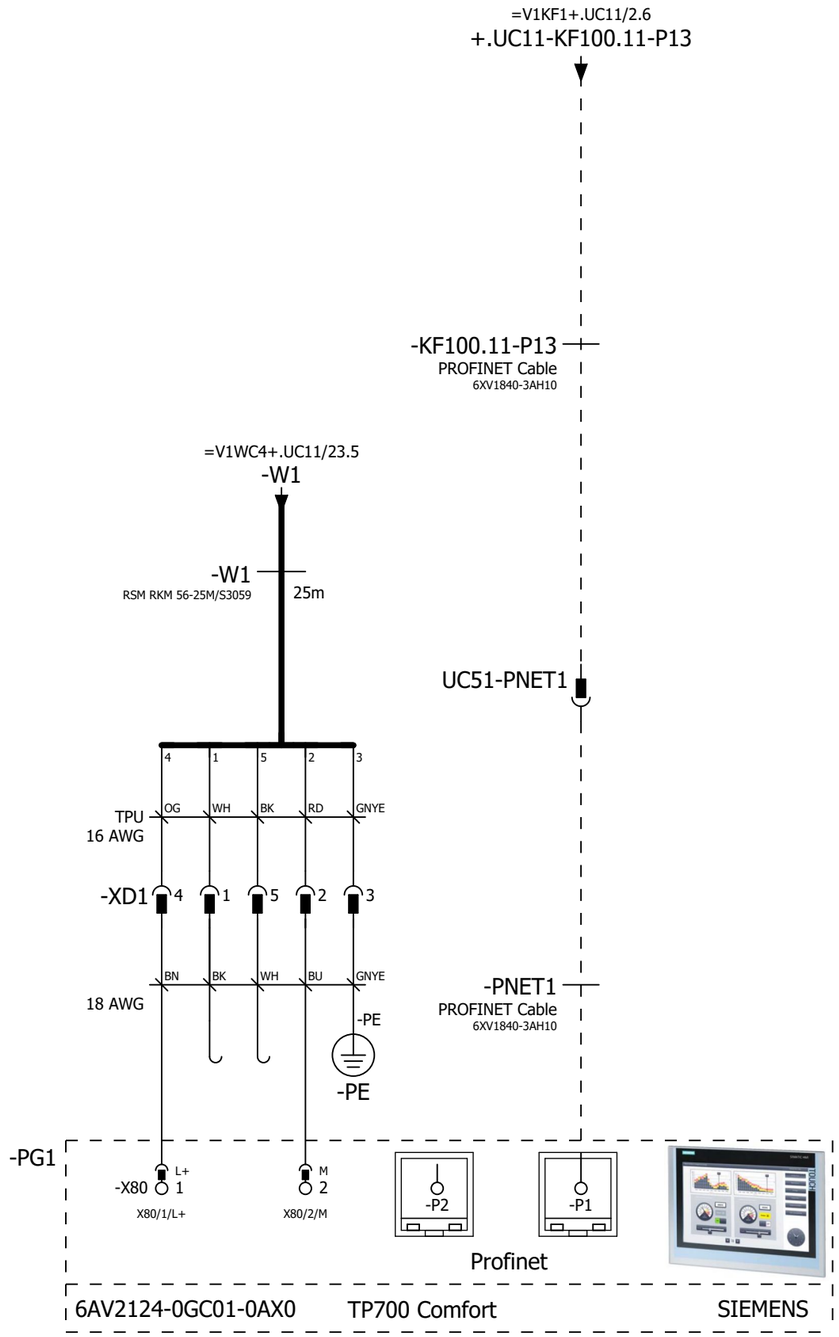

=V1SF0PG1+.UC32/2

=V1SF0SF1+.UC71/1

			Date	1/24/2023	Volvo Trucks North America	Valiant TMS	TP700: S020 Display	Drawing name: =2V01&EFS-EL_KF1	= V1SF0PG2
			Ed.	MKLEPADLO					+ V1UC51
			Appr		P6700 Framing - Cell 2V01, KF1			Document type: EFS	Project nr: 22-16152
Modification	Date	Name	Original		Replacement of	Replaced by	Scale 1:1		Page 1 / 1630

0	1	2	3	4	5	6	7	8	9

=V1KF1+V1UC11

S020 Operator Run Button 1
=V1SF0SF1+V1UC71-SF1.1
=V1KF1+.UC11/12.2

S020 Operator Emergency Stop 1 Ch1
=V1SF0SF1+V1UC71-SF1.4
=V1KF1+.UC11/15.2

S020 Operator Emergency Stop 1 Ch2
=V1SF0SF1+V1UC71-SF1.6
=V1KF1+.UC11/15.2

DI ET200SP
I57.6
DI14
15

=V1KF1
-KF11.14

=V1KF1
-KF11.32
F-DI 8 24VDC
PROFISAFE
ET200SP
I5056.0
DI0
VS0
I5056.4
DI4
VS4
1
9
5
13

I57.6 BUOG 16 AWG
I5056.0 BUOG 16 AWG
VS0 BUOG 16 AWG
I5056.4 BUOG 16 AWG
VS4 BUOG 16 AWG

=V1WC4+.UC11/5.4 / 3L+8
=V1WC4+.UC11/5.4 / 3M8

-KF11.14 15
I57.6 WH 16 AWG

-KF11.32 1
I5056.0 YE 16 AWG

9
VS0 GY 16 AWG

5
I5056.4 PK 16 AWG

13
VS4 RD 16 AWG

-XG1

WH BN GN YE GY PK BU RD

-W1
WKC 8T-30-S1587
30m

WH BN GN YE GY PK BU RD

-SF1
SSA-EBM Series E-stop Box
M12
1 2 3 4 5 6 7 8

-SF1 E

-SF2

BANNER
SSA-EBM-12EB1Q8OTBB

=V1SF0PG2+.UC51/1

=V1U20FQ1+.U20/1

			Date	1/24/2023	Volvo Trucks North America	Valiant TMS	S020 Operating box RB	Drawing name: =2V01&EFS-EL_KF1	= V1SF0SF1
			Ed.	MKLEPADLO					+ V1UC71
			Appr		P6700 Framing - Cell 2V01, KF1	Scale 1:1		Document type: EFS	Project nr: 22-16152	Page 1
Modification	Date	Name	Original		Replacement of	Replaced by				1630

0	1	2	3	4	5	6	7	8	9

=V1KF1+V1UC11

S020 Lift Assist Clear Ch1
=V1U20FQ1-BG01
=V1KF1+.UC11/14.2

S020 Lift Assist Clear Ch2
=V1U20FQ1-BG01
=V1KF1+.UC11/14.2

=V1KF1
-KF11.31

F-DI 8 24VDC

PROFISAFE
ET200SP

I5050.2 DI2 VS2 I5050.6 DI6 VS6

3 11 7 15

I5050.2 BUOG 16 AWG
VS2 BUOG 16 AWG
I5050.6 BUOG 16 AWG
VS6 BUOG 16 AWG

-KF11.31 3 11 7 15

BK BU WH BN

-W1
RKC 4.4T-35-RSC 4.4T/S3060
35m

BN BU BK WH

-BG01
A-B.802T-AMP
CW/CCW
S020 Lift Assist Clear

NEMA
4 & 13
Limit
Switch

1 2 3 4

=V1SF0SF1+.UC71/1

=V1U20U01KF1+.U20U01/10

			Date	1/24/2023	Volvo Trucks North America	Valiant TMS	S020 Lift Assist Safety Switch	Drawing name: =2V01&EFS-EL_KF1	= V1U20FQ1
			Ed.	MKLEPADLO					+ V1U20
			Appr		P6700 Framing - Cell 2V01, KF1	Scale 1:1		Document type: EFS	Project nr: 22-16152
Modification	Date	Name	Original		Replacement of	Replaced by			Page 1 / 1630

0	1	2	3	4	5	6	7	8	9

=V1WC4+.UC11/27.5
-KF1.X01

-W1
RSM RKM 56-30M/S3059
30m

4 3 1 2 PE

=V1UQ53KF1+.UQ53/1.1
+.UQ53-W1

4 3 1 2 PE

=V1KF1+.UC11/2.6
+.UC11-KF100.11-P12

-KF100.11-P12
PROFINET Cable
6XV1840-3AH10

=V1UQ53KF1+.UQ53/1.3
+.UQ53-KF100.11-P12

-KF1.11
/10.0
24 VDC

POWER IN 7/8" 4 5 1 2 3
+24V US | +24V UA | 0V UA | 0V US | PE

POWER OUT 7/8" 4 5 1 2 3
+24V US | +24V UA | 0V UA | 0V US | PE

M12 P1 R
BUS IN

M12 P2 R
BUS OUT

MURR ELEKTRONIK stay connected
MVK-MPNIO DI8 DO8 FSU
55339

S070 Dome light | S070 Dome light | Spare | Spare | Spare | Spare | Spare | Spare

S070 Dome light | S070 Dome light | Spare | Spare | Spare | Spare | Spare | Spare

-KF1.11
/10.0
24 VDC

MURR ELEKTRONIK stay connected
MVK-MPNIO DI8 DO8 FSU

Input 1 Q4900.0	Input 2 Q4900.1	Input 3 Q4900.2	Not used Q4900.3	Q4900.4	Q4900.5	Q4900.6	Q4900.7	I4900.0	I4900.1	I4900.2	I4900.3	I4900.4	I4900.5	I4900.6	I4900.7

X0: n.c. | DO | 0V UA | DO | FE — 1 4 3 2 5
X1: n.c. | DO | 0V UA | DO | FE — 1 4 3 2 5
X2: n.c. | DO | 0V UA | DO | FE — 1 4 3 2 5
X3: n.c. | DO | 0V UA | DO | FE — 1 4 3 2 5
X4: +24V US | DI | 0V US | DI/DIAG | FE — 1 4 3 2 5
X5: +24V US | DI | 0V US | DI/DIAG | FE — 1 4 3 2 5
X6: +24V US | DI | 0V US | DI/DIAG | FE — 1 4 3 2 5
X7: +24V US | DI | 0V US | DI/DIAG | FE — 1 4 3 2 5

55339

BN BK BU WH

BN BK BU WH

+.U20U01PF1-W1.1
=V1U20U01PF1/2.4

+.U20U01PF1-W1.2
=V1U20U01PF1/2.5

=V1U20FQ1+V1U20/1

=V1U20U01PF1/2

			Date	1/24/2023	Volvo Trucks North America	Valiant TMS	MURR MODULE 8 IN/ 8 OUT	Drawing name: =2V01&EFS-EL_KF1	= V1U20U01KF1
			Ed.	MKLEPADLO					+ V1U20U01
			Appr		P6700 Framing - Cell 2V01, KF1	Scale 1:1		Document type: EFS	Project nr: 22-16152
Modification	Date	Name	Original		Replacement of	Replaced by			Page 10 / 1630

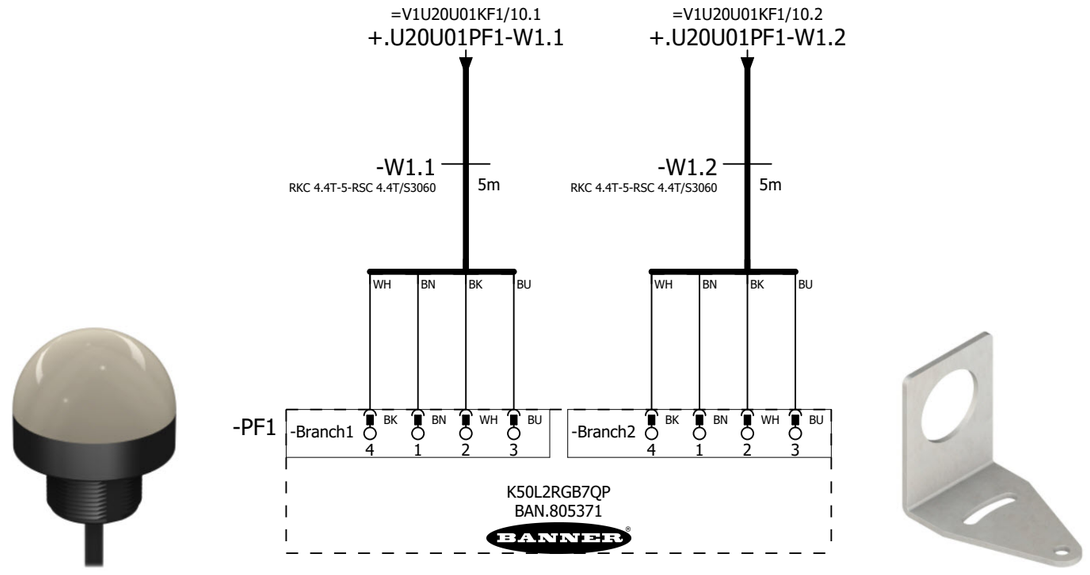

Table 1: Default Color Definition

	Red	Yellow	Green	Cyan	Blue	Magenta	White
Input 1	X	X				X	X
Input 2		X	X	X			X
Input 3				X	X	X	X

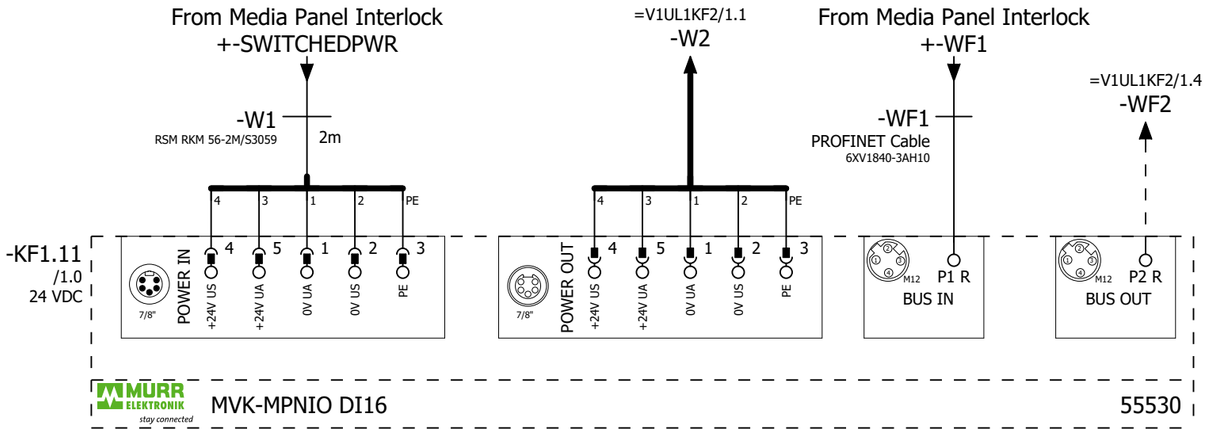

Common Pin Clamp 1 (SET) | Common Pin Clamp 1 (SET) | Common Pin Clamp 2 (SET) | Common Pin Clamp 3 (SET) | L150 Model Guided Slide (SET) | Spare | Spare | Spare

Common Pin Clamp 1 (RESET) | Common Pin Clamp 1 (RESET) | Common Pin Clamp 2 (RESET) | Common Pin Clamp 3 (RESET) | L150 Model Guided Slide (RESET) | Spare | Spare | Spare

-KF1.11
/1.0
24 VDC

MURR ELEKTRONIK stay connected — MVK-MPNIO DI16

	V1UL1UQ1.1-BGS		V1UL1UQ1.2-BGS		V1UL1UQ2.1-BGS		V1UL1UQ3.1-BGS		V1UL1UQ4.1-BGS							
	V1UL1UQ1.1-BGR		V1UL1UQ1.2-BGR		V1UL1UQ2.1-BGR		V1UL1UQ3.1-BGR		V1UL1UQ4.1-BGR							
	I4904.0	I4904.1	I4904.2	I4904.3	I4904.4	I4904.5	I4904.6	I4904.7	I4905.0	I4905.1	I4905.2	I4905.3	I4905.4	I4905.5	I4905.6	I4905.7

	+24V US	DI	0V US	DI	FE
X0	1	4	3	2	5
X1	1	4	3	2	5
X2	1	4	3	2	5
X3	1	4	3	2	5
X4	1	4	3	2	5
X5	1	4	3	2	5
X6	1	4	3	2	5
X7	1	4	3	2	5

55530

BN BK BU WH

+.UL1UQ1.1-W1 =V1UL1UQ1+.UL1UQ1/1.1

+.UL1UQ1.2-W1 =V1UL1UQ1+.UL1UQ1/1.2

+.UL1UQ2.1-W1 =V1UL1UQ2+.UL1UQ2/1.1

+.UL1UQ3.1-W1 =V1UL1UQ3+.UL1UQ3/1.1

+.UL1UQ4.1-W1 =V1UL1UQ4+.UL1UQ4/1.1

=V1U20U01PF1+.U20U01/2

=V1UL1KF2/1

			Date	1/24/2023	Volvo Trucks North America	Valiant TMS	MURR MODULE 16 IN	Drawing name: =2V01&EFS-EL_KF1
			Ed.	MKLEPADLO				= V1UL1KF1
			Appr		P6700 Framing - Cell 2V01, KF1			+ V1UL1
Modification	Date	Name	Original		Replacement of / Replaced by	Scale 1:1		Document type: EFS / Project nr: 22-16152 / Page 1 / 1630

0	1	2	3	4	5	6	7	8	9

=V1UL1KF1/1.3
-W2

-W2
RSM RKM 56-3M/S3059
3m

4 3 1 2 PE

=V1UL1KF1/1.4
-WF2

-WF2
PROFINET Cable
6XV1840-3AH10

-KF2.11
/1.0
24 VDC

POWER IN 7/8" 4 +24V US 5 +24V UA 1 0V UA 2 0V US 3 PE

POWER OUT 7/8" 4 +24V US 5 +24V UA 1 0V UA 2 0V US 3 PE

M12 P1 R BUS IN

M12 P2 R BUS OUT

MURR ELEKTRONIK stay connected

MVK-MPNIO DI16

55530

Common Pin Clamp 1 (SET) | Common Pin Clamp 1 (SET) | Common Pin Clamp 2 (SET) | Common Pin Clamp 3 (SET) | L150 Model Guided Slide (SET) | Spare | Spare | Spare

Common Pin Clamp 1 (RESET) | Common Pin Clamp 1 (RESET) | Common Pin Clamp 2 (RESET) | Common Pin Clamp 3 (RESET) | L150 Model Guided Slide (RESET) | Spare | Spare | Spare

-KF2.11
/1.0
24 VDC

MURR ELEKTRONIK stay connected

MVK-MPNIO DI16

V1UL1UQ1.3-BGS	V1UL1UQ1.4-BGS	V1UL1UQ2.2-BGS	V1UL1UQ3.2-BGS	V1UL1UQ4.2-BGS
V1UL1UQ1.3-BGR	V1UL1UQ1.4-BGR	V1UL1UQ2.2-BGR	V1UL1UQ3.2-BGR	V1UL1UQ4.2-BGR
I4906.0 I4906.1	I4906.2 I4906.3	I4906.4 I4906.5	I4906.6 I4906.7	I4907.0 I4907.1 I4907.2 I4907.3 I4907.4 I4907.5 I4907.6 I4907.7

X0 +24V US 1 DI 4 0V US 3 DI 2 FE 5
X1 +24V US 1 DI 4 0V US 3 DI 2 FE 5
X2 +24V US 1 DI 4 0V US 3 DI 2 FE 5
X3 +24V US 1 DI 4 0V US 3 DI 2 FE 5
X4 +24V US 1 DI 4 0V US 3 DI 2 FE 5
X5 +24V US 1 DI 4 0V US 3 DI 2 FE 5
X6 +24V US 1 DI 4 0V US 3 DI 2 FE 5
X7 +24V US 1 DI 4 0V US 3 DI 2 FE 5

55530

BN BK BU WH

+.UL1UQ1.3-W1
=V1UL1UQ1+.UL1UQ1/1.4

+.UL1UQ1.4-W1
=V1UL1UQ1+.UL1UQ1/1.5

+.UL1UQ2.2-W1
=V1UL1UQ2+.UL1UQ2/1.2

+.UL1UQ3.2-W1
=V1UL1UQ3+.UL1UQ3/1.2

+.UL1UQ4.2-W1
=V1UL1UQ4+.UL1UQ4/1.2

=V1UL1KF1/1

=V1UL1UQ1+.UL1UQ1/1

			Date	1/24/2023	Volvo Trucks North America	Valiant TMS	MURR MODULE 16 IN	Drawing name: =2V01&EFS-EL_KF1	= V1UL1KF2
			Ed.	MKLEPADLO					+ V1UL1
			Appr		P6700 Framing - Cell 2V01, KF1	Scale 1:1		Document type: EFS	Project nr: 22-16152
Modification	Date	Name	Original		Replacement of	Replaced by			Page 1 / 1630

0	1	2	3	4	5	6	7	8	9

=V1UL1KF1+V1UL1/1.1
+.UL1UQ1.1-W1

-W1
RKC 4.4T-3-RSC 4.4T/S3060
3m

Common Pin Clamp 1

=V1UL1UQ1.1
+.UL1UQ1.1
-UQ1.1

=V1UL1
-UQ1.1-BGS/R
Common Pin
Clamp 1

=V1UL1KF1+V1UL1/1.2
+.UL1UQ1.2-W1

-W1
RKC 4.4T-3-RSC 4.4T/S3060
3m

Common Clamp 1

=V1UL1UQ1.2
+.UL1UQ1.2
-UQ1.2

=V1UL1
-UQ1.2-BGS/R
Common
Clamp 1

=V1UL1KF2+V1UL1/1.1
+.UL1UQ1.3-W1

-W1
RKC 4.4T-3-RSC 4.4T/S3060
3m

Common Clamp 1

=V1UL1UQ1.3
+.UL1UQ1.3
-UQ1.3

=V1UL1
-UQ1.3-BGS/R
Common
Clamp 1

=V1UL1KF2+V1UL1/1.2
+.UL1UQ1.4-W1

-W1
RKC 4.4T-3-RSC 4.4T/S3060
3m

Common Pin Clamp 1

=V1UL1UQ1.4
+.UL1UQ1.4
-UQ1.4

=V1UL1
-UQ1.4-BGS/R
Common Pin
Clamp 1

=V1UL1KF2+V1UL1/1

=V1UL1UQ2+.UL1UQ2/1

			Date	1/24/2023	Volvo Trucks North America		Valiant TMS	FESTO DQ CONNECTION QN1	Drawing name: =2V01&EFS-EL_KF1	= V1UL1UQ1
			Ed.	MKLEPADLO						+ V1UL1UQ1
			Appr		P6700 Framing - Cell 2V01, KF1				Document type: EFS	Project nr: 22-16152
Modification	Date	Name	Original		Replacement of	Replaced by	Scale 1:1			Page 1 / 1630

0	1	2	3	4	5	6	7	8	9

=V1UL1KF1+V1UL1/1.3
+.UL1UQ2.1-W1

-W1
RKC 4.4T-1-RSC 4.4T/S3060
1m

BN BU BK WH

-BGS/R
1 3
+ -
284395
A2 A1
2 4

Common Pin Clamp 2

=V1UL1UQ2.1
+.UL1UQ2.1
-UQ2.1

=V1UL1
-UQ2.1-BGS/R
Common Pin
Clamp 2

=V1UL1KF2+V1UL1/1.3
+.UL1UQ2.2-W1

-W1
RKC 4.4T-1-RSC 4.4T/S3060
1m

BN BU BK WH

-BGS/R
1 3
+ -
284395
A2 A1
2 4

Common Pin Clamp 2

=V1UL1UQ2.2
+.UL1UQ2.2
-UQ2.2

=V1UL1
-UQ2.2-BGS/R
Common Pin
Clamp 2

=V1UL1UQ1+.UL1UQ1/1

=V1UL1UQ3+.UL1UQ3/1

			Date	1/24/2023	Volvo Trucks North America		Valiant TMS	FESTO DQ CONNECTION QN2	Drawing name: =2V01&EFS-EL_KF1	= V1UL1UQ2
			Ed.	MKLEPADLO						+ V1UL1UQ2
			Appr		P6700 Framing - Cell 2V01, KF1				Document type: EFS	Project nr: 22-16152
Modification	Date	Name	Original		Replacement of	Replaced by	Scale 1:1			Page 1 / 1630

0	1	2	3	4	5	6	7	8	9

=V1UL1KF1+V1UL1/1.4
+.UL1UQ3.1-W1

=V1UL1KF2+V1UL1/1.4
+.UL1UQ3.2-W1

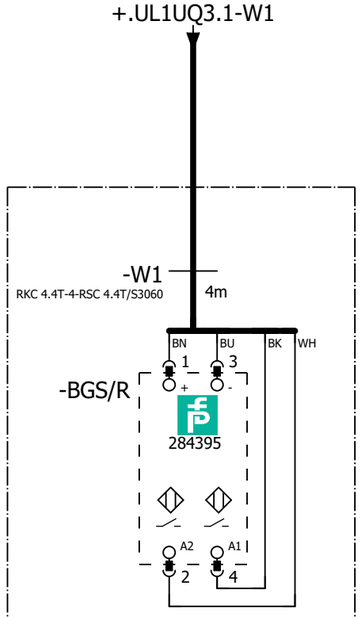

Common Pin Clamp 3

=V1UL1UQ3.1
+.UL1UQ3.1
-UQ3.1

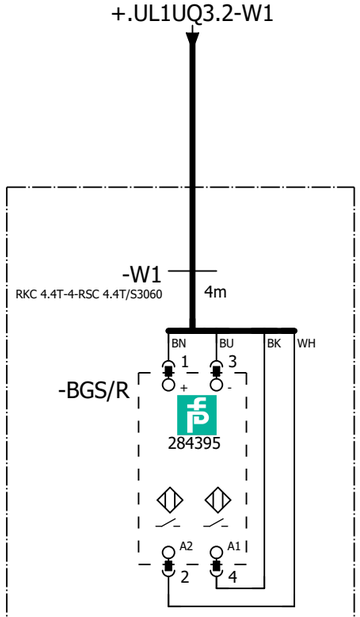

Common Pin Clamp 3

=V1UL1UQ3.2
+.UL1UQ3.2
-UQ3.2

=V1UL1
-UQ3.1-BGS/R
Common Pin
Clamp 3

=V1UL1
-UQ3.2-BGS/R
Common Pin
Clamp 3

=V1UL1UQ2+.UL1UQ2/1

=V1UL1UQ4+.UL1UQ4/1

			Date	1/24/2023	Volvo Trucks North America		Valiant TMS	FESTO DQ CONNECTION QN3	Drawing name: =2V01&EFS-EL_KF1	= V1UL1UQ3
			Ed.	MKLEPADLO						+ V1UL1UQ3
			Appr		P6700 Framing - Cell 2V01, KF1				Document type: EFS	Project nr: 22-16152
Modification	Date	Name	Original		Replacement of	Replaced by	Scale 1:1			Page 1 / 1630

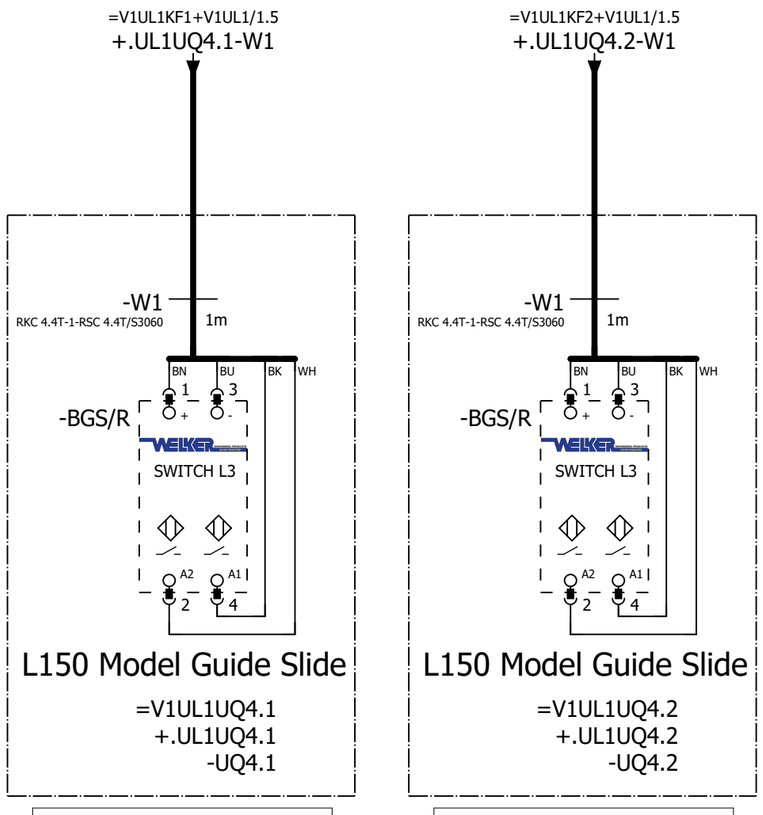

=V1UL1
-UQ4.1-BGS/R
L150 Model
Guide Slide

=V1UL1
-UQ4.2-BGS/R
L150 Model
Guide Slide

=V1UL1UQ3+.UL1UQ3/1

=V1UQ31BG0+.UQ31/1

			Date	1/24/2023	Volvo Trucks North America	Valiant TMS	FESTO DQ CONNECTION QN4	Drawing name: =2V01&EFS-EL_KF1	= V1UL1UQ4 + V1UL1UQ4
			Ed.	MKLEPADLO	P6700 Framing - Cell 2V01, KF1				
			Appr					Document type: EFS	Project nr: 22-16152
Modification	Date	Name	Original		Replacement of / Replaced by	Scale 1:1			Page 1 / 1630

0	1	2	3	4	5	6	7	8	9

=V1UQ31KF1/1.8

-XG1

-W1
RKC 4.4T-8-RSC 4.4T/S3060
8m

BN BU BK WH

1 3

-BG01
Sn = 20 mm

TURCK

1627297

A pnp

4

=V1UQ31
-BG01
MH1 EOAT
Part Present

=V1UQ31KF1/1.9

-XG2

-W2
RKC 4.4T-10-RSC 4.4T/S3060
10m

BN BU BK WH

1 3

-BG02
Sn = 20 mm

TURCK

1627297

A pnp

4

=V1UQ31
-BG02
MH1 EOAT
Part Present

=V1UL1UQ4+.UL1UQ4/1

=V1UQ31KF1/1

			Date	1/24/2023	Volvo Trucks North America	Valiant TMS	SENSORS	Drawing name: =2V01&EFS-EL_KF1	= V1UQ31BG0
			Ed.	MKLEPADLO					+ V1UQ31
			Appr		P6700 Framing - Cell 2V01, KF1	Scale 1:1		Document type: EFS	Project nr: 22-16152
Modification	Date	Name	Original		Replacement of	Replaced by			Page 1 / 1630

0	1	2	3	4	5	6	7	8	9

=V1WC4+.UC11/24.5 / W1

=V1KF1+.UC11/2.6 / +.UC11-KF100.11-P9

-W1
RSM RKM 56-20M/S3059
20m

-KF100.11-P9
PROFINET Cable
6XV1840-3AH10

-KF1

X20 M12, 7/8" 1 2 PE 4 5

0V_VAL / OUT | 0V_EL / SEN | FE | 24V_EL / SEN | 24V_VAL / OUT

ON OFF 1 2 1 2

M12 -TP1 M12 -TP2

FESTO
Bus node + Interlinking block
548755 + 550208

I2000.0	DI 0 X1:4	V1UQ31UQ1.1-BGR	MH1 EOAT Clamp (RESET)
I2000.1	DI 1 X1:2	V1UQ31UQ1.1-BGS	MH1 EOAT Clamp (SET)
I2000.2	DI 2 X2:4	V1UQ31UQ1.2-BGR	MH1 EOAT Clamp (RESET)
I2000.3	DI 3 X2:2	V1UQ31UQ1.2-BGS	MH1 EOAT Clamp (SET)
I2000.4	DI 4 X3:4	V1UQ31UQ1.3-BGR	MH1 EOAT Clamp (RESET)
I2000.5	DI 5 X3:2	V1UQ31UQ1.3-BGS	MH1 EOAT Clamp (SET)
I2000.6	DI 6 X4:4	V1UQ31UQ1.4-BGR	MH1 EOAT Clamp (RESET)
I2000.7	DI 7 X4:2	V1UQ31UQ1.4-BGS	MH1 EOAT Clamp (SET)
I2001.0	DI 8 X5:4	V1UQ31UQ2.1-BGR	Common Clamp (RESET)
I2001.1	DI 9 X5:2	V1UQ31UQ2.1-BGS	Common Clamp (SET)
I2001.2	DI 10 X6:4	V1UQ31UQ2.2-BGR	Common Clamp (RESET)
I2001.3	DI 11 X6:2	V1UQ31UQ2.2-BGS	Common Clamp (SET)
I2001.4	DI 12 X7:4	V1UQ31-BG01	MH1 EOAT Part Present
I2001.5	DI 13 X7:2	I2001.5	Spare
I2001.6	DI 14 X8:4	V1UQ31-BG02	MH1 EOAT Part Present
I2001.7	DI 15 X8:2	I2001.7	Spare

-KF1.11

FESTO
CPX-M-AB-8-M12X2-5POL
549335

X1 M12 1 2 3 4 5 — 24V | DI 1 | 0V | DI 0 | FE — BN WH BU BK

X2 M12 1 2 3 4 5 — 24V | DI 3 | 0V | DI 2 | FE — BN WH BU BK

X3 M12 1 2 3 4 5 — 24V | DI 5 | 0V | DI 4 | FE — BN WH BU BK

X4 M12 1 2 3 4 5 — 24V | DI 7 | 0V | DI 6 | FE — BN WH BU BK

X5 M12 1 2 3 4 5 — 24V | DI 9 | 0V | DI 8 | FE — BN WH BU BK

X6 M12 1 2 3 4 5 — 24V | DI 11 | 0V | DI 10 | FE — BN WH BU BK

X7 M12 1 2 3 4 5 — 24V | DI 13 | 0V | DI 12 | FE — BN WH BU BK

X8 M12 1 2 3 4 5 — 24V | DI 15 | 0V | DI 14 | FE — BN WH BU BK

+.UQ31UQ1.1-W1
=V1UQ31UQ1+.UQ31UQ1/1.1

+.UQ31UQ1.2-W1
=V1UQ31UQ1+.UQ31UQ1/1.2

+.UQ31UQ1.3-W1
=V1UQ31UQ1+.UQ31UQ1/1.4

+.UQ31UQ1.4-W1
=V1UQ31UQ1+.UQ31UQ1/1.5

+.UQ31UQ2.1-W1
=V1UQ31UQ2+.UQ31UQ2/1.1

+.UQ31UQ2.2-W1
=V1UQ31UQ2+.UQ31UQ2/1.2

-XG1
=V1UQ31BG0/1.1

-XG2
=V1UQ31BG0/1.3

=V1UQ31BG0/1

			Date	1/24/2023	Volvo Trucks North America	Valiant TMS	CONNECTING MOD. FOR VTSA MANIFOLD	Drawing name: =2V01&EFS-EL_KF1	= V1UQ31KF1
			Ed.	MKLEPADLO					+ V1UQ31
			Appr		P6700 Framing - Cell 2V01, KF1			Document type: EFS	Project nr: 22-16152
Modification	Date	Name	Original		Replacement of / Replaced by	Scale 1:1			Page 1 / 1630

0	1	2	3	4	5	6	7	8	9

-KF1 -KF1.11 -KF1.20 -KF1.21 -KF1.22 -KF1.23

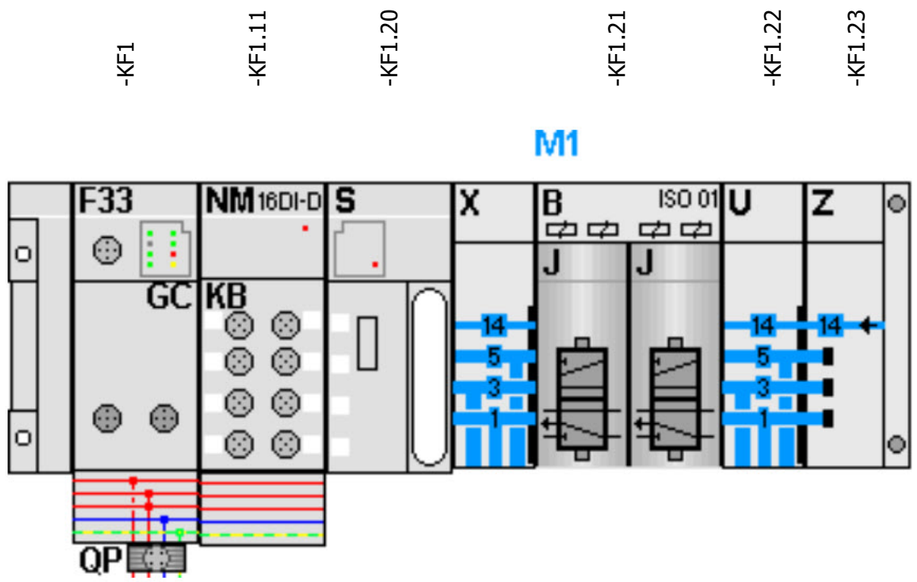

-KF1.21
=V1UQ31UQ1+.UQ31UQ1/1.3
=V1UQ31UQ2+.UQ31UQ2/1.3

FESTO

=V1UQ31UQ1+.UQ31UQ1/1.4	Q2000.0 DO 0 1.1	-QN1.1_Q	MH1 EOAT Clamps (RST)
=V1UQ31UQ1+.UQ31UQ1/1.4	Q2000.1 DO 1 1.2	-QN1.2_Q	MH1 EOAT Clamps (SET)
=V1UQ31UQ2+.UQ31UQ2/1.4	Q2000.2 DO 2 2.1	-QN2.1_Q	Common Clamps (RST)
=V1UQ31UQ2+.UQ31UQ2/1.4	Q2000.3 DO 3 2.2	-QN2.2_Q	Common Clamps (SET)

1

=V1UQ31UQ1+.UQ31UQ1/1

			Date	1/24/2023	Volvo Trucks North America	Valiant TMS	CONNECTING MOD. FOR FESTO DQ	Drawing name: =2V01&EFS-EL_KF1	= V1UQ31KF1	
			Ed.	MKLEPADLO					+ V1UQ31	
			Appr		P6700 Framing - Cell 2V01, KF1	Scale 1:1		Document type: EFS	Project nr: 22-16152	Page 2 / 1630
Modification	Date	Name	Original		Replacement of / Replaced by					

0	1	2	3	4	5	6	7	8	9

=V1UQ31KF1
+.UQ31

-KF1.21
=V1UQ31KF1+V1UQ31/2.1

MH1 EOAT Clamps (RST)	MH1 EOAT Clamps (SET)
=V1UQ31KF1	=V1UQ31KF1
+V1UQ31	+V1UQ31
-QN1.1_Q	-QN1.2_Q
=V1UQ31KF1	=V1UQ31KF1
+V1UQ31/2.3	+V1UQ31/2.3
Q2000.0	Q2000.1
1.1 Pneumatic Valve	1.2 Pneumatic Valve

-QN1 .1 .2

=V1UQ31KF1+V1UQ31/1.1
+.UQ31UQ1.1-W1

-W1
RKC 4.4T-8-RSC 4.4T/S3060
8m

-BGS/R
BN BU BK WH
1 3
TÜNKERS
1324644
A2 A1
2 4

MH1 EOAT Clamp
=V1UQ31UQ1.1
+.UQ31UQ1.1
-UQ1.1

=V1UQ31
-UQ1.1-BGS/R
MH1 EOAT
Clamp

=V1UQ31KF1+V1UQ31/1.2
+.UQ31UQ1.2-W1

-W1
RKC 4.4T-10-RSC 4.4T/S3060
10m

-BGS/R
BN BU BK WH
1 3
TÜNKERS
1324644
A2 A1
2 4

MH1 EOAT Clamp
=V1UQ31UQ1.2
+.UQ31UQ1.2
-UQ1.2

=V1UQ31
-UQ1.2-BGS/R
MH1 EOAT
Clamp

=V1UQ31KF1+V1UQ31/1.3
+.UQ31UQ1.3-W1

-W1
RKC 4.4T-8-RSC 4.4T/S3060
8m

-BGS/R
BN BU BK WH
1 3
TÜNKERS
1324644
A2 A1
2 4

MH1 EOAT Clamp
=V1UQ31UQ1.3
+.UQ31UQ1.3
-UQ1.3

=V1UQ31
-UQ1.3-BGS/R
MH1 EOAT
Clamp

=V1UQ31KF1+V1UQ31/1.4
+.UQ31UQ1.4-W1

-W1
RKC 4.4T-10-RSC 4.4T/S3060
10m

-BGS/R
BN BU BK WH
1 3
TÜNKERS
1324644
A2 A1
2 4

MH1 EOAT Clamp
=V1UQ31UQ1.4
+.UQ31UQ1.4
-UQ1.4

=V1UQ31
-UQ1.4-BGS/R
MH1 EOAT
Clamp

=V1UQ31KF1+V1UQ31/2

=V1UQ31UQ2+.UQ31UQ2/1

			Date	1/24/2023	Volvo Trucks North America	Valiant TMS	FESTO DQ CONNECTION QN1	Drawing name: =2V01&EFS-EL_KF1	= V1UQ31UQ1
			Ed.	MKLEPADLO					+ V1UQ31UQ1
			Appr		P6700 Framing - Cell 2V01, KF1			Document type: EFS	Project nr: 22-16152
Modification	Date	Name	Original		Replacement of	Replaced by	Scale 1:1		Page 1 / 1630

0	1	2	3	4	5	6	7	8	9

=V1UQ31KF1
+.UQ31

-KF1.21
=V1UQ31KF1+V1UQ31/2.1

Common Clamps (RST)	Common Clamps (SET)
=V1UQ31KF1	=V1UQ31KF1
+V1UQ31	+V1UQ31
-QN2.1_Q	-QN2.2_Q
=V1UQ31KF1	=V1UQ31KF1
+V1UQ31/2.3	+V1UQ31/2.3
Q2000.2	Q2000.3
2.1 Pneumatic Valve	2.2 Pneumatic Valve

-QN2 .1 .2

=V1UQ31KF1+V1UQ31/1.5
+.UQ31UQ2.1-W1

-W1
RKC 4.4T-8-RSC 4.4T/S3060
8m

BN BU BK WH
1 3
+ -
-BGS/R
TÜNKERS
1324644
A2 A1
2 4

Common Clamp
=V1UQ31UQ2.1
+.UQ31UQ2.1
-UQ2.1

=V1UQ31
-UQ2.1-BGS/R
Common
Clamp

=V1UQ31KF1+V1UQ31/1.6
+.UQ31UQ2.2-W1

-W1
RKC 4.4T-10-RSC 4.4T/S3060
10m

BN BU BK WH
1 3
+ -
-BGS/R
TÜNKERS
1324644
A2 A1
2 4

Common Clamp
=V1UQ31UQ2.2
+.UQ31UQ2.2
-UQ2.2

=V1UQ31
-UQ2.2-BGS/R
Common
Clamp

=V1UQ31UQ1+.UQ31UQ1/1

=V1UQ51BG0+.UQ51/1

			Date	1/24/2023	Volvo Trucks North America		Valiant TMS	FESTO DQ CONNECTION QN2	Drawing name: =2V01&EFS-EL_KF1	= V1UQ31UQ2
			Ed.	MKLEPADLO						+ V1UQ31UQ2
			Appr		P6700 Framing - Cell 2V01, KF1				Document type: EFS	Project nr: 22-16152
Modification	Date	Name	Original		Replacement of	Replaced by	Scale 1:1			Page 1 / 1630

0	1	2	3	4	5	6	7	8	9

=V1UQ51KF1/1.1

-BG01

-W1

RKC 4.4T-1-RSC 4.4T/S3060

1m

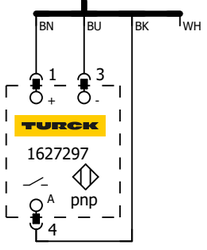

=V1UQ51
-BG01
Common
Part Present

=V1UQ51KF1/1.2

-BG02

-W2

RKC 4.4T-3-RSC 4.4T/S3060

3m

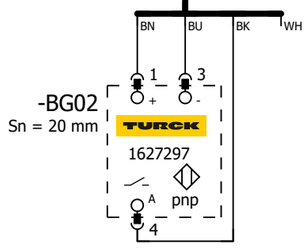

=V1UQ51
-BG02
Common
Part Present

=V1UQ31UQ2+.UQ31UQ2/1

=V1UQ51KF1/1

			Date	1/24/2023	Volvo Trucks North America		Valiant TMS	SENSORS	Drawing name: =2V01&EFS-EL_KF1	= V1UQ51BG0
			Ed.	MKLEPADLO						+ V1UQ51
			Appr		P6700 Framing - Cell 2V01, KF1		Scale 1:1		Document type: EFS	Project nr: 22-16152
Modification	Date	Name	Original		Replacement of	Replaced by				Page 1 / 1630

0	1	2	3	4	5	6	7	8	9

=V1WC4+.UC12/24.5
+.UQ51KF1-W1.1

-W1.1
RSM RKM 56-20M/S3059
20m

4 3 1 2 PE

=V1KF1+.UC12/2.6
+.UC12-KF100.12-P11

-KF100.12-P11
PROFINET Cable
6XV1840-3AH10

-KF1.11
/1.0
24 VDC

POWER IN 7/8" 4 5 1 2 3
+24V US | +24V UA | 0V UA | 0V US | PE

POWER OUT 7/8" 4 5 1 2 3
+24V US | +24V UA | 0V UA | 0V US | PE

M12 P1 R
BUS IN

M12 P2 R
BUS OUT

MURR ELEKTRONIK stay connected
MVK-MPNIO DI16
55530

Spare Spare Spare Spare Spare Spare Spare Spare Spare

Common Part Present | Common Part Present | Spare | Spare | Spare | Spare | Spare | Spare

-KF1.11
/1.0
24 VDC

MURR ELEKTRONIK stay connected
MVK-MPNIO DI16

V1UQ51-BG01 I4908.0 I4908.1 | V1UQ51-BG02 I4908.2 I4908.3 | I4908.4 I4908.5 | I4908.6 I4908.7 | I4909.0 I4909.1 | I4909.2 I4909.3 | I4909.4 I4909.5 | I4909.6 I4909.7

+24V US | DI | 0V US | DI | FE

X0 1 4 3 2 5 | X1 1 4 3 2 5 | X2 1 4 3 2 5 | X3 1 4 3 2 5 | X4 1 4 3 2 5 | X5 1 4 3 2 5 | X6 1 4 3 2 5 | X7 1 4 3 2 5

55530

BN BK BU WH

BN BK BU WH

-BG01
=V1UQ51BG0/1.1

-BG02
=V1UQ51BG0/1.3

=V1UQ51BG0/1

=V1UQ53BG0+.UQ53/1

			Date	1/24/2023	Volvo Trucks North America	Valiant TMS	MURR MODULE 16 IN	Drawing name: =2V01&EFS-EL_KF1	= V1UQ51KF1
			Ed.	MKLEPADLO					+ V1UQ51
			Appr		P6700 Framing - Cell 2V01, KF1	Scale 1:1		Document type: EFS	Project nr: 22-16152
Modification	Date	Name	Original		Replacement of	Replaced by			Page 1 / 1630

0	1	2	3	4	5	6	7	8	9

=V1UQ53KF1/2.1
-BG01

-W1
RKC 4.4T-3-RSC 4.4T/S3060
3m

BN BU BK WH

-BG01
Sn = 6000 mm
1 3
BN BU
BANNER
73260
BK pnp
4

=V1UQ53
-BG01
U-Body Floor Part
Present (Common)

=V1UQ53KF1/2.2
-XG2/3

-W2
RKC 4.4T-3-RSC 4.4T/S3060
3m

BN BU BK WH

-XG2/3 P1 1 3 4 2 VB2-FSM 4.4/2FKM 4/S3450 TURCK

J1 1 3 4 2 J2 1 3 4 2

BN BU BK WH

-W2.1
RKC 4.4T-0.5-RSC 4.4T/S3060
0.5m

-W2.2
RKC 4.4T-0.5-RSC 4.4T/S3060
0.5m

BN BU BK WH

-BG02
Sn = 50 mm
1 3
+ -
TURCK
1646633
A pnp
4

-BG03
Sn = 50 mm
1 3
+ -
TURCK
1646633
A pnp
4

=V1UQ53
-BG02
Pallet Pos Part
Present (L230)

=V1UQ53
-BG03
Pallet Pos Part
Present (L230)

=V1UQ53KF1/2.3
-XG4/5

-W3
RKC 4.4T-3-RSC 4.4T/S3060
3m

BN BU BK WH

-XG4/5 P1 1 3 4 2 VB2-FSM 4.4/2FKM 4/S3450 TURCK

J1 1 3 4 2 J2 1 3 4 2

BN BU BK WH

-W3.1
RKC 4.4T-0.5-RSC 4.4T/S3060
0.5m

-W3.2
RKC 4.4T-0.5-RSC 4.4T/S3060
0.5m

BN BU BK WH

-BG04
Sn = 50 mm
1 3
+ -
TURCK
1646633
A pnp
4

-BG05
Sn = 50 mm
1 3
+ -
TURCK
1646633
A pnp
4

=V1UQ53
-BG04
Pallet Pos Part
Present (L290)

=V1UQ53
-BG05
Pallet Pos Part
Present (L290)

=V1UQ51KF1+.UQ51/1

			Date	1/24/2023	Volvo Trucks North America	Valiant TMS	SENSORS	Drawing name: =2V01&EFS-EL_KF1	= V1UQ53BG0
			Ed.	MKLEPADLO					+ V1UQ53
			Appr		P6700 Framing - Cell 2V01, KF1			Document type: EFS	Project nr: 22-16152
Modification	Date	Name	Original		Replacement of	Replaced by	Scale 1:1		Page 1 / 1630

0	1	2	3	4	5	6	7	8	9

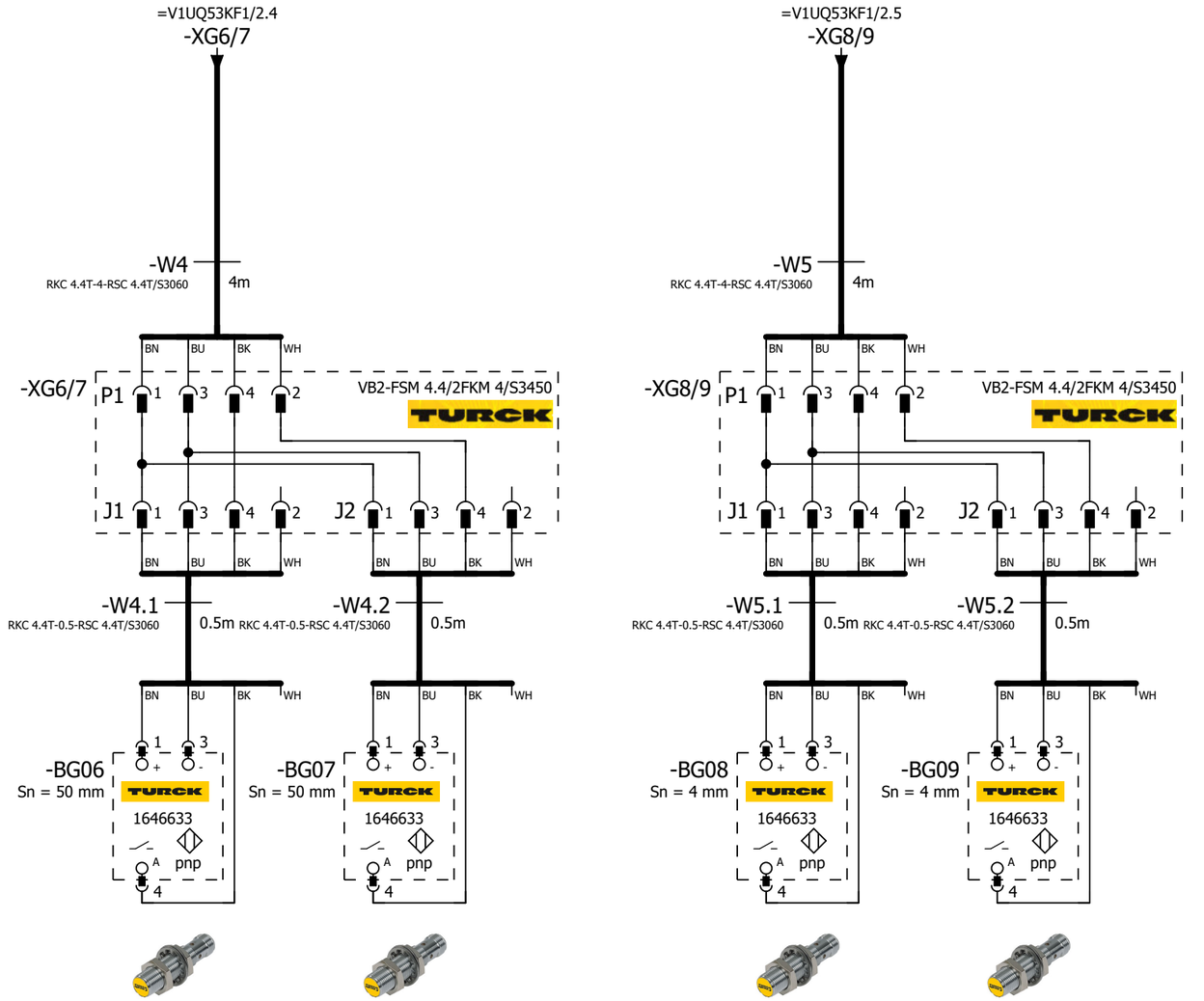

=V1UQ53 -BG06 Pallet Pos Part Present (L320)	=V1UQ53 -BG07 Pallet Pos Part Present (L320)	=V1UQ53 -BG08 Pallet Pos Part Present (L150)	=V1UQ53 -BG09 Pallet Pos Part Present (L150)

1

=V1UQ53KF1/1

			Date	1/24/2023	Volvo Trucks North America		Valiant TMS	SENSORS	Drawing name: =2V01&EFS-EL_KF1	= V1UQ53BG0
			Ed.	MKLEPADLO						+ V1UQ53
			Appr		P6700 Framing - Cell 2V01, KF1		Scale 1:1		Document type: EFS	Project nr: 22-16152	Page 2
Modification	Date	Name	Original		Replacement of	Replaced by					1630

0	1	2	3	4	5	6	7	8	9

=V1U20U01KF1+.U20U01/10.3 / W1

=V1U20U01KF1+.U20U01/10.4 / -KF100.11-P12

-W1
RSM RKM 56-20M/S3059
20m

-KF100.11-P12
PROFINET Cable
6XV1840-3AH10

-KF1

X20 M12, 7/8" 1 2 PE 4 5
0V_VAL / OUT
0V_EL / SEN
FE
24V_EL / SEN
24V_VAL / OUT

ON OFF 1 2 1 2

M12 -TP1 M12 -TP2

FESTO
Bus node + Interlinking block
548755 + 550208

I2050.0	DI 0 X1:4	V1UQ53UQ5.1-BGR	Modile Supply Assembly (RESET)
I2050.1	DI 1 X1:2	V1UQ53UQ5.1-BGS	Modile Supply Assembly (SET)
I2050.2	DI 2 X2:4	I2050.2	Spare
I2050.3	DI 3 X2:2	I2050.3	Spare
I2050.4	DI 4 X3:4	I2050.4	Spare
I2050.5	DI 5 X3:2	I2050.5	Spare
I2050.6	DI 6 X4:4	I2050.6	Spare
I2050.7	DI 7 X4:2	I2050.7	Spare
I2051.0	DI 8 X5:4	I2051.0	Spare
I2051.1	DI 9 X5:2	I2051.1	Spare
I2051.2	DI 10 X6:4	I2051.2	Spare
I2051.3	DI 11 X6:2	I2051.3	Spare
I2051.4	DI 12 X7:4	I2051.4	Spare
I2051.5	DI 13 X7:2	I2051.5	Spare
I2051.6	DI 14 X8:4	I2051.6	Spare
I2051.7	DI 15 X8:2	I2051.7	Spare

-KF1.11

FESTO
CPX-M-AB-8-M12X2-5POL
549335

X1 M12 1 2 3 4 5 — 24V DI 1 0V DI 0 FE
X2 M12 1 2 3 4 5 — 24V DI 3 0V DI 2 FE
X3 M12 1 2 3 4 5 — 24V DI 5 0V DI 4 FE
X4 M12 1 2 3 4 5 — 24V DI 7 0V DI 6 FE
X5 M12 1 2 3 4 5 — 24V DI 9 0V DI 8 FE
X6 M12 1 2 3 4 5 — 24V DI 11 0V DI 10 FE
X7 M12 1 2 3 4 5 — 24V DI 13 0V DI 12 FE
X8 M12 1 2 3 4 5 — 24V DI 15 0V DI 14 FE

BN WH BU BK

+.UQ53UQ5.1-W1
=V1UQ53UQ5+.UQ53UQ5/1.1

=V1UQ53BG0/2

2

			Date	1/24/2023	Volvo Trucks North America	Valiant TMS	CONNECTING MOD. FOR VTSA MANIFOLD	Drawing name: =2V01&EFS-EL_KF1	= V1UQ53KF1
			Ed.	MKLEPADLO					+ V1UQ53
			Appr		P6700 Framing - Cell 2V01, KF1			Document type: EFS	Project nr: 22-16152
Modification	Date	Name	Original		Replacement of	Replaced by	Scale 1:1		Page 1 / 1630

I2052.0 DI 0 X1:4	V1UQ53-BG01 — Sensor Underbody Floor (Common)
I2052.1 DI 1 X1:2	I2052.1 — Spare
I2052.2 DI 2 X2:4	V1UQ53-BG02 — Sensor Pallet Position (L230)
I2052.3 DI 3 X2:2	V1UQ53-BG03 — Sensor Pallet Position (L230)
I2052.4 DI 4 X3:4	V1UQ53-BG04 — Sensor Pallet Position (L290)
I2052.5 DI 5 X3:2	V1UQ53-BG05 — Sensor Pallet Position (L290)
I2052.6 DI 6 X4:4	V1UQ53-BG06 — Sensor Pallet Position (L320)
I2052.7 DI 7 X4:2	V1UQ53-BG07 — Sensor Pallet Position (L320)
I2053.0 DI 8 X5:4	V1UQ53-BG08 — Sensor Pallet Position (L150)
I2053.1 DI 9 X5:2	V1UQ53-BG09 — Sensor Pallet Position (L150)
I2053.2 DI 10 X6:4	I2053.2 — Spare
I2053.3 DI 11 X6:2	I2053.3 — Spare
I2053.4 DI 12 X7:4	I2053.4 — Spare
I2053.5 DI 13 X7:2	I2053.5 — Spare
I2053.6 DI 14 X8:4	I2053.6 — Spare
I2053.7 DI 15 X8:2	I2053.7 — Spare

-KF1.12

FESTO
CPX-M-AB-8-M12X2-5POL
549335

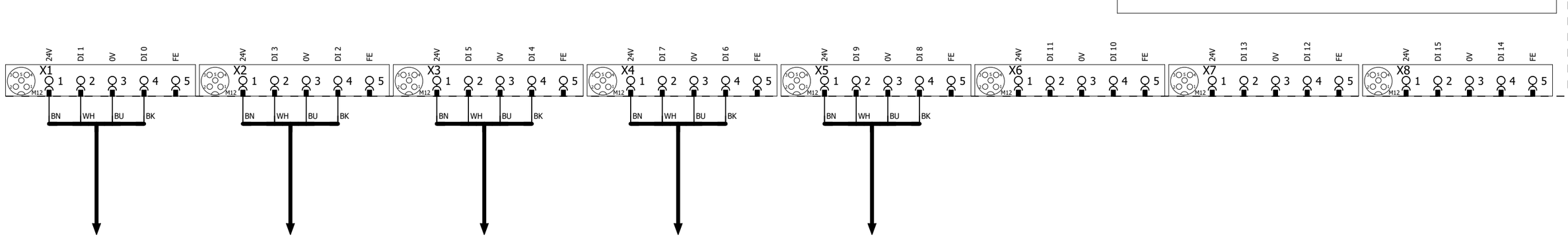

1 3

			Date	1/24/2023	Volvo Trucks North America	Valiant TMS	I/O MOD. DI16 (8 x M12) FOR VTSA-F	Drawing name: =2V01&EFS-EL_KF1	= V1UQ53KF1	
			Ed.	MKLEPADLO					+ V1UQ53	
			Appr		P6700 Framing - Cell 2V01, KF1			Document type: EFS	Project nr: 22-16152	Page 2
Modification	Date	Name	Original		Replacement of / Replaced by	Scale 1:1				1630

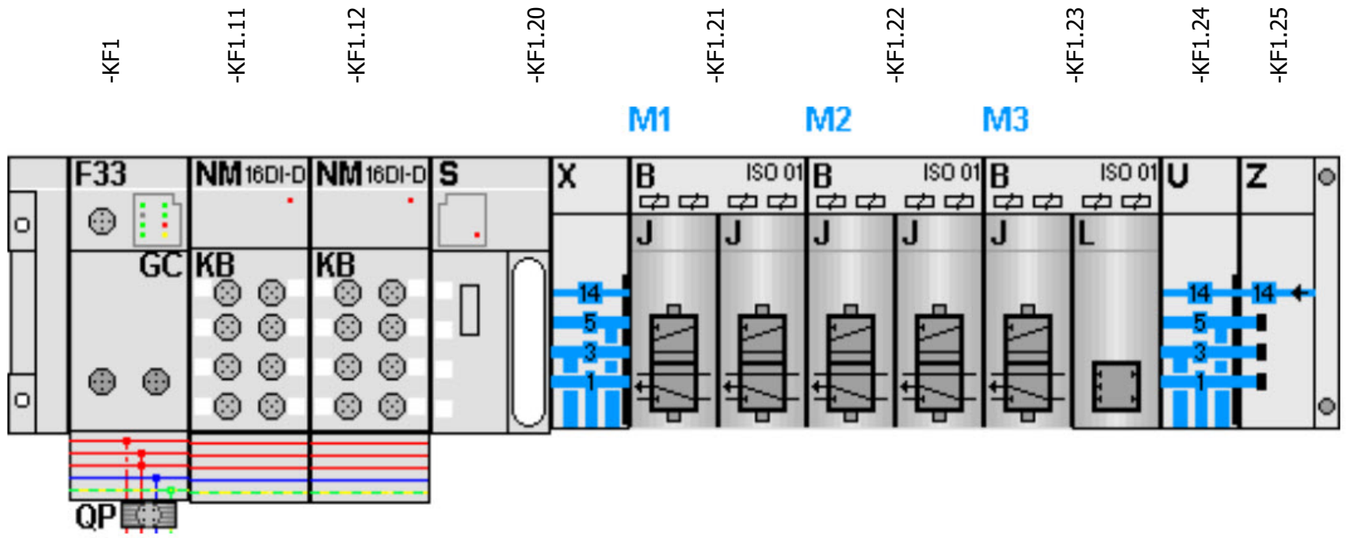

-KF1.21
=V1UQ53UQ1+.UQ53UQ1/1.3
=V1UQ53UQ2+.UQ53UQ2/1.3

FESTO

=V1UQ53UQ1+.UQ53UQ1/1.4	Q2050.0 DO 0 1.1	-QN1.1_Q	Common Pin Clamps 1 (RST)
=V1UQ53UQ1+.UQ53UQ1/1.4	Q2050.1 DO 1 1.2	-QN1.2_Q	Common Pin Clamps 1 (SET)
=V1UQ53UQ2+.UQ53UQ2/1.4	Q2050.2 DO 2 2.1	-QN2.1_Q	Common Pin Clamps 2 (RST)
=V1UQ53UQ2+.UQ53UQ2/1.4	Q2050.3 DO 3 2.2	-QN2.2_Q	Common Pin Clamps 2 (SET)

-KF1.22
=V1UQ53UQ3+.UQ53UQ3/1.3
=V1UQ53UQ4+.UQ53UQ4/1.3

FESTO

=V1UQ53UQ3+.UQ53UQ3/1.4	Q2050.4 DO 0 1.1	-QN3.1_Q	Common Pin Clamps 3 (RST)
=V1UQ53UQ3+.UQ53UQ3/1.4	Q2050.5 DO 1 1.2	-QN3.2_Q	Common Pin Clamps 3 (SET)
=V1UQ53UQ4+.UQ53UQ4/1.4	Q2050.6 DO 2 2.1	-QN4.1_Q	L150 Model Guide Slides (RST)
=V1UQ53UQ4+.UQ53UQ4/1.4	Q2050.7 DO 3 2.2	-QN4.2_Q	L150 Model Guide Slides (SET)

-KF1.23
=V1UQ53UQ5+.UQ53UQ5/1.3

FESTO

=V1UQ53UQ5+.UQ53UQ5/1.4	Q2051.0 DO 0 1.1	-QN5.1_Q	Mobile Supply Assembly (RST)
=V1UQ53UQ5+.UQ53UQ5/1.4	Q2051.1 DO 1 1.2	-QN5.2_Q	Mobile Supply Assembly (SET)
	Q2051.2 DO 2 2.1	-QN6.1_Q	Spare (RST)
	Q2051.3 DO 3 2.2	-QN6.2_Q	Spare (SET)

0	1	2	3	4	5	6	7	8	9

=V1UQ53KF1
+.UQ53

-KF1.21
=V1UQ53KF1+V1UQ53/3.1

Common Pin Clamps 1 (RST)	Common Pin Clamps 1 (SET)
=V1UQ53KF1	=V1UQ53KF1
+V1UQ53	+V1UQ53
-QN1.1_Q	-QN1.2_Q
=V1UQ53KF1	=V1UQ53KF1
+V1UQ53/3.3	+V1UQ53/3.3
Q2050.0	Q2050.1
1.1 Pneumatic Valve	1.2 Pneumatic Valve

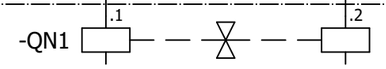

=V1UQ53KF1+V1UQ53/3

=V1UQ53UQ2+.UQ53UQ2/1

			Date	1/24/2023	Volvo Trucks North America	Valiant TMS	FESTO DQ CONNECTION QN1	Drawing name: =2V01&EFS-EL_KF1	= V1UQ53UQ1
			Ed.	MKLEPADLO					+ V1UQ53UQ1
			Appr		P6700 Framing - Cell 2V01, KF1			Document type: EFS	Project nr: 22-16152
Modification	Date	Name	Original		Replacement of / Replaced by	Scale 1:1			Page 1 / 1630

0	1	2	3	4	5	6	7	8	9

=V1UQ53KF1
+.UQ53

-KF1.21
=V1UQ53KF1+V1UQ53/3.1

Common Pin Clamps 2 (RST)	Common Pin Clamps 2 (SET)
=V1UQ53KF1	=V1UQ53KF1
+V1UQ53	+V1UQ53
-QN2.1_Q	-QN2.2_Q
=V1UQ53KF1	=V1UQ53KF1
+V1UQ53/3.3	+V1UQ53/3.3
Q2050.2	Q2050.3
2.1 Pneumatic Valve	2.2 Pneumatic Valve

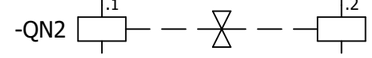

=V1UQ53UQ1+.UQ53UQ1/1

=V1UQ53UQ3+.UQ53UQ3/1

			Date	1/24/2023	Volvo Trucks North America	Valiant TMS	FESTO DQ CONNECTION QN2	Drawing name: =2V01&EFS-EL_KF1	= V1UQ53UQ2
			Ed.	MKLEPADLO					+ V1UQ53UQ2
			Appr		P6700 Framing - Cell 2V01, KF1			Document type: EFS	Project nr: 22-16152
Modification	Date	Name	Original		Replacement of / Replaced by	Scale 1:1			Page 1 / 1630

0	1	2	3	4	5	6	7	8	9

=V1UQ53KF1
+.UQ53

-KF1.22
=V1UQ53KF1+V1UQ53/3.1

Common Pin Clamps 3 (RST)	Common Pin Clamps 3 (SET)
=V1UQ53KF1	=V1UQ53KF1
+V1UQ53	+V1UQ53
-QN3.1_Q	-QN3.2_Q
=V1UQ53KF1	=V1UQ53KF1
+V1UQ53/3.3	+V1UQ53/3.3
Q2050.4	Q2050.5
1.1 Pneumatic Valve	1.2 Pneumatic Valve

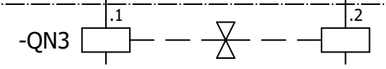

=V1UQ53UQ2+.UQ53UQ2/1

=V1UQ53UQ4+.UQ53UQ4/1

			Date	1/24/2023	Volvo Trucks North America	Valiant TMS	FESTO DQ CONNECTION QN3	Drawing name: =2V01&EFS-EL_KF1	= V1UQ53UQ3
			Ed.	MKLEPADLO					+ V1UQ53UQ3
			Appr		P6700 Framing - Cell 2V01, KF1			Document type: EFS	Project nr: 22-16152
Modification	Date	Name	Original		Replacement of / Replaced by	Scale 1:1			Page 1 / 1630

0	1	2	3	4	5	6	7	8	9

=V1UQ53KF1
+.UQ53

-KF1.22
=V1UQ53KF1+V1UQ53/3.1

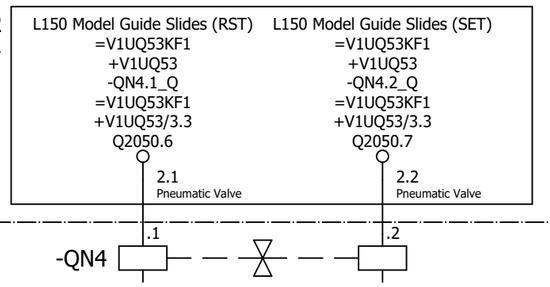

=V1UQ53UQ3+.UQ53UQ3/1

=V1UQ53UQ5+.UQ53UQ5/1

			Date	1/24/2023	Volvo Trucks North America	Valiant TMS	FESTO DQ CONNECTION QN4	Drawing name: =2V01&EFS-EL_KF1	= V1UQ53UQ4
			Ed.	MKLEPADLO					+ V1UQ53UQ4
			Appr		P6700 Framing - Cell 2V01, KF1			Document type: EFS	Project nr: 22-16152
Modification	Date	Name	Original		Replacement of	Replaced by	Scale 1:1		Page 1 / 1630

0	1	2	3	4	5	6	7	8	9

=V1UQ53KF1
+.UQ53

-KF1.23
=V1UQ53KF1+V1UQ53/3.1

Mobile Supply Assembly (RST)	Mobile Supply Assembly (SET)
=V1UQ53KF1	=V1UQ53KF1
+V1UQ53	+V1UQ53
-QN5.1_Q	-QN5.2_Q
=V1UQ53KF1	=V1UQ53KF1
+V1UQ53/3.3	+V1UQ53/3.3
Q2051.0	Q2051.1
1.1 Pneumatic Valve	1.2 Pneumatic Valve

-QN5 .1 .2

=V1UQ53KF1+V1UQ53/1.1
+.UQ53UQ5.1-W1

-W1
RKC 4.4T-3-RSC 4.4T/S3060
3m
BN BU BK WH

-XGR/S
P1 1 3 4 2
VB2-FSM 4.4/2FKM 4/S3450
TURCK
J1 1 3 4 2
J2 1 3 4 2
BN BU BK WH

-W1.1
RKC 4.4T-0.5-RSC 4.4T/S3060
0.5m
-W1.2
RKC 4.4T-0.5-RSC 4.4T/S3060
0.5m
BN BU BK WH

-BGR
Sn = 4 mm
TURCK
1644797
pnp
1 3 4

-BGS
Sn = 4 mm
TURCK
1644797
pnp
1 3 4

Mobile Supply Assembly
=V1UQ53UQ5.1
+.UQ53UQ5.1
-UQ5.1

=V1UQ53 -UQ5.1-BGR Mobile Supply Assembly	=V1UQ53 -UQ5.1-BGS Mobile Supply Assembly

=V1UQ53UQ4+.UQ53UQ4/1

=V1WC1+.UC11/1

			Date	1/24/2023	Volvo Trucks North America	Valiant TMS	FESTO DQ CONNECTION QN5	Drawing name: =2V01&EFS-EL_KF1	= V1UQ53UQ5
			Ed.	MKLEPADLO					+ V1UQ53UQ5
			Appr		P6700 Framing - Cell 2V01, KF1			Document type: EFS	Project nr: 22-16152
Modification	Date	Name	Original		Replacement of	Replaced by	Scale 1:1		Page 1 / 1630

0	1	2	3	4	5	6	7	8	9

3L1 / =V1WC2/10.1

3L2 / =V1WC2/10.1

3L3 / =V1WC2/10.1

3L1 BK 4/0 AWG

3L2 BK 4/0 AWG

3L3 BK 4/0 AWG

-QB1
In=250A

SIEMENS

MCCB_UL_FS250_250A_3P_65KA_ETU8_LSI

3VA6225-6KP31-0AA0

ETU850

1 3 5

I> I> I>

I>> I>> I>>

2 4 6

L

I> S

I>> I

MF

-KF1
Communication module

3VA9177-0TB10

N U-tap -X4

N-CT -X1

EFB/AFB -X2

-WF10

-2L+3 / =V1WC4/4.2

-2M3 / =V1WC4/4.2

L+ 1 1/L+

M 2 2/M

-X1

-KF1.1
Breaker data server

COM

3VA9977-0TA20

P1

-KF1.2
PN expansion module

P2

-KF100.11-P2 / =V1KF1/2.5

-KF100.11-P2
PROFINET Cable

7KM9300-0AE02-0AA0

1L1 BK 4/0 AWG

1L2 BK 4/0 AWG

1L3 BK 4/0 AWG

3 KVA
-TA1

-FC1

1L1 BKOG 14 AWG

1L3 BKOG 14 AWG

1 3 5

I> I> I>

2 4 6

15A

2L1 BKOG 14 AWG

2L3 BKOG 14 AWG

H1 X4

H3 X2

480VAC

120VAC

H2 X3

H4 X1

-V1UC11HL / =V1WC3/1.1

-V1UC11HN / =V1WC3/1.1

1L1 1L2 1L3 PE

PE

1PE / =V1WC2/11.1

PE PE

PE PE

PE

-GND1
RK
1x6 AWG

-GND
Terminal block Equipment Bonding

480VAC TN-S 3 PHASE 60Hz
Fed from: .....
short circuit protection: .....
Over current: .....
cable type: 4/0 AWG

IkMax =.....kA
IkMin = ...kA
Z: ..... mΩ.

=V1UQ53UQ5+.UQ53UQ5/1

+.UC12/1

			Date	1/24/2023	Volvo Trucks North America		Valiant TMS	Incoming power supply 480 VAC	Drawing name: =2V01&EFS-EL_KF1	= V1WC1
			Ed.	MKLEPADLO						+ V1UC11
			Appr		P6700 Framing - Cell 2V01, KF1				Document type: EFS	Project nr: 22-16152
Modification	Date	Name	Original		Replacement of	Replaced by	Scale 1:1			Page 1 / 1630

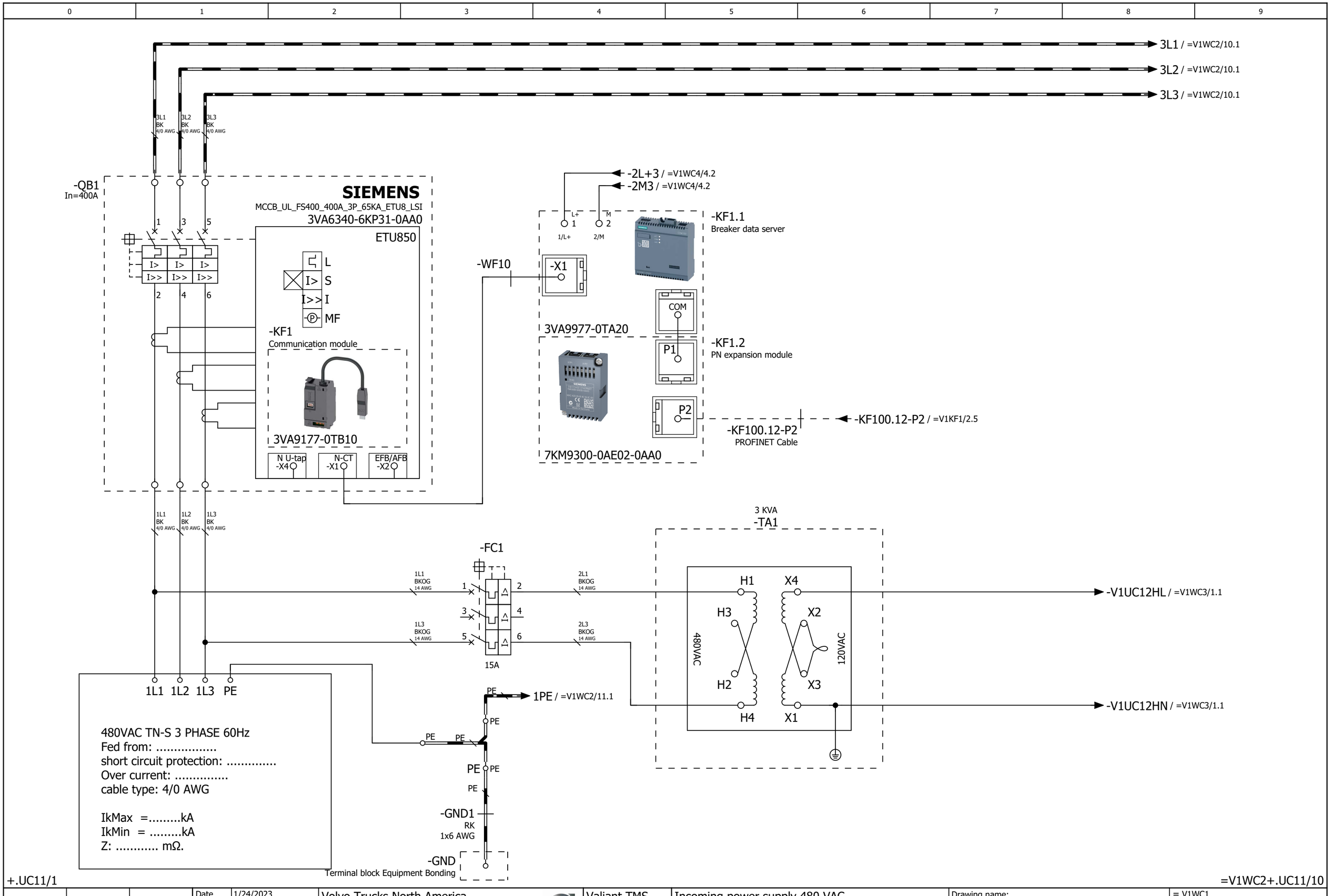

			Date	1/24/2023	Volvo Trucks North America	Valiant TMS	Incoming power supply 480 VAC	Drawing name: =2V01&EFS-EL_KF1	= V1WC1 + V1UC12
			Ed.	MKLEPADLO	P6700 Framing - Cell 2V01, KF1				
			Appr					Document type: EFS	Project nr: 22-16152
Modification	Date	Name	Original		Replacement of / Replaced by	Scale 1:1			Page 1 / 1630

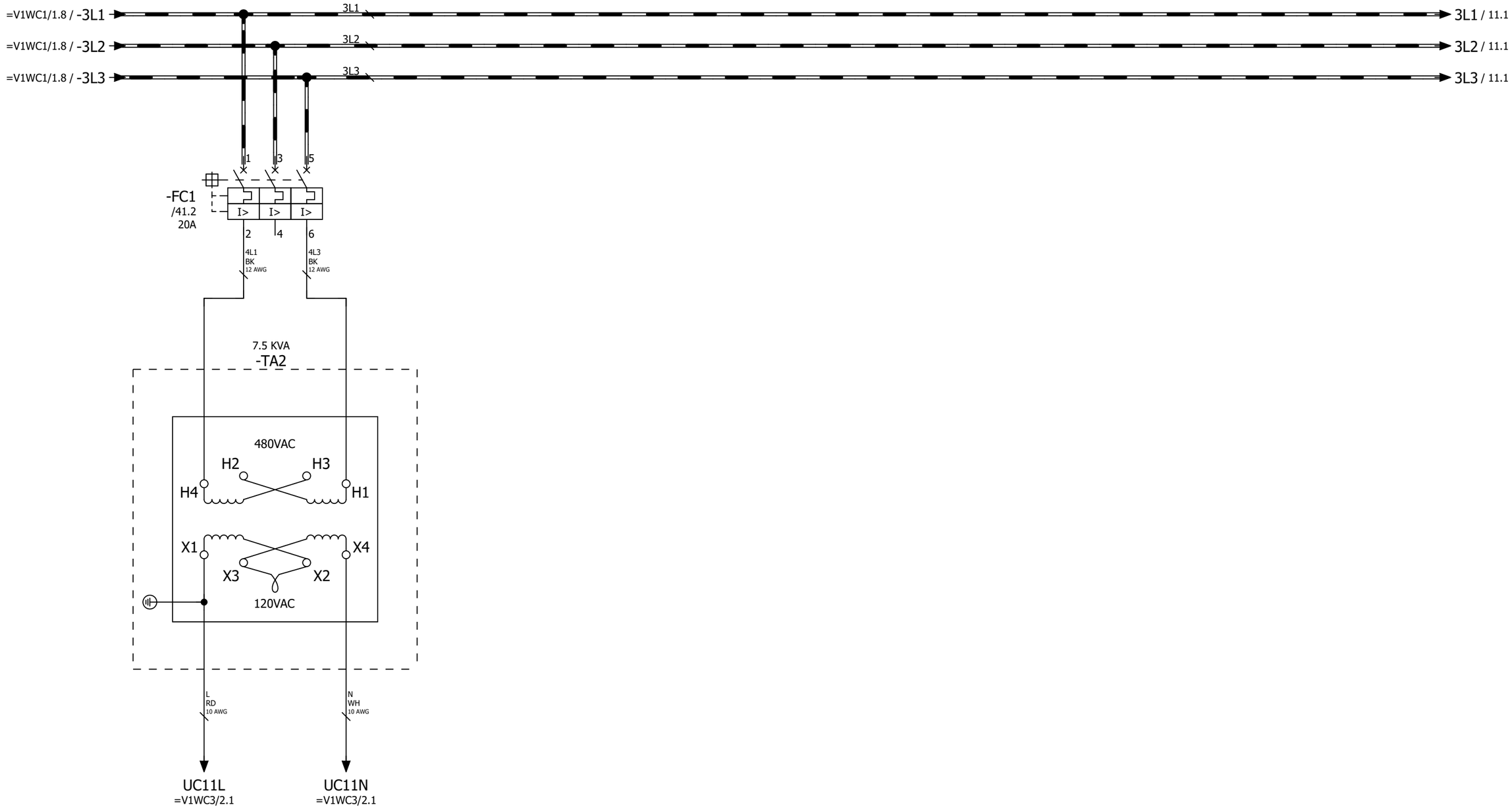

Power
Distribution
=V1UC11

=V1WC1+.UC12/1

11

			Date	1/24/2023	Volvo Trucks North America		Valiant TMS	Power distribution 480 VAC	Drawing name: =2V01&EFS-EL_KF1	= V1WC2	
			Ed.	MKLEPADLO						+ V1UC11	
			Appr		P6700 Framing - Cell 2V01, KF1				Document type: EFS	Project nr: 22-16152	Page 10
Modification	Date	Name	Original		Replacement of	Replaced by	Scale 1:1				1630

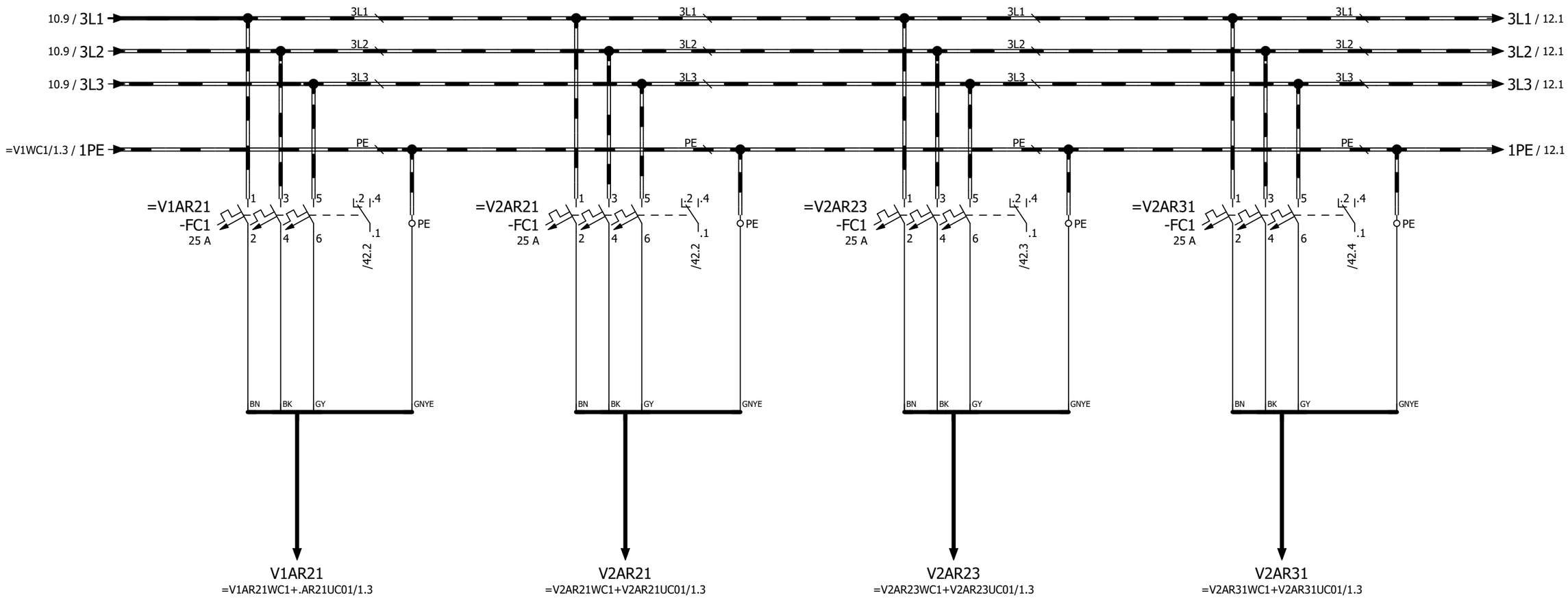

Power Distribution =V1AR21

Power Distribution =V2AR21

Power Distribution =V2AR23

Power Distribution =V2AR31

			Date	1/24/2023	Volvo Trucks North America		Valiant TMS	Power distribution 480 VAC	Drawing name: =2V01&EFS-EL_KF1	= V1WC2
			Ed.	MKLEPADLO						+ V1UC11
			Appr		P6700 Framing - Cell 2V01, KF1				Document type: EFS	Project nr: 22-16152	Page 11
Modification	Date	Name	Original		Replacement of	Replaced by	Scale 1:1			1630

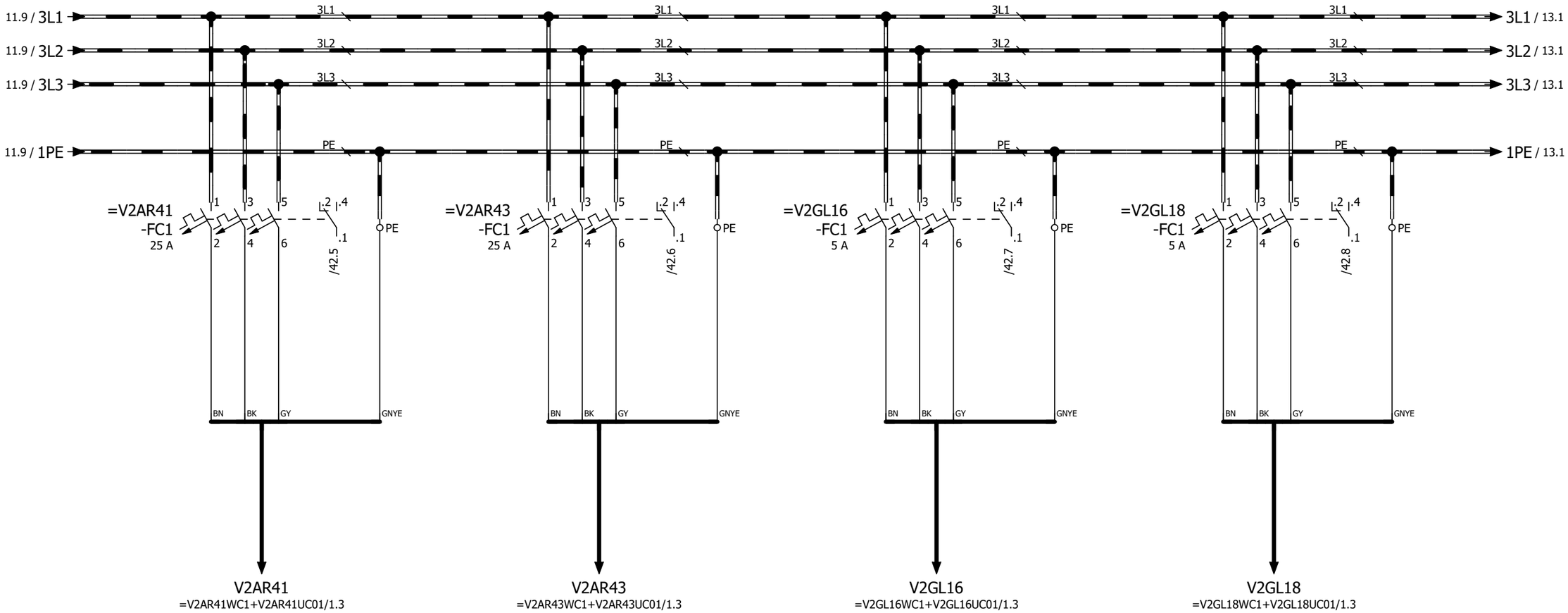

Power Distribution =V2AR41

Power Distribution =V2AR43

Power Distribution =V2GL16

Power Distribution =V2GL18

			Date	1/24/2023	Volvo Trucks North America	Valiant TMS	Power distribution 480 VAC	Drawing name: =2V01&EFS-EL_KF1	= V1WC2
			Ed.	MKLEPADLO					+ V1UC11
			Appr		P6700 Framing - Cell 2V01, KF1			Document type: EFS	Project nr: 22-16152
Modification	Date	Name	Original		Replacement of / Replaced by	Scale 1:1			Page 12 / 1630

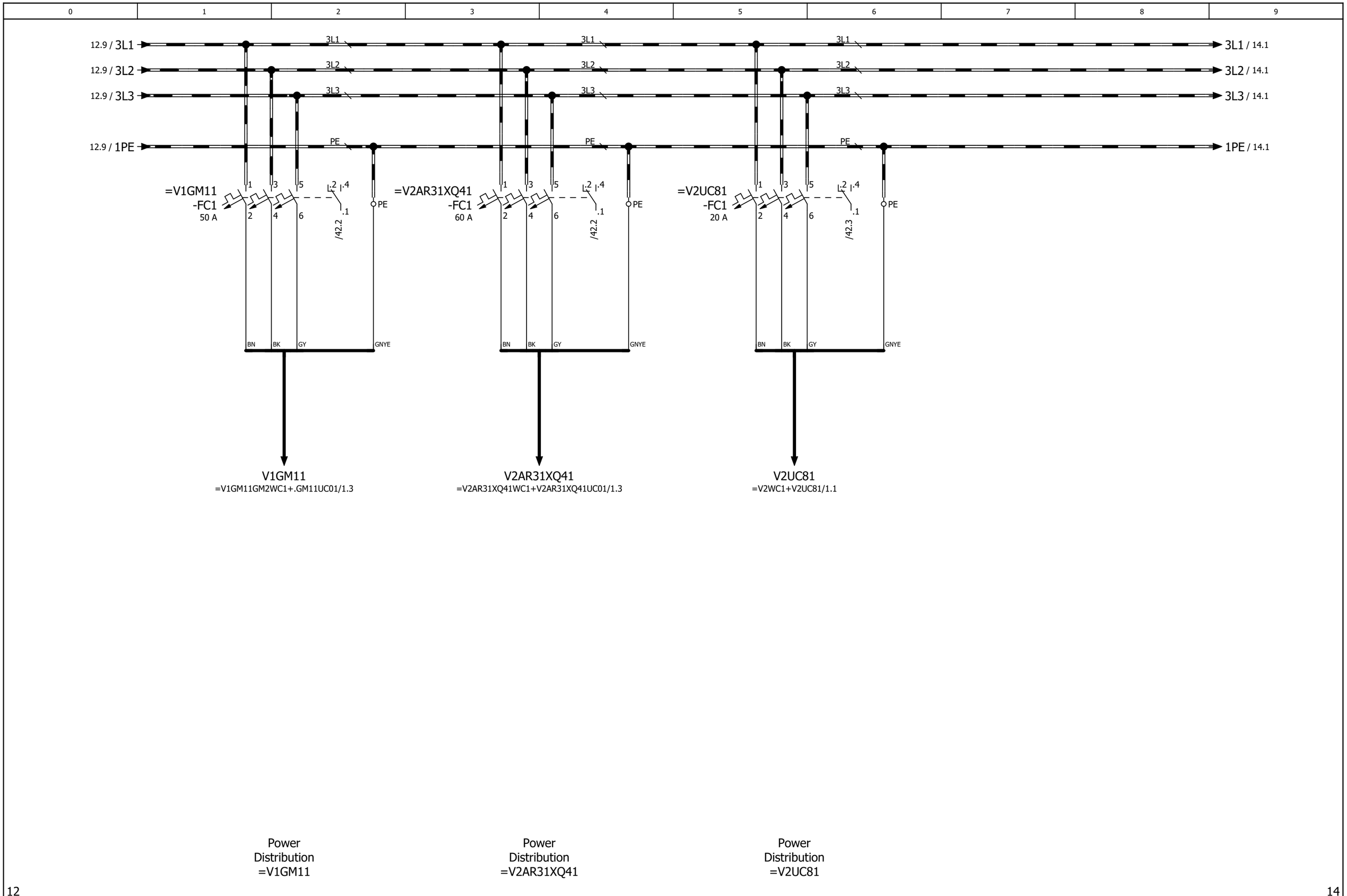

			Date	1/24/2023	Volvo Trucks North America	Valiant TMS	Power distribution 480 VAC	Drawing name: =2V01&EFS-EL_KF1	= V1WC2	
			Ed.	MKLEPADLO	P6700 Framing - Cell 2V01, KF1				+ V1UC11	
			Appr					Document type: EFS	Project nr: 22-16152	Page 13
Modification	Date	Name	Original		Replacement of / Replaced by	Scale 1:1				1630

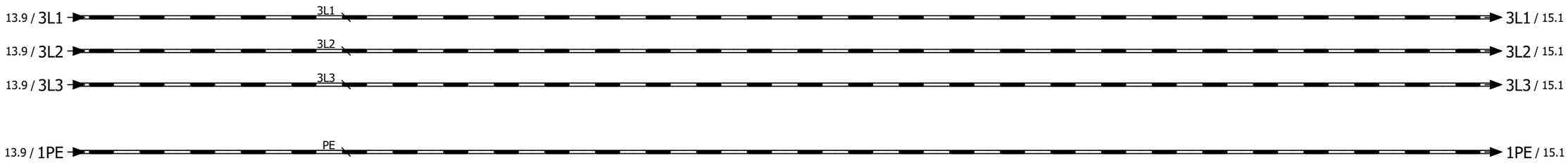

			Date	1/24/2023	Volvo Trucks North America	Valiant TMS	Power distribution 480 VAC	Drawing name: =2V01&EFS-EL_KF1	= V1WC2	
			Ed.	MKLEPADLO					+ V1UC11	
			Appr		P6700 Framing - Cell 2V01, KF1			Document type: EFS	Project nr: 22-16152	Page 14
Modification	Date	Name	Original		Replacement of / Replaced by	Scale 1:1				1630

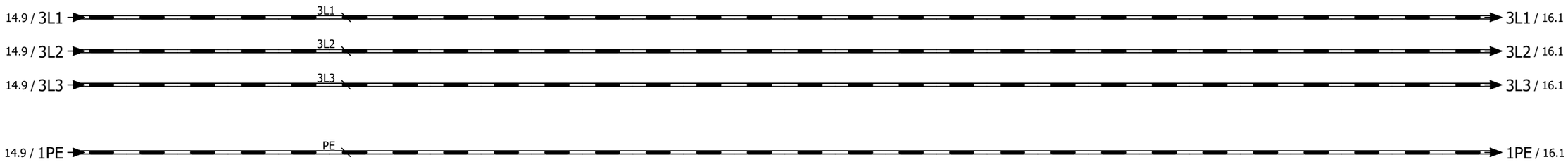

			Date	1/24/2023	Volvo Trucks North America	Valiant TMS	Power distribution 480 VAC	Drawing name: =2V01&EFS-EL_KF1	= V1WC2	
			Ed.	MKLEPADLO					+ V1UC11	
			Appr		P6700 Framing - Cell 2V01, KF1			Document type: EFS	Project nr: 22-16152	Page 15
Modification	Date	Name	Original		Replacement of / Replaced by	Scale 1:1				1630

0	1	2	3	4	5	6	7	8	9

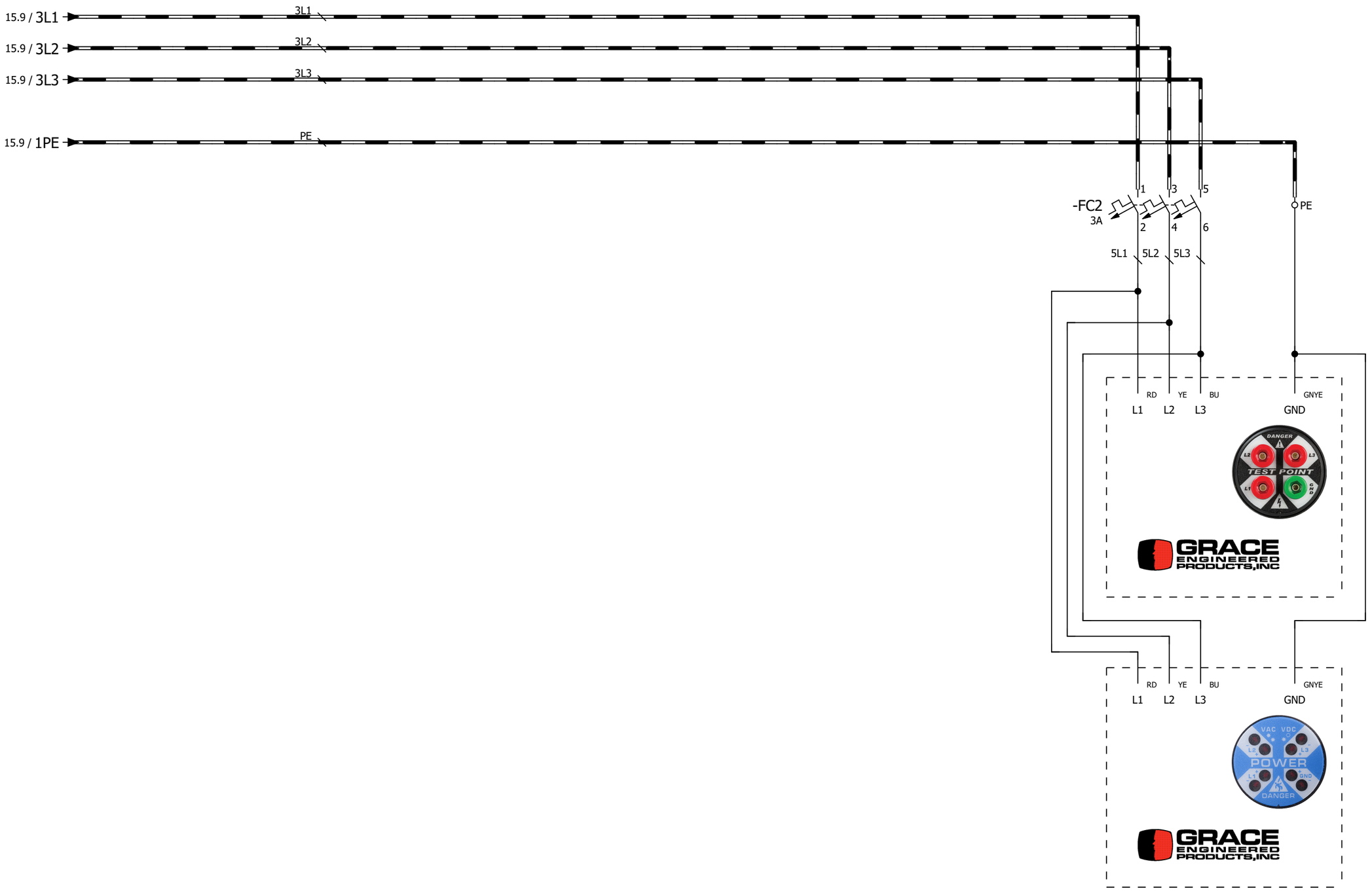

Voltage Test Port /
Indicator Light

			Date	1/24/2023	Volvo Trucks North America		Valiant TMS	Power distribution 480 VAC	Drawing name: =2V01&EFS-EL_KF1	= V1WC2
			Ed.	MKLEPADLO						+ V1UC11
			Appr		P6700 Framing - Cell 2V01, KF1				Document type: EFS	Project nr: 22-16152
Modification	Date	Name	Original		Replacement of	Replaced by	Scale 1:1			Page 16 / 1630

=V1KF1

-KF11.11

Monitoring 480 VAC SPARE =V1KF1/9.2	Monitoring 480 VAC =V1UC11-FC1 =V1KF1/9.2			Monitoring 480 VAC SPARE =V1KF1/9.2	Monitoring 480 VAC SPARE =V1KF1/9.2
DI ET200SP	DI ET200SP	=V1WC4/1.0 TA1	=V1WC4/11.0 TA2	=V1WC4/1.1 FC11	=V1WC4/11.1 FC12	DI ET200SP	DI ET200SP
I50.0 DI0	I50.1 DI1					I50.6 DI6	I50.7 DI7
1	2					7	8

I50.1 BUOG 16 AWG

=V1WC2 -FC1 /10.1 .2 .4 .1

3L+1 BUOG 16 AWG

-XD3 1 2 3 4 5

=V1WC4/5.1 / 3L+1

=V1KF1

-KF11.11

Monitoring 480 VAC SPARE =V1KF1/9.2	Monitoring 480 VAC SPARE =V1KF1/9.2	Monitoring 480 VAC SPARE =V1KF1/9.2	Monitoring 480 VAC SPARE =V1KF1/9.2	Monitoring 480 VAC SPARE =V1KF1/9.2	Monitoring 480 VAC SPARE =V1KF1/9.2	Monitoring 480 VAC SPARE =V1KF1/9.2	Monitoring 480 VAC SPARE =V1KF1/9.2
DI ET200SP	DI ET200SP	DI ET200SP	DI ET200SP	DI ET200SP	DI ET200SP	DI ET200SP	DI ET200SP
I51.0 DI8	I51.1 DI9	I51.2 DI10	I51.3 DI11	I51.4 DI12	I51.5 DI13	I51.6 DI14	I51.7 DI15
9	10	11	12	13	14	15	16

			Date	1/24/2023	Volvo Trucks North America	Valiant TMS	Power distribution 480 VAC monitoring	Drawing name: =2V01&EFS-EL_KF1	= V1WC2
			Ed.	MKLEPADLO					+ V1UC11
			Appr		P6700 Framing - Cell 2V01, KF1			Document type: EFS	Project nr: 22-16152	Page 41
Modification	Date	Name	Original		Replacement of / Replaced by	Scale 1:1				1630

0	1	2	3	4	5	6	7	8	9

=V1KF1

	Monitoring 480 VAC =V1AR21-FC1 =V1KF1/10.2	Monitoring 480 VAC =V2AR21-FC1 =V1KF1/10.2	Monitoring 480 VAC =V2AR23-FC1 =V1KF1/10.2	Monitoring 480 VAC =V2AR31-FC1 =V1KF1/10.2	Monitoring 480 VAC =V2AR41-FC1 =V1KF1/10.2	Monitoring 480 VAC =V2AR43-FC1 =V1KF1/10.2	Monitoring 480 VAC =V2GL16-FC1 =V1KF1/10.2	Monitoring 480 VAC =V2GL18-FC1 =V1KF1/10.2
-KF11.12	DI ET200SP	DI ET200SP	DI ET200SP	DI ET200SP	DI ET200SP	DI ET200SP	DI ET200SP	DI ET200SP
	I52.0 DI0	I52.1 DI1	I52.2 DI2	I52.3 DI3	I52.4 DI4	I52.5 DI5	I52.6 DI6	I52.7 DI7
	1	2	3	4	5	6	7	8
	I52.0 BUOG 16 AWG	I52.1 BUOG 16 AWG	I52.2 BUOG 16 AWG	I52.3 BUOG 16 AWG	I52.4 BUOG 16 AWG	I52.5 BUOG 16 AWG	I52.6 BUOG 16 AWG	I52.7 BUOG 16 AWG
-KF11.12	1	2	3	4	5	6	7	8
	I52.0 BUOG 16 AWG	I52.1 BUOG 16 AWG	I52.2 BUOG 16 AWG	I52.3 BUOG 16 AWG	I52.4 BUOG 16 AWG	I52.5 BUOG 16 AWG	I52.6 BUOG 16 AWG	I52.7 BUOG 16 AWG
	.2 .4	.2 .4	.2 .4	.2 .4	.2 .4	.2 .4	.2 .4	.2 .4
	=V1AR21 -FC1 /11.1	=V2AR21 -FC1 /11.3	=V2AR23 -FC1 /11.5	=V2AR31 -FC1 /11.7	=V2AR41 -FC1 /12.1	=V2AR43 -FC1 /12.3	=V2GL16 -FC1 /12.5	=V2GL18 -FC1 /12.7
	.1	.1	.1	.1	.1	.1	.1	.1
	3L+3 BUOG 16 AWG	3L+3 BUOG 16 AWG	3L+3 BUOG 16 AWG	3L+3 BUOG 16 AWG	3L+3 BUOG 16 AWG	3L+3 BUOG 16 AWG	3L+3 BUOG 16 AWG	3L+3 BUOG 16 AWG
-XD1	1	2	3	4	5	6	7	8

=V1WC4/5.2 / 3L+3

=V1KF1

	Monitoring 480 VAC =V1GM11-FC1 =V1KF1/10.2	Monitoring 480 VAC =V2AR31XQ41-FC1 =V1KF1/10.2	Monitoring 480 VAC =V2UC81-FC1 =V1KF1/10.2	Monitoring 480 VAC SPARE =V1KF1/10.2	Monitoring 480 VAC SPARE =V1KF1/10.2	Monitoring 480 VAC SPARE =V1KF1/10.2	Monitoring 480 VAC SPARE =V1KF1/10.2	Monitoring 480 VAC SPARE =V1KF1/10.2
-KF11.12	DI ET200SP	DI ET200SP	DI ET200SP	DI ET200SP	DI ET200SP	DI ET200SP	DI ET200SP	DI ET200SP
	I53.0 DI8	I53.1 DI9	I53.2 DI10	I53.3 DI11	I53.4 DI12	I53.5 DI13	I53.6 DI14	I53.7 DI15
	9	10	11	12	13	14	15	16
	I53.0 BUOG 16 AWG	I53.1 BUOG 16 AWG	I53.2 BUOG 16 AWG	I53.3 BUOG 16 AWG	I53.4 BUOG 16 AWG	I53.5 BUOG 16 AWG	I53.6 BUOG 16 AWG	I53.7 BUOG 16 AWG
-KF11.12	9	10	11	12	13	14	15	16
	I53.0 BUOG 16 AWG	I53.1 BUOG 16 AWG	I53.2 BUOG 16 AWG					
	.2 .4	.2 .4	.2 .4					
	=V1GM11 -FC1 /13.1	=V2AR31XQ41 -FC1 /13.3	=V2UC81 -FC1 /13.5					
	.1	.1	.1					
	3L+3 BUOG 16 AWG	3L+3 BUOG 16 AWG	3L+3 BUOG 16 AWG					
-XD1	9	10	11	12	13	14	15	16

			Date	1/24/2023	Volvo Trucks North America	Valiant TMS	Power distribution 480 VAC monitoring	Drawing name: =2V01&EFS-EL_KF1	= V1WC2
			Ed.	MKLEPADLO					+ V1UC11
			Appr		P6700 Framing - Cell 2V01, KF1			Document type: EFS	Project nr: 22-16152	Page 42
Modification	Date	Name	Original		Replacement of / Replaced by	Scale 1:1				1630

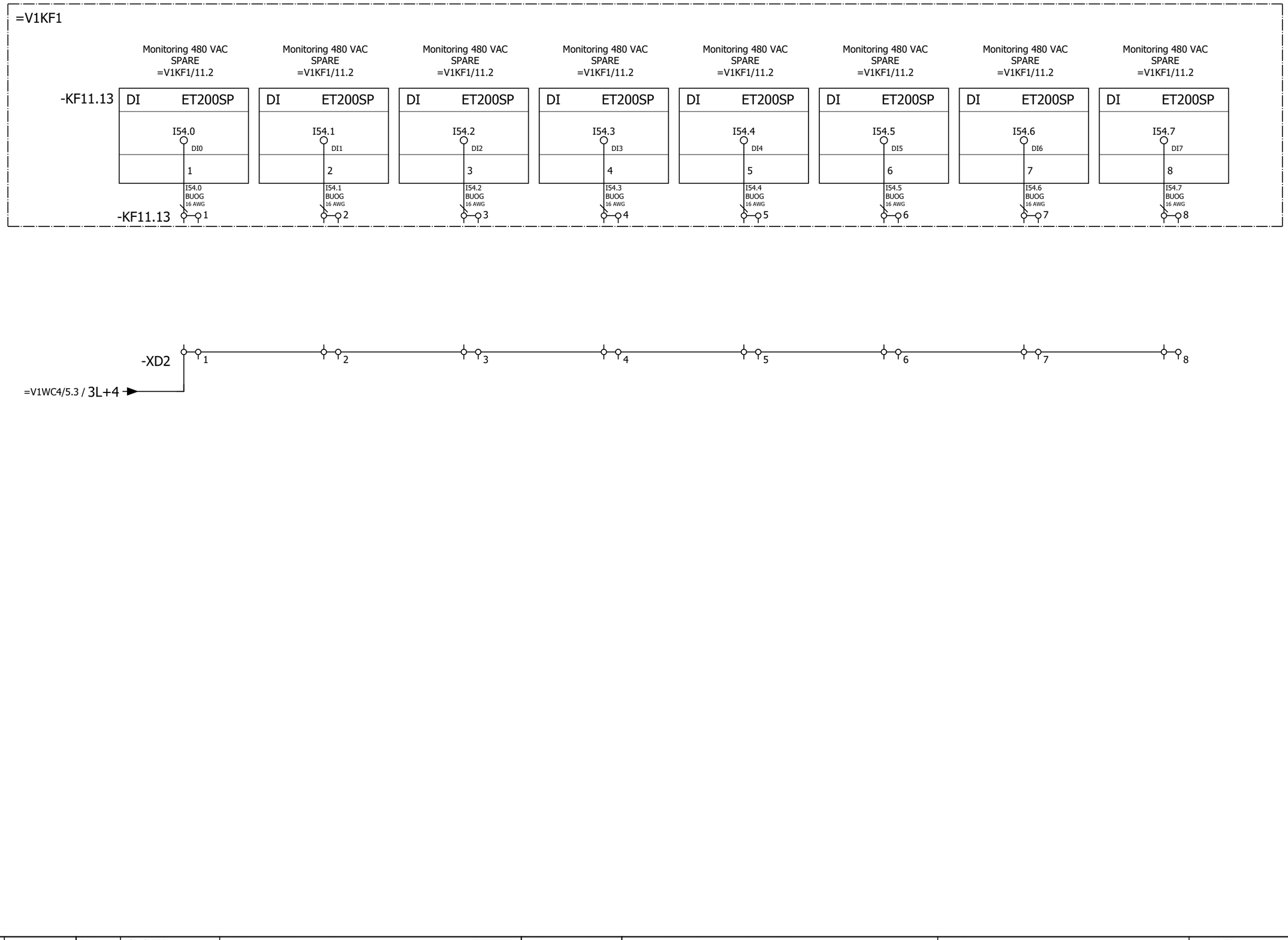

			Date	1/24/2023	Volvo Trucks North America	Valiant TMS	Power distribution 480 VAC monitoring	Drawing name: =2V01&EFS-EL_KF1	= V1WC2	
			Ed.	MKLEPADLO					+ V1UC11	
			Appr		P6700 Framing - Cell 2V01, KF1	Scale 1:1		Document type: EFS	Project nr: 22-16152	Page 43 / 1630
Modification	Date	Name	Original		Replacement of / Replaced by					

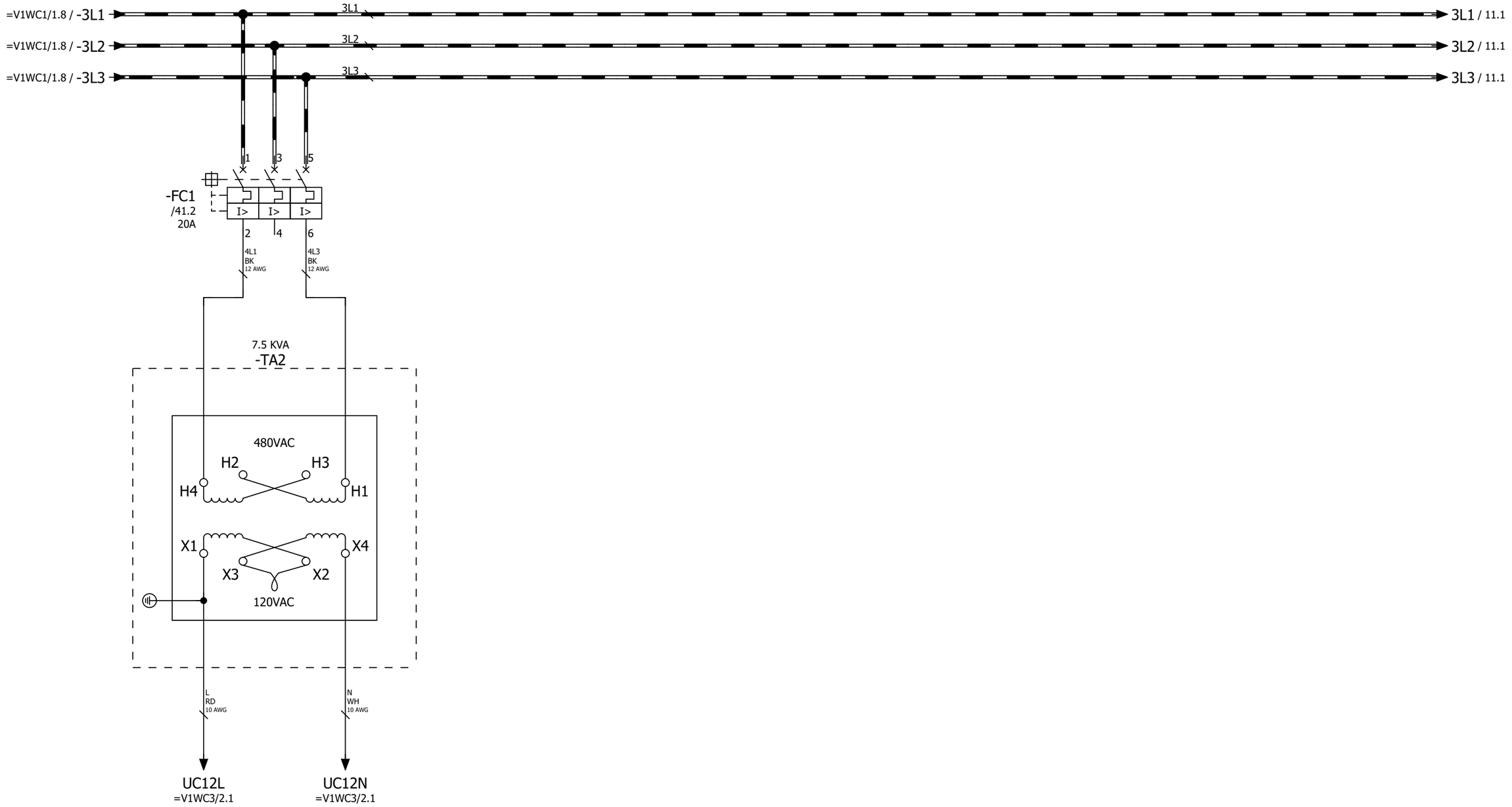

Power
Distribution
=V1UC12

			Date	1/24/2023	Volvo Trucks North America		Valiant TMS	Power distribution 480 VAC	Drawing name: =2V01&EFS-EL_KF1	= V1WC2	
			Ed.	MKLEPADLO						+ V1UC12	
			Appr		P6700 Framing - Cell 2V01, KF1				Document type: EFS	Project nr: 22-16152	Page 10
Modification	Date	Name	Original		Replacement of	Replaced by	Scale 1:1				1630

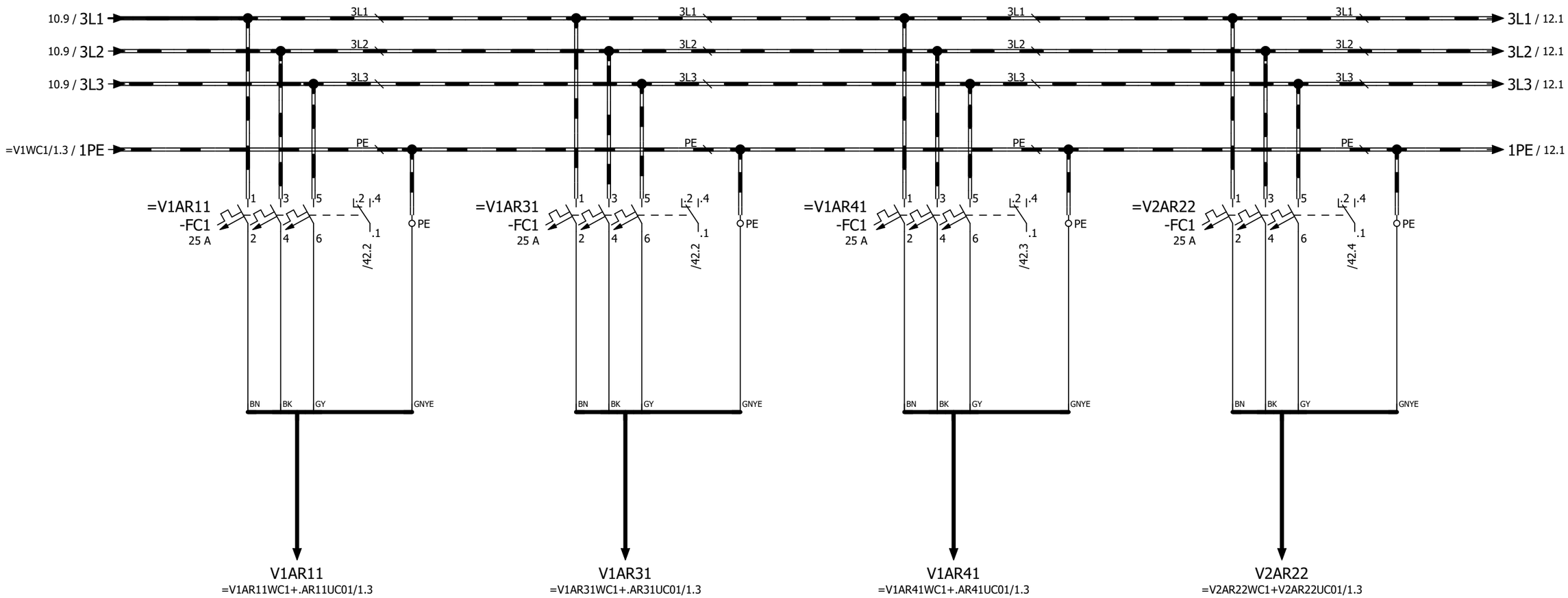

Power Distribution =V1AR11

Power Distribution =V1AR31

Power Distribution =V1AR41

Power Distribution =V2AR22

			Date	1/24/2023	Volvo Trucks North America	Valiant TMS	Power distribution 480 VAC	Drawing name: =2V01&EFS-EL_KF1	= V1WC2	
			Ed.	MKLEPADLO					+ V1UC12	
			Appr		P6700 Framing - Cell 2V01, KF1			Document type: EFS	Project nr: 22-16152	Page 11
Modification	Date	Name	Original		Replacement of / Replaced by	Scale 1:1				1630

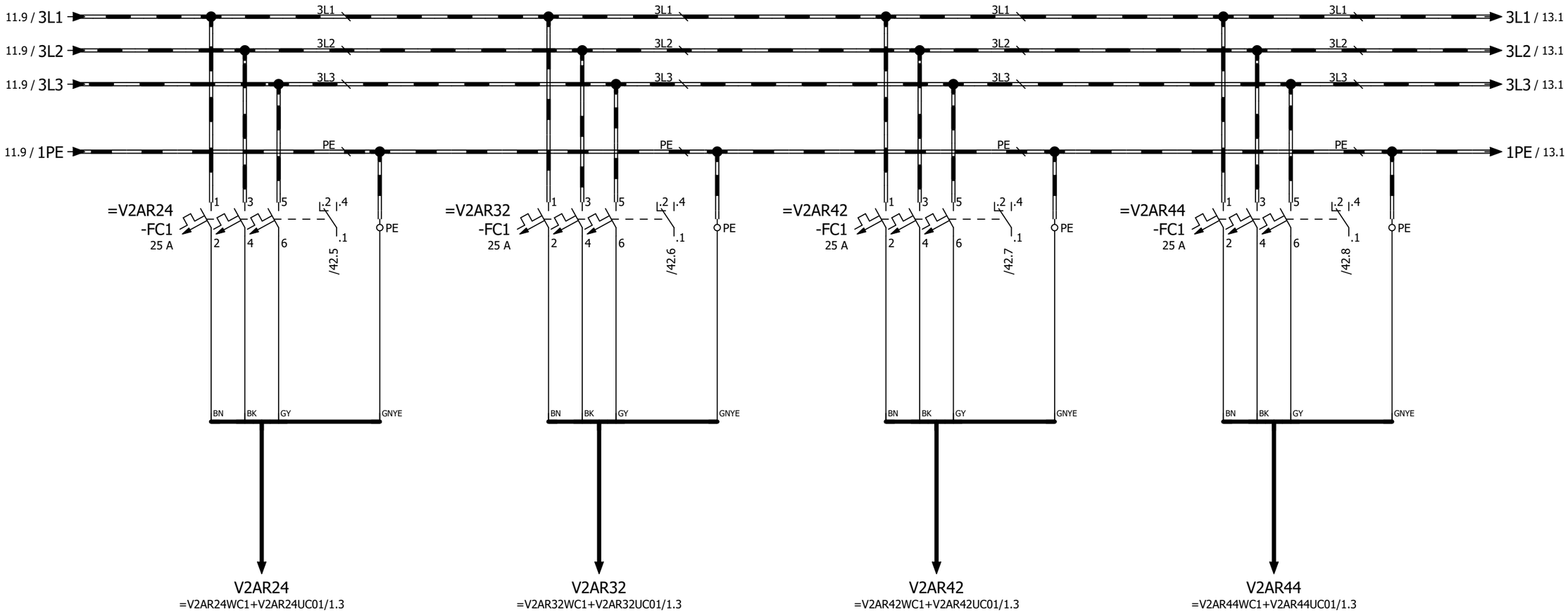

Power Distribution =V2AR24

Power Distribution =V2AR32

Power Distribution =V2AR42

Power Distribution =V2AR44

			Date	1/24/2023	Volvo Trucks North America	Valiant TMS	Power distribution 480 VAC	Drawing name: =2V01&EFS-EL_KF1	= V1WC2
			Ed.	MKLEPADLO					+ V1UC12
			Appr		P6700 Framing - Cell 2V01, KF1			Document type: EFS / Project nr: 22-16152	Page 12
Modification	Date	Name	Original		Replacement of / Replaced by	Scale 1:1			1630

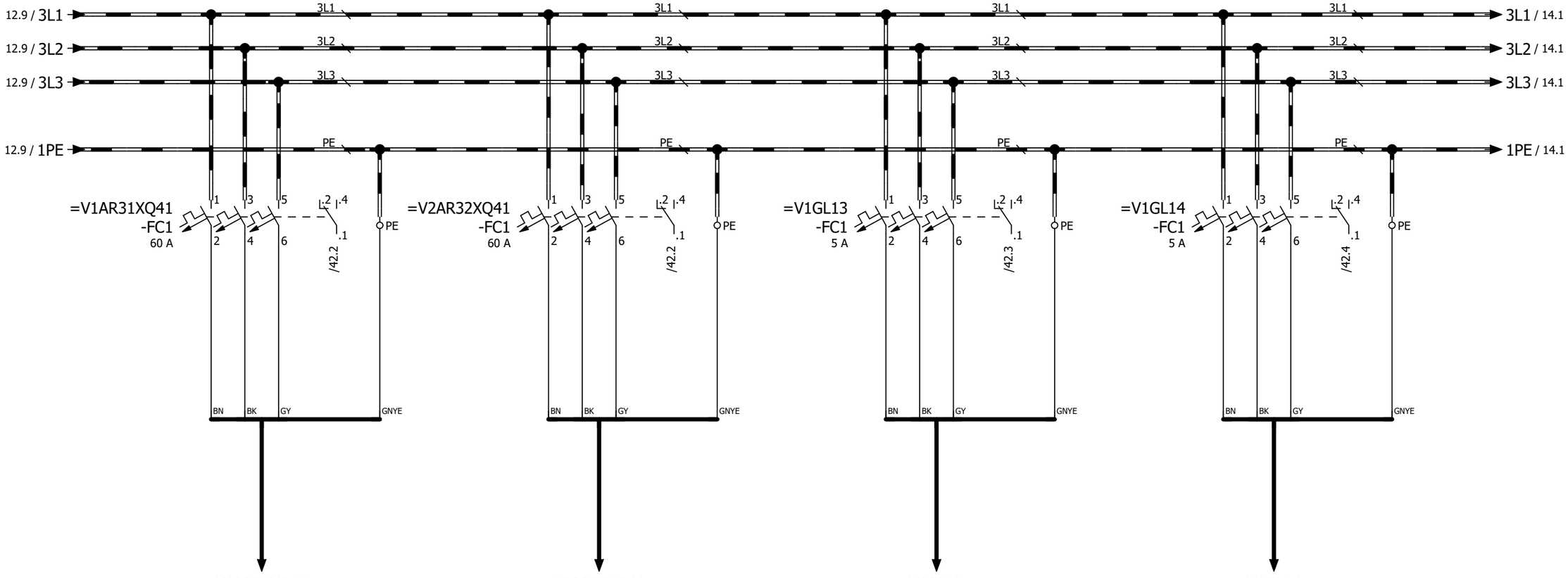

Power Distribution =V1AR31XQ41

Power Distribution =V2AR32XQ41

Power Distribution =V1GL13

Power Distribution =V1GL14

			Date	1/24/2023	Volvo Trucks North America		Valiant TMS	Power distribution 480 VAC	Drawing name: =2V01&EFS-EL_KF1	= V1WC2
			Ed.	MKLEPADLO						+ V1UC12
			Appr		P6700 Framing - Cell 2V01, KF1		Scale 1:1		Document type: EFS	Project nr: 22-16152
Modification	Date	Name	Original		Replacement of	Replaced by				Page 13 / 1630

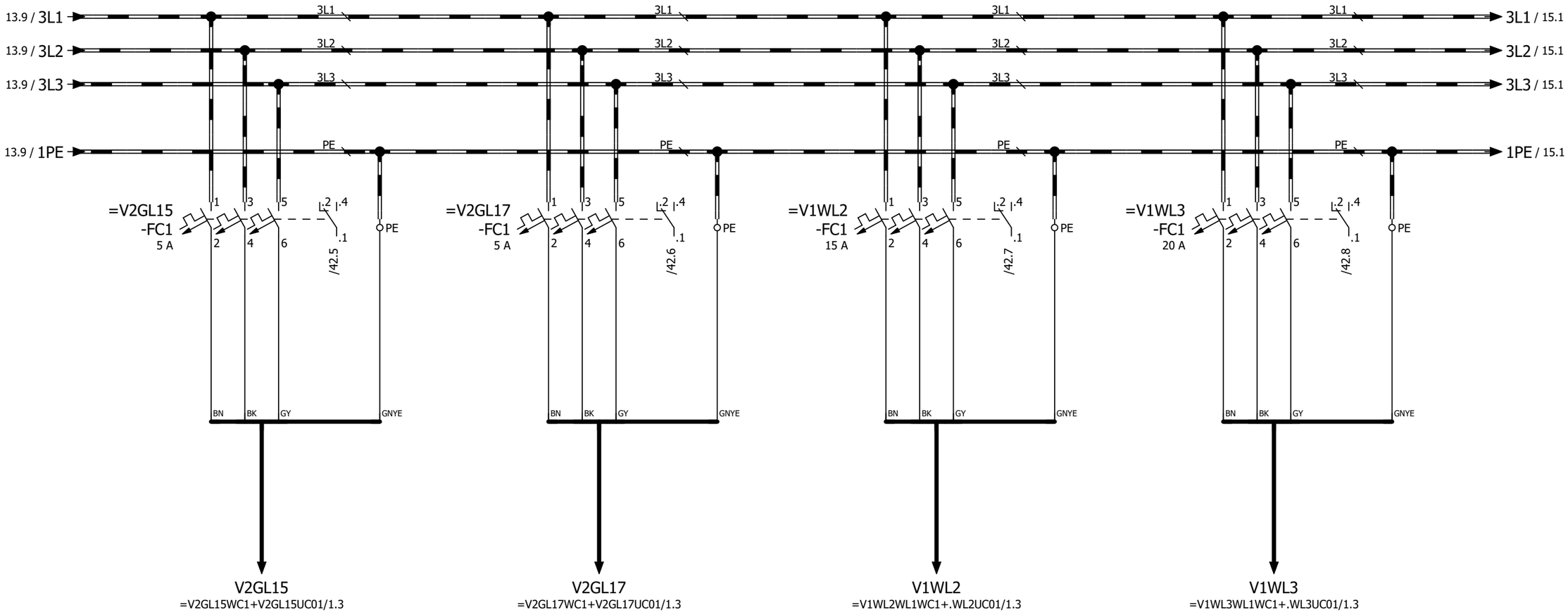

Power Distribution =V2GL15

Power Distribution =V2GL17

Power Distribution =V1WL2

Power Distribution =V1WL3

			Date	1/24/2023	Volvo Trucks North America	Valiant TMS	Power distribution 480 VAC	Drawing name: =2V01&EFS-EL_KF1	= V1WC2	
			Ed.	MKLEPADLO					+ V1UC12	
			Appr		P6700 Framing - Cell 2V01, KF1			Document type: EFS	Project nr: 22-16152	Page 14
Modification	Date	Name	Original		Replacement of / Replaced by	Scale 1:1				1630

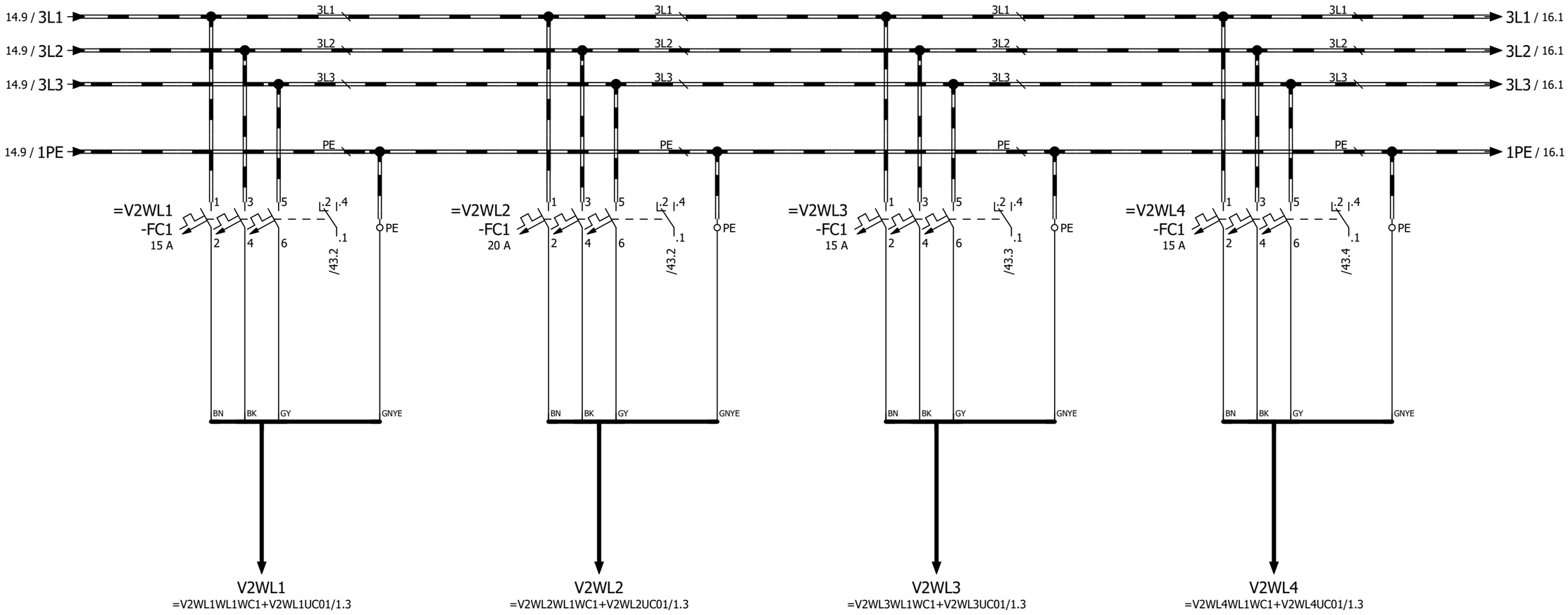

Power Distribution =V2WL1

Power Distribution =V2WL2

Power Distribution =V2WL3

Power Distribution =V2WL4

			Date	1/24/2023	Volvo Trucks North America	Valiant TMS	Power distribution 480 VAC	Drawing name: =2V01&EFS-EL_KF1	= V1WC2
			Ed.	MKLEPADLO					+ V1UC12
			Appr		P6700 Framing - Cell 2V01, KF1			Document type: EFS	Project nr: 22-16152
Modification	Date	Name	Original		Replacement of / Replaced by	Scale 1:1			Page 15 / 1630

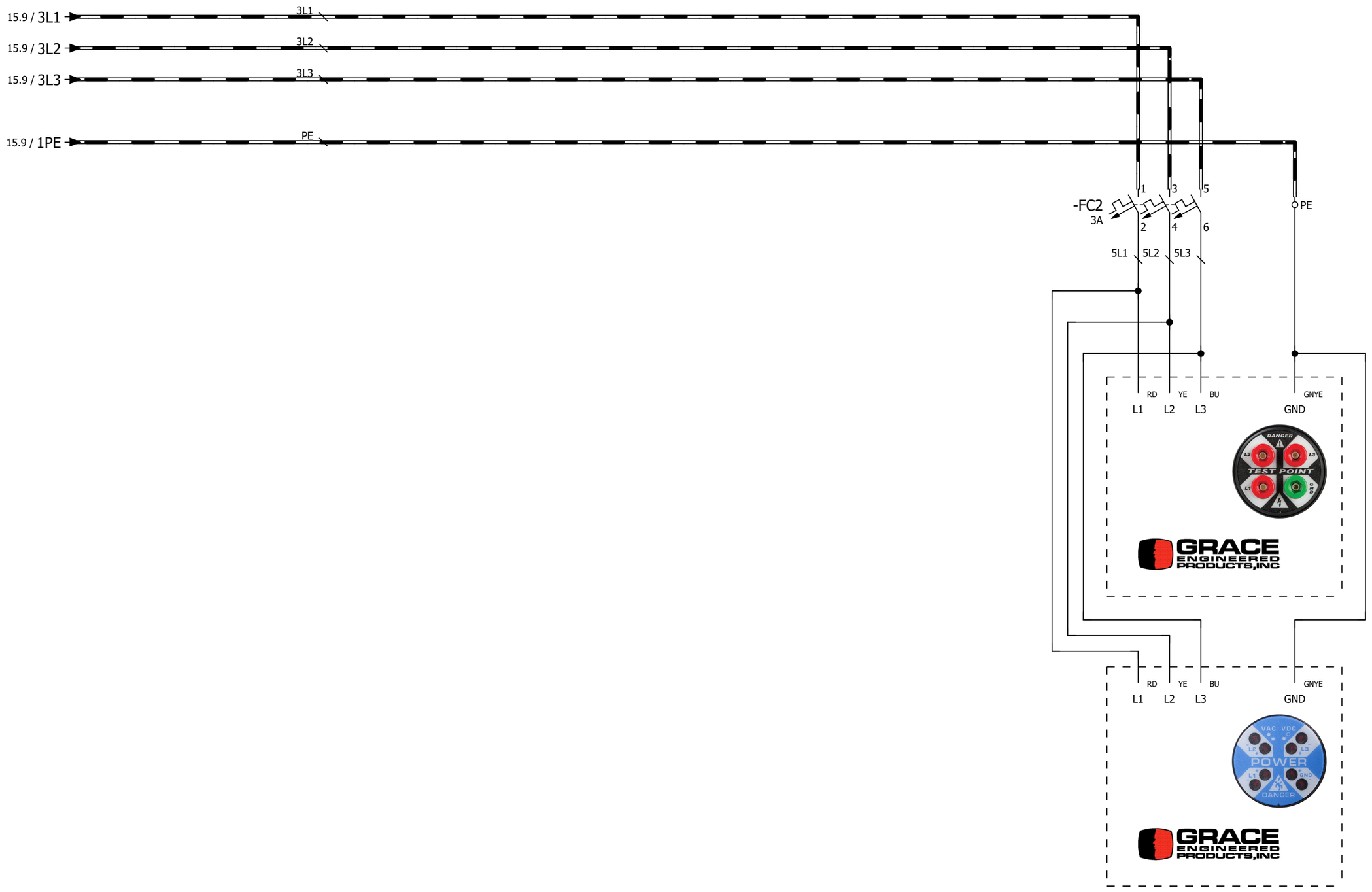

Voltage Test Port /
Indicator Light

			Date	1/24/2023	Volvo Trucks North America		Valiant TMS	Power distribution 480 VAC	Drawing name: =2V01&EFS-EL_KF1	= V1WC2
			Ed.	MKLEPADLO						+ V1UC12
			Appr		P6700 Framing - Cell 2V01, KF1				Document type: EFS	Project nr: 22-16152
Modification	Date	Name	Original		Replacement of	Replaced by	Scale 1:1			Page 16 / 1630

=V1KF1

-KF12.11

Monitoring 480 VAC SPARE =V1KF1/9.2	Monitoring 480 VAC =V1UC12-FC1 =V1KF1/9.2			Monitoring 480 VAC SPARE =V1KF1/9.2	Monitoring 480 VAC SPARE =V1KF1/9.2
DI ET200SP	DI ET200SP	=V1WC4/1.0 TA1	=V1WC4/11.0 TA2	=V1WC4/1.1 FC11	=V1WC4/11.1 FC12	DI ET200SP	DI ET200SP
I80.0 DI0	I80.1 DI1					I80.6 DI6	I80.7 DI7
1	2					7	8

I80.1 BUOG 16 AWG

=V1WC2 -FC1 /10.1 .2 .4 .1

3L+1 BUOG 16 AWG

-XD3 1 2 3 4 5

=V1WC4/5.1 / 3L+1

=V1KF1

-KF12.11

Monitoring 480 VAC SPARE =V1KF1/9.2	Monitoring 480 VAC SPARE =V1KF1/9.2	Monitoring 480 VAC SPARE =V1KF1/9.2	Monitoring 480 VAC SPARE =V1KF1/9.2	Monitoring 480 VAC SPARE =V1KF1/9.2	Monitoring 480 VAC SPARE =V1KF1/9.2	Monitoring 480 VAC SPARE =V1KF1/9.2	Monitoring 480 VAC SPARE =V1KF1/9.2
DI ET200SP	DI ET200SP	DI ET200SP	DI ET200SP	DI ET200SP	DI ET200SP	DI ET200SP	DI ET200SP
I81.0 DI8	I81.1 DI9	I81.2 DI10	I81.3 DI11	I81.4 DI12	I81.5 DI13	I81.6 DI14	I81.7 DI15
9	10	11	12	13	14	15	16

			Date	1/24/2023	Volvo Trucks North America	Valiant TMS	Power distribution 480 VAC monitoring	Drawing name: =2V01&EFS-EL_KF1	= V1WC2
			Ed.	MKLEPADLO					+ V1UC12
			Appr		P6700 Framing - Cell 2V01, KF1			Document type: EFS	Project nr: 22-16152	Page 41
Modification	Date	Name	Original		Replacement of / Replaced by	Scale 1:1				1630

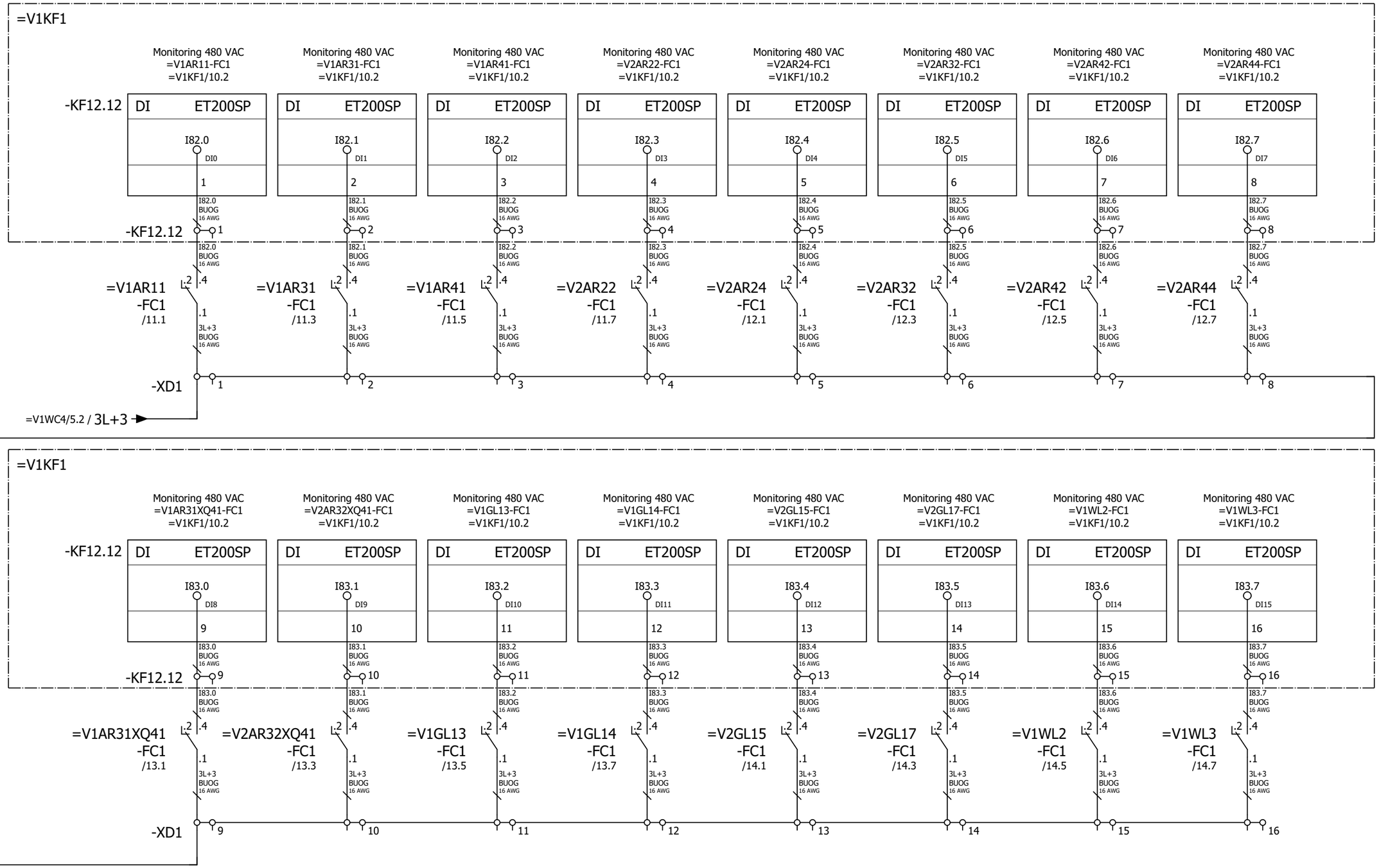

			Date	1/24/2023	Volvo Trucks North America		Valiant TMS	Power distribution 480 VAC monitoring	Drawing name: =2V01&EFS-EL_KF1	= V1WC2
			Ed.	MKLEPADLO						+ V1UC12
			Appr		P6700 Framing - Cell 2V01, KF1				Document type: EFS	Project nr: 22-16152
Modification	Date	Name	Original		Replacement of	Replaced by	Scale 1:1			Page 42 / 1630

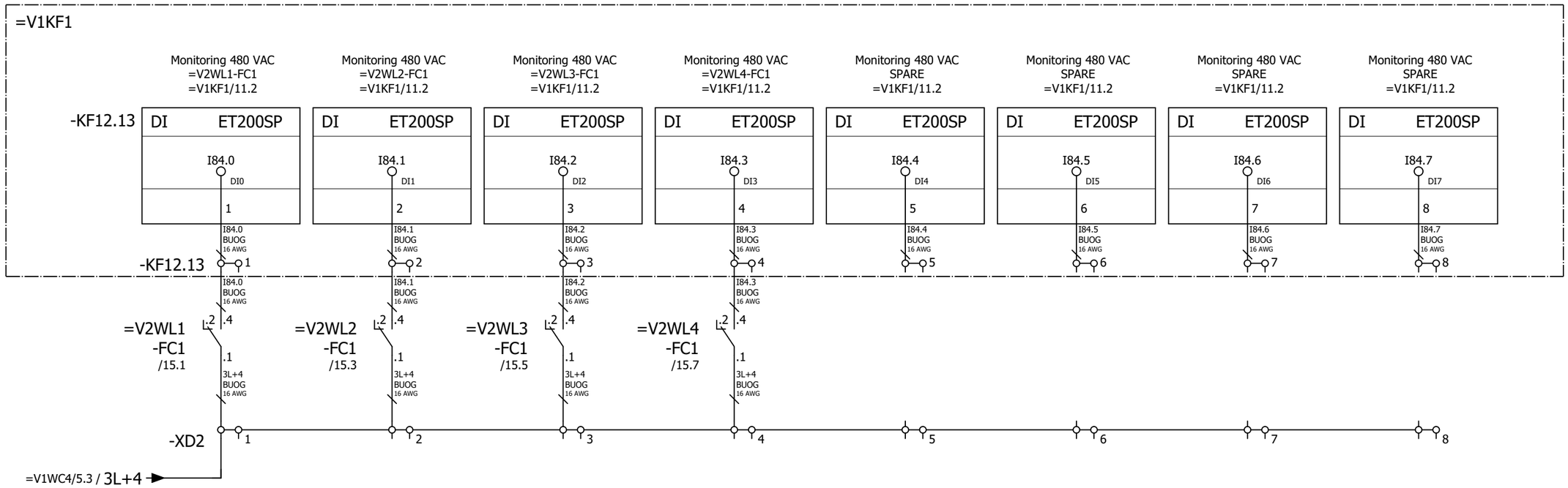

			Date	1/24/2023	Volvo Trucks North America	Valiant TMS	Power distribution 480 VAC monitoring	Drawing name: =2V01&EFS-EL_KF1	= V1WC2	
			Ed.	MKLEPADLO					+ V1UC12	
			Appr		P6700 Framing - Cell 2V01, KF1			Document type: EFS	Project nr: 22-16152	Page 43
Modification	Date	Name	Original		Replacement of / Replaced by	Scale 1:1				1630

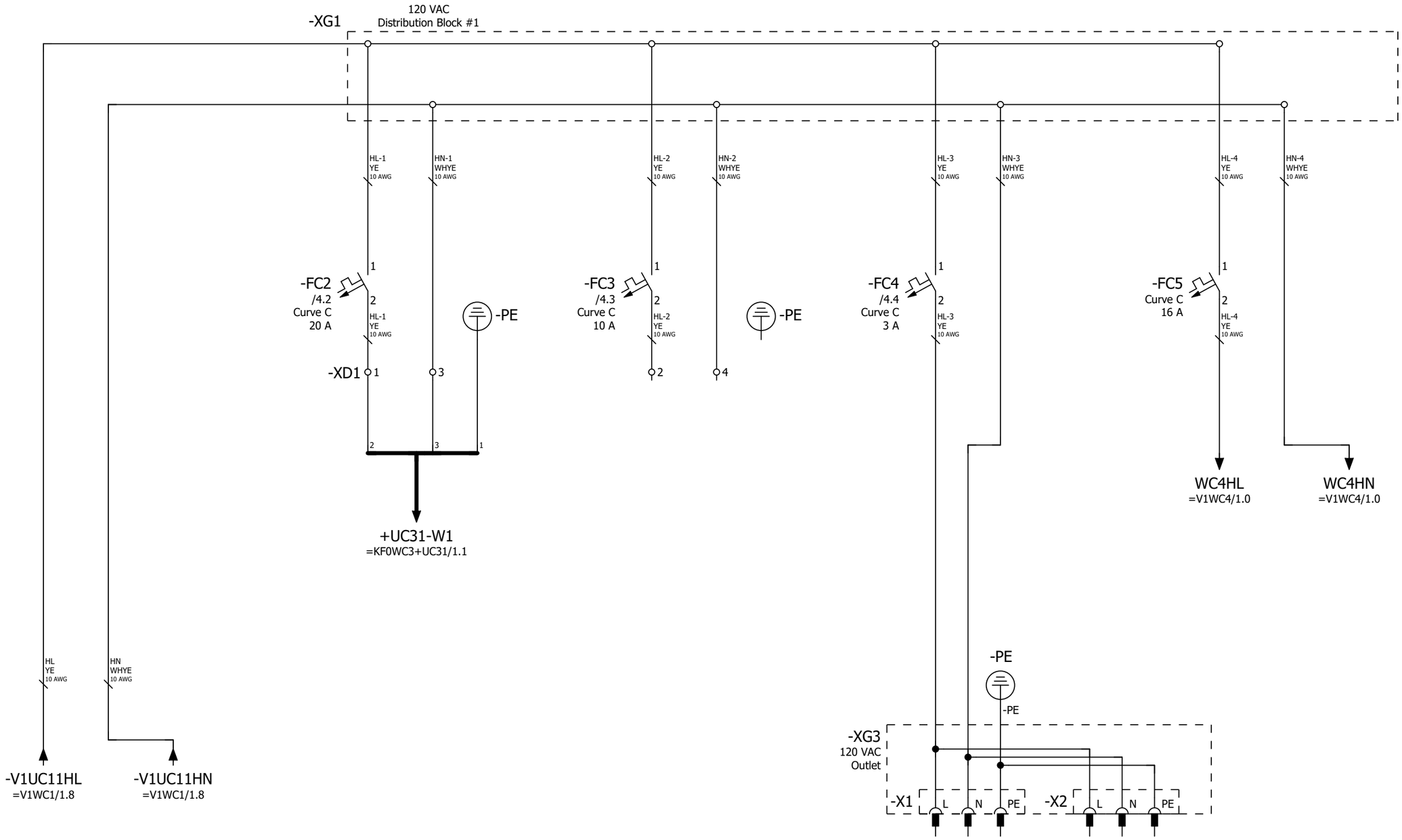

Power Distribution 120 VAC UC31 (MOP)	Power Distribution 120 VAC (SPARE)	Power Distribution 120 VAC Programming Port	Power Distribution 120 VAC To 24VDC Power Supply
=V1WC2+.UC12/43			2

			Date	1/24/2023	Volvo Trucks North America	Valiant TMS	Power Distribution 120 VAC (Above Disconnect)	Drawing name: =2V01&EFS-EL_KF1	= V1WC3	
			Ed.	MKLEPADLO					+ V1UC11	
			Appr		P6700 Framing - Cell 2V01, KF1	Scale 1:1		Document type: EFS	Project nr: 22-16152	Page 1 / 1630
Modification	Date	Name	Original		Replacement of / Replaced by					

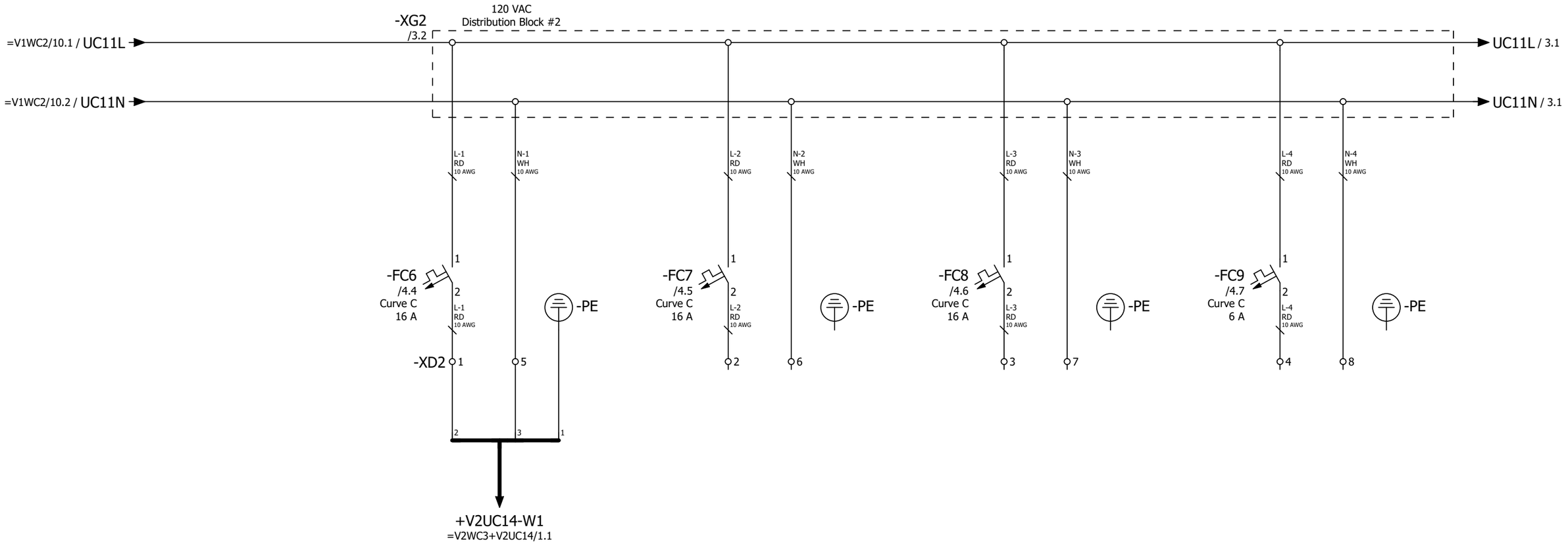

1	Power Distribution 120 VAC V2UC14 (RIO)	Power Distribution 120 VAC (SPARE)	Power Distribution 120 VAC (SPARE)	Power Distribution 120 VAC (SPARE)	3

			Date	1/24/2023	Volvo Trucks North America	Valiant TMS	Power Distribution 120 VAC (Below Disconnect)	Drawing name: =2V01&EFS-EL_KF1	= V1WC3		
			Ed.	MKLEPADLO					+ V1UC11		
			Appr		P6700 Framing - Cell 2V01, KF1	Scale 1:1		Document type: EFS	Project nr: 22-16152	Page	2
Modification	Date	Name	Original		Replacement of	Replaced by					1630

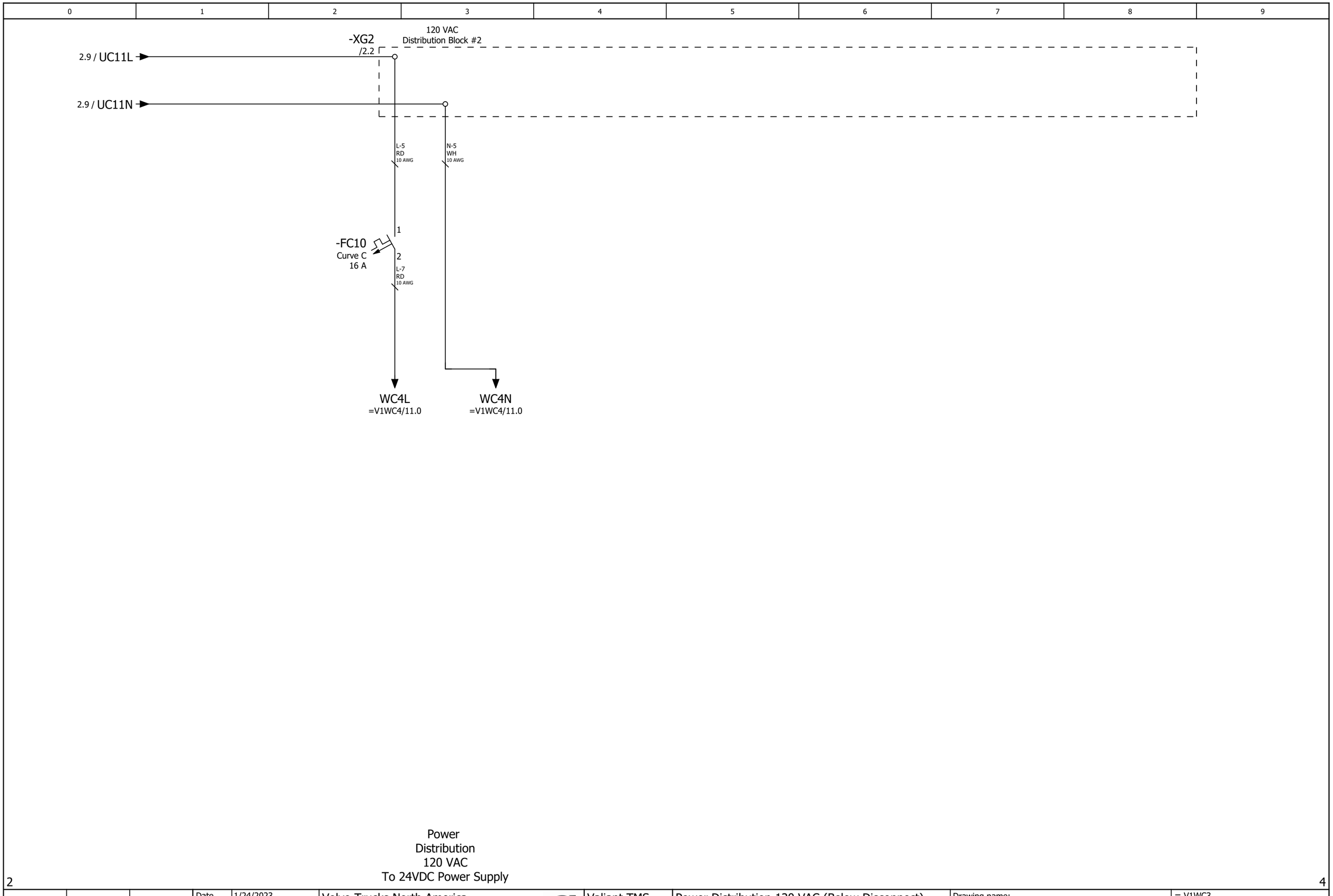

			Date	1/24/2023	Volvo Trucks North America	Valiant TMS	Power Distribution 120 VAC (Below Disconnect)	Drawing name: =2V01&EFS-EL_KF1	= V1WC3 + V1UC11
			Ed.	MKLEPADLO	P6700 Framing - Cell 2V01, KF1				
			Appr					Document type: EFS	Project nr: 22-16152
Modification	Date	Name	Original		Replacement of / Replaced by	Scale 1:1			Page 3 / 1630

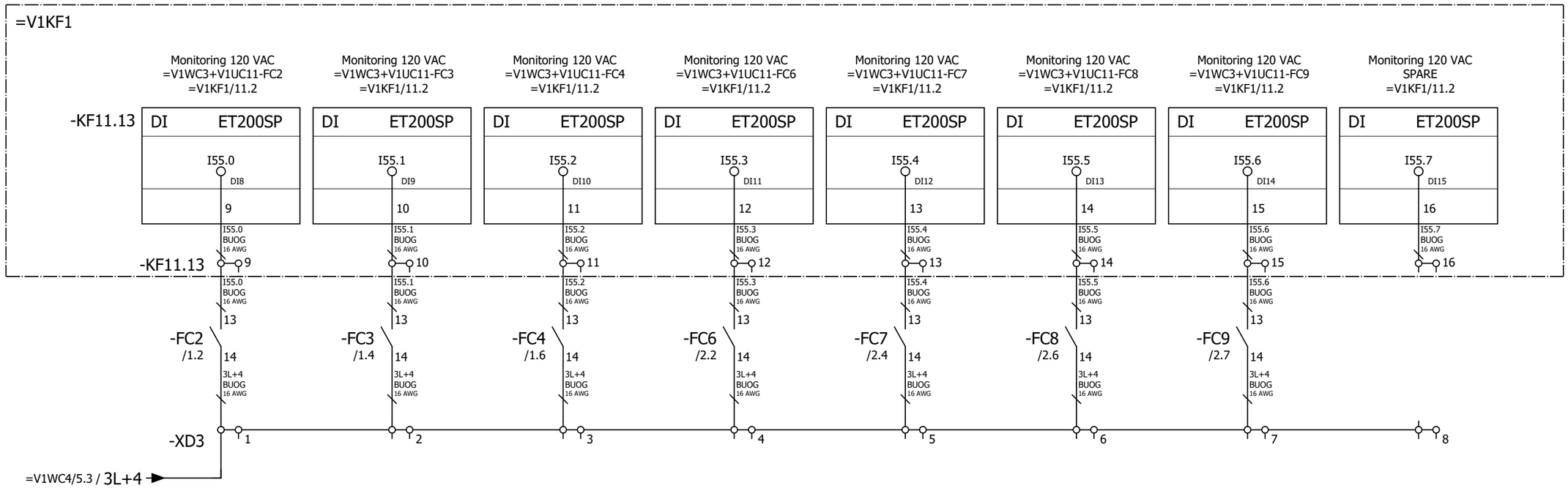

3 +.UC12/1

			Date	1/24/2023	Volvo Trucks North America	Valiant TMS	Power distribution 120 VAC monitoring (Above Disconnect)	Drawing name: =2V01&EFS-EL_KF1	= V1WC3	
			Ed.	MKLEPADLO					+ V1UC11	
			Appr		P6700 Framing - Cell 2V01, KF1			Document type: EFS	Project nr: 22-16152	Page 4
Modification	Date	Name	Original		Replacement of / Replaced by	Scale 1:1				1630

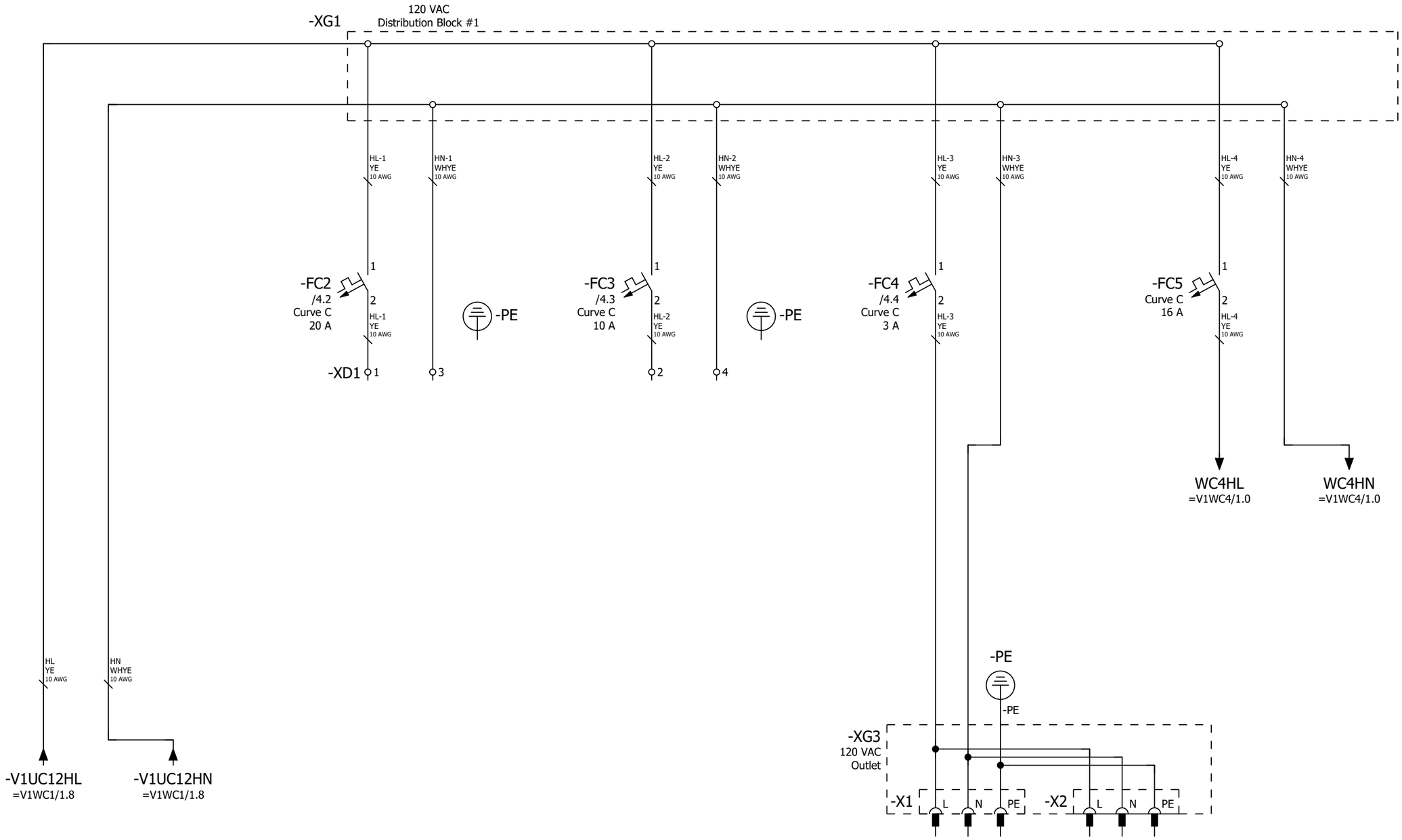

Power Distribution 120 VAC (SPARE)

Power Distribution 120 VAC (SPARE)

Power Distribution 120 VAC Programming Port

Power Distribution 120 VAC To 24VDC Power Supply

+.UC11/4

2

			Date	1/24/2023	Volvo Trucks North America	Valiant TMS	Power Distribution 120 VAC (Above Disconnect)	Drawing name: =2V01&EFS-EL_KF1	= V1WC3
			Ed.	MKLEPADLO					+ V1UC12
			Appr		P6700 Framing - Cell 2V01, KF1	Scale 1:1		Document type: EFS	Project nr: 22-16152
Modification	Date	Name	Original		Replacement of	Replaced by			Page 1 / 1630

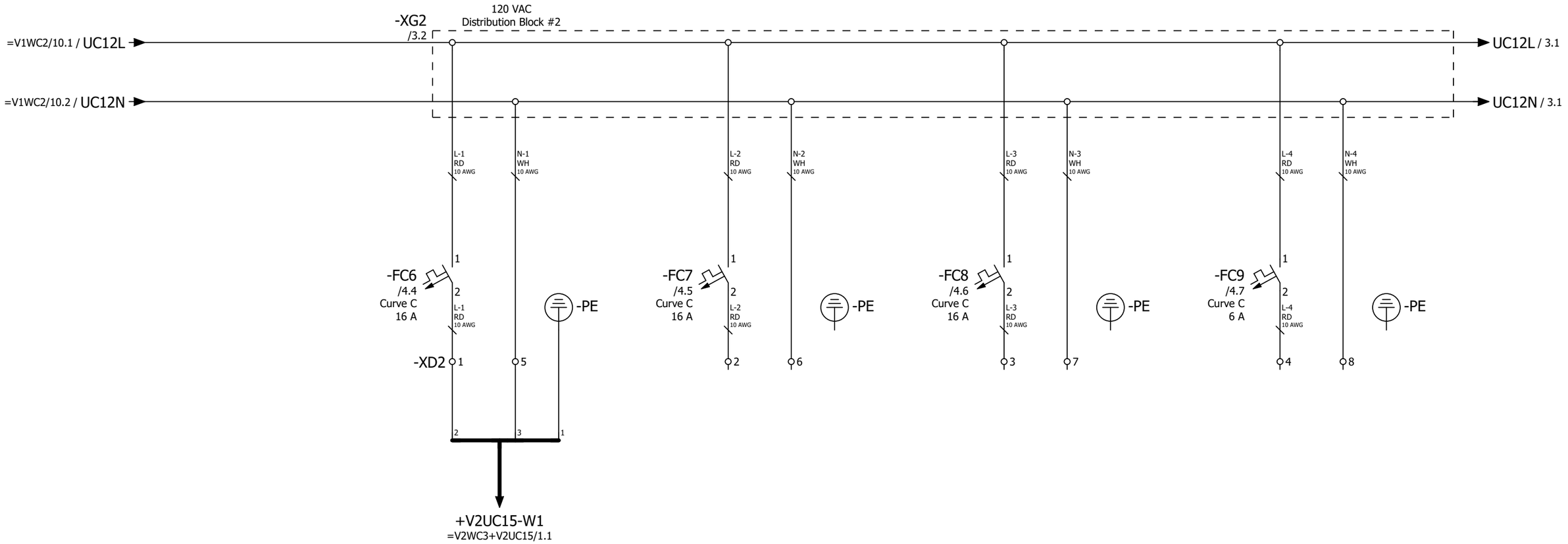

1	Power Distribution 120 VAC V2UC15 (RIO)	Power Distribution 120 VAC (SPARE)	Power Distribution 120 VAC (SPARE)	Power Distribution 120 VAC (SPARE)	3

			Date	1/24/2023	Volvo Trucks North America	Valiant TMS	Power Distribution 120 VAC (Below Disconnect)	Drawing name: =2V01&EFS-EL_KF1	= V1WC3		
			Ed.	MKLEPADLO					+ V1UC12		
			Appr		P6700 Framing - Cell 2V01, KF1			Document type: EFS	Project nr: 22-16152	Page	2
Modification	Date	Name	Original		Replacement of / Replaced by	Scale 1:1					1630

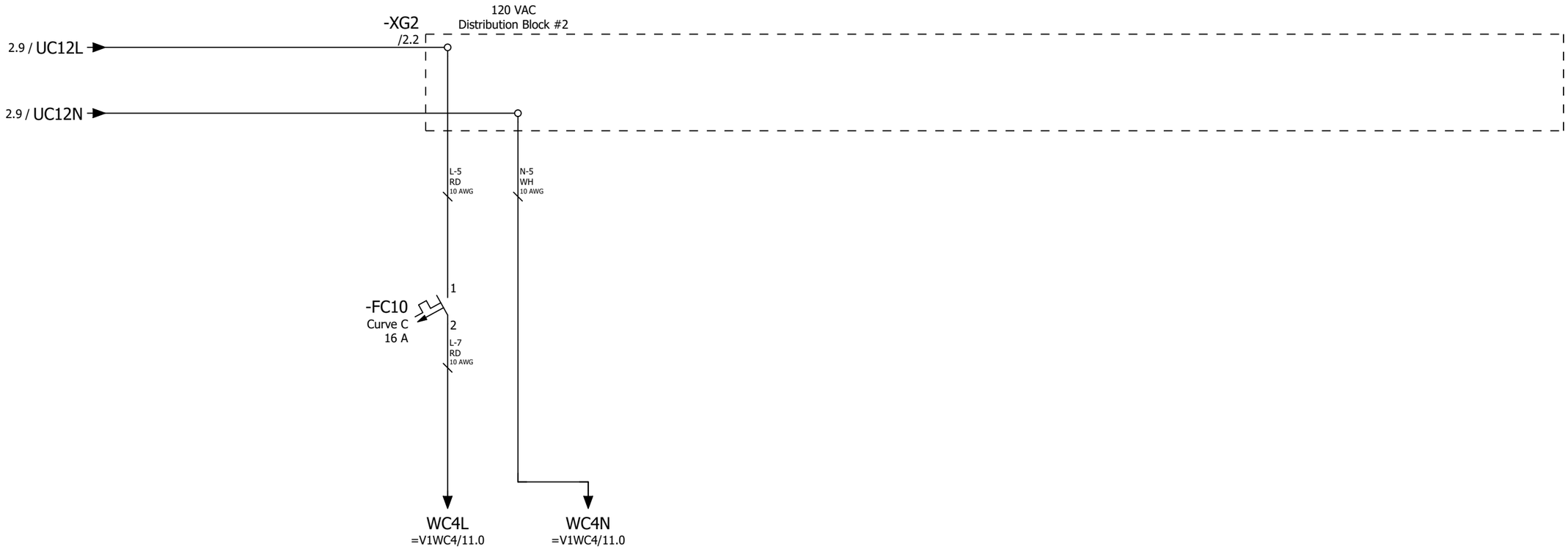

Power
Distribution
120 VAC
To 24VDC Power Supply

			Date	1/24/2023	Volvo Trucks North America	Valiant TMS	Power Distribution 120 VAC (Below Disconnect)	Drawing name: =2V01&EFS-EL_KF1	= V1WC3
			Ed.	MKLEPADLO					+ V1UC12
			Appr		P6700 Framing - Cell 2V01, KF1	Scale 1:1		Document type: EFS / Project nr: 22-16152	Page 3 / 1630
Modification	Date	Name	Original		Replacement of / Replaced by				

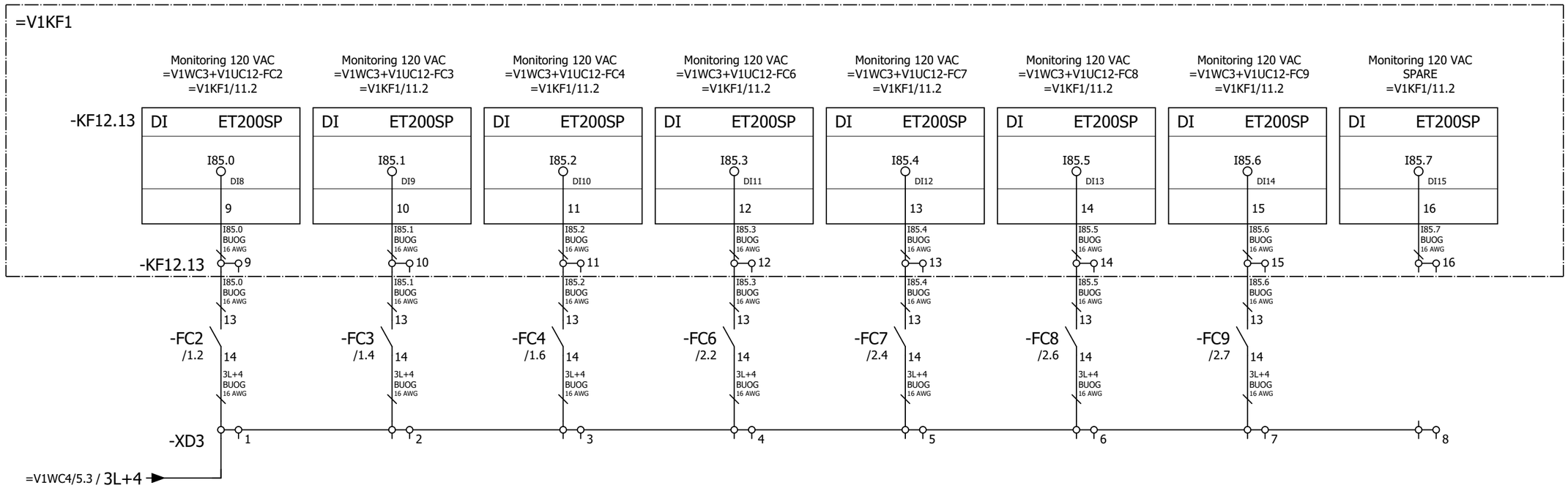

3

=V1WC4+.UC11/1

			Date	1/24/2023	Volvo Trucks North America	Valiant TMS	Power distribution 120 VAC monitoring (Above Disconnect)	Drawing name: =2V01&EFS-EL_KF1	= V1WC3	
			Ed.	MKLEPADLO					+ V1UC12	
			Appr		P6700 Framing - Cell 2V01, KF1			Document type: EFS	Project nr: 22-16152	Page 4
Modification	Date	Name	Original		Replacement of / Replaced by	Scale 1:1				1630

0	1	2	3	4	5	6	7	8	9

=V1WC3/1.7 / WC4HL

=V1WC3/1.8 / WC4HN

-PE

-TA1
IN: AC 120-230 V,
DC 110-240 V
OUT: DC 24 V/20 A

L1/+ N/L2/- PE

SIEMENS
SITOP PSU6200 1ph 24 V/20 A
6EP3336-7SB00-3AX0

ADJUST
24 ... 28V
DEFAULT VALUE
24V

0 1
COM
HV
PO

>20 V CLOSED

+1 +2 -1 -2 -3 13 14

Monitoring 24VDC
=V1WC4+V1UC11-TA1_I
=V1KF1/9.2

DI ET200SP
I50.2
DI2
3

=V1KF1
-KF11.11

TA1 BUOG 16 AWG
M1 WHOG 12 AWG
-PE
3L+1 BUOG 16 AWG
I50.2 BUOG 16 AWG

=V1WC2/41.4 / TA1

M1
2.1

-XD5 1

-FC11
In: DC 24V
Out: 8 x DC 24V/10A

SIEMENS
SITOP SEL1200 8 x 10A
6EP4438-7FB00-3DX0

0 1
COM
TD2
TD1

24V1 INPUT 24V2

E--- RESET

CONTROL LOGIC

13 14 NF RST 0V1 0V2

OUTPUT

1 2 3 4 5 6 7 8

Monitoring 24VDC
=V1WC4+V1UC11-FC11_I
=V1KF1/9.2

DI ET200SP
I50.4
DI4
5

=V1KF1
-KF11.11

3L+1 BUOG 16 AWG
I50.4 BUOG 16 AWG

=V1WC2/41.5 / FC11

2.1 / 1M1

1L+ BUOG 16 AWG
2L+ BUOG 16 AWG
3L+ BUOG 16 AWG
4L+ BUOG 16 AWG
5L+ RD 16 AWG
6L+ RD 16 AWG
7L+ RD 16 AWG
8L+ RD 16 AWG

3.1 / -1L+
4.1 / -2L+
5.1 / -3L+
6.1 / -4L+
20.5 / -5L+
21.5 / -6L+
22.5 / -7L+
23.5 / -8L+

=V1WC3+.UC12/4

2

			Date	1/24/2023	Volvo Trucks North America	Valiant TMS	Power distribution 24VDC (Above Disconnect)	Drawing name: =2V01&EFS-EL_KF1	= V1WC4
			Ed.	MKLEPADLO					+ V1UC11
			Appr		P6700 Framing - Cell 2V01, KF1			Document type: EFS	Project nr: 22-16152
Modification	Date	Name	Original		Replacement of	Replaced by	Scale 1:1		Page 1 / 1630

0	1	2	3	4	5	6	7	8	9

1 3

			Date	1/24/2023	Volvo Trucks North America		Valiant TMS	Power distribution 24VDC HL+	Drawing name: =2V01&EFS-EL_KF1		= V1WC4	
			Ed.	MKLEPADLO							+ V1UC11	
			Appr		P6700 Framing - Cell 2V01, KF1				Document type: EFS	Project nr: 22-16152	Page	2
Modification	Date	Name	Original		Replacement of	Replaced by	Scale 1:1					1630

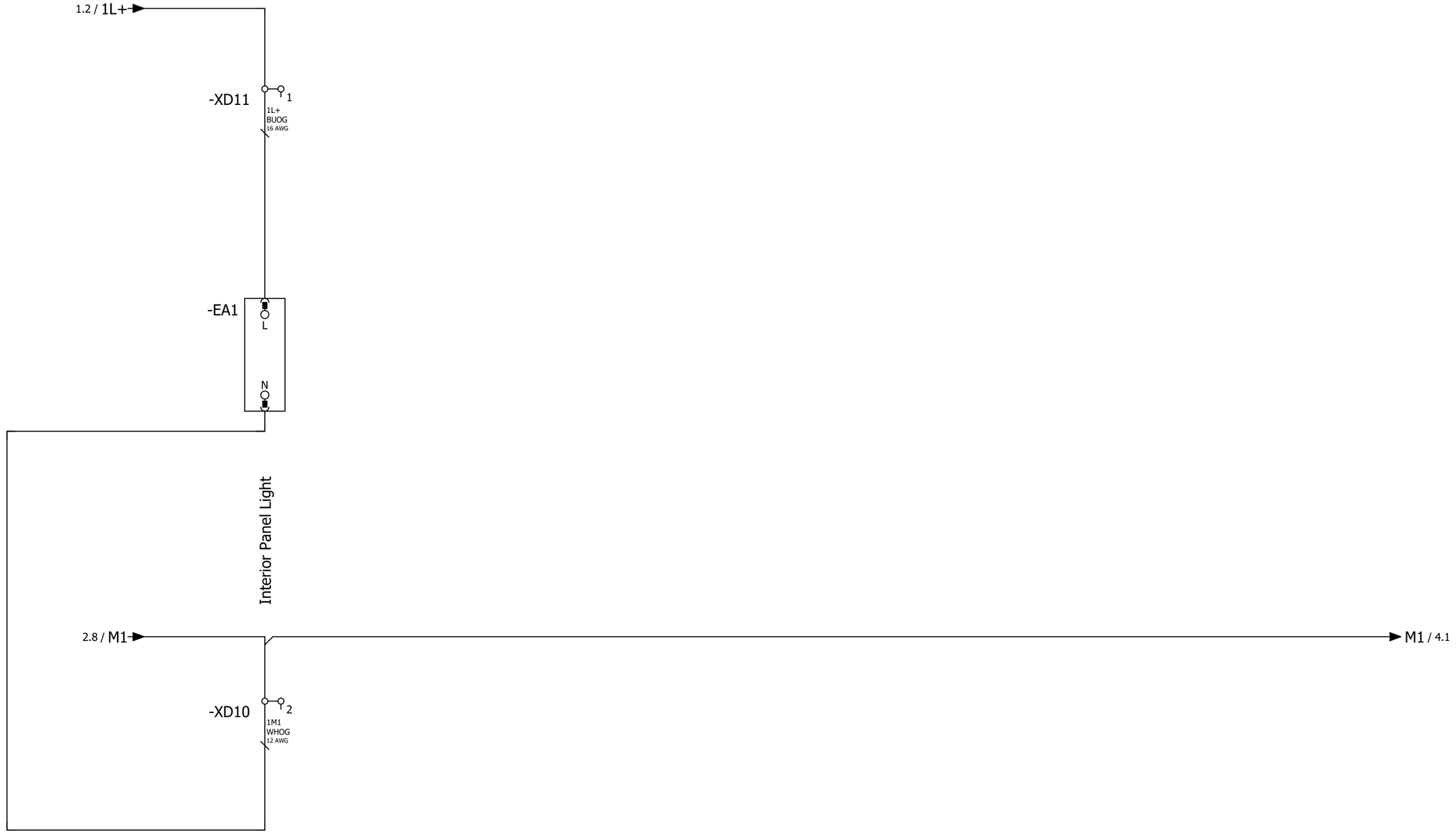

			Date	1/24/2023	Volvo Trucks North America	Valiant TMS	Power distribution 24VDC 1L+	Drawing name: =2V01&EFS-EL_KF1	= V1WC4	
			Ed.	MKLEPADLO					+ V1UC11	
			Appr		P6700 Framing - Cell 2V01, KF1	Scale 1:1		Document type: EFS	Project nr: 22-16152	Page 3 / 1630
Modification	Date	Name	Original		Replacement of	Replaced by				

0	1	2	3	4	5	6	7	8	9

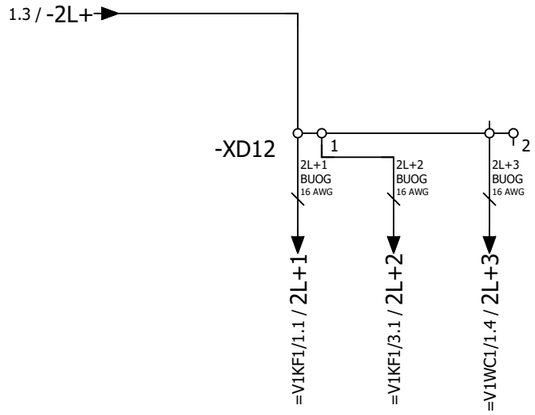

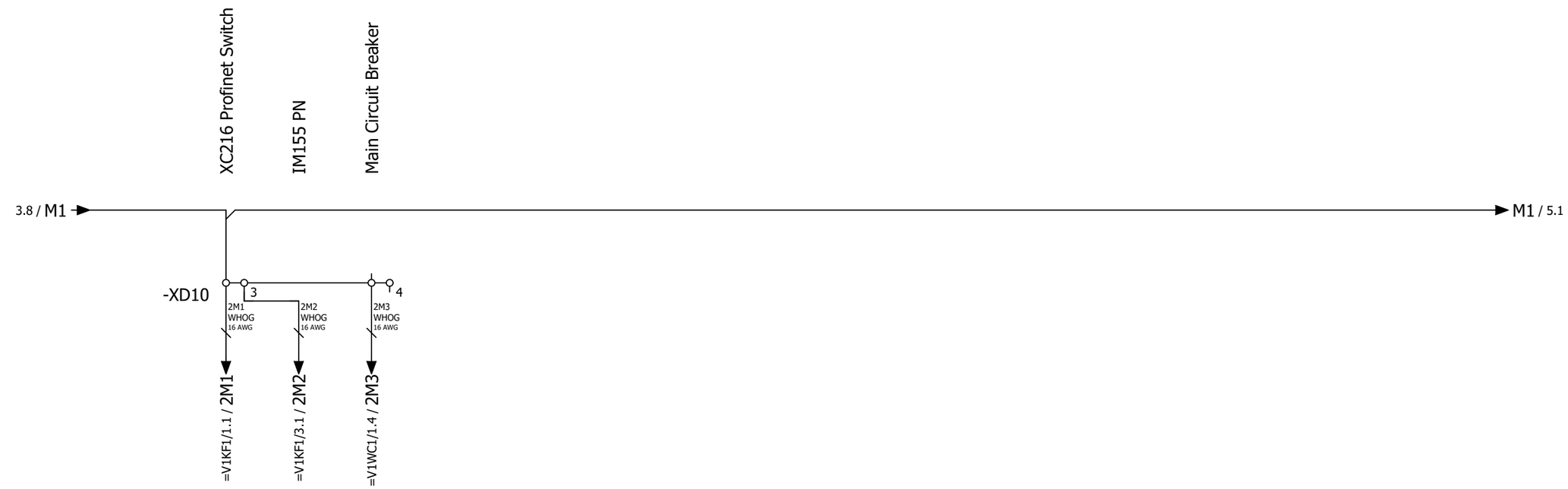

3 5

			Date	1/24/2023	Volvo Trucks North America		Valiant TMS	Power distribution 24VDC 2L+	Drawing name: =2V01&EFS-EL_KF1	= V1WC4	
			Ed.	MKLEPADLO						+ V1UC11	
			Appr		P6700 Framing - Cell 2V01, KF1		Scale 1:1		Document type: EFS	Project nr: 22-16152	Page 4
Modification	Date	Name	Original		Replacement of	Replaced by					1630

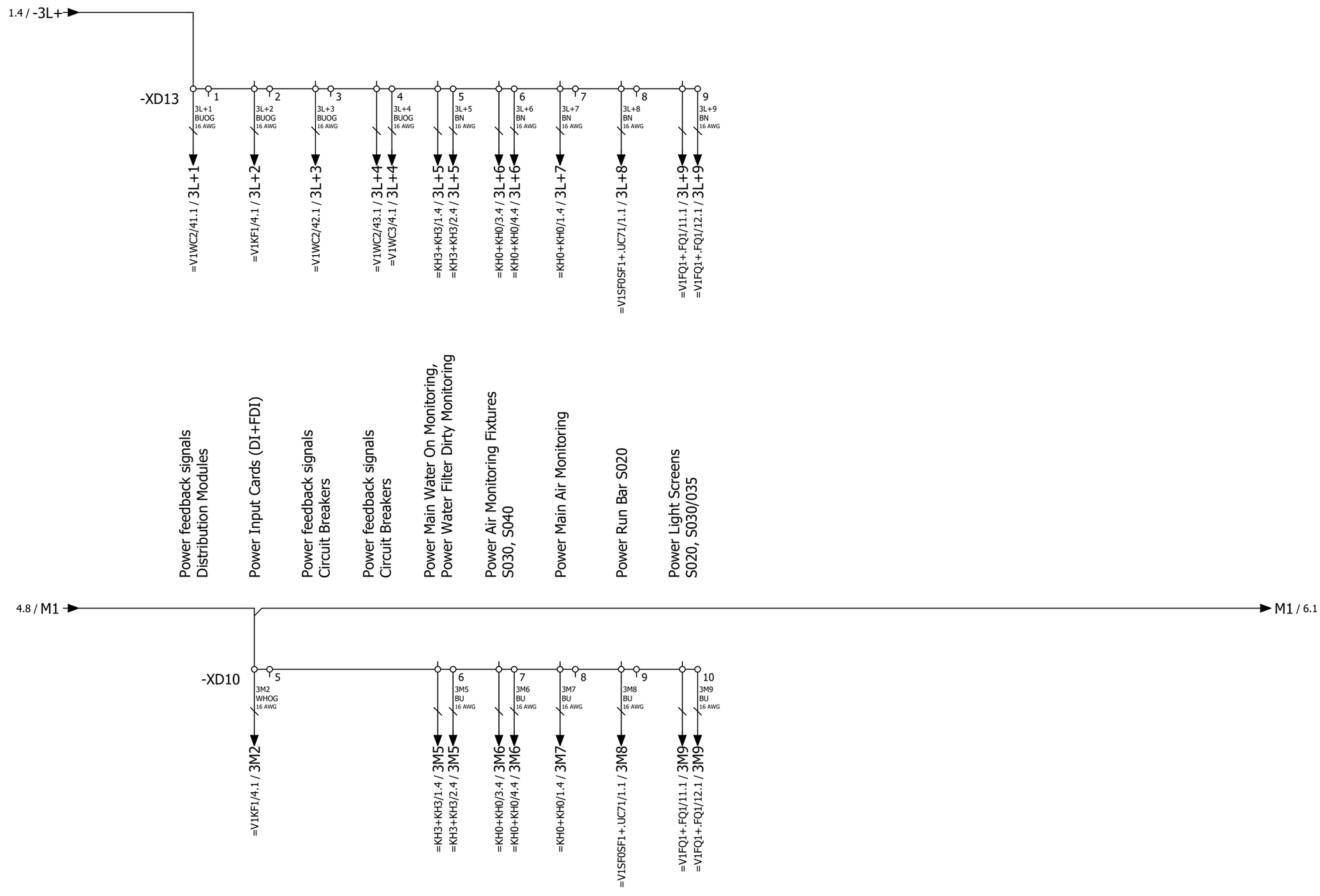

4 6

			Date	1/24/2023	Volvo Trucks North America	Valiant TMS	Power distribution 24VDC 3L+	Drawing name: =2V01&EFS-EL_KF1	= V1WC4 + V1UC11
			Ed.	MKLEPADLO	P6700 Framing - Cell 2V01, KF1				
			Appr					Document type: EFS	Project nr: 22-16152
Modification	Date	Name	Original		Replacement of / Replaced by	Scale 1:1			Page 5 / 1630

0	1	2	3	4	5	6	7	8	9

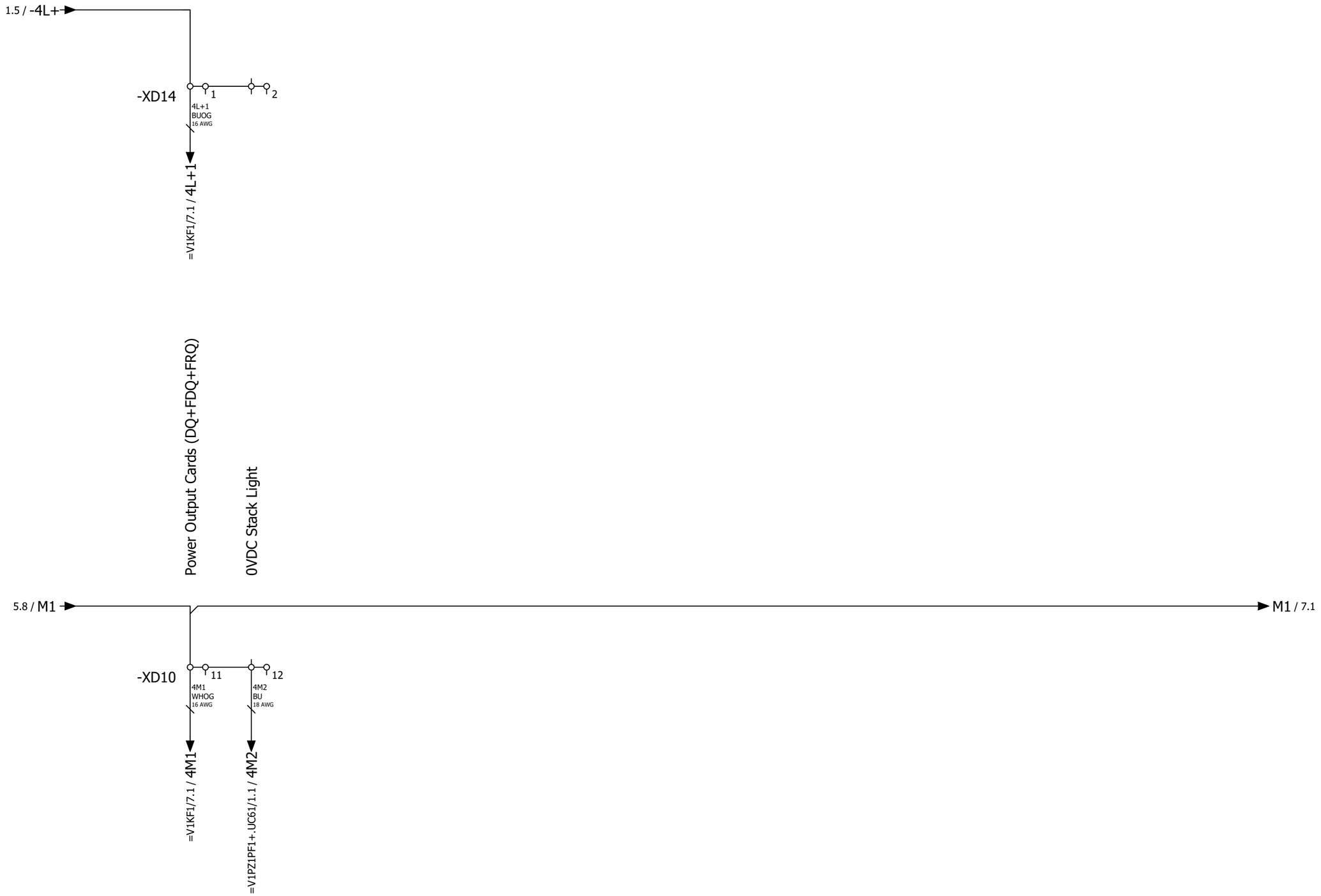

5 7

			Date	1/24/2023	Volvo Trucks North America	Valiant TMS	Power distribution 24VDC 4L+	Drawing name: =2V01&EFS-EL_KF1	= V1WC4
			Ed.	MKLEPADLO					+ V1UC11
			Appr		P6700 Framing - Cell 2V01, KF1			Document type: EFS	Project nr: 22-16152
Modification	Date	Name	Original		Replacement of / Replaced by	Scale 1:1			Page 6 / 1630

6 8

			Date	1/24/2023	Volvo Trucks North America	Valiant TMS	Power distribution 24VDC 5L+	Drawing name: =2V01&EFS-EL_KF1	= V1WC4	
			Ed.	MKLEPADLO					+ V1UC11	
			Appr		P6700 Framing - Cell 2V01, KF1			Document type: EFS	Project nr: 22-16152	Page 7
Modification	Date	Name	Original		Replacement of / Replaced by	Scale 1:1				1630

0	1	2	3	4	5	6	7	8	9

7

9

			Date	1/24/2023	Volvo Trucks North America		Valiant TMS	Power distribution 24VDC 6L+	Drawing name: =2V01&EFS-EL_KF1	= V1WC4	
			Ed.	MKLEPADLO						+ V1UC11	
			Appr		P6700 Framing - Cell 2V01, KF1		Scale 1:1		Document type: EFS	Project nr: 22-16152	Page 8 / 1630
Modification	Date	Name	Original		Replacement of	Replaced by					

8 10

			Date	1/24/2023	Volvo Trucks North America	Valiant TMS	Power distribution 24VDC 7L+	Drawing name: =2V01&EFS-EL_KF1	= V1WC4	
			Ed.	MKLEPADLO	P6700 Framing - Cell 2V01, KF1				+ V1UC11	
			Appr					Document type: EFS	Project nr: 22-16152	Page 9
Modification	Date	Name	Original		Replacement of / Replaced by	Scale 1:1				1630

0	1	2	3	4	5	6	7	8	9

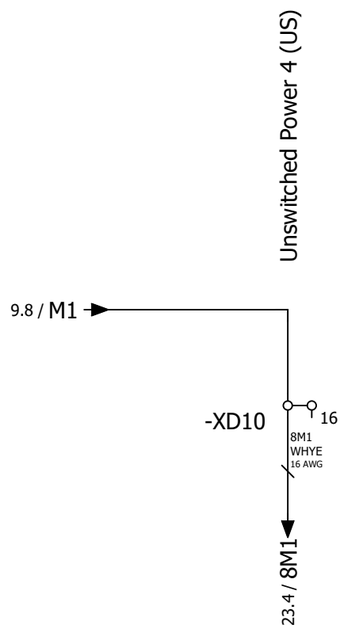

9

11

			Date	1/24/2023	Volvo Trucks North America		Valiant TMS	Power distribution 24VDC 8L+	Drawing name: =2V01&EFS-EL_KF1		= V1WC4	
			Ed.	MKLEPADLO							+ V1UC11	
			Appr		P6700 Framing - Cell 2V01, KF1				Document type: EFS	Project nr: 22-16152	Page	10
Modification	Date	Name	Original		Replacement of	Replaced by	Scale 1:1					1630

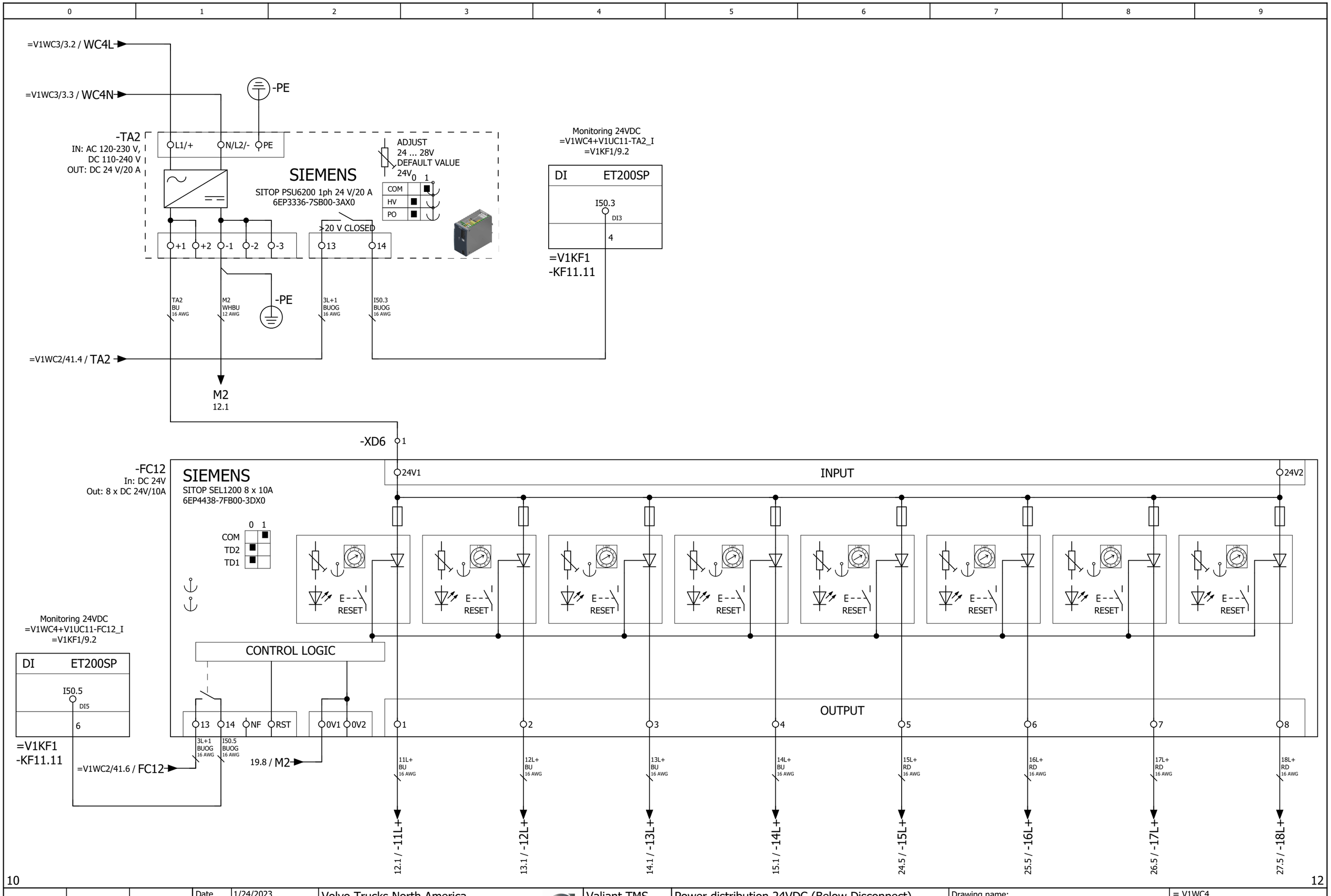

			Date	1/24/2023	Volvo Trucks North America	Valiant TMS	Power distribution 24VDC (Below Disconnect)	Drawing name: =2V01&EFS-EL_KF1	= V1WC4 + V1UC11
			Ed.	MKLEPADLO	P6700 Framing - Cell 2V01, KF1				
			Appr					Document type: EFS	Project nr: 22-16152
Modification	Date	Name	Original		Replacement of / Replaced by	Scale 1:1			Page 11 / 1630

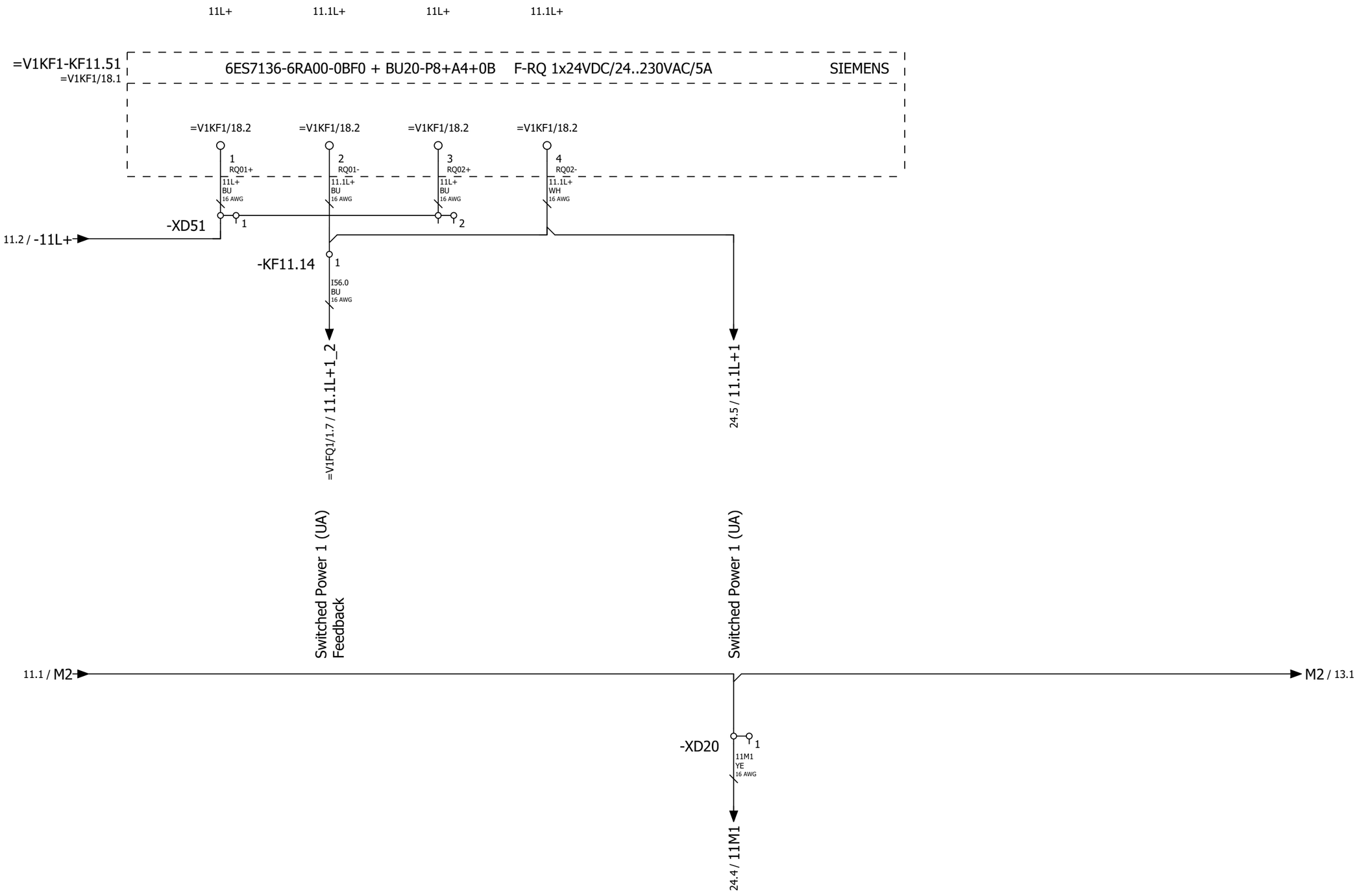

11

13

			Date	1/24/2023	Volvo Trucks North America	Valiant TMS	Power distribution 24VDC 11L+	Drawing name: =2V01&EFS-EL_KF1	= V1WC4		
			Ed.	MKLEPADLO					+ V1UC11		
			Appr		P6700 Framing - Cell 2V01, KF1	Scale 1:1		Document type: EFS	Project nr: 22-16152	Page	12
Modification	Date	Name	Original		Replacement of	Replaced by					1630

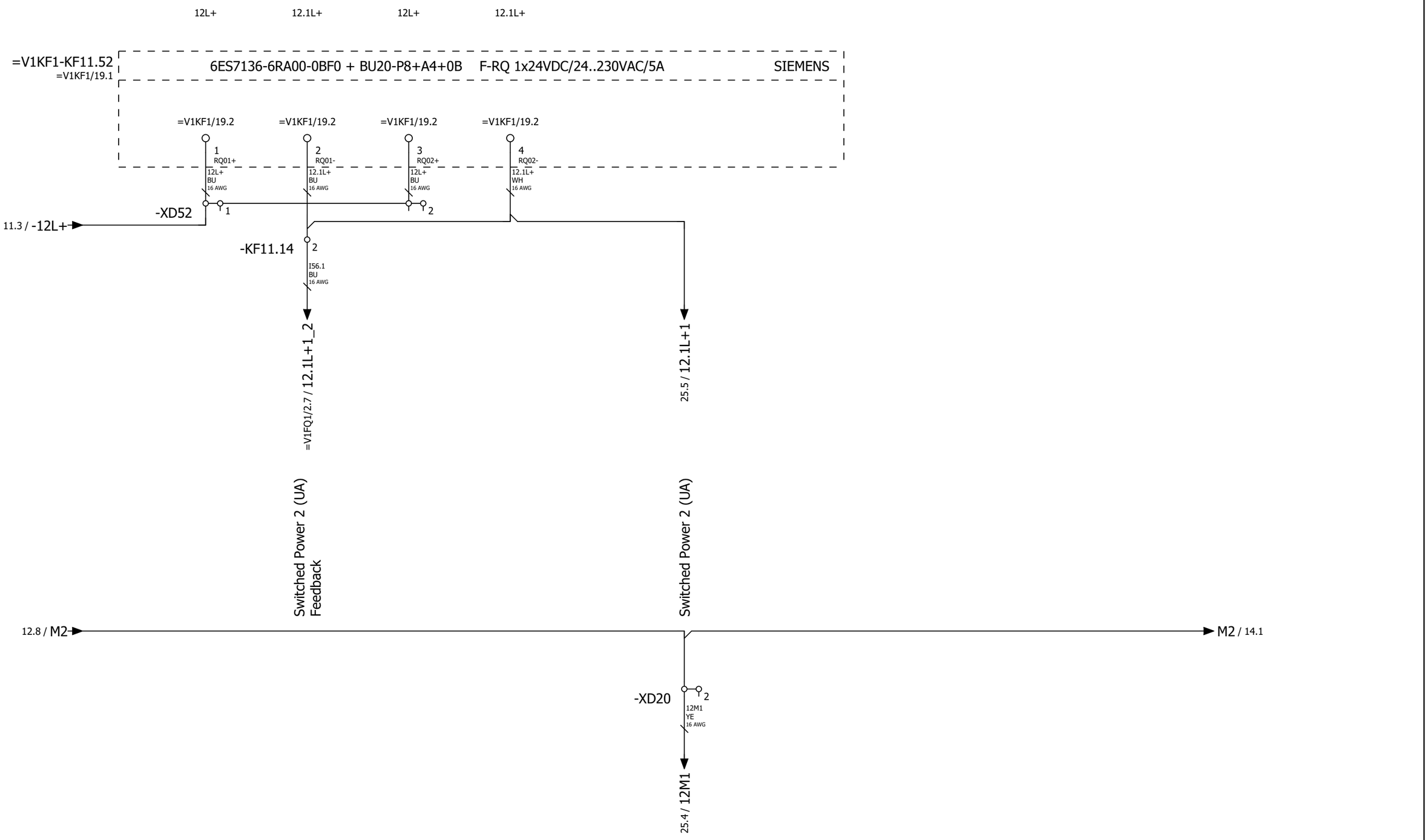

12

14

			Date	1/24/2023	Volvo Trucks North America	Valiant TMS	Power distribution 24VDC 12L+	Drawing name: =2V01&EFS-EL_KF1	= V1WC4		
			Ed.	MKLEPADLO					+ V1UC11		
			Appr		P6700 Framing - Cell 2V01, KF1	Scale 1:1		Document type: EFS	Project nr: 22-16152	Page	13
Modification	Date	Name	Original		Replacement of	Replaced by					1630

0	1	2	3	4	5	6	7	8	9

13L+ 13.1L+ 13L+ 13.1L+

=V1KF1-KF11.53
=V1KF1/20.1

6ES7136-6RA00-0BF0 + BU20-P8+A4+0B F-RQ 1x24VDC/24..230VAC/5A SIEMENS

=V1KF1/20.2 =V1KF1/20.2 =V1KF1/20.2 =V1KF1/20.2

1 RQ01+ 13L+ BU 16 AWG
2 RQ01- 13.1L+ BU 16 AWG
3 RQ02+ 13L+ BU 16 AWG
4 RQ02- 13.1L+ WH 16 AWG

11.4 / -13L+ → -XD53 1 2

-KF11.14 3
I56.2 BU 16 AWG

=V1FQ1/3.7 / 13.1L+1_2

Switched Power 3 (UA) Feedback

26.5 / 13.1L+1

Switched Power 3 (UA)

13.8 / M2 → M2 / 15.1

-XD20 3
13M1 YE 16 AWG

26.4 / 13M1

13 15

			Date	1/24/2023	Volvo Trucks North America	Valiant TMS	Power distribution 24VDC 13L+	Drawing name: =2V01&EFS-EL_KF1	= V1WC4
			Ed.	MKLEPADLO					+ V1UC11
			Appr		P6700 Framing - Cell 2V01, KF1	Scale 1:1		Document type: EFS / Project nr: 22-16152	Page 14 / 1630
Modification	Date	Name	Original		Replacement of / Replaced by				

0	1	2	3	4	5	6	7	8	9

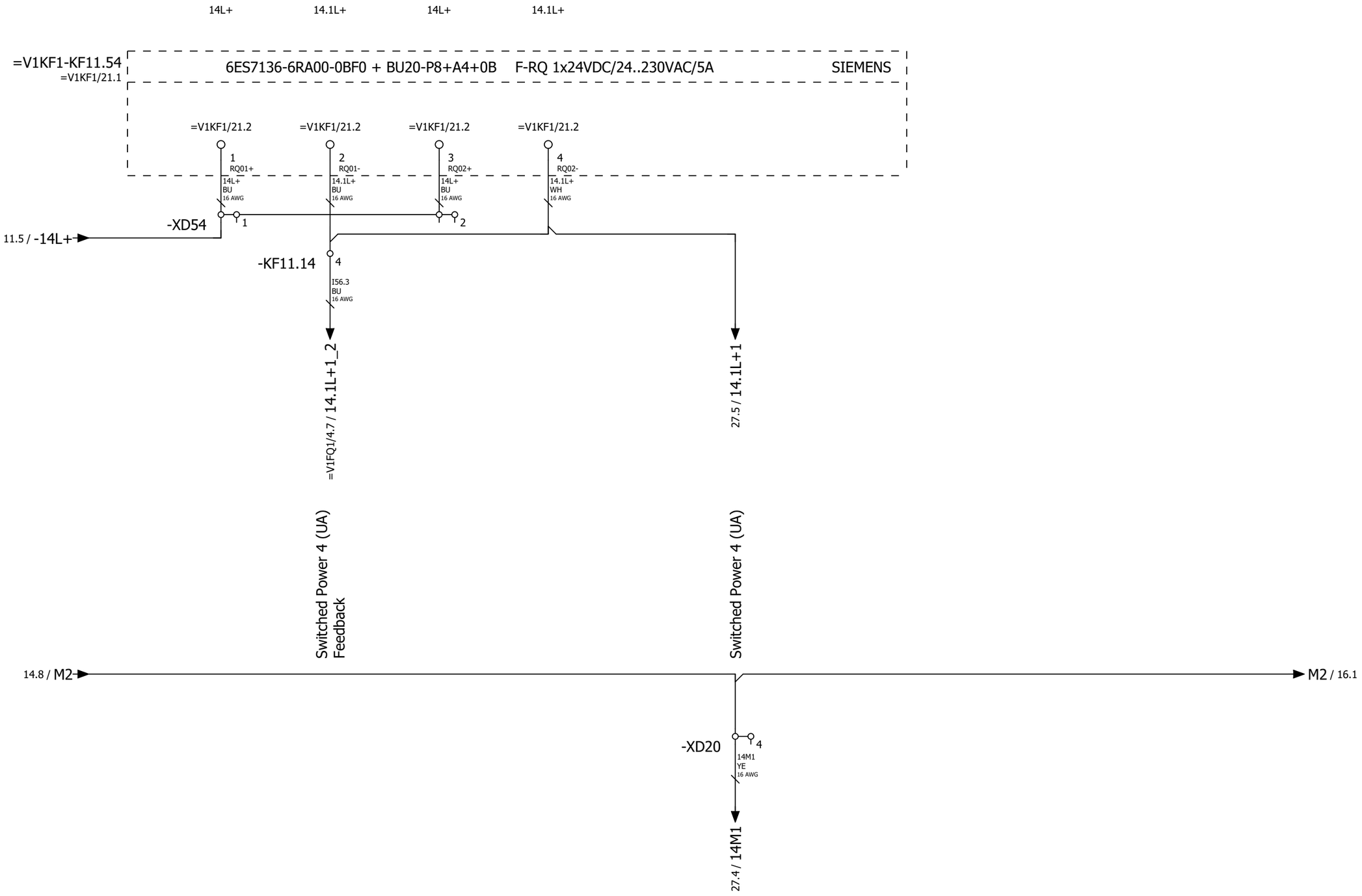

			Date	1/24/2023	Volvo Trucks North America	Valiant TMS	Power distribution 24VDC 14L+	Drawing name: =2V01&EFS-EL_KF1	= V1WC4		
			Ed.	MKLEPADLO					+ V1UC11		
			Appr		P6700 Framing - Cell 2V01, KF1	Scale 1:1		Document type: EFS	Project nr: 22-16152	Page	15
Modification	Date	Name	Original		Replacement of	Replaced by					1630

Switched Power 1 (US)

15.8 / M2

M2 / 17.1

-XD20

5

15M1
WHYE
16 AWG

24.4 / 15M1

15

17

			Date	1/24/2023	Volvo Trucks North America	Valiant TMS	Power distribution 24VDC 15L+	Drawing name: =2V01&EFS-EL_KF1	= V1WC4		
			Ed.	MKLEPADLO					+ V1UC11		
			Appr		P6700 Framing - Cell 2V01, KF1	Scale 1:1		Document type: EFS	Project nr: 22-16152	Page	16
Modification	Date	Name	Original		Replacement of	Replaced by					1630

			Date	1/24/2023	Volvo Trucks North America	Valiant TMS	Power distribution 24VDC 16L+	Drawing name: =2V01&EFS-EL_KF1		= V1WC4	
			Ed.	MKLEPADLO						+ V1UC11	
			Appr		P6700 Framing - Cell 2V01, KF1			Document type: EFS	Project nr: 22-16152	Page	17
Modification	Date	Name	Original		Replacement of / Replaced by	Scale 1:1					1630

17

19

			Date	1/24/2023	Volvo Trucks North America		Valiant TMS	Power distribution 24VDC 17L+	Drawing name: =2V01&EFS-EL_KF1	= V1WC4	
			Ed.	MKLEPADLO						+ V1UC11	
			Appr		P6700 Framing - Cell 2V01, KF1				Document type: EFS	Project nr: 22-16152	Page 18
Modification	Date	Name	Original		Replacement of	Replaced by	Scale 1:1				1630

			Date	1/24/2023	Volvo Trucks North America	Valiant TMS	Power distribution 24VDC 18L+	Drawing name: =2V01&EFS-EL_KF1	= V1WC4		
			Ed.	MKLEPADLO					+ V1UC11		
			Appr		P6700 Framing - Cell 2V01, KF1			Document type: EFS	Project nr: 22-16152	Page	19
Modification	Date	Name	Original		Replacement of / Replaced by	Scale 1:1					1630

0	1	2	3	4	5	6	7	8	9

+.UC11

/ 7.1

/ 1.6

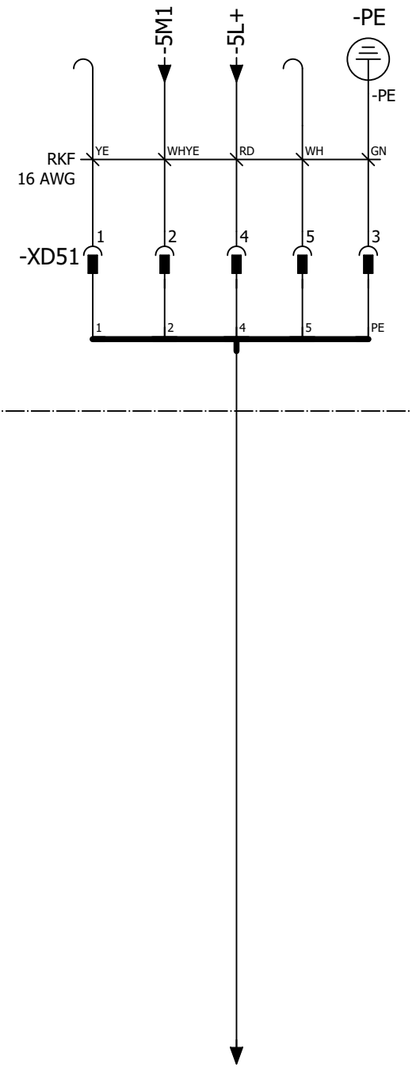

POWER IN / POWER OUT

Pin 1: 0 V UA
Pin 2: 0 V US
Pin 3: FE
Pin 4: +24 V US / 9 A
Pin 5: +24 V UA / 9 A

Pin #	WIRE	COLOR
Pin 1	N/C	YE
Pin 2	-5M1	WHYE
Pin 3	GND	GN
Pin 4	-5L+	RD
Pin 5	N/C	WH

+.FQ1-BG2
=V1FQ1+.FQ1/2.3

			Date	1/24/2023	Volvo Trucks North America	Valiant TMS	24VDC Unswitched Power 1	Drawing name: =2V01&EFS-EL_KF1	= V1WC4
			Ed.	MKLEPADLO					+ V1UC11
			Appr		P6700 Framing - Cell 2V01, KF1	Scale 1:1		Document type: EFS	Project nr: 22-16152
Modification	Date	Name	Original		Replacement of	Replaced by			Page 20 / 1630

+.UC11

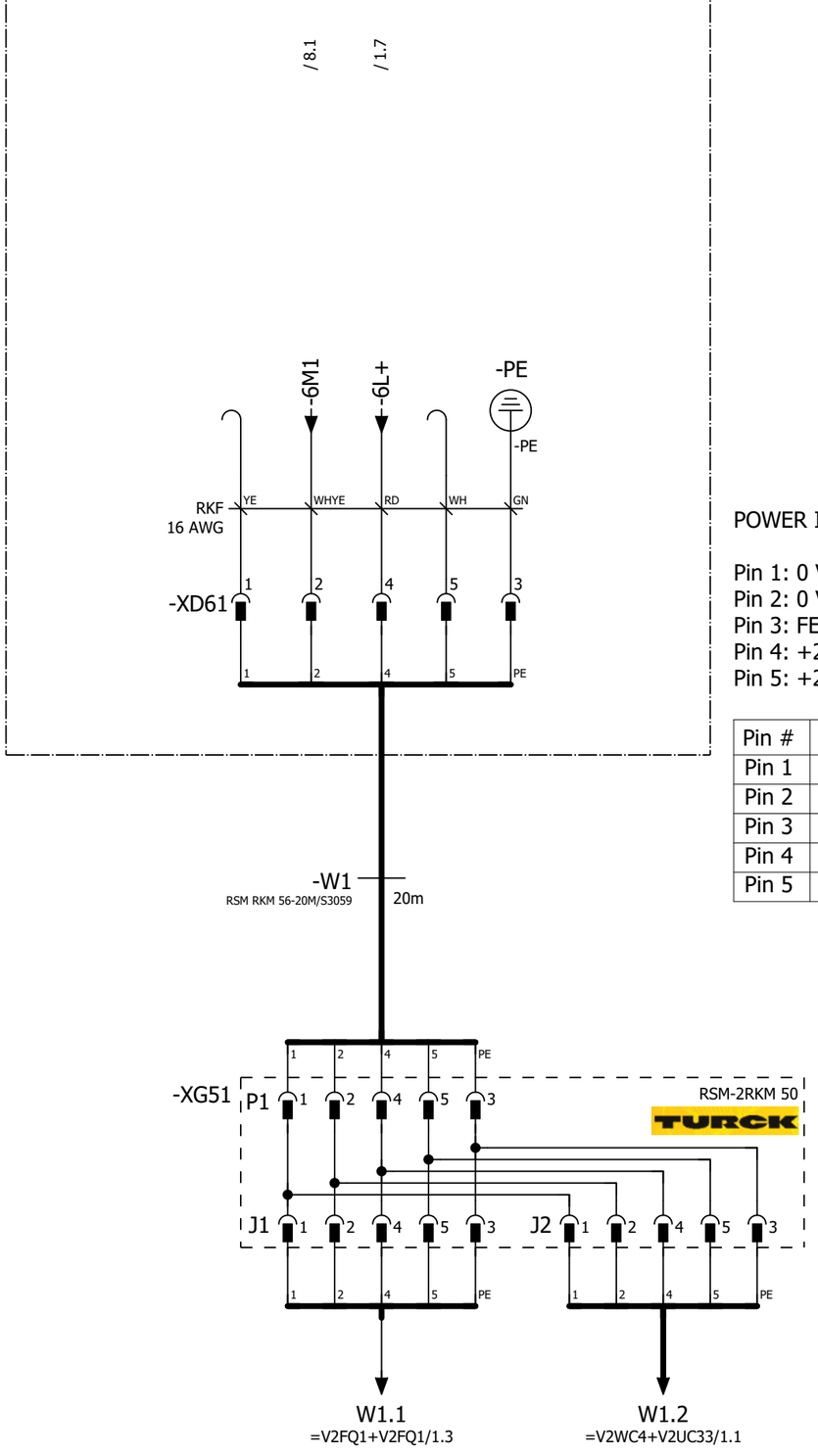

POWER IN / POWER OUT

Pin 1: 0 V UA
Pin 2: 0 V US
Pin 3: FE
Pin 4: +24 V US / 9 A
Pin 5: +24 V UA / 9 A

Pin #	WIRE	COLOR
Pin 1	N/C	YE
Pin 2	-6M1	WHYE
Pin 3	GND	GN
Pin 4	-6L+	RD
Pin 5	N/C	WH

			Date	1/24/2023	Volvo Trucks North America	Valiant TMS	24VDC Unswitched Power 2	Drawing name: =2V01&EFS-EL_KF1	= V1WC4
			Ed.	MKLEPADLO					+ V1UC11
			Appr		P6700 Framing - Cell 2V01, KF1	Scale 1:1		Document type: EFS	Project nr: 22-16152
Modification	Date	Name	Original		Replacement of	Replaced by			Page 21 / 1630

0	1	2	3	4	5	6	7	8	9

+.UC11

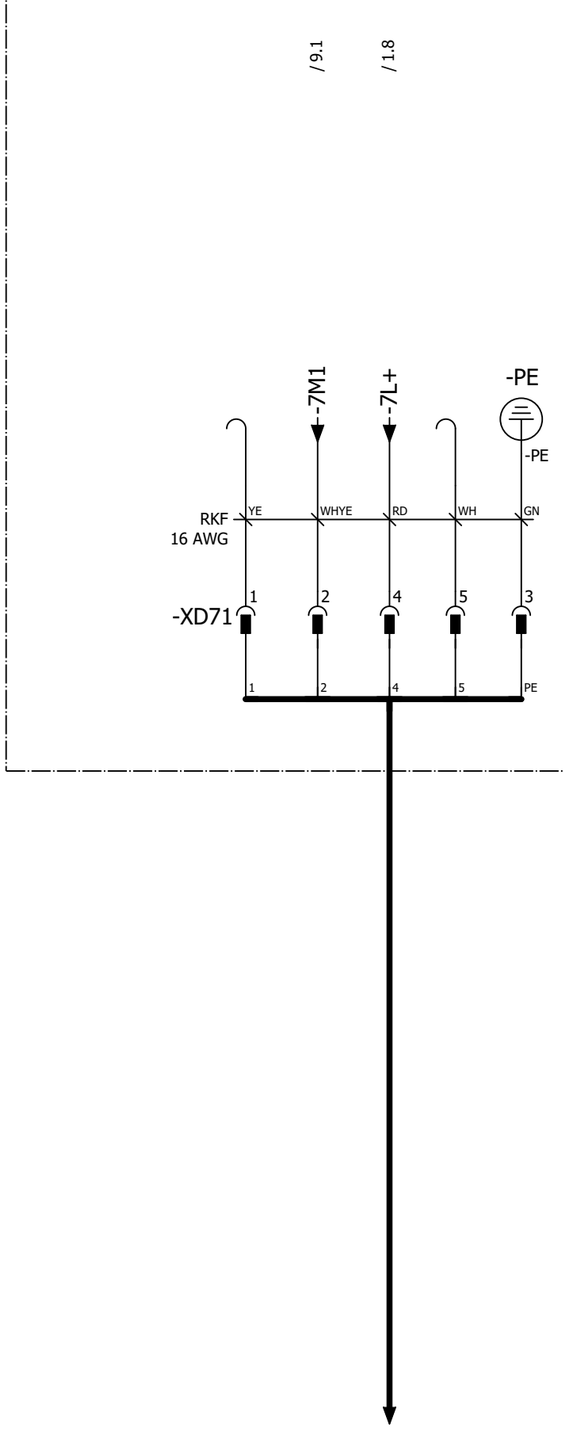

POWER IN / POWER OUT

Pin 1: 0 V UA
Pin 2: 0 V US
Pin 3: FE
Pin 4: +24 V US / 9 A
Pin 5: +24 V UA / 9 A

Pin #	WIRE	COLOR
Pin 1	N/C	YE
Pin 2	-7M1	WHYE
Pin 3	GND	GN
Pin 4	-7L+	RD
Pin 5	N/C	WH

			Date	1/24/2023	Volvo Trucks North America		Valiant TMS	24VDC Unswitched Power 3	Drawing name: =2V01&EFS-EL_KF1	= V1WC4
			Ed.	MKLEPADLO						+ V1UC11
			Appr		P6700 Framing - Cell 2V01, KF1		Scale 1:1		Document type: EFS	Project nr: 22-16152
Modification	Date	Name	Original		Replacement of	Replaced by				Page 22 / 1630

0	1	2	3	4	5	6	7	8	9

+.UC11

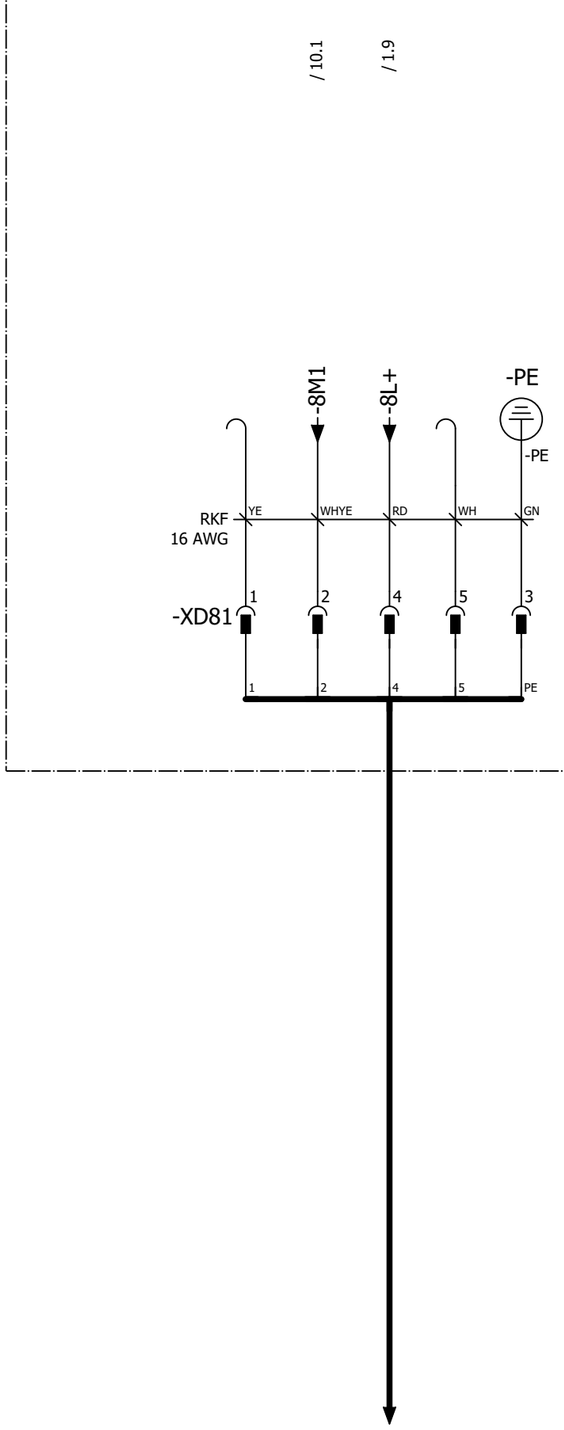

POWER IN / POWER OUT

Pin 1: 0 V UA
Pin 2: 0 V US
Pin 3: FE
Pin 4: +24 V US / 9 A
Pin 5: +24 V UA / 9 A

Pin #	WIRE	COLOR
Pin 1	N/C	YE
Pin 2	-8M1	WHYE
Pin 3	GND	GN
Pin 4	-8L+	RD
Pin 5	N/C	WH

			Date	1/24/2023	Volvo Trucks North America	Valiant TMS	24VDC Unswitched Power 4	Drawing name: =2V01&EFS-EL_KF1	= V1WC4
			Ed.	MKLEPADLO					+ V1UC11
			Appr		P6700 Framing - Cell 2V01, KF1	Scale 1:1		Document type: EFS	Project nr: 22-16152
Modification	Date	Name	Original		Replacement of / Replaced by				Page 23 / 1630

0	1	2	3	4	5	6	7	8	9

+.UC11

/ 12.5 / 16.1 / 11.6 / 12.5

-11M1 -15M1 -15L+ -11.1L+1 -PE

-PE

RKF
16 AWG

YE WHYE RD WH GN

-XD151

1 2 4 5 3

1 2 4 5 PE

+V1UQ31-W1
=V1UQ31KF1+.UQ31/1.1

POWER IN / POWER OUT

Pin 1: 0 V UA
Pin 2: 0 V US
Pin 3: FE
Pin 4: +24 V US / 9 A
Pin 5: +24 V UA / 9 A

Pin #	WIRE	COLOR
Pin 1	-11M1	YE
Pin 2	-15M1	WHYE
Pin 3	GND	GN
Pin 4	-15L+	RD
Pin 5	-11.1L+1	WH

			Date	1/24/2023	Volvo Trucks North America	Valiant TMS	24VDC Switched Power 1	Drawing name: =2V01&EFS-EL_KF1	= V1WC4
			Ed.	MKLEPADLO					+ V1UC11
			Appr		P6700 Framing - Cell 2V01, KF1	Scale 1:1		Document type: EFS	Project nr: 22-16152
Modification	Date	Name	Original		Replacement of	Replaced by			Page 24 / 1630

0	1	2	3	4	5	6	7	8	9

+.UC11

/ 13.5 / 17.1 / 11.7 / 13.5

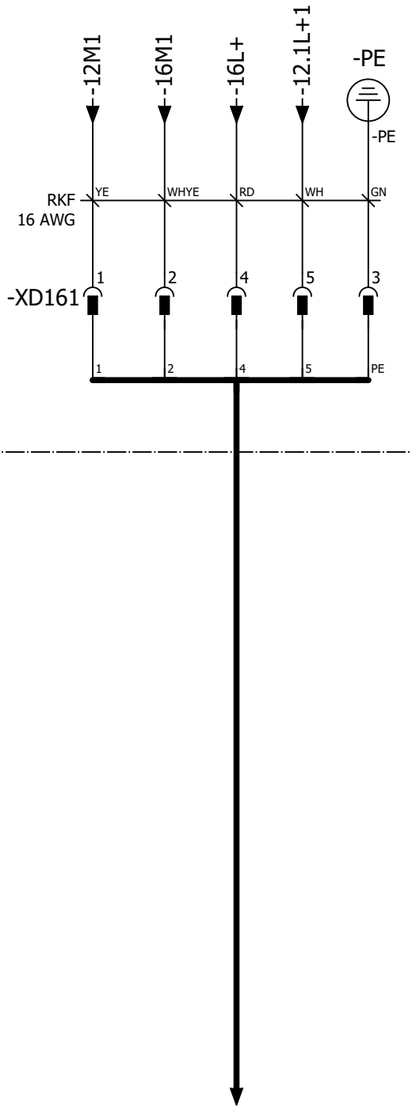

-SWITCHEDPWR2
=V2UQ31WC4+V2UQ31/1.5

POWER IN / POWER OUT

Pin 1: 0 V UA
Pin 2: 0 V US
Pin 3: FE
Pin 4: +24 V US / 9 A
Pin 5: +24 V UA / 9 A

Pin #	WIRE	COLOR
Pin 1	-12M1	YE
Pin 2	-16M1	WHYE
Pin 3	GND	GN
Pin 4	-16L+	RD
Pin 5	-12.1L+1	WH

+.UC11

/ 14.5 / 18.1 / 11.8 / 14.5

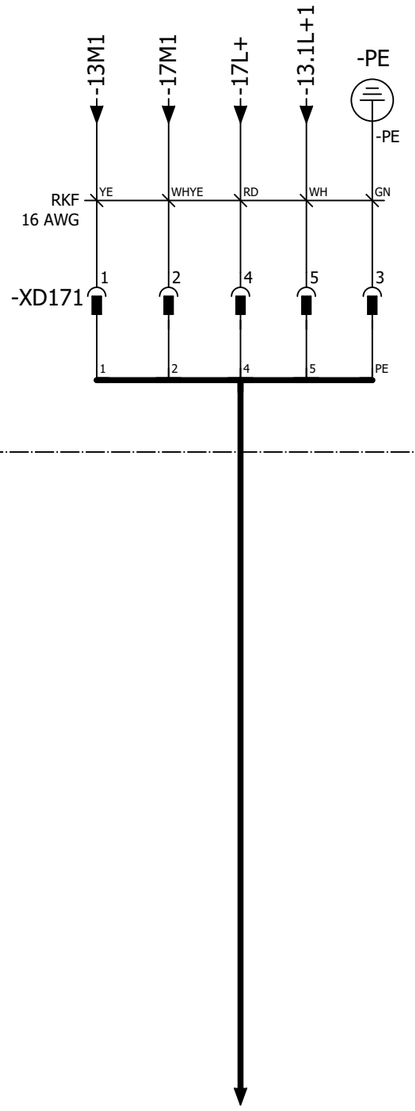

POWER IN / POWER OUT

Pin 1: 0 V UA
Pin 2: 0 V US
Pin 3: FE
Pin 4: +24 V US / 9 A
Pin 5: +24 V UA / 9 A

Pin #	WIRE	COLOR
Pin 1	-13M1	YE
Pin 2	-17M1	WHYE
Pin 3	GND	GN
Pin 4	-17L+	RD
Pin 5	-13.1L+1	WH

			Date	1/24/2023	Volvo Trucks North America	Valiant TMS	24VDC Switched Power 3	Drawing name: =2V01&EFS-EL_KF1	= V1WC4
			Ed.	MKLEPADLO					+ V1UC11
			Appr		P6700 Framing - Cell 2V01, KF1	Scale 1:1		Document type: EFS	Project nr: 22-16152
Modification	Date	Name	Original		Replacement of	Replaced by			Page 26 / 1630

0	1	2	3	4	5	6	7	8	9

+.UC11

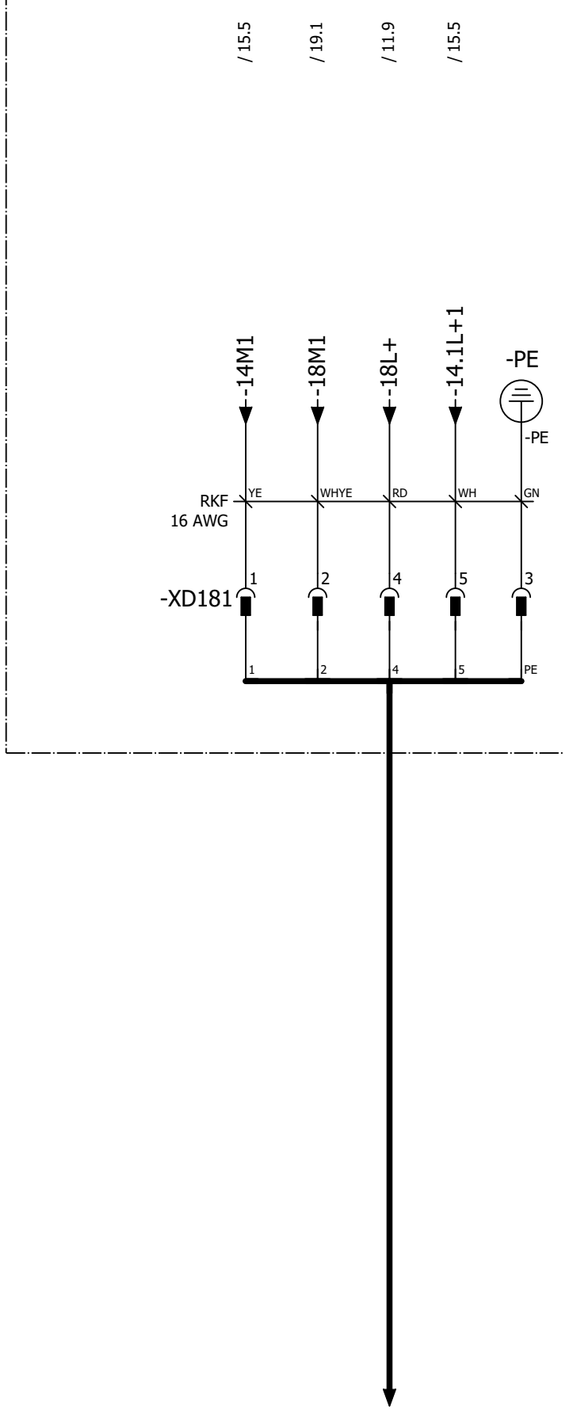

POWER IN / POWER OUT

Pin 1: 0 V UA
Pin 2: 0 V US
Pin 3: FE
Pin 4: +24 V US / 9 A
Pin 5: +24 V UA / 9 A

Pin #	WIRE	COLOR
Pin 1	-14M1	YE
Pin 2	-18M1	WHYE
Pin 3	GND	GN
Pin 4	-18L+	RD
Pin 5	-14.1L+1	WH

			Date	1/24/2023	Volvo Trucks North America	Valiant TMS	24VDC Switched Power 4	Drawing name: =2V01&EFS-EL_KF1	= V1WC4
			Ed.	MKLEPADLO					+ V1UC11
			Appr		P6700 Framing - Cell 2V01, KF1			Document type: EFS	Project nr: 22-16152
Modification	Date	Name	Original		Replacement of / Replaced by	Scale 1:1			Page 27 / 1630

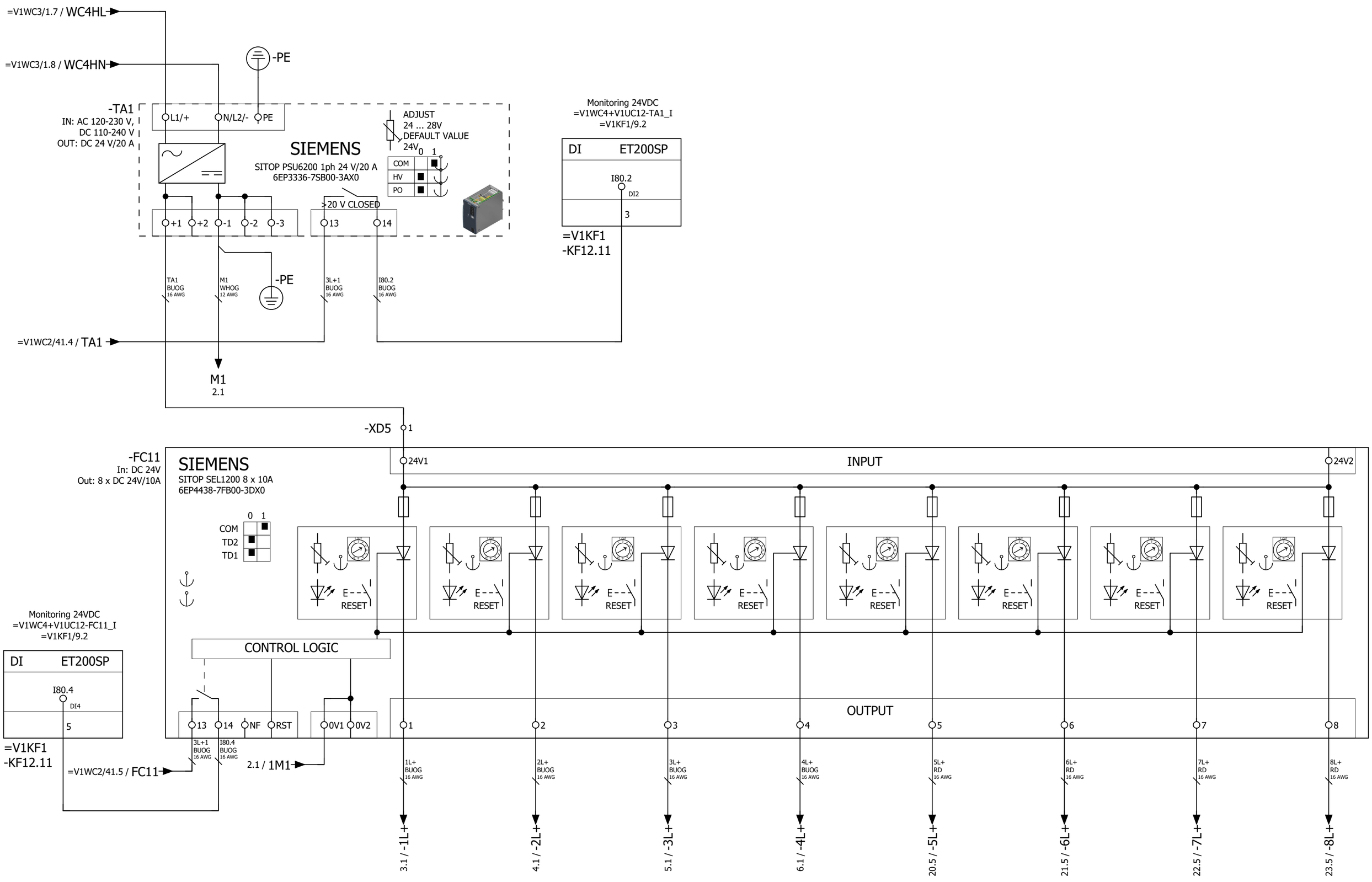

			Date	1/24/2023	Volvo Trucks North America	Valiant TMS	Power distribution 24VDC (Above Disconnect)	Drawing name: =2V01&EFS-EL_KF1	= V1WC4 + V1UC12
			Ed.	MKLEPADLO	P6700 Framing - Cell 2V01, KF1				
			Appr					Document type: EFS	Project nr: 22-16152
Modification	Date	Name	Original		Replacement of / Replaced by	Scale 1:1			Page 1 / 1630

1 3

			Date	1/24/2023	Volvo Trucks North America	Valiant TMS	Power distribution 24VDC HL+	Drawing name: =2V01&EFS-EL_KF1	= V1WC4	
			Ed.	MKLEPADLO					+ V1UC12	
			Appr		P6700 Framing - Cell 2V01, KF1			Document type: EFS	Project nr: 22-16152	Page 2
Modification	Date	Name	Original		Replacement of / Replaced by	Scale 1:1				1630

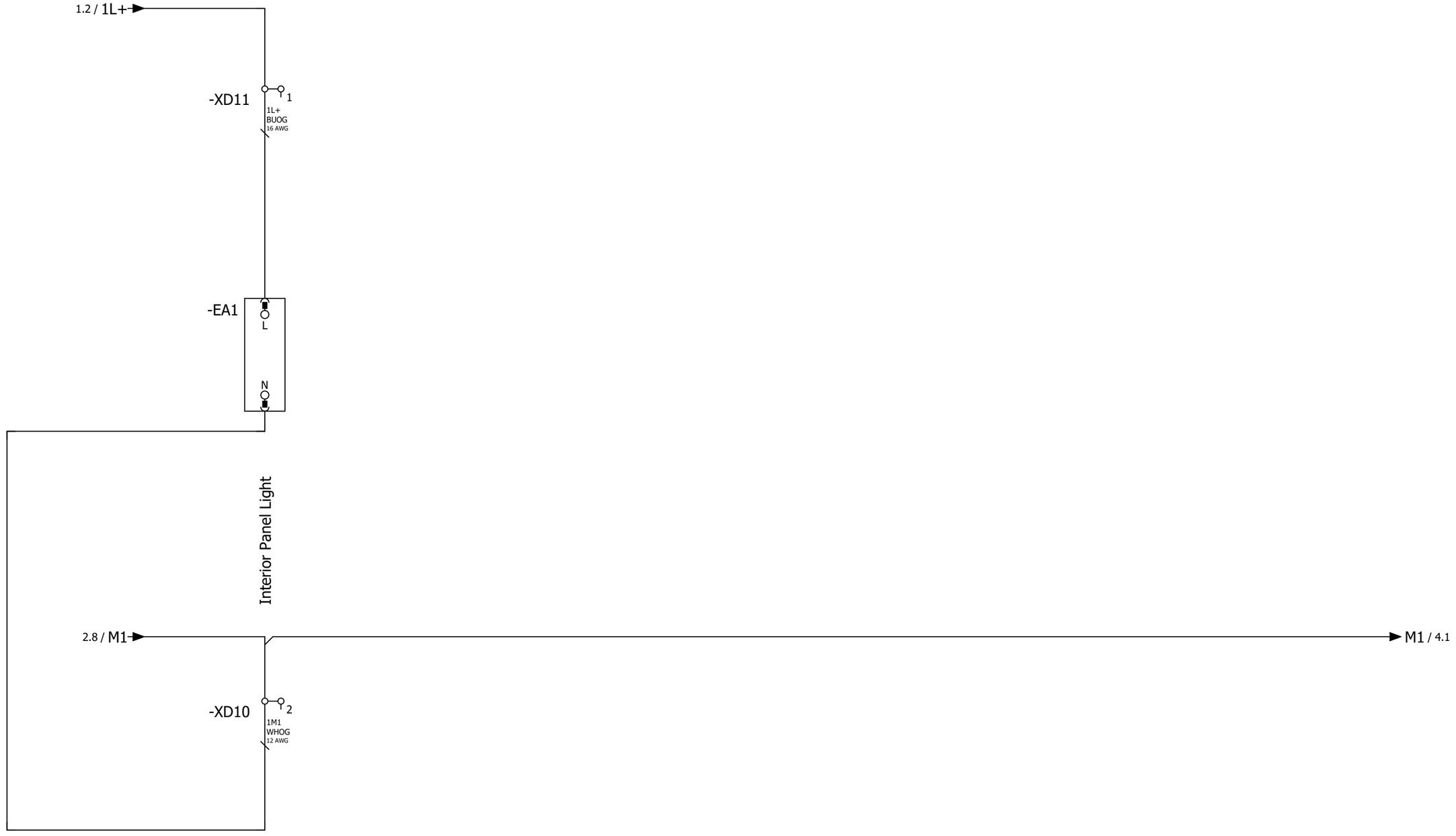

2 4

			Date	1/24/2023	Volvo Trucks North America	Valiant TMS	Power distribution 24VDC 1L+	Drawing name: =2V01&EFS-EL_KF1	= V1WC4	
			Ed.	MKLEPADLO					+ V1UC12	
			Appr		P6700 Framing - Cell 2V01, KF1			Document type: EFS	Project nr: 22-16152	Page 3
Modification	Date	Name	Original		Replacement of / Replaced by	Scale 1:1				1630

0	1	2	3	4	5	6	7	8	9

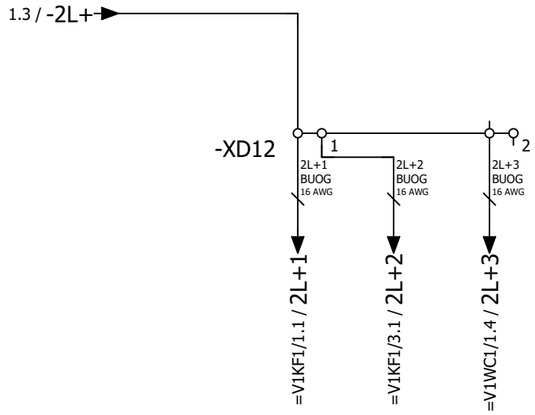

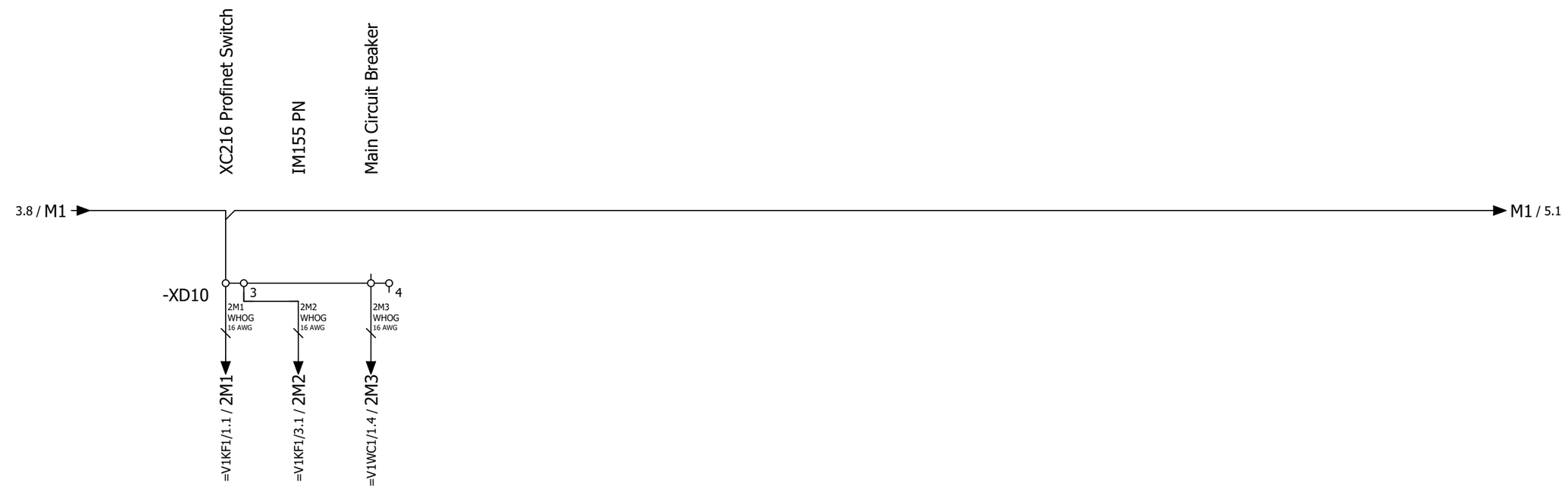

3 5

			Date	1/24/2023	Volvo Trucks North America		Valiant TMS	Power distribution 24VDC 2L+	Drawing name: =2V01&EFS-EL_KF1	= V1WC4	
			Ed.	MKLEPADLO						+ V1UC12	
			Appr		P6700 Framing - Cell 2V01, KF1		Scale 1:1		Document type: EFS	Project nr: 22-16152	Page 4 / 1630
Modification	Date	Name	Original		Replacement of	Replaced by					

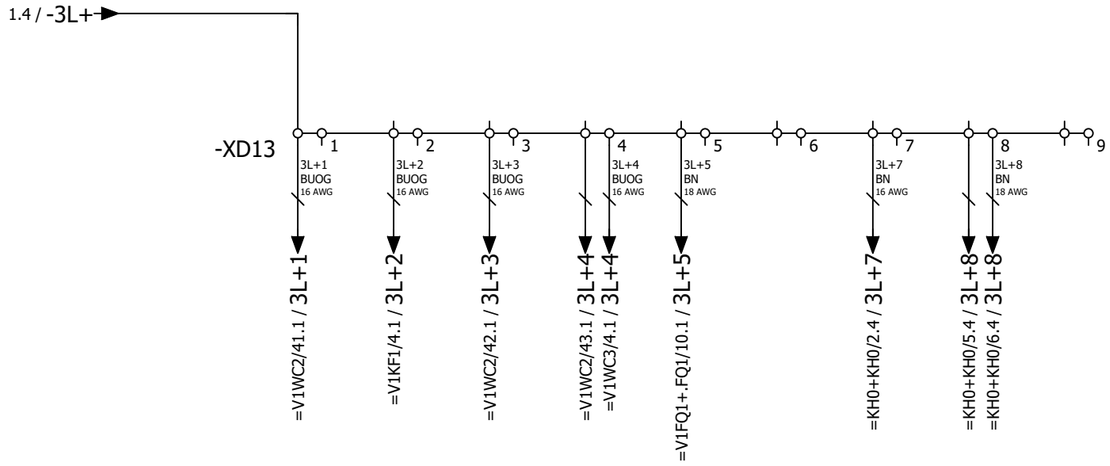

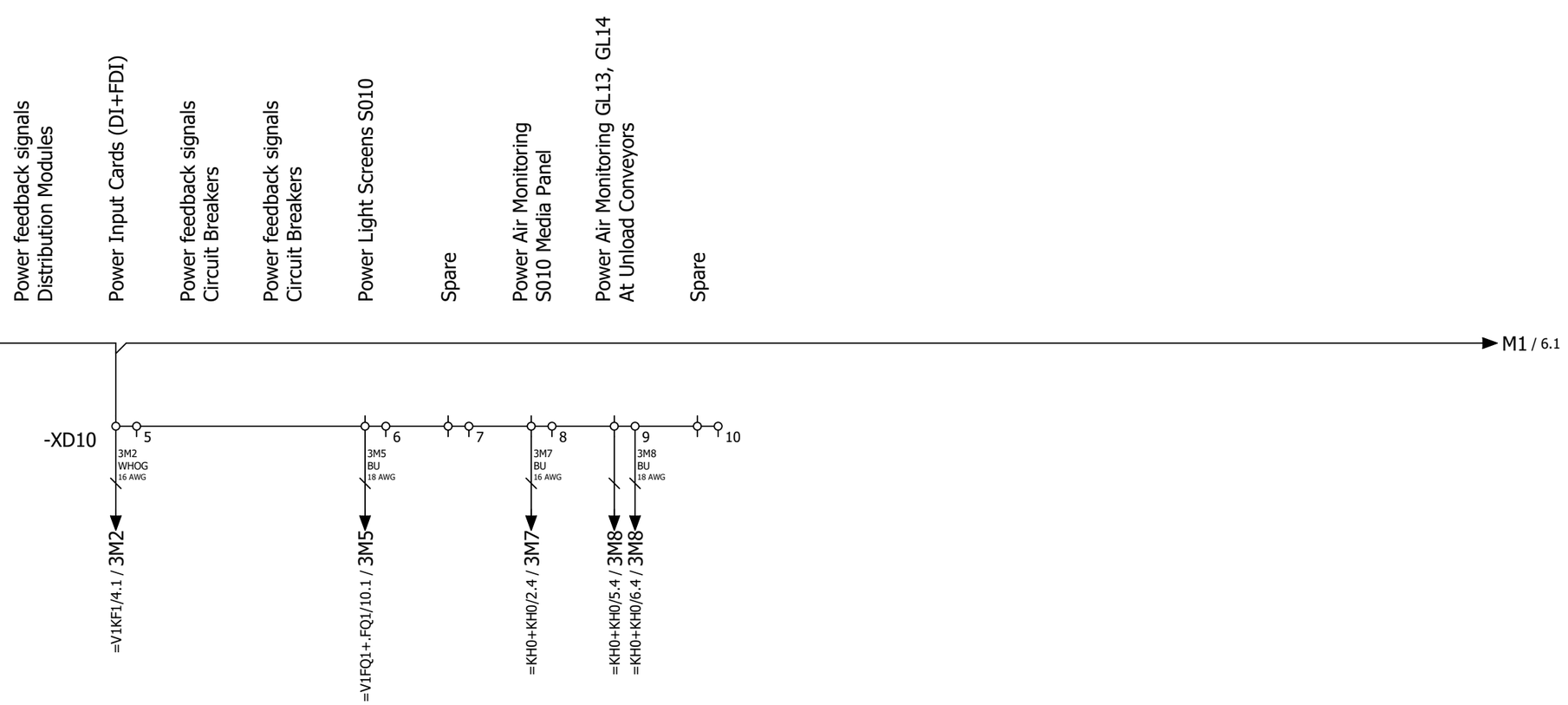

			Date	1/24/2023	Volvo Trucks North America	Valiant TMS	Power distribution 24VDC 3L+	Drawing name: =2V01&EFS-EL_KF1	= V1WC4	
			Ed.	MKLEPADLO					+ V1UC12	
			Appr		P6700 Framing - Cell 2V01, KF1			Document type: EFS	Project nr: 22-16152	Page 5
Modification	Date	Name	Original		Replacement of	Replaced by	Scale 1:1			1630

0	1	2	3	4	5	6	7	8	9

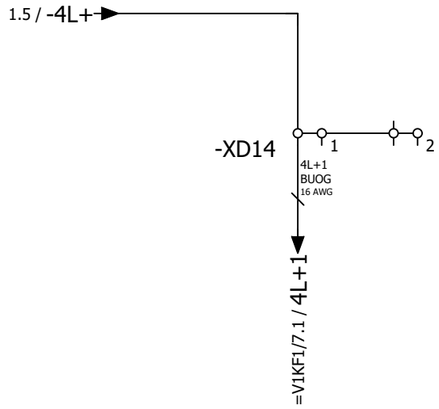

Power Output Cards (DQ+FDQ+FRQ)

Spare

5

7

			Date	1/24/2023	Volvo Trucks North America	Valiant TMS	Power distribution 24VDC 4L+	Drawing name: =2V01&EFS-EL_KF1	= V1WC4
			Ed.	MKLEPADLO					+ V1UC12
			Appr		P6700 Framing - Cell 2V01, KF1			Document type: EFS / Project nr: 22-16152	Page 6 / 1630
Modification	Date	Name	Original		Replacement of / Replaced by	Scale 1:1			

0	1	2	3	4	5	6	7	8	9

6

8

			Date	1/24/2023	Volvo Trucks North America		Valiant TMS	Power distribution 24VDC 5L+	Drawing name: =2V01&EFS-EL_KF1	= V1WC4	
			Ed.	MKLEPADLO						+ V1UC12	
			Appr		P6700 Framing - Cell 2V01, KF1		Scale 1:1		Document type: EFS	Project nr: 22-16152	Page 7 / 1630
Modification	Date	Name	Original		Replacement of	Replaced by					

0	1	2	3	4	5	6	7	8	9

7

9

			Date	1/24/2023	Volvo Trucks North America		Valiant TMS	Power distribution 24VDC 6L+	Drawing name: =2V01&EFS-EL_KF1	= V1WC4	
			Ed.	MKLEPADLO						+ V1UC12	
			Appr		P6700 Framing - Cell 2V01, KF1		Scale 1:1		Document type: EFS	Project nr: 22-16152	Page 8 / 1630
Modification	Date	Name	Original		Replacement of	Replaced by					

0	1	2	3	4	5	6	7	8	9

8

10

			Date	1/24/2023	Volvo Trucks North America		Valiant TMS	Power distribution 24VDC 7L+	Drawing name: =2V01&EFS-EL_KF1	= V1WC4	
			Ed.	MKLEPADLO						+ V1UC12	
			Appr		P6700 Framing - Cell 2V01, KF1		Scale 1:1		Document type: EFS	Project nr: 22-16152	Page 9 / 1630
Modification	Date	Name	Original		Replacement of	Replaced by					

0	1	2	3	4	5	6	7	8	9

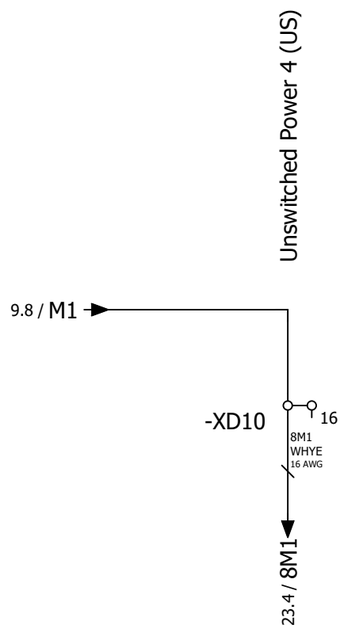

9

11

			Date	1/24/2023	Volvo Trucks North America		Valiant TMS	Power distribution 24VDC 8L+	Drawing name: =2V01&EFS-EL_KF1		= V1WC4	
			Ed.	MKLEPADLO							+ V1UC12	
			Appr		P6700 Framing - Cell 2V01, KF1				Document type: EFS	Project nr: 22-16152	Page	10
Modification	Date	Name	Original		Replacement of	Replaced by	Scale 1:1					1630

0	1	2	3	4	5	6	7	8	9

=V1WC3/3.2 / WC4L

=V1WC3/3.3 / WC4N

-PE

-TA2
IN: AC 120-230 V,
DC 110-240 V
OUT: DC 24 V/20 A

L1/+ N/L2/- PE

SIEMENS
SITOP PSU6200 1ph 24 V/20 A
6EP3336-7SB00-3AX0

ADJUST
24 ... 28V
DEFAULT VALUE
24V

COM HV PO

>20 V CLOSED

+1 +2 -1 -2 -3 13 14

Monitoring 24VDC
=V1WC4+V1UC12-TA2_I
=V1KF1/9.2

DI ET200SP
I80.3
DI3
4

=V1KF1
-KF12.11

TA2 BU 16 AWG
M2 WHBU 12 AWG
-PE
3L+1 BUOG 16 AWG
I80.3 BUOG 16 AWG

=V1WC2/41.4 / TA2

M2
12.1

-XD6 1

-FC12
In: DC 24V
Out: 8 x DC 24V/10A

SIEMENS
SITOP SEL1200 8 x 10A
6EP4438-7FB00-3DX0

COM TD2 TD1

24V1 INPUT 24V2

E--- RESET

CONTROL LOGIC

13 14 NF RST 0V1 0V2

1 2 3 4 5 6 7 8

OUTPUT

Monitoring 24VDC
=V1WC4+V1UC12-FC12_I
=V1KF1/9.2

DI ET200SP
I80.5
DI5
6

=V1KF1
-KF12.11

3L+1 BUOG 16 AWG
I80.5 BUOG 16 AWG
=V1WC2/41.6 / FC12

19.8 / M2

11L+ BU 16 AWG
12L+ BU 16 AWG
13L+ BU 16 AWG
14L+ BU 16 AWG
15L+ RD 16 AWG
16L+ RD 16 AWG
17L+ RD 16 AWG
18L+ RD 16 AWG

12.1 / -11L+
13.1 / -12L+
14.1 / -13L+
15.1 / -14L+
24.5 / -15L+
25.5 / -16L+
26.5 / -17L+
27.5 / -18L+

10 12

			Date	1/24/2023	Volvo Trucks North America	Valiant TMS	Power distribution 24VDC (Below Disconnect)	Drawing name: =2V01&EFS-EL_KF1	= V1WC4
			Ed.	MKLEPADLO					+ V1UC12
			Appr		P6700 Framing - Cell 2V01, KF1			Document type: EFS	Project nr: 22-16152	Page 11
Modification	Date	Name	Original		Replacement of	Replaced by	Scale 1:1			1630

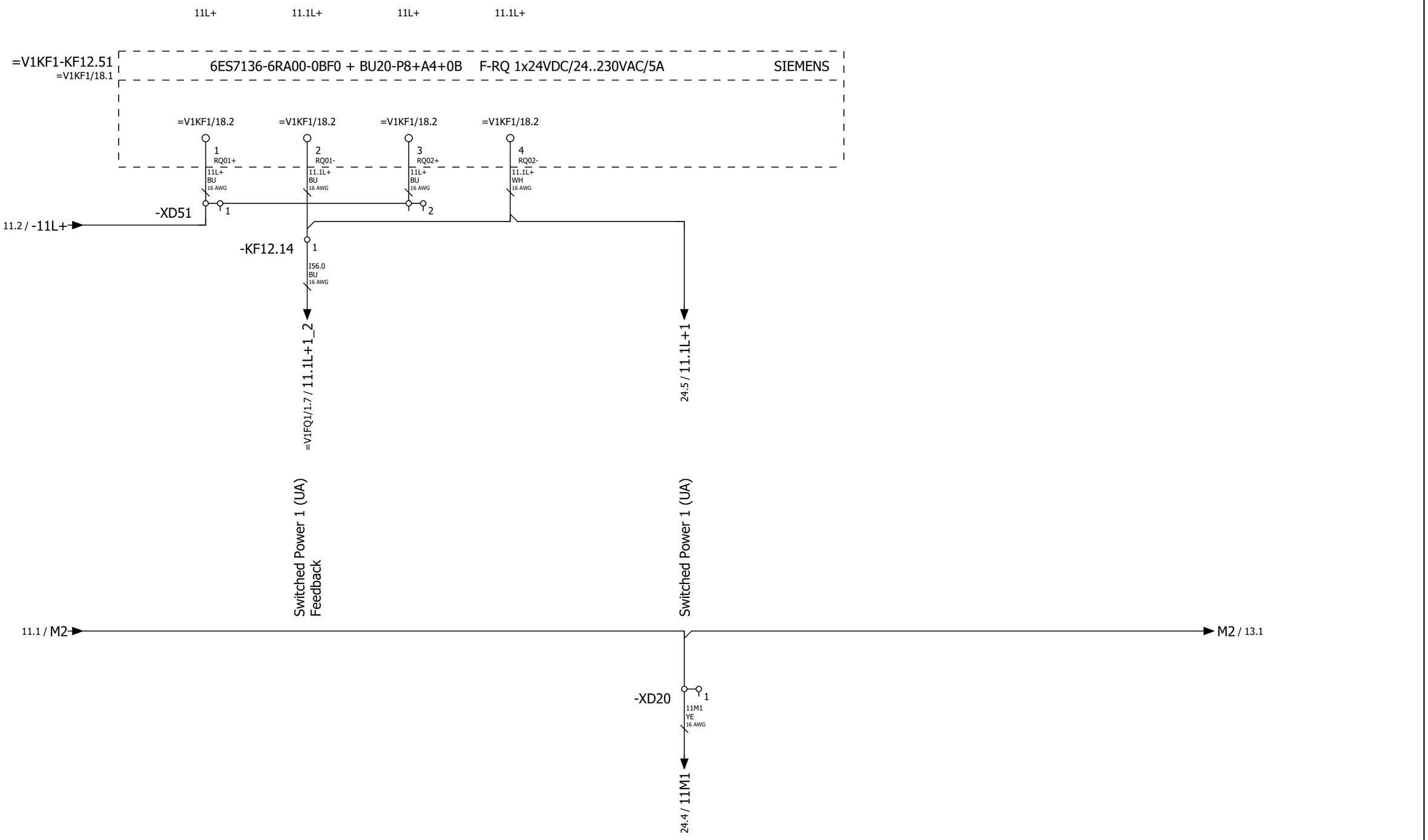

11

13

			Date	1/24/2023	Volvo Trucks North America		Valiant TMS	Power distribution 24VDC 11L+	Drawing name: =2V01&EFS-EL_KF1	= V1WC4	
			Ed.	MKLEPADLO						+ V1UC12	
			Appr		P6700 Framing - Cell 2V01, KF1		Scale 1:1		Document type: EFS	Project nr: 22-16152	Page 12 / 1630
Modification	Date	Name	Original		Replacement of	Replaced by					

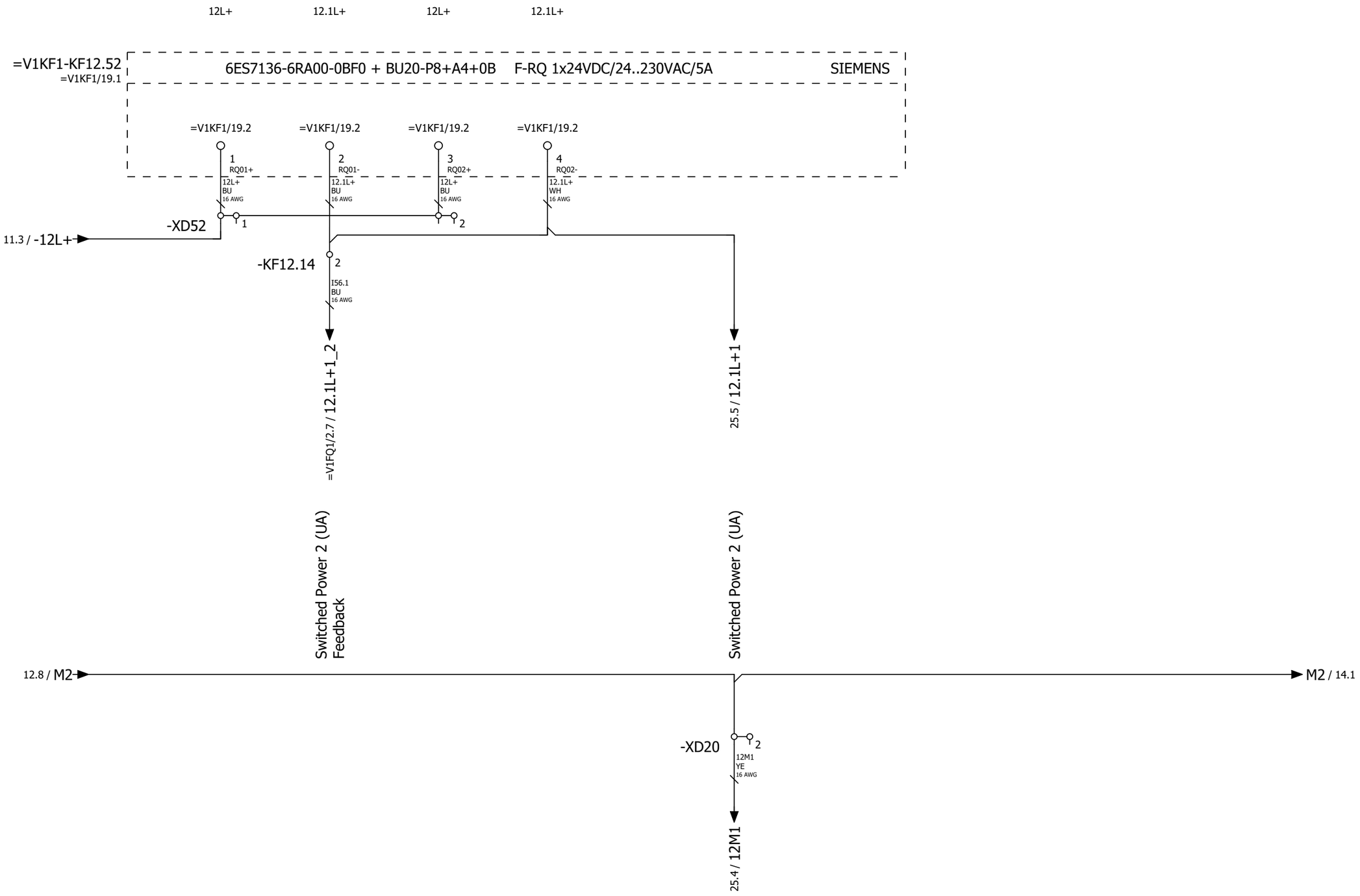

12

14

			Date	1/24/2023	Volvo Trucks North America	Valiant TMS	Power distribution 24VDC 12L+	Drawing name: =2V01&EFS-EL_KF1	= V1WC4		
			Ed.	MKLEPADLO					+ V1UC12		
			Appr		P6700 Framing - Cell 2V01, KF1	Scale 1:1		Document type: EFS	Project nr: 22-16152	Page	13
Modification	Date	Name	Original		Replacement of	Replaced by					1630

0	1	2	3	4	5	6	7	8	9

13L+ 13.1L+ 13L+ 13.1L+

=V1KF1-KF12.53
=V1KF1/20.1

6ES7136-6RA00-0BF0 + BU20-P8+A4+0B F-RQ 1x24VDC/24..230VAC/5A SIEMENS

=V1KF1/20.2 =V1KF1/20.2 =V1KF1/20.2 =V1KF1/20.2

1 RQ01+ 13L+ BU 16 AWG
2 RQ01- 13.1L+ BU 16 AWG
3 RQ02+ 13L+ BU 16 AWG
4 RQ02- 13.1L+ WH 16 AWG

11.4 / -13L+ → -XD53 1 2

-KF12.14 3
I56.2 BU 16 AWG

=V1FQ1/3.7 / 13.1L+1_2

Switched Power 3 (UA) Feedback

26.5 / 13.1L+1

Switched Power 3 (UA)

13.8 / M2 → M2 / 15.1

-XD20 3
13M1 YE 16 AWG

26.4 / 13M1

13 15

			Date	1/24/2023	Volvo Trucks North America	Valiant TMS	Power distribution 24VDC 13L+	Drawing name: =2V01&EFS-EL_KF1	= V1WC4
			Ed.	MKLEPADLO					+ V1UC12
			Appr		P6700 Framing - Cell 2V01, KF1	Scale 1:1		Document type: EFS / Project nr: 22-16152	Page 14 / 1630
Modification	Date	Name	Original		Replacement of / Replaced by				

0	1	2	3	4	5	6	7	8	9

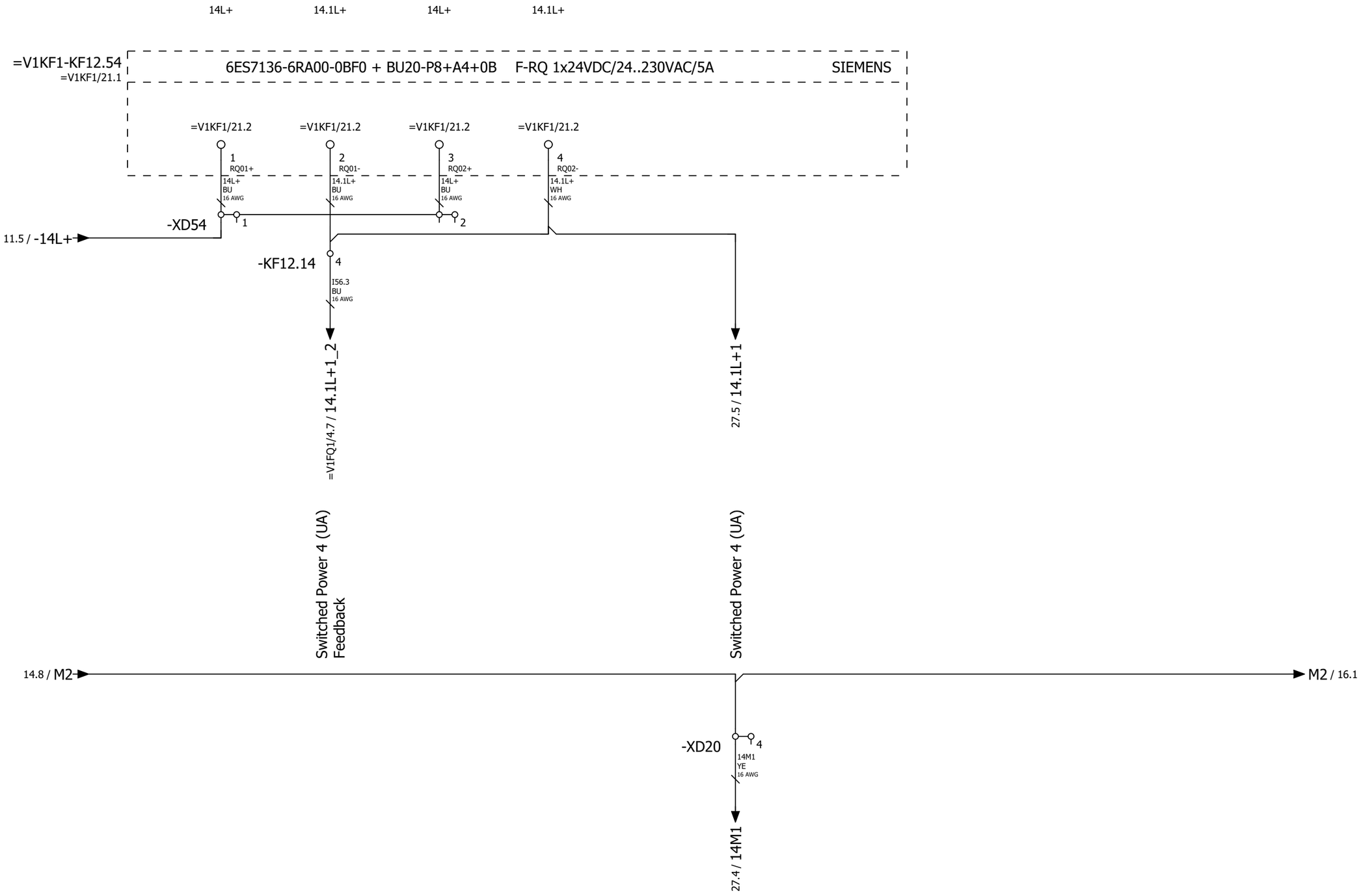

14

16

			Date	1/24/2023	Volvo Trucks North America	Valiant TMS	Power distribution 24VDC 14L+	Drawing name: =2V01&EFS-EL_KF1	= V1WC4		
			Ed.	MKLEPADLO					+ V1UC12		
			Appr		P6700 Framing - Cell 2V01, KF1	Scale 1:1		Document type: EFS	Project nr: 22-16152	Page	15
Modification	Date	Name	Original		Replacement of	Replaced by					1630

Switched Power 1 (US)

15.8 / M2

M2 / 17.1

-XD20

5

15M1
WHYE
16 AWG

24.4 / 15M1

15

17

			Date	1/24/2023	Volvo Trucks North America	Valiant TMS	Power distribution 24VDC 15L+	Drawing name: =2V01&EFS-EL_KF1		= V1WC4	
			Ed.	MKLEPADLO						+ V1UC12	
			Appr		P6700 Framing - Cell 2V01, KF1	Scale 1:1		Document type: EFS	Project nr: 22-16152	Page	16
Modification	Date	Name	Original		Replacement of	Replaced by					1630

Switched Power 2 (US)

16.8 / M2

M2 / 18.1

-XD20

6

16M1
WHYE
16 AWG

25.4 / 16M1

16

18

			Date	1/24/2023	Volvo Trucks North America	Valiant TMS	Power distribution 24VDC 16L+	Drawing name: =2V01&EFS-EL_KF1	= V1WC4	
			Ed.	MKLEPADLO					+ V1UC12	
			Appr		P6700 Framing - Cell 2V01, KF1			Document type: EFS	Project nr: 22-16152	Page 17
Modification	Date	Name	Original		Replacement of / Replaced by	Scale 1:1				1630

17

19

			Date	1/24/2023	Volvo Trucks North America	Valiant TMS	Power distribution 24VDC 17L+	Drawing name: =2V01&EFS-EL_KF1	= V1WC4	
			Ed.	MKLEPADLO					+ V1UC12	
			Appr		P6700 Framing - Cell 2V01, KF1			Document type: EFS	Project nr: 22-16152	Page 18
Modification	Date	Name	Original		Replacement of / Replaced by	Scale 1:1				1630

0	1	2	3	4	5	6	7	8	9

18

20

			Date	1/24/2023	Volvo Trucks North America		Valiant TMS	Power distribution 24VDC 18L+	Drawing name: =2V01&EFS-EL_KF1	= V1WC4	
			Ed.	MKLEPADLO						+ V1UC12	
			Appr		P6700 Framing - Cell 2V01, KF1				Document type: EFS	Project nr: 22-16152	Page 19
Modification	Date	Name	Original		Replacement of	Replaced by	Scale 1:1				1630

0	1	2	3	4	5	6	7	8	9

+.UC12

/ 7.1

/ 1.6

POWER IN / POWER OUT

Pin 1: 0 V UA
Pin 2: 0 V US
Pin 3: FE
Pin 4: +24 V US / 9 A
Pin 5: +24 V UA / 9 A

Pin #	WIRE	COLOR
Pin 1	N/C	YE
Pin 2	-5M1	WHYE
Pin 3	GND	GN
Pin 4	-5L+	RD
Pin 5	N/C	WH

+.FQ1-BG7
=V1FQ1+.FQ1/4.3

19

21

			Date	1/24/2023	Volvo Trucks North America		Valiant TMS	24VDC Unswitched Power 1	Drawing name: =2V01&EFS-EL_KF1	= V1WC4
			Ed.	MKLEPADLO						+ V1UC12
			Appr		P6700 Framing - Cell 2V01, KF1		Scale 1:1		Document type: EFS	Project nr: 22-16152
Modification	Date	Name	Original		Replacement of	Replaced by				Page 20 / 1630

0	1	2	3	4	5	6	7	8	9

+.UC12

/ 8.1

/ 1.7

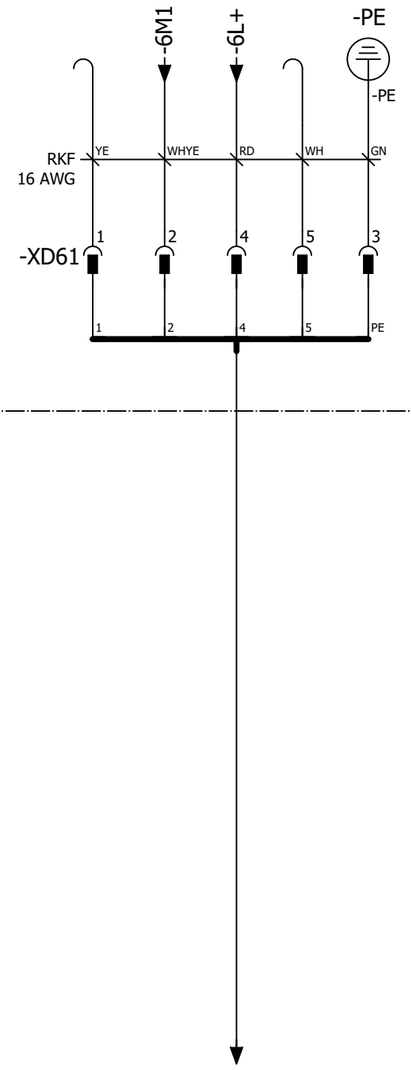

POWER IN / POWER OUT

Pin 1: 0 V UA
Pin 2: 0 V US
Pin 3: FE
Pin 4: +24 V US / 9 A
Pin 5: +24 V UA / 9 A

Pin #	WIRE	COLOR
Pin 1	N/C	YE
Pin 2	-6M1	WHYE
Pin 3	GND	GN
Pin 4	-6L+	RD
Pin 5	N/C	WH

+.FQ1-BG8
=V2FQ1+V2FQ1/4.3

20

22

			Date	1/24/2023	Volvo Trucks North America	Valiant TMS	24VDC Unswitched Power 2	Drawing name: =2V01&EFS-EL_KF1	= V1WC4
			Ed.	MKLEPADLO					+ V1UC12
			Appr		P6700 Framing - Cell 2V01, KF1	Scale 1:1		Document type: EFS	Project nr: 22-16152
Modification	Date	Name	Original		Replacement of	Replaced by			Page 21 / 1630

0	1	2	3	4	5	6	7	8	9

+.UC12

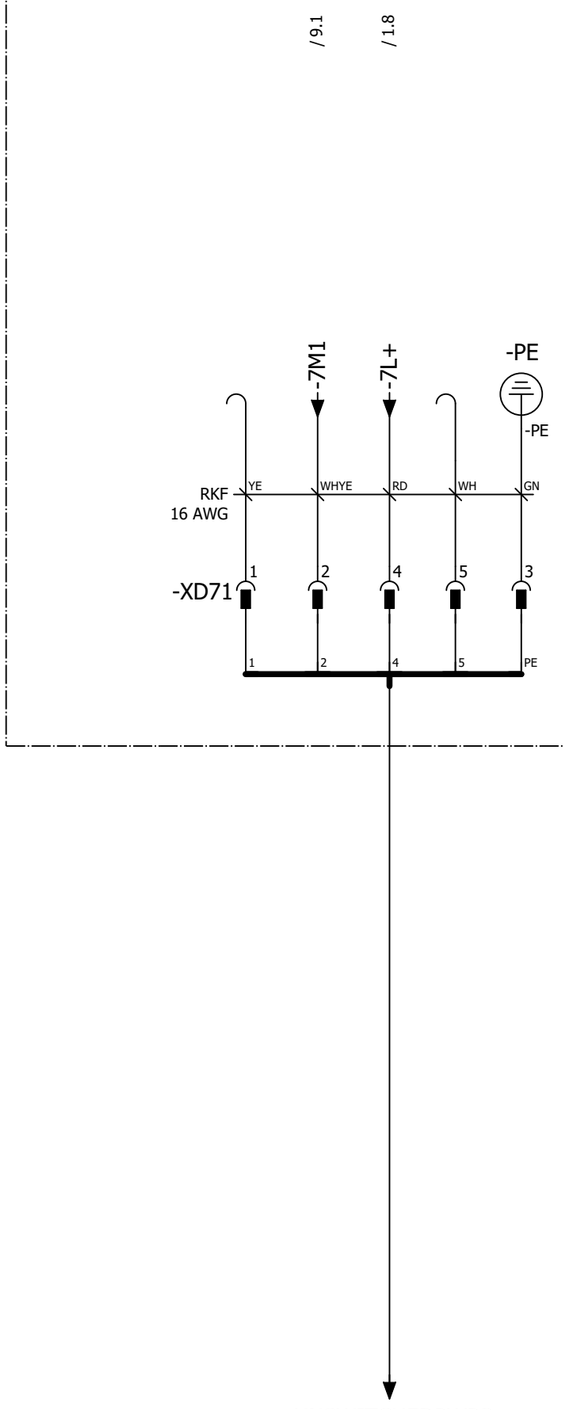

POWER IN / POWER OUT

Pin 1: 0 V UA
Pin 2: 0 V US
Pin 3: FE
Pin 4: +24 V US / 9 A
Pin 5: +24 V UA / 9 A

Pin #	WIRE	COLOR
Pin 1	N/C	YE
Pin 2	-7M1	WHYE
Pin 3	GND	GN
Pin 4	-7L+	RD
Pin 5	N/C	WH

			Date	1/24/2023	Volvo Trucks North America	Valiant TMS	24VDC Unswitched Power 3	Drawing name: =2V01&EFS-EL_KF1	= V1WC4
			Ed.	MKLEPADLO					+ V1UC12
			Appr		P6700 Framing - Cell 2V01, KF1	Scale 1:1		Document type: EFS	Project nr: 22-16152
Modification	Date	Name	Original		Replacement of	Replaced by			Page 22 / 1630

0	1	2	3	4	5	6	7	8	9

+.UC12

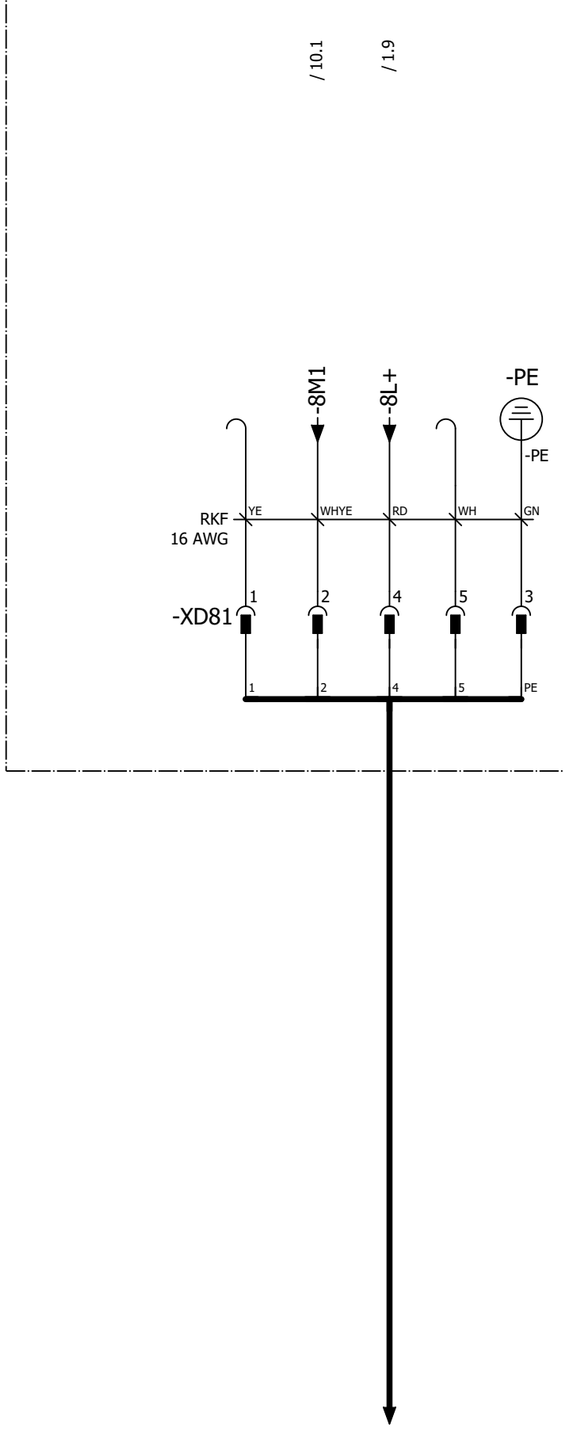

POWER IN / POWER OUT

Pin 1: 0 V UA
Pin 2: 0 V US
Pin 3: FE
Pin 4: +24 V US / 9 A
Pin 5: +24 V UA / 9 A

Pin #	WIRE	COLOR
Pin 1	N/C	YE
Pin 2	-8M1	WHYE
Pin 3	GND	GN
Pin 4	-8L+	RD
Pin 5	N/C	WH

			Date	1/24/2023	Volvo Trucks North America	Valiant TMS	24VDC Unswitched Power 4	Drawing name: =2V01&EFS-EL_KF1	= V1WC4
			Ed.	MKLEPADLO					+ V1UC12
			Appr		P6700 Framing - Cell 2V01, KF1	Scale 1:1		Document type: EFS	Project nr: 22-16152
Modification	Date	Name	Original		Replacement of	Replaced by			Page 23 / 1630

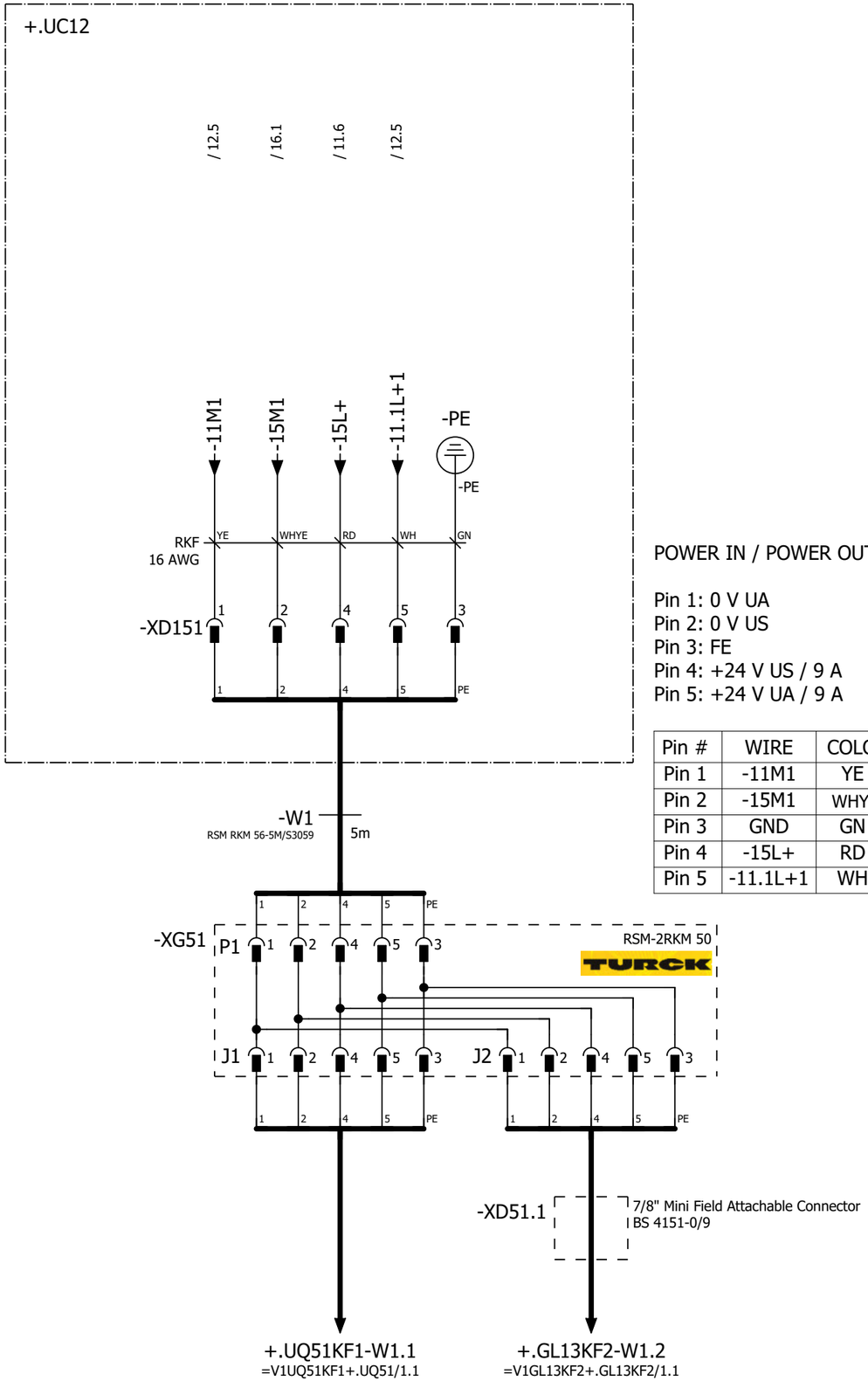

POWER IN / POWER OUT

Pin 1: 0 V UA
Pin 2: 0 V US
Pin 3: FE
Pin 4: +24 V US / 9 A
Pin 5: +24 V UA / 9 A

Pin #	WIRE	COLOR
Pin 1	-11M1	YE
Pin 2	-15M1	WHYE
Pin 3	GND	GN
Pin 4	-15L+	RD
Pin 5	-11.1L+1	WH

			Date	1/24/2023	Volvo Trucks North America	Valiant TMS	24VDC Switched Power 1	Drawing name: =2V01&EFS-EL_KF1	= V1WC4
			Ed.	MKLEPADLO					+ V1UC12
			Appr		P6700 Framing - Cell 2V01, KF1			Document type: EFS / Project nr: 22-16152	Page 24 / 1630
Modification	Date	Name	Original		Replacement of / Replaced by	Scale 1:1			

+.UC12

/ 13.5 / 17.1 / 11.7 / 13.5

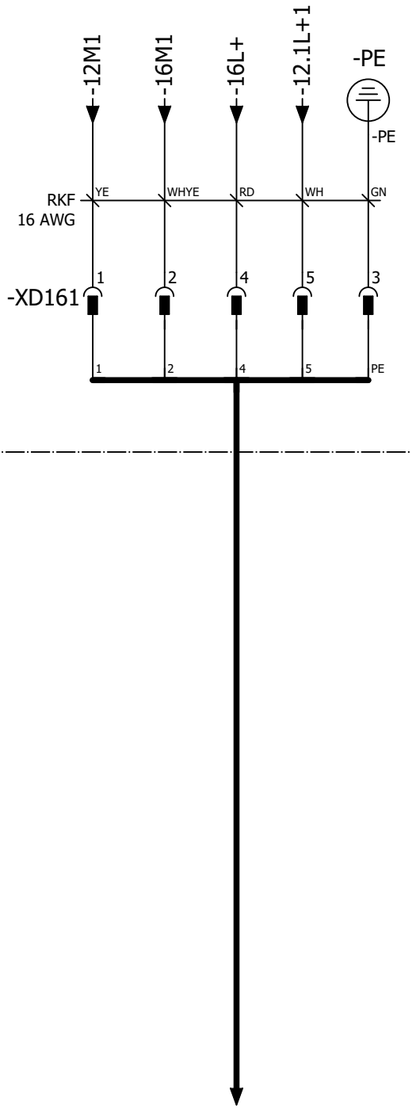

+.GL13KF2-W1
=V1GL13KF2+.GL13KF2/10.1

POWER IN / POWER OUT

Pin 1: 0 V UA
Pin 2: 0 V US
Pin 3: FE
Pin 4: +24 V US / 9 A
Pin 5: +24 V UA / 9 A

Pin #	WIRE	COLOR
Pin 1	-12M1	YE
Pin 2	-16M1	WHYE
Pin 3	GND	GN
Pin 4	-16L+	RD
Pin 5	-12.1L+1	WH

			Date	1/24/2023	Volvo Trucks North America	Valiant TMS	24VDC Switched Power 2	Drawing name: =2V01&EFS-EL_KF1	= V1WC4
			Ed.	MKLEPADLO					+ V1UC12
			Appr		P6700 Framing - Cell 2V01, KF1	Scale 1:1		Document type: EFS	Project nr: 22-16152 Page 25
Modification	Date	Name	Original		Replacement of / Replaced by				1630

+.UC12

/ 14.5 / 18.1 / 11.8 / 14.5

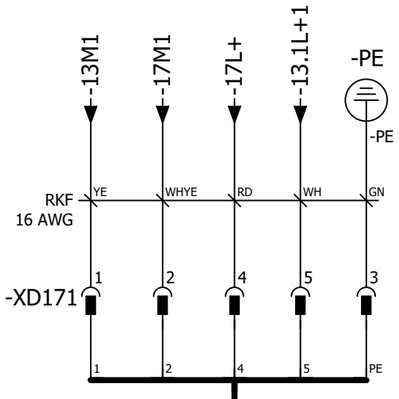

POWER IN / POWER OUT

Pin 1: 0 V UA
Pin 2: 0 V US
Pin 3: FE
Pin 4: +24 V US / 9 A
Pin 5: +24 V UA / 9 A

Pin #	WIRE	COLOR
Pin 1	-13M1	YE
Pin 2	-17M1	WHYE
Pin 3	GND	GN
Pin 4	-17L+	RD
Pin 5	-13.1L+1	WH

+.GL14KF2-W1
=V1GL14KF2+.GL14KF2/10.1

			Date	1/24/2023	Volvo Trucks North America	Valiant TMS	24VDC Switched Power 3	Drawing name: =2V01&EFS-EL_KF1	= V1WC4
			Ed.	MKLEPADLO					+ V1UC12
			Appr		P6700 Framing - Cell 2V01, KF1			Document type: EFS	Project nr: 22-16152
Modification	Date	Name	Original		Replacement of / Replaced by	Scale 1:1			Page 26 / 1630

0	1	2	3	4	5	6	7	8	9

+.UC12

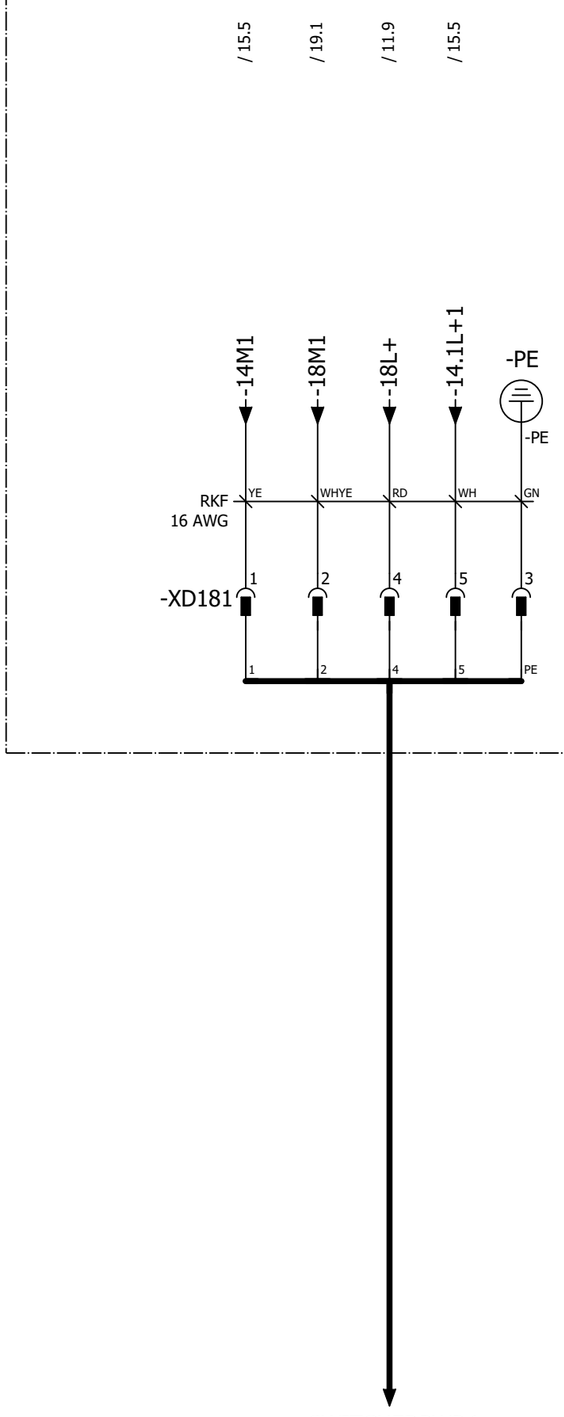

POWER IN / POWER OUT

Pin 1: 0 V UA
Pin 2: 0 V US
Pin 3: FE
Pin 4: +24 V US / 9 A
Pin 5: +24 V UA / 9 A

Pin #	WIRE	COLOR
Pin 1	-14M1	YE
Pin 2	-18M1	WHYE
Pin 3	GND	GN
Pin 4	-18L+	RD
Pin 5	-14.1L+1	WH

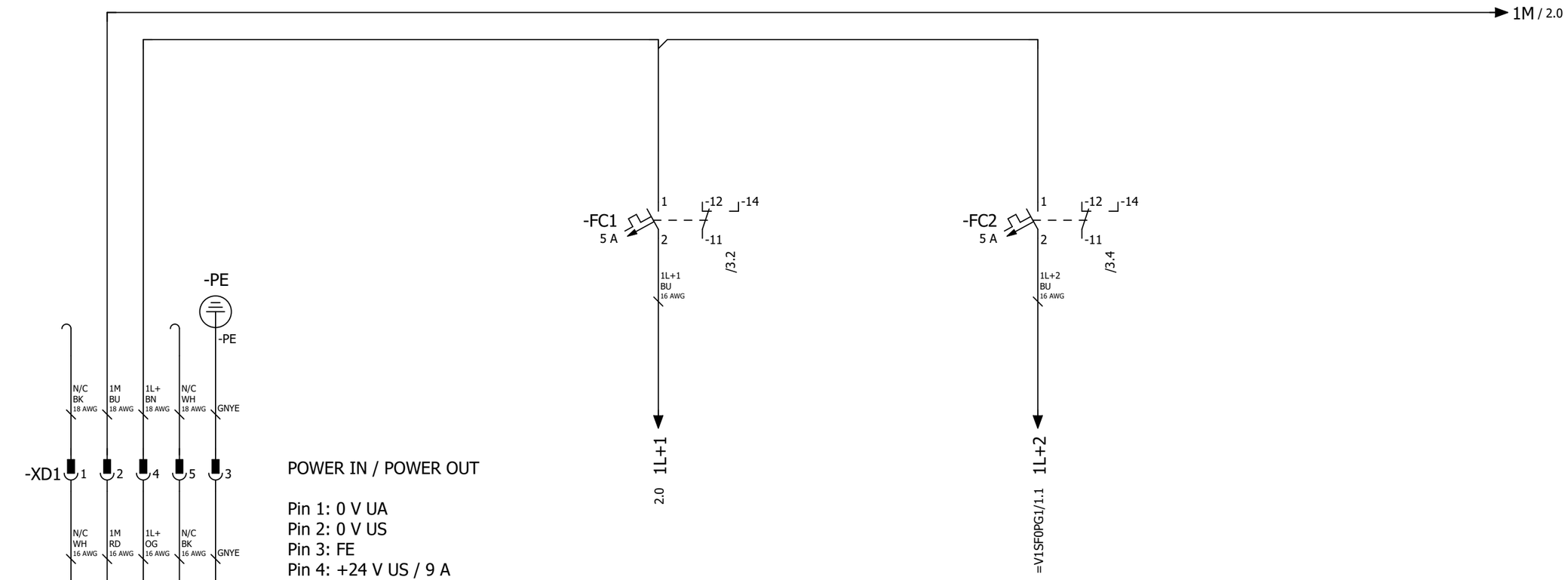

POWER IN / POWER OUT

Pin 1: 0 V UA
Pin 2: 0 V US
Pin 3: FE
Pin 4: +24 V US / 9 A
Pin 5: +24 V UA / 9 A

Pin #	WIRE	COLOR
Pin 1	N/C	BK
Pin 2	1M	BU
Pin 3	PE	GNYE
Pin 4	1L+	BN
Pin 5	N/C	WH

Power Distribution 24 VDC Display

Power Distribution 24 VDC ET200

+.UC12/27

2

			Date	1/24/2023	Volvo Trucks North America	Valiant TMS	Incomming power supply 24 VDC	Drawing name: =2V01&EFS-EL_KF1	= V1WC4	
			Ed.	MKLEPADLO					+ V1UC32	
			Appr		P6700 Framing - Cell 2V01, KF1			Document type: EFS	Project nr: 22-16152	Page 1
Modification	Date	Name	Original		Replacement of / Replaced by	Scale 1:1				1630

			Date	1/24/2023	Volvo Trucks North America		Valiant TMS	Power distribution 24VDC 1L+	Drawing name: =2V01&EFS-EL_KF1	= V1WC4	
			Ed.	MKLEPADLO						+ V1UC32	
			Appr		P6700 Framing - Cell 2V01, KF1		Scale 1:1		Document type: EFS	Project nr: 22-16152	Page 2
Modification	Date	Name	Original		Replacement of	Replaced by					1630

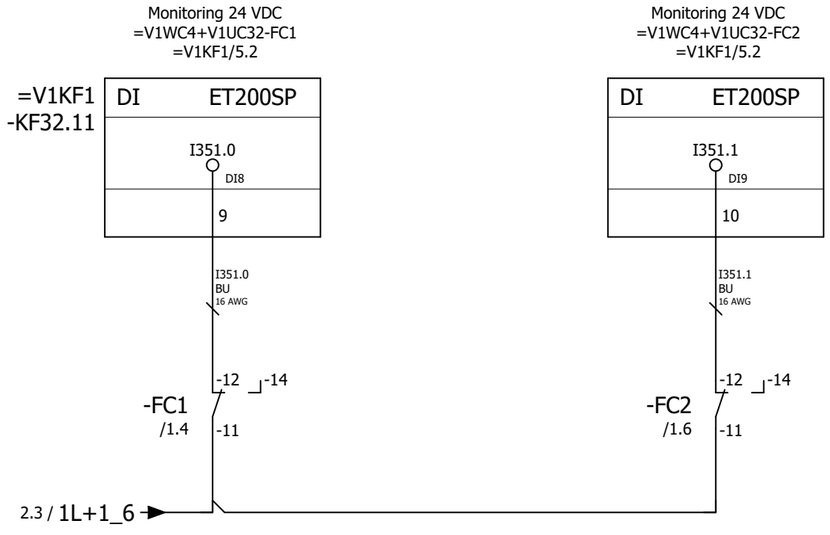

			Date	1/24/2023	Volvo Trucks North America	Valiant TMS	Monitoring 24VDC	Drawing name: =2V01&EFS-EL_KF1	= V1WC4	
			Ed.	MKLEPADLO					+ V1UC32	
			Appr		P6700 Framing - Cell 2V01, KF1			Document type: EFS	Project nr: 22-16152	Page 3
Modification	Date	Name	Original		Replacement of / Replaced by	Scale 1:1				1630

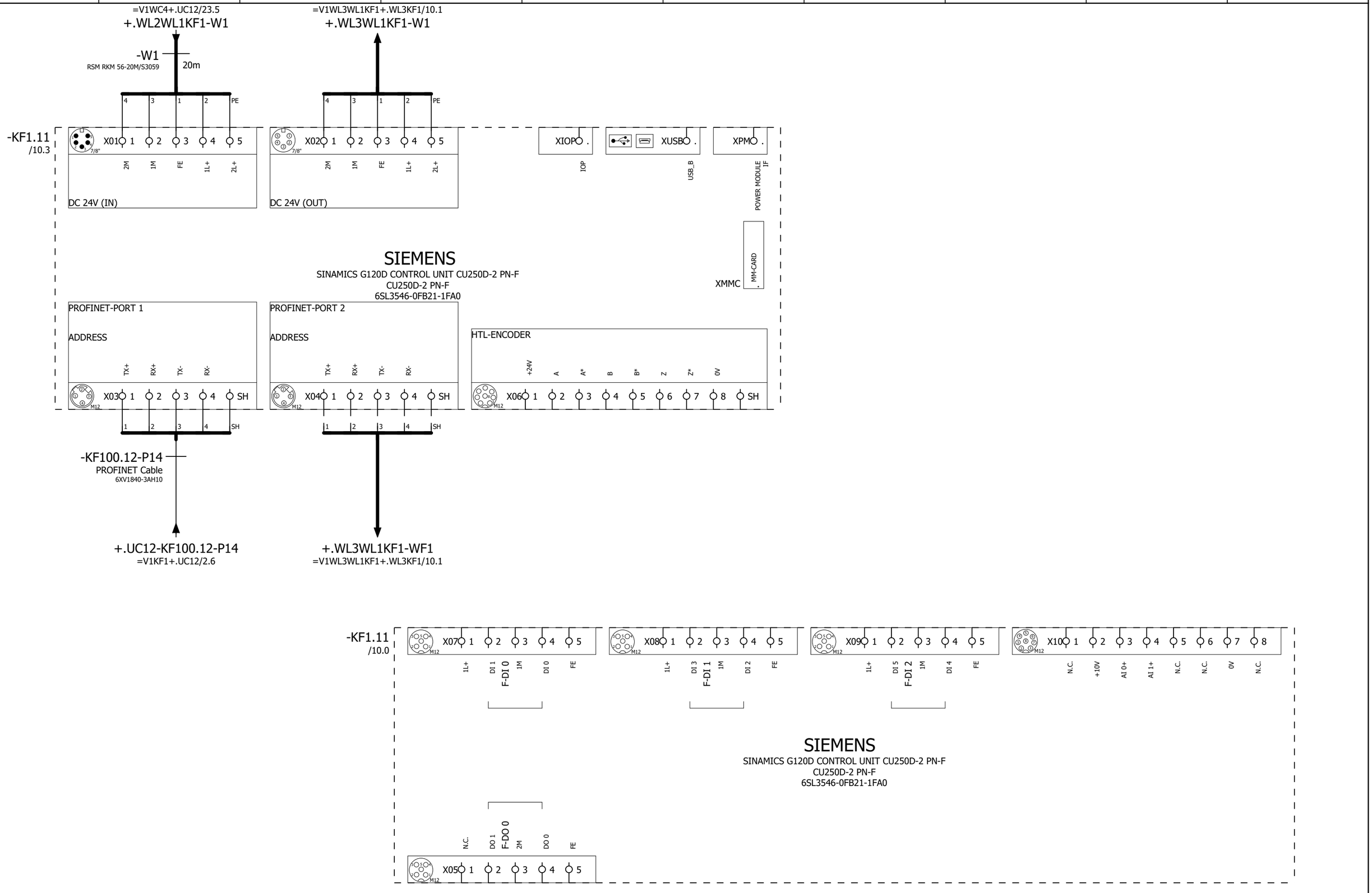

=V1WC4+.UC32/3

=V1WL2WL1WC1+.WL2UC01/1

			Date	1/24/2023	Volvo Trucks North America	Valiant TMS	G120D Control Unit	Drawing name: =2V01&EFS-EL_KF1	= V1WL2WL1KF1
			Ed.	MKLEPADLO	P6700 Framing - Cell 2V01, KF1				+ V1WL2KF1
			Appr					Document type: EFS	Project nr: 22-16152
Modification	Date	Name	Original		Replacement of / Replaced by	Scale 1:1			Page 10 / 1630

0	1	2	3	4	5	6	7	8	9

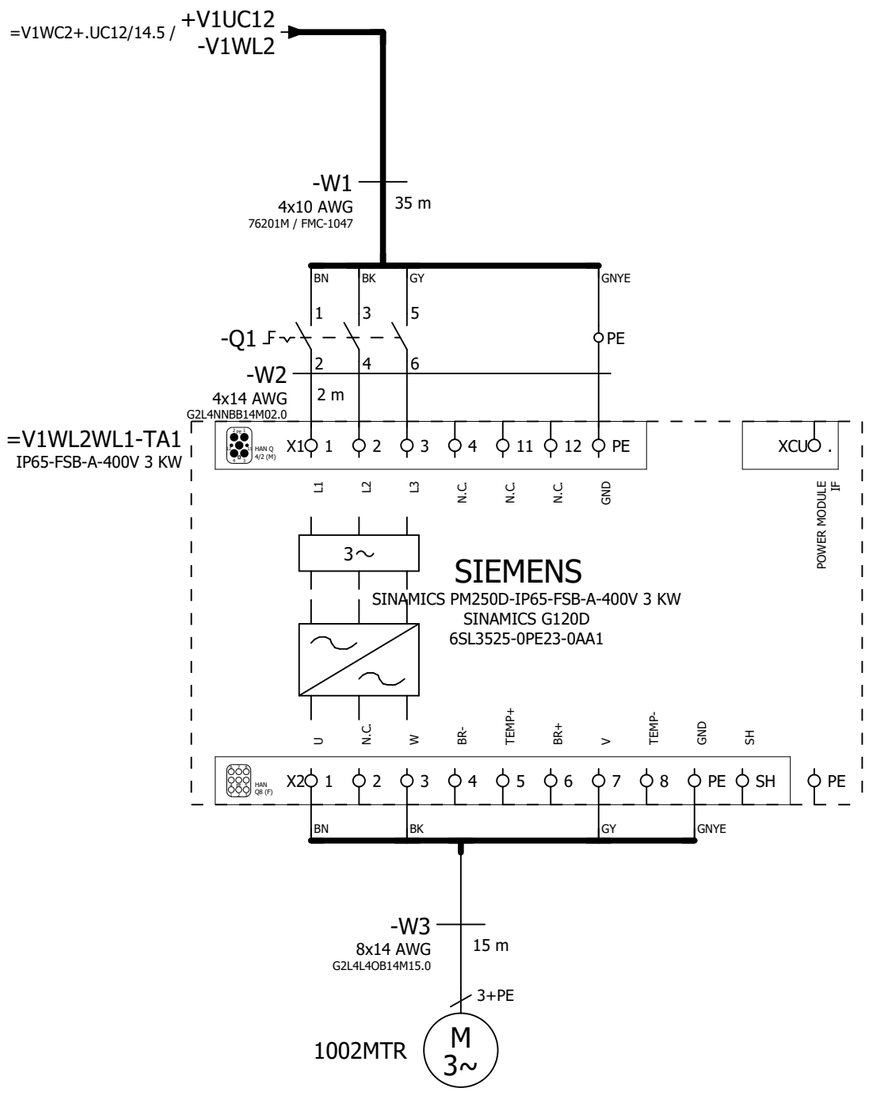

=V1WL2WL1KF1+.WL2KF1/10

=V1WL3GM1KF1+.WL3KF1/10

			Date	1/24/2023	Volvo Trucks North America	Valiant TMS	Incoming power	Drawing name: =2V01&EFS-EL_KF1	= V1WL2WL1WC1
			Ed.	MKLEPADLO					+ V1WL2UC01
			Appr		P6700 Framing - Cell 2V01, KF1			Document type: EFS	Project nr: 22-16152
Modification	Date	Name	Original		Replacement of	Replaced by	Scale 1:1		Page 1 / 1630

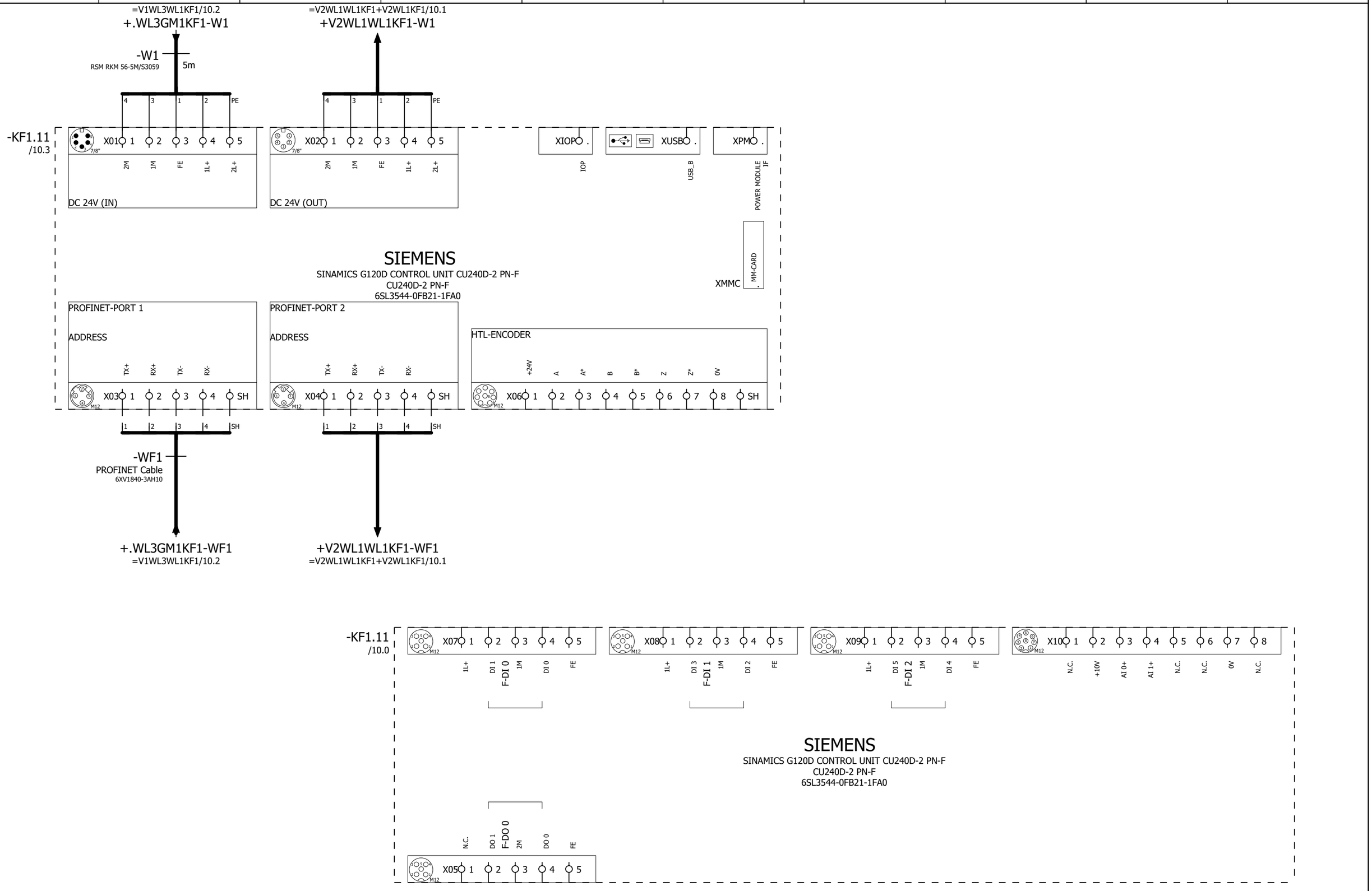

=V1WL2WL1WC1+.WL2UC01/1

=V1WL3GM1WC1+.WL3UC01/1

			Date	1/24/2023	Volvo Trucks North America	Valiant TMS	G120D Control Unit	Drawing name: =2V01&EFS-EL_KF1	= V1WL3GM1KF1 + V1WL3KF1
			Ed.	MKLEPADLO	P6700 Framing - Cell 2V01, KF1				
			Appr					Document type: EFS	Project nr: 22-16152
Modification	Date	Name	Original		Replacement of / Replaced by	Scale 1:1			Page 10 / 1630

0	1	2	3	4	5	6	7	8	9

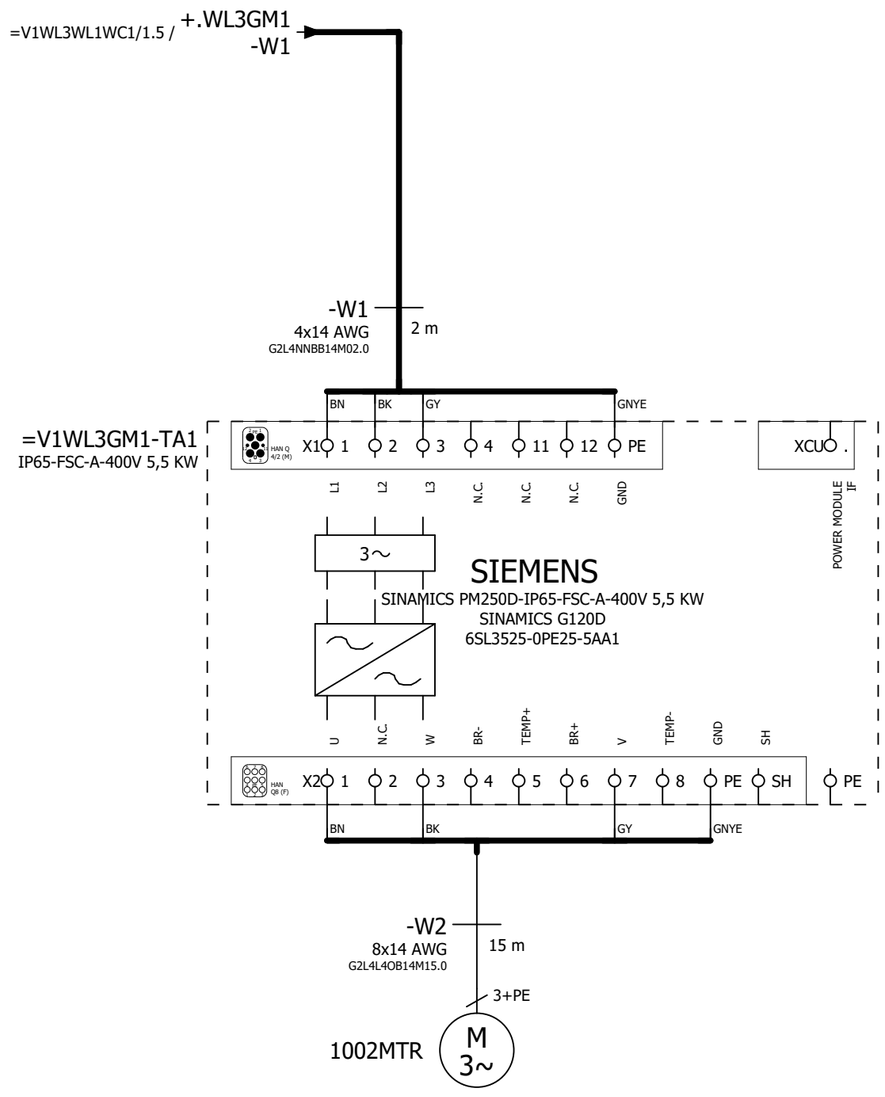

=V1WL3GM1KF1+.WL3KF1/10

=V1WL3WL1KF1+.WL3KF1/10

			Date	1/24/2023	Volvo Trucks North America		Valiant TMS	Incoming power	Drawing name: =2V01&EFS-EL_KF1	= V1WL3GM1WC1
			Ed.	MKLEPADLO						+ V1WL3UC01
			Appr		P6700 Framing - Cell 2V01, KF1				Document type: EFS	Project nr: 22-16152
Modification	Date	Name	Original		Replacement of	Replaced by	Scale 1:1			Page 1 / 1630

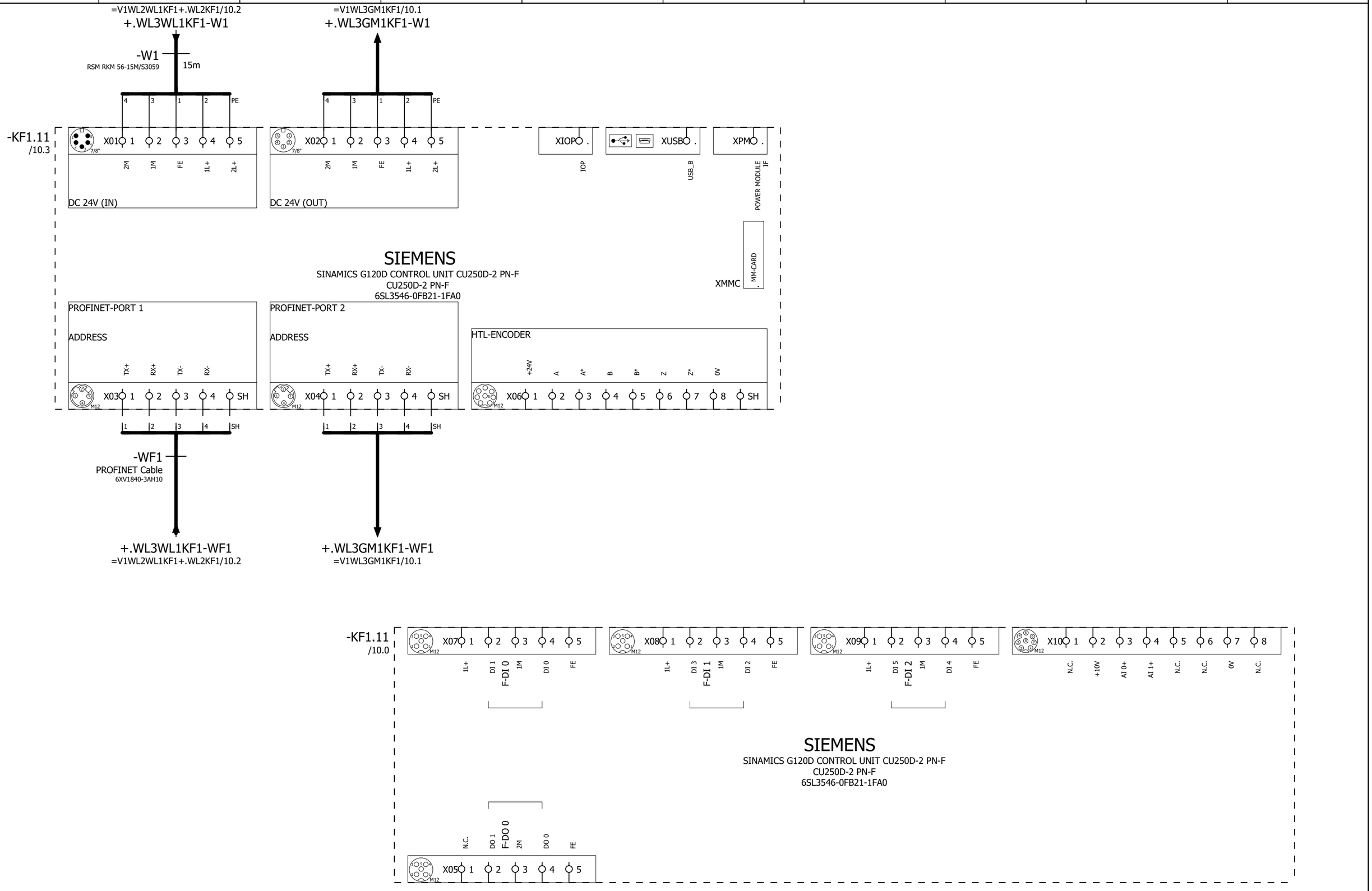

=V1WL3GM1WC1+.WL3UC01/1

=V1WL3WL1WC1+.WL3UC01/1

			Date	1/24/2023	Volvo Trucks North America	Valiant TMS	G120D Control Unit	Drawing name: =2V01&EFS-EL_KF1	= V1WL3WL1KF1 + V1WL3KF1
			Ed.	MKLEPADLO	P6700 Framing - Cell 2V01, KF1				
			Appr					Document type: EFS	Project nr: 22-16152
Modification	Date	Name	Original		Replacement of / Replaced by	Scale 1:1			Page 10 / 1630

0	1	2	3	4	5	6	7	8	9

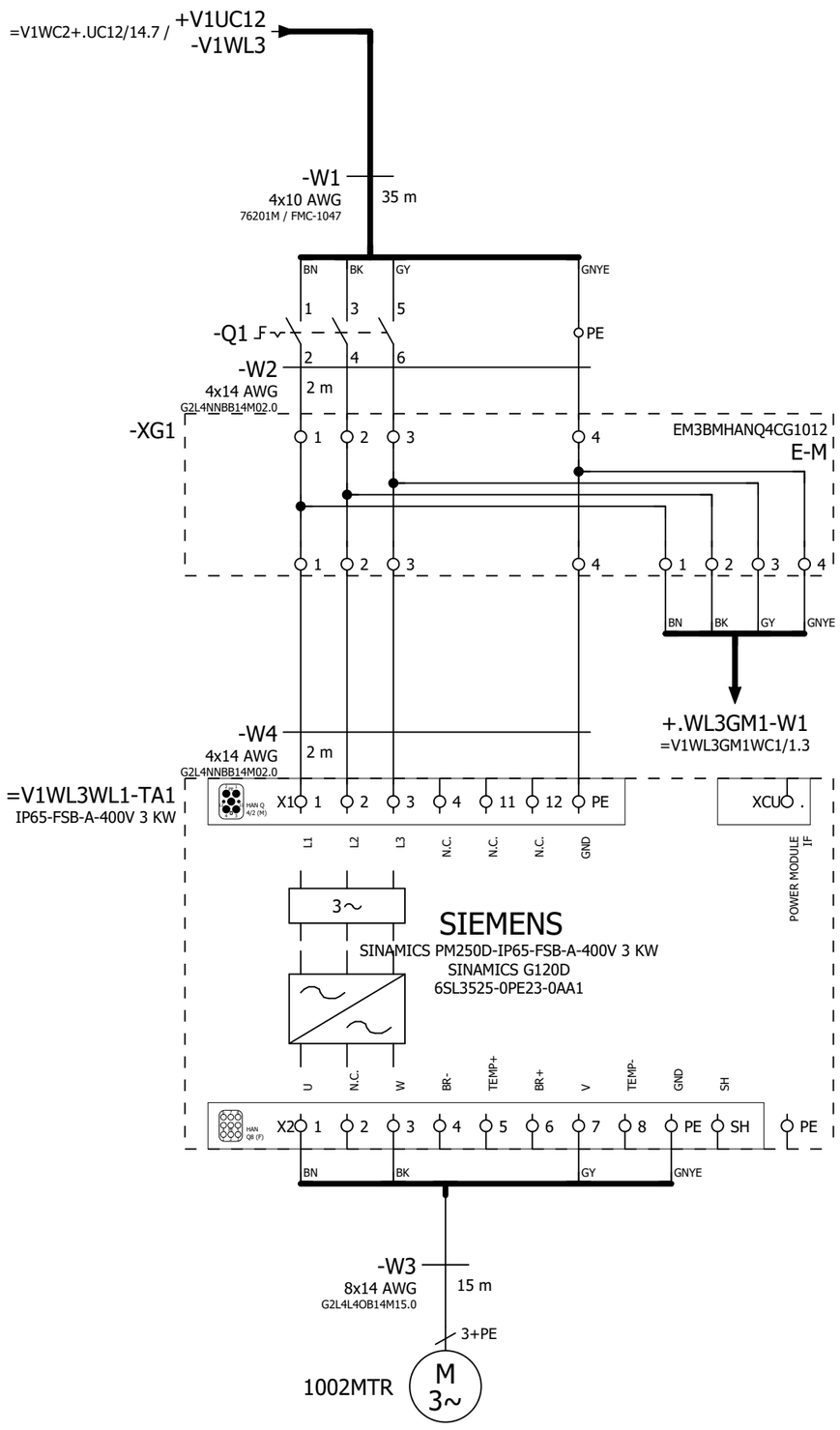

=V1WL3WL1KF1+.WL3KF1/10

=V2AR21KF1+V2AR21UC01/1

			Date	1/24/2023	Volvo Trucks North America		Valiant TMS	Incoming power	Drawing name: =2V01&EFS-EL_KF1	= V1WL3WL1WC1
			Ed.	MKLEPADLO						+ V1WL3UC01
			Appr		P6700 Framing - Cell 2V01, KF1				Document type: EFS	Project nr: 22-16152
Modification	Date	Name	Original		Replacement of	Replaced by	Scale 1:1			Page 1 / 1630

0	1	2	3	4	5	6	7	8	9

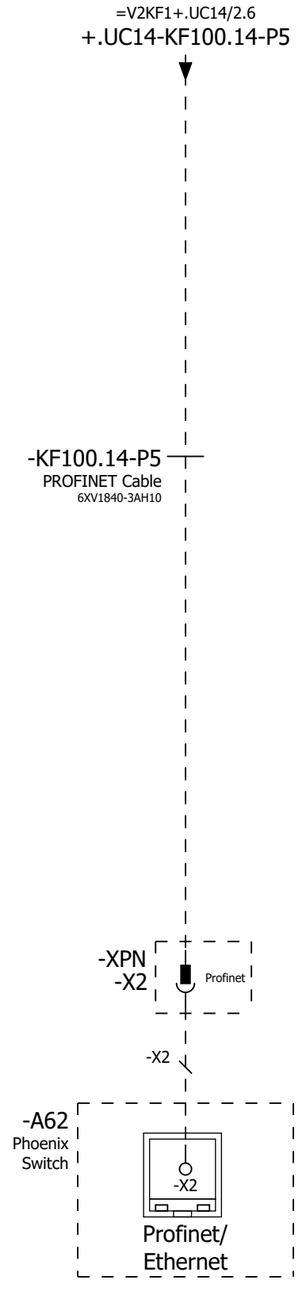

=V1WL3WL1WC1+V1WL3UC01/1

=V2AR21WC1/1

			Date	1/24/2023	Volvo Trucks North America	Valiant TMS	Incoming Profinet	Drawing name: =2V01&EFS-EL_KF1	= V2AR21KF1
			Ed.	MKLEPADLO					+ V2AR21UC01
			Appr		P6700 Framing - Cell 2V01, KF1			Document type: EFS	Project nr: 22-16152
Modification	Date	Name	Original		Replacement of / Replaced by	Scale 1:1			Page 1 / 1630

0	1	2	3	4	5	6	7	8	9

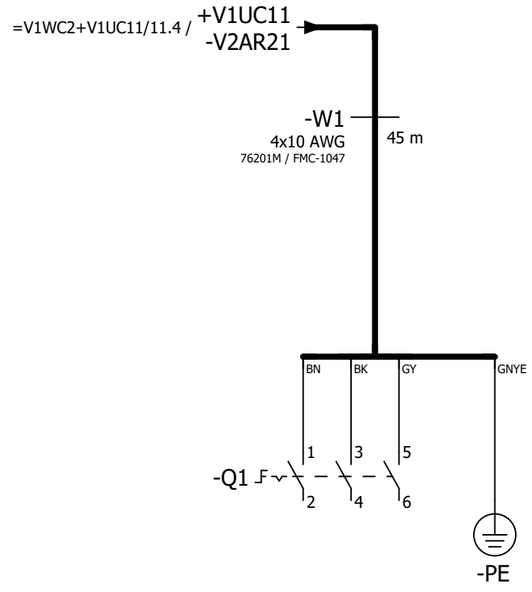

=V2AR21KF1/1

=V2AR21XQ11WC1+.AR21XQ11UC01/1

			Date	1/24/2023	Volvo Trucks North America	Valiant TMS	Incoming power	Drawing name: =2V01&EFS-EL_KF1	= V2AR21WC1
			Ed.	MKLEPADLO					+ V2AR21UC01
			Appr		P6700 Framing - Cell 2V01, KF1			Document type: EFS / Project nr: 22-16152	Page 1
Modification	Date	Name	Original		Replacement of / Replaced by	Scale 1:1			1630

0	1	2	3	4	5	6	7	8	9

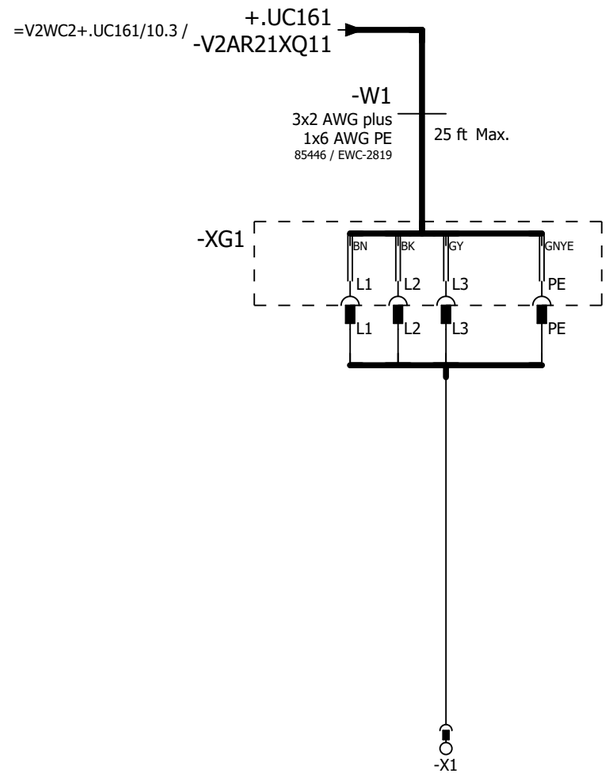

=V2AR21WC1+.AR21UC01/1

=V2AR22KF1+.AR22UC01/1

			Date	1/24/2023	Volvo Trucks North America		Valiant TMS	Incoming power	Drawing name: =2V01&EFS-EL_KF1	= V2AR21XQ11WC1	
			Ed.	MKLEPADLO						+ V2AR21XQ11UC01	
			Appr		P6700 Framing - Cell 2V01, KF1		Scale 1:1		Document type: EFS	Project nr: 22-16152	Page 1 / 1630
Modification	Date	Name	Original		Replacement of	Replaced by					

0	1	2	3	4	5	6	7	8	9

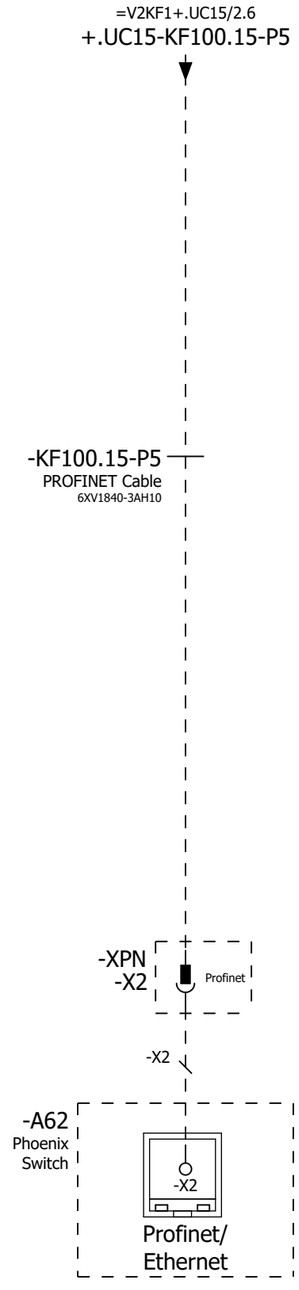

=V2AR21XQ11WC1+.AR21XQ11UC01/1

=V2AR22WC1/1

			Date	1/24/2023	Volvo Trucks North America	Valiant TMS	Incoming Profinet	Drawing name: =2V01&EFS-EL_KF1	= V2AR22KF1
			Ed.	MKLEPADLO					+ V2AR22UC01
			Appr		P6700 Framing - Cell 2V01, KF1			Document type: EFS	Project nr: 22-16152
Modification	Date	Name	Original		Replacement of / Replaced by	Scale 1:1			Page 1 / 1630

0	1	2	3	4	5	6	7	8	9

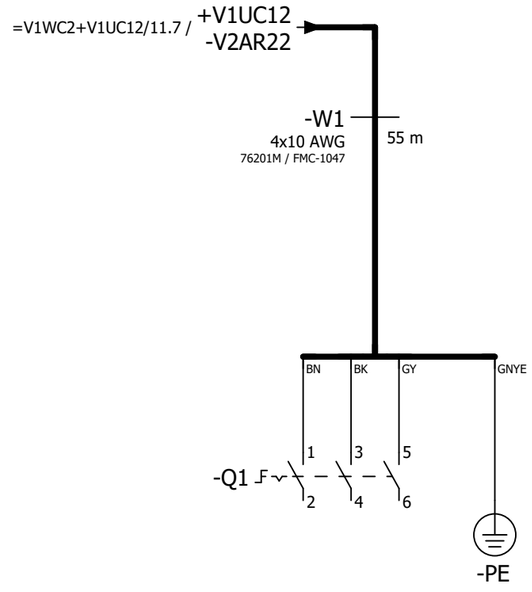

=V2AR22KF1/1

=V2AR22XQ11WC1+.AR22XQ11UC01/1

			Date	1/24/2023	Volvo Trucks North America		Valiant TMS	Incoming power	Drawing name: =2V01&EFS-EL_KF1	= V2AR22WC1
			Ed.	MKLEPADLO						+ V2AR22UC01
			Appr		P6700 Framing - Cell 2V01, KF1		Scale 1:1		Document type: EFS	Project nr: 22-16152
Modification	Date	Name	Original		Replacement of	Replaced by				Page 1 / 1630

0	1	2	3	4	5	6	7	8	9

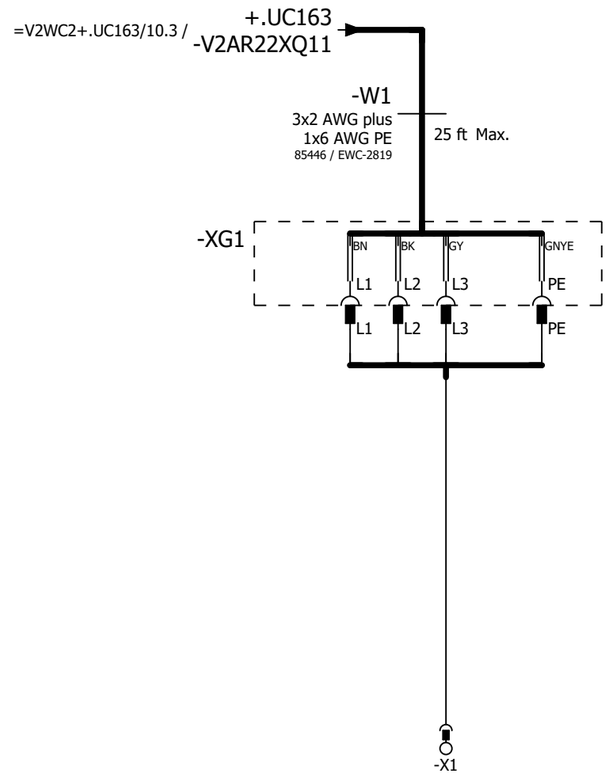

=V2AR22WC1+.AR22UC01/1

=V2AR23KF1+.AR23UC01/1

			Date	1/24/2023	Volvo Trucks North America	Valiant TMS	Incoming power	Drawing name: =2V01&EFS-EL_KF1	= V2AR22XQ11WC1	
			Ed.	MKLEPADLO					+ V2AR22XQ11UC01	
			Appr		P6700 Framing - Cell 2V01, KF1	Scale 1:1		Document type: EFS	Project nr: 22-16152	Page 1 / 1630
Modification	Date	Name	Original		Replacement of	Replaced by				

0	1	2	3	4	5	6	7	8	9

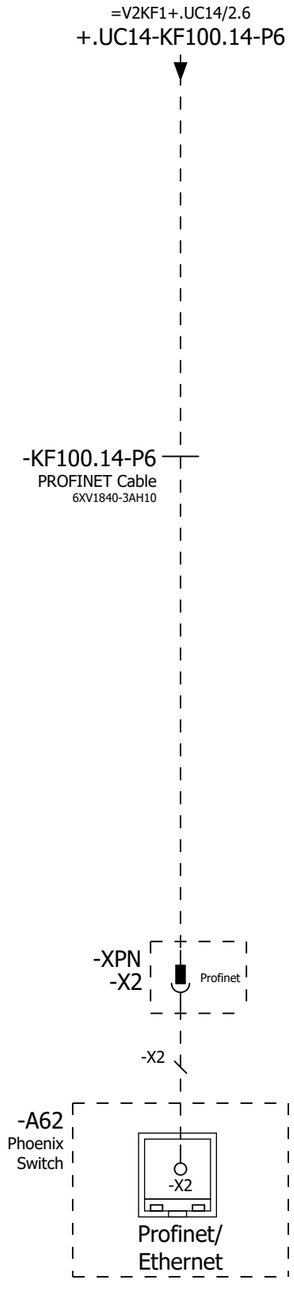

=V2AR22XQ11WC1+.AR22XQ11UC01/1

=V2AR23WC1/1

			Date	1/24/2023	Volvo Trucks North America	Valiant TMS	Incoming Profinet	Drawing name: =2V01&EFS-EL_KF1	= V2AR23KF1
			Ed.	MKLEPADLO					+ V2AR23UC01
			Appr		P6700 Framing - Cell 2V01, KF1	Scale 1:1		Document type: EFS	Project nr: 22-16152
Modification	Date	Name	Original		Replacement of	Replaced by			Page 1 / 1630

0	1	2	3	4	5	6	7	8	9

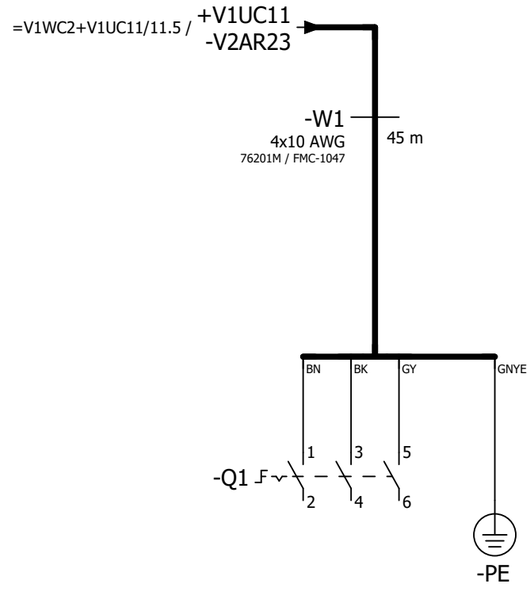

=V2AR23KF1/1

=V2AR23XQ11WC1+.AR23XQ11UC01/1

			Date	1/24/2023	Volvo Trucks North America	Valiant TMS	Incoming power	Drawing name: =2V01&EFS-EL_KF1	= V2AR23WC1
			Ed.	MKLEPADLO					+ V2AR23UC01
			Appr		P6700 Framing - Cell 2V01, KF1			Document type: EFS / Project nr: 22-16152	Page 1
Modification	Date	Name	Original		Replacement of / Replaced by	Scale 1:1			1630

0	1	2	3	4	5	6	7	8	9

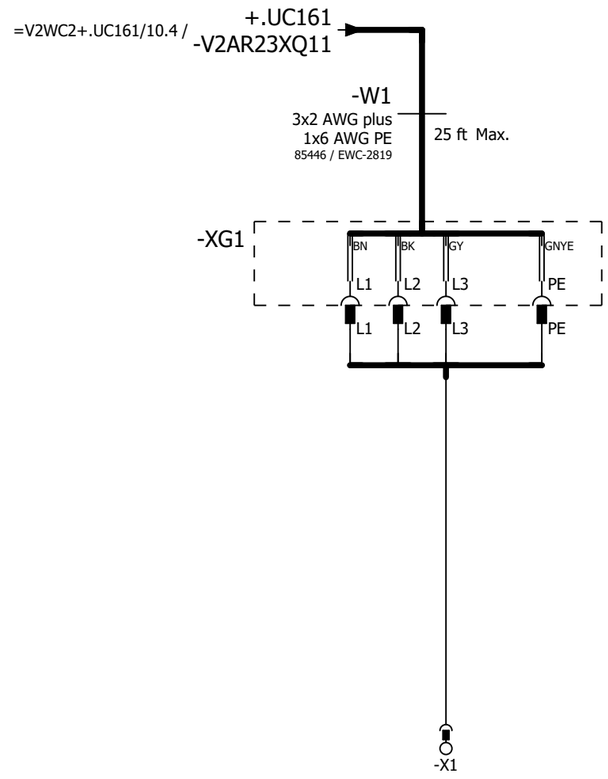

=V2AR23WC1+.AR23UC01/1

=V2AR24KF1+.AR24UC01/1

			Date	1/24/2023	Volvo Trucks North America		Valiant TMS	Incoming power	Drawing name: =2V01&EFS-EL_KF1	= V2AR23XQ11WC1	
			Ed.	MKLEPADLO						+ V2AR23XQ11UC01	
			Appr		P6700 Framing - Cell 2V01, KF1		Scale 1:1		Document type: EFS	Project nr: 22-16152	Page 1 / 1630
Modification	Date	Name	Original		Replacement of	Replaced by					

0	1	2	3	4	5	6	7	8	9

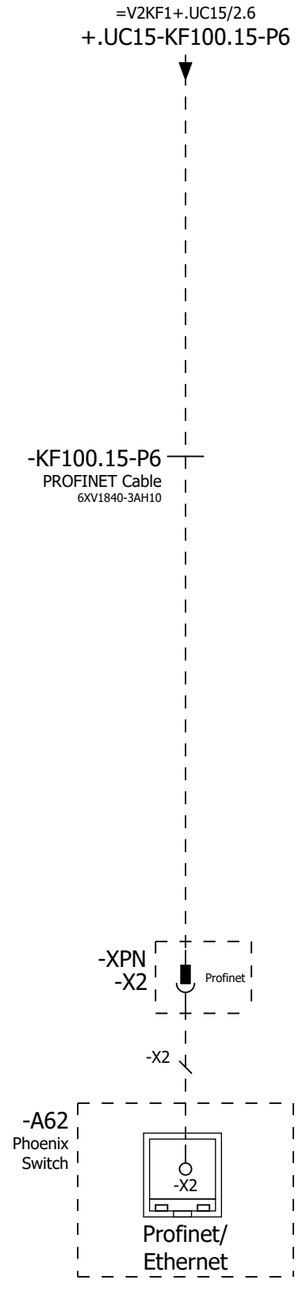

=V2AR23XQ11WC1+.AR23XQ11UC01/1

=V2AR24WC1/1

			Date	1/24/2023	Volvo Trucks North America	Valiant TMS	Incoming Profinet	Drawing name: =2V01&EFS-EL_KF1	= V2AR24KF1
			Ed.	MKLEPADLO					+ V2AR24UC01
			Appr		P6700 Framing - Cell 2V01, KF1	Scale 1:1		Document type: EFS	Project nr: 22-16152
Modification	Date	Name	Original		Replacement of	Replaced by			Page 1 / 1630

0	1	2	3	4	5	6	7	8	9

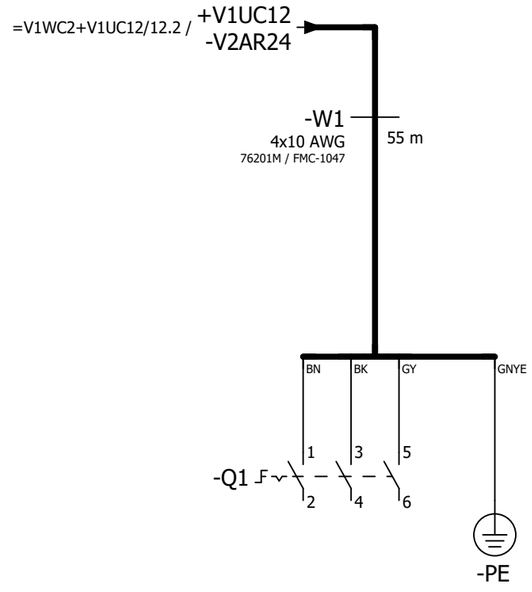

=V2AR24KF1/1

=V2AR24XQ11WC1+.AR24XQ11UC01/1

			Date	1/24/2023	Volvo Trucks North America		Valiant TMS	Incoming power	Drawing name: =2V01&EFS-EL_KF1	= V2AR24WC1
			Ed.	MKLEPADLO						+ V2AR24UC01
			Appr		P6700 Framing - Cell 2V01, KF1		Scale 1:1		Document type: EFS	Project nr: 22-16152
Modification	Date	Name	Original		Replacement of	Replaced by				Page 1 / 1630

0	1	2	3	4	5	6	7	8	9

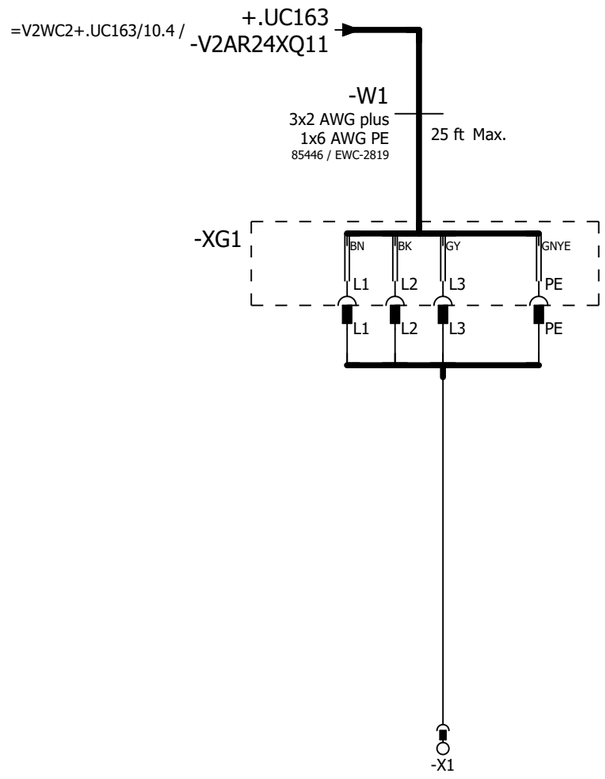

=V2AR24WC1+.AR24UC01/1

=V2AR31KF1+.AR31UC01/1

			Date	1/24/2023	Volvo Trucks North America		Valiant TMS	Incoming power	Drawing name: =2V01&EFS-EL_KF1	= V2AR24XQ11WC1
			Ed.	MKLEPADLO						+ V2AR24XQ11UC01
			Appr		P6700 Framing - Cell 2V01, KF1		Scale 1:1		Document type: EFS	Project nr: 22-16152
Modification	Date	Name	Original		Replacement of	Replaced by				Page 1 / 1630

0	1	2	3	4	5	6	7	8	9

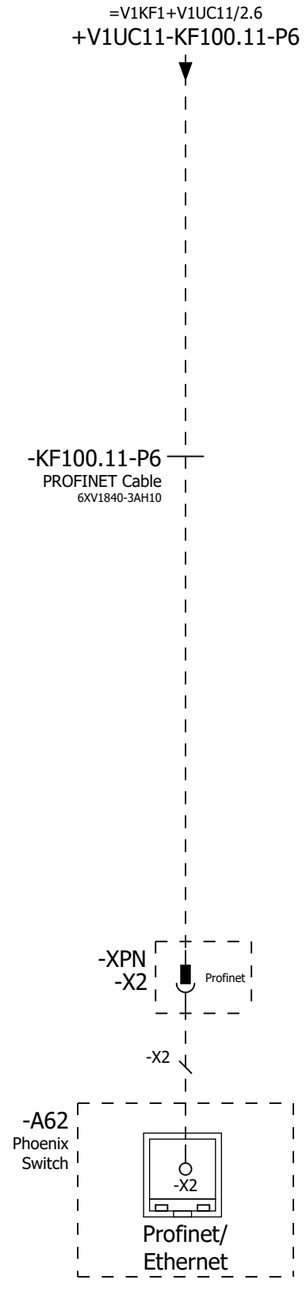

=V2AR24XQ11WC1+.AR24XQ11UC01/1

=V2AR31UQ41BG0+.AR31UQ41/1

			Date	1/24/2023	Volvo Trucks North America	Valiant TMS	Incoming Profinet	Drawing name: =2V01&EFS-EL_KF1	= V2AR31KF1
			Ed.	MKLEPADLO					+ V2AR31UC01
			Appr		P6700 Framing - Cell 2V01, KF1			Document type: EFS / Project nr: 22-16152	Page 1
Modification	Date	Name	Original		Replacement of / Replaced by	Scale 1:1			1630

0	1	2	3	4	5	6	7	8	9

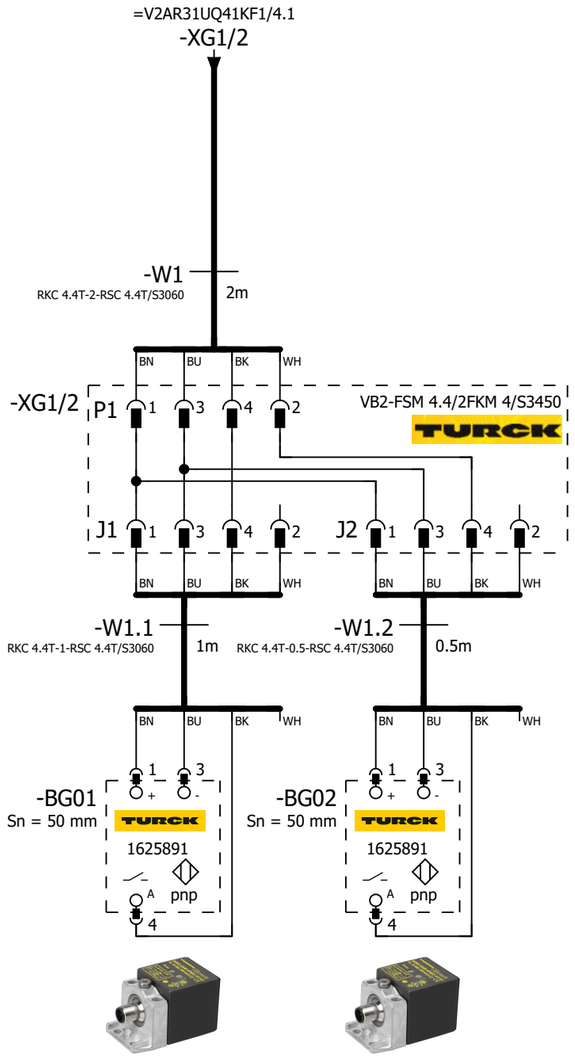

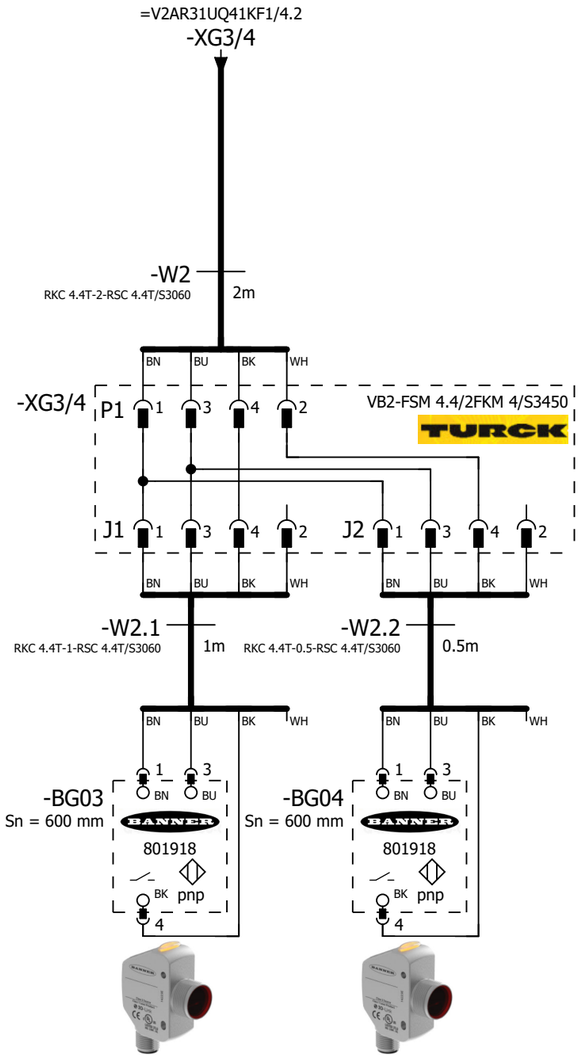

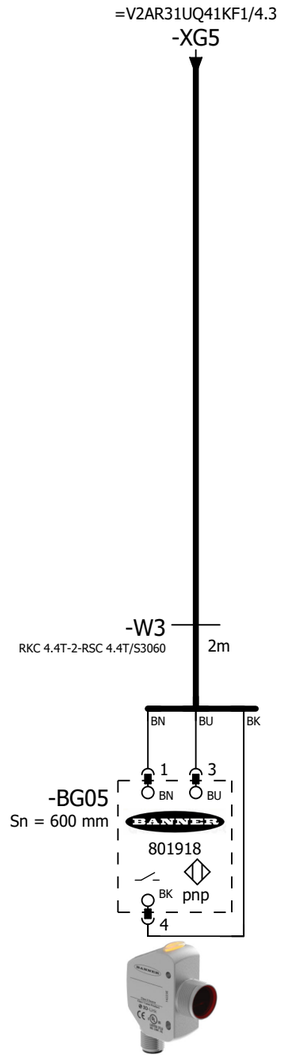

=V2AR31UQ41 -BG01 Common Part Present	=V2AR31UQ41 -BG02 Common Part Present	=V2AR31UQ41 -BG03 Common Position Control	=V2AR31UQ41 -BG04 Common Position Control	=V2AR31UQ41 -BG05 Common Position Control

=V2AR31KF1+.AR31UC01/1

=V2AR31UQ41KF1/1

			Date	1/24/2023	Volvo Trucks North America	Valiant TMS	SENSORS	Drawing name: =2V01&EFS-EL_KF1	= V2AR31UQ41BG0
			Ed.	MKLEPADLO					+ V2AR31UQ41
			Appr		P6700 Framing - Cell 2V01, KF1			Document type: EFS	Project nr: 22-16152
Modification	Date	Name	Original		Replacement of / Replaced by	Scale 1:1			Page 1 / 1630

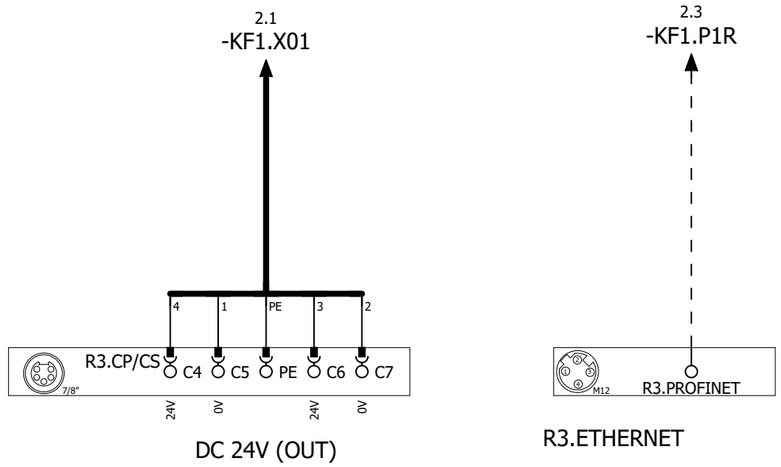

DC 24V (OUT)

R3.ETHERNET

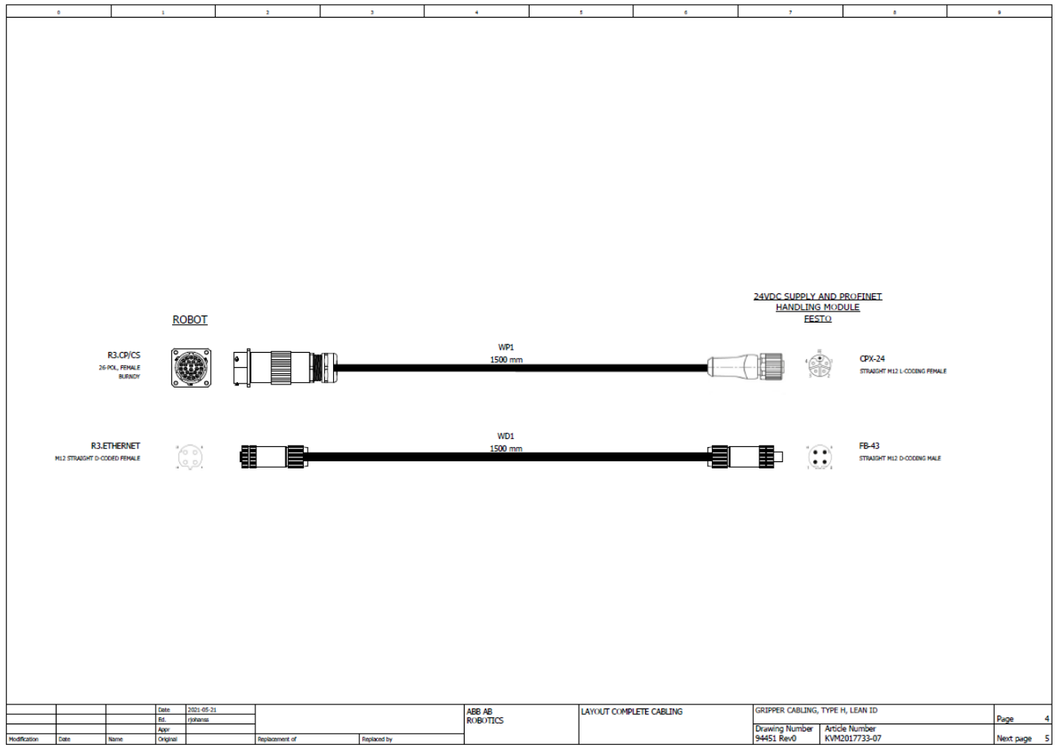

=V2AR31UQ41BG0/1

2

			Date	1/24/2023	Volvo Trucks North America	Valiant TMS	24VDC SUPPLY AND PROFINET HANDLING MODULE	Drawing name: =2V01&EFS-EL_KF1	= V2AR31UQ41KF1
			Ed.	MKLEPADLO					+ V2AR31UQ41
			Appr		P6700 Framing - Cell 2V01, KF1	Scale 1:1		Document type: EFS	Project nr: 22-16152
Modification	Date	Name	Original		Replacement of / Replaced by				Page 1 / 1630

0	1	2	3	4	5	6	7	8	9

1.3 / -KF1.X01

-W1
RSM RKM 56-2M/S3059
2m

1.5 / -KF1.P1R

-WF1
PROFINET Cable
6XV1840-3AH10

-KF1

X20 7/8" 1 2 3 4 5
1 2 PE 3 4
0V_VAL / OUT
0V_EL / SEN
FE
24V_EL / SEN
24V_VAL / OUT

ON
OFF
1 2 1 2

M12 -TP1
M12 -TP2

FESTO
Bus node + Interlinking block
548755 + 550208

DI:0	DI 0 X1:4	V2AR31UQ41UQ1.1-BGR	Common Shot Pin (RESET)
DI:1	DI 1 X1:2	V2AR31UQ41UQ1.1-BGS	Common Shot Pin (SET)
DI:2	DI 2 X2:4	V2AR31UQ41UQ2.1-BGR	Common Clamp (RESET)
DI:3	DI 3 X2:2	V2AR31UQ41UQ2.1-BGS	Common Clamp (SET)
DI:4	DI 4 X3:4	V2AR31UQ41UQ2.2-BGR	Common Clamp (RESET)
DI:5	DI 5 X3:2	V2AR31UQ41UQ2.2-BGS	Common Clamp (SET)
DI:6	DI 6 X4:4	V2AR31UQ41UQ2.3-BGR	Common Clamp (RESET)
DI:7	DI 7 X4:2	V2AR31UQ41UQ2.3-BGS	Common Clamp (SET)
DI:8	DI 8 X5:4	V2AR31UQ41UQ2.4-BGR	Common Clamp (RESET)
DI:9	DI 9 X5:2	V2AR31UQ41UQ2.4-BGS	Common Clamp (SET)
DI:10	DI 10 X6:4	V2AR31UQ41UQ3.1-BGR	L230 Model Clamp (RESET)
DI:11	DI 11 X6:2	V2AR31UQ41UQ3.1-BGS	L230 Model Clamp (SET)
DI:12	DI 12 X7:4	V2AR31UQ41UQ3.2-BGR	L230 Model Clamp (RESET)
DI:13	DI 13 X7:2	V2AR31UQ41UQ3.2-BGS	L230 Model Clamp (SET)
DI:14	DI 14 X8:4	V2AR31UQ41UQ3.3-BGR	L230 Model Clamp (RESET)
DI:15	DI 15 X8:2	V2AR31UQ41UQ3.3-BGS	L230 Model Clamp (SET)

-KF1.11

FESTO
CPX-M-AB-8-M12X2-5POL
549335

X1 24V DI 1 0V DI 0 FE
X2 24V DI 3 0V DI 2 FE
X3 24V DI 5 0V DI 4 FE
X4 24V DI 7 0V DI 6 FE
X5 24V DI 9 0V DI 8 FE
X6 24V DI 11 0V DI 10 FE
X7 24V DI 13 0V DI 12 FE
X8 24V DI 15 0V DI 14 FE
M12 1 2 3 4 5
BN WH BU BK

+.AR31UQ41UQ1.1-W1
=V2AR31UQ41UQ1+.AR31UQ41UQ1/1.1

+.AR31UQ41UQ2.1-W1
=V2AR31UQ41UQ2+.AR31UQ41UQ2/1.1

+.AR31UQ41UQ2.2-W1
=V2AR31UQ41UQ2+.AR31UQ41UQ2/1.2

+.AR31UQ41UQ2.3-W1
=V2AR31UQ41UQ2+.AR31UQ41UQ2/1.4

+.AR31UQ41UQ2.4-W1
=V2AR31UQ41UQ2+.AR31UQ41UQ2/1.5

+.AR31UQ41UQ3.1-W1
=V2AR31UQ41UQ3+.AR31UQ41UQ3/1.1

+.AR31UQ41UQ3.2-W1
=V2AR31UQ41UQ3+.AR31UQ41UQ3/1.2

+.AR31UQ41UQ3.3-W1
=V2AR31UQ41UQ3+.AR31UQ41UQ3/1.4

1 3

			Date	1/24/2023	Volvo Trucks North America	Valiant TMS	CONNECTING MOD. FOR MPA MANIFOLD	Drawing name: =2V01&EFS-EL_KF1	= V2AR31UQ41KF1
			Ed.	MKLEPADLO					+ V2AR31UQ41
			Appr		P6700 Framing - Cell 2V01, KF1	Scale 1:1		Document type: EFS	Project nr: 22-16152
Modification	Date	Name	Original		Replacement of / Replaced by				Page 2 / 1630

DI:16	V2AR31UQ41UQ4.1-BGR	L290 Model Shot Pin (RESET)
DI:17	V2AR31UQ41UQ4.1-BGS	L290 Model Shot Pin (SET)
DI:18	V2AR31UQ41UQ5.1-BGR	L290 Model Clamp (RESET)
DI:19	V2AR31UQ41UQ5.1-BGS	L290 Model Clamp (SET)
DI:20	V2AR31UQ41UQ5.2-BGR	L290 Model Clamp (RESET)
DI:21	V2AR31UQ41UQ5.2-BGS	L290 Model Clamp (SET)
DI:22	V2AR31UQ41UQ6.1-BGR	L320 Model Shot Pin (RESET)
DI:23	V2AR31UQ41UQ6.1-BGS	L320 Model Shot Pin (SET)
DI:24	V2AR31UQ41UQ7.1-BGR	L320 Model Clamp (RESET)
DI:25	V2AR31UQ41UQ7.1-BGS	L320 Model Clamp (SET)
DI:26	V2AR31UQ41UQ7.2-BGR	L320 Model Clamp (RESET)
DI:27	V2AR31UQ41UQ7.2-BGS	L320 Model Clamp (SET)
DI:28	DI:28	Spare
DI:29	DI:29	Spare
DI:30	DI:30	Spare
DI:31	DI:31	Spare

-KF1.12

FESTO
CPX-M-AB-8-M12X2-5POL
549335

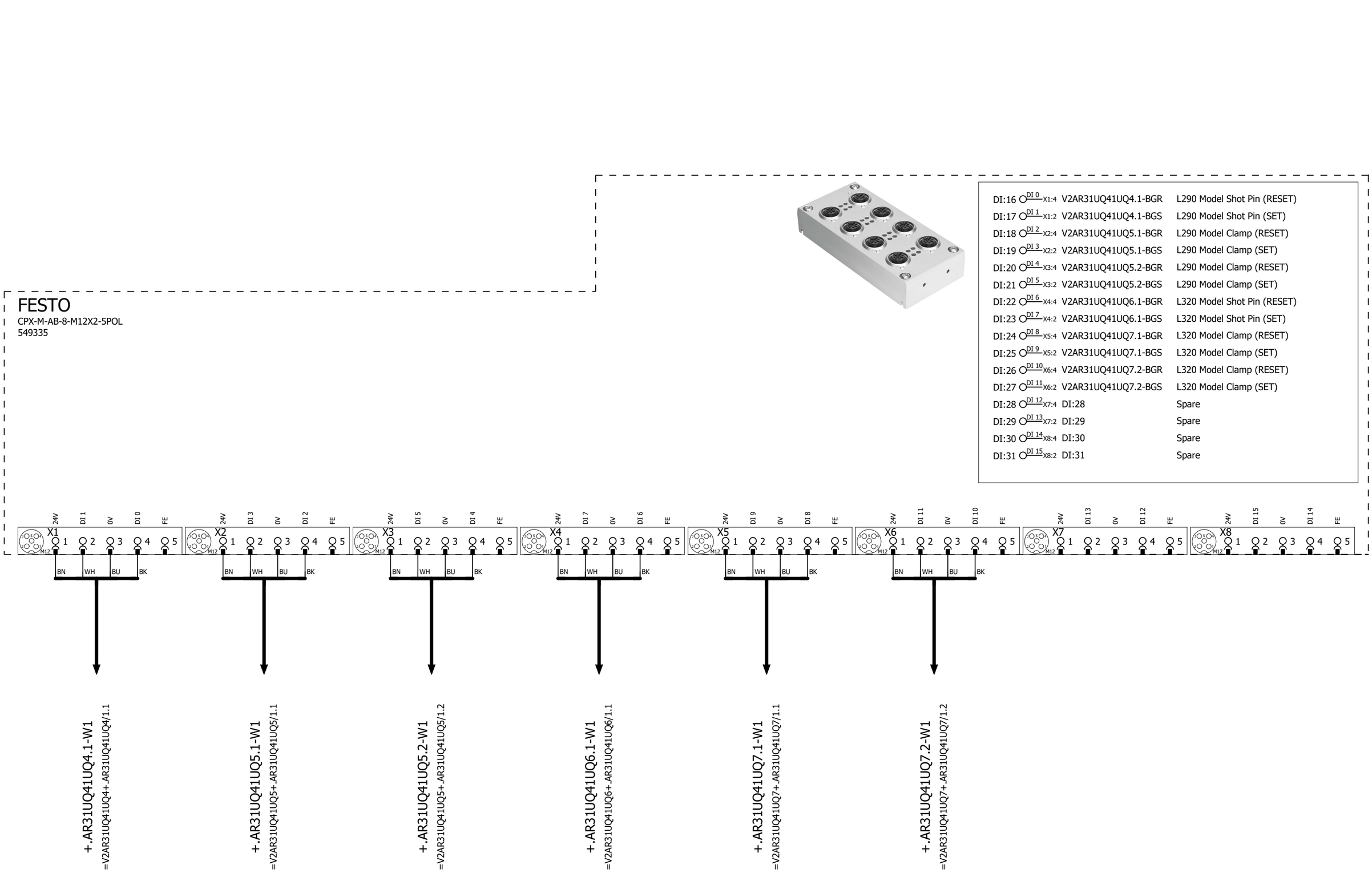

			Date	1/24/2023	Volvo Trucks North America		Valiant TMS	I/O MOD. DI16 (8 x M12) FOR MPA	Drawing name: =2V01&EFS-EL_KF1	= V2AR31UQ41KF1	
			Ed.	MKLEPADLO						+ V2AR31UQ41	
			Appr		P6700 Framing - Cell 2V01, KF1		Scale 1:1		Document type: EFS	Project nr: 22-16152	Page 3 / 1630
Modification	Date	Name	Original		Replacement of	Replaced by					

0	1	2	3	4	5	6	7	8	9

-KF1.13

FESTO
CPX-M-AB-8-M12X2-5POL
549335

DI:32	DI 0 X1:4	V2AR31UQ41-BG01	Common Part Present
DI:33	DI 1 X1:2	V2AR31UQ41-BG02	Common Part Present
DI:34	DI 2 X2:4	V2AR31UQ41-BG03	Common Position Control
DI:35	DI 3 X2:2	V2AR31UQ41-BG04	Common Position Control
DI:36	DI 4 X3:4	V2AR31UQ41-BG05	Common Position Control
DI:37	DI 5 X3:2	DI:37	Spare
DI:38	DI 6 X4:4	DI:38	Spare
DI:39	DI 7 X4:2	DI:39	Spare
DI:40	DI 8 X5:4	DI:40	Spare
DI:41	DI 9 X5:2	DI:41	Spare
DI:42	DI 10 X6:4	DI:42	Spare
DI:43	DI 11 X6:2	DI:43	Spare
DI:44	DI 12 X7:4	DI:44	Spare
DI:45	DI 13 X7:2	DI:45	Spare
DI:46	DI 14 X8:4	DI:46	Spare
DI:47	DI 15 X8:2	DI:47	Spare

-XG1/2
=V2AR31UQ41BG0/1.1

-XG3/4
=V2AR31UQ41BG0/1.4

-XG5
=V2AR31UQ41BG0/1.6

			Date	1/24/2023	Volvo Trucks North America		Valiant TMS	I/O MOD. DI16 (8 x M12) FOR MPA	Drawing name: =2V01&EFS-EL_KF1	= V2AR31UQ41KF1
			Ed.	MKLEPADLO						+ V2AR31UQ41
			Appr		P6700 Framing - Cell 2V01, KF1		Scale 1:1		Document type: EFS	Project nr: 22-16152
Modification	Date	Name	Original		Replacement of	Replaced by				Page 4 / 1630

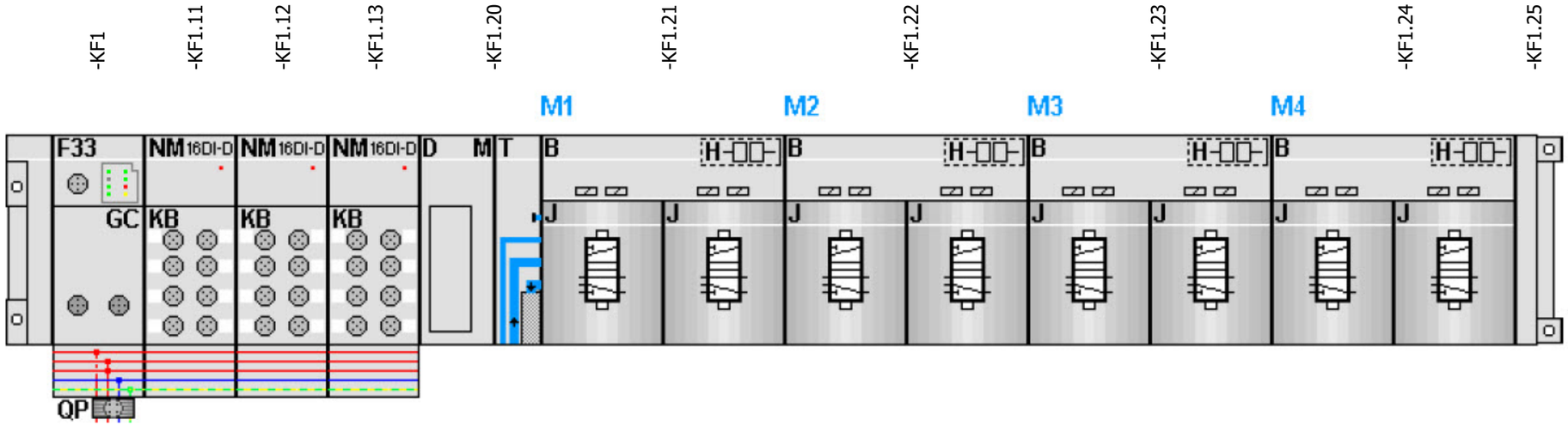

-KF1.21
=V2AR31UQ41UQ1+.AR31UQ41UQ1/1.3
=V2AR31UQ41UQ2+.AR31UQ41UQ2/1.3

FESTO

=V2AR31UQ41UQ1+.AR31UQ41UQ1/1.4	DO:0	DO 0 1.1	-QN1.1_Q	Common Shot Pin (RST)
=V2AR31UQ41UQ1+.AR31UQ41UQ1/1.4	DO:1	DO 1 1.2	-QN1.2_Q	Common Shot Pin (SET)
=V2AR31UQ41UQ2+.AR31UQ41UQ2/1.4	DO:2	DO 2 2.1	-QN2.1_Q	Common Clamps (RST)
=V2AR31UQ41UQ2+.AR31UQ41UQ2/1.4	DO:3	DO 3 2.2	-QN2.2_Q	Common Clamps (SET)

-KF1.22
=V2AR31UQ41UQ3+.AR31UQ41UQ3/1.3
=V2AR31UQ41UQ4+.AR31UQ41UQ4/1.3

FESTO

=V2AR31UQ41UQ3+.AR31UQ41UQ3/1.4	DO:4	DO 4 1.1	-QN3.1_Q	L230 Model Clamps (RST)
=V2AR31UQ41UQ3+.AR31UQ41UQ3/1.4	DO:5	DO 5 1.2	-QN3.2_Q	L230 Model Clamps (SET)
=V2AR31UQ41UQ4+.AR31UQ41UQ4/1.4	DO:6	DO 6 2.1	-QN4.1_Q	L290 Model Shot Pin (RST)
=V2AR31UQ41UQ4+.AR31UQ41UQ4/1.4	DO:7	DO 7 2.2	-QN4.2_Q	L290 Model Shot Pin (SET)

-KF1.23
=V2AR31UQ41UQ5+.AR31UQ41UQ5/1.3
=V2AR31UQ41UQ6+.AR31UQ41UQ6/1.3

FESTO

=V2AR31UQ41UQ5+.AR31UQ41UQ5/1.4	DO:8	DO 8 1.1	-QN5.1_Q	L290 Model Clamps (RST)
=V2AR31UQ41UQ5+.AR31UQ41UQ5/1.4	DO:9	DO 9 1.2	-QN5.2_Q	L290 Model Clamps (SET)
=V2AR31UQ41UQ6+.AR31UQ41UQ6/1.4	DO:10	DO 10 2.1	-QN6.1_Q	L320 Model Shot Pin (RST)
=V2AR31UQ41UQ6+.AR31UQ41UQ6/1.4	DO:11	DO 11 2.2	-QN6.2_Q	L320 Model Shot Pin (SET)

-KF1.24
=V2AR31UQ41UQ7+.AR31UQ41UQ7/1.3
=V2AR31UQ41UQ8+.AR31UQ41UQ8/1.3

FESTO

=V2AR31UQ41UQ7+.AR31UQ41UQ7/1.4	DO:12	DO 12 1.1	-QN7.1_Q	L320 Model Clamps (RST)
=V2AR31UQ41UQ7+.AR31UQ41UQ7/1.4	DO:13	DO 13 1.2	-QN7.2_Q	L320 Model Clamps (SET)
=V2AR31UQ41UQ8+.AR31UQ41UQ8/1.4	DO:14	DO 14 2.1	-QN8.1_Q	Spare (RST)
=V2AR31UQ41UQ8+.AR31UQ41UQ8/1.4	DO:15	DO 15 2.2	-QN8.2_Q	Spare (SET)

=V2AR31UQ41UQ1+.AR31UQ41UQ1/1

			Date	1/24/2023	Volvo Trucks North America	Valiant TMS	CONNECTING MOD. FOR FESTO DQ	Drawing name: =2V01&EFS-EL_KF1	= V2AR31UQ41KF1
			Ed.	MKLEPADLO					+ V2AR31UQ41
			Appr		P6700 Framing - Cell 2V01, KF1			Document type: EFS	Project nr: 22-16152
Modification	Date	Name	Original		Replacement of / Replaced by	Scale 1:1			Page 5 / 1630

0	1	2	3	4	5	6	7	8	9

=V2AR31UQ41KF1
+.AR31UQ41

-KF1.21
=V2AR31UQ41KF1+V2AR31UQ41/5.1

Common Shot Pin (RST)
=V2AR31UQ41KF1
+V2AR31UQ41
-QN1.1_Q
=V2AR31UQ41KF1
+V2AR31UQ41/5.3
DO:0

Common Shot Pin (SET)
=V2AR31UQ41KF1
+V2AR31UQ41
-QN1.2_Q
=V2AR31UQ41KF1
+V2AR31UQ41/5.3
DO:1

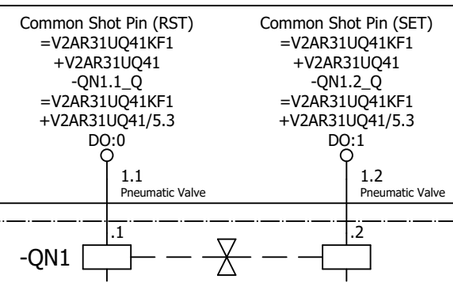

=V2AR31UQ41KF1+V2AR31UQ41/2.1
+.AR31UQ41UQ1.1-W1

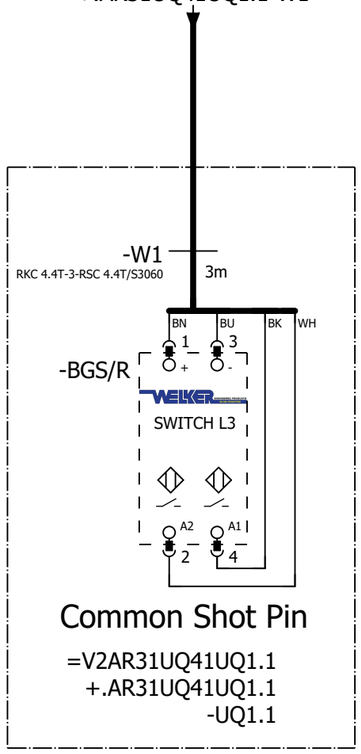

Common Shot Pin

=V2AR31UQ41UQ1.1
+.AR31UQ41UQ1.1
-UQ1.1

=V2AR31UQ41
-UQ1.1-BGS/R
Common
Shot Pin

=V2AR31UQ41KF1+V2AR31UQ41/5

=V2AR31UQ41UQ2+.AR31UQ41UQ2/1

			Date	1/24/2023	Volvo Trucks North America		Valiant TMS	FESTO DQ CONNECTION QN1	Drawing name: =2V01&EFS-EL_KF1	= V2AR31UQ41UQ1
			Ed.	MKLEPADLO						+ V2AR31UQ41UQ1
			Appr		P6700 Framing - Cell 2V01, KF1		Scale 1:1		Document type: EFS	Project nr: 22-16152
Modification	Date	Name	Original		Replacement of	Replaced by				Page 1 / 1630

0	1	2	3	4	5	6	7	8	9

=V2AR31UQ41KF1
+.AR31UQ41

-KF1.21
=V2AR31UQ41KF1+V2AR31UQ41/5.1

Common Clamps (RST)
=V2AR31UQ41KF1
+V2AR31UQ41
-QN2.1_Q
=V2AR31UQ41KF1
+V2AR31UQ41/5.3
DO:2

Common Clamps (SET)
=V2AR31UQ41KF1
+V2AR31UQ41
-QN2.2_Q
=V2AR31UQ41KF1
+V2AR31UQ41/5.3
DO:3

2.1 Pneumatic Valve
2.2 Pneumatic Valve

-QN2 .1 .2

=V2AR31UQ41KF1+V2AR31UQ41/2.2
+.AR31UQ41UQ2.1-W1

=V2AR31UQ41KF1+V2AR31UQ41/2.3
+.AR31UQ41UQ2.2-W1

=V2AR31UQ41KF1+V2AR31UQ41/2.4
+.AR31UQ41UQ2.3-W1

=V2AR31UQ41KF1+V2AR31UQ41/2.5
+.AR31UQ41UQ2.4-W1

-W1 RKC 4.4T-3-RSC 4.4T/S3060 3m
-W1 RKC 4.4T-2-RSC 4.4T/S3060 2m
-W1 RKC 4.4T-1-RSC 4.4T/S3060 1m
-W1 RKC 4.4T-2-RSC 4.4T/S3060 2m

-BGS/R
BN BU BK WH
1 3
TÜNKERS
1324638
A2 A1
2 4

Common Clamp
=V2AR31UQ41UQ2.1
+.AR31UQ41UQ2.1
-UQ2.1

Common Clamp
=V2AR31UQ41UQ2.2
+.AR31UQ41UQ2.2
-UQ2.2

Common Clamp
=V2AR31UQ41UQ2.3
+.AR31UQ41UQ2.3
-UQ2.3

Common Clamp
=V2AR31UQ41UQ2.4
+.AR31UQ41UQ2.4
-UQ2.4

=V2AR31UQ41
-UQ2.1-BGS/R
Common
Clamp

=V2AR31UQ41
-UQ2.2-BGS/R
Common
Clamp

=V2AR31UQ41
-UQ2.3-BGS/R
Common
Clamp

=V2AR31UQ41
-UQ2.4-BGS/R
Common
Clamp

=V2AR31UQ41UQ1+.AR31UQ41UQ1/1

=V2AR31UQ41UQ3+.AR31UQ41UQ3/1

			Date	1/24/2023	Volvo Trucks North America	Valiant TMS	FESTO DQ CONNECTION QN2	Drawing name: =2V01&EFS-EL_KF1
			Ed.	MKLEPADLO				= V2AR31UQ41UQ2
			Appr		P6700 Framing - Cell 2V01, KF1			+ V2AR31UQ41UQ2
Modification	Date	Name	Original		Replacement of / Replaced by	Scale 1:1		Document type: EFS / Project nr: 22-16152 / Page 1 / 1630

0	1	2	3	4	5	6	7	8	9

=V2AR31UQ41KF1
+.AR31UQ41

-KF1.22
=V2AR31UQ41KF1+V2AR31UQ41/5.1

L230 Model Clamps (RST)
=V2AR31UQ41KF1
+V2AR31UQ41
-QN3.1_Q
=V2AR31UQ41KF1
+V2AR31UQ41/5.3
DO:4

L230 Model Clamps (SET)
=V2AR31UQ41KF1
+V2AR31UQ41
-QN3.2_Q
=V2AR31UQ41KF1
+V2AR31UQ41/5.3
DO:5

1.1 Pneumatic Valve
1.2 Pneumatic Valve

-QN3 .1 .2

=V2AR31UQ41KF1+V2AR31UQ41/2.6
+.AR31UQ41UQ3.1-W1

=V2AR31UQ41KF1+V2AR31UQ41/2.8
+.AR31UQ41UQ3.2-W1

=V2AR31UQ41KF1+V2AR31UQ41/2.9
+.AR31UQ41UQ3.3-W1

-W1 2m
RKC 4.4T-2-RSC 4.4T/S3060

BN BU BK WH
1 3
+ -
TÜNKERS
1324638
A2 A1
2 4

-BGS/R

L230 Model Clamp
=V2AR31UQ41UQ3.1
+.AR31UQ41UQ3.1
-UQ3.1

L230 Model Clamp
=V2AR31UQ41UQ3.2
+.AR31UQ41UQ3.2
-UQ3.2

L230 Model Clamp
=V2AR31UQ41UQ3.3
+.AR31UQ41UQ3.3
-UQ3.3

=V2AR31UQ41
-UQ3.1-BGS/R
L230 Model
Clamp

=V2AR31UQ41
-UQ3.2-BGS/R
L230 Model
Clamp

=V2AR31UQ41
-UQ3.3-BGS/R
L230 Model
Clamp

=V2AR31UQ41UQ2+.AR31UQ41UQ2/1

=V2AR31UQ41UQ4+.AR31UQ41UQ4/1

			Date	1/24/2023	Volvo Trucks North America		Valiant TMS	FESTO DQ CONNECTION QN3	Drawing name: =2V01&EFS-EL_KF1	= V2AR31UQ41UQ3
			Ed.	MKLEPADLO						+ V2AR31UQ41UQ3
			Appr		P6700 Framing - Cell 2V01, KF1				Document type: EFS	Project nr: 22-16152
Modification	Date	Name	Original		Replacement of	Replaced by	Scale 1:1			Page 1 / 1630

0	1	2	3	4	5	6	7	8	9

=V2AR31UQ41KF1
+.AR31UQ41

-KF1.22
=V2AR31UQ41KF1+V2AR31UQ41/5.1

L290 Model Shot Pin (RST)
=V2AR31UQ41KF1
+V2AR31UQ41
-QN4.1_Q
=V2AR31UQ41KF1
+V2AR31UQ41/5.3
DO:6

L290 Model Shot Pin (SET)
=V2AR31UQ41KF1
+V2AR31UQ41
-QN4.2_Q
=V2AR31UQ41KF1
+V2AR31UQ41/5.3
DO:7

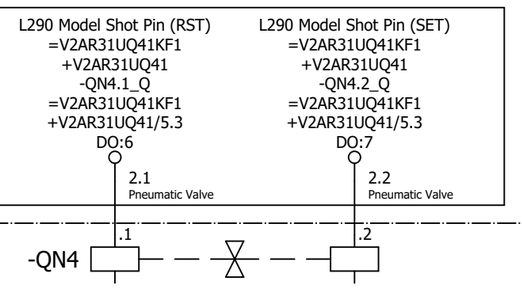

=V2AR31UQ41KF1+V2AR31UQ41/3.1
+.AR31UQ41UQ4.1-W1

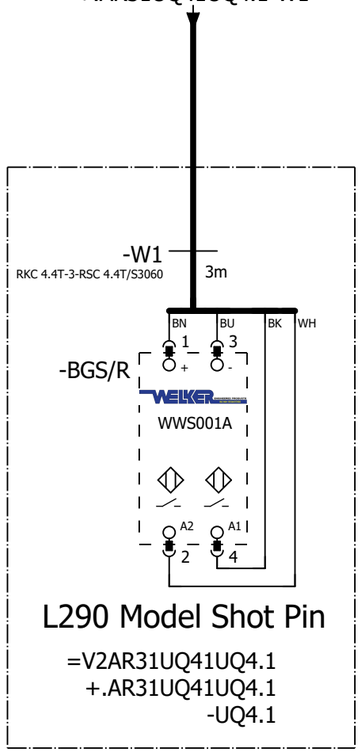

L290 Model Shot Pin

=V2AR31UQ41UQ4.1
+.AR31UQ41UQ4.1
-UQ4.1

=V2AR31UQ41
-UQ4.1-BGS/R
L290 Model
Shot Pin

=V2AR31UQ41UQ3+.AR31UQ41UQ3/1

=V2AR31UQ41UQ5+.AR31UQ41UQ5/1

			Date	1/24/2023	Volvo Trucks North America		Valiant TMS	FESTO DQ CONNECTION QN4	Drawing name: =2V01&EFS-EL_KF1	= V2AR31UQ41UQ4
			Ed.	MKLEPADLO						+ V2AR31UQ41UQ4
			Appr		P6700 Framing - Cell 2V01, KF1				Document type: EFS	Project nr: 22-16152
Modification	Date	Name	Original		Replacement of	Replaced by	Scale 1:1			Page 1 / 1630

0	1	2	3	4	5	6	7	8	9

=V2AR31UQ41KF1
+.AR31UQ41

-KF1.23
=V2AR31UQ41KF1+V2AR31UQ41/5.1

L290 Model Clamps (RST)
=V2AR31UQ41KF1
+V2AR31UQ41
-QN5.1_Q
=V2AR31UQ41KF1
+V2AR31UQ41/5.3
DO:8

L290 Model Clamps (SET)
=V2AR31UQ41KF1
+V2AR31UQ41
-QN5.2_Q
=V2AR31UQ41KF1
+V2AR31UQ41/5.3
DO:9

1.1 Pneumatic Valve

1.2 Pneumatic Valve

-QN5 .1 .2

=V2AR31UQ41KF1+V2AR31UQ41/3.2
+.AR31UQ41UQ5.1-W1

-W1 3m
RKC 4.4T-3-RSC 4.4T/S3060

BN BU BK WH
1 3
-BGS/R
TÜNKERS
1324638
A2 A1
2 4

L290 Model Clamp
=V2AR31UQ41UQ5.1
+.AR31UQ41UQ5.1
-UQ5.1

=V2AR31UQ41
-UQ5.1-BGS/R
L290 Model
Clamp

=V2AR31UQ41KF1+V2AR31UQ41/3.3
+.AR31UQ41UQ5.2-W1

-W1 2m
RKC 4.4T-2-RSC 4.4T/S3060

BN BU BK WH
1 3
-BGS/R
TÜNKERS
1324638
A2 A1
2 4

L290 Model Clamp
=V2AR31UQ41UQ5.2
+.AR31UQ41UQ5.2
-UQ5.2

=V2AR31UQ41
-UQ5.2-BGS/R
L290 Model
Clamp

=V2AR31UQ41UQ4+.AR31UQ41UQ4/1

=V2AR31UQ41UQ6+.AR31UQ41UQ6/1

			Date	1/24/2023	Volvo Trucks North America	Valiant TMS	FESTO DQ CONNECTION QN5	Drawing name: =2V01&EFS-EL_KF1	= V2AR31UQ41UQ5
			Ed.	MKLEPADLO					+ V2AR31UQ41UQ5
			Appr		P6700 Framing - Cell 2V01, KF1			Document type: EFS	Project nr: 22-16152
Modification	Date	Name	Original		Replacement of / Replaced by	Scale 1:1			Page 1 / 1630

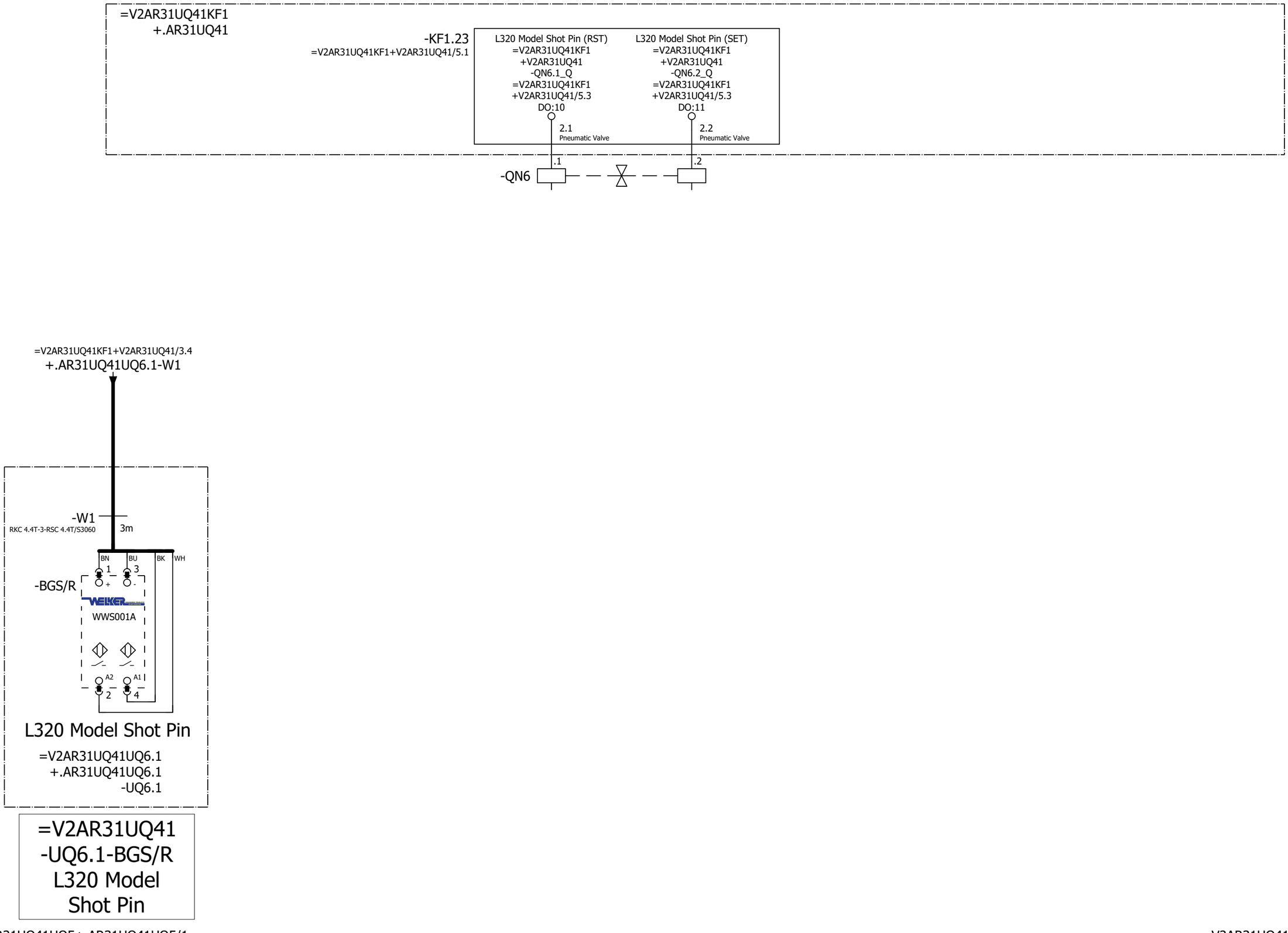

=V2AR31UQ41UQ5+.AR31UQ41UQ5/1

=V2AR31UQ41UQ7+.AR31UQ41UQ7/1

			Date	1/24/2023	Volvo Trucks North America	Valiant TMS	FESTO DQ CONNECTION QN6	Drawing name: =2V01&EFS-EL_KF1	= V2AR31UQ41UQ6
			Ed.	MKLEPADLO					+ V2AR31UQ41UQ6
			Appr		P6700 Framing - Cell 2V01, KF1			Document type: EFS	Project nr: 22-16152
Modification	Date	Name	Original		Replacement of / Replaced by	Scale 1:1			Page 1 / 1630

0	1	2	3	4	5	6	7	8	9

=V2AR31UQ41KF1
+.AR31UQ41

-KF1.24
=V2AR31UQ41KF1+V2AR31UQ41/5.1

L320 Model Clamps (RST)	L320 Model Clamps (SET)
=V2AR31UQ41KF1	=V2AR31UQ41KF1
+V2AR31UQ41	+V2AR31UQ41
-QN7.1_Q	-QN7.2_Q
=V2AR31UQ41KF1	=V2AR31UQ41KF1
+V2AR31UQ41/5.3	+V2AR31UQ41/5.3
DO:12	DO:13
1.1 Pneumatic Valve	1.2 Pneumatic Valve

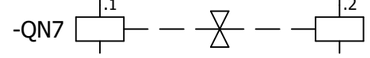

=V2AR31UQ41KF1+V2AR31UQ41/3.5
+.AR31UQ41UQ7.1-W1

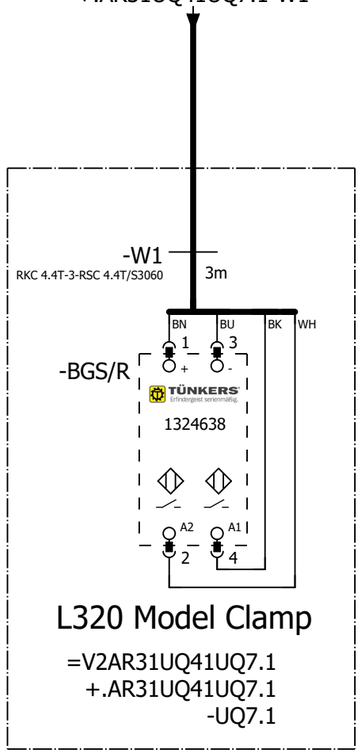

L320 Model Clamp

=V2AR31UQ41UQ7.1
+.AR31UQ41UQ7.1
-UQ7.1

=V2AR31UQ41KF1+V2AR31UQ41/3.6
+.AR31UQ41UQ7.2-W1

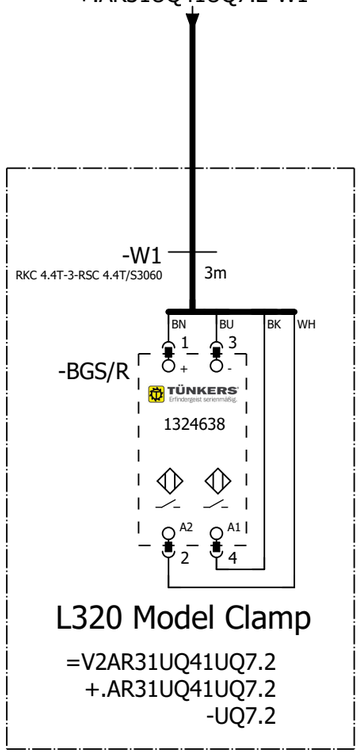

L320 Model Clamp

=V2AR31UQ41UQ7.2
+.AR31UQ41UQ7.2
-UQ7.2

=V2AR31UQ41
-UQ7.1-BGS/R
L320 Model
Clamp

=V2AR31UQ41
-UQ7.2-BGS/R
L320 Model
Clamp

=V2AR31UQ41UQ6+.AR31UQ41UQ6/1

=V2AR31UQ41UQ8+.AR31UQ41UQ8/1

			Date	1/24/2023	Volvo Trucks North America		Valiant TMS	FESTO DQ CONNECTION QN7	Drawing name: =2V01&EFS-EL_KF1	= V2AR31UQ41UQ7
			Ed.	MKLEPADLO						+ V2AR31UQ41UQ7
			Appr		P6700 Framing - Cell 2V01, KF1				Document type: EFS	Project nr: 22-16152
Modification	Date	Name	Original		Replacement of	Replaced by	Scale 1:1			Page 1 / 1630

0	1	2	3	4	5	6	7	8	9

=V2AR31UQ41KF1
+.AR31UQ41

-KF1.24
=V2AR31UQ41KF1+V2AR31UQ41/5.1

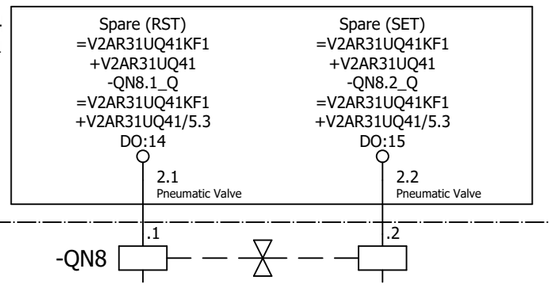

=V2AR31UQ41UQ7+.AR31UQ41UQ7/1

=V2AR31UQ42BG0+.AR31UQ42/1

			Date	1/24/2023	Volvo Trucks North America	Valiant TMS	FESTO DQ CONNECTION QN8	Drawing name: =2V01&EFS-EL_KF1	= V2AR31UQ41UQ8
			Ed.	MKLEPADLO					+ V2AR31UQ41UQ8
			Appr		P6700 Framing - Cell 2V01, KF1	Scale 1:1		Document type: EFS / Project nr: 22-16152	Page 1 / 1630
Modification	Date	Name	Original		Replacement of / Replaced by				

0	1	2	3	4	5	6	7	8	9

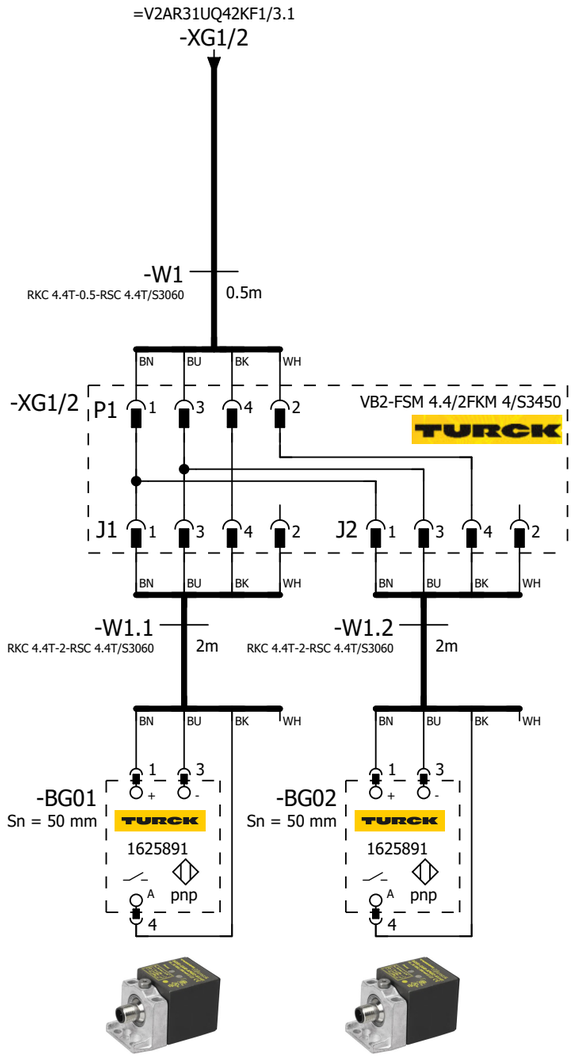

=V2AR31UQ42
-BG01
Common
Part Present

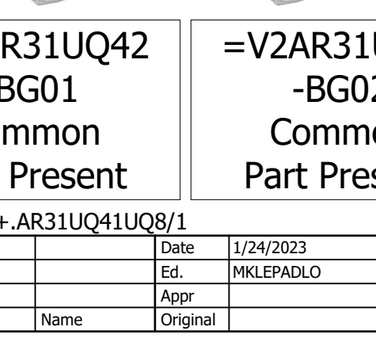

=V2AR31UQ42
-BG02
Common
Part Present

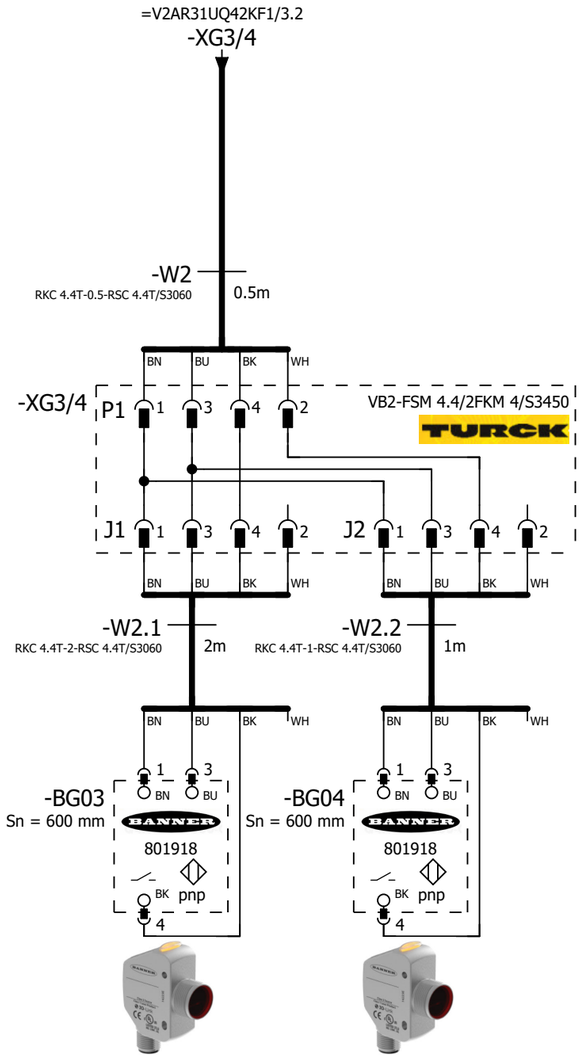

=V2AR31UQ42
-BG03
L150 Model
Position Control

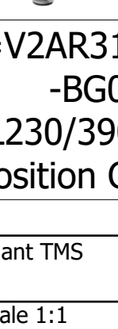

=V2AR31UQ42
-BG04
L230/390/320
Position Control

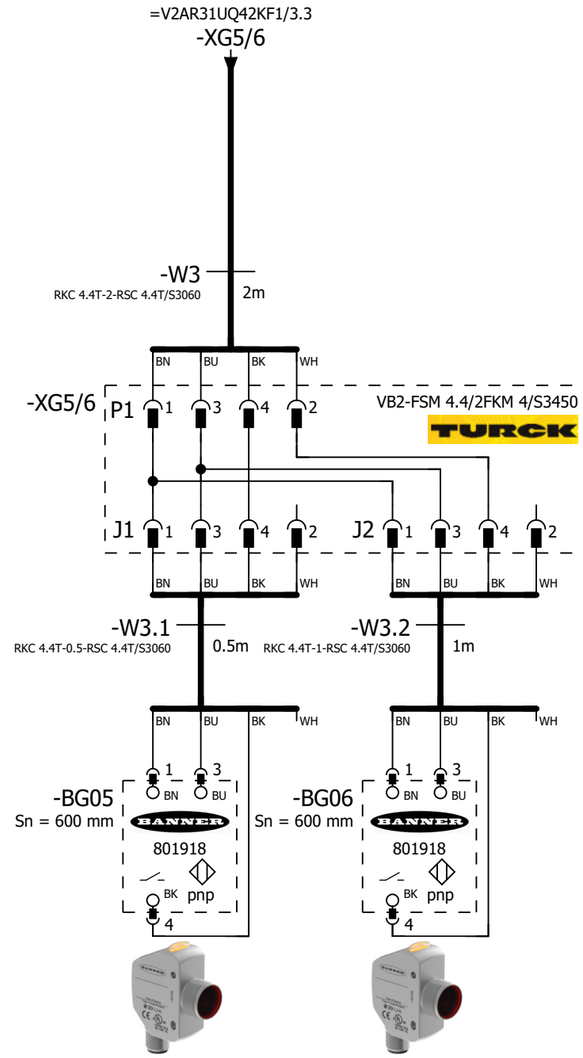

=V2AR31UQ42
-BG05
Common
Position Control

=V2AR31UQ42
-BG06
Common
Part Present

=V2AR31UQ41UQ8+.AR31UQ41UQ8/1

=V2AR31UQ42KF1/1

			Date	1/24/2023	Volvo Trucks North America	Valiant TMS	SENSORS	Drawing name: =2V01&EFS-EL_KF1	= V2AR31UQ42BG0
			Ed.	MKLEPADLO					+ V2AR31UQ42
			Appr		P6700 Framing - Cell 2V01, KF1			Document type: EFS	Project nr: 22-16152
Modification	Date	Name	Original		Replacement of	Replaced by	Scale 1:1		Page 1 / 1630

0	1	2	3	4	5	6	7	8	9

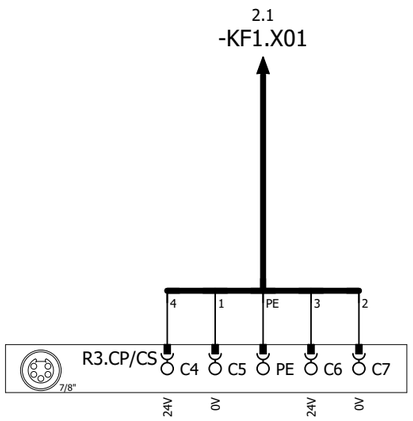

DC 24V (OUT)

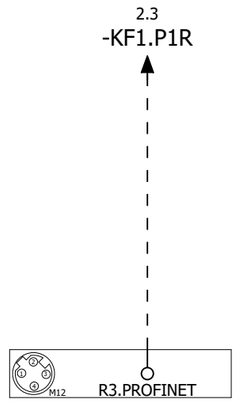

R3.ETHERNET

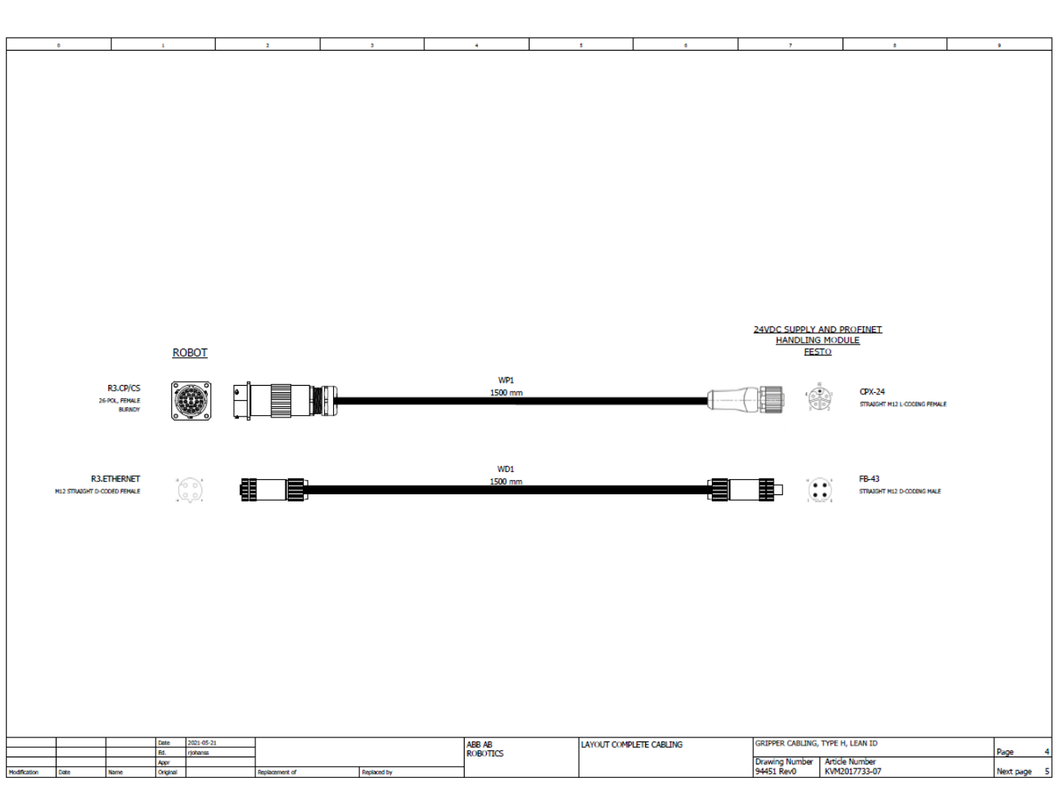

=V2AR31UQ42BG0/1

2

			Date	1/24/2023	Volvo Trucks North America	Valiant TMS	24VDC SUPPLY AND PROFINET HANDLING MODULE	Drawing name: =2V01&EFS-EL_KF1	= V2AR31UQ42KF1
			Ed.	MKLEPADLO					+ V2AR31UQ42
			Appr		P6700 Framing - Cell 2V01, KF1	Scale 1:1		Document type: EFS	Project nr: 22-16152
Modification	Date	Name	Original		Replacement of / Replaced by				Page 1 / 1630

1.3 / -KF1.X01

-W1
RSM RKM 56-2M/S3059
2m

1.5 / -KF1.P1R

-WF1
PROFINET Cable
6XV1840-3AH10

-KF1

X20 (7/8") 1 2 PE 3 4 5
0V_VAL / OUT | 0V_EL / SEN | FE | 24V_EL / SEN | 24V_VAL / OUT

ON / OFF 1 2 1 2

M12 -TP1 M12 -TP2

FESTO
Bus node + Interlinking block
548755 + 550208

DI:0	DI 0 X1:4	V2AR31UQ42UQ1.1-BGR	Common Clamp (RESET)
DI:1	DI 1 X1:2	V2AR31UQ42UQ1.1-BGS	Common Clamp (SET)
DI:2	DI 2 X2:4	V2AR31UQ42UQ1.2-BGR	Common Clamp (RESET)
DI:3	DI 3 X2:2	V2AR31UQ42UQ1.2-BGS	Common Clamp (SET)
DI:4	DI 4 X3:4	V2AR31UQ42UQ2.1-BGR	L150 Model Clamp (RESET)
DI:5	DI 5 X3:2	V2AR31UQ42UQ2.1-BGS	L150 Model Clamp (SET)
DI:6	DI 6 X4:4	V2AR31UQ42UQ2.2-BGR	L150 Model Clamp (RESET)
DI:7	DI 7 X4:2	V2AR31UQ42UQ2.2-BGS	L150 Model Clamp (SET)
DI:8	DI 8 X5:4	V2AR31UQ42UQ3.1-BGR	L230/290/320 Clamp (RESET)
DI:9	DI 9 X5:2	V2AR31UQ42UQ3.1-BGS	L230/290/320 Clamp (SET)
DI:10	DI 10 X6:4	V2AR31UQ42UQ3.2-BGR	L230/290/320 Clamp (RESET)
DI:11	DI 11 X6:2	V2AR31UQ42UQ3.2-BGS	L230/290/320 Clamp (SET)
DI:12	DI 12 X7:4	DI:12	Spare
DI:13	DI 13 X7:2	DI:13	Spare
DI:14	DI 14 X8:4	DI:14	Spare
DI:15	DI 15 X8:2	DI:15	Spare

-KF1.11

FESTO
CPX-M-AB-8-M12X2-5POL
549335

X1 X2 X3 X4 X5 X6 X7 X8 (M12)
1: 24V | 2: DI n | 3: 0V | 4: DI n | 5: FE
BN | WH | BU | BK

+.AR31UQ42UQ1.1-W1 =V2AR31UQ42UQ1+.AR31UQ42UQ1/1.1
+.AR31UQ42UQ1.2-W1 =V2AR31UQ42UQ1+.AR31UQ42UQ1/1.2
+.AR31UQ42UQ2.1-W1 =V2AR31UQ42UQ2+.AR31UQ42UQ2/1.1
+.AR31UQ42UQ2.2-W1 =V2AR31UQ42UQ2+.AR31UQ42UQ2/1.2
+.AR31UQ42UQ3.1-W1 =V2AR31UQ42UQ3+.AR31UQ42UQ3/1.1
+.AR31UQ42UQ3.2-W1 =V2AR31UQ42UQ3+.AR31UQ42UQ3/1.2

1 3

			Date	1/24/2023	Volvo Trucks North America		Valiant TMS	CONNECTING MOD. FOR MPA MANIFOLD	Drawing name: =2V01&EFS-EL_KF1	= V2AR31UQ42KF1	
			Ed.	MKLEPADLO						+ V2AR31UQ42	
			Appr		P6700 Framing - Cell 2V01, KF1		Scale 1:1		Document type: EFS	Project nr: 22-16152	Page 2 / 1630
Modification	Date	Name	Original		Replacement of	Replaced by					

0	1	2	3	4	5	6	7	8	9

-KF1.12

FESTO

CPX-M-AB-8-M12X2-5POL

549335

DI:16	DI 0 X1:4	V2AR31UQ42-BG01	Common Part Present
DI:17	DI 1 X1:2	V2AR31UQ42-BG02	Common Part Present
DI:18	DI 2 X2:4	V2AR31UQ42-BG03	L150 Model Position Control
DI:19	DI 3 X2:2	V2AR31UQ42-BG04	L230/290/320 Position Control
DI:20	DI 4 X3:4	V2AR31UQ42-BG05	Common Position control
DI:21	DI 5 X3:2	V2AR31UQ42-BG06	Common Position control
DI:22	DI 6 X4:4	DI:22	Spare
DI:23	DI 7 X4:2	DI:23	Spare
DI:24	DI 8 X5:4	DI:24	Spare
DI:25	DI 9 X5:2	DI:25	Spare
DI:26	DI 10 X6:4	DI:26	Spare
DI:27	DI 11 X6:2	DI:27	Spare
DI:28	DI 12 X7:4	DI:28	Spare
DI:29	DI 13 X7:2	DI:29	Spare
DI:30	DI 14 X8:4	DI:30	Spare
DI:31	DI 15 X8:2	DI:31	Spare

-XG1/2
=V2AR31UQ42BG0/1.1

-XG3/4
=V2AR31UQ42BG0/1.4

-XG5/6
=V2AR31UQ42BG0/1.6

2

4

			Date	1/24/2023	Volvo Trucks North America		Valiant TMS	I/O MOD. DI16 (8 x M12) FOR MPA	Drawing name: =2V01&EFS-EL_KF1	= V2AR31UQ42KF1
			Ed.	MKLEPADLO						+ V2AR31UQ42
			Appr		P6700 Framing - Cell 2V01, KF1		Scale 1:1		Document type: EFS	Project nr: 22-16152
Modification	Date	Name	Original		Replacement of	Replaced by				Page 3 / 1630

0	1	2	3	4	5	6	7	8	9

-KF1.13

FESTO

CPX-M-AB-8-M12X2-5POL

549335

DI:32	DI 0 X1:4	DI:32	Spare
DI:33	DI 1 X1:2	DI:33	Spare
DI:34	DI 2 X2:4	DI:34	Spare
DI:35	DI 3 X2:2	DI:35	Spare
DI:36	DI 4 X3:4	DI:36	Spare
DI:37	DI 5 X3:2	DI:37	Spare
DI:38	DI 6 X4:4	DI:38	Spare
DI:39	DI 7 X4:2	DI:39	Spare
DI:40	DI 8 X5:4	DI:40	Spare
DI:41	DI 9 X5:2	DI:41	Spare
DI:42	DI 10 X6:4	DI:42	Spare
DI:43	DI 11 X6:2	DI:43	Spare
DI:44	DI 12 X7:4	DI:44	Spare
DI:45	DI 13 X7:2	DI:45	Spare
DI:46	DI 14 X8:4	DI:46	Spare
DI:47	DI 15 X8:2	DI:47	Spare

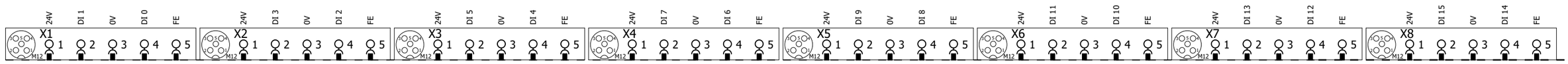

3 5

			Date	1/24/2023	Volvo Trucks North America	Valiant TMS	I/O MOD. DI16 (8 x M12) FOR MPA	Drawing name: =2V01&EFS-EL_KF1	= V2AR31UQ42KF1
			Ed.	MKLEPADLO					+ V2AR31UQ42
			Appr		P6700 Framing - Cell 2V01, KF1			Document type: EFS	Project nr: 22-16152
Modification	Date	Name	Original		Replacement of / Replaced by	Scale 1:1			Page 4 / 1630

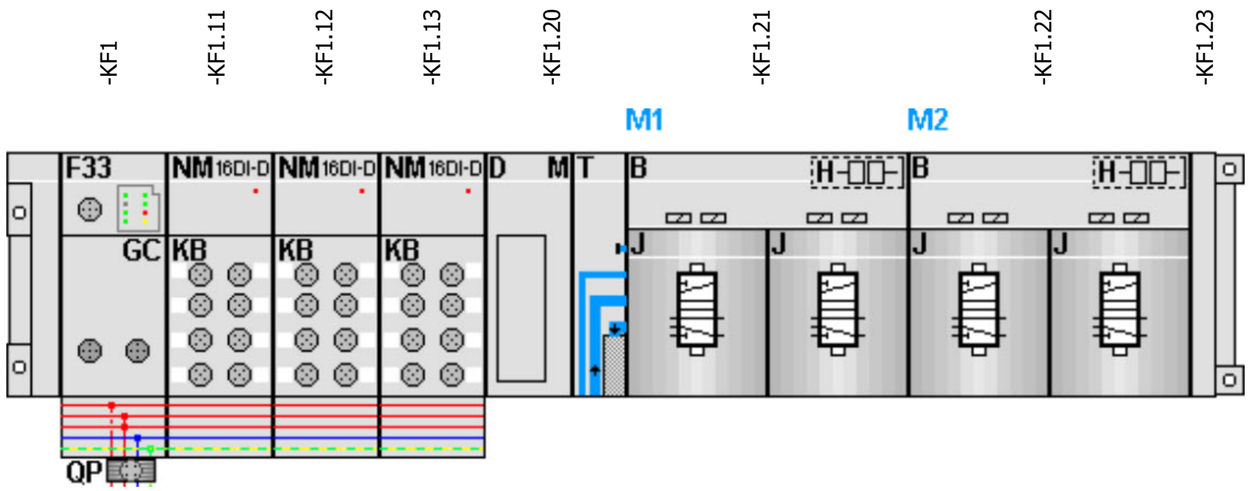

-KF1.21
=V2AR31UQ42UQ1+.AR31UQ42UQ1/1.3
=V2AR31UQ42UQ2+.AR31UQ42UQ2/1.3

FESTO

=V2AR31UQ42UQ1+.AR31UQ42UQ1/1.4	DO:0 DO 0 1.1	-QN1.1_Q	Common Clamps (RST)
=V2AR31UQ42UQ1+.AR31UQ42UQ1/1.4	DO:1 DO 1 1.2	-QN1.2_Q	Common Clamps (SET)
=V2AR31UQ42UQ2+.AR31UQ42UQ2/1.4	DO:2 DO 2 2.1	-QN2.1_Q	L150 Model Clamps (RST)
=V2AR31UQ42UQ2+.AR31UQ42UQ2/1.4	DO:3 DO 3 2.2	-QN2.2_Q	L150 Model Clamps (SET)

-KF1.22
=V2AR31UQ42UQ3+.AR31UQ42UQ3/1.3
=V2AR31UQ42UQ4+.AR31UQ42UQ4/1.3

FESTO

=V2AR31UQ42UQ3+.AR31UQ42UQ3/1.4	DO:4 DO 4 1.1	-QN3.1_Q	L230/290/320 Model Clamps (RST)
=V2AR31UQ42UQ3+.AR31UQ42UQ3/1.4	DO:5 DO 5 1.2	-QN3.2_Q	L230/290/320 Model Clamps (SET)
=V2AR31UQ42UQ4+.AR31UQ42UQ4/1.4	DO:6 DO 6 2.1	-QN4.1_Q	Spare (RST)
=V2AR31UQ42UQ4+.AR31UQ42UQ4/1.4	DO:7 DO 7 2.2	-QN4.2_Q	Spare (SET)

0	1	2	3	4	5	6	7	8	9

=V2AR31UQ42KF1
+.AR31UQ42

-KF1.21
=V2AR31UQ42KF1+V2AR31UQ42/5.1

Common Clamps (RST)
=V2AR31UQ42KF1
+V2AR31UQ42
-QN1.1_Q
=V2AR31UQ42KF1
+V2AR31UQ42/5.3
DO:0

Common Clamps (SET)
=V2AR31UQ42KF1
+V2AR31UQ42
-QN1.2_Q
=V2AR31UQ42KF1
+V2AR31UQ42/5.3
DO:1

1.1
Pneumatic Valve

1.2
Pneumatic Valve

-QN1 .1 .2

=V2AR31UQ42KF1+V2AR31UQ42/2.1
+.AR31UQ42UQ1.1-W1

-W1
RKC 4.4T-2-RSC 4.4T/S3060
2m

BN BU BK WH

-BGS/R
1 3
+ -
TÜNKERS
1324638
A2 A1
2 4

Common Clamp
=V2AR31UQ42UQ1.1
+.AR31UQ42UQ1.1
-UQ1.1

=V2AR31UQ42
-UQ1.1-BGS/R
Common
Clamp

=V2AR31UQ42KF1+V2AR31UQ42/2.2
+.AR31UQ42UQ1.2-W1

-W1
RKC 4.4T-2-RSC 4.4T/S3060
2m

BN BU BK WH

-BGS/R
1 3
+ -
TÜNKERS
1324638
A2 A1
2 4

Common Clamp
=V2AR31UQ42UQ1.2
+.AR31UQ42UQ1.2
-UQ1.2

=V2AR31UQ42
-UQ1.2-BGS/R
Common
Clamp

=V2AR31UQ42KF1+V2AR31UQ42/5

=V2AR31UQ42UQ2+.AR31UQ42UQ2/1

			Date	1/24/2023	Volvo Trucks North America		Valiant TMS	FESTO DQ CONNECTION QN1	Drawing name: =2V01&EFS-EL_KF1	= V2AR31UQ42UQ1
			Ed.	MKLEPADLO						+ V2AR31UQ42UQ1
			Appr		P6700 Framing - Cell 2V01, KF1				Document type: EFS	Project nr: 22-16152
Modification	Date	Name	Original		Replacement of	Replaced by	Scale 1:1			Page 1 / 1630

0	1	2	3	4	5	6	7	8	9

=V2AR31UQ42KF1
+.AR31UQ42

-KF1.21
=V2AR31UQ42KF1+V2AR31UQ42/5.1

L150 Model Clamps (RST)
=V2AR31UQ42KF1
+V2AR31UQ42
-QN2.1_Q
=V2AR31UQ42KF1
+V2AR31UQ42/5.3
DO:2

L150 Model Clamps (SET)
=V2AR31UQ42KF1
+V2AR31UQ42
-QN2.2_Q
=V2AR31UQ42KF1
+V2AR31UQ42/5.3
DO:3

2.1 Pneumatic Valve

2.2 Pneumatic Valve

-QN2 .1 .2

=V2AR31UQ42KF1+V2AR31UQ42/2.3
+.AR31UQ42UQ2.1-W1

=V2AR31UQ42KF1+V2AR31UQ42/2.4
+.AR31UQ42UQ2.2-W1

-W1 2m
RKC 4.4T-2-RSC 4.4T/S3060
BN BU BK WH
-BGS/R
1 3
+ -
TÜNKERS
1324638
A2 A1
2 4

L150 Model Clamp
=V2AR31UQ42UQ2.1
+.AR31UQ42UQ2.1
-UQ2.1

L150 Model Clamp
=V2AR31UQ42UQ2.2
+.AR31UQ42UQ2.2
-UQ2.2

=V2AR31UQ42
-UQ2.1-BGS/R
L150 Model
Clamp

=V2AR31UQ42
-UQ2.2-BGS/R
L150 Model
Clamp

=V2AR31UQ42UQ1+.AR31UQ42UQ1/1

=V2AR31UQ42UQ3+.AR31UQ42UQ3/1

			Date	1/24/2023	Volvo Trucks North America		Valiant TMS	FESTO DQ CONNECTION QN2	Drawing name: =2V01&EFS-EL_KF1	= V2AR31UQ42UQ2
			Ed.	MKLEPADLO						+ V2AR31UQ42UQ2
			Appr		P6700 Framing - Cell 2V01, KF1				Document type: EFS	Project nr: 22-16152
Modification	Date	Name	Original		Replacement of	Replaced by	Scale 1:1			Page 1 / 1630

0	1	2	3	4	5	6	7	8	9

=V2AR31UQ42KF1
+.AR31UQ42

-KF1.22
=V2AR31UQ42KF1+V2AR31UQ42/5.1

L230/290/320 Model Clamps (RST)
=V2AR31UQ42KF1
+V2AR31UQ42
-QN3.1_Q
=V2AR31UQ42KF1
+V2AR31UQ42/5.3
DO:4

L230/290/320 Model Clamps (SET)
=V2AR31UQ42KF1
+V2AR31UQ42
-QN3.2_Q
=V2AR31UQ42KF1
+V2AR31UQ42/5.3
DO:5

1.1 Pneumatic Valve

1.2 Pneumatic Valve

-QN3 .1 .2

=V2AR31UQ42KF1+V2AR31UQ42/2.5
+.AR31UQ42UQ3.1-W1

=V2AR31UQ42KF1+V2AR31UQ42/2.6
+.AR31UQ42UQ3.2-W1

-W1 2m
RKC 4.4T-2-RSC 4.4T/S3060

BN BU BK WH

-BGS/R
1 3
+ -
TÜNKERS
1324638
A2 A1
2 4

L230/290/320 Clamp
=V2AR31UQ42UQ3.1
+.AR31UQ42UQ3.1
-UQ3.1

L230/290/320 Clamp
=V2AR31UQ42UQ3.2
+.AR31UQ42UQ3.2
-UQ3.2

=V2AR31UQ42
-UQ3.1-BGS/R
L230/290/320
Clamp

=V2AR31UQ42
-UQ3.2-BGS/R
L230/290/320
Clamp

=V2AR31UQ42UQ2+.AR31UQ42UQ2/1

=V2AR31UQ42UQ4+.AR31UQ42UQ4/1

			Date	1/24/2023	Volvo Trucks North America		Valiant TMS	FESTO DQ CONNECTION QN3	Drawing name: =2V01&EFS-EL_KF1	= V2AR31UQ42UQ3
			Ed.	MKLEPADLO						+ V2AR31UQ42UQ3
			Appr		P6700 Framing - Cell 2V01, KF1				Document type: EFS	Project nr: 22-16152
Modification	Date	Name	Original		Replacement of	Replaced by	Scale 1:1			Page 1 / 1630

0	1	2	3	4	5	6	7	8	9

=V2AR31UQ42KF1
+.AR31UQ42

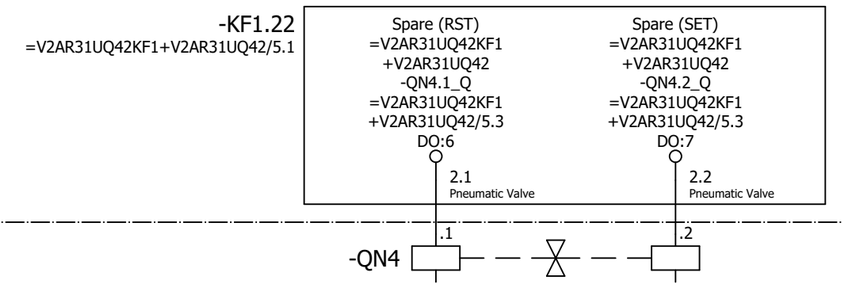

=V2AR31UQ42UQ3+.AR31UQ42UQ3/1

=V2AR31WC1+.AR31UC01/1

			Date	1/24/2023	Volvo Trucks North America	Valiant TMS	FESTO DQ CONNECTION QN4	Drawing name: =2V01&EFS-EL_KF1	= V2AR31UQ42UQ4
			Ed.	MKLEPADLO					+ V2AR31UQ42UQ4
			Appr		P6700 Framing - Cell 2V01, KF1	Scale 1:1		Document type: EFS / Project nr: 22-16152	Page 1 / 1630
Modification	Date	Name	Original		Replacement of / Replaced by				

0	1	2	3	4	5	6	7	8	9

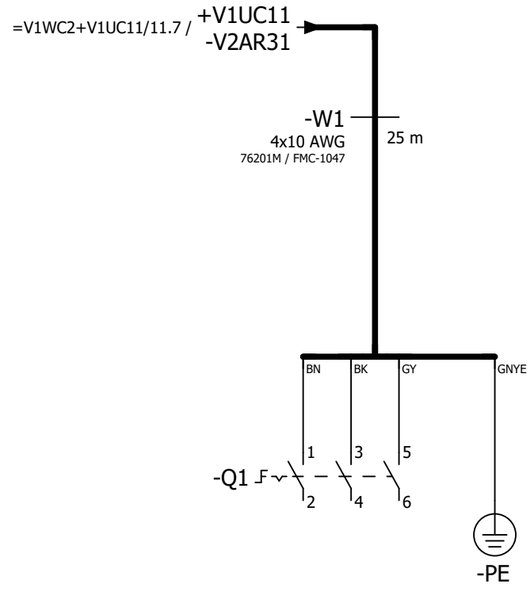

=V2AR31UQ42UQ4+.AR31UQ42UQ4/1

=V2AR31XQ41KF1+.AR31XQ41/1

			Date	1/24/2023	Volvo Trucks North America	Valiant TMS	Incoming power	Drawing name: =2V01&EFS-EL_KF1	= V2AR31WC1
			Ed.	MKLEPADLO					+ V2AR31UC01
			Appr		P6700 Framing - Cell 2V01, KF1	Scale 1:1		Document type: EFS / Project nr: 22-16152	Page 1 / 1630
Modification	Date	Name	Original		Replacement of / Replaced by				

0	1	2	3	4	5	6	7	8	9

=V2WC4+.UC14/20.6 / -W1.2

-W1.2
RSM RKM 56-20M/S3059
20m

/ -KF1
Robot Media Panel

-KF1
PROFINET Cable
6XV1840-3AH10

-KF1
/1.3

X20 M12, 7/8" 1 2 PE 4 5
0V_VAL / OUT
0V_EL / SEN
FE
24V_EL / SEN
24V_VAL / OUT

ON
OFF
1 2 1 2

M12 -TP1
M12 -TP2

FESTO
Bus node + Interlinking block
548755 + 550208

DI:96	DI 0 X1:4	V2AR31XQ41UQ1.1-BGR	Cylinder (RESET)
DI:97	DI 1 X1:2	V2AR31XQ41UQ1.1-BGS	Cylinder (SET)
DI:98	DI 2 X2:4	DI:98	Spare
DI:99	DI 3 X2:2	DI:99	Spare
DI:100	DI 4 X3:4	DI:100	Spare
DI:101	DI 5 X3:2	DI:101	Spare
DI:102	DI 6 X4:4	DI:102	Spare
DI:103	DI 7 X4:2	DI:103	Spare
DI:104	DI 8 X5:4	DI:104	Spare
DI:105	DI 9 X5:2	DI:105	Spare
DI:106	DI 10 X6:4	DI:106	Spare
DI:107	DI 11 X6:2	DI:107	Spare
DI:108	DI 12 X7:4	DI:108	Spare
DI:109	DI 13 X7:2	DI:109	Spare
DI:110	DI 14 X8:4	DI:110	Spare
DI:111	DI 15 X8:2	DI:111	Spare

-KF1.11

FESTO
CPX-M-AB-8-M12X2-5POL
549335

X1 M12 24V DI 1 0V DI 0 FE
X2 M12 24V DI 3 0V DI 2 FE
X3 M12 24V DI 5 0V DI 4 FE
X4 M12 24V DI 7 0V DI 6 FE
X5 M12 24V DI 9 0V DI 8 FE
X6 M12 24V DI 11 0V DI 10 FE
X7 M12 24V DI 13 0V DI 12 FE
X8 M12 24V DI 15 0V DI 14 FE
1 2 3 4 5

BN WH BU BK

+.AR31XQ41UQ1-XG1/2
=V2AR31XQ41UQ1+.AR31XQ41UQ1/1.1

=V2AR31WC1+.AR31UC01/1

2

			Date	1/24/2023	Volvo Trucks North America	Valiant TMS	CONNECTING MOD. FOR VTSA MANIFOLD	Drawing name: =2V01&EFS-EL_KF1	= V2AR31XQ41KF1	
			Ed.	MKLEPADLO					+ V2AR31XQ41	
			Appr		P6700 Framing - Cell 2V01, KF1			Document type: EFS	Project nr: 22-16152	Page 1
Modification	Date	Name	Original		Replacement of	Replaced by	Scale 1:1			1630

-KF1 -KF1.11 -KF1.20 -KF1.21 -KF1.22 -KF1.23

M1

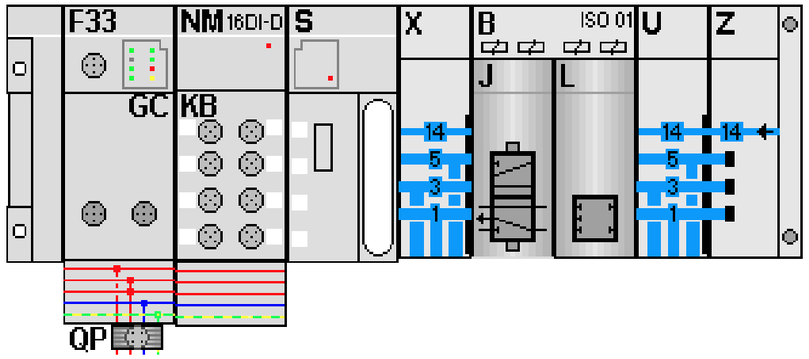

-KF1.21
=V2AR31XQ41UQ1+.AR31XQ41UQ1/1.3

FESTO

=V2AR31XQ41UQ1+.AR31XQ41UQ1/1.4	DO:32 DO 0 1.1	-QN1.1_Q	Cylinder (RST)
=V2AR31XQ41UQ1+.AR31XQ41UQ1/1.4	DO:33 DO 1 1.2	-QN1.2_Q	Cylinder (SET)
	DO:34 DO 2 2.1	-QN2.1_Q	Spare (RST)
	DO:35 DO 3 2.2	-QN2.2_Q	Spare (SET)

			Date	1/24/2023	Volvo Trucks North America	Valiant TMS	CONNECTING MOD. FOR FESTO DQ	Drawing name: =2V01&EFS-EL_KF1	= V2AR31XQ41KF1
			Ed.	MKLEPADLO					+ V2AR31XQ41
			Appr		P6700 Framing - Cell 2V01, KF1			Document type: EFS	Project nr: 22-16152
Modification	Date	Name	Original		Replacement of / Replaced by	Scale 1:1			Page 2 / 1630

0	1	2	3	4	5	6	7	8	9

=V2AR31XQ41KF1
+.AR31XQ41

-KF1.21
=V2AR31XQ41KF1+V2AR31XQ41/2.1

Cylinder (RST)
=V2AR31XQ41KF1
+V2AR31XQ41
-QN1.1_Q
=V2AR31XQ41KF1
+V2AR31XQ41/2.3
DO:32

Cylinder (SET)
=V2AR31XQ41KF1
+V2AR31XQ41
-QN1.2_Q
=V2AR31XQ41KF1
+V2AR31XQ41/2.3
DO:33

1.1 Pneumatic Valve
1.2 Pneumatic Valve

-QN1 .1 .2

=V2AR31XQ41KF1+V2AR31XQ41/1.1
-XG1/2

-W1
RKC 4.4T-0.5-RSC 4.4T/S3060
0.5m

BN BU BK WH

-XG1/2 P1 1 3 4 2
VB2-FSM 4.4/2FKM 4/S3450
TURCK

J1 1 3 4 2
J2 1 3 4 2

BN BU BK WH

-W1.1
RKC 4.4T-0.5-RSC 4.4T/S3060
0.5m

-W1.2
RKC 4.4T-0.5-RSC 4.4T/S3060
0.5m

BN BU BK WH

1 3

-BGR
Sn = 2 mm
TURCK
1627205
pnp
A
4

-BGS
Sn = 2 mm
TURCK
1627205
pnp
A
4

Cylinder
=V2AR31XQ41UQ1.1
+.AR31XQ41UQ1.1
-UQ1.1

=V2AR31XQ41
-UQ1.1-BGR
Cylinder

=V2AR31XQ41
-UQ1.1-BGS
Cylinder

=V2AR31XQ41KF1+V2AR31XQ41/2

=V2AR31XQ41WC1+.AR31XQ41UC01/1

			Date	1/24/2023	Volvo Trucks North America	Valiant TMS	FESTO DQ CONNECTION QN1	Drawing name: =2V01&EFS-EL_KF1	= V2AR31XQ41UQ1
			Ed.	MKLEPADLO					+ V2AR31XQ41UQ1
			Appr		P6700 Framing - Cell 2V01, KF1			Document type: EFS	Project nr: 22-16152
Modification	Date	Name	Original		Replacement of / Replaced by	Scale 1:1			Page 1 / 1630

0	1	2	3	4	5	6	7	8	9

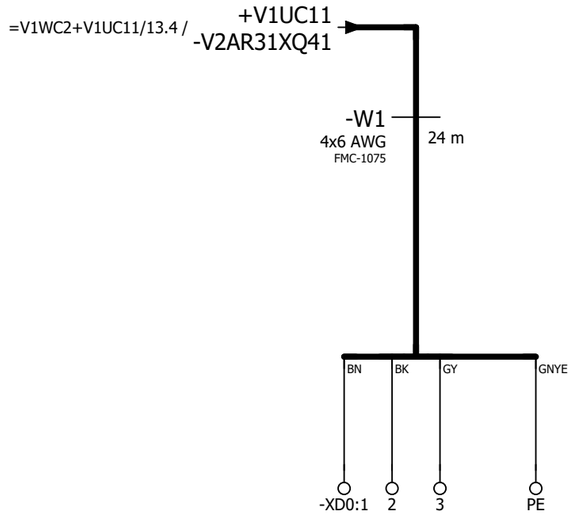

=V2AR31XQ41UQ1+.AR31XQ41UQ1/1

=V2AR32KF1+.AR32UC01/1

			Date	1/24/2023	Volvo Trucks North America	Valiant TMS	Incoming power	Drawing name: =2V01&EFS-EL_KF1	= V2AR31XQ41WC1
			Ed.	MKLEPADLO					+ V2AR31XQ41UC01
			Appr		P6700 Framing - Cell 2V01, KF1	Scale 1:1		Document type: EFS / Project nr: 22-16152	Page 1 / 1630
Modification	Date	Name	Original		Replacement of / Replaced by				

0	1	2	3	4	5	6	7	8	9

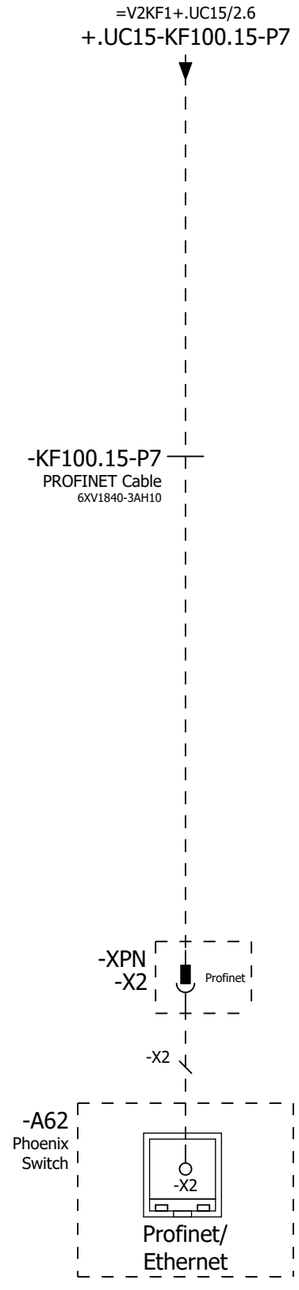

=V2AR31XQ41WC1+.AR31XQ41UC01/1

=V2AR32UQ41BG0+.AR32UQ41/1

			Date	1/24/2023	Volvo Trucks North America	Valiant TMS	Incoming Profinet	Drawing name: =2V01&EFS-EL_KF1	= V2AR32KF1
			Ed.	MKLEPADLO					+ V2AR32UC01
			Appr		P6700 Framing - Cell 2V01, KF1			Document type: EFS	Project nr: 22-16152
Modification	Date	Name	Original		Replacement of / Replaced by	Scale 1:1			Page 1 / 1630

0	1	2	3	4	5	6	7	8	9

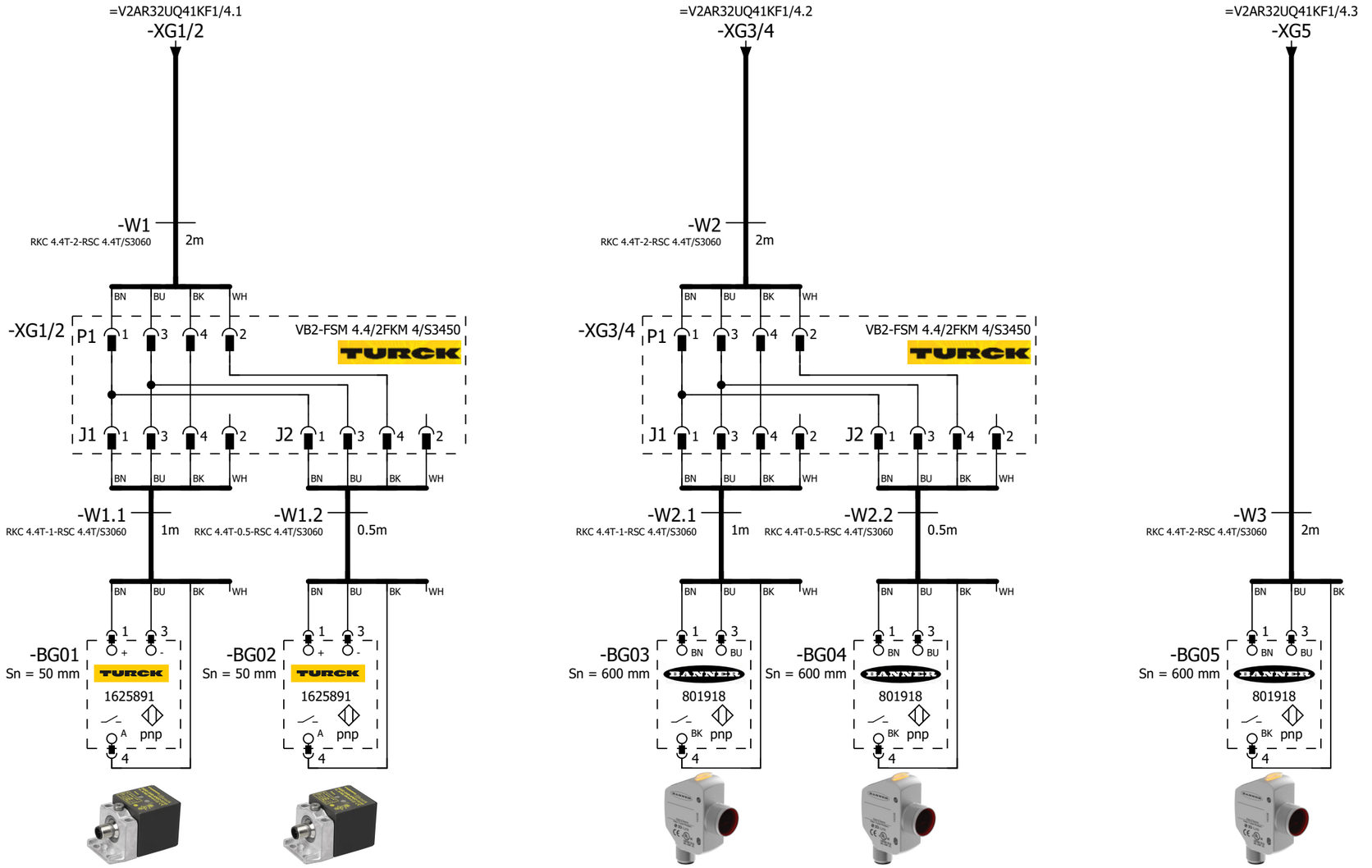

=V2AR32UQ41 -BG01 Common Part Present	=V2AR32UQ41 -BG02 Common Part Present	=V2AR32UQ41 -BG03 Common Position Control	=V2AR32UQ41 -BG04 Common Position Control	=V2AR32UQ41 -BG05 Common Position Control

=V2AR32KF1+.AR32UC01/1

=V2AR32UQ41KF1/1

			Date	1/24/2023	Volvo Trucks North America	Valiant TMS	SENSORS	Drawing name: =2V01&EFS-EL_KF1	= V2AR32UQ41BG0
			Ed.	MKLEPADLO					+ V2AR32UQ41
			Appr		P6700 Framing - Cell 2V01, KF1			Document type: EFS	Project nr: 22-16152
Modification	Date	Name	Original		Replacement of / Replaced by	Scale 1:1			Page 1 / 1630

0	1	2	3	4	5	6	7	8	9

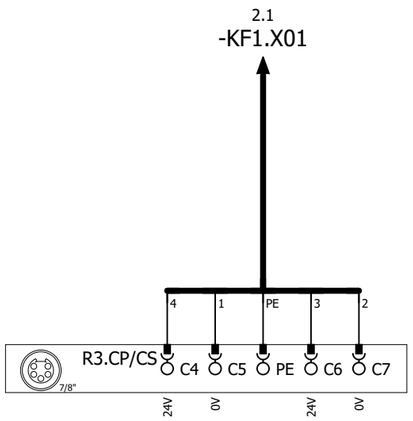

DC 24V (OUT)

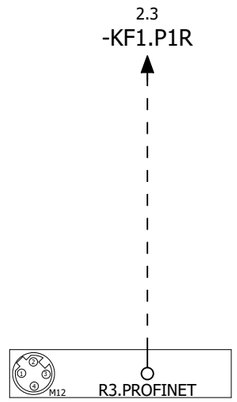

R3.ETHERNET

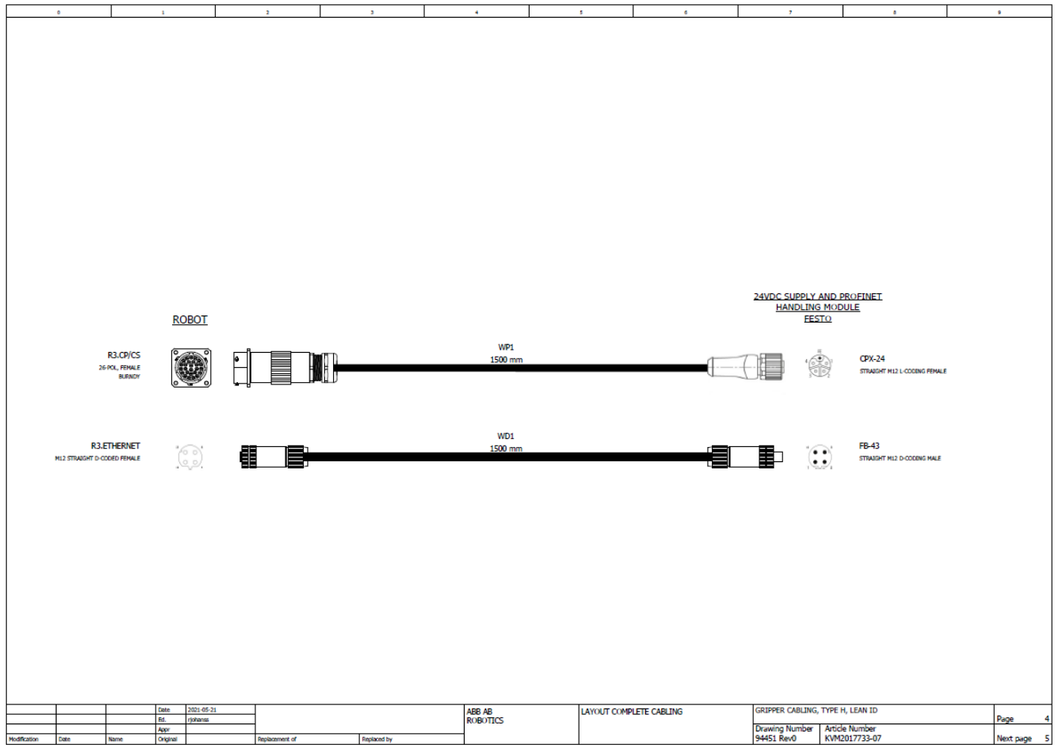

=V2AR32UQ41BG0/1

2

			Date	1/24/2023	Volvo Trucks North America	Valiant TMS	24VDC SUPPLY AND PROFINET HANDLING MODULE	Drawing name: =2V01&EFS-EL_KF1	= V2AR32UQ41KF1
			Ed.	MKLEPADLO					+ V2AR32UQ41
			Appr		P6700 Framing - Cell 2V01, KF1	Scale 1:1		Document type: EFS	Project nr: 22-16152
Modification	Date	Name	Original		Replacement of / Replaced by				Page 1 / 1630

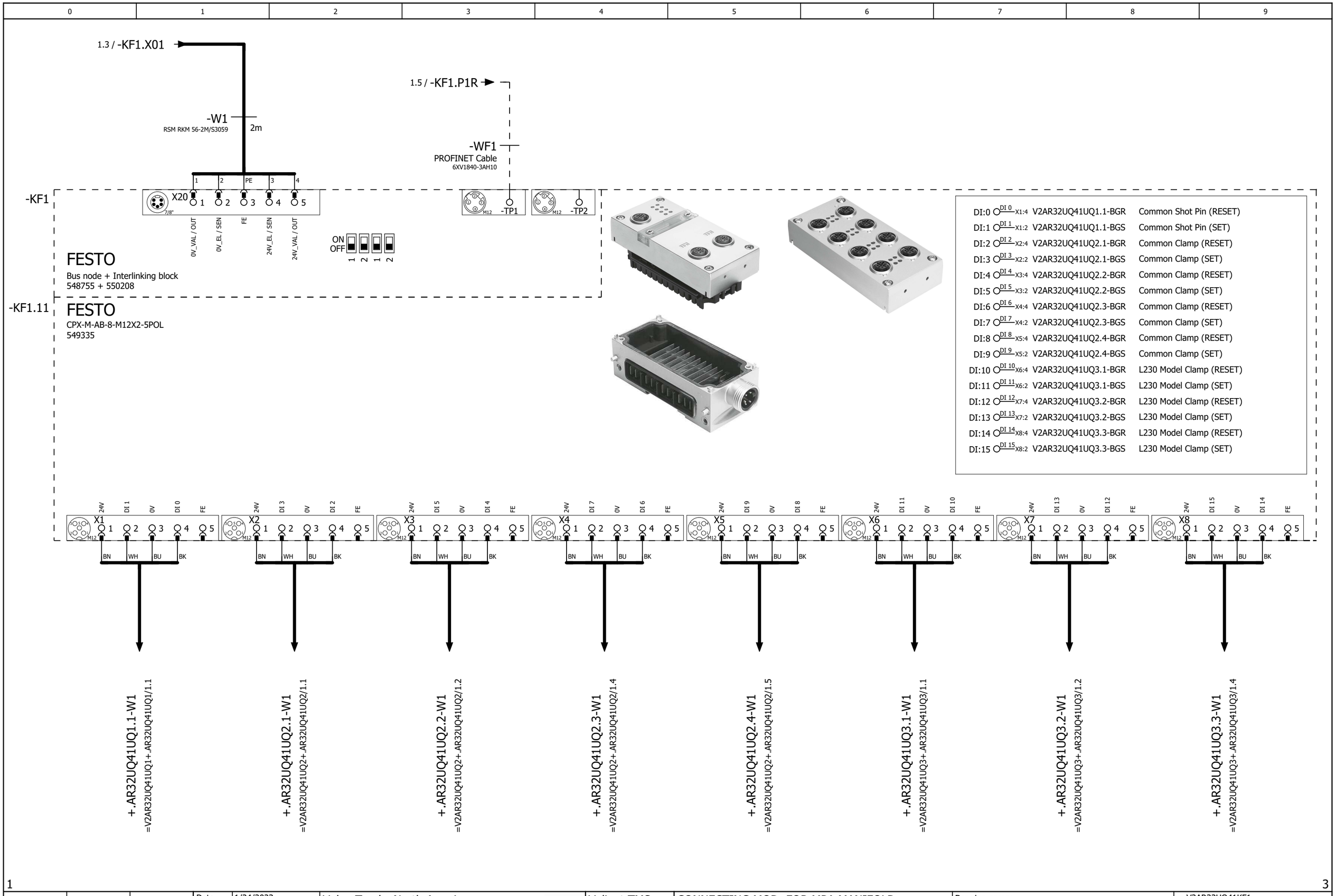

			Date	1/24/2023	Volvo Trucks North America	Valiant TMS	CONNECTING MOD. FOR MPA MANIFOLD	Drawing name: =2V01&EFS-EL_KF1	= V2AR32UQ41KF1 + V2AR32UQ41	
			Ed.	MKLEPADLO	P6700 Framing - Cell 2V01, KF1			Document type: EFS	Project nr: 22-16152	Page 2
			Appr							
Modification	Date	Name	Original		Replacement of / Replaced by	Scale 1:1				1630

0	1	2	3	4	5	6	7	8	9

-KF1.12

FESTO
CPX-M-AB-8-M12X2-5POL
549335

DI:16	DI 0 X1:4	V2AR32UQ41UQ4.1-BGR	L290 Model Shot Pin (RESET)
DI:17	DI 1 X1:2	V2AR32UQ41UQ4.1-BGS	L290 Model Shot Pin (SET)
DI:18	DI 2 X2:4	V2AR32UQ41UQ5.1-BGR	L290 Model Clamp (RESET)
DI:19	DI 3 X2:2	V2AR32UQ41UQ5.1-BGS	L290 Model Clamp (SET)
DI:20	DI 4 X3:4	V2AR32UQ41UQ5.2-BGR	L290 Model Clamp (RESET)
DI:21	DI 5 X3:2	V2AR32UQ41UQ5.2-BGS	L290 Model Clamp (SET)
DI:22	DI 6 X4:4	V2AR32UQ41UQ6.1-BGR	L320 Model Shot Pin (RESET)
DI:23	DI 7 X4:2	V2AR32UQ41UQ6.1-BGS	L320 Model Shot Pin (SET)
DI:24	DI 8 X5:4	V2AR32UQ41UQ7.1-BGR	L320 Model Clamp (RESET)
DI:25	DI 9 X5:2	V2AR32UQ41UQ7.1-BGS	L320 Model Clamp (SET)
DI:26	DI 10 X6:4	V2AR32UQ41UQ7.2-BGR	L320 Model Clamp (RESET)
DI:27	DI 11 X6:2	V2AR32UQ41UQ7.2-BGS	L320 Model Clamp (SET)
DI:28	DI 12 X7:4	DI:28	Spare
DI:29	DI 13 X7:2	DI:29	Spare
DI:30	DI 14 X8:4	DI:30	Spare
DI:31	DI 15 X8:2	DI:31	Spare

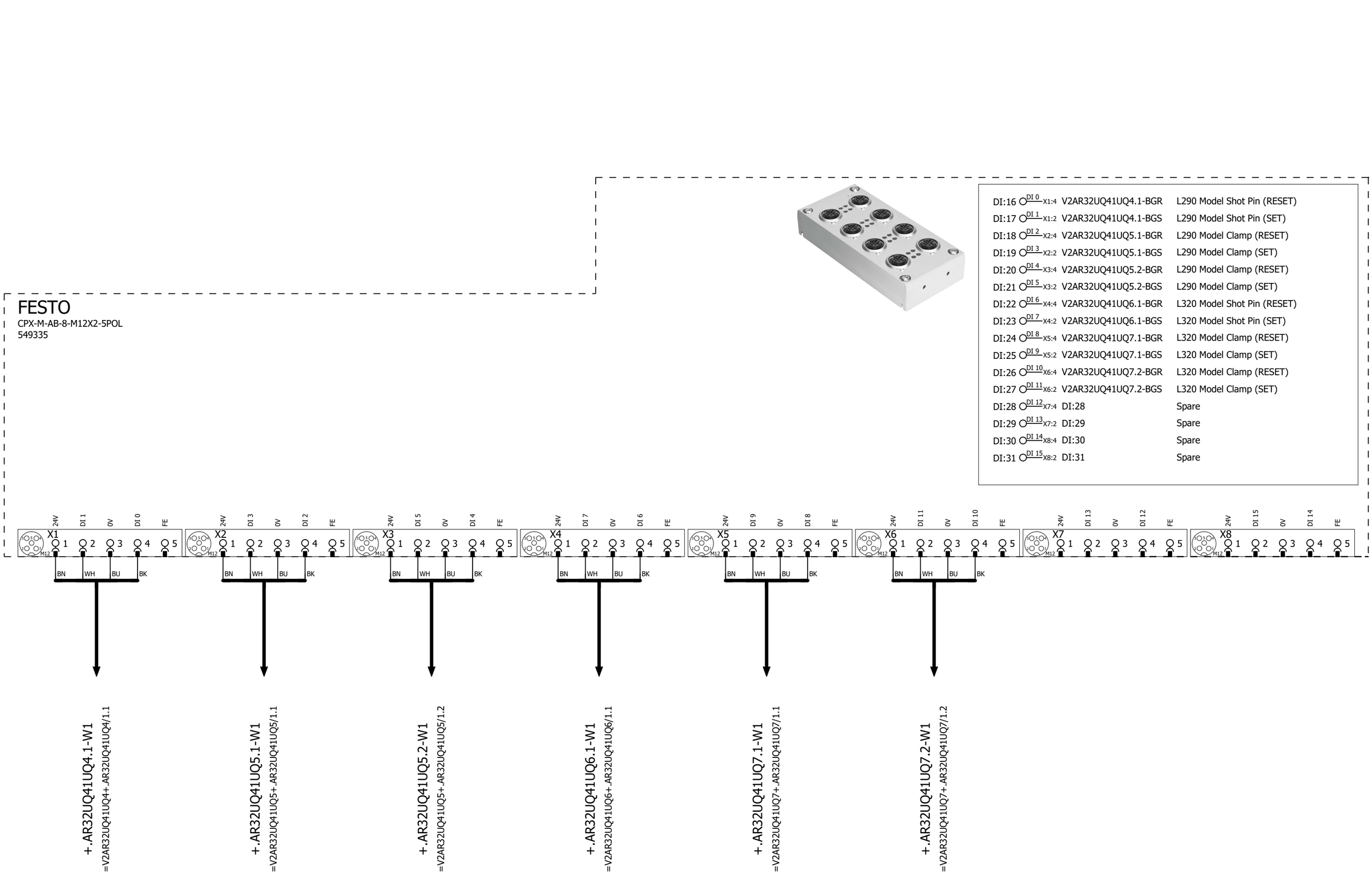

2 4

			Date	1/24/2023	Volvo Trucks North America	Valiant TMS	I/O MOD. DI16 (8 x M12) FOR MPA	Drawing name: =2V01&EFS-EL_KF1	= V2AR32UQ41KF1
			Ed.	MKLEPADLO					+ V2AR32UQ41
			Appr		P6700 Framing - Cell 2V01, KF1	Scale 1:1		Document type: EFS	Project nr: 22-16152
Modification	Date	Name	Original		Replacement of / Replaced by				Page 3 / 1630

0	1	2	3	4	5	6	7	8	9

-KF1.13

FESTO

CPX-M-AB-8-M12X2-5POL

549335

DI:32	DI 0 X1:4	V2AR32UQ41-BG01	Common Part Present
DI:33	DI 1 X1:2	V2AR32UQ41-BG02	Common Part Present
DI:34	DI 2 X2:4	V2AR32UQ41-BG03	Common Position Control
DI:35	DI 3 X2:2	V2AR32UQ41-BG04	Common Position Control
DI:36	DI 4 X3:4	V2AR32UQ41-BG05	Common Position Control
DI:37	DI 5 X3:2	DI:37	Spare
DI:38	DI 6 X4:4	DI:38	Spare
DI:39	DI 7 X4:2	DI:39	Spare
DI:40	DI 8 X5:4	DI:40	Spare
DI:41	DI 9 X5:2	DI:41	Spare
DI:42	DI 10 X6:4	DI:42	Spare
DI:43	DI 11 X6:2	DI:43	Spare
DI:44	DI 12 X7:4	DI:44	Spare
DI:45	DI 13 X7:2	DI:45	Spare
DI:46	DI 14 X8:4	DI:46	Spare
DI:47	DI 15 X8:2	DI:47	Spare

-XG1/2
=V2AR32UQ41BG0/1.1

-XG3/4
=V2AR32UQ41BG0/1.4

-XG5
=V2AR32UQ41BG0/1.6

3 5

			Date	1/24/2023	Volvo Trucks North America	Valiant TMS	I/O MOD. DI16 (8 x M12) FOR MPA	Drawing name: =2V01&EFS-EL_KF1	= V2AR32UQ41KF1
			Ed.	MKLEPADLO					+ V2AR32UQ41
			Appr		P6700 Framing - Cell 2V01, KF1			Document type: EFS	Project nr: 22-16152
Modification	Date	Name	Original		Replacement of / Replaced by	Scale 1:1			Page 4 / 1630

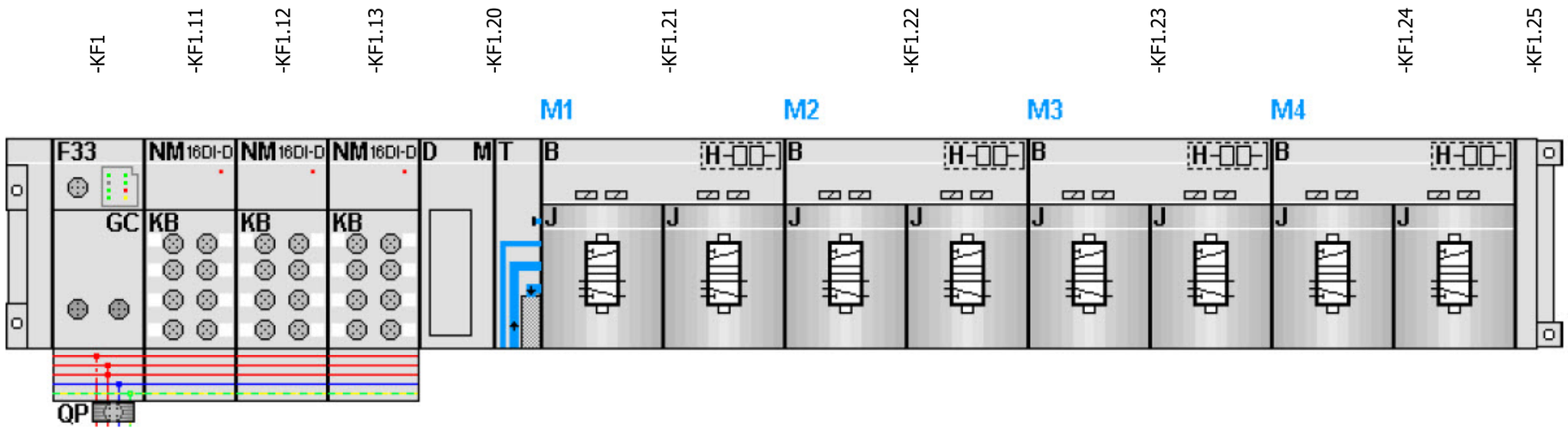

-KF1.21
=V2AR32UQ41UQ1+.AR32UQ41UQ1/1.3
=V2AR32UQ41UQ2+.AR32UQ41UQ2/1.3

FESTO

=V2AR32UQ41UQ1+.AR32UQ41UQ1/1.4	DO:0 DO 0 1.1	-QN1.1_Q	Common Shot Pin (RST)
=V2AR32UQ41UQ1+.AR32UQ41UQ1/1.4	DO:1 DO 1 1.2	-QN1.2_Q	Common Shot Pin (SET)
=V2AR32UQ41UQ2+.AR32UQ41UQ2/1.4	DO:2 DO 2 2.1	-QN2.1_Q	Common Clamps (RST)
=V2AR32UQ41UQ2+.AR32UQ41UQ2/1.4	DO:3 DO 3 2.2	-QN2.2_Q	Common Clamps (SET)

-KF1.22
=V2AR32UQ41UQ3+.AR32UQ41UQ3/1.3
=V2AR32UQ41UQ4+.AR32UQ41UQ4/1.3

FESTO

=V2AR32UQ41UQ3+.AR32UQ41UQ3/1.4	DO:4 DO 4 1.1	-QN3.1_Q	L230 Model Clamps (RST)
=V2AR32UQ41UQ3+.AR32UQ41UQ3/1.4	DO:5 DO 5 1.2	-QN3.2_Q	L230 Model Clamps (SET)
=V2AR32UQ41UQ4+.AR32UQ41UQ4/1.4	DO:6 DO 6 2.1	-QN4.1_Q	L290 Model Shot Pin (RST)
=V2AR32UQ41UQ4+.AR32UQ41UQ4/1.4	DO:7 DO 7 2.2	-QN4.2_Q	L290 Model Shot Pin (SET)

-KF1.23
=V2AR32UQ41UQ5+.AR32UQ41UQ5/1.3
=V2AR32UQ41UQ6+.AR32UQ41UQ6/1.3

FESTO

=V2AR32UQ41UQ5+.AR32UQ41UQ5/1.4	DO:8 DO 8 1.1	-QN5.1_Q	L290 Model Clamps (RST)
=V2AR32UQ41UQ5+.AR32UQ41UQ5/1.4	DO:9 DO 9 1.2	-QN5.2_Q	L290 Model Clamps (SET)
=V2AR32UQ41UQ6+.AR32UQ41UQ6/1.4	DO:10 DO 10 2.1	-QN6.1_Q	L320 Model Shot Pin (RST)
=V2AR32UQ41UQ6+.AR32UQ41UQ6/1.4	DO:11 DO 11 2.2	-QN6.2_Q	L320 Model Shot Pin (SET)

-KF1.24
=V2AR32UQ41UQ7+.AR32UQ41UQ7/1.3
=V2AR32UQ41UQ8+.AR32UQ41UQ8/1.3

FESTO

=V2AR32UQ41UQ7+.AR32UQ41UQ7/1.4	DO:12 DO 12 1.1	-QN7.1_Q	L320 Model Clamps (RST)
=V2AR32UQ41UQ7+.AR32UQ41UQ7/1.4	DO:13 DO 13 1.2	-QN7.2_Q	L320 Model Clamps (SET)
=V2AR32UQ41UQ8+.AR32UQ41UQ8/1.4	DO:14 DO 14 2.1	-QN8.1_Q	Spare (RST)
=V2AR32UQ41UQ8+.AR32UQ41UQ8/1.4	DO:15 DO 15 2.2	-QN8.2_Q	Spare (SET)

=V2AR32UQ41UQ1+.AR32UQ41UQ1/1

			Date	1/24/2023	Volvo Trucks North America	Valiant TMS	CONNECTING MOD. FOR FESTO DQ	Drawing name: =2V01&EFS-EL_KF1	= V2AR32UQ41KF1
			Ed.	MKLEPADLO					+ V2AR32UQ41
			Appr		P6700 Framing - Cell 2V01, KF1			Document type: EFS	Project nr: 22-16152
Modification	Date	Name	Original		Replacement of	Replaced by	Scale 1:1		Page 5 / 1630

0	1	2	3	4	5	6	7	8	9

=V2AR32UQ41KF1
+.AR32UQ41

-KF1.21
=V2AR32UQ41KF1+V2AR32UQ41/5.1

Common Shot Pin (RST)
=V2AR32UQ41KF1
+V2AR32UQ41
-QN1.1_Q
=V2AR32UQ41KF1
+V2AR32UQ41/5.3
DO:0

Common Shot Pin (SET)
=V2AR32UQ41KF1
+V2AR32UQ41
-QN1.2_Q
=V2AR32UQ41KF1
+V2AR32UQ41/5.3
DO:1

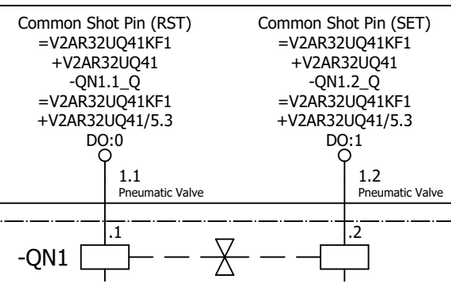

=V2AR32UQ41KF1+V2AR32UQ41/2.1
+.AR32UQ41UQ1.1-W1

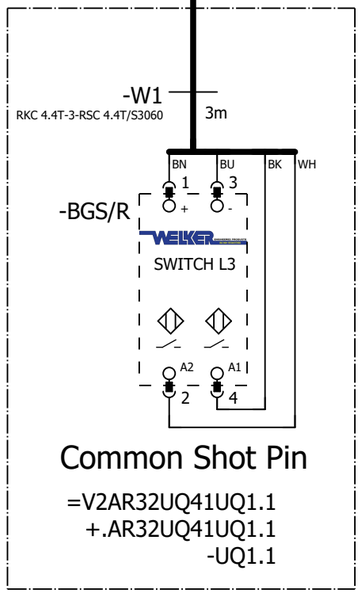

Common Shot Pin

=V2AR32UQ41UQ1.1
+.AR32UQ41UQ1.1
-UQ1.1

=V2AR32UQ41
-UQ1.1-BGS/R
Common
Shot Pin

=V2AR32UQ41KF1+V2AR32UQ41/5

=V2AR32UQ41UQ2+.AR32UQ41UQ2/1

			Date	1/24/2023	Volvo Trucks North America	Valiant TMS	FESTO DQ CONNECTION QN1	Drawing name: =2V01&EFS-EL_KF1	= V2AR32UQ41UQ1
			Ed.	MKLEPADLO					+ V2AR32UQ41UQ1
			Appr		P6700 Framing - Cell 2V01, KF1			Document type: EFS	Project nr: 22-16152
Modification	Date	Name	Original		Replacement of / Replaced by	Scale 1:1			Page 1 / 1630

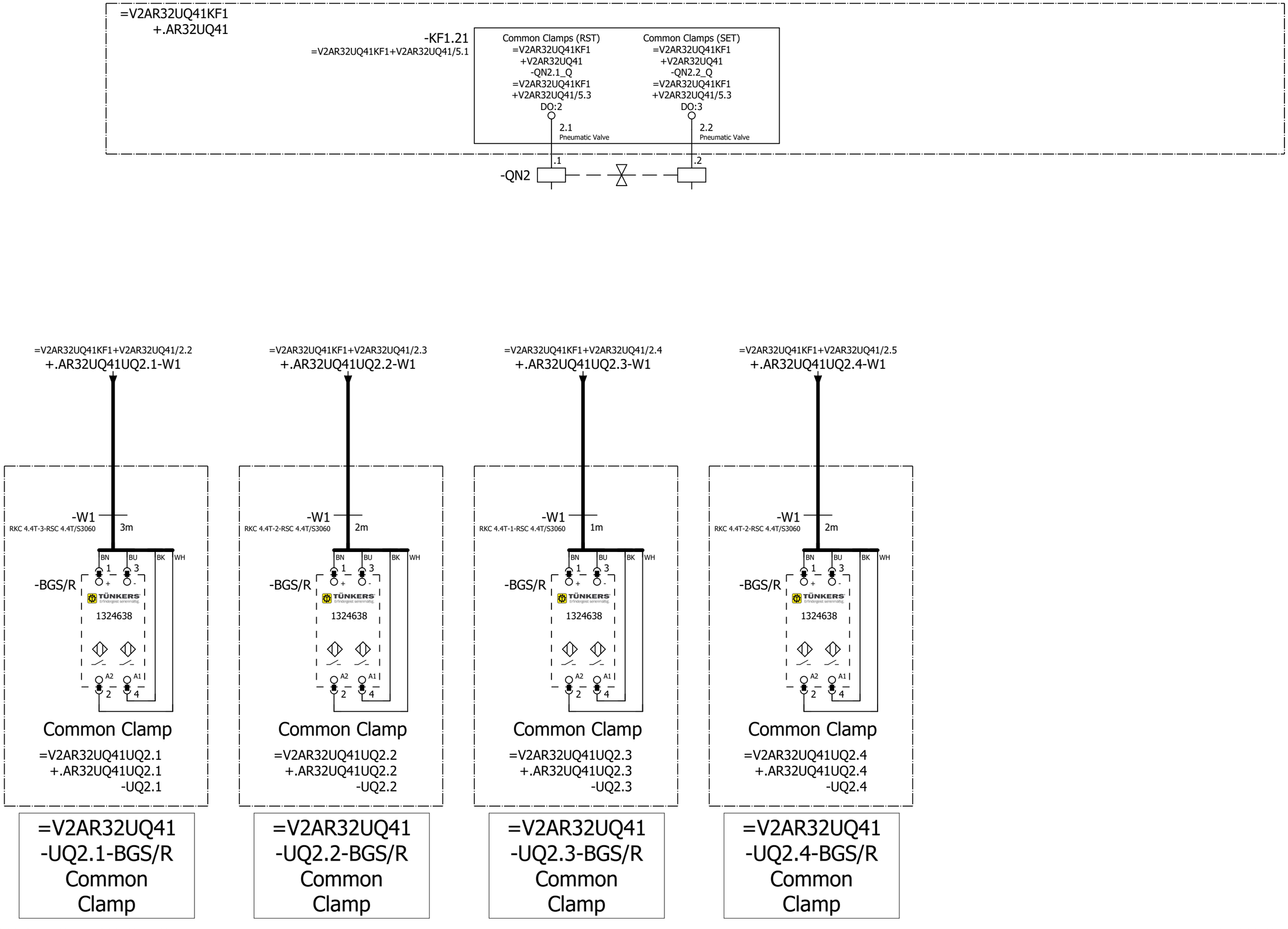

=V2AR32UQ41UQ1+.AR32UQ41UQ1/1

=V2AR32UQ41UQ3+.AR32UQ41UQ3/1

			Date	1/24/2023	Volvo Trucks North America	Valiant TMS	FESTO DQ CONNECTION QN2	Drawing name: =2V01&EFS-EL_KF1	= V2AR32UQ41UQ2 + V2AR32UQ41UQ2
			Ed.	MKLEPADLO	P6700 Framing - Cell 2V01, KF1				
			Appr					Document type: EFS	Project nr: 22-16152
Modification	Date	Name	Original		Replacement of / Replaced by	Scale 1:1			Page 1 / 1630

0	1	2	3	4	5	6	7	8	9

=V2AR32UQ41KF1
+.AR32UQ41

-KF1.22
=V2AR32UQ41KF1+V2AR32UQ41/5.1

L230 Model Clamps (RST)
=V2AR32UQ41KF1
+V2AR32UQ41
-QN3.1_Q
=V2AR32UQ41KF1
+V2AR32UQ41/5.3
DO:4

L230 Model Clamps (SET)
=V2AR32UQ41KF1
+V2AR32UQ41
-QN3.2_Q
=V2AR32UQ41KF1
+V2AR32UQ41/5.3
DO:5

1.1 Pneumatic Valve
1.2 Pneumatic Valve

-QN3 .1 .2

=V2AR32UQ41KF1+V2AR32UQ41/2.6
+.AR32UQ41UQ3.1-W1

=V2AR32UQ41KF1+V2AR32UQ41/2.8
+.AR32UQ41UQ3.2-W1

=V2AR32UQ41KF1+V2AR32UQ41/2.9
+.AR32UQ41UQ3.3-W1

-W1 2m
RKC 4.4T-2-RSC 4.4T/S3060

BN BU BK WH

-BGS/R
1 3
+ -
TÜNKERS
1324638
A2 A1
2 4

L230 Model Clamp
=V2AR32UQ41UQ3.1
+.AR32UQ41UQ3.1
-UQ3.1

L230 Model Clamp
=V2AR32UQ41UQ3.2
+.AR32UQ41UQ3.2
-UQ3.2

L230 Model Clamp
=V2AR32UQ41UQ3.3
+.AR32UQ41UQ3.3
-UQ3.3

=V2AR32UQ41
-UQ3.1-BGS/R
L230 Model
Clamp

=V2AR32UQ41
-UQ3.2-BGS/R
L230 Model
Clamp

=V2AR32UQ41
-UQ3.3-BGS/R
L230 Model
Clamp

=V2AR32UQ41UQ2+.AR32UQ41UQ2/1

=V2AR32UQ41UQ4+.AR32UQ41UQ4/1

			Date	1/24/2023	Volvo Trucks North America		Valiant TMS	FESTO DQ CONNECTION QN3	Drawing name: =2V01&EFS-EL_KF1	= V2AR32UQ41UQ3
			Ed.	MKLEPADLO						+ V2AR32UQ41UQ3
			Appr		P6700 Framing - Cell 2V01, KF1				Document type: EFS	Project nr: 22-16152
Modification	Date	Name	Original		Replacement of	Replaced by	Scale 1:1			Page 1 / 1630

0	1	2	3	4	5	6	7	8	9

=V2AR32UQ41KF1
+.AR32UQ41

-KF1.22
=V2AR32UQ41KF1+V2AR32UQ41/5.1

L290 Model Shot Pin (RST)	L290 Model Shot Pin (SET)
=V2AR32UQ41KF1	=V2AR32UQ41KF1
+V2AR32UQ41	+V2AR32UQ41
-QN4.1_Q	-QN4.2_Q
=V2AR32UQ41KF1	=V2AR32UQ41KF1
+V2AR32UQ41/5.3	+V2AR32UQ41/5.3
DO:6	DO:7

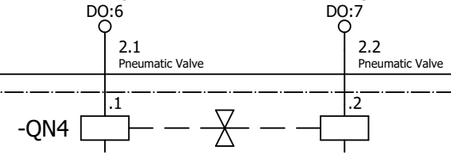

=V2AR32UQ41KF1+V2AR32UQ41/3.1
+.AR32UQ41UQ4.1-W1

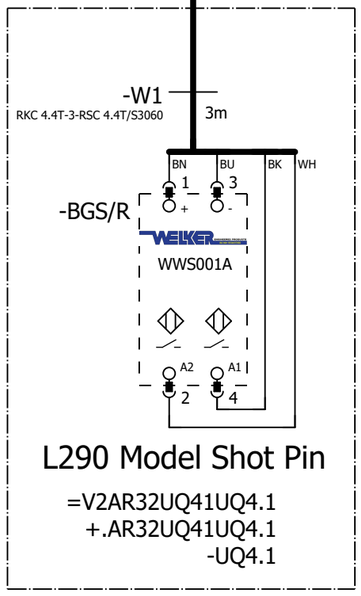

L290 Model Shot Pin

=V2AR32UQ41UQ4.1
+.AR32UQ41UQ4.1
-UQ4.1

=V2AR32UQ41 -UQ4.1-BGS/R L290 Model Shot Pin

=V2AR32UQ41UQ3+.AR32UQ41UQ3/1

=V2AR32UQ41UQ5+.AR32UQ41UQ5/1

			Date	1/24/2023	Volvo Trucks North America		Valiant TMS	FESTO DQ CONNECTION QN4	Drawing name: =2V01&EFS-EL_KF1	= V2AR32UQ41UQ4
			Ed.	MKLEPADLO						+ V2AR32UQ41UQ4
			Appr		P6700 Framing - Cell 2V01, KF1				Document type: EFS	Project nr: 22-16152
Modification	Date	Name	Original		Replacement of	Replaced by	Scale 1:1			Page 1 / 1630

0	1	2	3	4	5	6	7	8	9

=V2AR32UQ41KF1
+.AR32UQ41

-KF1.23
=V2AR32UQ41KF1+V2AR32UQ41/5.1

L290 Model Clamps (RST)
=V2AR32UQ41KF1
+V2AR32UQ41
-QN5.1_Q
=V2AR32UQ41KF1
+V2AR32UQ41/5.3
DO:8

L290 Model Clamps (SET)
=V2AR32UQ41KF1
+V2AR32UQ41
-QN5.2_Q
=V2AR32UQ41KF1
+V2AR32UQ41/5.3
DO:9

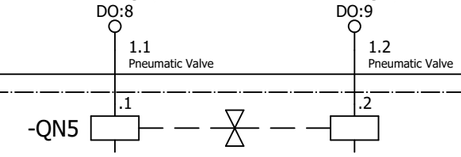

=V2AR32UQ41KF1+V2AR32UQ41/3.2
+.AR32UQ41UQ5.1-W1

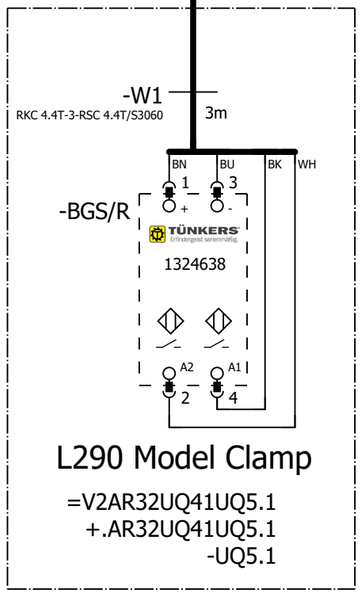

L290 Model Clamp
=V2AR32UQ41UQ5.1
+.AR32UQ41UQ5.1
-UQ5.1

=V2AR32UQ41KF1+V2AR32UQ41/3.3
+.AR32UQ41UQ5.2-W1

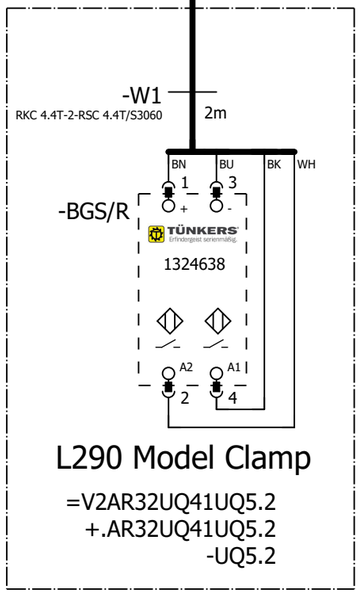

L290 Model Clamp
=V2AR32UQ41UQ5.2
+.AR32UQ41UQ5.2
-UQ5.2

=V2AR32UQ41
-UQ5.1-BGS/R
L290 Model
Clamp

=V2AR32UQ41
-UQ5.2-BGS/R
L290 Model
Clamp

=V2AR32UQ41UQ4+.AR32UQ41UQ4/1

=V2AR32UQ41UQ6+.AR32UQ41UQ6/1

			Date	1/24/2023	Volvo Trucks North America		Valiant TMS	FESTO DQ CONNECTION QN5	Drawing name: =2V01&EFS-EL_KF1	= V2AR32UQ41UQ5
			Ed.	MKLEPADLO						+ V2AR32UQ41UQ5
			Appr		P6700 Framing - Cell 2V01, KF1				Document type: EFS	Project nr: 22-16152
Modification	Date	Name	Original		Replacement of	Replaced by	Scale 1:1			Page 1 / 1630

0	1	2	3	4	5	6	7	8	9

=V2AR32UQ41KF1
+.AR32UQ41

-KF1.23
=V2AR32UQ41KF1+V2AR32UQ41/5.1

L320 Model Shot Pin (RST)	L320 Model Shot Pin (SET)
=V2AR32UQ41KF1	=V2AR32UQ41KF1
+V2AR32UQ41	+V2AR32UQ41
-QN6.1_Q	-QN6.2_Q
=V2AR32UQ41KF1	=V2AR32UQ41KF1
+V2AR32UQ41/5.3	+V2AR32UQ41/5.3
DO:10	DO:11
2.1 Pneumatic Valve	2.2 Pneumatic Valve

-QN6 .1 .2

=V2AR32UQ41KF1+V2AR32UQ41/3.4
+.AR32UQ41UQ6.1-W1

-W1
RKC 4.4T-3-RSC 4.4T/S3060
3m

-BGS/R
BN 1 +
BU 3 -
BK
WH
WELKER
WWS001A
A2 2
A1 4

L320 Model Shot Pin

=V2AR32UQ41UQ6.1
+.AR32UQ41UQ6.1
-UQ6.1

=V2AR32UQ41
-UQ6.1-BGS/R
L320 Model
Shot Pin

=V2AR32UQ41UQ5+.AR32UQ41UQ5/1

=V2AR32UQ41UQ7+.AR32UQ41UQ7/1

			Date	1/24/2023	Volvo Trucks North America	Valiant TMS	FESTO DQ CONNECTION QN6	Drawing name: =2V01&EFS-EL_KF1	= V2AR32UQ41UQ6
			Ed.	MKLEPADLO					+ V2AR32UQ41UQ6
			Appr		P6700 Framing - Cell 2V01, KF1			Document type: EFS	Project nr: 22-16152
Modification	Date	Name	Original		Replacement of / Replaced by	Scale 1:1			Page 1 / 1630

0	1	2	3	4	5	6	7	8	9

=V2AR32UQ41KF1
+.AR32UQ41

-KF1.24
=V2AR32UQ41KF1+V2AR32UQ41/5.1

L320 Model Clamps (RST)	L320 Model Clamps (SET)
=V2AR32UQ41KF1	=V2AR32UQ41KF1
+V2AR32UQ41	+V2AR32UQ41
-QN7.1_Q	-QN7.2_Q
=V2AR32UQ41KF1	=V2AR32UQ41KF1
+V2AR32UQ41/5.3	+V2AR32UQ41/5.3
DO:12	DO:13
1.1 Pneumatic Valve	1.2 Pneumatic Valve

-QN7 .1 .2

=V2AR32UQ41KF1+V2AR32UQ41/3.5
+.AR32UQ41UQ7.1-W1

-W1
RKC 4.4T-3-RSC 4.4T/S3060
3m

BN BU BK WH
1 3
-BGS/R
TÜNKERS
1324638
A2 A1
2 4

L320 Model Clamp

=V2AR32UQ41UQ7.1
+.AR32UQ41UQ7.1
-UQ7.1

=V2AR32UQ41
-UQ7.1-BGS/R
L320 Model
Clamp

=V2AR32UQ41KF1+V2AR32UQ41/3.6
+.AR32UQ41UQ7.2-W1

-W1
RKC 4.4T-3-RSC 4.4T/S3060
3m

BN BU BK WH
1 3
-BGS/R
TÜNKERS
1324638
A2 A1
2 4

L320 Model Clamp

=V2AR32UQ41UQ7.2
+.AR32UQ41UQ7.2
-UQ7.2

=V2AR32UQ41
-UQ7.2-BGS/R
L320 Model
Clamp

=V2AR32UQ41UQ6+.AR32UQ41UQ6/1

=V2AR32UQ41UQ8+.AR32UQ41UQ8/1

			Date	1/24/2023	Volvo Trucks North America		Valiant TMS	FESTO DQ CONNECTION QN7	Drawing name: =2V01&EFS-EL_KF1
			Ed.	MKLEPADLO					= V2AR32UQ41UQ7
			Appr		P6700 Framing - Cell 2V01, KF1				+ V2AR32UQ41UQ7
Modification	Date	Name	Original		Replacement of	Replaced by	Scale 1:1		Document type: EFS / Project nr: 22-16152 / Page 1 / 1630

0	1	2	3	4	5	6	7	8	9

=V2AR32UQ41KF1
+.AR32UQ41

-KF1.24
=V2AR32UQ41KF1+V2AR32UQ41/5.1

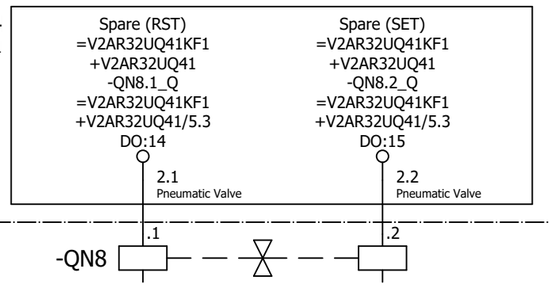

=V2AR32UQ41UQ7+.AR32UQ41UQ7/1

=V2AR32UQ42BG0+.AR32UQ42/1

			Date	1/24/2023	Volvo Trucks North America	Valiant TMS	FESTO DQ CONNECTION QN8	Drawing name: =2V01&EFS-EL_KF1	= V2AR32UQ41UQ8
			Ed.	MKLEPADLO					+ V2AR32UQ41UQ8
			Appr		P6700 Framing - Cell 2V01, KF1			Document type: EFS / Project nr: 22-16152	Page 1
Modification	Date	Name	Original		Replacement of / Replaced by	Scale 1:1			1630

0	1	2	3	4	5	6	7	8	9

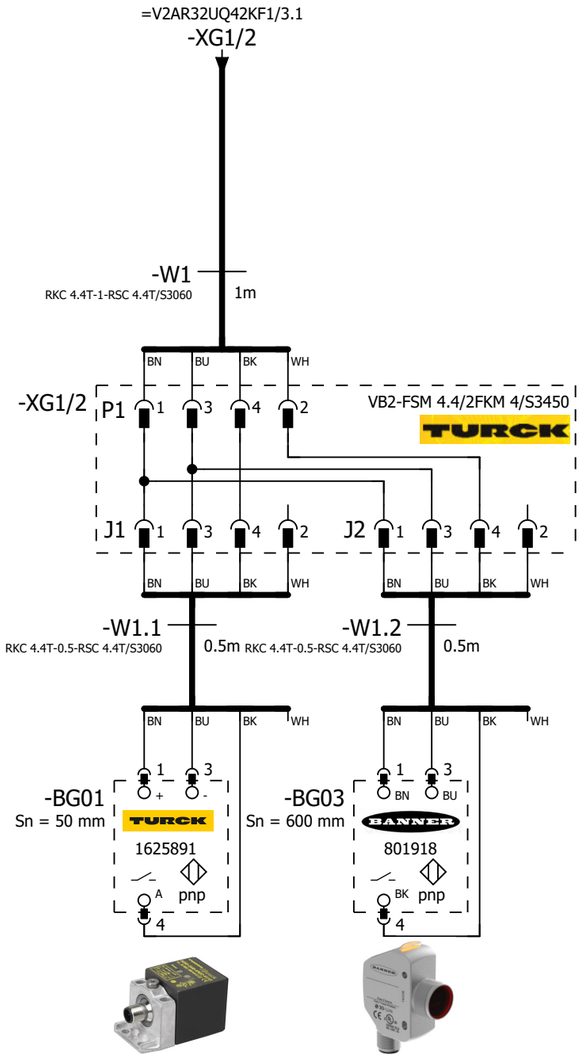

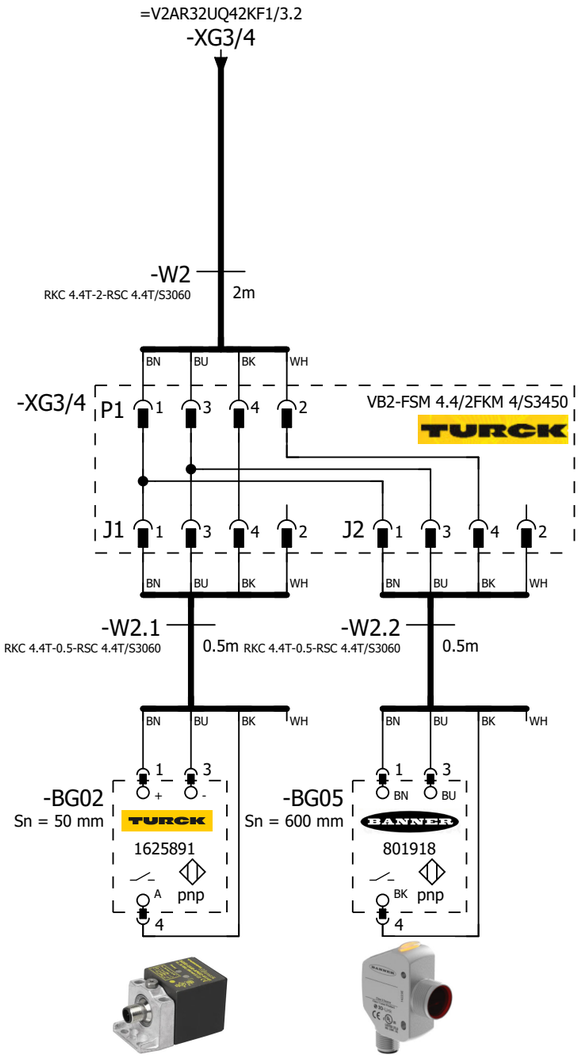

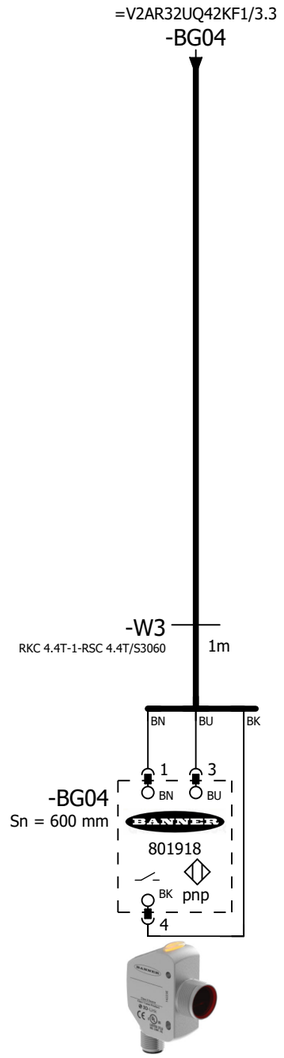

=V2AR32UQ42 -BG01 Common Part Present	=V2AR32UQ42 -BG03 Common Position Control	=V2AR32UQ42 -BG02 Common Part Present	=V2AR32UQ42 -BG05 Common Position Control	=V2AR32UQ42 -BG04 Common Position Control

=V2AR32UQ41UQ8+.AR32UQ41UQ8/1

=V2AR32UQ42KF1/1

			Date	1/24/2023	Volvo Trucks North America	Valiant TMS	SENSORS	Drawing name: =2V01&EFS-EL_KF1	= V2AR32UQ42BG0
			Ed.	MKLEPADLO					+ V2AR32UQ42
			Appr		P6700 Framing - Cell 2V01, KF1			Document type: EFS	Project nr: 22-16152
Modification	Date	Name	Original		Replacement of / Replaced by	Scale 1:1			Page 1 / 1630

0	1	2	3	4	5	6	7	8	9

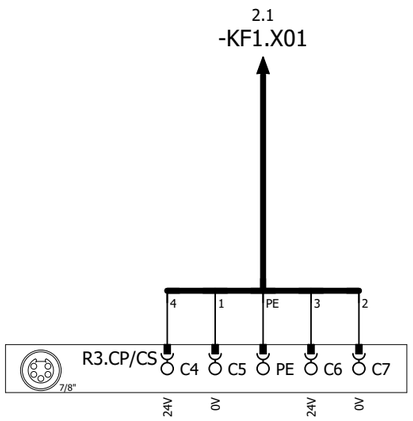

DC 24V (OUT)

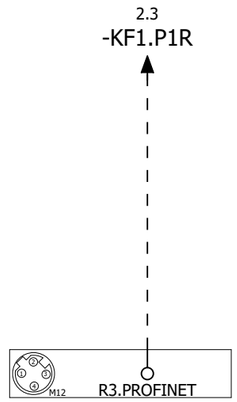

R3.ETHERNET

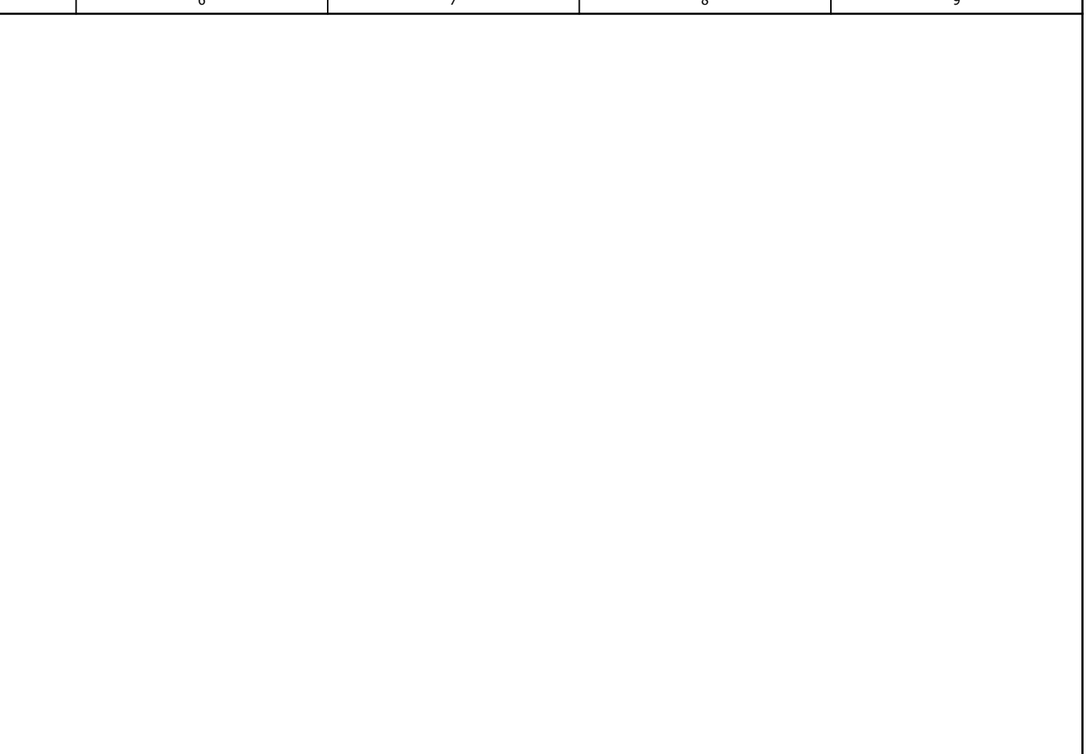

=V2AR32UQ42BG0/1

2

			Date	1/24/2023	Volvo Trucks North America	Valiant TMS	24VDC SUPPLY AND PROFINET HANDLING MODULE	Drawing name: =2V01&EFS-EL_KF1	= V2AR32UQ42KF1
			Ed.	MKLEPADLO					+ V2AR32UQ42
			Appr		P6700 Framing - Cell 2V01, KF1	Scale 1:1		Document type: EFS	Project nr: 22-16152
Modification	Date	Name	Original		Replacement of / Replaced by				Page 1 / 1630

0	1	2	3	4	5	6	7	8	9

1.3 / -KF1.X01

-W1
RSM RKM 56-2M/S3059
2m

1.5 / -KF1.P1R

-WF1
PROFINET Cable
6XV1840-3AH10

-KF1

X20 7/8" 1 2 PE 3 4 5
0V_VAL / OUT
0V_EL / SEN
FE
24V_EL / SEN
24V_VAL / OUT

ON
OFF
1 2 1 2

M12 -TP1
M12 -TP2

FESTO
Bus node + Interlinking block
548755 + 550208

DI:0	DI 0 X1:4	V2AR32UQ42UQ1.1-BGR	Common Clamp (RESET)
DI:1	DI 1 X1:2	V2AR32UQ42UQ1.1-BGS	Common Clamp (SET)
DI:2	DI 2 X2:4	V2AR32UQ42UQ1.2-BGR	Common Clamp (RESET)
DI:3	DI 3 X2:2	V2AR32UQ42UQ1.2-BGS	Common Clamp (SET)
DI:4	DI 4 X3:4	V2AR32UQ42UQ2.1-BGR	L150 Model Clamp (RESET)
DI:5	DI 5 X3:2	V2AR32UQ42UQ2.1-BGS	L150 Model Clamp (SET)
DI:6	DI 6 X4:4	V2AR32UQ42UQ2.2-BGR	L150 Model Clamp (RESET)
DI:7	DI 7 X4:2	V2AR32UQ42UQ2.2-BGS	L150 Model Clamp (SET)
DI:8	DI 8 X5:4	DI:8	Spare
DI:9	DI 9 X5:2	DI:9	Spare
DI:10	DI 10 X6:4	DI:10	Spare
DI:11	DI 11 X6:2	DI:11	Spare
DI:12	DI 12 X7:4	DI:12	Spare
DI:13	DI 13 X7:2	DI:13	Spare
DI:14	DI 14 X8:4	DI:14	Spare
DI:15	DI 15 X8:2	DI:15	Spare

-KF1.11

FESTO
CPX-M-AB-8-M12X2-5POL
549335

X1 X2 X3 X4 X5 X6 X7 X8
M12
24V | DI 1 | 0V | DI 0 | FE
24V | DI 3 | 0V | DI 2 | FE
24V | DI 5 | 0V | DI 4 | FE
24V | DI 7 | 0V | DI 6 | FE
24V | DI 9 | 0V | DI 8 | FE
24V | DI 11 | 0V | DI 10 | FE
24V | DI 13 | 0V | DI 12 | FE
24V | DI 15 | 0V | DI 14 | FE
BN WH BU BK

+.AR32UQ42UQ1.1-W1
=V2AR32UQ42UQ1+.AR32UQ42UQ1/1.1

+.AR32UQ42UQ1.2-W1
=V2AR32UQ42UQ1+.AR32UQ42UQ1/1.2

+.AR32UQ42UQ2.1-W1
=V2AR32UQ42UQ2+.AR32UQ42UQ2/1.1

+.AR32UQ42UQ2.2-W1
=V2AR32UQ42UQ2+.AR32UQ42UQ2/1.2

1 3

			Date	1/24/2023	Volvo Trucks North America	Valiant TMS	CONNECTING MOD. FOR MPA MANIFOLD	Drawing name: =2V01&EFS-EL_KF1	= V2AR32UQ42KF1
			Ed.	MKLEPADLO					+ V2AR32UQ42
			Appr		P6700 Framing - Cell 2V01, KF1	Scale 1:1		Document type: EFS	Project nr: 22-16152
Modification	Date	Name	Original		Replacement of	Replaced by			Page 2 / 1630

0	1	2	3	4	5	6	7	8	9

DI:16	DI 0 X1:4	V2AR32UQ42-BG01	Common Part Present
DI:17	DI 1 X1:2	V2AR32UQ42-BG03	Common Position Control
DI:18	DI 2 X2:4	V2AR32UQ42-BG02	Common Part Present
DI:19	DI 3 X2:2	V2AR32UQ42-BG05	Common Position Control
DI:20	DI 4 X3:4	V2AR32UQ42-BG04	Common Position Control
DI:21	DI 5 X3:2	DI:21	Spare
DI:22	DI 6 X4:4	DI:22	Spare
DI:23	DI 7 X4:2	DI:23	Spare
DI:24	DI 8 X5:4	DI:24	Spare
DI:25	DI 9 X5:2	DI:25	Spare
DI:26	DI 10 X6:4	DI:26	Spare
DI:27	DI 11 X6:2	DI:27	Spare
DI:28	DI 12 X7:4	DI:28	Spare
DI:29	DI 13 X7:2	DI:29	Spare
DI:30	DI 14 X8:4	DI:30	Spare
DI:31	DI 15 X8:2	DI:31	Spare

-KF1.12

FESTO

CPX-M-AB-8-M12X2-5POL

549335

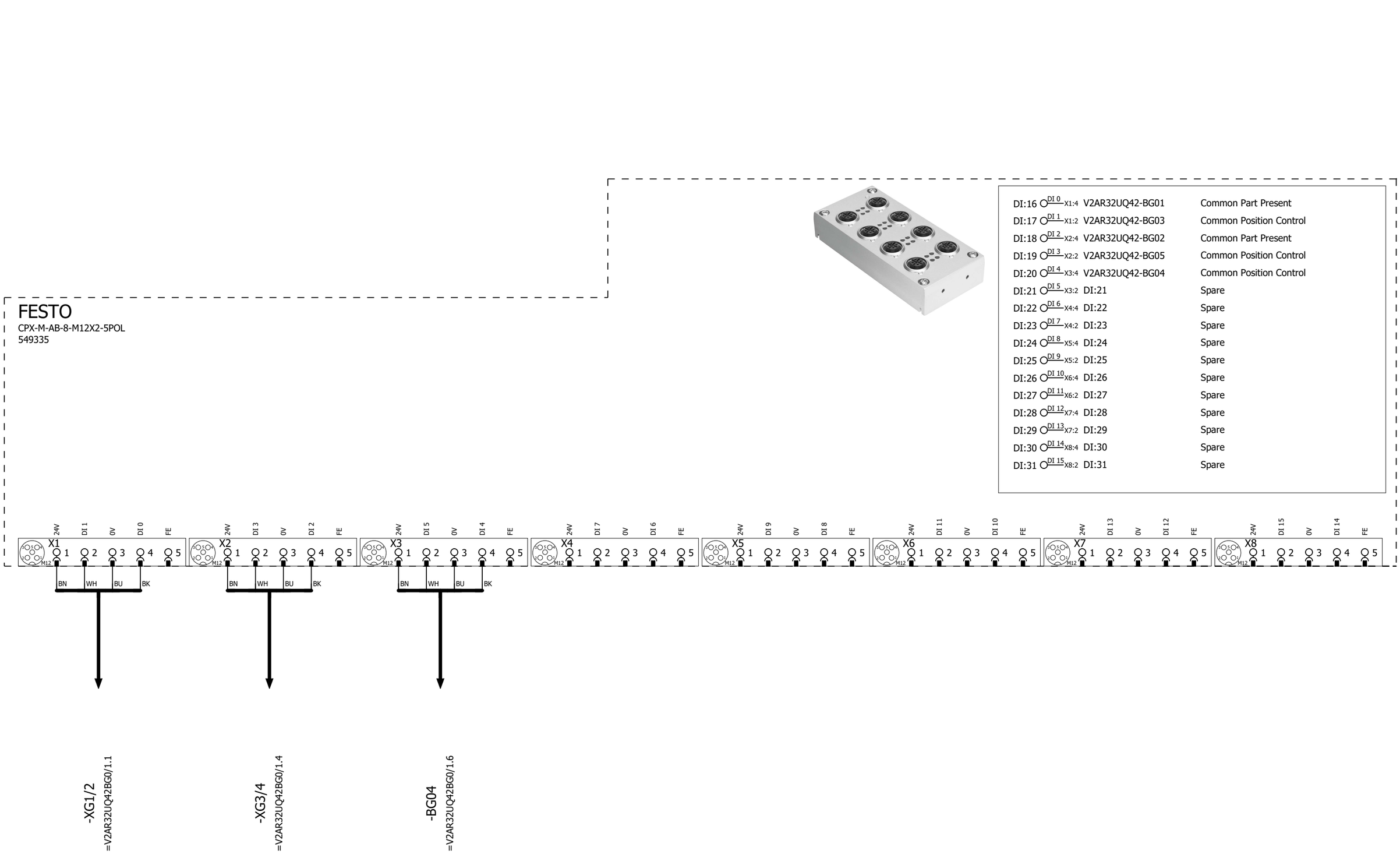

2

4

			Date	1/24/2023	Volvo Trucks North America		Valiant TMS	I/O MOD. DI16 (8 x M12) FOR MPA	Drawing name: =2V01&EFS-EL_KF1	= V2AR32UQ42KF1
			Ed.	MKLEPADLO						+ V2AR32UQ42
			Appr		P6700 Framing - Cell 2V01, KF1				Document type: EFS	Project nr: 22-16152
Modification	Date	Name	Original		Replacement of	Replaced by	Scale 1:1			Page 3 / 1630

0	1	2	3	4	5	6	7	8	9

-KF1 -KF1.11 -KF1.12 -KF1.20 -KF1.21 -KF1.22

M1

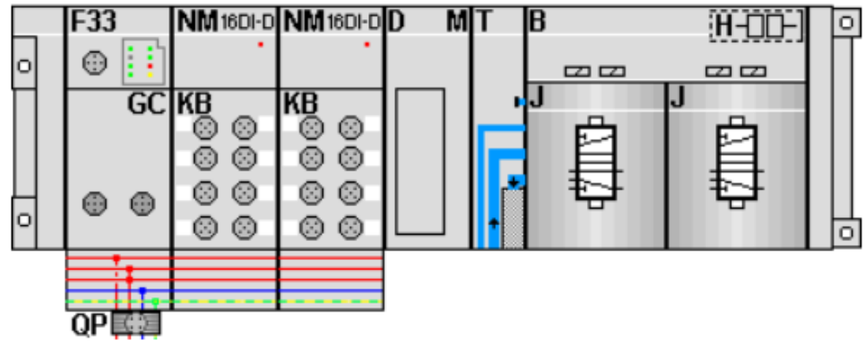

-KF1.21
=V2AR32UQ42UQ1+.AR32UQ42UQ1/1.3
=V2AR32UQ42UQ2+.AR32UQ42UQ2/1.3

FESTO

=V2AR32UQ42UQ1+.AR32UQ42UQ1/1.4	DO:0 DO 0 1.1	-QN1.1_Q	Common Clamps (RST)
=V2AR32UQ42UQ1+.AR32UQ42UQ1/1.4	DO:1 DO 1 1.2	-QN1.2_Q	Common Clamps (SET)
=V2AR32UQ42UQ2+.AR32UQ42UQ2/1.4	DO:2 DO 2 2.1	-QN2.1_Q	L150 Model Clamps (RST)
=V2AR32UQ42UQ2+.AR32UQ42UQ2/1.4	DO:3 DO 3 2.2	-QN2.2_Q	L150 Model Clamps (SET)

3

=V2AR32UQ42UQ1+.AR32UQ42UQ1/1

			Date	1/24/2023	Volvo Trucks North America	Valiant TMS	CONNECTING MOD. FOR FESTO DQ	Drawing name: =2V01&EFS-EL_KF1	= V2AR32UQ42KF1
			Ed.	MKLEPADLO					+ V2AR32UQ42
			Appr		P6700 Framing - Cell 2V01, KF1			Document type: EFS / Project nr: 22-16152	Page 4 / 1630
Modification	Date	Name	Original		Replacement of / Replaced by	Scale 1:1			

0	1	2	3	4	5	6	7	8	9

=V2AR32UQ42KF1
+.AR32UQ42

-KF1.21
=V2AR32UQ42KF1+V2AR32UQ42/4.1

Common Clamps (RST)
=V2AR32UQ42KF1
+V2AR32UQ42
-QN1.1_Q
=V2AR32UQ42KF1
+V2AR32UQ42/4.3
DO:0

Common Clamps (SET)
=V2AR32UQ42KF1
+V2AR32UQ42
-QN1.2_Q
=V2AR32UQ42KF1
+V2AR32UQ42/4.3
DO:1

1.1 Pneumatic Valve

1.2 Pneumatic Valve

-QN1 .1 .2

=V2AR32UQ42KF1+V2AR32UQ42/2.1
+.AR32UQ42UQ1.1-W1

=V2AR32UQ42KF1+V2AR32UQ42/2.2
+.AR32UQ42UQ1.2-W1

-W1 2m
RKC 4.4T-2-RSC 4.4T/S3060

-W1 2m
RKC 4.4T-2-RSC 4.4T/S3060

-BGS/R
BN BU BK WH
1 3
TÜNKERS
1324638
A2 A1
2 4

-BGS/R
BN BU BK WH
1 3
TÜNKERS
1324638
A2 A1
2 4

Common Clamp
=V2AR32UQ42UQ1.1
+.AR32UQ42UQ1.1
-UQ1.1

Common Clamp
=V2AR32UQ42UQ1.2
+.AR32UQ42UQ1.2
-UQ1.2

=V2AR32UQ42
-UQ1.1-BGS/R
Common
Clamp

=V2AR32UQ42
-UQ1.2-BGS/R
Common
Clamp

=V2AR32UQ42KF1+V2AR32UQ42/4

=V2AR32UQ42UQ2+.AR32UQ42UQ2/1

			Date	1/24/2023	Volvo Trucks North America		Valiant TMS	FESTO DQ CONNECTION QN1	Drawing name: =2V01&EFS-EL_KF1	= V2AR32UQ42UQ1
			Ed.	MKLEPADLO						+ V2AR32UQ42UQ1
			Appr		P6700 Framing - Cell 2V01, KF1				Document type: EFS	Project nr: 22-16152
Modification	Date	Name	Original		Replacement of	Replaced by	Scale 1:1			Page 1 / 1630

0	1	2	3	4	5	6	7	8	9

=V2AR32UQ42KF1
+.AR32UQ42

-KF1.21
=V2AR32UQ42KF1+V2AR32UQ42/4.1

L150 Model Clamps (RST)
=V2AR32UQ42KF1
+V2AR32UQ42
-QN2.1_Q
=V2AR32UQ42KF1
+V2AR32UQ42/4.3
DO:2

L150 Model Clamps (SET)
=V2AR32UQ42KF1
+V2AR32UQ42
-QN2.2_Q
=V2AR32UQ42KF1
+V2AR32UQ42/4.3
DO:3

2.1 Pneumatic Valve

2.2 Pneumatic Valve

-QN2 .1 .2

=V2AR32UQ42KF1+V2AR32UQ42/2.3
+.AR32UQ42UQ2.1-W1

=V2AR32UQ42KF1+V2AR32UQ42/2.4
+.AR32UQ42UQ2.2-W1

-W1 2m
RKC 4.4T-2-RSC 4.4T/S3060
BN BU BK WH
1 3
-BGS/R
TÜNKERS
1324638
A2 A1
2 4

L150 Model Clamp
=V2AR32UQ42UQ2.1
+.AR32UQ42UQ2.1
-UQ2.1

L150 Model Clamp
=V2AR32UQ42UQ2.2
+.AR32UQ42UQ2.2
-UQ2.2

=V2AR32UQ42
-UQ2.1-BGS/R
L150 Model
Clamp

=V2AR32UQ42
-UQ2.2-BGS/R
L150 Model
Clamp

=V2AR32UQ42UQ1+.AR32UQ42UQ1/1

=V2AR32WC1+.AR32UC01/1

			Date	1/24/2023	Volvo Trucks North America		Valiant TMS	FESTO DQ CONNECTION QN2	Drawing name: =2V01&EFS-EL_KF1	= V2AR32UQ42UQ2
			Ed.	MKLEPADLO						+ V2AR32UQ42UQ2
			Appr		P6700 Framing - Cell 2V01, KF1				Document type: EFS	Project nr: 22-16152
Modification	Date	Name	Original		Replacement of	Replaced by	Scale 1:1			Page 1 / 1630

0	1	2	3	4	5	6	7	8	9

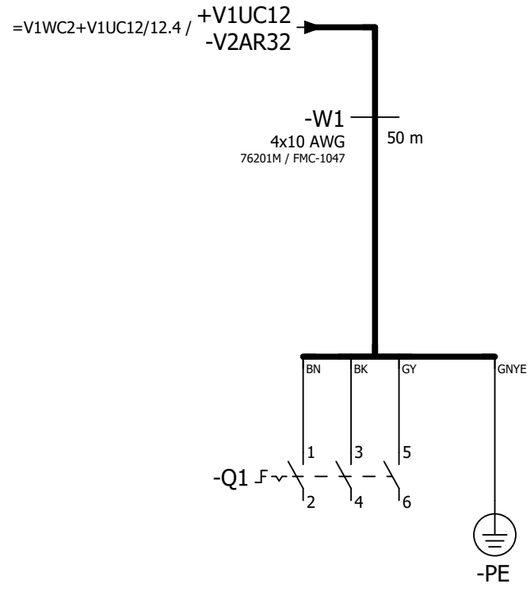

=V2AR32UQ42UQ2+.AR32UQ42UQ2/1

=V2AR32XQ41KF1+.AR32XQ41/1

			Date	1/24/2023	Volvo Trucks North America		Valiant TMS	Incoming power	Drawing name: =2V01&EFS-EL_KF1	= V2AR32WC1
			Ed.	MKLEPADLO						+ V2AR32UC01
			Appr		P6700 Framing - Cell 2V01, KF1				Document type: EFS	Project nr: 22-16152
Modification	Date	Name	Original		Replacement of	Replaced by	Scale 1:1			Page 1 / 1630

0	1	2	3	4	5	6	7	8	9

=V1AR31XQ41WC4+V1AR31XQ41UC01/1.6 / -W1.2

-W1
RSM RKM 56-30M/S3059
30m

/ -KF1
Robot Media Panel

-KF1
PROFINET Cable
6XV1840-3AH10

-KF1
/1.3

X20 M12, 7/8" 1 2 PE 4 5
0V_VAL / OUT
0V_EL / SEN
FE
24V_EL / SEN
24V_VAL / OUT

ON
OFF
1 2 1 2

M12 -TP1
M12 -TP2

FESTO
Bus node + Interlinking block
548755 + 550208

DI:96	DI 0 X1:4	V2AR32XQ41UQ1.1-BGR	Cylinder (RESET)
DI:97	DI 1 X1:2	V2AR32XQ41UQ1.1-BGS	Cylinder (SET)
DI:98	DI 2 X2:4	DI:98	Spare
DI:99	DI 3 X2:2	DI:99	Spare
DI:100	DI 4 X3:4	DI:100	Spare
DI:101	DI 5 X3:2	DI:101	Spare
DI:102	DI 6 X4:4	DI:102	Spare
DI:103	DI 7 X4:2	DI:103	Spare
DI:104	DI 8 X5:4	DI:104	Spare
DI:105	DI 9 X5:2	DI:105	Spare
DI:106	DI 10 X6:4	DI:106	Spare
DI:107	DI 11 X6:2	DI:107	Spare
DI:108	DI 12 X7:4	DI:108	Spare
DI:109	DI 13 X7:2	DI:109	Spare
DI:110	DI 14 X8:4	DI:110	Spare
DI:111	DI 15 X8:2	DI:111	Spare

-KF1.11

FESTO
CPX-M-AB-8-M12X2-5POL
549335

X1 M12 1 24V 2 DI 1 3 0V 4 DI 0 5 FE
X2 M12 1 24V 2 DI 3 3 0V 4 DI 2 5 FE
X3 M12 1 24V 2 DI 5 3 0V 4 DI 4 5 FE
X4 M12 1 24V 2 DI 7 3 0V 4 DI 6 5 FE
X5 M12 1 24V 2 DI 9 3 0V 4 DI 8 5 FE
X6 M12 1 24V 2 DI 11 3 0V 4 DI 10 5 FE
X7 M12 1 24V 2 DI 13 3 0V 4 DI 12 5 FE
X8 M12 1 24V 2 DI 15 3 0V 4 DI 14 5 FE

BN WH BU BK

+.AR32XQ41UQ1-XG1/2
=V2AR32XQ41UQ1+.AR32XQ41UQ1/1.1

=V2AR32WC1+.AR32UC01/1

			Date	1/24/2023	Volvo Trucks North America	Valiant TMS	CONNECTING MOD. FOR VTSA MANIFOLD	Drawing name: =2V01&EFS-EL_KF1	= V2AR32XQ41KF1
			Ed.	MKLEPADLO					+ V2AR32XQ41
			Appr		P6700 Framing - Cell 2V01, KF1			Document type: EFS	Project nr: 22-16152 / Page 1
Modification	Date	Name	Original		Replacement of / Replaced by	Scale 1:1			1630

-KF1 -KF1.11 -KF1.20 -KF1.21 -KF1.22 -KF1.23

M1

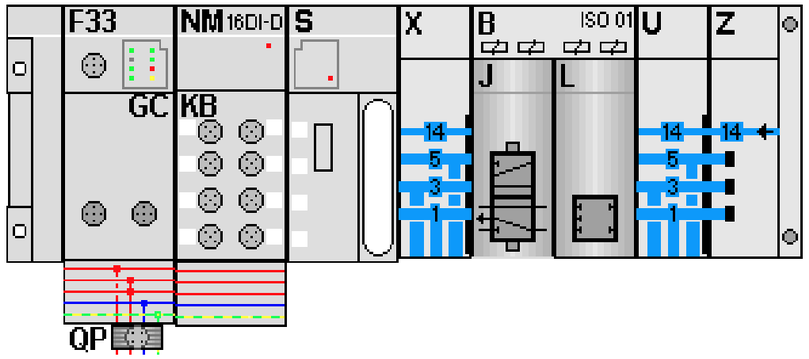

-KF1.21
=V2AR32XQ41UQ1+.AR32XQ41UQ1/1.3

FESTO

=V2AR32XQ41UQ1+.AR32XQ41UQ1/1.4	DO:32 DO 0 1.1	-QN1.1_Q	Cylinder (RST)
=V2AR32XQ41UQ1+.AR32XQ41UQ1/1.4	DO:33 DO 1 1.2	-QN1.2_Q	Cylinder (SET)
	DO:34 DO 2 2.1	-QN2.1_Q	Spare (RST)
	DO:35 DO 3 2.2	-QN2.2_Q	Spare (SET)

			Date	1/24/2023	Volvo Trucks North America	Valiant TMS	CONNECTING MOD. FOR FESTO DQ	Drawing name: =2V01&EFS-EL_KF1	= V2AR32XQ41KF1
			Ed.	MKLEPADLO					+ V2AR32XQ41
			Appr		P6700 Framing - Cell 2V01, KF1			Document type: EFS	Project nr: 22-16152
Modification	Date	Name	Original		Replacement of / Replaced by	Scale 1:1			Page 2 / 1630

0	1	2	3	4	5	6	7	8	9

=V2AR32XQ41KF1
+.AR32XQ41

-KF1.21
=V2AR32XQ41KF1+V2AR32XQ41/2.1

Cylinder (RST)
=V2AR32XQ41KF1
+V2AR32XQ41
-QN1.1_Q
=V2AR32XQ41KF1
+V2AR32XQ41/2.3
DO:32

Cylinder (SET)
=V2AR32XQ41KF1
+V2AR32XQ41
-QN1.2_Q
=V2AR32XQ41KF1
+V2AR32XQ41/2.3
DO:33

1.1 Pneumatic Valve
1.2 Pneumatic Valve

-QN1 .1 .2

=V2AR32XQ41KF1+V2AR32XQ41/1.1
-XG1/2

-W1
RKC 4.4T-0.5-RSC 4.4T/S3060
0.5m
BN BU BK WH

-XG1/2 P1 1 3 4 2
VB2-FSM 4.4/2FKM 4/S3450
TURCK

J1 1 3 4 2
J2 1 3 4 2

BN BU BK WH

-W1.1
RKC 4.4T-0.5-RSC 4.4T/S3060
0.5m

-W1.2
RKC 4.4T-0.5-RSC 4.4T/S3060
0.5m

BN BU BK WH

-BGR
Sn = 2 mm
TURCK
1627205
pnp
1 3 4

-BGS
Sn = 2 mm
TURCK
1627205
pnp
1 3 4

Cylinder
=V2AR32XQ41UQ1.1
+.AR32XQ41UQ1.1
-UQ1.1

=V2AR32XQ41
-UQ1.1-BGR
Cylinder

=V2AR32XQ41
-UQ1.1-BGS
Cylinder

=V2AR32XQ41KF1+V2AR32XQ41/2

=V2AR32XQ41WC1+.AR32XQ41UC01/1

			Date	1/24/2023	Volvo Trucks North America	Valiant TMS	FESTO DQ CONNECTION QN1	Drawing name: =2V01&EFS-EL_KF1	= V2AR32XQ41UQ1
			Ed.	MKLEPADLO					+ V2AR32XQ41UQ1
			Appr		P6700 Framing - Cell 2V01, KF1			Document type: EFS	Project nr: 22-16152
Modification	Date	Name	Original		Replacement of / Replaced by	Scale 1:1			Page 1630

0	1	2	3	4	5	6	7	8	9

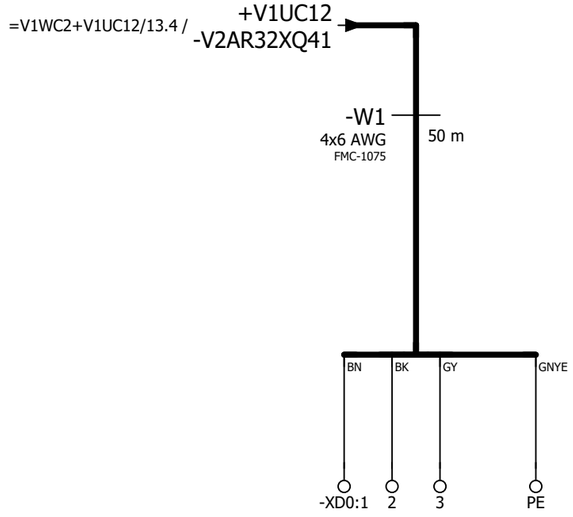

=V2AR32XQ41UQ1+.AR32XQ41UQ1/1

=V2AR41KF1+.AR41UC01/1

			Date	1/24/2023	Volvo Trucks North America	Valiant TMS	Incoming power	Drawing name: =2V01&EFS-EL_KF1	= V2AR32XQ41WC1	
			Ed.	MKLEPADLO					+ V2AR32XQ41UC01	
			Appr		P6700 Framing - Cell 2V01, KF1	Scale 1:1		Document type: EFS	Project nr: 22-16152	Page 1 / 1630
Modification	Date	Name	Original		Replacement of / Replaced by					

0	1	2	3	4	5	6	7	8	9

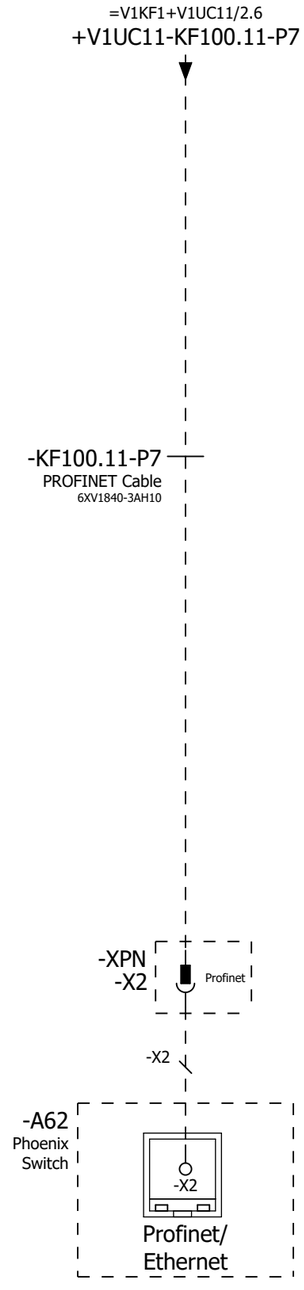

=V2AR32XQ41WC1+.AR32XQ41UC01/1

=V2AR41UQ41BG0+.AR41UQ41/1

			Date	1/24/2023	Volvo Trucks North America	Valiant TMS	Incoming Profinet	Drawing name: =2V01&EFS-EL_KF1	= V2AR41KF1
			Ed.	MKLEPADLO					+ V2AR41UC01
			Appr		P6700 Framing - Cell 2V01, KF1	Scale 1:1		Document type: EFS	Project nr: 22-16152
Modification	Date	Name	Original		Replacement of	Replaced by			Page 1 / 1630

0	1	2	3	4	5	6	7	8	9

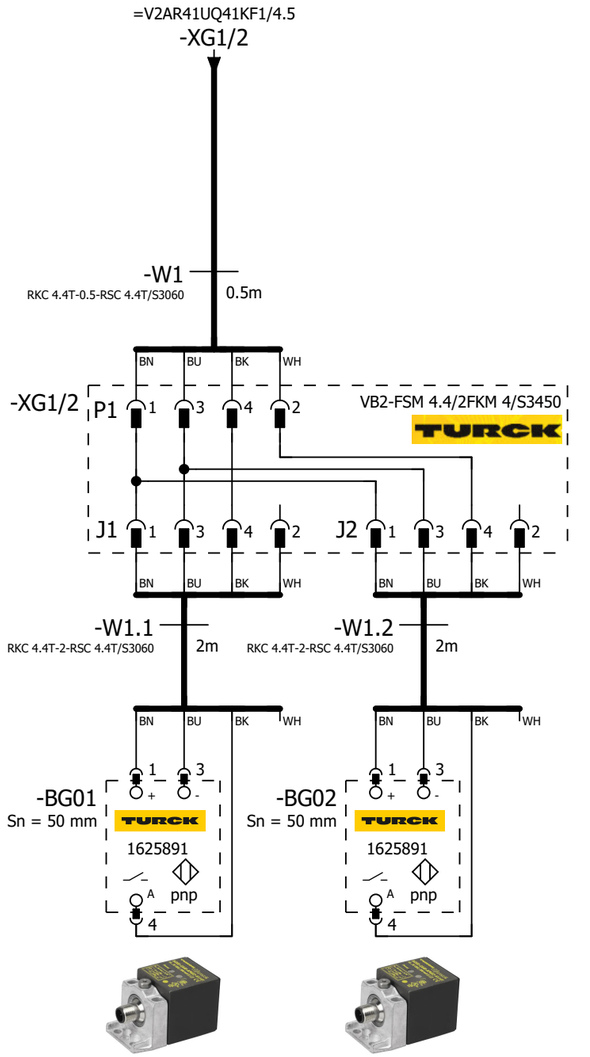

=V2AR41UQ41 -BG01 Common Part Present	=V2AR41UQ41 -BG02 Common Part Present

=V2AR41KF1+.AR41UC01/1

=V2AR41UQ41KF1/1

			Date	1/24/2023	Volvo Trucks North America	Valiant TMS	SENSORS	Drawing name: =2V01&EFS-EL_KF1	= V2AR41UQ41BG0
			Ed.	MKLEPADLO					+ V2AR41UQ41
			Appr		P6700 Framing - Cell 2V01, KF1			Document type: EFS	Project nr: 22-16152
Modification	Date	Name	Original		Replacement of / Replaced by	Scale 1:1			Page 1 / 1630

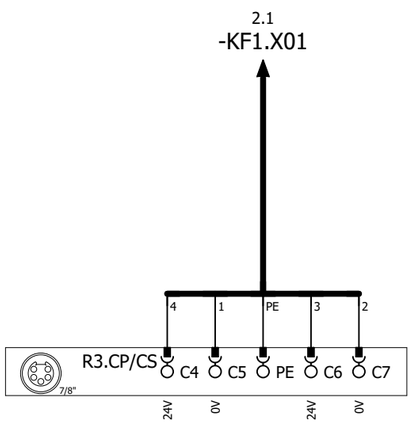

DC 24V (OUT)

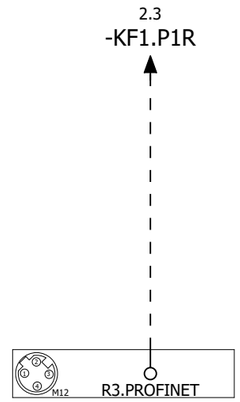

R3.ETHERNET

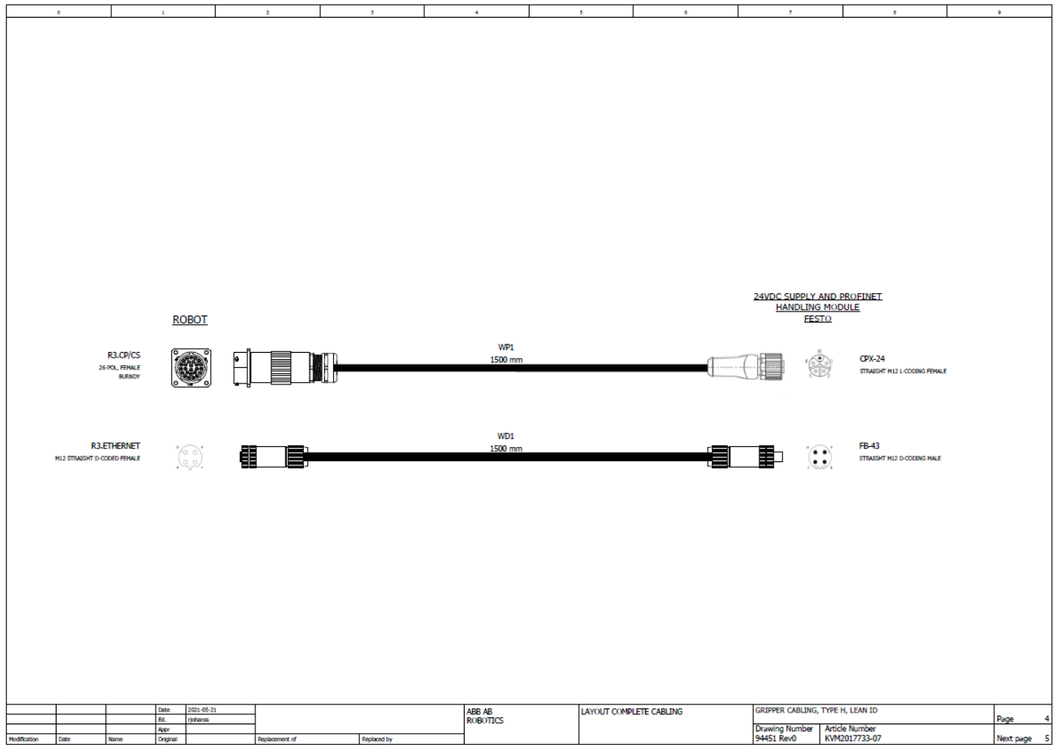

=V2AR41UQ41BG0/1

2

			Date	1/24/2023	Volvo Trucks North America	Valiant TMS	24VDC SUPPLY AND PROFINET HANDLING MODULE	Drawing name: =2V01&EFS-EL_KF1	= V2AR41UQ41KF1
			Ed.	MKLEPADLO					+ V2AR41UQ41
			Appr		P6700 Framing - Cell 2V01, KF1	Scale 1:1		Document type: EFS	Project nr: 22-16152
Modification	Date	Name	Original		Replacement of / Replaced by				Page 1 / 1630

0	1	2	3	4	5	6	7	8	9

1.3 / -KF1.X01

-W1
RSM RKM 56-2M/S3059
2m

1.5 / -KF1.P1R

-WF1
PROFINET Cable
6XV1840-3AH10

-KF1

X20 (7/8") 1 2 PE 3 4
0V_VAL / OUT
0V_EL / SEN
FE
24V_EL / SEN
24V_VAL / OUT

ON / OFF 1 2 1 2

M12 -TP1
M12 -TP2

FESTO
Bus node + Interlinking block
548755 + 550208

DI:0	DI 0 X1:4	V2AR41UQ41UQ1.1-BGR	L150 Model Shot Pin (RESET)
DI:1	DI 1 X1:2	V2AR41UQ41UQ1.1-BGS	L150 Model Shot Pin (SET)
DI:2	DI 2 X2:4	V2AR41UQ41UQ1.2-BGR	L150 Model Shot Pin (RESET)
DI:3	DI 3 X2:2	V2AR41UQ41UQ1.2-BGS	L150 Model Shot Pin (SET)
DI:4	DI 4 X3:4	V2AR41UQ41UQ1.3-BGR	L150 Model Shot Pin (RESET)
DI:5	DI 5 X3:2	V2AR41UQ41UQ1.3-BGS	L150 Model Shot Pin (SET)
DI:6	DI 6 X4:4	V2AR41UQ41UQ1.4-BGR	L150 Model Shot Pin (RESET)
DI:7	DI 7 X4:2	V2AR41UQ41UQ1.4-BGS	L150 Model Shot Pin (SET)
DI:8	DI 8 X5:4	V2AR41UQ41UQ2.1-BGR	L150 Model Clamp 1 (RESET)
DI:9	DI 9 X5:2	V2AR41UQ41UQ2.1-BGS	L150 Model Clamp 1 (SET)
DI:10	DI 10 X6:4	V2AR41UQ41UQ2.2-BGR	L150 Model Clamp 1 (RESET)
DI:11	DI 11 X6:2	V2AR41UQ41UQ2.2-BGS	L150 Model Clamp 1 (SET)
DI:12	DI 12 X7:4	V2AR41UQ41UQ3.1-BGR	Common Clamp (RESET)
DI:13	DI 13 X7:2	V2AR41UQ41UQ3.1-BGS	Common Clamp (SET)
DI:14	DI 14 X8:4	V2AR41UQ41UQ3.2-BGR	Common Clamp (RESET)
DI:15	DI 15 X8:2	V2AR41UQ41UQ3.2-BGS	Common Clamp (SET)

-KF1.11

FESTO
CPX-M-AB-8-M12X2-5POL
549335

X1 X2 X3 X4 X5 X6 X7 X8 (M12)
1: 24V
2: DI 1 / DI 3 / DI 5 / DI 7 / DI 9 / DI 11 / DI 13 / DI 15
3: 0V
4: DI 0 / DI 2 / DI 4 / DI 6 / DI 8 / DI 10 / DI 12 / DI 14
5: FE
BN WH BU BK

+.AR41UQ41UQ1.1-W1
=V2AR41UQ41UQ1+.AR41UQ41UQ1/1.1

+.AR41UQ41UQ1.2-W1
=V2AR41UQ41UQ1+.AR41UQ41UQ1/1.2

+.AR41UQ41UQ1.3-W1
=V2AR41UQ41UQ1+.AR41UQ41UQ1/1.4

+.AR41UQ41UQ1.4-W1
=V2AR41UQ41UQ1+.AR41UQ41UQ1/1.5

+.AR41UQ41UQ2.1-W1
=V2AR41UQ41UQ2+.AR41UQ41UQ2/1.1

+.AR41UQ41UQ2.2-W1
=V2AR41UQ41UQ2+.AR41UQ41UQ2/1.2

+.AR41UQ41UQ3.1-W1
=V2AR41UQ41UQ3+.AR41UQ41UQ3/1.1

+.AR41UQ41UQ3.2-W1
=V2AR41UQ41UQ3+.AR41UQ41UQ3/1.2

1 3

			Date	1/24/2023	Volvo Trucks North America	Valiant TMS	CONNECTING MOD. FOR MPA MANIFOLD	Drawing name: =2V01&EFS-EL_KF1	= V2AR41UQ41KF1	
			Ed.	MKLEPADLO					+ V2AR41UQ41	
			Appr		P6700 Framing - Cell 2V01, KF1	Scale 1:1		Document type: EFS	Project nr: 22-16152	Page 2 / 1630
Modification	Date	Name	Original		Replacement of	Replaced by				

0	1	2	3	4	5	6	7	8	9

DI:16	DI 0 X1:4	V2AR41UQ41UQ4.1-BGR	L230/290/320 Clamps 1 (RESET)
DI:17	DI 1 X1:2	V2AR41UQ41UQ4.1-BGS	L230/290/320 Clamps 1 (SET)
DI:18	DI 2 X2:4	V2AR41UQ41UQ4.2-BGR	L230/290/320 Clamps 1 (RESET)
DI:19	DI 3 X2:2	V2AR41UQ41UQ4.2-BGS	L230/290/320 Clamps 1 (SET)
DI:20	DI 4 X3:4	V2AR41UQ41UQ4.3-BGR	L230/290/320 Clamps 1 (RESET)
DI:21	DI 5 X3:2	V2AR41UQ41UQ4.3-BGS	L230/290/320 Clamps 1 (SET)
DI:22	DI 6 X4:4	V2AR41UQ41UQ4.4-BGR	L230/290/320 Clamps 1 (RESET)
DI:23	DI 7 X4:2	V2AR41UQ41UQ4.4-BGS	L230/290/320 Clamps 1 (SET)
DI:24	DI 8 X5:4	V2AR41UQ41UQ5.1-BGR	L230/290/320 Clamps 2 (RESET)
DI:25	DI 9 X5:2	V2AR41UQ41UQ5.1-BGS	L230/290/320 Clamps 2 (SET)
DI:26	DI 10 X6:4	V2AR41UQ41UQ5.2-BGR	L230/290/320 Clamps 2 (RESET)
DI:27	DI 11 X6:2	V2AR41UQ41UQ5.2-BGS	L230/290/320 Clamps 2 (SET)
DI:28	DI 12 X7:4	V2AR41UQ41UQ6.1-BGS	Common Vaccums 1 (SET)
DI:29	DI 13 X7:2	DI:29	Spare
DI:30	DI 14 X8:4	V2AR41UQ41UQ7.1-BGR	L150 Model Clamp 2 (RESET)
DI:31	DI 15 X8:2	V2AR41UQ41UQ7.1-BGS	L150 Model Clamp 2 (SET)

-KF1.12

FESTO

CPX-M-AB-8-M12X2-5POL

549335

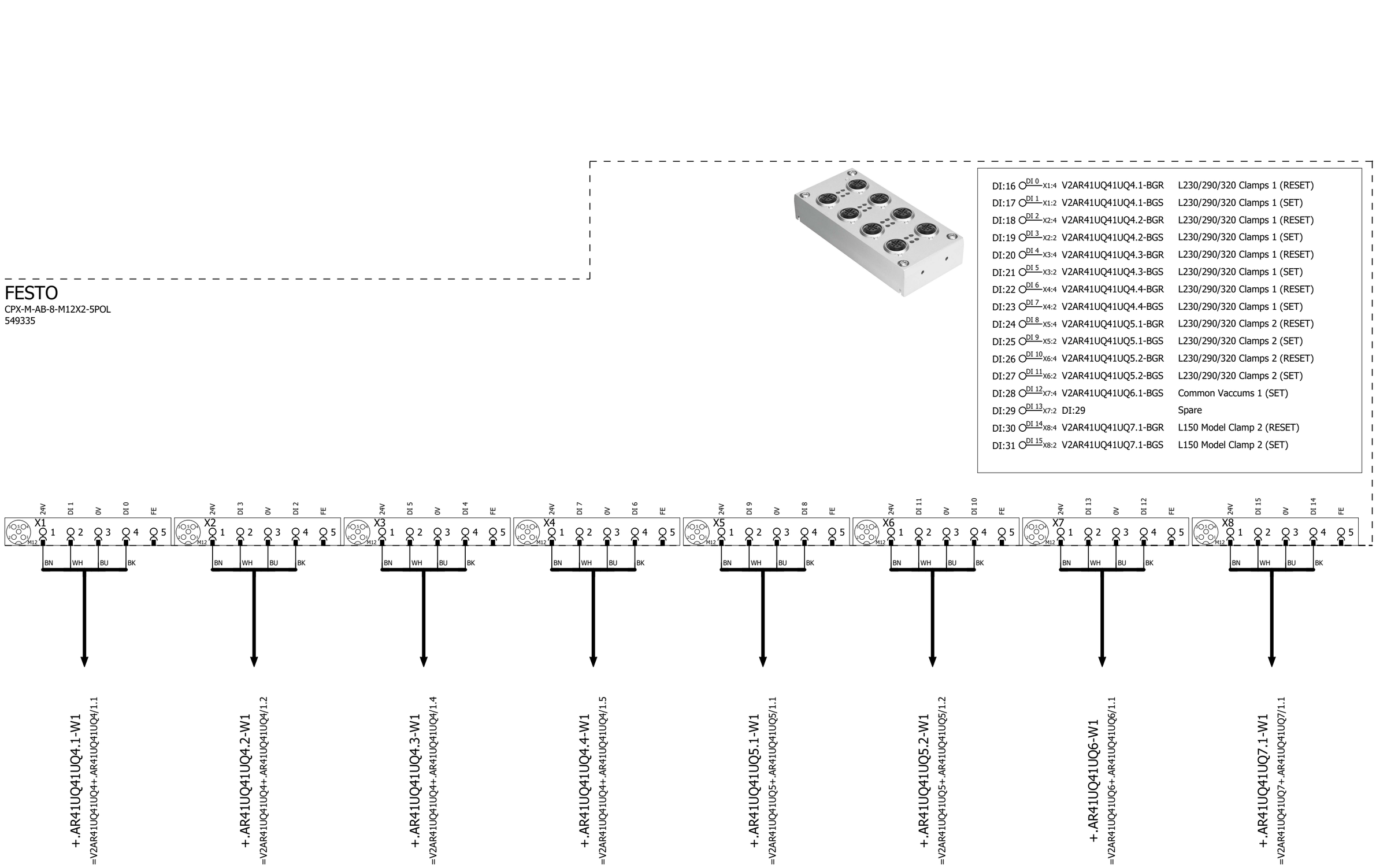

2

4

			Date	1/24/2023	Volvo Trucks North America	Valiant TMS	I/O MOD. DI16 (8 x M12) FOR MPA	Drawing name: =2V01&EFS-EL_KF1	= V2AR41UQ41KF1
			Ed.	MKLEPADLO					+ V2AR41UQ41
			Appr		P6700 Framing - Cell 2V01, KF1	Scale 1:1		Document type: EFS	Project nr: 22-16152
Modification	Date	Name	Original		Replacement of / Replaced by				Page 3 / 1630

0	1	2	3	4	5	6	7	8	9

-KF1.13

FESTO

CPX-M-AB-8-M12X2-5POL

549335

DI:32	DI 0 X1:4	V2AR41UQ41UQ7.2-BGR	L150 Model Clamp 2 (RESET)
DI:33	DI 1 X1:2	V2AR41UQ41UQ7.2-BGS	L150 Model Clamp 2 (SET)
DI:34	DI 2 X2:4	V2AR41UQ41UQ8.1-BGS	Common Vaccums 2 (SET)
DI:35	DI 3 X2:2	DI:35	Spare
DI:36	DI 4 X3:4	DI:36	Spare
DI:37	DI 5 X3:2	DI:37	Spare
DI:38	DI 6 X4:4	DI:38	Spare
DI:39	DI 7 X4:2	DI:39	Spare
DI:40	DI 8 X5:4	V2AR41UQ41-BG01	Common Part Present
DI:41	DI 9 X5:2	V2AR41UQ41-BG02	Common Part Present
DI:42	DI 10 X6:4	DI:42	Spare
DI:43	DI 11 X6:2	DI:43	Spare
DI:44	DI 12 X7:4	DI:44	Spare
DI:45	DI 13 X7:2	DI:45	Spare
DI:46	DI 14 X8:4	DI:46	Spare
DI:47	DI 15 X8:2	DI:47	Spare

+.AR41UQ41UQ7.2-W1
=V2AR41UQ41UQ7+.AR41UQ41UQ7/1.2

+.AR41UQ41UQ8-W1
=V2AR41UQ41UQ8+.AR41UQ41UQ8/1.1

-XG1/2
=V2AR41UQ41BG0/1.1

3

5

			Date	1/24/2023	Volvo Trucks North America		Valiant TMS	I/O MOD. DI16 (8 x M12) FOR MPA	Drawing name: =2V01&EFS-EL_KF1	= V2AR41UQ41KF1
			Ed.	MKLEPADLO						+ V2AR41UQ41
			Appr		P6700 Framing - Cell 2V01, KF1				Document type: EFS	Project nr: 22-16152
Modification	Date	Name	Original		Replacement of	Replaced by	Scale 1:1			Page 4 / 1630

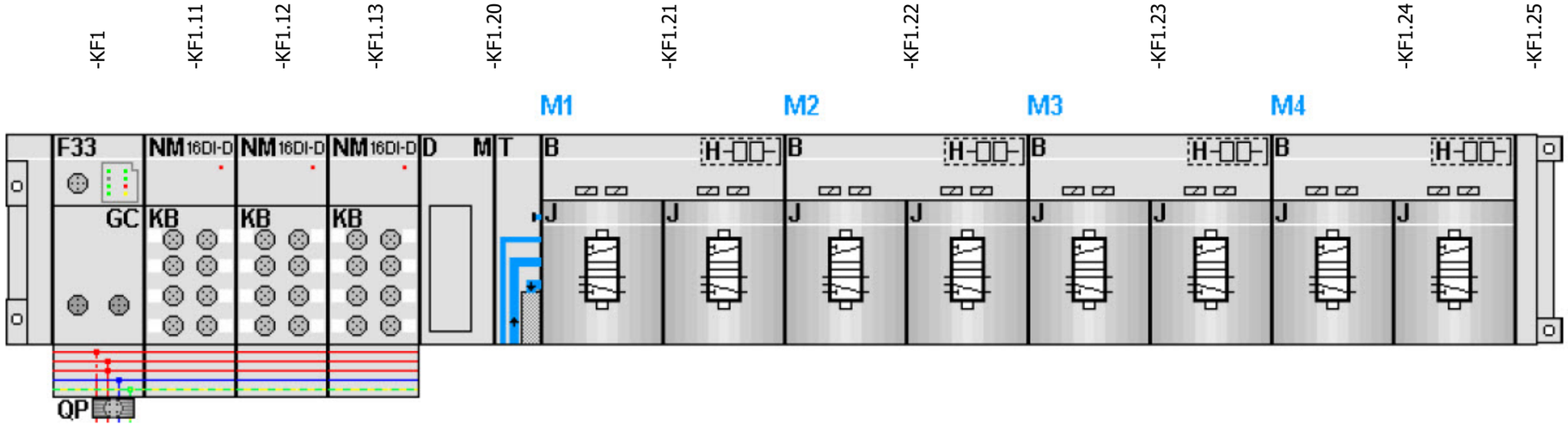

-KF1.21
=V2AR41UQ41UQ1+.AR41UQ41UQ1/1.3
=V2AR41UQ41UQ2+.AR41UQ41UQ2/1.3

FESTO

=V2AR41UQ41UQ1+.AR41UQ41UQ1/1.4	DO:0 DO 0 1.1	-QN1.1_Q	L150 Shot Pins (RST)
=V2AR41UQ41UQ1+.AR41UQ41UQ1/1.4	DO:1 DO 1 1.2	-QN1.2_Q	L150 Shot Pins (SET)
=V2AR41UQ41UQ2+.AR41UQ41UQ2/1.4	DO:2 DO 2 2.1	-QN2.1_Q	L150 Model Clamps 1 (RST)
=V2AR41UQ41UQ2+.AR41UQ41UQ2/1.4	DO:3 DO 3 2.2	-QN2.2_Q	L150 Model Clamps 1 (SET)

-KF1.22
=V2AR41UQ41UQ3+.AR41UQ41UQ3/1.3
=V2AR41UQ41UQ4+.AR41UQ41UQ4/1.3

FESTO

=V2AR41UQ41UQ3+.AR41UQ41UQ3/1.4	DO:4 DO 4 1.1	-QN3.1_Q	Common Clamps (RST)
=V2AR41UQ41UQ3+.AR41UQ41UQ3/1.4	DO:5 DO 5 1.2	-QN3.2_Q	Common Clamps (SET)
=V2AR41UQ41UQ4+.AR41UQ41UQ4/1.4	DO:6 DO 6 2.1	-QN4.1_Q	L230/290/320 Clamps 1 (RST)
=V2AR41UQ41UQ4+.AR41UQ41UQ4/1.4	DO:7 DO 7 2.2	-QN4.2_Q	L230/290/320 Clamps 1 (SET)

-KF1.23
=V2AR41UQ41UQ5+.AR41UQ41UQ5/1.3
=V2AR41UQ41UQ6+.AR41UQ41UQ6/1.3

FESTO

=V2AR41UQ41UQ5+.AR41UQ41UQ5/1.4	DO:8 DO 8 1.1	-QN5.1_Q	L230/290/320 Clamps 2 (RST)
=V2AR41UQ41UQ5+.AR41UQ41UQ5/1.4	DO:9 DO 9 1.2	-QN5.2_Q	L230/290/320 Clamps 2 (SET)
=V2AR41UQ41UQ6+.AR41UQ41UQ6/1.4	DO:10 DO 10 2.1	-QN6.1_Q	Common Vacuums 1 (RST)
=V2AR41UQ41UQ6+.AR41UQ41UQ6/1.4	DO:11 DO 11 2.2	-QN6.2_Q	Common Vacuums 1 (SET)

-KF1.24
=V2AR41UQ41UQ7+.AR41UQ41UQ7/1.3
=V2AR41UQ41UQ8+.AR41UQ41UQ8/1.3

FESTO

=V2AR41UQ41UQ7+.AR41UQ41UQ7/1.4	DO:12 DO 12 1.1	-QN7.1_Q	L150 Model Clamps 2 (RST)
=V2AR41UQ41UQ7+.AR41UQ41UQ7/1.4	DO:13 DO 13 1.2	-QN7.2_Q	L150 Model Clamps 2 (SET)
=V2AR41UQ41UQ8+.AR41UQ41UQ8/1.4	DO:14 DO 14 2.1	-QN8.1_Q	Common Vacuums 2 (RST)
=V2AR41UQ41UQ8+.AR41UQ41UQ8/1.4	DO:15 DO 15 2.2	-QN8.2_Q	Common Vacuums 2 (SET)

=V2AR41UQ41UQ1+.AR41UQ41UQ1/1

			Date	1/24/2023	Volvo Trucks North America	Valiant TMS	CONNECTING MOD. FOR FESTO DQ	Drawing name: =2V01&EFS-EL_KF1	= V2AR41UQ41KF1
			Ed.	MKLEPADLO					+ V2AR41UQ41
			Appr		P6700 Framing - Cell 2V01, KF1			Document type: EFS	Project nr: 22-16152
Modification	Date	Name	Original		Replacement of / Replaced by	Scale 1:1			Page 5 / 1630

0	1	2	3	4	5	6	7	8	9

=V2AR41UQ41KF1
+.AR41UQ41

-KF1.21
=V2AR41UQ41KF1+V2AR41UQ41/5.1

L150 Shot Pins (RST)
=V2AR41UQ41KF1
+V2AR41UQ41
-QN1.1_Q
=V2AR41UQ41KF1
+V2AR41UQ41/5.3
DO:0

L150 Shot Pins (SET)
=V2AR41UQ41KF1
+V2AR41UQ41
-QN1.2_Q
=V2AR41UQ41KF1
+V2AR41UQ41/5.3
DO:1

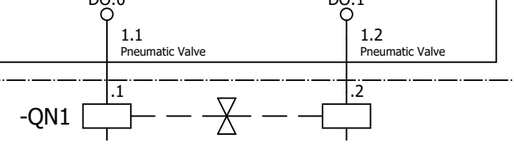

=V2AR41UQ41KF1+V2AR41UQ41/2.1
+.AR41UQ41UQ1.1-W1

=V2AR41UQ41KF1+V2AR41UQ41/2.2
+.AR41UQ41UQ1.2-W1

=V2AR41UQ41KF1+V2AR41UQ41/2.3
+.AR41UQ41UQ1.3-W1

=V2AR41UQ41KF1+V2AR41UQ41/2.4
+.AR41UQ41UQ1.4-W1

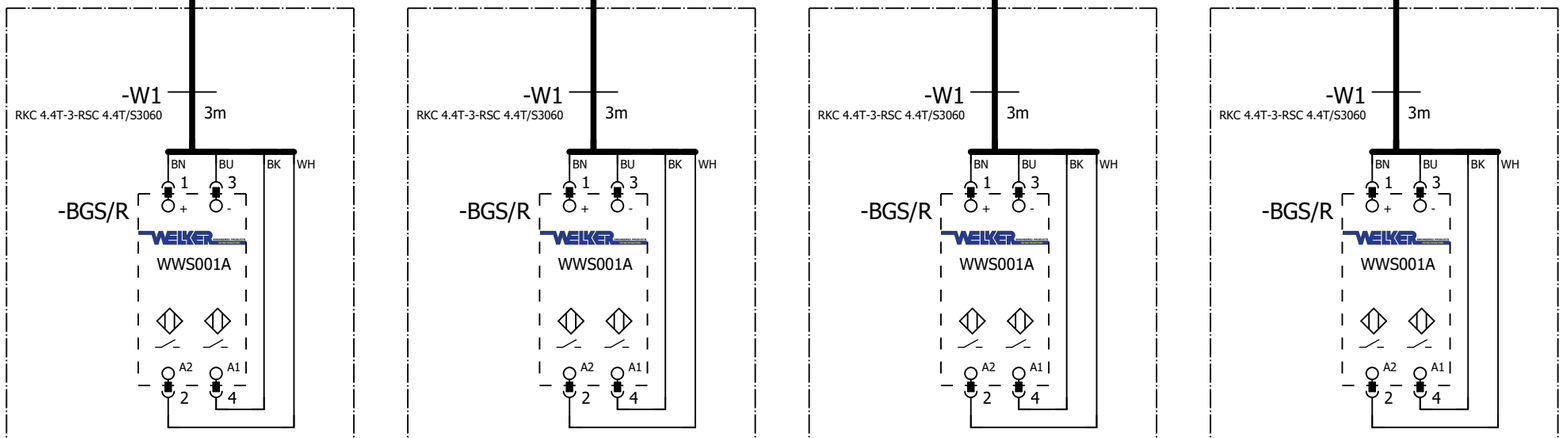

L150 Model Shot Pin
=V2AR41UQ41UQ1.1
+.AR41UQ41UQ1.1
-UQ1.1

L150 Model Shot Pin
=V2AR41UQ41UQ1.2
+.AR41UQ41UQ1.2
-UQ1.2

L150 Model Shot Pin
=V2AR41UQ41UQ1.3
+.AR41UQ41UQ1.3
-UQ1.3

L150 Model Shot Pin
=V2AR41UQ41UQ1.4
+.AR41UQ41UQ1.4
-UQ1.4

=V2AR41UQ41
-UQ1.1-BGS/R
L150 Model
Shot Pin

=V2AR41UQ41
-UQ1.2-BGS/R
L150 Model
Shot Pin

=V2AR41UQ41
-UQ1.3-BGS/R
L150 Model
Shot Pin

=V2AR41UQ41
-UQ1.4-BGS/R
L150 Model
Shot Pin

=V2AR41UQ41KF1+V2AR41UQ41/5

=V2AR41UQ41UQ2+.AR41UQ41UQ2/1

			Date	1/24/2023	Volvo Trucks North America		Valiant TMS	FESTO DQ CONNECTION QN1	Drawing name: =2V01&EFS-EL_KF1	= V2AR41UQ41UQ1
			Ed.	MKLEPADLO						+ V2AR41UQ41UQ1
			Appr		P6700 Framing - Cell 2V01, KF1		Scale 1:1		Document type: EFS	Project nr: 22-16152
Modification	Date	Name	Original		Replacement of	Replaced by				Page 1 / 1630

0	1	2	3	4	5	6	7	8	9

=V2AR41UQ41KF1
+.AR41UQ41

-KF1.21
=V2AR41UQ41KF1+V2AR41UQ41/5.1

L150 Model Clamps 1 (RST)
=V2AR41UQ41KF1
+V2AR41UQ41
-QN2.1_Q
=V2AR41UQ41KF1
+V2AR41UQ41/5.3
DO:2

L150 Model Clamps 1 (SET)
=V2AR41UQ41KF1
+V2AR41UQ41
-QN2.2_Q
=V2AR41UQ41KF1
+V2AR41UQ41/5.3
DO:3

2.1 Pneumatic Valve

2.2 Pneumatic Valve

-QN2 .1 .2

=V2AR41UQ41KF1+V2AR41UQ41/2.5
+.AR41UQ41UQ2.1-W1

=V2AR41UQ41KF1+V2AR41UQ41/2.6
+.AR41UQ41UQ2.2-W1

-W1
RKC 4.4T-4-RSC 4.4T/S3060
4m

BN BU BK WH
1 3
+ -
-BGS/R
TÜNKERS
1324638
A2 A1
2 4

L150 Model Clamp 1
=V2AR41UQ41UQ2.1
+.AR41UQ41UQ2.1
-UQ2.1

L150 Model Clamp 1
=V2AR41UQ41UQ2.2
+.AR41UQ41UQ2.2
-UQ2.2

=V2AR41UQ41
-UQ2.1-BGS/R
L150 Model
Clamp 1

=V2AR41UQ41
-UQ2.2-BGS/R
L150 Model
Clamp 1

=V2AR41UQ41UQ1+.AR41UQ41UQ1/1

=V2AR41UQ41UQ3+.AR41UQ41UQ3/1

			Date	1/24/2023	Volvo Trucks North America		Valiant TMS	FESTO DQ CONNECTION QN2	Drawing name: =2V01&EFS-EL_KF1	= V2AR41UQ41UQ2
			Ed.	MKLEPADLO						+ V2AR41UQ41UQ2
			Appr		P6700 Framing - Cell 2V01, KF1				Document type: EFS	Project nr: 22-16152
Modification	Date	Name	Original		Replacement of	Replaced by	Scale 1:1			Page 1 / 1630

0	1	2	3	4	5	6	7	8	9

=V2AR41UQ41KF1
+.AR41UQ41

-KF1.22
=V2AR41UQ41KF1+V2AR41UQ41/5.1

Common Clamps (RST)
=V2AR41UQ41KF1
+V2AR41UQ41
-QN3.1_Q
=V2AR41UQ41KF1
+V2AR41UQ41/5.3
DO:4

Common Clamps (SET)
=V2AR41UQ41KF1
+V2AR41UQ41
-QN3.2_Q
=V2AR41UQ41KF1
+V2AR41UQ41/5.3
DO:5

1.1 Pneumatic Valve

1.2 Pneumatic Valve

-QN3 .1 .2

=V2AR41UQ41KF1+V2AR41UQ41/2.8
+.AR41UQ41UQ3.1-W1

=V2AR41UQ41KF1+V2AR41UQ41/2.9
+.AR41UQ41UQ3.2-W1

-W1 2m
RKC 4.4T-2-RSC 4.4T/S3060
BN BU BK WH
1 3
-BGS/R
TÜNKERS
1324638
A2 A1
2 4

Common Clamp
=V2AR41UQ41UQ3.1
+.AR41UQ41UQ3.1
-UQ3.1

Common Clamp
=V2AR41UQ41UQ3.2
+.AR41UQ41UQ3.2
-UQ3.2

=V2AR41UQ41
-UQ3.1-BGS/R
Common
Clamp

=V2AR41UQ41
-UQ3.2-BGS/R
Common
Clamp

=V2AR41UQ41UQ2+.AR41UQ41UQ2/1

=V2AR41UQ41UQ4+.AR41UQ41UQ4/1

			Date	1/24/2023	Volvo Trucks North America	Valiant TMS	FESTO DQ CONNECTION QN3	Drawing name: =2V01&EFS-EL_KF1	= V2AR41UQ41UQ3
			Ed.	MKLEPADLO					+ V2AR41UQ41UQ3
			Appr		P6700 Framing - Cell 2V01, KF1			Document type: EFS	Project nr: 22-16152
Modification	Date	Name	Original		Replacement of / Replaced by	Scale 1:1			Page 1 / 1630

0	1	2	3	4	5	6	7	8	9

=V2AR41UQ41KF1
+.AR41UQ41

-KF1.22
=V2AR41UQ41KF1+V2AR41UQ41/5.1

L230/290/320 Clamps 1 (RST)
=V2AR41UQ41KF1
+V2AR41UQ41
-QN4.1_Q
=V2AR41UQ41KF1
+V2AR41UQ41/5.3
DO:6

L230/290/320 Clamps 1 (SET)
=V2AR41UQ41KF1
+V2AR41UQ41
-QN4.2_Q
=V2AR41UQ41KF1
+V2AR41UQ41/5.3
DO:7

2.1 Pneumatic Valve
2.2 Pneumatic Valve

-QN4 .1 .2

=V2AR41UQ41KF1+V2AR41UQ41/3.1
+.AR41UQ41UQ4.1-W1

=V2AR41UQ41KF1+V2AR41UQ41/3.2
+.AR41UQ41UQ4.2-W1

=V2AR41UQ41KF1+V2AR41UQ41/3.3
+.AR41UQ41UQ4.3-W1

=V2AR41UQ41KF1+V2AR41UQ41/3.4
+.AR41UQ41UQ4.4-W1

-W1 4m
RKC 4.4T-4-RSC 4.4T/S3060
BN BU BK WH
1 3
-BGS/R
TÜNKERS
1324638
A2 A1
2 4

L230/290/320 Clamp 1
=V2AR41UQ41UQ4.1
+.AR41UQ41UQ4.1
-UQ4.1

-W1 4m
RKC 4.4T-4-RSC 4.4T/S3060
BN BU BK WH
1 3
-BGS/R
TÜNKERS
1324638
A2 A1
2 4

L230/290/320 Clamp 1
=V2AR41UQ41UQ4.2
+.AR41UQ41UQ4.2
-UQ4.2

-W1 2m
RKC 4.4T-2-RSC 4.4T/S3060
BN BU BK WH
1 3
-BGS/R
TÜNKERS
1324638
A2 A1
2 4

L230/290/320 Clamp 1
=V2AR41UQ41UQ4.3
+.AR41UQ41UQ4.3
-UQ4.3

-W1 2m
RKC 4.4T-2-RSC 4.4T/S3060
BN BU BK WH
1 3
-BGS/R
TÜNKERS
1324638
A2 A1
2 4

L230/290/320 Clamp 1
=V2AR41UQ41UQ4.4
+.AR41UQ41UQ4.4
-UQ4.4

=V2AR41UQ41
-UQ4.1-BGS/R
L230/290/320
Clamp 1

=V2AR41UQ41
-UQ4.2-BGS/R
L230/290/320
Clamp 1

=V2AR41UQ41
-UQ4.3-BGS/R
L230/290/320
Clamp 1

=V2AR41UQ41
-UQ4.4-BGS/R
L230/290/320
Clamp 1

=V2AR41UQ41UQ3+.AR41UQ41UQ3/1

=V2AR41UQ41UQ5+.AR41UQ41UQ5/1

			Date	1/24/2023	Volvo Trucks North America	Valiant TMS	FESTO DQ CONNECTION QN4	Drawing name: =2V01&EFS-EL_KF1	= V2AR41UQ41UQ4
			Ed.	MKLEPADLO					+ V2AR41UQ41UQ4
			Appr		P6700 Framing - Cell 2V01, KF1			Document type: EFS	Project nr: 22-16152
Modification	Date	Name	Original		Replacement of	Replaced by	Scale 1:1		Page 1 / 1630

0	1	2	3	4	5	6	7	8	9

=V2AR41UQ41KF1
+.AR41UQ41

-KF1.23
=V2AR41UQ41KF1+V2AR41UQ41/5.1

L230/290/320 Clamps 2 (RST)	L230/290/320 Clamps 2 (SET)
=V2AR41UQ41KF1	=V2AR41UQ41KF1
+V2AR41UQ41	+V2AR41UQ41
-QN5.1_Q	-QN5.2_Q
=V2AR41UQ41KF1	=V2AR41UQ41KF1
+V2AR41UQ41/5.3	+V2AR41UQ41/5.3
DO:8	DO:9
1.1 Pneumatic Valve	1.2 Pneumatic Valve

-QN5 .1 .2

=V2AR41UQ41KF1+V2AR41UQ41/3.5
+.AR41UQ41UQ5.1-W1

-W1 4m
RKC 4.4T-4-RSC 4.4T/S3060

-BGS/R
BN BU BK WH
1 3
TÜNKERS
1324644
A2 A1
2 4

L230/290/320 Clamp 2
=V2AR41UQ41UQ5.1
+.AR41UQ41UQ5.1
-UQ5.1

=V2AR41UQ41
-UQ5.1-BGS/R
L230/290/320
Clamp 2

=V2AR41UQ41KF1+V2AR41UQ41/3.6
+.AR41UQ41UQ5.2-W1

-W1 4m
RKC 4.4T-4-RSC 4.4T/S3060

-BGS/R
BN BU BK WH
1 3
TÜNKERS
1324644
A2 A1
2 4

L230/290/320 Clamp 2
=V2AR41UQ41UQ5.2
+.AR41UQ41UQ5.2
-UQ5.2

=V2AR41UQ41
-UQ5.2-BGS/R
L230/290/320
Clamp 2

=V2AR41UQ41UQ4+.AR41UQ41UQ4/1

=V2AR41UQ41UQ6+.AR41UQ41UQ6/1

			Date	1/24/2023	Volvo Trucks North America	Valiant TMS	FESTO DQ CONNECTION QN5	Drawing name: =2V01&EFS-EL_KF1	= V2AR41UQ41UQ5
			Ed.	MKLEPADLO					+ V2AR41UQ41UQ5
			Appr		P6700 Framing - Cell 2V01, KF1	Scale 1:1		Document type: EFS	Project nr: 22-16152
Modification	Date	Name	Original		Replacement of	Replaced by			Page 1 / 1630

0	1	2	3	4	5	6	7	8	9

=V2AR41UQ41KF1
+.AR41UQ41

-KF1.23
=V2AR41UQ41KF1+V2AR41UQ41/5.1

Common Vacuums 1 (RST)	Common Vacuums 1 (SET)
=V2AR41UQ41KF1	=V2AR41UQ41KF1
+V2AR41UQ41	+V2AR41UQ41
-QN6.1_Q	-QN6.2_Q
=V2AR41UQ41KF1	=V2AR41UQ41KF1
+V2AR41UQ41/5.3	+V2AR41UQ41/5.3
DO:10	DO:11
2.1 Pneumatic Valve	2.2 Pneumatic Valve

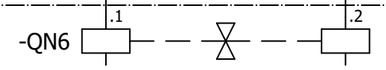

=V2AR41UQ41KF1+V2AR41UQ41/3.8
+.AR41UQ41UQ6-W1

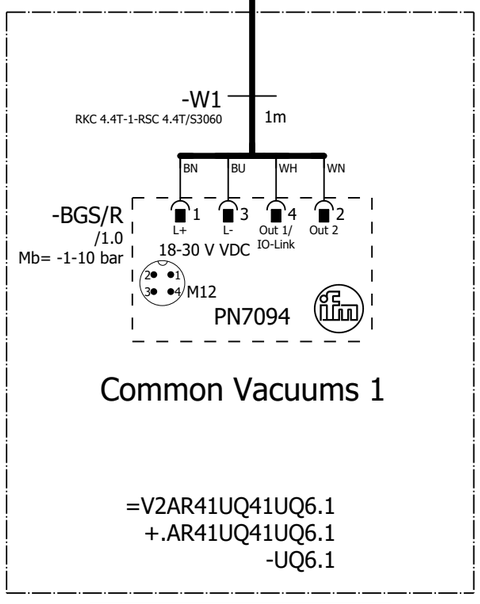

Common Vacuums 1

=V2AR41UQ41UQ6.1
+.AR41UQ41UQ6.1
-UQ6.1

=V2AR41UQ41
-UQ6.1-BGS/R
Common
Vacuums 1

=V2AR41UQ41UQ5+.AR41UQ41UQ5/1

=V2AR41UQ41UQ7+.AR41UQ41UQ7/1

			Date	1/24/2023	Volvo Trucks North America	Valiant TMS	FESTO DQ CONNECTION QN6	Drawing name: =2V01&EFS-EL_KF1	= V2AR41UQ41UQ6
			Ed.	MKLEPADLO					+ V2AR41UQ41UQ6
			Appr		P6700 Framing - Cell 2V01, KF1			Document type: EFS	Project nr: 22-16152
Modification	Date	Name	Original		Replacement of	Replaced by	Scale 1:1		Page 1 / 1630

0	1	2	3	4	5	6	7	8	9

=V2AR41UQ41KF1
+.AR41UQ41

-KF1.24
=V2AR41UQ41KF1+V2AR41UQ41/5.1

L150 Model Clamps 2 (RST)	L150 Model Clamps 2 (SET)
=V2AR41UQ41KF1	=V2AR41UQ41KF1
+V2AR41UQ41	+V2AR41UQ41
-QN7.1_Q	-QN7.2_Q
=V2AR41UQ41KF1	=V2AR41UQ41KF1
+V2AR41UQ41/5.3	+V2AR41UQ41/5.3
DO:12	DO:13
1.1 Pneumatic Valve	1.2 Pneumatic Valve

-QN7 .1 .2

=V2AR41UQ41KF1+V2AR41UQ41/3.9
+.AR41UQ41UQ7.1-W1

-W1
RKC 4.4T-2-RSC 4.4T/S3060
2m

BN BU BK WH
1 3
+ -
-BGS/R
TÜNKERS
1324638
A2 A1
2 4

L150 Model Clamp 2

=V2AR41UQ41UQ7.1
+.AR41UQ41UQ7.1
-UQ7.1

=V2AR41UQ41
-UQ7.1-BGS/R
L150 Model
Clamp 2

=V2AR41UQ41KF1+V2AR41UQ41/4.1
+.AR41UQ41UQ7.2-W1

-W1
RKC 4.4T-2-RSC 4.4T/S3060
2m

BN BU BK WH
1 3
+ -
-BGS/R
TÜNKERS
1324638
A2 A1
2 4

L150 Model Clamp 2

=V2AR41UQ41UQ7.2
+.AR41UQ41UQ7.2
-UQ7.2

=V2AR41UQ41
-UQ7.2-BGS/R
L150 Model
Clamp 2

=V2AR41UQ41UQ6+.AR41UQ41UQ6/1

=V2AR41UQ41UQ8+.AR41UQ41UQ8/1

			Date	1/24/2023	Volvo Trucks North America		Valiant TMS	FESTO DQ CONNECTION QN7	Drawing name: =2V01&EFS-EL_KF1	= V2AR41UQ41UQ7
			Ed.	MKLEPADLO						+ V2AR41UQ41UQ7
			Appr		P6700 Framing - Cell 2V01, KF1				Document type: EFS	Project nr: 22-16152
Modification	Date	Name	Original		Replacement of	Replaced by	Scale 1:1			Page 1 / 1630

0	1	2	3	4	5	6	7	8	9

=V2AR41UQ41KF1
+.AR41UQ41

-KF1.24
=V2AR41UQ41KF1+V2AR41UQ41/5.1

Common Vacuums 2 (RST)	Common Vacuums 2 (SET)
=V2AR41UQ41KF1	=V2AR41UQ41KF1
+V2AR41UQ41	+V2AR41UQ41
-QN8.1_Q	-QN8.2_Q
=V2AR41UQ41KF1	=V2AR41UQ41KF1
+V2AR41UQ41/5.3	+V2AR41UQ41/5.3
DO:14	DO:15
2.1 Pneumatic Valve	2.2 Pneumatic Valve

-QN8 .1 .2

=V2AR41UQ41KF1+V2AR41UQ41/4.2
+.AR41UQ41UQ8-W1

-W1
RKC 4.4T-1-RSC 4.4T/S3060
1m

BN BU WH WN

-BGS/R
/1.0
Mb= -1-10 bar

1	3	4	2
L+	L-	Out 1/ IO-Link	Out 2

18-30 V VDC

M12

PN7094

Common Vacuums 2

=V2AR41UQ41UQ8.1
+.AR41UQ41UQ8.1
-UQ8.1

=V2AR41UQ41
-UQ8.1-BGS/R
Common
Vacuums 2

=V2AR41UQ41UQ7+.AR41UQ41UQ7/1

=V2AR41WC1+.AR41UC01/1

			Date	1/24/2023	Volvo Trucks North America	Valiant TMS	FESTO DQ CONNECTION QN8	Drawing name: =2V01&EFS-EL_KF1	= V2AR41UQ41UQ8
			Ed.	MKLEPADLO					+ V2AR41UQ41UQ8
			Appr		P6700 Framing - Cell 2V01, KF1	Scale 1:1		Document type: EFS	Project nr: 22-16152
Modification	Date	Name	Original		Replacement of	Replaced by			Page 1 / 1630

0	1	2	3	4	5	6	7	8	9

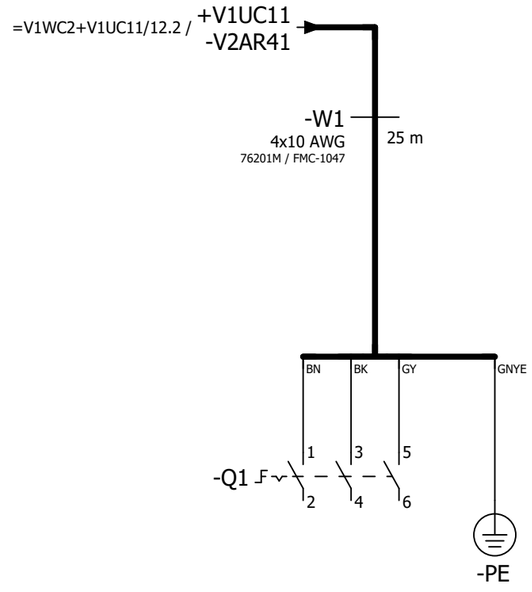

=V2AR41UQ41UQ8+.AR41UQ41UQ8/1

=V2AR41XQ11WC1+.AR41XQ11UC01/1

			Date	1/24/2023	Volvo Trucks North America		Valiant TMS	Incoming power	Drawing name: =2V01&EFS-EL_KF1	= V2AR41WC1
			Ed.	MKLEPADLO						+ V2AR41UC01
			Appr		P6700 Framing - Cell 2V01, KF1				Document type: EFS	Project nr: 22-16152	Page 1
Modification	Date	Name	Original		Replacement of	Replaced by	Scale 1:1				1630

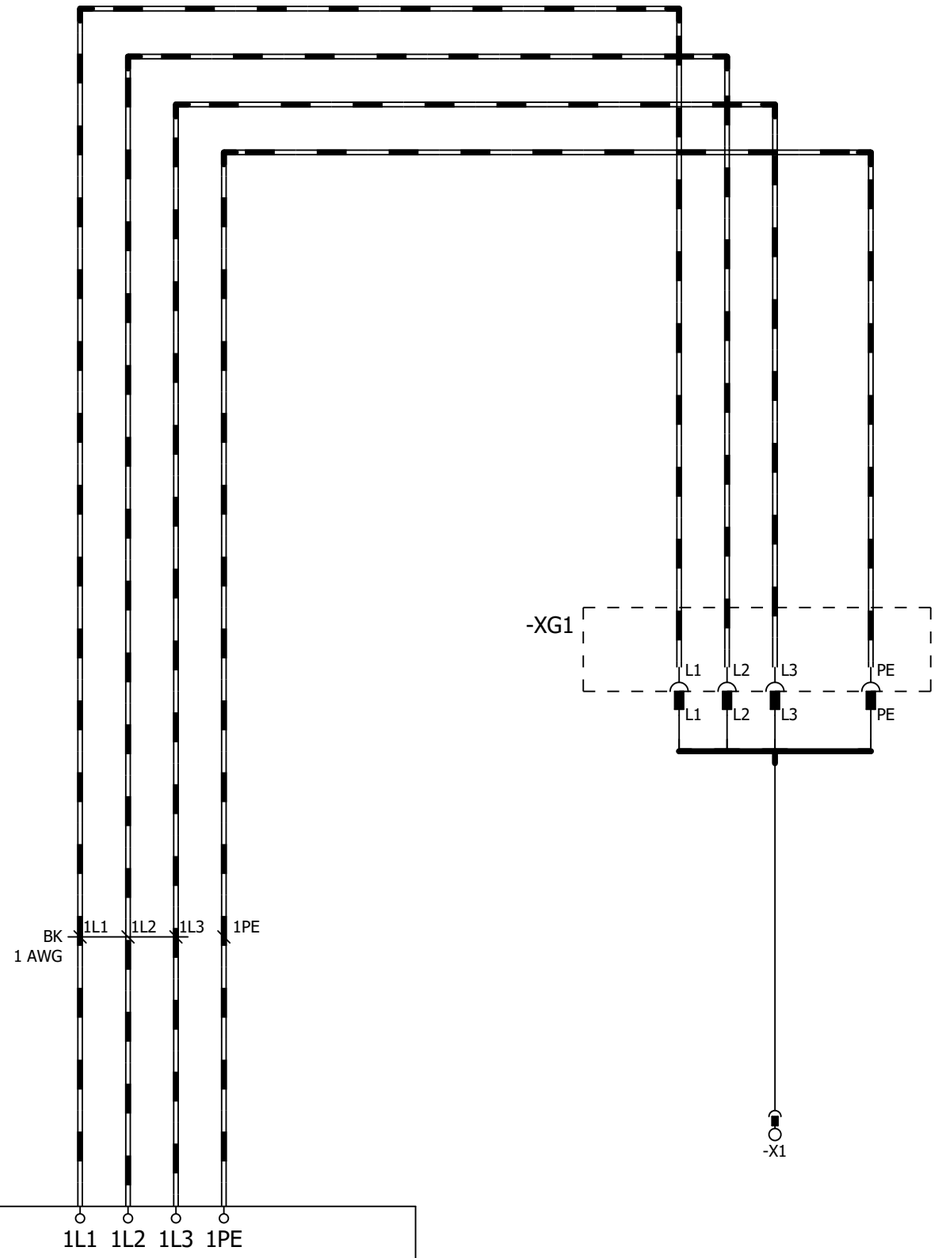

480VAC TN-S 3 PHASE 60Hz
Fed from: .....
short circuit protection: .....
Over current: .....
cable type: 1 AWG

IkMax =.....kA
IkMin = ...kA
Z: ..... mΩ.

=V2AR41WC1+.AR41UC01/1

=V2AR42KF1+.AR42UC01/1

			Date	1/24/2023	Volvo Trucks North America		Valiant TMS	Incoming power	Drawing name: =2V01&EFS-EL_KF1	= V2AR41XQ11WC1	
			Ed.	MKLEPADLO						+ V2AR41XQ11UC01	
			Appr		P6700 Framing - Cell 2V01, KF1				Document type: EFS	Project nr: 22-16152	Page 1
Modification	Date	Name	Original		Replacement of	Replaced by	Scale 1:1				1630

0	1	2	3	4	5	6	7	8	9

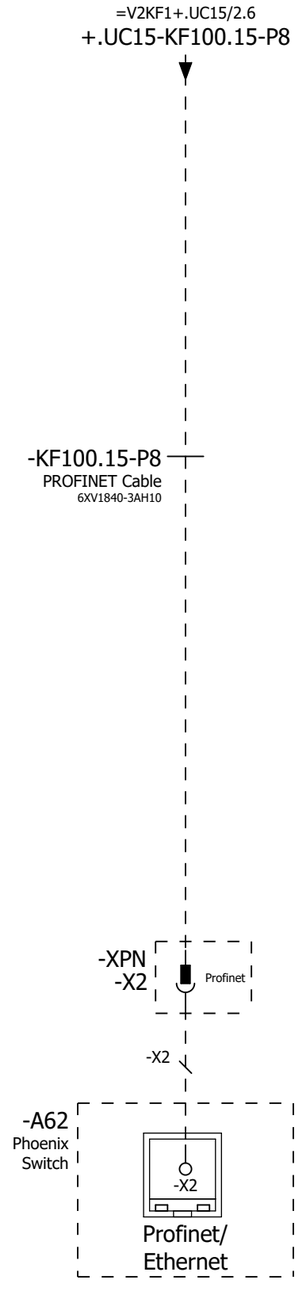

=V2AR41XQ11WC1+.AR41XQ11UC01/1

=V2AR42UQ41BG0+.AR42UQ41/1

			Date	1/24/2023	Volvo Trucks North America	Valiant TMS	Incoming Profinet	Drawing name: =2V01&EFS-EL_KF1	= V2AR42KF1
			Ed.	MKLEPADLO					+ V2AR42UC01
			Appr		P6700 Framing - Cell 2V01, KF1			Document type: EFS	Project nr: 22-16152
Modification	Date	Name	Original		Replacement of / Replaced by	Scale 1:1			Page 1 / 1630

0	1	2	3	4	5	6	7	8	9

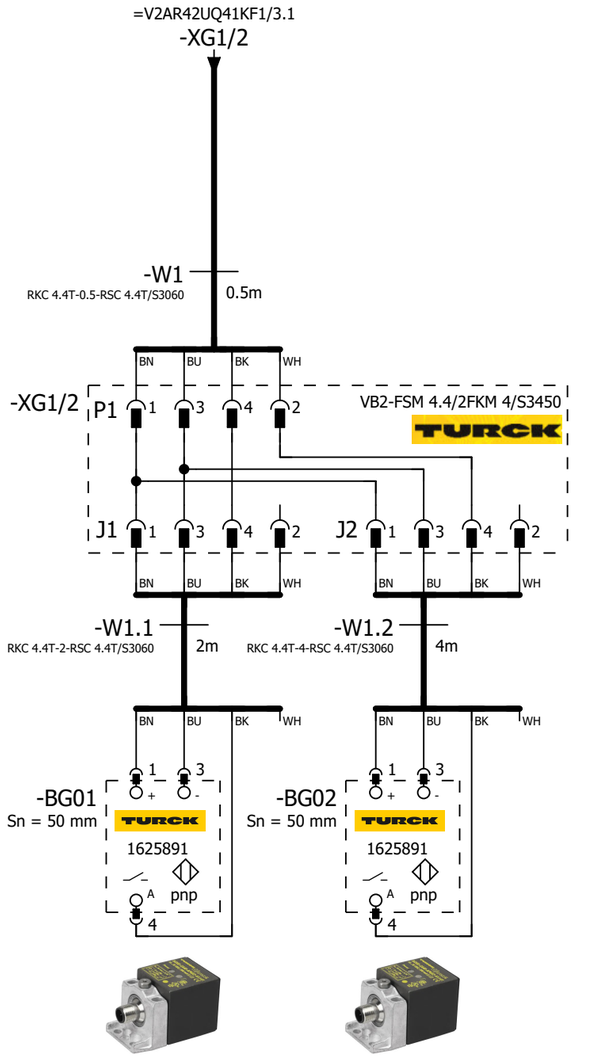

=V2AR42UQ41 -BG01 L150 Model Part Present	=V2AR42UQ41 -BG02 L150 Model Part Present

=V2AR42KF1+.AR42UC01/1

=V2AR42UQ41KF1/1

			Date	1/24/2023	Volvo Trucks North America		Valiant TMS	SENSORS	Drawing name: =2V01&EFS-EL_KF1	= V2AR42UQ41BG0
			Ed.	MKLEPADLO						+ V2AR42UQ41
			Appr		P6700 Framing - Cell 2V01, KF1				Document type: EFS	Project nr: 22-16152	Page 1
Modification	Date	Name	Original		Replacement of	Replaced by	Scale 1:1				1630

0	1	2	3	4	5	6	7	8	9

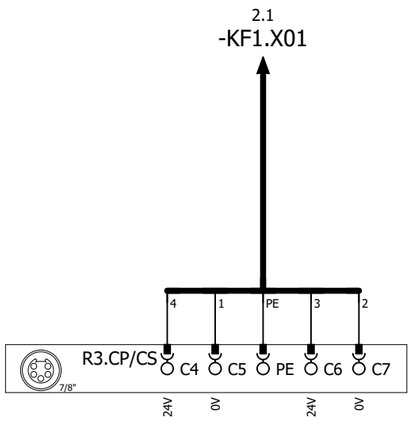

DC 24V (OUT)

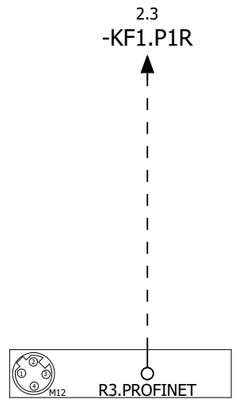

R3.ETHERNET

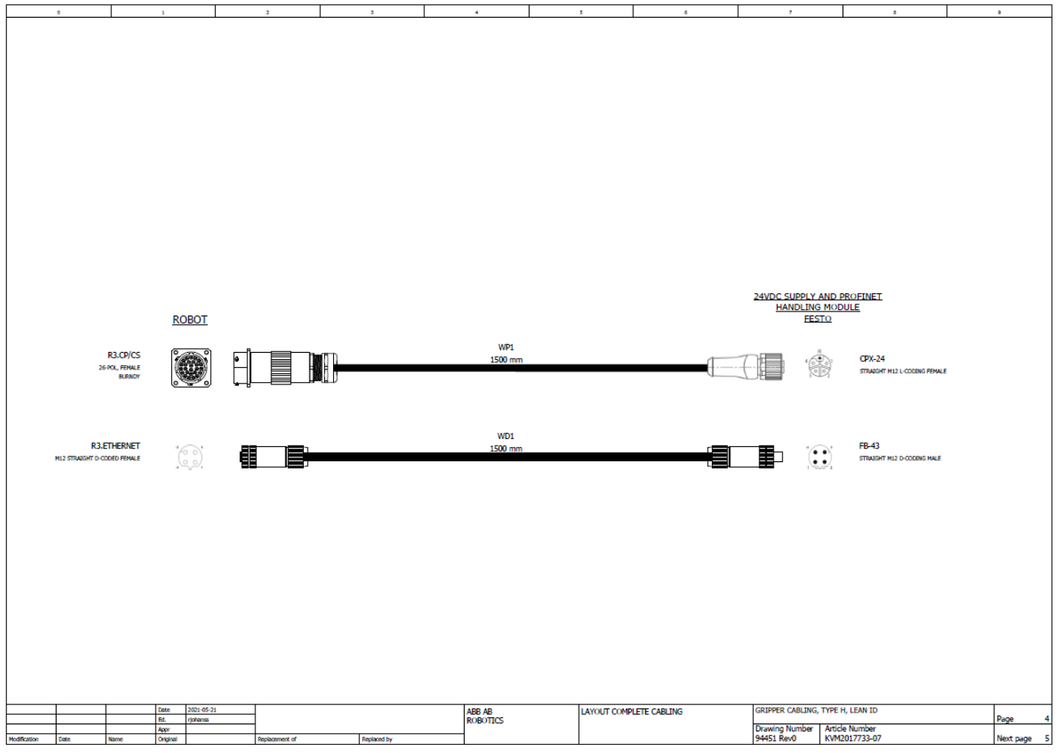

=V2AR42UQ41BG0/1

2

			Date	1/24/2023	Volvo Trucks North America	Valiant TMS	24VDC SUPPLY AND PROFINET HANDLING MODULE	Drawing name: =2V01&EFS-EL_KF1	= V2AR42UQ41KF1
			Ed.	MKLEPADLO					+ V2AR42UQ41
			Appr		P6700 Framing - Cell 2V01, KF1	Scale 1:1		Document type: EFS	Project nr: 22-16152
Modification	Date	Name	Original		Replacement of	Replaced by			Page 1 / 1630

1.3 / -KF1.X01

-W1
RSM RKM 56-2M/S3059
2m

1.5 / -KF1.P1R

-WF1
PROFINET Cable
6XV1840-3AH10

-KF1

X20 (7/8") 1 2 PE 3 4 5
0V_VAL / OUT | 0V_EL / SEN | FE | 24V_EL / SEN | 24V_VAL / OUT

ON / OFF 1 2 1 2

M12 -TP1 M12 -TP2

FESTO
Bus node + Interlinking block
548755 + 550208

DI:0	DI 0 X1:4	V2AR42UQ41UQ1.1-BGR	L150 Model Clamp 1 (RESET)
DI:1	DI 1 X1:2	V2AR42UQ41UQ1.1-BGS	L150 Model Clamp 1 (SET)
DI:2	DI 2 X2:4	V2AR42UQ41UQ1.2-BGR	L150 Model Clamp 1 (RESET)
DI:3	DI 3 X2:2	V2AR42UQ41UQ1.2-BGS	L150 Model Clamp 1 (SET)
DI:4	DI 4 X3:4	V2AR42UQ41UQ1.3-BGR	L150 Model Clamp 1 (RESET)
DI:5	DI 5 X3:2	V2AR42UQ41UQ1.3-BGS	L150 Model Clamp 1 (SET)
DI:6	DI 6 X4:4	V2AR42UQ41UQ1.4-BGR	L150 Model Clamp 1 (RESET)
DI:7	DI 7 X4:2	V2AR42UQ41UQ1.4-BGS	L150 Model Clamp 1 (SET)
DI:8	DI 8 X5:4	DI:8	Spare
DI:9	DI 9 X5:2	DI:9	Spare
DI:10	DI 10 X6:4	DI:10	Spare
DI:11	DI 11 X6:2	DI:11	Spare
DI:12	DI 12 X7:4	DI:12	Spare
DI:13	DI 13 X7:2	DI:13	Spare
DI:14	DI 14 X8:4	DI:14	Spare
DI:15	DI 15 X8:2	DI:15	Spare

-KF1.11

FESTO
CPX-M-AB-8-M12X2-5POL
549335

X1 X2 X3 X4 X5 X6 X7 X8 (M12)
24V | DI 1 | 0V | DI 0 | FE
24V | DI 3 | 0V | DI 2 | FE
24V | DI 5 | 0V | DI 4 | FE
24V | DI 7 | 0V | DI 6 | FE
24V | DI 9 | 0V | DI 8 | FE
24V | DI 11 | 0V | DI 10 | FE
24V | DI 13 | 0V | DI 12 | FE
24V | DI 15 | 0V | DI 14 | FE

BN | WH | BU | BK

+.AR42UQ41UQ1.1-W1
=V2AR42UQ41UQ1+.AR42UQ41UQ1/1.1

+.AR42UQ41UQ1.2-W1
=V2AR42UQ41UQ1+.AR42UQ41UQ1/1.2

+.AR42UQ41UQ1.3-W1
=V2AR42UQ41UQ1+.AR42UQ41UQ1/1.4

+.AR42UQ41UQ1.4-W1
=V2AR42UQ41UQ1+.AR42UQ41UQ1/1.5

1 3

			Date	1/24/2023	Volvo Trucks North America	Valiant TMS	CONNECTING MOD. FOR MPA MANIFOLD	Drawing name: =2V01&EFS-EL_KF1	= V2AR42UQ41KF1
			Ed.	MKLEPADLO					+ V2AR42UQ41
			Appr		P6700 Framing - Cell 2V01, KF1	Scale 1:1		Document type: EFS	Project nr: 22-16152
Modification	Date	Name	Original		Replacement of	Replaced by			Page 2 / 1630

0	1	2	3	4	5	6	7	8	9

-KF1.12

FESTO
CPX-M-AB-8-M12X2-5POL
549335

DI:16	DI 0 X1:4	V2AR42UQ41-BG01	L150 Model Part Present
DI:17	DI 1 X1:2	V2AR42UQ41-BG02	L150 Model Part Present
DI:18	DI 2 X2:4	DI:18	Spare
DI:19	DI 3 X2:2	DI:19	Spare
DI:20	DI 4 X3:4	DI:20	Spare
DI:21	DI 5 X3:2	DI:21	Spare
DI:22	DI 6 X4:4	DI:22	Spare
DI:23	DI 7 X4:2	DI:23	Spare
DI:24	DI 8 X5:4	DI:24	Spare
DI:25	DI 9 X5:2	DI:25	Spare
DI:26	DI 10 X6:4	DI:26	Spare
DI:27	DI 11 X6:2	DI:27	Spare
DI:28	DI 12 X7:4	DI:28	Spare
DI:29	DI 13 X7:2	DI:29	Spare
DI:30	DI 14 X8:4	DI:30	Spare
DI:31	DI 15 X8:2	DI:31	Spare

-XG1/2
=V2AR42UQ41BG0/1.1

2 4

			Date	1/24/2023	Volvo Trucks North America		Valiant TMS	I/O MOD. DI16 (8 x M12) FOR MPA	Drawing name: =2V01&EFS-EL_KF1	= V2AR42UQ41KF1
			Ed.	MKLEPADLO						+ V2AR42UQ41
			Appr		P6700 Framing - Cell 2V01, KF1				Document type: EFS	Project nr: 22-16152
Modification	Date	Name	Original		Replacement of	Replaced by	Scale 1:1			Page 3 / 1630

0	1	2	3	4	5	6	7	8	9

-KF1 -KF1.11 -KF1.12 -KF1.20 -KF1.21 -KF1.22

M1

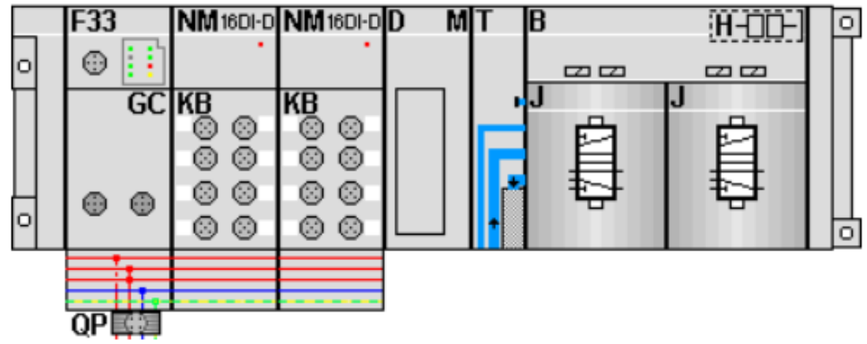

-KF1.21
=V2AR42UQ41UQ1+.AR42UQ41UQ1/1.3
=V2AR42UQ41UQ2+.AR42UQ41UQ2/1.3

FESTO

=V2AR42UQ41UQ1+.AR42UQ41UQ1/1.4	DO:0 DO 0 1.1	-QN1.1_Q	L150 Model Clamps (RST)
=V2AR42UQ41UQ1+.AR42UQ41UQ1/1.4	DO:1 DO 1 1.2	-QN1.2_Q	L150 Model Clamps (SET)
=V2AR42UQ41UQ2+.AR42UQ41UQ2/1.4	DO:2 DO 2 2.1	-QN2.1_Q	Spare (RST)
=V2AR42UQ41UQ2+.AR42UQ41UQ2/1.4	DO:3 DO 3 2.2	-QN2.2_Q	Spare (SET)

=V2AR42UQ41UQ1+.AR42UQ41UQ1/1

			Date	1/24/2023	Volvo Trucks North America		Valiant TMS	CONNECTING MOD. FOR FESTO DQ	Drawing name: =2V01&EFS-EL_KF1	= V2AR42UQ41KF1
			Ed.	MKLEPADLO						+ V2AR42UQ41
			Appr		P6700 Framing - Cell 2V01, KF1		Scale 1:1		Document type: EFS / Project nr: 22-16152	Page 4 / 1630
Modification	Date	Name	Original		Replacement of	Replaced by				

0	1	2	3	4	5	6	7	8	9

=V2AR42UQ41KF1
+.AR42UQ41

-KF1.21
=V2AR42UQ41KF1+V2AR42UQ41/4.1

L150 Model Clamps (RST)
=V2AR42UQ41KF1
+V2AR42UQ41
-QN1.1_Q
=V2AR42UQ41KF1
+V2AR42UQ41/4.3
DO:0

L150 Model Clamps (SET)
=V2AR42UQ41KF1
+V2AR42UQ41
-QN1.2_Q
=V2AR42UQ41KF1
+V2AR42UQ41/4.3
DO:1

1.1 Pneumatic Valve
1.2 Pneumatic Valve

-QN1 .1 .2

=V2AR42UQ41KF1+V2AR42UQ41/2.1
+.AR42UQ41UQ1.1-W1

=V2AR42UQ41KF1+V2AR42UQ41/2.2
+.AR42UQ41UQ1.2-W1

=V2AR42UQ41KF1+V2AR42UQ41/2.3
+.AR42UQ41UQ1.3-W1

=V2AR42UQ41KF1+V2AR42UQ41/2.4
+.AR42UQ41UQ1.4-W1

-W1 RKC 4.4T-2-RSC 4.4T/S3060 2m
-W1 RKC 4.4T-4-RSC 4.4T/S3060 4m
-W1 RKC 4.4T-2-RSC 4.4T/S3060 2m
-W1 RKC 4.4T-4-RSC 4.4T/S3060 4m

-BGS/R
BN BU BK WH
1 3
TÜNKERS
1324638
A2 A1
2 4

L150 Model Clamp
=V2AR42UQ41UQ1.1
+.AR42UQ41UQ1.1
-UQ1.1

L150 Model Clamp
=V2AR42UQ41UQ1.2
+.AR42UQ41UQ1.2
-UQ1.2

L150 Model Clamp
=V2AR42UQ41UQ1.3
+.AR42UQ41UQ1.3
-UQ1.3

L150 Model Clamp
=V2AR42UQ41UQ1.4
+.AR42UQ41UQ1.4
-UQ1.4

=V2AR42UQ41
-UQ1.1-BGS/R
L150 Model
Clamp

=V2AR42UQ41
-UQ1.2-BGS/R
L150 Model
Clamp

=V2AR42UQ41
-UQ1.3-BGS/R
L150 Model
Clamp

=V2AR42UQ41
-UQ1.4-BGS/R
L150 Model
Clamp

=V2AR42UQ41KF1+V2AR42UQ41/4

=V2AR42UQ41UQ2+.AR42UQ41UQ2/1

			Date	1/24/2023	Volvo Trucks North America	Valiant TMS	FESTO DQ CONNECTION QN1	Drawing name: =2V01&EFS-EL_KF1	= V2AR42UQ41UQ1
			Ed.	MKLEPADLO					+ V2AR42UQ41UQ1
			Appr		P6700 Framing - Cell 2V01, KF1			Document type: EFS	Project nr: 22-16152
Modification	Date	Name	Original		Replacement of / Replaced by	Scale 1:1			Page 1 / 1630

0	1	2	3	4	5	6	7	8	9

=V2AR42UQ41KF1
+.AR42UQ41

-KF1.21
=V2AR42UQ41KF1+V2AR42UQ41/4.1

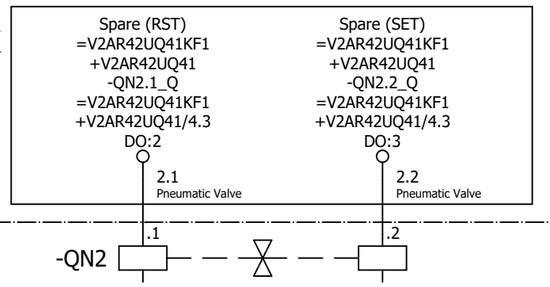

=V2AR42UQ41UQ1+.AR42UQ41UQ1/1

=V2AR42UQ42BG0+.AR42UQ42/1

			Date	1/24/2023	Volvo Trucks North America	Valiant TMS	FESTO DQ CONNECTION QN2	Drawing name: =2V01&EFS-EL_KF1	= V2AR42UQ41UQ2
			Ed.	MKLEPADLO					+ V2AR42UQ41UQ2
			Appr		P6700 Framing - Cell 2V01, KF1	Scale 1:1		Document type: EFS	Project nr: 22-16152
Modification	Date	Name	Original		Replacement of	Replaced by			Page 1 / 1630

0	1	2	3	4	5	6	7	8	9

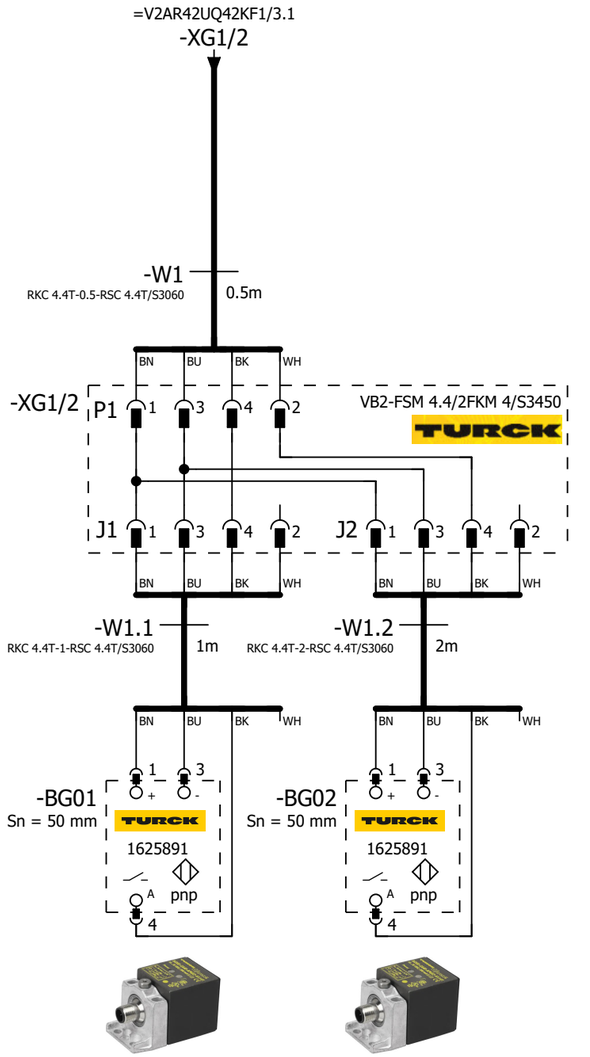

=V2AR42UQ42 -BG01 L230/290/320 Part Present	=V2AR42UQ42 -BG02 L230/290/320 Part Present

=V2AR42UQ41UQ2+.AR42UQ41UQ2/1

=V2AR42UQ42KF1/1

			Date	1/24/2023	Volvo Trucks North America		Valiant TMS	SENSORS	Drawing name: =2V01&EFS-EL_KF1	= V2AR42UQ42BG0
			Ed.	MKLEPADLO						+ V2AR42UQ42
			Appr		P6700 Framing - Cell 2V01, KF1				Document type: EFS	Project nr: 22-16152	Page 1
Modification	Date	Name	Original		Replacement of	Replaced by	Scale 1:1				1630

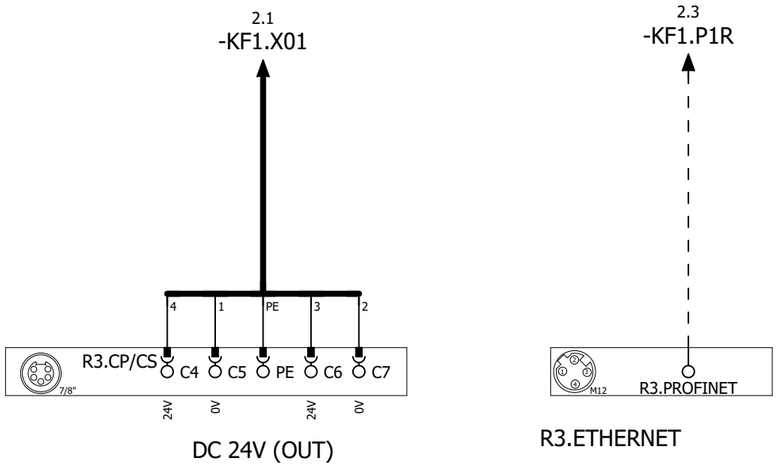

DC 24V (OUT)

R3.ETHERNET

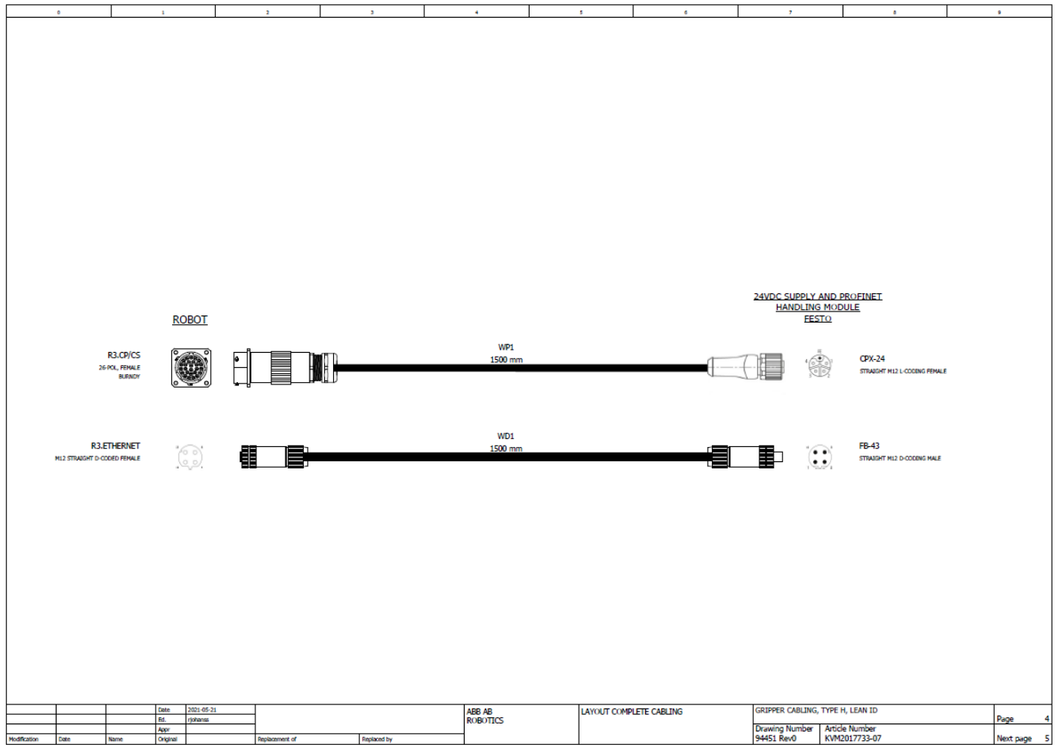

=V2AR42UQ42BG0/1

2

			Date	1/24/2023	Volvo Trucks North America	Valiant TMS	24VDC SUPPLY AND PROFINET HANDLING MODULE	Drawing name: =2V01&EFS-EL_KF1	= V2AR42UQ42KF1
			Ed.	MKLEPADLO					+ V2AR42UQ42
			Appr		P6700 Framing - Cell 2V01, KF1	Scale 1:1		Document type: EFS	Project nr: 22-16152
Modification	Date	Name	Original		Replacement of / Replaced by				Page 1 / 1630

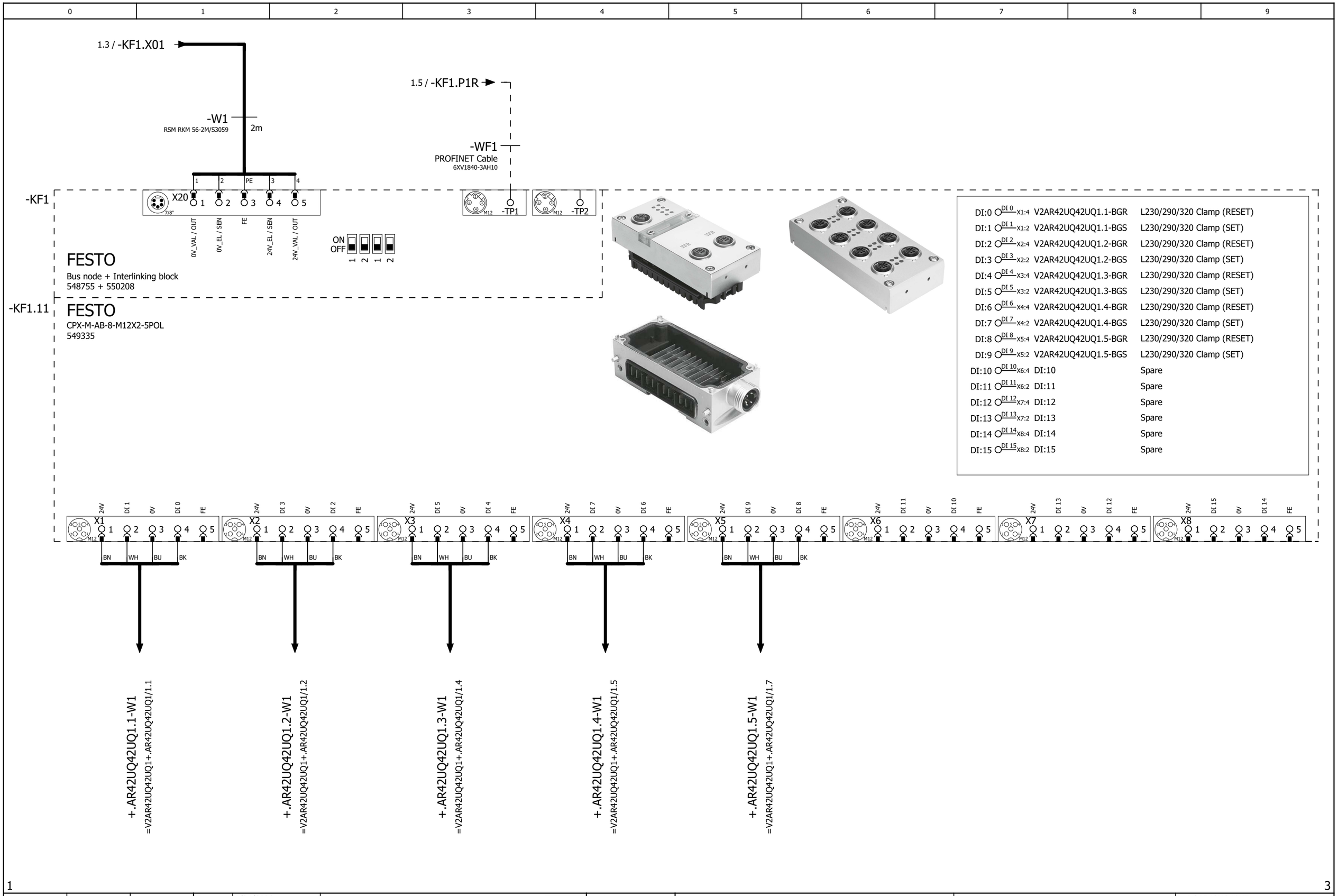

1 3

			Date	1/24/2023	Volvo Trucks North America	Valiant TMS	CONNECTING MOD. FOR MPA MANIFOLD	Drawing name: =2V01&EFS-EL_KF1	= V2AR42UQ42KF1 + V2AR42UQ42
			Ed.	MKLEPADLO	P6700 Framing - Cell 2V01, KF1				
			Appr					Document type: EFS	Project nr: 22-16152
Modification	Date	Name	Original		Replacement of / Replaced by	Scale 1:1			Page 2 / 1630

0	1	2	3	4	5	6	7	8	9

-KF1.12

FESTO
CPX-M-AB-8-M12X2-5POL
549335

DI:16	DI 0 X1:4	V2AR42UQ42-BG01	L230/290/320 Model Part Present
DI:17	DI 1 X1:2	V2AR42UQ42-BG02	L230/290/320 Model Part Present
DI:18	DI 2 X2:4	DI:18	Spare
DI:19	DI 3 X2:2	DI:19	Spare
DI:20	DI 4 X3:4	DI:20	Spare
DI:21	DI 5 X3:2	DI:21	Spare
DI:22	DI 6 X4:4	DI:22	Spare
DI:23	DI 7 X4:2	DI:23	Spare
DI:24	DI 8 X5:4	DI:24	Spare
DI:25	DI 9 X5:2	DI:25	Spare
DI:26	DI 10 X6:4	DI:26	Spare
DI:27	DI 11 X6:2	DI:27	Spare
DI:28	DI 12 X7:4	DI:28	Spare
DI:29	DI 13 X7:2	DI:29	Spare
DI:30	DI 14 X8:4	DI:30	Spare
DI:31	DI 15 X8:2	DI:31	Spare

-XG1/2
=V2AR42UQ42BG0/1.1

2 4

			Date	1/24/2023	Volvo Trucks North America	Valiant TMS	I/O MOD. DI16 (8 x M12) FOR MPA	Drawing name: =2V01&EFS-EL_KF1	= V2AR42UQ42KF1	
			Ed.	MKLEPADLO					+ V2AR42UQ42	
			Appr		P6700 Framing - Cell 2V01, KF1			Document type: EFS	Project nr: 22-16152	Page 3
Modification	Date	Name	Original		Replacement of / Replaced by	Scale 1:1				1630

0	1	2	3	4	5	6	7	8	9

-KF1 -KF1.11 -KF1.12 -KF1.20 -KF1.21 -KF1.22

M1

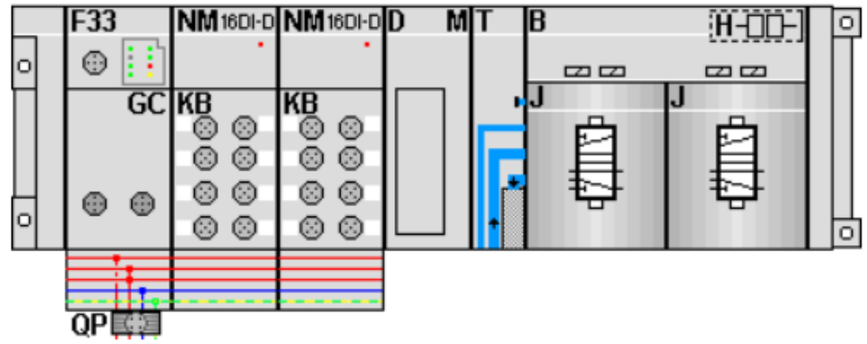

-KF1.21
=V2AR42UQ42UQ1+.AR42UQ42UQ1/1.3
=V2AR42UQ42UQ2+.AR42UQ42UQ2/1.3

FESTO

=V2AR42UQ42UQ1+.AR42UQ42UQ1/1.4	DO:0	DO 0 1.1	-QN1.1_Q	L230/290/320 Clamps (RST)
=V2AR42UQ42UQ1+.AR42UQ42UQ1/1.4	DO:1	DO 1 1.2	-QN1.2_Q	L230/290/320 Clamps (SET)
=V2AR42UQ42UQ2+.AR42UQ42UQ2/1.4	DO:2	DO 2 2.1	-QN2.1_Q	Spare (RST)
=V2AR42UQ42UQ2+.AR42UQ42UQ2/1.4	DO:3	DO 3 2.2	-QN2.2_Q	Spare (SET)

			Date	1/24/2023	Volvo Trucks North America	Valiant TMS	CONNECTING MOD. FOR FESTO DQ	Drawing name: =2V01&EFS-EL_KF1	= V2AR42UQ42KF1
			Ed.	MKLEPADLO					+ V2AR42UQ42
			Appr		P6700 Framing - Cell 2V01, KF1	Scale 1:1		Document type: EFS / Project nr: 22-16152	Page 4 / 1630
Modification	Date	Name	Original		Replacement of / Replaced by				

0	1	2	3	4	5	6	7	8	9

=V2AR42UQ42KF1
+.AR42UQ42

-KF1.21
=V2AR42UQ42KF1+V2AR42UQ42/4.1

L230/290/320 Clamps (RST)
=V2AR42UQ42KF1
+V2AR42UQ42
-QN1.1_Q
=V2AR42UQ42KF1
+V2AR42UQ42/4.3
DO:0

L230/290/320 Clamps (SET)
=V2AR42UQ42KF1
+V2AR42UQ42
-QN1.2_Q
=V2AR42UQ42KF1
+V2AR42UQ42/4.3
DO:1

1.1 Pneumatic Valve
1.2 Pneumatic Valve

-QN1 .1 .2

=V2AR42UQ42KF1+V2AR42UQ42/2.1
+.AR42UQ42UQ1.1-W1

=V2AR42UQ42KF1+V2AR42UQ42/2.2
+.AR42UQ42UQ1.2-W1

=V2AR42UQ42KF1+V2AR42UQ42/2.3
+.AR42UQ42UQ1.3-W1

=V2AR42UQ42KF1+V2AR42UQ42/2.4
+.AR42UQ42UQ1.4-W1

=V2AR42UQ42KF1+V2AR42UQ42/2.5
+.AR42UQ42UQ1.5-W1

-W1 RKC 4.4T-1-RSC 4.4T/S3060 1m
-W1 RKC 4.4T-2-RSC 4.4T/S3060 2m
-W1 RKC 4.4T-1-RSC 4.4T/S3060 1m
-W1 RKC 4.4T-2-RSC 4.4T/S3060 2m
-W1 RKC 4.4T-1-RSC 4.4T/S3060 1m

BN BU BK WH

-BGS/R
TÜNKERS
1324638
A2 A1 2 4

L230/290/320 Clamp
=V2AR42UQ42UQ1.1
+.AR42UQ42UQ1.1
-UQ1.1

L230/290/320 Clamp
=V2AR42UQ42UQ1.2
+.AR42UQ42UQ1.2
-UQ1.2

L230/290/320 Clamp
=V2AR42UQ42UQ1.3
+.AR42UQ42UQ1.3
-UQ1.3

L230/290/320 Clamp
=V2AR42UQ42UQ1.4
+.AR42UQ42UQ1.4
-UQ1.4

L230/290/320 Clamp
=V2AR42UQ42UQ1.5
+.AR42UQ42UQ1.5
-UQ1.5

=V2AR42UQ42
-UQ1.1-BGS/R
L230/290/320
Clamp

=V2AR42UQ42
-UQ1.2-BGS/R
L230/290/320
Clamp

=V2AR42UQ42
-UQ1.3-BGS/R
L230/290/320
Clamp

=V2AR42UQ42
-UQ1.4-BGS/R
L230/290/320
Clamp

=V2AR42UQ42
-UQ1.5-BGS/R
L230/290/320
Clamp

=V2AR42UQ42KF1+V2AR42UQ42/4

=V2AR42UQ42UQ2+.AR42UQ42UQ2/1

			Date	1/24/2023	Volvo Trucks North America	Valiant TMS	FESTO DQ CONNECTION QN1	Drawing name: =2V01&EFS-EL_KF1	= V2AR42UQ42UQ1
			Ed.	MKLEPADLO					+ V2AR42UQ42UQ1
			Appr		P6700 Framing - Cell 2V01, KF1			Document type: EFS	Project nr: 22-16152
Modification	Date	Name	Original		Replacement of	Replaced by	Scale 1:1		Page 1 / 1630

0	1	2	3	4	5	6	7	8	9

=V2AR42UQ42KF1
+.AR42UQ42

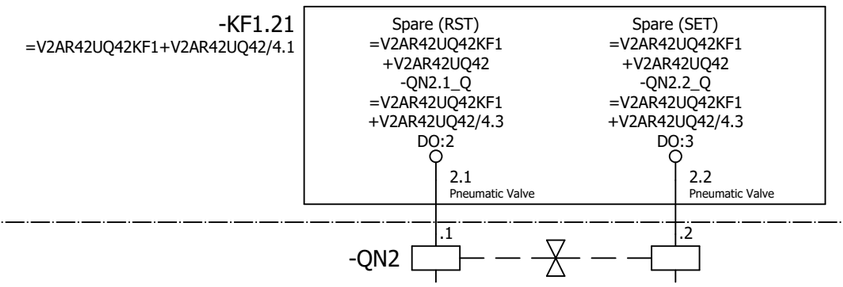

=V2AR42UQ42UQ1+.AR42UQ42UQ1/1

=V2AR42WC1+.AR42UC01/1

			Date	1/24/2023	Volvo Trucks North America	Valiant TMS	FESTO DQ CONNECTION QN2	Drawing name: =2V01&EFS-EL_KF1	= V2AR42UQ42UQ2
			Ed.	MKLEPADLO					+ V2AR42UQ42UQ2
			Appr		P6700 Framing - Cell 2V01, KF1	Scale 1:1		Document type: EFS / Project nr: 22-16152	Page 1 / 1630
Modification	Date	Name	Original		Replacement of / Replaced by				

0	1	2	3	4	5	6	7	8	9

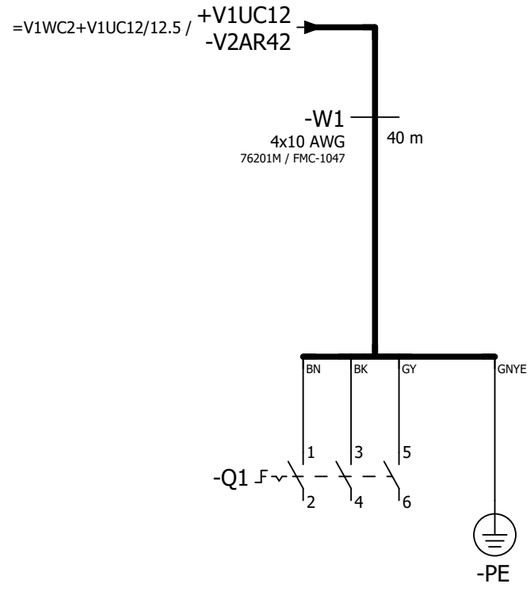

=V2AR42UQ42UQ2+.AR42UQ42UQ2/1

=V2AR42XQ11WC1+.AR42XQ11UC01/1

			Date	1/24/2023	Volvo Trucks North America		Valiant TMS	Incoming power	Drawing name: =2V01&EFS-EL_KF1	= V2AR42WC1
			Ed.	MKLEPADLO						+ V2AR42UC01
			Appr		P6700 Framing - Cell 2V01, KF1				Document type: EFS	Project nr: 22-16152
Modification	Date	Name	Original		Replacement of	Replaced by	Scale 1:1			Page 1 / 1630

0	1	2	3	4	5	6	7	8	9

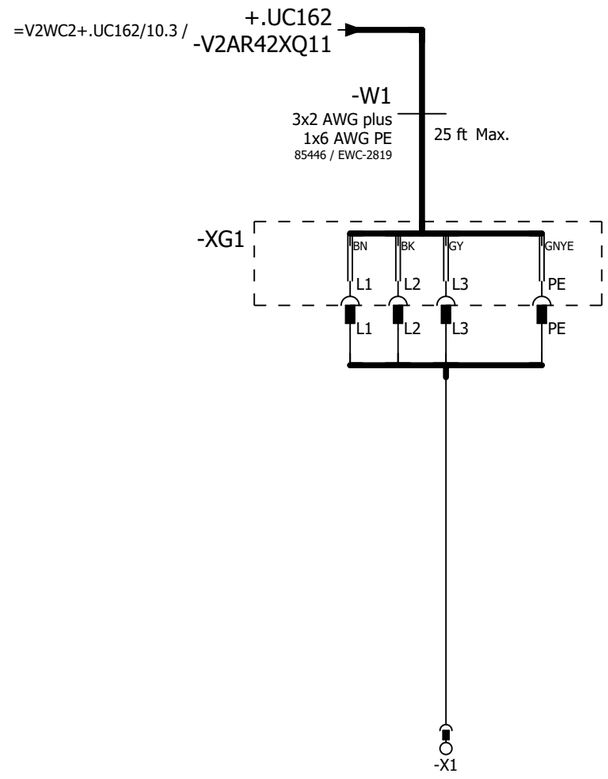

=V2AR42WC1+.AR42UC01/1

=V2AR43KF1+.AR43UC01/1

			Date	1/24/2023	Volvo Trucks North America	Valiant TMS	Incoming power	Drawing name: =2V01&EFS-EL_KF1	= V2AR42XQ11WC1	
			Ed.	MKLEPADLO					+ V2AR42XQ11UC01	
			Appr		P6700 Framing - Cell 2V01, KF1	Scale 1:1		Document type: EFS	Project nr: 22-16152	Page 1 / 1630
Modification	Date	Name	Original		Replacement of / Replaced by					

0	1	2	3	4	5	6	7	8	9

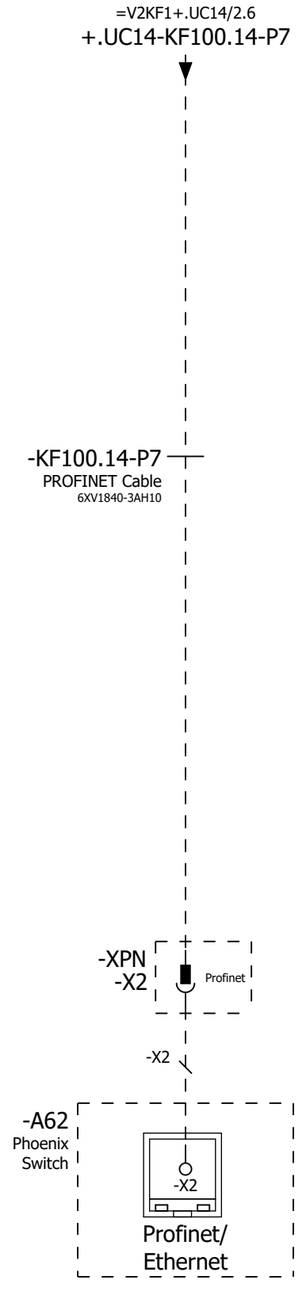

=V2AR42XQ11WC1+.AR42XQ11UC01/1

=V2AR43UQ41BG0+.AR43UQ41/1

			Date	1/24/2023	Volvo Trucks North America	Valiant TMS	Incoming Profinet	Drawing name: =2V01&EFS-EL_KF1	= V2AR43KF1
			Ed.	MKLEPADLO					+ V2AR43UC01
			Appr		P6700 Framing - Cell 2V01, KF1			Document type: EFS	Project nr: 22-16152
Modification	Date	Name	Original		Replacement of / Replaced by	Scale 1:1			Page 1 / 1630

0	1	2	3	4	5	6	7	8	9

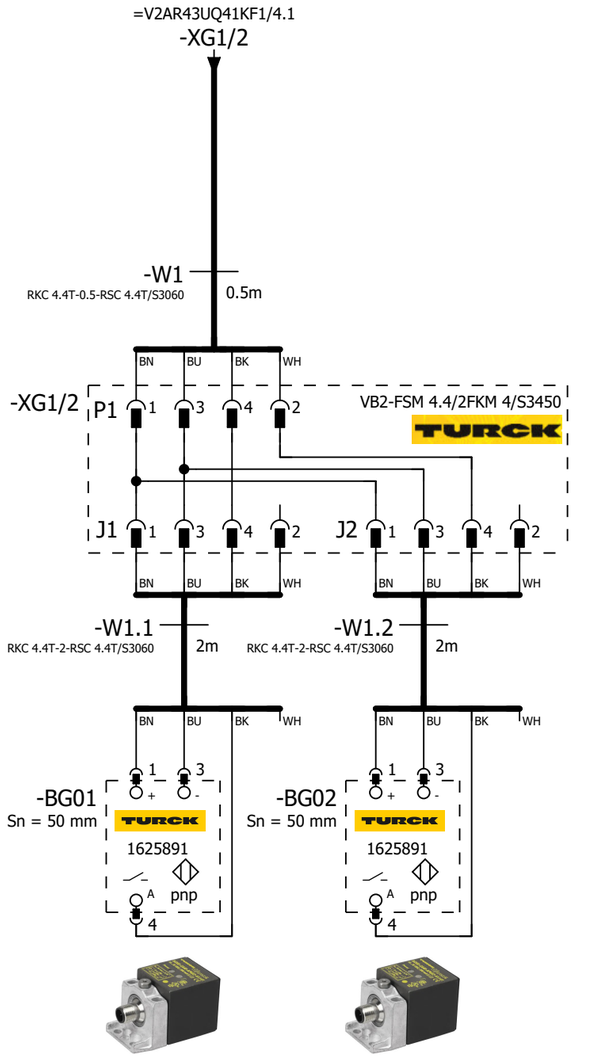

=V2AR43UQ41 -BG01 L150 Model Part Present	=V2AR43UQ41 -BG02 L150 Model Part Present

=V2AR43KF1+.AR43UC01/1

=V2AR43UQ41KF1/1

			Date	1/24/2023	Volvo Trucks North America	Valiant TMS	SENSORS	Drawing name: =2V01&EFS-EL_KF1	= V2AR43UQ41BG0
			Ed.	MKLEPADLO					+ V2AR43UQ41
			Appr		P6700 Framing - Cell 2V01, KF1			Document type: EFS	Project nr: 22-16152
Modification	Date	Name	Original		Replacement of / Replaced by	Scale 1:1			Page 1 / 1630

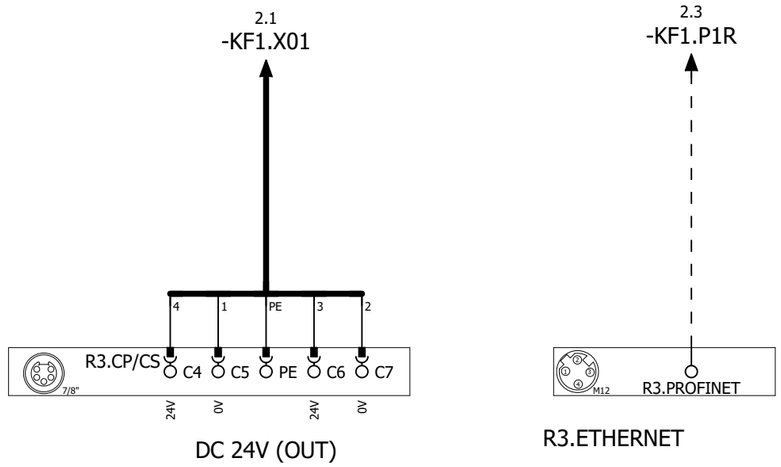

DC 24V (OUT)

R3.ETHERNET

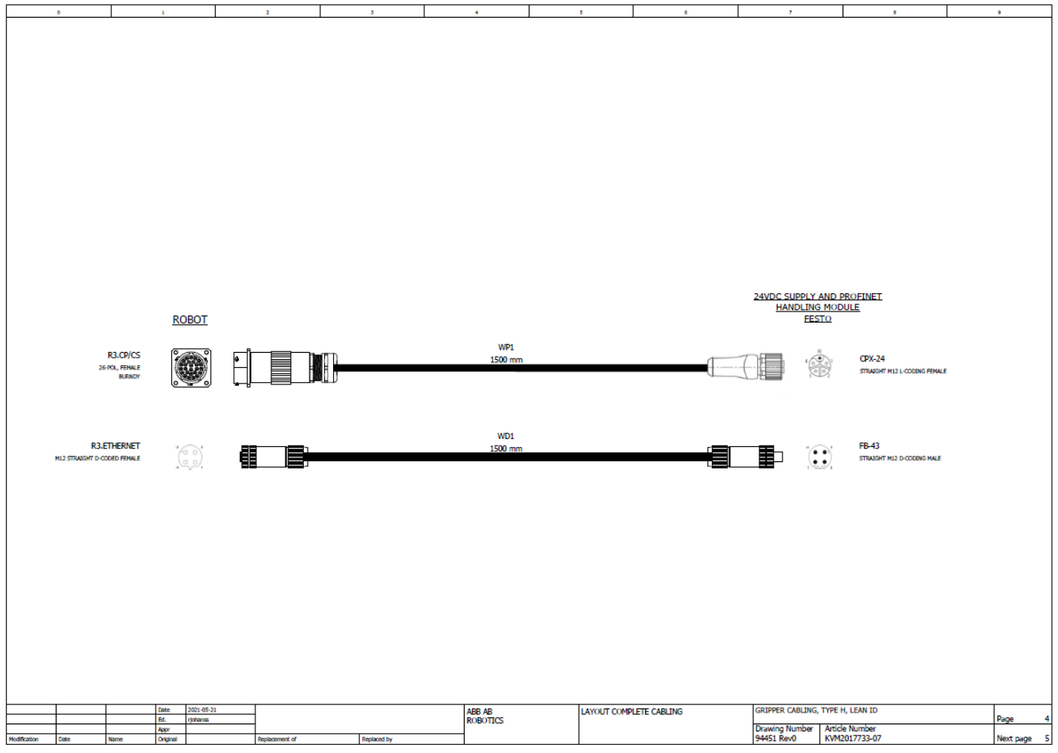

=V2AR43UQ41BG0/1

2

			Date	1/24/2023	Volvo Trucks North America	Valiant TMS	24VDC SUPPLY AND PROFINET HANDLING MODULE	Drawing name: =2V01&EFS-EL_KF1	= V2AR43UQ41KF1
			Ed.	MKLEPADLO					+ V2AR43UQ41
			Appr		P6700 Framing - Cell 2V01, KF1			Document type: EFS	Project nr: 22-16152
Modification	Date	Name	Original		Replacement of / Replaced by	Scale 1:1			Page 1 / 1630

0	1	2	3	4	5	6	7	8	9

1.3 / -KF1.X01

-W1
RSM RKM 56-2M/S3059
2m

1.5 / -KF1.P1R

-WF1
PROFINET Cable
6XV1840-3AH10

-KF1

X20 (7/8") 1 2 PE 3 4 5
0V_VAL / OUT
0V_EL / SEN
FE
24V_EL / SEN
24V_VAL / OUT

ON / OFF 1 2 1 2

M12 -TP1
M12 -TP2

FESTO
Bus node + Interlinking block
548755 + 550208

DI:0	DI 0 X1:4	V2AR43UQ41UQ1.1-BGR	L150 Model Shot Pin (RESET)
DI:1	DI 1 X1:2	V2AR43UQ41UQ1.1-BGS	L150 Model Shot Pin (SET)
DI:2	DI 2 X2:4	V2AR43UQ41UQ1.2-BGR	L150 Model Shot Pin (RESET)
DI:3	DI 3 X2:2	V2AR43UQ41UQ1.2-BGS	L150 Model Shot Pin (SET)
DI:4	DI 4 X3:4	V2AR43UQ41UQ2.1-BGR	L150 Model Clamp 1 (RESET)
DI:5	DI 5 X3:2	V2AR43UQ41UQ2.1-BGS	L150 Model Clamp 1 (SET)
DI:6	DI 6 X4:4	V2AR43UQ41UQ2.2-BGR	L150 Model Clamp 1 (RESET)
DI:7	DI 7 X4:2	V2AR43UQ41UQ2.2-BGS	L150 Model Clamp 1 (SET)
DI:8	DI 8 X5:4	V2AR43UQ41UQ2.3-BGR	L150 Model Clamp 1 (RESET)
DI:9	DI 9 X5:2	V2AR43UQ41UQ2.3-BGS	L150 Model Clamp 1 (SET)
DI:10	DI 10 X6:4	V2AR43UQ41UQ3.1-BGS	L150 Model Vacuums (SET)
DI:11	DI 11 X6:2	DI:11	Spare
DI:12	DI 12 X7:4	V2AR43UQ41UQ4.1-BGR	L150 Model Clamp 2 (RESET)
DI:13	DI 13 X7:2	V2AR43UQ41UQ4.1-BGS	L150 Model Clamp 2 (SET)
DI:14	DI 14 X8:4	V2AR43UQ41UQ4.2-BGR	L150 Model Clamp 2 (RESET)
DI:15	DI 15 X8:2	V2AR43UQ41UQ4.2-BGS	L150 Model Clamp 2 (SET)

-KF1.11

FESTO
CPX-M-AB-8-M12X2-5POL
549335

X1 X2 X3 X4 X5 X6 X7 X8 (M12)
24V | DI 1 | 0V | DI 0 | FE
24V | DI 3 | 0V | DI 2 | FE
24V | DI 5 | 0V | DI 4 | FE
24V | DI 7 | 0V | DI 6 | FE
24V | DI 9 | 0V | DI 8 | FE
24V | DI 11 | 0V | DI 10 | FE
24V | DI 13 | 0V | DI 12 | FE
24V | DI 15 | 0V | DI 14 | FE
BN WH BU BK

+.AR43UQ41UQ1.1-W1
=V2AR43UQ41UQ1+.AR43UQ41UQ1/1.1

+.AR43UQ41UQ1.2-W1
=V2AR43UQ41UQ1+.AR43UQ41UQ1/1.2

+.AR43UQ41UQ2.1-W1
=V2AR43UQ41UQ2+.AR43UQ41UQ2/1.1

+.AR43UQ41UQ2.2-W1
=V2AR43UQ41UQ2+.AR43UQ41UQ2/1.2

+.AR43UQ41UQ2.3-W1
=V2AR43UQ41UQ2+.AR43UQ41UQ2/1.4

+.AR43UQ41UQ3.1-W1
=V2AR43UQ41UQ3+.AR43UQ41UQ3/1.1

+.AR43UQ41UQ4.1-W1
=V2AR43UQ41UQ4+.AR43UQ41UQ4/1.1

+.AR43UQ41UQ4.2-W1
=V2AR43UQ41UQ4+.AR43UQ41UQ4/1.2

1 3

			Date	1/24/2023	Volvo Trucks North America		Valiant TMS	CONNECTING MOD. FOR MPA MANIFOLD	Drawing name: =2V01&EFS-EL_KF1	= V2AR43UQ41KF1
			Ed.	MKLEPADLO						+ V2AR43UQ41
			Appr		P6700 Framing - Cell 2V01, KF1		Scale 1:1		Document type: EFS	Project nr: 22-16152
Modification	Date	Name	Original		Replacement of	Replaced by				Page 2 / 1630

0	1	2	3	4	5	6	7	8	9

-KF1.12

FESTO
CPX-M-AB-8-M12X2-5POL
549335

DI:16	DI 0 X1:4	V2AR43UQ41UQ4.3-BGR	L150 Model Clamp 2 (RESET)
DI:17	DI 1 X1:2	V2AR43UQ41UQ4.3-BGS	L150 Model Clamp 2 (SET)
DI:18	DI 2 X2:4	DI:18	Spare
DI:19	DI 3 X2:2	DI:19	Spare
DI:20	DI 4 X3:4	DI:20	Spare
DI:21	DI 5 X3:2	DI:21	Spare
DI:22	DI 6 X4:4	DI:22	Spare
DI:23	DI 7 X4:2	DI:23	Spare
DI:24	DI 8 X5:4	DI:24	Spare
DI:25	DI 9 X5:2	DI:25	Spare
DI:26	DI 10 X6:4	DI:26	Spare
DI:27	DI 11 X6:2	DI:27	Spare
DI:28	DI 12 X7:4	DI:28	Spare
DI:29	DI 13 X7:2	DI:29	Spare
DI:30	DI 14 X8:4	DI:30	Spare
DI:31	DI 15 X8:2	DI:31	Spare

+.AR43UQ41UQ4.3-W1
=V2AR43UQ41UQ4+.AR43UQ41UQ4/1.4

2 4

			Date	1/24/2023	Volvo Trucks North America	Valiant TMS	I/O MOD. DI16 (8 x M12) FOR MPA	Drawing name: =2V01&EFS-EL_KF1	= V2AR43UQ41KF1
			Ed.	MKLEPADLO					+ V2AR43UQ41
			Appr		P6700 Framing - Cell 2V01, KF1	Scale 1:1		Document type: EFS	Project nr: 22-16152
Modification	Date	Name	Original		Replacement of	Replaced by			Page 3 / 1630

0	1	2	3	4	5	6	7	8	9

-KF1.13

FESTO
CPX-M-AB-8-M12X2-5POL
549335

DI:32	DI 0 X1:4	V2AR43UQ41-B01	L150 Model Part Present
DI:33	DI 1 X1:2	V2AR43UQ41-B02	L150 Model Part Present
DI:34	DI 2 X2:4	DI:34	Spare
DI:35	DI 3 X2:2	DI:35	Spare
DI:36	DI 4 X3:4	DI:36	Spare
DI:37	DI 5 X3:2	DI:37	Spare
DI:38	DI 6 X4:4	DI:38	Spare
DI:39	DI 7 X4:2	DI:39	Spare
DI:40	DI 8 X5:4	DI:40	Spare
DI:41	DI 9 X5:2	DI:41	Spare
DI:42	DI 10 X6:4	DI:42	Spare
DI:43	DI 11 X6:2	DI:43	Spare
DI:44	DI 12 X7:4	DI:44	Spare
DI:45	DI 13 X7:2	DI:45	Spare
DI:46	DI 14 X8:4	DI:46	Spare
DI:47	DI 15 X8:2	DI:47	Spare

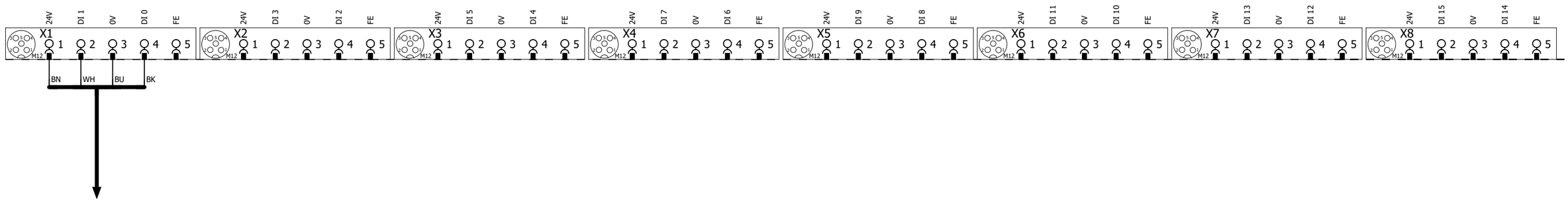

-XG1/2
=V2AR43UQ41BG0/1.1

3 5

			Date	1/24/2023	Volvo Trucks North America		Valiant TMS	I/O MOD. DI16 (8 x M12) FOR MPA	Drawing name: =2V01&EFS-EL_KF1	= V2AR43UQ41KF1
			Ed.	MKLEPADLO						+ V2AR43UQ41
			Appr		P6700 Framing - Cell 2V01, KF1				Document type: EFS	Project nr: 22-16152
Modification	Date	Name	Original		Replacement of	Replaced by	Scale 1:1			Page 4 / 1630

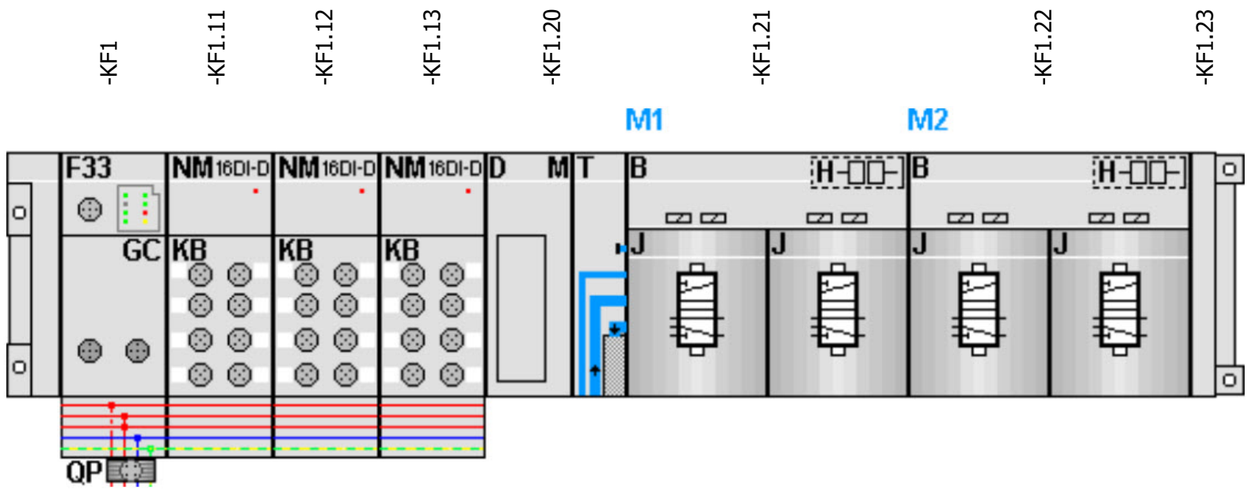

-KF1.21
=V2AR43UQ41UQ1+.AR43UQ41UQ1/1.3
=V2AR43UQ41UQ2+.AR43UQ41UQ2/1.3

FESTO

=V2AR43UQ41UQ1+.AR43UQ41UQ1/1.4	DO:0	DO 0 1.1	-QN1.1_Q	L150 Model Shot Pins (RST)
=V2AR43UQ41UQ1+.AR43UQ41UQ1/1.4	DO:1	DO 1 1.2	-QN1.2_Q	L150 Model Shot Pins (SET)
=V2AR43UQ41UQ2+.AR43UQ41UQ2/1.4	DO:2	DO 2 2.1	-QN2.1_Q	L150 Model Clamps 1 (RST)
=V2AR43UQ41UQ2+.AR43UQ41UQ2/1.4	DO:3	DO 3 2.2	-QN2.2_Q	L150 Model Clamps 1 (SET)

-KF1.22
=V2AR43UQ41UQ3+.AR43UQ41UQ3/1.3
=V2AR43UQ41UQ4+.AR43UQ41UQ4/1.3

FESTO

=V2AR43UQ41UQ3+.AR43UQ41UQ3/1.4	DO:4	DO 4 1.1	-QN3.1_Q	L150 Model Vacuums (RST)
=V2AR43UQ41UQ3+.AR43UQ41UQ3/1.4	DO:5	DO 5 1.2	-QN3.2_Q	L150 Model Vacuums (SET)
=V2AR43UQ41UQ4+.AR43UQ41UQ4/1.4	DO:6	DO 6 2.1	-QN4.1_Q	L150 Model Clamps 2 (RST)
=V2AR43UQ41UQ4+.AR43UQ41UQ4/1.4	DO:7	DO 7 2.2	-QN4.2_Q	L150 Model Clamps 2 (SET)

=V2AR43UQ41UQ1+.AR43UQ41UQ1/1

			Date	1/24/2023	Volvo Trucks North America	Valiant TMS	CONNECTING MOD. FOR FESTO DQ	Drawing name: =2V01&EFS-EL_KF1	= V2AR43UQ41KF1
			Ed.	MKLEPADLO					+ V2AR43UQ41
			Appr		P6700 Framing - Cell 2V01, KF1			Document type: EFS	Project nr: 22-16152
Modification	Date	Name	Original		Replacement of / Replaced by	Scale 1:1			Page 5 / 1630

0	1	2	3	4	5	6	7	8	9

=V2AR43UQ41KF1
+.AR43UQ41

-KF1.21
=V2AR43UQ41KF1+V2AR43UQ41/5.1

L150 Model Shot Pins (RST)
=V2AR43UQ41KF1
+V2AR43UQ41
-QN1.1_Q
=V2AR43UQ41KF1
+V2AR43UQ41/5.3
DO:0

L150 Model Shot Pins (SET)
=V2AR43UQ41KF1
+V2AR43UQ41
-QN1.2_Q
=V2AR43UQ41KF1
+V2AR43UQ41/5.3
DO:1

1.1
Pneumatic Valve

1.2
Pneumatic Valve

-QN1
.1
.2

=V2AR43UQ41KF1+V2AR43UQ41/2.1
+.AR43UQ41UQ1.1-W1

=V2AR43UQ41KF1+V2AR43UQ41/2.2
+.AR43UQ41UQ1.2-W1

-W1
RKC 4.4T-1-RSC 4.4T/S3060
1m

-BGS/R
BN BU BK WH
1 3
+ -
WELKER
WWS001A
A2 A1
2 4

L150 Model Shot Pin
=V2AR43UQ41UQ1.1
+.AR43UQ41UQ1.1
-UQ1.1

L150 Model Shot Pin
=V2AR43UQ41UQ1.2
+.AR43UQ41UQ1.2
-UQ1.2

=V2AR43UQ41
-UQ1.1-BGS/R
L150 Model
Shot Pin

=V2AR43UQ41
-UQ1.2-BGS/R
L150 Model
Shot Pin

=V2AR43UQ41KF1+V2AR43UQ41/5

=V2AR43UQ41UQ2+.AR43UQ41UQ2/1

			Date	1/24/2023	Volvo Trucks North America		Valiant TMS	FESTO DQ CONNECTION QN1	Drawing name: =2V01&EFS-EL_KF1	= V2AR43UQ41UQ1
			Ed.	MKLEPADLO						+ V2AR43UQ41UQ1
			Appr		P6700 Framing - Cell 2V01, KF1				Document type: EFS	Project nr: 22-16152
Modification	Date	Name	Original		Replacement of	Replaced by	Scale 1:1			Page 1 / 1630

0	1	2	3	4	5	6	7	8	9

=V2AR43UQ41KF1
+.AR43UQ41

-KF1.21
=V2AR43UQ41KF1+V2AR43UQ41/5.1

L150 Model Clamps 1 (RST)
=V2AR43UQ41KF1
+V2AR43UQ41
-QN2.1_Q
=V2AR43UQ41KF1
+V2AR43UQ41/5.3
DO:2

L150 Model Clamps 1 (SET)
=V2AR43UQ41KF1
+V2AR43UQ41
-QN2.2_Q
=V2AR43UQ41KF1
+V2AR43UQ41/5.3
DO:3

2.1 Pneumatic Valve
2.2 Pneumatic Valve

-QN2 .1 .2

=V2AR43UQ41KF1+V2AR43UQ41/2.3
+.AR43UQ41UQ2.1-W1

=V2AR43UQ41KF1+V2AR43UQ41/2.4
+.AR43UQ41UQ2.2-W1

=V2AR43UQ41KF1+V2AR43UQ41/2.5
+.AR43UQ41UQ2.3-W1

-W1 RKC 4.4T-1-RSC 4.4T/S3060 1m
-W1 RKC 4.4T-1-RSC 4.4T/S3060 1m
-W1 RKC 4.4T-2-RSC 4.4T/S3060 2m

BN BU BK WH

-BGS/R
TÜNKERS
1324638
A2 A1 2 4

L150 Model Clamp 1
=V2AR43UQ41UQ2.1
+.AR43UQ41UQ2.1
-UQ2.1

L150 Model Clamp 1
=V2AR43UQ41UQ2.2
+.AR43UQ41UQ2.2
-UQ2.2

L150 Model Clamp 1
=V2AR43UQ41UQ2.3
+.AR43UQ41UQ2.3
-UQ2.3

=V2AR43UQ41
-UQ2.1-BGS/R
L150 Model
Clamp 1

=V2AR43UQ41
-UQ2.2-BGS/R
L150 Model
Clamp 1

=V2AR43UQ41
-UQ2.3-BGS/R
L150 Model
Clamp 1

=V2AR43UQ41UQ1+.AR43UQ41UQ1/1

=V2AR43UQ41UQ3+.AR43UQ41UQ3/1

			Date	1/24/2023	Volvo Trucks North America		Valiant TMS	FESTO DQ CONNECTION QN2	Drawing name: =2V01&EFS-EL_KF1	= V2AR43UQ41UQ2
			Ed.	MKLEPADLO						+ V2AR43UQ41UQ2
			Appr		P6700 Framing - Cell 2V01, KF1				Document type: EFS	Project nr: 22-16152
Modification	Date	Name	Original		Replacement of	Replaced by	Scale 1:1			Page 1 / 1630

0	1	2	3	4	5	6	7	8	9

=V2AR43UQ41KF1
+.AR43UQ41

-KF1.22
=V2AR43UQ41KF1+V2AR43UQ41/5.1

L150 Model Vacuums (RST)	L150 Model Vacuums (SET)
=V2AR43UQ41KF1	=V2AR43UQ41KF1
+V2AR43UQ41	+V2AR43UQ41
-QN3.1_Q	-QN3.2_Q
=V2AR43UQ41KF1	=V2AR43UQ41KF1
+V2AR43UQ41/5.3	+V2AR43UQ41/5.3
DO:4	DO:5

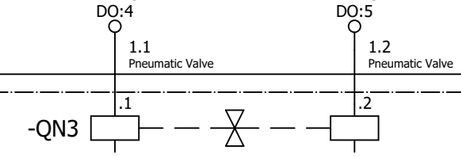

=V2AR43UQ41KF1+V2AR43UQ41/2.6
+.AR43UQ41UQ3.1-W1

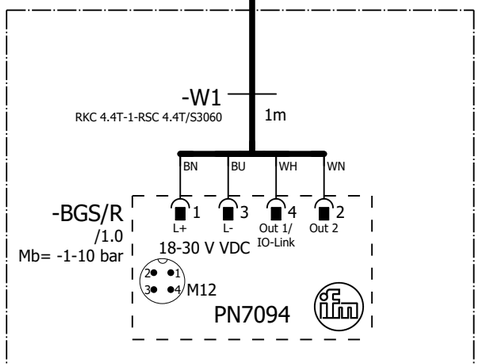

L150 Model Vacuums

=V2AR43UQ41UQ3.1
+.AR43UQ41UQ3.1
-UQ3.1

=V2AR43UQ41 -UQ3.1-BGS/R L150 Model Vacuums

=V2AR43UQ41UQ2+.AR43UQ41UQ2/1

=V2AR43UQ41UQ4+.AR43UQ41UQ4/1

			Date	1/24/2023	Volvo Trucks North America	Valiant TMS	FESTO DQ CONNECTION QN3	Drawing name: =2V01&EFS-EL_KF1	= V2AR43UQ41UQ3
			Ed.	MKLEPADLO					+ V2AR43UQ41UQ3
			Appr		P6700 Framing - Cell 2V01, KF1	Scale 1:1		Document type: EFS	Project nr: 22-16152
Modification	Date	Name	Original		Replacement of	Replaced by			Page 1 / 1630

0	1	2	3	4	5	6	7	8	9

=V2AR43UQ41KF1
+.AR43UQ41

-KF1.22
=V2AR43UQ41KF1+V2AR43UQ41/5.1

L150 Model Clamps 2 (RST)
=V2AR43UQ41KF1
+V2AR43UQ41
-QN4.1_Q
=V2AR43UQ41KF1
+V2AR43UQ41/5.3
DO:6

L150 Model Clamps 2 (SET)
=V2AR43UQ41KF1
+V2AR43UQ41
-QN4.2_Q
=V2AR43UQ41KF1
+V2AR43UQ41/5.3
DO:7

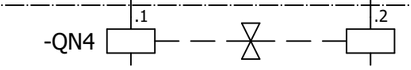

=V2AR43UQ41KF1+V2AR43UQ41/2.8
+.AR43UQ41UQ4.1-W1

=V2AR43UQ41KF1+V2AR43UQ41/2.9
+.AR43UQ41UQ4.2-W1

=V2AR43UQ41KF1+V2AR43UQ41/3.1
+.AR43UQ41UQ4.3-W1

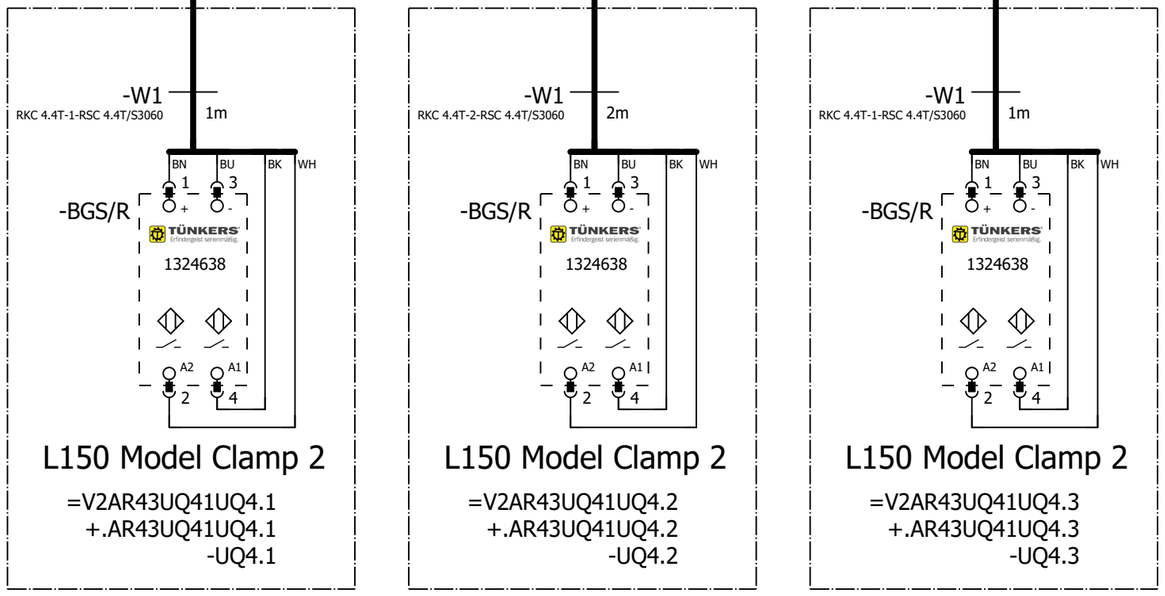

=V2AR43UQ41
-UQ4.1-BGS/R
L150 Model
Clamp 2

=V2AR43UQ41
-UQ4.2-BGS/R
L150 Model
Clamp 2

=V2AR43UQ41
-UQ4.3-BGS/R
L150 Model
Clamp 2

=V2AR43UQ41UQ3+.AR43UQ41UQ3/1

=V2AR43UQ42BG0+.AR43UQ42/1

			Date	1/24/2023	Volvo Trucks North America		Valiant TMS	FESTO DQ CONNECTION QN4	Drawing name: =2V01&EFS-EL_KF1	= V2AR43UQ41UQ4
			Ed.	MKLEPADLO						+ V2AR43UQ41UQ4
			Appr		P6700 Framing - Cell 2V01, KF1				Document type: EFS	Project nr: 22-16152
Modification	Date	Name	Original		Replacement of	Replaced by	Scale 1:1			Page 1 / 1630

0	1	2	3	4	5	6	7	8	9

=V2AR43UQ42KF1/4.5

-XG1/2

-W1

RKC 4.4T-0.5-RSC 4.4T/S3060

0.5m

BN BU BK WH

-XG1/2 P1 1 3 4 2

VB2-FSM 4.4/2FKM 4/S3450

TURCK

J1 1 3 4 2 J2 1 3 4 2

BN BU BK WH

-W1.1

RKC 4.4T-3-RSC 4.4T/S3060

3m

-W1.2

RKC 4.4T-3-RSC 4.4T/S3060

3m

BN BU BK WH

1 3

-BG01

Sn = 50 mm

TURCK

1625891

A pnp

4

-BG02

Sn = 50 mm

TURCK

1625891

A pnp

4

=V2AR43UQ42
-BG01
L290/320 Model
Part Present

=V2AR43UQ42
-BG02
L290 Model
Part Present

=V2AR43UQ42KF1/4.6

-XG3

-W2

RKC 4.4T-4-RSC 4.4T/S3060

4m

BN BU BK WH

1 3

-BG03

Sn = 50 mm

TURCK

1625891

A pnp

4

=V2AR43UQ42
-BG03
L320 Model
Part Present

=V2AR43UQ41UQ4+.AR43UQ41UQ4/1

=V2AR43UQ42KF1/1

			Date	1/24/2023	Volvo Trucks North America	Valiant TMS	SENSORS	Drawing name: =2V01&EFS-EL_KF1	= V2AR43UQ42BG0
			Ed.	MKLEPADLO					+ V2AR43UQ42
			Appr		P6700 Framing - Cell 2V01, KF1			Document type: EFS	Project nr: 22-16152
Modification	Date	Name	Original		Replacement of / Replaced by	Scale 1:1			Page 1 / 1630

0	1	2	3	4	5	6	7	8	9

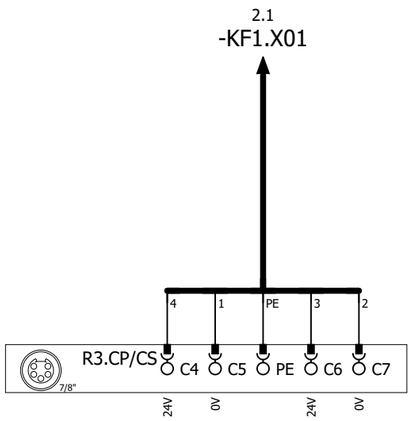

DC 24V (OUT)

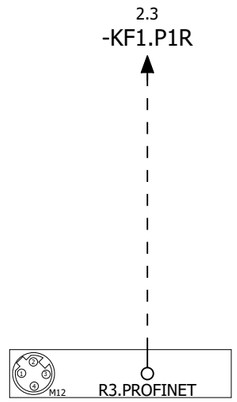

R3.ETHERNET

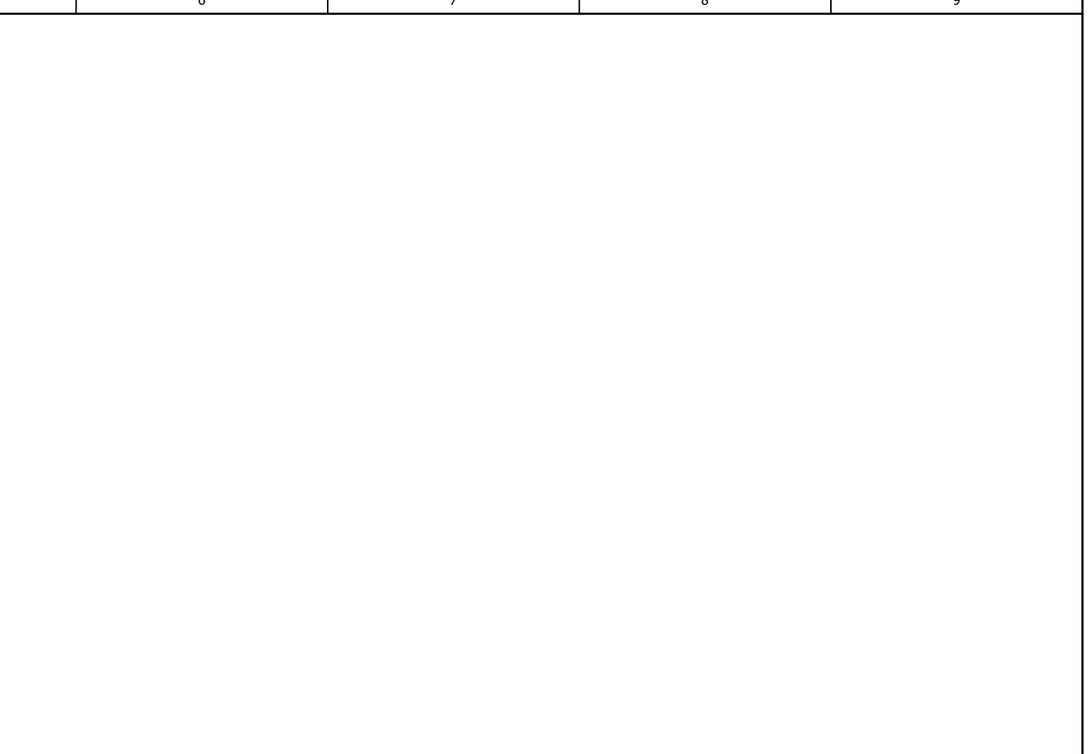

=V2AR43UQ42BG0/1

2

			Date	1/24/2023	Volvo Trucks North America	Valiant TMS	24VDC SUPPLY AND PROFINET HANDLING MODULE	Drawing name: =2V01&EFS-EL_KF1	= V2AR43UQ42KF1
			Ed.	MKLEPADLO					+ V2AR43UQ42
			Appr		P6700 Framing - Cell 2V01, KF1	Scale 1:1		Document type: EFS	Project nr: 22-16152
Modification	Date	Name	Original		Replacement of / Replaced by				Page 1 / 1630

0	1	2	3	4	5	6	7	8	9

1.3 / -KF1.X01

-W1
RSM RKM 56-2M/S3059
2m

1.5 / -KF1.P1R

-WF1
PROFINET Cable
6XV1840-3AH10

-KF1

X20 (7/8") 1 2 PE 3 4
0V_VAL / OUT
0V_EL / SEN
FE
24V_EL / SEN
24V_VAL / OUT

ON / OFF 1 2 1 2

M12 -TP1
M12 -TP2

FESTO
Bus node + Interlinking block
548755 + 550208

DI:0	DI 0 X1:4	V2AR43UQ42UQ1.1-BGR	L290/320 Model Shot Pin (RESET)
DI:1	DI 1 X1:2	V2AR43UQ42UQ1.1-BGS	L290/320 Model Shot Pin (SET)
DI:2	DI 2 X2:4	V2AR43UQ42UQ2.1-BGR	L290 Model Clamp 1 (RESET)
DI:3	DI 3 X2:2	V2AR43UQ42UQ2.1-BGS	L290 Model Clamp 1 (SET)
DI:4	DI 4 X3:4	V2AR43UQ42UQ2.2-BGR	L290 Model Clamp 1 (RESET)
DI:5	DI 5 X3:2	V2AR43UQ42UQ2.2-BGS	L290 Model Clamp 1 (SET)
DI:6	DI 6 X4:4	V2AR43UQ42UQ3.1-BGS	L290/320 Model Vacuums (SET)
DI:7	DI 7 X4:2	DI:7	Spare
DI:8	DI 8 X5:4	V2AR43UQ42UQ4.1-BGR	L290/320 Model Clamp 1 (RESET)
DI:9	DI 9 X5:2	V2AR43UQ42UQ4.1-BGS	L290/320 Model Clamp 1 (SET)
DI:10	DI 10 X6:4	V2AR43UQ42UQ4.2-BGR	L290/320 Model Clamp 1 (RESET)
DI:11	DI 11 X6:2	V2AR43UQ42UQ4.2-BGS	L290/320 Model Clamp 1 (SET)
DI:12	DI 12 X7:4	V2AR43UQ42UQ5.1-BGR	L290 Model Clamp 2 (RESET)
DI:13	DI 13 X7:2	V2AR43UQ42UQ5.1-BGS	L290 Model Clamp 2 (SET)
DI:14	DI 14 X8:4	V2AR43UQ42UQ5.2-BGR	L290 Model Clamp 2 (RESET)
DI:15	DI 15 X8:2	V2AR43UQ42UQ5.2-BGS	L290 Model Clamp 2 (SET)

-KF1.11

FESTO
CPX-M-AB-8-M12X2-5POL
549335

X1 X2 X3 X4 X5 X6 X7 X8 (M12)
24V / DI 1 / 0V / DI 0 / FE
24V / DI 3 / 0V / DI 2 / FE
24V / DI 5 / 0V / DI 4 / FE
24V / DI 7 / 0V / DI 6 / FE
24V / DI 9 / 0V / DI 8 / FE
24V / DI 11 / 0V / DI 10 / FE
24V / DI 13 / 0V / DI 12 / FE
24V / DI 15 / 0V / DI 14 / FE
BN WH BU BK

+.AR43UQ42UQ1.1-W1
=V2AR43UQ42UQ1+.AR43UQ42UQ1/1.1

+.AR43UQ42UQ2.1-W1
=V2AR43UQ42UQ2+.AR43UQ42UQ2/1.1

+.AR43UQ42UQ2.2-W1
=V2AR43UQ42UQ2+.AR43UQ42UQ2/1.2

+.AR43UQ42UQ3.1-W1
=V2AR43UQ42UQ3+.AR43UQ42UQ3/1.1

+.AR43UQ42UQ4.1-W1
=V2AR43UQ42UQ4+.AR43UQ42UQ4/1.1

+.AR43UQ42UQ4.2-W1
=V2AR43UQ42UQ4+.AR43UQ42UQ4/1.2

+.AR43UQ42UQ5.1-W1
=V2AR43UQ42UQ5+.AR43UQ42UQ5/1.1

+.AR43UQ42UQ5.2-W1
=V2AR43UQ42UQ5+.AR43UQ42UQ5/1.2

1 3

			Date	1/24/2023	Volvo Trucks North America	Valiant TMS	CONNECTING MOD. FOR MPA MANIFOLD	Drawing name: =2V01&EFS-EL_KF1	= V2AR43UQ42KF1
			Ed.	MKLEPADLO					+ V2AR43UQ42
			Appr		P6700 Framing - Cell 2V01, KF1	Scale 1:1		Document type: EFS	Project nr: 22-16152
Modification	Date	Name	Original		Replacement of	Replaced by			Page 2 / 1630

0	1	2	3	4	5	6	7	8	9

-KF1.12

FESTO

CPX-M-AB-8-M12X2-5POL

549335

DI:16	DI 0 X1:4	V2AR43UQ42UQ6.1-BGR	L290/320 Model Clamp 2 (RESET)
DI:17	DI 1 X1:2	V2AR43UQ42UQ6.1-BGS	L290/320 Model Clamp 2 (SET)
DI:18	DI 2 X2:4	V2AR43UQ42UQ6.2-BGR	L290/320 Model Clamp 2 (RESET)
DI:19	DI 3 X2:2	V2AR43UQ42UQ6.2-BGS	L290/320 Model Clamp 2 (SET)
DI:20	DI 4 X3:4	V2AR43UQ42UQ6.3-BGR	L290/320 Model Clamp 2 (RESET)
DI:21	DI 5 X3:2	V2AR43UQ42UQ6.3-BGS	L290/320 Model Clamp 2 (SET)
DI:22	DI 6 X4:4	V2AR43UQ42UQ7.1-BGR	L290 Model Clamp 3 (RESET)
DI:23	DI 7 X4:2	V2AR43UQ42UQ7.1-BGS	L290 Model Clamp 3 (SET)
DI:24	DI 8 X5:4	V2AR43UQ42UQ7.2-BGR	L290 Model Clamp 3 (RESET)
DI:25	DI 9 X5:2	V2AR43UQ42UQ7.2-BGS	L290 Model Clamp 3 (SET)
DI:26	DI 10 X6:4	V2AR43UQ42UQ8.1-BGR	L320 Model Clamp 1 (RESET)
DI:27	DI 11 X6:2	V2AR43UQ42UQ8.1-BGS	L320 Model Clamp 1 (SET)
DI:28	DI 12 X7:4	V2AR43UQ42UQ8.2-BGR	L320 Model Clamp 1 (RESET)
DI:29	DI 13 X7:2	V2AR43UQ42UQ8.2-BGS	L320 Model Clamp 1 (SET)
DI:30	DI 14 X8:4	V2AR43UQ42UQ9.1-BGR	L320 Model Clamp 2 (RESET)
DI:31	DI 15 X8:2	V2AR43UQ42UQ9.1-BGS	L320 Model Clamp 2 (SET)

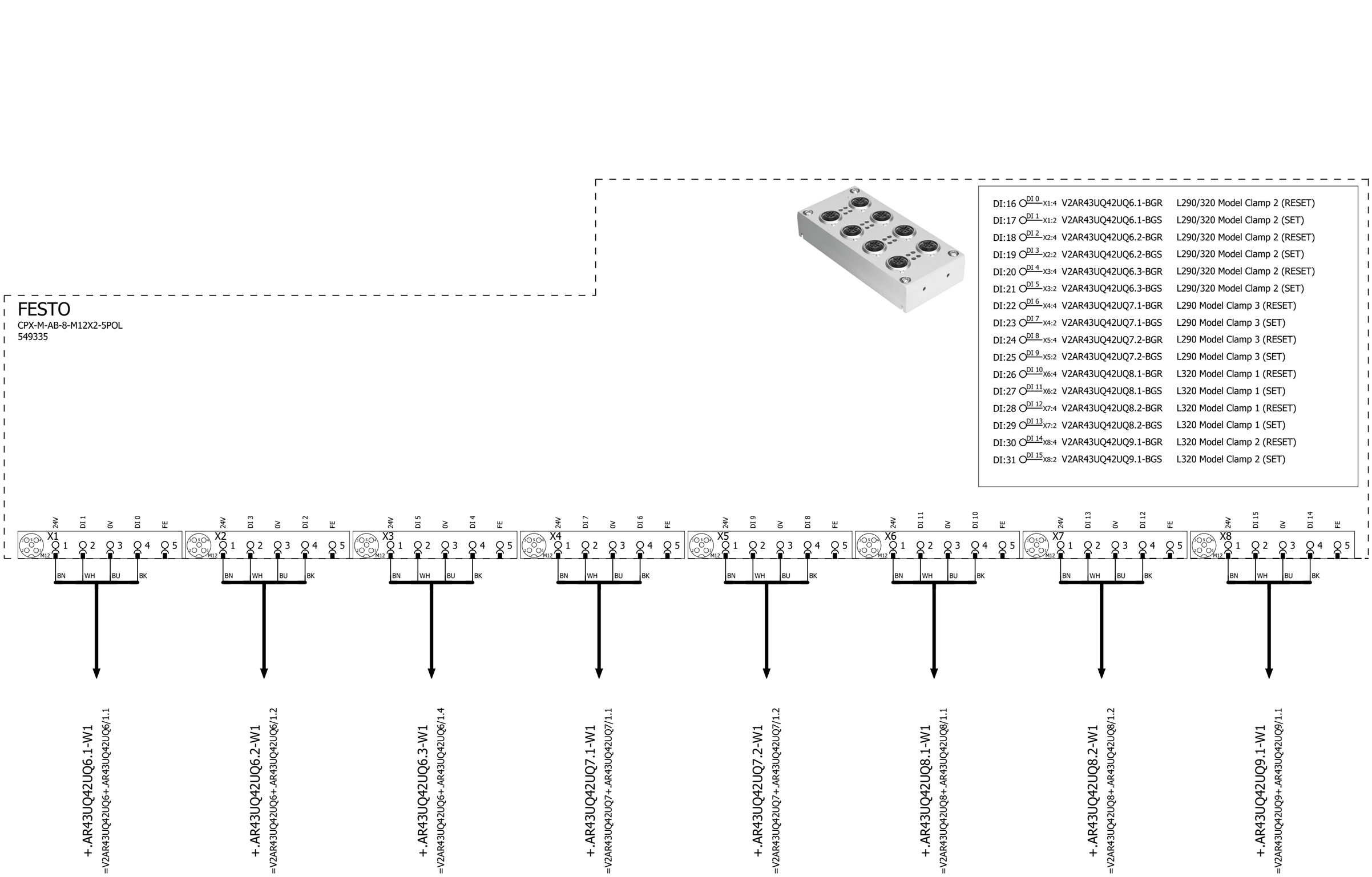

2 4

			Date	1/24/2023	Volvo Trucks North America		Valiant TMS	I/O MOD. DI16 (8 x M12) FOR MPA	Drawing name: =2V01&EFS-EL_KF1	= V2AR43UQ42KF1
			Ed.	MKLEPADLO						+ V2AR43UQ42
			Appr		P6700 Framing - Cell 2V01, KF1		Scale 1:1		Document type: EFS	Project nr: 22-16152
Modification	Date	Name	Original		Replacement of	Replaced by				Page 3 / 1630

DI:32	DI 0 X1:4	V2AR43UQ42UQ9.2-BGR	L320 Model Clamp 2 (RESET)
DI:33	DI 1 X1:2	V2AR43UQ42UQ9.2-BGS	L320 Model Clamp 2 (SET)
DI:34	DI 2 X2:4	DI:34	Spare
DI:35	DI 3 X2:2	DI:35	Spare
DI:36	DI 4 X3:4	DI:36	Spare
DI:37	DI 5 X3:2	DI:37	Spare
DI:38	DI 6 X4:4	DI:38	Spare
DI:39	DI 7 X4:2	DI:39	Spare
DI:40	DI 8 X5:4	V2AR43UQ42-BG01	L290/320 Model Part Present
DI:41	DI 9 X5:2	V2AR43UQ42-BG02	L290 Model Part Present
DI:42	DI 10 X6:4	V2AR43UQ42-BG03	L320 Model Part Present
DI:43	DI 11 X6:2	DI:43	Spare
DI:44	DI 12 X7:4	DI:44	Spare
DI:45	DI 13 X7:2	DI:45	Spare
DI:46	DI 14 X8:4	DI:46	Spare
DI:47	DI 15 X8:2	DI:47	Spare

-KF1.13

FESTO

CPX-M-AB-8-M12X2-5POL

549335

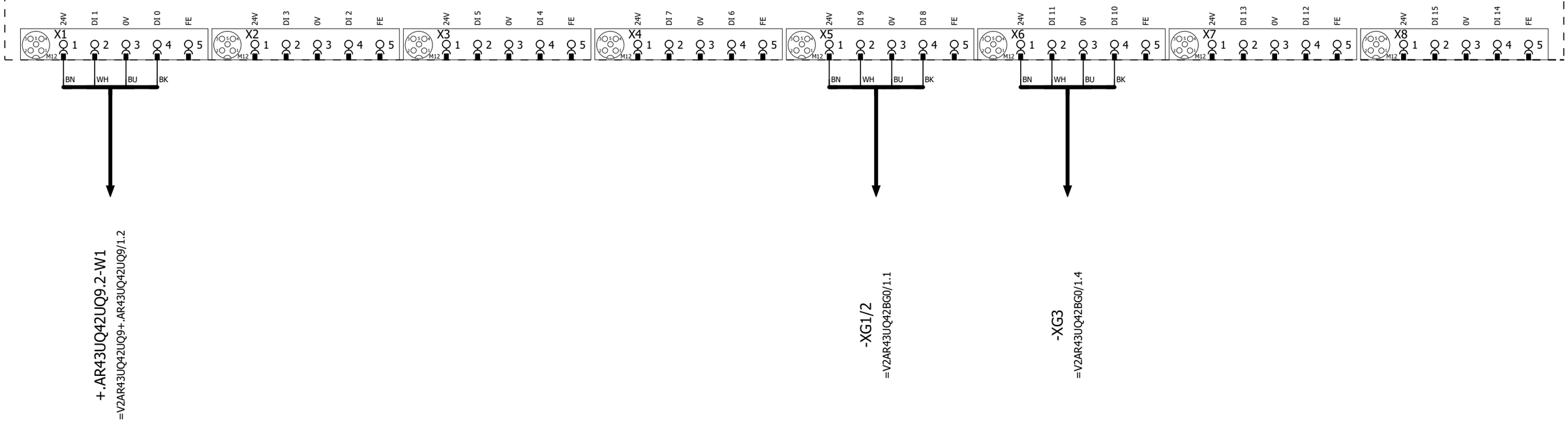

3 5

			Date	1/24/2023	Volvo Trucks North America	Valiant TMS	I/O MOD. DI16 (8 x M12) FOR MPA	Drawing name: =2V01&EFS-EL_KF1	= V2AR43UQ42KF1 + V2AR43UQ42
			Ed.	MKLEPADLO	P6700 Framing - Cell 2V01, KF1				
			Appr					Document type: EFS	Project nr: 22-16152
Modification	Date	Name	Original		Replacement of / Replaced by	Scale 1:1			Page 4 / 1630

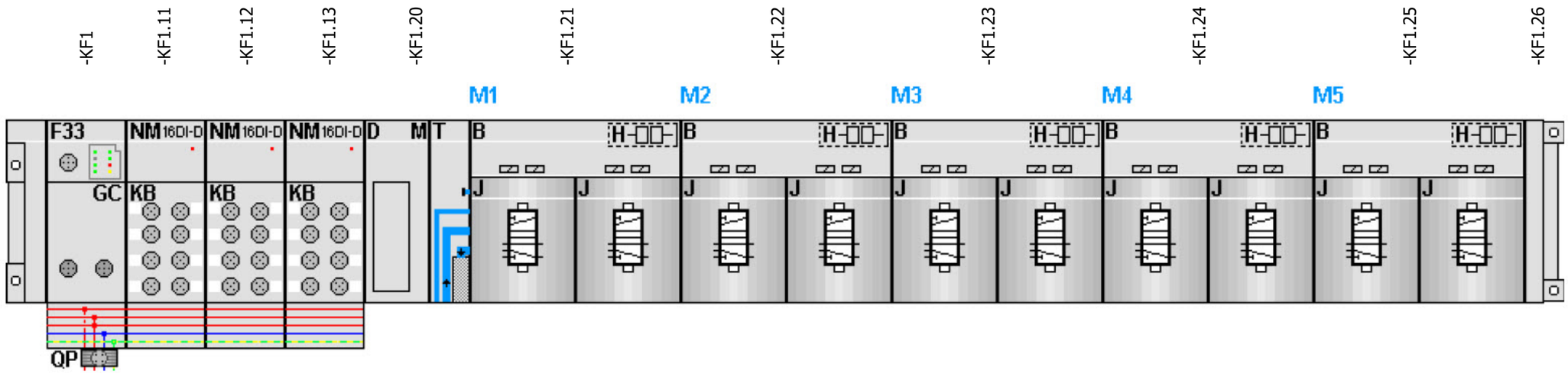

-KF1.21
=V2AR43UQ42UQ1+.AR43UQ42UQ1/1.3
=V2AR43UQ42UQ2+.AR43UQ42UQ2/1.3

FESTO

=V2AR43UQ42UQ1+.AR43UQ42UQ1/1.4	DO:0 DO 0 1.1	-QN1.1_Q	L290/320 Model Shot Pin (RST)
=V2AR43UQ42UQ1+.AR43UQ42UQ1/1.4	DO:1 DO 1 1.2	-QN1.2_Q	L290/320 Model Shot Pin (SET)
=V2AR43UQ42UQ2+.AR43UQ42UQ2/1.4	DO:2 DO 2 2.1	-QN2.1_Q	L290 Model Clamps 1 (RST)
=V2AR43UQ42UQ2+.AR43UQ42UQ2/1.4	DO:3 DO 3 2.2	-QN2.2_Q	L290 Model Clamps 1 (SET)

-KF1.22
=V2AR43UQ42UQ3+.AR43UQ42UQ3/1.3
=V2AR43UQ42UQ4+.AR43UQ42UQ4/1.3

FESTO

=V2AR43UQ42UQ3+.AR43UQ42UQ3/1.4	DO:4 DO 4 1.1	-QN3.1_Q	L290/320 Model Vacuums (RST)
=V2AR43UQ42UQ3+.AR43UQ42UQ3/1.4	DO:5 DO 5 1.2	-QN3.2_Q	L290/320 Model Vacuums (SET)
=V2AR43UQ42UQ4+.AR43UQ42UQ4/1.4	DO:6 DO 6 2.1	-QN4.1_Q	L290/320 Model Clamps 1 (RST)
=V2AR43UQ42UQ4+.AR43UQ42UQ4/1.4	DO:7 DO 7 2.2	-QN4.2_Q	L290/320 Model Clamps 1 (SET)

-KF1.23
=V2AR43UQ42UQ5+.AR43UQ42UQ5/1.3
=V2AR43UQ42UQ6+.AR43UQ42UQ6/1.3

FESTO

=V2AR43UQ42UQ5+.AR43UQ42UQ5/1.4	DO:8 DO 8 1.1	-QN5.1_Q	L290 Model Clamps 2 (RST)
=V2AR43UQ42UQ5+.AR43UQ42UQ5/1.4	DO:9 DO 9 1.2	-QN5.2_Q	L290 Model Clamps 2 (SET)
=V2AR43UQ42UQ6+.AR43UQ42UQ6/1.4	DO:10 DO 10 2.1	-QN6.1_Q	L290/320 Model Clamps 2 (RST)
=V2AR43UQ42UQ6+.AR43UQ42UQ6/1.4	DO:11 DO 11 2.2	-QN6.2_Q	L290/320 Model Clamps 2 (SET)

-KF1.24
=V2AR43UQ42UQ7+.AR43UQ42UQ7/1.3
=V2AR43UQ42UQ8+.AR43UQ42UQ8/1.3

FESTO

=V2AR43UQ42UQ7+.AR43UQ42UQ7/1.4	DO:12 DO 12 1.1	-QN7.1_Q	L290 Model Clamps 3 (RST)
=V2AR43UQ42UQ7+.AR43UQ42UQ7/1.4	DO:13 DO 13 1.2	-QN7.2_Q	L290 Model Clamps 3 (SET)
=V2AR43UQ42UQ8+.AR43UQ42UQ8/1.4	DO:14 DO 14 2.1	-QN8.1_Q	L320 Model Clamps 1 (RST)
=V2AR43UQ42UQ8+.AR43UQ42UQ8/1.4	DO:15 DO 15 2.2	-QN8.2_Q	L320 Model Clamps 1 (SET)

-KF1.25
=V2AR43UQ42UQ9+.AR43UQ42UQ9/1.3
=V2AR43UQ42UQ10+.AR43UQ42UQ10/1.3

FESTO

=V2AR43UQ42UQ9+.AR43UQ42UQ9/1.4	DO:16 DO 16 1.1	-QN9.1_Q	L320 Model Clamp 2 (RST)
=V2AR43UQ42UQ9+.AR43UQ42UQ9/1.4	DO:17 DO 17 1.2	-QN9.2_Q	L320 Model Clamp 2 (SET)
=V2AR43UQ42UQ10+.AR43UQ42UQ10/1.4	DO:18 DO 18 2.1	-QN10.1_Q	Spare (RST)
=V2AR43UQ42UQ10+.AR43UQ42UQ10/1.4	DO:19 DO 19 2.2	-QN10.2_Q	Spare (SET)

=V2AR43UQ42UQ1+.AR43UQ42UQ1/1

			Date	1/24/2023	Volvo Trucks North America	Valiant TMS	CONNECTING MOD. FOR FESTO DQ	Drawing name: =2V01&EFS-EL_KF1 / = V2AR43UQ42KF1 / + V2AR43UQ42
			Ed.	MKLEPADLO				
			Appr		P6700 Framing - Cell 2V01, KF1			Document type: EFS / Project nr: 22-16152 / Page 5 / 1630
Modification	Date	Name	Original		Replacement of / Replaced by	Scale 1:1		

0	1	2	3	4	5	6	7	8	9

=V2AR43UQ42KF1
+.AR43UQ42

-KF1.21
=V2AR43UQ42KF1+V2AR43UQ42/5.1

L290/320 Model Shot Pin (RST)	L290/320 Model Shot Pin (SET)
=V2AR43UQ42KF1	=V2AR43UQ42KF1
+V2AR43UQ42	+V2AR43UQ42
-QN1.1_Q	-QN1.2_Q
=V2AR43UQ42KF1	=V2AR43UQ42KF1
+V2AR43UQ42/5.3	+V2AR43UQ42/5.3
DO:0	DO:1

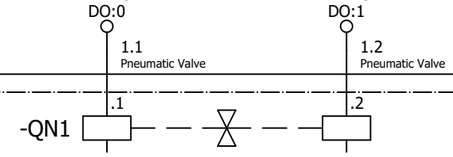

=V2AR43UQ42KF1+V2AR43UQ42/2.1
+.AR43UQ42UQ1.1-W1

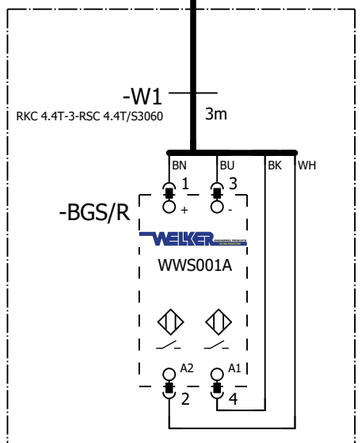

L290/320 Model Shot Pin

=V2AR43UQ42UQ1.1
+.AR43UQ42UQ1.1
-UQ1.1

=V2AR43UQ42 -UQ1.1-BGS/R L290/320 Model Shot Pin

=V2AR43UQ42KF1+V2AR43UQ42/5

=V2AR43UQ42UQ2+.AR43UQ42UQ2/1

			Date	1/24/2023	Volvo Trucks North America		Valiant TMS	FESTO DQ CONNECTION QN1	Drawing name: =2V01&EFS-EL_KF1	= V2AR43UQ42UQ1
			Ed.	MKLEPADLO						+ V2AR43UQ42UQ1
			Appr		P6700 Framing - Cell 2V01, KF1				Document type: EFS	Project nr: 22-16152
Modification	Date	Name	Original		Replacement of	Replaced by	Scale 1:1			Page 1 / 1630

0	1	2	3	4	5	6	7	8	9

=V2AR43UQ42KF1
+.AR43UQ42

-KF1.21
=V2AR43UQ42KF1+V2AR43UQ42/5.1

L290 Model Clamps 1 (RST)
=V2AR43UQ42KF1
+V2AR43UQ42
-QN2.1_Q
=V2AR43UQ42KF1
+V2AR43UQ42/5.3
DO:2

L290 Model Clamps 1 (SET)
=V2AR43UQ42KF1
+V2AR43UQ42
-QN2.2_Q
=V2AR43UQ42KF1
+V2AR43UQ42/5.3
DO:3

2.1 Pneumatic Valve

2.2 Pneumatic Valve

-QN2 .1 .2

=V2AR43UQ42KF1+V2AR43UQ42/2.2
+.AR43UQ42UQ2.1-W1

-W1 3m
RKC 4.4T-3-RSC 4.4T/S3060

BN BU BK WH

-BGS/R
1 3
+ -
TÜNKERS
1324644
A2 A1
2 4

L290 Model Clamp 1
=V2AR43UQ42UQ2.1
+.AR43UQ42UQ2.1
-UQ2.1

=V2AR43UQ42
-UQ2.1-BGS/R
L290 Model
Clamp 1

=V2AR43UQ42KF1+V2AR43UQ42/2.3
+.AR43UQ42UQ2.2-W1

-W1 3m
RKC 4.4T-3-RSC 4.4T/S3060

BN BU BK WH

-BGS/R
1 3
+ -
TÜNKERS
1324644
A2 A1
2 4

L290 Model Clamp 1
=V2AR43UQ42UQ2.2
+.AR43UQ42UQ2.2
-UQ2.2

=V2AR43UQ42
-UQ2.2-BGS/R
L290 Model
Clamp 1

=V2AR43UQ42UQ1+.AR43UQ42UQ1/1

=V2AR43UQ42UQ3+.AR43UQ42UQ3/1

			Date	1/24/2023	Volvo Trucks North America		Valiant TMS	FESTO DQ CONNECTION QN2	Drawing name: =2V01&EFS-EL_KF1	= V2AR43UQ42UQ2
			Ed.	MKLEPADLO						+ V2AR43UQ42UQ2
			Appr		P6700 Framing - Cell 2V01, KF1				Document type: EFS	Project nr: 22-16152
Modification	Date	Name	Original		Replacement of	Replaced by	Scale 1:1			Page 1 / 1630

0	1	2	3	4	5	6	7	8	9

=V2AR43UQ42KF1
+.AR43UQ42

-KF1.22
=V2AR43UQ42KF1+V2AR43UQ42/5.1

L290/320 Model Vacuums (RST)	L290/320 Model Vacuums (SET)
=V2AR43UQ42KF1	=V2AR43UQ42KF1
+V2AR43UQ42	+V2AR43UQ42
-QN3.1_Q	-QN3.2_Q
=V2AR43UQ42KF1	=V2AR43UQ42KF1
+V2AR43UQ42/5.3	+V2AR43UQ42/5.3
DO:4	DO:5

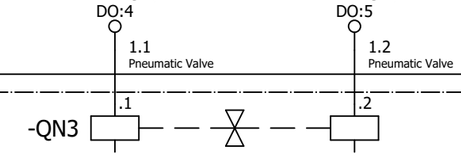

=V2AR43UQ42KF1+V2AR43UQ42/2.4
+.AR43UQ42UQ3.1-W1

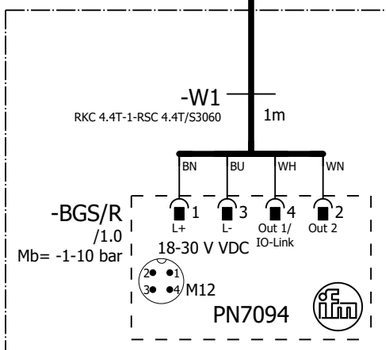

L290/320 Model Vacuums

=V2AR43UQ42UQ3.1
+.AR43UQ42UQ3.1
-UQ3.1

=V2AR43UQ42 -UQ3.1-BGS/R L290/320 Model Vacuums

=V2AR43UQ42UQ2+.AR43UQ42UQ2/1

=V2AR43UQ42UQ4+.AR43UQ42UQ4/1

			Date	1/24/2023	Volvo Trucks North America	Valiant TMS	FESTO DQ CONNECTION QN3	Drawing name: =2V01&EFS-EL_KF1	= V2AR43UQ42UQ3
			Ed.	MKLEPADLO					+ V2AR43UQ42UQ3
			Appr		P6700 Framing - Cell 2V01, KF1	Scale 1:1		Document type: EFS	Project nr: 22-16152
Modification	Date	Name	Original		Replacement of	Replaced by			Page 1 / 1630

0	1	2	3	4	5	6	7	8	9

=V2AR43UQ42KF1
+.AR43UQ42

-KF1.22
=V2AR43UQ42KF1+V2AR43UQ42/5.1

L290/320 Model Clamps 1 (RST)
=V2AR43UQ42KF1
+V2AR43UQ42
-QN4.1_Q
=V2AR43UQ42KF1
+V2AR43UQ42/5.3
DO:6

L290/320 Model Clamps 1 (SET)
=V2AR43UQ42KF1
+V2AR43UQ41
-QN4.2_Q
=V2AR43UQ42KF1
+V2AR43UQ42/5.3
DO:7

2.1 Pneumatic Valve
2.2 Pneumatic Valve

-QN4 .1 .2

=V2AR43UQ42KF1+V2AR43UQ42/2.5
+.AR43UQ42UQ4.1-W1

=V2AR43UQ42KF1+V2AR43UQ42/2.6
+.AR43UQ42UQ4.2-W1

-W1 1m
RKC 4.4T-1-RSC 4.4T/S3060
BN BU BK WH
1 3
-BGS/R
TÜNKERS
1324638
A2 A1
2 4

L290/320 Model Clamp 1
=V2AR43UQ42UQ4.1
+.AR43UQ42UQ4.1
-UQ4.1

L290/320 Model Clamp 1
=V2AR43UQ42UQ4.2
+.AR43UQ42UQ4.2
-UQ4.2

=V2AR43UQ42
-UQ4.1-BGS/R
L290/320 Model
Clamp 1

=V2AR43UQ42
-UQ4.2-BGS/R
L290/320 Model
Clamp 1

=V2AR43UQ42UQ3+.AR43UQ42UQ3/1

=V2AR43UQ42UQ5+.AR43UQ42UQ5/1

			Date	1/24/2023	Volvo Trucks North America		Valiant TMS	FESTO DQ CONNECTION QN4	Drawing name: =2V01&EFS-EL_KF1	= V2AR43UQ42UQ4
			Ed.	MKLEPADLO						+ V2AR43UQ42UQ4
			Appr		P6700 Framing - Cell 2V01, KF1				Document type: EFS	Project nr: 22-16152
Modification	Date	Name	Original		Replacement of	Replaced by	Scale 1:1			Page 1 / 1630

0	1	2	3	4	5	6	7	8	9

=V2AR43UQ42KF1
+.AR43UQ42

-KF1.23
=V2AR43UQ42KF1+V2AR43UQ42/5.1

L290 Model Clamps 2 (RST)
=V2AR43UQ42KF1
+V2AR43UQ42
-QN5.1_Q
=V2AR43UQ42KF1
+V2AR43UQ42/5.3
DO:8

L290 Model Clamps 2 (SET)
=V2AR43UQ42KF1
+V2AR43UQ42
-QN5.2_Q
=V2AR43UQ42KF1
+V2AR43UQ42/5.3
DO:9

1.1 Pneumatic Valve

1.2 Pneumatic Valve

-QN5 .1 .2

=V2AR43UQ42KF1+V2AR43UQ42/2.8
+.AR43UQ42UQ5.1-W1

-W1 2m
RKC 4.4T-2-RSC 4.4T/S3060

BN BU BK WH

-BGS/R
1 3
+ -
TÜNKERS
1324638
A2 A1
2 4

L290 Model Clamps 2
=V2AR43UQ42UQ5.1
+.AR43UQ42UQ5.1
-UQ5.1

=V2AR43UQ42
-UQ5.1-BGS/R
L290 Model
Clamps 2

=V2AR43UQ42KF1+V2AR43UQ42/2.9
+.AR43UQ42UQ5.2-W1

-W1 2m
RKC 4.4T-2-RSC 4.4T/S3060

BN BU BK WH

-BGS/R
1 3
+ -
TÜNKERS
1324638
A2 A1
2 4

L290 Model Clamps 2
=V2AR43UQ42UQ5.2
+.AR43UQ42UQ5.2
-UQ5.2

=V2AR43UQ42
-UQ5.2-BGS/R
L290 Model
Clamps 2

=V2AR43UQ42UQ4+.AR43UQ42UQ4/1

=V2AR43UQ42UQ6+.AR43UQ42UQ6/1

			Date	1/24/2023	Volvo Trucks North America		Valiant TMS	FESTO DQ CONNECTION QN5	Drawing name: =2V01&EFS-EL_KF1	= V2AR43UQ42UQ5
			Ed.	MKLEPADLO						+ V2AR43UQ42UQ5
			Appr		P6700 Framing - Cell 2V01, KF1				Document type: EFS	Project nr: 22-16152
Modification	Date	Name	Original		Replacement of	Replaced by	Scale 1:1			Page 1 / 1630

0	1	2	3	4	5	6	7	8	9

=V2AR43UQ42KF1
+.AR43UQ42

-KF1.23
=V2AR43UQ42KF1+V2AR43UQ42/5.1

L290/320 Model Clamps 2 (RST)
=V2AR43UQ42KF1
+V2AR43UQ42
-QN6.1_Q
=V2AR43UQ42KF1
+V2AR43UQ42/5.3
DO:10

L290/320 Model Clamps 2 (SET)
=V2AR43UQ42KF1
+V2AR43UQ42
-QN6.2_Q
=V2AR43UQ42KF1
+V2AR43UQ42/5.3
DO:11

2.1 Pneumatic Valve
2.2 Pneumatic Valve

-QN6 .1 .2

=V2AR43UQ42KF1+V2AR43UQ42/3.1
+.AR43UQ42UQ6.1-W1

=V2AR43UQ42KF1+V2AR43UQ42/3.2
+.AR43UQ42UQ6.2-W1

=V2AR43UQ42KF1+V2AR43UQ42/3.3
+.AR43UQ42UQ6.3-W1

-W1 2m
RKC 4.4T-2-RSC 4.4T/S3060

BN BU BK WH
1 3
-BGS/R
TÜNKERS
1324638
A2 A1
2 4

L290/320 Model Clamp 2
=V2AR43UQ42UQ6.1
+.AR43UQ42UQ6.1
-UQ6.1

L290/320 Model Clamp 2
=V2AR43UQ42UQ6.2
+.AR43UQ42UQ6.2
-UQ6.2

L290/320 Model Clamp 2
=V2AR43UQ42UQ6.3
+.AR43UQ42UQ6.3
-UQ6.3

=V2AR43UQ42
-UQ6.1-BGS/R
L290/320 Model
Clamp 2

=V2AR43UQ42
-UQ6.2-BGS/R
L290/320 Model
Clamp 2

=V2AR43UQ42
-UQ6.3-BGS/R
L290/320 Model
Clamp 2

=V2AR43UQ42UQ5+.AR43UQ42UQ5/1

=V2AR43UQ42UQ7+.AR43UQ42UQ7/1

			Date	1/24/2023	Volvo Trucks North America	Valiant TMS	FESTO DQ CONNECTION QN6	Drawing name: =2V01&EFS-EL_KF1
			Ed.	MKLEPADLO				= V2AR43UQ42UQ6
			Appr		P6700 Framing - Cell 2V01, KF1			+ V2AR43UQ42UQ6
Modification	Date	Name	Original		Replacement of / Replaced by	Scale 1:1		Document type: EFS / Project nr: 22-16152 / Page 1 / 1630

0	1	2	3	4	5	6	7	8	9

=V2AR43UQ42KF1
+.AR43UQ42

-KF1.24
=V2AR43UQ42KF1+V2AR43UQ42/5.1

L290 Model Clamps 3 (RST)	L290 Model Clamps 3 (SET)
=V2AR43UQ42KF1	=V2AR43UQ42KF1
+V2AR43UQ42	+V2AR43UQ42
-QN7.1_Q	-QN7.2_Q
=V2AR43UQ42KF1	=V2AR43UQ42KF1
+V2AR43UQ42/5.3	+V2AR43UQ42/5.3
DO:12	DO:13
1.1 Pneumatic Valve	1.2 Pneumatic Valve

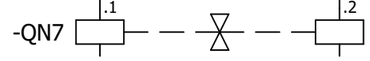

=V2AR43UQ42KF1+V2AR43UQ42/3.4
+.AR43UQ42UQ7.1-W1

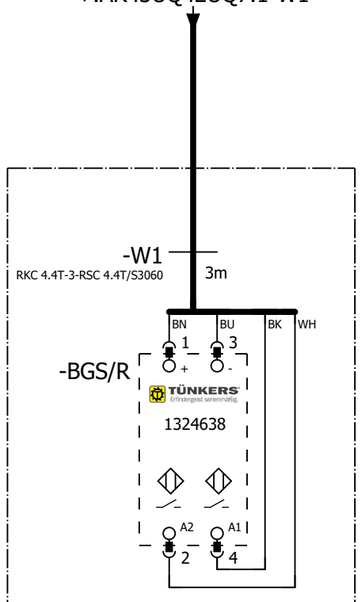

L290 Model Clamp 3

=V2AR43UQ42UQ7.1
+.AR43UQ42UQ7.1
-UQ7.1

=V2AR43UQ42KF1+V2AR43UQ42/3.5
+.AR43UQ42UQ7.2-W1

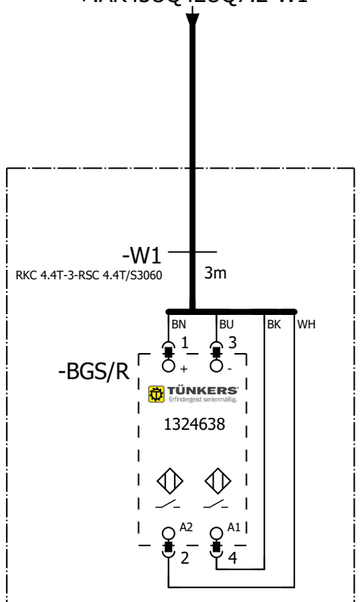

L290 Model Clamp 3

=V2AR43UQ42UQ7.2
+.AR43UQ42UQ7.2
-UQ7.2

=V2AR43UQ42
-UQ7.1-BGS/R
L290 Model
Clamp 3

=V2AR43UQ42
-UQ7.2-BGS/R
L290 Model
Clamp 3

=V2AR43UQ42UQ6+.AR43UQ42UQ6/1

=V2AR43UQ42UQ8+.AR43UQ42UQ8/1

			Date	1/24/2023	Volvo Trucks North America		Valiant TMS	FESTO DQ CONNECTION QN7	Drawing name: =2V01&EFS-EL_KF1
			Ed.	MKLEPADLO					= V2AR43UQ42UQ7
			Appr		P6700 Framing - Cell 2V01, KF1				+ V2AR43UQ42UQ7
Modification	Date	Name	Original		Replacement of	Replaced by	Scale 1:1		Document type: EFS / Project nr: 22-16152 / Page 1 / 1630

0	1	2	3	4	5	6	7	8	9

=V2AR43UQ42KF1
+.AR43UQ42

-KF1.24
=V2AR43UQ42KF1+V2AR43UQ42/5.1

L320 Model Clamps 1 (RST)	L320 Model Clamps 1 (SET)
=V2AR43UQ42KF1	=V2AR43UQ42KF1
+V2AR43UQ42	+V2AR43UQ42
-QN8.1_Q	-QN8.2_Q
=V2AR43UQ42KF1	=V2AR43UQ42KF1
+V2AR43UQ42/5.3	+V2AR43UQ42/5.3
DO:14	DO:15
2.1 Pneumatic Valve	2.2 Pneumatic Valve

-QN8 .1 .2

=V2AR43UQ42KF1+V2AR43UQ42/3.6
+.AR43UQ42UQ8.1-W1

-W1
RKC 4.4T-1-RSC 4.4T/S3060
1m

BN BU BK WH

-BGS/R
1 3
+ -
TÜNKERS
1324638
A2 A1
2 4

L320 Model Clamp 1

=V2AR43UQ42UQ8.1
+.AR43UQ42UQ8.1
-UQ8.1

=V2AR43UQ42
-UQ8.1-BGS/R
L320 Model
Clamp 1

=V2AR43UQ42KF1+V2AR43UQ42/3.8
+.AR43UQ42UQ8.2-W1

-W1
RKC 4.4T-1-RSC 4.4T/S3060
1m

BN BU BK WH

-BGS/R
1 3
+ -
TÜNKERS
1324638
A2 A1
2 4

L320 Model Clamp 1

=V2AR43UQ42UQ8.2
+.AR43UQ42UQ8.2
-UQ8.2

=V2AR43UQ42
-UQ8.2-BGS/R
L320 Model
Clamp 1

=V2AR43UQ42UQ7+.AR43UQ42UQ7/1

=V2AR43UQ42UQ9+.AR43UQ42UQ9/1

			Date	1/24/2023	Volvo Trucks North America		Valiant TMS	FESTO DQ CONNECTION QN8	Drawing name: =2V01&EFS-EL_KF1	= V2AR43UQ42UQ8
			Ed.	MKLEPADLO						+ V2AR43UQ42UQ8
			Appr		P6700 Framing - Cell 2V01, KF1				Document type: EFS	Project nr: 22-16152
Modification	Date	Name	Original		Replacement of	Replaced by	Scale 1:1			Page 1 / 1630

0	1	2	3	4	5	6	7	8	9

=V2AR43UQ42KF1
+.AR43UQ42

-KF1.25
=V2AR43UQ42KF1+V2AR43UQ42/5.1

L320 Model Clamp 2 (RST)
=V2AR43UQ42KF1
+V2AR43UQ42
-QN9.1_Q
=V2AR43UQ42KF1
+V2AR43UQ42/5.3
DO:16

L320 Model Clamp 2 (SET)
=V2AR43UQ42KF1
+V2AR43UQ42
-QN9.2_Q
=V2AR43UQ42KF1
+V2AR43UQ42/5.3
DO:17

1.1 Pneumatic Valve

1.2 Pneumatic Valve

-QN9 .1 .2

=V2AR43UQ42KF1+V2AR43UQ42/3.9
+.AR43UQ42UQ9.1-W1

-W1
RKC 4.4T-4-RSC 4.4T/S3060
4m

BN BU BK WH
1 3
+ -
-BGS/R
TÜNKERS
1324638
A2 A1
2 4

L320 Model Clamp 2
=V2AR43UQ42UQ9.1
+.AR43UQ42UQ9.1
-UQ9.1

=V2AR43UQ42KF1+V2AR43UQ42/4.1
+.AR43UQ42UQ9.2-W1

-W1
RKC 4.4T-4-RSC 4.4T/S3060
4m

BN BU BK WH
1 3
+ -
-BGS/R
TÜNKERS
1324638
A2 A1
2 4

L320 Model Clamp 2
=V2AR43UQ42UQ9.2
+.AR43UQ42UQ9.2
-UQ9.2

=V2AR43UQ42
-UQ9.1-BGS/R
L320 Model
Clamp 2

=V2AR43UQ42
-UQ9.2-BGS/R
L320 Model
Clamp 2

=V2AR43UQ42UQ8+.AR43UQ42UQ8/1

=V2AR43UQ42UQ10+.AR43UQ42UQ10/1

			Date	1/24/2023	Volvo Trucks North America		Valiant TMS	FESTO DQ CONNECTION QN9	Drawing name: =2V01&EFS-EL_KF1	= V2AR43UQ42UQ9
			Ed.	MKLEPADLO						+ V2AR43UQ42UQ9
			Appr		P6700 Framing - Cell 2V01, KF1				Document type: EFS	Project nr: 22-16152
Modification	Date	Name	Original		Replacement of	Replaced by	Scale 1:1			Page 1 / 1630

0	1	2	3	4	5	6	7	8	9

=V2AR43UQ42KF1
+.AR43UQ42

-KF1.25
=V2AR43UQ42KF1+V2AR43UQ42/5.1

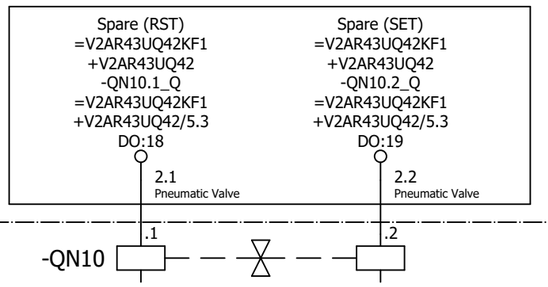

=V2AR43UQ42UQ9+.AR43UQ42UQ9/1

=V2AR43UQ43BG0+.AR43UQ43/1

			Date	1/24/2023	Volvo Trucks North America	Valiant TMS	FESTO DQ CONNECTION QN10	Drawing name: =2V01&EFS-EL_KF1	= V2AR43UQ42UQ10
			Ed.	MKLEPADLO					+ V2AR43UQ42UQ10
			Appr		P6700 Framing - Cell 2V01, KF1			Document type: EFS / Project nr: 22-16152	Page 1
Modification	Date	Name	Original		Replacement of / Replaced by	Scale 1:1			1630

0	1	2	3	4	5	6	7	8	9

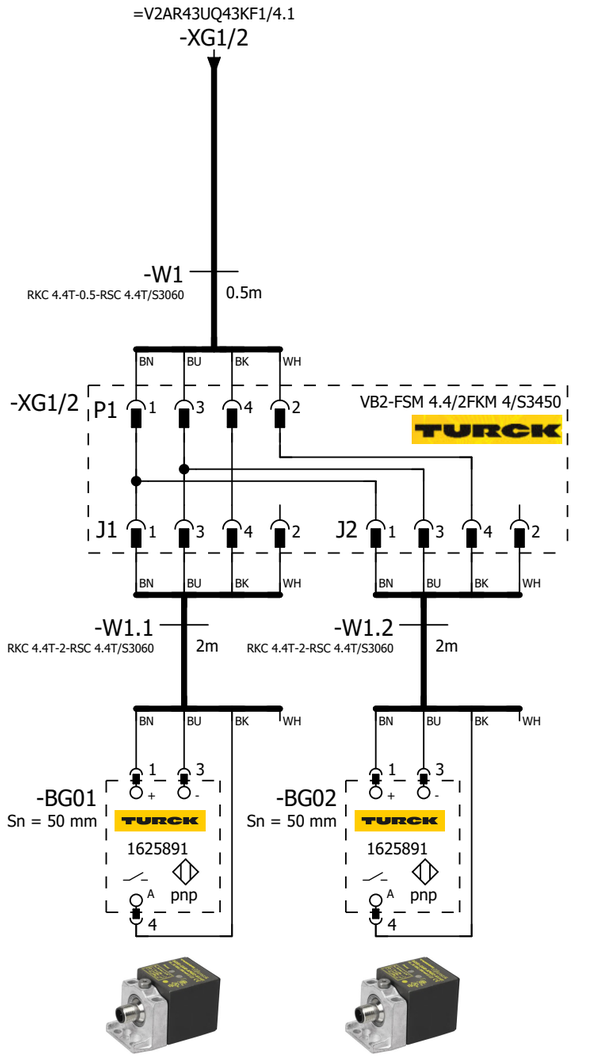

=V2AR43UQ43 -BG01 L230 Model Part Present	=V2AR43UQ43 -BG02 L230 Model Part Present

=V2AR43UQ42UQ10+.AR43UQ42UQ10/1

=V2AR43UQ43KF1/1

			Date	1/24/2023	Volvo Trucks North America	Valiant TMS	SENSORS	Drawing name: =2V01&EFS-EL_KF1	= V2AR43UQ43BG0
			Ed.	MKLEPADLO					+ V2AR43UQ43
			Appr		P6700 Framing - Cell 2V01, KF1			Document type: EFS	Project nr: 22-16152
Modification	Date	Name	Original		Replacement of / Replaced by	Scale 1:1			Page 1 / 1630

0	1	2	3	4	5	6	7	8	9

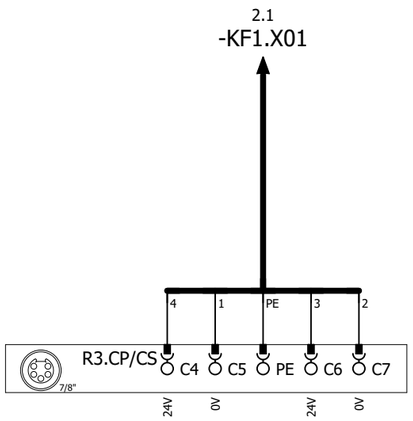

DC 24V (OUT)

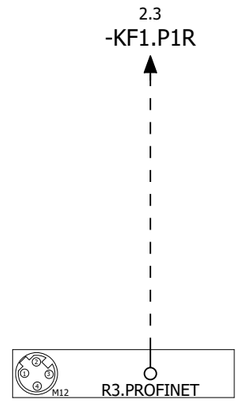

R3.ETHERNET

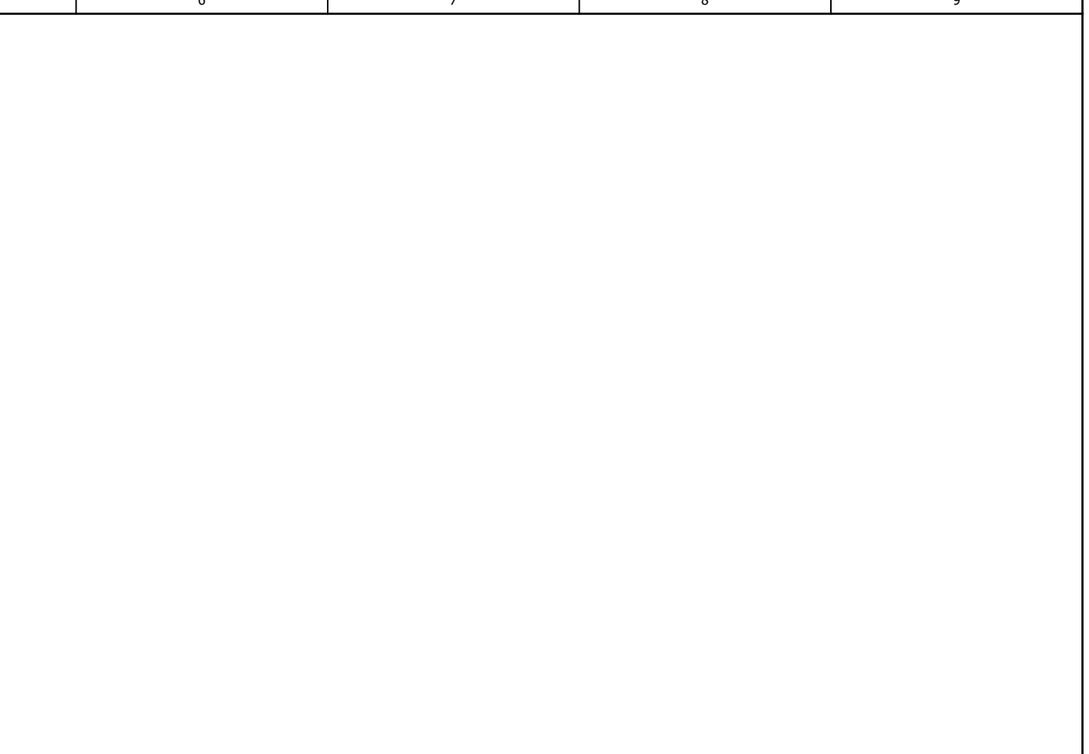

=V2AR43UQ43BG0/1

2

			Date	1/24/2023	Volvo Trucks North America	Valiant TMS	24VDC SUPPLY AND PROFINET HANDLING MODULE	Drawing name: =2V01&EFS-EL_KF1	= V2AR43UQ43KF1
			Ed.	MKLEPADLO					+ V2AR43UQ43
			Appr		P6700 Framing - Cell 2V01, KF1	Scale 1:1		Document type: EFS	Project nr: 22-16152
Modification	Date	Name	Original		Replacement of / Replaced by				Page 1 / 1630

0	1	2	3	4	5	6	7	8	9

1.3 / -KF1.X01

-W1
RSM RKM 56-2M/S3059
2m

1.5 / -KF1.P1R

-WF1
PROFINET Cable
6XV1840-3AH10

-KF1

X20 7/8" 1 2 PE 3 4 5
0V_VAL / OUT
0V_EL / SEN
FE
24V_EL / SEN
24V_VAL / OUT

M12 -TP1
M12 -TP2

ON
OFF
1 2 1 2

FESTO
Bus node + Interlinking block
548755 + 550208

DI:0	DI 0 X1:4	V2AR43UQ43UQ1.1-BGR	L230 Model Shot Pin (RESET)
DI:1	DI 1 X1:2	V2AR43UQ43UQ1.1-BGS	L230 Model Shot Pin (SET)
DI:2	DI 2 X2:4	V2AR43UQ43UQ2.1-BGR	L230 Model Clamp 1 (RESET)
DI:3	DI 3 X2:2	V2AR43UQ43UQ2.1-BGS	L230 Model Clamp 1 (SET)
DI:4	DI 4 X3:4	V2AR43UQ43UQ2.2-BGR	L230 Model Clamp 1 (RESET)
DI:5	DI 5 X3:2	V2AR43UQ43UQ2.2-BGS	L230 Model Clamp 1 (SET)
DI:6	DI 6 X4:4	V2AR43UQ43UQ2.3-BGR	L230 Model Clamp 1 (RESET)
DI:7	DI 7 X4:2	V2AR43UQ43UQ2.3-BGS	L230 Model Clamp 1 (SET)
DI:8	DI 8 X5:4	V2AR43UQ43UQ3.1-BGS	L230 Model Vacuums (SET)
DI:9	DI 9 X5:2	DI:9	Spare
DI:10	DI 10 X6:4	V2AR43UQ43UQ4.1-BGR	L230 Model Clamp 2 (RESET)
DI:11	DI 11 X6:2	V2AR43UQ43UQ4.1-BGS	L230 Model Clamp 2 (SET)
DI:12	DI 12 X7:4	V2AR43UQ43UQ4.2-BGR	L230 Model Clamp 2 (RESET)
DI:13	DI 13 X7:2	V2AR43UQ43UQ4.2-BGS	L230 Model Clamp 2 (SET)
DI:14	DI 14 X8:4	V2AR43UQ43UQ4.3-BGR	L230 Model Clamp 2 (RESET)
DI:15	DI 15 X8:2	V2AR43UQ43UQ4.3-BGS	L230 Model Clamp 2 (SET)

-KF1.11

FESTO
CPX-M-AB-8-M12X2-5POL
549335

X1 M12: 24V DI 1 0V DI 0 FE — 1 2 3 4 5 — BN WH BU BK
X2 M12: 24V DI 3 0V DI 2 FE — 1 2 3 4 5 — BN WH BU BK
X3 M12: 24V DI 5 0V DI 4 FE — 1 2 3 4 5 — BN WH BU BK
X4 M12: 24V DI 7 0V DI 6 FE — 1 2 3 4 5 — BN WH BU BK
X5 M12: 24V DI 9 0V DI 8 FE — 1 2 3 4 5 — BN WH BU BK
X6 M12: 24V DI 11 0V DI 10 FE — 1 2 3 4 5 — BN WH BU BK
X7 M12: 24V DI 13 0V DI 12 FE — 1 2 3 4 5 — BN WH BU BK
X8 M12: 24V DI 15 0V DI 14 FE — 1 2 3 4 5 — BN WH BU BK

+.AR43UQ43UQ1.1-W1
=V2AR43UQ43UQ1+.AR43UQ43UQ1/1.1

+.AR43UQ43UQ2.1-W1
=V2AR43UQ43UQ2+.AR43UQ43UQ2/1.1

+.AR43UQ43UQ2.2-W1
=V2AR43UQ43UQ2+.AR43UQ43UQ2/1.2

+.AR43UQ43UQ2.3-W1
=V2AR43UQ43UQ2+.AR43UQ43UQ2/1.4

+.AR43UQ43UQ3.1-W1
=V2AR43UQ43UQ3+.AR43UQ43UQ3/1.1

+.AR43UQ43UQ4.1-W1
=V2AR43UQ43UQ4+.AR43UQ43UQ4/1.1

+.AR43UQ43UQ4.2-W1
=V2AR43UQ43UQ4+.AR43UQ43UQ4/1.2

+.AR43UQ43UQ4.3-W1
=V2AR43UQ43UQ4+.AR43UQ43UQ4/1.4

1 3

			Date	1/24/2023	Volvo Trucks North America		Valiant TMS	CONNECTING MOD. FOR MPA MANIFOLD	Drawing name: =2V01&EFS-EL_KF1	= V2AR43UQ43KF1
			Ed.	MKLEPADLO						+ V2AR43UQ43
			Appr		P6700 Framing - Cell 2V01, KF1		Scale 1:1		Document type: EFS	Project nr: 22-16152
Modification	Date	Name	Original		Replacement of	Replaced by				Page 2 / 1630

0	1	2	3	4	5	6	7	8	9

DI:16	DI 0 X1:4	V2AR43UQ43UQ4.4-BGR	L230 Model Clamp 2 (RESET)
DI:17	DI 1 X1:2	V2AR43UQ43UQ4.4-BGS	L230 Model Clamp 2 (SET)
DI:18	DI 2 X2:4	V2AR43UQ43UQ4.5-BGR	L230 Model Clamp 2 (RESET)
DI:19	DI 3 X2:2	V2AR43UQ43UQ4.5-BGS	L230 Model Clamp 2 (SET)
DI:20	DI 4 X3:4	DI:20	Spare
DI:21	DI 5 X3:2	DI:21	Spare
DI:22	DI 6 X4:4	DI:22	Spare
DI:23	DI 7 X4:2	DI:23	Spare
DI:24	DI 8 X5:4	DI:24	Spare
DI:25	DI 9 X5:2	DI:25	Spare
DI:26	DI 10 X6:4	DI:26	Spare
DI:27	DI 11 X6:2	DI:27	Spare
DI:28	DI 12 X7:4	DI:28	Spare
DI:29	DI 13 X7:2	DI:29	Spare
DI:30	DI 14 X8:4	DI:30	Spare
DI:31	DI 15 X8:2	DI:31	Spare

-KF1.12

FESTO

CPX-M-AB-8-M12X2-5POL

549335

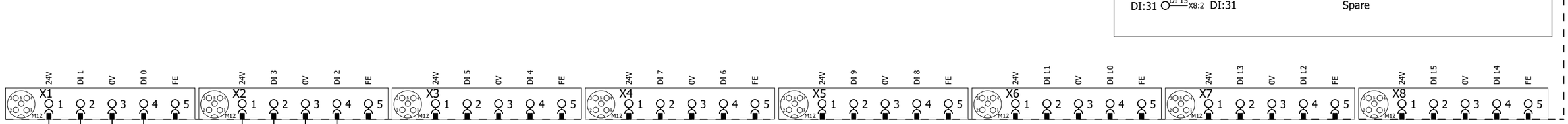

+.AR43UQ43UQ4.4-W1

=V2AR43UQ43UQ4+.AR43UQ43UQ4/1.5

+.AR43UQ43UQ4.5-W1

=V2AR43UQ43UQ4+.AR43UQ43UQ4/1.7

2 4

			Date	1/24/2023	Volvo Trucks North America	Valiant TMS	I/O MOD. DI16 (8 x M12) FOR MPA	Drawing name: =2V01&EFS-EL_KF1	= V2AR43UQ43KF1
			Ed.	MKLEPADLO					+ V2AR43UQ43
			Appr		P6700 Framing - Cell 2V01, KF1			Document type: EFS	Project nr: 22-16152
Modification	Date	Name	Original		Replacement of / Replaced by	Scale 1:1			Page 3 / 1630

0	1	2	3	4	5	6	7	8	9

-KF1.13

FESTO
CPX-M-AB-8-M12X2-5POL
549335

DI:32	DI 0 X1:4	V2AR43UQ43-B01	L230 Model Part Present
DI:33	DI 1 X1:2	V2AR43UQ43-B02	L230 Model Part Present
DI:34	DI 2 X2:4	DI:34	Spare
DI:35	DI 3 X2:2	DI:35	Spare
DI:36	DI 4 X3:4	DI:36	Spare
DI:37	DI 5 X3:2	DI:37	Spare
DI:38	DI 6 X4:4	DI:38	Spare
DI:39	DI 7 X4:2	DI:39	Spare
DI:40	DI 8 X5:4	DI:40	Spare
DI:41	DI 9 X5:2	DI:41	Spare
DI:42	DI 10 X6:4	DI:42	Spare
DI:43	DI 11 X6:2	DI:43	Spare
DI:44	DI 12 X7:4	DI:44	Spare
DI:45	DI 13 X7:2	DI:45	Spare
DI:46	DI 14 X8:4	DI:46	Spare
DI:47	DI 15 X8:2	DI:47	Spare

-XG1/2
=V2AR43UQ43BG0/1.1

3 5

			Date	1/24/2023	Volvo Trucks North America		Valiant TMS	I/O MOD. DI16 (8 x M12) FOR MPA	Drawing name: =2V01&EFS-EL_KF1	= V2AR43UQ43KF1
			Ed.	MKLEPADLO						+ V2AR43UQ43
			Appr		P6700 Framing - Cell 2V01, KF1		Scale 1:1		Document type: EFS	Project nr: 22-16152
Modification	Date	Name	Original		Replacement of	Replaced by				Page 4 / 1630

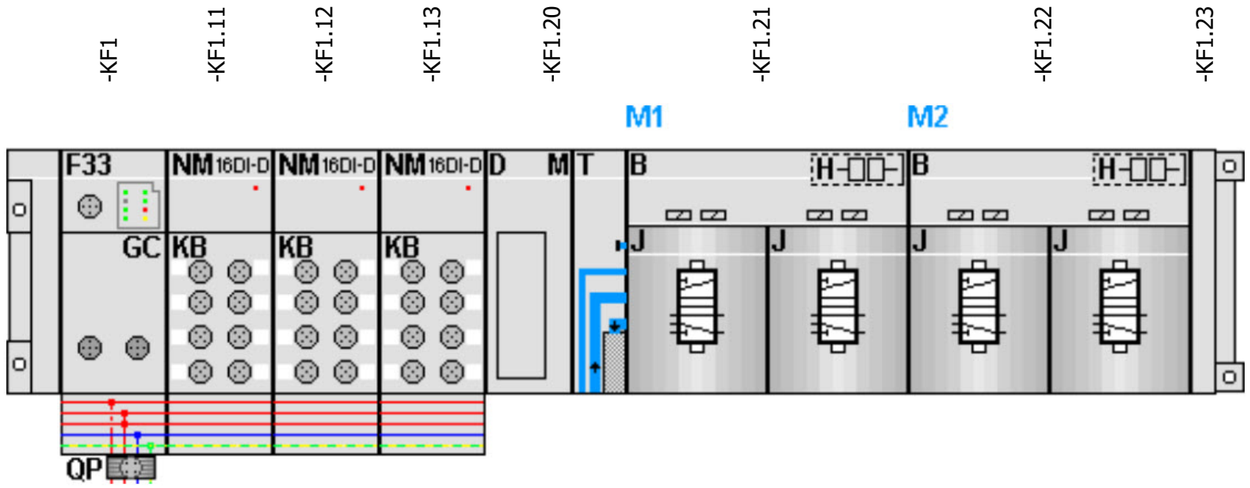

-KF1.21
=V2AR43UQ43UQ1+.AR43UQ43UQ1/1.3
=V2AR43UQ43UQ2+.AR43UQ43UQ2/1.3

FESTO

=V2AR43UQ43UQ1+.AR43UQ43UQ1/1.4	DO:0	DO 0 1.1	-QN1.1_Q	L230 Model Shot Pin (RST)
=V2AR43UQ43UQ1+.AR43UQ43UQ1/1.4	DO:1	DO 1 1.2	-QN1.2_Q	L230 Model Shot Pin (SET)
=V2AR43UQ43UQ2+.AR43UQ43UQ2/1.4	DO:2	DO 2 2.1	-QN2.1_Q	L230 Model Clamps 1 (RST)
=V2AR43UQ43UQ2+.AR43UQ43UQ2/1.4	DO:3	DO 3 2.2	-QN2.2_Q	L230 Model Clamps 1 (SET)

-KF1.22
=V2AR43UQ43UQ3+.AR43UQ43UQ3/1.3
=V2AR43UQ43UQ4+.AR43UQ43UQ4/1.3

FESTO

=V2AR43UQ43UQ3+.AR43UQ43UQ3/1.4	DO:4	DO 4 1.1	-QN3.1_Q	L230 Model Vacuums (RST)
=V2AR43UQ43UQ3+.AR43UQ43UQ3/1.4	DO:5	DO 5 1.2	-QN3.2_Q	L230 Model Vacuums (SET)
=V2AR43UQ43UQ4+.AR43UQ43UQ4/1.4	DO:6	DO 6 2.1	-QN4.1_Q	L230 Model Clamps 2 (RST)
=V2AR43UQ43UQ4+.AR43UQ43UQ4/1.4	DO:7	DO 7 2.2	-QN4.2_Q	L230 Model Clamps 2 (SET)

			Date	1/24/2023	Volvo Trucks North America	Valiant TMS	CONNECTING MOD. FOR FESTO DQ	Drawing name: =2V01&EFS-EL_KF1	= V2AR43UQ43KF1	
			Ed.	MKLEPADLO					+ V2AR43UQ43	
			Appr		P6700 Framing - Cell 2V01, KF1			Document type: EFS	Project nr: 22-16152	Page 5
Modification	Date	Name	Original		Replacement of / Replaced by	Scale 1:1				1630

0	1	2	3	4	5	6	7	8	9

=V2AR43UQ43KF1
+.AR43UQ43

-KF1.21
=V2AR43UQ43KF1+V2AR43UQ43/5.1

L230 Model Shot Pin (RST)
=V2AR43UQ43KF1
+V2AR43UQ43
-QN1.1_Q
=V2AR43UQ43KF1
+V2AR43UQ43/5.3
DO:0

L230 Model Shot Pin (SET)
=V2AR43UQ43KF1
+V2AR43UQ43
-QN1.2_Q
=V2AR43UQ43KF1
+V2AR43UQ43/5.3
DO:1

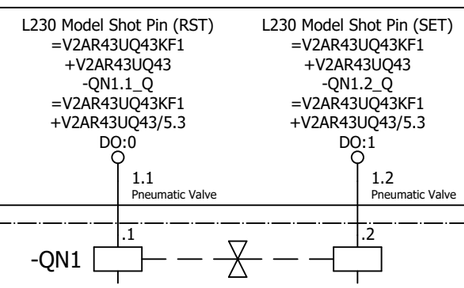

=V2AR43UQ43KF1+V2AR43UQ43/2.1
+.AR43UQ43UQ1.1-W1

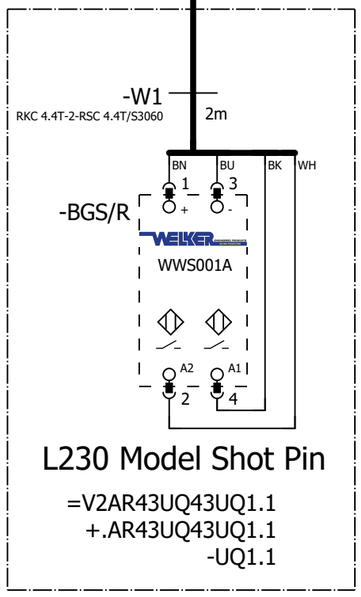

L230 Model Shot Pin

=V2AR43UQ43UQ1.1
+.AR43UQ43UQ1.1
-UQ1.1

=V2AR43UQ43
-UQ1.1-BGS/R
L230 Model
Shot Pin

=V2AR43UQ43KF1+V2AR43UQ43/5

=V2AR43UQ43UQ2+.AR43UQ43UQ2/1

			Date	1/24/2023	Volvo Trucks North America		Valiant TMS	FESTO DQ CONNECTION QN1	Drawing name: =2V01&EFS-EL_KF1	= V2AR43UQ43UQ1
			Ed.	MKLEPADLO						+ V2AR43UQ43UQ1
			Appr		P6700 Framing - Cell 2V01, KF1				Document type: EFS	Project nr: 22-16152
Modification	Date	Name	Original		Replacement of	Replaced by	Scale 1:1			Page 1 / 1630

0	1	2	3	4	5	6	7	8	9

=V2AR43UQ43KF1
+.AR43UQ43

-KF1.21
=V2AR43UQ43KF1+V2AR43UQ43/5.1

L230 Model Clamps 1 (RST)	L230 Model Clamps 1 (SET)
=V2AR43UQ43KF1	=V2AR43UQ43KF1
+V2AR43UQ43	+V2AR43UQ43
-QN2.1_Q	-QN2.2_Q
=V2AR43UQ43KF1	=V2AR43UQ43KF1
+V2AR43UQ43/5.3	+V2AR43UQ43/5.3
DO:2	DO:3
2.1 Pneumatic Valve	2.2 Pneumatic Valve

-QN2 .1 .2

=V2AR43UQ43KF1+V2AR43UQ43/2.2
+.AR43UQ43UQ2.1-W1

-W1 RKC 4.4T-1-RSC 4.4T/S3060 1m

-BGS/R
BN 1 + BU 3 - BK WH
TÜNKERS
1324638
A2 2 A1 4

L230 Model Clamp 1
=V2AR43UQ43UQ2.1
+.AR43UQ43UQ2.1
-UQ2.1

=V2AR43UQ43
-UQ2.1-BGS/R
L230 Model
Clamp 1

=V2AR43UQ43KF1+V2AR43UQ43/2.3
+.AR43UQ43UQ2.2-W1

-W1 RKC 4.4T-1-RSC 4.4T/S3060 1m

-BGS/R
BN 1 + BU 3 - BK WH
TÜNKERS
1324638
A2 2 A1 4

L230 Model Clamp 1
=V2AR43UQ43UQ2.2
+.AR43UQ43UQ2.2
-UQ2.2

=V2AR43UQ43
-UQ2.2-BGS/R
L230 Model
Clamp 1

=V2AR43UQ43KF1+V2AR43UQ43/2.4
+.AR43UQ43UQ2.3-W1

-W1 RKC 4.4T-2-RSC 4.4T/S3060 2m

-BGS/R
BN 1 + BU 3 - BK WH
TÜNKERS
1324638
A2 2 A1 4

L230 Model Clamp 1
=V2AR43UQ43UQ2.3
+.AR43UQ43UQ2.3
-UQ2.3

=V2AR43UQ43
-UQ2.3-BGS/R
L230 Model
Clamp 1

=V2AR43UQ43UQ1+.AR43UQ43UQ1/1

=V2AR43UQ43UQ3+.AR43UQ43UQ3/1

			Date	1/24/2023	Volvo Trucks North America		Valiant TMS	FESTO DQ CONNECTION QN2	Drawing name: =2V01&EFS-EL_KF1
			Ed.	MKLEPADLO					= V2AR43UQ43UQ2
			Appr		P6700 Framing - Cell 2V01, KF1				+ V2AR43UQ43UQ2
Modification	Date	Name	Original		Replacement of	Replaced by	Scale 1:1		Document type: EFS / Project nr: 22-16152 / Page 1 / 1630

0	1	2	3	4	5	6	7	8	9

=V2AR43UQ43KF1
+.AR43UQ43

-KF1.22
=V2AR43UQ43KF1+V2AR43UQ43/5.1

L230 Model Vacuums (RST)	L230 Model Vacuums (SET)
=V2AR43UQ43KF1	=V2AR43UQ43KF1
+V2AR43UQ43	+V2AR43UQ43
-QN3.1_Q	-QN3.2_Q
=V2AR43UQ43KF1	=V2AR43UQ43KF1
+V2AR43UQ43/5.3	+V2AR43UQ43/5.3
DO:4	DO:5
1.1 Pneumatic Valve	1.2 Pneumatic Valve

-QN3 .1 .2

=V2AR43UQ43KF1+V2AR43UQ43/2.5
+.AR43UQ43UQ3.1-W1

-W1
RKC 4.4T-1-RSC 4.4T/S3060
1m

BN BU WH WN

-BGS/R
/1.0
Mb= -1-10 bar

1	3	4	2
L+	L-	Out 1/ IO-Link	Out 2

18-30 V VDC

M12

PN7094

L230 Model Vacuums

=V2AR43UQ43UQ3.1
+.AR43UQ43UQ3.1
-UQ3.1

=V2AR43UQ43 -UQ3.1-BGS/R L230 Model Vacuums

=V2AR43UQ43UQ2+.AR43UQ43UQ2/1

=V2AR43UQ43UQ4+.AR43UQ43UQ4/1

			Date	1/24/2023	Volvo Trucks North America	Valiant TMS	FESTO DQ CONNECTION QN3	Drawing name: =2V01&EFS-EL_KF1	= V2AR43UQ43UQ3
			Ed.	MKLEPADLO					+ V2AR43UQ43UQ3
			Appr		P6700 Framing - Cell 2V01, KF1	Scale 1:1		Document type: EFS	Project nr: 22-16152
Modification	Date	Name	Original		Replacement of	Replaced by			Page 1 / 1630

0	1	2	3	4	5	6	7	8	9

=V2AR43UQ43KF1
+.AR43UQ43

-KF1.22
=V2AR43UQ43KF1+V2AR43UQ43/5.1

L230 Model Clamps 2 (RST)	L230 Model Clamps 2 (SET)
=V2AR43UQ43KF1	=V2AR43UQ43KF1
+V2AR43UQ43	+V2AR43UQ43
-QN4.1_Q	-QN4.2_Q
=V2AR43UQ43KF1	=V2AR43UQ43KF1
+V2AR43UQ43/5.3	+V2AR43UQ43/5.3
DO:6	DO:7
2.1 Pneumatic Valve	2.2 Pneumatic Valve

-QN4 .1 .2

=V2AR43UQ43KF1+V2AR43UQ43/2.6
+.AR43UQ43UQ4.1-W1

-W1 RKC 4.4T-3-RSC 4.4T/S3060 3m

-BGS/R BN BU BK WH 1 3 2 4 A2 A1 TÜNKERS 1324638

L230 Model Clamp 2

=V2AR43UQ43UQ4.1
+.AR43UQ43UQ4.1
-UQ4.1

=V2AR43UQ43
-UQ4.1-BGS/R
L230 Model
Clamp 2

=V2AR43UQ43KF1+V2AR43UQ43/2.8
+.AR43UQ43UQ4.2-W1

-W1 RKC 4.4T-1-RSC 4.4T/S3060 1m

-BGS/R BN BU BK WH 1 3 2 4 A2 A1 TÜNKERS 1324638

L230 Model Clamp 2

=V2AR43UQ43UQ4.2
+.AR43UQ43UQ4.2
-UQ4.2

=V2AR43UQ43
-UQ4.2-BGS/R
L230 Model
Clamp 2

=V2AR43UQ43KF1+V2AR43UQ43/2.9
+.AR43UQ43UQ4.3-W1

-W1 RKC 4.4T-2-RSC 4.4T/S3060 2m

-BGS/R BN BU BK WH 1 3 2 4 A2 A1 TÜNKERS 1324638

L230 Model Clamp 2

=V2AR43UQ43UQ4.3
+.AR43UQ43UQ4.3
-UQ4.3

=V2AR43UQ43
-UQ4.3-BGS/R
L230 Model
Clamp 2

=V2AR43UQ43KF1+V2AR43UQ43/3.1
+.AR43UQ43UQ4.4-W1

-W1 RKC 4.4T-2-RSC 4.4T/S3060 2m

-BGS/R BN BU BK WH 1 3 2 4 A2 A1 TÜNKERS 1324638

L230 Model Clamp 2

=V2AR43UQ43UQ4.4
+.AR43UQ43UQ4.4
-UQ4.4

=V2AR43UQ43
-UQ4.4-BGS/R
L230 Model
Clamp 2

=V2AR43UQ43KF1+V2AR43UQ43/3.2
+.AR43UQ43UQ4.5-W1

-W1 RKC 4.4T-3-RSC 4.4T/S3060 3m

-BGS/R BN BU BK WH 1 3 2 4 A2 A1 TÜNKERS 1324638

L230 Model Clamp 2

=V2AR43UQ43UQ4.5
+.AR43UQ43UQ4.5
-UQ4.5

=V2AR43UQ43
-UQ4.5-BGS/R
L230 Model
Clamp 2

=V2AR43UQ43UQ3+.AR43UQ43UQ3/1

=V2AR43WC1+.AR43UC01/1

			Date	1/24/2023	Volvo Trucks North America	Valiant TMS	FESTO DQ CONNECTION QN4	Drawing name: =2V01&EFS-EL_KF1	= V2AR43UQ43UQ4
			Ed.	MKLEPADLO					+ V2AR43UQ43UQ4
			Appr		P6700 Framing - Cell 2V01, KF1			Document type: EFS	Project nr: 22-16152
Modification	Date	Name	Original		Replacement of / Replaced by	Scale 1:1			Page 1 / 1630

0	1	2	3	4	5	6	7	8	9

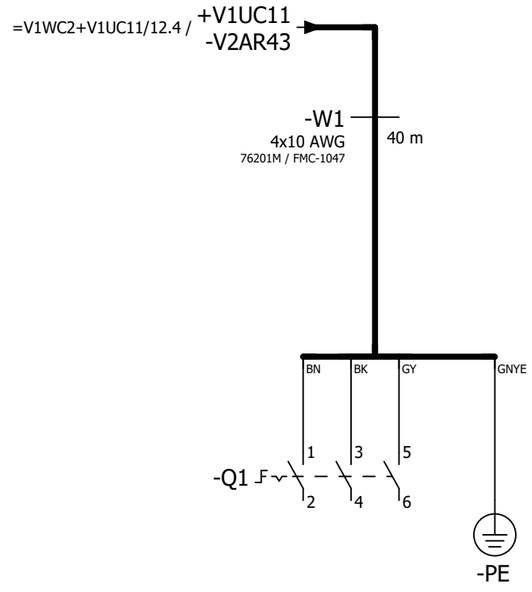

=V2AR43UQ43UQ4+.AR43UQ43UQ4/1

=V2AR43XQ11WC1+.AR43XQ11UC01/1

			Date	1/24/2023	Volvo Trucks North America		Valiant TMS	Incoming power	Drawing name: =2V01&EFS-EL_KF1	= V2AR43WC1
			Ed.	MKLEPADLO						+ V2AR43UC01
			Appr		P6700 Framing - Cell 2V01, KF1				Document type: EFS	Project nr: 22-16152
Modification	Date	Name	Original		Replacement of	Replaced by	Scale 1:1			Page 1 / 1630

0	1	2	3	4	5	6	7	8	9

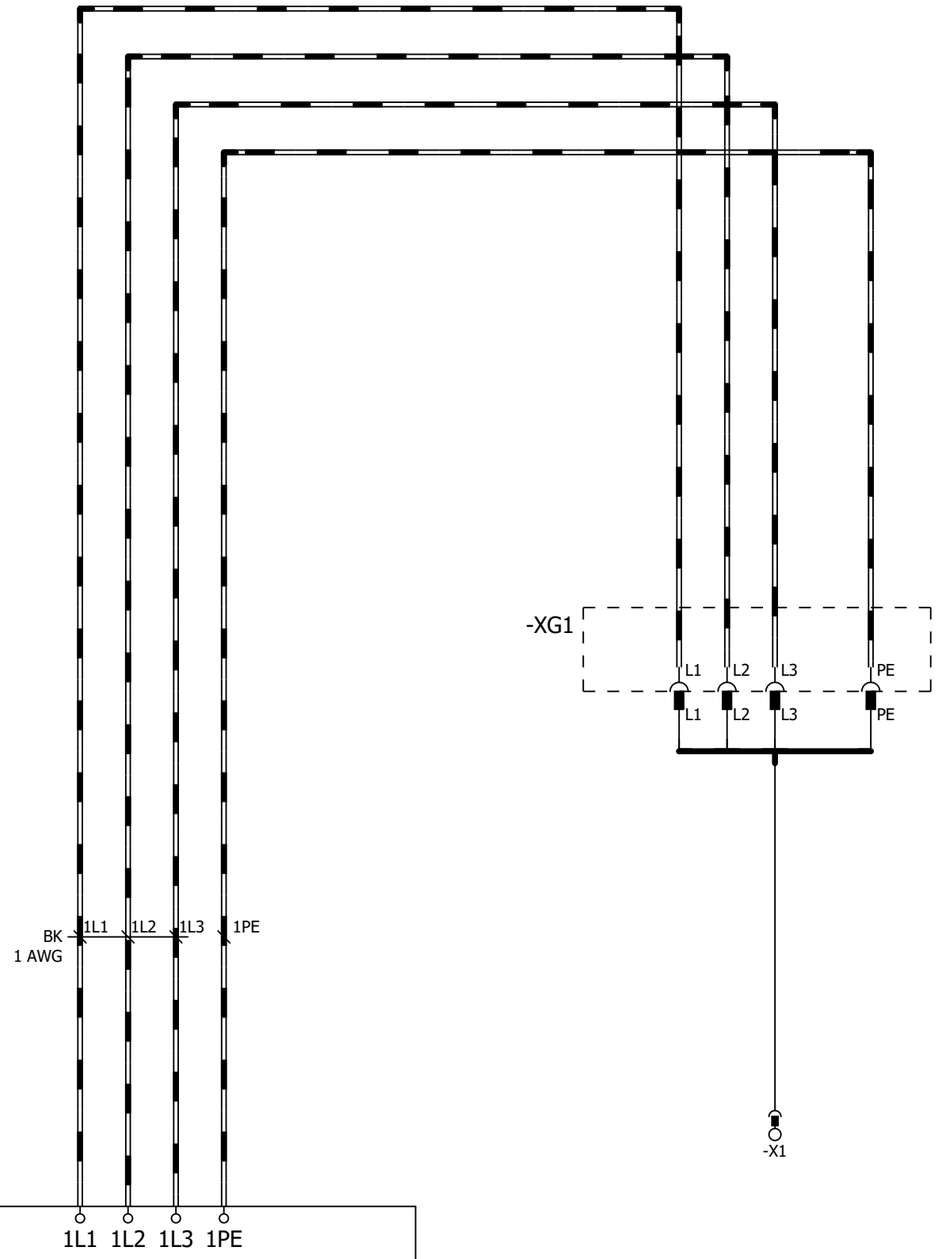

480VAC TN-S 3 PHASE 60Hz
Fed from: .....
short circuit protection: .....
Over current: .....
cable type: 1 AWG

IkMax =.....kA
IkMin = ...kA
Z: ..... mΩ.

=V2AR43WC1+.AR43UC01/1

=V2AR44KF1+.AR44UC01/1

			Date	1/24/2023	Volvo Trucks North America		Valiant TMS	Incoming power	Drawing name: =2V01&EFS-EL_KF1		= V2AR43XQ11WC1	
			Ed.	MKLEPADLO							+ V2AR43XQ11UC01	
			Appr		P6700 Framing - Cell 2V01, KF1				Document type: EFS	Project nr: 22-16152	Page	1
Modification	Date	Name	Original		Replacement of	Replaced by	Scale 1:1					1630

0	1	2	3	4	5	6	7	8	9

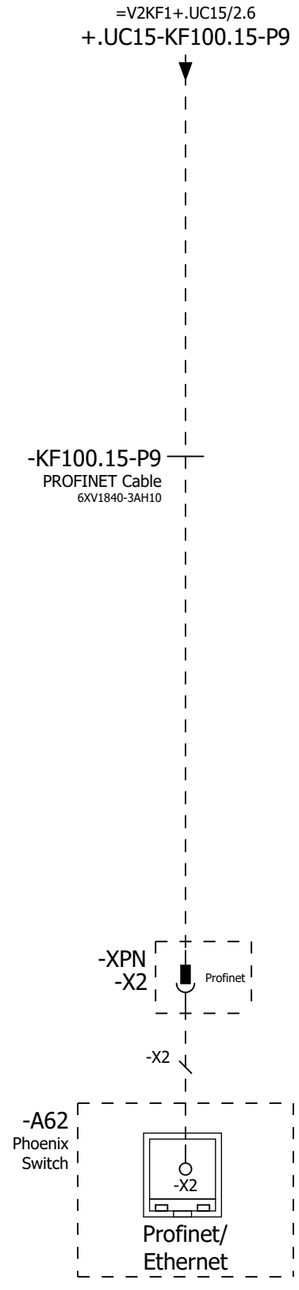

=V2AR43XQ11WC1+.AR43XQ11UC01/1

=V2AR44UQ41BG0+.AR44UQ41/1

			Date	1/24/2023	Volvo Trucks North America	Valiant TMS	Incoming Profinet	Drawing name: =2V01&EFS-EL_KF1	= V2AR44KF1
			Ed.	MKLEPADLO					+ V2AR44UC01
			Appr		P6700 Framing - Cell 2V01, KF1			Document type: EFS	Project nr: 22-16152
Modification	Date	Name	Original		Replacement of / Replaced by	Scale 1:1			Page 1 / 1630

0	1	2	3	4	5	6	7	8	9

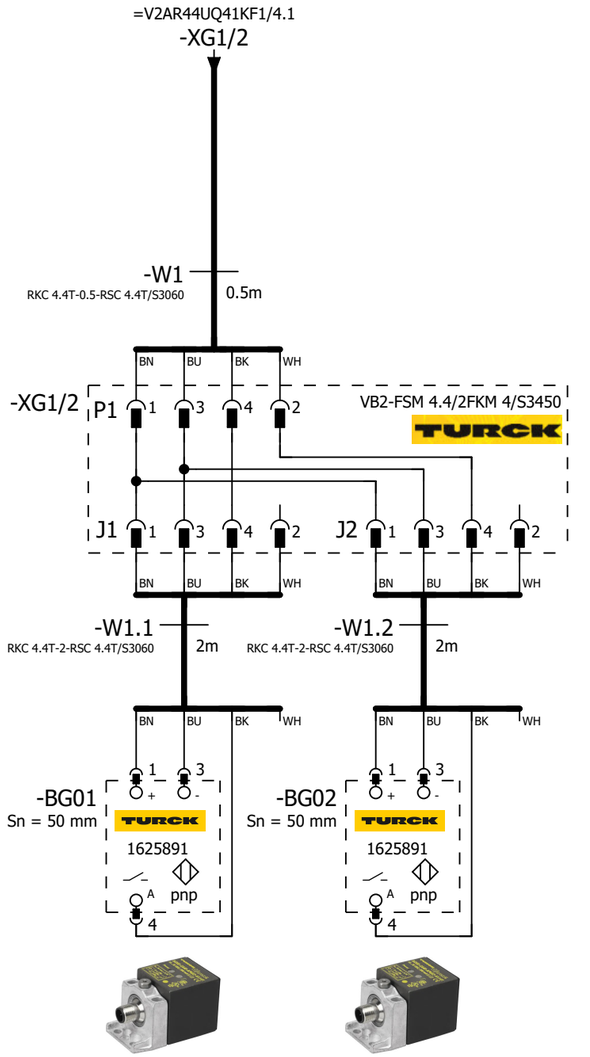

=V2AR44UQ41 -BG01 L150 Model Part Present	=V2AR44UQ41 -BG02 L150 Model Part Present

=V2AR44KF1+.AR44UC01/1

=V2AR44UQ41KF1/1

			Date	1/24/2023	Volvo Trucks North America		Valiant TMS	SENSORS	Drawing name: =2V01&EFS-EL_KF1	= V2AR44UQ41BG0
			Ed.	MKLEPADLO						+ V2AR44UQ41
			Appr		P6700 Framing - Cell 2V01, KF1				Document type: EFS	Project nr: 22-16152	Page 1
Modification	Date	Name	Original		Replacement of	Replaced by	Scale 1:1				1630

0	1	2	3	4	5	6	7	8	9

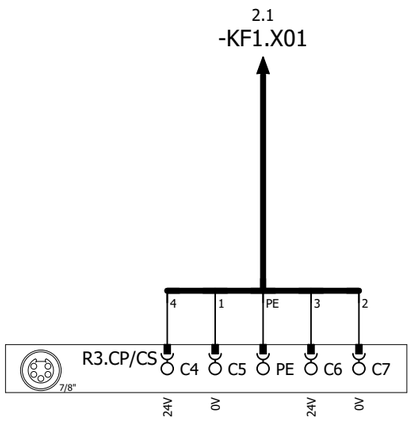

DC 24V (OUT)

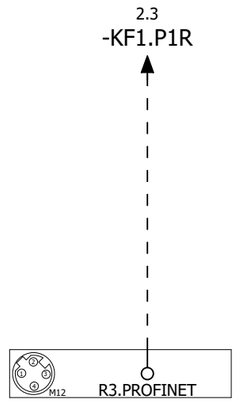

R3.ETHERNET

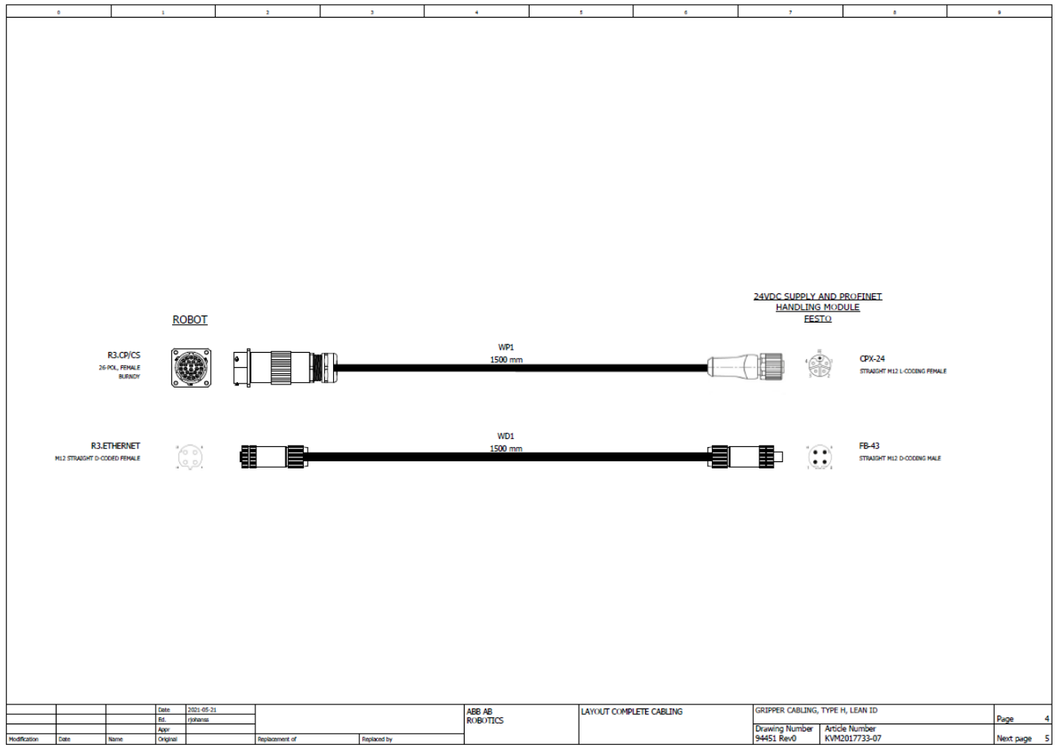

=V2AR44UQ41BG0/1

2

			Date	1/24/2023	Volvo Trucks North America	Valiant TMS	24VDC SUPPLY AND PROFINET HANDLING MODULE	Drawing name: =2V01&EFS-EL_KF1	= V2AR44UQ41KF1
			Ed.	MKLEPADLO					+ V2AR44UQ41
			Appr		P6700 Framing - Cell 2V01, KF1	Scale 1:1		Document type: EFS	Project nr: 22-16152
Modification	Date	Name	Original		Replacement of / Replaced by				Page 1 / 1630

0	1	2	3	4	5	6	7	8	9

1.3 / -KF1.X01

-W1
RSM RKM 56-2M/S3059
2m

1.5 / -KF1.P1R

-WF1
PROFINET Cable
6XV1840-3AH10

-KF1

X20 (7/8") 1 2 PE 3 4
0V_VAL / OUT
0V_EL / SEN
FE
24V_EL / SEN
24V_VAL / OUT

ON / OFF 1 2 1 2

M12 -TP1
M12 -TP2

FESTO
Bus node + Interlinking block
548755 + 550208

DI:0	DI 0 X1:4	V2AR44UQ41UQ1.1-BGR	L150 Model Shot Pin (RESET)
DI:1	DI 1 X1:2	V2AR44UQ41UQ1.1-BGS	L150 Model Shot Pin (SET)
DI:2	DI 2 X2:4	V2AR44UQ41UQ1.2-BGR	L150 Model Shot Pin (RESET)
DI:3	DI 3 X2:2	V2AR44UQ41UQ1.2-BGS	L150 Model Shot Pin (SET)
DI:4	DI 4 X3:4	V2AR44UQ41UQ2.1-BGR	L150 Model Clamp 1 (RESET)
DI:5	DI 5 X3:2	V2AR44UQ41UQ2.1-BGS	L150 Model Clamp 1 (SET)
DI:6	DI 6 X4:4	V2AR44UQ41UQ2.2-BGR	L150 Model Clamp 1 (RESET)
DI:7	DI 7 X4:2	V2AR44UQ41UQ2.2-BGS	L150 Model Clamp 1 (SET)
DI:8	DI 8 X5:4	V2AR44UQ41UQ2.3-BGR	L150 Model Clamp 1 (RESET)
DI:9	DI 9 X5:2	V2AR44UQ41UQ2.3-BGS	L150 Model Clamp 1 (SET)
DI:10	DI 10 X6:4	V2AR44UQ41UQ3.1-BGS	L150 Model Vacuums (SET)
DI:11	DI 11 X6:2	DI:11	Spare
DI:12	DI 12 X7:4	V2AR44UQ41UQ4.1-BGR	L150 Model Clamp 2 (RESET)
DI:13	DI 13 X7:2	V2AR44UQ41UQ4.1-BGS	L150 Model Clamp 2 (SET)
DI:14	DI 14 X8:4	V2AR44UQ41UQ4.2-BGR	L150 Model Clamp 2 (RESET)
DI:15	DI 15 X8:2	V2AR44UQ41UQ4.2-BGS	L150 Model Clamp 2 (SET)

-KF1.11

FESTO
CPX-M-AB-8-M12X2-5POL
549335

X1 X2 X3 X4 X5 X6 X7 X8 (M12)
24V / DI 1 / 0V / DI 0 / FE
24V / DI 3 / 0V / DI 2 / FE
24V / DI 5 / 0V / DI 4 / FE
24V / DI 7 / 0V / DI 6 / FE
24V / DI 9 / 0V / DI 8 / FE
24V / DI 11 / 0V / DI 10 / FE
24V / DI 13 / 0V / DI 12 / FE
24V / DI 15 / 0V / DI 14 / FE
BN WH BU BK

+.AR44UQ41UQ1.1-W1
=V2AR44UQ41UQ1+.AR44UQ41UQ1/1.1

+.AR44UQ41UQ1.2-W1
=V2AR44UQ41UQ1+.AR44UQ41UQ1/1.2

+.AR44UQ41UQ2.1-W1
=V2AR44UQ41UQ2+.AR44UQ41UQ2/1.1

+.AR44UQ41UQ2.2-W1
=V2AR44UQ41UQ2+.AR44UQ41UQ2/1.2

+.AR44UQ41UQ2.3-W1
=V2AR44UQ41UQ2+.AR44UQ41UQ2/1.4

+.AR44UQ41UQ3.1-W1
=V2AR44UQ41UQ3+.AR44UQ41UQ3/1.1

+.AR44UQ41UQ4.1-W1
=V2AR44UQ41UQ4+.AR44UQ41UQ4/1.1

+.AR44UQ41UQ4.2-W1
=V2AR44UQ41UQ4+.AR44UQ41UQ4/1.2

1 3

			Date	1/24/2023	Volvo Trucks North America	Valiant TMS	CONNECTING MOD. FOR MPA MANIFOLD	Drawing name: =2V01&EFS-EL_KF1	= V2AR44UQ41KF1
			Ed.	MKLEPADLO					+ V2AR44UQ41
			Appr		P6700 Framing - Cell 2V01, KF1	Scale 1:1		Document type: EFS	Project nr: 22-16152
Modification	Date	Name	Original		Replacement of	Replaced by			Page 2 / 1630

0	1	2	3	4	5	6	7	8	9

-KF1.12

FESTO
CPX-M-AB-8-M12X2-5POL
549335

DI:16	DI 0 X1:4	V2AR44UQ41UQ4.3-BGR	L150 Model Clamp 2 (RESET)
DI:17	DI 1 X1:2	V2AR44UQ41UQ4.3-BGS	L150 Model Clamp 2 (SET)
DI:18	DI 2 X2:4	DI:18	Spare
DI:19	DI 3 X2:2	DI:19	Spare
DI:20	DI 4 X3:4	DI:20	Spare
DI:21	DI 5 X3:2	DI:21	Spare
DI:22	DI 6 X4:4	DI:22	Spare
DI:23	DI 7 X4:2	DI:23	Spare
DI:24	DI 8 X5:4	DI:24	Spare
DI:25	DI 9 X5:2	DI:25	Spare
DI:26	DI 10 X6:4	DI:26	Spare
DI:27	DI 11 X6:2	DI:27	Spare
DI:28	DI 12 X7:4	DI:28	Spare
DI:29	DI 13 X7:2	DI:29	Spare
DI:30	DI 14 X8:4	DI:30	Spare
DI:31	DI 15 X8:2	DI:31	Spare

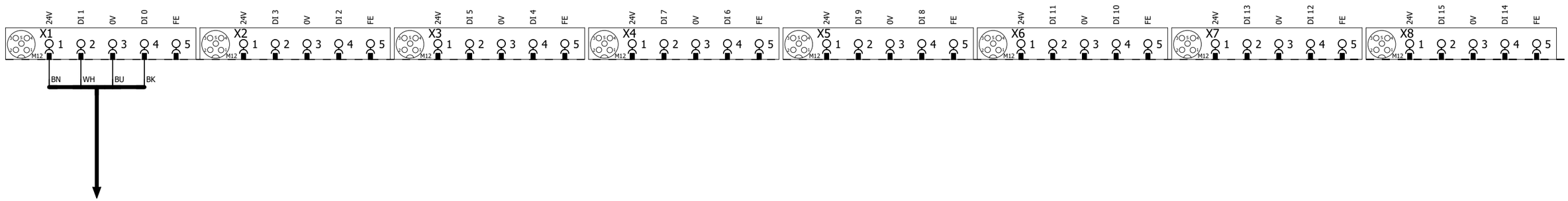

+.AR44UQ41UQ4.3-W1
=V2AR44UQ41UQ4+.AR44UQ41UQ4/1.4

2 4

			Date	1/24/2023	Volvo Trucks North America	Valiant TMS	I/O MOD. DI16 (8 x M12) FOR MPA	Drawing name: =2V01&EFS-EL_KF1	= V2AR44UQ41KF1
			Ed.	MKLEPADLO					+ V2AR44UQ41
			Appr		P6700 Framing - Cell 2V01, KF1			Document type: EFS	Project nr: 22-16152
Modification	Date	Name	Original		Replacement of / Replaced by	Scale 1:1			Page 3 / 1630

0	1	2	3	4	5	6	7	8	9

-KF1.13

FESTO
CPX-M-AB-8-M12X2-5POL
549335

DI:32	DI 0 X1:4	V2AR44UQ41-B01	L150 Model Part Present
DI:33	DI 1 X1:2	V2AR44UQ41-B02	L150 Model Part Present
DI:34	DI 2 X2:4	DI:34	Spare
DI:35	DI 3 X2:2	DI:35	Spare
DI:36	DI 4 X3:4	DI:36	Spare
DI:37	DI 5 X3:2	DI:37	Spare
DI:38	DI 6 X4:4	DI:38	Spare
DI:39	DI 7 X4:2	DI:39	Spare
DI:40	DI 8 X5:4	DI:40	Spare
DI:41	DI 9 X5:2	DI:41	Spare
DI:42	DI 10 X6:4	DI:42	Spare
DI:43	DI 11 X6:2	DI:43	Spare
DI:44	DI 12 X7:4	DI:44	Spare
DI:45	DI 13 X7:2	DI:45	Spare
DI:46	DI 14 X8:4	DI:46	Spare
DI:47	DI 15 X8:2	DI:47	Spare

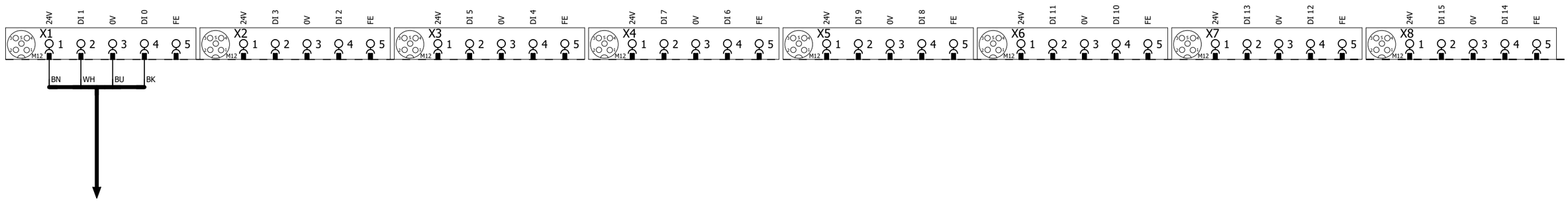

-XG1/2
=V2AR44UQ41BG0/1.1

3 5

			Date	1/24/2023	Volvo Trucks North America		Valiant TMS	I/O MOD. DI16 (8 x M12) FOR MPA	Drawing name: =2V01&EFS-EL_KF1	= V2AR44UQ41KF1
			Ed.	MKLEPADLO						+ V2AR44UQ41
			Appr		P6700 Framing - Cell 2V01, KF1				Document type: EFS	Project nr: 22-16152
Modification	Date	Name	Original		Replacement of	Replaced by	Scale 1:1			Page 4 / 1630

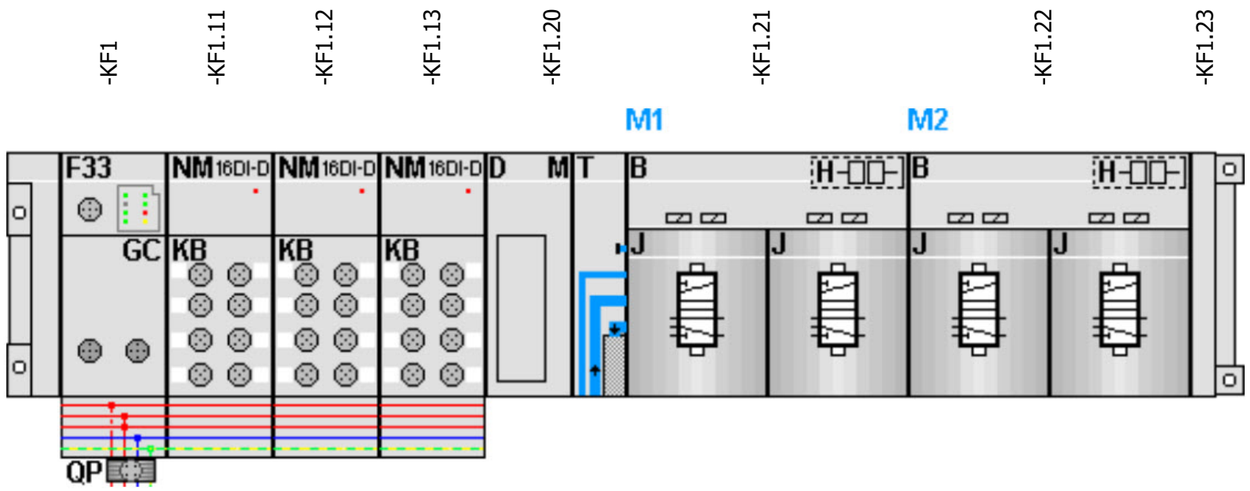

-KF1.21
=V2AR44UQ41UQ1+.AR44UQ41UQ1/1.3
=V2AR44UQ41UQ2+.AR44UQ41UQ2/1.3

FESTO

=V2AR44UQ41UQ1+.AR44UQ41UQ1/1.4	DO:0	DO 0 1.1	-QN1.1_Q	L150 Model Shot Pins (RST)
=V2AR44UQ41UQ1+.AR44UQ41UQ1/1.4	DO:1	DO 1 1.2	-QN1.2_Q	L150 Model Shot Pins (SET)
=V2AR44UQ41UQ2+.AR44UQ41UQ2/1.4	DO:2	DO 2 2.1	-QN2.1_Q	L150 Model Clamps 1 (RST)
=V2AR44UQ41UQ2+.AR44UQ41UQ2/1.4	DO:3	DO 3 2.2	-QN2.2_Q	L150 Model Clamps 1 (SET)

-KF1.22
=V2AR44UQ41UQ3+.AR44UQ41UQ3/1.3
=V2AR44UQ41UQ4+.AR44UQ41UQ4/1.3

FESTO

=V2AR44UQ41UQ3+.AR44UQ41UQ3/1.4	DO:4	DO 4 1.1	-QN3.1_Q	L150 Model Vacuums (RST)
=V2AR44UQ41UQ3+.AR44UQ41UQ3/1.4	DO:5	DO 5 1.2	-QN3.2_Q	L150 Model Vacuums (SET)
=V2AR44UQ41UQ4+.AR44UQ41UQ4/1.4	DO:6	DO 6 2.1	-QN4.1_Q	L150 Model Clamps 2 (RST)
=V2AR44UQ41UQ4+.AR44UQ41UQ4/1.4	DO:7	DO 7 2.2	-QN4.2_Q	L150 Model Clamps 2 (SET)

			Date	1/24/2023	Volvo Trucks North America	Valiant TMS	CONNECTING MOD. FOR FESTO DQ	Drawing name: =2V01&EFS-EL_KF1	= V2AR44UQ41KF1	
			Ed.	MKLEPADLO					+ V2AR44UQ41	
			Appr		P6700 Framing - Cell 2V01, KF1			Document type: EFS	Project nr: 22-16152	Page 5
Modification	Date	Name	Original		Replacement of / Replaced by	Scale 1:1				1630

0	1	2	3	4	5	6	7	8	9

=V2AR44UQ41KF1
+.AR44UQ41

-KF1.21
=V2AR44UQ41KF1+V2AR44UQ41/5.1

L150 Model Shot Pins (RST)
=V2AR44UQ41KF1
+V2AR44UQ41
-QN1.1_Q
=V2AR44UQ41KF1
+V2AR44UQ41/5.3
DO:0

L150 Model Shot Pins (SET)
=V2AR44UQ41KF1
+V2AR44UQ41
-QN1.2_Q
=V2AR44UQ41KF1
+V2AR44UQ41/5.3
DO:1

1.1
Pneumatic Valve

1.2
Pneumatic Valve

-QN1
.1
.2

=V2AR44UQ41KF1+V2AR44UQ41/2.1
+.AR44UQ41UQ1.1-W1

=V2AR44UQ41KF1+V2AR44UQ41/2.2
+.AR44UQ41UQ1.2-W1

-W1
RKC 4.4T-1-RSC 4.4T/S3060
1m

BN BU BK WH
1 3
+ -

-BGS/R

WELKER
WWS001A

A2 A1
2 4

L150 Model Shot Pin
=V2AR44UQ41UQ1.1
+.AR44UQ41UQ1.1
-UQ1.1

L150 Model Shot Pin
=V2AR44UQ41UQ1.2
+.AR44UQ41UQ1.2
-UQ1.2

=V2AR44UQ41
-UQ1.1-BGS/R
L150 Model
Shot Pin

=V2AR44UQ41
-UQ1.2-BGS/R
L150 Model
Shot Pin

=V2AR44UQ41KF1+V2AR44UQ41/5

=V2AR44UQ41UQ2+.AR44UQ41UQ2/1

			Date	1/24/2023	Volvo Trucks North America		Valiant TMS	FESTO DQ CONNECTION QN1	Drawing name: =2V01&EFS-EL_KF1	= V2AR44UQ41UQ1
			Ed.	MKLEPADLO						+ V2AR44UQ41UQ1
			Appr		P6700 Framing - Cell 2V01, KF1				Document type: EFS	Project nr: 22-16152
Modification	Date	Name	Original		Replacement of	Replaced by	Scale 1:1			Page 1 / 1630

0	1	2	3	4	5	6	7	8	9

=V2AR44UQ41KF1
+.AR44UQ41

-KF1.21
=V2AR44UQ41KF1+V2AR44UQ41/5.1

L150 Model Clamps 1 (RST)
=V2AR44UQ41KF1
+V2AR44UQ41
-QN2.1_Q
=V2AR44UQ41KF1
+V2AR44UQ41/5.3
DO:2

L150 Model Clamps 1 (SET)
=V2AR44UQ41KF1
+V2AR44UQ41
-QN2.2_Q
=V2AR44UQ41KF1
+V2AR44UQ41/5.3
DO:3

2.1 Pneumatic Valve
2.2 Pneumatic Valve

-QN2 .1 .2

=V2AR44UQ41KF1+V2AR44UQ41/2.3
+.AR44UQ41UQ2.1-W1

=V2AR44UQ41KF1+V2AR44UQ41/2.4
+.AR44UQ41UQ2.2-W1

=V2AR44UQ41KF1+V2AR44UQ41/2.5
+.AR44UQ41UQ2.3-W1

-W1 RKC 4.4T-1-RSC 4.4T/S3060 1m
-W1 RKC 4.4T-1-RSC 4.4T/S3060 1m
-W1 RKC 4.4T-2-RSC 4.4T/S3060 2m

BN BU BK WH

-BGS/R
TÜNKERS
1324638
A2 A1 2 4

L150 Model Clamp 1
=V2AR44UQ41UQ2.1
+.AR44UQ41UQ2.1
-UQ2.1

L150 Model Clamp 1
=V2AR44UQ41UQ2.2
+.AR44UQ41UQ2.2
-UQ2.2

L150 Model Clamp 1
=V2AR44UQ41UQ2.3
+.AR44UQ41UQ2.3
-UQ2.3

=V2AR44UQ41
-UQ2.1-BGS/R
L150 Model
Clamp 1

=V2AR44UQ41
-UQ2.2-BGS/R
L150 Model
Clamp 1

=V2AR44UQ41
-UQ2.3-BGS/R
L150 Model
Clamp 1

=V2AR44UQ41UQ1+.AR44UQ41UQ1/1

=V2AR44UQ41UQ3+.AR44UQ41UQ3/1

			Date	1/24/2023	Volvo Trucks North America		Valiant TMS	FESTO DQ CONNECTION QN2	Drawing name: =2V01&EFS-EL_KF1	= V2AR44UQ41UQ2
			Ed.	MKLEPADLO						+ V2AR44UQ41UQ2
			Appr		P6700 Framing - Cell 2V01, KF1				Document type: EFS	Project nr: 22-16152
Modification	Date	Name	Original		Replacement of	Replaced by	Scale 1:1			Page 1 / 1630

0	1	2	3	4	5	6	7	8	9

=V2AR44UQ41KF1
+.AR44UQ41

-KF1.22
=V2AR44UQ41KF1+V2AR44UQ41/5.1

L150 Model Vacuums (RST)
=V2AR44UQ41KF1
+V2AR44UQ41
-QN3.1_Q
=V2AR44UQ41KF1
+V2AR44UQ41/5.3
DO:4

L150 Model Vacuums (SET)
=V2AR44UQ41KF1
+V2AR44UQ41
-QN3.2_Q
=V2AR44UQ41KF1
+V2AR44UQ41/5.3
DO:5

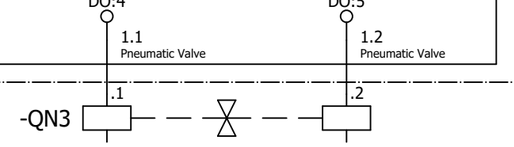

=V2AR44UQ41KF1+V2AR44UQ41/2.6
+.AR44UQ41UQ3.1-W1

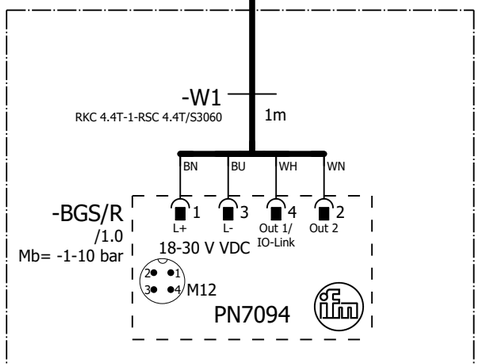

L150 Model Vacuums

=V2AR44UQ41UQ3.1
+.AR44UQ41UQ3.1
-UQ3.1

=V2AR44UQ41 -UQ3.1-BGS/R L150 Model Vacuums

=V2AR44UQ41UQ2+.AR44UQ41UQ2/1

=V2AR44UQ41UQ4+.AR44UQ41UQ4/1

			Date	1/24/2023	Volvo Trucks North America	Valiant TMS	FESTO DQ CONNECTION QN3	Drawing name: =2V01&EFS-EL_KF1	= V2AR44UQ41UQ3
			Ed.	MKLEPADLO					+ V2AR44UQ41UQ3
			Appr		P6700 Framing - Cell 2V01, KF1	Scale 1:1		Document type: EFS	Project nr: 22-16152
Modification	Date	Name	Original		Replacement of	Replaced by			Page 1 / 1630

0	1	2	3	4	5	6	7	8	9

=V2AR44UQ41KF1
+.AR44UQ41

-KF1.22
=V2AR44UQ41KF1+V2AR44UQ41/5.1

L150 Model Clamps 2 (RST)
=V2AR44UQ41KF1
+V2AR44UQ41
-QN4.1_Q
=V2AR44UQ41KF1
+V2AR44UQ41/5.3
DO:6

L150 Model Clamps 2 (SET)
=V2AR44UQ41KF1
+V2AR44UQ41
-QN4.2_Q
=V2AR44UQ41KF1
+V2AR44UQ41/5.3
DO:7

2.1 Pneumatic Valve
2.2 Pneumatic Valve

-QN4 .1 .2

=V2AR44UQ41KF1+V2AR44UQ41/2.8
+.AR44UQ41UQ4.1-W1

=V2AR44UQ41KF1+V2AR44UQ41/2.9
+.AR44UQ41UQ4.2-W1

=V2AR44UQ41KF1+V2AR44UQ41/3.1
+.AR44UQ41UQ4.3-W1

-W1 RKC 4.4T-1-RSC 4.4T/S3060 1m

-W1 RKC 4.4T-2-RSC 4.4T/S3060 2m

-W1 RKC 4.4T-1-RSC 4.4T/S3060 1m

-BGS/R
BN BU BK WH
1 3
+ -
TÜNKERS
1324638
A2 A1
2 4

L150 Model Clamp 2
=V2AR44UQ41UQ4.1
+.AR44UQ41UQ4.1
-UQ4.1

L150 Model Clamp 2
=V2AR44UQ41UQ4.2
+.AR44UQ41UQ4.2
-UQ4.2

L150 Model Clamp 2
=V2AR44UQ41UQ4.3
+.AR44UQ41UQ4.3
-UQ4.3

=V2AR44UQ41
-UQ4.1-BGS/R
L150 Model
Clamp 2

=V2AR44UQ41
-UQ4.2-BGS/R
L150 Model
Clamp 2

=V2AR44UQ41
-UQ4.3-BGS/R
L150 Model
Clamp 2

=V2AR44UQ41UQ3+.AR44UQ41UQ3/1

=V2AR44UQ42BG0+.AR44UQ42/1

			Date	1/24/2023	Volvo Trucks North America		Valiant TMS	FESTO DQ CONNECTION QN4	Drawing name: =2V01&EFS-EL_KF1	= V2AR44UQ41UQ4
			Ed.	MKLEPADLO						+ V2AR44UQ41UQ4
			Appr		P6700 Framing - Cell 2V01, KF1				Document type: EFS	Project nr: 22-16152
Modification	Date	Name	Original		Replacement of	Replaced by	Scale 1:1			Page 1 / 1630

0	1	2	3	4	5	6	7	8	9

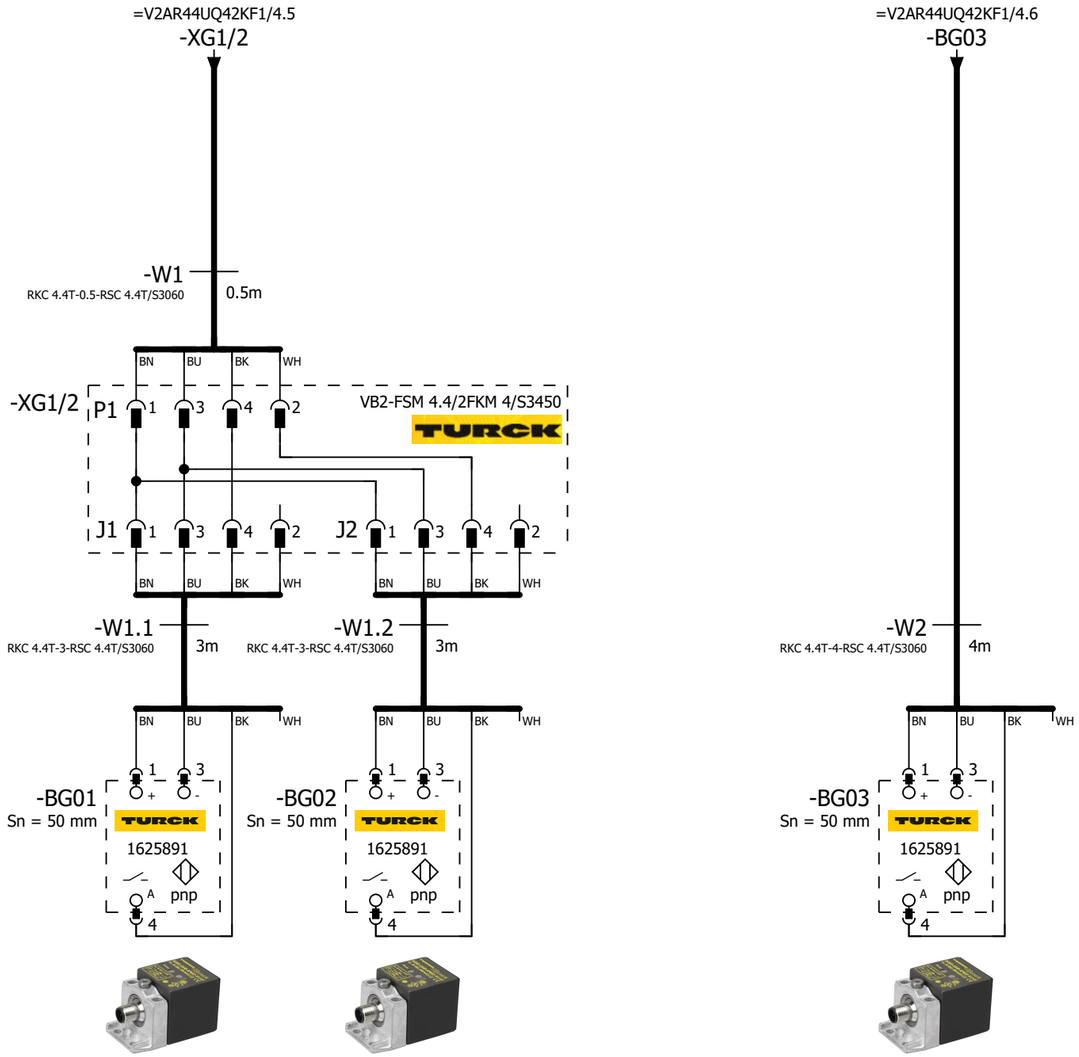

=V2AR44UQ41UQ4+.AR44UQ41UQ4/1

=V2AR44UQ42KF1/1

			Date	1/24/2023	Volvo Trucks North America	Valiant TMS	SENSORS	Drawing name: =2V01&EFS-EL_KF1	= V2AR44UQ42BG0
			Ed.	MKLEPADLO					+ V2AR44UQ42
			Appr		P6700 Framing - Cell 2V01, KF1			Document type: EFS	Project nr: 22-16152
Modification	Date	Name	Original		Replacement of / Replaced by	Scale 1:1			Page 1 / 1630

0	1	2	3	4	5	6	7	8	9

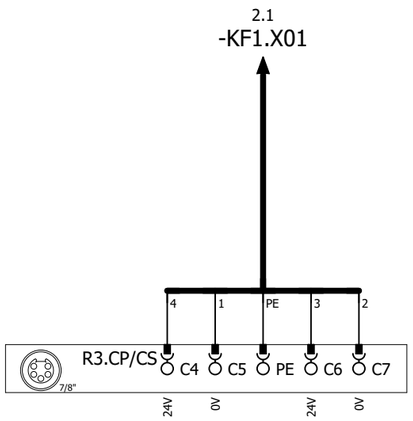

DC 24V (OUT)

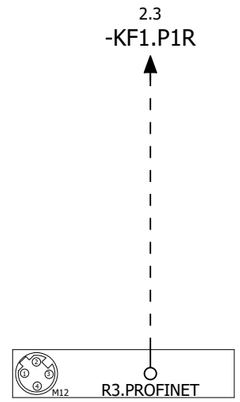

R3.ETHERNET

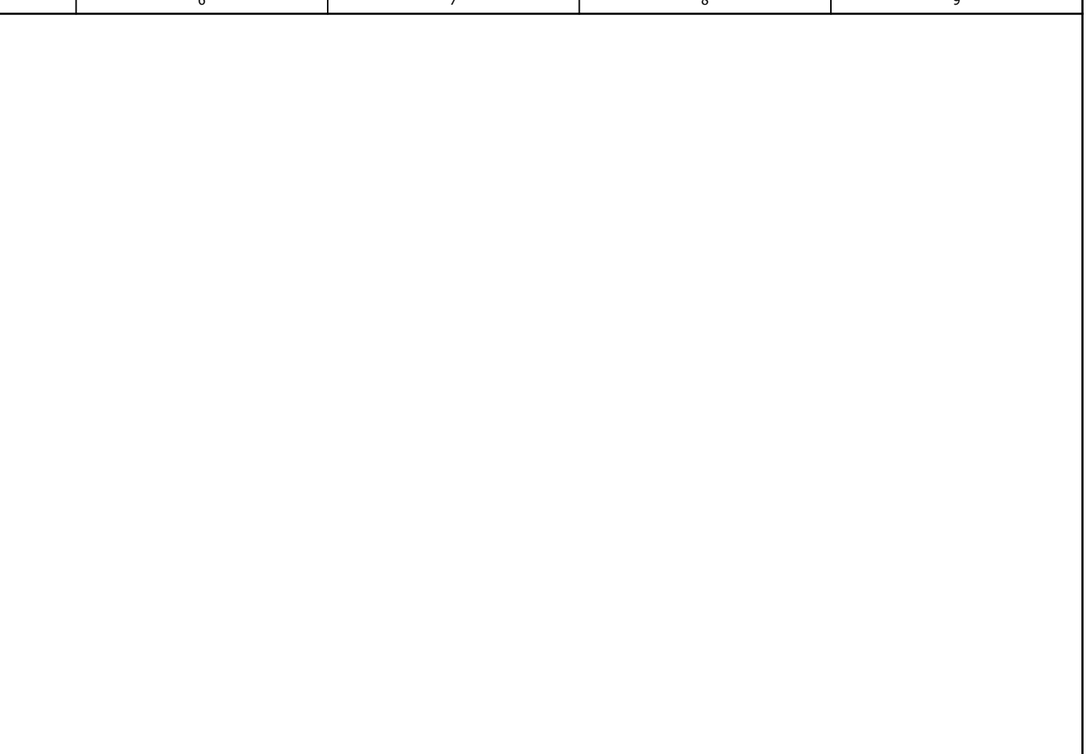

=V2AR44UQ42BG0/1

2

			Date	1/24/2023	Volvo Trucks North America		Valiant TMS	24VDC SUPPLY AND PROFINET HANDLING MODULE	Drawing name: =2V01&EFS-EL_KF1	= V2AR44UQ42KF1
			Ed.	MKLEPADLO						+ V2AR44UQ42
			Appr		P6700 Framing - Cell 2V01, KF1		Scale 1:1		Document type: EFS	Project nr: 22-16152
Modification	Date	Name	Original		Replacement of	Replaced by				Page 1 / 1630

1.3 / -KF1.X01

-W1
RSM RKM 56-2M/S3059
2m

1.5 / -KF1.P1R

-WF1
PROFINET Cable
6XV1840-3AH10

-KF1

X20 (7/8") 1 2 PE 3 4 5
0V_VAL / OUT | 0V_EL / SEN | FE | 24V_EL / SEN | 24V_VAL / OUT

ON / OFF 1 2 1 2

M12 -TP1 M12 -TP2

FESTO
Bus node + Interlinking block
548755 + 550208

DI:0	DI 0 X1:4 V2AR44UQ42UQ1.1-BGR	L290/320 Model Shot Pin (RESET)
DI:1	DI 1 X1:2 V2AR44UQ42UQ1.1-BGS	L290/320 Model Shot Pin (SET)
DI:2	DI 2 X2:4 V2AR44UQ42UQ2.1-BGR	L290 Model Clamp 1 (RESET)
DI:3	DI 3 X2:2 V2AR44UQ42UQ2.1-BGS	L290 Model Clamp 1 (SET)
DI:4	DI 4 X3:4 V2AR44UQ42UQ2.2-BGR	L290 Model Clamp 1 (RESET)
DI:5	DI 5 X3:2 V2AR44UQ42UQ2.2-BGS	L290 Model Clamp 1 (SET)
DI:6	DI 6 X4:4 V2AR44UQ42UQ3.1-BGS	L290/320 Model Vacuums (SET)
DI:7	DI 7 X4:2 DI:7	Spare
DI:8	DI 8 X5:4 V2AR44UQ42UQ4.1-BGR	L290/320 Model Clamp 1 (RESET)
DI:9	DI 9 X5:2 V2AR44UQ42UQ4.1-BGS	L290/320 Model Clamp 1 (SET)
DI:10	DI 10 X6:4 V2AR44UQ42UQ4.2-BGR	L290/320 Model Clamp 1 (RESET)
DI:11	DI 11 X6:2 V2AR44UQ42UQ4.2-BGS	L290/320 Model Clamp 1 (SET)
DI:12	DI 12 X7:4 V2AR44UQ42UQ5.1-BGR	L290 Model Clamp 2 (RESET)
DI:13	DI 13 X7:2 V2AR44UQ42UQ5.1-BGS	L290 Model Clamp 2 (SET)
DI:14	DI 14 X8:4 V2AR44UQ42UQ5.2-BGR	L290 Model Clamp 2 (RESET)
DI:15	DI 15 X8:2 V2AR44UQ42UQ5.2-BGS	L290 Model Clamp 2 (SET)

-KF1.11

FESTO
CPX-M-AB-8-M12X2-5POL
549335

X1 24V DI 1 0V DI 0 FE
X2 24V DI 3 0V DI 2 FE
X3 24V DI 5 0V DI 4 FE
X4 24V DI 7 0V DI 6 FE
X5 24V DI 9 0V DI 8 FE
X6 24V DI 11 0V DI 10 FE
X7 24V DI 13 0V DI 12 FE
X8 24V DI 15 0V DI 14 FE

BN WH BU BK

+.AR44UQ42UQ1.1-W1
=V2AR44UQ42UQ1+.AR44UQ42UQ1/1.1

+.AR44UQ42UQ2.1-W1
=V2AR44UQ42UQ2+.AR44UQ42UQ2/1.1

+.AR44UQ42UQ2.2-W1
=V2AR44UQ42UQ2+.AR44UQ42UQ2/1.2

+.AR44UQ42UQ3.1-W1
=V2AR44UQ42UQ3+.AR44UQ42UQ3/1.1

+.AR44UQ42UQ4.1-W1
=V2AR44UQ42UQ4+.AR44UQ42UQ4/1.1

+.AR44UQ42UQ4.2-W1
=V2AR44UQ42UQ4+.AR44UQ42UQ4/1.2

+.AR44UQ42UQ5.1-W1
=V2AR44UQ42UQ5+.AR44UQ42UQ5/1.1

+.AR44UQ42UQ5.2-W1
=V2AR44UQ42UQ5+.AR44UQ42UQ5/1.2

1 3

			Date	1/24/2023	Volvo Trucks North America	Valiant TMS	CONNECTING MOD. FOR MPA MANIFOLD	Drawing name: =2V01&EFS-EL_KF1	= V2AR44UQ42KF1
			Ed.	MKLEPADLO					+ V2AR44UQ42
			Appr		P6700 Framing - Cell 2V01, KF1	Scale 1:1		Document type: EFS	Project nr: 22-16152
Modification	Date	Name	Original		Replacement of	Replaced by			Page 2 / 1630

0	1	2	3	4	5	6	7	8	9

-KF1.12

FESTO
CPX-M-AB-8-M12X2-5POL
549335

DI:16	DI 0 X1:4	V2AR44UQ42UQ6.1-BGR	L290/320 Model Clamp 2 (RESET)
DI:17	DI 1 X1:2	V2AR44UQ42UQ6.1-BGS	L290/320 Model Clamp 2 (SET)
DI:18	DI 2 X2:4	V2AR44UQ42UQ6.2-BGR	L290/320 Model Clamp 2 (RESET)
DI:19	DI 3 X2:2	V2AR44UQ42UQ6.2-BGS	L290/320 Model Clamp 2 (SET)
DI:20	DI 4 X3:4	V2AR44UQ42UQ6.3-BGR	L290/320 Model Clamp 2 (RESET)
DI:21	DI 5 X3:2	V2AR44UQ42UQ6.3-BGS	L290/320 Model Clamp 2 (SET)
DI:22	DI 6 X4:4	V2AR44UQ42UQ7.1-BGR	L290 Model Clamp 3 (RESET)
DI:23	DI 7 X4:2	V2AR44UQ42UQ7.1-BGS	L290 Model Clamp 3 (SET)
DI:24	DI 8 X5:4	V2AR44UQ42UQ7.2-BGR	L290 Model Clamp 3 (RESET)
DI:25	DI 9 X5:2	V2AR44UQ42UQ7.2-BGS	L290 Model Clamp 3 (SET)
DI:26	DI 10 X6:4	V2AR44UQ42UQ8.1-BGR	L320 Model Clamp 1 (RESET)
DI:27	DI 11 X6:2	V2AR44UQ42UQ8.1-BGS	L320 Model Clamp 1 (SET)
DI:28	DI 12 X7:4	V2AR44UQ42UQ8.2-BGR	L320 Model Clamp 1 (RESET)
DI:29	DI 13 X7:2	V2AR44UQ42UQ8.2-BGS	L320 Model Clamp 1 (SET)
DI:30	DI 14 X8:4	V2AR44UQ42UQ9.1-BGR	L320 Model Clamp 2 (RESET)
DI:31	DI 15 X8:2	V2AR44UQ42UQ9.1-BGS	L320 Model Clamp 2 (SET)

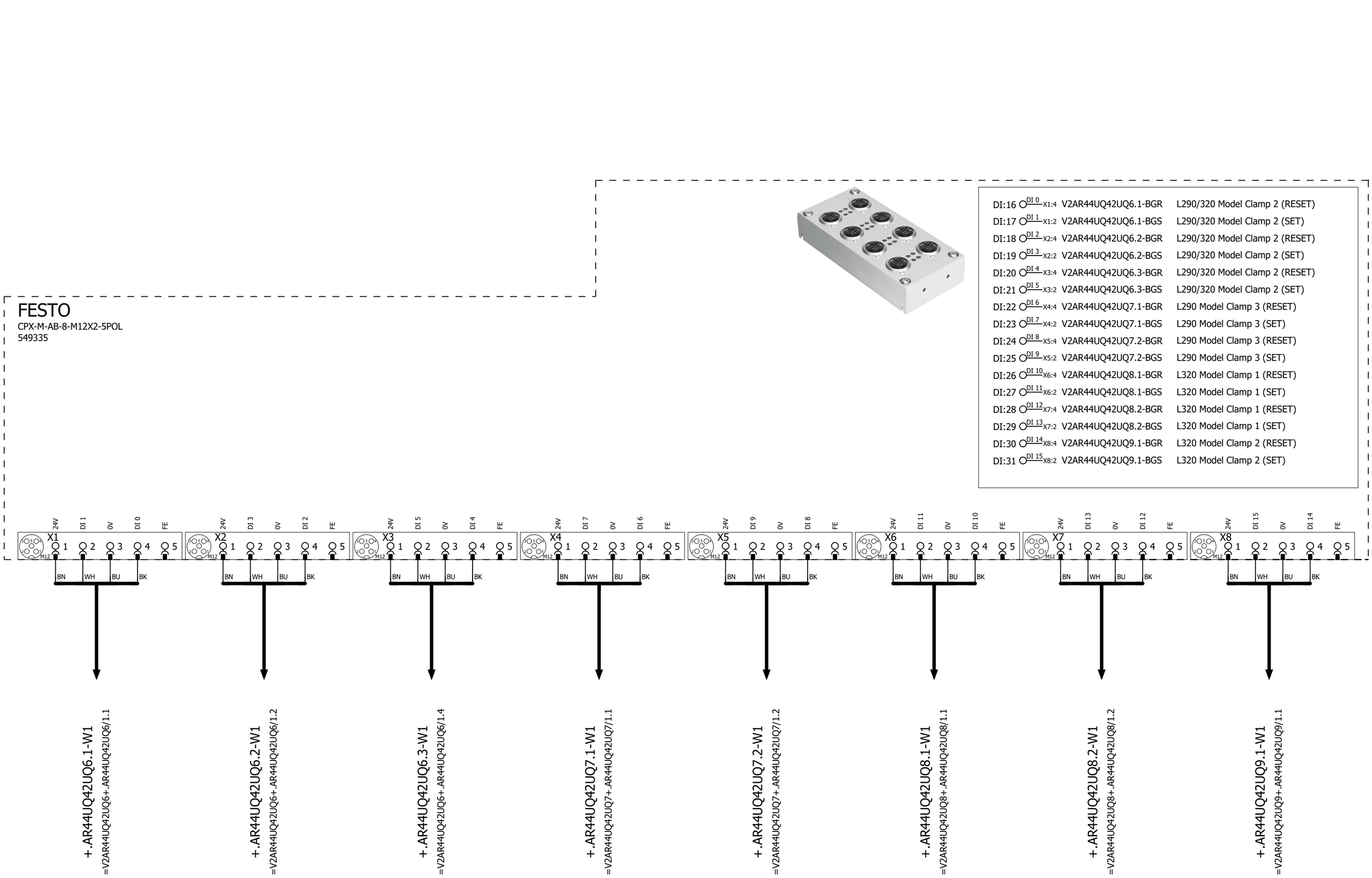

2 4

			Date	1/24/2023	Volvo Trucks North America	Valiant TMS	I/O MOD. DI16 (8 x M12) FOR MPA	Drawing name: =2V01&EFS-EL_KF1	= V2AR44UQ42KF1
			Ed.	MKLEPADLO					+ V2AR44UQ42
			Appr		P6700 Framing - Cell 2V01, KF1	Scale 1:1		Document type: EFS	Project nr: 22-16152
Modification	Date	Name	Original		Replacement of / Replaced by				Page 3 / 1630

0	1	2	3	4	5	6	7	8	9

DI:32	DI 0 X1:4	V2AR44UQ42UQ9.2-BGR	L320 Model Clamp 2 (RESET)
DI:33	DI 1 X1:2	V2AR44UQ42UQ9.2-BGS	L320 Model Clamp 2 (SET)
DI:34	DI 2 X2:4	DI:34	Spare
DI:35	DI 3 X2:2	DI:35	Spare
DI:36	DI 4 X3:4	DI:36	Spare
DI:37	DI 5 X3:2	DI:37	Spare
DI:38	DI 6 X4:4	DI:38	Spare
DI:39	DI 7 X4:2	DI:39	Spare
DI:40	DI 8 X5:4	V2AR44UQ42-BG01	L290/320 Model Part Present
DI:41	DI 9 X5:2	V2AR44UQ42-BG02	L290 Model Part Present
DI:42	DI 10 X6:4	V2AR44UQ42-BG03	L320 Model Part Present
DI:43	DI 11 X6:2	DI:43	Spare
DI:44	DI 12 X7:4	DI:44	Spare
DI:45	DI 13 X7:2	DI:45	Spare
DI:46	DI 14 X8:4	DI:46	Spare
DI:47	DI 15 X8:2	DI:47	Spare

-KF1.13

FESTO
CPX-M-AB-8-M12X2-5POL
549335

+.AR44UQ42UQ9.2-W1
=V2AR44UQ42UQ9+.AR44UQ42UQ9/1.2

-XG1/2
=V2AR44UQ42BG0/1.1

-BG03
=V2AR44UQ42BG0/1.4

3 5

			Date	1/24/2023	Volvo Trucks North America	Valiant TMS	I/O MOD. DI16 (8 x M12) FOR MPA	Drawing name: =2V01&EFS-EL_KF1	= V2AR44UQ42KF1	
			Ed.	MKLEPADLO					+ V2AR44UQ42	
			Appr		P6700 Framing - Cell 2V01, KF1			Document type: EFS	Project nr: 22-16152	Page 4
Modification	Date	Name	Original		Replacement of / Replaced by	Scale 1:1				1630

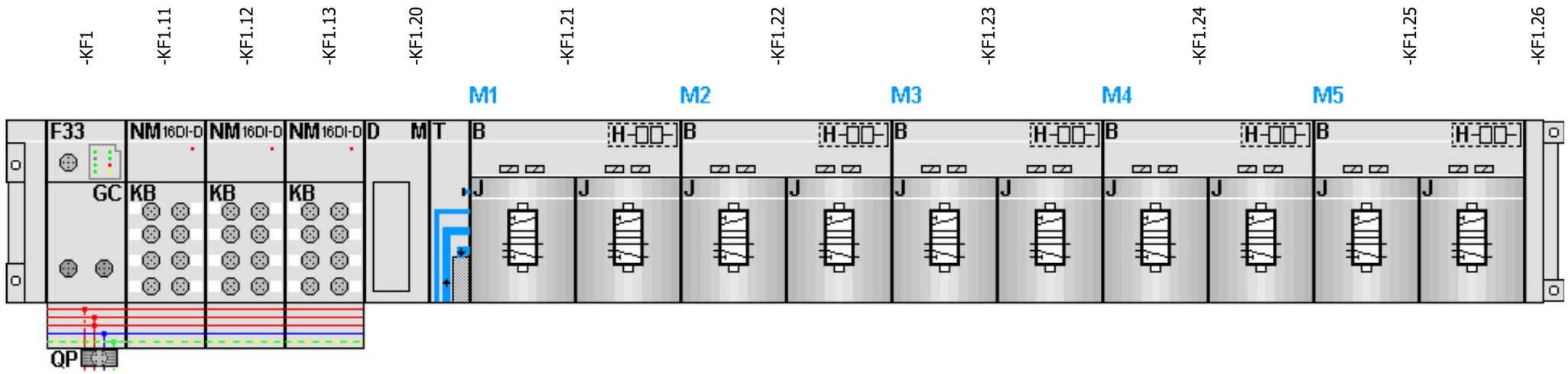

-KF1.21
=V2AR44UQ42UQ1+.AR44UQ42UQ1/1.3
=V2AR44UQ42UQ2+.AR44UQ42UQ2/1.3

FESTO

=V2AR44UQ42UQ1+.AR44UQ42UQ1/1.4	DO:0 DO 0 1.1	-QN1.1_Q	L290/320 Model Shot Pin (RST)
=V2AR44UQ42UQ1+.AR44UQ42UQ1/1.4	DO:1 DO 1 1.2	-QN1.2_Q	L290/320 Model Shot Pin (SET)
=V2AR44UQ42UQ2+.AR44UQ42UQ2/1.4	DO:2 DO 2 2.1	-QN2.1_Q	L290 Model Clamps 1 (RST)
=V2AR44UQ42UQ2+.AR44UQ42UQ2/1.4	DO:3 DO 3 2.2	-QN2.2_Q	L290 Model Clamps 1 (SET)

-KF1.22
=V2AR44UQ42UQ3+.AR44UQ42UQ3/1.3
=V2AR44UQ42UQ4+.AR44UQ42UQ4/1.3

FESTO

=V2AR44UQ42UQ3+.AR44UQ42UQ3/1.4	DO:4 DO 4 1.1	-QN3.1_Q	L290/320 Model Vacuums (RST)
=V2AR44UQ42UQ3+.AR44UQ42UQ3/1.4	DO:5 DO 5 1.2	-QN3.2_Q	L290/320 Model Vacuums (SET)
=V2AR44UQ42UQ4+.AR44UQ42UQ4/1.4	DO:6 DO 6 2.1	-QN4.1_Q	L290/320 Model Clamps 1 (RST)
=V2AR44UQ42UQ4+.AR44UQ42UQ4/1.4	DO:7 DO 7 2.2	-QN4.2_Q	L290/320 Model Clamps 1 (SET)

-KF1.23
=V2AR44UQ42UQ5+.AR44UQ42UQ5/1.3
=V2AR44UQ42UQ6+.AR44UQ42UQ6/1.3

FESTO

=V2AR44UQ42UQ5+.AR44UQ42UQ5/1.4	DO:8 DO 8 1.1	-QN5.1_Q	L290 Model Clamps 2 (RST)
=V2AR44UQ42UQ5+.AR44UQ42UQ5/1.4	DO:9 DO 9 1.2	-QN5.2_Q	L290 Model Clamps 2 (SET)
=V2AR44UQ42UQ6+.AR44UQ42UQ6/1.4	DO:10 DO 10 2.1	-QN6.1_Q	L290/320 Model Clamps 2 (RST)
=V2AR44UQ42UQ6+.AR44UQ42UQ6/1.4	DO:11 DO 11 2.2	-QN6.2_Q	L290/320 Model Clamps 2 (SET)

-KF1.24
=V2AR44UQ42UQ7+.AR44UQ42UQ7/1.3
=V2AR44UQ42UQ8+.AR44UQ42UQ8/1.3

FESTO

=V2AR44UQ42UQ7+.AR44UQ42UQ7/1.4	DO:12 DO 12 1.1	-QN7.1_Q	L290 Model Clamps 3 (RST)
=V2AR44UQ42UQ7+.AR44UQ42UQ7/1.4	DO:13 DO 13 1.2	-QN7.2_Q	L290 Model Clamps 3 (SET)
=V2AR44UQ42UQ8+.AR44UQ42UQ8/1.4	DO:14 DO 14 2.1	-QN8.1_Q	L320 Model Clamps 1 (RST)
=V2AR44UQ42UQ8+.AR44UQ42UQ8/1.4	DO:15 DO 15 2.2	-QN8.2_Q	L320 Model Clamps 1 (SET)

-KF1.25
=V2AR44UQ42UQ9+.AR44UQ42UQ9/1.3
=V2AR44UQ42UQ10+.AR44UQ42UQ10/1.3

FESTO

=V2AR44UQ42UQ9+.AR44UQ42UQ9/1.4	DO:16 DO 16 1.1	-QN9.1_Q	L320 Model Clamp 2 (RST)
=V2AR44UQ42UQ9+.AR44UQ42UQ9/1.4	DO:17 DO 17 1.2	-QN9.2_Q	L320 Model Clamp 2 (SET)
=V2AR44UQ42UQ10+.AR44UQ42UQ10/1.4	DO:18 DO 18 2.1	-QN10.1_Q	Spare (RST)
=V2AR44UQ42UQ10+.AR44UQ42UQ10/1.4	DO:19 DO 19 2.2	-QN10.2_Q	Spare (SET)

=V2AR44UQ42UQ1+.AR44UQ42UQ1/1

			Date	1/24/2023	Volvo Trucks North America	Valiant TMS	CONNECTING MOD. FOR FESTO DQ	Drawing name: =2V01&EFS-EL_KF1
			Ed.	MKLEPADLO				= V2AR44UQ42KF1
			Appr		P6700 Framing - Cell 2V01, KF1			+ V2AR44UQ42
Modification	Date	Name	Original		Replacement of / Replaced by	Scale 1:1		Document type: EFS / Project nr: 22-16152 / Page 5 / 1630

0	1	2	3	4	5	6	7	8	9

=V2AR44UQ42KF1
+.AR44UQ42

-KF1.21
=V2AR44UQ42KF1+V2AR44UQ42/5.1

L290/320 Model Shot Pin (RST)
=V2AR44UQ42KF1
+V2AR44UQ42
-QN1.1_Q
=V2AR44UQ42KF1
+V2AR44UQ42/5.3
DO:0

L290/320 Model Shot Pin (SET)
=V2AR44UQ42KF1
+V2AR44UQ42
-QN1.2_Q
=V2AR44UQ42KF1
+V2AR44UQ42/5.3
DO:1

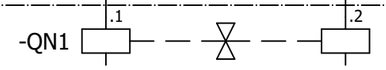

=V2AR44UQ42KF1+V2AR44UQ42/2.1
+.AR44UQ42UQ1.1-W1

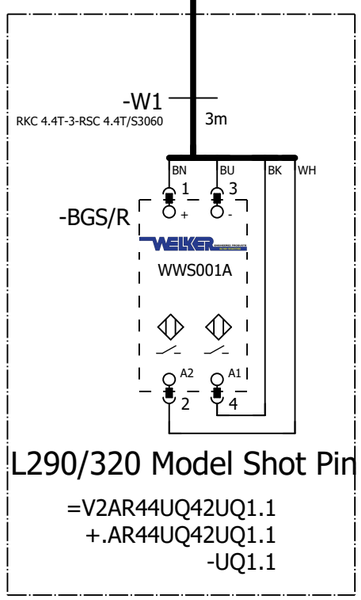

L290/320 Model Shot Pin

=V2AR44UQ42UQ1.1
+.AR44UQ42UQ1.1
-UQ1.1

=V2AR44UQ42
-UQ1.1-BGS/R
L290/320 Model
Shot Pin

=V2AR44UQ42KF1+V2AR44UQ42/5

=V2AR44UQ42UQ2+.AR44UQ42UQ2/1

			Date	1/24/2023	Volvo Trucks North America	Valiant TMS	FESTO DQ CONNECTION QN1	Drawing name: =2V01&EFS-EL_KF1	= V2AR44UQ42UQ1
			Ed.	MKLEPADLO					+ V2AR44UQ42UQ1
			Appr		P6700 Framing - Cell 2V01, KF1			Document type: EFS	Project nr: 22-16152
Modification	Date	Name	Original		Replacement of / Replaced by	Scale 1:1			Page 1 / 1630

0	1	2	3	4	5	6	7	8	9

=V2AR44UQ42KF1
+.AR44UQ42

-KF1.21
=V2AR44UQ42KF1+V2AR44UQ42/5.1

L290 Model Clamps 1 (RST)
=V2AR44UQ42KF1
+V2AR44UQ42
-QN2.1_Q
=V2AR44UQ42KF1
+V2AR44UQ42/5.3
DO:2

L290 Model Clamps 1 (SET)
=V2AR44UQ42KF1
+V2AR44UQ42
-QN2.2_Q
=V2AR44UQ42KF1
+V2AR44UQ42/5.3
DO:3

2.1 Pneumatic Valve

2.2 Pneumatic Valve

-QN2 .1 .2

=V2AR44UQ42KF1+V2AR44UQ42/2.2
+.AR44UQ42UQ2.1-W1

-W1 3m
RKC 4.4T-3-RSC 4.4T/S3060

-BGS/R
BN BU BK WH
1 3
TÜNKERS
1324644
A2 A1
2 4

L290 Model Clamp 1
=V2AR44UQ42UQ2.1
+.AR44UQ42UQ2.1
-UQ2.1

=V2AR44UQ42
-UQ2.1-BGS/R
L290 Model
Clamp 1

=V2AR44UQ42KF1+V2AR44UQ42/2.3
+.AR44UQ42UQ2.2-W1

-W1 3m
RKC 4.4T-3-RSC 4.4T/S3060

-BGS/R
BN BU BK WH
1 3
TÜNKERS
1324644
A2 A1
2 4

L290 Model Clamp 1
=V2AR44UQ42UQ2.2
+.AR44UQ42UQ2.2
-UQ2.2

=V2AR44UQ42
-UQ2.2-BGS/R
L290 Model
Clamp 1

=V2AR44UQ42UQ1+.AR44UQ42UQ1/1

=V2AR44UQ42UQ3+.AR44UQ42UQ3/1

			Date	1/24/2023	Volvo Trucks North America		Valiant TMS	FESTO DQ CONNECTION QN2	Drawing name: =2V01&EFS-EL_KF1	= V2AR44UQ42UQ2
			Ed.	MKLEPADLO						+ V2AR44UQ42UQ2
			Appr		P6700 Framing - Cell 2V01, KF1				Document type: EFS	Project nr: 22-16152
Modification	Date	Name	Original		Replacement of	Replaced by	Scale 1:1			Page 1 / 1630

0	1	2	3	4	5	6	7	8	9

=V2AR44UQ42KF1
+.AR44UQ42

-KF1.22
=V2AR44UQ42KF1+V2AR44UQ42/5.1

L290/320 Model Vacuums (RST)
=V2AR44UQ42KF1
+V2AR44UQ42
-QN3.1_Q
=V2AR44UQ42KF1
+V2AR44UQ42/5.3
DO:4

L290/320 Model Vacuums (SET)
=V2AR44UQ42KF1
+V2AR44UQ42
-QN3.2_Q
=V2AR44UQ42KF1
+V2AR44UQ42/5.3
DO:5

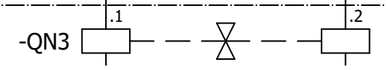

=V2AR44UQ42KF1+V2AR44UQ42/2.4
+.AR44UQ42UQ3.1-W1

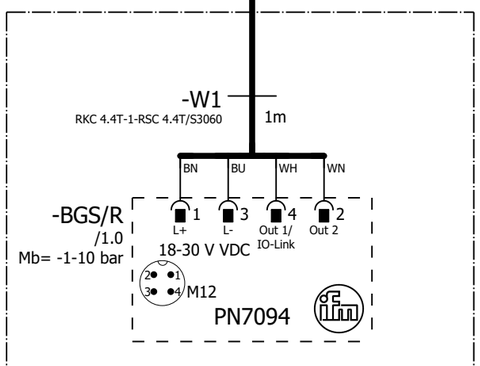

L290/320 Model Vacuums

=V2AR44UQ42UQ3.1
+.AR44UQ42UQ3.1
-UQ3.1

=V2AR44UQ42 -UQ3.1-BGS/R L290/320 Model Vacuums

=V2AR44UQ42UQ2+.AR44UQ42UQ2/1

=V2AR44UQ42UQ4+.AR44UQ42UQ4/1

			Date	1/24/2023	Volvo Trucks North America	Valiant TMS	FESTO DQ CONNECTION QN3	Drawing name: =2V01&EFS-EL_KF1	= V2AR44UQ42UQ3
			Ed.	MKLEPADLO					+ V2AR44UQ42UQ3
			Appr		P6700 Framing - Cell 2V01, KF1	Scale 1:1		Document type: EFS	Project nr: 22-16152
Modification	Date	Name	Original		Replacement of	Replaced by			Page 1 / 1630

0	1	2	3	4	5	6	7	8	9

=V2AR44UQ42KF1
+.AR44UQ42

-KF1.22
=V2AR44UQ42KF1+V2AR44UQ42/5.1

L290/320 Model Clamps 1 (RST)
=V2AR44UQ42KF1
+V2AR44UQ42
-QN4.1_Q
=V2AR44UQ42KF1
+V2AR44UQ42/5.3
DO:6

L290/320 Model Clamps 1 (SET)
=V2AR44UQ42KF1
+V2AR44UQ41
-QN4.2_Q
=V2AR44UQ42KF1
+V2AR44UQ42/5.3
DO:7

2.1 Pneumatic Valve
2.2 Pneumatic Valve

-QN4 .1 .2

=V2AR44UQ42KF1+V2AR44UQ42/2.5
+.AR44UQ42UQ4.1-W1

=V2AR44UQ42KF1+V2AR44UQ42/2.6
+.AR44UQ42UQ4.2-W1

-W1 1m
RKC 4.4T-1-RSC 4.4T/S3060

BN BU BK WH
1 3
+ -
-BGS/R
TÜNKERS
1324638
A2 A1
2 4

L290/320 Model Clamp 1
=V2AR44UQ42UQ4.1
+.AR44UQ42UQ4.1
-UQ4.1

L290/320 Model Clamp 1
=V2AR44UQ42UQ4.2
+.AR44UQ42UQ4.2
-UQ4.2

=V2AR44UQ42
-UQ4.1-BGS/R
L290/320 Model
Clamp 1

=V2AR44UQ42
-UQ4.2-BGS/R
L290/320 Model
Clamp 1

=V2AR44UQ42UQ3+.AR44UQ42UQ3/1

=V2AR44UQ42UQ5+.AR44UQ42UQ5/1

			Date	1/24/2023	Volvo Trucks North America		Valiant TMS	FESTO DQ CONNECTION QN4	Drawing name: =2V01&EFS-EL_KF1	= V2AR44UQ42UQ4
			Ed.	MKLEPADLO						+ V2AR44UQ42UQ4
			Appr		P6700 Framing - Cell 2V01, KF1				Document type: EFS	Project nr: 22-16152
Modification	Date	Name	Original		Replacement of	Replaced by	Scale 1:1			Page 1 / 1630

0	1	2	3	4	5	6	7	8	9

=V2AR44UQ42KF1
+.AR44UQ42

-KF1.23
=V2AR44UQ42KF1+V2AR44UQ42/5.1

L290 Model Clamps 2 (RST)
=V2AR44UQ42KF1
+V2AR44UQ42
-QN5.1_Q
=V2AR44UQ42KF1
+V2AR44UQ42/5.3
DO:8

L290 Model Clamps 2 (SET)
=V2AR44UQ42KF1
+V2AR44UQ42
-QN5.2_Q
=V2AR44UQ42KF1
+V2AR44UQ42/5.3
DO:9

1.1 Pneumatic Valve

1.2 Pneumatic Valve

-QN5 .1 .2

=V2AR44UQ42KF1+V2AR44UQ42/2.8
+.AR44UQ42UQ5.1-W1

-W1
RKC 4.4T-2-RSC 4.4T/S3060
2m

BN BU BK WH
1 3
+ -
-BGS/R
TÜNKERS
1324638
A2 A1
2 4

L290 Model Clamps 2
=V2AR44UQ42UQ5.1
+.AR44UQ42UQ5.1
-UQ5.1

=V2AR44UQ42KF1+V2AR44UQ42/2.9
+.AR44UQ42UQ5.2-W1

-W1
RKC 4.4T-2-RSC 4.4T/S3060
2m

BN BU BK WH
1 3
+ -
-BGS/R
TÜNKERS
1324638
A2 A1
2 4

L290 Model Clamps 2
=V2AR44UQ42UQ5.2
+.AR44UQ42UQ5.2
-UQ5.2

=V2AR44UQ42
-UQ5.1-BGS/R
L290 Model
Clamps 2

=V2AR44UQ42
-UQ5.2-BGS/R
L290 Model
Clamps 2

=V2AR44UQ42UQ4+.AR44UQ42UQ4/1

=V2AR44UQ42UQ6+.AR44UQ42UQ6/1

			Date	1/24/2023	Volvo Trucks North America		Valiant TMS	FESTO DQ CONNECTION QN5	Drawing name: =2V01&EFS-EL_KF1	= V2AR44UQ42UQ5
			Ed.	MKLEPADLO						+ V2AR44UQ42UQ5
			Appr		P6700 Framing - Cell 2V01, KF1				Document type: EFS	Project nr: 22-16152
Modification	Date	Name	Original		Replacement of	Replaced by	Scale 1:1			Page 1 / 1630

0	1	2	3	4	5	6	7	8	9

=V2AR44UQ42KF1
+.AR44UQ42

-KF1.23
=V2AR44UQ42KF1+V2AR44UQ42/5.1

L290/320 Model Clamps 2 (RST)
=V2AR44UQ42KF1
+V2AR44UQ42
-QN6.1_Q
=V2AR44UQ42KF1
+V2AR44UQ42/5.3
DO:10

L290/320 Model Clamps 2 (SET)
=V2AR44UQ42KF1
+V2AR44UQ42
-QN6.2_Q
=V2AR44UQ42KF1
+V2AR44UQ42/5.3
DO:11

2.1 Pneumatic Valve
2.2 Pneumatic Valve

-QN6 .1 .2

=V2AR44UQ42KF1+V2AR44UQ42/3.1
+.AR44UQ42UQ6.1-W1

=V2AR44UQ42KF1+V2AR44UQ42/3.2
+.AR44UQ42UQ6.2-W1

=V2AR44UQ42KF1+V2AR44UQ42/3.3
+.AR44UQ42UQ6.3-W1

-W1 2m
RKC 4.4T-2-RSC 4.4T/S3060

BN BU BK WH

-BGS/R
1 3
+ -
TÜNKERS
1324638
A2 A1
2 4

L290/320 Model Clamp 2
=V2AR44UQ42UQ6.1
+.AR44UQ42UQ6.1
-UQ6.1

L290/320 Model Clamp 2
=V2AR44UQ42UQ6.2
+.AR44UQ42UQ6.2
-UQ6.2

L290/320 Model Clamp 2
=V2AR44UQ42UQ6.3
+.AR44UQ42UQ6.3
-UQ6.3

=V2AR44UQ42
-UQ6.1-BGS/R
L290/320 Model
Clamp 2

=V2AR44UQ42
-UQ6.2-BGS/R
L290/320 Model
Clamp 2

=V2AR44UQ42
-UQ6.3-BGS/R
L290/320 Model
Clamp 2

=V2AR44UQ42UQ5+.AR44UQ42UQ5/1

=V2AR44UQ42UQ7+.AR44UQ42UQ7/1

			Date	1/24/2023	Volvo Trucks North America		Valiant TMS	FESTO DQ CONNECTION QN6	Drawing name: =2V01&EFS-EL_KF1	= V2AR44UQ42UQ6
			Ed.	MKLEPADLO						+ V2AR44UQ42UQ6
			Appr		P6700 Framing - Cell 2V01, KF1				Document type: EFS	Project nr: 22-16152
Modification	Date	Name	Original		Replacement of	Replaced by	Scale 1:1			Page 1 / 1630

0	1	2	3	4	5	6	7	8	9

=V2AR44UQ42KF1
+.AR44UQ42

-KF1.24
=V2AR44UQ42KF1+V2AR44UQ42/5.1

L290 Model Clamps 3 (RST)	L290 Model Clamps 3 (SET)
=V2AR44UQ42KF1	=V2AR44UQ42KF1
+V2AR44UQ42	+V2AR44UQ42
-QN7.1_Q	-QN7.2_Q
=V2AR44UQ42KF1	=V2AR44UQ42KF1
+V2AR44UQ42/5.3	+V2AR44UQ42/5.3
DO:12	DO:13
1.1 Pneumatic Valve	1.2 Pneumatic Valve

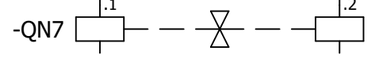

=V2AR44UQ42KF1+V2AR44UQ42/3.4
+.AR44UQ42UQ7.1-W1

=V2AR44UQ42KF1+V2AR44UQ42/3.5
+.AR44UQ42UQ7.2-W1

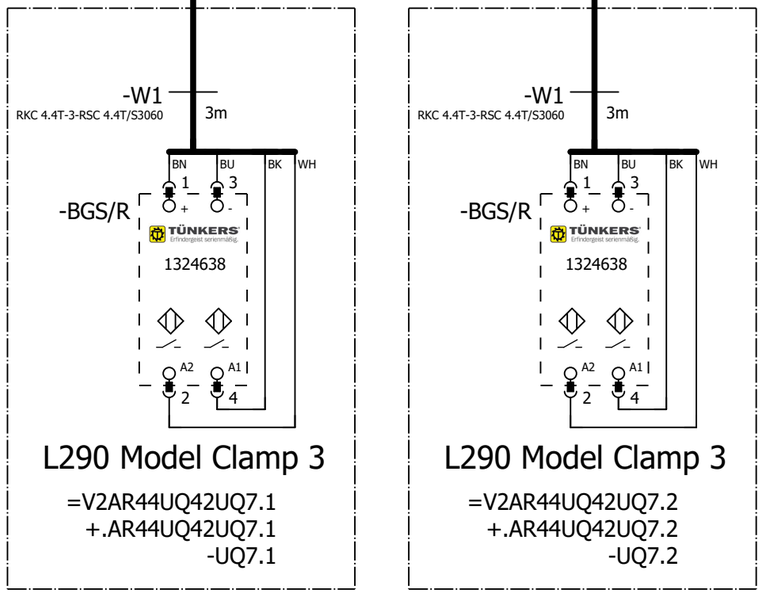

L290 Model Clamp 3
=V2AR44UQ42UQ7.1
+.AR44UQ42UQ7.1
-UQ7.1

L290 Model Clamp 3
=V2AR44UQ42UQ7.2
+.AR44UQ42UQ7.2
-UQ7.2

=V2AR44UQ42
-UQ7.1-BGS/R
L290 Model
Clamp 3

=V2AR44UQ42
-UQ7.2-BGS/R
L290 Model
Clamp 3

=V2AR44UQ42UQ6+.AR44UQ42UQ6/1

=V2AR44UQ42UQ8+.AR44UQ42UQ8/1

			Date	1/24/2023	Volvo Trucks North America		Valiant TMS	FESTO DQ CONNECTION QN7	Drawing name: =2V01&EFS-EL_KF1	= V2AR44UQ42UQ7
			Ed.	MKLEPADLO						+ V2AR44UQ42UQ7
			Appr		P6700 Framing - Cell 2V01, KF1				Document type: EFS	Project nr: 22-16152
Modification	Date	Name	Original		Replacement of	Replaced by	Scale 1:1			Page 1 / 1630

0	1	2	3	4	5	6	7	8	9

=V2AR44UQ42KF1
+.AR44UQ42

-KF1.24
=V2AR44UQ42KF1+V2AR44UQ42/5.1

L320 Model Clamps 1 (RST)
=V2AR44UQ42KF1
+V2AR44UQ42
-QN8.1_Q
=V2AR44UQ42KF1
+V2AR44UQ42/5.3
DO:14

L320 Model Clamps 1 (SET)
=V2AR44UQ42KF1
+V2AR44UQ42
-QN8.2_Q
=V2AR44UQ42KF1
+V2AR44UQ42/5.3
DO:15

2.1 Pneumatic Valve
2.2 Pneumatic Valve

-QN8 .1 .2

=V2AR44UQ42KF1+V2AR44UQ42/3.6
+.AR44UQ42UQ8.1-W1

-W1
RKC 4.4T-1-RSC 4.4T/S3060
1m

BN BU BK WH
1 3
-BGS/R
TÜNKERS
1324638
A2 A1
2 4

L320 Model Clamp 1
=V2AR44UQ42UQ8.1
+.AR44UQ42UQ8.1
-UQ8.1

=V2AR44UQ42KF1+V2AR44UQ42/3.8
+.AR44UQ42UQ8.2-W1

-W1
RKC 4.4T-1-RSC 4.4T/S3060
1m

BN BU BK WH
1 3
-BGS/R
TÜNKERS
1324638
A2 A1
2 4

L320 Model Clamp 1
=V2AR44UQ42UQ8.2
+.AR44UQ42UQ8.2
-UQ8.2

=V2AR44UQ42
-UQ8.1-BGS/R
L320 Model
Clamp 1

=V2AR44UQ42
-UQ8.2-BGS/R
L320 Model
Clamp 1

=V2AR44UQ42UQ7+.AR44UQ42UQ7/1

=V2AR44UQ42UQ9+.AR44UQ42UQ9/1

			Date	1/24/2023	Volvo Trucks North America		Valiant TMS	FESTO DQ CONNECTION QN8	Drawing name: =2V01&EFS-EL_KF1	= V2AR44UQ42UQ8
			Ed.	MKLEPADLO						+ V2AR44UQ42UQ8
			Appr		P6700 Framing - Cell 2V01, KF1				Document type: EFS	Project nr: 22-16152
Modification	Date	Name	Original		Replacement of	Replaced by	Scale 1:1			Page 1 / 1630

0	1	2	3	4	5	6	7	8	9

=V2AR44UQ42KF1
+.AR44UQ42

-KF1.25
=V2AR44UQ42KF1+V2AR44UQ42/5.1

L320 Model Clamp 2 (RST)
=V2AR44UQ42KF1
+V2AR44UQ42
-QN9.1_Q
=V2AR44UQ42KF1
+V2AR44UQ42/5.3
DO:16

L320 Model Clamp 2 (SET)
=V2AR44UQ42KF1
+V2AR44UQ42
-QN9.2_Q
=V2AR44UQ42KF1
+V2AR44UQ42/5.3
DO:17

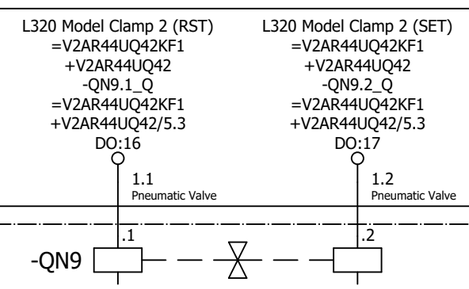

=V2AR44UQ42KF1+V2AR44UQ42/3.9
+.AR44UQ42UQ9.1-W1

=V2AR44UQ42KF1+V2AR44UQ42/4.1
+.AR44UQ42UQ9.2-W1

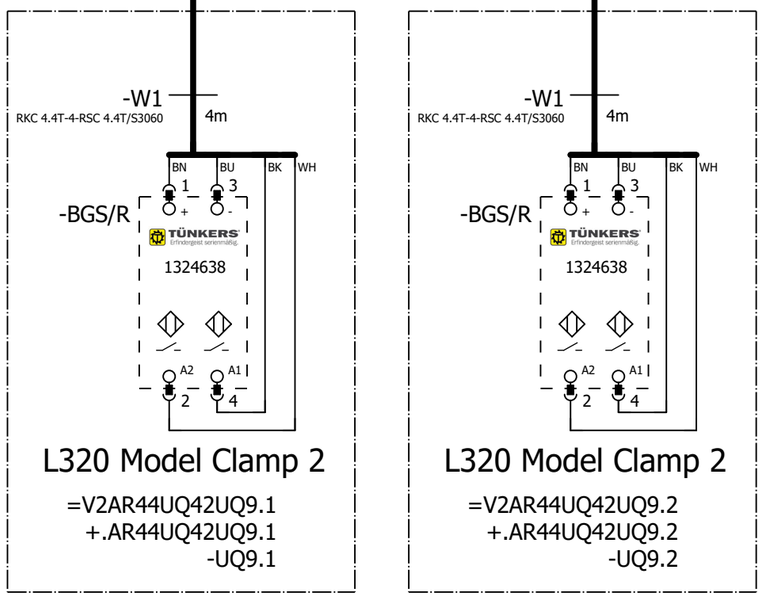

L320 Model Clamp 2
=V2AR44UQ42UQ9.1
+.AR44UQ42UQ9.1
-UQ9.1

L320 Model Clamp 2
=V2AR44UQ42UQ9.2
+.AR44UQ42UQ9.2
-UQ9.2

=V2AR44UQ42
-UQ9.1-BGS/R
L320 Model
Clamp 2

=V2AR44UQ42
-UQ9.2-BGS/R
L320 Model
Clamp 2

=V2AR44UQ42UQ8+.AR44UQ42UQ8/1

=V2AR44UQ42UQ10+.AR44UQ42UQ10/1

			Date	1/24/2023	Volvo Trucks North America	Valiant TMS	FESTO DQ CONNECTION QN9	Drawing name: =2V01&EFS-EL_KF1	= V2AR44UQ42UQ9
			Ed.	MKLEPADLO					+ V2AR44UQ42UQ9
			Appr		P6700 Framing - Cell 2V01, KF1			Document type: EFS	Project nr: 22-16152
Modification	Date	Name	Original		Replacement of / Replaced by	Scale 1:1			Page 1 / 1630

0	1	2	3	4	5	6	7	8	9

=V2AR44UQ42KF1
+.AR44UQ42

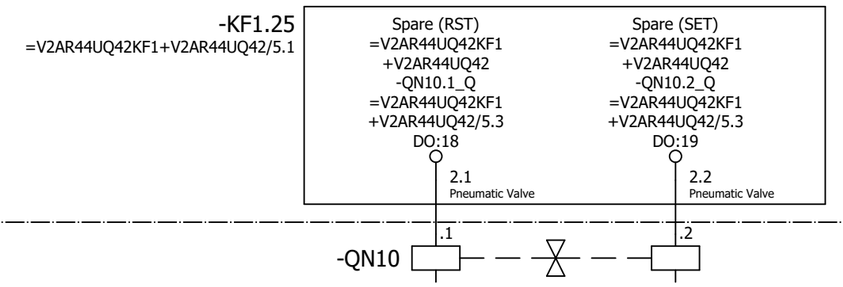

=V2AR44UQ42UQ9+.AR44UQ42UQ9/1

=V2AR44UQ43BG0+.AR44UQ43/1

			Date	1/24/2023	Volvo Trucks North America	Valiant TMS	FESTO DQ CONNECTION QN10	Drawing name: =2V01&EFS-EL_KF1	= V2AR44UQ42UQ10
			Ed.	MKLEPADLO					+ V2AR44UQ42UQ10
			Appr		P6700 Framing - Cell 2V01, KF1	Scale 1:1		Document type: EFS / Project nr: 22-16152	Page 1 / 1630
Modification	Date	Name	Original		Replacement of / Replaced by				

0	1	2	3	4	5	6	7	8	9

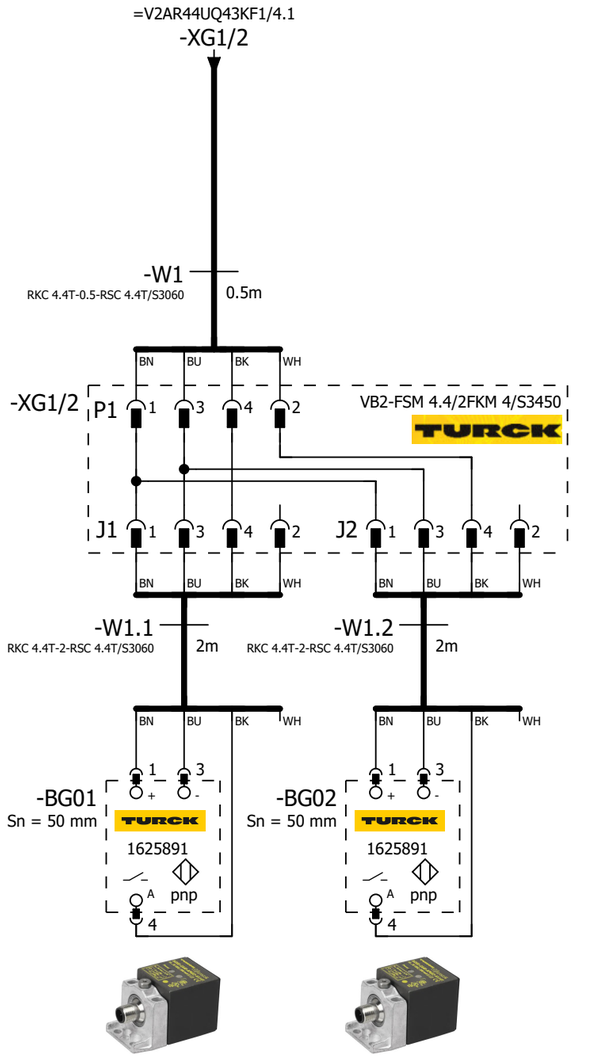

=V2AR44UQ43 -BG01 L230 Model Part Present	=V2AR44UQ43 -BG02 L230 Model Part Present

=V2AR44UQ42UQ10+.AR44UQ42UQ10/1

=V2AR44UQ43KF1/1

			Date	1/24/2023	Volvo Trucks North America		Valiant TMS	SENSORS	Drawing name: =2V01&EFS-EL_KF1	= V2AR44UQ43BG0
			Ed.	MKLEPADLO						+ V2AR44UQ43
			Appr		P6700 Framing - Cell 2V01, KF1				Document type: EFS	Project nr: 22-16152	Page 1
Modification	Date	Name	Original		Replacement of	Replaced by	Scale 1:1				1630

0	1	2	3	4	5	6	7	8	9

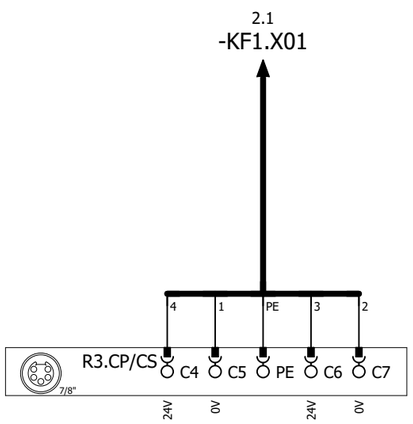

DC 24V (OUT)

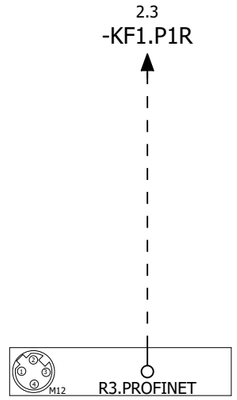

R3.ETHERNET

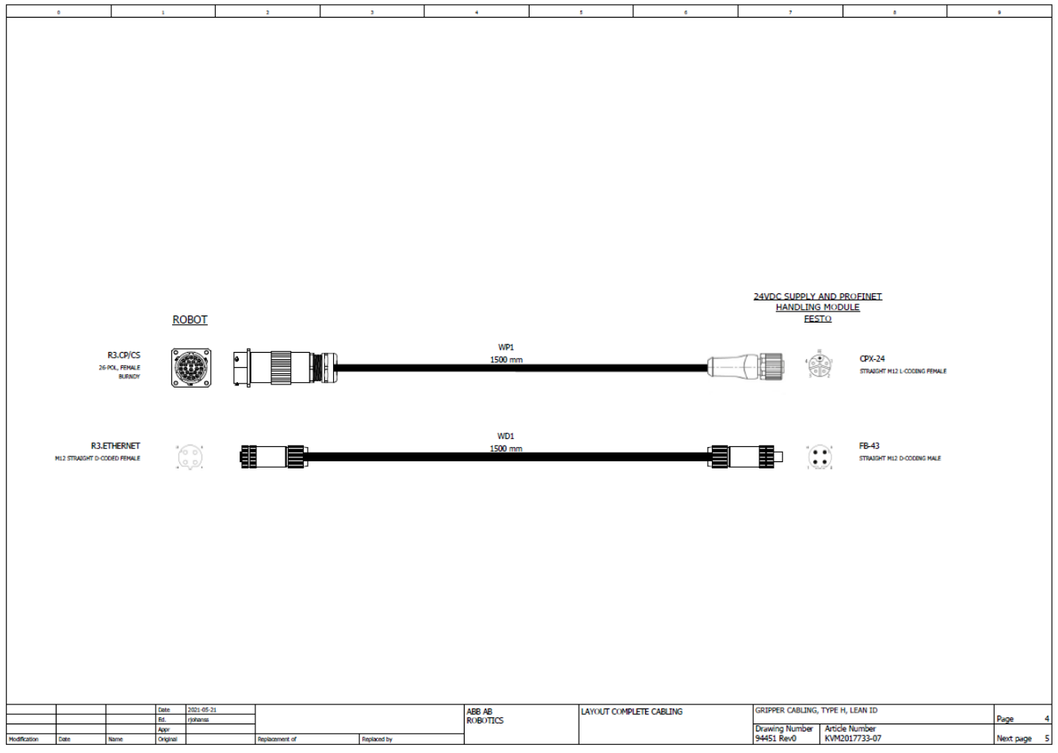

=V2AR44UQ43BG0/1

2

			Date	1/24/2023	Volvo Trucks North America		Valiant TMS	24VDC SUPPLY AND PROFINET HANDLING MODULE	Drawing name: =2V01&EFS-EL_KF1	= V2AR44UQ43KF1
			Ed.	MKLEPADLO						+ V2AR44UQ43
			Appr		P6700 Framing - Cell 2V01, KF1		Scale 1:1		Document type: EFS	Project nr: 22-16152
Modification	Date	Name	Original		Replacement of	Replaced by				Page 1 / 1630

0	1	2	3	4	5	6	7	8	9

1.3 / -KF1.X01

-W1
RSM RKM 56-2M/S3059
2m

1.5 / -KF1.P1R

-WF1
PROFINET Cable
6XV1840-3AH10

-KF1

X20 7/8" 1 2 PE 3 4 5
0V_VAL / OUT
0V_EL / SEN
FE
24V_EL / SEN
24V_VAL / OUT

ON
OFF
1 2 1 2

M12 -TP1
M12 -TP2

FESTO
Bus node + Interlinking block
548755 + 550208

DI:0	DI 0 X1:4	V2AR44UQ43UQ1.1-BGR	L230 Model Shot Pin (RESET)
DI:1	DI 1 X1:2	V2AR44UQ43UQ1.1-BGS	L230 Model Shot Pin (SET)
DI:2	DI 2 X2:4	V2AR44UQ43UQ2.1-BGR	L230 Model Clamp 1 (RESET)
DI:3	DI 3 X2:2	V2AR44UQ43UQ2.1-BGS	L230 Model Clamp 1 (SET)
DI:4	DI 4 X3:4	V2AR44UQ43UQ2.2-BGR	L230 Model Clamp 1 (RESET)
DI:5	DI 5 X3:2	V2AR44UQ43UQ2.2-BGS	L230 Model Clamp 1 (SET)
DI:6	DI 6 X4:4	V2AR44UQ43UQ2.3-BGR	L230 Model Clamp 1 (RESET)
DI:7	DI 7 X4:2	V2AR44UQ43UQ2.3-BGS	L230 Model Clamp 1 (SET)
DI:8	DI 8 X5:4	V2AR44UQ43UQ3.1-BGS	L230 Model Vacuums (SET)
DI:9	DI 9 X5:2	DI:9	Spare
DI:10	DI 10 X6:4	V2AR44UQ43UQ4.1-BGR	L230 Model Clamp 2 (RESET)
DI:11	DI 11 X6:2	V2AR44UQ43UQ4.1-BGS	L230 Model Clamp 2 (SET)
DI:12	DI 12 X7:4	V2AR44UQ43UQ4.2-BGR	L230 Model Clamp 2 (RESET)
DI:13	DI 13 X7:2	V2AR44UQ43UQ4.2-BGS	L230 Model Clamp 2 (SET)
DI:14	DI 14 X8:4	V2AR44UQ43UQ4.3-BGR	L230 Model Clamp 2 (RESET)
DI:15	DI 15 X8:2	V2AR44UQ43UQ4.3-BGS	L230 Model Clamp 2 (SET)

-KF1.11

FESTO
CPX-M-AB-8-M12X2-5POL
549335

X1 24V DI 1 0V DI 0 FE — BN WH BU BK
X2 24V DI 3 0V DI 2 FE — BN WH BU BK
X3 24V DI 5 0V DI 4 FE — BN WH BU BK
X4 24V DI 7 0V DI 6 FE — BN WH BU BK
X5 24V DI 9 0V DI 8 FE — BN WH BU BK
X6 24V DI 11 0V DI 10 FE — BN WH BU BK
X7 24V DI 13 0V DI 12 FE — BN WH BU BK
X8 24V DI 15 0V DI 14 FE — BN WH BU BK

+.AR44UQ43UQ1.1-W1
=V2AR44UQ43UQ1+.AR44UQ43UQ1/1.1

+.AR44UQ43UQ2.1-W1
=V2AR44UQ43UQ2+.AR44UQ43UQ2/1.1

+.AR44UQ43UQ2.2-W1
=V2AR44UQ43UQ2+.AR44UQ43UQ2/1.2

+.AR44UQ43UQ2.3-W1
=V2AR44UQ43UQ2+.AR44UQ43UQ2/1.4

+.AR44UQ43UQ3.1-W1
=V2AR44UQ43UQ3+.AR44UQ43UQ3/1.1

+.AR44UQ43UQ4.1-W1
=V2AR44UQ43UQ4+.AR44UQ43UQ4/1.1

+.AR44UQ43UQ4.2-W1
=V2AR44UQ43UQ4+.AR44UQ43UQ4/1.2

+.AR44UQ43UQ4.3-W1
=V2AR44UQ43UQ4+.AR44UQ43UQ4/1.4

1 3

			Date	1/24/2023	Volvo Trucks North America	Valiant TMS	CONNECTING MOD. FOR MPA MANIFOLD	Drawing name: =2V01&EFS-EL_KF1	= V2AR44UQ43KF1	
			Ed.	MKLEPADLO					+ V2AR44UQ43	
			Appr		P6700 Framing - Cell 2V01, KF1	Scale 1:1		Document type: EFS	Project nr: 22-16152	Page 2 / 1630
Modification	Date	Name	Original		Replacement of	Replaced by				

0	1	2	3	4	5	6	7	8	9

-KF1.12

FESTO

CPX-M-AB-8-M12X2-5POL

549335

DI:16	DI 0 X1:4	V2AR44UQ43UQ4.4-BGR	L230 Model Clamp 2 (RESET)
DI:17	DI 1 X1:2	V2AR44UQ43UQ4.4-BGS	L230 Model Clamp 2 (SET)
DI:18	DI 2 X2:4	V2AR44UQ43UQ4.5-BGR	L230 Model Clamp 2 (RESET)
DI:19	DI 3 X2:2	V2AR44UQ43UQ4.5-BGS	L230 Model Clamp 2 (SET)
DI:20	DI 4 X3:4	DI:20	Spare
DI:21	DI 5 X3:2	DI:21	Spare
DI:22	DI 6 X4:4	DI:22	Spare
DI:23	DI 7 X4:2	DI:23	Spare
DI:24	DI 8 X5:4	DI:24	Spare
DI:25	DI 9 X5:2	DI:25	Spare
DI:26	DI 10 X6:4	DI:26	Spare
DI:27	DI 11 X6:2	DI:27	Spare
DI:28	DI 12 X7:4	DI:28	Spare
DI:29	DI 13 X7:2	DI:29	Spare
DI:30	DI 14 X8:4	DI:30	Spare
DI:31	DI 15 X8:2	DI:31	Spare

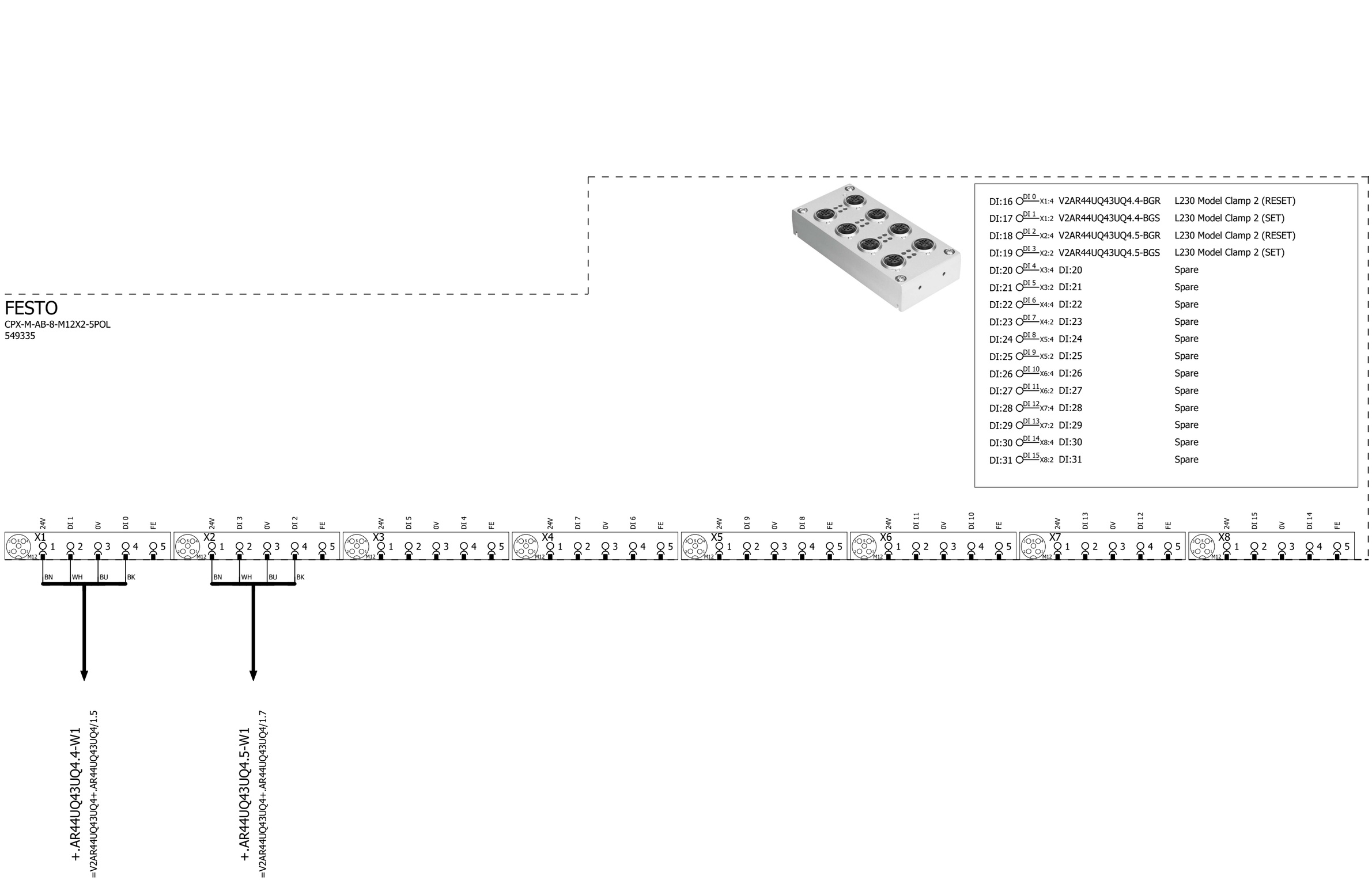

2 4

			Date	1/24/2023	Volvo Trucks North America	Valiant TMS	I/O MOD. DI16 (8 x M12) FOR MPA	Drawing name: =2V01&EFS-EL_KF1	= V2AR44UQ43KF1
			Ed.	MKLEPADLO					+ V2AR44UQ43
			Appr		P6700 Framing - Cell 2V01, KF1	Scale 1:1		Document type: EFS	Project nr: 22-16152
Modification	Date	Name	Original		Replacement of / Replaced by				Page 3 / 1630

0	1	2	3	4	5	6	7	8	9

-KF1.13

FESTO

CPX-M-AB-8-M12X2-5POL

549335

DI:32	DI 0 X1:4	V2AR44UQ43-B01	L230 Model Part Present
DI:33	DI 1 X1:2	V2AR44UQ43-B02	L230 Model Part Present
DI:34	DI 2 X2:4	DI:34	Spare
DI:35	DI 3 X2:2	DI:35	Spare
DI:36	DI 4 X3:4	DI:36	Spare
DI:37	DI 5 X3:2	DI:37	Spare
DI:38	DI 6 X4:4	DI:38	Spare
DI:39	DI 7 X4:2	DI:39	Spare
DI:40	DI 8 X5:4	DI:40	Spare
DI:41	DI 9 X5:2	DI:41	Spare
DI:42	DI 10 X6:4	DI:42	Spare
DI:43	DI 11 X6:2	DI:43	Spare
DI:44	DI 12 X7:4	DI:44	Spare
DI:45	DI 13 X7:2	DI:45	Spare
DI:46	DI 14 X8:4	DI:46	Spare
DI:47	DI 15 X8:2	DI:47	Spare

-XG1/2

=V2AR44UQ43BG0/1.1

3 5

			Date	1/24/2023	Volvo Trucks North America		Valiant TMS	I/O MOD. DI16 (8 x M12) FOR MPA	Drawing name: =2V01&EFS-EL_KF1	= V2AR44UQ43KF1
			Ed.	MKLEPADLO						+ V2AR44UQ43
			Appr		P6700 Framing - Cell 2V01, KF1				Document type: EFS	Project nr: 22-16152
Modification	Date	Name	Original		Replacement of	Replaced by	Scale 1:1			Page 4 / 1630

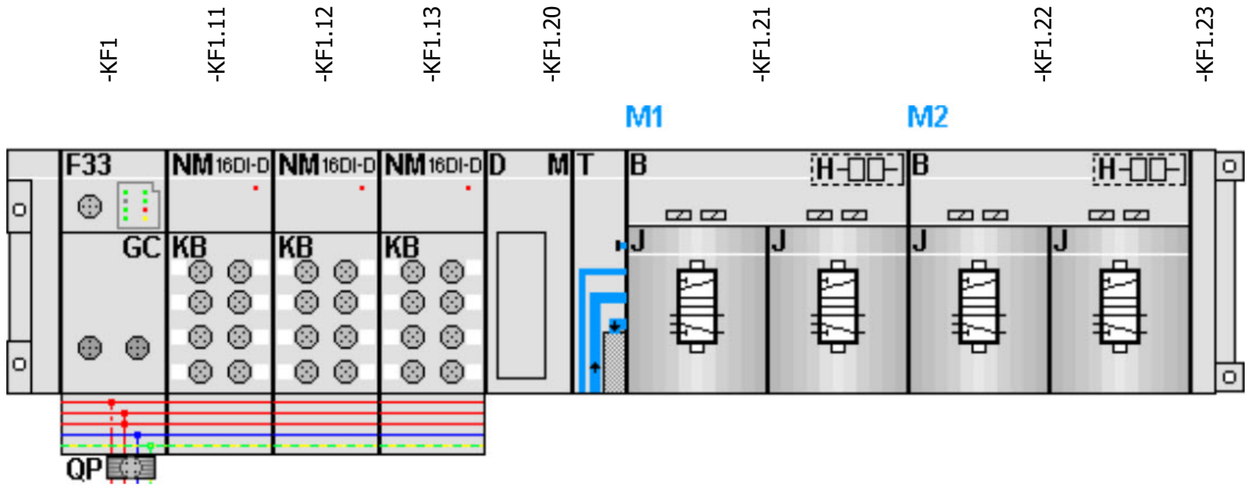

-KF1.21
=V2AR44UQ43UQ1+.AR44UQ43UQ1/1.3
=V2AR44UQ43UQ2+.AR44UQ43UQ2/1.3

FESTO

=V2AR44UQ43UQ1+.AR44UQ43UQ1/1.4	DO:0 DO 0 1.1	-QN1.1_Q	L230 Model Shot Pin (RST)
=V2AR44UQ43UQ1+.AR44UQ43UQ1/1.4	DO:1 DO 1 1.2	-QN1.2_Q	L230 Model Shot Pin (SET)
=V2AR44UQ43UQ2+.AR44UQ43UQ2/1.4	DO:2 DO 2 2.1	-QN2.1_Q	L230 Model Clamps 1 (RST)
=V2AR44UQ43UQ2+.AR44UQ43UQ2/1.4	DO:3 DO 3 2.2	-QN2.2_Q	L230 Model Clamps 1 (SET)

-KF1.22
=V2AR44UQ43UQ3+.AR44UQ43UQ3/1.3
=V2AR44UQ43UQ4+.AR44UQ43UQ4/1.3

FESTO

=V2AR44UQ43UQ3+.AR44UQ43UQ3/1.4	DO:4 DO 4 1.1	-QN3.1_Q	L230 Model Vacuums (RST)
=V2AR44UQ43UQ3+.AR44UQ43UQ3/1.4	DO:5 DO 5 1.2	-QN3.2_Q	L230 Model Vacuums (SET)
=V2AR44UQ43UQ4+.AR44UQ43UQ4/1.4	DO:6 DO 6 2.1	-QN4.1_Q	L230 Model Clamps 2 (RST)
=V2AR44UQ43UQ4+.AR44UQ43UQ4/1.4	DO:7 DO 7 2.2	-QN4.2_Q	L230 Model Clamps 2 (SET)

			Date	1/24/2023	Volvo Trucks North America	Valiant TMS	CONNECTING MOD. FOR FESTO DQ	Drawing name: =2V01&EFS-EL_KF1	= V2AR44UQ43KF1	
			Ed.	MKLEPADLO					+ V2AR44UQ43	
			Appr		P6700 Framing - Cell 2V01, KF1			Document type: EFS	Project nr: 22-16152	Page 5
Modification	Date	Name	Original		Replacement of / Replaced by	Scale 1:1				1630

0	1	2	3	4	5	6	7	8	9

=V2AR44UQ43KF1
+.AR44UQ43

-KF1.21
=V2AR44UQ43KF1+V2AR44UQ43/5.1

L230 Model Shot Pin (RST)
=V2AR44UQ43KF1
+V2AR44UQ43
-QN1.1_Q
=V2AR44UQ43KF1
+V2AR44UQ43/5.3
DO:0

L230 Model Shot Pin (SET)
=V2AR44UQ43KF1
+V2AR44UQ43
-QN1.2_Q
=V2AR44UQ43KF1
+V2AR44UQ43/5.3
DO:1

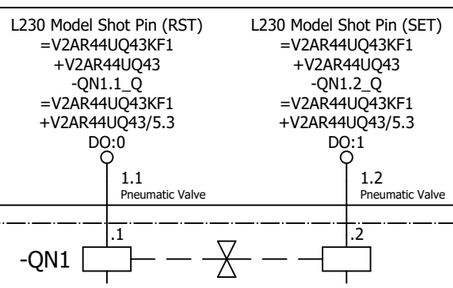

=V2AR44UQ43KF1+V2AR44UQ43/2.1
+.AR44UQ43UQ1.1-W1

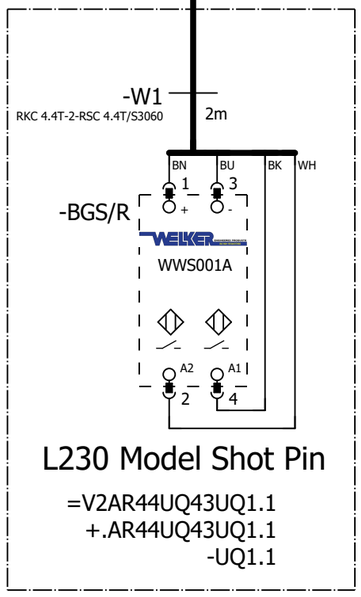

L230 Model Shot Pin

=V2AR44UQ43UQ1.1
+.AR44UQ43UQ1.1
-UQ1.1

=V2AR44UQ43 -UQ1.1-BGS/R L230 Model Shot Pin

=V2AR44UQ43KF1+V2AR44UQ43/5

=V2AR44UQ43UQ2+.AR44UQ43UQ2/1

			Date	1/24/2023	Volvo Trucks North America		Valiant TMS	FESTO DQ CONNECTION QN1	Drawing name: =2V01&EFS-EL_KF1	= V2AR44UQ43UQ1
			Ed.	MKLEPADLO						+ V2AR44UQ43UQ1
			Appr		P6700 Framing - Cell 2V01, KF1				Document type: EFS	Project nr: 22-16152
Modification	Date	Name	Original		Replacement of	Replaced by	Scale 1:1			Page 1 / 1630

0	1	2	3	4	5	6	7	8	9

=V2AR44UQ43KF1
+.AR44UQ43

-KF1.21
=V2AR44UQ43KF1+V2AR44UQ43/5.1

L230 Model Clamps 1 (RST)
=V2AR44UQ43KF1
+V2AR44UQ43
-QN2.1_Q
=V2AR44UQ43KF1
+V2AR44UQ43/5.3
DO:2

L230 Model Clamps 1 (SET)
=V2AR44UQ43KF1
+V2AR44UQ43
-QN2.2_Q
=V2AR44UQ43KF1
+V2AR44UQ43/5.3
DO:3

2.1 Pneumatic Valve
2.2 Pneumatic Valve

-QN2 .1 .2

=V2AR44UQ43KF1+V2AR44UQ43/2.2
+.AR44UQ43UQ2.1-W1

=V2AR44UQ43KF1+V2AR44UQ43/2.3
+.AR44UQ43UQ2.2-W1

=V2AR44UQ43KF1+V2AR44UQ43/2.4
+.AR44UQ43UQ2.3-W1

-W1 RKC 4.4T-1-RSC 4.4T/S3060 1m

-W1 RKC 4.4T-1-RSC 4.4T/S3060 1m

-W1 RKC 4.4T-2-RSC 4.4T/S3060 2m

-BGS/R
BN BU BK WH
1 3
+ -
TÜNKERS
1324638
A2 A1
2 4

-BGS/R
BN BU BK WH
1 3
+ -
TÜNKERS
1324638
A2 A1
2 4

-BGS/R
BN BU BK WH
1 3
+ -
TÜNKERS
1324638
A2 A1
2 4

L230 Model Clamp 1
=V2AR44UQ43UQ2.1
+.AR44UQ43UQ2.1
-UQ2.1

L230 Model Clamp 1
=V2AR44UQ43UQ2.2
+.AR44UQ43UQ2.2
-UQ2.2

L230 Model Clamp 1
=V2AR44UQ43UQ2.3
+.AR44UQ43UQ2.3
-UQ2.3

=V2AR44UQ43
-UQ2.1-BGS/R
L230 Model
Clamp 1

=V2AR44UQ43
-UQ2.2-BGS/R
L230 Model
Clamp 1

=V2AR44UQ43
-UQ2.3-BGS/R
L230 Model
Clamp 1

=V2AR44UQ43UQ1+.AR44UQ43UQ1/1

=V2AR44UQ43UQ3+.AR44UQ43UQ3/1

			Date	1/24/2023	Volvo Trucks North America		Valiant TMS	FESTO DQ CONNECTION QN2	Drawing name: =2V01&EFS-EL_KF1	= V2AR44UQ43UQ2
			Ed.	MKLEPADLO						+ V2AR44UQ43UQ2
			Appr		P6700 Framing - Cell 2V01, KF1				Document type: EFS	Project nr: 22-16152
Modification	Date	Name	Original		Replacement of	Replaced by	Scale 1:1			Page 1 / 1630

0	1	2	3	4	5	6	7	8	9

=V2AR44UQ43KF1
+.AR44UQ43

-KF1.22
=V2AR44UQ43KF1+V2AR44UQ43/5.1

L230 Model Vacuums (RST)	L230 Model Vacuums (SET)
=V2AR44UQ43KF1	=V2AR44UQ43KF1
+V2AR44UQ43	+V2AR44UQ43
-QN3.1_Q	-QN3.2_Q
=V2AR44UQ43KF1	=V2AR44UQ43KF1
+V2AR44UQ43/5.3	+V2AR44UQ43/5.3
DO:4	DO:5
1.1 Pneumatic Valve	1.2 Pneumatic Valve

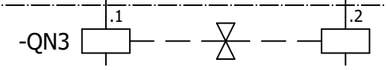

=V2AR44UQ43KF1+V2AR44UQ43/2.5
+.AR44UQ43UQ3.1-W1

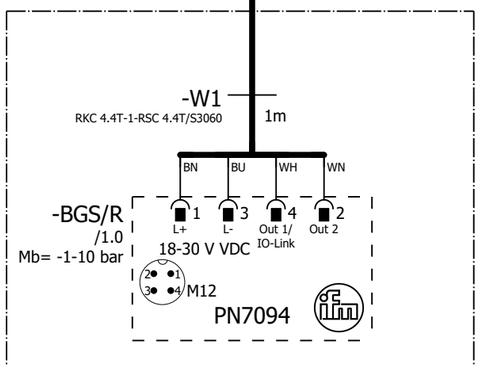

L230 Model Vacuums

=V2AR44UQ43UQ3.1
+.AR44UQ43UQ3.1
-UQ3.1

=V2AR44UQ43 -UQ3.1-BGS/R L230 Model Vacuums

=V2AR44UQ43UQ2+.AR44UQ43UQ2/1

=V2AR44UQ43UQ4+.AR44UQ43UQ4/1

			Date	1/24/2023	Volvo Trucks North America	Valiant TMS	FESTO DQ CONNECTION QN3	Drawing name: =2V01&EFS-EL_KF1	= V2AR44UQ43UQ3
			Ed.	MKLEPADLO					+ V2AR44UQ43UQ3
			Appr		P6700 Framing - Cell 2V01, KF1	Scale 1:1		Document type: EFS	Project nr: 22-16152
Modification	Date	Name	Original		Replacement of	Replaced by			Page 1 / 1630

0	1	2	3	4	5	6	7	8	9

=V2AR44UQ43KF1
+.AR44UQ43

-KF1.22
=V2AR44UQ43KF1+V2AR44UQ43/5.1

L230 Model Clamps 2 (RST)
=V2AR44UQ43KF1
+V2AR44UQ43
-QN4.1_Q
=V2AR44UQ43KF1
+V2AR44UQ43/5.3
DO:6

L230 Model Clamps 2 (SET)
=V2AR44UQ43KF1
+V2AR44UQ43
-QN4.2_Q
=V2AR44UQ43KF1
+V2AR44UQ43/5.3
DO:7

2.1 Pneumatic Valve
2.2 Pneumatic Valve

-QN4 .1 .2

=V2AR44UQ43KF1+V2AR44UQ43/2.6
+.AR44UQ43UQ4.1-W1

=V2AR44UQ43KF1+V2AR44UQ43/2.8
+.AR44UQ43UQ4.2-W1

=V2AR44UQ43KF1+V2AR44UQ43/2.9
+.AR44UQ43UQ4.3-W1

=V2AR44UQ43KF1+V2AR44UQ43/3.1
+.AR44UQ43UQ4.4-W1

=V2AR44UQ43KF1+V2AR44UQ43/3.2
+.AR44UQ43UQ4.5-W1

-W1 RKC 4.4T-3-RSC 4.4T/S3060 3m
-W1 RKC 4.4T-1-RSC 4.4T/S3060 1m
-W1 RKC 4.4T-2-RSC 4.4T/S3060 2m
-W1 RKC 4.4T-2-RSC 4.4T/S3060 2m
-W1 RKC 4.4T-3-RSC 4.4T/S3060 3m

-BGS/R
BN BU BK WH
1 3
TÜNKERS
1324638
A2 A1
2 4

L230 Model Clamp 2
=V2AR44UQ43UQ4.1
+.AR44UQ43UQ4.1
-UQ4.1

L230 Model Clamp 2
=V2AR44UQ43UQ4.2
+.AR44UQ43UQ4.2
-UQ4.2

L230 Model Clamp 2
=V2AR44UQ43UQ4.3
+.AR44UQ43UQ4.3
-UQ4.3

L230 Model Clamp 2
=V2AR44UQ43UQ4.4
+.AR44UQ43UQ4.4
-UQ4.4

L230 Model Clamp 2
=V2AR44UQ43UQ4.5
+.AR44UQ43UQ4.5
-UQ4.5

=V2AR44UQ43
-UQ4.1-BGS/R
L230 Model
Clamp 2

=V2AR44UQ43
-UQ4.2-BGS/R
L230 Model
Clamp 2

=V2AR44UQ43
-UQ4.3-BGS/R
L230 Model
Clamp 2

=V2AR44UQ43
-UQ4.4-BGS/R
L230 Model
Clamp 2

=V2AR44UQ43
-UQ4.5-BGS/R
L230 Model
Clamp 2

=V2AR44UQ43UQ3+.AR44UQ43UQ3/1

=V2AR44WC1+.AR44UC01/1

			Date	1/24/2023	Volvo Trucks North America	Valiant TMS	FESTO DQ CONNECTION QN4	Drawing name: =2V01&EFS-EL_KF1	= V2AR44UQ43UQ4
			Ed.	MKLEPADLO					+ V2AR44UQ43UQ4
			Appr		P6700 Framing - Cell 2V01, KF1			Document type: EFS	Project nr: 22-16152
Modification	Date	Name	Original		Replacement of / Replaced by	Scale 1:1			Page 1 / 1630

0	1	2	3	4	5	6	7	8	9

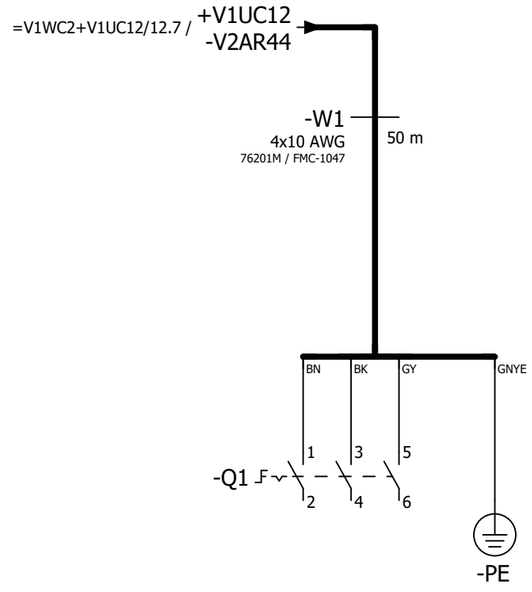

=V2AR44UQ43UQ4+.AR44UQ43UQ4/1

=V2AR44XQ11WC1+.AR44XQ11UC01/1

			Date	1/24/2023	Volvo Trucks North America		Valiant TMS	Incoming power	Drawing name: =2V01&EFS-EL_KF1	= V2AR44WC1
			Ed.	MKLEPADLO						+ V2AR44UC01
			Appr		P6700 Framing - Cell 2V01, KF1				Document type: EFS	Project nr: 22-16152
Modification	Date	Name	Original		Replacement of	Replaced by	Scale 1:1			Page 1 / 1630

0	1	2	3	4	5	6	7	8	9

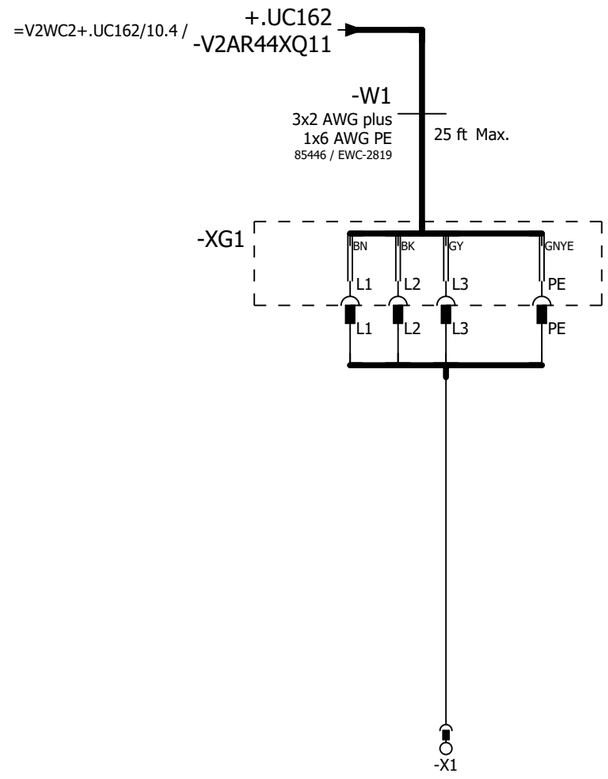

=V2AR44WC1+.AR44UC01/1

=V2FQ1+.FQ1/1

			Date	1/24/2023	Volvo Trucks North America		Valiant TMS	Incoming power	Drawing name: =2V01&EFS-EL_KF1	= V2AR44XQ11WC1
			Ed.	MKLEPADLO						+ V2AR44XQ11UC01
			Appr		P6700 Framing - Cell 2V01, KF1		Scale 1:1		Document type: EFS / Project nr: 22-16152	Page 1 / 1630
Modification	Date	Name	Original		Replacement of	Replaced by				

=V1KF1+V1UC11

=V1WC4+V1UC11/21.5
-W1.1

=V1KF1+V1UC11/2.6
-KF100.11-P16

-KF100.11-P16
PROFINET Cable
6XV1840-3AH10

-W3
RSM RKM 56-3M/S3059
3m

2.3
-BG4

2.6
-KF100.11-P16

+.FQ1BG3

-BG3
24 V
MGB-L2B-PNA-R-121859
MGB-L2B-PNA-R-121859

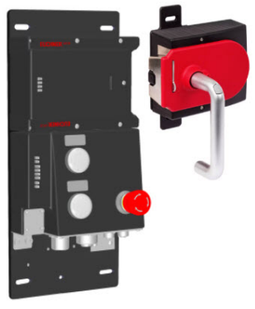

-X1 WH RD GNYE OG BK
7/8" MINI 1 2 3 4 5

-X2 WH RD GNYE OG BK
7/8" MINI 1 2 3 4 5

MGB
0V 0V FE 24V 24V
N2 N1 Earth L1 L2

EUCHNER

-X3
Profinet/ Ethernet

-X4
Profinet/ Ethernet

=V2AR44XQ11WC1+.AR44XQ11UC01/1

2

			Date	1/24/2023	Volvo Trucks North America	Valiant TMS	Door lock sensor -BG3	Drawing name: =2V01&EFS-EL_KF1	= V2FQ1
			Ed.	MKLEPADLO					+ V2FQ1
			Appr		P6700 Framing - Cell 2V01, KF1	Scale 1:1		Document type: EFS	Project nr: 22-16152
Modification	Date	Name	Original		Replacement of	Replaced by			Page 1 / 1630

0	1	2	3	4	5	6	7	8	9

=V1KF1+V1UC11

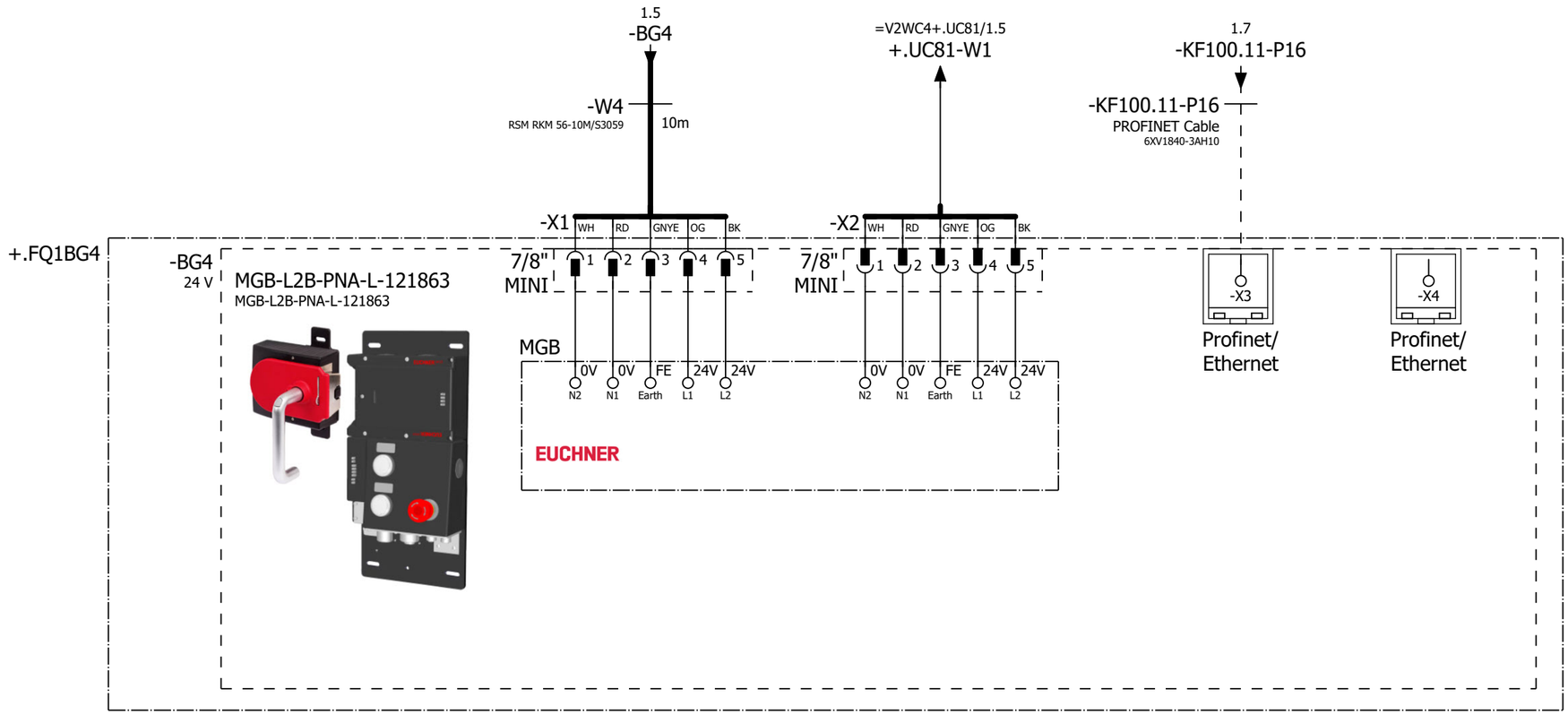

1 3

			Date	1/24/2023	Volvo Trucks North America	Valiant TMS	Door lock sensor -BG4	Drawing name: =2V01&EFS-EL_KF1	= V2FQ1
			Ed.	MKLEPADLO					+ V2FQ1
			Appr		P6700 Framing - Cell 2V01, KF1	Scale 1:1		Document type: EFS	Project nr: 22-16152
Modification	Date	Name	Original		Replacement of	Replaced by			Page 2 / 1630

=V2KF1+V2UC14

=V2WC4+.UC14/23.5
+.FQ1-BG5

=V2KF1+.UC14/2.6
-KF100.14-P16

-KF100.14-P16
PROFINET Cable
6XV1840-3AH10

=V2WC4+.UC32/1.1
+V2UC32-W1

=V2KF1+.UC32/1.4
-KF100.14-P16

-W5
RSM RKM 56-15M/S3059
15m

+.FQ1BG5

-BG5
24 V
MGB-L2B-PNA-R-121859
MGB-L2B-PNA-R-121859

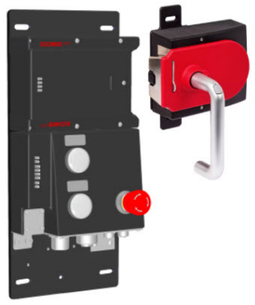

-X1 WH RD GNYE OG BK
7/8" MINI 1 2 3 4 5

-X2 WH RD GNYE OG BK
7/8" MINI 1 2 3 4 5

MGB
0V 0V FE 24V 24V
N2 N1 Earth L1 L2

EUCHNER

-X3
Profinet/
Ethernet

-X4
Profinet/
Ethernet

2 4

			Date	1/24/2023	Volvo Trucks North America	Valiant TMS	Door lock sensor -BG5	Drawing name: =2V01&EFS-EL_KF1	= V2FQ1	
			Ed.	MKLEPADLO					+ V2FQ1	
			Appr		P6700 Framing - Cell 2V01, KF1			Document type: EFS	Project nr: 22-16152	Page 3
Modification	Date	Name	Original		Replacement of	Replaced by	Scale 1:1			1630

=V1KF1+V1UC12

=V1WC4+V1UC12/21.5
+.FQ1-BG8

=V1KF1+V1UC12/2.6
-KF100.12-P16

-KF100.12-P16
PROFINET Cable
6XV1840-3AH10

5.3
-BG9

5.6
-KF100.12-P16

-W8
RSM RKM 56-15M/S3059
15m

+.FQ1BG8

-BG8
24 V
MGB-L2B-PNA-R-121859
MGB-L2B-PNA-R-121859

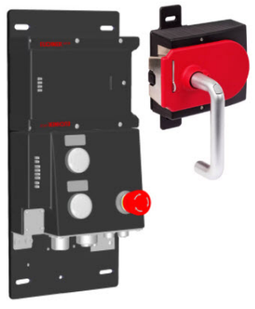

-X1 WH RD GNYE OG BK
7/8" MINI 1 2 3 4 5

-X2 WH RD GNYE OG BK
7/8" MINI 1 2 3 4 5

MGB
0V 0V FE 24V 24V
N2 N1 Earth L1 L2

EUCHNER

-X3
Profinet/
Ethernet

-X4
Profinet/
Ethernet

3 5

			Date	1/24/2023	Volvo Trucks North America	Valiant TMS	Door lock sensor -BG8	Drawing name: =2V01&EFS-EL_KF1	= V2FQ1
			Ed.	MKLEPADLO					+ V2FQ1
			Appr		P6700 Framing - Cell 2V01, KF1	Scale 1:1		Document type: EFS	Project nr: 22-16152
Modification	Date	Name	Original		Replacement of	Replaced by			Page 4 / 1630

=V1KF1+V1UC12

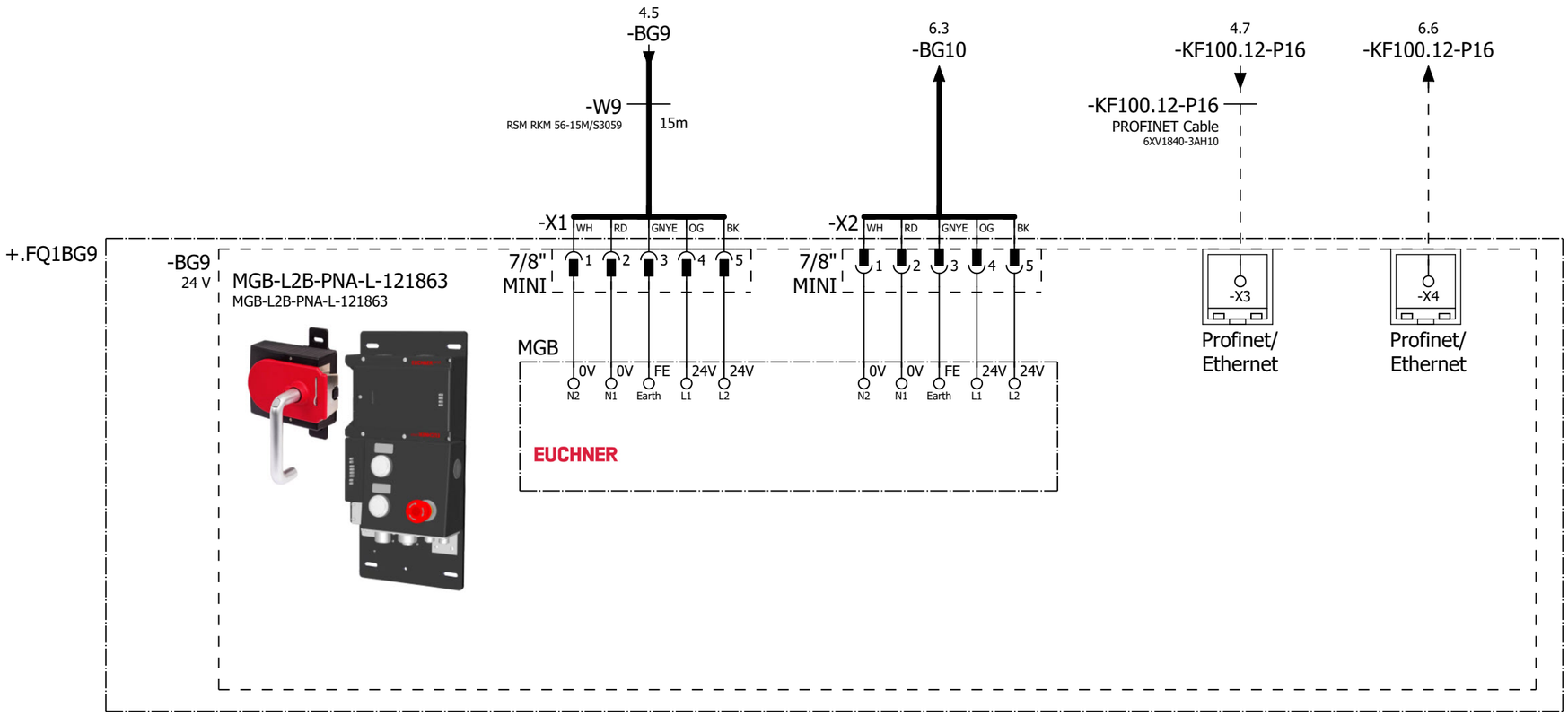

4 6

			Date	1/24/2023	Volvo Trucks North America	Valiant TMS	Door lock sensor -BG9	Drawing name: =2V01&EFS-EL_KF1	= V2FQ1	
			Ed.	MKLEPADLO					+ V2FQ1	
			Appr		P6700 Framing - Cell 2V01, KF1	Scale 1:1		Document type: EFS	Project nr: 22-16152	Page 5 / 1630
Modification	Date	Name	Original		Replacement of	Replaced by				

0	1	2	3	4	5	6	7	8	9

=V1KF1+V1UC12

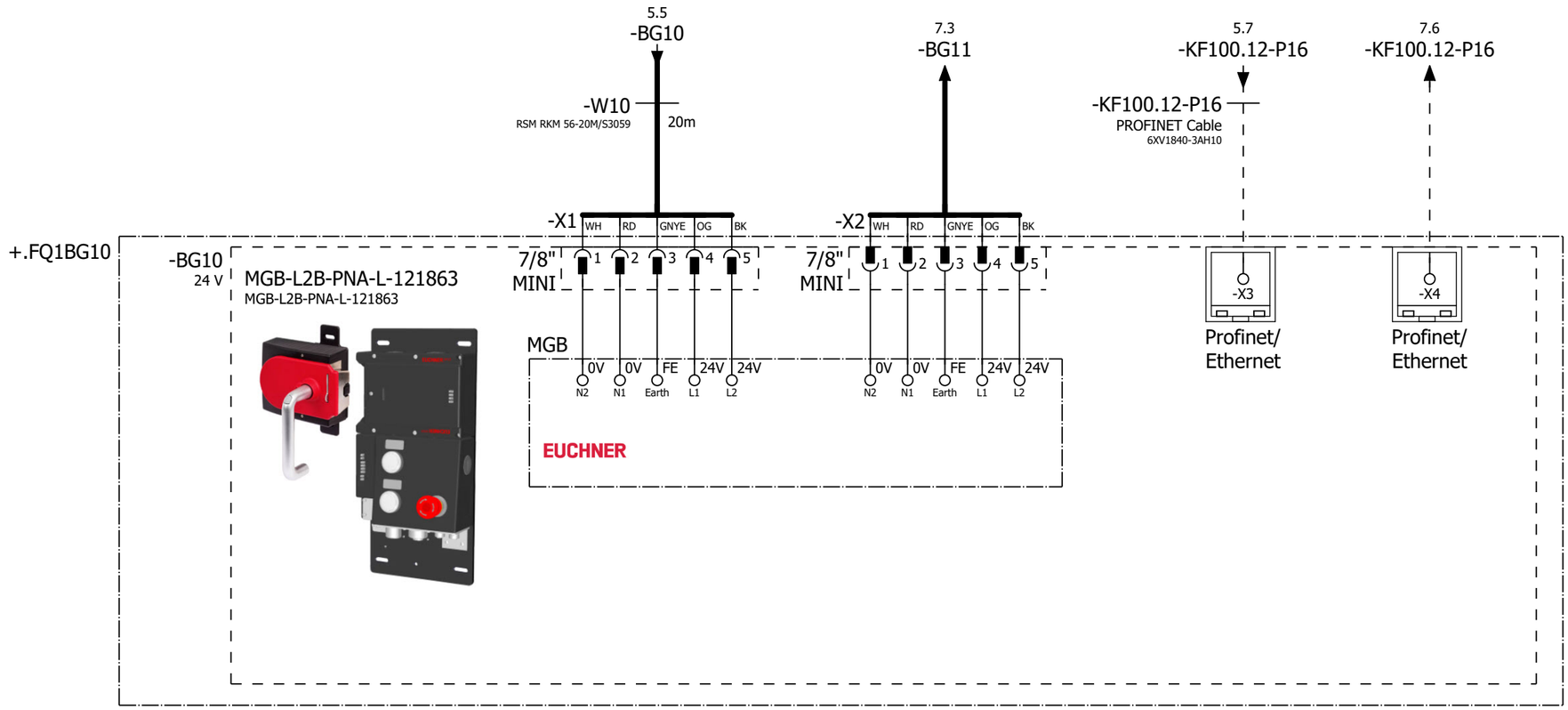

5 7

			Date	1/24/2023	Volvo Trucks North America	Valiant TMS	Door lock sensor -BG10	Drawing name: =2V01&EFS-EL_KF1	= V2FQ1
			Ed.	MKLEPADLO					+ V2FQ1
			Appr		P6700 Framing - Cell 2V01, KF1	Scale 1:1		Document type: EFS	Project nr: 22-16152
Modification	Date	Name	Original		Replacement of	Replaced by			Page 6 / 1630

0	1	2	3	4	5	6	7	8	9

=V1KF1+V1UC12

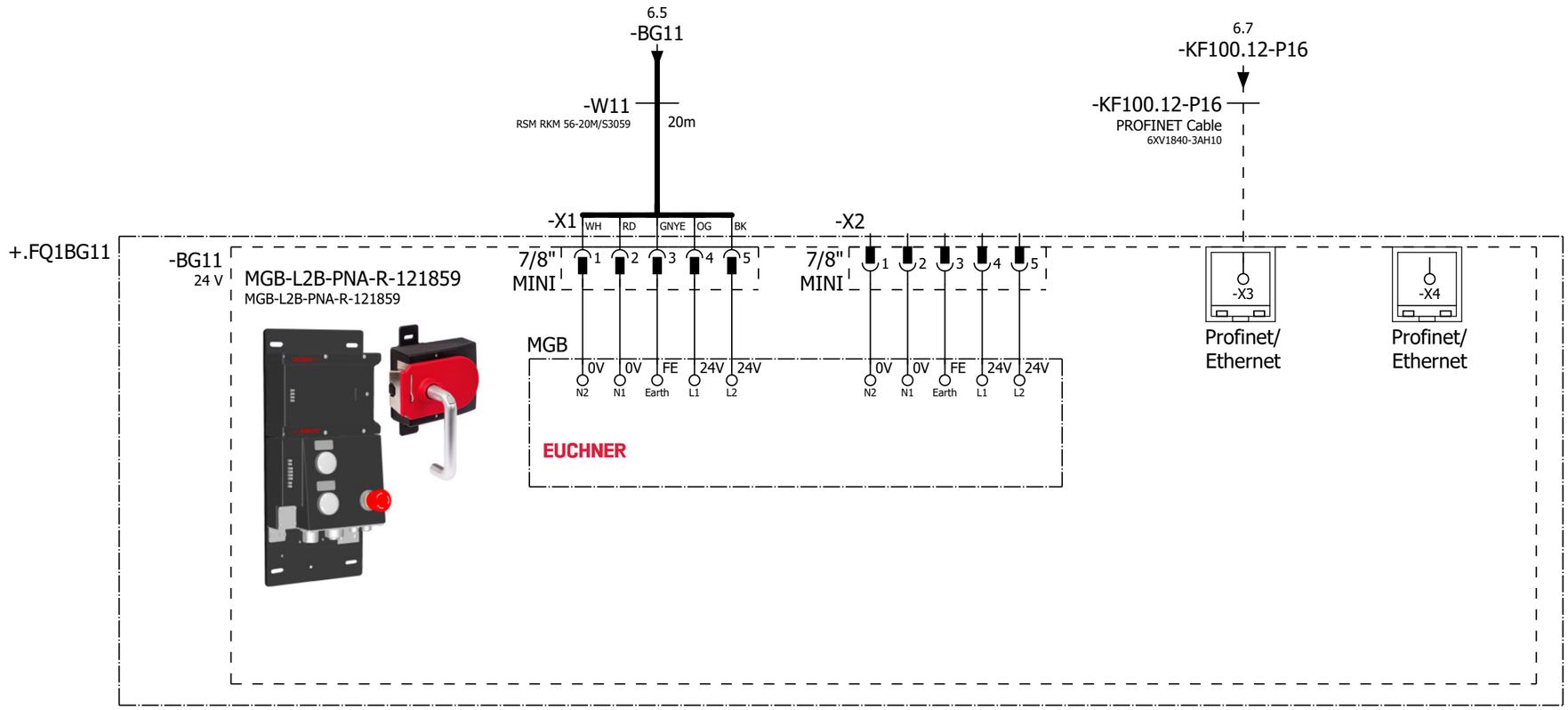

6 8

			Date	1/24/2023	Volvo Trucks North America	Valiant TMS	Door lock sensor -BG11	Drawing name: =2V01&EFS-EL_KF1	= V2FQ1	
			Ed.	MKLEPADLO					+ V2FQ1	
			Appr		P6700 Framing - Cell 2V01, KF1	Scale 1:1		Document type: EFS	Project nr: 22-16152	Page 7 / 1630
Modification	Date	Name	Original		Replacement of	Replaced by				

=V2KF1+V2UC15

=V2WC4+.UC15/23.5
+.FQ1-BG12

=V2KF1+.UC15/2.6
-KF100.15-P16

-KF100.15-P16
PROFINET Cable
6XV1840-3AH10

-W12
RSM RKM 56-20M/S3059
20m

+.FQ1BG12

-BG12
24 V

MGB-L2B-PNA-R-121859
MGB-L2B-PNA-R-121859

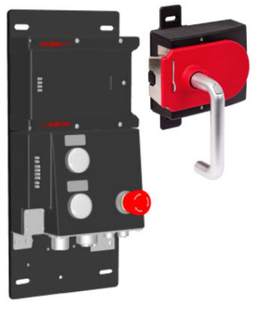

-X1 WH RD GNYE OG BK

7/8" MINI 1 2 3 4 5

-X2

7/8" MINI 1 2 3 4 5

MGB

0V 0V FE 24V 24V
N2 N1 Earth L1 L2

0V 0V FE 24V 24V
N2 N1 Earth L1 L2

EUCHNER

-X3
Profinet/
Ethernet

-X4
Profinet/
Ethernet

7

10

			Date	1/24/2023	Volvo Trucks North America	Valiant TMS	Door lock sensor -BG12	Drawing name: =2V01&EFS-EL_KF1	= V2FQ1
			Ed.	MKLEPADLO					+ V2FQ1
			Appr		P6700 Framing - Cell 2V01, KF1	Scale 1:1		Document type: EFS	Project nr: 22-16152
Modification	Date	Name	Original		Replacement of	Replaced by			Page 8 / 1630

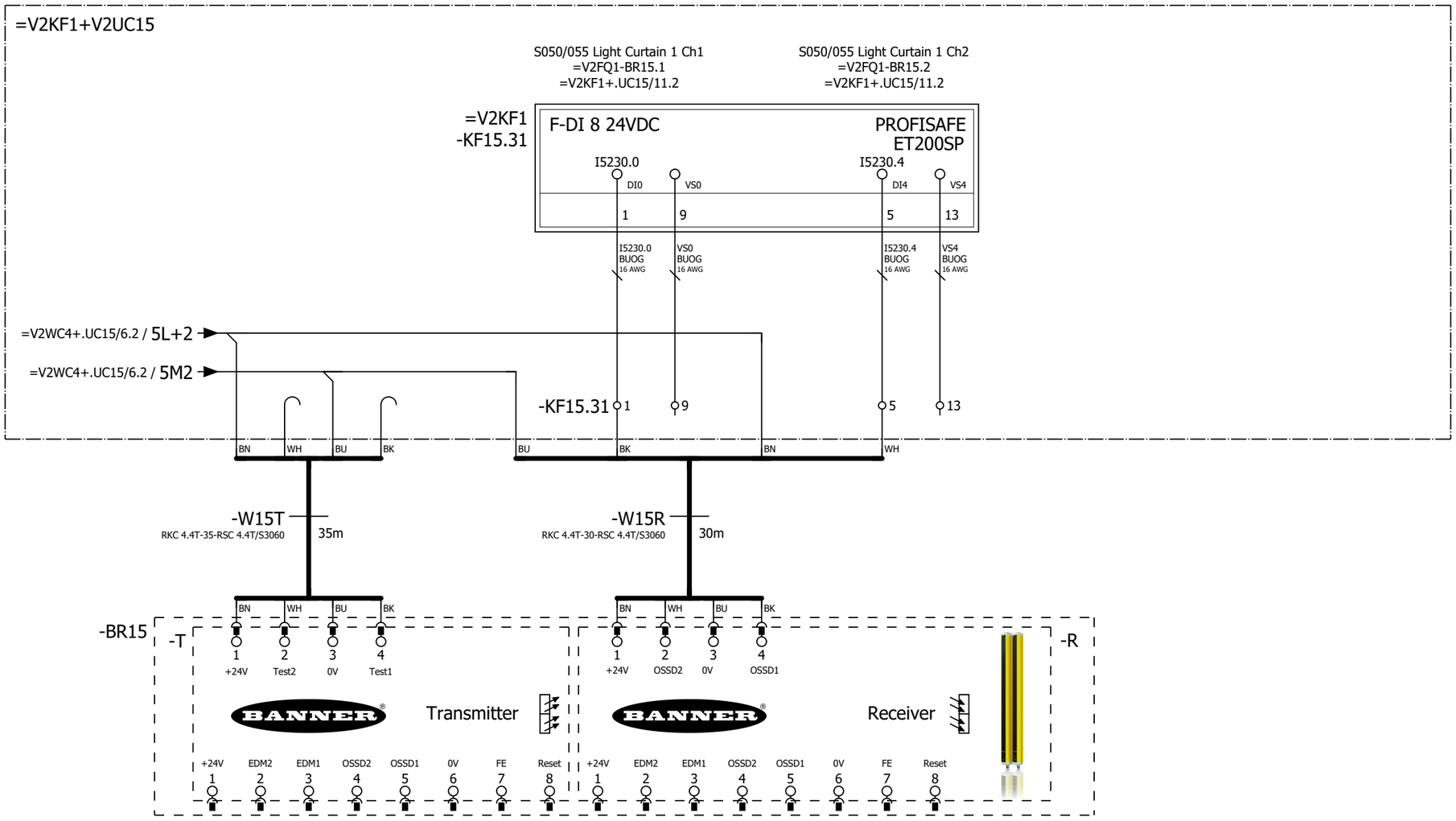

8

+.UC14/1

			Date	1/24/2023	Volvo Trucks North America	Valiant TMS	S050/055 Light Curtain 1	Drawing name: =2V01&EFS-EL_KF1	= V2FQ1	
			Ed.	MKLEPADLO					+ V2FQ1	
			Appr		P6700 Framing - Cell 2V01, KF1	Scale 1:1		Document type: EFS	Project nr: 22-16152	Page 10 / 1630
Modification	Date	Name	Original		Replacement of	Replaced by				

Switched Power 1 11.1L+
-KF14.51
=V2KF1/13.2

=V2KF1
-KF14.41

F 4DO 24 DC PROFISAFE
ET200SP

Q5212.0 QX.0
DQ-P0 DQ-M0
1 9

Q5212.0
BU
16 AWG

QX.0
BU
16 AWG

=V2KF1/15.2
Switched Power 1 11.1L+P

=V2KF1/15.2
SPARE

=V2KF1/15.2
Switched Power 1 11.1L+M

=V2KF1/15.2
SPARE

=V2KF1
-KF14.51
=V2KF1/15.1

F-RQ 1x24VDC/24..230VAC/5A PROFISAFE
ET200SP

9 IN P
10 OUT P
11 IN M
12 OUT M

Monitoring Safety contactors 11.1L+
-KF14.51RQ
=V2KF1/9.2

=V2KF1
-KF14.12

DI ET200SP
I202.0
DI0
1

=V2WC4/12.2 / -11.1L+1_2

+.FQ1/10

2

			Date	1/24/2023	Volvo Trucks North America	Valiant TMS	Safety power monitoring RQ - KF14.51	Drawing name: =2V01&EFS-EL_KF1	= V2FQ1	
			Ed.	MKLEPADLO					+ V2UC14	
			Appr		P6700 Framing - Cell 2V01, KF1	Scale 1:1		Document type: EFS	Project nr: 22-16152	Page 1 / 1630
Modification	Date	Name	Original		Replacement of / Replaced by					

Switched Power 2 12.1L+
-KF14.52
=V2KF1/13.2

=V2KF1
-KF14.41

F 4DO 24 DC PROFISAFE
ET200SP

Q5212.1 QX.1

DQ-P1 DQ-M1

2 10

Q5212.1
BU
16 AWG

QX.1
BU
16 AWG

=V2KF1/16.2
Switched Power 2 12.1L+P

=V2KF1/16.2
SPARE

=V2KF1/16.2
Switched Power 2 12.1L+M

=V2KF1/16.2
SPARE

=V2KF1
-KF14.52
=V2KF1/16.1

F-RQ 1x24VDC/24..230VAC/5A PROFISAFE
ET200SP

9 IN P | 10 OUT P | 11 IN M | 12 OUT M

Monitoring Safety contactors 12.1L+
-KF14.52RQ
=V2KF1/9.2

=V2KF1
-KF14.12

DI ET200SP

I202.1
DI1

2

=V2WC4/13.2 / -12.1L+1_2

			Date	1/24/2023	Volvo Trucks North America		Valiant TMS	Safety power monitoring RQ - KF14.52	Drawing name: =2V01&EFS-EL_KF1	= V2FQ1
			Ed.	MKLEPADLO						+ V2UC14
			Appr		P6700 Framing - Cell 2V01, KF1		Scale 1:1		Document type: EFS / Project nr: 22-16152	Page 2 / 1630
Modification	Date	Name	Original		Replacement of	Replaced by				

Switched Power 3 13.1L+
-KF14.53
=V2KF1/13.2

=V2KF1/17.2
Switched Power 3 13.1L+P

=V2KF1/17.2
SPARE

=V2KF1/17.2
Switched Power 3 13.1L+M

=V2KF1/17.2
SPARE

Monitoring Safety contactors 13.1L+
-KF14.53RQ
=V2KF1/9.2

=V2KF1
-KF14.41

F 4DO 24 DC PROFISAFE
ET200SP

Q5212.2 QX.2

DQ-P2 DQ-M2

3 11

=V2KF1
-KF14.53
=V2KF1/17.1

F-RQ 1x24VDC/24..230VAC/5A PROFISAFE
ET200SP

9 IN P | 10 OUT P | 11 IN M | 12 OUT M

Q5212.2
BU
16 AWG

QX.2
BU
16 AWG

=V2KF1
-KF14.12

DI ET200SP

I202.2

DI2

3

=V2WC4/14.2 / -13.1L+1_2

			Date	1/24/2023	Volvo Trucks North America	Valiant TMS	Safety power monitoring RQ - KF14.53	Drawing name: =2V01&EFS-EL_KF1	= V2FQ1	
			Ed.	MKLEPADLO					+ V2UC14	
			Appr		P6700 Framing - Cell 2V01, KF1	Scale 1:1		Document type: EFS	Project nr: 22-16152	Page 3 / 1630
Modification	Date	Name	Original		Replacement of / Replaced by					

Switched Power 4 14.1L+
-KF14.54
=V2KF1/13.2

=V2KF1/18.2
Switched Power 4 14.1L+P

=V2KF1/18.2
SPARE

=V2KF1/18.2
Switched Power 4 14.1L+M

=V2KF1/18.2
SPARE

Monitoring Safety contactors 14.1L+
-KF14.54RQ
=V2KF1/9.2

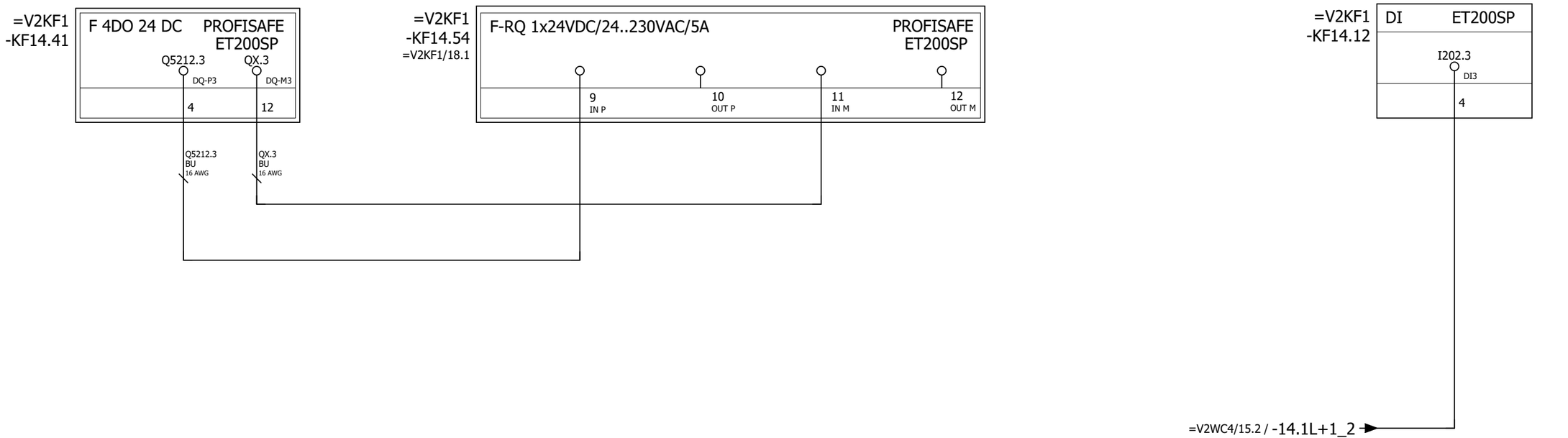

			Date	1/24/2023	Volvo Trucks North America	Valiant TMS	Safety power monitoring RQ - KF14.54	Drawing name: =2V01&EFS-EL_KF1	= V2FQ1	
			Ed.	MKLEPADLO					+ V2UC14	
			Appr		P6700 Framing - Cell 2V01, KF1	Scale 1:1		Document type: EFS	Project nr: 22-16152	Page 4 / 1630
Modification	Date	Name	Original		Replacement of / Replaced by					

Switched Power 1 11.1L+
-KF15.51
=V2KF1/13.2

=V2KF1
-KF15.41

F 4DO 24 DC PROFISAFE
ET200SP

Q5242.0 QX.0
DQ-P0 DQ-M0
1 9

Q5242.0
BU
16 AWG

QX.0
BU
16 AWG

=V2KF1/15.2 =V2KF1/15.2 =V2KF1/15.2 =V2KF1/15.2
Switched Power 1 11.1L+P SPARE Switched Power 1 11.1L+M SPARE

=V2KF1
-KF15.51
=V2KF1/15.1

F-RQ 1x24VDC/24..230VAC/5A PROFISAFE
ET200SP

9 IN P
10 OUT P
11 IN M
12 OUT M

Monitoring Safety contactors 11.1L+
-KF15.51RQ
=V2KF1/9.2

=V2KF1
-KF15.12

DI ET200SP
I232.0
DI0
1

=V2WC4/12.2 / -11.1L+1_2

+.UC14/4

2

			Date	1/24/2023	Volvo Trucks North America	Valiant TMS	Safety power monitoring RQ - KF15.51	Drawing name: =2V01&EFS-EL_KF1	= V2FQ1	
			Ed.	MKLEPADLO					+ V2UC15	
			Appr		P6700 Framing - Cell 2V01, KF1	Scale 1:1		Document type: EFS	Project nr: 22-16152	Page 1 / 1630
Modification	Date	Name	Original		Replacement of	Replaced by				

Switched Power 2 12.1L+
-KF15.52
=V2KF1/13.2

=V2KF1
-KF15.41

F 4DO 24 DC PROFISAFE
ET200SP

Q5242.1 QX.1

DQ-P1 DQ-M1

2 10

Q5242.1
BU
16 AWG

QX.1
BU
16 AWG

=V2KF1/16.2
Switched Power 2 12.1L+P

=V2KF1/16.2
SPARE

=V2KF1/16.2
Switched Power 2 12.1L+M

=V2KF1/16.2
SPARE

=V2KF1
-KF15.52
=V2KF1/16.1

F-RQ 1x24VDC/24..230VAC/5A PROFISAFE
ET200SP

9 IN P
10 OUT P
11 IN M
12 OUT M

Monitoring Safety contactors 12.1L+
-KF15.52RQ
=V2KF1/9.2

=V2KF1
-KF15.12

DI ET200SP

I232.1
DI1

2

=V2WC4/13.2 / -12.1L+1_2

1 3

			Date	1/24/2023	Volvo Trucks North America	Valiant TMS	Safety power monitoring RQ - KF15.52	Drawing name: =2V01&EFS-EL_KF1	= V2FQ1	
			Ed.	MKLEPADLO					+ V2UC15	
			Appr		P6700 Framing - Cell 2V01, KF1			Document type: EFS	Project nr: 22-16152	Page 2
Modification	Date	Name	Original		Replacement of / Replaced by	Scale 1:1				1630

Switched Power 3 13.1L+
-KF15.53
=V2KF1/13.2

=V2KF1/17.2
Switched Power 3 13.1L+P

=V2KF1/17.2
SPARE

=V2KF1/17.2
Switched Power 3 13.1L+M

=V2KF1/17.2
SPARE

Monitoring Safety contactors 13.1L+
-KF15.53RQ
=V2KF1/9.2

=V2KF1
-KF15.41

F 4DO 24 DC PROFISAFE
ET200SP

Q5242.2 QX.2

DQ-P2 DQ-M2

3 11

=V2KF1
-KF15.53
=V2KF1/17.1

F-RQ 1x24VDC/24..230VAC/5A PROFISAFE
ET200SP

9 IN P | 10 OUT P | 11 IN M | 12 OUT M

Q5242.2
BU
16 AWG

QX.2
BU
16 AWG

=V2KF1
-KF15.12

DI ET200SP

I232.2
DI2

3

=V2WC4/14.2 / -13.1L+1_2

2 4

			Date	1/24/2023	Volvo Trucks North America	Valiant TMS	Safety power monitoring RQ - KF15.53	Drawing name: =2V01&EFS-EL_KF1	= V2FQ1	
			Ed.	MKLEPADLO					+ V2UC15	
			Appr		P6700 Framing - Cell 2V01, KF1	Scale 1:1		Document type: EFS	Project nr: 22-16152	Page 3 / 1630
Modification	Date	Name	Original		Replacement of	Replaced by				

Switched Power 4 14.1L+
-KF15.54
=V2KF1/13.2

=V2KF1/18.2
Switched Power 4 14.1L+P

=V2KF1/18.2
SPARE

=V2KF1/18.2
Switched Power 4 14.1L+M

=V2KF1/18.2
SPARE

Monitoring Safety contactors 14.1L+
-KF15.54RQ
=V2KF1/9.2

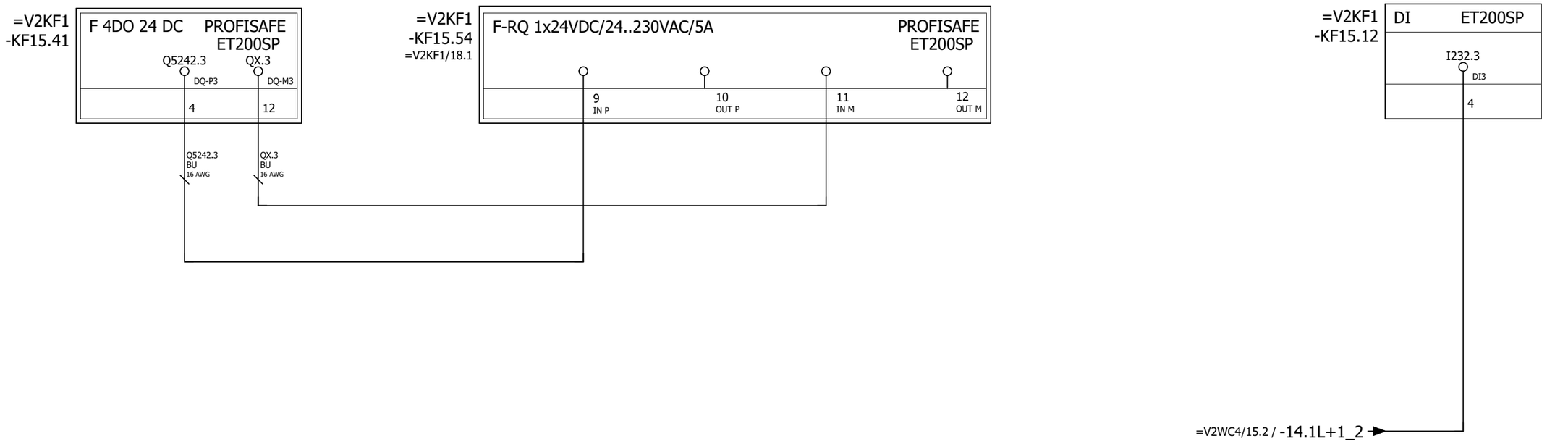

3

=V2GL15KF2+.GL15KF2/10

			Date	1/24/2023	Volvo Trucks North America	Valiant TMS	Safety power monitoring RQ - KF15.54	Drawing name: =2V01&EFS-EL_KF1	= V2FQ1	
			Ed.	MKLEPADLO					+ V2UC15	
			Appr		P6700 Framing - Cell 2V01, KF1	Scale 1:1		Document type: EFS	Project nr: 22-16152	Page 4 / 1630
Modification	Date	Name	Original		Replacement of / Replaced by					

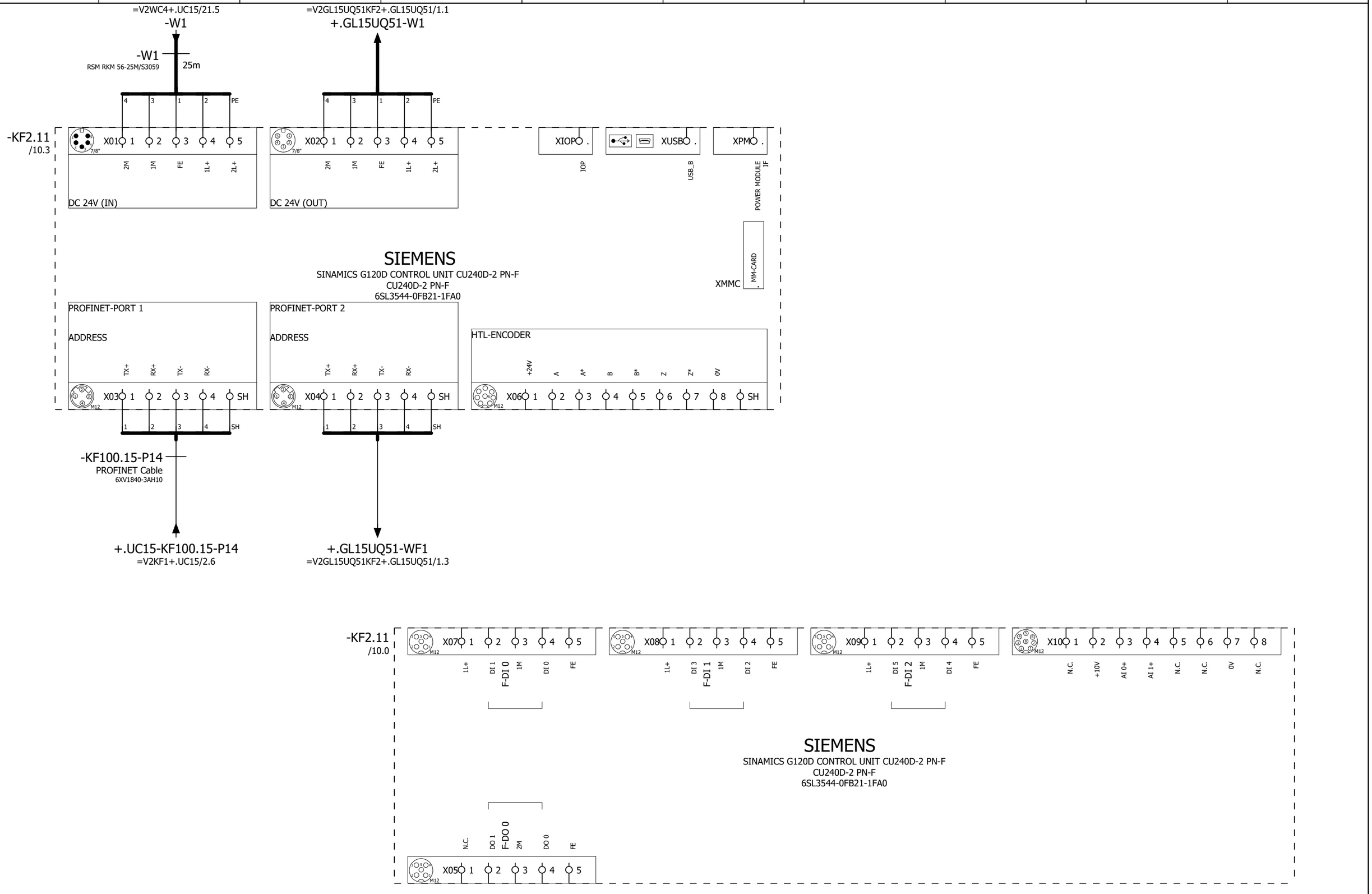

=V2FQ1+.UC15/4

=V2GL15UQ51BG0+.GL15UQ51/1

			Date	1/24/2023	Volvo Trucks North America	Valiant TMS	G120D Control Unit	Drawing name: =2V01&EFS-EL_KF1	= V2GL15KF2 + V2GL15KF2
			Ed.	MKLEPADLO	P6700 Framing - Cell 2V01, KF1				
			Appr					Document type: EFS	Project nr: 22-16152
Modification	Date	Name	Original		Replacement of / Replaced by	Scale 1:1			Page 10 / 1630

0	1	2	3	4	5	6	7	8	9

=V2GL15UQ51KF2/2.1
-BG05

-W5
RKC 4.4T-XX-RSC 4.4T/S3060
XXm

BN BU BK WH

-BG05
Sn = 8 mm
TURCK
1644741
pnp

=V2GL15UQ51
-BG05
Pallet Present at
Pre-Unload Sta #3

=V2GL15UQ51KF2/2.2
-XG6/17

-W6
RKC 4.4T-XX-RSC 4.4T/S3060
XXm

-XG6/17
P1 J1 J2
VB2-FSM 4.4/2FKM 4/S3450
TURCK

-W6.1
RKC 4.4T-XX-RSC 4.4T/S3060
XXm

-W6.2
RKC 4.4T-XX-RSC 4.4T/S3060
XXm

-BG06
Sn = 8 mm
TURCK
1644741
pnp

-BG17
Sn = 1000 mm
BANNER
71959
pnp

=V2GL15UQ51
-BG06
Pallet Present at
Unload Sta #4

=V2GL15UQ51
-BG17
Part Present
At Unload

=V2GL15UQ51KF2/2.3
-XG7/12

-W7
RKC 4.4T-XX-RSC 4.4T/S3060
XXm

-XG7/12
P1 J1 J2
VB2-FSM 4.4/2FKM 4/S3450
TURCK

-W7.1
RKC 4.4T-XX-RSC 4.4T/S3060
XXm

-W7.2
RKC 4.4T-XX-RSC 4.4T/S3060
XXm

-BG07
Sn = 8 mm
TURCK
1644741
pnp

-BG12
Sn = 8 mm
TURCK
1644741
pnp

=V2GL15UQ51
-BG07
Pallet Present at
Accum Zone 4-5

=V2GL15UQ51
-BG12
Drive Overtorque
Sensor

=V2GL15KF2+.GL15KF2/10

			Date	1/24/2023	Volvo Trucks North America		Valiant TMS	SENSORS	Drawing name: =2V01&EFS-EL_KF1	= V2GL15UQ51BG0
			Ed.	MKLEPADLO						+ V2GL15UQ51
			Appr		P6700 Framing - Cell 2V01, KF1		Scale 1:1		Document type: EFS	Project nr: 22-16152	Page 1
Modification	Date	Name	Original		Replacement of	Replaced by				1630

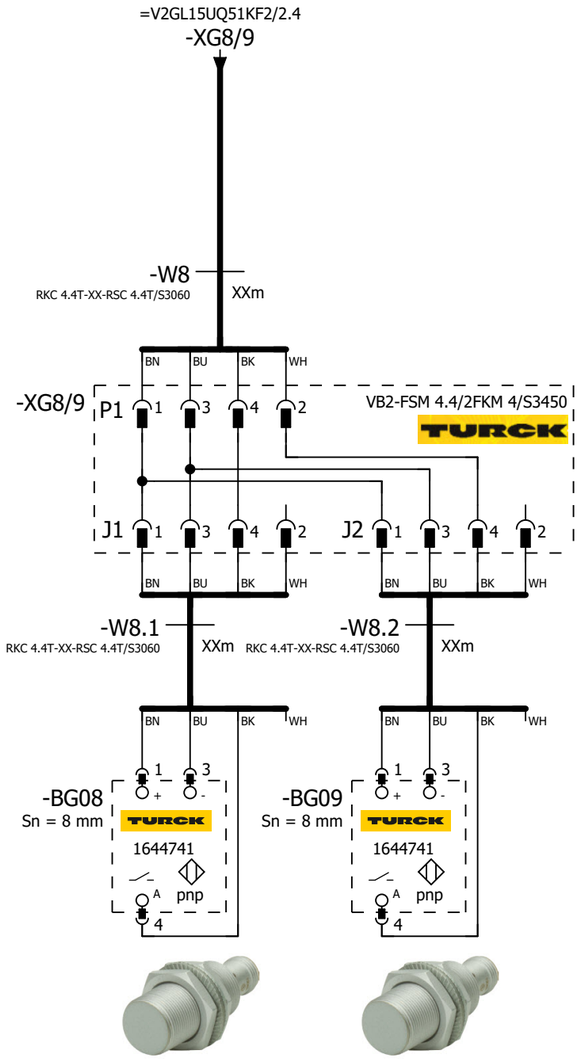

=V2GL15UQ51
-BG08
Pallet Present at
Mid-Stop Sta #5

=V2GL15UQ51
-BG09
Pallet Present at
Accum Zone 5-6

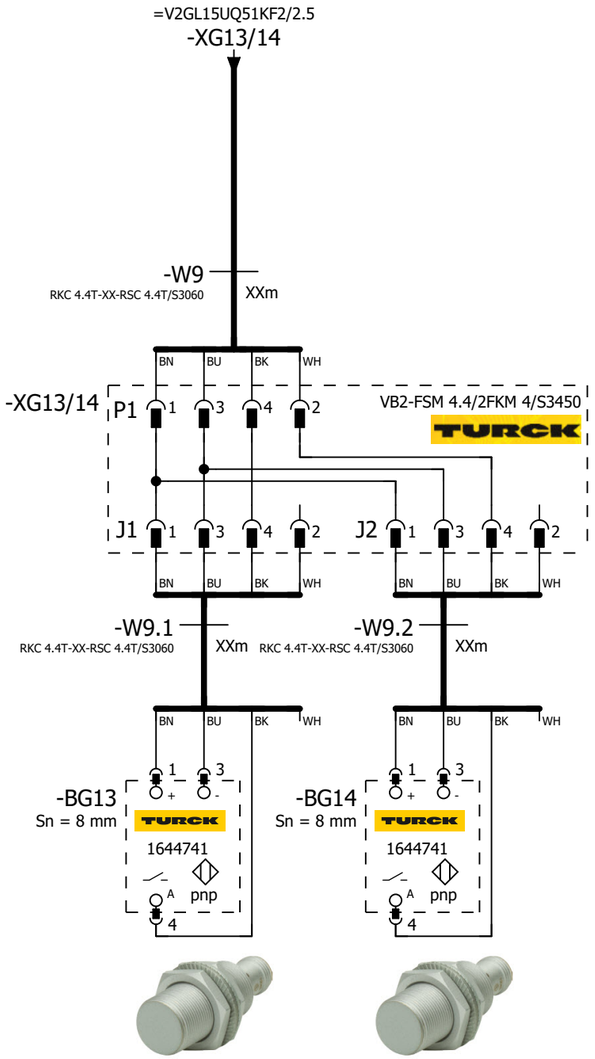

=V2GL15UQ51
-BG13
Chain Tension
Alert On Take-up

=V2GL15UQ51
-BG14
Broken Chain Alert
On Take-up

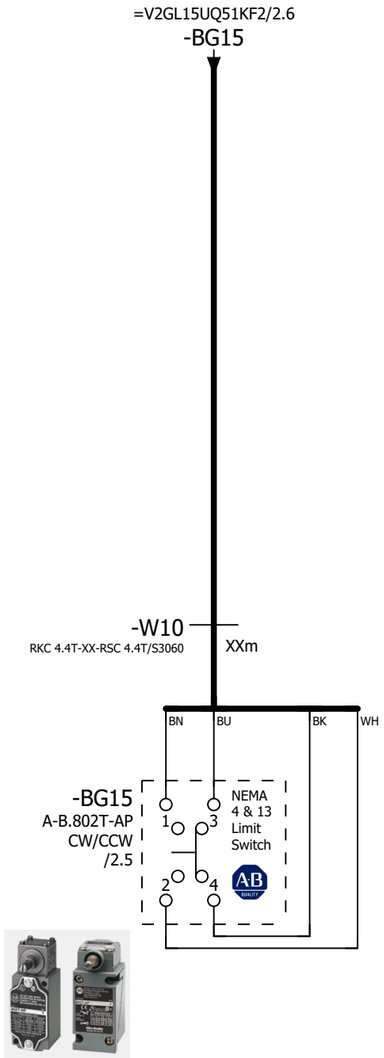

=V2GL15UQ51
-BG15
Part Overtravel

1

=V2GL15UQ51KF2/1

			Date	1/24/2023	Volvo Trucks North America	Valiant TMS	SENSORS	Drawing name: =2V01&EFS-EL_KF1	= V2GL15UQ51BG0	
			Ed.	MKLEPADLO					+ V2GL15UQ51	
			Appr		P6700 Framing - Cell 2V01, KF1			Document type: EFS	Project nr: 22-16152	Page 2
Modification	Date	Name	Original		Replacement of / Replaced by	Scale 1:1				1630

0	1	2	3	4	5	6	7	8	9

=V2GL15KF2+.GL15KF2/10.2 / W1

-W1
RSM RKM 56-5M/S3059
5m

=V2GL15KF2+.GL15KF2/10.2 / -WF1

-WF1
PROFINET Cable
6XV1840-3AH10

-KF2

X20 M12, 7/8" 1 2 PE 4 5

0V_VAL / OUT | 0V_EL / SEN | FE | 24V_EL / SEN | 24V_VAL / OUT

M12 -TP1 M12 -TP2

ON
OFF
1 2 1 2

FESTO
Bus node + Interlinking block
548755 + 550208

I2300.0	DI 0 X1:4	V2GL15UQ51UQ3.1-BGR	Pallet Stop Station #3 Pre-Unload (RESET)
I2300.1	DI 1 X1:2	V2GL15UQ51UQ3.1-BGS	Pallet Stop Station #3 Pre-Unload (SET)
I2300.2	DI 2 X2:4	V2GL15UQ51UQ4.1-BGR	Pallet Stop Station #4 Unload (RESET)
I2300.3	DI 3 X2:2	V2GL15UQ51UQ4.1-BGS	Pallet Stop Station #4 Unload (SET)
I2300.4	DI 4 X3:4	V2GL15UQ51UQ5.1-BGR	Pallet Stop Station #5 Mid-Stop (RESET)
I2300.5	DI 5 X3:2	V2GL15UQ51UQ5.1-BGS	Pallet Stop Station #5 Mid-Stop (SET)
I2300.6	DI 6 X4:4	I2300.6	SPARE
I2300.7	DI 7 X4:2	I2300.7	SPARE
I2301.0	DI 8 X5:4	I2301.0	SPARE
I2301.1	DI 9 X5:2	I2301.1	SPARE
I2301.2	DI 10 X6:4	I2301.2	SPARE
I2301.3	DI 11 X6:2	I2301.3	SPARE
I2301.4	DI 12 X7:4	I2301.4	SPARE
I2301.5	DI 13 X7:2	I2301.5	SPARE
I2301.6	DI 14 X8:4	I2301.6	SPARE
I2301.7	DI 15 X8:2	I2301.7	SPARE

-KF2.11

FESTO
CPX-M-AB-8-M12X2-5POL
549335

X1 M12: 24V | DI 1 | 0V | DI 0 | FE — 1 2 3 4 5 — BN WH BU BK
X2 M12: 24V | DI 3 | 0V | DI 2 | FE — 1 2 3 4 5 — BN WH BU BK
X3 M12: 24V | DI 5 | 0V | DI 4 | FE — 1 2 3 4 5 — BN WH BU BK
X4 M12: 24V | DI 7 | 0V | DI 6 | FE — 1 2 3 4 5
X5 M12: 24V | DI 9 | 0V | DI 8 | FE — 1 2 3 4 5
X6 M12: 24V | DI 11 | 0V | DI 10 | FE — 1 2 3 4 5
X7 M12: 24V | DI 13 | 0V | DI 12 | FE — 1 2 3 4 5
X8 M12: 24V | DI 15 | 0V | DI 14 | FE — 1 2 3 4 5

+.GL15UQ51UQ3.1-W1
=V2GL15UQ51UQ3+.GL15UQ51UQ3/1.1

+.GL15UQ51UQ4.1-W1
=V2GL15UQ51UQ4+.GL15UQ51UQ4/1.1

+.GL15UQ51UQ5.1-W1
=V2GL15UQ51UQ5+.GL15UQ51UQ5/1.1

=V2GL15UQ51BG0/2

2

			Date	1/24/2023	Volvo Trucks North America		Valiant TMS	CONNECTING MOD. FOR VTSA MANIFOLD	Drawing name: =2V01&EFS-EL_KF1	= V2GL15UQ51KF2
			Ed.	MKLEPADLO						+ V2GL15UQ51
			Appr		P6700 Framing - Cell 2V01, KF1		Scale 1:1		Document type: EFS	Project nr: 22-16152
Modification	Date	Name	Original		Replacement of	Replaced by				Page 1 / 1630

0	1	2	3	4	5	6	7	8	9

I2302.0	DI 0 X1:4	V2GL15UQ51-BG05	Sensor Pallet Present at Pre-Unload Sta #3
I2302.1	DI 1 X1:2	I2302.1	SPARE
I2302.2	DI 2 X2:4	V2GL15UQ51-BG06	Sensor Pallet Present at Unload Sta #4
I2302.3	DI 3 X2:2	V2GL15UQ51-BG17	Sensor Part Present At Unload
I2302.4	DI 4 X3:4	V2GL15UQ51-BG07	Sensor Pallet Present at Accum Zone 4-5
I2302.5	DI 5 X3:2	V2GL15UQ51-BG12	Sensor Drive Overtorque
I2302.6	DI 6 X4:4	V2GL15UQ51-BG08	Sensor Pallet Present at Mid-Stop Sta #5
I2302.7	DI 7 X4:2	V2GL15UQ51-BG09	Sensor Pallet Present at Accum Zone 5-6
I2303.0	DI 8 X5:4	V2GL15UQ51-BG13	Sensor Chain Tension Alert On Take-up
I2303.1	DI 9 X5:2	V2GL15UQ51-BG14	Sensor Broken Chain Alert On Take-up
I2303.2	DI 10 X6:4	V2GL15UQ51-BG15	Part Overtravel N.O.
I2303.3	DI 11 X6:2	V2GL15UQ51-BG15	Part Overtravel N.C.
I2303.4	DI 12 X7:4	I2303.4	SPARE
I2303.5	DI 13 X7:2	I2303.5	SPARE
I2303.6	DI 14 X8:4	I2303.6	SPARE
I2303.7	DI 15 X8:2	I2303.7	SPARE

-KF2.12

FESTO

CPX-M-AB-8-M12X2-5POL

549335

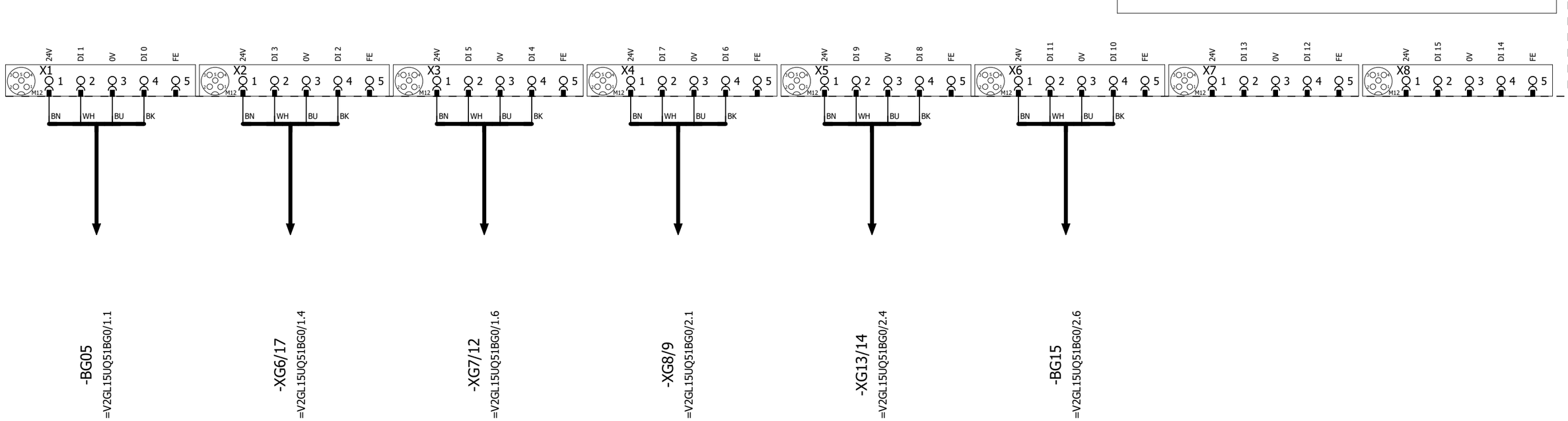

1 3

			Date	1/24/2023	Volvo Trucks North America	Valiant TMS	I/O MOD. DI16 (8 x M12) FOR VTSA-F	Drawing name: =2V01&EFS-EL_KF1	= V2GL15UQ51KF2
			Ed.	MKLEPADLO					+ V2GL15UQ51
			Appr		P6700 Framing - Cell 2V01, KF1	Scale 1:1		Document type: EFS	Project nr: 22-16152
Modification	Date	Name	Original		Replacement of	Replaced by			Page 2 / 1630

0	1	2	3	4	5	6	7	8	9

-KF2.13

FESTO

CPX-M-AB-8-M12X2-5POL

549335

I2304.0	DI 0 X1:4	I2304.0	SPARE
I2304.1	DI 1 X1:2	I2304.1	SPARE
I2304.2	DI 2 X2:4	I2304.2	SPARE
I2304.3	DI 3 X2:2	I2304.3	SPARE
I2304.4	DI 4 X3:4	I2304.4	SPARE
I2304.5	DI 5 X3:2	I2304.5	SPARE
I2304.6	DI 6 X4:4	I2304.6	SPARE
I2304.7	DI 7 X4:2	I2304.7	SPARE
I2305.0	DI 8 X5:4	I2305.0	SPARE
I2305.1	DI 9 X5:2	I2305.1	SPARE
I2305.2	DI 10 X6:4	I2305.2	SPARE
I2305.3	DI 11 X6:2	I2305.3	SPARE
I2305.4	DI 12 X7:4	I2305.4	SPARE
I2305.5	DI 13 X7:2	I2305.5	SPARE
I2305.6	DI 14 X8:4	I2305.6	SPARE
I2305.7	DI 15 X8:2	I2305.7	SPARE

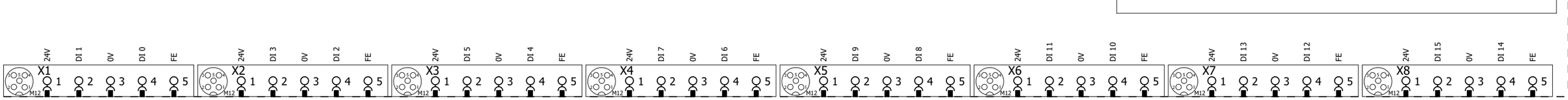

2 4

			Date	1/24/2023	Volvo Trucks North America	Valiant TMS	I/O MOD. DI16 (8 x M12) FOR VTSA-F	Drawing name: =2V01&EFS-EL_KF1	= V2GL15UQ51KF2
			Ed.	MKLEPADLO					+ V2GL15UQ51
			Appr		P6700 Framing - Cell 2V01, KF1	Scale 1:1		Document type: EFS	Project nr: 22-16152
Modification	Date	Name	Original		Replacement of / Replaced by				Page 3 / 1630

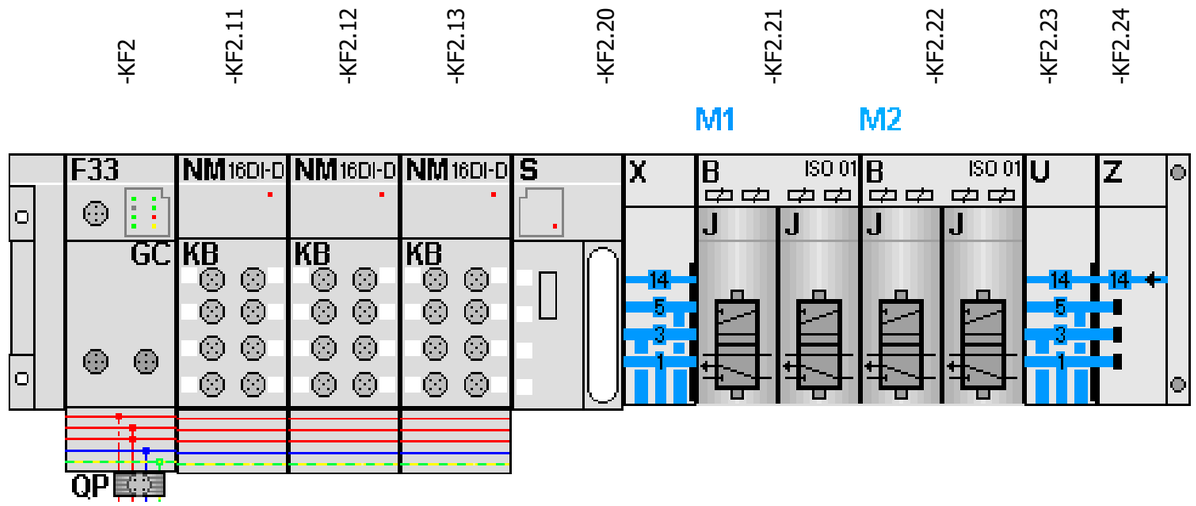

-KF2.21
=V2GL15UQ51UQ3+.GL15UQ51UQ3/1.3
=V2GL15UQ51UQ4+.GL15UQ51UQ4/1.3

FESTO

=V2GL15UQ51UQ3+.GL15UQ51UQ3/1.4	Q2300.0 DO 0 1.1	-QN1.1_Q	Pallet Stop Station #3 Pre-Unload (RST)
=V2GL15UQ51UQ3+.GL15UQ51UQ3/1.4	Q2300.1 DO 1 1.2	-QN1.2_Q	Pallet Stop Station #3 Pre-Unload (SET)
=V2GL15UQ51UQ4+.GL15UQ51UQ4/1.4	Q2300.2 DO 2 2.1	-QN2.1_Q	Pallet Stop Station #4 Unload (RST)
=V2GL15UQ51UQ4+.GL15UQ51UQ4/1.4	Q2300.3 DO 3 2.2	-QN2.2_Q	Pallet Stop Station #4 Unload (SET)

-KF2.22
=V2GL15UQ51UQ5+.GL15UQ51UQ5/1.3
=V2GL15UQ51UQ8+.GL15UQ51UQ8/1.3

FESTO

=V2GL15UQ51UQ5+.GL15UQ51UQ5/1.4	Q2300.4 DO 0 1.1	-QN3.1_Q	Pallet Stop Station #5 Mid-Stop (RST)
=V2GL15UQ51UQ5+.GL15UQ51UQ5/1.4	Q2300.5 DO 1 1.2	-QN3.2_Q	Pallet Stop Station #5 Mid-Stop (SET)
=V2GL15UQ51UQ8+.GL15UQ51UQ8/1.4	Q2300.6 DO 2 2.1	-QN4.1_Q	Spare (RST)
=V2GL15UQ51UQ8+.GL15UQ51UQ8/1.4	Q2300.7 DO 3 2.2	-QN4.2_Q	Spare (SET)

			Date	1/24/2023	Volvo Trucks North America	Valiant TMS	CONNECTING MOD. FOR FESTO DQ	Drawing name: =2V01&EFS-EL_KF1	= V2GL15UQ51KF2
			Ed.	MKLEPADLO					+ V2GL15UQ51
			Appr		P6700 Framing - Cell 2V01, KF1			Document type: EFS	Project nr: 22-16152
Modification	Date	Name	Original		Replacement of / Replaced by	Scale 1:1			Page 4 / 1630

0	1	2	3	4	5	6	7	8	9

=V2GL15UQ51KF2
+.GL15UQ51

-KF2.21
=V2GL15UQ51KF2+V2GL15UQ51/4.1

Pallet Stop
Station #3 Pre-Unload (RST)
=V2GL15UQ51KF1
+V2GL15UQ51
-QN1.1_Q
=V2GL15UQ51KF2
+V2GL15UQ51/4.3
Q2300.0

Pallet Stop
Station #3 Pre-Unload (SET)
=V2GL15UQ51KF1
+V2GL15UQ51
-QN1.2_Q
=V2GL15UQ51KF2
+V2GL15UQ51/4.3
Q2300.1

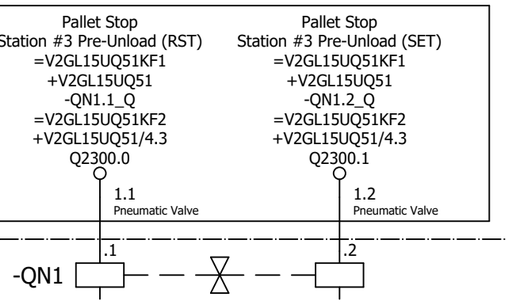

=V2GL15UQ51KF2+V2GL15UQ51/1.1
+.GL15UQ51UQ3.1-W1

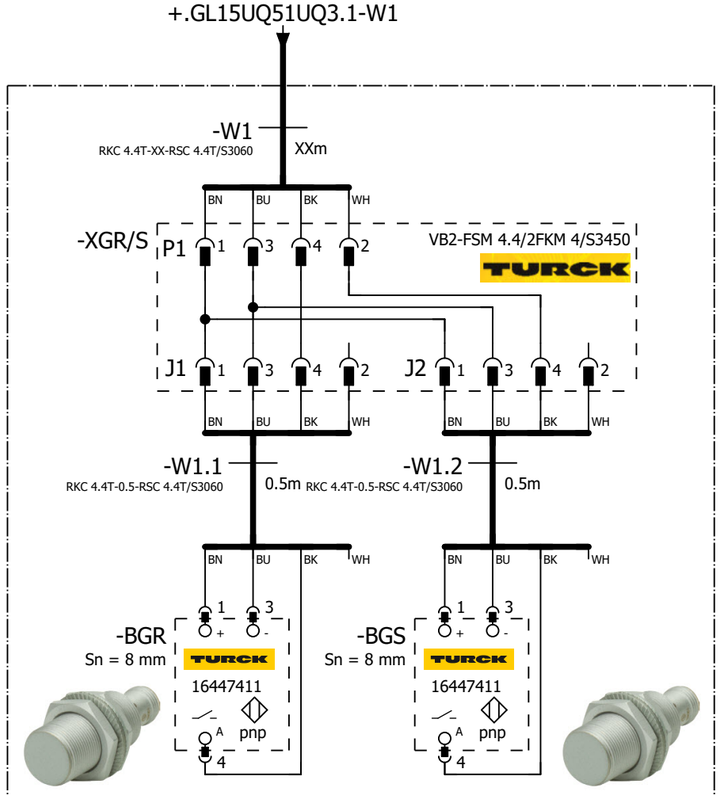

Pallet Stop Station #3 Pre-Unload
=V2GL15UQ51UQ3.1
+.GL15UQ51UQ3.1
-UQ3.1

=V2GL15UQ51 -UQ3.1-BGR Pallet Stop Station #3 Pre-Unload	=V2GL15UQ51 -UQ3.1-BGS Pallet Stop Station #3 Pre-Unload

=V2GL15UQ51KF2+V2GL15UQ51/4

=V2GL15UQ51UQ4+.GL15UQ51UQ4/1

			Date	1/24/2023	Volvo Trucks North America	Valiant TMS	FESTO DQ CONNECTION QN1	Drawing name: =2V01&EFS-EL_KF1	= V2GL15UQ51UQ3
			Ed.	MKLEPADLO					+ V2GL15UQ51UQ3
			Appr		P6700 Framing - Cell 2V01, KF1			Document type: EFS	Project nr: 22-16152
Modification	Date	Name	Original		Replacement of / Replaced by	Scale 1:1			Page 1 / 1630

0	1	2	3	4	5	6	7	8	9

=V2GL15UQ51KF2
+.GL15UQ51

-KF2.21
=V2GL15UQ51KF2+V2GL15UQ51/4.1

Pallet Stop Station #4 Unload (RST)	Pallet Stop Station #4 Unload (SET)
=V2GL15UQ51KF1	=V2GL15UQ51KF1
+V2GL15UQ51	+V2GL15UQ51
-QN2.1_Q	-QN2.2_Q
=V2GL15UQ51KF2	=V2GL15UQ51KF2
+V2GL15UQ51/4.3	+V2GL15UQ51/4.3
Q2300.2	Q2300.3
2.1 Pneumatic Valve	2.2 Pneumatic Valve

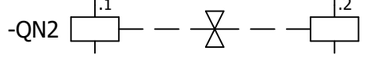

=V2GL15UQ51KF2+V2GL15UQ51/1.2
+.GL15UQ51UQ4.1-W1

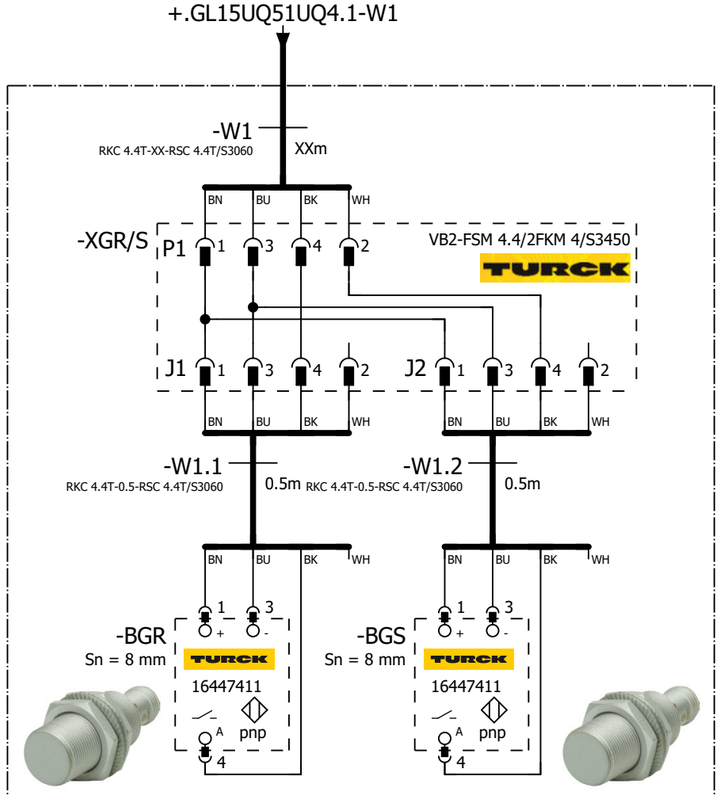

Pallet Stop Station #4 Unload
=V2GL15UQ51UQ4.1
+.GL15UQ51UQ4.1
-UQ4.1

=V2GL15UQ51 -UQ4.1-BGR Pallet Stop Station #4 Unload	=V2GL15UQ51 -UQ4.1-BGS Pallet Stop Station #4 Unload

=V2GL15UQ51UQ3+.GL15UQ51UQ3/1

=V2GL15UQ51UQ5+.GL15UQ51UQ5/1

			Date	1/24/2023	Volvo Trucks North America	Valiant TMS	FESTO DQ CONNECTION QN2	Drawing name: =2V01&EFS-EL_KF1	= V2GL15UQ51UQ4
			Ed.	MKLEPADLO					+ V2GL15UQ51UQ4
			Appr		P6700 Framing - Cell 2V01, KF1			Document type: EFS	Project nr: 22-16152
Modification	Date	Name	Original		Replacement of / Replaced by	Scale 1:1			Page 1 / 1630

0	1	2	3	4	5	6	7	8	9

=V2GL15UQ51KF2
+.GL15UQ51

-KF2.22
=V2GL15UQ51KF2+V2GL15UQ51/4.1

Pallet Stop
Station #5 Mid-Stop (RST)
=V2GL15UQ51KF1
+V2GL15UQ51
-QN3.1_Q
=V2GL15UQ51KF2
+V2GL15UQ51/4.3
Q2300.4

Pallet Stop
Station #5 Mid-Stop (SET)
=V2GL15UQ51KF1
+V2GL15UQ51
-QN3.2_Q
=V2GL15UQ51KF2
+V2GL15UQ51/4.3
Q2300.5

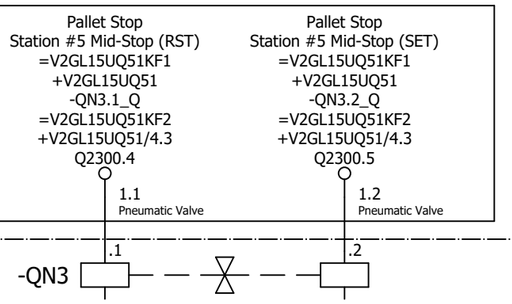

=V2GL15UQ51KF2+V2GL15UQ51/1.3
+.GL15UQ51UQ5.1-W1

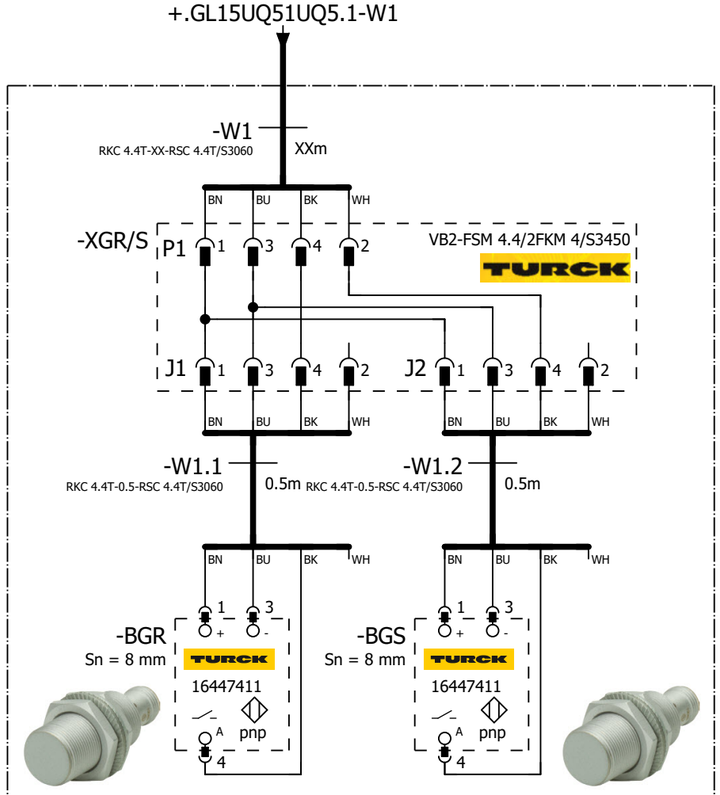

Pallet Stop Station #5 Mid-Stop
=V2GL15UQ51UQ5.1
+.GL15UQ51UQ5.1
-UQ5.1

=V2GL15UQ51 -UQ5.1-BGR Pallet Stop Station #5 Mid-Stop	=V2GL15UQ51 -UQ5.1-BGS Pallet Stop Station #5 Mid-Stop

=V2GL15UQ51UQ4+.GL15UQ51UQ4/1

=V2GL15UQ51UQ8+.GL15UQ51UQ8/1

			Date	1/24/2023	Volvo Trucks North America		Valiant TMS	FESTO DQ CONNECTION QN3	Drawing name: =2V01&EFS-EL_KF1	= V2GL15UQ51UQ5
			Ed.	MKLEPADLO						+ V2GL15UQ51UQ5
			Appr		P6700 Framing - Cell 2V01, KF1				Document type: EFS	Project nr: 22-16152
Modification	Date	Name	Original		Replacement of	Replaced by	Scale 1:1			Page 1 / 1630

0	1	2	3	4	5	6	7	8	9

=V2GL15UQ51KF2
+.GL15UQ51

-KF2.22
=V2GL15UQ51KF2+V2GL15UQ51/4.1

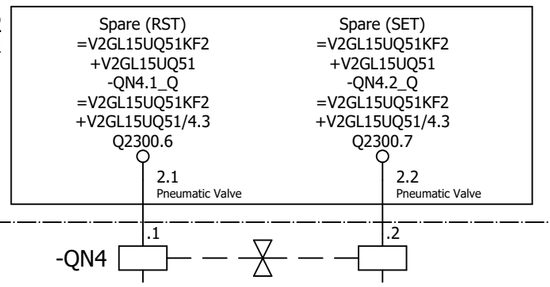

=V2GL15UQ51UQ5+.GL15UQ51UQ5/1

=V2GL15WC1+.GL15UC01/1

			Date	1/24/2023	Volvo Trucks North America	Valiant TMS	FESTO DQ CONNECTION QN4	Drawing name: =2V01&EFS-EL_KF1	= V2GL15UQ51UQ8
			Ed.	MKLEPADLO					+ V2GL15UQ51UQ8
			Appr		P6700 Framing - Cell 2V01, KF1	Scale 1:1		Document type: EFS / Project nr: 22-16152	Page 1 / 1630
Modification	Date	Name	Original		Replacement of / Replaced by				

0	1	2	3	4	5	6	7	8	9

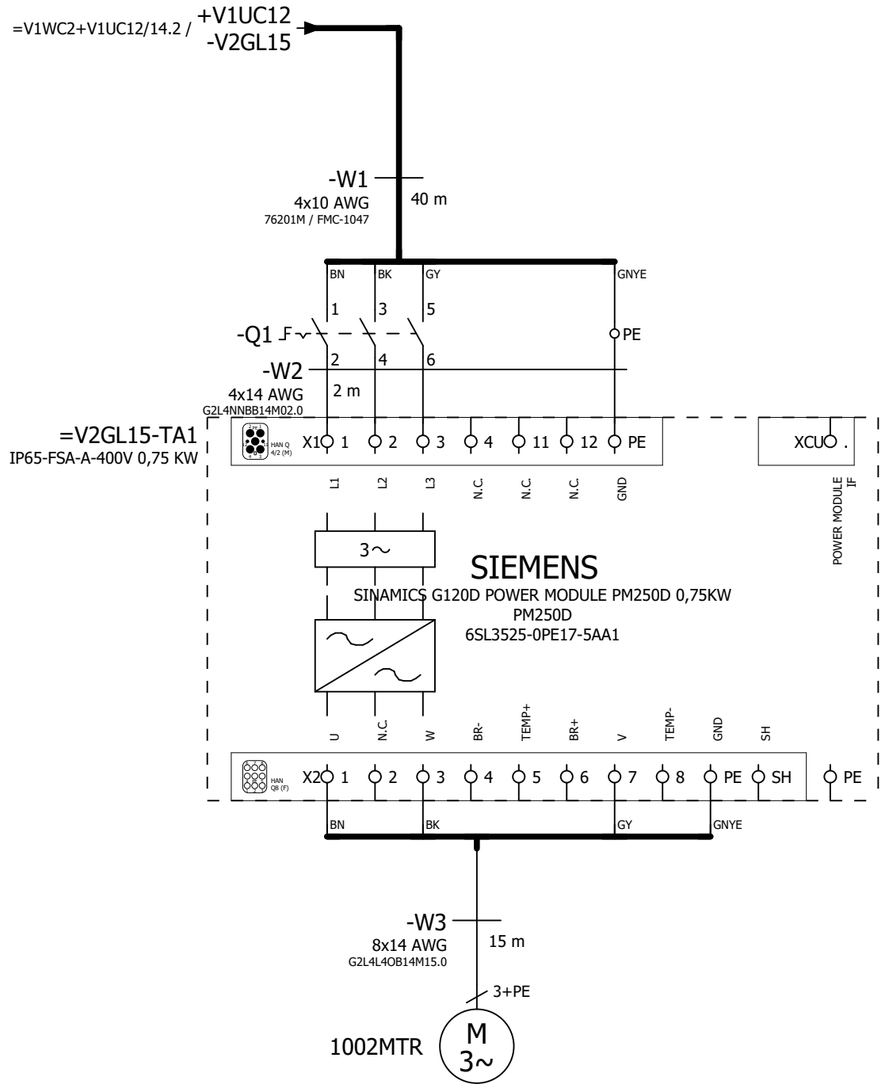

=V2GL15UQ51UQ8+.GL15UQ51UQ8/1

=V2GL16KF2+.GL16KF2/10

			Date	1/24/2023	Volvo Trucks North America		Valiant TMS	Incoming power	Drawing name: =2V01&EFS-EL_KF1	= V2GL15WC1
			Ed.	MKLEPADLO						+ V2GL15UC01
			Appr		P6700 Framing - Cell 2V01, KF1				Document type: EFS	Project nr: 22-16152
Modification	Date	Name	Original		Replacement of	Replaced by	Scale 1:1			Page 1 / 1630

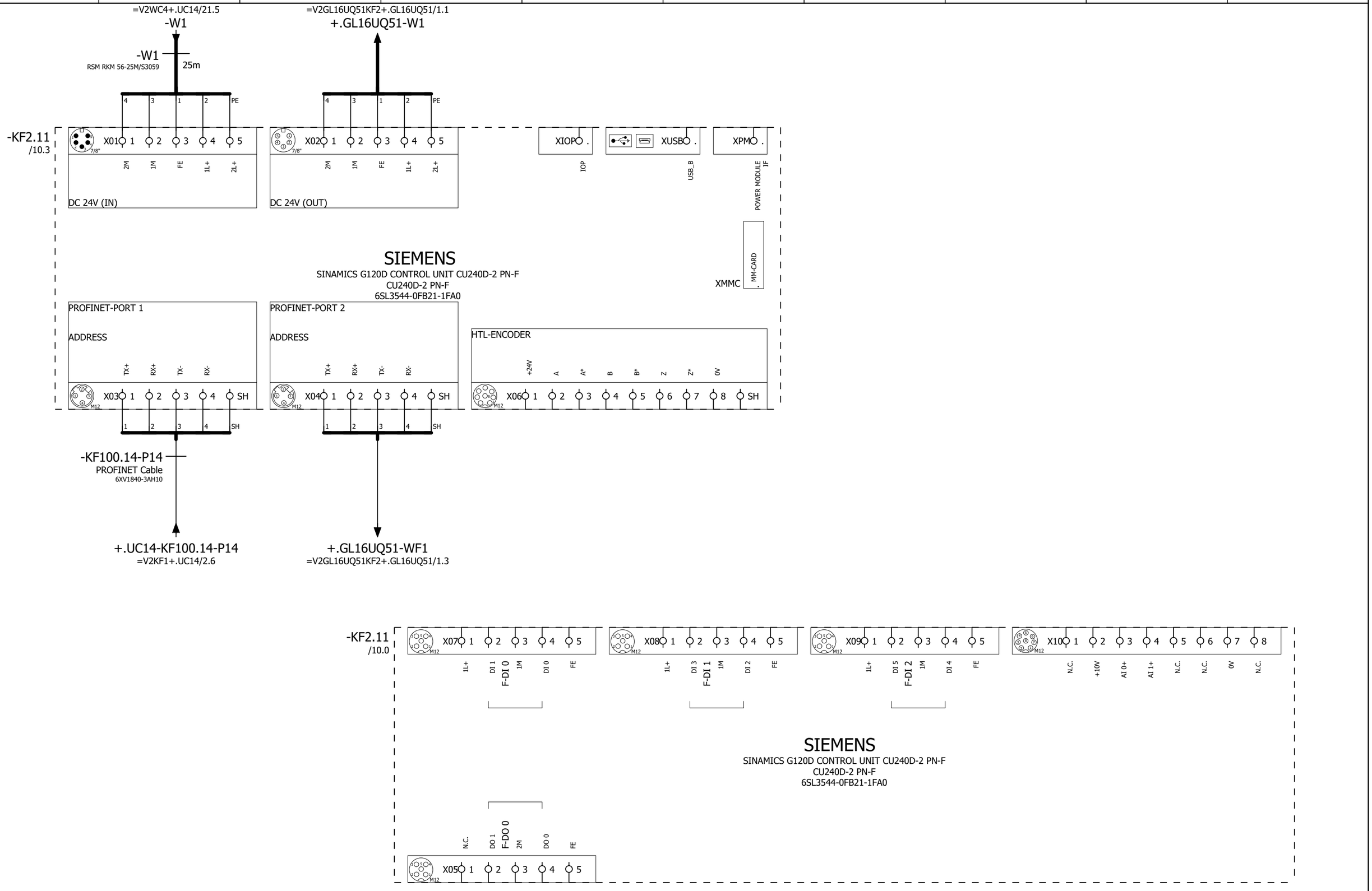

=V2GL15WC1+.GL15UC01/1

=V2GL16UQ51BG0+.GL16UQ51/1

			Date	1/24/2023	Volvo Trucks North America	Valiant TMS	G120D Control Unit	Drawing name: =2V01&EFS-EL_KF1	= V2GL16KF2 + V2GL16KF2
			Ed.	MKLEPADLO	P6700 Framing - Cell 2V01, KF1				
			Appr					Document type: EFS	Project nr: 22-16152
Modification	Date	Name	Original		Replacement of / Replaced by	Scale 1:1			Page 10 / 1630

0	1	2	3	4	5	6	7	8	9

=V2GL16UQ51KF2/2.1
-BG05

-W5
RKC 4.4T-XX-RSC 4.4T/S3060
XXm

BN BU BK WH

-BG05
Sn = 8 mm
TURCK
1644741
pnp

=V2GL16UQ51
-BG05
Pallet Present at
Pre-Unload Sta #3

=V2GL16UQ51KF2/2.2
-XG6/17

-W6
RKC 4.4T-XX-RSC 4.4T/S3060
XXm

BN BU BK WH

-XG6/17
P1 1 3 4 2
VB2-FSM 4.4/2FKM 4/S3450
TURCK

J1 1 3 4 2
J2 1 3 4 2

BN BU BK WH

-W6.1
RKC 4.4T-XX-RSC 4.4T/S3060
XXm

-W6.2
RKC 4.4T-XX-RSC 4.4T/S3060
XXm

BN BU BK WH

-BG06
Sn = 8 mm
TURCK
1644741
pnp

-BG17
Sn = 1000 mm
BANNER
71959
pnp

=V2GL16UQ51
-BG06
Pallet Present at
Unload Sta #4

=V2GL16UQ51
-BG17
Part Present
At Unload

=V2GL16UQ51KF2/2.3
-XG7/12

-W7
RKC 4.4T-XX-RSC 4.4T/S3060
XXm

BN BU BK WH

-XG7/12
P1 1 3 4 2
VB2-FSM 4.4/2FKM 4/S3450
TURCK

J1 1 3 4 2
J2 1 3 4 2

BN BU BK WH

-W7.1
RKC 4.4T-XX-RSC 4.4T/S3060
XXm

-W7.2
RKC 4.4T-XX-RSC 4.4T/S3060
XXm

BN BU BK WH

-BG07
Sn = 8 mm
TURCK
1644741
pnp

-BG12
Sn = 8 mm
TURCK
1644741
pnp

=V2GL16UQ51
-BG07
Pallet Present at
Accum Zone 4-5

=V2GL16UQ51
-BG12
Drive Overtorque
Sensor

=V2GL16KF2+.GL16KF2/10

			Date	1/24/2023	Volvo Trucks North America	Valiant TMS	SENSORS	Drawing name: =2V01&EFS-EL_KF1	= V2GL16UQ51BG0
			Ed.	MKLEPADLO					+ V2GL16UQ51
			Appr		P6700 Framing - Cell 2V01, KF1	Scale 1:1		Document type: EFS	Project nr: 22-16152 / Page 1 / 1630
Modification	Date	Name	Original		Replacement of / Replaced by				

0	1	2	3	4	5	6	7	8	9

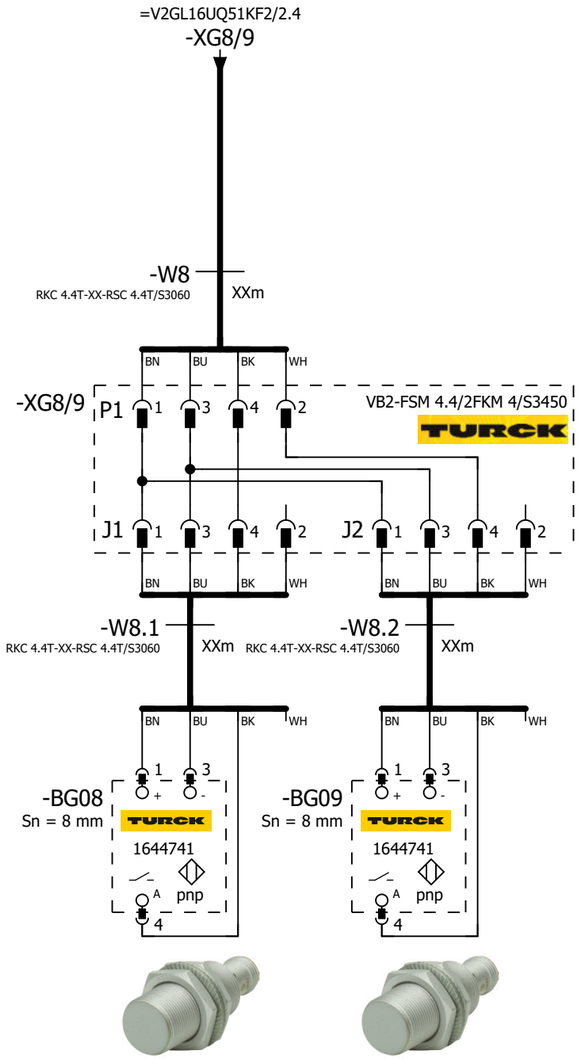

=V2GL16UQ51
-BG08
Pallet Present at
Mid-Stop Sta #5

=V2GL16UQ51
-BG09
Pallet Present at
Accum Zone 5-6

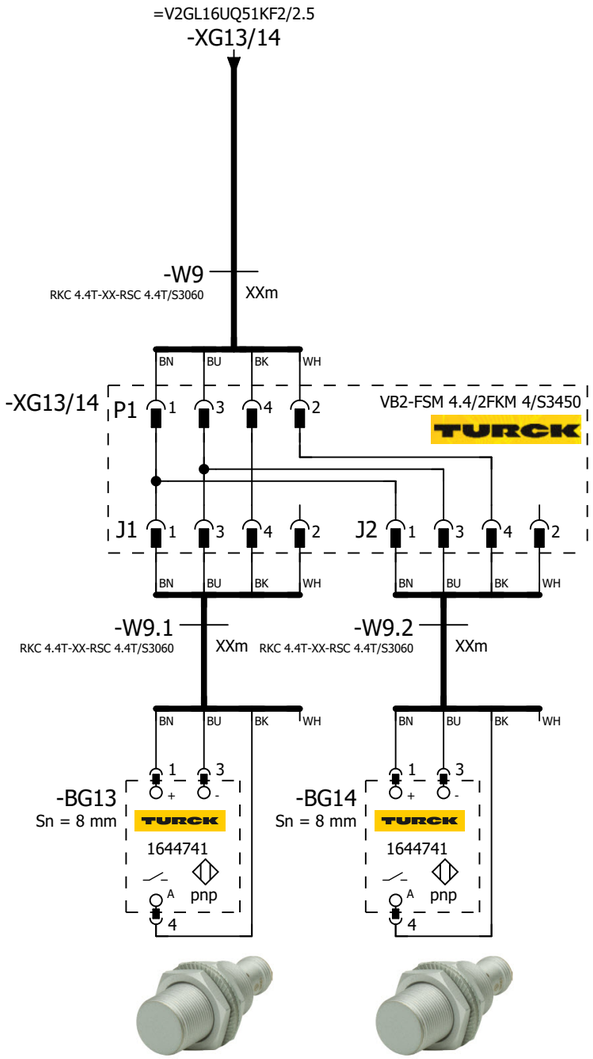

=V2GL16UQ51
-BG13
Chain Tension
Alert On Take-up

=V2GL16UQ51
-BG14
Broken Chain Alert
On Take-up

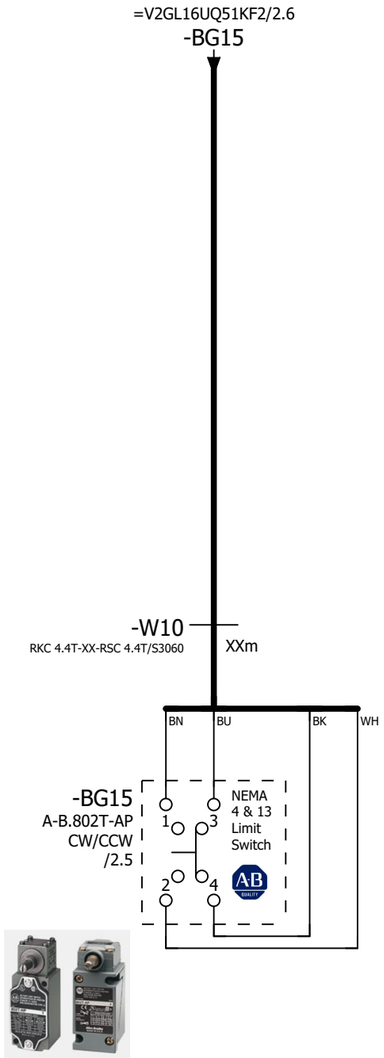

=V2GL16UQ51
-BG15
Part Overtravel

1

=V2GL16UQ51KF2/1

			Date	1/24/2023	Volvo Trucks North America	Valiant TMS	SENSORS	Drawing name: =2V01&EFS-EL_KF1	= V2GL16UQ51BG0
			Ed.	MKLEPADLO					+ V2GL16UQ51
			Appr		P6700 Framing - Cell 2V01, KF1			Document type: EFS	Project nr: 22-16152
Modification	Date	Name	Original		Replacement of / Replaced by	Scale 1:1			Page 2 / 1630

0	1	2	3	4	5	6	7	8	9

=V2GL16KF2+.GL16KF2/10.2 / W1

-W1
RSM RKM 56-5M/S3059
5m

=V2GL16KF2+.GL16KF2/10.2 / -WF1

-WF1
PROFINET Cable
6XV1840-3AH10

-KF2

X20 M12, 7/8" 1 2 PE 4 5
0V_VAL / OUT | 0V_EL / SEN | FE | 24V_EL / SEN | 24V_VAL / OUT

M12 -TP1 M12 -TP2

ON
OFF
1 2 1 2

FESTO
Bus node + Interlinking block
548755 + 550208

I2350.0	DI 0 X1:4	V2GL16UQ51UQ3.1-BGR	Pallet Stop Station #3 Pre-Unload (RESET)
I2350.1	DI 1 X1:2	V2GL16UQ51UQ3.1-BGS	Pallet Stop Station #3 Pre-Unload (SET)
I2350.2	DI 2 X2:4	V2GL16UQ51UQ4.1-BGR	Pallet Stop Station #4 Unload (RESET)
I2350.3	DI 3 X2:2	V2GL16UQ51UQ4.1-BGS	Pallet Stop Station #4 Unload (SET)
I2350.4	DI 4 X3:4	V2GL16UQ51UQ5.1-BGR	Pallet Stop Station #5 Mid-Stop (RESET)
I2350.5	DI 5 X3:2	V2GL16UQ51UQ5.1-BGS	Pallet Stop Station #5 Mid-Stop (SET)
I2350.6	DI 6 X4:4	I2350.6	SPARE
I2350.7	DI 7 X4:2	I2350.7	SPARE
I2351.0	DI 8 X5:4	I2351.0	SPARE
I2351.1	DI 9 X5:2	I2351.1	SPARE
I2351.2	DI 10 X6:4	I2351.2	SPARE
I2351.3	DI 11 X6:2	I2351.3	SPARE
I2351.4	DI 12 X7:4	I2351.4	SPARE
I2351.5	DI 13 X7:2	I2351.5	SPARE
I2351.6	DI 14 X8:4	I2351.6	SPARE
I2351.7	DI 15 X8:2	I2351.7	SPARE

-KF2.11

FESTO
CPX-M-AB-8-M12X2-5POL
549335

X1 M12: 24V | DI 1 | 0V | DI 0 | FE — 1 2 3 4 5 — BN WH BU BK
X2 M12: 24V | DI 3 | 0V | DI 2 | FE — 1 2 3 4 5 — BN WH BU BK
X3 M12: 24V | DI 5 | 0V | DI 4 | FE — 1 2 3 4 5 — BN WH BU BK
X4 M12: 24V | DI 7 | 0V | DI 6 | FE — 1 2 3 4 5
X5 M12: 24V | DI 9 | 0V | DI 8 | FE — 1 2 3 4 5
X6 M12: 24V | DI 11 | 0V | DI 10 | FE — 1 2 3 4 5
X7 M12: 24V | DI 13 | 0V | DI 12 | FE — 1 2 3 4 5
X8 M12: 24V | DI 15 | 0V | DI 14 | FE — 1 2 3 4 5

+.GL16UQ51UQ3.1-W1
=V2GL16UQ51UQ3+.GL16UQ51UQ3/1.1

+.GL16UQ51UQ4.1-W1
=V2GL16UQ51UQ4+.GL16UQ51UQ4/1.1

+.GL16UQ51UQ5.1-W1
=V2GL16UQ51UQ5+.GL16UQ51UQ5/1.1

=V2GL16UQ51BG0/2

2

			Date	1/24/2023	Volvo Trucks North America		Valiant TMS	CONNECTING MOD. FOR VTSA MANIFOLD	Drawing name: =2V01&EFS-EL_KF1	= V2GL16UQ51KF2
			Ed.	MKLEPADLO						+ V2GL16UQ51
			Appr		P6700 Framing - Cell 2V01, KF1		Scale 1:1		Document type: EFS	Project nr: 22-16152
Modification	Date	Name	Original		Replacement of	Replaced by				Page 1 / 1630

I2352.0	DI 0 X1:4	V2GL16UQ51-BG05	Sensor Pallet Present at Pre-Unload Sta #3
I2352.1	DI 1 X1:2	I2352.1	SPARE
I2352.2	DI 2 X2:4	V2GL16UQ51-BG06	Sensor Pallet Present at Unload Sta #4
I2352.3	DI 3 X2:2	V2GL16UQ51-BG17	Sensor Part Present At Unload
I2352.4	DI 4 X3:4	V2GL16UQ51-BG07	Sensor Pallet Present at Accum Zone 4-5
I2352.5	DI 5 X3:2	V2GL16UQ51-BG12	Sensor Drive Overtorque
I2352.6	DI 6 X4:4	V2GL16UQ51-BG08	Sensor Pallet Present at Mid-Stop Sta #5
I2352.7	DI 7 X4:2	V2GL16UQ51-BG09	Sensor Pallet Present at Accum Zone 5-6
I2353.0	DI 8 X5:4	V2GL16UQ51-BG13	Sensor Chain Tension Alert On Take-up
I2353.1	DI 9 X5:2	V2GL16UQ51-BG14	Sensor Broken Chain Alert On Take-up
I2353.2	DI 10 X6:4	V2GL16UQ51-BG15	Part Overtravel N.O.
I2353.3	DI 11 X6:2	V2GL16UQ51-BG15	Part Overtravel N.C.
I2353.4	DI 12 X7:4	I2353.4	SPARE
I2353.5	DI 13 X7:2	I2353.5	SPARE
I2353.6	DI 14 X8:4	I2353.6	SPARE
I2353.7	DI 15 X8:2	I2353.7	SPARE

-KF2.12

FESTO
CPX-M-AB-8-M12X2-5POL
549335

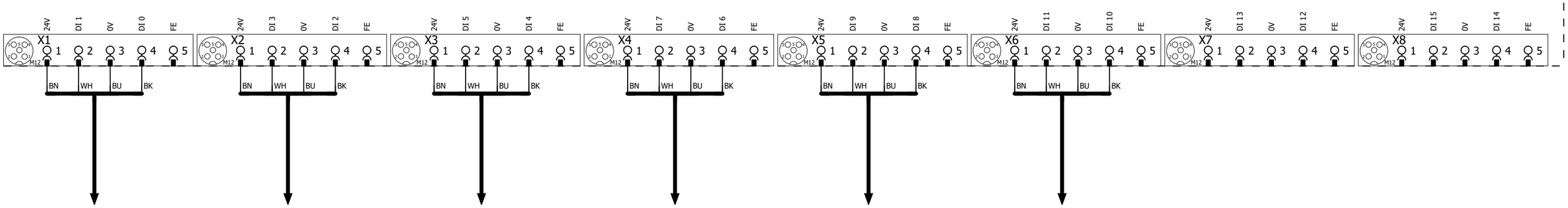

1 3

			Date	1/24/2023	Volvo Trucks North America	Valiant TMS	I/O MOD. DI16 (8 x M12) FOR VTSA-F	Drawing name: =2V01&EFS-EL_KF1	= V2GL16UQ51KF2 + V2GL16UQ51
			Ed.	MKLEPADLO	P6700 Framing - Cell 2V01, KF1				
			Appr					Document type: EFS	Project nr: 22-16152
Modification	Date	Name	Original		Replacement of / Replaced by	Scale 1:1			Page 2 / 1630

0	1	2	3	4	5	6	7	8	9

-KF2.13

FESTO

CPX-M-AB-8-M12X2-5POL

549335

I2354.0	DI 0 X1:4	I2354.0	SPARE
I2354.1	DI 1 X1:2	I2354.1	SPARE
I2354.2	DI 2 X2:4	I2354.2	SPARE
I2354.3	DI 3 X2:2	I2354.3	SPARE
I2354.4	DI 4 X3:4	I2354.4	SPARE
I2354.5	DI 5 X3:2	I2354.5	SPARE
I2354.6	DI 6 X4:4	I2354.6	SPARE
I2354.7	DI 7 X4:2	I2354.7	SPARE
I2355.0	DI 8 X5:4	I2355.0	SPARE
I2355.1	DI 9 X5:2	I2355.1	SPARE
I2355.2	DI 10 X6:4	I2355.2	SPARE
I2355.3	DI 11 X6:2	I2355.3	SPARE
I2355.4	DI 12 X7:4	I2355.4	SPARE
I2355.5	DI 13 X7:2	I2355.5	SPARE
I2355.6	DI 14 X8:4	I2355.6	SPARE
I2355.7	DI 15 X8:2	I2355.7	SPARE

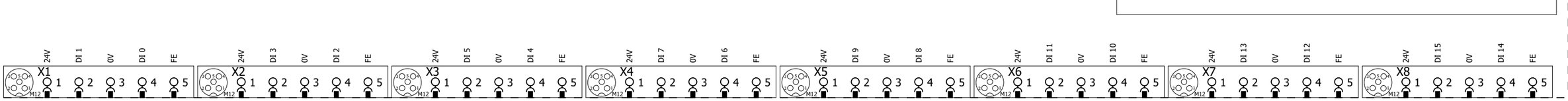

			Date	1/24/2023	Volvo Trucks North America		Valiant TMS	I/O MOD. DI16 (8 x M12) FOR VTSA-F	Drawing name: =2V01&EFS-EL_KF1	= V2GL16UQ51KF2
			Ed.	MKLEPADLO						+ V2GL16UQ51
			Appr		P6700 Framing - Cell 2V01, KF1		Scale 1:1		Document type: EFS	Project nr: 22-16152
Modification	Date	Name	Original		Replacement of	Replaced by				Page 3 / 1630

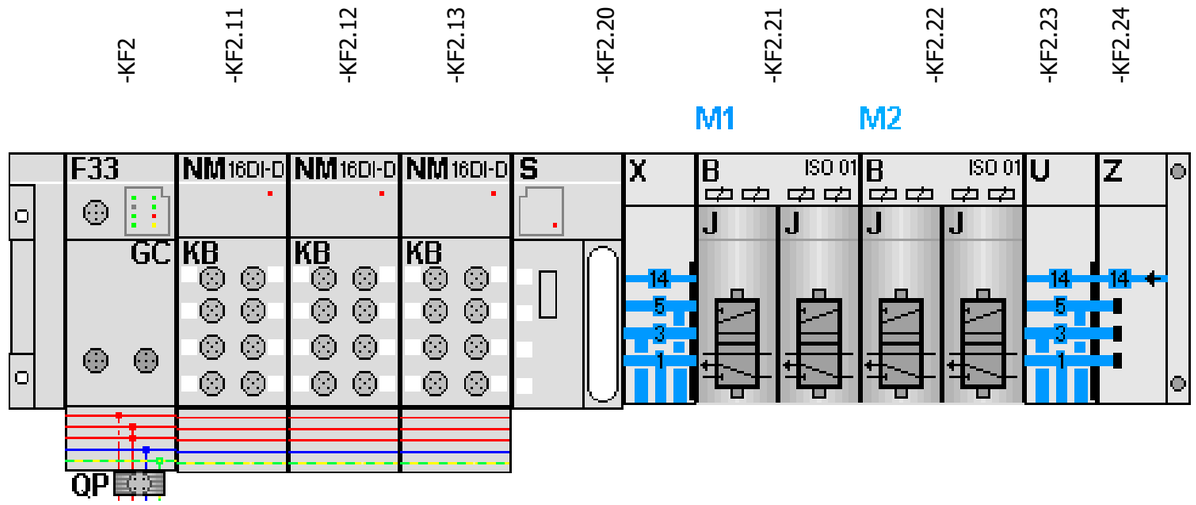

-KF2.21
=V2GL16UQ51UQ3+.GL16UQ51UQ3/1.3
=V2GL16UQ51UQ4+.GL16UQ51UQ4/1.3

FESTO

=V2GL16UQ51UQ3+.GL16UQ51UQ3/1.4	Q2350.0	DO 0 / 1.1	-QN1.1_Q	Pallet Stop Station #3 Pre-Unload (RST)
=V2GL16UQ51UQ3+.GL16UQ51UQ3/1.4	Q2350.1	DO 1 / 1.2	-QN1.2_Q	Pallet Stop Station #3 Pre-Unload (SET)
=V2GL16UQ51UQ4+.GL16UQ51UQ4/1.4	Q2350.2	DO 2 / 2.1	-QN2.1_Q	Pallet Stop Station #4 Unload (RST)
=V2GL16UQ51UQ4+.GL16UQ51UQ4/1.4	Q2350.3	DO 3 / 2.2	-QN2.2_Q	Pallet Stop Station #4 Unload (SET)

-KF2.22
=V2GL16UQ51UQ5+.GL16UQ51UQ5/1.3
=V2GL16UQ51UQ8+.GL16UQ51UQ8/1.3

FESTO

=V2GL16UQ51UQ5+.GL16UQ51UQ5/1.4	Q2350.4	DO 0 / 1.1	-QN3.1_Q	Pallet Stop Station #5 Mid-Stop (RST)
=V2GL16UQ51UQ5+.GL16UQ51UQ5/1.4	Q2350.5	DO 1 / 1.2	-QN3.2_Q	Pallet Stop Station #5 Mid-Stop (SET)
=V2GL16UQ51UQ8+.GL16UQ51UQ8/1.4	Q2350.6	DO 2 / 2.1	-QN4.1_Q	Spare (RST)
=V2GL16UQ51UQ8+.GL16UQ51UQ8/1.4	Q2350.7	DO 3 / 2.2	-QN4.2_Q	Spare (SET)

			Date	1/24/2023	Volvo Trucks North America	Valiant TMS	CONNECTING MOD. FOR FESTO DQ	Drawing name: =2V01&EFS-EL_KF1	= V2GL16UQ51KF2
			Ed.	MKLEPADLO					+ V2GL16UQ51
			Appr		P6700 Framing - Cell 2V01, KF1			Document type: EFS	Project nr: 22-16152
Modification	Date	Name	Original		Replacement of / Replaced by	Scale 1:1			Page 4 / 1630

0	1	2	3	4	5	6	7	8	9

=V2GL16UQ51KF2
+.GL16UQ51

-KF2.21
=V2GL16UQ51KF2+V2GL16UQ51/4.1

Pallet Stop Station #3 Pre-Unload (RST) =V2GL16UQ51KF1 +V2GL16UQ51 -QN1.1_Q =V2GL16UQ51KF2 +V2GL16UQ51/4.3 Q2350.0	Pallet Stop Station #3 Pre-Unload (SET) =V2GL16UQ51KF1 +V2GL16UQ51 -QN1.2_Q =V2GL16UQ51KF2 +V2GL16UQ51/4.3 Q2350.1
1.1 Pneumatic Valve	1.2 Pneumatic Valve

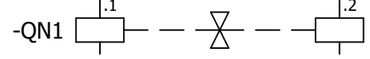

=V2GL16UQ51KF2+V2GL16UQ51/1.1
+.GL16UQ51UQ3.1-W1

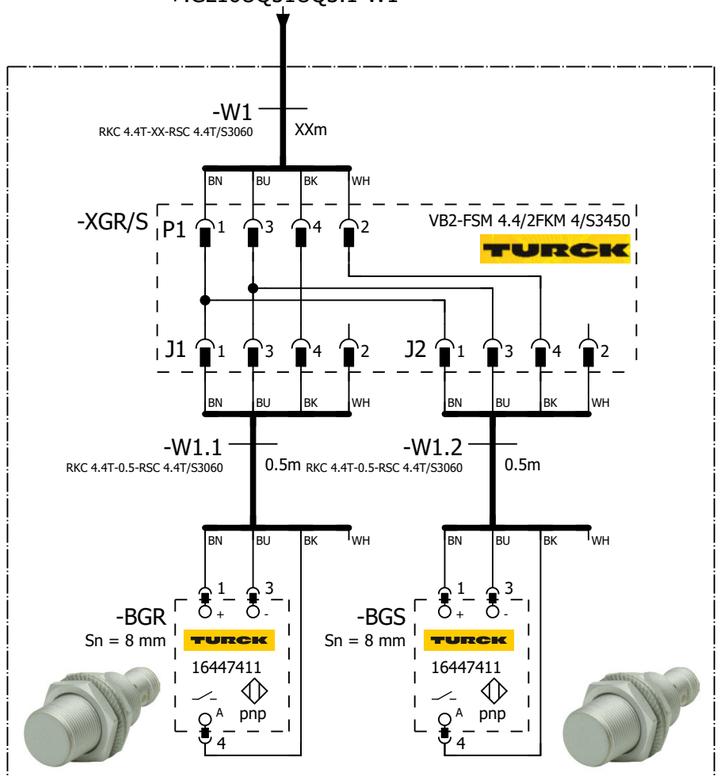

Pallet Stop Station #3 Pre-Unload
=V2GL16UQ51UQ3.1
+.GL16UQ51UQ3.1
-UQ3.1

=V2GL16UQ51 -UQ3.1-BGR Pallet Stop Station #3 Pre-Unload	=V2GL16UQ51 -UQ3.1-BGS Pallet Stop Station #3 Pre-Unload

=V2GL16UQ51KF2+V2GL16UQ51/4

=V2GL16UQ51UQ4+.GL16UQ51UQ4/1

			Date	1/24/2023	Volvo Trucks North America	Valiant TMS	FESTO DQ CONNECTION QN1	Drawing name: =2V01&EFS-EL_KF1	= V2GL16UQ51UQ3
			Ed.	MKLEPADLO					+ V2GL16UQ51UQ3
			Appr		P6700 Framing - Cell 2V01, KF1			Document type: EFS	Project nr: 22-16152
Modification	Date	Name	Original		Replacement of / Replaced by	Scale 1:1			Page 1 / 1630

0	1	2	3	4	5	6	7	8	9

=V2GL16UQ51KF2
+.GL16UQ51

-KF2.21
=V2GL16UQ51KF2+V2GL16UQ51/4.1

Pallet Stop Station #4 Unload (RST)	Pallet Stop Station #4 Unload (SET)
=V2GL16UQ51KF1	=V2GL16UQ51KF1
+V2GL16UQ51	+V2GL16UQ51
-QN2.1_Q	-QN2.2_Q
=V2GL16UQ51KF2	=V2GL16UQ51KF2
+V2GL16UQ51/4.3	+V2GL16UQ51/4.3
Q2350.2	Q2350.3
2.1 Pneumatic Valve	2.2 Pneumatic Valve

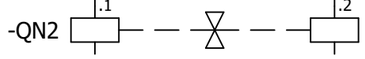

=V2GL16UQ51KF2+V2GL16UQ51/1.2
+.GL16UQ51UQ4.1-W1

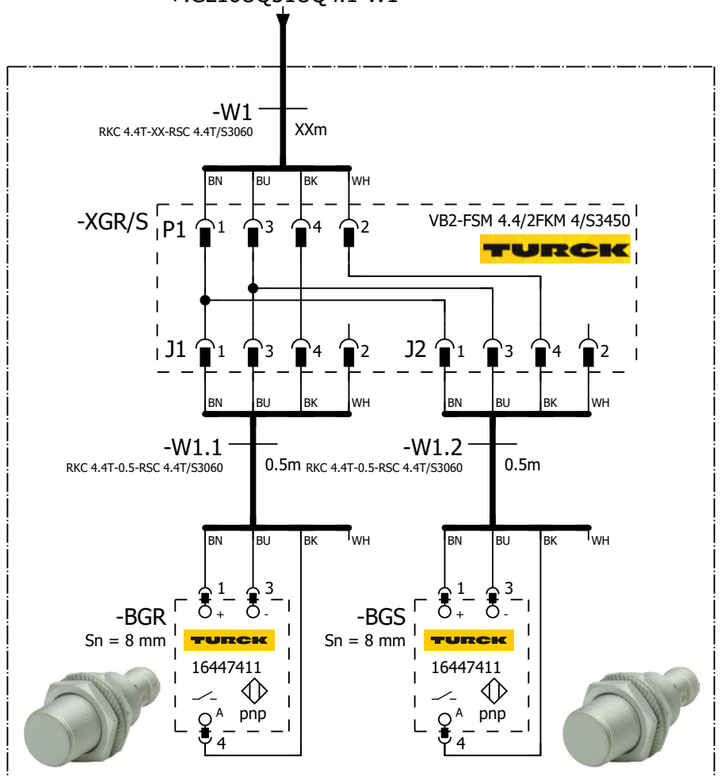

Pallet Stop Station #4 Unload
=V2GL16UQ51UQ4.1
+.GL16UQ51UQ4.1
-UQ4.1

=V2GL16UQ51 -UQ4.1-BGR Pallet Stop Station #4 Unload	=V2GL16UQ51 -UQ4.1-BGS Pallet Stop Station #4 Unload

=V2GL16UQ51UQ3+.GL16UQ51UQ3/1

=V2GL16UQ51UQ5+.GL16UQ51UQ5/1

			Date	1/24/2023	Volvo Trucks North America	Valiant TMS	FESTO DQ CONNECTION QN2	Drawing name: =2V01&EFS-EL_KF1	= V2GL16UQ51UQ4
			Ed.	MKLEPADLO					+ V2GL16UQ51UQ4
			Appr		P6700 Framing - Cell 2V01, KF1			Document type: EFS	Project nr: 22-16152
Modification	Date	Name	Original		Replacement of / Replaced by	Scale 1:1			Page 1 / 1630

0	1	2	3	4	5	6	7	8	9

=V2GL16UQ51KF2
+.GL16UQ51

-KF2.22
=V2GL16UQ51KF2+V2GL16UQ51/4.1

Pallet Stop Station #5 Mid-Stop (RST) =V2GL16UQ51KF1 +V2GL16UQ51 -QN3.1_Q =V2GL16UQ51KF2 +V2GL16UQ51/4.3 Q2350.4	Pallet Stop Station #5 Mid-Stop (SET) =V2GL16UQ51KF1 +V2GL16UQ51 -QN3.2_Q =V2GL16UQ51KF2 +V2GL16UQ51/4.3 Q2350.5
1.1 Pneumatic Valve	1.2 Pneumatic Valve

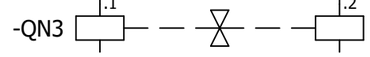

=V2GL16UQ51KF2+V2GL16UQ51/1.3
+.GL16UQ51UQ5.1-W1

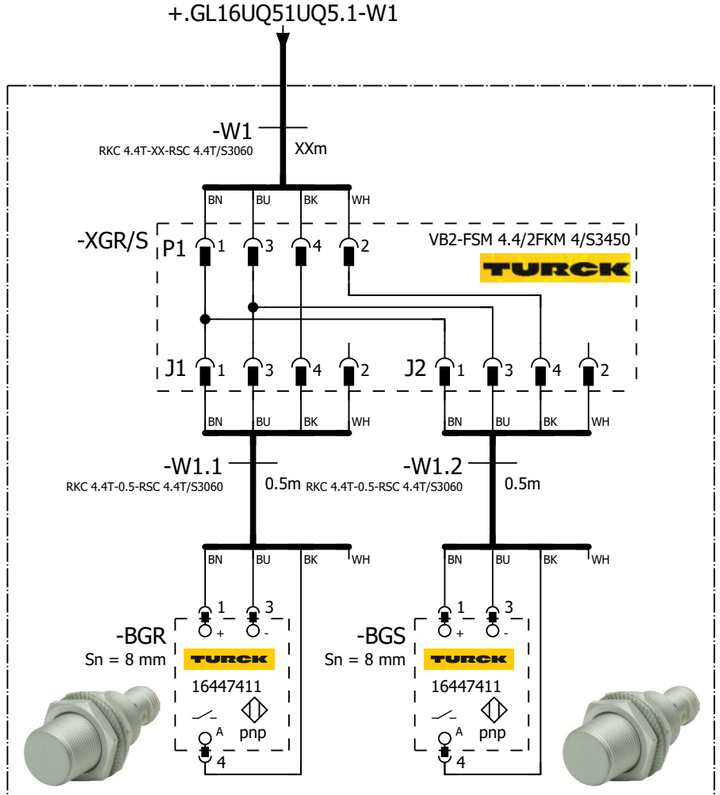

Pallet Stop Station #5 Mid-Stop
=V2GL16UQ51UQ5.1
+.GL16UQ51UQ5.1
-UQ5.1

=V2GL16UQ51 -UQ5.1-BGR Pallet Stop Station #5 Mid-Stop	=V2GL16UQ51 -UQ5.1-BGS Pallet Stop Station #5 Mid-Stop

=V2GL16UQ51UQ4+.GL16UQ51UQ4/1

=V2GL16UQ51UQ8+.GL16UQ51UQ8/1

			Date	1/24/2023	Volvo Trucks North America	Valiant TMS	FESTO DQ CONNECTION QN3	Drawing name: =2V01&EFS-EL_KF1	= V2GL16UQ51UQ5
			Ed.	MKLEPADLO					+ V2GL16UQ51UQ5
			Appr		P6700 Framing - Cell 2V01, KF1			Document type: EFS	Project nr: 22-16152
Modification	Date	Name	Original		Replacement of / Replaced by	Scale 1:1			Page 1 / 1630

0	1	2	3	4	5	6	7	8	9

=V2GL16UQ51KF2
+.GL16UQ51

-KF2.22
=V2GL16UQ51KF2+V2GL16UQ51/4.1

Spare (RST)	Spare (SET)
=V2GL16UQ51KF2 +V2GL16UQ51 -QN4.1_Q =V2GL16UQ51KF2 +V2GL16UQ51/4.3 Q2350.6	=V2GL16UQ51KF2 +V2GL16UQ51 -QN4.2_Q =V2GL16UQ51KF2 +V2GL16UQ51/4.3 Q2350.7
2.1 Pneumatic Valve	2.2 Pneumatic Valve

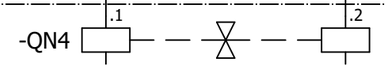

=V2GL16UQ51UQ5+.GL16UQ51UQ5/1

=V2GL16WC1+.GL16UC01/1

			Date	1/24/2023	Volvo Trucks North America	Valiant TMS	FESTO DQ CONNECTION QN4	Drawing name: =2V01&EFS-EL_KF1	= V2GL16UQ51UQ8
			Ed.	MKLEPADLO					+ V2GL16UQ51UQ8
			Appr		P6700 Framing - Cell 2V01, KF1	Scale 1:1		Document type: EFS	Project nr: 22-16152
Modification	Date	Name	Original		Replacement of	Replaced by			Page 1 / 1630

0	1	2	3	4	5	6	7	8	9

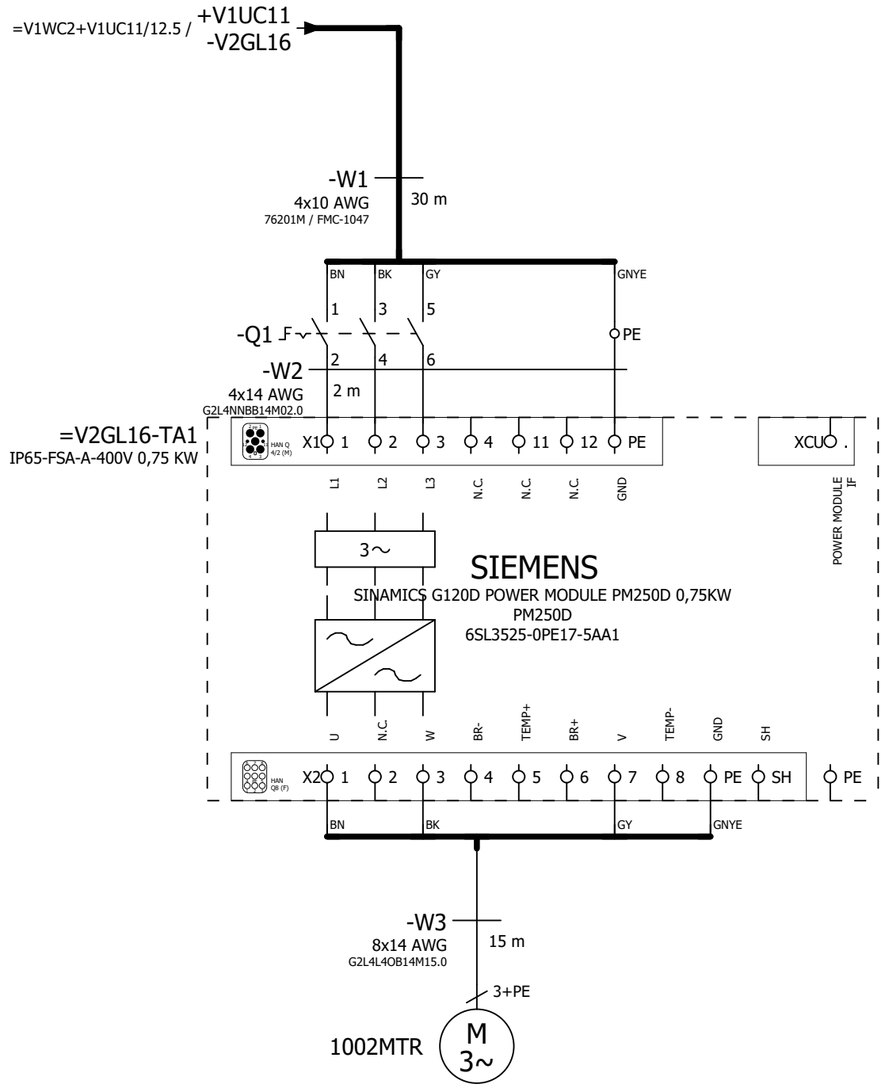

=V2GL16UQ51UQ8+.GL16UQ51UQ8/1

=V2GL17KF2+.GL17KF2/10

			Date	1/24/2023	Volvo Trucks North America		Valiant TMS	Incoming power	Drawing name: =2V01&EFS-EL_KF1	= V2GL16WC1
			Ed.	MKLEPADLO						+ V2GL16UC01
			Appr		P6700 Framing - Cell 2V01, KF1				Document type: EFS	Project nr: 22-16152
Modification	Date	Name	Original		Replacement of	Replaced by	Scale 1:1			Page 1 / 1630

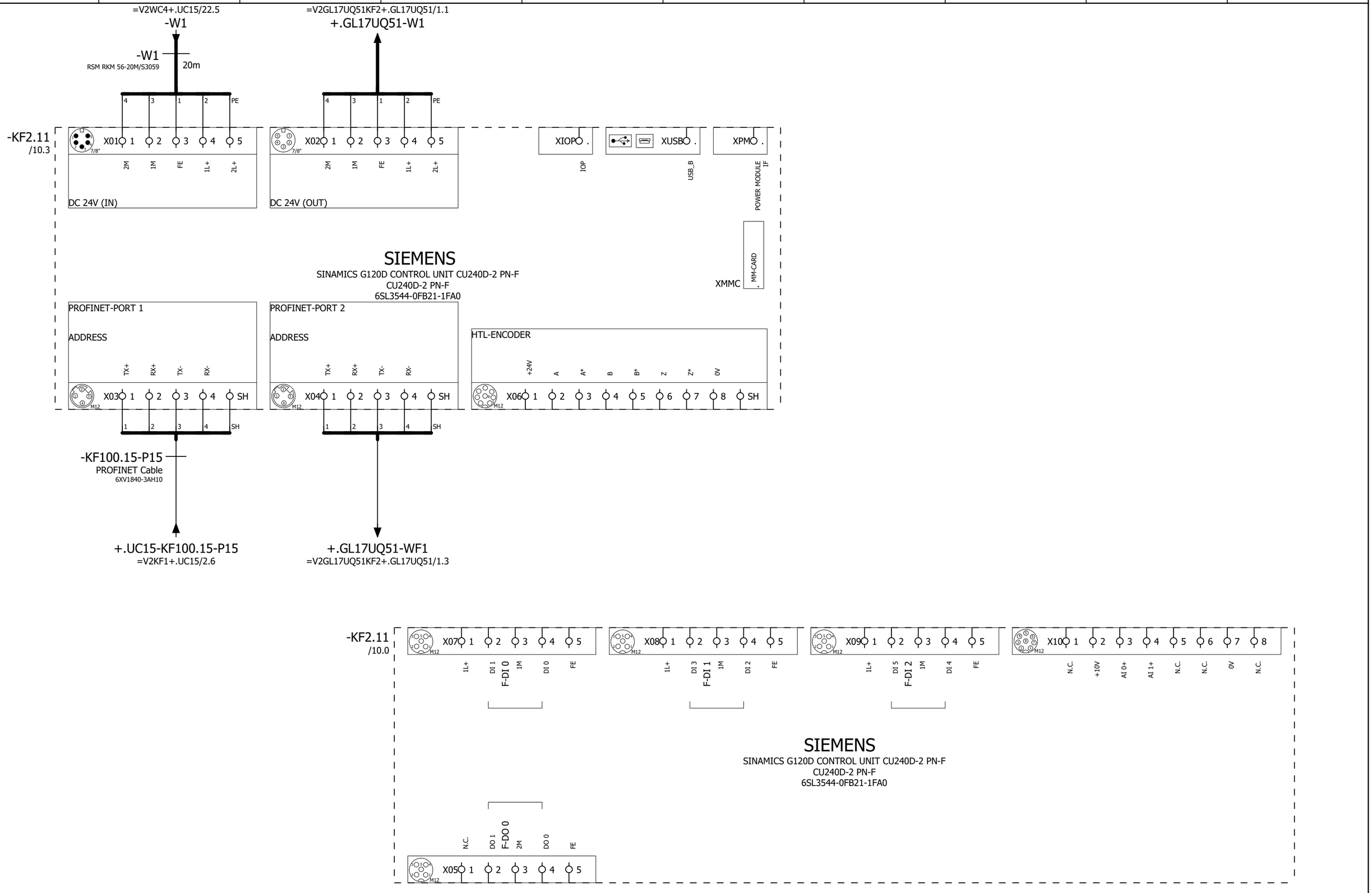

=V2GL16WC1+.GL16UC01/1

=V2GL17UQ51BG0+.GL17UQ51/1

			Date	1/24/2023	Volvo Trucks North America	Valiant TMS	G120D Control Unit	Drawing name: =2V01&EFS-EL_KF1	= V2GL17KF2 + V2GL17KF2
			Ed.	MKLEPADLO	P6700 Framing - Cell 2V01, KF1			Document type: EFS	Project nr: 22-16152
			Appr						Page 10
Modification	Date	Name	Original		Replacement of / Replaced by	Scale 1:1			1630

0	1	2	3	4	5	6	7	8	9

=V2GL17UQ51KF2/2.1
-BG05

-W5
RKC 4.4T-XX-RSC 4.4T/S3060
XXm

BN BU BK WH

-BG05
Sn = 8 mm
TURCK
1644741
pnp

=V2GL17UQ51
-BG05
Pallet Present at
Pre-Unload Sta #3

=V2GL17UQ51KF2/2.2
-XG6/17

-W6
RKC 4.4T-XX-RSC 4.4T/S3060
XXm

-XG6/17 P1 VB2-FSM 4.4/2FKM 4/S3450
TURCK
J1
J2

-W6.1
RKC 4.4T-XX-RSC 4.4T/S3060
XXm

-W6.2
RKC 4.4T-XX-RSC 4.4T/S3060
XXm

-BG06
Sn = 8 mm
TURCK
1644741
pnp

-BG17
Sn = 1000 mm
BANNER
71959
pnp

=V2GL17UQ51
-BG06
Pallet Present at
Unload Sta #4

=V2GL17UQ51
-BG17
Part Present
At Unload

=V2GL17UQ51KF2/2.3
-XG7/12

-W7
RKC 4.4T-XX-RSC 4.4T/S3060
XXm

-XG7/12 P1 VB2-FSM 4.4/2FKM 4/S3450
TURCK
J1
J2

-W7.1
RKC 4.4T-XX-RSC 4.4T/S3060
XXm

-W7.2
RKC 4.4T-XX-RSC 4.4T/S3060
XXm

-BG07
Sn = 8 mm
TURCK
1644741
pnp

-BG12
Sn = 8 mm
TURCK
1644741
pnp

=V2GL17UQ51
-BG07
Pallet Present at
Accum Zone 4-5

=V2GL17UQ51
-BG12
Drive Overtorque
Sensor

=V2GL17KF2+.GL17KF2/10

			Date	1/24/2023	Volvo Trucks North America	Valiant TMS	SENSORS	Drawing name: =2V01&EFS-EL_KF1	= V2GL17UQ51BG0
			Ed.	MKLEPADLO					+ V2GL17UQ51
			Appr		P6700 Framing - Cell 2V01, KF1	Scale 1:1		Document type: EFS	Project nr: 22-16152 / Page 1 / 1630
Modification	Date	Name	Original		Replacement of / Replaced by				

0	1	2	3	4	5	6	7	8	9

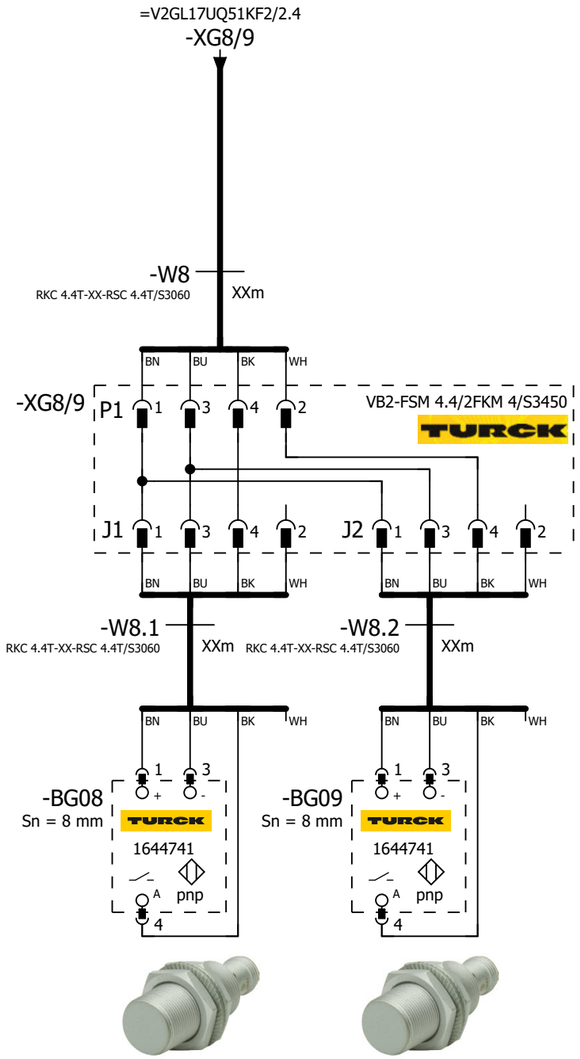

=V2GL17UQ51
-BG08
Pallet Present at
Mid-Stop Sta #5

=V2GL17UQ51
-BG09
Pallet Present at
Accum Zone 5-6

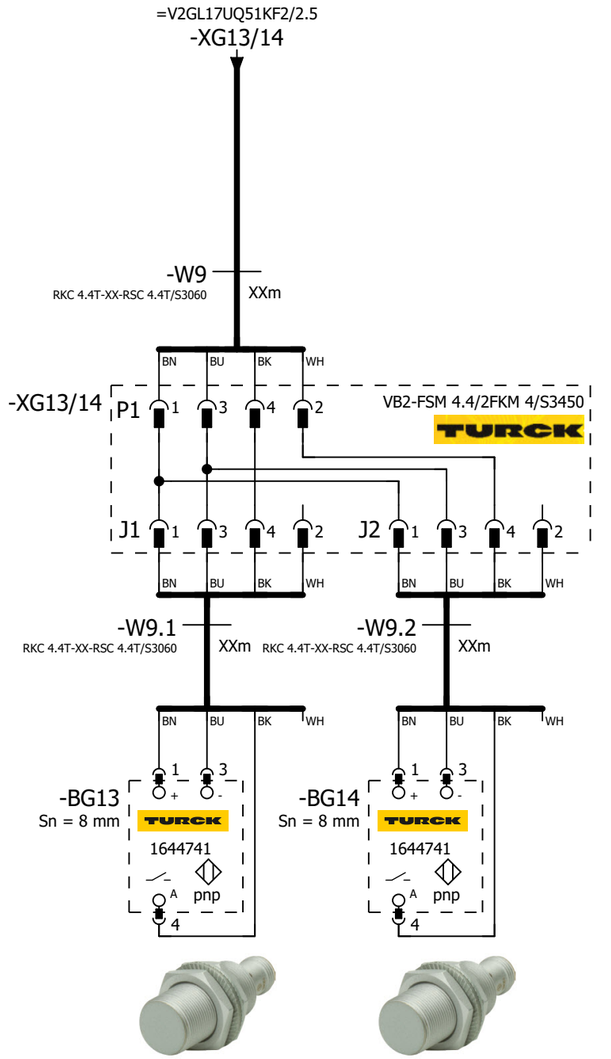

=V2GL17UQ51
-BG13
Chain Tension
Alert On Take-up

=V2GL17UQ51
-BG14
Broken Chain Alert
On Take-up

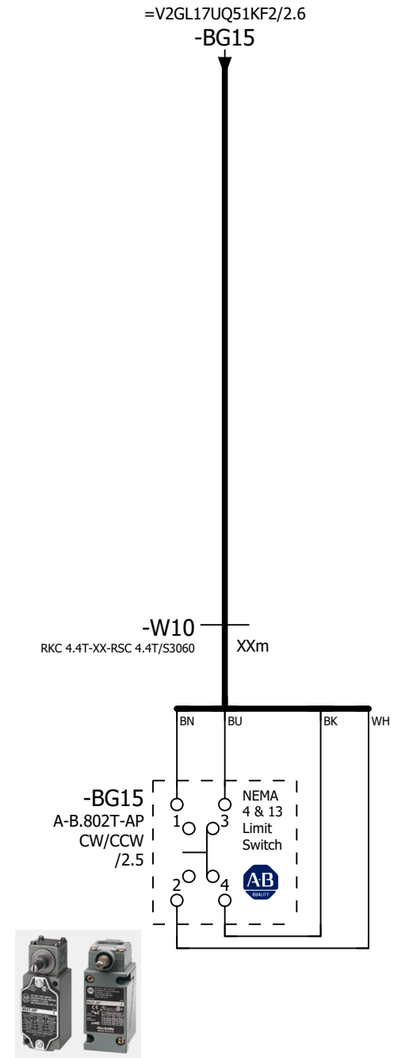

=V2GL17UQ51
-BG15
Part Overtravel

1

=V2GL17UQ51KF2/1

			Date	1/24/2023	Volvo Trucks North America	Valiant TMS	SENSORS	Drawing name: =2V01&EFS-EL_KF1	= V2GL17UQ51BG0
			Ed.	MKLEPADLO					+ V2GL17UQ51
			Appr		P6700 Framing - Cell 2V01, KF1			Document type: EFS	Project nr: 22-16152
Modification	Date	Name	Original		Replacement of	Replaced by	Scale 1:1		Page 2 / 1630

0	1	2	3	4	5	6	7	8	9

=V2GL17KF2+.GL17KF2/10.2 / W1

-W1
RSM RKM 56-5M/S3059
5m

1 2 PE 4 5

X20 M12, 7/8" 1 2 3 4 5

0V_VAL / OUT
0V_EL / SEN
FE
24V_EL / SEN
24V_VAL / OUT

ON
OFF
1 2 1 2

=V2GL17KF2+.GL17KF2/10.2 / -WF1

-WF1
PROFINET Cable
6XV1840-3AH10

M12 -TP1

M12 -TP2

-KF2

FESTO
Bus node + Interlinking block
548755 + 550208

-KF2.11

FESTO
CPX-M-AB-8-M12X2-5POL
549335

I2400.0	DI 0 X1:4	V2GL17UQ51UQ3.1-BGR	Pallet Stop Station #3 Pre-Unload (RESET)
I2400.1	DI 1 X1:2	V2GL17UQ51UQ3.1-BGS	Pallet Stop Station #3 Pre-Unload (SET)
I2400.2	DI 2 X2:4	V2GL17UQ51UQ4.1-BGR	Pallet Stop Station #4 Unload (RESET)
I2400.3	DI 3 X2:2	V2GL17UQ51UQ4.1-BGS	Pallet Stop Station #4 Unload (SET)
I2400.4	DI 4 X3:4	V2GL17UQ51UQ5.1-BGR	Pallet Stop Station #5 Mid-Stop (RESET)
I2400.5	DI 5 X3:2	V2GL17UQ51UQ5.1-BGS	Pallet Stop Station #5 Mid-Stop (SET)
I2400.6	DI 6 X4:4	I2400.6	SPARE
I2400.7	DI 7 X4:2	I2400.7	SPARE
I2401.0	DI 8 X5:4	I2401.0	SPARE
I2401.1	DI 9 X5:2	I2401.1	SPARE
I2401.2	DI 10 X6:4	I2401.2	SPARE
I2401.3	DI 11 X6:2	I2401.3	SPARE
I2401.4	DI 12 X7:4	I2401.4	SPARE
I2401.5	DI 13 X7:2	I2401.5	SPARE
I2401.6	DI 14 X8:4	I2401.6	SPARE
I2401.7	DI 15 X8:2	I2401.7	SPARE

X1 M12 1 2 3 4 5 — 24V | DI 1 | 0V | DI 0 | FE — BN | WH | BU | BK

X2 M12 1 2 3 4 5 — 24V | DI 3 | 0V | DI 2 | FE — BN | WH | BU | BK

X3 M12 1 2 3 4 5 — 24V | DI 5 | 0V | DI 4 | FE — BN | WH | BU | BK

X4 M12 1 2 3 4 5 — 24V | DI 7 | 0V | DI 6 | FE

X5 M12 1 2 3 4 5 — 24V | DI 9 | 0V | DI 8 | FE

X6 M12 1 2 3 4 5 — 24V | DI 11 | 0V | DI 10 | FE

X7 M12 1 2 3 4 5 — 24V | DI 13 | 0V | DI 12 | FE

X8 M12 1 2 3 4 5 — 24V | DI 15 | 0V | DI 14 | FE

+.GL17UQ51UQ3.1-W1
=V2GL17UQ51UQ3+.GL17UQ51UQ3/1.1

+.GL17UQ51UQ4.1-W1
=V2GL17UQ51UQ4+.GL17UQ51UQ4/1.1

+.GL17UQ51UQ5.1-W1
=V2GL17UQ51UQ5+.GL17UQ51UQ5/1.1

=V2GL17UQ51BG0/2

2

			Date	1/24/2023	Volvo Trucks North America	Valiant TMS	CONNECTING MOD. FOR VTSA MANIFOLD	Drawing name: =2V01&EFS-EL_KF1	= V2GL17UQ51KF2
			Ed.	MKLEPADLO					+ V2GL17UQ51
			Appr		P6700 Framing - Cell 2V01, KF1			Document type: EFS	Project nr: 22-16152
Modification	Date	Name	Original		Replacement of	Replaced by	Scale 1:1		Page 1 / 1630

0	1	2	3	4	5	6	7	8	9

-KF2.12

FESTO

CPX-M-AB-8-M12X2-5POL

549335

I2402.0	DI 0 X1:4	V2GL17UQ51-BG05	Sensor Pallet Present at Pre-Unload Sta #3
I2402.1	DI 1 X1:2	I2402.1	SPARE
I2402.2	DI 2 X2:4	V2GL17UQ51-BG06	Sensor Pallet Present at Unload Sta #4
I2402.3	DI 3 X2:2	V2GL17UQ51-BG17	Sensor Part Present At Unload
I2402.4	DI 4 X3:4	V2GL17UQ51-BG07	Sensor Pallet Present at Accum Zone 4-5
I2402.5	DI 5 X3:2	V2GL17UQ51-BG12	Sensor Drive Overtorque
I2402.6	DI 6 X4:4	V2GL17UQ51-BG08	Sensor Pallet Present at Mid-Stop Sta #5
I2402.7	DI 7 X4:2	V2GL17UQ51-BG09	Sensor Pallet Present at Accum Zone 5-6
I2403.0	DI 8 X5:4	V2GL17UQ51-BG13	Sensor Chain Tension Alert On Take-up
I2403.1	DI 9 X5:2	V2GL17UQ51-BG14	Sensor Broken Chain Alert On Take-up
I2403.2	DI 10 X6:4	V2GL17UQ51-BG15	Part Overtravel N.O.
I2403.3	DI 11 X6:2	V2GL17UQ51-BG15	Part Overtravel N.C.
I2403.4	DI 12 X7:4	I2403.4	SPARE
I2403.5	DI 13 X7:2	I2403.5	SPARE
I2403.6	DI 14 X8:4	I2403.6	SPARE
I2403.7	DI 15 X8:2	I2403.7	SPARE

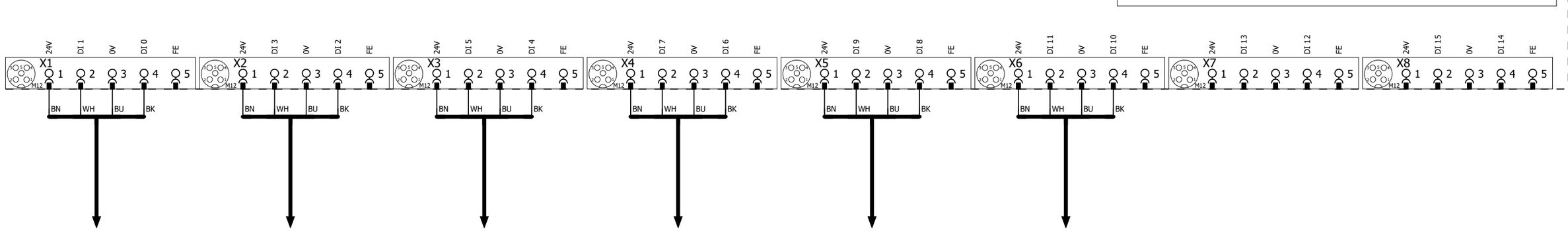

1 3

			Date	1/24/2023	Volvo Trucks North America	Valiant TMS	I/O MOD. DI16 (8 x M12) FOR VTSA-F	Drawing name: =2V01&EFS-EL_KF1	= V2GL17UQ51KF2
			Ed.	MKLEPADLO					+ V2GL17UQ51
			Appr		P6700 Framing - Cell 2V01, KF1	Scale 1:1		Document type: EFS	Project nr: 22-16152
Modification	Date	Name	Original		Replacement of	Replaced by			Page 2 / 1630

0	1	2	3	4	5	6	7	8	9

-KF2.13

FESTO

CPX-M-AB-8-M12X2-5POL

549335

I2404.0	DI 0 X1:4	I2404.0	SPARE
I2404.1	DI 1 X1:2	I2404.1	SPARE
I2404.2	DI 2 X2:4	I2404.2	SPARE
I2404.3	DI 3 X2:2	I2404.3	SPARE
I2404.4	DI 4 X3:4	I2404.4	SPARE
I2404.5	DI 5 X3:2	I2404.5	SPARE
I2404.6	DI 6 X4:4	I2404.6	SPARE
I2404.7	DI 7 X4:2	I2404.7	SPARE
I2405.0	DI 8 X5:4	I2405.0	SPARE
I2405.1	DI 9 X5:2	I2405.1	SPARE
I2405.2	DI 10 X6:4	I2405.2	SPARE
I2405.3	DI 11 X6:2	I2405.3	SPARE
I2405.4	DI 12 X7:4	I2405.4	SPARE
I2405.5	DI 13 X7:2	I2405.5	SPARE
I2405.6	DI 14 X8:4	I2405.6	SPARE
I2405.7	DI 15 X8:2	I2405.7	SPARE

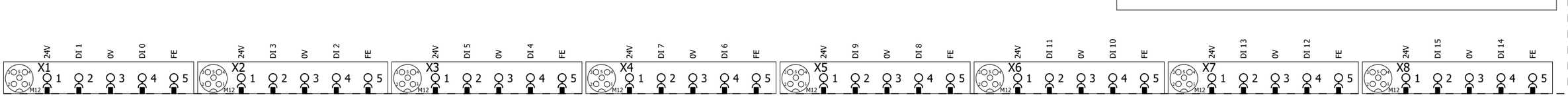

2 4

			Date	1/24/2023	Volvo Trucks North America	Valiant TMS	I/O MOD. DI16 (8 x M12) FOR VTSA-F	Drawing name: =2V01&EFS-EL_KF1	= V2GL17UQ51KF2	
			Ed.	MKLEPADLO					+ V2GL17UQ51	
			Appr		P6700 Framing - Cell 2V01, KF1	Scale 1:1		Document type: EFS	Project nr: 22-16152	Page 3
Modification	Date	Name	Original		Replacement of / Replaced by					1630

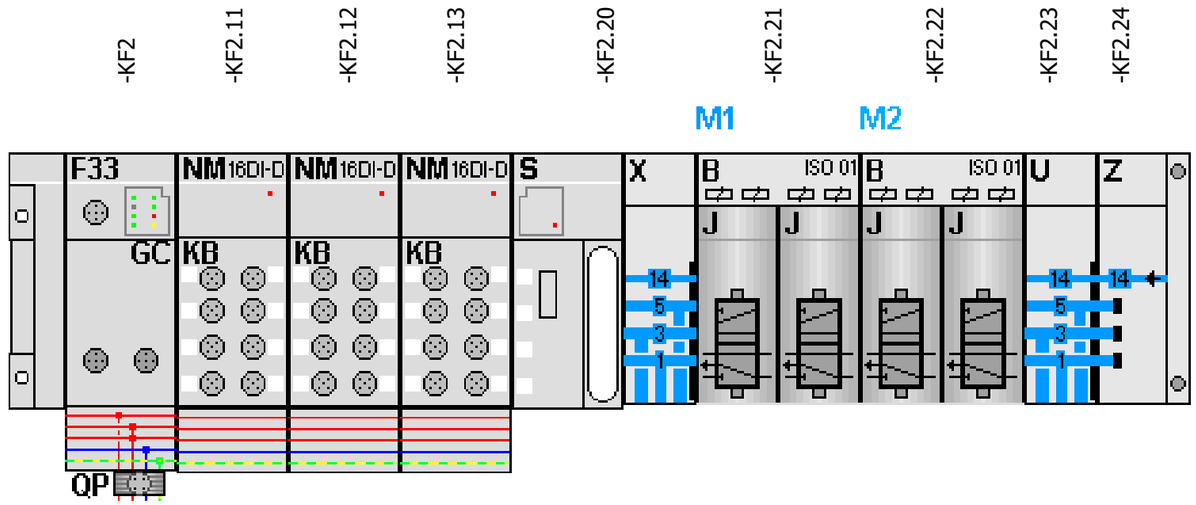

-KF2.21
=V2GL17UQ51UQ3+.GL17UQ51UQ3/1.3
=V2GL17UQ51UQ4+.GL17UQ51UQ4/1.3

FESTO

=V2GL17UQ51UQ3+.GL17UQ51UQ3/1.4	Q2400.0 DO 0 1.1	-QN1.1_Q	Pallet Stop Station #3 Pre-Unload (RST)
=V2GL17UQ51UQ3+.GL17UQ51UQ3/1.4	Q2400.1 DO 1 1.2	-QN1.2_Q	Pallet Stop Station #3 Pre-Unload (SET)
=V2GL17UQ51UQ4+.GL17UQ51UQ4/1.4	Q2400.2 DO 2 2.1	-QN2.1_Q	Pallet Stop Station #4 Unload (RST)
=V2GL17UQ51UQ4+.GL17UQ51UQ4/1.4	Q2400.3 DO 3 2.2	-QN2.2_Q	Pallet Stop Station #4 Unload (SET)

-KF2.22
=V2GL17UQ51UQ5+.GL17UQ51UQ5/1.3
=V2GL17UQ51UQ8+.GL17UQ51UQ8/1.3

FESTO

=V2GL17UQ51UQ5+.GL17UQ51UQ5/1.4	Q2400.4 DO 0 1.1	-QN3.1_Q	Pallet Stop Station #5 Mid-Stop (RST)
=V2GL17UQ51UQ5+.GL17UQ51UQ5/1.4	Q2400.5 DO 1 1.2	-QN3.2_Q	Pallet Stop Station #5 Mid-Stop (SET)
=V2GL17UQ51UQ8+.GL17UQ51UQ8/1.4	Q2400.6 DO 2 2.1	-QN4.1_Q	Spare (RST)
=V2GL17UQ51UQ8+.GL17UQ51UQ8/1.4	Q2400.7 DO 3 2.2	-QN4.2_Q	Spare (SET)

			Date	1/24/2023	Volvo Trucks North America		Valiant TMS	CONNECTING MOD. FOR FESTO DQ	Drawing name: =2V01&EFS-EL_KF1	= V2GL17UQ51KF2
			Ed.	MKLEPADLO						+ V2GL17UQ51
			Appr		P6700 Framing - Cell 2V01, KF1				Document type: EFS	Project nr: 22-16152
Modification	Date	Name	Original		Replacement of	Replaced by	Scale 1:1			Page 4 / 1630

0	1	2	3	4	5	6	7	8	9

=V2GL17UQ51KF2
+.GL17UQ51

-KF2.21
=V2GL17UQ51KF2+V2GL17UQ51/4.1

Pallet Stop
Station #3 Pre-Unload (RST)
=V2GL17UQ51KF1
+V2GL17UQ51
-QN1.1_Q
=V2GL17UQ51KF2
+V2GL17UQ51/4.3
Q2400.0

Pallet Stop
Station #3 Pre-Unload (SET)
=V2GL17UQ51KF1
+V2GL17UQ51
-QN1.2_Q
=V2GL17UQ51KF2
+V2GL17UQ51/4.3
Q2400.1

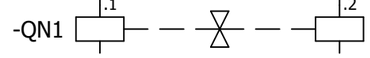

=V2GL17UQ51KF2+V2GL17UQ51/1.1
+.GL17UQ51UQ3.1-W1

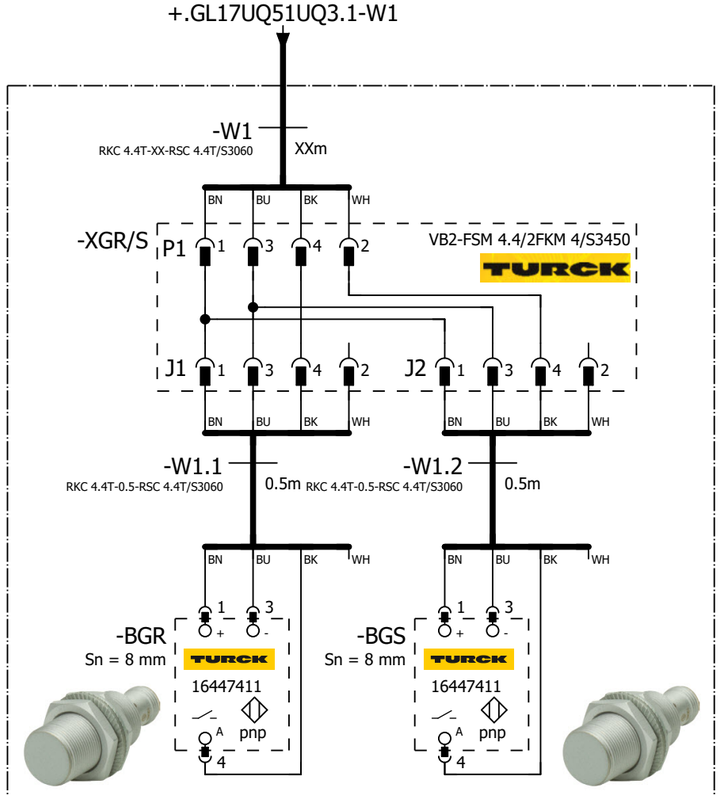

Pallet Stop Station #3 Pre-Unload
=V2GL17UQ51UQ3.1
+.GL17UQ51UQ3.1
-UQ3.1

=V2GL17UQ51 -UQ3.1-BGR Pallet Stop Station #3 Pre-Unload	=V2GL17UQ51 -UQ3.1-BGS Pallet Stop Station #3 Pre-Unload

=V2GL17UQ51KF2+V2GL17UQ51/4

=V2GL17UQ51UQ4+.GL17UQ51UQ4/1

			Date	1/24/2023	Volvo Trucks North America	Valiant TMS	FESTO DQ CONNECTION QN1	Drawing name: =2V01&EFS-EL_KF1	= V2GL17UQ51UQ3
			Ed.	MKLEPADLO					+ V2GL17UQ51UQ3
			Appr		P6700 Framing - Cell 2V01, KF1			Document type: EFS	Project nr: 22-16152
Modification	Date	Name	Original		Replacement of / Replaced by	Scale 1:1			Page 1 / 1630

0	1	2	3	4	5	6	7	8	9

=V2GL17UQ51KF2
+.GL17UQ51

-KF2.21
=V2GL17UQ51KF2+V2GL17UQ51/4.1

Pallet Stop
Station #4 Unload (RST)
=V2GL17UQ51KF1
+V2GL17UQ51
-QN2.1_Q
=V2GL17UQ51KF2
+V2GL17UQ51/4.3
Q2400.2

Pallet Stop
Station #4 Unload (SET)
=V2GL17UQ51KF1
+V2GL17UQ51
-QN2.2_Q
=V2GL17UQ51KF2
+V2GL17UQ51/4.3
Q2400.3

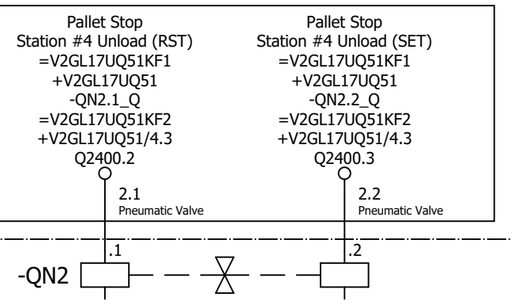

=V2GL17UQ51KF2+V2GL17UQ51/1.2
+.GL17UQ51UQ4.1-W1

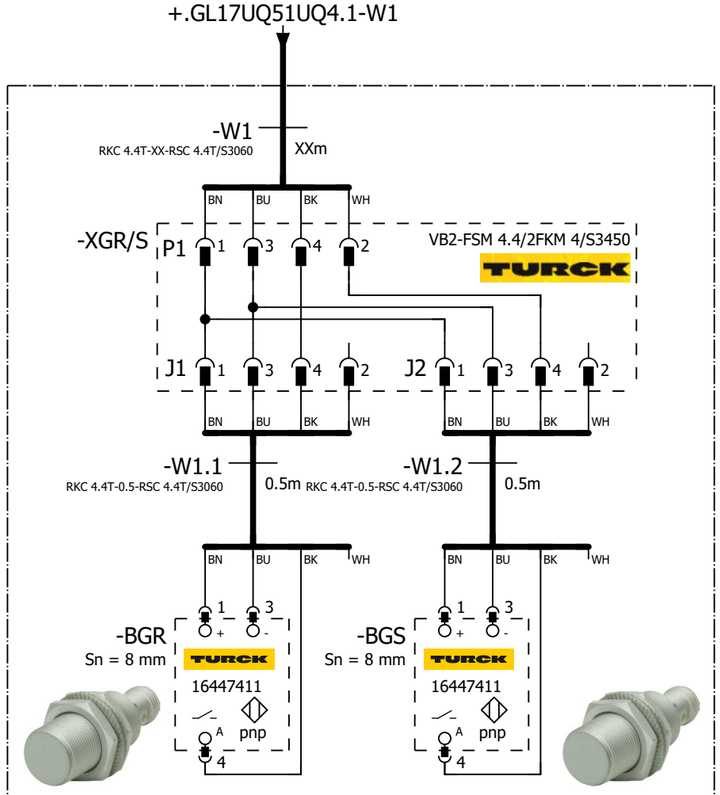

Pallet Stop Station #4 Unload
=V2GL17UQ51UQ4.1
+.GL17UQ51UQ4.1
-UQ4.1

=V2GL17UQ51 -UQ4.1-BGR Pallet Stop Station #4 Unload	=V2GL17UQ51 -UQ4.1-BGS Pallet Stop Station #4 Unload

=V2GL17UQ51UQ3+.GL17UQ51UQ3/1

=V2GL17UQ51UQ5+.GL17UQ51UQ5/1

			Date	1/24/2023	Volvo Trucks North America	Valiant TMS	FESTO DQ CONNECTION QN2	Drawing name: =2V01&EFS-EL_KF1	= V2GL17UQ51UQ4
			Ed.	MKLEPADLO					+ V2GL17UQ51UQ4
			Appr		P6700 Framing - Cell 2V01, KF1			Document type: EFS	Project nr: 22-16152
Modification	Date	Name	Original		Replacement of / Replaced by	Scale 1:1			Page 1 / 1630

0	1	2	3	4	5	6	7	8	9

=V2GL17UQ51KF2
+.GL17UQ51

-KF2.22
=V2GL17UQ51KF2+V2GL17UQ51/4.1

Pallet Stop
Station #5 Mid-Stop (RST)
=V2GL17UQ51KF1
+V2GL17UQ51
-QN3.1_Q
=V2GL17UQ51KF2
+V2GL17UQ51/4.3
Q2400.4

Pallet Stop
Station #5 Mid-Stop (SET)
=V2GL17UQ51KF1
+V2GL17UQ51
-QN3.2_Q
=V2GL17UQ51KF2
+V2GL17UQ51/4.3
Q2400.5

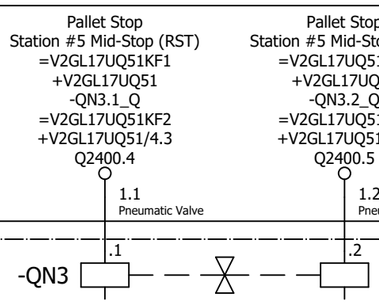

=V2GL17UQ51KF2+V2GL17UQ51/1.3
+.GL17UQ51UQ5.1-W1

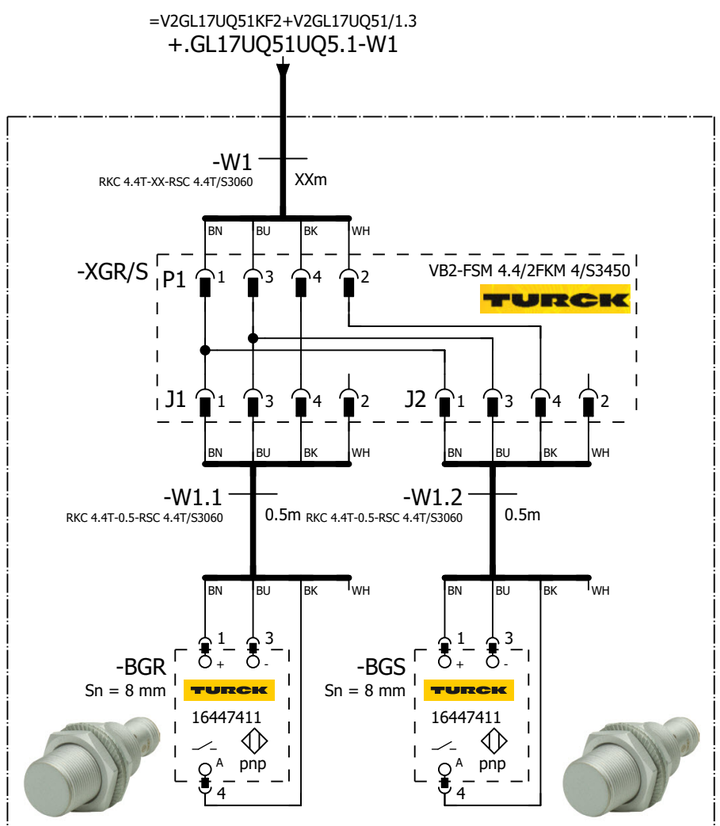

Pallet Stop Station #5 Mid-Stop
=V2GL17UQ51UQ5.1
+.GL17UQ51UQ5.1
-UQ5.1

=V2GL17UQ51 -UQ5.1-BGR Pallet Stop Station #5 Mid-Stop	=V2GL17UQ51 -UQ5.1-BGS Pallet Stop Station #5 Mid-Stop

=V2GL17UQ51UQ4+.GL17UQ51UQ4/1

=V2GL17UQ51UQ8+.GL17UQ51UQ8/1

			Date	1/24/2023	Volvo Trucks North America		Valiant TMS	FESTO DQ CONNECTION QN3	Drawing name: =2V01&EFS-EL_KF1	= V2GL17UQ51UQ5
			Ed.	MKLEPADLO						+ V2GL17UQ51UQ5
			Appr		P6700 Framing - Cell 2V01, KF1				Document type: EFS	Project nr: 22-16152
Modification	Date	Name	Original		Replacement of	Replaced by	Scale 1:1			Page 1 / 1630

0	1	2	3	4	5	6	7	8	9

=V2GL17UQ51KF2
+.GL17UQ51

-KF2.22
=V2GL17UQ51KF2+V2GL17UQ51/4.1

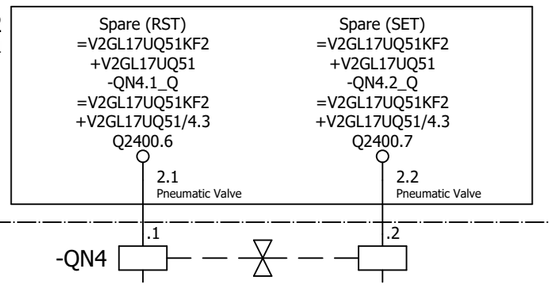

=V2GL17UQ51UQ5+.GL17UQ51UQ5/1

=V2GL17WC1+.GL17UC01/1

			Date	1/24/2023	Volvo Trucks North America	Valiant TMS	FESTO DQ CONNECTION QN4	Drawing name: =2V01&EFS-EL_KF1	= V2GL17UQ51UQ8
			Ed.	MKLEPADLO					+ V2GL17UQ51UQ8
			Appr		P6700 Framing - Cell 2V01, KF1	Scale 1:1		Document type: EFS / Project nr: 22-16152	Page 1 / 1630
Modification	Date	Name	Original		Replacement of / Replaced by				

0	1	2	3	4	5	6	7	8	9

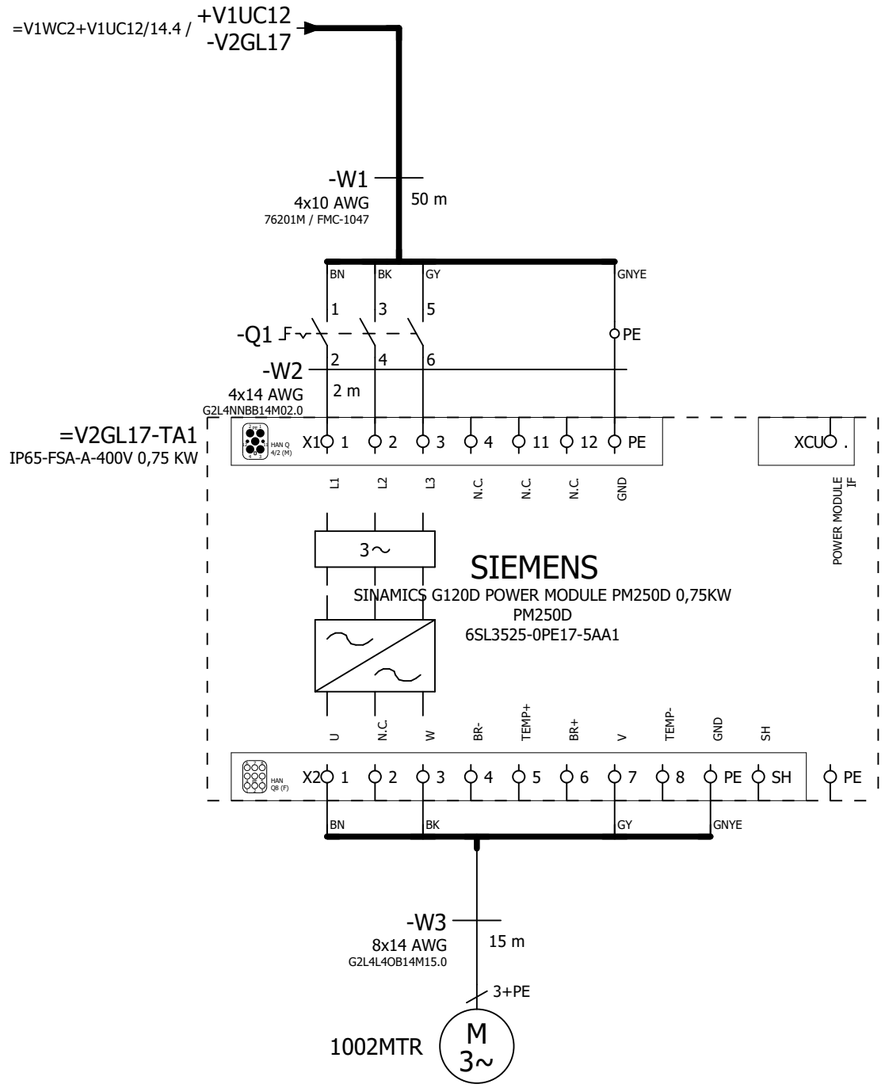

=V2GL17UQ51UQ8+.GL17UQ51UQ8/1

=V2GL18KF2+.GL18KF2/10

			Date	1/24/2023	Volvo Trucks North America		Valiant TMS	Incoming power	Drawing name: =2V01&EFS-EL_KF1	= V2GL17WC1
			Ed.	MKLEPADLO						+ V2GL17UC01
			Appr		P6700 Framing - Cell 2V01, KF1		Scale 1:1		Document type: EFS	Project nr: 22-16152
Modification	Date	Name	Original		Replacement of	Replaced by				Page 1 / 1630

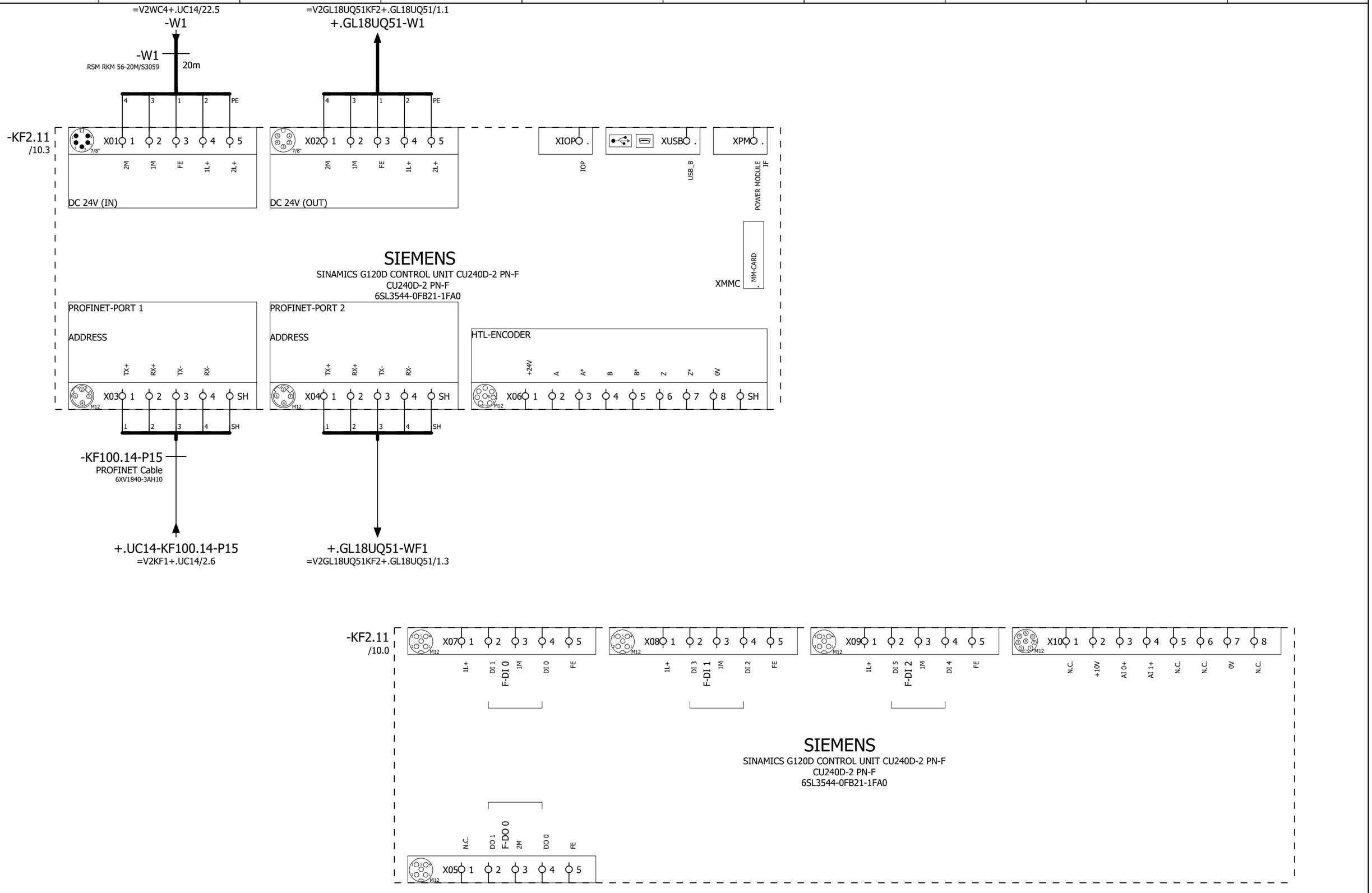

=V2GL17WC1+.GL17UC01/1

=V2GL18UQ51BG0+.GL18UQ51/1

			Date	1/24/2023	Volvo Trucks North America	Valiant TMS	G120D Control Unit	Drawing name: =2V01&EFS-EL_KF1	= V2GL18KF2 + V2GL18KF2
			Ed.	MKLEPADLO	P6700 Framing - Cell 2V01, KF1				
			Appr					Document type: EFS	Project nr: 22-16152
Modification	Date	Name	Original		Replacement of / Replaced by	Scale 1:1			Page 10 / 1630

0	1	2	3	4	5	6	7	8	9

=V2GL18UQ51KF2/2.1

-BG05

-W5

RKC 4.4T-XX-RSC 4.4T/S3060

XXm

BN BU BK WH

-BG05

Sn = 8 mm

TURCK

1644741

pnp

=V2GL18UQ51
-BG05
Pallet Present at
Pre-Unload Sta #3

=V2GL18UQ51KF2/2.2

-XG6/17

-W6

RKC 4.4T-XX-RSC 4.4T/S3060

XXm

BN BU BK WH

-XG6/17

P1 1 3 4 2

VB2-FSM 4.4/2FKM 4/S3450

TURCK

J1 1 3 4 2

J2 1 3 4 2

BN BU BK WH

-W6.1

RKC 4.4T-XX-RSC 4.4T/S3060

XXm

-W6.2

RKC 4.4T-XX-RSC 4.4T/S3060

XXm

BN BU BK WH

-BG06

Sn = 8 mm

TURCK

1644741

pnp

-BG17

Sn = 1000 mm

BANNER

71959

BN BU BK pnp

=V2GL18UQ51
-BG06
Pallet Present at
Unload Sta #4

=V2GL18UQ51
-BG17
Part Present
At Unload

=V2GL18UQ51KF2/2.3

-XG7/12

-W7

RKC 4.4T-XX-RSC 4.4T/S3060

XXm

BN BU BK WH

-XG7/12

P1 1 3 4 2

VB2-FSM 4.4/2FKM 4/S3450

TURCK

J1 1 3 4 2

J2 1 3 4 2

BN BU BK WH

-W7.1

RKC 4.4T-XX-RSC 4.4T/S3060

XXm

-W7.2

RKC 4.4T-XX-RSC 4.4T/S3060

XXm

BN BU BK WH

-BG07

Sn = 8 mm

TURCK

1644741

pnp

-BG12

Sn = 8 mm

TURCK

1644741

pnp

=V2GL18UQ51
-BG07
Pallet Present at
Accum Zone 4-5

=V2GL18UQ51
-BG12
Drive Overtorque
Sensor

=V2GL18KF2+.GL18KF2/10

			Date	1/24/2023	Volvo Trucks North America	Valiant TMS	SENSORS	Drawing name: =2V01&EFS-EL_KF1	= V2GL18UQ51BG0
			Ed.	MKLEPADLO					+ V2GL18UQ51
			Appr		P6700 Framing - Cell 2V01, KF1			Document type: EFS	Project nr: 22-16152
Modification	Date	Name	Original		Replacement of	Replaced by	Scale 1:1		Page 1 / 1630

0	1	2	3	4	5	6	7	8	9

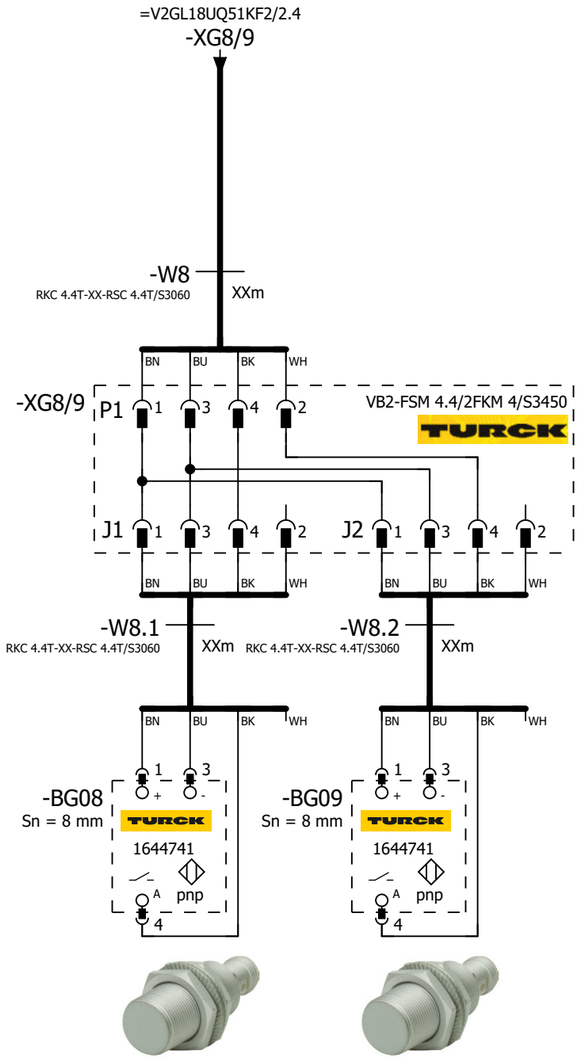

=V2GL18UQ51
-BG08
Pallet Present at
Mid-Stop Sta #5

=V2GL18UQ51
-BG09
Pallet Present at
Accum Zone 5-6

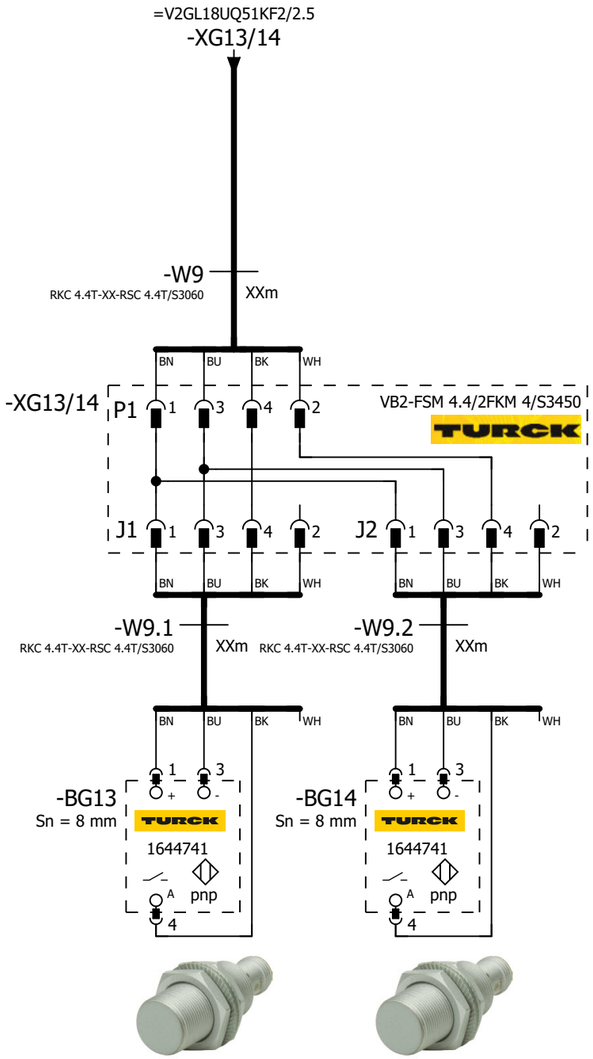

=V2GL18UQ51
-BG13
Chain Tension
Alert On Take-up

=V2GL18UQ51
-BG14
Broken Chain Alert
On Take-up

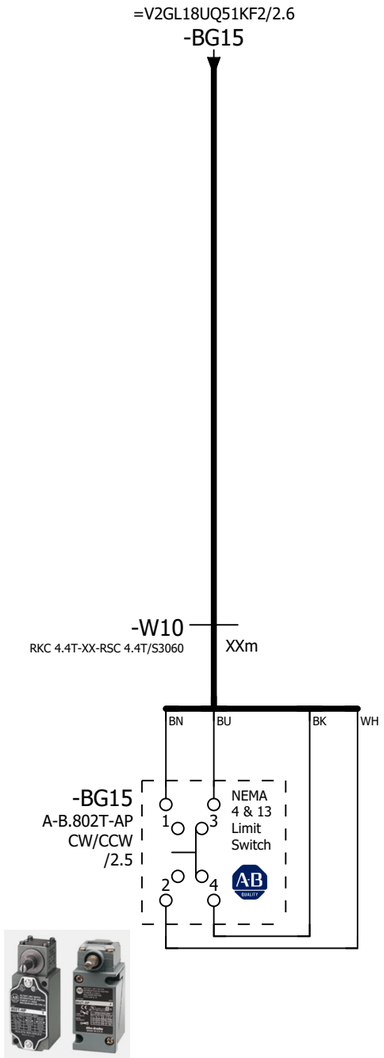

=V2GL18UQ51
-BG15
Part Overtravel

1

=V2GL18UQ51KF2/1

			Date	1/24/2023	Volvo Trucks North America	Valiant TMS	SENSORS	Drawing name: =2V01&EFS-EL_KF1	= V2GL18UQ51BG0
			Ed.	MKLEPADLO					+ V2GL18UQ51
			Appr		P6700 Framing - Cell 2V01, KF1			Document type: EFS	Project nr: 22-16152
Modification	Date	Name	Original		Replacement of / Replaced by	Scale 1:1			Page 2 / 1630

0	1	2	3	4	5	6	7	8	9

=V2GL18KF2+.GL18KF2/10.2 / W1

-W1
RSM RKM 56-5M/S3059
5m

=V2GL18KF2+.GL18KF2/10.2 / -WF1

-WF1
PROFINET Cable
6XV1840-3AH10

-KF2

X20 M12, 7/8" 1 2 PE 4 5

0V_VAL / OUT | 0V_EL / SEN | FE | 24V_EL / SEN | 24V_VAL / OUT

M12 -TP1 M12 -TP2

ON
OFF
1 2 1 2

FESTO
Bus node + Interlinking block
548755 + 550208

I2450.0	DI 0 X1:4	V2GL18UQ51UQ3.1-BGR	Pallet Stop Station #3 Pre-Unload (RESET)
I2450.1	DI 1 X1:2	V2GL18UQ51UQ3.1-BGS	Pallet Stop Station #3 Pre-Unload (SET)
I2450.2	DI 2 X2:4	V2GL18UQ51UQ4.1-BGR	Pallet Stop Station #4 Unload (RESET)
I2450.3	DI 3 X2:2	V2GL18UQ51UQ4.1-BGS	Pallet Stop Station #4 Unload (SET)
I2450.4	DI 4 X3:4	V2GL18UQ51UQ5.1-BGR	Pallet Stop Station #5 Mid-Stop (RESET)
I2450.5	DI 5 X3:2	V2GL18UQ51UQ5.1-BGS	Pallet Stop Station #5 Mid-Stop (SET)
I2450.6	DI 6 X4:4	I2450.6	SPARE
I2450.7	DI 7 X4:2	I2450.7	SPARE
I2451.0	DI 8 X5:4	I2451.0	SPARE
I2451.1	DI 9 X5:2	I2451.1	SPARE
I2451.2	DI 10 X6:4	I2451.2	SPARE
I2451.3	DI 11 X6:2	I2451.3	SPARE
I2451.4	DI 12 X7:4	I2451.4	SPARE
I2451.5	DI 13 X7:2	I2451.5	SPARE
I2451.6	DI 14 X8:4	I2451.6	SPARE
I2451.7	DI 15 X8:2	I2451.7	SPARE

-KF2.11

FESTO
CPX-M-AB-8-M12X2-5POL
549335

X1 M12: 24V | DI 1 | 0V | DI 0 | FE — 1 2 3 4 5 — BN WH BU BK
X2 M12: 24V | DI 3 | 0V | DI 2 | FE — 1 2 3 4 5 — BN WH BU BK
X3 M12: 24V | DI 5 | 0V | DI 4 | FE — 1 2 3 4 5 — BN WH BU BK
X4 M12: 24V | DI 7 | 0V | DI 6 | FE — 1 2 3 4 5
X5 M12: 24V | DI 9 | 0V | DI 8 | FE — 1 2 3 4 5
X6 M12: 24V | DI 11 | 0V | DI 10 | FE — 1 2 3 4 5
X7 M12: 24V | DI 13 | 0V | DI 12 | FE — 1 2 3 4 5
X8 M12: 24V | DI 15 | 0V | DI 14 | FE — 1 2 3 4 5

+.GL18UQ51UQ3.1-W1
=V2GL18UQ51UQ3+.GL18UQ51UQ3/1.1

+.GL18UQ51UQ4.1-W1
=V2GL18UQ51UQ4+.GL18UQ51UQ4/1.1

+.GL18UQ51UQ5.1-W1
=V2GL18UQ51UQ5+.GL18UQ51UQ5/1.1

=V2GL18UQ51BG0/2

2

			Date	1/24/2023	Volvo Trucks North America		Valiant TMS	CONNECTING MOD. FOR VTSA MANIFOLD	Drawing name: =2V01&EFS-EL_KF1	= V2GL18UQ51KF2
			Ed.	MKLEPADLO						+ V2GL18UQ51
			Appr		P6700 Framing - Cell 2V01, KF1		Scale 1:1		Document type: EFS	Project nr: 22-16152
Modification	Date	Name	Original		Replacement of	Replaced by				Page 1 / 1630

0	1	2	3	4	5	6	7	8	9

-KF2.12

FESTO

CPX-M-AB-8-M12X2-5POL

549335

I2452.0	DI 0 X1:4	V2GL18UQ51-BG05	Sensor Pallet Present at Pre-Unload Sta #3
I2452.1	DI 1 X1:2	I2452.1	SPARE
I2452.2	DI 2 X2:4	V2GL18UQ51-BG06	Sensor Pallet Present at Unload Sta #4
I2452.3	DI 3 X2:2	V2GL18UQ51-BG17	Sensor Part Present At Unload
I2452.4	DI 4 X3:4	V2GL18UQ51-BG07	Sensor Pallet Present at Accum Zone 4-5
I2452.5	DI 5 X3:2	V2GL18UQ51-BG12	Sensor Drive Overtorque
I2452.6	DI 6 X4:4	V2GL18UQ51-BG08	Sensor Pallet Present at Mid-Stop Sta #5
I2452.7	DI 7 X4:2	V2GL18UQ51-BG09	Sensor Pallet Present at Accum Zone 5-6
I2453.0	DI 8 X5:4	V2GL18UQ51-BG13	Sensor Chain Tension Alert On Take-up
I2453.1	DI 9 X5:2	V2GL18UQ51-BG14	Sensor Broken Chain Alert On Take-up
I2453.2	DI 10 X6:4	V2GL18UQ51-BG15	Part Overtravel N.O.
I2453.3	DI 11 X6:2	V2GL18UQ51-BG15	Part Overtravel N.C.
I2453.4	DI 12 X7:4	I2453.4	SPARE
I2453.5	DI 13 X7:2	I2453.5	SPARE
I2453.6	DI 14 X8:4	I2453.6	SPARE
I2453.7	DI 15 X8:2	I2453.7	SPARE

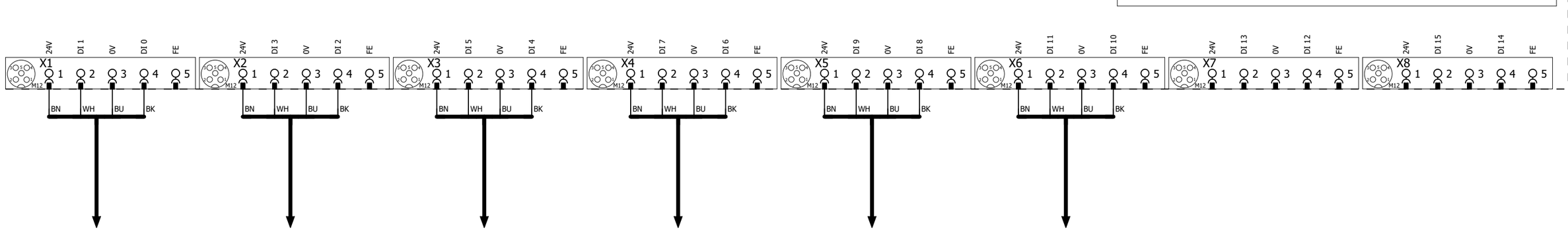

-BG05 =V2GL18UQ51BG0/1.1

-XG6/17 =V2GL18UQ51BG0/1.4

-XG7/12 =V2GL18UQ51BG0/1.6

-XG8/9 =V2GL18UQ51BG0/2.1

-XG13/14 =V2GL18UQ51BG0/2.4

-BG15 =V2GL18UQ51BG0/2.6

1 3

			Date	1/24/2023	Volvo Trucks North America	Valiant TMS	I/O MOD. DI16 (8 x M12) FOR VTSA-F	Drawing name: =2V01&EFS-EL_KF1	= V2GL18UQ51KF2
			Ed.	MKLEPADLO					+ V2GL18UQ51
			Appr		P6700 Framing - Cell 2V01, KF1	Scale 1:1		Document type: EFS	Project nr: 22-16152
Modification	Date	Name	Original		Replacement of	Replaced by			Page 2 / 1630

0	1	2	3	4	5	6	7	8	9

-KF2.13

FESTO

CPX-M-AB-8-M12X2-5POL

549335

I2454.0	DI 0 X1:4	I2454.0	SPARE
I2454.1	DI 1 X1:2	I2454.1	SPARE
I2454.2	DI 2 X2:4	I2454.2	SPARE
I2454.3	DI 3 X2:2	I2454.3	SPARE
I2454.4	DI 4 X3:4	I2454.4	SPARE
I2454.5	DI 5 X3:2	I2454.5	SPARE
I2454.6	DI 6 X4:4	I2454.6	SPARE
I2454.7	DI 7 X4:2	I2454.7	SPARE
I2455.0	DI 8 X5:4	I2455.0	SPARE
I2455.1	DI 9 X5:2	I2455.1	SPARE
I2455.2	DI 10 X6:4	I2455.2	SPARE
I2455.3	DI 11 X6:2	I2455.3	SPARE
I2455.4	DI 12 X7:4	I2455.4	SPARE
I2455.5	DI 13 X7:2	I2455.5	SPARE
I2455.6	DI 14 X8:4	I2455.6	SPARE
I2455.7	DI 15 X8:2	I2455.7	SPARE

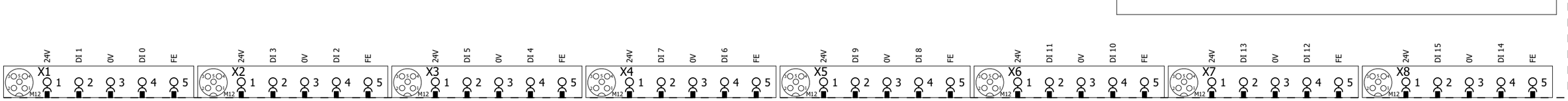

2 4

			Date	1/24/2023	Volvo Trucks North America	Valiant TMS	I/O MOD. DI16 (8 x M12) FOR VTSA-F	Drawing name: =2V01&EFS-EL_KF1	= V2GL18UQ51KF2
			Ed.	MKLEPADLO					+ V2GL18UQ51
			Appr		P6700 Framing - Cell 2V01, KF1	Scale 1:1		Document type: EFS	Project nr: 22-16152
Modification	Date	Name	Original		Replacement of / Replaced by				Page 3 / 1630

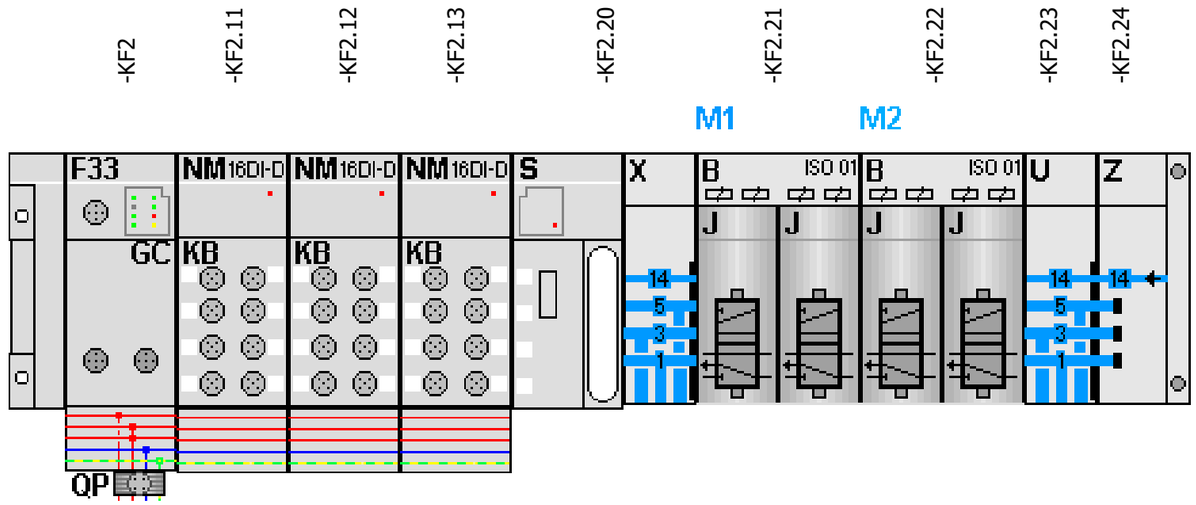

-KF2.21
=V2GL18UQ51UQ3+.GL18UQ51UQ3/1.3
=V2GL18UQ51UQ4+.GL18UQ51UQ4/1.3

FESTO

=V2GL18UQ51UQ3+.GL18UQ51UQ3/1.4	Q2450.0 DO 0 1.1	-QN1.1_Q	Pallet Stop Station #3 Pre-Unload (RST)
=V2GL18UQ51UQ3+.GL18UQ51UQ3/1.4	Q2450.1 DO 1 1.2	-QN1.2_Q	Pallet Stop Station #3 Pre-Unload (SET)
=V2GL18UQ51UQ4+.GL18UQ51UQ4/1.4	Q2450.2 DO 2 2.1	-QN2.1_Q	Pallet Stop Station #4 Unload (RST)
=V2GL18UQ51UQ4+.GL18UQ51UQ4/1.4	Q2450.3 DO 3 2.2	-QN2.2_Q	Pallet Stop Station #4 Unload (SET)

-KF2.22
=V2GL18UQ51UQ5+.GL18UQ51UQ5/1.3
=V2GL18UQ51UQ8+.GL18UQ51UQ8/1.3

FESTO

=V2GL18UQ51UQ5+.GL18UQ51UQ5/1.4	Q2450.4 DO 0 1.1	-QN3.1_Q	Pallet Stop Station #5 Mid-Stop (RST)
=V2GL18UQ51UQ5+.GL18UQ51UQ5/1.4	Q2450.5 DO 1 1.2	-QN3.2_Q	Pallet Stop Station #5 Mid-Stop (SET)
=V2GL18UQ51UQ8+.GL18UQ51UQ8/1.4	Q2450.6 DO 2 2.1	-QN4.1_Q	Spare (RST)
=V2GL18UQ51UQ8+.GL18UQ51UQ8/1.4	Q2450.7 DO 3 2.2	-QN4.2_Q	Spare (SET)

			Date	1/24/2023	Volvo Trucks North America	Valiant TMS	CONNECTING MOD. FOR FESTO DQ	Drawing name: =2V01&EFS-EL_KF1	= V2GL18UQ51KF2
			Ed.	MKLEPADLO					+ V2GL18UQ51
			Appr		P6700 Framing - Cell 2V01, KF1			Document type: EFS	Project nr: 22-16152
Modification	Date	Name	Original		Replacement of / Replaced by	Scale 1:1			Page 4 / 1630

0	1	2	3	4	5	6	7	8	9

=V2GL18UQ51KF2
+.GL18UQ51

-KF2.21
=V2GL18UQ51KF2+V2GL18UQ51/4.1

Pallet Stop Station #3 Pre-Unload (RST) =V2GL17UQ51KF1 +V2GL17UQ51 -QN1.1_Q =V2GL18UQ51KF2 +V2GL18UQ51/4.3 Q2450.0	Pallet Stop Station #3 Pre-Unload (SET) =V2GL17UQ51KF1 +V2GL17UQ51 -QN1.2_Q =V2GL18UQ51KF2 +V2GL18UQ51/4.3 Q2450.1
1.1 Pneumatic Valve	1.2 Pneumatic Valve

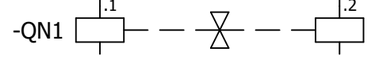

=V2GL18UQ51KF2+V2GL18UQ51/1.1
+.GL18UQ51UQ3.1-W1

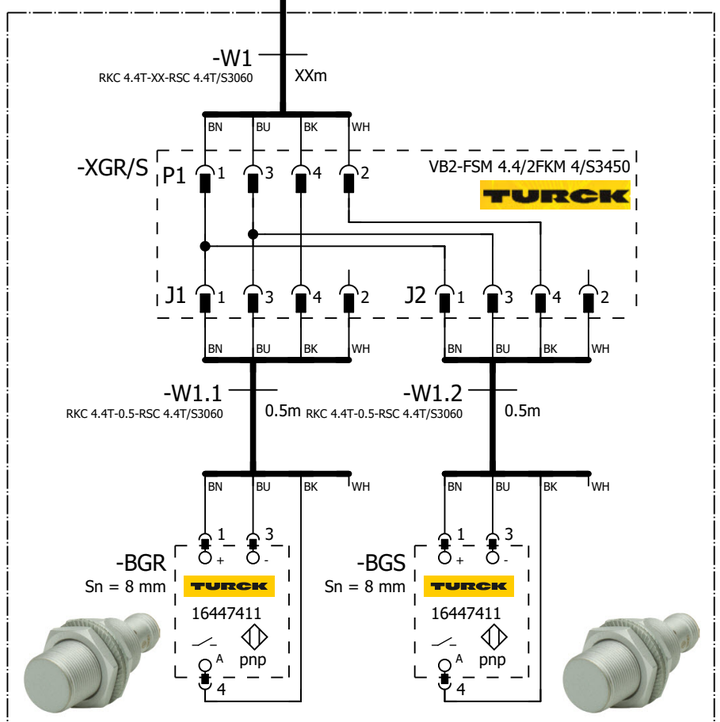

Pallet Stop Station #3 Pre-Unload
=V2GL18UQ51UQ3.1
+.GL18UQ51UQ3.1
-UQ3.1

=V2GL18UQ51 -UQ3.1-BGR Pallet Stop Station #3 Pre-Unload	=V2GL18UQ51 -UQ3.1-BGS Pallet Stop Station #3 Pre-Unload

=V2GL18UQ51KF2+V2GL18UQ51/4

=V2GL18UQ51UQ4+.GL18UQ51UQ4/1

			Date	1/24/2023	Volvo Trucks North America	Valiant TMS	FESTO DQ CONNECTION QN1	Drawing name: =2V01&EFS-EL_KF1	= V2GL18UQ51UQ3
			Ed.	MKLEPADLO					+ V2GL18UQ51UQ3
			Appr		P6700 Framing - Cell 2V01, KF1			Document type: EFS	Project nr: 22-16152
Modification	Date	Name	Original		Replacement of / Replaced by	Scale 1:1			Page 1 / 1630

0	1	2	3	4	5	6	7	8	9

=V2GL18UQ51KF2
+.GL18UQ51

-KF2.21
=V2GL18UQ51KF2+V2GL18UQ51/4.1

Pallet Stop Station #4 Unload (RST)	Pallet Stop Station #4 Unload (SET)
=V2GL17UQ51KF1	=V2GL17UQ51KF1
+V2GL17UQ51	+V2GL17UQ51
-QN2.1_Q	-QN2.2_Q
=V2GL18UQ51KF2	=V2GL18UQ51KF2
+V2GL18UQ51/4.3	+V2GL18UQ51/4.3
Q2450.2	Q2450.3
2.1 Pneumatic Valve	2.2 Pneumatic Valve

-QN2 .1 .2

=V2GL18UQ51KF2+V2GL18UQ51/1.2
+.GL18UQ51UQ4.1-W1

-W1
RKC 4.4T-XX-RSC 4.4T/S3060
XXm

BN BU BK WH

-XGR/S P1 1 3 4 2 VB2-FSM 4.4/2FKM 4/S3450 TURCK

J1 1 3 4 2 J2 1 3 4 2

BN BU BK WH BN BU BK WH

-W1.1
RKC 4.4T-0.5-RSC 4.4T/S3060
0.5m

-W1.2
RKC 4.4T-0.5-RSC 4.4T/S3060
0.5m

BN BU BK WH BN BU BK WH

-BGR
Sn = 8 mm
TURCK
16447411
pnp
1 3 A 4

-BGS
Sn = 8 mm
TURCK
16447411
pnp
1 3 A 4

Pallet Stop Station #4 Unload
=V2GL18UQ51UQ4.1
+.GL18UQ51UQ4.1
-UQ4.1

=V2GL18UQ51
-UQ4.1-BGR
Pallet Stop Station
#4 Unload

=V2GL18UQ51
-UQ4.1-BGS
Pallet Stop Station
#4 Unload

=V2GL18UQ51UQ3+.GL18UQ51UQ3/1

=V2GL18UQ51UQ5+.GL18UQ51UQ5/1

			Date	1/24/2023	Volvo Trucks North America	Valiant TMS	FESTO DQ CONNECTION QN2	Drawing name: =2V01&EFS-EL_KF1	= V2GL18UQ51UQ4
			Ed.	MKLEPADLO					+ V2GL18UQ51UQ4
			Appr		P6700 Framing - Cell 2V01, KF1			Document type: EFS	Project nr: 22-16152
Modification	Date	Name	Original		Replacement of	Replaced by	Scale 1:1		Page 1 / 1630

0	1	2	3	4	5	6	7	8	9

=V2GL18UQ51KF2
+.GL18UQ51

-KF2.22
=V2GL18UQ51KF2+V2GL18UQ51/4.1

Pallet Stop Station #5 Mid-Stop (RST)	Pallet Stop Station #5 Mid-Stop (SET)
=V2GL17UQ51KF1	=V2GL17UQ51KF1
+V2GL17UQ51	+V2GL17UQ51
-QN3.1_Q	-QN3.2_Q
=V2GL18UQ51KF2	=V2GL18UQ51KF2
+V2GL18UQ51/4.3	+V2GL18UQ51/4.3
Q2450.4	Q2450.5
1.1 Pneumatic Valve	1.2 Pneumatic Valve

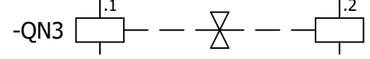

=V2GL18UQ51KF2+V2GL18UQ51/1.3
+.GL18UQ51UQ5.1-W1

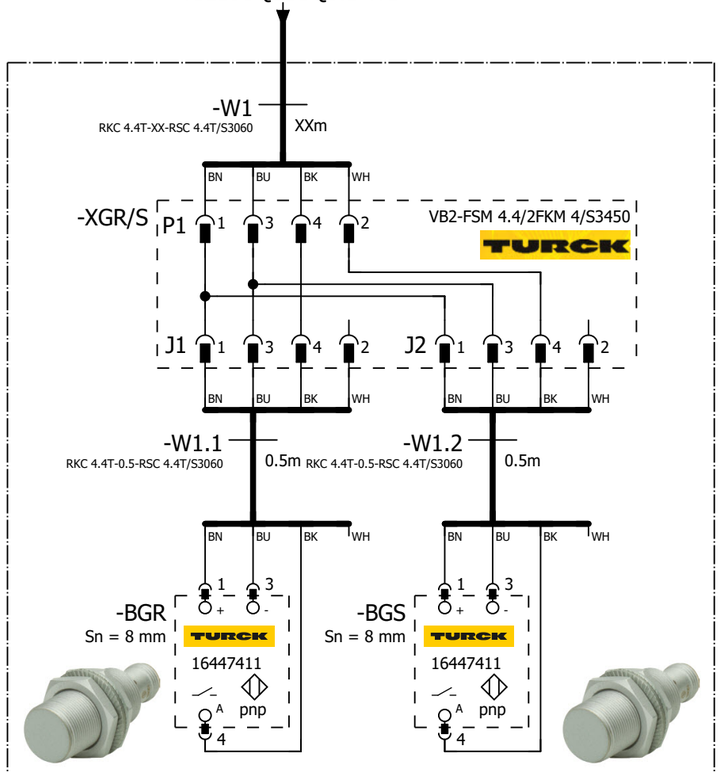

Pallet Stop Station #5 Mid-Stop
=V2GL18UQ51UQ5.1
+.GL18UQ51UQ5.1
-UQ5.1

=V2GL18UQ51 -UQ5.1-BGR Pallet Stop Station #5 Mid-Stop	=V2GL18UQ51 -UQ5.1-BGS Pallet Stop Station #5 Mid-Stop

=V2GL18UQ51UQ4+.GL18UQ51UQ4/1

=V2GL18UQ51UQ8+.GL18UQ51UQ8/1

			Date	1/24/2023	Volvo Trucks North America	Valiant TMS	FESTO DQ CONNECTION QN3	Drawing name: =2V01&EFS-EL_KF1	= V2GL18UQ51UQ5
			Ed.	MKLEPADLO					+ V2GL18UQ51UQ5
			Appr		P6700 Framing - Cell 2V01, KF1			Document type: EFS	Project nr: 22-16152
Modification	Date	Name	Original		Replacement of / Replaced by	Scale 1:1			Page 1 / 1630

0	1	2	3	4	5	6	7	8	9

=V2GL18UQ51KF2
+.GL18UQ51

-KF2.22
=V2GL18UQ51KF2+V2GL18UQ51/4.1

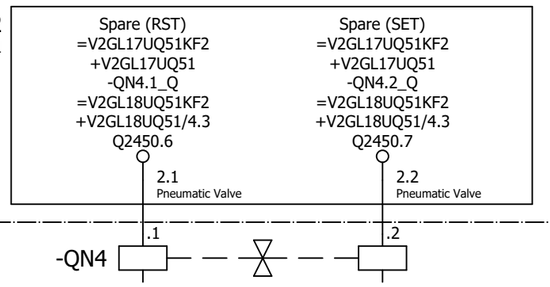

=V2GL18UQ51UQ5+.GL18UQ51UQ5/1

=V2GL18WC1+.GL18UC01/1

			Date	1/24/2023	Volvo Trucks North America	Valiant TMS	FESTO DQ CONNECTION QN4	Drawing name: =2V01&EFS-EL_KF1	= V2GL18UQ51UQ8
			Ed.	MKLEPADLO					+ V2GL18UQ51UQ8
			Appr		P6700 Framing - Cell 2V01, KF1	Scale 1:1		Document type: EFS / Project nr: 22-16152	Page 1 / 1630
Modification	Date	Name	Original		Replacement of / Replaced by				

0	1	2	3	4	5	6	7	8	9

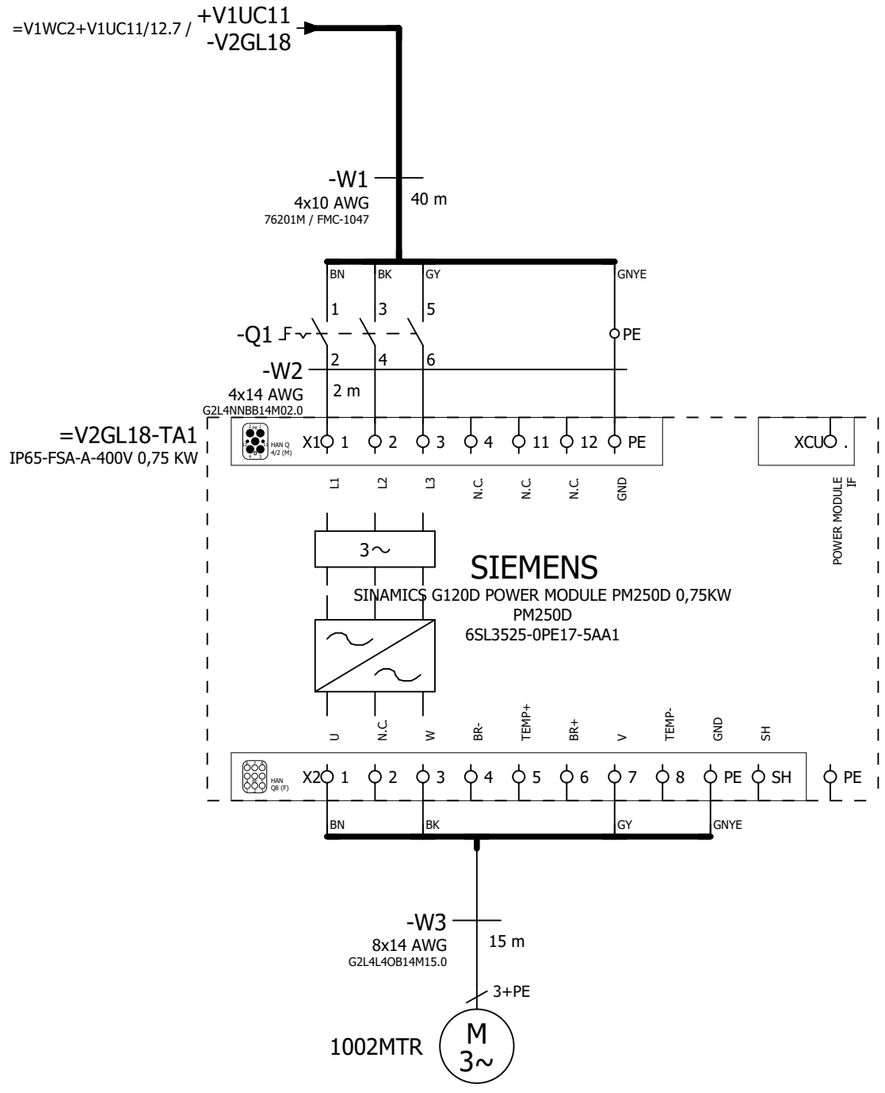

=V2GL18UQ51UQ8+.GL18UQ51UQ8/1

=V2KF1+.UC14/1

			Date	1/24/2023	Volvo Trucks North America		Valiant TMS	Incoming power	Drawing name: =2V01&EFS-EL_KF1	= V2GL18WC1
			Ed.	MKLEPADLO						+ V2GL18UC01
			Appr		P6700 Framing - Cell 2V01, KF1				Document type: EFS	Project nr: 22-16152
Modification	Date	Name	Original		Replacement of	Replaced by	Scale 1:1			Page 1 / 1630

0	1	2	3	4	5	6	7	8	9

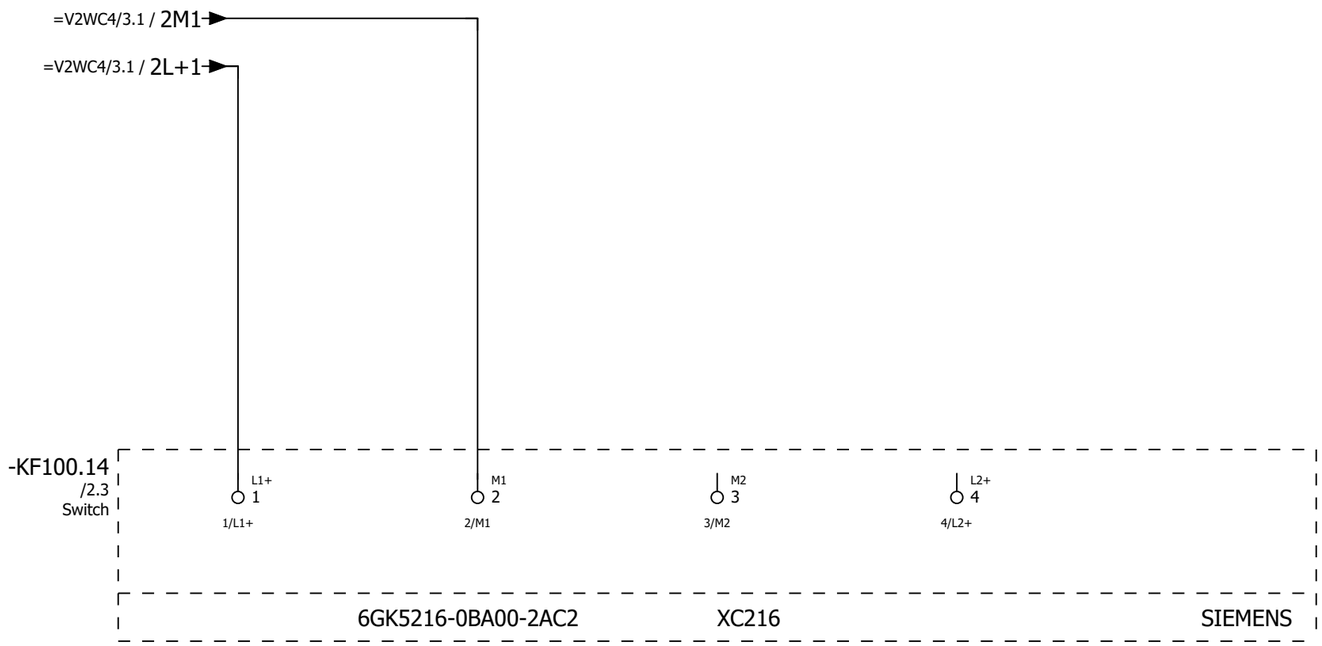

=V2GL18WC1+.GL18UC01/1

2

			Date	1/24/2023	Volvo Trucks North America	Valiant TMS	Switch, Scalance XC216	Drawing name: =2V01&EFS-EL_KF1	= V2KF1
			Ed.	MKLEPADLO					+ V2UC14
			Appr		P6700 Framing - Cell 2V01, KF1			Document type: EFS / Project nr: 22-16152	Page 1
Modification	Date	Name	Original		Replacement of / Replaced by	Scale 1:1			1630

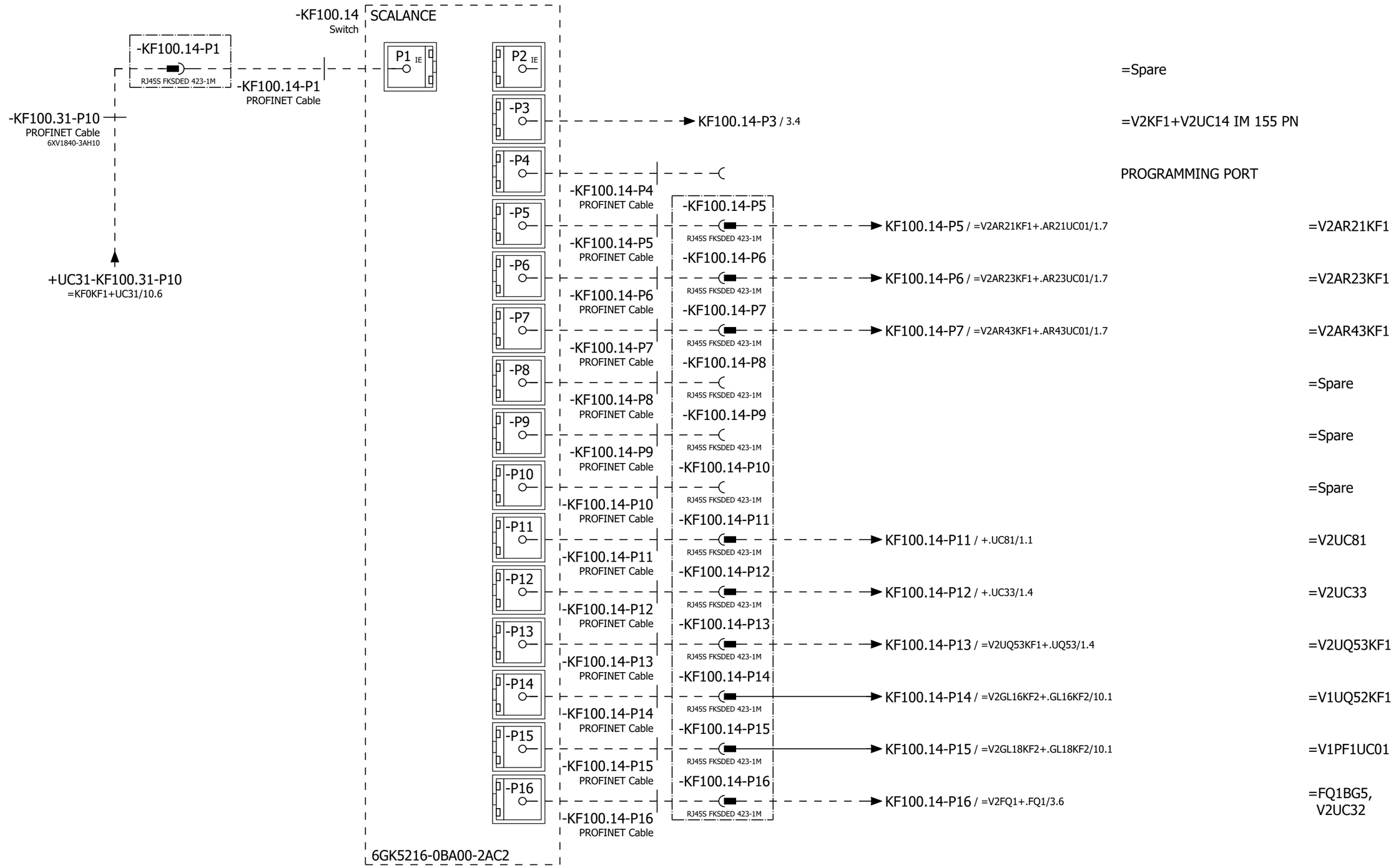

			Date	1/24/2023	Volvo Trucks North America		Valiant TMS	Network Overview	Drawing name: =2V01&EFS-EL_KF1	= V2KF1	
			Ed.	MKLEPADLO						+ V2UC14	
			Appr		P6700 Framing - Cell 2V01, KF1		Scale 1:1		Document type: EFS	Project nr: 22-16152	Page 2
Modification	Date	Name	Original		Replacement of	Replaced by					1630

0	1	2	3	4	5	6	7	8	9

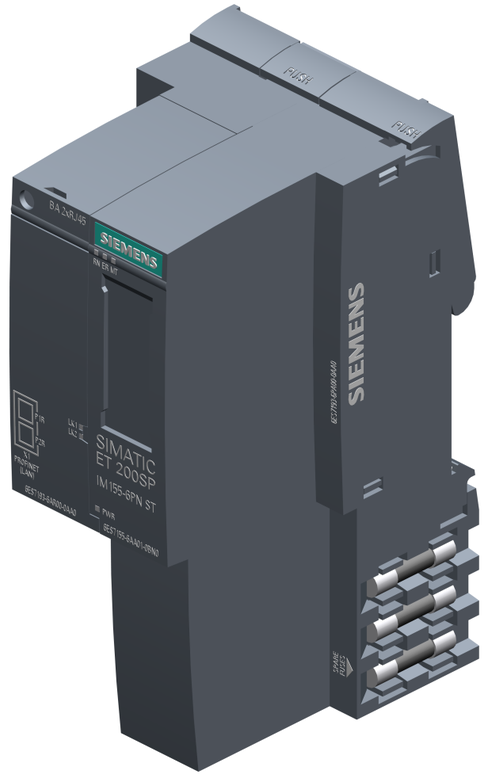

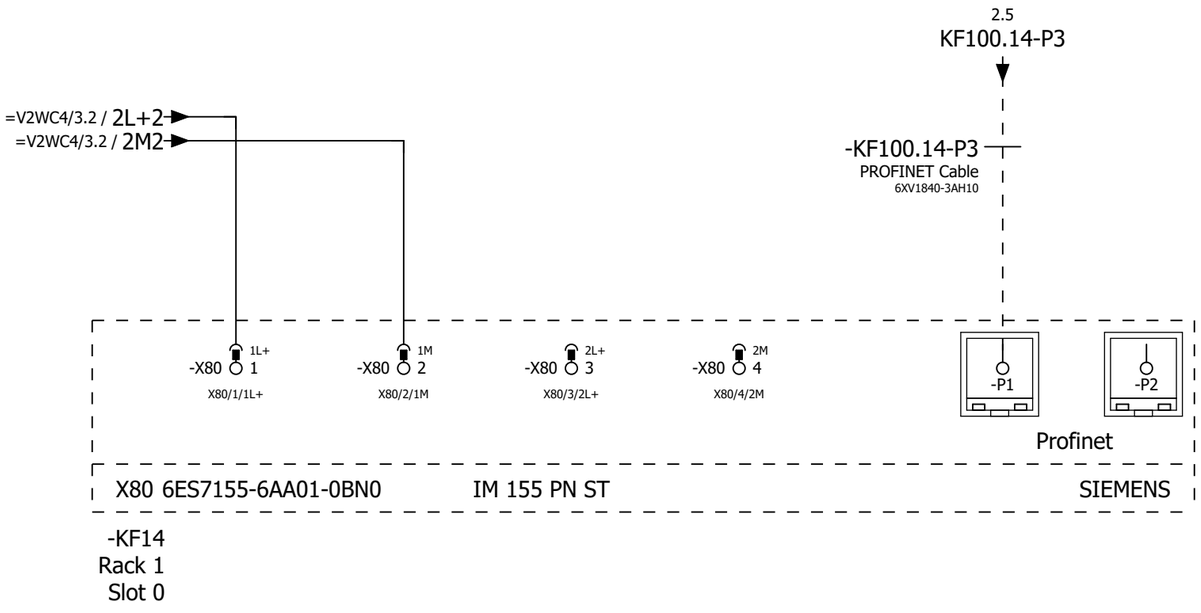

2 4

			Date	1/24/2023	Volvo Trucks North America	Valiant TMS	IM 155 PN	Drawing name: =2V01&EFS-EL_KF1	= V2KF1
			Ed.	MKLEPADLO					+ V2UC14
			Appr		P6700 Framing - Cell 2V01, KF1			Document type: EFS	Project nr: 22-16152
Modification	Date	Name	Original		Replacement of	Replaced by	Scale 1:1		Page 3 / 1630

0	1	2	3	4	5	6	7	8	9

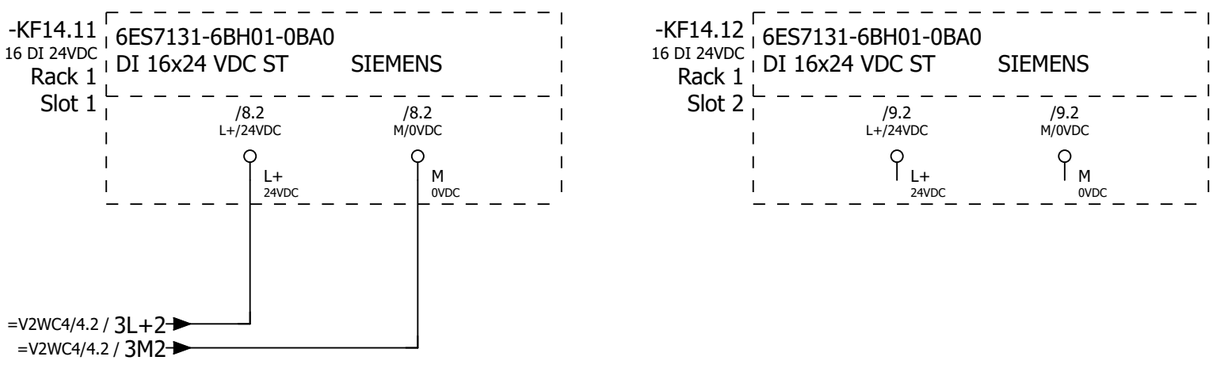

			Date	1/24/2023	Volvo Trucks North America	Valiant TMS	ET200S Wiring DI	Drawing name: =2V01&EFS-EL_KF1	= V2KF1
			Ed.	MKLEPADLO					+ V2UC14
			Appr		P6700 Framing - Cell 2V01, KF1			Document type: EFS / Project nr: 22-16152	Page 4
Modification	Date	Name	Original		Replacement of / Replaced by	Scale 1:1			1630

0	1	2	3	4	5	6	7	8	9

-KF14.31
FDI 8 24VDC
Rack 1
Slot 3

6ES7136-6BA00-0CA0
F-DI 8x24VDC HF SIEMENS

/11.2 L+ 24VDC

/11.2 M 0VDC

-KF14.32
FDI 8 24VDC
Rack 1
Slot 4

6ES7136-6BA00-0CA0
F-DI 8x24VDC HF SIEMENS

/12.2 L+ 24VDC

/12.2 M 0VDC

4 6

			Date	1/24/2023	Volvo Trucks North America	Valiant TMS	ET200S Wiring F-DI	Drawing name: =2V01&EFS-EL_KF1	= V2KF1
			Ed.	MKLEPADLO					+ V2UC14
			Appr		P6700 Framing - Cell 2V01, KF1			Document type: EFS	Project nr: 22-16152
Modification	Date	Name	Original		Replacement of	Replaced by	Scale 1:1		Page 5 / 1630

0	1	2	3	4	5	6	7	8	9

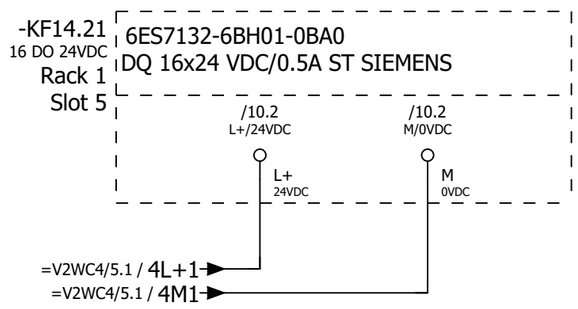

5 7

			Date	1/24/2023	Volvo Trucks North America	Valiant TMS	ET200S Wiring DQ	Drawing name: =2V01&EFS-EL_KF1	= V2KF1	
			Ed.	MKLEPADLO					+ V2UC14	
			Appr		P6700 Framing - Cell 2V01, KF1			Document type: EFS	Project nr: 22-16152	Page 6
Modification	Date	Name	Original		Replacement of / Replaced by	Scale 1:1				1630

-KF14.41
=V2FQ1/1.0
=V2FQ1/2.0
=V2FQ1/3.0
=V2FQ1/4.0
/13.1
FDO 4 24VDC
Rack 1
Slot 6

6ES7136-6DB00-0CA0 + BU15-P16+A0+2B F-DQ 4X24VDC/2A PM HF SIEMENS

/13.2 L+ 24VDC

/13.2 M 0VDC

-KF14.42
/14.1
FDO 4 24VDC
Rack 1
Slot 7

6ES7136-6DB00-0CA0 + BU15-P16+A0+2B F-DQ 4X24VDC/2A PM HF SIEMENS

/14.2 L+ 24VDC

/14.2 M 0VDC

			Date	1/24/2023	Volvo Trucks North America	Valiant TMS	ET200S Wiring F-DQ	Drawing name: =2V01&EFS-EL_KF1	= V2KF1	
			Ed.	MKLEPADLO					+ V2UC14	
			Appr		P6700 Framing - Cell 2V01, KF1			Document type: EFS	Project nr: 22-16152	Page 7
Modification	Date	Name	Original		Replacement of / Replaced by	Scale 1:1				1630

0	1	2	3	4	5	6	7	8	9

-KF14.11
/4.0

ET 200SP SIEMENS
DI 16x24 VDC ST

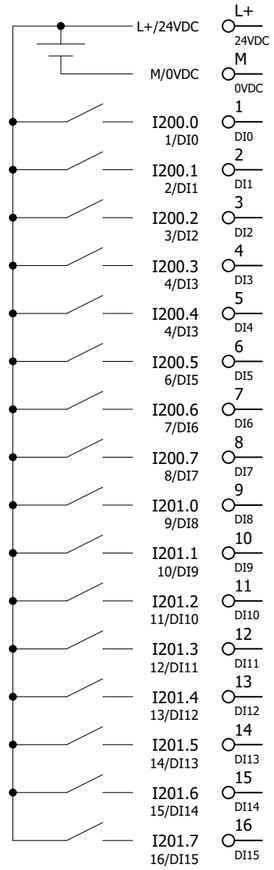

6ES7131-6BH01-0BA0

/4.1			
/4.2			
=V2WC3/2.2	=V2WC3+V2UC14-FC1	Monitoring 120 VAC	
=V2WC3/2.3	=V2WC3+V2UC14-FC2	Monitoring 120 VAC	
=V2WC4/1.4	=V2WC4+V2UC14-TA1_I	Monitoring 24VDC	
	I200.3	Spare	
=V2WC4/1.0	=V2WC4+V2UC14-FC11_I	Monitoring 24VDC	
=V2WC4/11.0	=V2WC4+V2UC14-FC12_I	Monitoring 24VDC	
	I200.6	Spare	
	I200.7	Spare	
	I201.0	Spare	
	I201.1	Spare	
	I201.2	Spare	
	I201.3	Spare	
	I201.4	Spare	
	I201.5	Spare	
	I201.6	Spare	
	I201.7	Spare	

7 9

			Date	1/24/2023	Volvo Trucks North America	Valiant TMS	ET200S DI Overview KF14.11	Drawing name: =2V01&EFS-EL_KF1	= V2KF1
			Ed.	MKLEPADLO					+ V2UC14
			Appr		P6700 Framing - Cell 2V01, KF1			Document type: EFS	Project nr: 22-16152
Modification	Date	Name	Original		Replacement of	Replaced by	Scale 1:1		Page 8 / 1630

-KF14.12
/4.3

ET 200SP SIEMENS
DI 16x24 VDC ST

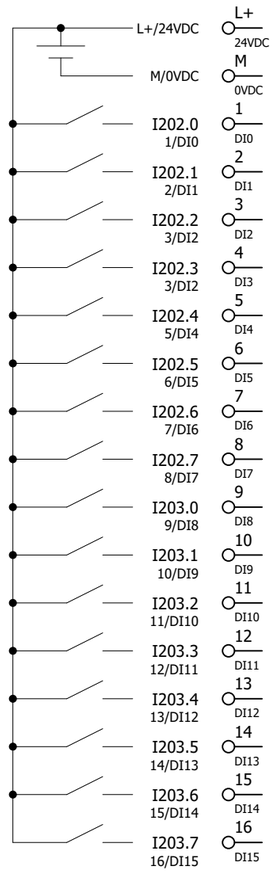

/4.3			
/4.4			
=V2FQ1/1.8	-KF14.51RQ	Monitoring Safety contactors 11.1L+	
=V2FQ1/2.8	-KF14.52RQ	Monitoring Safety contactors 12.1L+	
=V2FQ1/3.8	-KF14.53RQ	Monitoring Safety contactors 13.1L+	
=V2FQ1/4.8	-KF14.54RQ	Monitoring Safety contactors 14.1L+	
	I202.4	Spare	
	I202.5	Spare	
	I202.6	Spare	
	I202.7	Spare	
=KH0+KH0/8.6	=KH0-BP8_I	Monitoring GL16 At Unload Conveyor AIR On	
=KH0+KH0/10.6	=KH0-BP10_I	Monitoring GL18 At Unload Conveyor AIR On	
	I203.2	Spare	
	I203.3	Spare	
	I203.4	Spare	
	I203.5	Spare	
	I203.6	Spare	
	I203.7	Spare	

6ES7131-6BH01-0BA0

			Date	1/24/2023	Volvo Trucks North America	Valiant TMS	ET200S DI Overview KF14.12	Drawing name: =2V01&EFS-EL_KF1	= V2KF1	
			Ed.	MKLEPADLO					+ V2UC14	
			Appr		P6700 Framing - Cell 2V01, KF1			Document type: EFS	Project nr: 22-16152	Page 9 / 1630
Modification	Date	Name	Original		Replacement of	Replaced by	Scale 1:1			

0	1	2	3	4	5	6	7	8	9

-KF14.21
/6.1
16 DO 24VDC

ET 200SP SIEMENS
DQ 16x24 VDC/0.5A ST

L+/24VDC	L+ 24VDC	/6.1			
M/0VDC	M 0VDC	/6.2			
Q200.0 1/DQ0	1 DQ0	=V2PZ1PF1+.UC61/1.3	=V2PZ1PF1+UC61-PF1_1	V2 Zone Indication column Blue	
Q200.1 2/DQ1	2 DQ1	=V2PZ1PF1+.UC61/1.4	=V2PZ1PF1+UC61-PF1_2	V2 Zone Indication column Green	
Q200.2 3/DQ2	3 DQ2	=V2PZ1PF1+.UC61/1.4	=V2PZ1PF1+UC61-PF1_3	V2 Zone Indication column Yellow	
Q200.3 4/DQ3	4 DQ3	=V2PZ1PF1+.UC61/1.5	=V2PZ1PF1+UC61-PF1_4	V2 Zone Indication column Red	
Q200.4 5/DQ4	5 DQ4	=V2PZ1PF1+.UC61/1.6	=V2PZ1PF1+UC61-PF1_5	V2 Zone Indication column Siren	
Q200.5 6/DQ5	6 DQ5		Q200.5	Spare	
Q200.6 7/DQ6	7 DQ6		Q200.6	Spare	
Q200.7 8/DQ7	8 DQ7		Q200.7	Spare	
Q201.0 9/DQ8	9 DQ8		Q201.0	Spare	
Q201.1 10/DQ9	10 DQ9		Q201.1	Spare	
Q201.2 11/DQ10	11 DQ10		Q201.2	Spare	
Q201.3 12/DQ11	12 DQ11		Q201.3	Spare	
Q201.4 13/DQ12	13 DQ12		Q201.4	Spare	
Q201.5 14/DQ13	14 DQ13		Q201.5	Spare	
Q201.6 15/DQ14	15 DQ14		Q201.6	Spare	
Q201.7 16/DQ15	16 DQ15		Q201.7	Spare	

6ES7132-6BH01-0BA0

			Date	1/24/2023	Volvo Trucks North America		Valiant TMS	ET200S DQ Overview KF14.21	Drawing name: =2V01&EFS-EL_KF1	= V2KF1	
			Ed.	MKLEPADLO						+ V2UC14	
			Appr		P6700 Framing - Cell 2V01, KF1		Scale 1:1		Document type: EFS	Project nr: 22-16152	Page 10 / 1630
Modification	Date	Name	Original		Replacement of	Replaced by					

0	1	2	3	4	5	6	7	8	9

-KF14.31
/5.0

ET 200SP SIEMENS
F-DI 8x24VDC HF

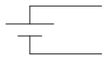

	L+ 24VDC		/5.1		
	M 0VDC		/5.2		
I5200.0	1 DI0			I5200.0	Spare
	9 VS0				
I5200.1	2 DI1			I5200.1	Spare
	10 VS1				
I5200.2	3 DI2			I5200.2	Spare
	11 VS2				
I5200.3	4 DI3			I5200.3	Spare
	12 VS3				
I5200.4	5 DI4			I5200.4	Spare
	13 VS4				
I5200.5	6 DI5			I5200.5	Spare
	14 VS5				
I5200.6	7 DI6			I5200.6	Spare
	15 VS6				
I5200.7	8 DI7			I5200.7	Spare
	16 VS7				

6ES7136-6BA00-0CA0

10 12

			Date	1/24/2023	Volvo Trucks North America		Valiant TMS	ET200S F-DI Overview KF14.31	Drawing name: =2V01&EFS-EL_KF1	= V2KF1	
			Ed.	MKLEPADLO						+ V2UC14	
			Appr		P6700 Framing - Cell 2V01, KF1		Scale 1:1		Document type: EFS	Project nr: 22-16152	Page 11
Modification	Date	Name	Original		Replacement of	Replaced by					1630

0	1	2	3	4	5	6	7	8	9

-KF14.32
/5.3

ET 200SP SIEMENS
F-DI 8x24VDC HF

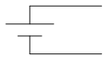

	L+ 24VDC	/5.3			
	M 0VDC	/5.4			
I5206.0	1 DI0		I5206.0	Spare	
	9 VS0				
I5206.1	2 DI1		I5206.1	Spare	
	10 VS1				
I5206.2	3 DI2		I5206.2	Spare	
	11 VS2				
I5206.3	4 DI3		I5206.3	Spare	
	12 VS3				
I5206.4	5 DI4		I5206.4	Spare	
	13 VS4				
I5206.5	6 DI5		I5206.5	Spare	
	14 VS5				
I5206.6	7 DI6		I5206.6	Spare	
	15 VS6				
I5206.7	8 DI7		I5206.7	Spare	
	16 VS7				

6ES7136-6BA00-0CA0

11 13

			Date	1/24/2023	Volvo Trucks North America		Valiant TMS	ET200S F-DI Overview KF14.32	Drawing name: =2V01&EFS-EL_KF1	= V2KF1	
			Ed.	MKLEPADLO						+ V2UC14	
			Appr		P6700 Framing - Cell 2V01, KF1		Scale 1:1		Document type: EFS	Project nr: 22-16152	Page 12
Modification	Date	Name	Original		Replacement of	Replaced by					1630

0	1	2	3	4	5	6	7	8	9

-KF14.41
/7.0

ET 200SP SIEMENS
F-DQ 4X24VDC/2A PM HF

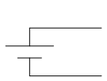

L+ 24VDC		/7.1			
M 0VDC		/7.2			
Q5212.0	1 DQ-P0	=V2FQ1/1.1	-KF14.51	Switched Power 1 11.1L+	
Q5212.0	5				
QX.0	9 DQ-M0	=V2FQ1/1.1			
QX.0	13				
Q5212.1	2 DQ-P1	=V2FQ1/2.1	-KF14.52	Switched Power 2 12.1L+	
Q5212.1	6				
QX.1	10 DQ-M1	=V2FQ1/2.1			
QX.1	14				
Q5212.2	3 DQ-P2	=V2FQ1/3.1	-KF14.53	Switched Power 3 13.1L+	
Q5212.2	7				
QX.2	11 DQ-M2	=V2FQ1/3.1			
QX.2	15				
Q5212.3	4 DQ-P3	=V2FQ1/4.1	-KF14.54	Switched Power 4 14.1L+	
Q5212.3	8				
QX.3	12 DQ-M3	=V2FQ1/4.1			
QX.3	16				

6ES7136-6DB00-0CA0 + BU15-P16+A0+2B

12 14

			Date	1/24/2023	Volvo Trucks North America	Valiant TMS	ET200S F-DQ Overview KF14.41	Drawing name: =2V01&EFS-EL_KF1	= V2KF1
			Ed.	MKLEPADLO					+ V2UC14
			Appr		P6700 Framing - Cell 2V01, KF1			Document type: EFS	Project nr: 22-16152
Modification	Date	Name	Original		Replacement of	Replaced by	Scale 1:1		Page 13 / 1630

0	1	2	3	4	5	6	7	8	9

-KF14.42
/7.5

ET 200SP SIEMENS
F-DQ 4X24VDC/2A PM HF

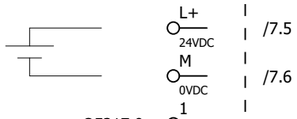

Q5217.0	Q5217.0	Spare
Q5217.1	Q5217.1	Spare
Q5217.2	Q5217.2	Spare
Q5217.3	Q5217.3	Spare

6ES7136-6DB00-0CA0 + BU15-P16+A0+2B

			Date	1/24/2023	Volvo Trucks North America	Valiant TMS	ET200S F-DQ Overview KF14.42	Drawing name: =2V01&EFS-EL_KF1	= V2KF1
			Ed.	MKLEPADLO					+ V2UC14
			Appr		P6700 Framing - Cell 2V01, KF1			Document type: EFS	Project nr: 22-16152
Modification	Date	Name	Original		Replacement of	Replaced by	Scale 1:1		Page 14 / 1630

0	1	2	3	4	5	6	7	8	9

-KF14.51
=V2FQ1/1.2
=V2WC4/12.1

ET 200SP SIEMENS
F-RQ 1x24VDC/24..230VAC/5A

Q5222.0	1 RQ01+	=V2WC4/12.2	11L+	
	2 RQ01-	=V2WC4/12.2	11.1L+	
Q5222.1	3 RQ02+	=V2WC4/12.3	11L+	
	4 RQ02-	=V2WC4/12.4	11.1L+	
	9 IN P	=V2FQ1/1.3	Switched Power 1 11.1L+P	
	10 OUT P	=V2FQ1/1.4	SPARE	
	11 IN M	=V2FQ1/1.4	Switched Power 1 11.1L+M	
	12 OUT M	=V2FQ1/1.5	SPARE	
	1A AUX			
	2A AUX			
	3A AUX			
	4A AUX			

6ES7136-6RA00-0BF0 + BU20-P8+A4+0B

			Date	1/24/2023	Volvo Trucks North America	Valiant TMS	ET200S F-RQ Overview KF14.51	Drawing name: =2V01&EFS-EL_KF1	= V2KF1
			Ed.	MKLEPADLO					+ V2UC14
			Appr		P6700 Framing - Cell 2V01, KF1			Document type: EFS	Project nr: 22-16152
Modification	Date	Name	Original		Replacement of	Replaced by	Scale 1:1		Page 15 / 1630

0	1	2	3	4	5	6	7	8	9

-KF14.52
=V2FQ1/2.2
=V2WC4/13.1

ET 200SP SIEMENS
F-RQ 1x24VDC/24..230VAC/5A

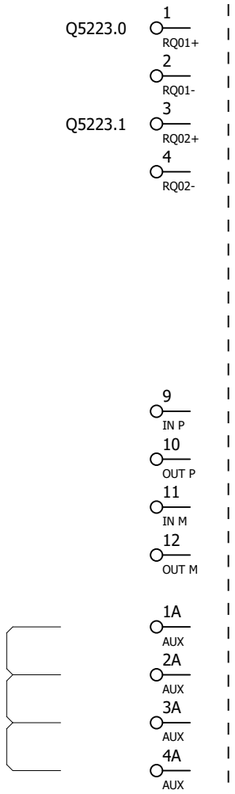

Q5223.0	=V2WC4/13.2	12L+
	=V2WC4/13.2	12.1L+
Q5223.1	=V2WC4/13.3	12L+
	=V2WC4/13.4	12.1L+
	=V2FQ1/2.3	Switched Power 2 12.1L+P
	=V2FQ1/2.4	SPARE
	=V2FQ1/2.4	Switched Power 2 12.1L+M
	=V2FQ1/2.5	SPARE

6ES7136-6RA00-0BF0 + BU20-P8+A4+0B

15 17

			Date	1/24/2023	Volvo Trucks North America	Valiant TMS	ET200S F-RQ Overview KF14.52	Drawing name: =2V01&EFS-EL_KF1	= V2KF1
			Ed.	MKLEPADLO					+ V2UC14
			Appr		P6700 Framing - Cell 2V01, KF1			Document type: EFS	Project nr: 22-16152
Modification	Date	Name	Original		Replacement of	Replaced by	Scale 1:1		Page 16 / 1630

0	1	2	3	4	5	6	7	8	9

-KF14.53
=V2FQ1/3.2
=V2WC4/14.1

ET 200SP SIEMENS
F-RQ 1x24VDC/24..230VAC/5A

Q5224.0	1 RQ01+	=V2WC4/14.2	13L+	
	2 RQ01-	=V2WC4/14.2	13.1L+	
Q5224.1	3 RQ02+	=V2WC4/14.3	13L+	
	4 RQ02-	=V2WC4/14.4	13.1L+	
	9 IN P	=V2FQ1/3.3	Switched Power 3 13.1L+P	
	10 OUT P	=V2FQ1/3.4	SPARE	
	11 IN M	=V2FQ1/3.4	Switched Power 3 13.1L+M	
	12 OUT M	=V2FQ1/3.5	SPARE	
	1A AUX			
	2A AUX			
	3A AUX			
	4A AUX			

6ES7136-6RA00-0BF0 + BU20-P8+A4+0B

			Date	1/24/2023	Volvo Trucks North America	Valiant TMS	ET200S F-RQ Overview KF14.53	Drawing name: =2V01&EFS-EL_KF1	= V2KF1
			Ed.	MKLEPADLO					+ V2UC14
			Appr		P6700 Framing - Cell 2V01, KF1			Document type: EFS	Project nr: 22-16152
Modification	Date	Name	Original		Replacement of / Replaced by	Scale 1:1			Page 17 / 1630

0	1	2	3	4	5	6	7	8	9

-KF14.54
=V2FQ1/4.2
=V2WC4/15.1

ET 200SP SIEMENS
F-RQ 1x24VDC/24..230VAC/5A

Q5225.0	1 RQ01+	=V2WC4/15.2	14L+
	2 RQ01-	=V2WC4/15.2	14.1L+
Q5225.1	3 RQ02+	=V2WC4/15.3	14L+
	4 RQ02-	=V2WC4/15.4	14.1L+
	9 IN P	=V2FQ1/4.3	Switched Power 4 14.1L+P
	10 OUT P	=V2FQ1/4.4	SPARE
	11 IN M	=V2FQ1/4.4	Switched Power 4 14.1L+M
	12 OUT M	=V2FQ1/4.5	SPARE
	1A AUX		
	2A AUX		
	3A AUX		
	4A AUX		

6ES7136-6RA00-0BF0 + BU20-P8+A4+0B

			Date	1/24/2023	Volvo Trucks North America	Valiant TMS	ET200S F-RQ Overview KF14.54	Drawing name: =2V01&EFS-EL_KF1	= V2KF1	
			Ed.	MKLEPADLO					+ V2UC14	
			Appr		P6700 Framing - Cell 2V01, KF1			Document type: EFS	Project nr: 22-16152	Page 18 / 1630
Modification	Date	Name	Original		Replacement of	Replaced by	Scale 1:1			

0	1	2	3	4	5	6	7	8	9

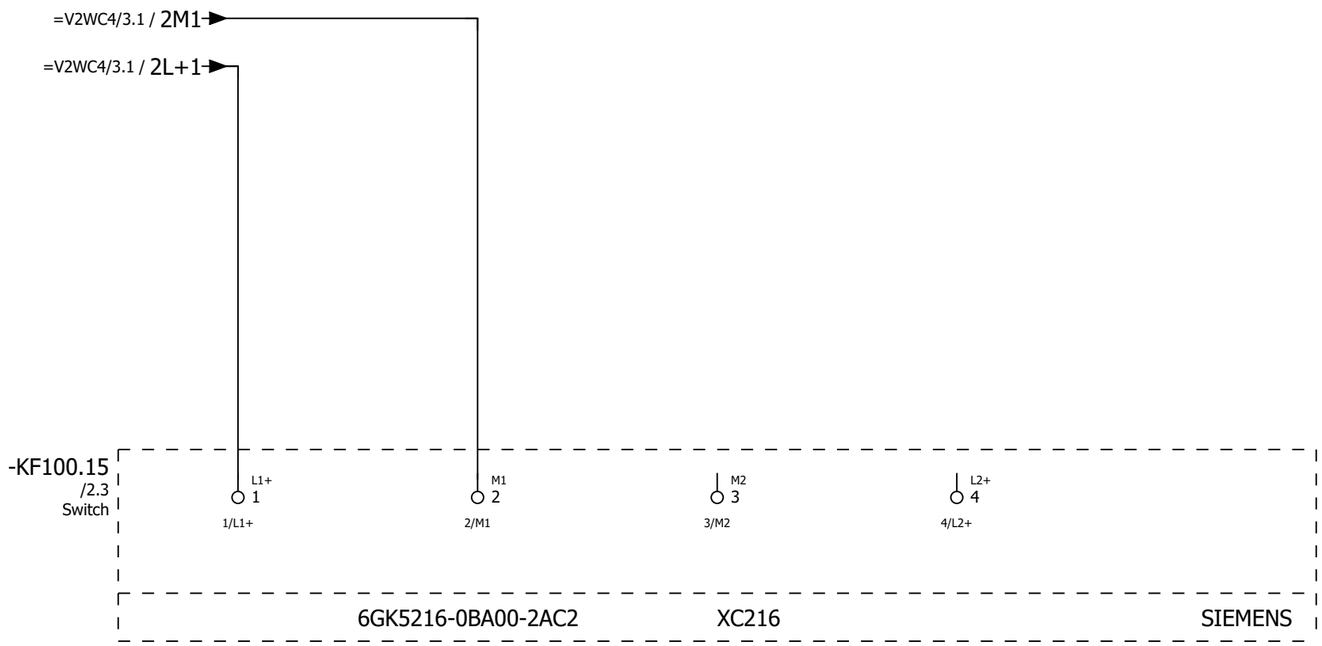

+.UC14/18

2

			Date	1/24/2023	Volvo Trucks North America	Valiant TMS	Switch, Scalance XC216	Drawing name: =2V01&EFS-EL_KF1	= V2KF1	
			Ed.	MKLEPADLO					+ V2UC15	
			Appr		P6700 Framing - Cell 2V01, KF1			Document type: EFS	Project nr: 22-16152	Page 1
Modification	Date	Name	Original		Replacement of / Replaced by	Scale 1:1				1630

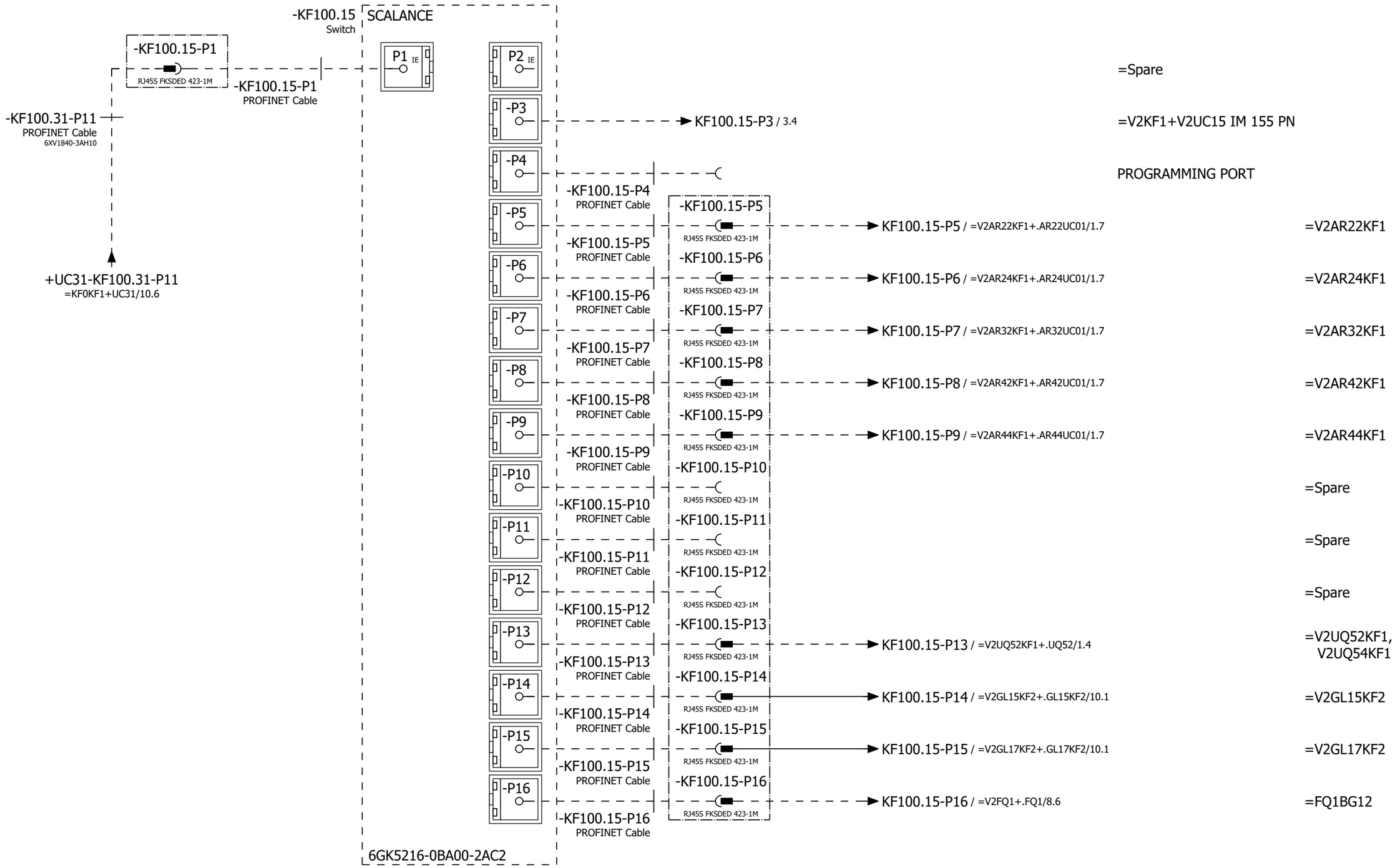

			Date	1/24/2023	Volvo Trucks North America	Valiant TMS	Network Overview	Drawing name: =2V01&EFS-EL_KF1	= V2KF1
			Ed.	MKLEPADLO					+ V2UC15
			Appr		P6700 Framing - Cell 2V01, KF1			Document type: EFS	Project nr: 22-16152
Modification	Date	Name	Original		Replacement of / Replaced by	Scale 1:1			Page 2 / 1630

0	1	2	3	4	5	6	7	8	9

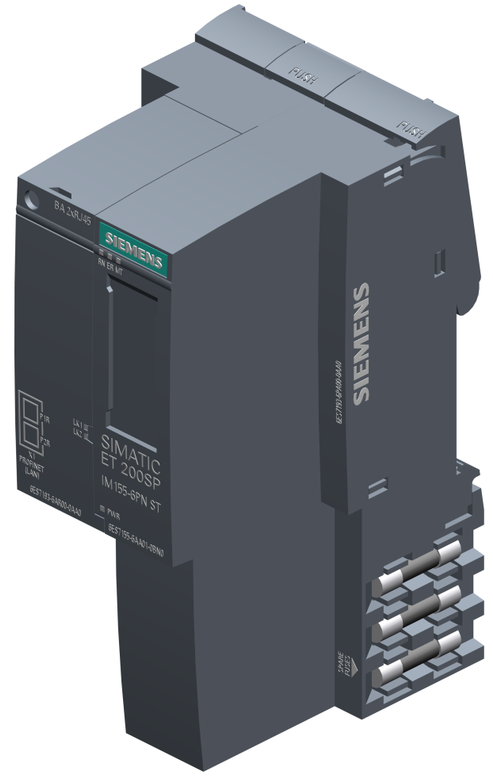

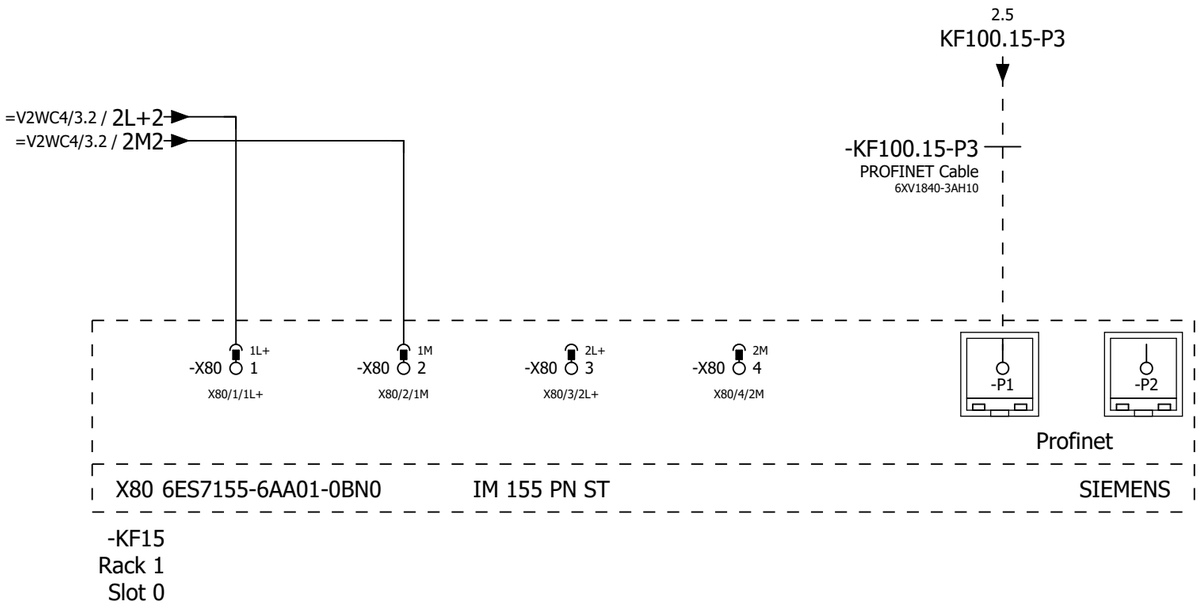

2 4

			Date	1/24/2023	Volvo Trucks North America	Valiant TMS	IM 155 PN	Drawing name: =2V01&EFS-EL_KF1	= V2KF1
			Ed.	MKLEPADLO					+ V2UC15
			Appr		P6700 Framing - Cell 2V01, KF1			Document type: EFS	Project nr: 22-16152
Modification	Date	Name	Original		Replacement of	Replaced by	Scale 1:1		Page 3 / 1630

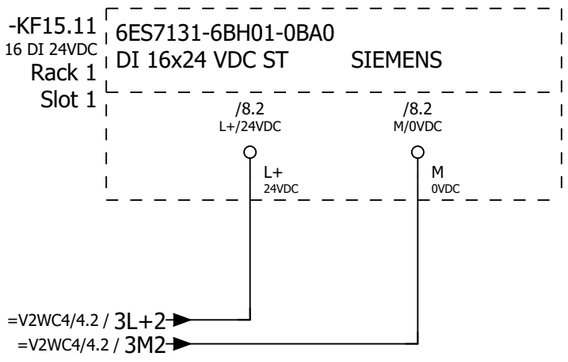

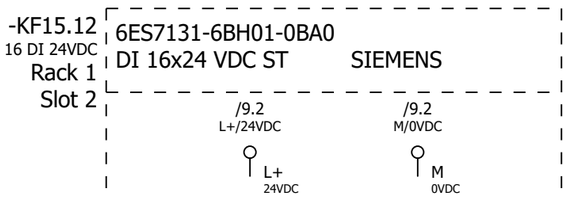

3

5

			Date	1/24/2023	Volvo Trucks North America	Valiant TMS	ET200S Wiring DI	Drawing name: =2V01&EFS-EL_KF1	= V2KF1	
			Ed.	MKLEPADLO					+ V2UC15	
			Appr		P6700 Framing - Cell 2V01, KF1			Document type: EFS	Project nr: 22-16152	Page 4
Modification	Date	Name	Original		Replacement of	Replaced by	Scale 1:1			1630

0	1	2	3	4	5	6	7	8	9

-KF15.31
FDI 8 24VDC
Rack 1
Slot 3

6ES7136-6BA00-0CA0
F-DI 8x24VDC HF SIEMENS

/11.2 L+ 24VDC

/11.2 M 0VDC

-KF15.32
FDI 8 24VDC
Rack 1
Slot 4

6ES7136-6BA00-0CA0
F-DI 8x24VDC HF SIEMENS

/12.2 L+ 24VDC

/12.2 M 0VDC

4 6

			Date	1/24/2023	Volvo Trucks North America	Valiant TMS	ET200S Wiring F-DI	Drawing name: =2V01&EFS-EL_KF1	= V2KF1
			Ed.	MKLEPADLO					+ V2UC15
			Appr		P6700 Framing - Cell 2V01, KF1			Document type: EFS	Project nr: 22-16152
Modification	Date	Name	Original		Replacement of	Replaced by	Scale 1:1		Page 5 / 1630

0	1	2	3	4	5	6	7	8	9

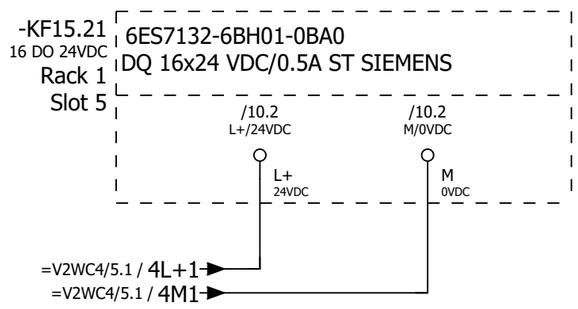

5 7

			Date	1/24/2023	Volvo Trucks North America	Valiant TMS	ET200S Wiring DQ	Drawing name: =2V01&EFS-EL_KF1	= V2KF1	
			Ed.	MKLEPADLO					+ V2UC15	
			Appr		P6700 Framing - Cell 2V01, KF1			Document type: EFS	Project nr: 22-16152	Page 6
Modification	Date	Name	Original		Replacement of / Replaced by	Scale 1:1				1630

0	1	2	3	4	5	6	7	8	9

-KF15.41
=V2FQ1/1.0
=V2FQ1/2.0
=V2FQ1/3.0
=V2FQ1/4.0
/13.1
FDO 4 24VDC
Rack 1
Slot 6

6ES7136-6DB00-0CA0 + BU15-P16+A0+2B F-DQ 4X24VDC/2A PM HF SIEMENS

/13.2 L+ 24VDC

/13.2 M 0VDC

-KF15.42
/14.1
FDO 4 24VDC
Rack 1
Slot 7

6ES7136-6DB00-0CA0 + BU15-P16+A0+2B F-DQ 4X24VDC/2A PM HF SIEMENS

/14.2 L+ 24VDC

/14.2 M 0VDC

			Date	1/24/2023	Volvo Trucks North America	Valiant TMS	ET200S Wiring F-DQ	Drawing name: =2V01&EFS-EL_KF1	= V2KF1
			Ed.	MKLEPADLO					+ V2UC15
			Appr		P6700 Framing - Cell 2V01, KF1			Document type: EFS	Project nr: 22-16152
Modification	Date	Name	Original		Replacement of	Replaced by	Scale 1:1		Page 7 / 1630

0	1	2	3	4	5	6	7	8	9

-KF15.11
/4.0

ET 200SP SIEMENS
DI 16x24 VDC ST

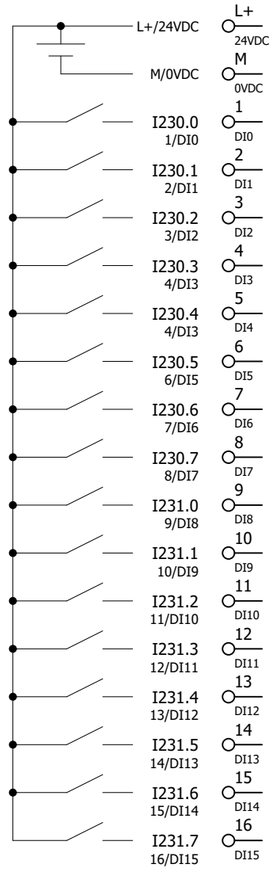

6ES7131-6BH01-0BA0

L+/24VDC	/4.1		
M/0VDC	/4.2		
I230.0 1/DI0	=V2WC3/2.2	=V2WC3+V2UC15-FC1	Monitoring 120 VAC
I230.1 2/DI1	=V2WC3/2.3	=V2WC3+V2UC15-FC2	Monitoring 120 VAC
I230.2 3/DI2	=V2WC4/1.4	=V2WC4+V2UC15-TA1_I	Monitoring 24VDC
I230.3 4/DI3		I230.3	Spare
I230.4 4/DI3	=V2WC4/1.0	=V2WC4+V2UC15-FC11_I	Monitoring 24VDC
I230.5 6/DI5	=V2WC4/11.0	=V2WC4+V2UC15-FC12_I	Monitoring 24VDC
I230.6 7/DI6		I230.6	Spare
I230.7 8/DI7		I230.7	Spare
I231.0 9/DI8		I231.0	Spare
I231.1 10/DI9		I231.1	Spare
I231.2 11/DI10		I231.2	Spare
I231.3 12/DI11		I231.3	Spare
I231.4 13/DI12		I231.4	Spare
I231.5 14/DI13		I231.5	Spare
I231.6 15/DI14		I231.6	Spare
I231.7 16/DI15		I231.7	Spare

			Date	1/24/2023	Volvo Trucks North America	Valiant TMS	ET200S DI Overview KF15.11	Drawing name: =2V01&EFS-EL_KF1	= V2KF1
			Ed.	MKLEPADLO					+ V2UC15
			Appr		P6700 Framing - Cell 2V01, KF1			Document type: EFS	Project nr: 22-16152
Modification	Date	Name	Original		Replacement of / Replaced by	Scale 1:1			Page 8 / 1630

0	1	2	3	4	5	6	7	8	9

-KF15.12
/4.3

ET 200SP SIEMENS
DI 16x24 VDC ST

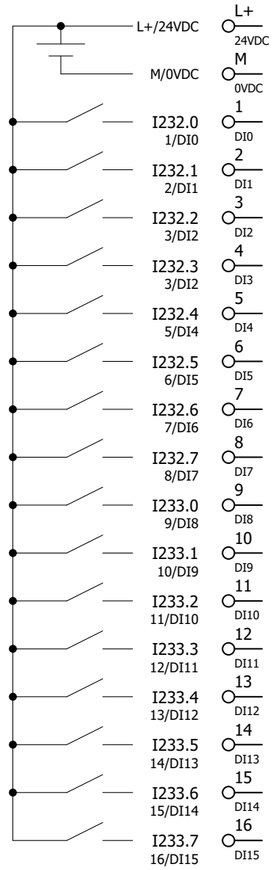

6ES7131-6BH01-0BA0

/4.3			
/4.4			
=V2FQ1/1.8	-KF15.51RQ	Monitoring Safety contactors 11.1L+	
=V2FQ1/2.8	-KF15.52RQ	Monitoring Safety contactors 12.1L+	
=V2FQ1/3.8	-KF15.53RQ	Monitoring Safety contactors 13.1L+	
=V2FQ1/4.8	-KF15.54RQ	Monitoring Safety contactors 14.1L+	
	I232.4	Spare	
	I232.5	Spare	
	I232.6	Spare	
	I232.7	Spare	
=KH0+KH0/7.6	=KH0-BP7_I	Monitoring GL15 At Unload Conveyor AIR On	
=KH0+KH0/9.6	=KH0-BP9_I	Monitoring GL17 At Unload Conveyor AIR On	
	I233.2	Spare	
	I233.3	Spare	
	I233.4	Spare	
	I233.5	Spare	
	I233.6	Spare	
	I233.7	Spare	

8 10

			Date	1/24/2023	Volvo Trucks North America		Valiant TMS	ET200S DI Overview KF15.12	Drawing name: =2V01&EFS-EL_KF1	= V2KF1
			Ed.	MKLEPADLO						+ V2UC15
			Appr		P6700 Framing - Cell 2V01, KF1		Scale 1:1		Document type: EFS	Project nr: 22-16152	Page 9
Modification	Date	Name	Original		Replacement of	Replaced by					1630

0	1	2	3	4	5	6	7	8	9

-KF15.21
/6.1
16 DO 24VDC

ET 200SP SIEMENS
DQ 16x24 VDC/0.5A ST

L+/24VDC	L+ 24VDC	/6.1	
M/0VDC	M 0VDC	/6.2	
Q230.0 1/DQ0	1 DQ0	Q230.0	Spare
Q230.1 2/DQ1	2 DQ1	Q230.1	Spare
Q230.2 3/DQ2	3 DQ2	Q230.2	Spare
Q230.3 4/DQ3	4 DQ3	Q230.3	Spare
Q230.4 5/DQ4	5 DQ4	Q230.4	Spare
Q230.5 6/DQ5	6 DQ5	Q230.5	Spare
Q230.6 7/DQ6	7 DQ6	Q230.6	Spare
Q230.7 8/DQ7	8 DQ7	Q230.7	Spare
Q231.0 9/DQ8	9 DQ8	Q231.0	Spare
Q231.1 10/DQ9	10 DQ9	Q231.1	Spare
Q231.2 11/DQ10	11 DQ10	Q231.2	Spare
Q231.3 12/DQ11	12 DQ11	Q231.3	Spare
Q231.4 13/DQ12	13 DQ12	Q231.4	Spare
Q231.5 14/DQ13	14 DQ13	Q231.5	Spare
Q231.6 15/DQ14	15 DQ14	Q231.6	Spare
Q231.7 16/DQ15	16 DQ15	Q231.7	Spare

6ES7132-6BH01-0BA0

			Date	1/24/2023	Volvo Trucks North America	Valiant TMS	ET200S DQ Overview KF15.21	Drawing name: =2V01&EFS-EL_KF1	= V2KF1
			Ed.	MKLEPADLO					+ V2UC15
			Appr		P6700 Framing - Cell 2V01, KF1			Document type: EFS	Project nr: 22-16152
Modification	Date	Name	Original		Replacement of / Replaced by	Scale 1:1			Page 10 / 1630

0	1	2	3	4	5	6	7	8	9

-KF15.31
/5.0

ET 200SP SIEMENS
F-DI 8x24VDC HF

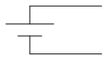

	L+ 24VDC	/5.1			
	M 0VDC	/5.2			
I5230.0	1 DI0	=V2FQ1+.FQ1/10.3	=V2FQ1-BR15.1	S050/055 Light Curtain 1 Ch1	
	9 VS0	=V2FQ1+.FQ1/10.3			
I5230.1	2 DI1		I5230.1	Spare	
	10 VS1				
I5230.2	3 DI2		I5230.2	Spare	
	11 VS2				
I5230.3	4 DI3		I5230.3	Spare	
	12 VS3				
I5230.4	5 DI4	=V2FQ1+.FQ1/10.4	=V2FQ1-BR15.2	S050/055 Light Curtain 1 Ch2	
	13 VS4	=V2FQ1+.FQ1/10.5			
I5230.5	6 DI5		I5230.5	Spare	
	14 VS5				
I5230.6	7 DI6		I5230.6	Spare	
	15 VS6				
I5230.7	8 DI7		I5230.7	Spare	
	16 VS7				

6ES7136-6BA00-0CA0

			Date	1/24/2023	Volvo Trucks North America		Valiant TMS	ET200S F-DI Overview KF15.31	Drawing name: =2V01&EFS-EL_KF1	= V2KF1
			Ed.	MKLEPADLO						+ V2UC15
			Appr		P6700 Framing - Cell 2V01, KF1		Scale 1:1		Document type: EFS	Project nr: 22-16152
Modification	Date	Name	Original		Replacement of	Replaced by				Page 11 / 1630

0	1	2	3	4	5	6	7	8	9

-KF15.32
/5.3

ET 200SP SIEMENS
F-DI 8x24VDC HF

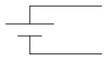

	L+ 24VDC	/5.3			
	M 0VDC	/5.4			
I5236.0	1 DI0		I5236.0	Spare	
	9 VS0				
I5236.1	2 DI1		I5236.1	Spare	
	10 VS1				
I5236.2	3 DI2		I5236.2	Spare	
	11 VS2				
I5236.3	4 DI3		I5236.3	Spare	
	12 VS3				
I5236.4	5 DI4		I5236.4	Spare	
	13 VS4				
I5236.5	6 DI5		I5236.5	Spare	
	14 VS5				
I5236.6	7 DI6		I5236.6	Spare	
	15 VS6				
I5236.7	8 DI7		I5236.7	Spare	
	16 VS7				

6ES7136-6BA00-0CA0

11 13

			Date	1/24/2023	Volvo Trucks North America	Valiant TMS	ET200S F-DI Overview KF15.32	Drawing name: =2V01&EFS-EL_KF1	= V2KF1
			Ed.	MKLEPADLO					+ V2UC15
			Appr		P6700 Framing - Cell 2V01, KF1			Document type: EFS	Project nr: 22-16152
Modification	Date	Name	Original		Replacement of / Replaced by	Scale 1:1			Page 12 / 1630

0	1	2	3	4	5	6	7	8	9

-KF15.41
/7.0

ET 200SP SIEMENS
F-DQ 4X24VDC/2A PM HF

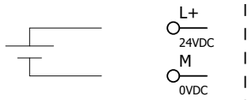

	L+ 24VDC	/7.1			
	M 0VDC	/7.2			
Q5242.0	1 DQ-P0	=V2FQ1/1.1	-KF15.51	Switched Power 1 11.1L+	
Q5242.0	5				
QX.0	9 DQ-M0	=V2FQ1/1.1			
QX.0	13				
Q5242.1	2 DQ-P1	=V2FQ1/2.1	-KF15.52	Switched Power 2 12.1L+	
Q5242.1	6				
QX.1	10 DQ-M1	=V2FQ1/2.1			
QX.1	14				
Q5242.2	3 DQ-P2	=V2FQ1/3.1	-KF15.53	Switched Power 3 13.1L+	
Q5242.2	7				
QX.2	11 DQ-M2	=V2FQ1/3.1			
QX.2	15				
Q5242.3	4 DQ-P3	=V2FQ1/4.1	-KF15.54	Switched Power 4 14.1L+	
Q5242.3	8				
QX.3	12 DQ-M3	=V2FQ1/4.1			
QX.3	16				

6ES7136-6DB00-0CA0 + BU15-P16+A0+2B

			Date	1/24/2023	Volvo Trucks North America	Valiant TMS	ET200S F-DQ Overview KF15.41	Drawing name: =2V01&EFS-EL_KF1	= V2KF1
			Ed.	MKLEPADLO					+ V2UC15
			Appr		P6700 Framing - Cell 2V01, KF1			Document type: EFS	Project nr: 22-16152
Modification	Date	Name	Original		Replacement of	Replaced by	Scale 1:1		Page 13 / 1630

0	1	2	3	4	5	6	7	8	9

-KF15.42
/7.5

ET 200SP SIEMENS
F-DQ 4X24VDC/2A PM HF

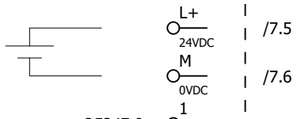

Q5247.0	Q5247.0	Spare
Q5247.1	Q5247.1	Spare
Q5247.2	Q5247.2	Spare
Q5247.3	Q5247.3	Spare

6ES7136-6DB00-0CA0 + BU15-P16+A0+2B

			Date	1/24/2023	Volvo Trucks North America	Valiant TMS	ET200S F-DQ Overview KF15.42	Drawing name: =2V01&EFS-EL_KF1	= V2KF1
			Ed.	MKLEPADLO					+ V2UC15
			Appr		P6700 Framing - Cell 2V01, KF1			Document type: EFS	Project nr: 22-16152
Modification	Date	Name	Original		Replacement of	Replaced by	Scale 1:1		Page 14 / 1630

0	1	2	3	4	5	6	7	8	9

-KF15.51
=V2FQ1/1.2
=V2WC4/12.1

ET 200SP SIEMENS
F-RQ 1x24VDC/24..230VAC/5A

Q5252.0	1 RQ01+	=V2WC4/12.2	11L+	
	2 RQ01-	=V2WC4/12.2	11.1L+	
Q5252.1	3 RQ02+	=V2WC4/12.3	11L+	
	4 RQ02-	=V2WC4/12.4	11.1L+	
	9 IN P	=V2FQ1/1.3	Switched Power 1 11.1L+P	
	10 OUT P	=V2FQ1/1.4	SPARE	
	11 IN M	=V2FQ1/1.4	Switched Power 1 11.1L+M	
	12 OUT M	=V2FQ1/1.5	SPARE	
	1A AUX			
	2A AUX			
	3A AUX			
	4A AUX			

6ES7136-6RA00-0BF0 + BU20-P8+A4+0B

			Date	1/24/2023	Volvo Trucks North America		Valiant TMS	ET200S F-RQ Overview KF15.51	Drawing name: =2V01&EFS-EL_KF1	= V2KF1	
			Ed.	MKLEPADLO						+ V2UC15	
			Appr		P6700 Framing - Cell 2V01, KF1		Scale 1:1		Document type: EFS	Project nr: 22-16152	Page 15 / 1630
Modification	Date	Name	Original		Replacement of	Replaced by					

0	1	2	3	4	5	6	7	8	9

-KF15.52
=V2FQ1/2.2
=V2WC4/13.1

ET 200SP SIEMENS
F-RQ 1x24VDC/24..230VAC/5A

Q5253.0	1 RQ01+	=V2WC4/13.2	12L+
	2 RQ01-	=V2WC4/13.2	12.1L+
Q5253.1	3 RQ02+	=V2WC4/13.3	12L+
	4 RQ02-	=V2WC4/13.4	12.1L+
	9 IN P	=V2FQ1/2.3	Switched Power 2 12.1L+P
	10 OUT P	=V2FQ1/2.4	SPARE
	11 IN M	=V2FQ1/2.4	Switched Power 2 12.1L+M
	12 OUT M	=V2FQ1/2.5	SPARE
	1A AUX		
	2A AUX		
	3A AUX		
	4A AUX		

6ES7136-6RA00-0BF0 + BU20-P8+A4+0B

			Date	1/24/2023	Volvo Trucks North America	Valiant TMS	ET200S F-RQ Overview KF15.52	Drawing name: =2V01&EFS-EL_KF1	= V2KF1
			Ed.	MKLEPADLO					+ V2UC15
			Appr		P6700 Framing - Cell 2V01, KF1			Document type: EFS	Project nr: 22-16152
Modification	Date	Name	Original		Replacement of	Replaced by	Scale 1:1		Page 16 / 1630

0	1	2	3	4	5	6	7	8	9

-KF15.53
=V2FQ1/3.2
=V2WC4/14.1

ET 200SP SIEMENS
F-RQ 1x24VDC/24..230VAC/5A

Q5254.0	1 RQ01+	=V2WC4/14.2	13L+
	2 RQ01-	=V2WC4/14.2	13.1L+
Q5254.1	3 RQ02+	=V2WC4/14.3	13L+
	4 RQ02-	=V2WC4/14.4	13.1L+
	9 IN P	=V2FQ1/3.3	Switched Power 3 13.1L+P
	10 OUT P	=V2FQ1/3.4	SPARE
	11 IN M	=V2FQ1/3.4	Switched Power 3 13.1L+M
	12 OUT M	=V2FQ1/3.5	SPARE
	1A AUX		
	2A AUX		
	3A AUX		
	4A AUX		

6ES7136-6RA00-0BF0 + BU20-P8+A4+0B

			Date	1/24/2023	Volvo Trucks North America	Valiant TMS	ET200S F-RQ Overview KF15.53	Drawing name: =2V01&EFS-EL_KF1	= V2KF1
			Ed.	MKLEPADLO					+ V2UC15
			Appr		P6700 Framing - Cell 2V01, KF1			Document type: EFS	Project nr: 22-16152
Modification	Date	Name	Original		Replacement of	Replaced by	Scale 1:1		Page 17 / 1630

0	1	2	3	4	5	6	7	8	9

-KF15.54
=V2FQ1/4.2
=V2WC4/15.1

ET 200SP SIEMENS
F-RQ 1x24VDC/24..230VAC/5A

Q5255.0	1 RQ01+	=V2WC4/15.2	14L+
	2 RQ01-	=V2WC4/15.2	14.1L+
Q5255.1	3 RQ02+	=V2WC4/15.3	14L+
	4 RQ02-	=V2WC4/15.4	14.1L+
	9 IN P	=V2FQ1/4.3	Switched Power 4 14.1L+P
	10 OUT P	=V2FQ1/4.4	SPARE
	11 IN M	=V2FQ1/4.4	Switched Power 4 14.1L+M
	12 OUT M	=V2FQ1/4.5	SPARE
	1A AUX		
	2A AUX		
	3A AUX		
	4A AUX		

6ES7136-6RA00-0BF0 + BU20-P8+A4+0B

			Date	1/24/2023	Volvo Trucks North America	Valiant TMS	ET200S F-RQ Overview KF15.54	Drawing name: =2V01&EFS-EL_KF1	= V2KF1
			Ed.	MKLEPADLO					+ V2UC15
			Appr		P6700 Framing - Cell 2V01, KF1			Document type: EFS	Project nr: 22-16152
Modification	Date	Name	Original		Replacement of / Replaced by	Scale 1:1			Page 18 / 1630

0	1	2	3	4	5	6	7	8	9

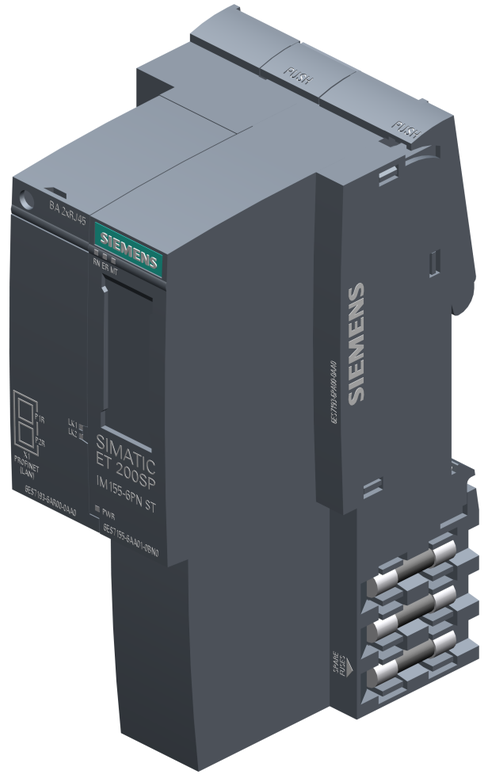

=V2FQ1+.FQ1/3.7
+.FQ1-KF100.14-P16

-KF100.14-P16
PROFINET Cable
6XV1840-3AH10

UC32-PNET1

-PNET1
PROFINET Cable
6XV1840-3AH10

=V2SF0PG1/1.6
-KF32-P2

=V2WC4/2.1 / 1L+1_1
=V2WC4/2.1 / 1M1_1

-X80 1L+ 1 X80/1/1L+
-X80 1M 2 X80/2/1M
-X80 2L+ 3 X80/3/2L+
-X80 2M 4 X80/4/2M
-P1
-P2
Profinet

X80 6ES7155-6AA01-0BN0 IM 155 PN ST SIEMENS

-KF32
Rack 1
Slot 0

+.UC15/18

2

			Date	1/24/2023	Volvo Trucks North America		Valiant TMS	IM 155 PN	Drawing name: =2V01&EFS-EL_KF1	= V2KF1
			Ed.	MKLEPADLO						+ V2UC32
			Appr		P6700 Framing - Cell 2V01, KF1				Document type: EFS	Project nr: 22-16152
Modification	Date	Name	Original		Replacement of	Replaced by	Scale 1:1			Page 1 / 1630

0	1	2	3	4	5	6	7	8	9

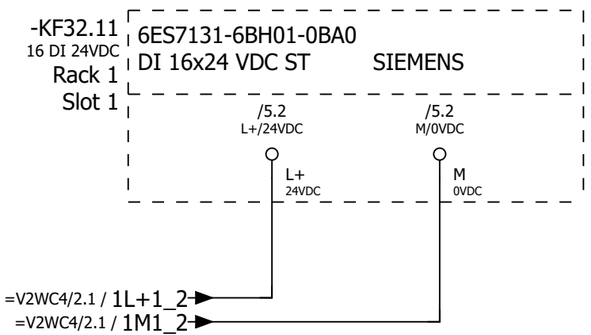

1 3

			Date	1/24/2023	Volvo Trucks North America		Valiant TMS	ET200S Wiring DI	Drawing name: =2V01&EFS-EL_KF1	= V2KF1	
			Ed.	MKLEPADLO						+ V2UC32	
			Appr		P6700 Framing - Cell 2V01, KF1				Document type: EFS	Project nr: 22-16152	Page 2
Modification	Date	Name	Original		Replacement of	Replaced by	Scale 1:1				1630

0	1	2	3	4	5	6	7	8	9

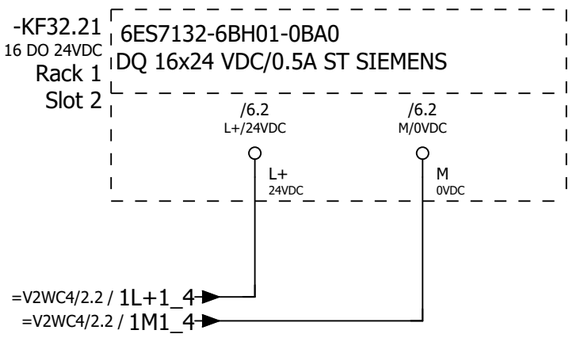

			Date	1/24/2023	Volvo Trucks North America	Valiant TMS	ET200S Wiring DO	Drawing name: =2V01&EFS-EL_KF1	= V2KF1	
			Ed.	MKLEPADLO					+ V2UC32	
			Appr		P6700 Framing - Cell 2V01, KF1			Document type: EFS	Project nr: 22-16152	Page 3
Modification	Date	Name	Original		Replacement of / Replaced by	Scale 1:1				1630

0	1	2	3	4	5	6	7	8	9

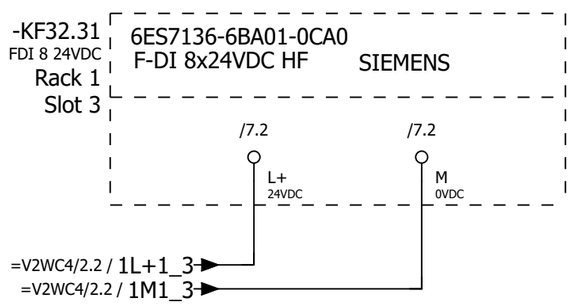

3 5

			Date	1/24/2023	Volvo Trucks North America		Valiant TMS	ET200S Wiring F-DI	Drawing name: =2V01&EFS-EL_KF1	= V2KF1	
			Ed.	MKLEPADLO						+ V2UC32	
			Appr		P6700 Framing - Cell 2V01, KF1		Scale 1:1		Document type: EFS	Project nr: 22-16152	Page 4
Modification	Date	Name	Original		Replacement of	Replaced by					1630

-KF32.11

ET 200SP SIEMENS
DI 16x24 VDC ST

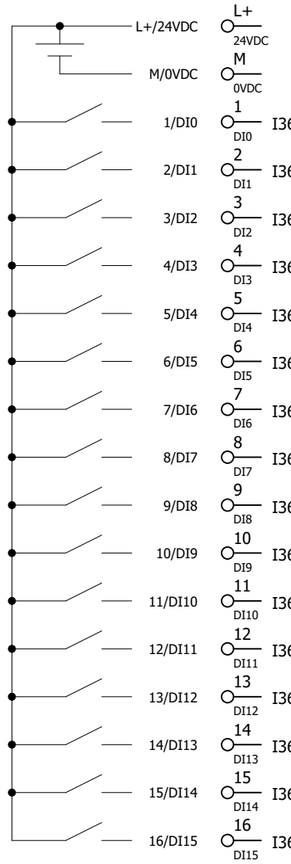

/2.1			
/2.2			
	I360.0	Spare	
	I360.1	Spare	
=V2SF0PG1/2.7	=V2SF1+V2UC32-SF3_4	Start auto PB	
	I360.3	Spare	
=V2SF0PG1/2.5	=V2SF1+V2UC32-SF1_4	Set PB	
=V2SF0PG1/2.2	=V2SF1+V2UC32-SF2_4	Reset PB	
	I360.6	Spare	
	I360.7	Spare	
=V2WC4/3.2	=V2WC4+V2UC32-FC1	Monitoring 24 VDC	
=V2WC4/3.4	=V2WC4+V2UC32-FC2	Monitoring 24 VDC	
	I361.2	Spare	
	I361.3	Spare	
	I361.4	Spare	
	I361.5	Spare	
	I361.6	Spare	
	I361.7	Spare	

6ES7131-6BH01-0BA0

			Date	1/24/2023	Volvo Trucks North America		Valiant TMS	ET200S Cross-reference Input module	Drawing name: =2V01&EFS-EL_KF1	= V2KF1
			Ed.	MKLEPADLO						+ V2UC32
			Appr		P6700 Framing - Cell 2V01, KF1				Document type: EFS	Project nr: 22-16152	Page 5
Modification	Date	Name	Original		Replacement of	Replaced by	Scale 1:1				1630

0	1	2	3	4	5	6	7	8	9

-KF32.21

ET 200SP SIEMENS
DQ 16x24 VDC/0.5A ST

L+/24VDC	L+ 24VDC		/3.1		
M/0VDC	M 0VDC		/3.2		
1/DQ0	1 DQ0	Q360.0		Q360.0	Spare
2/DQ1	2 DQ1	Q360.1	=V2SF0PG1/2.8	=V2SF1+V2UC32-PF3_Q	Start auto LT
3/DQ2	3 DQ2	Q360.2		Q360.2	Spare
4/DQ3	4 DQ3	Q360.3		Q360.3	Spare
5/DQ4	5 DQ4	Q360.4		Q360.4	Spare
6/DQ5	6 DQ5	Q360.5		Q360.5	Spare
7/DQ6	7 DQ6	Q360.6		Q360.6	Spare
8/DQ7	8 DQ7	Q360.7		Q360.7	Spare
9/DQ8	9 DQ8	Q361.0		Q361.0	Spare
10/DQ9	10 DQ9	Q361.1		Q361.1	Spare
11/DQ10	11 DQ10	Q361.2		Q361.2	Spare
12/DQ11	12 DQ11	Q361.3		Q361.3	Spare
13/DQ12	13 DQ12	Q361.4		Q361.4	Spare
14/DQ13	14 DQ13	Q361.5		Q361.5	Spare
15/DQ14	15 DQ14	Q361.6		Q361.6	Spare
16/DQ15	16 DQ15	Q361.7		Q361.7	Spare

6ES7132-6BH01-0BA0

5 7

			Date	1/24/2023	Volvo Trucks North America	Valiant TMS	ET200S Cross-reference Output module	Drawing name: =2V01&EFS-EL_KF1	= V2KF1	
			Ed.	MKLEPADLO					+ V2UC32	
			Appr		P6700 Framing - Cell 2V01, KF1	Scale 1:1		Document type: EFS	Project nr: 22-16152	Page 6 / 1630
Modification	Date	Name	Original		Replacement of	Replaced by				

0	1	2	3	4	5	6	7	8	9

-KF32.31
/4.0

ET 200SP SIEMENS
F-DI 8x24VDC HF

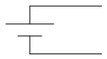

	L+ 24VDC	/4.1			
	M 0VDC	/4.2			
I5360.0	1 DI0	=FQ0V2SF1S01/1.3	=FQ0V2SF1S01+UC32-SF1.1	Emergency stop Ch1	
	9 VS0	=FQ0V2SF1S01/1.3			
I5360.1	2 DI1		I5360.1	Spare	
	10 VS1				
I5360.2	3 DI2		I5360.2	Spare	
	11 VS2				
I5360.3	4 DI3		I5360.3	Spare	
	12 VS3				
I5360.4	5 DI4	=FQ0V2SF1S01/1.4	=FQ0V2SF1S01+UC32-SF1.11	Emergency stop Ch2	
	13 VS4	=FQ0V2SF1S01/1.4			
I5360.5	6 DI5		I5360.5	Spare	
	14 VS5				
I5360.6	7 DI6		I5360.6	Spare	
	15 VS6				
I5360.7	8 DI7		I5360.7	Spare	
	16 VS7				

6ES7136-6BA01-0CA0

			Date	1/24/2023	Volvo Trucks North America	Valiant TMS	ET200S Cross-reference Safe input module	Drawing name: =2V01&EFS-EL_KF1	= V2KF1
			Ed.	MKLEPADLO					+ V2UC32
			Appr		P6700 Framing - Cell 2V01, KF1			Document type: EFS	Project nr: 22-16152
Modification	Date	Name	Original		Replacement of / Replaced by	Scale 1:1			Page 7 / 1630

0	1	2	3	4	5	6	7	8	9

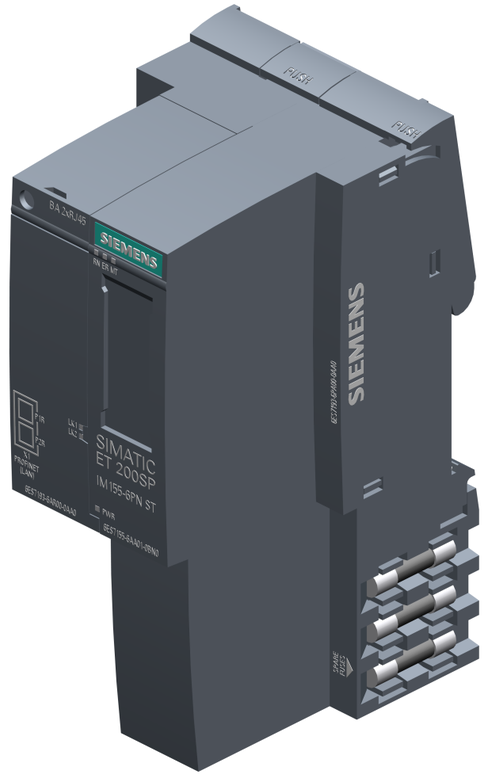

+.UC14/2.6
+.UC14-KF100.14-P12

-KF100.14-P12
PROFINET Cable
6XV1840-3AH10

UC33-PNET1

-PNET1
PROFINET Cable
6XV1840-3AH10

=V2SF0PG2/1.6
-KF33-P2

=V2WC4/2.1 / 1L+1_1
=V2WC4/2.1 / 1M1_1

-X80 1L+ 1 — X80/1/1L+
-X80 1M 2 — X80/2/1M
-X80 2L+ 3 — X80/3/2L+
-X80 2M 4 — X80/4/2M
-P1
-P2
Profinet

X80 6ES7155-6AA01-0BN0 IM 155 PN ST SIEMENS

-KF33
Rack 1
Slot 0

+.UC32/7

2

			Date	1/24/2023	Volvo Trucks North America		Valiant TMS	IM 155 PN	Drawing name: =2V01&EFS-EL_KF1	= V2KF1
			Ed.	MKLEPADLO						+ V2UC33
			Appr		P6700 Framing - Cell 2V01, KF1				Document type: EFS	Project nr: 22-16152
Modification	Date	Name	Original		Replacement of	Replaced by	Scale 1:1			Page 1 / 1630

0	1	2	3	4	5	6	7	8	9

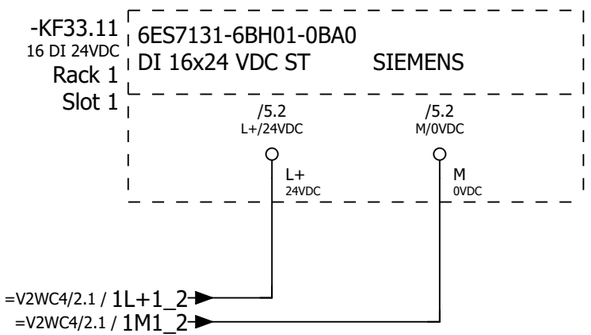

1 3

			Date	1/24/2023	Volvo Trucks North America		Valiant TMS	ET200S Wiring DI	Drawing name: =2V01&EFS-EL_KF1	= V2KF1	
			Ed.	MKLEPADLO						+ V2UC33	
			Appr		P6700 Framing - Cell 2V01, KF1				Document type: EFS	Project nr: 22-16152	Page 2
Modification	Date	Name	Original		Replacement of	Replaced by	Scale 1:1				1630

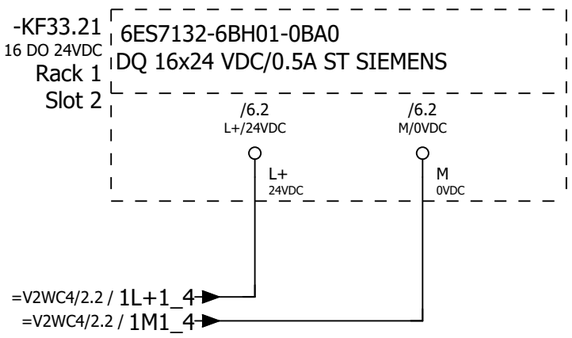

			Date	1/24/2023	Volvo Trucks North America	Valiant TMS	ET200S Wiring DO	Drawing name: =2V01&EFS-EL_KF1	= V2KF1	
			Ed.	MKLEPADLO					+ V2UC33	
			Appr		P6700 Framing - Cell 2V01, KF1			Document type: EFS	Project nr: 22-16152	Page 3
Modification	Date	Name	Original		Replacement of / Replaced by	Scale 1:1				1630

0	1	2	3	4	5	6	7	8	9

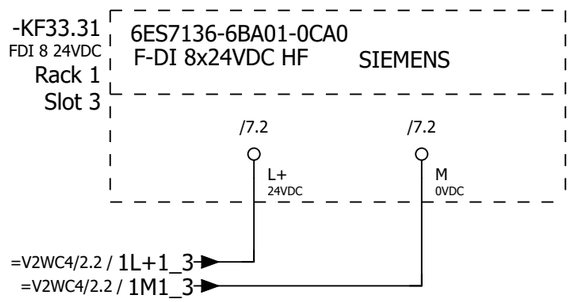

3 5

			Date	1/24/2023	Volvo Trucks North America		Valiant TMS	ET200S Wiring F-DI	Drawing name: =2V01&EFS-EL_KF1	= V2KF1	
			Ed.	MKLEPADLO						+ V2UC33	
			Appr		P6700 Framing - Cell 2V01, KF1		Scale 1:1		Document type: EFS	Project nr: 22-16152	Page 4
Modification	Date	Name	Original		Replacement of	Replaced by					1630

-KF33.11

ET 200SP SIEMENS
DI 16x24 VDC ST

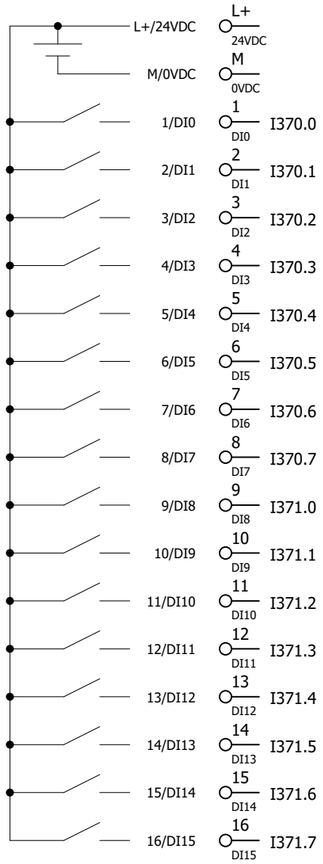

/2.1			
/2.2			
	I370.0	Spare	
	I370.1	Spare	
=V2SF0PG2/2.7	=V2SF1+V2UC33-SF3_4	Start auto PB	
	I370.3	Spare	
=V2SF0PG2/2.5	=V2SF1+V2UC33-SF1_4	Set PB	
=V2SF0PG2/2.2	=V2SF1+V2UC33-SF2_4	Reset PB	
	I370.6	Spare	
	I370.7	Spare	
=V2WC4/3.2	=V2WC4+V2UC33-FC1	Monitoring 24 VDC	
=V2WC4/3.4	=V2WC4+V2UC33-FC2	Monitoring 24 VDC	
	I371.2	Spare	
	I371.3	Spare	
	I371.4	Spare	
	I371.5	Spare	
	I371.6	Spare	
	I371.7	Spare	

6ES7131-6BH01-0BA0

			Date	1/24/2023	Volvo Trucks North America		Valiant TMS	ET200S Cross-reference Input module	Drawing name: =2V01&EFS-EL_KF1	= V2KF1
			Ed.	MKLEPADLO						+ V2UC33
			Appr		P6700 Framing - Cell 2V01, KF1				Document type: EFS	Project nr: 22-16152	Page 5
Modification	Date	Name	Original		Replacement of	Replaced by	Scale 1:1				1630

0	1	2	3	4	5	6	7	8	9

-KF33.21

ET 200SP SIEMENS
DQ 16x24 VDC/0.5A ST

L+/24VDC	L+ 24VDC		/3.1		
M/0VDC	M 0VDC		/3.2		
1/DQ0	1 DQ0	Q370.0		Q370.0	Spare
2/DQ1	2 DQ1	Q370.1	=V2SF0PG2/2.8	=V2SF1+V2UC33-PF3_Q	Start auto LT
3/DQ2	3 DQ2	Q370.2		Q370.2	Spare
4/DQ3	4 DQ3	Q370.3		Q370.3	Spare
5/DQ4	5 DQ4	Q370.4		Q370.4	Spare
6/DQ5	6 DQ5	Q370.5		Q370.5	Spare
7/DQ6	7 DQ6	Q370.6		Q370.6	Spare
8/DQ7	8 DQ7	Q370.7		Q370.7	Spare
9/DQ8	9 DQ8	Q371.0		Q371.0	Spare
10/DQ9	10 DQ9	Q371.1		Q371.1	Spare
11/DQ10	11 DQ10	Q371.2		Q371.2	Spare
12/DQ11	12 DQ11	Q371.3		Q371.3	Spare
13/DQ12	13 DQ12	Q371.4		Q371.4	Spare
14/DQ13	14 DQ13	Q371.5		Q371.5	Spare
15/DQ14	15 DQ14	Q371.6		Q371.6	Spare
16/DQ15	16 DQ15	Q371.7		Q371.7	Spare

6ES7132-6BH01-0BA0

5 7

			Date	1/24/2023	Volvo Trucks North America	Valiant TMS	ET200S Cross-reference Output module	Drawing name: =2V01&EFS-EL_KF1		= V2KF1	
			Ed.	MKLEPADLO						+ V2UC33	
			Appr		P6700 Framing - Cell 2V01, KF1	Scale 1:1		Document type: EFS	Project nr: 22-16152	Page	6
Modification	Date	Name	Original		Replacement of	Replaced by					1630

0	1	2	3	4	5	6	7	8	9

-KF33.31
/4.0

ET 200SP SIEMENS
F-DI 8x24VDC HF

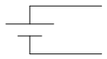

	L+ 24VDC	/4.1			
	M 0VDC	/4.2			
I5370.0	1 DI0	=FQ0V2SF2S01/1.3	=FQ0V2SF2S01+UC33-SF1.1	Emergency stop Ch1	
	9 VS0	=FQ0V2SF2S01/1.3			
I5370.1	2 DI1		I5370.1	Spare	
	10 VS1				
I5370.2	3 DI2		I5370.2	Spare	
	11 VS2				
I5370.3	4 DI3		I5370.3	Spare	
	12 VS3				
I5370.4	5 DI4	=FQ0V2SF2S01/1.4	=FQ0V2SF2S01+UC33-SF1.11	Emergency stop Ch2	
	13 VS4	=FQ0V2SF2S01/1.4			
I5370.5	6 DI5		I5370.5	Spare	
	14 VS5				
I5370.6	7 DI6		I5370.6	Spare	
	15 VS6				
I5370.7	8 DI7		I5370.7	Spare	
	16 VS7				

6ES7136-6BA01-0CA0

			Date	1/24/2023	Volvo Trucks North America	Valiant TMS	ET200S Cross-reference Safe input module	Drawing name: =2V01&EFS-EL_KF1	= V2KF1
			Ed.	MKLEPADLO					+ V2UC33
			Appr		P6700 Framing - Cell 2V01, KF1			Document type: EFS	Project nr: 22-16152
Modification	Date	Name	Original		Replacement of / Replaced by	Scale 1:1			Page 7 / 1630

0	1	2	3	4	5	6	7	8	9

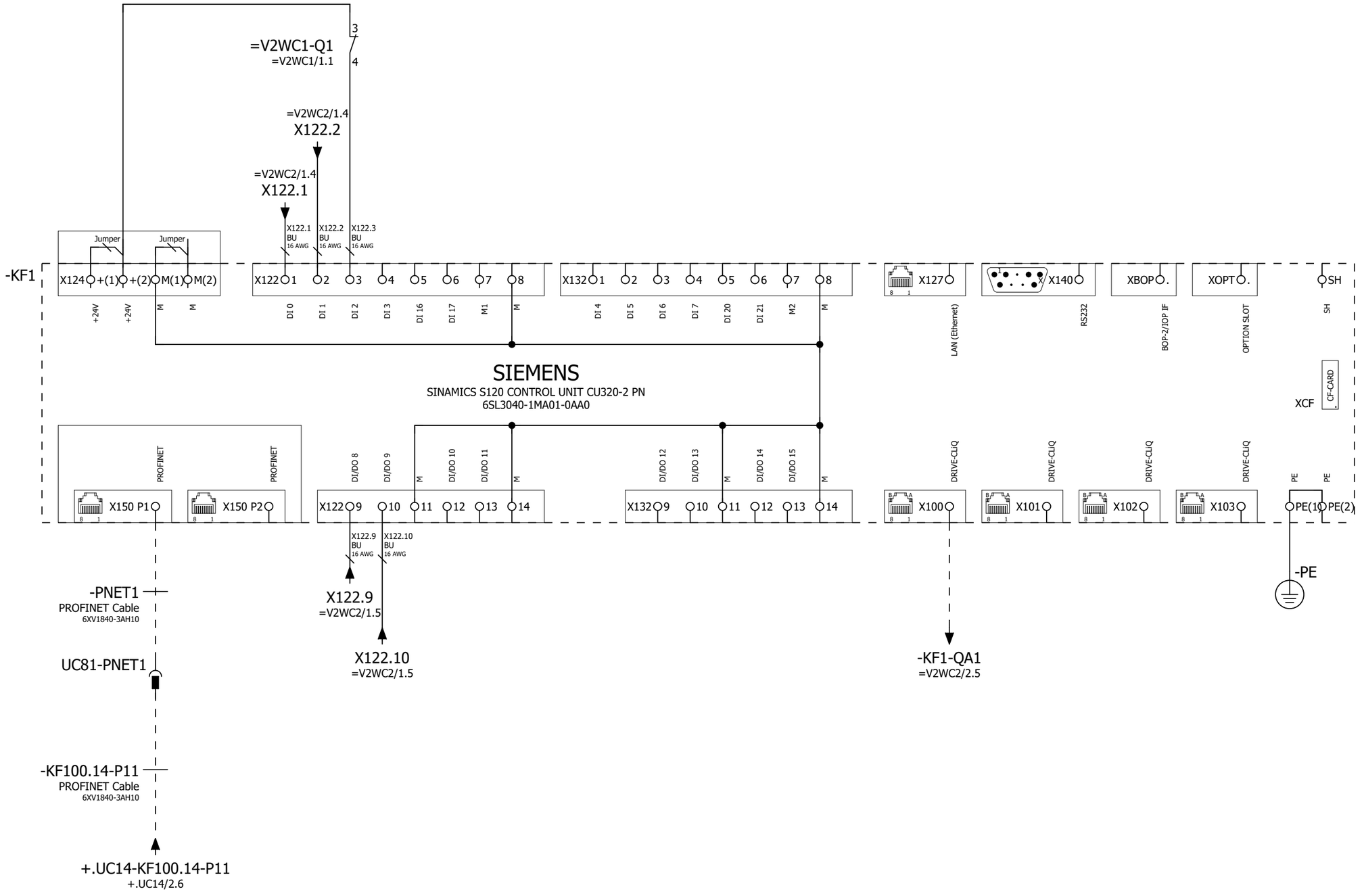

+.UC33/7

=V2PZ1PF1+.UC61/1

			Date	1/24/2023	Volvo Trucks North America	Valiant TMS	SINAMICS S120 Control Unit	Drawing name: =2V01&EFS-EL_KF1	= V2KF1
			Ed.	MKLEPADLO					+ V2UC81
			Appr		P6700 Framing - Cell 2V01, KF1	Scale 1:1		Document type: EFS	Project nr: 22-16152
Modification	Date	Name	Original		Replacement of	Replaced by			Page 1 / 1630

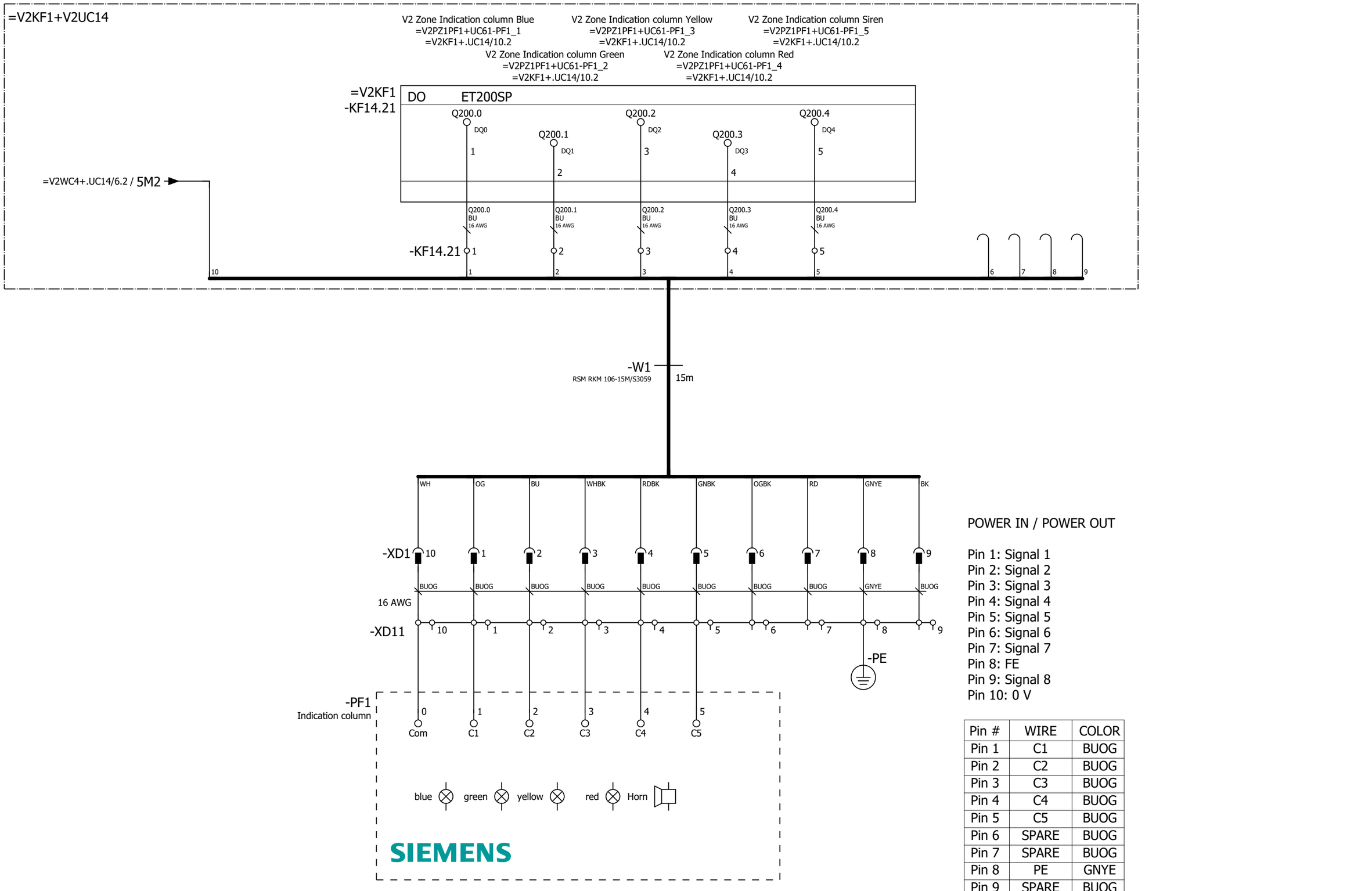

POWER IN / POWER OUT

Pin 1: Signal 1
Pin 2: Signal 2
Pin 3: Signal 3
Pin 4: Signal 4
Pin 5: Signal 5
Pin 6: Signal 6
Pin 7: Signal 7
Pin 8: FE
Pin 9: Signal 8
Pin 10: 0 V

Pin #	WIRE	COLOR
Pin 1	C1	BUOG
Pin 2	C2	BUOG
Pin 3	C3	BUOG
Pin 4	C4	BUOG
Pin 5	C5	BUOG
Pin 6	SPARE	BUOG
Pin 7	SPARE	BUOG
Pin 8	PE	GNYE
Pin 9	SPARE	BUOG
Pin 10	COM	BUOG

=V2KF1+.UC81/1

=V2SF0PG1+.UC32/1

			Date	1/24/2023	Volvo Trucks North America	Valiant TMS	V2 Zone Indication column	Drawing name: =2V01&EFS-EL_KF1
			Ed.	MKLEPADLO	P6700 Framing - Cell 2V01, KF1			= V2PZ1PF1
			Appr			Scale 1:1		+ V2UC61
Modification	Date	Name	Original		Replacement of	Replaced by		Document type: EFS / Project nr: 22-16152 / Page 1 / 1630

0	1	2	3	4	5	6	7	8	9

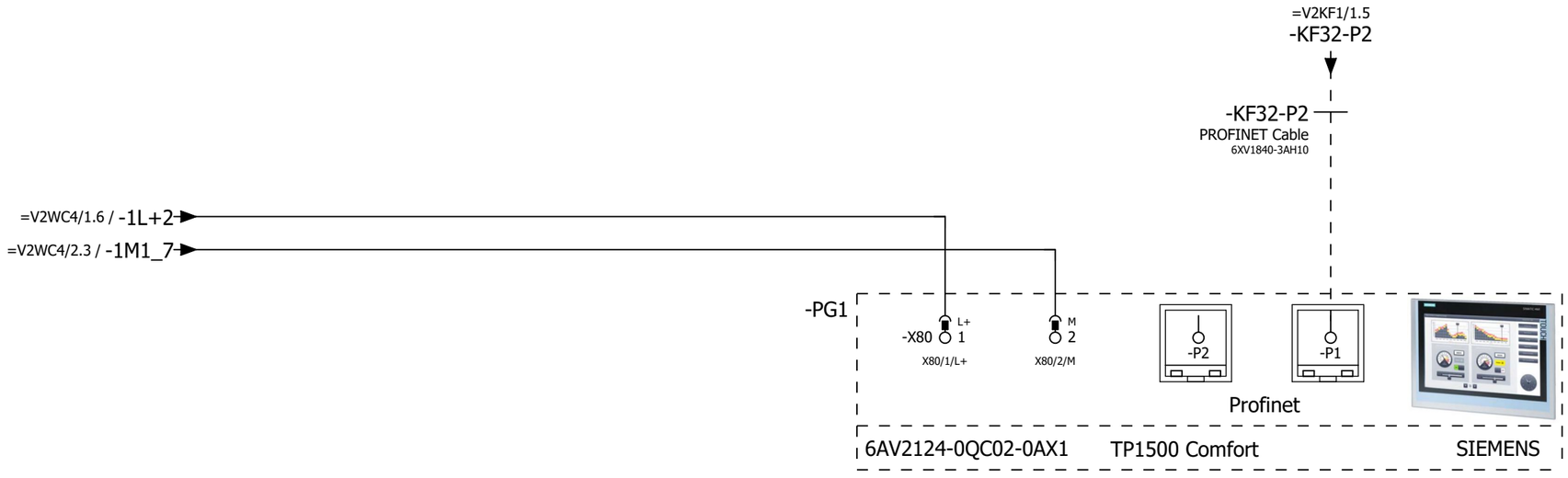

=V2PZ1PF1+.UC61/1

2

			Date	1/24/2023	Volvo Trucks North America		Valiant TMS	TP1500: SOP Display	Drawing name: =2V01&EFS-EL_KF1	= V2SF0PG1	
			Ed.	MKLEPADLO						+ V2UC32	
			Appr		P6700 Framing - Cell 2V01, KF1		Scale 1:1		Document type: EFS	Project nr: 22-16152	Page 1 / 1630
Modification	Date	Name	Original		Replacement of	Replaced by					

Reset PB
=V2SF1+V2UC32-SF2_4
=V2KF1/5.2

DI ET200SP
I360.5 DI5
6

=V2KF1
-KF32.11
I360.5 BU 18 AWG

Set PB
=V2SF1+V2UC32-SF1_4
=V2KF1/5.2

DI ET200SP
I360.4 DI4
5

I360.4 BU 18 AWG

Start auto PB
=V2SF1+V2UC32-SF3_4
=V2KF1/5.2

DI ET200SP
I360.2 DI2
3

I360.2 BU 18 AWG

Start auto LT
=V2SF1+V2UC32-PF3_Q
=V2KF1/6.2

DO ET200SP
Q360.1 DQ1
2

=V2KF1
-KF32.21
Q360.1 BU 18 AWG

-SF2
&ELU/1.3
&ELU/1.3
CP1-10Y-20
Reset PB
4 E 3 1SFA619100R1023 14 13

-SF1
&ELU/1.2
&ELU/1.2
CP1-10G-20
Set PB
4 E 3 1SFA619100R1022 14 13

-SF3/PF3
&ELU/1.3
&ELU/1.3
CP1-11C-10
Start auto PBLT
4 E 3 1SFA619100R1118 x1 White x2

=V2WC4/2.3 / 1L+1_5
=V2WC4/2.3 / 1M1_5

1

=V2SF0PG2+.UC33/1

			Date	1/24/2023	Volvo Trucks North America	Valiant TMS	Operating box SOP	Drawing name: =2V01&EFS-EL_KF1	= V2SF0PG1
			Ed.	MKLEPADLO					+ V2UC32
			Appr		P6700 Framing - Cell 2V01, KF1	Scale 1:1		Document type: EFS / Project nr: 22-16152	Page 2 / 1630
Modification	Date	Name	Original		Replacement of / Replaced by				

0	1	2	3	4	5	6	7	8	9

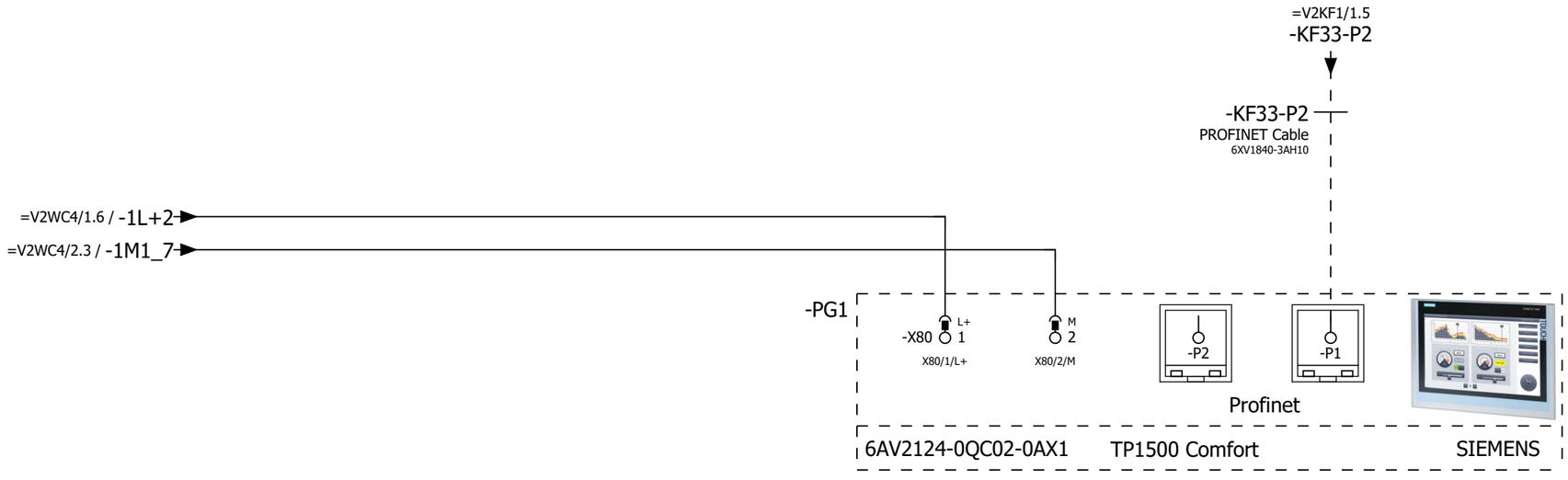

=V2SF0PG1+.UC32/2

2

			Date	1/24/2023	Volvo Trucks North America	Valiant TMS	TP1500: SOP Display	Drawing name: =2V01&EFS-EL_KF1	= V2SF0PG2
			Ed.	MKLEPADLO					+ V2UC33
			Appr		P6700 Framing - Cell 2V01, KF1	Scale 1:1		Document type: EFS	Project nr: 22-16152
Modification	Date	Name	Original		Replacement of	Replaced by			Page 1 / 1630

Reset PB
=V2SF1+V2UC33-SF2_4
=V2KF1/5.2

DI	ET200SP
I370.5 DI5	
6	

=V2KF1
-KF33.11
I370.5
BU
18 AWG

Set PB
=V2SF1+V2UC33-SF1_4
=V2KF1/5.2

DI	ET200SP
I370.4 DI4	
5	

I370.4
BU
18 AWG

Start auto PB
=V2SF1+V2UC33-SF3_4
=V2KF1/5.2

DI	ET200SP
I370.2 DI2	
3	

I370.2
BU
18 AWG

Start auto LT
=V2SF1+V2UC33-PF3_Q
=V2KF1/6.2

DO	ET200SP
Q370.1 DQ1	
2	

=V2KF1
-KF33.21
Q370.1
BU
18 AWG

-SF2
&ELU/1.3
&ELU/1.3
CP1-10Y-20
Reset PB
4 E 3 1SFA619100R1023 14 13

-SF1
&ELU/1.2
&ELU/1.2
CP1-10G-20
Set PB
4 E 3 1SFA619100R1022 14 13

-SF3/PF3
&ELU/1.3
&ELU/1.3
CP1-11C-10
Start auto PBLT
4 E 3 1SFA619100R1118 x1 White x2

=V2WC4/2.3 / 1L+1_5
=V2WC4/2.3 / 1M1_5

1

=V2UQ31BG0+.UQ31/1

			Date	1/24/2023	Volvo Trucks North America	Valiant TMS	Operating box SOP	Drawing name: =2V01&EFS-EL_KF1	= V2SF0PG2
			Ed.	MKLEPADLO					+ V2UC33
			Appr		P6700 Framing - Cell 2V01, KF1			Document type: EFS / Project nr: 22-16152	Page 2
Modification	Date	Name	Original		Replacement of / Replaced by	Scale 1:1			1630

0	1	2	3	4	5	6	7	8	9

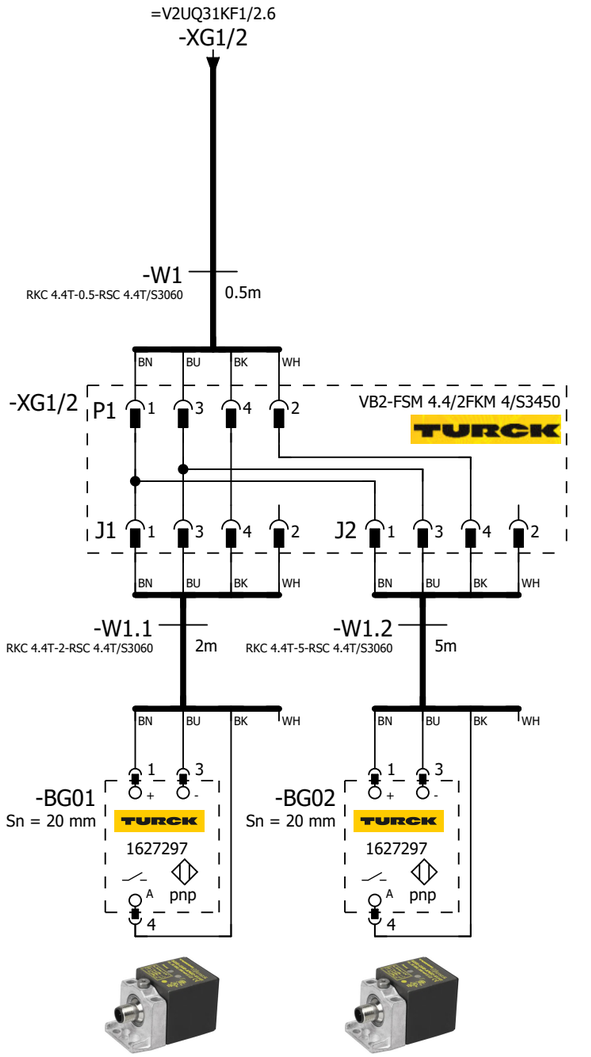

=V2UQ31
-BG01
B-Side LH Inner
Part Present

=V2UQ31
-BG02
B-Side LH Inner
Part Present

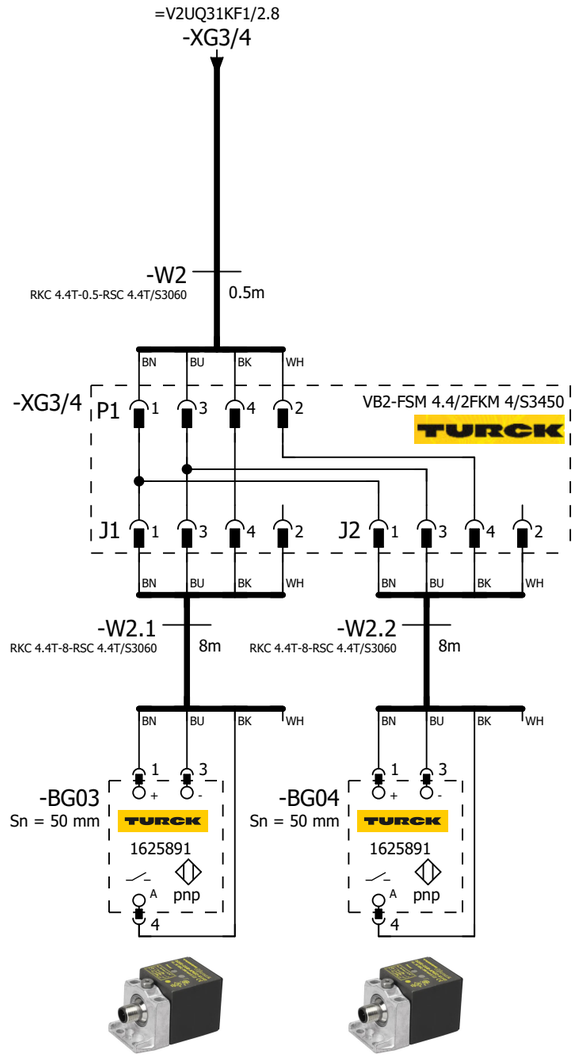

=V2UQ31
-BG03
B-Side LH Inner
Part Present

=V2UQ31
-BG04
Roof Inner LH
Part Present

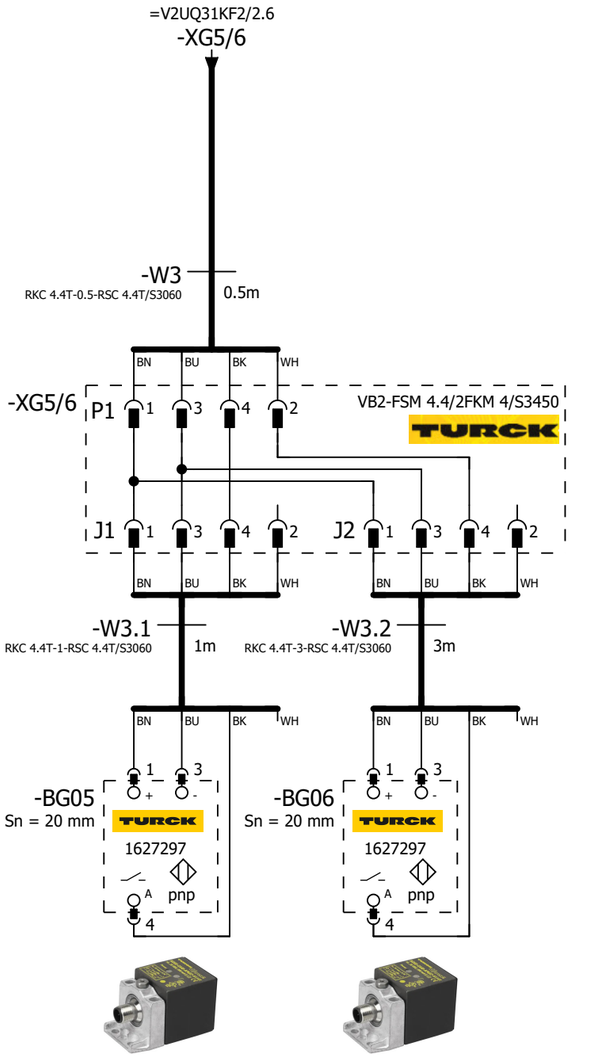

=V2UQ31
-BG05
B-Side RH Inner
Part Present

=V2UQ31
-BG06
B-Side RH Inner
Part Present

=V2SF0PG2+.UC33/2

2

			Date	1/24/2023	Volvo Trucks North America	Valiant TMS	SENSORS	Drawing name: =2V01&EFS-EL_KF1	= V2UQ31BG0
			Ed.	MKLEPADLO					+ V2UQ31
			Appr		P6700 Framing - Cell 2V01, KF1			Document type: EFS	Project nr: 22-16152
Modification	Date	Name	Original		Replacement of / Replaced by	Scale 1:1			Page 1 / 1630

0	1	2	3	4	5	6	7	8	9

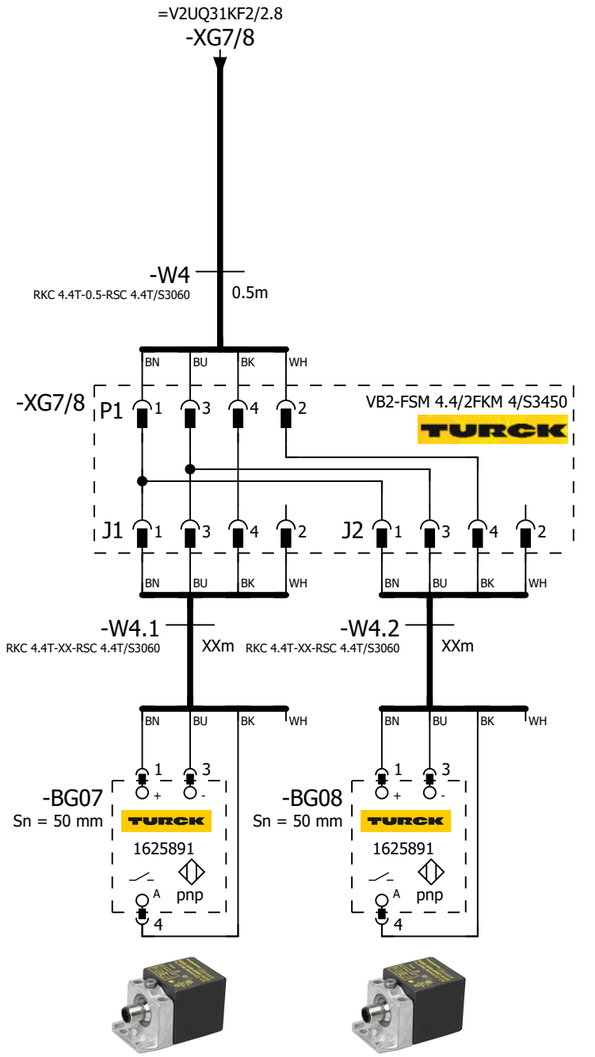

=V2UQ31 -BG07 B-Side RH Inner Part Present	=V2UQ31 -BG08 Roof Inner RH Part Present

1

=V2UQ31KF1/1

			Date	1/24/2023	Volvo Trucks North America	Valiant TMS	SENSORS	Drawing name: =2V01&EFS-EL_KF1	= V2UQ31BG0
			Ed.	MKLEPADLO					+ V2UQ31
			Appr		P6700 Framing - Cell 2V01, KF1			Document type: EFS	Project nr: 22-16152
Modification	Date	Name	Original		Replacement of / Replaced by	Scale 1:1			Page 2 / 1630

0	1	2	3	4	5	6	7	8	9

=V2UQ31WC4/1.5 / W1.1

-W1.1
RSM RKM 56-1M/S3059
1m

=V1KF1+V1UC11/2.6 / +V1UC11-KF100.11-P10

-KF100.11-P10
PROFINET Cable
6XV1840-3AH10

KF1-P2 / =V2UQ31KF2/1.3

-KF1

X20 7/8" 1 2 PE 4 5
0V_VAL / OUT
0V_EL / SEN
FE
24V_EL / SEN
24V_VAL / OUT

ON
OFF
1 2 1 2

M12 -TP1
M12 -TP2

FESTO
Bus node + Interlinking block
548755 + 550208

-KF1.11

FESTO
CPX-M-AB-8-M12X2-5POL
549335

I2100.0 DI 0 X1:4	V2UQ31UQ1.1-BGR	LH Common Clamp 1 (RESET)
I2100.1 DI 1 X1:2	V2UQ31UQ1.1-BGS	LH Common Clamp 1 (SET)
I2100.2 DI 2 X2:4	V2UQ31UQ1.2-BGR	LH Common Clamp 1 (RESET)
I2100.3 DI 3 X2:2	V2UQ31UQ1.2-BGS	LH Common Clamp 1 (SET)
I2100.4 DI 4 X3:4	V2UQ31UQ1.3-BGR	LH Common Clamp 1 (RESET)
I2100.5 DI 5 X3:2	V2UQ31UQ1.3-BGS	LH Common Clamp 1 (SET)
I2100.6 DI 6 X4:4	V2UQ31UQ2.1-BGR	LH Common Clamp 2 (RESET)
I2100.7 DI 7 X4:2	V2UQ31UQ2.1-BGS	LH Common Clamp 2 (SET)
I2101.0 DI 8 X5:4	V2UQ31UQ3.1-BGR	LH Common Clamp 3 (RESET)
I2101.1 DI 9 X5:2	V2UQ31UQ3.1-BGS	LH Common Clamp 3 (SET)
I2101.2 DI 10 X6:4	V2UQ31UQ4.1-BGR	LH L150 Model Clamp 1 (RESET)
I2101.3 DI 11 X6:2	V2UQ31UQ4.1-BGS	LH L150 Model Clamp 1 (SET)
I2101.4 DI 12 X7:4	V2UQ31UQ5.1-BGR	LH L150 Model Clamp 2 (RESET)
I2101.5 DI 13 X7:2	V2UQ31UQ5.1-BGS	LH L150 Model Clamp 2 (SET)
I2101.6 DI 14 X8:4	V2UQ31UQ6.1-BGR	LH L150 Model Clamp 3 (RESET)
I2101.7 DI 15 X8:2	V2UQ31UQ6.1-BGS	LH L150 Model Clamp 3 (SET)

X1 M12: 24V | DI 1 | 0V | DI 0 | FE — 1 2 3 4 5 — BN WH BU BK
X2 M12: 24V | DI 3 | 0V | DI 2 | FE — 1 2 3 4 5 — BN WH BU BK
X3 M12: 24V | DI 5 | 0V | DI 4 | FE — 1 2 3 4 5 — BN WH BU BK
X4 M12: 24V | DI 7 | 0V | DI 6 | FE — 1 2 3 4 5 — BN WH BU BK
X5 M12: 24V | DI 9 | 0V | DI 8 | FE — 1 2 3 4 5 — BN WH BU BK
X6 M12: 24V | DI 11 | 0V | DI 10 | FE — 1 2 3 4 5 — BN WH BU BK
X7 M12: 24V | DI 13 | 0V | DI 12 | FE — 1 2 3 4 5 — BN WH BU BK
X8 M12: 24V | DI 15 | 0V | DI 14 | FE — 1 2 3 4 5 — BN WH BU BK

+.UQ31UQ1.1-W1
=V2UQ31UQ1+.UQ31UQ1/1.1

+.UQ31UQ1.2-W1
=V2UQ31UQ1+.UQ31UQ1/1.2

+.UQ31UQ1.3-W1
=V2UQ31UQ1+.UQ31UQ1/1.4

+.UQ31UQ2.1-W1
=V2UQ31UQ2+.UQ31UQ2/1.1

+.UQ31UQ3.1-W1
=V2UQ31UQ3+.UQ31UQ3/1.1

+.UQ31UQ4.1-W1
=V2UQ31UQ4+.UQ31UQ4/1.1

+.UQ31UQ5.1-W1
=V2UQ31UQ5+.UQ31UQ5/1.1

+.UQ31UQ6.1-W1
=V2UQ31UQ6+.UQ31UQ6/1.1

=V2UQ31BG0/2

			Date	1/24/2023	Volvo Trucks North America	Valiant TMS	CONNECTING MOD. FOR VTSA MANIFOLD	Drawing name: =2V01&EFS-EL_KF1	= V2UQ31KF1
			Ed.	MKLEPADLO					+ V2UQ31
			Appr		P6700 Framing - Cell 2V01, KF1	Scale 1:1		Document type: EFS	Project nr: 22-16152
Modification	Date	Name	Original		Replacement of	Replaced by			Page 1 / 1630

0	1	2	3	4	5	6	7	8	9

-KF1.12

FESTO

CPX-M-AB-8-M12X2-5POL

549335

I2102.0	DI 0 X1:4	V2UQ31UQ7.1-BGR	LH L230/290/320 Clamp 1 (RESET)
I2102.1	DI 1 X1:2	V2UQ31UQ7.1-BGS	LH L230/290/320 Clamp 1 (SET)
I2102.2	DI 2 X2:4	V2UQ31UQ8.1-BGR	LH L230/290/320 Clamp 2 (RESET)
I2102.3	DI 3 X2:2	V2UQ31UQ8.1-BGS	LH L230/290/320 Clamp 2 (SET)
I2102.4	DI 4 X3:4	V2UQ31UQ9.1-BGR	LH L230/290/320 Clamp 3 (RESET)
I2102.5	DI 5 X3:2	V2UQ31UQ9.1-BGS	LH L230/290/320 Clamp 3 (SET)
I2102.6	DI 6 X4:4	I2102.6	Spare
I2102.7	DI 7 X4:2	I2102.7	Spare
I2103.0	DI 8 X5:4	I2103.0	Spare
I2103.1	DI 9 X5:2	I2103.1	Spare
I2103.2	DI 10 X6:4	V2UQ31-BG01	Sensor B-Side LH Inner Part Present
I2103.3	DI 11 X6:2	V2UQ31-BG02	Sensor B-Side LH Inner Part Present
I2103.4	DI 12 X7:4	V2UQ31-BG03	Sensor B-Side LH Inner Part Present
I2103.5	DI 13 X7:2	V2UQ31-BG04	Sensor Roof Inner LH Part Present
I2103.6	DI 14 X8:4	I2103.6	Spare
I2103.7	DI 15 X8:2	I2103.7	Spare

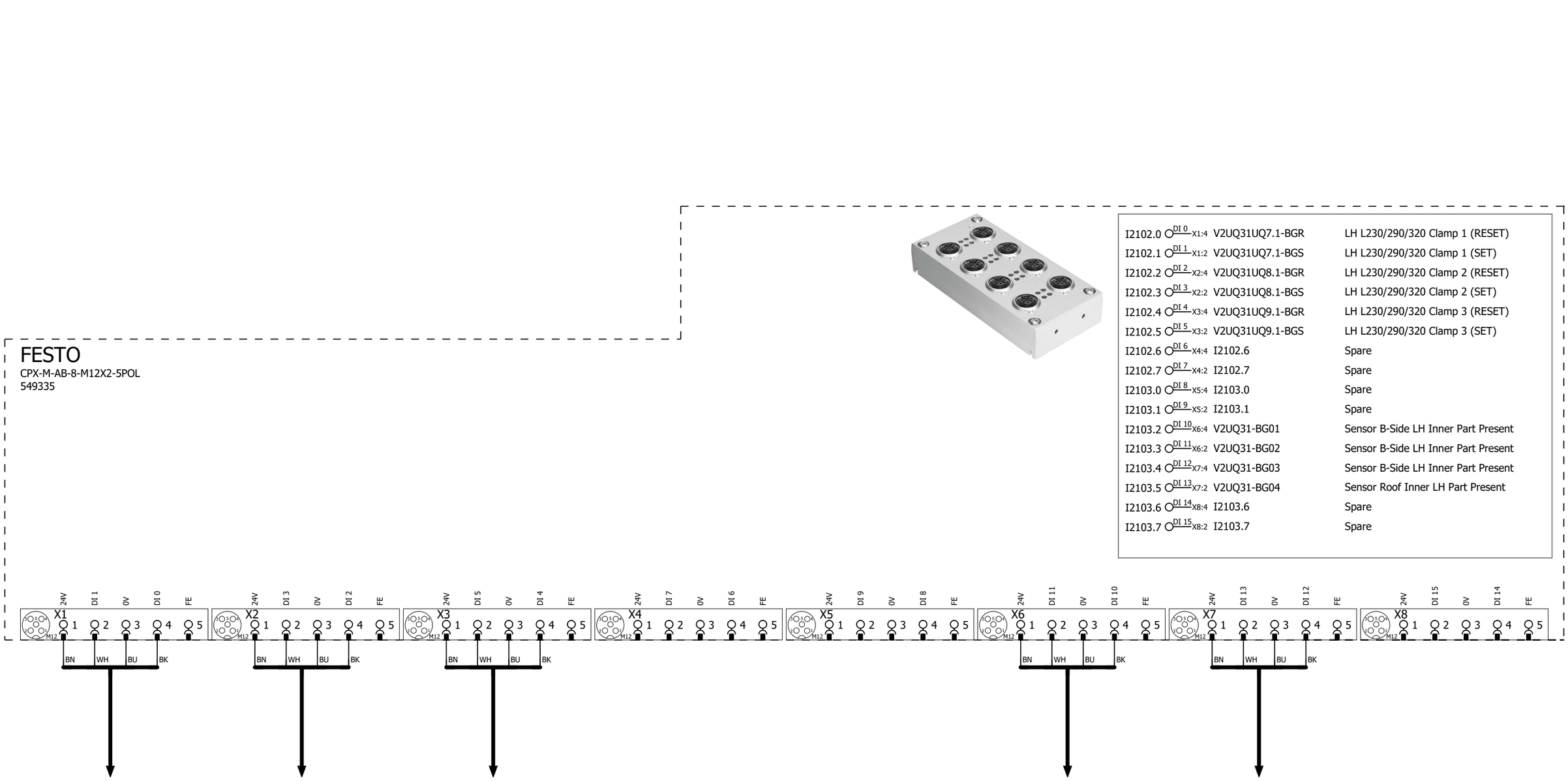

1 3

			Date	1/24/2023	Volvo Trucks North America		Valiant TMS	I/O MOD. DI16 (8 x M12) FOR VTSA-F	Drawing name: =2V01&EFS-EL_KF1	= V2UQ31KF1
			Ed.	MKLEPADLO						+ V2UQ31
			Appr		P6700 Framing - Cell 2V01, KF1				Document type: EFS	Project nr: 22-16152
Modification	Date	Name	Original		Replacement of	Replaced by	Scale 1:1			Page 2 / 1630

-KF1 -KF1.11 -KF1.12 -KF1.13 -KF1.20 -KF1.21 -KF1.22 -KF1.23 -KF1.24 -KF1.25 -KF1.26

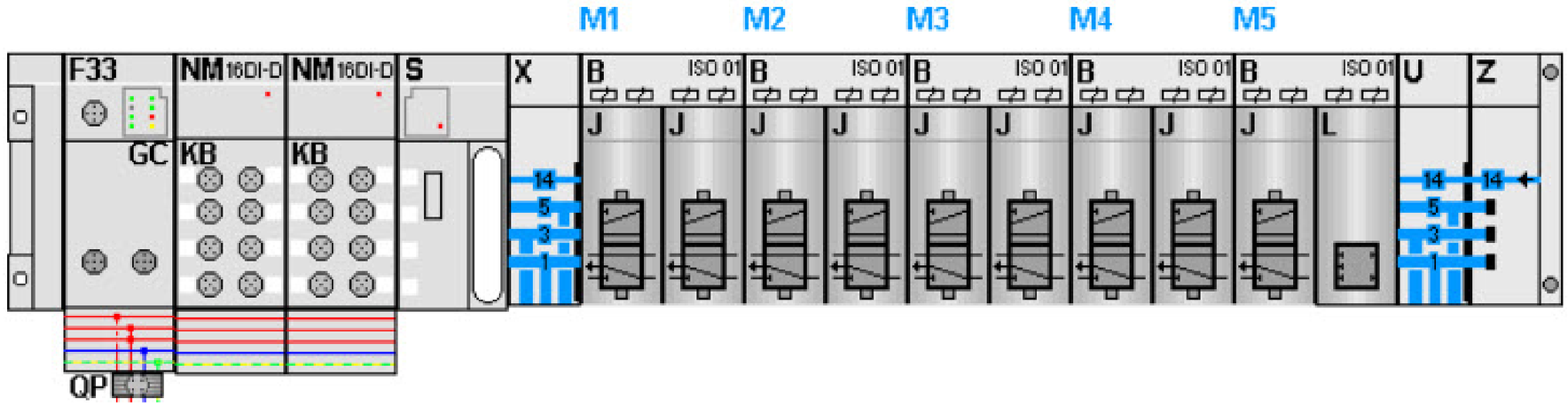

-KF1.21
=V2UQ31UQ1+.UQ31UQ1/1.3
=V2UQ31UQ2+.UQ31UQ2/1.3

FESTO

=V2UQ31UQ1+.UQ31UQ1/1.4	Q2100.0 DO 0 1.1	-QN1.1_Q	LH Common Clamps 1 (RST)
=V2UQ31UQ1+.UQ31UQ1/1.4	Q2100.1 DO 1 1.2	-QN1.2_Q	LH Common Clamps 1 (SET)
=V2UQ31UQ2+.UQ31UQ2/1.4	Q2100.2 DO 2 2.1	-QN2.1_Q	LH Common Clamp 2 (RST)
=V2UQ31UQ2+.UQ31UQ2/1.4	Q2100.3 DO 3 2.2	-QN2.2_Q	LH Common Clamp 2 (SET)

-KF1.22
=V2UQ31UQ3+.UQ31UQ3/1.3
=V2UQ31UQ4+.UQ31UQ4/1.3

FESTO

=V2UQ31UQ3+.UQ31UQ3/1.4	Q2100.4 DO 4 1.1	-QN3.1_Q	LH Common Clamp 3 (RST)
=V2UQ31UQ3+.UQ31UQ3/1.4	Q2100.5 DO 5 1.2	-QN3.2_Q	LH Common Clamp 3 (SET)
=V2UQ31UQ4+.UQ31UQ4/1.4	Q2100.6 DO 6 2.1	-QN4.1_Q	LH L150 Model Clamp 1 (RST)
=V2UQ31UQ4+.UQ31UQ4/1.4	Q2100.7 DO 7 2.2	-QN4.2_Q	LH L150 Model Clamp 1 (SET)

-KF1.23
=V2UQ31UQ5+.UQ31UQ5/1.3
=V2UQ31UQ6+.UQ31UQ6/1.3

FESTO

=V2UQ31UQ5+.UQ31UQ5/1.4	Q2101.0 DO 8 1.1	-QN5.1_Q	LH L150 Model Clamp 2 (RST)
=V2UQ31UQ5+.UQ31UQ5/1.4	Q2101.1 DO 9 1.2	-QN5.2_Q	LH L150 Model Clamp 2 (SET)
=V2UQ31UQ6+.UQ31UQ6/1.4	Q2101.2 DO 10 2.1	-QN6.1_Q	LH L150 Model clamp 3 (RST)
=V2UQ31UQ6+.UQ31UQ6/1.4	Q2101.3 DO 11 2.2	-QN6.2_Q	LH L150 Model clamp 3 (SET)

-KF1.24
=V2UQ31UQ7+.UQ31UQ7/1.3
=V2UQ31UQ8+.UQ31UQ8/1.3

FESTO

=V2UQ31UQ7+.UQ31UQ7/1.4	Q2101.4 DO 8 1.1	-QN7.1_Q	L230/290/320 Clamp 1 (RST)
=V2UQ31UQ7+.UQ31UQ7/1.4	Q2101.5 DO 9 1.2	-QN7.2_Q	L230/290/320 Clamp 1 (SET)
=V2UQ31UQ8+.UQ31UQ8/1.4	Q2101.6 DO 10 2.1	-QN8.1_Q	LH L230/290/320 Clamp 2 (RST)
=V2UQ31UQ8+.UQ31UQ8/1.4	Q2101.7 DO 11 2.2	-QN8.2_Q	LH L230/290/320 Clamp 2 (SET)

-KF1.25
=V2UQ31UQ9+.UQ31UQ9/1.3

FESTO

=V2UQ31UQ9+.UQ31UQ9/1.4	Q2102.0 DO 8 1.1	-QN9.1_Q	LH L230/290/320 Clamp 3 (RST)
=V2UQ31UQ9+.UQ31UQ9/1.4	Q2102.1 DO 9 1.2	-QN9.2_Q	LH L230/290/320 Clamp 3 (SET)
	Q2102.2 DO 10 2.1	-QN10.1_Q	Spare (RST)
	Q2102.3 DO 11 2.2	-QN10.2_Q	Spare (SET)

			Date	1/24/2023	Volvo Trucks North America	Valiant TMS	CONNECTING MOD. FOR FESTO DQ	Drawing name: =2V01&EFS-EL_KF1	= V2UQ31KF1
			Ed.	MKLEPADLO					+ V2UQ31
			Appr		P6700 Framing - Cell 2V01, KF1	Scale 1:1		Document type: EFS	Project nr: 22-16152
Modification	Date	Name	Original		Replacement of	Replaced by			Page 3 / 1630

0	1	2	3	4	5	6	7	8	9

=V2UQ31WC4/1.6 / W1.2

-W1.2
RSM RKM 56-10M/S3059
10m

=V2UQ31KF1/1.4 / KF1-P2

-WF2
PROFINET Cable
6XV1840-3AH10

-KF2

X20 7/8" 1 2 PE 3 4
0V_VAL / OUT
0V_EL / SEN
FE
24V_EL / SEN
24V_VAL / OUT

ON
OFF
1 2 1 2

M12 -TP1
M12 -TP2

FESTO
Bus node + Interlinking block
548755 + 550208

I2125.0	DI 0 X1:4	V2UQ31UQ10.1-BGR	RH Common Clamp 1 (RESET)
I2125.1	DI 1 X1:2	V2UQ31UQ10.1-BGS	RH Common Clamp 1 (SET)
I2125.2	DI 2 X2:4	V2UQ31UQ10.2-BGR	RH Common Clamp 1 (RESET)
I2125.3	DI 3 X2:2	V2UQ31UQ10.2-BGS	RH Common Clamp 1 (SET)
I2125.4	DI 4 X3:4	V2UQ31UQ10.3-BGR	RH Common Clamp 1 (RESET)
I2125.5	DI 5 X3:2	V2UQ31UQ10.3-BGS	RH Common Clamp 1 (SET)
I2125.6	DI 6 X4:4	V2UQ31UQ11.1-BGR	RH Common Clamp 2 (RESET)
I2125.7	DI 7 X4:2	V2UQ31UQ11.1-BGS	RH Common Clamp 2 (SET)
I2126.0	DI 8 X5:4	V2UQ31UQ12.1-BGR	RH Common Clamp 3 (RESET)
I2126.1	DI 9 X5:2	V2UQ31UQ12.1-BGS	RH Common Clamp 3 (SET)
I2126.2	DI 10 X6:4	V2UQ31UQ13.1-BGR	RH L150 Model Clamp 1 (RESET)
I2126.3	DI 11 X6:2	V2UQ31UQ13.1-BGS	RH L150 Model Clamp 1 (SET)
I2126.4	DI 12 X7:4	V2UQ31UQ14.1-BGR	RH L150 Model Clamp 2 (RESET)
I2126.5	DI 13 X7:2	V2UQ31UQ14.1-BGS	RH L150 Model Clamp 2 (SET)
I2126.6	DI 14 X8:4	V2UQ31UQ15.1-BGR	RH L150 Model Clamp 3 (RESET)
I2126.7	DI 15 X8:2	V2UQ31UQ15.1-BGS	RH L150 Model Clamp 3 (SET)

-KF2.11

FESTO
CPX-M-AB-8-M12X2-5POL
549335

X1 X2 X3 X4 X5 X6 X7 X8 M12
1: 24V
2: DI 1 / DI 3 / DI 5 / DI 7 / DI 9 / DI 11 / DI 13 / DI 15
3: 0V
4: DI 0 / DI 2 / DI 4 / DI 6 / DI 8 / DI 10 / DI 12 / DI 14
5: FE
BN WH BU BK

+.UQ31UQ10.1-W1
=V2UQ31UQ10+.UQ31UQ10/1.1

+.UQ31UQ10.2-W1
=V2UQ31UQ10+.UQ31UQ10/1.2

+.UQ31UQ10.3-W1
=V2UQ31UQ10+.UQ31UQ10/1.4

+.UQ31UQ11.1-W1
=V2UQ31UQ11+.UQ31UQ11/1.1

+.UQ31UQ12.1-W1
=V2UQ31UQ12+.UQ31UQ12/1.1

+.UQ31UQ13.1-W1
=V2UQ31UQ13+.UQ31UQ13/1.1

+.UQ31UQ14.1-W1
=V2UQ31UQ14+.UQ31UQ14/1.1

+.UQ31UQ15.1-W1
=V2UQ31UQ15+.UQ31UQ15/1.1

=V2UQ31KF1/3

2

			Date	1/24/2023	Volvo Trucks North America	Valiant TMS	CONNECTING MOD. FOR VTSA MANIFOLD	Drawing name: =2V01&EFS-EL_KF1	= V2UQ31KF2
			Ed.	MKLEPADLO					+ V2UQ31
			Appr		P6700 Framing - Cell 2V01, KF1	Scale 1:1		Document type: EFS	Project nr: 22-16152
Modification	Date	Name	Original		Replacement of / Replaced by				Page 1 / 1630

I2127.0	DI 0 X1:4	V2UQ31UQ16.1-BGR	RH L230/290/320 Clamp 1 (RESET)
I2127.1	DI 1 X1:2	V2UQ31UQ16.1-BGS	RH L230/290/320 Clamp 1 (SET)
I2127.2	DI 2 X2:4	V2UQ31UQ17.1-BGR	RH L230/290/320 Clamp 2 (RESET)
I2127.3	DI 3 X2:2	V2UQ31UQ17.1-BGS	RH L230/290/320 Clamp 2 (SET)
I2127.4	DI 4 X3:4	V2UQ31UQ18.1-BGR	RH L230/290/320 Clamp 3 (RESET)
I2127.5	DI 5 X3:2	V2UQ31UQ18.1-BGS	RH L230/290/320 Clamp 3 (SET)
I2127.6	DI 6 X4:4	I2127.6	Spare
I2127.7	DI 7 X4:2	I2127.7	Spare
I2128.0	DI 8 X5:4	I2128.0	Spare
I2128.1	DI 9 X5:2	I2128.1	Spare
I2128.2	DI 10 X6:4	V2UQ31-BG05	Sensor B-Side RH Inner Part Present
I2128.3	DI 11 X6:2	V2UQ31-BG06	Sensor B-Side RH Inner Part Present
I2128.4	DI 12 X7:4	V2UQ31-BG07	Sensor B-Side RH Inner Part Present
I2128.5	DI 13 X7:2	V2UQ31-BG08	Sensor Roof Inner RH Part Present
I2128.6	DI 14 X8:4	I2128.6	Spare
I2128.7	DI 15 X8:2	I2128.7	Spare

-KF2.12

FESTO

CPX-M-AB-8-M12X2-5POL

549335

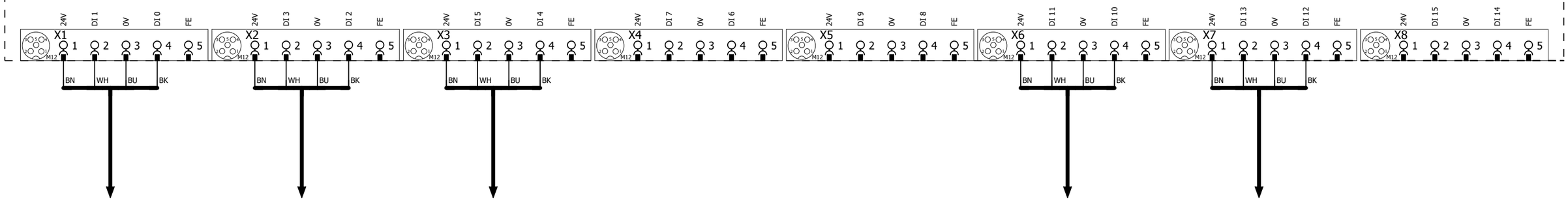

+.UQ31UQ16.1-W1
=V2UQ31UQ16+.UQ31UQ16/1.1

+.UQ31UQ17.1-W1
=V2UQ31UQ17+.UQ31UQ17/1.1

+.UQ31UQ18.1-W1
=V2UQ31UQ18+.UQ31UQ18/1.1

-XG5/6
=V2UQ31BG0/1.6

-XG7/8
=V2UQ31BG0/2.1

1 3

			Date	1/24/2023	Volvo Trucks North America	Valiant TMS	I/O MOD. DI16 (8 x M12) FOR VTSA-F	Drawing name: =2V01&EFS-EL_KF1	= V2UQ31KF2 + V2UQ31
			Ed.	MKLEPADLO	P6700 Framing - Cell 2V01, KF1				
			Appr					Document type: EFS	Project nr: 22-16152
Modification	Date	Name	Original		Replacement of / Replaced by	Scale 1:1			Page 2 / 1630

-KF2 -KF2.11 -KF2.12 -KF2.13 -KF2.20 -KF2.21 -KF2.22 -KF2.23 -KF2.24 -KF2.25 -KF2.26

M1 M2 M3 M4 M5

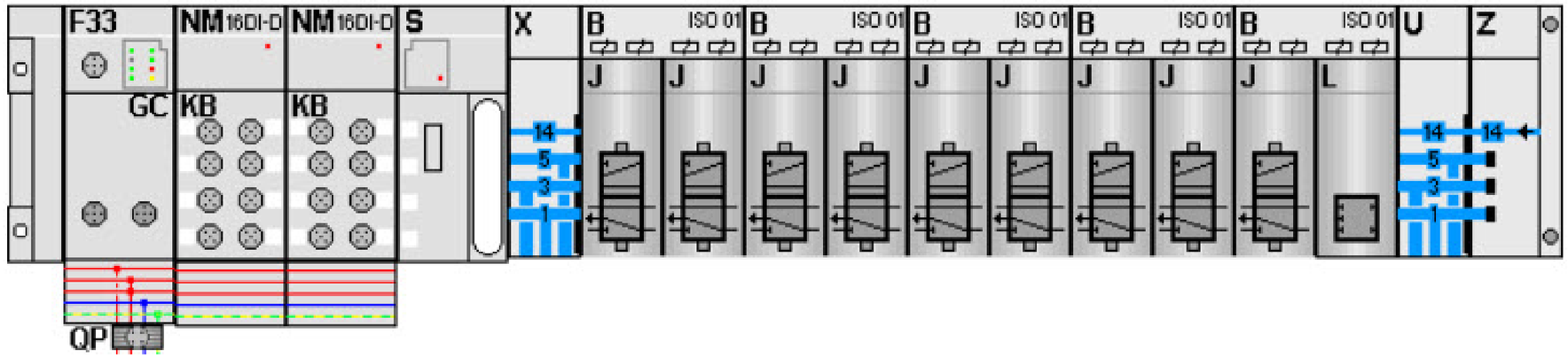

-KF2.21
=V2UQ31UQ10+.UQ31UQ10/1.3
=V2UQ31UQ11+.UQ31UQ11/1.3

FESTO

=V2UQ31UQ10+.UQ31UQ10/1.4	Q2125.0 DO 0 1.1	-QN10.1_Q	RH Common Clamps 1 (RST)
=V2UQ31UQ10+.UQ31UQ10/1.4	Q2125.1 DO 1 1.2	-QN10.2_Q	RH Common Clamps 1 (SET)
=V2UQ31UQ11+.UQ31UQ11/1.4	Q2125.2 DO 2 2.1	-QN11.1_Q	RH Common Clamp 2 (RST)
=V2UQ31UQ11+.UQ31UQ11/1.4	Q2125.3 DO 3 2.2	-QN11.2_Q	RH Common Clamp 2 (SET)

-KF2.22
=V2UQ31UQ12+.UQ31UQ12/1.3
=V2UQ31UQ13+.UQ31UQ13/1.3

FESTO

=V2UQ31UQ12+.UQ31UQ12/1.4	Q2125.4 DO 4 1.1	-QN12.1_Q	RH Common Clamp 3 (RST)
=V2UQ31UQ12+.UQ31UQ12/1.4	Q2125.5 DO 5 1.2	-QN12.2_Q	RH Common Clamp 3 (SET)
=V2UQ31UQ13+.UQ31UQ13/1.4	Q2125.6 DO 6 2.1	-QN13.1_Q	RH L150 Model Clamp 1 (RST)
=V2UQ31UQ13+.UQ31UQ13/1.4	Q2125.7 DO 7 2.2	-QN13.2_Q	RH L150 Model Clamp 1 (SET)

-KF2.23
=V2UQ31UQ14+.UQ31UQ14/1.3
=V2UQ31UQ15+.UQ31UQ15/1.3

FESTO

=V2UQ31UQ14+.UQ31UQ14/1.4	Q2126.0 DO 8 1.1	-QN14.1_Q	RH L150 Model Clamp 2 (RST)
=V2UQ31UQ14+.UQ31UQ14/1.4	Q2126.1 DO 9 1.2	-QN14.2_Q	RH L150 Model Clamp 2 (SET)
=V2UQ31UQ15+.UQ31UQ15/1.4	Q2126.2 DO 10 2.1	-QN15.1_Q	RH L150 Model clamp 3 (RST)
=V2UQ31UQ15+.UQ31UQ15/1.4	Q2126.3 DO 11 2.2	-QN15.2_Q	RH L150 Model clamp 3 (SET)

-KF2.24
=V2UQ31UQ16+.UQ31UQ16/1.3
=V2UQ31UQ17+.UQ31UQ17/1.3

FESTO

=V2UQ31UQ16+.UQ31UQ16/1.4	Q2126.4 DO 8 1.1	-QN16.1_Q	RH L230/290/320 Clamp 1 (RST)
=V2UQ31UQ16+.UQ31UQ16/1.4	Q2126.5 DO 9 1.2	-QN16.2_Q	RH L230/290/320 Clamp 1 (SET)
=V2UQ31UQ17+.UQ31UQ17/1.4	Q2126.6 DO 10 2.1	-QN17.1_Q	RH L230/290/320 Clamp 2 (RST)
=V2UQ31UQ17+.UQ31UQ17/1.4	Q2126.7 DO 11 2.2	-QN17.2_Q	RH L230/290/320 Clamp 2 (SET)

-KF2.25
=V2UQ31UQ18+.UQ31UQ18/1.3

FESTO

=V2UQ31UQ18+.UQ31UQ18/1.4	Q2127.0 DO 8 1.1	-QN18.1_Q	RH L230/290/320 Clamp 3 (RST)
=V2UQ31UQ18+.UQ31UQ18/1.4	Q2127.1 DO 9 1.2	-QN18.2_Q	RH L230/290/320 Clamp 3 (SET)
	Q2127.2 DO 10 2.1	-QN10.1_Q	Spare (RST)
	Q2127.3 DO 11 2.2	-QN10.2_Q	Spare (SET)

=V2UQ31UQ1+.UQ31UQ1/1

			Date	1/24/2023	Volvo Trucks North America	Valiant TMS	CONNECTING MOD. FOR FESTO DQ	Drawing name: =2V01&EFS-EL_KF1	= V2UQ31KF2
			Ed.	MKLEPADLO					+ V2UQ31
			Appr		P6700 Framing - Cell 2V01, KF1	Scale 1:1		Document type: EFS	Project nr: 22-16152
Modification	Date	Name	Original		Replacement of	Replaced by			Page 3 / 1630

0	1	2	3	4	5	6	7	8	9

=V2UQ31KF1
+.UQ31

-KF1.21
=V2UQ31KF1+V2UQ31/3.1

LH Common Clamps 1 (RST)	LH Common Clamps 1 (SET)
=V2UQ31KF1	=V2UQ31KF1
+V2UQ31	+V2UQ31
-QN1.1_Q	-QN1.2_Q
=V2UQ31KF1	=V2UQ31KF1
+V2UQ31/3.3	+V2UQ31/3.3
Q2100.0	Q2100.1
1.1 Pneumatic Valve	1.2 Pneumatic Valve

-QN1 .1 .2

=V2UQ31KF1+V2UQ31/1.1
+.UQ31UQ1.1-W1

-W1
RKC 4.4T-3-RSC 4.4T/S3060
3m

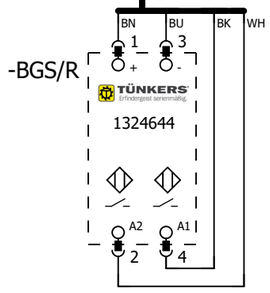

-BGS/R

LH Common Clamp 1

=V2UQ31UQ1.1
+.UQ31UQ1.1
-UQ1.1

=V2UQ31
-UQ1.1-BGS/R
LH Common
Clamp 1

=V2UQ31KF1+V2UQ31/1.2
+.UQ31UQ1.2-W1

-W1
RKC 4.4T-8-RSC 4.4T/S3060
8m

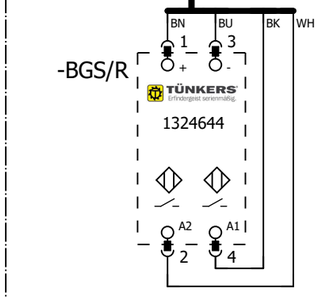

-BGS/R

LH Common Clamp 1

=V2UQ31UQ1.2
+.UQ31UQ1.2
-UQ1.2

=V2UQ31
-UQ1.2-BGS/R
LH Common
Clamp 1

=V2UQ31KF1+V2UQ31/1.3
+.UQ31UQ1.3-W1

-W1
RKC 4.4T-8-RSC 4.4T/S3060
8m

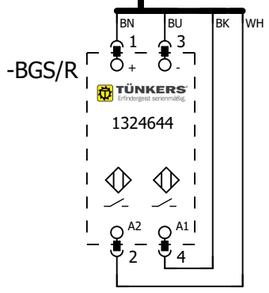

-BGS/R

LH Common Clamp 1

=V2UQ31UQ1.3
+.UQ31UQ1.3
-UQ1.3

=V2UQ31
-UQ1.3-BGS/R
LH Common
Clamp 1

=V2UQ31KF2+V2UQ31/3

=V2UQ31UQ2+.UQ31UQ2/1

			Date	1/24/2023	Volvo Trucks North America	Valiant TMS	FESTO DQ CONNECTION QN1	Drawing name: =2V01&EFS-EL_KF1	= V2UQ31UQ1
			Ed.	MKLEPADLO					+ V2UQ31UQ1
			Appr		P6700 Framing - Cell 2V01, KF1			Document type: EFS	Project nr: 22-16152
Modification	Date	Name	Original		Replacement of	Replaced by	Scale 1:1		Page 1 / 1630

0	1	2	3	4	5	6	7	8	9

=V2UQ31KF1
+.UQ31

-KF1.21
=V2UQ31KF1+V2UQ31/3.1

LH Common Clamp 2 (RST)	LH Common Clamp 2 (SET)
=V2UQ31KF1	=V2UQ31KF1
+V2UQ31	+V2UQ31
-QN2.1_Q	-QN2.2_Q
=V2UQ31KF1	=V2UQ31KF1
+V2UQ31/3.3	+V2UQ31/3.3
Q2100.2	Q2100.3
2.1 Pneumatic Valve	2.2 Pneumatic Valve

-QN2 .1 .2

=V2UQ31KF1+V2UQ31/1.4
+.UQ31UQ2.1-W1

-W1
RKC 4.4T-8-RSC 4.4T/S3060
8m

BN BU BK WH

-BGS/R
1 3
+ -
TÜNKERS
1324644
A2 A1
2 4

LH Common Clamp 2

=V2UQ31UQ2.1
+.UQ31UQ2.1
-UQ2.1

=V2UQ31
-UQ2.1-BGS/R
LH Common
Clamp 2

=V2UQ31UQ1+.UQ31UQ1/1

=V2UQ31UQ3+.UQ31UQ3/1

			Date	1/24/2023	Volvo Trucks North America	Valiant TMS	FESTO DQ CONNECTION QN2	Drawing name: =2V01&EFS-EL_KF1	= V2UQ31UQ2
			Ed.	MKLEPADLO					+ V2UQ31UQ2
			Appr		P6700 Framing - Cell 2V01, KF1			Document type: EFS	Project nr: 22-16152
Modification	Date	Name	Original		Replacement of	Replaced by	Scale 1:1		Page 1 / 1630

0	1	2	3	4	5	6	7	8	9

=V2UQ31KF1
+.UQ31

-KF1.22
=V2UQ31KF1+V2UQ31/3.1

LH Common Clamp 3 (RST)	LH Common Clamp 3 (SET)
=V2UQ31KF1	=V2UQ31KF1
+V2UQ31	+V2UQ31
-QN3.1_Q	-QN3.2_Q
=V2UQ31KF1	=V2UQ31KF1
+V2UQ31/3.3	+V2UQ31/3.3
Q2100.4	Q2100.5
1.1 Pneumatic Valve	1.2 Pneumatic Valve

-QN3 .1 .2

=V2UQ31KF1+V2UQ31/1.5
+.UQ31UQ3.1-W1

-W1
RKC 4.4T-8-RSC 4.4T/S3060
8m

BN BU BK WH

-BGS/R
1 3
+ -
TÜNKERS
1324644
A2 A1
2 4

LH Common Clamp 3

=V2UQ31UQ3.1
+.UQ31UQ3.1
-UQ3.1

=V2UQ31 -UQ3.1-BGS/R LH Common Clamp 3

=V2UQ31UQ2+.UQ31UQ2/1

=V2UQ31UQ4+.UQ31UQ4/1

			Date	1/24/2023	Volvo Trucks North America	Valiant TMS	FESTO DQ CONNECTION QN3	Drawing name: =2V01&EFS-EL_KF1	= V2UQ31UQ3
			Ed.	MKLEPADLO					+ V2UQ31UQ3
			Appr		P6700 Framing - Cell 2V01, KF1			Document type: EFS	Project nr: 22-16152
Modification	Date	Name	Original		Replacement of	Replaced by	Scale 1:1		Page 1 / 1630

0	1	2	3	4	5	6	7	8	9

=V2UQ31KF1
+.UQ31

-KF1.22
=V2UQ31KF1+V2UQ31/3.1

LH L150 Model Clamp 1 (RST)	LH L150 Model Clamp 1 (SET)
=V2UQ31KF1	=V2UQ31KF1
+V2UQ31	+V2UQ31
-QN4.1_Q	-QN4.2_Q
=V2UQ31KF1	=V2UQ31KF1
+V2UQ31/3.3	+V2UQ31/3.3
Q2100.6	Q2100.7
2.1 Pneumatic Valve	2.2 Pneumatic Valve

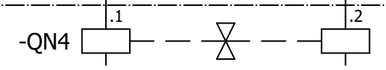

=V2UQ31KF1+V2UQ31/1.6
+.UQ31UQ4.1-W1

-W1
RKC 4.4T-10-RSC 4.4T/S3060
10m

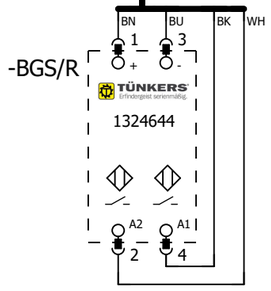

LH L150 Model Clamp 1

=V2UQ31UQ4.1
+.UQ31UQ4.1
-UQ4.1

=V2UQ31 -UQ4.1-BGS/R LH L150 Model Clamp 1

=V2UQ31UQ3+.UQ31UQ3/1

=V2UQ31UQ5+.UQ31UQ5/1

			Date	1/24/2023	Volvo Trucks North America		Valiant TMS	FESTO DQ CONNECTION QN4	Drawing name: =2V01&EFS-EL_KF1	= V2UQ31UQ4
			Ed.	MKLEPADLO						+ V2UQ31UQ4
			Appr		P6700 Framing - Cell 2V01, KF1				Document type: EFS	Project nr: 22-16152
Modification	Date	Name	Original		Replacement of	Replaced by	Scale 1:1			Page 1 / 1630

0	1	2	3	4	5	6	7	8	9

=V2UQ31KF1
+.UQ31

-KF1.23
=V2UQ31KF1+V2UQ31/3.1

LH L150 Model Clamp 2 (RST)	LH L150 Model Clamp 2 (SET)
=V2UQ31KF1	=V2UQ31KF1
+V2UQ31	+V2UQ31
-QN5.1_Q	-QN5.2_Q
=V2UQ31KF1	=V2UQ31KF1
+V2UQ31/3.3	+V2UQ31/3.3
Q2101.0	Q2101.1
1.1 Pneumatic Valve	1.2 Pneumatic Valve

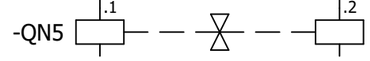

=V2UQ31KF1+V2UQ31/1.8
+.UQ31UQ5.1-W1

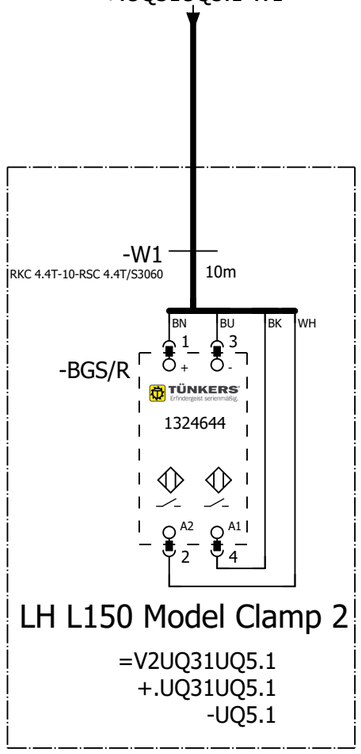

LH L150 Model Clamp 2

=V2UQ31UQ5.1
+.UQ31UQ5.1
-UQ5.1

=V2UQ31 -UQ5.1-BGS/R LH L150 Model Clamp 2

=V2UQ31UQ4+.UQ31UQ4/1

=V2UQ31UQ6+.UQ31UQ6/1

			Date	1/24/2023	Volvo Trucks North America	Valiant TMS	FESTO DQ CONNECTION QN5	Drawing name: =2V01&EFS-EL_KF1	= V2UQ31UQ5
			Ed.	MKLEPADLO					+ V2UQ31UQ5
			Appr		P6700 Framing - Cell 2V01, KF1			Document type: EFS	Project nr: 22-16152
Modification	Date	Name	Original		Replacement of	Replaced by	Scale 1:1		Page 1 / 1630

0	1	2	3	4	5	6	7	8	9

=V2UQ31KF1
+.UQ31

-KF1.23
=V2UQ31KF1+V2UQ31/3.1

LH L150 Model clamp 3 (RST)	LH L150 Model clamp 3 (SET)
=V2UQ31KF1	=V2UQ31KF1
+V2UQ31	+V2UQ31
-QN6.1_Q	-QN6.2_Q
=V2UQ31KF1	=V2UQ31KF1
+V2UQ31/3.3	+V2UQ31/3.3
Q2101.2	Q2101.3
2.1 Pneumatic Valve	2.2 Pneumatic Valve

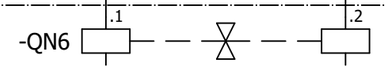

=V2UQ31KF1+V2UQ31/1.9
+.UQ31UQ6.1-W1

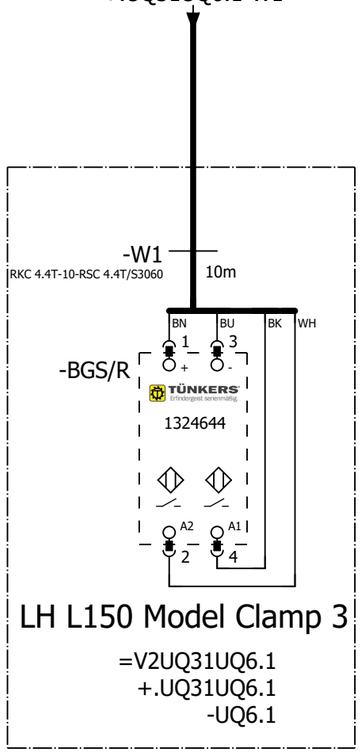

LH L150 Model Clamp 3

=V2UQ31UQ6.1
+.UQ31UQ6.1
-UQ6.1

=V2UQ31 -UQ6.1-BGS/R LH L150 Model Clamp 3

=V2UQ31UQ5+.UQ31UQ5/1

=V2UQ31UQ7+.UQ31UQ7/1

			Date	1/24/2023	Volvo Trucks North America	Valiant TMS	FESTO DQ CONNECTION QN6	Drawing name: =2V01&EFS-EL_KF1	= V2UQ31UQ6
			Ed.	MKLEPADLO					+ V2UQ31UQ6
			Appr		P6700 Framing - Cell 2V01, KF1			Document type: EFS	Project nr: 22-16152
Modification	Date	Name	Original		Replacement of	Replaced by	Scale 1:1		Page 1 / 1630

0	1	2	3	4	5	6	7	8	9

=V2UQ31KF1
+.UQ31

-KF1.24
=V2UQ31KF1+V2UQ31/3.1

L230/290/320 Clamp 1 (RST)	L230/290/320 Clamp 1 (SET)
=V2UQ31KF1	=V2UQ31KF1
+V2UQ31	+V2UQ31
-QN7.1_Q	-QN7.2_Q
=V2UQ31KF1	=V2UQ31KF1
+V2UQ31/3.3	+V2UQ31/3.3
Q2101.4	Q2101.5
1.1 Pneumatic Valve	1.2 Pneumatic Valve

-QN7 .1 .2

=V2UQ31KF1+V2UQ31/2.1
+.UQ31UQ7.1-W1

-W1
RKC 4.4T-8-RSC 4.4T/S3060
8m

BN BU BK WH

-BGS/R
1 3
+ -
TÜNKERS
1324644
A2 A1
2 4

LH L230/290/320 Clamp 1

=V2UQ31UQ7.1
+.UQ31UQ7.1
-UQ7.1

=V2UQ31 -UQ7.1-BGS/R LH L230/290/320 Clamp 1

=V2UQ31UQ6+.UQ31UQ6/1

=V2UQ31UQ8+.UQ31UQ8/1

			Date	1/24/2023	Volvo Trucks North America	Valiant TMS	FESTO DQ CONNECTION QN7	Drawing name: =2V01&EFS-EL_KF1	= V2UQ31UQ7
			Ed.	MKLEPADLO					+ V2UQ31UQ7
			Appr		P6700 Framing - Cell 2V01, KF1			Document type: EFS	Project nr: 22-16152
Modification	Date	Name	Original		Replacement of	Replaced by	Scale 1:1		Page 1 / 1630

0	1	2	3	4	5	6	7	8	9

=V2UQ31KF1
+.UQ31

-KF1.24
=V2UQ31KF1+V2UQ31/3.1

LH L230/290/320 Clamp 2 (RST)
=V2UQ31KF1
+V2UQ31
-QN8.1_Q
=V2UQ31KF1
+V2UQ31/3.3
Q2101.6

LH L230/290/320 Clamp 2 (SET)
=V2UQ31KF1
+V2UQ31
-QN8.2_Q
=V2UQ31KF1
+V2UQ31/3.3
Q2101.7

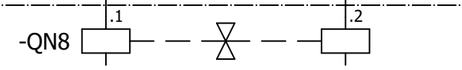

=V2UQ31KF1+V2UQ31/2.2
+.UQ31UQ8.1-W1

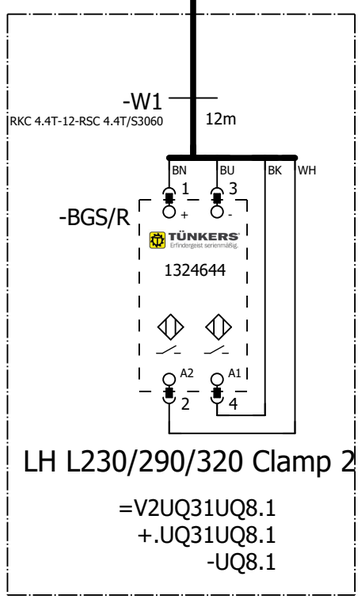

LH L230/290/320 Clamp 2

=V2UQ31UQ8.1
+.UQ31UQ8.1
-UQ8.1

=V2UQ31 -UQ8.1-BGS/R LH L230/290/320 Clamp 2

=V2UQ31UQ7+.UQ31UQ7/1

=V2UQ31UQ9+.UQ31UQ9/1

			Date	1/24/2023	Volvo Trucks North America	Valiant TMS	FESTO DQ CONNECTION QN8	Drawing name: =2V01&EFS-EL_KF1	= V2UQ31UQ8
			Ed.	MKLEPADLO					+ V2UQ31UQ8
			Appr		P6700 Framing - Cell 2V01, KF1			Document type: EFS	Project nr: 22-16152
Modification	Date	Name	Original		Replacement of	Replaced by	Scale 1:1		Page 1 / 1630

0	1	2	3	4	5	6	7	8	9

=V2UQ31KF1
+.UQ31

-KF1.25
=V2UQ31KF1+V2UQ31/3.1

LH L230/290/320 Clamp 3 (RST)
=V2UQ31KF1
+V2UQ31
-QN9.1_Q
=V2UQ31KF1
+V2UQ31/3.3
Q2102.0

LH L230/290/320 Clamp 3 (SET)
=V2UQ31KF1
+V2UQ31
-QN9.2_Q
=V2UQ31KF1
+V2UQ31/3.3
Q2102.1

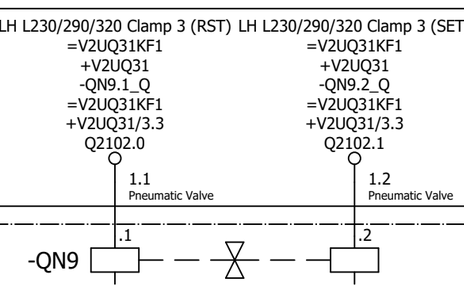

=V2UQ31KF1+V2UQ31/2.3
+.UQ31UQ9.1-W1

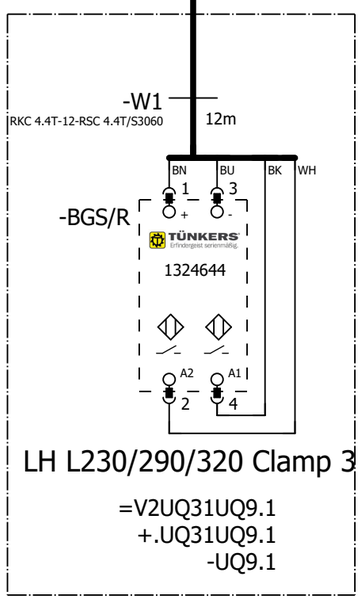

LH L230/290/320 Clamp 3

=V2UQ31UQ9.1
+.UQ31UQ9.1
-UQ9.1

=V2UQ31
-UQ9.1-BGS/R
LH L230/290/320
Clamp 3

=V2UQ31UQ8+.UQ31UQ8/1

=V2UQ31UQ10+.UQ31UQ10/1

			Date	1/24/2023	Volvo Trucks North America		Valiant TMS	FESTO DQ CONNECTION QN9	Drawing name: =2V01&EFS-EL_KF1	= V2UQ31UQ9
			Ed.	MKLEPADLO						+ V2UQ31UQ9
			Appr		P6700 Framing - Cell 2V01, KF1				Document type: EFS	Project nr: 22-16152
Modification	Date	Name	Original		Replacement of	Replaced by	Scale 1:1			Page 1 / 1630

0	1	2	3	4	5	6	7	8	9

=V2UQ31KF2
+.UQ31

-KF2.21
=V2UQ31KF2+V2UQ31/3.1

RH Common Clamps 1 (RST)	RH Common Clamps 1 (SET)
=V2UQ31KF2	=V2UQ31KF2
+V2UQ31	+V2UQ31
-QN10.1_Q	-QN10.2_Q
=V2UQ31KF2	=V2UQ31KF2
+V2UQ31/3.3	+V2UQ31/3.3
Q2125.0	Q2125.1
1.1 Pneumatic Valve	1.2 Pneumatic Valve

-QN10 .1 .2

=V2UQ31KF2+V2UQ31/1.1
+.UQ31UQ10.1-W1

-W1
RKC 4.4T-3-RSC 4.4T/S3060
3m

-BGS/R
BN BU BK WH
1 3
TÜNKERS
1324644
A2 A1
2 4

RH Common Clamp 1
=V2UQ31UQ10.1
+.UQ31UQ10.1
-UQ10.1

=V2UQ31
-UQ10.1-BGS/R
RH Common
Clamp 1

=V2UQ31KF2+V2UQ31/1.2
+.UQ31UQ10.2-W1

-W1
RKC 4.4T-8-RSC 4.4T/S3060
8m

-BGS/R
BN BU BK WH
1 3
TÜNKERS
1324644
A2 A1
2 4

RH Common Clamp 1
=V2UQ31UQ10.2
+.UQ31UQ10.2
-UQ10.2

=V2UQ31
-UQ10.2-BGS/R
RH Common
Clamp 1

=V2UQ31KF2+V2UQ31/1.3
+.UQ31UQ10.3-W1

-W1
RKC 4.4T-8-RSC 4.4T/S3060
8m

-BGS/R
BN BU BK WH
1 3
TÜNKERS
1324644
A2 A1
2 4

RH Common Clamp 1
=V2UQ31UQ10.3
+.UQ31UQ10.3
-UQ10.3

=V2UQ31
-UQ10.3-BGS/R
RH Common
Clamp 1

=V2UQ31UQ9+.UQ31UQ9/1

=V2UQ31UQ11+.UQ31UQ11/1

			Date	1/24/2023	Volvo Trucks North America		Valiant TMS	FESTO DQ CONNECTION QN10	Drawing name: =2V01&EFS-EL_KF1	= V2UQ31UQ10
			Ed.	MKLEPADLO						+ V2UQ31UQ10
			Appr		P6700 Framing - Cell 2V01, KF1				Document type: EFS	Project nr: 22-16152
Modification	Date	Name	Original		Replacement of	Replaced by	Scale 1:1			Page 1 / 1630

0	1	2	3	4	5	6	7	8	9

=V2UQ31KF2
+.UQ31

-KF2.21
=V2UQ31KF2+V2UQ31/3.1

RH Common Clamp 2 (RST)	RH Common Clamp 2 (SET)
=V2UQ31KF2	=V2UQ31KF2
+V2UQ31	+V2UQ31
-QN11.1_Q	-QN11.2_Q
=V2UQ31KF2	=V2UQ31KF2
+V2UQ31/3.3	+V2UQ31/3.3
Q2125.2	Q2125.3
2.1 Pneumatic Valve	2.2 Pneumatic Valve

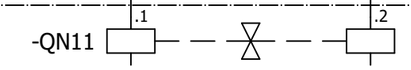

=V2UQ31KF2+V2UQ31/1.4
+.UQ31UQ11.1-W1

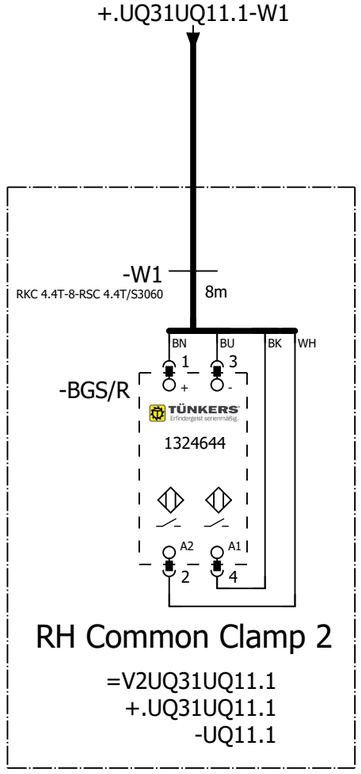

RH Common Clamp 2

=V2UQ31UQ11.1
+.UQ31UQ11.1
-UQ11.1

=V2UQ31
-UQ11.1-BGS/R
RH Common
Clamp 2

=V2UQ31UQ10+.UQ31UQ10/1

=V2UQ31UQ12+.UQ31UQ12/1

			Date	1/24/2023	Volvo Trucks North America	Valiant TMS	FESTO DQ CONNECTION QN11	Drawing name: =2V01&EFS-EL_KF1	= V2UQ31UQ11
			Ed.	MKLEPADLO					+ V2UQ31UQ11
			Appr		P6700 Framing - Cell 2V01, KF1			Document type: EFS	Project nr: 22-16152
Modification	Date	Name	Original		Replacement of	Replaced by	Scale 1:1		Page 1 / 1630

0	1	2	3	4	5	6	7	8	9

=V2UQ31KF2
+.UQ31

-KF2.22
=V2UQ31KF2+V2UQ31/3.1

RH Common Clamp 3 (RST)	RH Common Clamp 3 (SET)
=V2UQ31KF1	=V2UQ31KF2
+V2UQ31	+V2UQ31
-QN12.1_Q	-QN12.2_Q
=V2UQ31KF2	=V2UQ31KF2
+V2UQ31/3.3	+V2UQ31/3.3
Q2125.4	Q2125.5
1.1 Pneumatic Valve	1.2 Pneumatic Valve

-QN12 .1 .2

=V2UQ31KF2+V2UQ31/1.5
+.UQ31UQ12.1-W1

-W1
RKC 4.4T-8-RSC 4.4T/S3060
8m

BN BU BK WH

-BGS/R
1 3
+ -
TÜNKERS
1324644
A2 A1
2 4

RH Common Clamp 3

=V2UQ31UQ12.1
+.UQ31UQ12.1
-UQ12.1

=V2UQ31
-UQ12.1-BGS/R
RH Common
Clamp 3

=V2UQ31UQ11+.UQ31UQ11/1

=V2UQ31UQ13+.UQ31UQ13/1

			Date	1/24/2023	Volvo Trucks North America		Valiant TMS	FESTO DQ CONNECTION QN12	Drawing name: =2V01&EFS-EL_KF1	= V2UQ31UQ12
			Ed.	MKLEPADLO						+ V2UQ31UQ12
			Appr		P6700 Framing - Cell 2V01, KF1				Document type: EFS	Project nr: 22-16152
Modification	Date	Name	Original		Replacement of	Replaced by	Scale 1:1			Page 1 / 1630

0	1	2	3	4	5	6	7	8	9

=V2UQ31KF2
+.UQ31

-KF2.22
=V2UQ31KF2+V2UQ31/3.1

RH L150 Model Clamp 1 (RST)	RH L150 Model Clamp 1 (SET)
=V2UQ31KF2	=V2UQ31KF2
+V2UQ31	+V2UQ31
-QN13.1_Q	-QN13.2_Q
=V2UQ31KF2	=V2UQ31KF2
+V2UQ31/3.3	+V2UQ31/3.3
Q2125.6	Q2125.7
2.1 Pneumatic Valve	2.2 Pneumatic Valve

-QN13 .1 .2

=V2UQ31KF2+V2UQ31/1.6
+.UQ31UQ13.1-W1

-W1
RKC 4.4T-10-RSC 4.4T/S3060
10m

BN BU BK WH

-BGS/R
1 3
+ -
TÜNKERS
1324644
A2 A1
2 4

RH L150 Model Clamp 1

=V2UQ31UQ13.1
+.UQ31UQ13.1
-UQ13.1

=V2UQ31 -UQ13.1-BGS/R RH L150 Model Clamp 1

=V2UQ31UQ12+.UQ31UQ12/1

=V2UQ31UQ14+.UQ31UQ14/1

			Date	1/24/2023	Volvo Trucks North America	Valiant TMS	FESTO DQ CONNECTION QN13	Drawing name: =2V01&EFS-EL_KF1	= V2UQ31UQ13
			Ed.	MKLEPADLO					+ V2UQ31UQ13
			Appr		P6700 Framing - Cell 2V01, KF1			Document type: EFS	Project nr: 22-16152
Modification	Date	Name	Original		Replacement of	Replaced by	Scale 1:1		Page 1 / 1630

0	1	2	3	4	5	6	7	8	9

=V2UQ31KF2
+.UQ31

-KF2.23
=V2UQ31KF2+V2UQ31/3.1

RH L150 Model Clamp 2 (RST)	RH L150 Model Clamp 2 (SET)
=V2UQ31KF2	=V2UQ31KF2
+V2UQ31	+V2UQ31
-QN14.1_Q	-QN14.2_Q
=V2UQ31KF2	=V2UQ31KF2
+V2UQ31/3.3	+V2UQ31/3.3
Q2126.0	Q2126.1
1.1 Pneumatic Valve	1.2 Pneumatic Valve

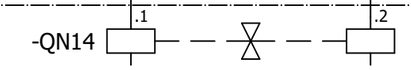

=V2UQ31KF2+V2UQ31/1.8
+.UQ31UQ14.1-W1

-W1
RKC 4.4T-10-RSC 4.4T/S3060
10m

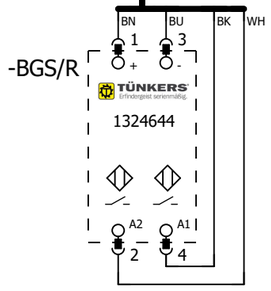

RH L150 Model Clamp 2

=V2UQ31UQ14.1
+.UQ31UQ14.1
-UQ14.1

=V2UQ31 -UQ14.1-BGS/R RH L150 Model Clamp 2

=V2UQ31UQ13+.UQ31UQ13/1

=V2UQ31UQ15+.UQ31UQ15/1

			Date	1/24/2023	Volvo Trucks North America	Valiant TMS	FESTO DQ CONNECTION QN14	Drawing name: =2V01&EFS-EL_KF1	= V2UQ31UQ14
			Ed.	MKLEPADLO					+ V2UQ31UQ14
			Appr		P6700 Framing - Cell 2V01, KF1			Document type: EFS	Project nr: 22-16152
Modification	Date	Name	Original		Replacement of / Replaced by	Scale 1:1			Page 1 / 1630

0	1	2	3	4	5	6	7	8	9

=V2UQ31KF2
+.UQ31

-KF2.23
=V2UQ31KF2+V2UQ31/3.1

RH L150 Model clamp 3 (RST)	RH L150 Model clamp 3 (SET)
=V2UQ31KF2	=V2UQ31KF2
+V2UQ31	+V2UQ31
-QN15.1_Q	-QN15.2_Q
=V2UQ31KF2	=V2UQ31KF2
+V2UQ31/3.3	+V2UQ31/3.3
Q2126.2	Q2126.3
2.1 Pneumatic Valve	2.2 Pneumatic Valve

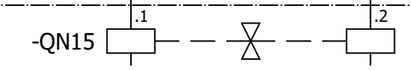

=V2UQ31KF2+V2UQ31/1.9
+.UQ31UQ15.1-W1

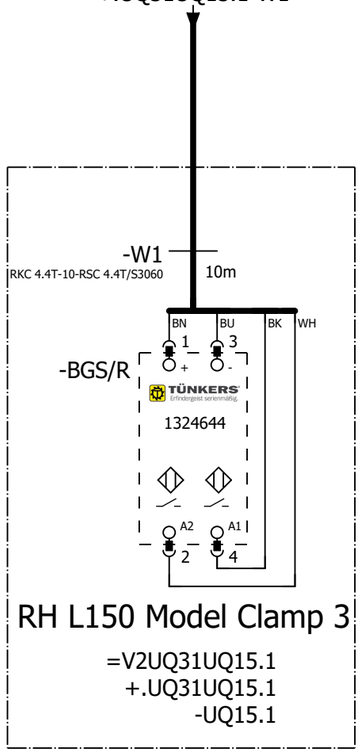

RH L150 Model Clamp 3

=V2UQ31UQ15.1
+.UQ31UQ15.1
-UQ15.1

=V2UQ31 -UQ15.1-BGS/R RH L150 Model Clamp 3

=V2UQ31UQ14+.UQ31UQ14/1

=V2UQ31UQ16+.UQ31UQ16/1

			Date	1/24/2023	Volvo Trucks North America		Valiant TMS	FESTO DQ CONNECTION QN15	Drawing name: =2V01&EFS-EL_KF1	= V2UQ31UQ15	
			Ed.	MKLEPADLO						+ V2UQ31UQ15	
			Appr		P6700 Framing - Cell 2V01, KF1				Document type: EFS	Project nr: 22-16152	Page 1
Modification	Date	Name	Original		Replacement of	Replaced by	Scale 1:1				1630

0	1	2	3	4	5	6	7	8	9

=V2UQ31KF2
+.UQ31

-KF2.24
=V2UQ31KF2+V2UQ31/3.1

RH L230/290/320 Clamp 1 (RST)
=V2UQ31KF2
+V2UQ31
-QN16.1_Q
=V2UQ31KF2
+V2UQ31/3.3
Q2126.4

RH L230/290/320 Clamp 1 (SET)
=V2UQ31KF2
+V2UQ31
-QN16.2_Q
=V2UQ31KF2
+V2UQ31/3.3
Q2126.5

1.1 Pneumatic Valve
1.2 Pneumatic Valve

-QN16 .1 .2

=V2UQ31KF2+V2UQ31/2.1
+.UQ31UQ16.1-W1

-W1
RKC 4.4T-8-RSC 4.4T/S3060
8m

BN BU BK WH

-BGS/R
1 3
+ -
TÜNKERS
1324644
A2 A1
2 4

RH L230/290/320 Clamp 1

=V2UQ31UQ16.1
+.UQ31UQ16.1
-UQ16.1

=V2UQ31 -UQ16.1-BGS/R RH L230/290/320 Clamp 1

=V2UQ31UQ15+.UQ31UQ15/1

=V2UQ31UQ17+.UQ31UQ17/1

			Date	1/24/2023	Volvo Trucks North America	Valiant TMS	FESTO DQ CONNECTION QN16	Drawing name: =2V01&EFS-EL_KF1	= V2UQ31UQ16
			Ed.	MKLEPADLO					+ V2UQ31UQ16
			Appr		P6700 Framing - Cell 2V01, KF1			Document type: EFS	Project nr: 22-16152
Modification	Date	Name	Original		Replacement of	Replaced by	Scale 1:1		Page 1 / 1630

0	1	2	3	4	5	6	7	8	9

=V2UQ31KF2
+.UQ31

-KF2.24
=V2UQ31KF2+V2UQ31/3.1

RH L230/290/320 Clamp 2 (RST)
=V2UQ31KF2
+V2UQ31
-QN17.1_Q
=V2UQ31KF2
+V2UQ31/3.3
Q2126.6

RH L230/290/320 Clamp 2 (SET)
=V2UQ31KF2
+V2UQ31
-QN17.2_Q
=V2UQ31KF2
+V2UQ31/3.3
Q2126.7

2.1
Pneumatic Valve

2.2
Pneumatic Valve

-QN17
.1
.2

=V2UQ31KF2+V2UQ31/2.2
+.UQ31UQ17.1-W1

-W1
RKC 4.4T-12-RSC 4.4T/S3060
12m

BN BU BK WH

-BGS/R
1 3
+ -
TÜNKERS
1324644
A2 A1
2 4

RH L230/290/320 Clamp 2

=V2UQ31UQ17.1
+.UQ31UQ17.1
-UQ17.1

=V2UQ31 -UQ17.1-BGS/R RH L230/290/320 Clamp 2

=V2UQ31UQ16+.UQ31UQ16/1

=V2UQ31UQ18+.UQ31UQ18/1

			Date	1/24/2023	Volvo Trucks North America	Valiant TMS	FESTO DQ CONNECTION QN17	Drawing name: =2V01&EFS-EL_KF1	= V2UQ31UQ17
			Ed.	MKLEPADLO					+ V2UQ31UQ17
			Appr		P6700 Framing - Cell 2V01, KF1			Document type: EFS	Project nr: 22-16152
Modification	Date	Name	Original		Replacement of	Replaced by	Scale 1:1		Page 1 / 1630

0	1	2	3	4	5	6	7	8	9

=V2UQ31KF2
+.UQ31

-KF2.25
=V2UQ31KF2+V2UQ31/3.1

RH L230/290/320 Clamp 3 (RST)
=V2UQ31KF2
+V2UQ31
-QN18.1_Q
=V2UQ31KF2
+V2UQ31/3.3
Q2127.0

RH L230/290/320 Clamp 3 (SET)
=V2UQ31KF2
+V2UQ31
-QN18.2_Q
=V2UQ31KF2
+V2UQ31/3.3
Q2127.1

1.1
Pneumatic Valve

1.2
Pneumatic Valve

-QN18
.1
.2

=V2UQ31KF2+V2UQ31/2.3
+.UQ31UQ18.1-W1

-W1
RKC 4.4T-12-RSC 4.4T/S3060
12m

BN BU BK WH

-BGS/R
1 3
+ -
TÜNKERS
1324644
A2 A1
2 4

RH L230/290/320 Clamp 3

=V2UQ31UQ18.1
+.UQ31UQ18.1
-UQ18.1

=V2UQ31 -UQ18.1-BGS/R RH L230/290/320 Clamp 3

=V2UQ31UQ17+.UQ31UQ17/1

=V2UQ31WC4+V2UQ31/1

			Date	1/24/2023	Volvo Trucks North America	Valiant TMS	FESTO DQ CONNECTION QN18	Drawing name: =2V01&EFS-EL_KF1	= V2UQ31UQ18
			Ed.	MKLEPADLO					+ V2UQ31UQ18
			Appr		P6700 Framing - Cell 2V01, KF1			Document type: EFS	Project nr: 22-16152
Modification	Date	Name	Original		Replacement of	Replaced by	Scale 1:1		Page 1 / 1630

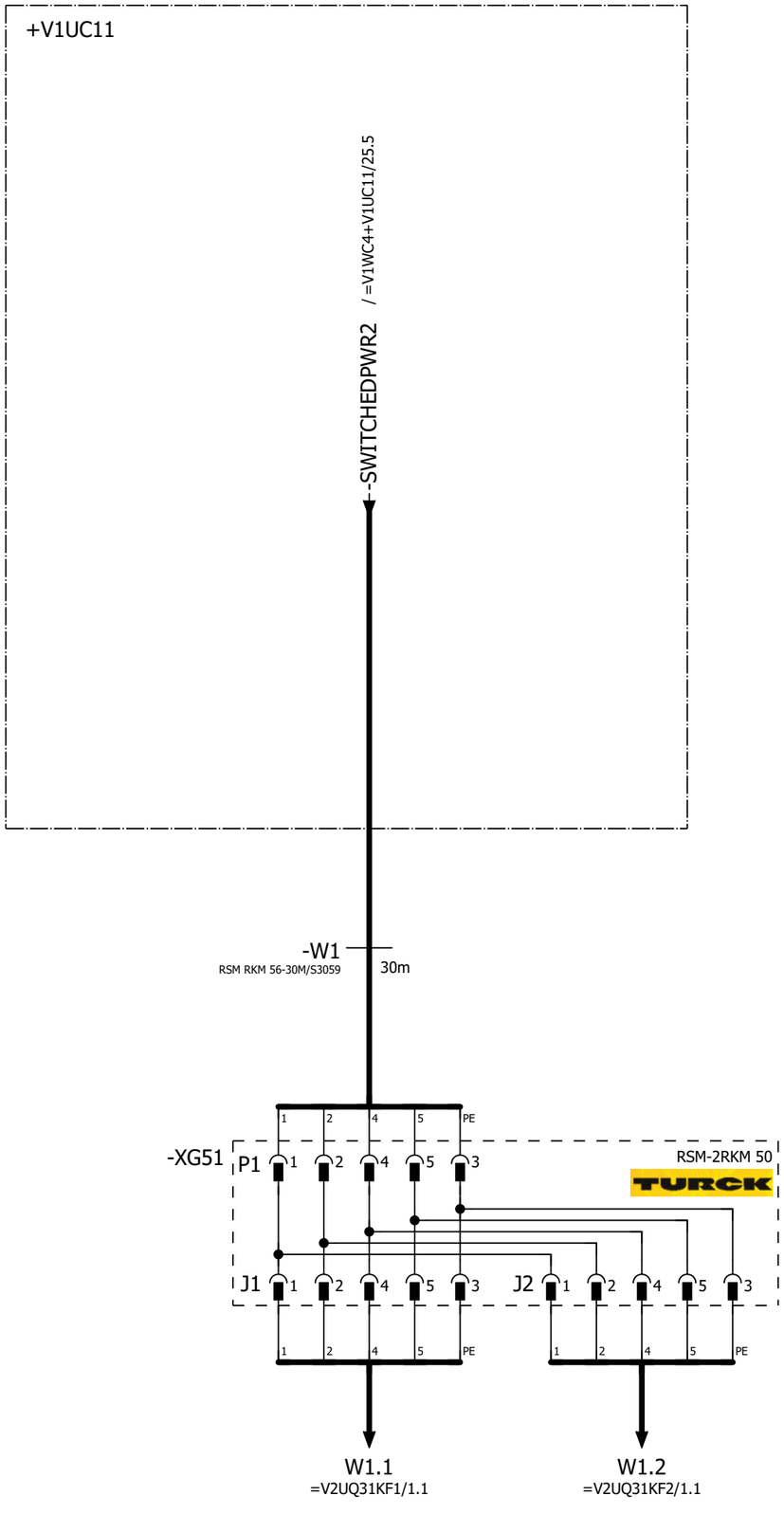

=V2UQ31UQ18+.UQ31UQ18/1

=V2UQ51BG0+.UQ51/1

			Date	1/24/2023	Volvo Trucks North America	Valiant TMS	24VDC	Drawing name: =2V01&EFS-EL_KF1	= V2UQ31WC4 + V2UQ31
			Ed.	MKLEPADLO	P6700 Framing - Cell 2V01, KF1				
			Appr					Document type: EFS	Project nr: 22-16152
Modification	Date	Name	Original		Replacement of / Replaced by	Scale 1:1			Page 1 / 1630

0	1	2	3	4	5	6	7	8	9

=V2UQ51KF1/1.1

-BG01

-W1

RKC 4.4T-2-RSC 4.4T/S3060

2m

BN BU BK WH

1 3

+ -

-BG01

Sn = 20 mm

TURCK

1627297

A pnp

4

=V2UQ51
-BG01
Common
Part Present

=V2UQ51KF1/1.2

-BG02

-W2

RKC 4.4T-3-RSC 4.4T/S3060

3m

BN BU BK WH

1 3

+ -

-BG02

Sn = 20 mm

TURCK

1627297

A pnp

4

=V2UQ51
-BG02
Common
Part Present

=V2UQ31WC4+.UQ31/1

=V2UQ51KF1/1

			Date	1/24/2023	Volvo Trucks North America	Valiant TMS	SENSORS	Drawing name: =2V01&EFS-EL_KF1	= V2UQ51BG0
			Ed.	MKLEPADLO					+ V2UQ51
			Appr		P6700 Framing - Cell 2V01, KF1	Scale 1:1		Document type: EFS	Project nr: 22-16152
Modification	Date	Name	Original		Replacement of	Replaced by			Page 1 / 1630

0	1	2	3	4	5	6	7	8	9

=V1WC4+V1UC11/26.5
+.UQ51KF1-W1

-W1
RSM RKM 56-15M/S3059
15m

4 3 1 2 PE

=V1KF1+V1UC11/2.6
+V1UC11-KF100.11-P11

-KF100.11-P11
PROFINET Cable
6XV1840-3AH10

-KF1.11
/1.0
24 VDC

POWER IN 7/8" 4 5 1 2 3
+24V US | +24V UA | 0V UA | 0V US | PE

POWER OUT 7/8" 4 5 1 2 3
+24V US | +24V UA | 0V UA | 0V US | PE

M12 P1 R
BUS IN

M12 P2 R
BUS OUT

MURR ELEKTRONIK stay connected
MVK-MPNIO DI16
55530

Spare Spare Spare Spare Spare Spare Spare Spare Spare

Common Part Present | Common Part Present | Spare | Spare | Spare | Spare | Spare | Spare

-KF1.11
/1.0
24 VDC

MURR ELEKTRONIK stay connected
MVK-MPNIO DI16

V2UQ51-BG01 I4910.0 I4910.1 | V2UQ51-BG02 I4910.2 I4910.3 | I4910.4 I4910.5 | I4910.6 I4910.7 | I4911.0 I4911.1 | I4911.2 I4911.3 | I4911.4 I4911.5 | I4911.6 I4911.7

X0 X1 X2 X3 X4 X5 X6 X7
+24V US | DI | 0V US | DI | FE
1 4 3 2 5

55530

BN BK BU WH

-BG01
=V2UQ51BG0/1.1

-BG02
=V2UQ51BG0/1.3

=V2UQ51BG0/1

=V2UQ52BG0+.UQ52/1

			Date	1/24/2023	Volvo Trucks North America	Valiant TMS	MURR MODULE 16 IN	Drawing name: =2V01&EFS-EL_KF1	= V2UQ51KF1
			Ed.	MKLEPADLO					+ V2UQ51
			Appr		P6700 Framing - Cell 2V01, KF1	Scale 1:1		Document type: EFS	Project nr: 22-16152
Modification	Date	Name	Original		Replacement of	Replaced by			Page 1 / 1630

0	1	2	3	4	5	6	7	8	9

=V2UQ52KF1/1.1

-BG01

-W1

RKC 4.4T-2-RSC 4.4T/S3060

2m

BN BU BK WH

1 3

+ -

-BG01

Sn = 20 mm

TURCK

1627297

A pnp

4

=V2UQ52
-BG01
Common
Part Present

=V2UQ52KF1/1.2

-BG02

-W2

RKC 4.4T-3-RSC 4.4T/S3060

3m

BN BU BK WH

1 3

+ -

-BG02

Sn = 20 mm

TURCK

1627297

A pnp

4

=V2UQ52
-BG02
Common
Part Present

=V2UQ51KF1+.UQ51/1

=V2UQ52KF1/1

			Date	1/24/2023	Volvo Trucks North America		Valiant TMS	SENSORS	Drawing name: =2V01&EFS-EL_KF1	= V2UQ52BG0
			Ed.	MKLEPADLO						+ V2UQ52
			Appr		P6700 Framing - Cell 2V01, KF1		Scale 1:1		Document type: EFS	Project nr: 22-16152
Modification	Date	Name	Original		Replacement of	Replaced by				Page 1 / 1630

0	1	2	3	4	5	6	7	8	9

=V2WC4+.UC15/20.5
+.UQ52KF1-W1

-W1
RSM RKM 56-15M/S3059
15m

4 3 1 2 PE

=V2UQ54KF1+.UQ54/1.1
+.UQ54KF1-W1

4 3 1 2 PE

=V2KF1+.UC15/2.6
+.UC15-KF100.15-P13

-KF100.15-P13
PROFINET Cable
6XV1840-3AH10

+.UQ54KF1-WF1 / =V2UQ54KF1+.UQ54/1.4

-KF1.11
/1.0
24 VDC

7/8" POWER IN 4 5 1 2 3
+24V US | +24V UA | 0V UA | 0V US | PE

7/8" POWER OUT 4 5 1 2 3
+24V US | +24V UA | 0V UA | 0V US | PE

M12 P1 R
BUS IN

M12 P2 R
BUS OUT

MURR ELEKTRONIK stay connected
MVK-MPNIO DI16

55530

Spare Spare Spare Spare Spare Spare Spare Spare Spare

Common Part Present | Common Part Present | Spare | Spare | Spare | Spare | Spare | Spare

-KF1.11
/1.0
24 VDC

MURR ELEKTRONIK stay connected
MVK-MPNIO DI16

V2UQ52-BG01
I4912.0 I4912.1

V2UQ52-BG02
I4912.2 I4912.3

I4912.4 I4912.5 I4912.6 I4912.7 I4913.0 I4913.1 I4913.2 I4913.3 I4913.4 I4913.5 I4913.6 I4913.7

X0 +24V US 1 | DI 4 | 0V US 3 | DI 2 | FE 5
X1 +24V US 1 | DI 4 | 0V US 3 | DI 2 | FE 5
X2 +24V US 1 | DI 4 | 0V US 3 | DI 2 | FE 5
X3 +24V US 1 | DI 4 | 0V US 3 | DI 2 | FE 5
X4 +24V US 1 | DI 4 | 0V US 3 | DI 2 | FE 5
X5 +24V US 1 | DI 4 | 0V US 3 | DI 2 | FE 5
X6 +24V US 1 | DI 4 | 0V US 3 | DI 2 | FE 5
X7 +24V US 1 | DI 4 | 0V US 3 | DI 2 | FE 5

55530

BN BK BU WH

BN BK BU WH

-BG01
=V2UQ52BG0/1.1

-BG02
=V2UQ52BG0/1.3

=V2UQ52BG0/1

=V2UQ53BG0+.UQ53/1

			Date	1/24/2023	Volvo Trucks North America	Valiant TMS	MURR MODULE 16 IN	Drawing name: =2V01&EFS-EL_KF1	= V2UQ52KF1
			Ed.	MKLEPADLO					+ V2UQ52
			Appr		P6700 Framing - Cell 2V01, KF1	Scale 1:1		Document type: EFS	Project nr: 22-16152
Modification	Date	Name	Original		Replacement of	Replaced by			Page 1 / 1630

0	1	2	3	4	5	6	7	8	9

=V2UQ53KF1/1.1
-BG01

-W1
RKC 4.4T-2-RSC 4.4T/S3060
2m

BN BU BK WH
1 3
+ -
-BG01
Sn = 20 mm
TURCK
1627297
A pnp
4

=V2UQ53
-BG01
Common
Part Present

=V2UQ53KF1/1.2
-BG02

-W2
RKC 4.4T-3-RSC 4.4T/S3060
3m

BN BU BK WH
1 3
+ -
-BG02
Sn = 20 mm
TURCK
1627297
A pnp
4

=V2UQ53
-BG02
Common
Part Present

=V2UQ52KF1+.UQ52/1

=V2UQ53KF1/1

			Date	1/24/2023	Volvo Trucks North America		Valiant TMS	SENSORS	Drawing name: =2V01&EFS-EL_KF1	= V2UQ53BG0
			Ed.	MKLEPADLO						+ V2UQ53
			Appr		P6700 Framing - Cell 2V01, KF1		Scale 1:1		Document type: EFS	Project nr: 22-16152
Modification	Date	Name	Original		Replacement of	Replaced by				Page 1 / 1630

0	1	2	3	4	5	6	7	8	9

=V2WC4+.UC14/20.5
+.UQ53KF1-W1.1

-W1
RSM RKM 56-15M/S3059
15m

4 3 1 2 PE

=V2KF1+.UC14/2.6
+.UC14-KF100.14-P13

-KF100.14-P13
PROFINET Cable
6XV1840-3AH10

-KF1.11
/1.0
24 VDC

POWER IN 7/8" 4 5 1 2 3
+24V US | +24V UA | 0V UA | 0V US | PE

POWER OUT 7/8" 4 5 1 2 3
+24V US | +24V UA | 0V UA | 0V US | PE

M12 P1 R
BUS IN

M12 P2 R
BUS OUT

MURR ELEKTRONIK stay connected
MVK-MPNIO DI16 55530

Spare Spare Spare Spare Spare Spare Spare Spare Spare

Common Part Present | Common Part Present | Spare | Spare | Spare | Spare | Spare | Spare

-KF1.11
/1.0
24 VDC

MURR ELEKTRONIK stay connected
MVK-MPNIO DI16

V2UQ53-BG01 I4914.0 I4914.1 | V2UQ53-BG02 I4914.2 I4914.3 | I4914.4 I4914.5 | I4914.6 I4914.7 | I4915.0 I4915.1 | I4915.2 I4915.3 | I4915.4 I4915.5 | I4915.6 I4915.7

X0 X1 X2 X3 X4 X5 X6 X7
+24V US | DI | 0V US | DI | FE
1 4 3 2 5

55530

BN BK BU WH

-BG01
=V2UQ53BG0/1.1

-BG02
=V2UQ53BG0/1.3

=V2UQ53BG0/1

=V2UQ54BG0+.UQ54/1

			Date	1/24/2023	Volvo Trucks North America	Valiant TMS	MURR MODULE 16 IN	Drawing name: =2V01&EFS-EL_KF1	= V2UQ53KF1
			Ed.	MKLEPADLO					+ V2UQ53
			Appr		P6700 Framing - Cell 2V01, KF1	Scale 1:1		Document type: EFS	Project nr: 22-16152
Modification	Date	Name	Original		Replacement of	Replaced by			Page 1 / 1630

0	1	2	3	4	5	6	7	8	9

=V2UQ54KF1/1.1

-BG01

-W1

RKC 4.4T-2-RSC 4.4T/S3060

2m

BN BU BK WH

1 3

+ -

-BG01

Sn = 20 mm

TURCK

1627297

A pnp

4

=V2UQ54
-BG01
Common
Part Present

=V2UQ54KF1/1.2

-BG02

-W2

RKC 4.4T-3-RSC 4.4T/S3060

3m

BN BU BK WH

1 3

+ -

-BG02

Sn = 20 mm

TURCK

1627297

A pnp

4

=V2UQ54
-BG02
Common
Part Present

=V2UQ53KF1+.UQ53/1

=V2UQ54KF1/1

			Date	1/24/2023	Volvo Trucks North America	Valiant TMS	SENSORS	Drawing name: =2V01&EFS-EL_KF1	= V2UQ54BG0
			Ed.	MKLEPADLO					+ V2UQ54
			Appr		P6700 Framing - Cell 2V01, KF1	Scale 1:1		Document type: EFS	Project nr: 22-16152
Modification	Date	Name	Original		Replacement of	Replaced by			Page 1 / 1630

0	1	2	3	4	5	6	7	8	9

=V2UQ52KF1+.UQ52/1.3
+.UQ54KF1-W1

-W1
RSM RKM 56-25M/S3059
25m

4 3 1 2 PE

=V2UQ52KF1+.UQ52/1.4
+.UQ54KF1-WF1

-WF1
PROFINET Cable
6XV1840-3AH10

-KF1.11
/1.0
24 VDC

POWER IN 7/8" +24V US 4 +24V UA 5 0V UA 1 0V US 2 PE 3

POWER OUT 7/8" +24V US 4 +24V UA 5 0V UA 1 0V US 2 PE 3

M12 P1 R BUS IN

M12 P2 R BUS OUT

MURR ELEKTRONIK stay connected
MVK-MPNIO DI16 55530

Spare Spare Spare Spare Spare Spare Spare Spare Spare

Common Part Present | Common Part Present | Spare | Spare | Spare | Spare | Spare | Spare

-KF1.11
/1.0
24 VDC

MURR ELEKTRONIK stay connected
MVK-MPNIO DI16

V2UQ54-BG01 I4916.0 I4916.1 | V2UQ54-BG02 I4916.2 I4916.3 | I4916.4 I4916.5 | I4916.6 I4916.7 | I4917.0 I4917.1 | I4917.2 I4917.3 | I4917.4 I4917.5 | I4917.6 I4917.7

X0 +24V US 1 DI 4 0V US 3 DI 2 FE 5
X1 +24V US 1 DI 4 0V US 3 DI 2 FE 5
X2 +24V US 1 DI 4 0V US 3 DI 2 FE 5
X3 +24V US 1 DI 4 0V US 3 DI 2 FE 5
X4 +24V US 1 DI 4 0V US 3 DI 2 FE 5
X5 +24V US 1 DI 4 0V US 3 DI 2 FE 5
X6 +24V US 1 DI 4 0V US 3 DI 2 FE 5
X7 +24V US 1 DI 4 0V US 3 DI 2 FE 5

55530

BN BK BU WH

BN BK BU WH

-BG01
=V2UQ54BG0/1.1

-BG02
=V2UQ54BG0/1.3

=V2UQ54BG0/1 =V2WC1+.UC81/1

			Date	1/24/2023	Volvo Trucks North America	Valiant TMS	MURR MODULE 16 IN	Drawing name: =2V01&EFS-EL_KF1	= V2UQ54KF1		
			Ed.	MKLEPADLO					+ V2UQ54		
			Appr		P6700 Framing - Cell 2V01, KF1	Scale 1:1		Document type: EFS	Project nr: 22-16152	Page	1
Modification	Date	Name	Original		Replacement of	Replaced by					1630

0	1	2	3	4	5	6	7	8	9

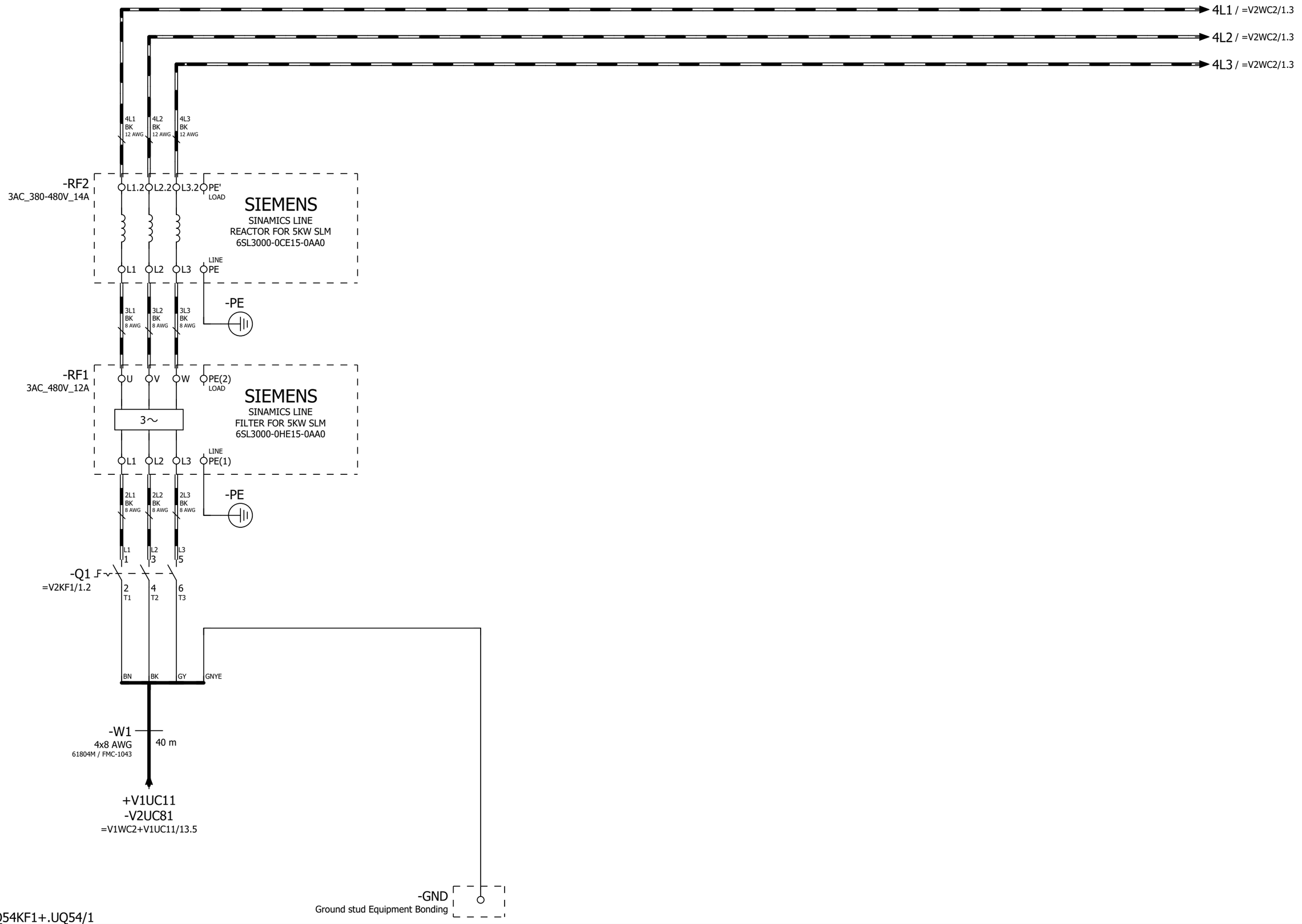

=V2UQ54KF1+.UQ54/1

+.UC161/1

			Date	1/24/2023	Volvo Trucks North America	Valiant TMS	Incoming servo power supply 480 VAC	Drawing name: =2V01&EFS-EL_KF1	= V2WC1
			Ed.	MKLEPADLO					+ V2UC81
			Appr		P6700 Framing - Cell 2V01, KF1	Scale 1:1		Document type: EFS	Project nr: 22-16152
Modification	Date	Name	Original		Replacement of	Replaced by			Page 1 / 1630

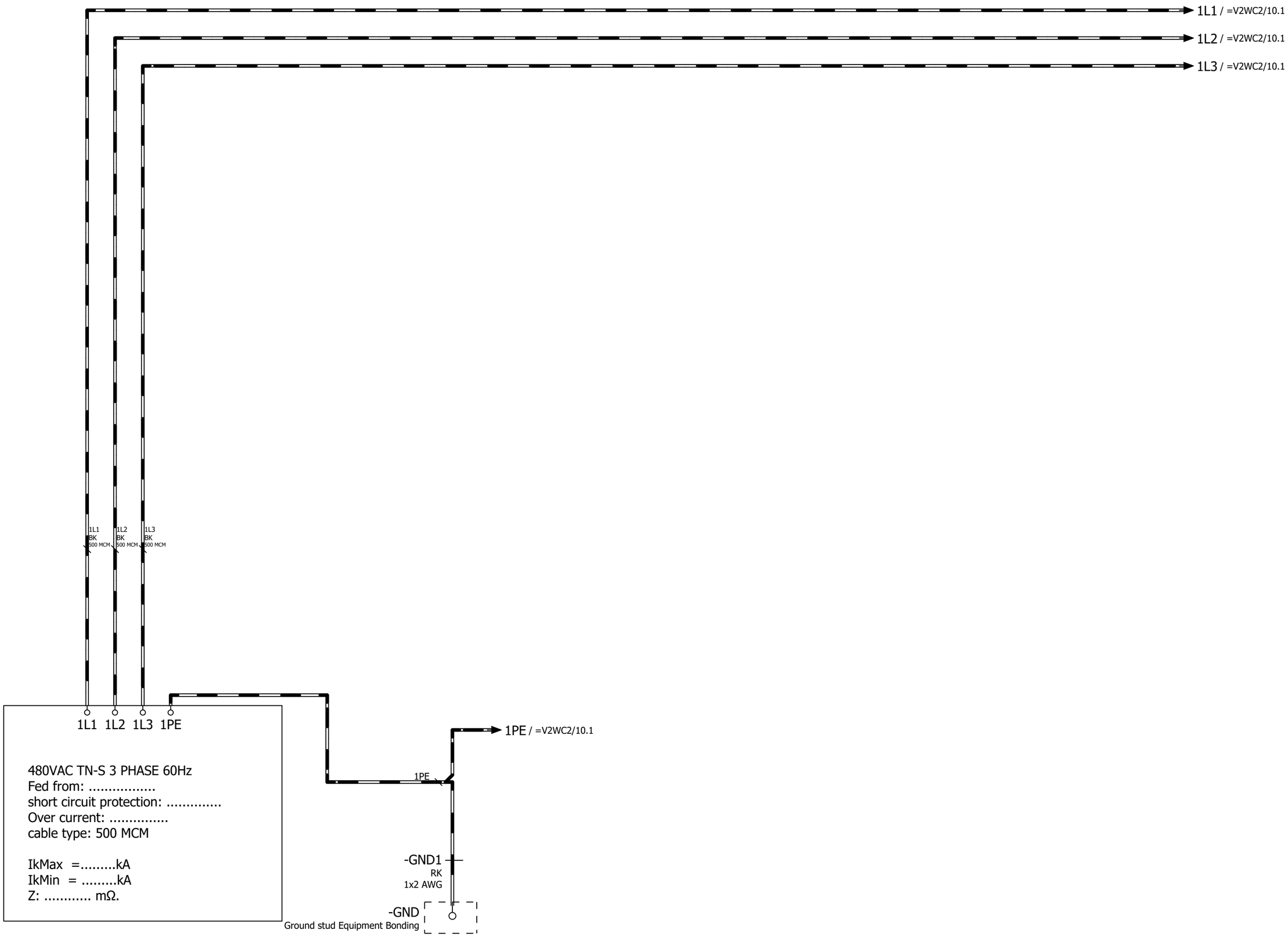

+.UC81/1

+.UC162/1

			Date	1/24/2023	Volvo Trucks North America	Valiant TMS	Incoming weld power supply 480 VAC	Drawing name: =2V01&EFS-EL_KF1	= V2WC1	
			Ed.	MKLEPADLO					+ V2UC161	
			Appr		P6700 Framing - Cell 2V01, KF1	Scale 1:1		Document type: EFS	Project nr: 22-16152	Page 1
Modification	Date	Name	Original		Replacement of / Replaced by					1630

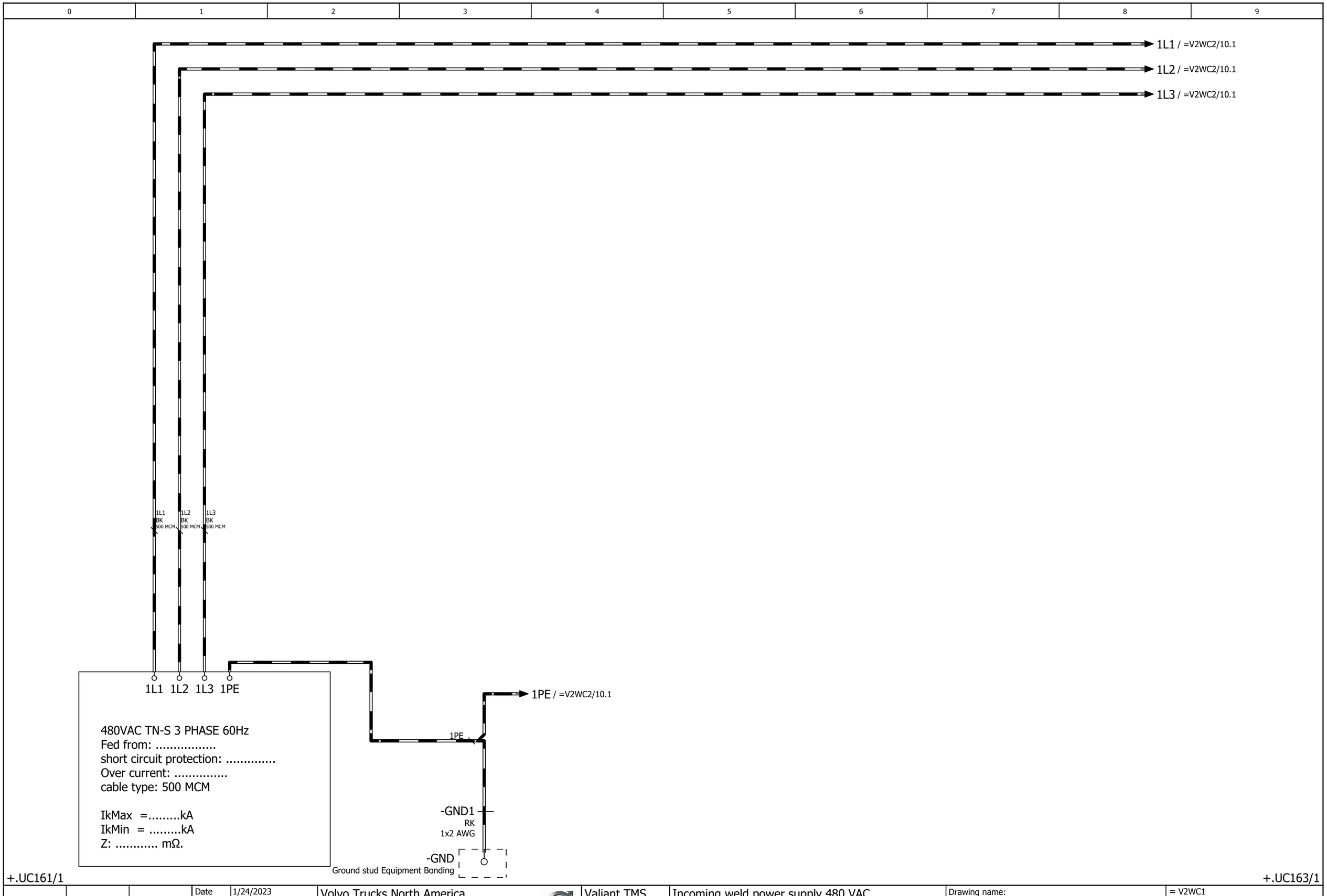

			Date	1/24/2023	Volvo Trucks North America	Valiant TMS	Incoming weld power supply 480 VAC	Drawing name: =2V01&EFS-EL_KF1	= V2WC1 + V2UC162	
			Ed.	MKLEPADLO	P6700 Framing - Cell 2V01, KF1					
			Appr					Document type: EFS	Project nr: 22-16152	Page 1
Modification	Date	Name	Original		Replacement of / Replaced by	Scale 1:1				1630

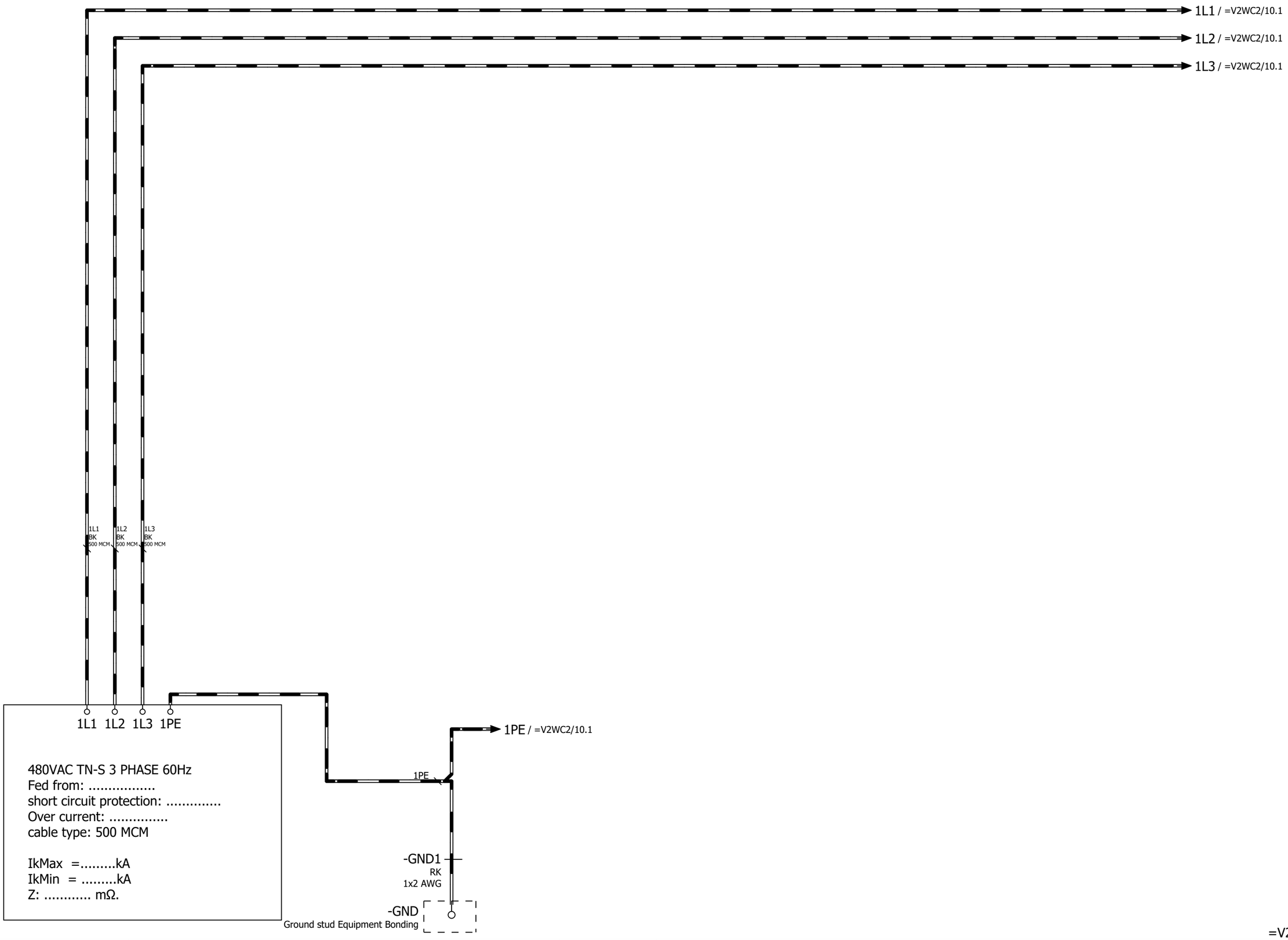

+.UC162/1

=V2WC2+.UC81/1

			Date	1/24/2023	Volvo Trucks North America	Valiant TMS	Incoming weld power supply 480 VAC	Drawing name: =2V01&EFS-EL_KF1	= V2WC1
			Ed.	MKLEPADLO					+ V2UC163
			Appr		P6700 Framing - Cell 2V01, KF1	Scale 1:1		Document type: EFS	Project nr: 22-16152
Modification	Date	Name	Original		Replacement of	Replaced by			Page 1 / 1630

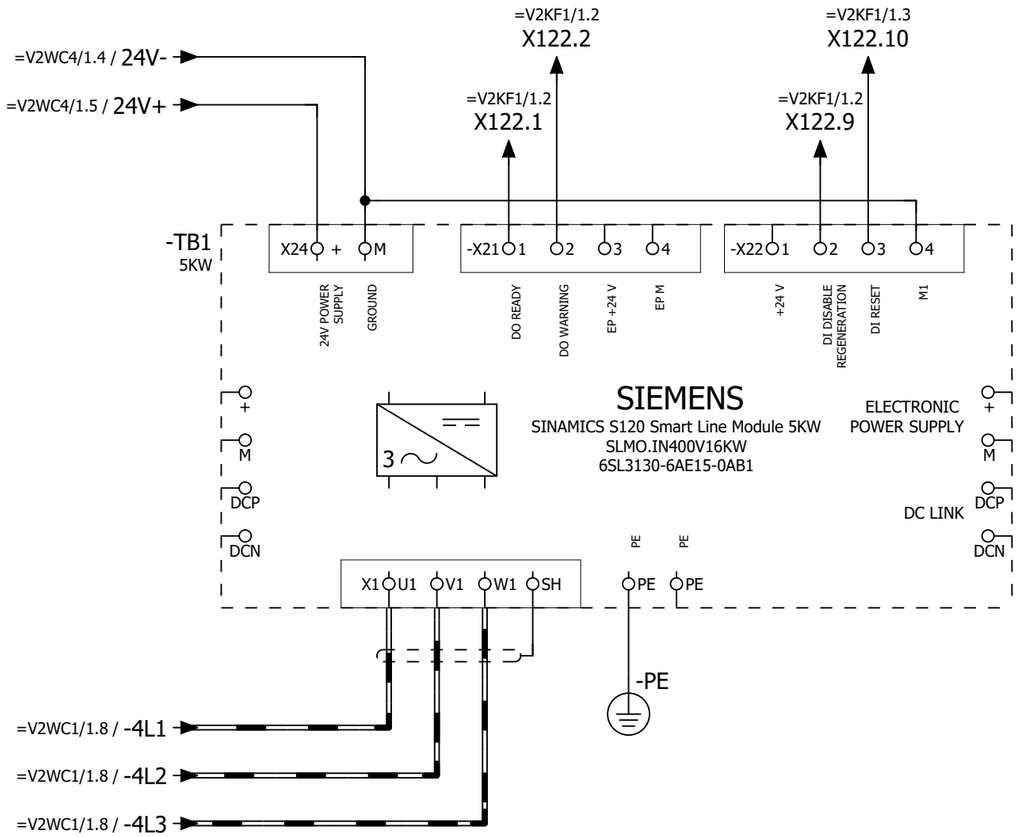

=V2WC1+.UC163/1

2

			Date	1/24/2023	Volvo Trucks North America	Valiant TMS	Power distribution 480 VAC	Drawing name: =2V01&EFS-EL_KF1	= V2WC2
			Ed.	MKLEPADLO					+ V2UC81
			Appr		P6700 Framing - Cell 2V01, KF1			Document type: EFS	Project nr: 22-16152
Modification	Date	Name	Original		Replacement of / Replaced by	Scale 1:1			Page 1 / 1630

0	1	2	3	4	5	6	7	8	9

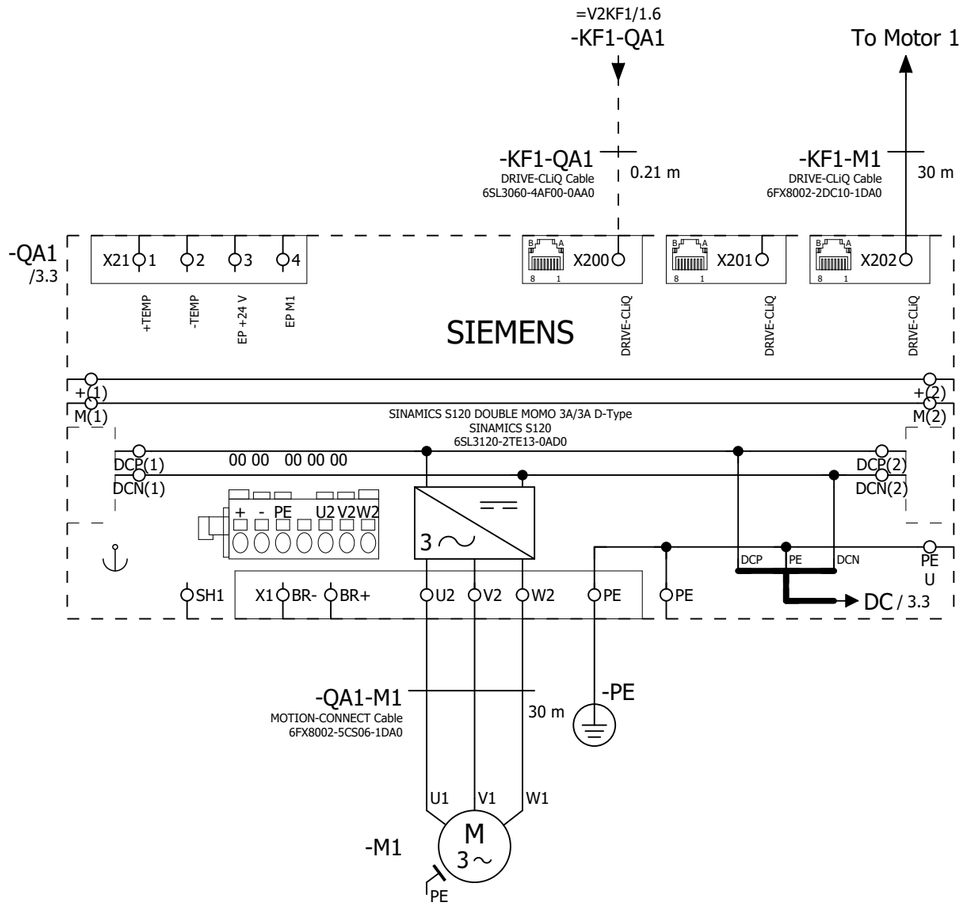

1 3

			Date	1/24/2023	Volvo Trucks North America		Valiant TMS	Power distribution 480 VAC	Drawing name: =2V01&EFS-EL_KF1	= V2WC2	
			Ed.	MKLEPADLO						+ V2UC81	
			Appr		P6700 Framing - Cell 2V01, KF1		Scale 1:1		Document type: EFS	Project nr: 22-16152	Page 2
Modification	Date	Name	Original		Replacement of	Replaced by					1630

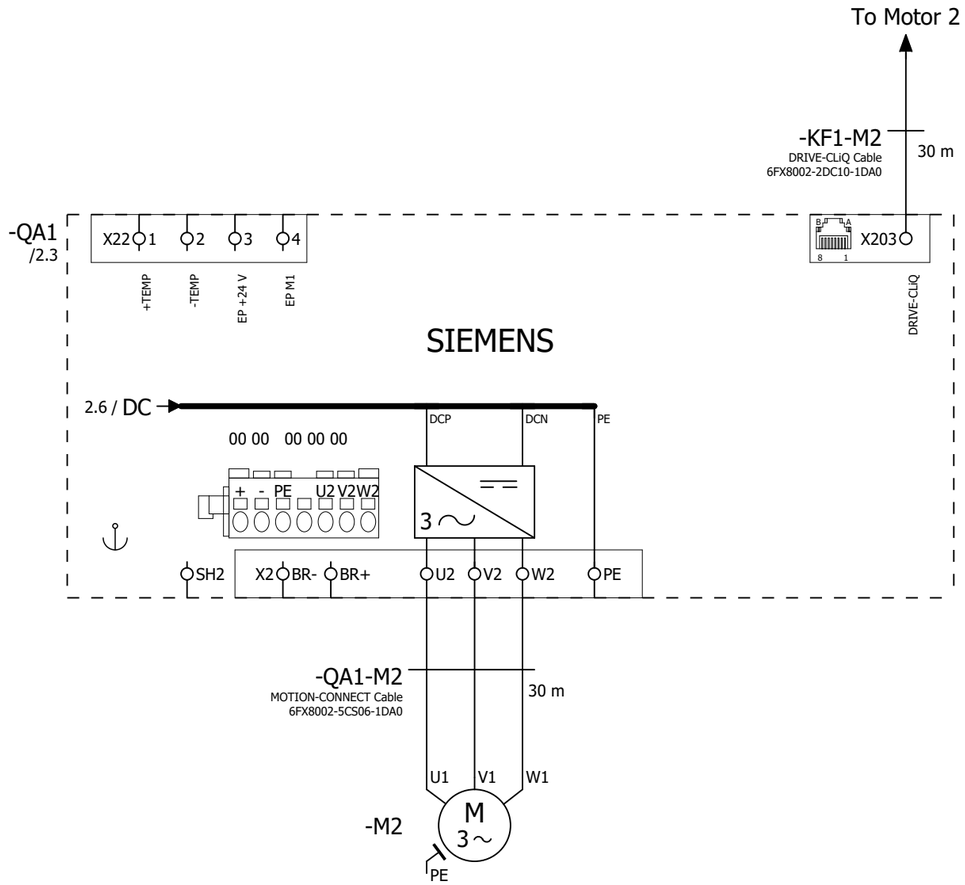

2

+.UC161/10

			Date	1/24/2023	Volvo Trucks North America	Valiant TMS	Power distribution 480 VAC	Drawing name: =2V01&EFS-EL_KF1	= V2WC2 + V2UC81
			Ed.	MKLEPADLO	P6700 Framing - Cell 2V01, KF1				
			Appr					Document type: EFS	Project nr: 22-16152
Modification	Date	Name	Original		Replacement of / Replaced by	Scale 1:1			Page 3 / 1630

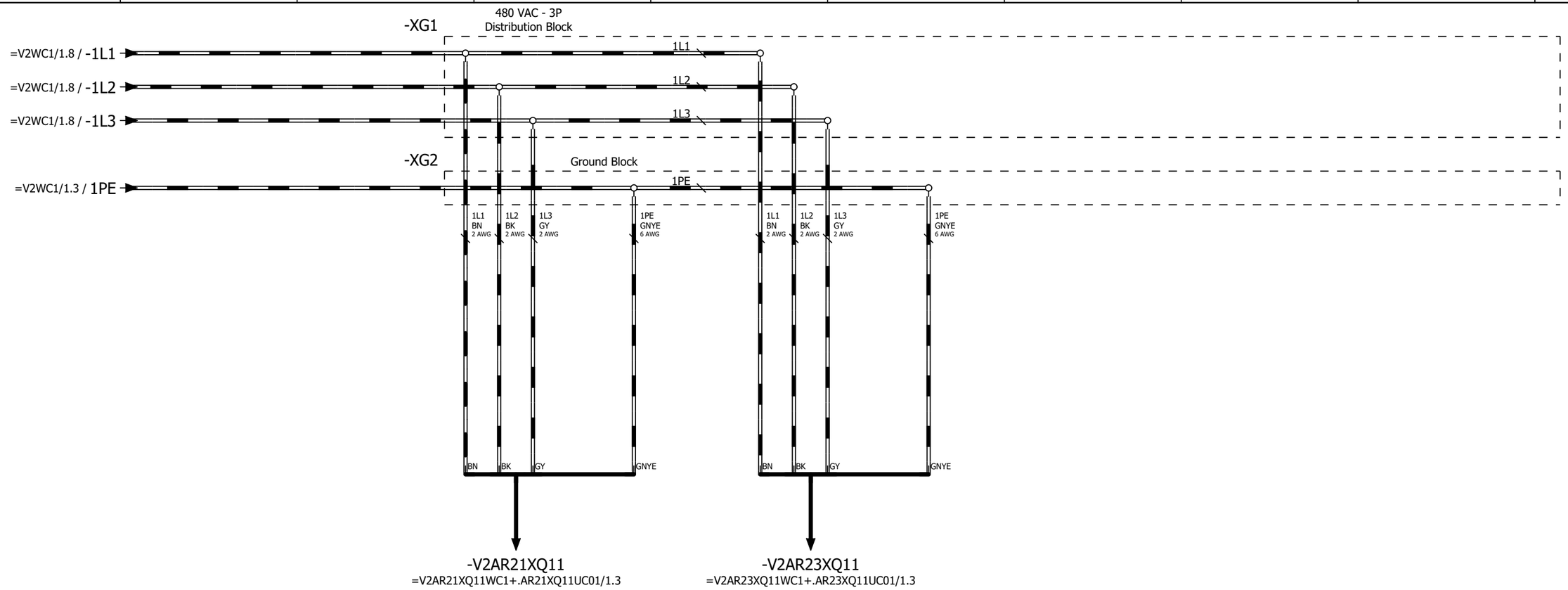

Weld Power Distribution 480 VAC V2AR21 (Weld Timer) (S050R01)

Weld Power Distribution 480 VAC V2AR23 (Weld Timer) (S050R03)

+.UC81/3

+.UC162/10

			Date	1/24/2023	Volvo Trucks North America	Valiant TMS	Weld power distribution 480 VAC	Drawing name: =2V01&EFS-EL_KF1	= V2WC2		
			Ed.	MKLEPADLO					+ V2UC161		
			Appr		P6700 Framing - Cell 2V01, KF1	Scale 1:1		Document type: EFS	Project nr: 22-16152	Page	10
Modification	Date	Name	Original		Replacement of / Replaced by						1630

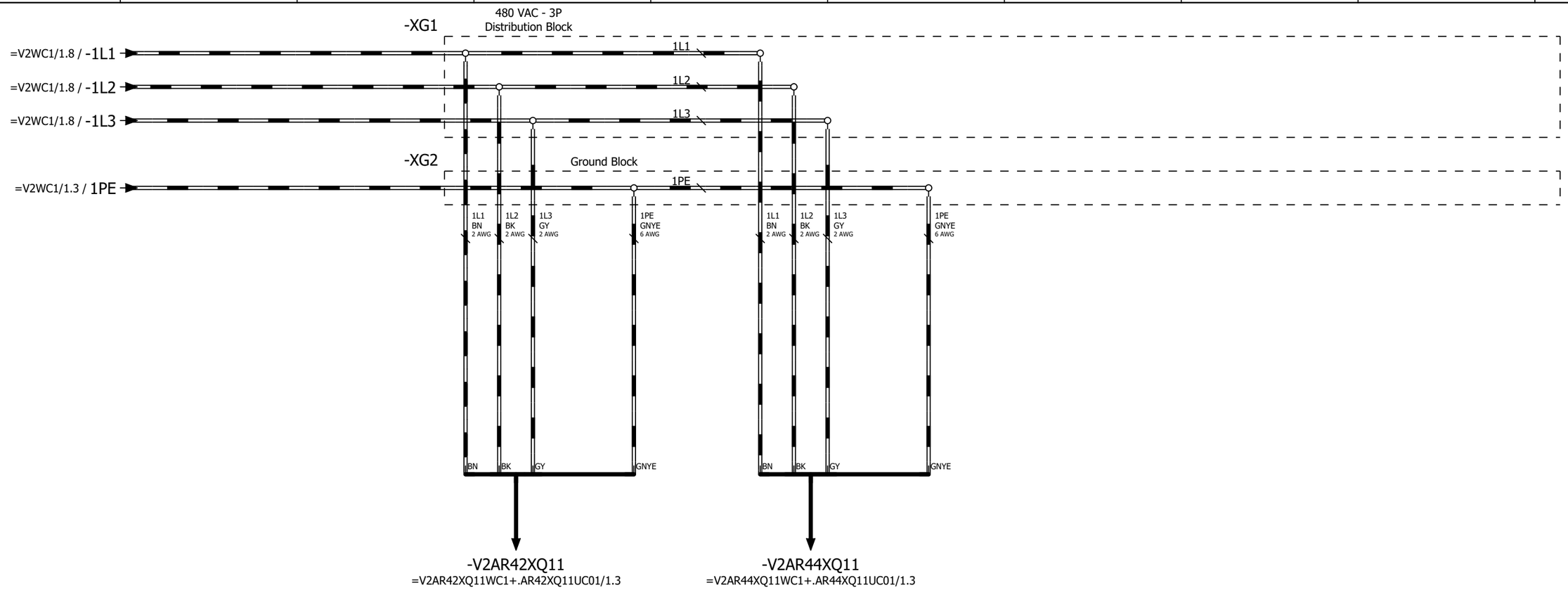

Weld Power Distribution 480 VAC V2AR42 (Weld Timer) (S040R02)

Weld Power Distribution 480 VAC V2AR44 (Weld Timer) (S040R04)

+.UC161/10

+.UC163/10

			Date	1/24/2023	Volvo Trucks North America	Valiant TMS	Weld power distribution 480 VAC	Drawing name: =2V01&EFS-EL_KF1	= V2WC2
			Ed.	MKLEPADLO					+ V2UC162
			Appr		P6700 Framing - Cell 2V01, KF1			Document type: EFS	Project nr: 22-16152
Modification	Date	Name	Original		Replacement of / Replaced by	Scale 1:1			Page 10 / 1630

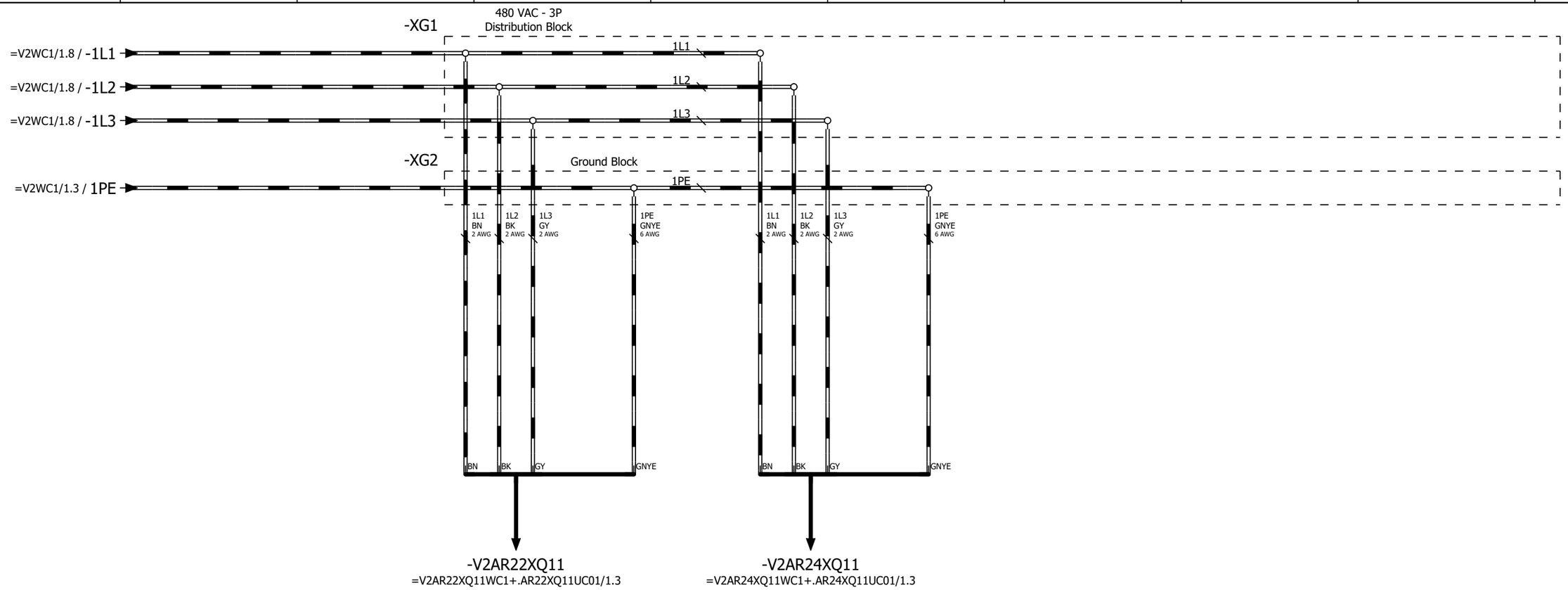

Weld Power Distribution 480 VAC V2AR22 (Weld Timer) (S050R02)

Weld Power Distribution 480 VAC V2AR24 (Weld Timer) (S050R04)

+.UC162/10

=V2WC3+.UC14/1

			Date	1/24/2023	Volvo Trucks North America		Valiant TMS	Weld power distribution 480 VAC	Drawing name: =2V01&EFS-EL_KF1	= V2WC2	
			Ed.	MKLEPADLO						+ V2UC163	
			Appr		P6700 Framing - Cell 2V01, KF1		Scale 1:1		Document type: EFS	Project nr: 22-16152	Page 10 / 1630
Modification	Date	Name	Original		Replacement of	Replaced by					

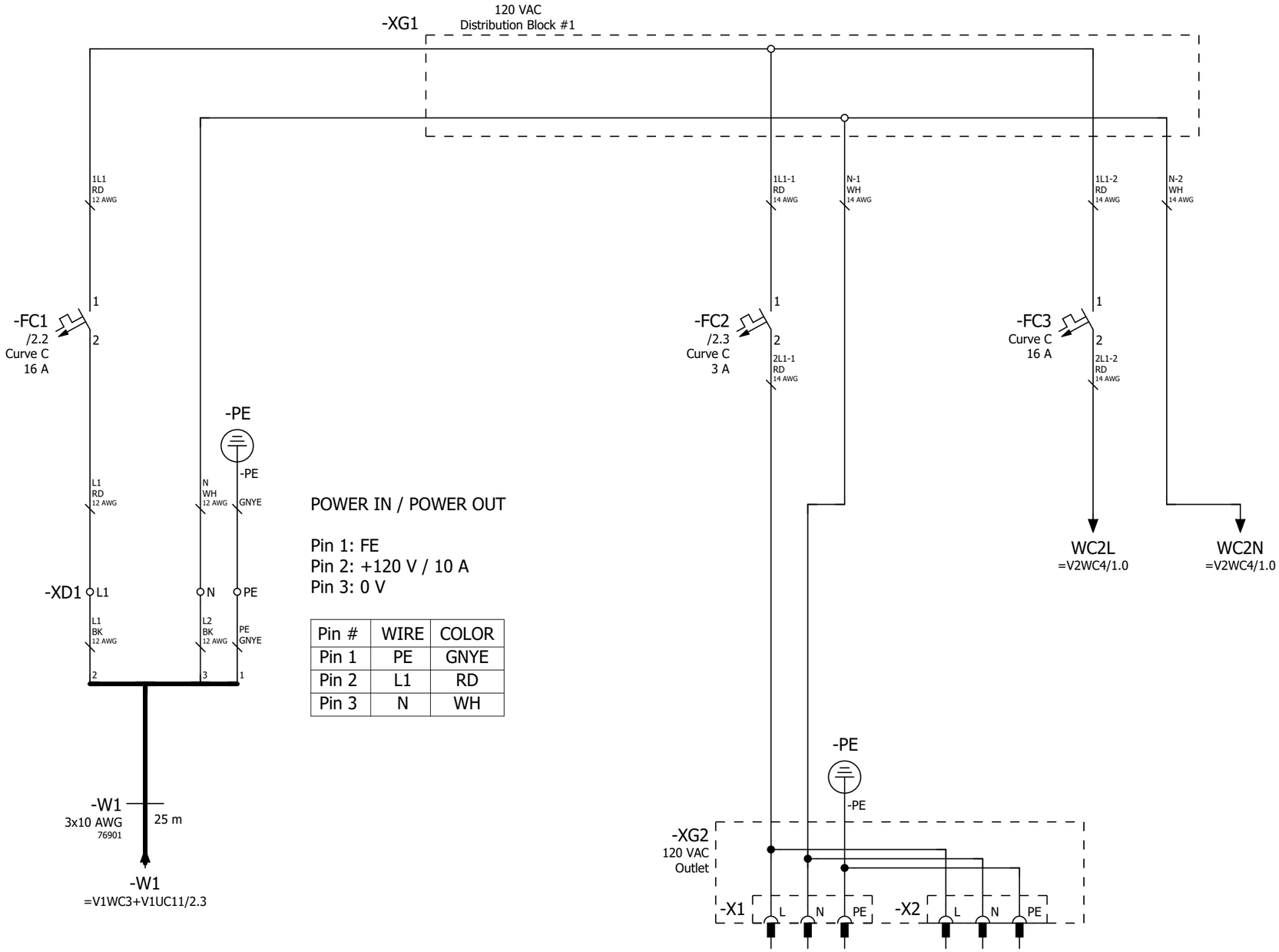

Pin #	WIRE	COLOR
Pin 1	PE	GNYE
Pin 2	L1	RD
Pin 3	N	WH

Power
Distribution
120 VAC
Programming Port

Power
Distribution
120 VAC
To 24VDC Power Supply

=V2WC2+.UC163/10

2

			Date	1/24/2023	Volvo Trucks North America		Valiant TMS	Power distribution 120 VAC	Drawing name: =2V01&EFS-EL_KF1	= V2WC3
			Ed.	MKLEPADLO						+ V2UC14
			Appr		P6700 Framing - Cell 2V01, KF1				Document type: EFS	Project nr: 22-16152
Modification	Date	Name	Original		Replacement of	Replaced by	Scale 1:1			Page 1 / 1630

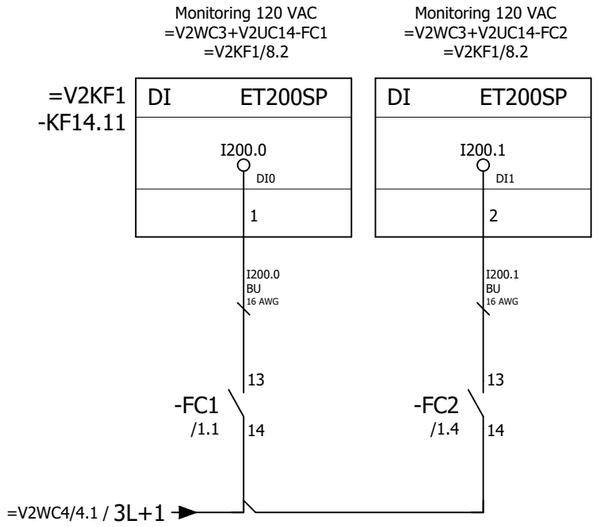

1

+.UC15/1

			Date	1/24/2023	Volvo Trucks North America	Valiant TMS	Monitoring 120VAC	Drawing name: =2V01&EFS-EL_KF1	= V2WC3	
			Ed.	MKLEPADLO					+ V2UC14	
			Appr		P6700 Framing - Cell 2V01, KF1			Document type: EFS	Project nr: 22-16152	Page 2
Modification	Date	Name	Original		Replacement of / Replaced by	Scale 1:1				1630

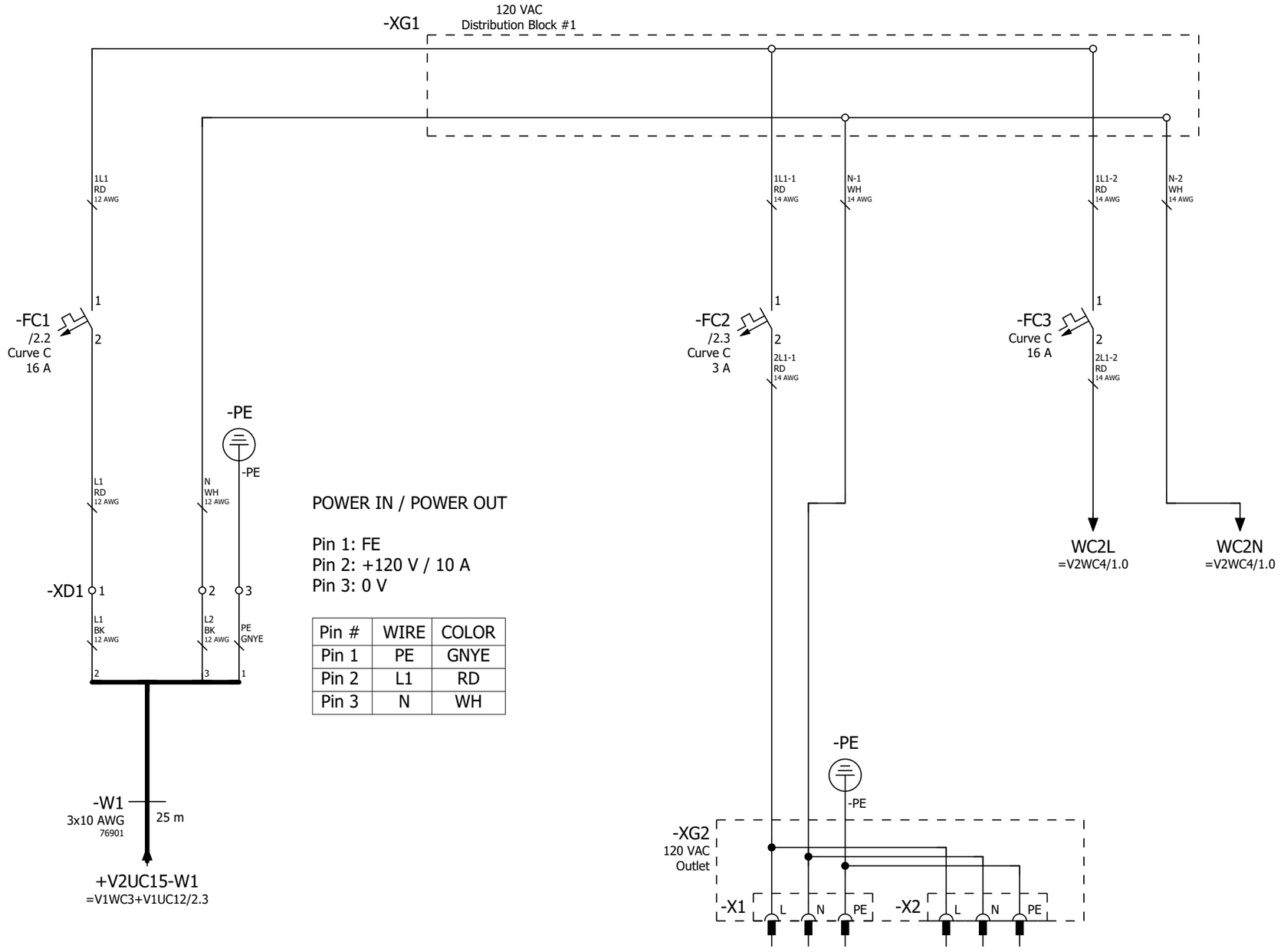

Pin #	WIRE	COLOR
Pin 1	PE	GNYE
Pin 2	L1	RD
Pin 3	N	WH

Power Distribution 120 VAC Programming Port

Power Distribution 120 VAC To 24VDC Power Supply

+.UC14/2

2

			Date	1/24/2023	Volvo Trucks North America		Valiant TMS	Power distribution 120 VAC	Drawing name: =2V01&EFS-EL_KF1	= V2WC3
			Ed.	MKLEPADLO						+ V2UC15
			Appr		P6700 Framing - Cell 2V01, KF1				Document type: EFS	Project nr: 22-16152
Modification	Date	Name	Original		Replacement of	Replaced by	Scale 1:1			Page 1 / 1630

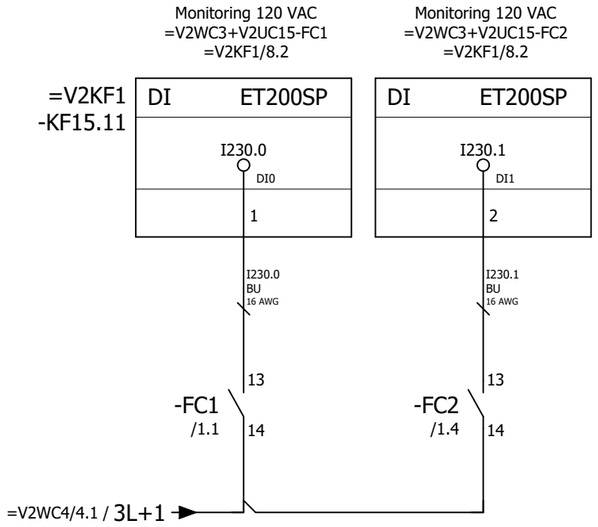

=V2WC4+.UC14/1

			Date	1/24/2023	Volvo Trucks North America	Valiant TMS	Monitoring 120VAC	Drawing name: =2V01&EFS-EL_KF1	= V2WC3		
			Ed.	MKLEPADLO					+ V2UC15		
			Appr		P6700 Framing - Cell 2V01, KF1			Document type: EFS	Project nr: 22-16152	Page	2
Modification	Date	Name	Original		Replacement of / Replaced by	Scale 1:1					1630

0	1	2	3	4	5	6	7	8	9

=V2WC3/1.6 / WC2L

=V2WC3/1.7 / WC2N

-PE

-TA1
IN: AC 120-230 V,
DC 110-240 V
OUT: DC 24 V/20 A

L1/+ N/L2/- PE

SIEMENS
SITOP PSU6200 1ph 24 V/20 A
6EP3336-7SB00-3AX0

ADJUST
24 ... 28V
DEFAULT VALUE
24V

0 1
COM
HV
PO

>20 V CLOSED

+1 +2 -1 -2 -3 13 14

Monitoring 24VDC
=V2WC4+V2UC14-TA1_I
=V2KF1/8.2

DI ET200SP
I200.2
DI2
3

=V2KF1
-KF14.11

TA1-1 BU 12 AWG
TA1-2 BU 12 AWG
M1 WH 12 AWG
-PE
3L+1 BUOG 16 AWG
I200.2 BUOG 16 AWG

4.2 / 3L+1

FC12 M1
11.0 2.1

FC12.1
11.1

-XD5 1

-FC11
In: DC 24V
Out: 8 x DC 24V/10A

SIEMENS
SITOP SEL1200 8 x 10A
6EP4438-7FB00-3DX0

0 1
COM
TD2
TD1

24V1 INPUT 24V2

E---I RESET

CONTROL LOGIC

13 14 NF RST 0V1 0V2

1 2 3 4 5 6 7 8

Monitoring 24VDC
=V2WC4+V2UC14-FC11_I
=V2KF1/8.2

DI ET200SP
I200.4
DI4
5

=V2KF1
-KF14.11

3L+1 BUOG 16 AWG
I200.4 BU 16 AWG
M1 WHBU 12 AWG

19.8 / M1 → M1 / 11.2

11.1 / FC11

OUTPUT

1L+ BUOG 16 AWG
2L+ BUOG 16 AWG
3L+ BUOG 16 AWG
4L+ BUOG 16 AWG
5L+ RD 16 AWG
6L+ RD 16 AWG
7L+ RD 16 AWG
8L+ RD 16 AWG

2.1 / -1L+
3.1 / -2L+
4.1 / -3L+
5.1 / -4L+
6.1 / -5L+
7.1 / -6L+
8.1 / -7L+
9.1 / -8L+

=V2WC3+.UC15/2

2

			Date	1/24/2023	Volvo Trucks North America	Valiant TMS	Power distribution 24VDC for Inputs	Drawing name: =2V01&EFS-EL_KF1	= V2WC4
			Ed.	MKLEPADLO					+ V2UC14
			Appr		P6700 Framing - Cell 2V01, KF1			Document type: EFS	Project nr: 22-16152	Page 1
Modification	Date	Name	Original		Replacement of	Replaced by	Scale 1:1			1630

0	1	2	3	4	5	6	7	8	9

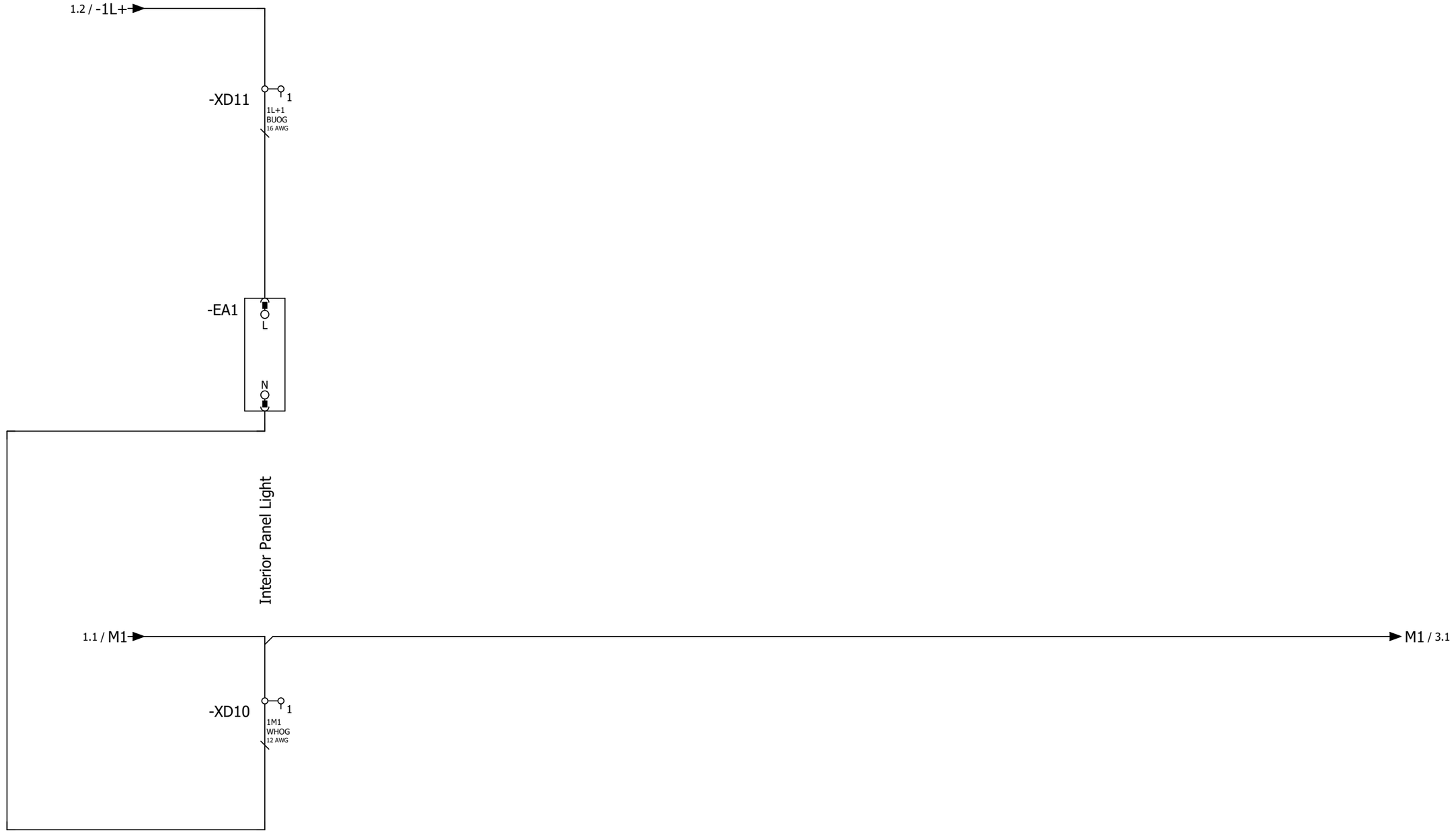

1 3

			Date	1/24/2023	Volvo Trucks North America		Valiant TMS	Power distribution 24VDC 1L+	Drawing name: =2V01&EFS-EL_KF1	= V2WC4	
			Ed.	MKLEPADLO						+ V2UC14	
			Appr		P6700 Framing - Cell 2V01, KF1		Scale 1:1		Document type: EFS	Project nr: 22-16152	Page 2
Modification	Date	Name	Original		Replacement of	Replaced by					1630

			Date	1/24/2023	Volvo Trucks North America	Valiant TMS	Power distribution 24VDC 2L+	Drawing name: =2V01&EFS-EL_KF1	= V2WC4	
			Ed.	MKLEPADLO					+ V2UC14	
			Appr		P6700 Framing - Cell 2V01, KF1			Document type: EFS	Project nr: 22-16152	Page 3
Modification	Date	Name	Original		Replacement of / Replaced by	Scale 1:1				1630

0	1	2	3	4	5	6	7	8	9

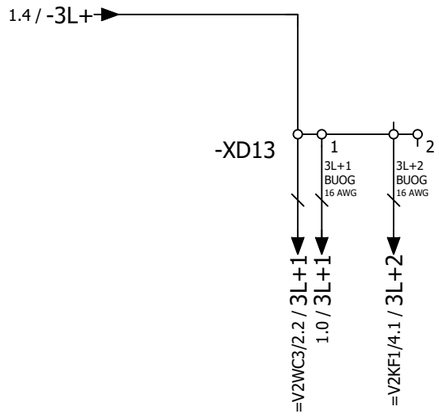

Power Monitoring

Power Input Cards (DI+FDI)

3

5

			Date	1/24/2023	Volvo Trucks North America		Valiant TMS	Power distribution 24VDC 3L+	Drawing name: =2V01&EFS-EL_KF1	= V2WC4	
			Ed.	MKLEPADLO						+ V2UC14	
			Appr		P6700 Framing - Cell 2V01, KF1		Scale 1:1		Document type: EFS	Project nr: 22-16152	Page 4 / 1630
Modification	Date	Name	Original		Replacement of	Replaced by					

0	1	2	3	4	5	6	7	8	9

1.5 / -4L+

-XD14 1

4L+1
BUOG
16 AWG

=V2KF1/6.1 / 4L+1

Power Output Cards (DQ+FDQ+FRQ)

4.8 / M1

M1 / 6.1

-XD10 5

4M1
WHOG
16 AWG

=V2KF1/6.1 / 4M1

4 6

			Date	1/24/2023	Volvo Trucks North America	Valiant TMS	Power distribution 24VDC 4L+	Drawing name: =2V01&EFS-EL_KF1	= V2WC4	
			Ed.	MKLEPADLO					+ V2UC14	
			Appr		P6700 Framing - Cell 2V01, KF1	Scale 1:1		Document type: EFS	Project nr: 22-16152	Page 5 / 1630
Modification	Date	Name	Original		Replacement of	Replaced by				

0	1	2	3	4	5	6	7	8	9

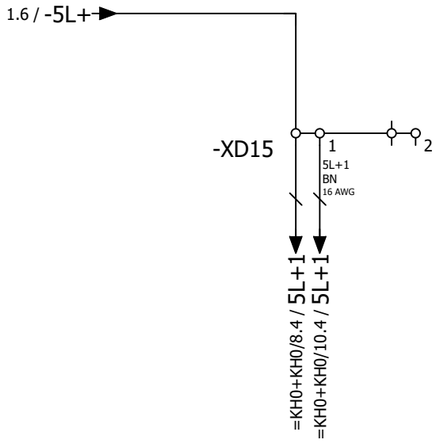

Power Air Monitoring GL16, GL18
At Unload Conveyors

0VDC Stack Light

5

7

			Date	1/24/2023	Volvo Trucks North America		Valiant TMS	Power distribution 24VDC 5L+	Drawing name: =2V01&EFS-EL_KF1	= V2WC4	
			Ed.	MKLEPADLO						+ V2UC14	
			Appr		P6700 Framing - Cell 2V01, KF1		Scale 1:1		Document type: EFS	Project nr: 22-16152	Page 6
Modification	Date	Name	Original		Replacement of	Replaced by					1630

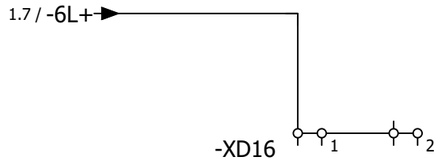

6 8

			Date	1/24/2023	Volvo Trucks North America		Valiant TMS	Power distribution 24VDC 6L+	Drawing name: =2V01&EFS-EL_KF1	= V2WC4	
			Ed.	MKLEPADLO						+ V2UC14	
			Appr		P6700 Framing - Cell 2V01, KF1		Scale 1:1		Document type: EFS	Project nr: 22-16152	Page 7 / 1630
Modification	Date	Name	Original		Replacement of	Replaced by					

0	1	2	3	4	5	6	7	8	9

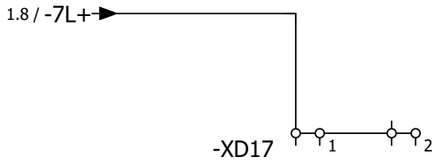

7

9

			Date	1/24/2023	Volvo Trucks North America		Valiant TMS	Power distribution 24VDC 7L+	Drawing name: =2V01&EFS-EL_KF1	= V2WC4	
			Ed.	MKLEPADLO						+ V2UC14	
			Appr		P6700 Framing - Cell 2V01, KF1				Document type: EFS	Project nr: 22-16152	Page 8
Modification	Date	Name	Original		Replacement of	Replaced by	Scale 1:1				1630

0	1	2	3	4	5	6	7	8	9

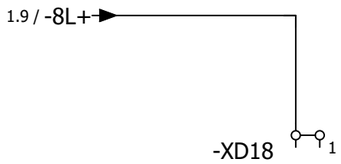

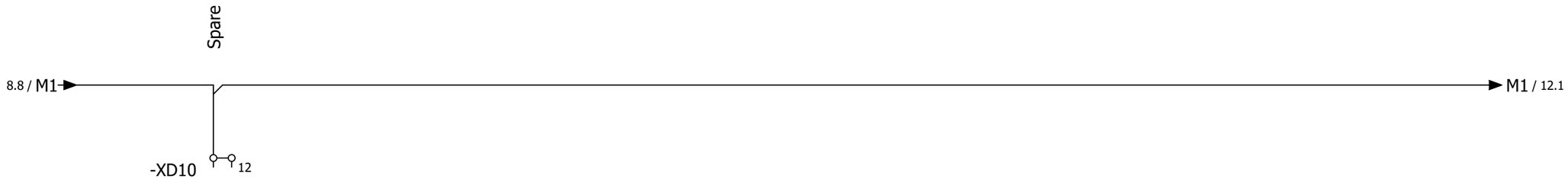

8

11

			Date	1/24/2023	Volvo Trucks North America	Valiant TMS	Power distribution 24VDC 8L+	Drawing name: =2V01&EFS-EL_KF1	= V2WC4		
			Ed.	MKLEPADLO					+ V2UC14		
			Appr		P6700 Framing - Cell 2V01, KF1	Scale 1:1		Document type: EFS	Project nr: 22-16152	Page	9
Modification	Date	Name	Original		Replacement of	Replaced by					1630

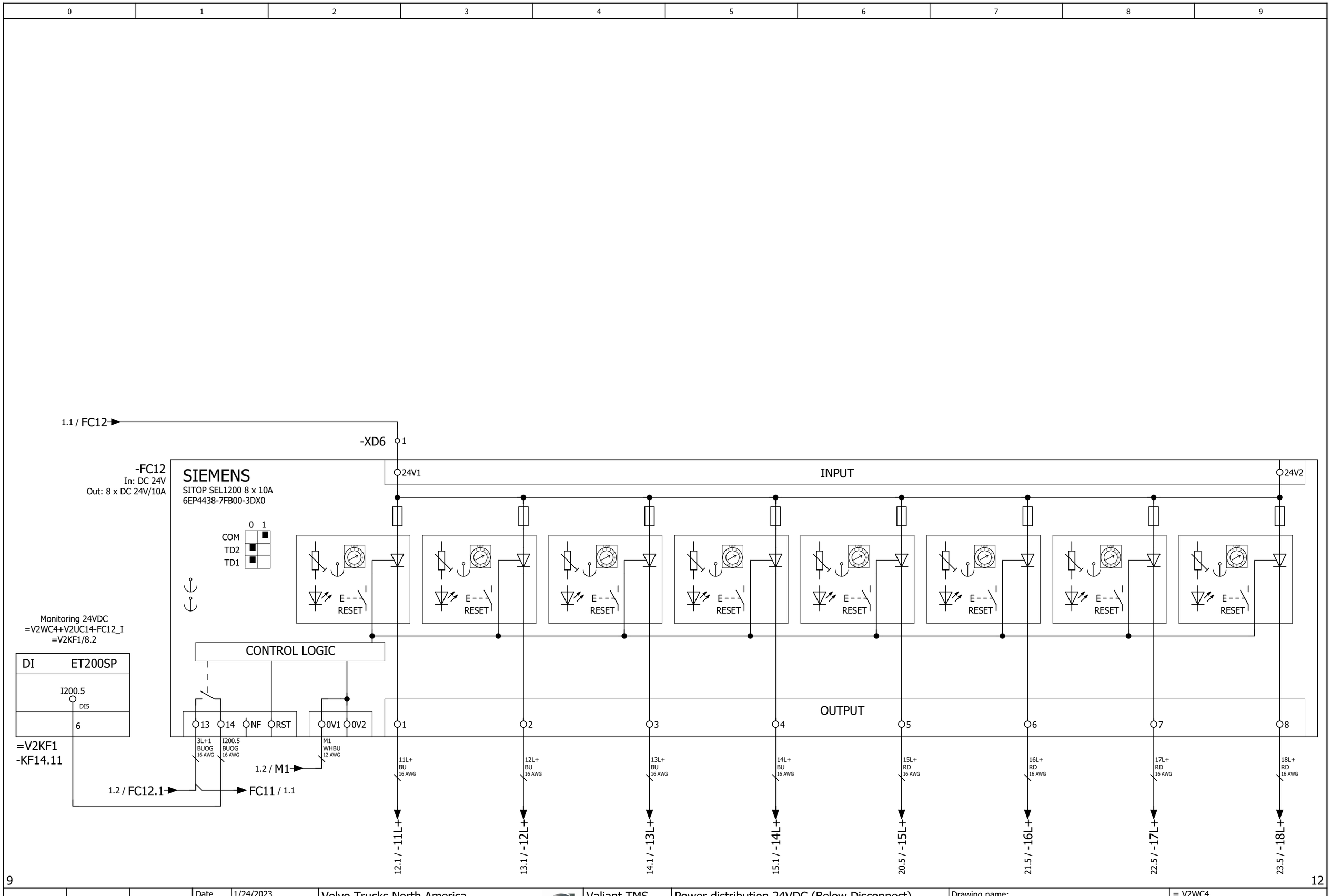

			Date	1/24/2023	Volvo Trucks North America	Valiant TMS	Power distribution 24VDC (Below Disconnect)	Drawing name: =2V01&EFS-EL_KF1	= V2WC4 + V2UC14	
			Ed.	MKLEPADLO	P6700 Framing - Cell 2V01, KF1					
			Appr					Document type: EFS	Project nr: 22-16152	Page 11
Modification	Date	Name	Original		Replacement of / Replaced by	Scale 1:1				1630

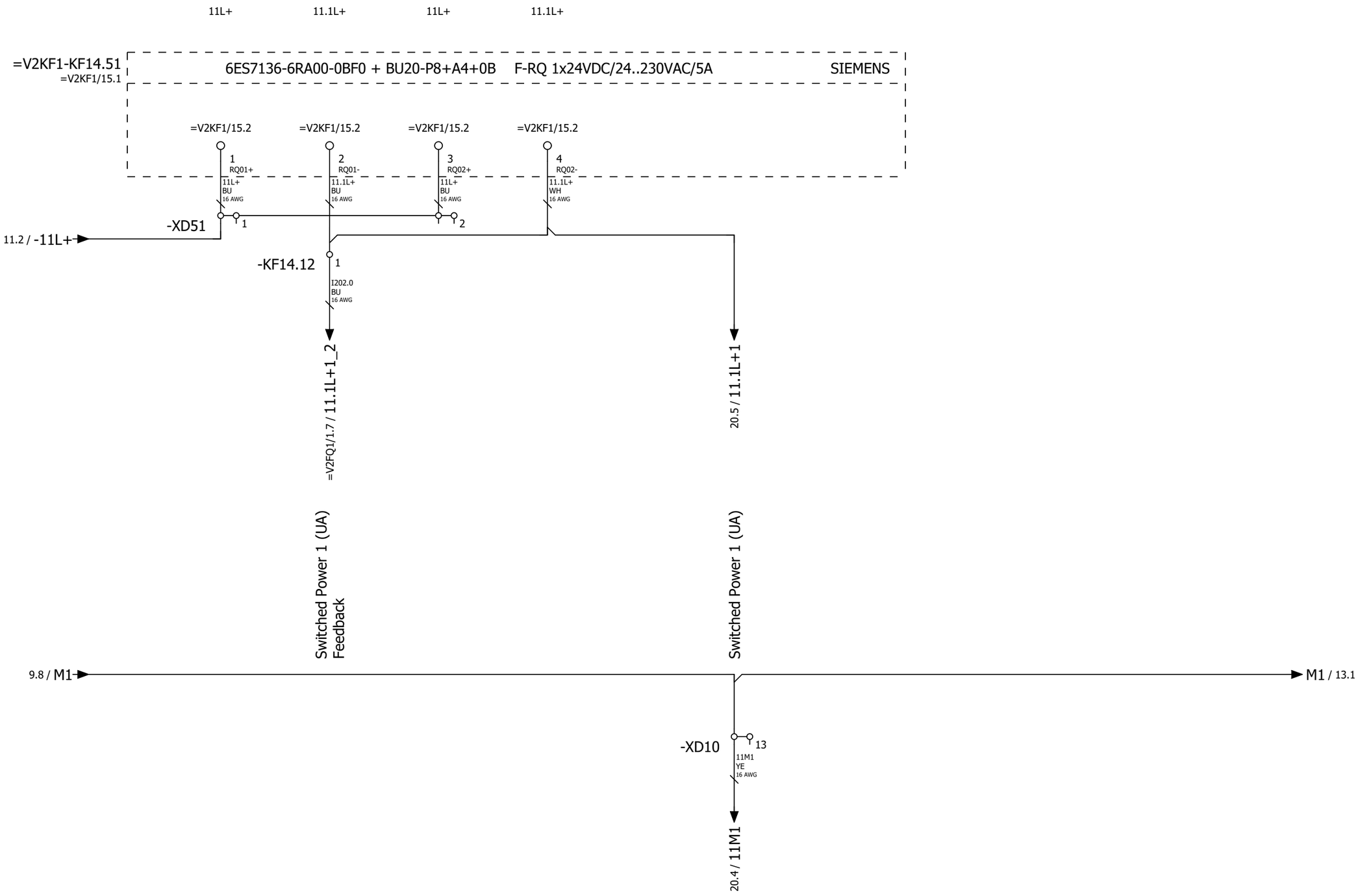

			Date	1/24/2023	Volvo Trucks North America		Valiant TMS	Power distribution 24VDC 11L+	Drawing name: =2V01&EFS-EL_KF1	= V2WC4
			Ed.	MKLEPADLO						+ V2UC14
			Appr		P6700 Framing - Cell 2V01, KF1		Scale 1:1		Document type: EFS	Project nr: 22-16152
Modification	Date	Name	Original		Replacement of	Replaced by				Page 12 / 1630

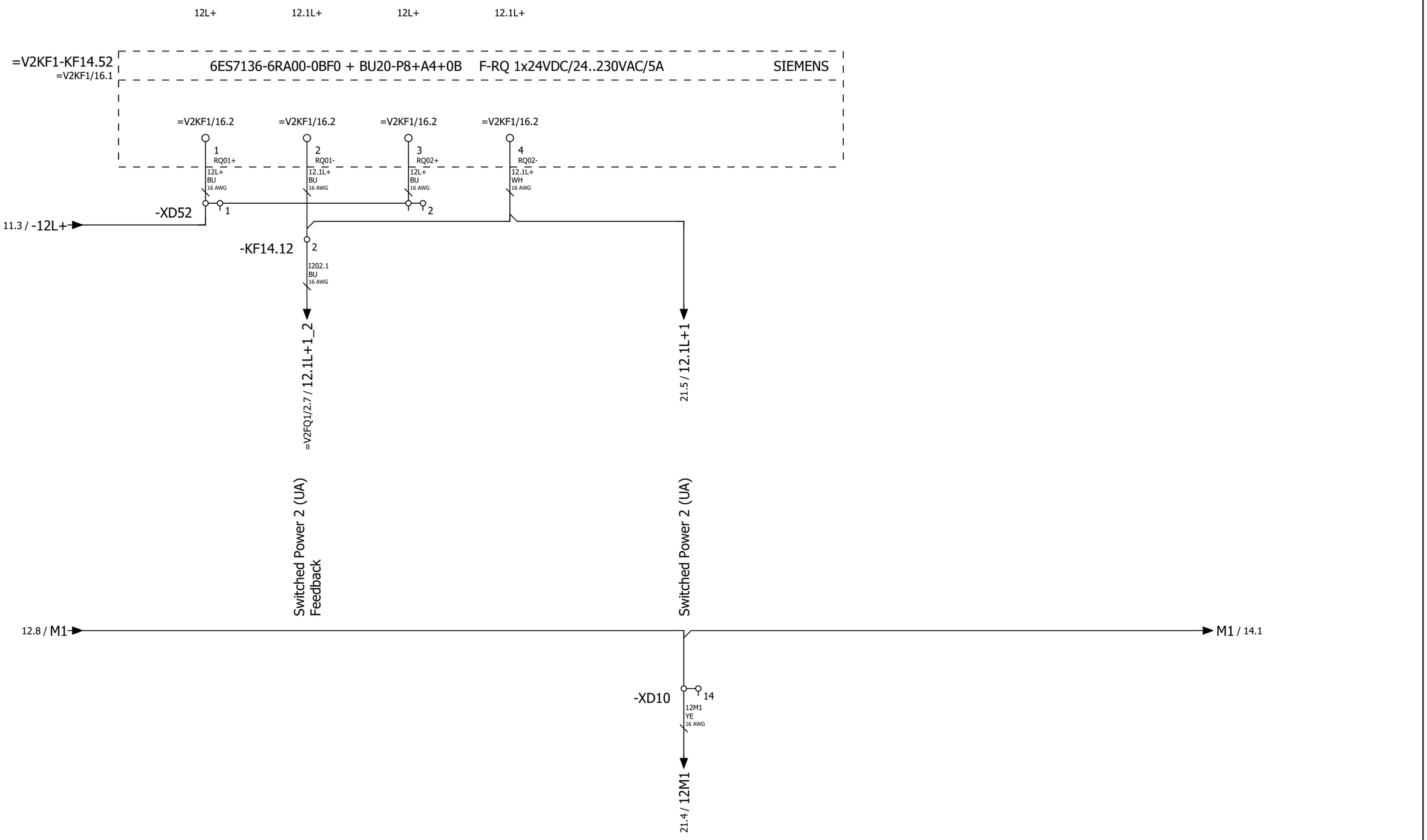

12

14

			Date	1/24/2023	Volvo Trucks North America		Valiant TMS	Power distribution 24VDC 12L+	Drawing name: =2V01&EFS-EL_KF1	= V2WC4	
			Ed.	MKLEPADLO						+ V2UC14	
			Appr		P6700 Framing - Cell 2V01, KF1		Scale 1:1		Document type: EFS	Project nr: 22-16152	Page 13 / 1630
Modification	Date	Name	Original		Replacement of	Replaced by					

0	1	2	3	4	5	6	7	8	9

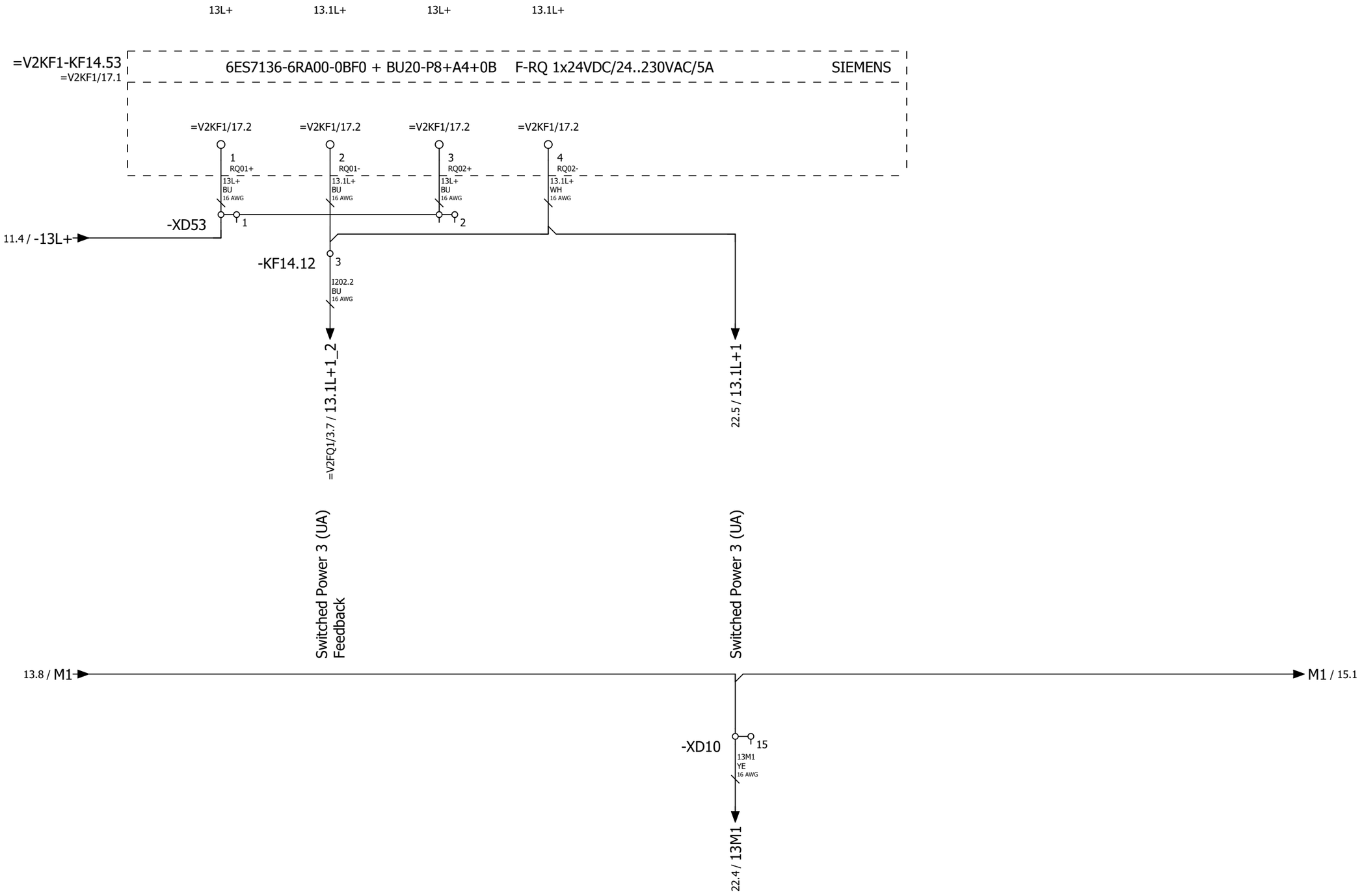

13

15

			Date	1/24/2023	Volvo Trucks North America	Valiant TMS	Power distribution 24VDC 13L+	Drawing name: =2V01&EFS-EL_KF1		= V2WC4	
			Ed.	MKLEPADLO						+ V2UC14	
			Appr		P6700 Framing - Cell 2V01, KF1	Scale 1:1		Document type: EFS	Project nr: 22-16152	Page	14
Modification	Date	Name	Original		Replacement of	Replaced by					1630

0	1	2	3	4	5	6	7	8	9

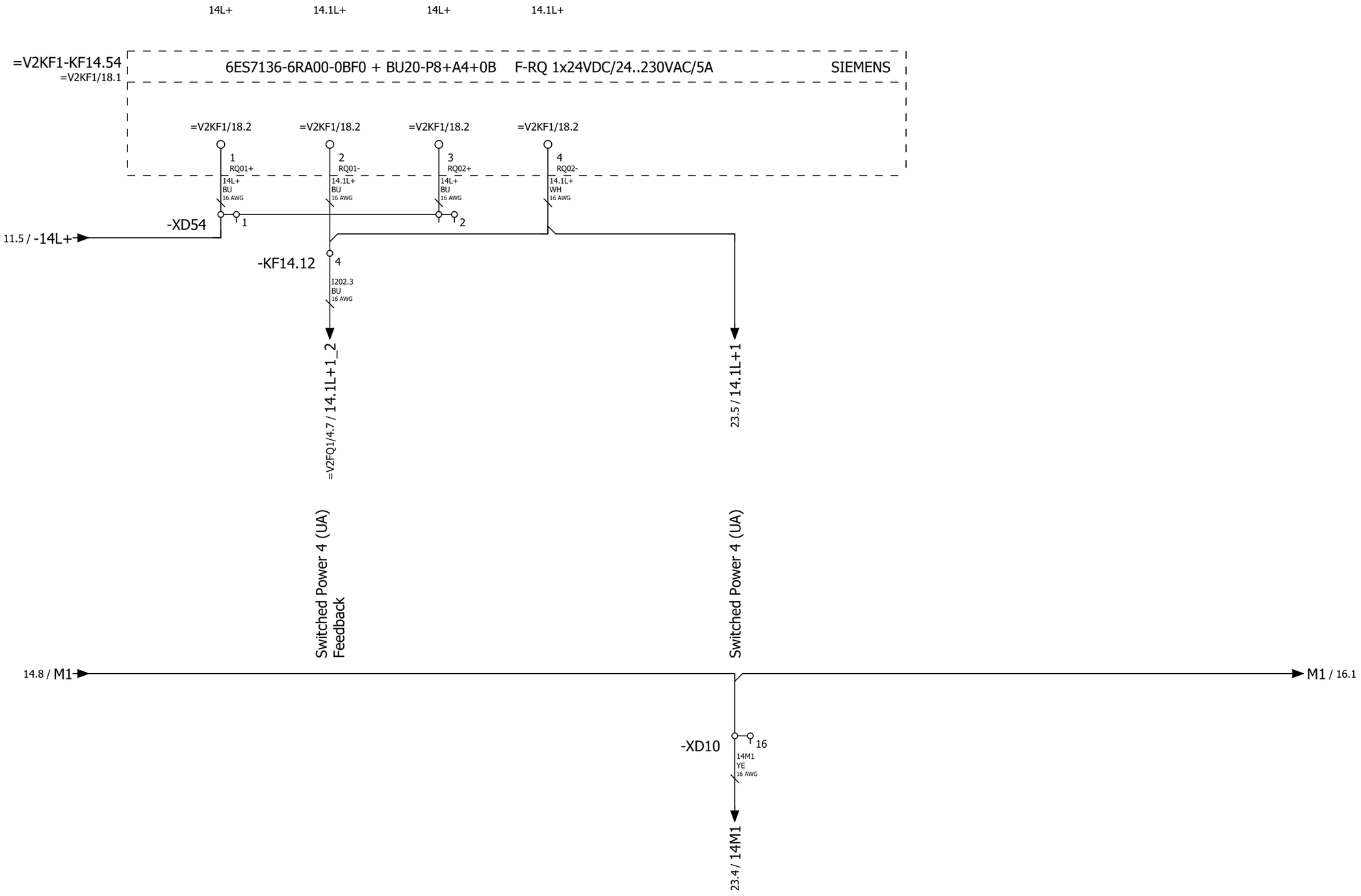

14

16

			Date	1/24/2023	Volvo Trucks North America	Valiant TMS	Power distribution 24VDC 14L+	Drawing name: =2V01&EFS-EL_KF1	= V2WC4		
			Ed.	MKLEPADLO					+ V2UC14		
			Appr		P6700 Framing - Cell 2V01, KF1	Scale 1:1		Document type: EFS	Project nr: 22-16152	Page	15
Modification	Date	Name	Original		Replacement of	Replaced by					1630

15

17

			Date	1/24/2023	Volvo Trucks North America	Valiant TMS	Power distribution 24VDC 15L+	Drawing name: =2V01&EFS-EL_KF1	= V2WC4		
			Ed.	MKLEPADLO					+ V2UC14		
			Appr		P6700 Framing - Cell 2V01, KF1	Scale 1:1		Document type: EFS	Project nr: 22-16152	Page	16
Modification	Date	Name	Original		Replacement of	Replaced by					1630

Switched Power 2 (US)

16.8 / M1

M1 / 18.1

-XD10

18

16M1
WHYE
16 AWG

21.4 / 16M1

16

18

			Date	1/24/2023	Volvo Trucks North America	Valiant TMS	Power distribution 24VDC 16L+	Drawing name: =2V01&EFS-EL_KF1	= V2WC4	
			Ed.	MKLEPADLO					+ V2UC14	
			Appr		P6700 Framing - Cell 2V01, KF1			Document type: EFS	Project nr: 22-16152	Page 17
Modification	Date	Name	Original		Replacement of / Replaced by	Scale 1:1				1630

17

19

			Date	1/24/2023	Volvo Trucks North America		Valiant TMS	Power distribution 24VDC 17L+	Drawing name: =2V01&EFS-EL_KF1	= V2WC4
			Ed.	MKLEPADLO						+ V2UC14
			Appr		P6700 Framing - Cell 2V01, KF1				Document type: EFS	Project nr: 22-16152
Modification	Date	Name	Original		Replacement of	Replaced by	Scale 1:1			Page 18 / 1630

0	1	2	3	4	5	6	7	8	9

18

20

			Date	1/24/2023	Volvo Trucks North America		Valiant TMS	Power distribution 24VDC 18L+	Drawing name: =2V01&EFS-EL_KF1		= V2WC4	
			Ed.	MKLEPADLO							+ V2UC14	
			Appr		P6700 Framing - Cell 2V01, KF1		Scale 1:1		Document type: EFS	Project nr: 22-16152	Page	19
Modification	Date	Name	Original		Replacement of	Replaced by						1630

+.UC14

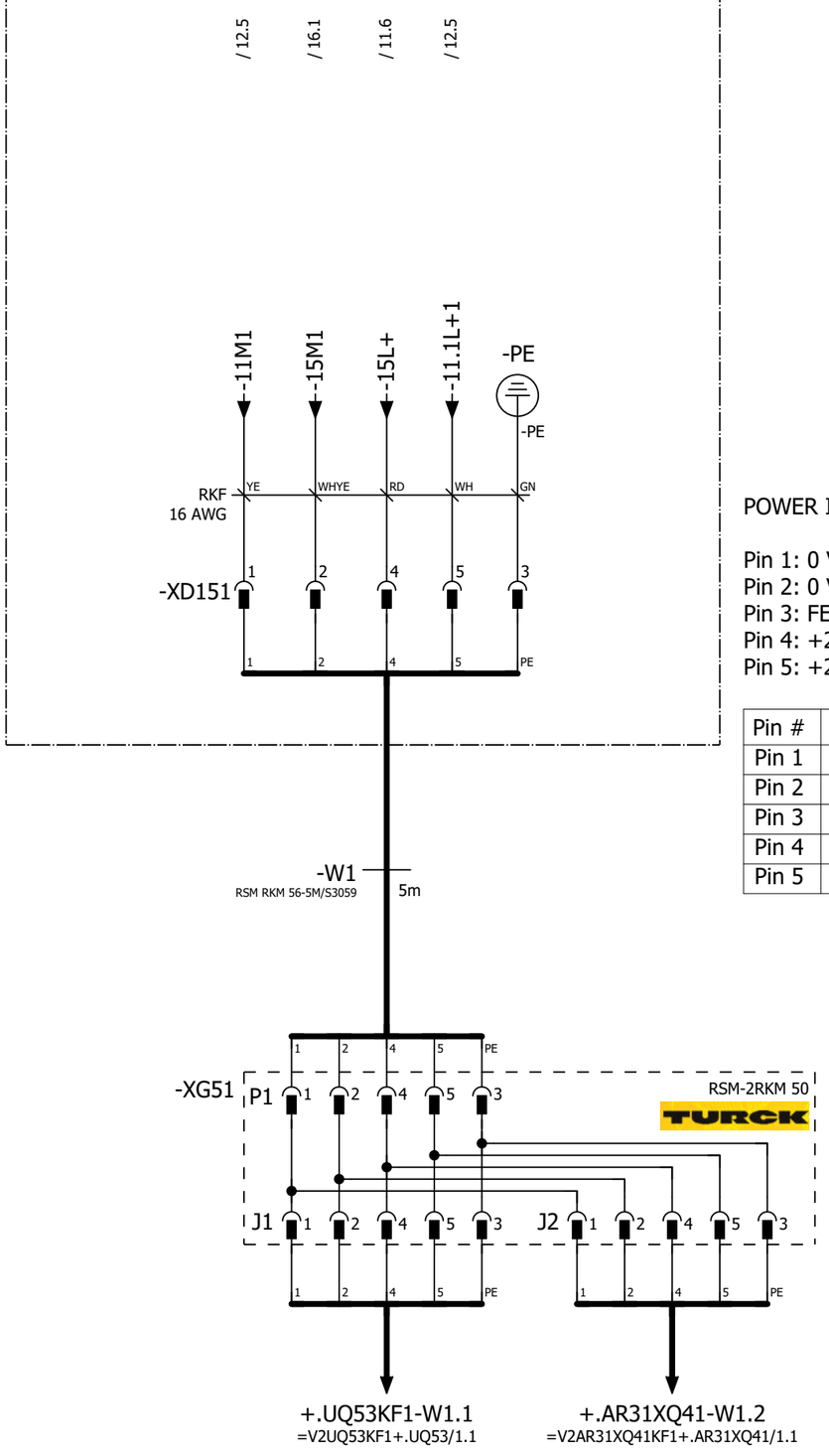

POWER IN / POWER OUT

Pin 1: 0 V UA
Pin 2: 0 V US
Pin 3: FE
Pin 4: +24 V US / 9 A
Pin 5: +24 V UA / 9 A

Pin #	WIRE	COLOR
Pin 1	-11M1	YE
Pin 2	-15M1	WHYE
Pin 3	GND	GN
Pin 4	-15L+	RD
Pin 5	-11.1L+1	WH

			Date	1/24/2023	Volvo Trucks North America	Valiant TMS	24VDC Switched Power 1	Drawing name: =2V01&EFS-EL_KF1	= V2WC4
			Ed.	MKLEPADLO					+ V2UC14
			Appr		P6700 Framing - Cell 2V01, KF1	Scale 1:1		Document type: EFS	Project nr: 22-16152
Modification	Date	Name	Original		Replacement of	Replaced by			Page 20 / 1630

0	1	2	3	4	5	6	7	8	9

+.UC14

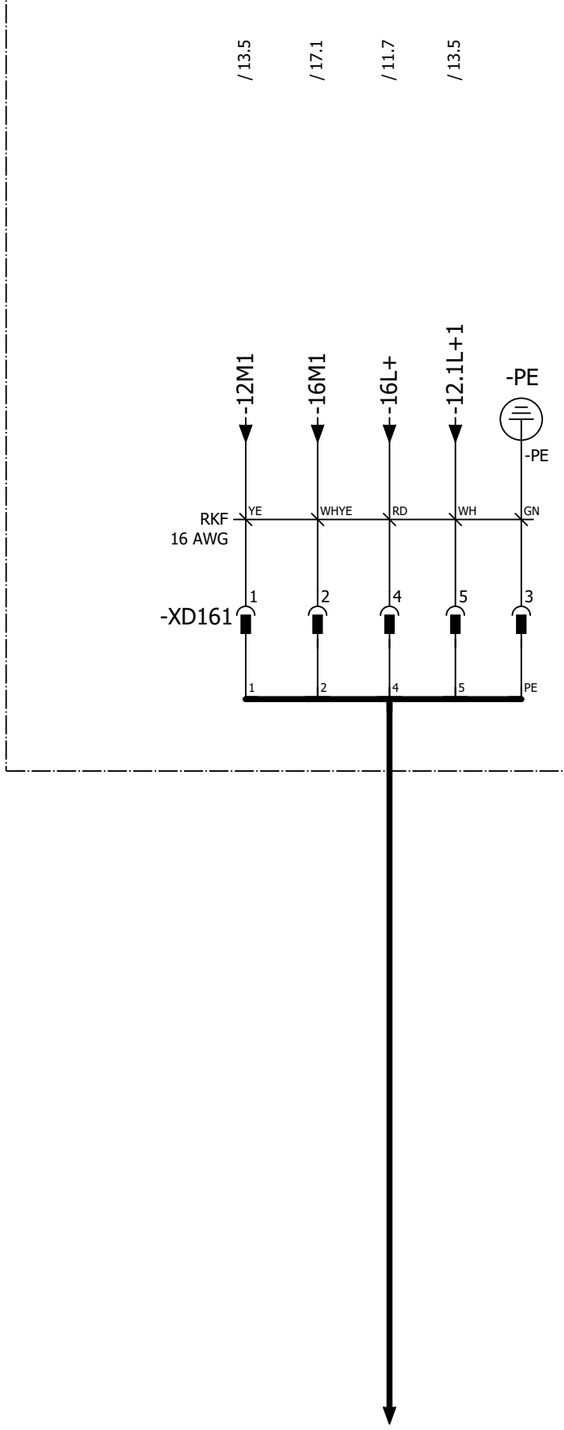

POWER IN / POWER OUT

Pin 1: 0 V UA
Pin 2: 0 V US
Pin 3: FE
Pin 4: +24 V US / 9 A
Pin 5: +24 V UA / 9 A

Pin #	WIRE	COLOR
Pin 1	-12M1	YE
Pin 2	-16M1	WHYE
Pin 3	GND	GN
Pin 4	-16L+	RD
Pin 5	-12.1L+1	WH

			Date	1/24/2023	Volvo Trucks North America	Valiant TMS	24VDC Switched Power 2	Drawing name: =2V01&EFS-EL_KF1	= V2WC4
			Ed.	MKLEPADLO					+ V2UC14
			Appr		P6700 Framing - Cell 2V01, KF1			Document type: EFS	Project nr: 22-16152
Modification	Date	Name	Original		Replacement of / Replaced by	Scale 1:1			Page 21 / 1630

+.UC14

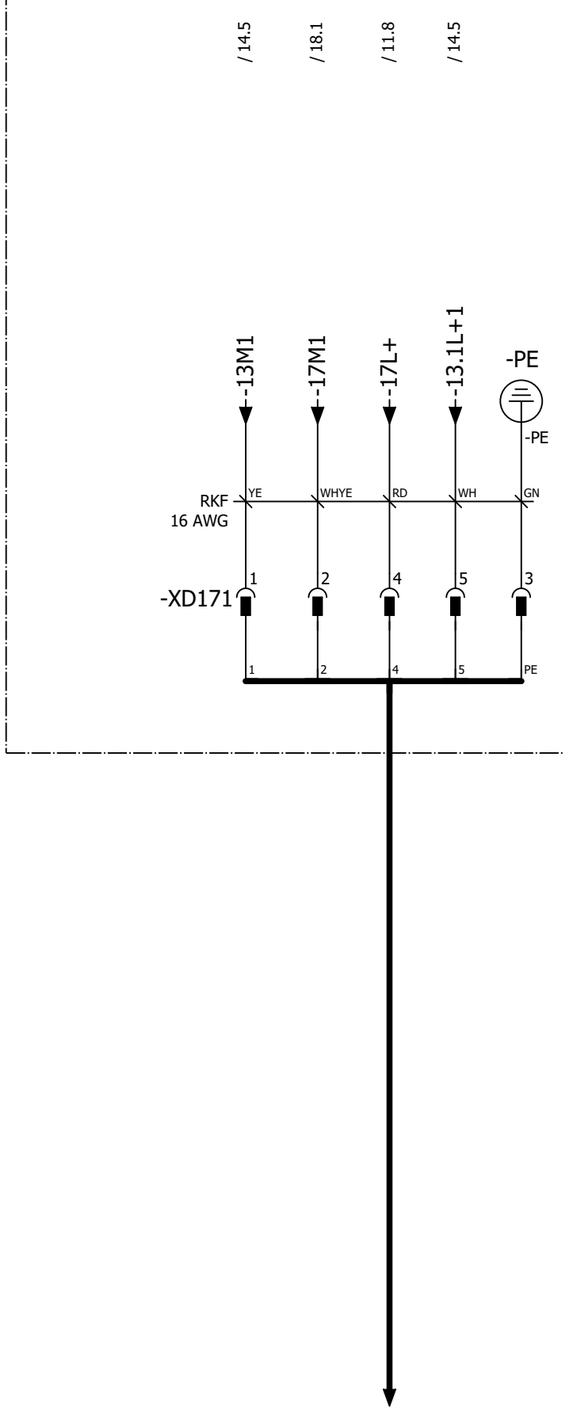

POWER IN / POWER OUT

Pin 1: 0 V UA
Pin 2: 0 V US
Pin 3: FE
Pin 4: +24 V US / 9 A
Pin 5: +24 V UA / 9 A

Pin #	WIRE	COLOR
Pin 1	-13M1	YE
Pin 2	-17M1	WHYE
Pin 3	GND	GN
Pin 4	-17L+	RD
Pin 5	-13.1L+1	WH

			Date	1/24/2023	Volvo Trucks North America	Valiant TMS	24VDC Switched Power 3	Drawing name: =2V01&EFS-EL_KF1	= V2WC4
			Ed.	MKLEPADLO					+ V2UC14
			Appr		P6700 Framing - Cell 2V01, KF1			Document type: EFS	Project nr: 22-16152
Modification	Date	Name	Original		Replacement of / Replaced by	Scale 1:1			Page 22 / 1630

+.UC14

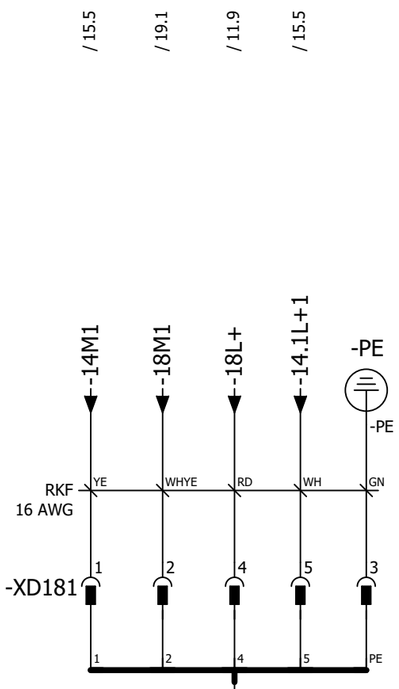

POWER IN / POWER OUT

Pin 1: 0 V UA
Pin 2: 0 V US
Pin 3: FE
Pin 4: +24 V US / 9 A
Pin 5: +24 V UA / 9 A

Pin #	WIRE	COLOR
Pin 1	-14M1	YE
Pin 2	-18M1	WHYE
Pin 3	GND	GN
Pin 4	-18L+	RD
Pin 5	-14.1L+1	WH

+.FQ1-BG5
=V2FQ1+.FQ1/3.3

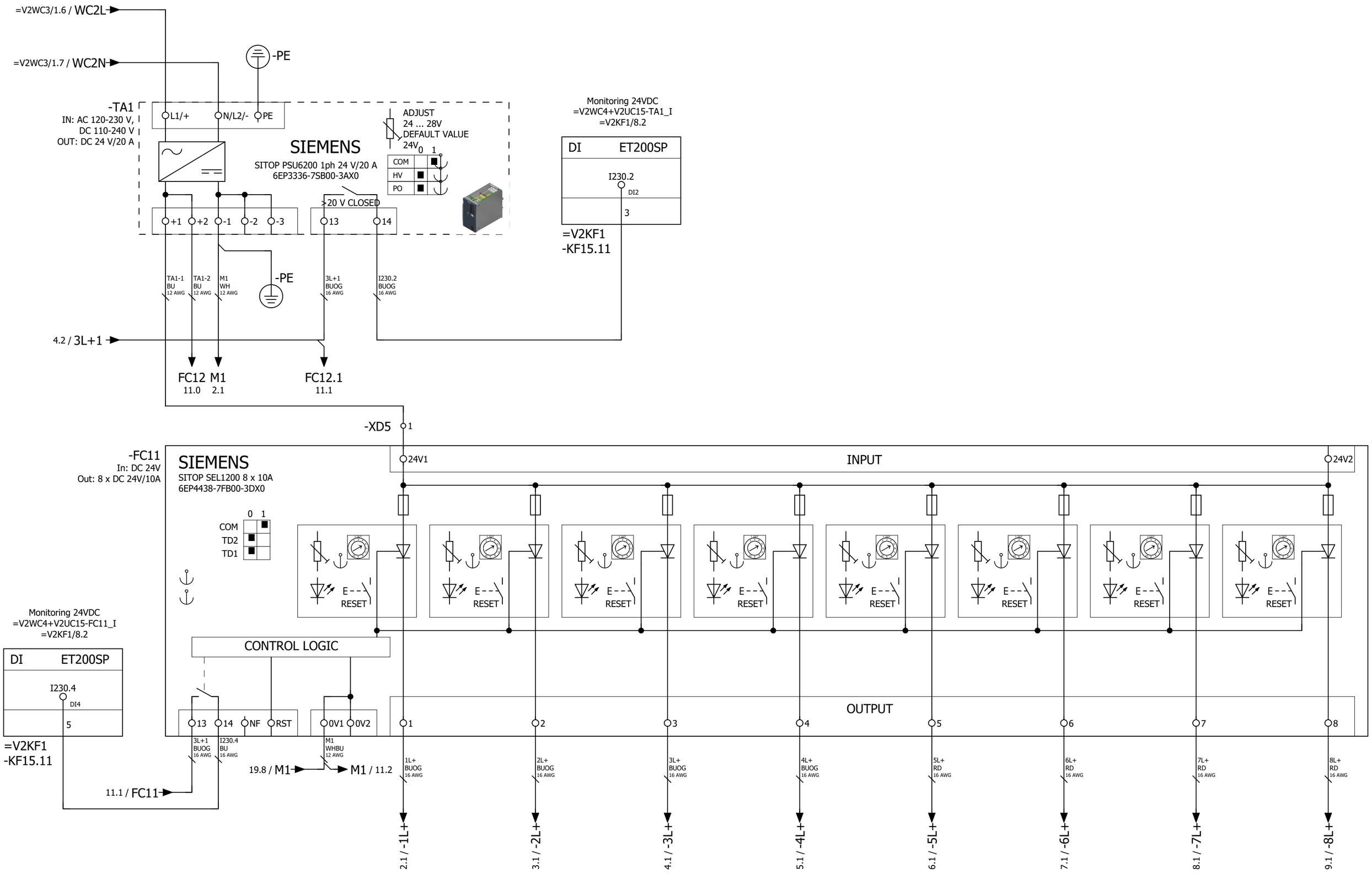

			Date	1/24/2023	Volvo Trucks North America	Valiant TMS	Power distribution 24VDC for Inputs	Drawing name: =2V01&EFS-EL_KF1	= V2WC4 + V2UC15
			Ed.	MKLEPADLO	P6700 Framing - Cell 2V01, KF1				
			Appr					Document type: EFS	Project nr: 22-16152
Modification	Date	Name	Original		Replacement of / Replaced by	Scale 1:1			Page 1 / 1630

1 3

			Date	1/24/2023	Volvo Trucks North America	Valiant TMS	Power distribution 24VDC 1L+	Drawing name: =2V01&EFS-EL_KF1	= V2WC4	
			Ed.	MKLEPADLO					+ V2UC15	
			Appr		P6700 Framing - Cell 2V01, KF1			Document type: EFS	Project nr: 22-16152	Page 2
Modification	Date	Name	Original		Replacement of	Replaced by	Scale 1:1			1630

			Date	1/24/2023	Volvo Trucks North America		Valiant TMS	Power distribution 24VDC 2L+	Drawing name: =2V01&EFS-EL_KF1	= V2WC4	
			Ed.	MKLEPADLO						+ V2UC15	
			Appr		P6700 Framing - Cell 2V01, KF1		Scale 1:1		Document type: EFS	Project nr: 22-16152	Page 3
Modification	Date	Name	Original		Replacement of	Replaced by					1630

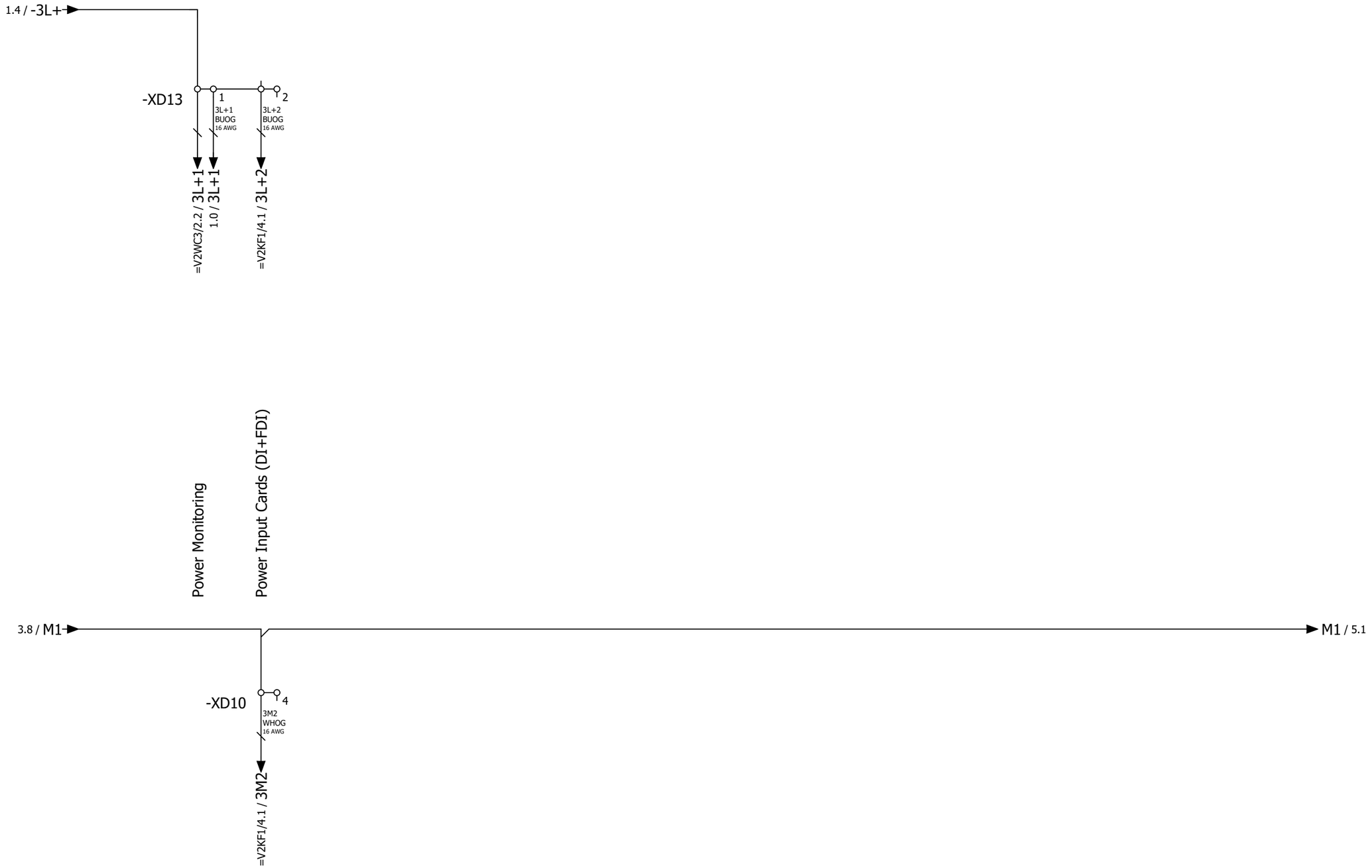

			Date	1/24/2023	Volvo Trucks North America		Valiant TMS	Power distribution 24VDC 3L+	Drawing name: =2V01&EFS-EL_KF1	= V2WC4	
			Ed.	MKLEPADLO						+ V2UC15	
			Appr		P6700 Framing - Cell 2V01, KF1		Scale 1:1		Document type: EFS	Project nr: 22-16152	Page 4 / 1630
Modification	Date	Name	Original		Replacement of	Replaced by					

0	1	2	3	4	5	6	7	8	9

1.5 / -4L+

-XD14 1

4L+1
BUOG
16 AWG

=V2KF1/6.1 / 4L+1

Power Output Cards (DQ+FDQ+FRQ)

4.8 / M1

M1 / 6.1

-XD10 5

4M1
WHOG
16 AWG

=V2KF1/6.1 / 4M1

4 6

			Date	1/24/2023	Volvo Trucks North America	Valiant TMS	Power distribution 24VDC 4L+	Drawing name: =2V01&EFS-EL_KF1	= V2WC4	
			Ed.	MKLEPADLO					+ V2UC15	
			Appr		P6700 Framing - Cell 2V01, KF1	Scale 1:1		Document type: EFS	Project nr: 22-16152	Page 5 / 1630
Modification	Date	Name	Original		Replacement of	Replaced by				

0	1	2	3	4	5	6	7	8	9

1.6 / -5L+

-XD15

1

5L+1
BN
18 AWG

2

5L+2
BN
18 AWG

=KH0+KH0/7.4 / 5L+1

=KH0+KH0/9.4 / 5L+1

=V2FQ1+.FQ1/10.1 / 5L+2

Power Air Monitoring GL15, GL17
At Unload Conveyors

Power Light Screens S030/035

5.8 / M1

M1 / 7.1

-XD10

6

5M1
BU
18 AWG

7

5M2
BU
18 AWG

=KH0+KH0/7.4 / 5M1

=KH0+KH0/9.4 / 5M1

=V2FQ1+.FQ1/10.1 / 5M2

5

7

			Date	1/24/2023	Volvo Trucks North America	Valiant TMS	Power distribution 24VDC 5L+	Drawing name: =2V01&EFS-EL_KF1	= V2WC4
			Ed.	MKLEPADLO					+ V2UC15
			Appr		P6700 Framing - Cell 2V01, KF1			Document type: EFS	Project nr: 22-16152
Modification	Date	Name	Original		Replacement of / Replaced by	Scale 1:1			Page 6 / 1630

0	1	2	3	4	5	6	7	8	9

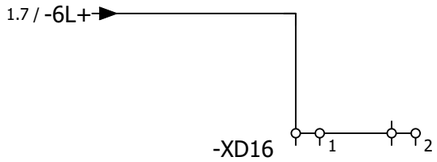

6

8

			Date	1/24/2023	Volvo Trucks North America		Valiant TMS	Power distribution 24VDC 6L+	Drawing name: =2V01&EFS-EL_KF1	= V2WC4	
			Ed.	MKLEPADLO						+ V2UC15	
			Appr		P6700 Framing - Cell 2V01, KF1		Scale 1:1		Document type: EFS	Project nr: 22-16152	Page 7 / 1630
Modification	Date	Name	Original		Replacement of	Replaced by					

0	1	2	3	4	5	6	7	8	9

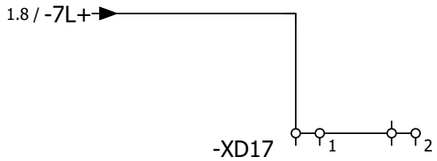

7

9

			Date	1/24/2023	Volvo Trucks North America		Valiant TMS	Power distribution 24VDC 7L+	Drawing name: =2V01&EFS-EL_KF1	= V2WC4	
			Ed.	MKLEPADLO						+ V2UC15	
			Appr		P6700 Framing - Cell 2V01, KF1		Scale 1:1		Document type: EFS	Project nr: 22-16152	Page 8 / 1630
Modification	Date	Name	Original		Replacement of	Replaced by					

0	1	2	3	4	5	6	7	8	9

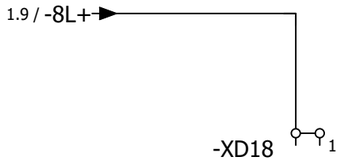

8

11

			Date	1/24/2023	Volvo Trucks North America		Valiant TMS	Power distribution 24VDC 8L+	Drawing name: =2V01&EFS-EL_KF1	= V2WC4	
			Ed.	MKLEPADLO						+ V2UC15	
			Appr		P6700 Framing - Cell 2V01, KF1		Scale 1:1		Document type: EFS	Project nr: 22-16152	Page 9
Modification	Date	Name	Original		Replacement of	Replaced by					1630

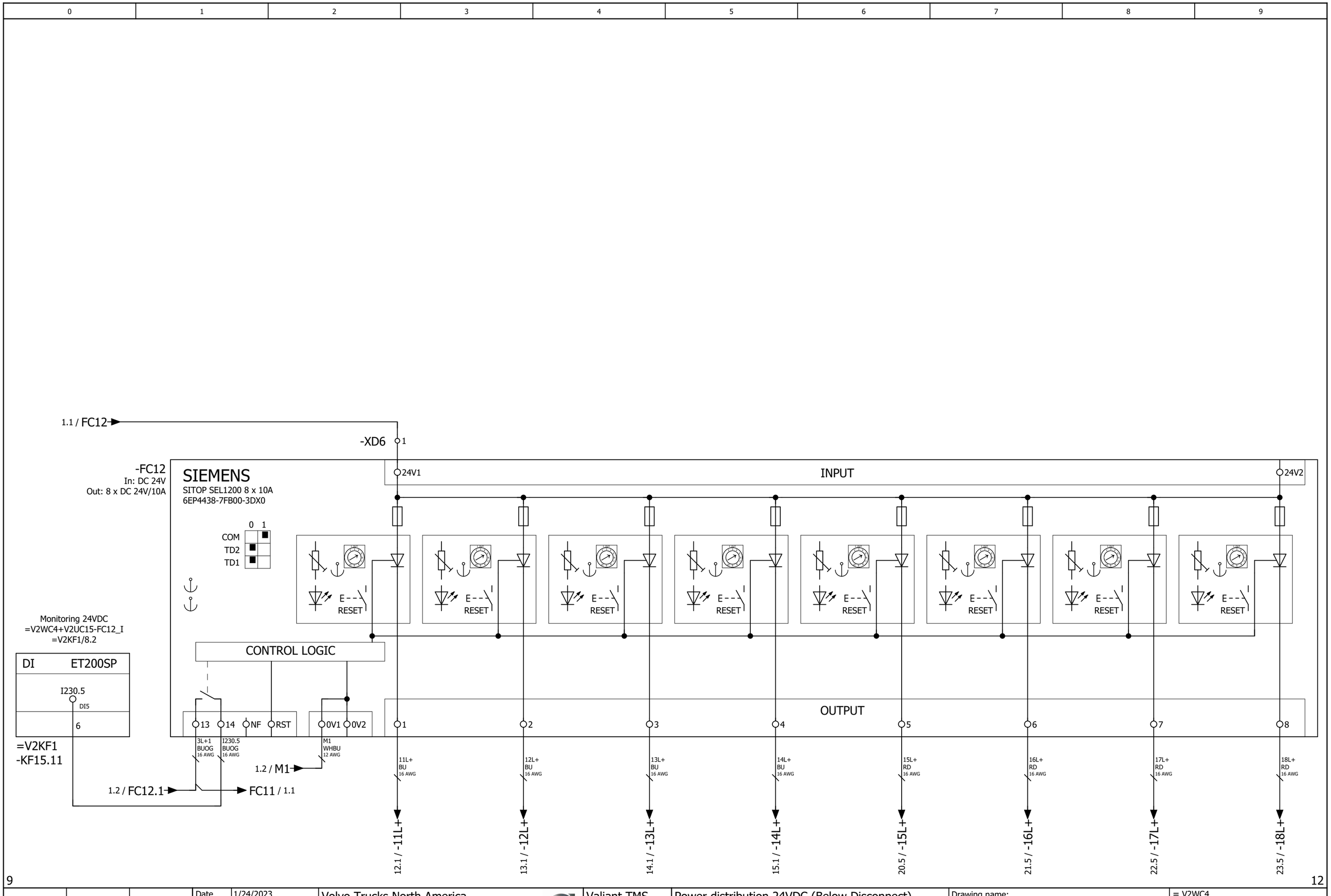

			Date	1/24/2023	Volvo Trucks North America	Valiant TMS	Power distribution 24VDC (Below Disconnect)	Drawing name: =2V01&EFS-EL_KF1	= V2WC4 + V2UC15
			Ed.	MKLEPADLO	P6700 Framing - Cell 2V01, KF1				
			Appr					Document type: EFS	Project nr: 22-16152
Modification	Date	Name	Original		Replacement of / Replaced by	Scale 1:1			Page 11 / 1630

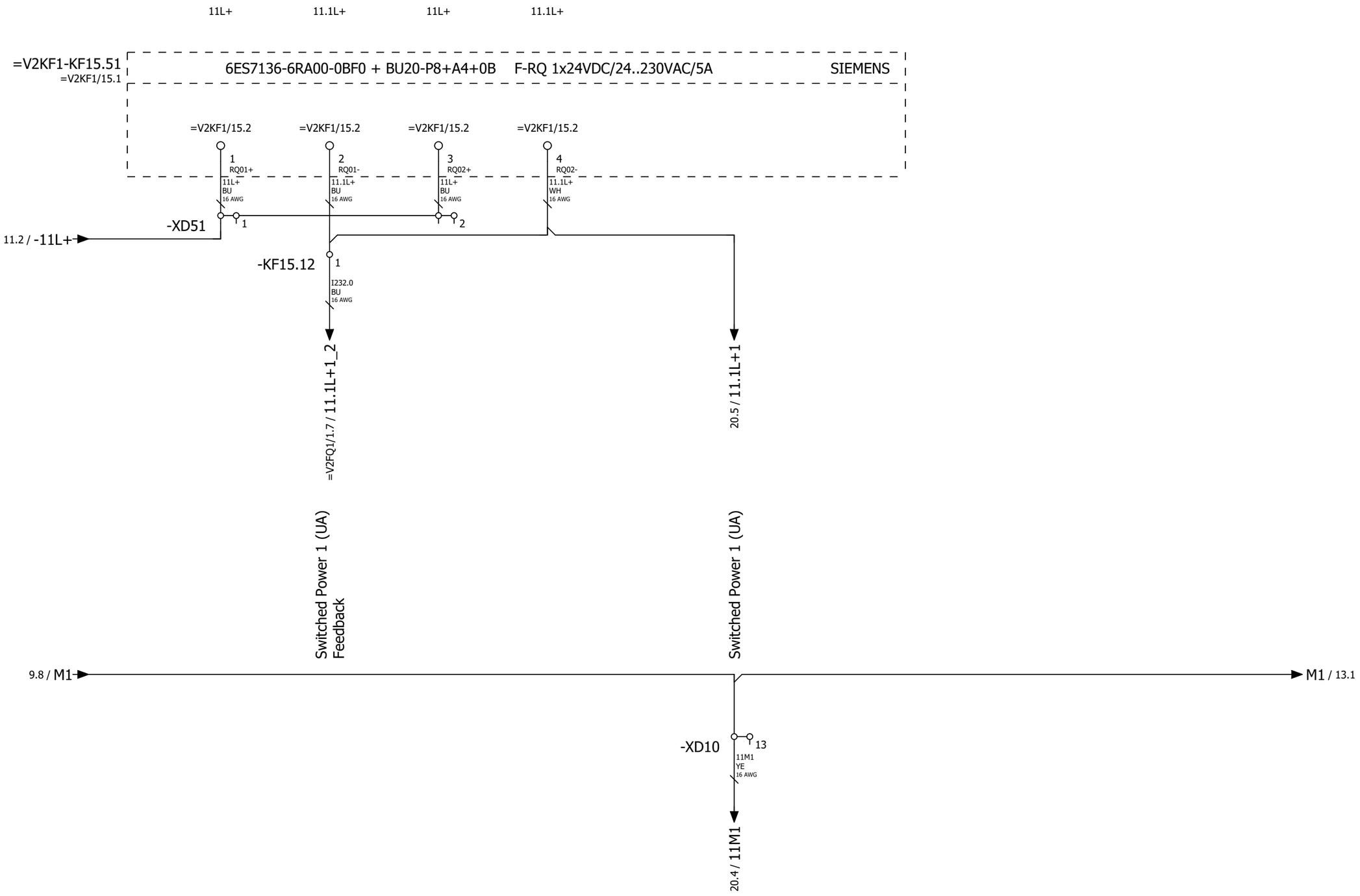

			Date	1/24/2023	Volvo Trucks North America		Valiant TMS	Power distribution 24VDC 11L+	Drawing name: =2V01&EFS-EL_KF1	= V2WC4
			Ed.	MKLEPADLO						+ V2UC15
			Appr		P6700 Framing - Cell 2V01, KF1		Scale 1:1		Document type: EFS / Project nr: 22-16152	Page 12 / 1630
Modification	Date	Name	Original		Replacement of	Replaced by				

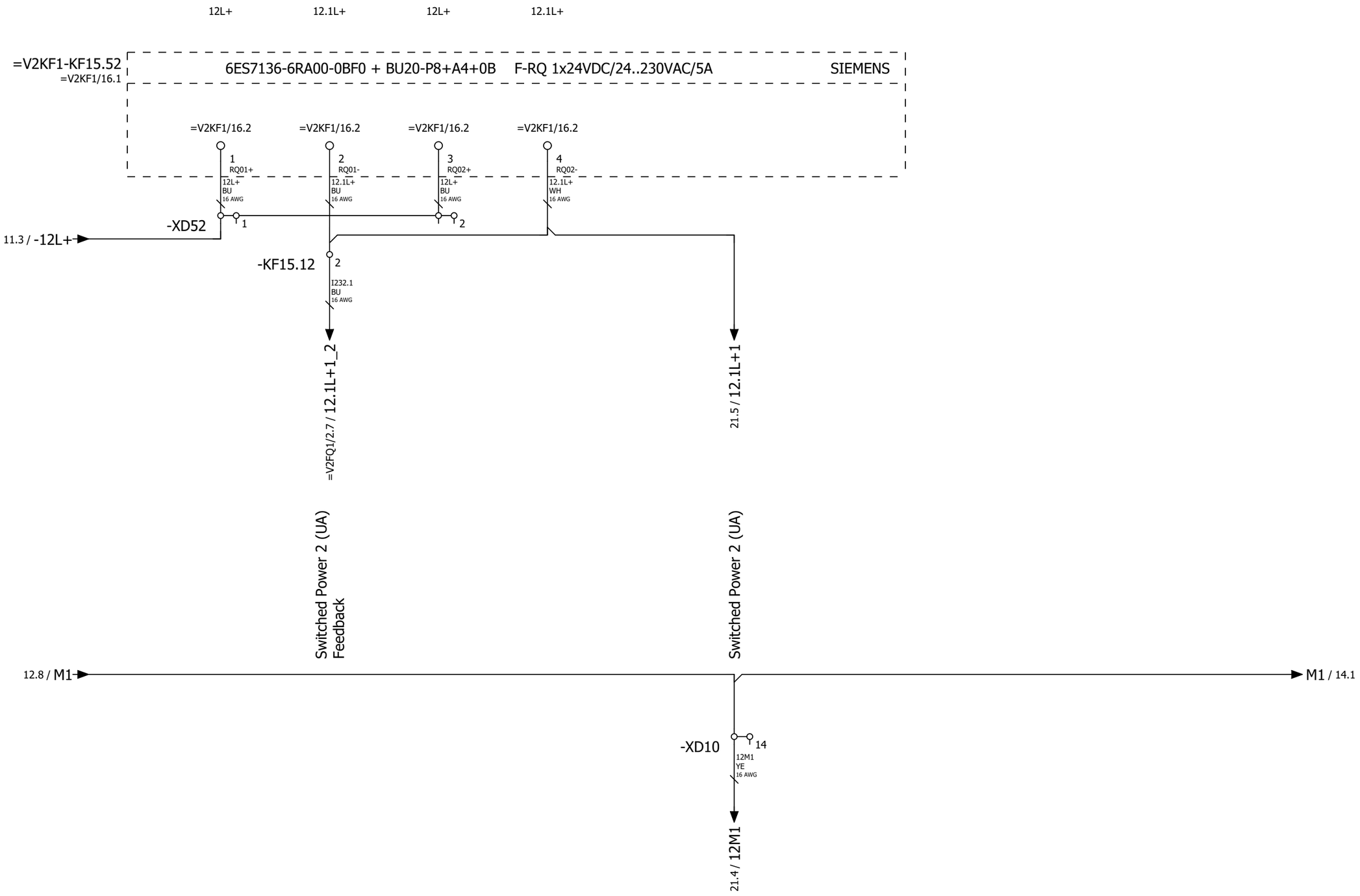

12

14

			Date	1/24/2023	Volvo Trucks North America		Valiant TMS	Power distribution 24VDC 12L+	Drawing name: =2V01&EFS-EL_KF1	= V2WC4	
			Ed.	MKLEPADLO						+ V2UC15	
			Appr		P6700 Framing - Cell 2V01, KF1		Scale 1:1		Document type: EFS	Project nr: 22-16152	Page 13 / 1630
Modification	Date	Name	Original		Replacement of	Replaced by					

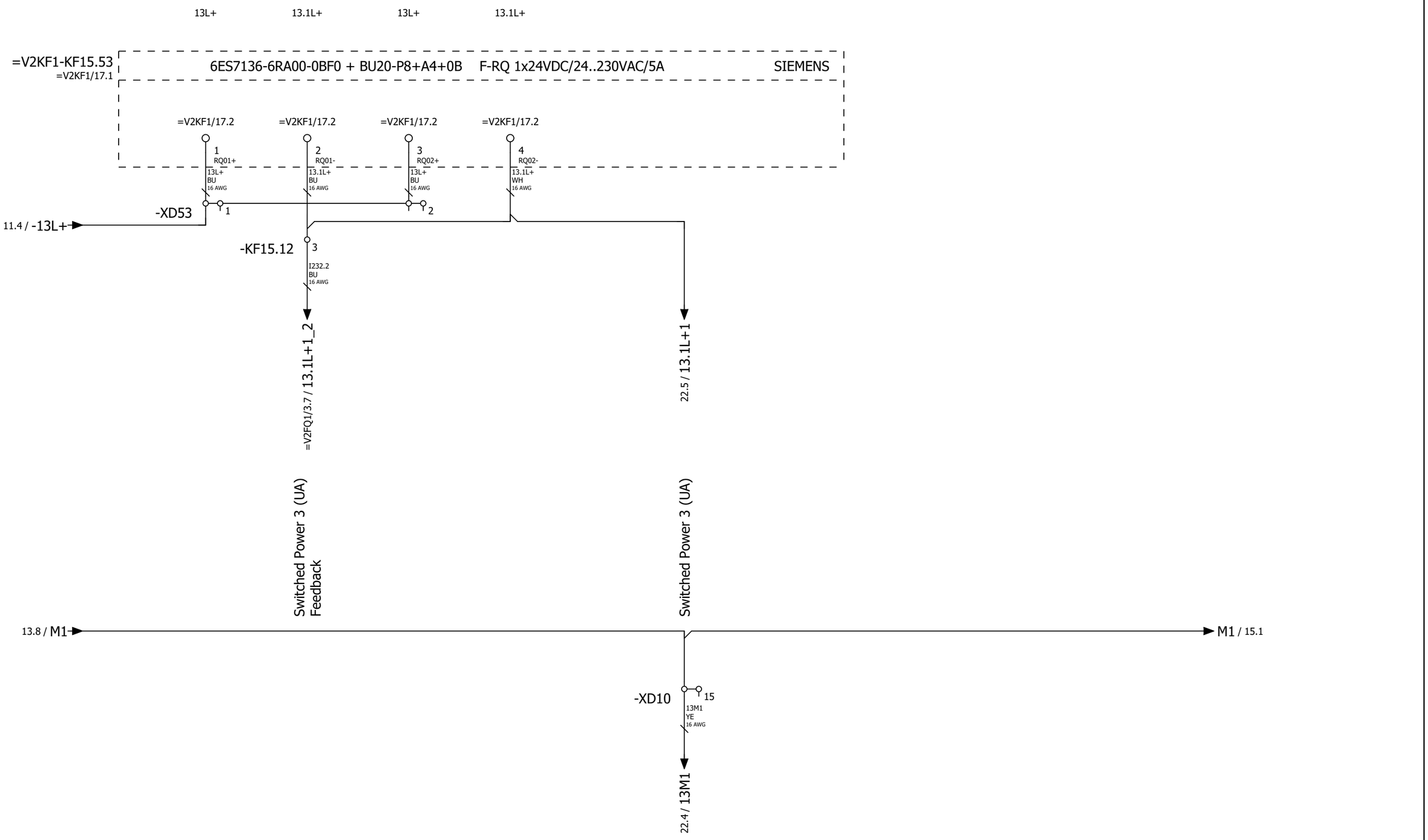

			Date	1/24/2023	Volvo Trucks North America		Valiant TMS	Power distribution 24VDC 13L+	Drawing name: =2V01&EFS-EL_KF1	= V2WC4
			Ed.	MKLEPADLO						+ V2UC15
			Appr		P6700 Framing - Cell 2V01, KF1		Scale 1:1		Document type: EFS	Project nr: 22-16152
Modification	Date	Name	Original		Replacement of	Replaced by				Page 14 / 1630

0	1	2	3	4	5	6	7	8	9

14L+ 14.1L+ 14L+ 14.1L+

=V2KF1-KF15.54
=V2KF1/18.1

6ES7136-6RA00-0BF0 + BU20-P8+A4+0B F-RQ 1x24VDC/24..230VAC/5A SIEMENS

=V2KF1/18.2 =V2KF1/18.2 =V2KF1/18.2 =V2KF1/18.2

1 RQ01+ 14L+ BU 16 AWG
2 RQ01- 14.1L+ BU 16 AWG
3 RQ02+ 14L+ BU 16 AWG
4 RQ02- 14.1L+ WH 16 AWG

-XD54 1 2

11.5 / -14L+

-KF15.12 4

I232.3 BU 16 AWG

=V2FQ1/4.7 / 14.1L+1_2

Switched Power 4 (UA) Feedback

23.5 / 14.1L+1

Switched Power 4 (UA)

14.8 / M1

M1 / 16.1

-XD10 16

14M1 YE 16 AWG

23.4 / 14M1

14 16

			Date	1/24/2023	Volvo Trucks North America		Valiant TMS	Power distribution 24VDC 14L+	Drawing name: =2V01&EFS-EL_KF1	= V2WC4	
			Ed.	MKLEPADLO						+ V2UC15	
			Appr		P6700 Framing - Cell 2V01, KF1		Scale 1:1		Document type: EFS	Project nr: 22-16152	Page 15 / 1630
Modification	Date	Name	Original		Replacement of	Replaced by					

15

17

			Date	1/24/2023	Volvo Trucks North America	Valiant TMS	Power distribution 24VDC 15L+	Drawing name: =2V01&EFS-EL_KF1	= V2WC4		
			Ed.	MKLEPADLO					+ V2UC15		
			Appr		P6700 Framing - Cell 2V01, KF1			Document type: EFS	Project nr: 22-16152	Page	16
Modification	Date	Name	Original		Replacement of	Replaced by	Scale 1:1				1630

Switched Power 2 (US)

16.8 / M1

M1 / 18.1

-XD10

18

16M1
WHYE
16 AWG

21.4 / 16M1

16

18

			Date	1/24/2023	Volvo Trucks North America	Valiant TMS	Power distribution 24VDC 16L+	Drawing name: =2V01&EFS-EL_KF1	= V2WC4	
			Ed.	MKLEPADLO					+ V2UC15	
			Appr		P6700 Framing - Cell 2V01, KF1			Document type: EFS	Project nr: 22-16152	Page 17
Modification	Date	Name	Original		Replacement of / Replaced by	Scale 1:1				1630

17

19

			Date	1/24/2023	Volvo Trucks North America	Valiant TMS	Power distribution 24VDC 17L+	Drawing name: =2V01&EFS-EL_KF1	= V2WC4 + V2UC15
			Ed.	MKLEPADLO	P6700 Framing - Cell 2V01, KF1			Document type: EFS	Project nr: 22-16152
			Appr						Page 18
Modification	Date	Name	Original		Replacement of / Replaced by	Scale 1:1			1630

0	1	2	3	4	5	6	7	8	9

18

20

			Date	1/24/2023	Volvo Trucks North America		Valiant TMS	Power distribution 24VDC 18L+	Drawing name: =2V01&EFS-EL_KF1		= V2WC4	
			Ed.	MKLEPADLO							+ V2UC15	
			Appr		P6700 Framing - Cell 2V01, KF1				Document type: EFS	Project nr: 22-16152	Page	19
Modification	Date	Name	Original		Replacement of	Replaced by	Scale 1:1					1630

+.UC15

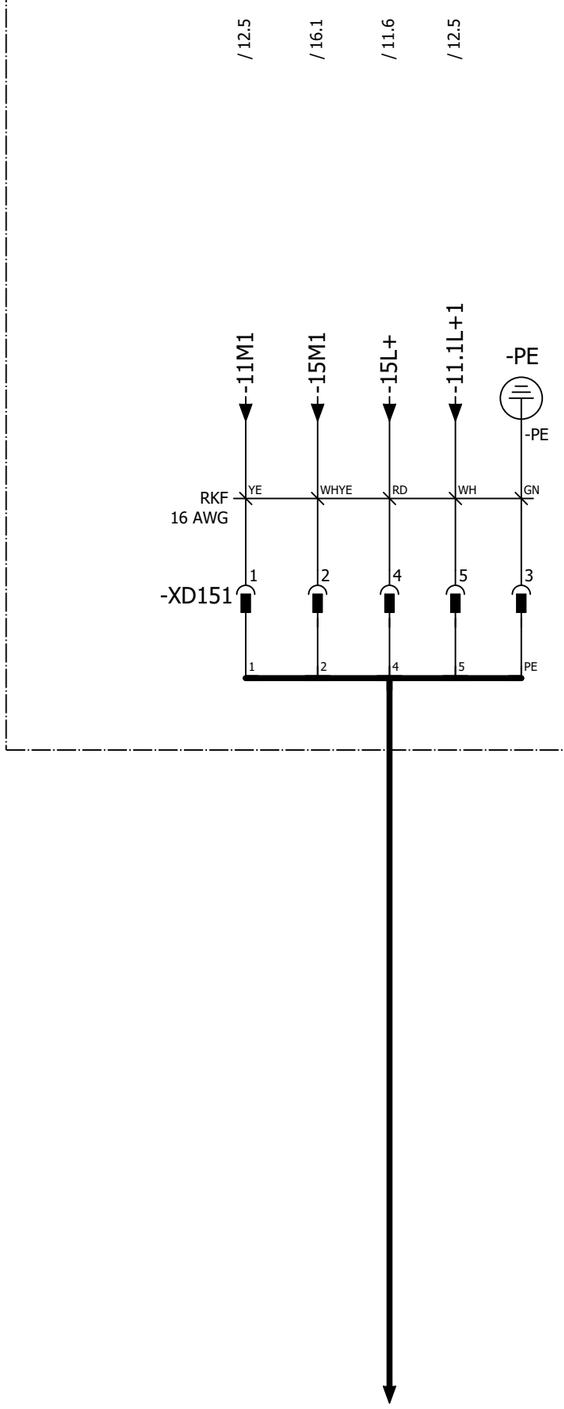

POWER IN / POWER OUT

Pin 1: 0 V UA
Pin 2: 0 V US
Pin 3: FE
Pin 4: +24 V US / 9 A
Pin 5: +24 V UA / 9 A

Pin #	WIRE	COLOR
Pin 1	-11M1	YE
Pin 2	-15M1	WHYE
Pin 3	GND	GN
Pin 4	-15L+	RD
Pin 5	-11.1L+1	WH

			Date	1/24/2023	Volvo Trucks North America	Valiant TMS	24VDC Switched Power 1	Drawing name: =2V01&EFS-EL_KF1	= V2WC4
			Ed.	MKLEPADLO					+ V2UC15
			Appr		P6700 Framing - Cell 2V01, KF1	Scale 1:1		Document type: EFS	Project nr: 22-16152
Modification	Date	Name	Original		Replacement of	Replaced by			Page 20 / 1630

0	1	2	3	4	5	6	7	8	9

+.UC15

/ 13.5 / 17.1 / 11.7 / 13.5

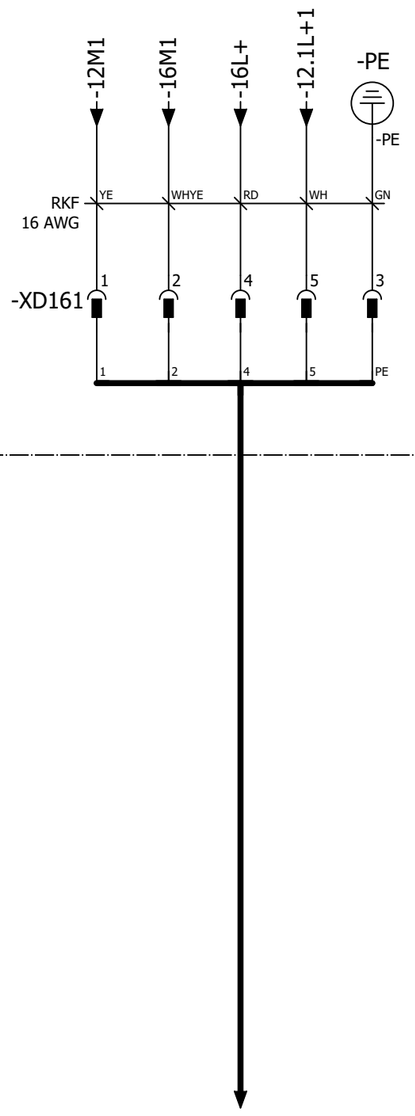

+.GL15KF2-W1
=V2GL15KF2+.GL15KF2/10.1

POWER IN / POWER OUT

Pin 1: 0 V UA
Pin 2: 0 V US
Pin 3: FE
Pin 4: +24 V US / 9 A
Pin 5: +24 V UA / 9 A

Pin #	WIRE	COLOR
Pin 1	-12M1	YE
Pin 2	-16M1	WHYE
Pin 3	GND	GN
Pin 4	-16L+	RD
Pin 5	-12.1L+1	WH

20

22

			Date	1/24/2023	Volvo Trucks North America	Valiant TMS	24VDC Switched Power 2	Drawing name: =2V01&EFS-EL_KF1	= V2WC4
			Ed.	MKLEPADLO					+ V2UC15
			Appr		P6700 Framing - Cell 2V01, KF1			Document type: EFS	Project nr: 22-16152
Modification	Date	Name	Original		Replacement of / Replaced by	Scale 1:1			Page 21 / 1630

+.UC15

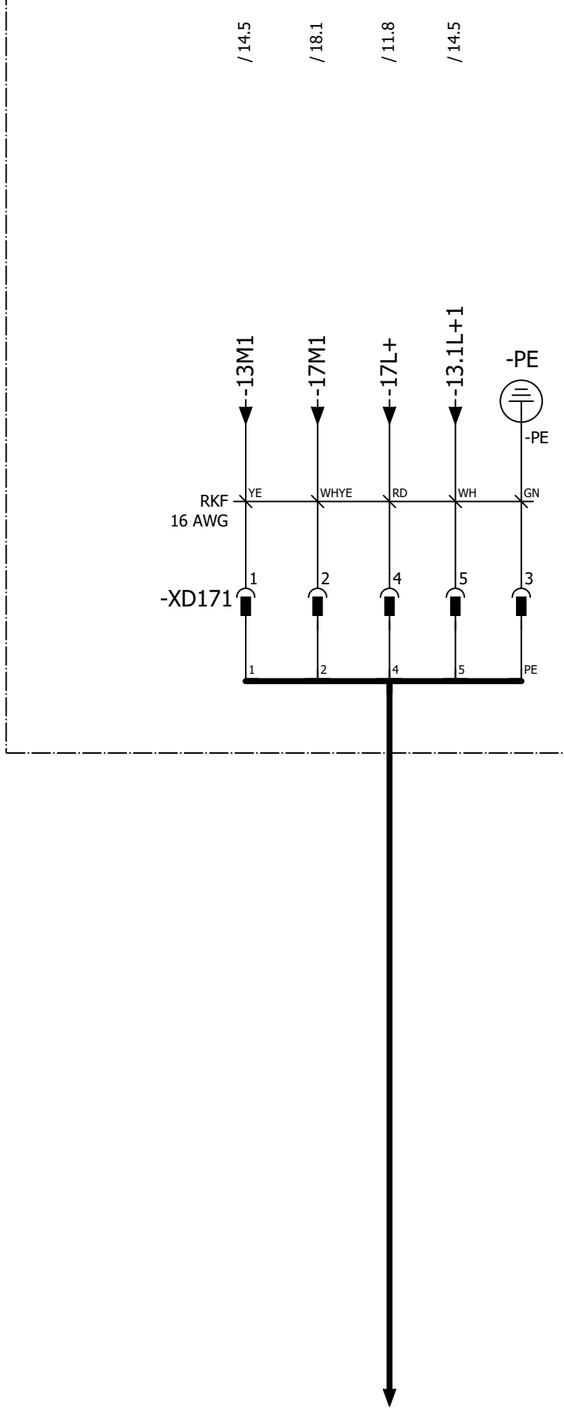

POWER IN / POWER OUT

Pin 1: 0 V UA
Pin 2: 0 V US
Pin 3: FE
Pin 4: +24 V US / 9 A
Pin 5: +24 V UA / 9 A

Pin #	WIRE	COLOR
Pin 1	-13M1	YE
Pin 2	-17M1	WHYE
Pin 3	GND	GN
Pin 4	-17L+	RD
Pin 5	-13.1L+1	WH

			Date	1/24/2023	Volvo Trucks North America	Valiant TMS	24VDC Switched Power 3	Drawing name: =2V01&EFS-EL_KF1	= V2WC4
			Ed.	MKLEPADLO					+ V2UC15
			Appr		P6700 Framing - Cell 2V01, KF1	Scale 1:1		Document type: EFS	Project nr: 22-16152
Modification	Date	Name	Original		Replacement of	Replaced by			Page 22 / 1630

0	1	2	3	4	5	6	7	8	9

+.UC15

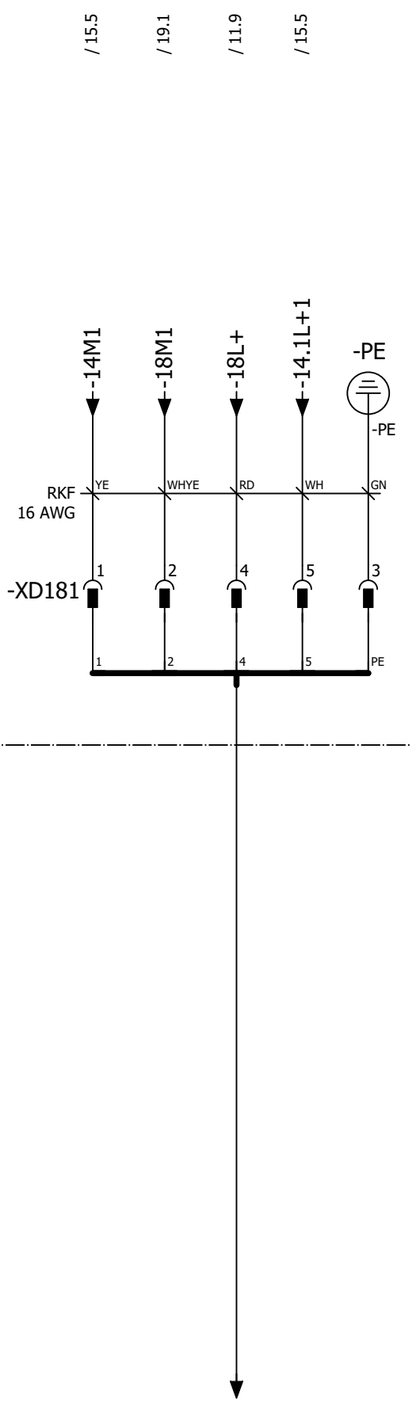

POWER IN / POWER OUT

Pin 1: 0 V UA
Pin 2: 0 V US
Pin 3: FE
Pin 4: +24 V US / 9 A
Pin 5: +24 V UA / 9 A

Pin #	WIRE	COLOR
Pin 1	-14M1	YE
Pin 2	-18M1	WHYE
Pin 3	GND	GN
Pin 4	-18L+	RD
Pin 5	-14.1L+1	WH

22

+.UC32/1

			Date	1/24/2023	Volvo Trucks North America	Valiant TMS	24VDC Switched Power 4	Drawing name: =2V01&EFS-EL_KF1	= V2WC4
			Ed.	MKLEPADLO					+ V2UC15
			Appr		P6700 Framing - Cell 2V01, KF1			Document type: EFS	Project nr: 22-16152
Modification	Date	Name	Original		Replacement of / Replaced by	Scale 1:1			Page 23 / 1630

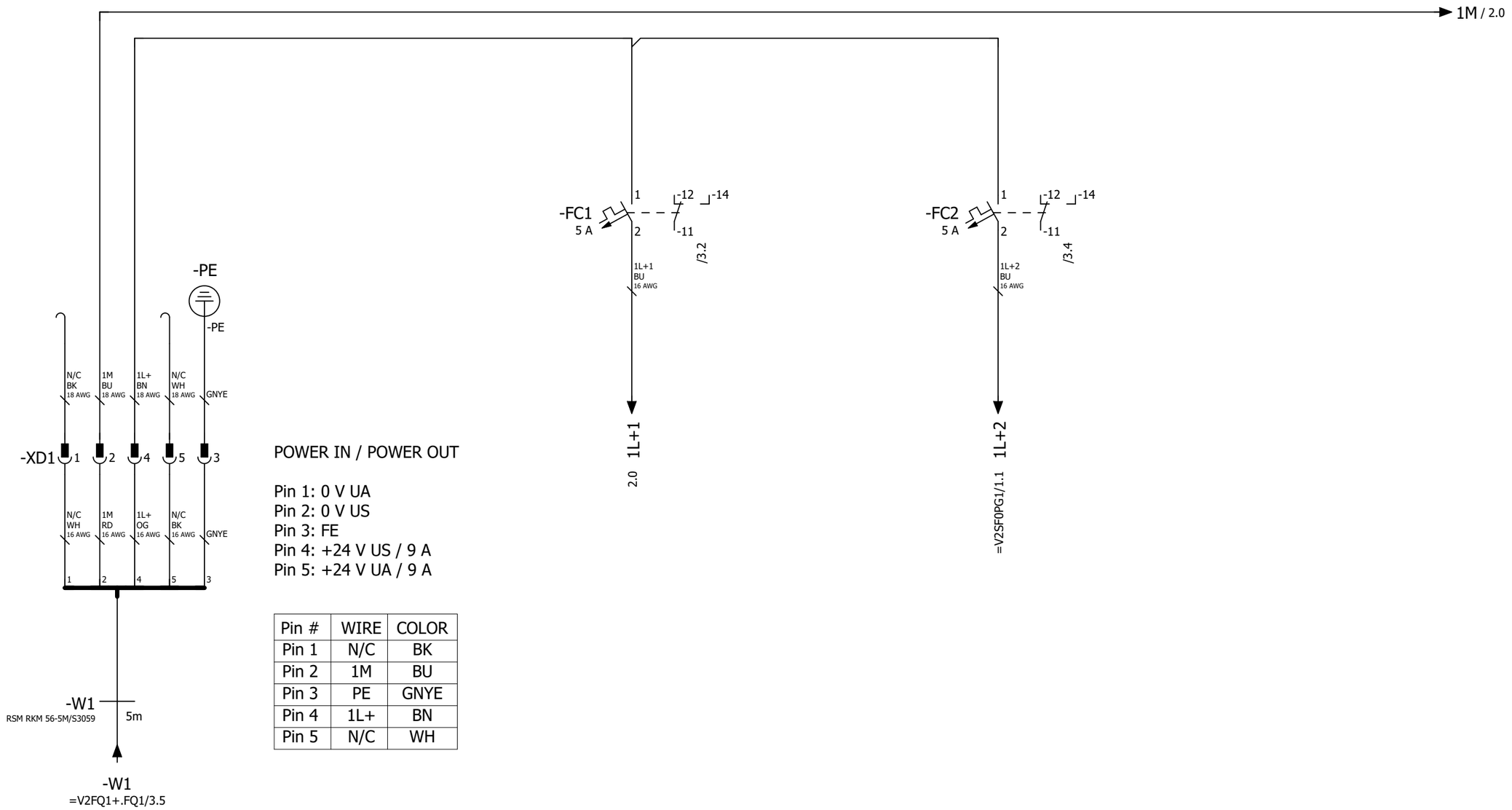

POWER IN / POWER OUT

Pin 1: 0 V UA
Pin 2: 0 V US
Pin 3: FE
Pin 4: +24 V US / 9 A
Pin 5: +24 V UA / 9 A

Pin #	WIRE	COLOR
Pin 1	N/C	BK
Pin 2	1M	BU
Pin 3	PE	GNYE
Pin 4	1L+	BN
Pin 5	N/C	WH

Power Distribution 24 VDC Display

Power Distribution 24 VDC ET200

+.UC15/23

2

			Date	1/24/2023	Volvo Trucks North America	Valiant TMS	Incomming power supply 24 VDC	Drawing name: =2V01&EFS-EL_KF1	= V2WC4
			Ed.	MKLEPADLO					+ V2UC32
			Appr		P6700 Framing - Cell 2V01, KF1			Document type: EFS / Project nr: 22-16152	Page 1
Modification	Date	Name	Original		Replacement of / Replaced by	Scale 1:1			1630

			Date	1/24/2023	Volvo Trucks North America		Valiant TMS	Power distribution 24VDC 1L+	Drawing name: =2V01&EFS-EL_KF1	= V2WC4	
			Ed.	MKLEPADLO						+ V2UC32	
			Appr		P6700 Framing - Cell 2V01, KF1		Scale 1:1		Document type: EFS	Project nr: 22-16152	Page 2 / 1630
Modification	Date	Name	Original		Replacement of	Replaced by					

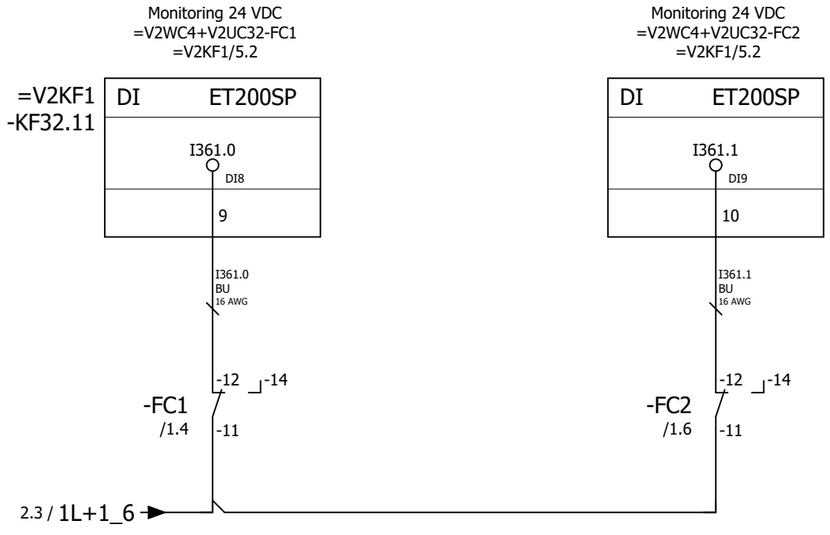

			Date	1/24/2023	Volvo Trucks North America	Valiant TMS	Monitoring 24VDC	Drawing name: =2V01&EFS-EL_KF1	= V2WC4	
			Ed.	MKLEPADLO					+ V2UC32	
			Appr		P6700 Framing - Cell 2V01, KF1			Document type: EFS	Project nr: 22-16152	Page 3
Modification	Date	Name	Original		Replacement of / Replaced by	Scale 1:1				1630

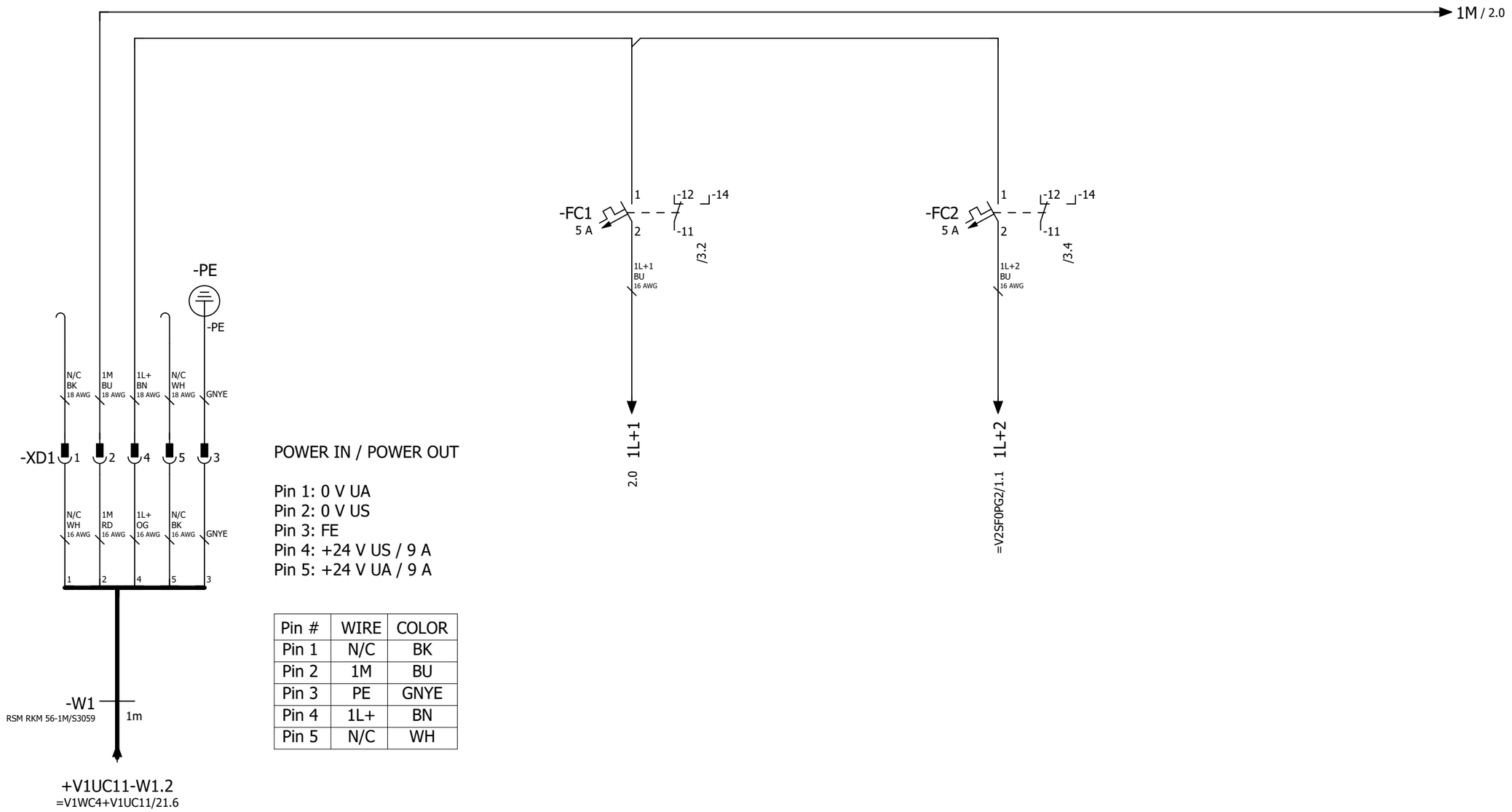

POWER IN / POWER OUT

Pin 1: 0 V UA
Pin 2: 0 V US
Pin 3: FE
Pin 4: +24 V US / 9 A
Pin 5: +24 V UA / 9 A

Pin #	WIRE	COLOR
Pin 1	N/C	BK
Pin 2	1M	BU
Pin 3	PE	GNYE
Pin 4	1L+	BN
Pin 5	N/C	WH

Power Distribution 24 VDC Display

Power Distribution 24 VDC ET200

+.UC32/3

2

			Date	1/24/2023	Volvo Trucks North America	Valiant TMS	Incomming power supply 24 VDC	Drawing name: =2V01&EFS-EL_KF1	= V2WC4	
			Ed.	MKLEPADLO					+ V2UC33	
			Appr		P6700 Framing - Cell 2V01, KF1			Document type: EFS	Project nr: 22-16152	Page 1
Modification	Date	Name	Original		Replacement of / Replaced by	Scale 1:1				1630

			Date	1/24/2023	Volvo Trucks North America		Valiant TMS	Power distribution 24VDC 1L+	Drawing name: =2V01&EFS-EL_KF1	= V2WC4	
			Ed.	MKLEPADLO						+ V2UC33	
			Appr		P6700 Framing - Cell 2V01, KF1		Scale 1:1		Document type: EFS	Project nr: 22-16152	Page 2 / 1630
Modification	Date	Name	Original		Replacement of	Replaced by					

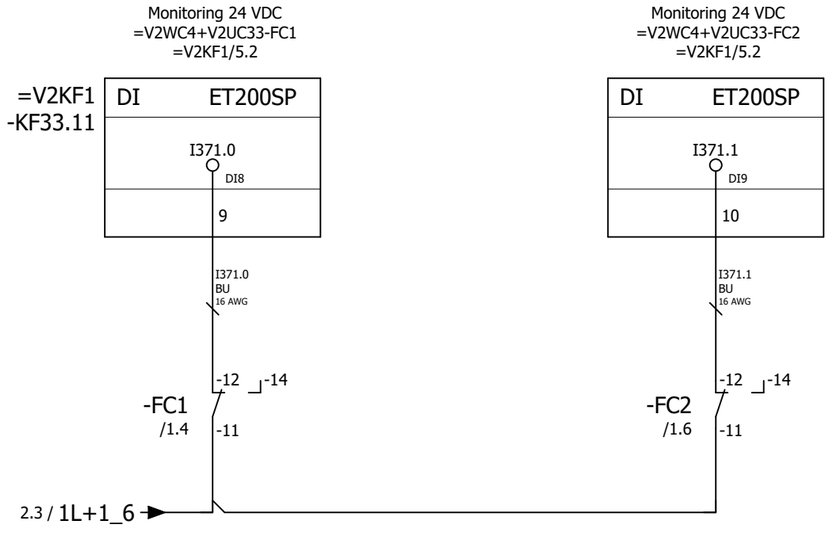

			Date	1/24/2023	Volvo Trucks North America	Valiant TMS	Monitoring 24VDC	Drawing name: =2V01&EFS-EL_KF1	= V2WC4	
			Ed.	MKLEPADLO					+ V2UC33	
			Appr		P6700 Framing - Cell 2V01, KF1			Document type: EFS	Project nr: 22-16152	Page 3
Modification	Date	Name	Original		Replacement of / Replaced by	Scale 1:1				1630

0	1	2	3	4	5	6	7	8	9

+V2UC81

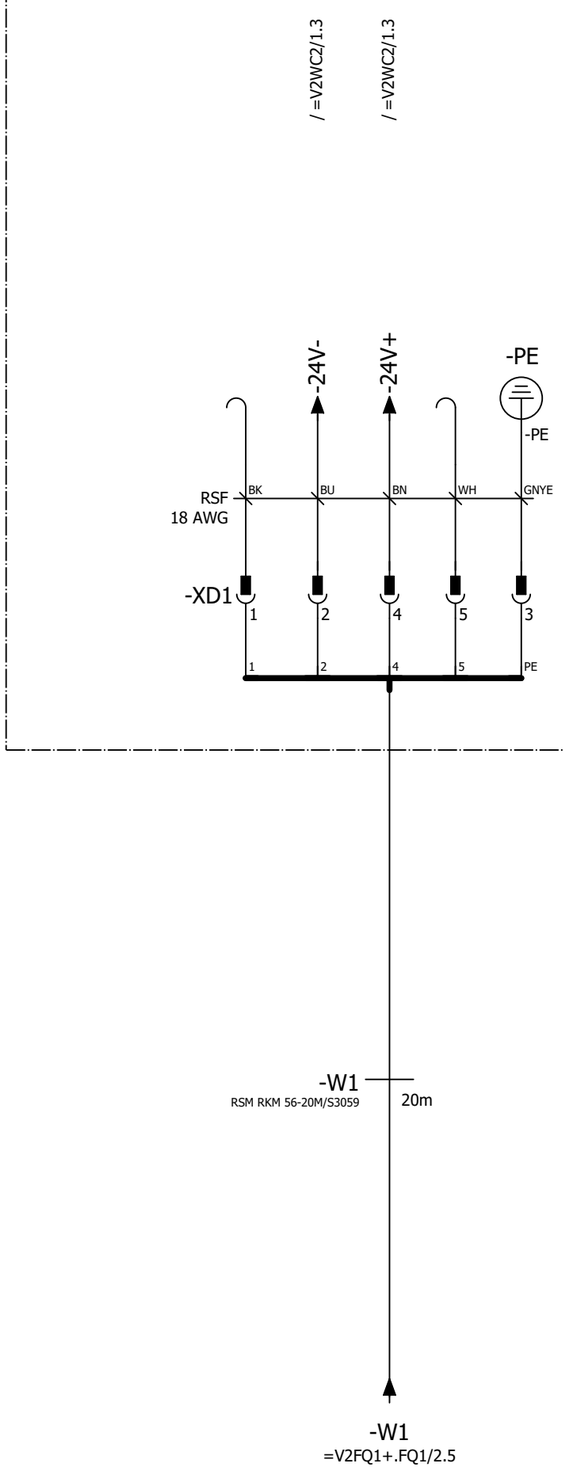

POWER IN / POWER OUT

Pin 1: 0 V UA
Pin 2: 0 V US
Pin 3: FE
Pin 4: +24 V US / 9 A
Pin 5: +24 V UA / 9 A

Pin #	WIRE	COLOR
Pin 1	N/C	BK
Pin 2	24V-	BU
Pin 3	GND	GNYE
Pin 4	24V+	BN
Pin 5	N/C	WH

+.UC33/3

=V2WL1WL1KF1+.WL1KF1/10

			Date	1/24/2023	Volvo Trucks North America	Valiant TMS	24VDC Power	Drawing name: =2V01&EFS-EL_KF1	= V2WC4
			Ed.	MKLEPADLO					+ V2UC81
			Appr		P6700 Framing - Cell 2V01, KF1	Scale 1:1		Document type: EFS	Project nr: 22-16152
Modification	Date	Name	Original		Replacement of	Replaced by			Page 1 / 1630

0	1	2	3	4	5	6	7	8	9

=V1WL3GM1KF1+V1WL3KF1/10.2

+.WL1WL1KF1-W1

-W1

RSM RKM 56-15M/S3059

15m

4 3 1 2 PE

-KF1.11
/10.3

X01 1 2 3 4 5 — 7/8" — 2M 1M FE 1L+ 2L+ — DC 24V (IN)

X02 1 2 3 4 5 — 7/8" — 2M 1M FE 1L+ 2L+ — DC 24V (OUT)

XIOP — IOP

XUSB — USB_B

XPM — POWER MODULE IF

XMMC — MM-CARD

SIEMENS

SINAMICS G120D CONTROL UNIT CU250D-2 PN-F
CU250D-2 PN-F
6SL3546-0FB21-1FA0

PROFINET-PORT 1

ADDRESS

X03 1 2 3 4 SH — M12 — TX+ RX+ TX- RX-

PROFINET-PORT 2

ADDRESS

X04 1 2 3 4 SH — M12 — TX+ RX+ TX- RX-

HTL-ENCODER

X06 1 2 3 4 5 6 7 8 SH — M12 — +24V A A* B B* Z Z* 0V

1 2 3 4 SH

-WF1

PROFINET Cable
6XV1840-3AH10

+.WL1WL1KF1-WF1

=V1WL3GM1KF1+V1WL3KF1/10.2

-KF1.11
/10.0

X07 1 2 3 4 5 — M12 — 1L+ DI 1 F-DI 0 1M DI 0 FE

X08 1 2 3 4 5 — M12 — 1L+ DI 3 F-DI 1 1M DI 2 FE

X09 1 2 3 4 5 — M12 — 1L+ DI 5 F-DI 2 1M DI 4 FE

X10 1 2 3 4 5 6 7 8 — M12 — N.C. +10V AI 0+ AI 1+ N.C. N.C. 0V N.C.

SIEMENS

SINAMICS G120D CONTROL UNIT CU250D-2 PN-F
CU250D-2 PN-F
6SL3546-0FB21-1FA0

X05 1 2 3 4 5 — M12 — N.C. DO 1 F-DO 0 2M DO 0 FE

=V2WC4+.UC81/1

=V2WL1WL1WC1+.WL1UC01/1

			Date	1/24/2023	Volvo Trucks North America	Valiant TMS	G120D Control Unit	Drawing name: =2V01&EFS-EL_KF1	= V2WL1WL1KF1
			Ed.	MKLEPADLO					+ V2WL1KF1
			Appr		P6700 Framing - Cell 2V01, KF1	Scale 1:1		Document type: EFS	Project nr: 22-16152
Modification	Date	Name	Original		Replacement of	Replaced by			Page 10 / 1630

0	1	2	3	4	5	6	7	8	9

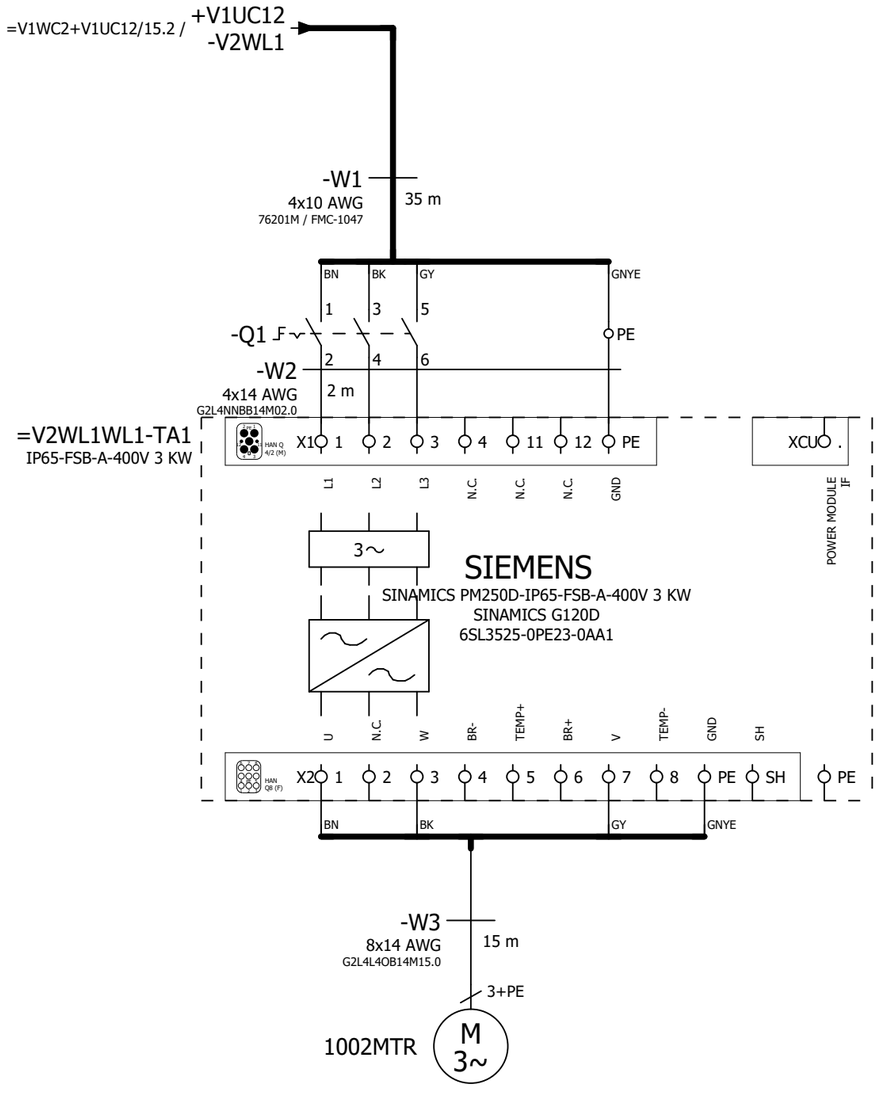

=V2WL1WL1KF1+.WL1KF1/10

=V2WL2GM1KF1+.WL2KF1/10

			Date	1/24/2023	Volvo Trucks North America		Valiant TMS	Incoming power	Drawing name: =2V01&EFS-EL_KF1	= V2WL1WL1WC1
			Ed.	MKLEPADLO						+ V2WL1UC01
			Appr		P6700 Framing - Cell 2V01, KF1				Document type: EFS	Project nr: 22-16152
Modification	Date	Name	Original		Replacement of	Replaced by	Scale 1:1			Page 1 / 1630

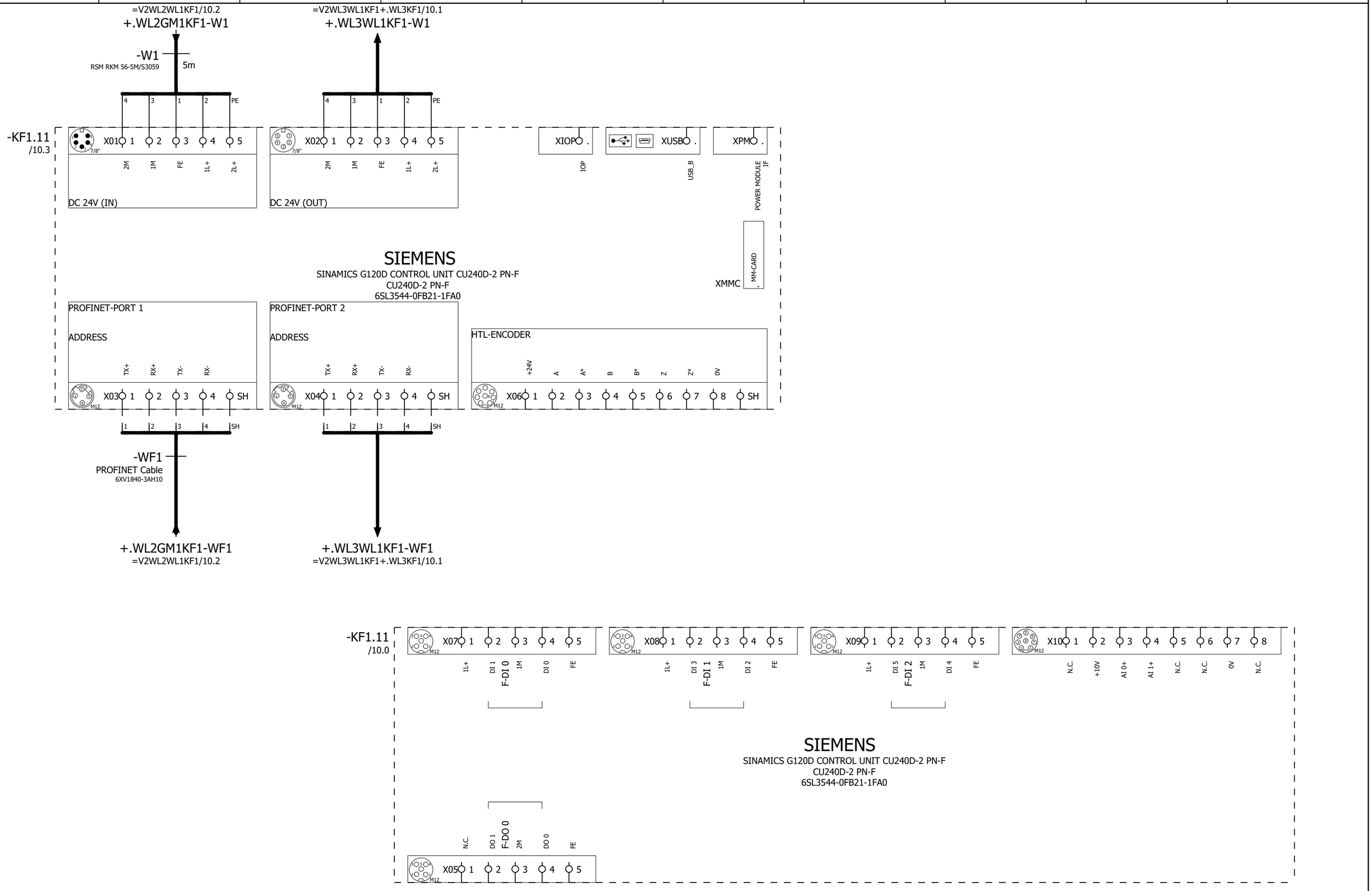

=V2WL1WL1WC1+.WL1UC01/1

=V2WL2GM1WC1+.WL2UC01/1

			Date	1/24/2023	Volvo Trucks North America	Valiant TMS	G120D Control Unit	Drawing name: =2V01&EFS-EL_KF1	= V2WL2GM1KF1
			Ed.	MKLEPADLO					+ V2WL2KF1
			Appr		P6700 Framing - Cell 2V01, KF1	Scale 1:1		Document type: EFS	Project nr: 22-16152
Modification	Date	Name	Original		Replacement of	Replaced by			Page 10 / 1630

0	1	2	3	4	5	6	7	8	9

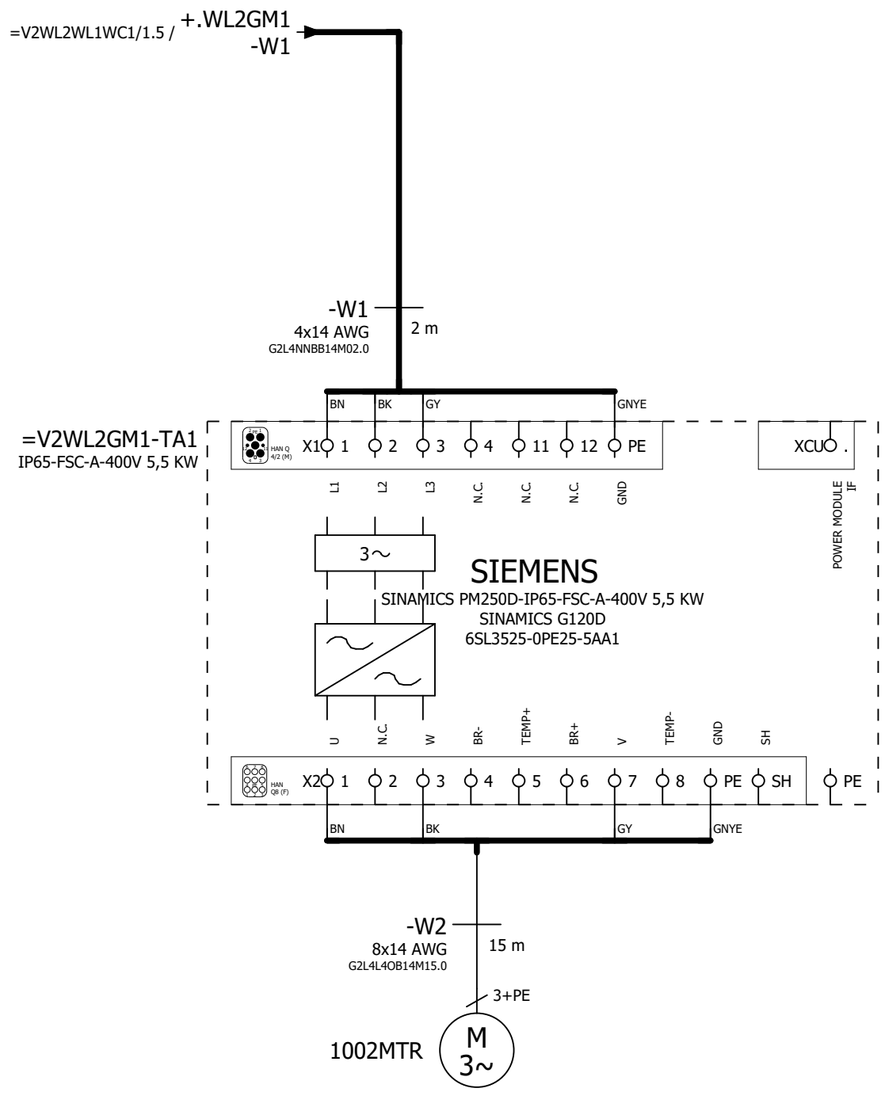

=V2WL2GM1KF1+.WL2KF1/10

=V2WL2WL1KF1+.WL2KF1/10

			Date	1/24/2023	Volvo Trucks North America		Valiant TMS	Incoming power	Drawing name: =2V01&EFS-EL_KF1	= V2WL2GM1WC1
			Ed.	MKLEPADLO						+ V2WL2UC01
			Appr		P6700 Framing - Cell 2V01, KF1		Scale 1:1		Document type: EFS	Project nr: 22-16152
Modification	Date	Name	Original		Replacement of	Replaced by				Page 1 / 1630

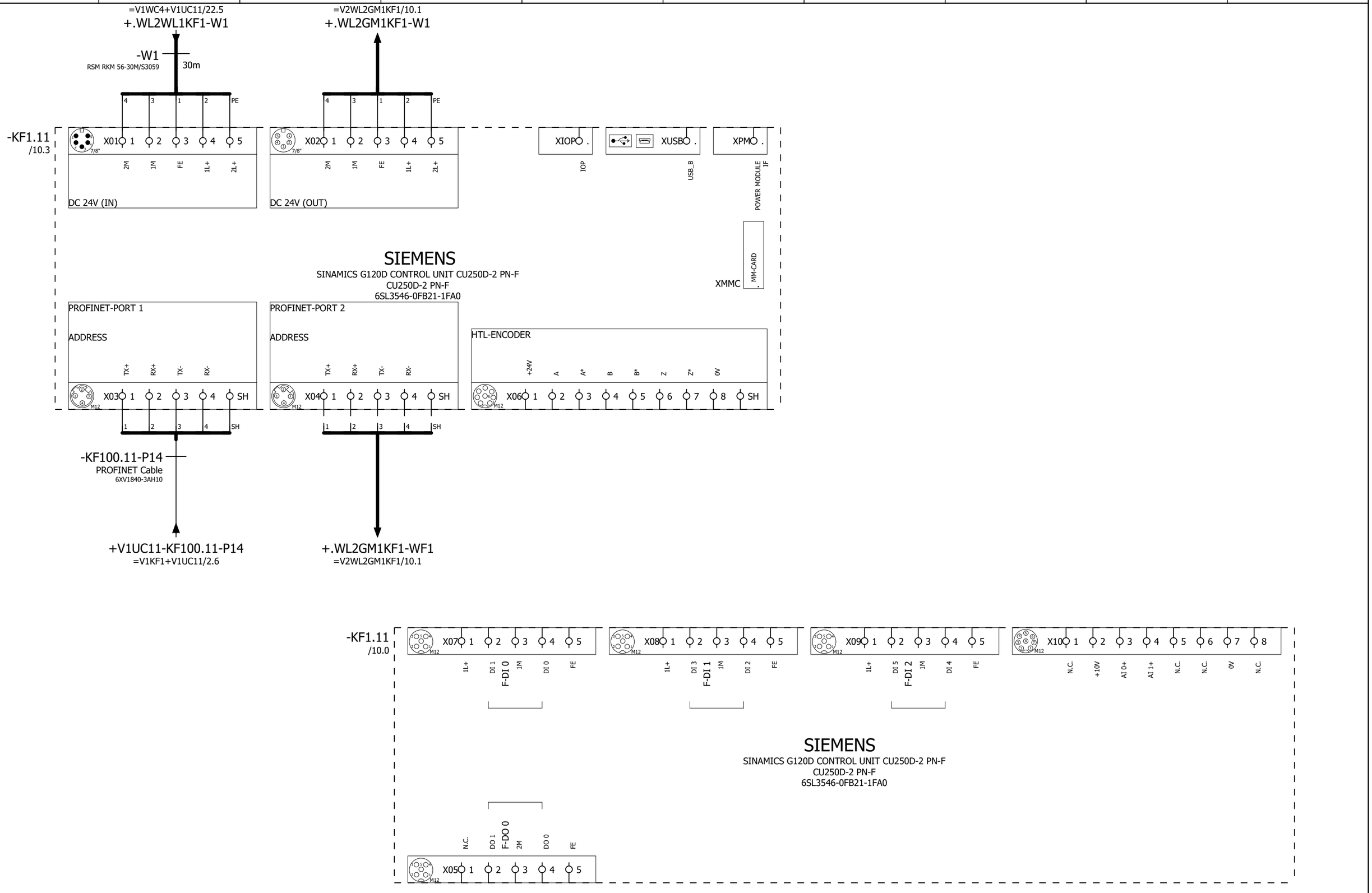

=V2WL2GM1WC1+.WL2UC01/1

=V2WL2WL1WC1+.WL2UC01/1

			Date	1/24/2023	Volvo Trucks North America	Valiant TMS	G120D Control Unit	Drawing name: =2V01&EFS-EL_KF1	= V2WL2WL1KF1
			Ed.	MKLEPADLO	P6700 Framing - Cell 2V01, KF1				+ V2WL2KF1
			Appr					Document type: EFS	Project nr: 22-16152
Modification	Date	Name	Original		Replacement of / Replaced by	Scale 1:1			Page 10 / 1630

0	1	2	3	4	5	6	7	8	9

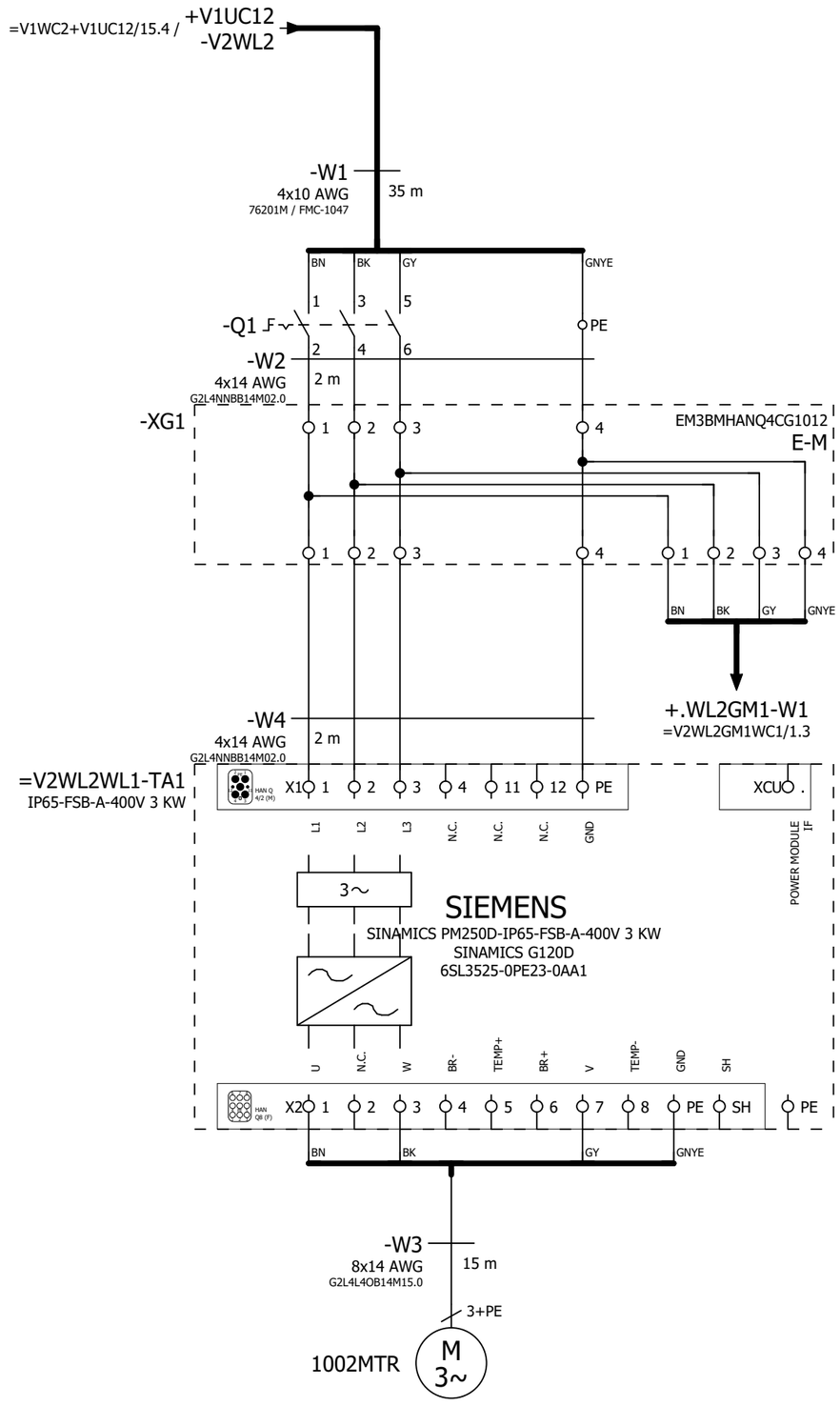

=V2WL2WL1KF1+.WL2KF1/10

=V2WL3WL1KF1+.WL3KF1/10

			Date	1/24/2023	Volvo Trucks North America		Valiant TMS	Incoming power	Drawing name: =2V01&EFS-EL_KF1	= V2WL2WL1WC1
			Ed.	MKLEPADLO						+ V2WL2UC01
			Appr		P6700 Framing - Cell 2V01, KF1				Document type: EFS	Project nr: 22-16152
Modification	Date	Name	Original		Replacement of	Replaced by	Scale 1:1			Page 1 / 1630

0	1	2	3	4	5	6	7	8	9

=V2WL2GM1KF1+.WL2KF1/10.2
+.WL3WL1KF1-W1

-W1
RSM RKM 56-15M/S3059
15m

=V2WL4WL1KF1+.WL4KF1/10.1
+.WL4WL1KF1-W1

-KF1.11
/10.3

4 3 1 2 PE

X01 1 2 3 4 5
7/8"
2M 1M FE 1L+ 2L+
DC 24V (IN)

X02 1 2 3 4 5
7/8"
2M 1M FE 1L+ 2L+
DC 24V (OUT)

XIOP .
IOP

XUSB .
USB_B

XPM .
POWER MODULE 1F

XMMC
MM-CARD

SIEMENS
SINAMICS G120D CONTROL UNIT CU250D-2 PN-F
CU250D-2 PN-F
6SL3546-0FB21-1FA0

PROFINET-PORT 1
ADDRESS
TX+ RX+ TX- RX-
X03 1 2 3 4 SH
M12
1 2 3 4 SH

PROFINET-PORT 2
ADDRESS
TX+ RX+ TX- RX-
X04 1 2 3 4 SH
M12
1 2 3 4 SH

HTL-ENCODER
+24V A A* B B* Z Z* 0V
X06 1 2 3 4 5 6 7 8 SH
M12

-WF1
PROFINET Cable
6XV1840-3AH10

+.WL3WL1KF1-WF1
=V2WL2GM1KF1+.WL2KF1/10.2

+.WL4WL1KF1-WF1
=V2WL4WL1KF1+.WL4KF1/10.1

-KF1.11
/10.0

X07 1 2 3 4 5
M12
1L+ DI 1 F-DI 0 1M DI 0 FE

X08 1 2 3 4 5
M12
1L+ DI 3 F-DI 1 1M DI 2 FE

X09 1 2 3 4 5
M12
1L+ DI 5 F-DI 2 1M DI 4 FE

X10 1 2 3 4 5 6 7 8
M12
N.C. +10V AI 0+ AI 1+ N.C. N.C. 0V N.C.

SIEMENS
SINAMICS G120D CONTROL UNIT CU250D-2 PN-F
CU250D-2 PN-F
6SL3546-0FB21-1FA0

N.C. DO 1 F-DO 0 2M DO 0 FE
X05 1 2 3 4 5
M12

=V2WL2WL1WC1+.WL2UC01/1

=V2WL3WL1WC1+.WL3UC01/1

			Date	1/24/2023	Volvo Trucks North America	Valiant TMS	G120D Control Unit	Drawing name: =2V01&EFS-EL_KF1	= V2WL3WL1KF1
			Ed.	MKLEPADLO					+ V2WL3KF1
			Appr		P6700 Framing - Cell 2V01, KF1	Scale 1:1		Document type: EFS	Project nr: 22-16152
Modification	Date	Name	Original		Replacement of	Replaced by			Page 10 / 1630

0	1	2	3	4	5	6	7	8	9

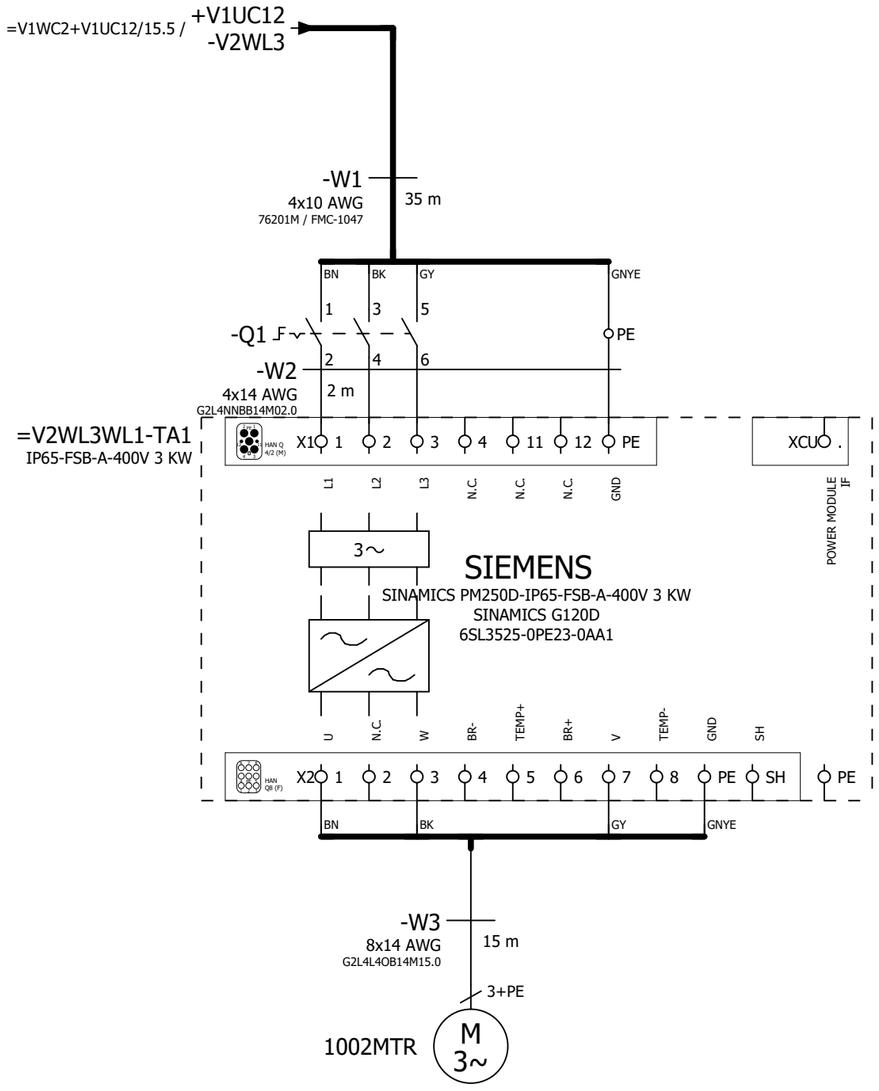

=V2WL3WL1KF1+.WL3KF1/10

=V2WL4WL1KF1+.WL4KF1/10

			Date	1/24/2023	Volvo Trucks North America		Valiant TMS	Incoming power	Drawing name: =2V01&EFS-EL_KF1	= V2WL3WL1WC1
			Ed.	MKLEPADLO						+ V2WL3UC01
			Appr		P6700 Framing - Cell 2V01, KF1				Document type: EFS	Project nr: 22-16152
Modification	Date	Name	Original		Replacement of	Replaced by	Scale 1:1			Page 1 / 1630

0	1	2	3	4	5	6	7	8	9

=V2WL3WL1KF1+.WL3KF1/10.2

+.WL4WL1KF1-W1

-W1

RSM RKM 56-15M/S3059

15m

4 3 1 2 PE

-KF1.11
/10.3

X01 1 2 3 4 5 (7/8") — 2M 1M FE 1L+ 2L+ — DC 24V (IN)

X02 1 2 3 4 5 (7/8") — 2M 1M FE 1L+ 2L+ — DC 24V (OUT)

XIOP — IOP

XUSB — USB_B

XPM — POWER MODULE 1F

XMMC — MM-CARD

SIEMENS

SINAMICS G120D CONTROL UNIT CU250D-2 PN-F
CU250D-2 PN-F
6SL3546-0FB21-1FA0

PROFINET-PORT 1

ADDRESS

X03 1 2 3 4 SH (M12) — TX+ RX+ TX- RX-

PROFINET-PORT 2

ADDRESS

X04 1 2 3 4 SH (M12) — TX+ RX+ TX- RX-

HTL-ENCODER

X06 1 2 3 4 5 6 7 8 SH (M12) — +24V A A* B B* Z Z* 0V

1 2 3 4 SH

-WF1

PROFINET Cable
6XV1840-3AH10

+.WL4WL1KF1-WF1
=V2WL3WL1KF1+.WL3KF1/10.2

-KF1.11
/10.0

X07 1 2 3 4 5 (M12) — 1L+ DI 1 F-DI 0 1M DI 0 FE

X08 1 2 3 4 5 (M12) — 1L+ DI 3 F-DI 1 1M DI 2 FE

X09 1 2 3 4 5 (M12) — 1L+ DI 5 F-DI 2 1M DI 4 FE

X10 1 2 3 4 5 6 7 8 (M12) — N.C. +10V AI 0+ AI 1+ N.C. N.C. 0V N.C.

SIEMENS

SINAMICS G120D CONTROL UNIT CU250D-2 PN-F
CU250D-2 PN-F
6SL3546-0FB21-1FA0

X05 1 2 3 4 5 (M12) — N.C. DO 1 F-DO 0 2M DO 0 FE

=V2WL3WL1WC1+.WL3UC01/1

=V2WL4WL1WC1+.WL4UC01/1

			Date	1/24/2023	Volvo Trucks North America	Valiant TMS	G120D Control Unit	Drawing name: =2V01&EFS-EL_KF1	= V2WL4WL1KF1
			Ed.	MKLEPADLO					+ V2WL4KF1
			Appr		P6700 Framing - Cell 2V01, KF1	Scale 1:1		Document type: EFS	Project nr: 22-16152
Modification	Date	Name	Original		Replacement of	Replaced by			Page 10 / 1630

0	1	2	3	4	5	6	7	8	9

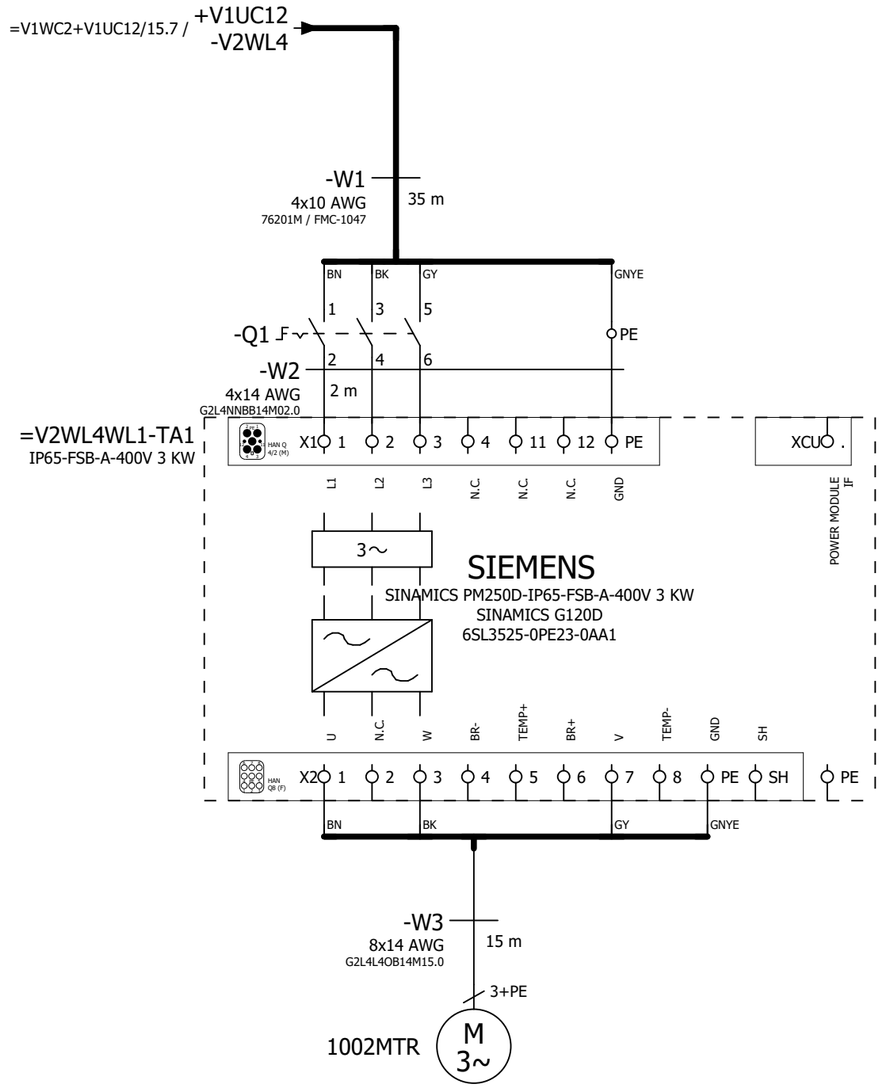

=V2WL4WL1KF1+.WL4KF1/10

&ELU=KF0+UC31/1

			Date	1/24/2023	Volvo Trucks North America	Valiant TMS	Incoming power	Drawing name: =2V01&EFS-EL_KF1	= V2WL4WL1WC1
			Ed.	MKLEPADLO					+ V2WL4UC01
			Appr		P6700 Framing - Cell 2V01, KF1			Document type: EFS	Project nr: 22-16152
Modification	Date	Name	Original		Replacement of	Replaced by	Scale 1:1		Page 1 / 1630

0	1	2	3	4	5	6	7	8	9

-UC31

&EFS=V2WL4WL1WC1+V2WL4UC01/1

2

			Date	1/24/2023	Volvo Trucks North America	Valiant TMS	Layout UC31 MOP	Drawing name: =2V01&EFS-EL_KF1	= KF0
			Ed.	MKLEPADLO					+ UC31
			Appr		P6700 Framing - Cell 2V01, KF1			Document type: ELU	Project nr: 22-16152
Modification	Date	Name	Original		Replacement of	Replaced by	Scale 1:1		Page 1 / 1630

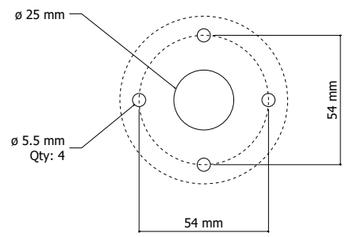

DETAIL 'B'
ABB Stack light
K70 series

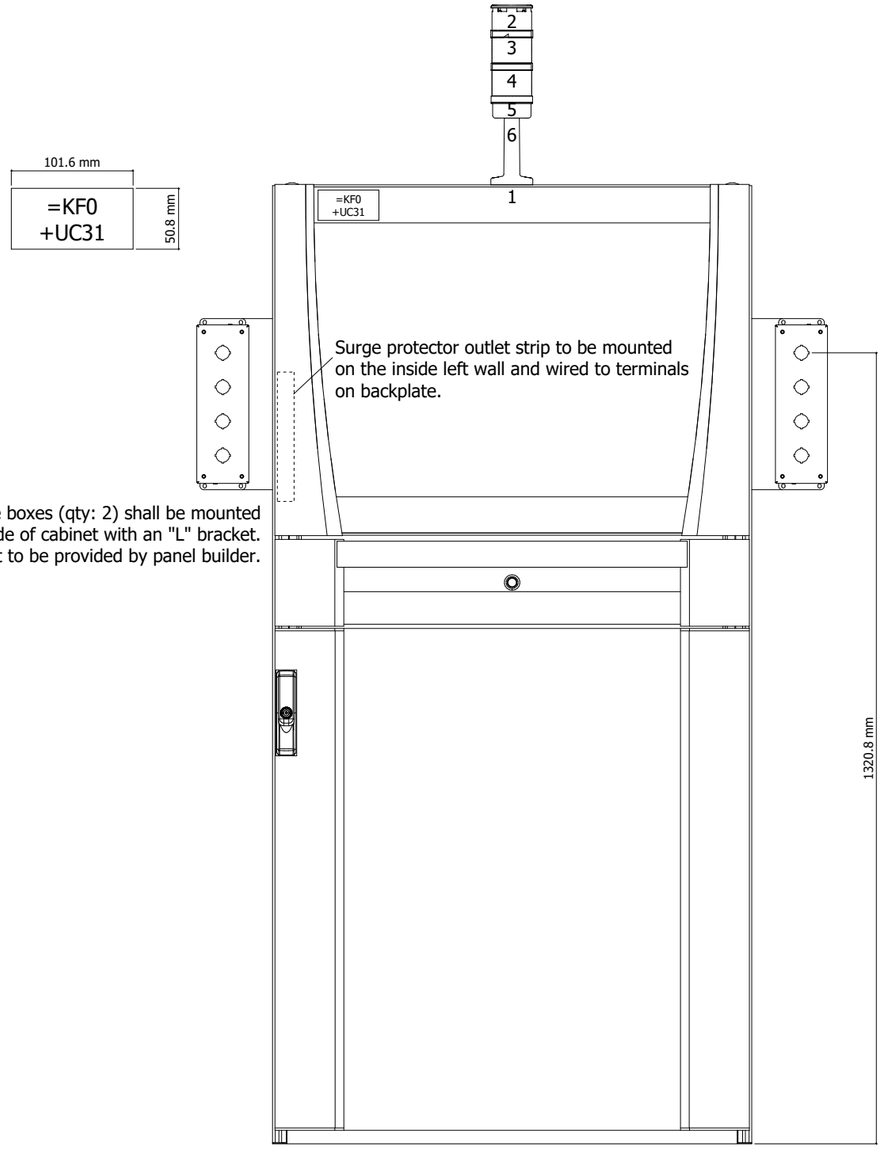

Enclosure boxes (qty: 2) shall be mounted to the side of cabinet with an "L" bracket.
* Mounting bracket to be provided by panel builder.

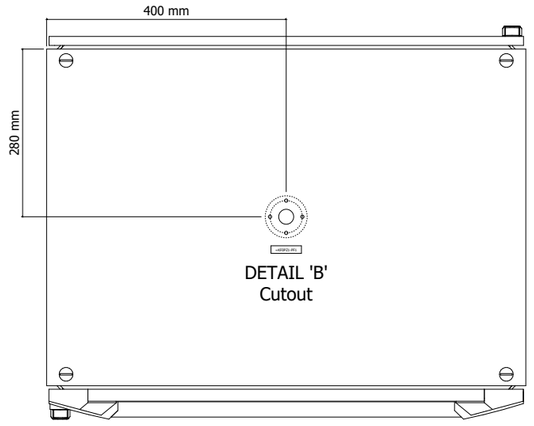

DETAIL 'B'
Cutout

Top View
of Enclosure

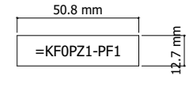

Enclosure panel shall be finished in RAL 7035 Light Grey paint.

1 3

			Date	1/24/2023	Volvo Trucks North America		Valiant TMS	Layout UC31 MOP External View	Drawing name: =2V01&EFS-EL_KF1	= KF0
			Ed.	MKLEPADLO						+ UC31
			Appr		P6700 Framing - Cell 2V01, KF1		Scale 1:10		Document type: ELU	Project nr: 22-16152
Modification	Date	Name	Original		Replacement of	Replaced by				Page 2 / 1630

0	1	2	3	4	5	6	7	8	9

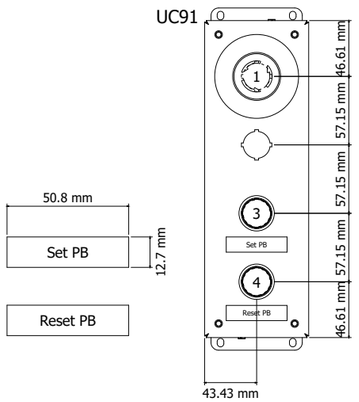

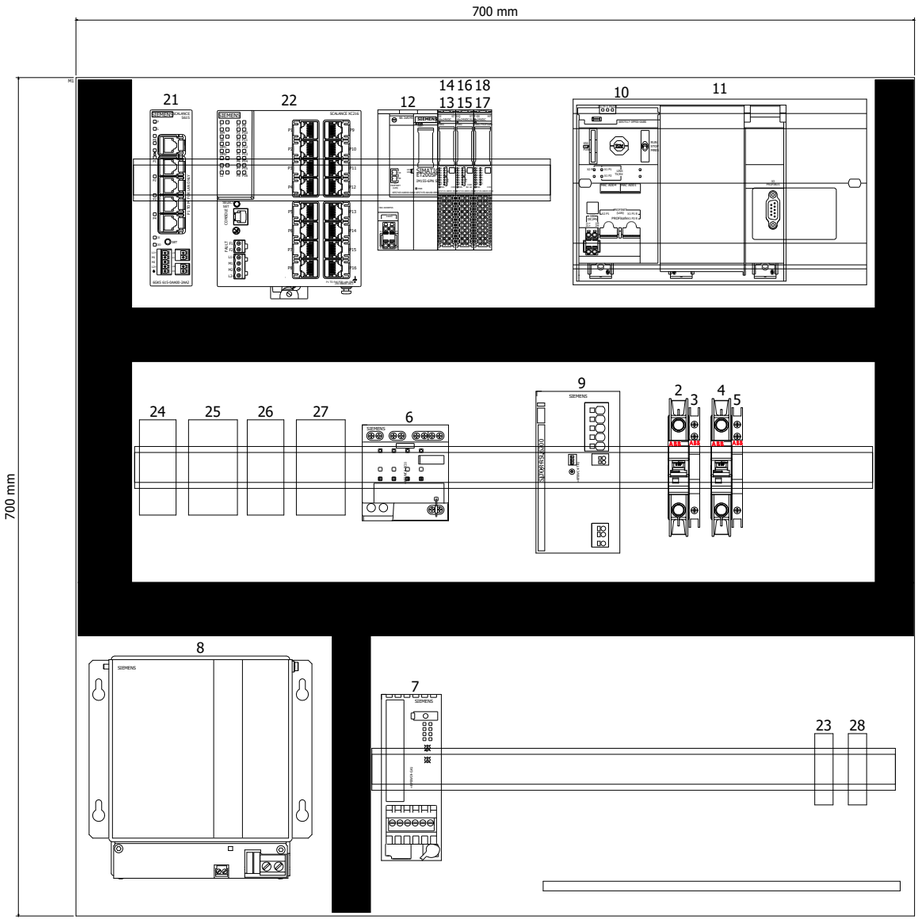

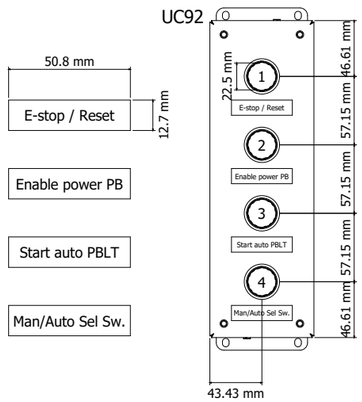

DETAIL 'B'
M12 Profinet Receptacle
Qty: 11

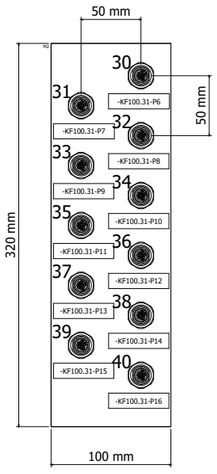

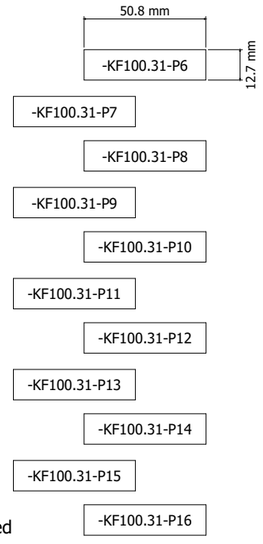

Profinet receptacle plate. Shall be mounted
to left side of subplate with a bracket.
* Mounting bracket to be provided by panel builder.

2

=V1PZ1PF1+V1UC61/1

			Date	1/24/2023	Volvo Trucks North America	Valiant TMS	Layout UC31 MOP Internal View	Drawing name: =2V01&EFS-EL_KF1	= KF0
			Ed.	MKLEPADLO					+ UC31
			Appr		P6700 Framing - Cell 2V01, KF1	Scale 1:5		Document type: ELU	Project nr: 22-16152
Modification	Date	Name	Original		Replacement of	Replaced by			Page 3 / 1630

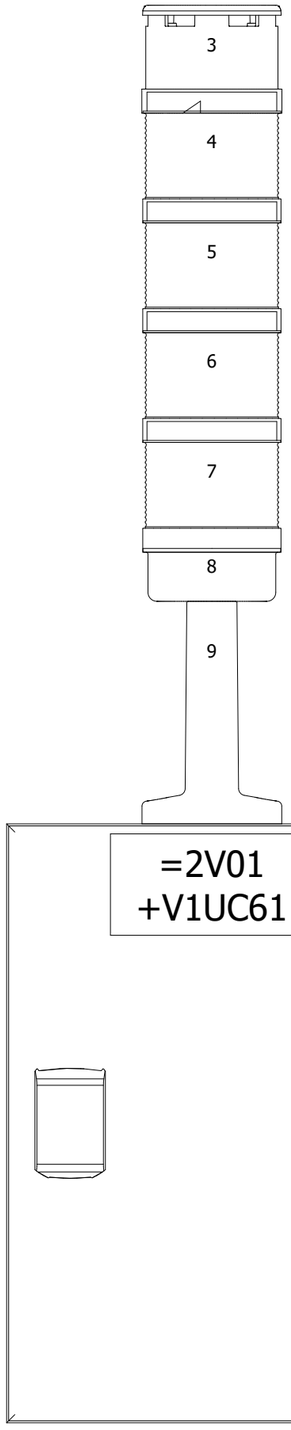

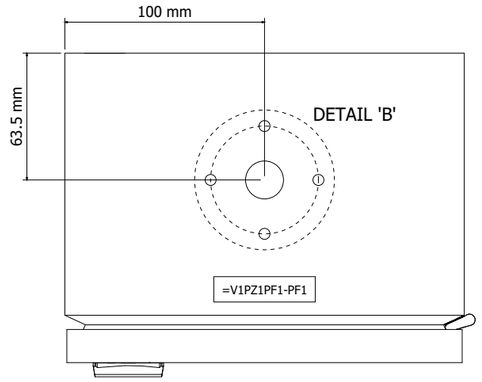

Top View
of Enclosure

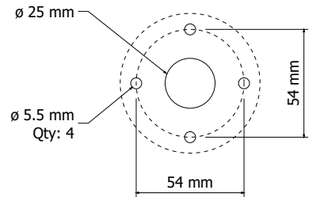

DETAIL 'B'
ABB Stack light
K70 series

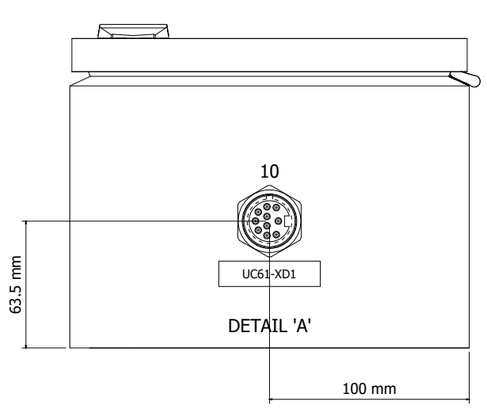

Buttom View
of Enclosure

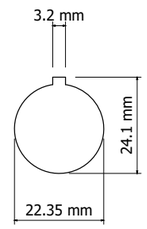

DETAIL 'A'
1-1/8" Receptacle

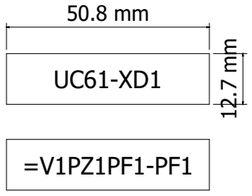

=KF0+UC31/3

2

			Date	1/24/2023	Volvo Trucks North America	Valiant TMS	Layout UC61 SL External View	Drawing name: =2V01&EFS-EL_KF1	= V1PZ1PF1
			Ed.	MKLEPADLO					+ V1UC61
			Appr		P6700 Framing - Cell 2V01, KF1			Document type: ELU	Project nr: 22-16152
Modification	Date	Name	Original		Replacement of	Replaced by	Scale 1:3		Page 1 / 1630

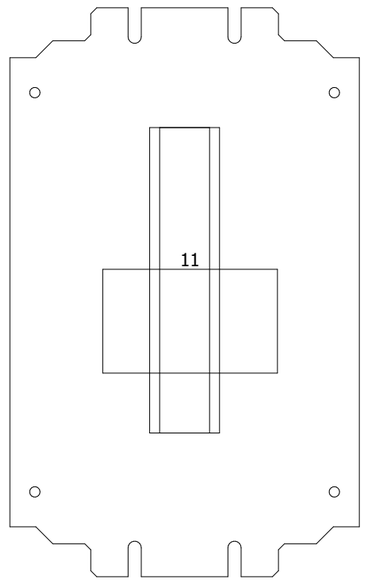

1

=V1SF0PG1+.UC32/1

			Date	1/24/2023	Volvo Trucks North America	Valiant TMS	Layout UC61 SL Internal View	Drawing name: =2V01&EFS-EL_KF1	= V1PZ1PF1	
			Ed.	MKLEPADLO					+ V1UC61	
			Appr		P6700 Framing - Cell 2V01, KF1			Document type: ELU	Project nr: 22-16152	Page 2
Modification	Date	Name	Original		Replacement of / Replaced by	Scale 1:3				1630

0	1	2	3	4	5	6	7	8	9

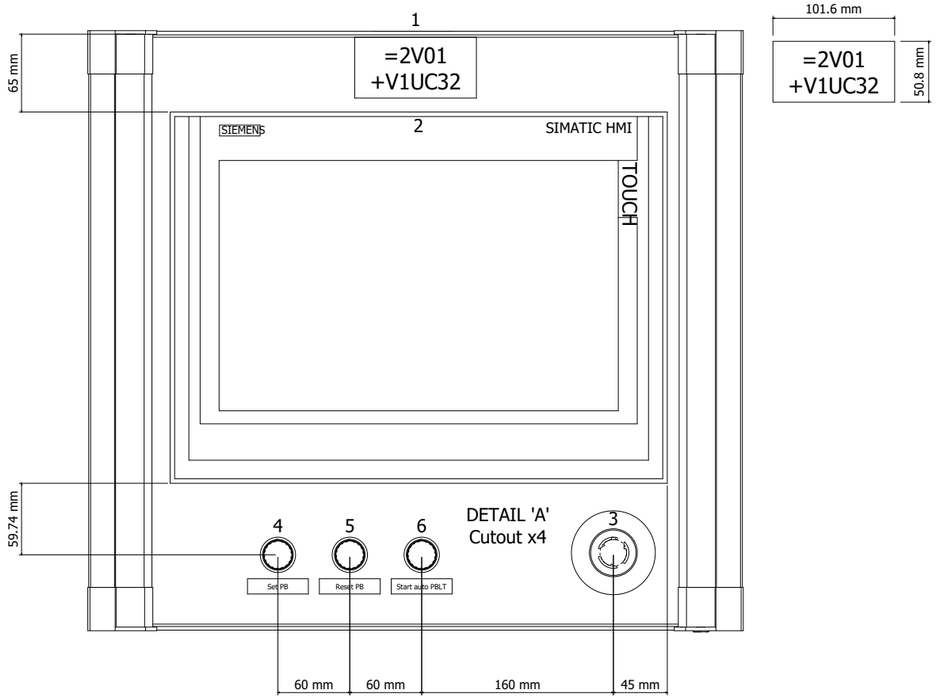

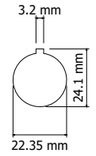

DETAIL 'A'
7/8" Receptacle,
Pushbutton and E-stop

DETAIL 'B'
M12 Profinet Receptacle

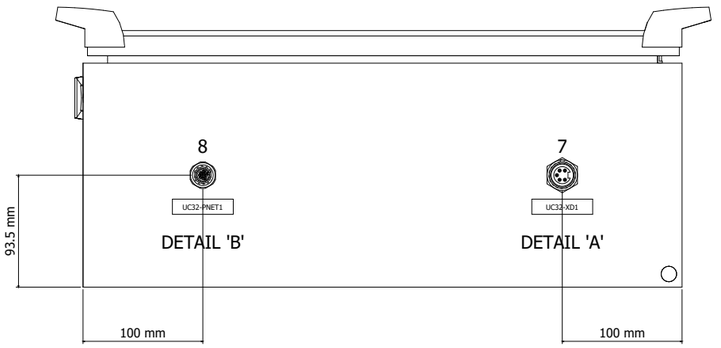

Buttom View
of Enclosure

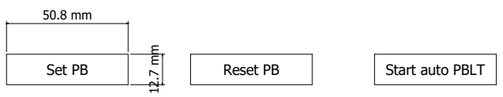

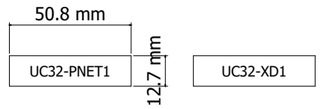

Enclosure panel shall be finished in RAL 7035 Light Grey paint.

=V1PZ1PF1+.UC61/2

2

			Date	1/24/2023	Volvo Trucks North America	Valiant TMS	Layout UC32 SOP External View	Drawing name: =2V01&EFS-EL_KF1	= V1SF0PG1
			Ed.	MKLEPADLO					+ V1UC32
			Appr		P6700 Framing - Cell 2V01, KF1	Scale 1:5		Document type: ELU	Project nr: 22-16152
Modification	Date	Name	Original		Replacement of	Replaced by			Page 1 / 1630

0	1	2	3	4	5	6	7	8	9

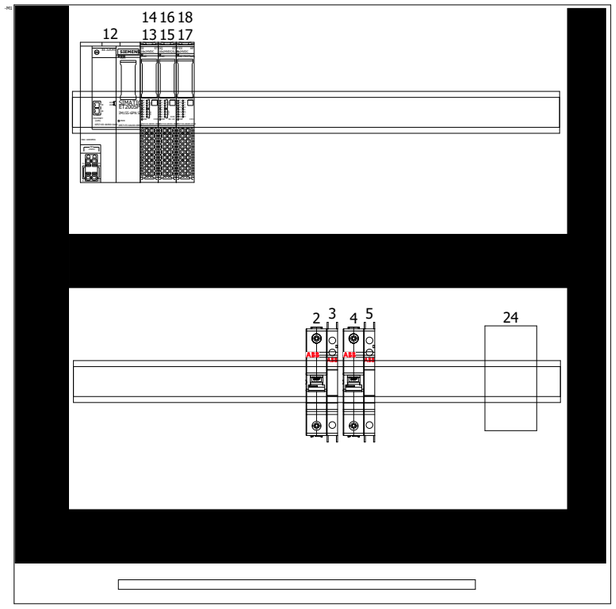

1

=V1SF0PG2+.UC51/1

			Date	1/24/2023	Volvo Trucks North America	Valiant TMS	Layout UC32 Sop Internal View	Drawing name: =2V01&EFS-EL_KF1	= V1SF0PG1	
			Ed.	MKLEPADLO					+ V1UC32	
			Appr		P6700 Framing - Cell 2V01, KF1			Document type: ELU	Project nr: 22-16152	Page 2
Modification	Date	Name	Original		Replacement of	Replaced by	Scale 1:5			1630

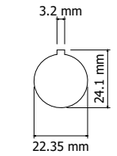

DETAIL 'A'
7/8" Receptacle

DETAIL 'B'
M12 Profinet Receptacle

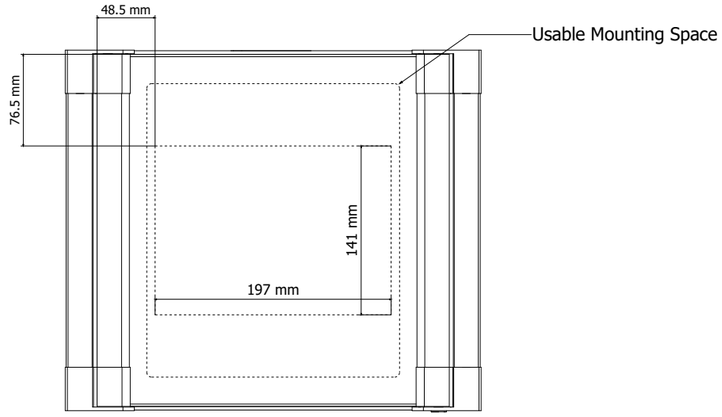

(Cutout measured from edge of removable mounting plate)

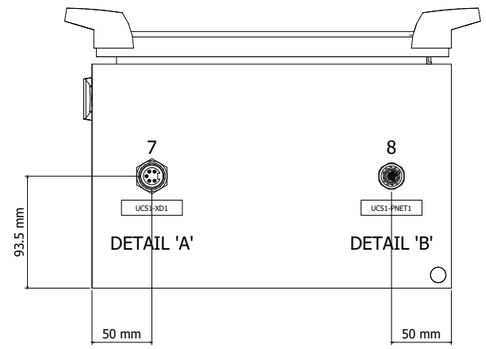

Buttom View
of Enclosure

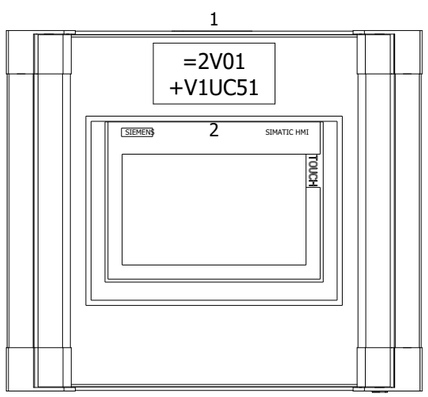

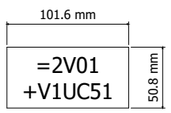

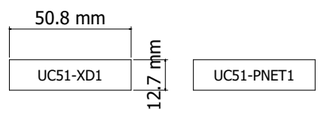

Enclosure panel shall be finished in RAL 7035 Light Grey paint.

=V1SF0PG1+.UC32/2

=V1SF0SF1+.UC71/1

			Date	1/24/2023	Volvo Trucks North America	Valiant TMS	Layout UC51 OD External View	Drawing name: =2V01&EFS-EL_KF1	= V1SF0PG2	
			Ed.	MKLEPADLO					+ V1UC51	
			Appr		P6700 Framing - Cell 2V01, KF1	Scale 1:5		Document type: ELU	Project nr: 22-16152	Page 1 / 1630
Modification	Date	Name	Original		Replacement of	Replaced by				

0	1	2	3	4	5	6	7	8	9

50.8 mm

+V1UC71UC01

12.7 mm

Operator Run

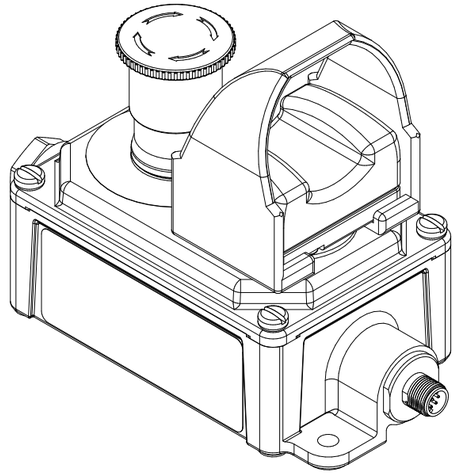

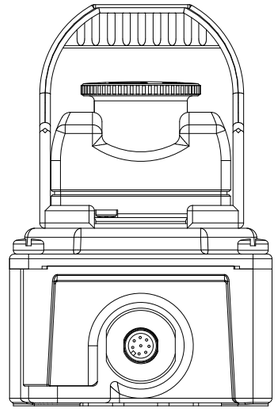

148.1 mm

55.9 mm

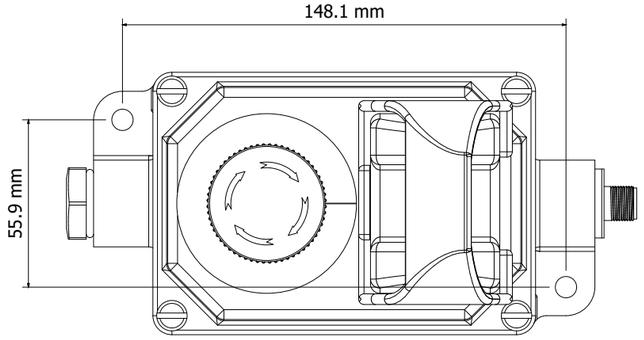

=V1SF0PG2+.UC51/1

=V1UC11+.UC11/1

			Date	1/24/2023	Volvo Trucks North America	Valiant TMS	Layout UC71 RB External View	Drawing name: =2V01&EFS-EL_KF1	= V1SF0SF1
			Ed.	MKLEPADLO					+ V1UC71
			Appr		P6700 Framing - Cell 2V01, KF1	Scale 1:2		Document type: ELU	Project nr: 22-16152
Modification	Date	Name	Original		Replacement of	Replaced by			Page 1 / 1630

0	1	2	3	4	5	6	7	8	9

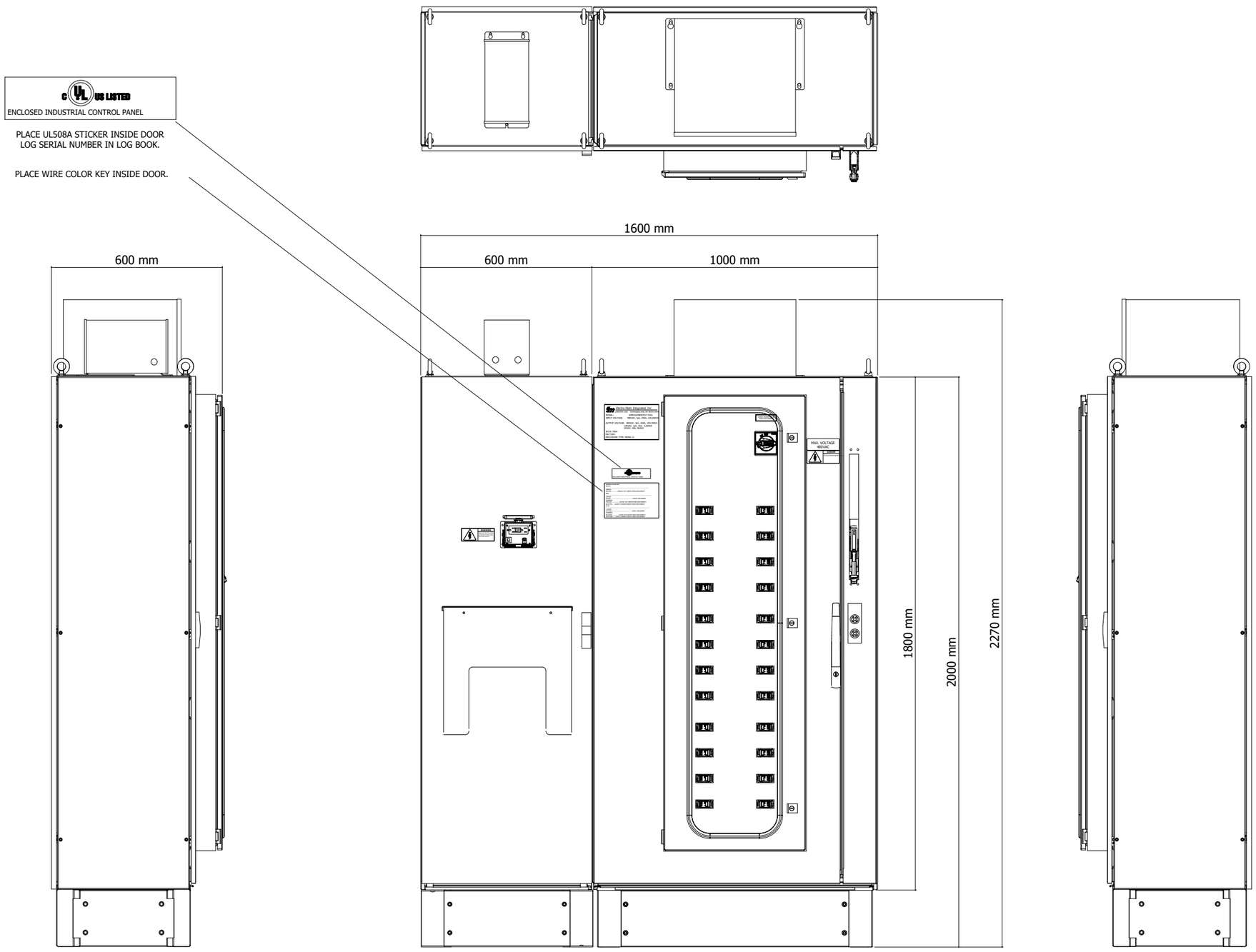

=V1SF0SF1+.UC71/1

2

			Date	1/24/2023	Volvo Trucks North America	Valiant TMS	Layout UC11 PDP External View	Drawing name: =2V01&EFS-EL_KF1	= V1UC11
			Ed.	MKLEPADLO					+ V1UC11
			Appr		P6700 Framing - Cell 2V01, KF1			Document type: ELU	Project nr: 22-16152
Modification	Date	Name	Original		Replacement of / Replaced by	Scale 1:15			Page 1 / 1630

0	1	2	3	4	5	6	7	8	9

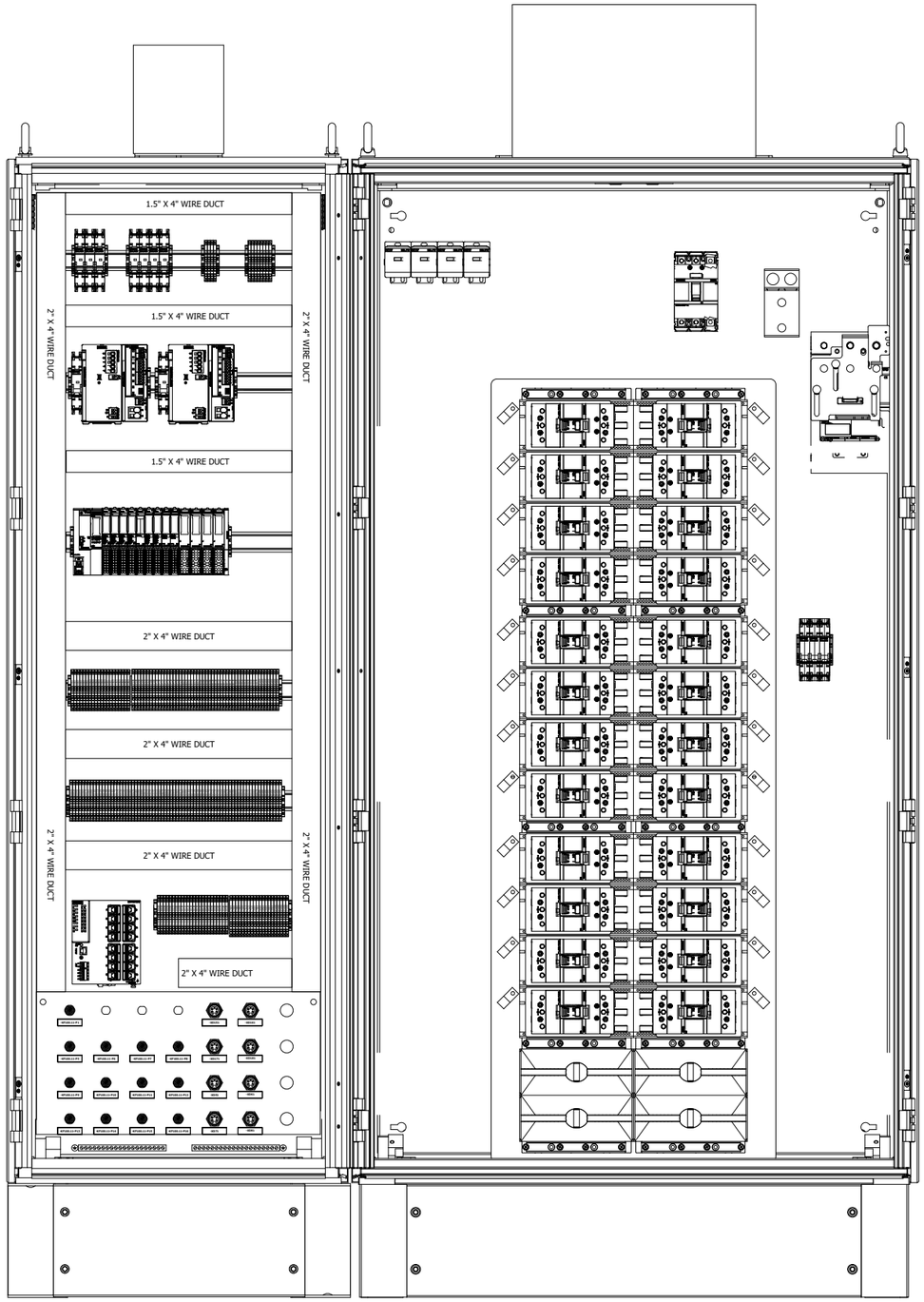

1

=V1UC12+.UC12/1

			Date	1/24/2023	Volvo Trucks North America	Valiant TMS	Layout UC11 PDP Internal View	Drawing name: =2V01&EFS-EL_KF1	= V1UC11		
			Ed.	MKLEPADLO					+ V1UC11		
1	2020-11-06	MINO	Appr		P6700 Framing - Cell 2V01, KF1			Document type: ELU	Project nr: 22-16152	Page	2
Modification	Date	Name	Original		Replacement of	Replaced by	Scale 1:10				1630

0	1	2	3	4	5	6	7	8	9

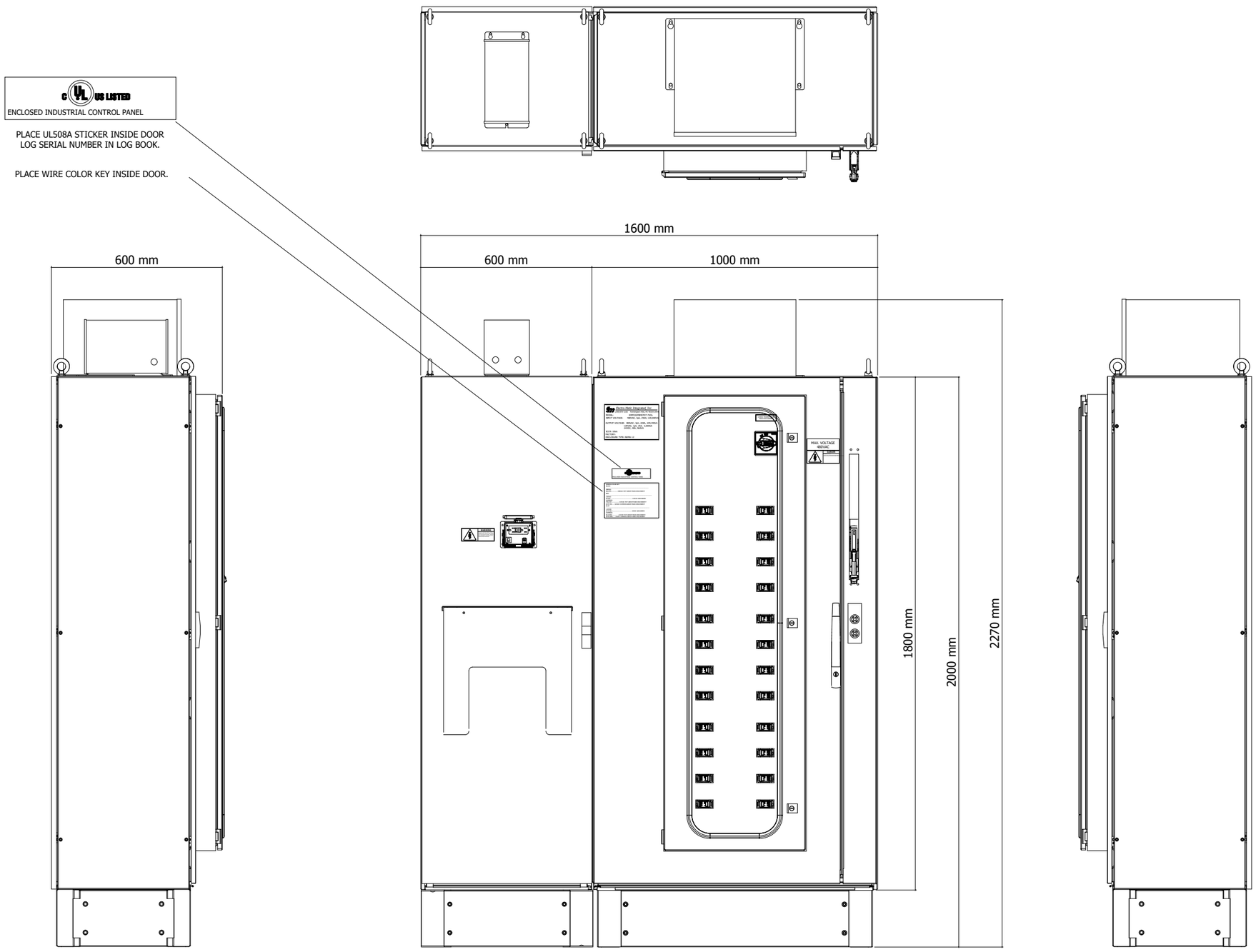

=V1UC11+.UC11/2

2

			Date	1/24/2023	Volvo Trucks North America	Valiant TMS	Layout UC12 PDP External View	Drawing name: =2V01&EFS-EL_KF1	= V1UC12
			Ed.	MKLEPADLO					+ V1UC12
			Appr		P6700 Framing - Cell 2V01, KF1			Document type: ELU	Project nr: 22-16152
Modification	Date	Name	Original		Replacement of / Replaced by	Scale 1:15			Page 1 / 1630

0	1	2	3	4	5	6	7	8	9

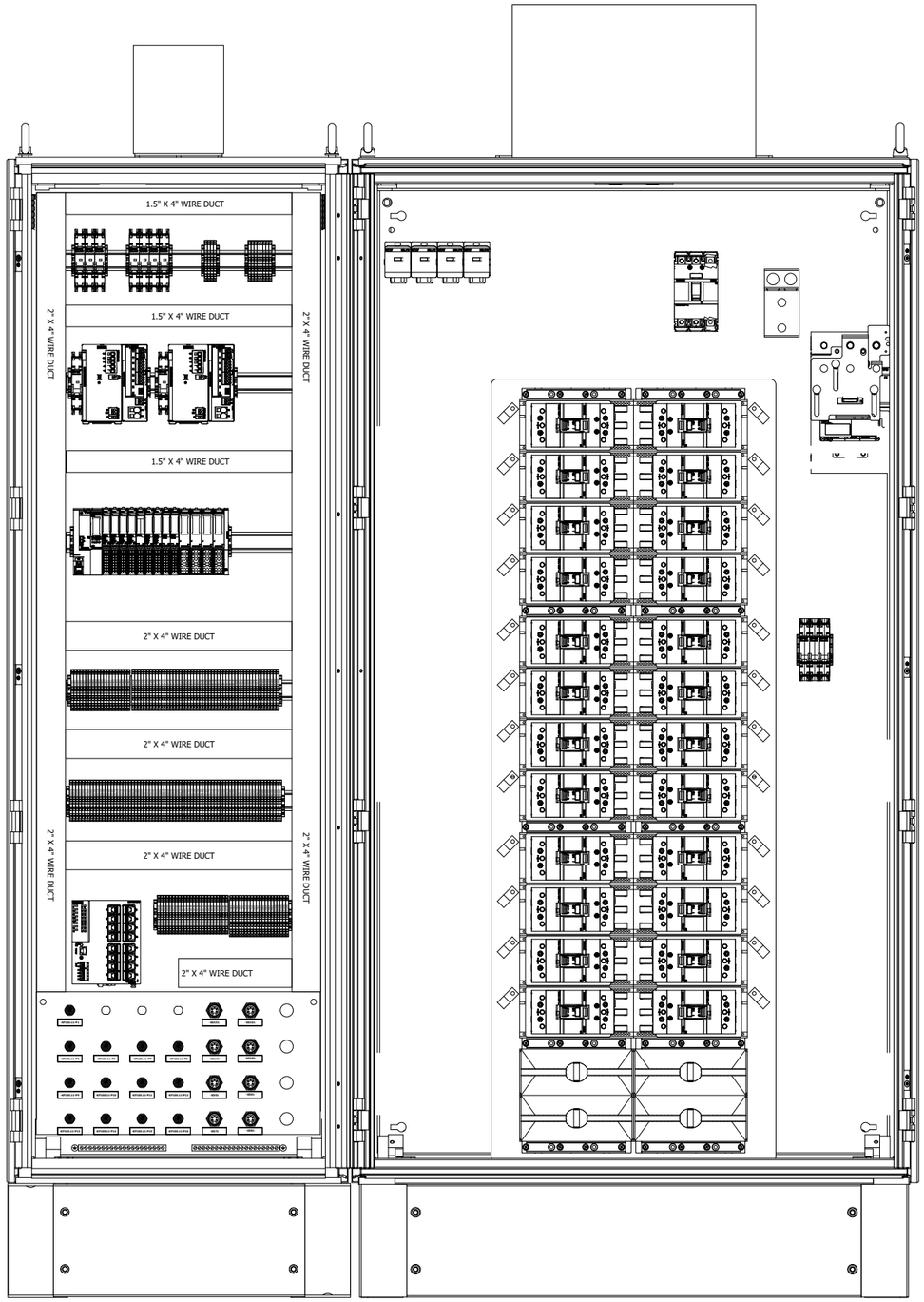

1

=V2PZ1PF1+V2UC61/1

			Date	1/24/2023	Volvo Trucks North America	Valiant TMS	Layout UC12 PDP Internal View	Drawing name: =2V01&EFS-EL_KF1		= V1UC12	
			Ed.	MKLEPADLO						+ V1UC12	
1	2020-11-06	MINO	Appr		P6700 Framing - Cell 2V01, KF1			Document type: ELU	Project nr: 22-16152	Page	2
Modification	Date	Name	Original		Replacement of	Replaced by	Scale 1:10				1630

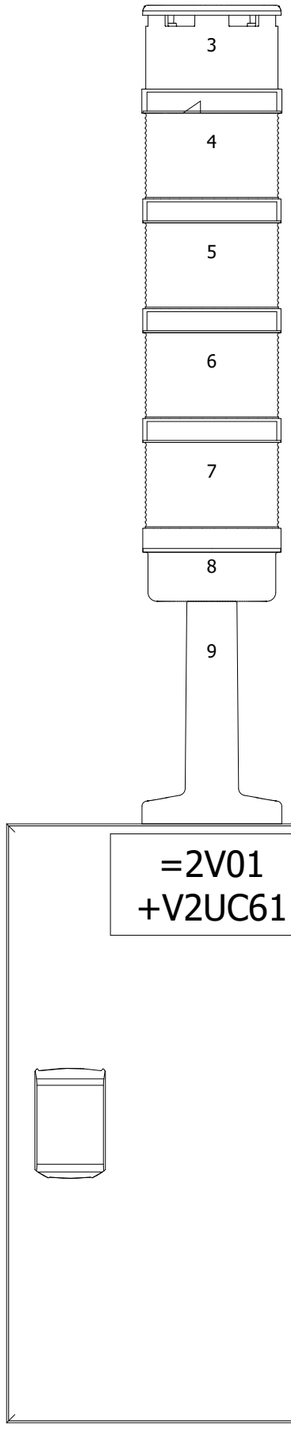

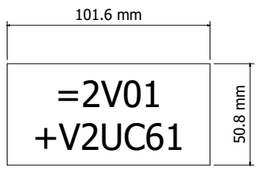

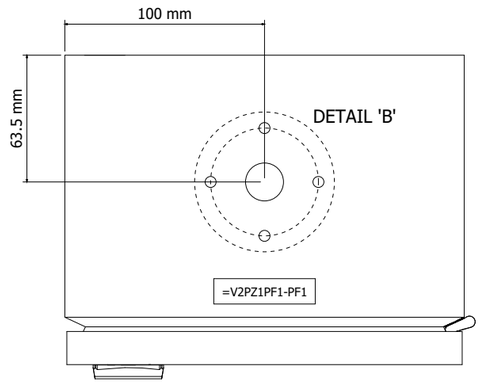

Top View
of Enclosure

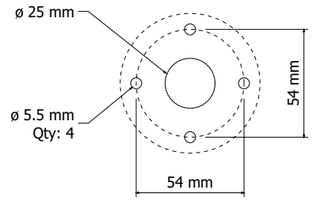

DETAIL 'B'
ABB Stack light
K70 series

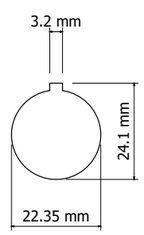

DETAIL 'A'
1-1/8" Receptacle

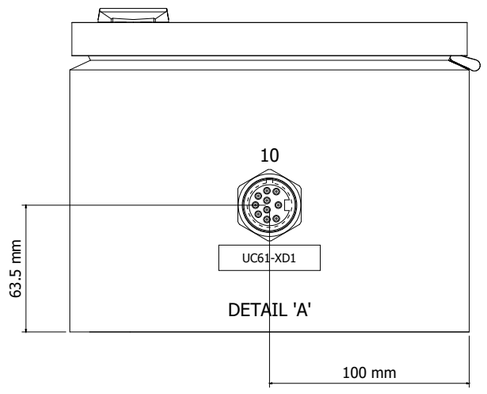

Buttom View
of Enclosure

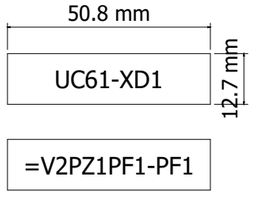

=V1UC12+V1UC12/2

2

			Date	1/24/2023	Volvo Trucks North America	Valiant TMS	Layout UC61 SL External View	Drawing name: =2V01&EFS-EL_KF1	= V2PZ1PF1
			Ed.	MKLEPADLO					+ V2UC61
			Appr		P6700 Framing - Cell 2V01, KF1			Document type: ELU	Project nr: 22-16152
Modification	Date	Name	Original		Replacement of	Replaced by	Scale 1:3		Page 1 / 1630

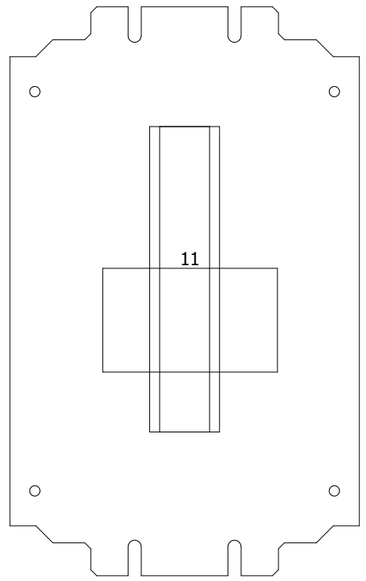

			Date	1/24/2023	Volvo Trucks North America	Valiant TMS	Layout UC61 SL Internal View	Drawing name: =2V01&EFS-EL_KF1	= V2PZ1PF1	
			Ed.	MKLEPADLO					+ V2UC61	
			Appr		P6700 Framing - Cell 2V01, KF1			Document type: ELU	Project nr: 22-16152	Page 2
Modification	Date	Name	Original		Replacement of / Replaced by	Scale 1:3				1630

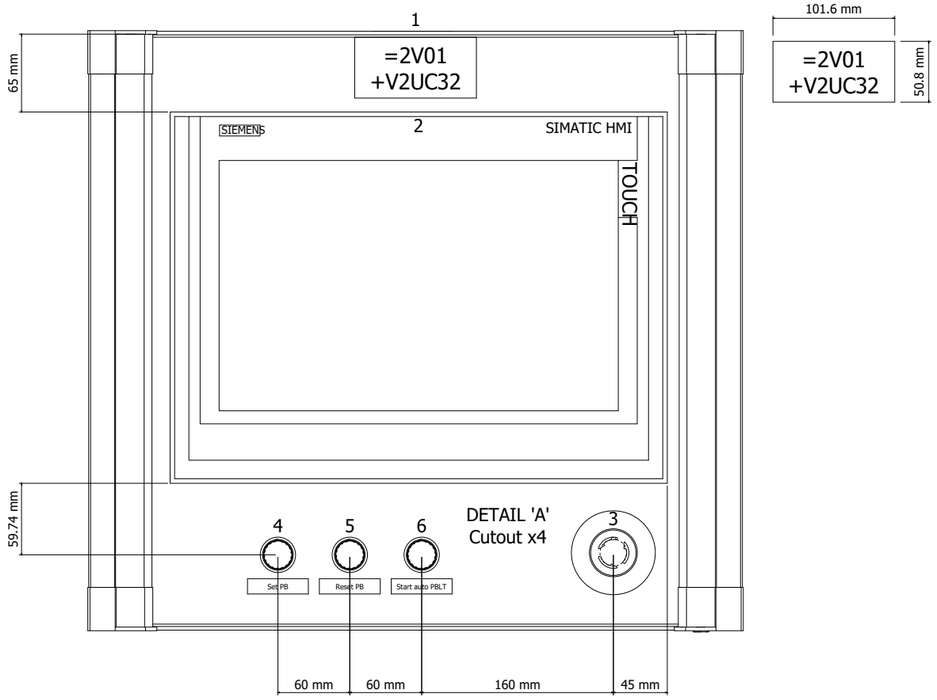

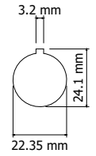

DETAIL 'A'
7/8" Receptacle,
Pushbutton and E-stop

DETAIL 'B'
M12 Profinet Receptacle

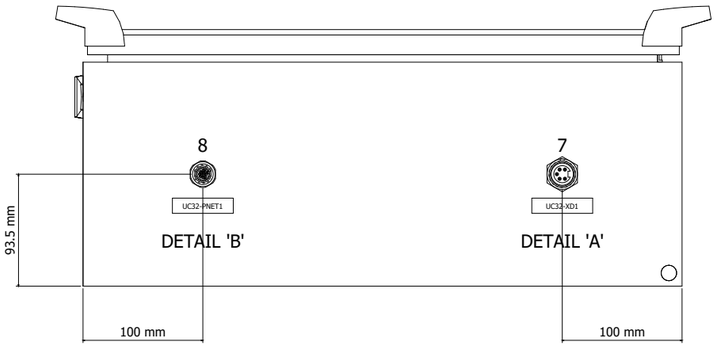

Buttom View
of Enclosure

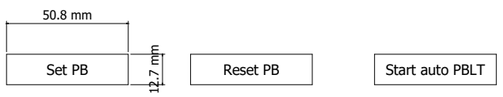

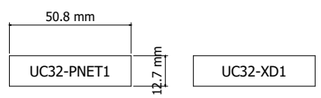

Enclosure panel shall be finished in RAL 7035 Light Grey paint.

=V2PZ1PF1+.UC61/2

2

			Date	1/24/2023	Volvo Trucks North America		Valiant TMS	Layout UC32 SOP External View	Drawing name: =2V01&EFS-EL_KF1	= V2SF0PG1
			Ed.	MKLEPADLO						+ V2UC32
			Appr		P6700 Framing - Cell 2V01, KF1		Scale 1:5		Document type: ELU	Project nr: 22-16152
Modification	Date	Name	Original		Replacement of	Replaced by				Page 1 / 1630

0	1	2	3	4	5	6	7	8	9

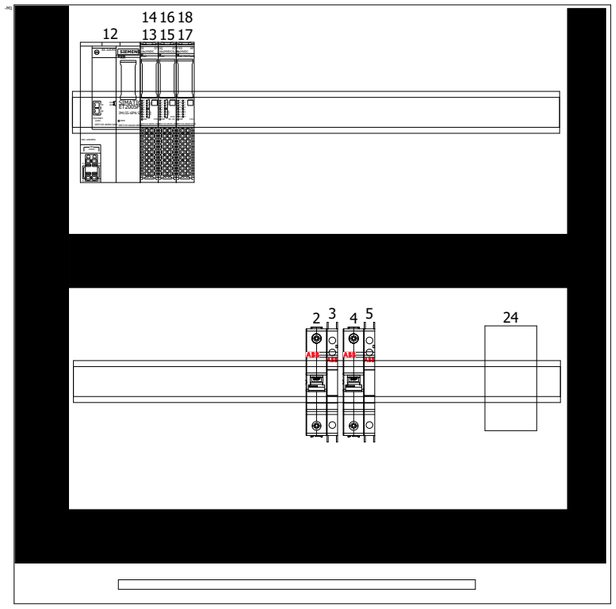

1

=V2SF0PG2+.UC33/1

			Date	1/24/2023	Volvo Trucks North America		Valiant TMS	Layout UC32 Sop Internal View	Drawing name: =2V01&EFS-EL_KF1	= V2SF0PG1	
			Ed.	MKLEPADLO						+ V2UC32	
			Appr		P6700 Framing - Cell 2V01, KF1		Scale 1:5		Document type: ELU	Project nr: 22-16152	Page 2 / 1630
Modification	Date	Name	Original		Replacement of	Replaced by					

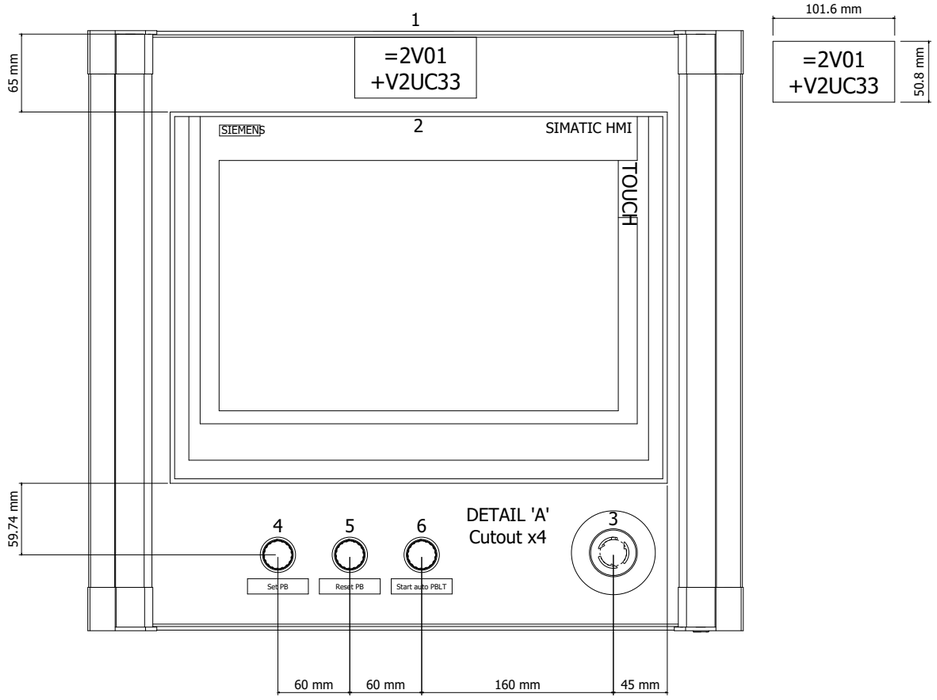

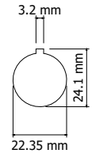

DETAIL 'A'
7/8" Receptacle,
Pushbutton and E-stop

DETAIL 'B'
M12 Profinet Receptacle

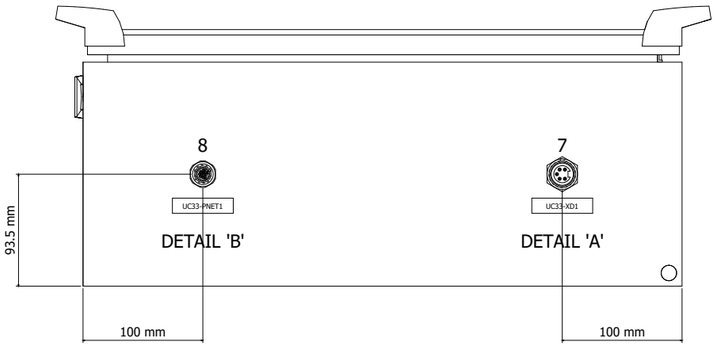

Buttom View
of Enclosure

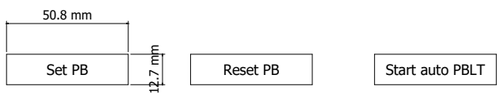

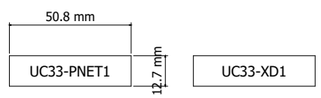

Enclosure panel shall be finished in RAL 7035 Light Grey paint.

=V2SF0PG1+.UC32/2

2

			Date	1/24/2023	Volvo Trucks North America		Valiant TMS	Layout UC33 SOP External View	Drawing name: =2V01&EFS-EL_KF1	= V2SF0PG2
			Ed.	MKLEPADLO						+ V2UC33
			Appr		P6700 Framing - Cell 2V01, KF1		Scale 1:5		Document type: ELU	Project nr: 22-16152
Modification	Date	Name	Original		Replacement of	Replaced by				Page 1 / 1630

0	1	2	3	4	5	6	7	8	9

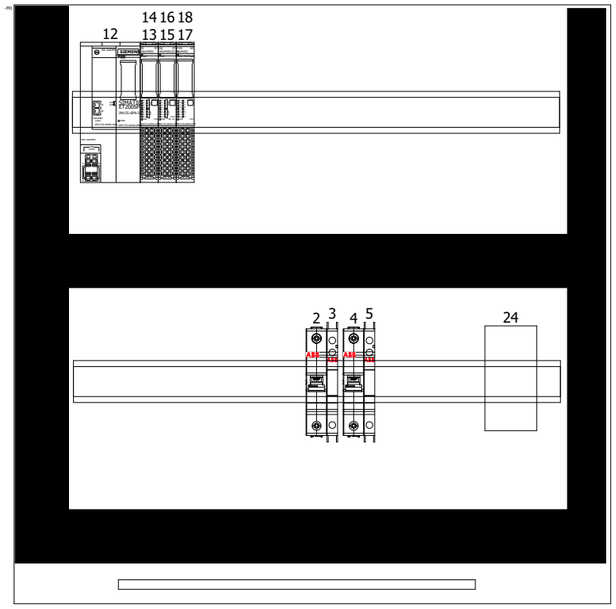

1

=V2UC14+.UC14/1

			Date	1/24/2023	Volvo Trucks North America		Valiant TMS	Layout UC33 SOP Internal View	Drawing name: =2V01&EFS-EL_KF1	= V2SF0PG2	
			Ed.	MKLEPADLO						+ V2UC33	
			Appr		P6700 Framing - Cell 2V01, KF1		Scale 1:5		Document type: ELU	Project nr: 22-16152	Page 2 / 1630
Modification	Date	Name	Original		Replacement of	Replaced by					

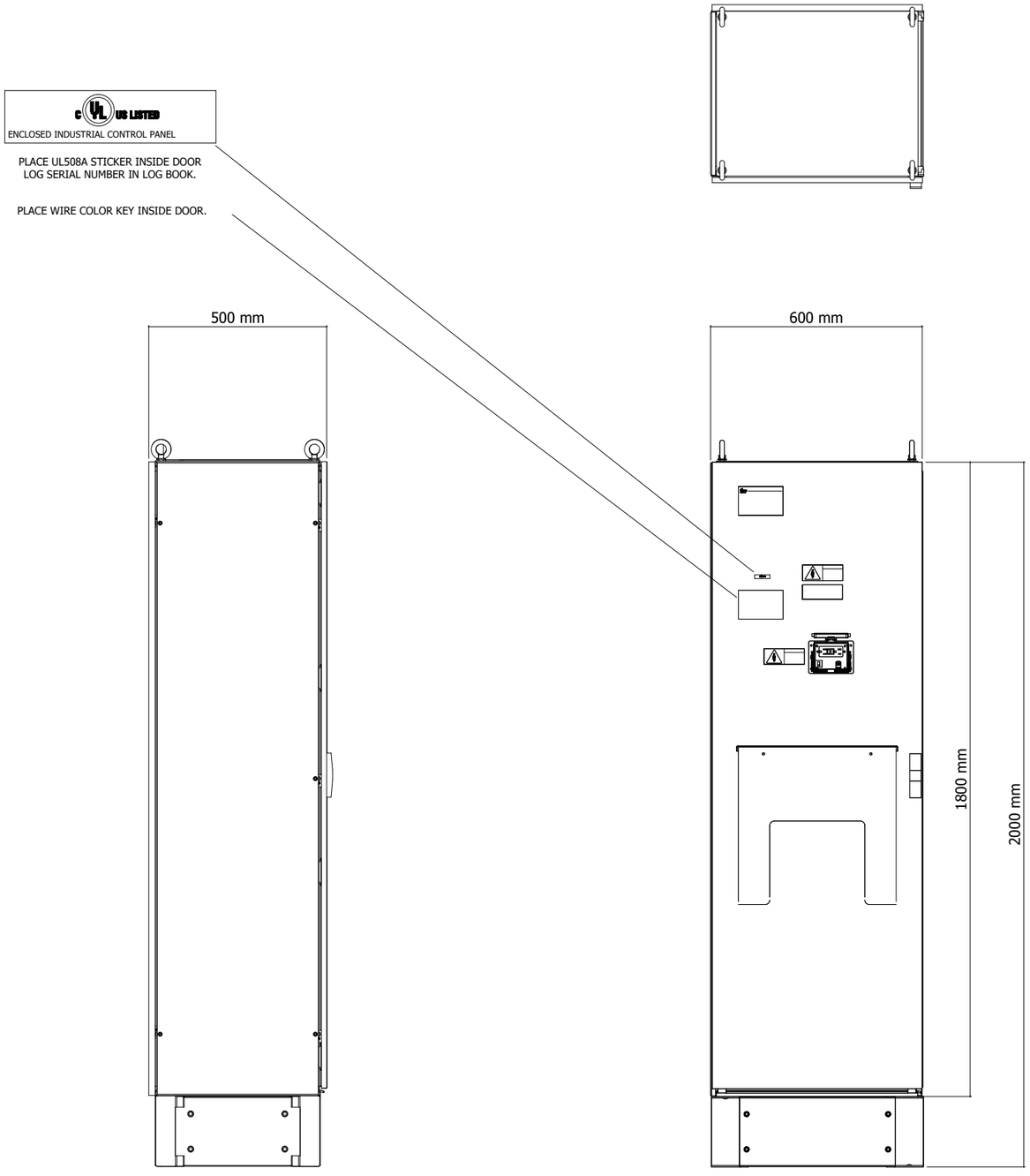

=V2SF0PG2+.UC33/2

2

			Date	1/24/2023	Volvo Trucks North America	Valiant TMS	Layout UC14 RIO External View	Drawing name: =2V01&EFS-EL_KF1	= V2UC14
			Ed.	MKLEPADLO					+ V2UC14
			Appr		P6700 Framing - Cell 2V01, KF1			Document type: ELU	Project nr: 22-16152
Modification	Date	Name	Original		Replacement of / Replaced by	Scale 1:15			Page 1 / 1630

0	1	2	3	4	5	6	7	8	9

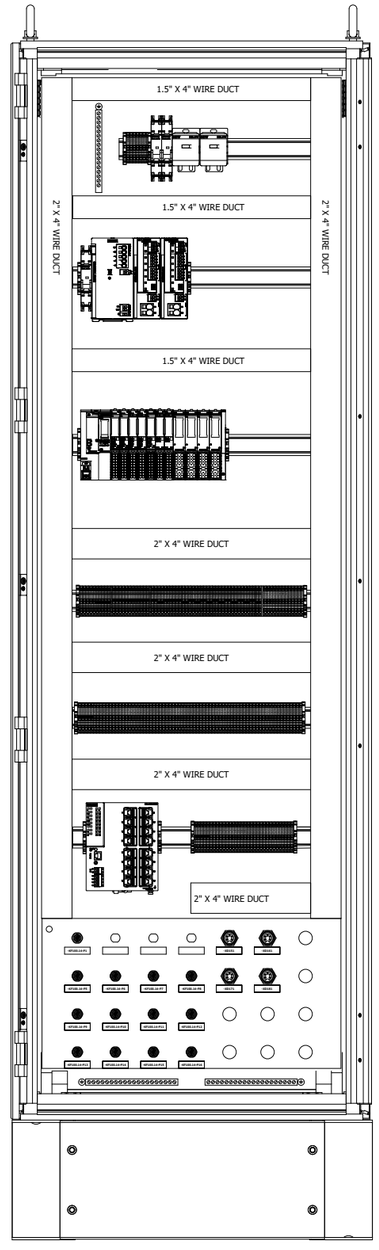

1

=V2UC15+.UC15/1

			Date	1/24/2023	Volvo Trucks North America	Valiant TMS	Layout UC14 RIO Internal Controls View	Drawing name: =2V01&EFS-EL_KF1	= V2UC14
			Ed.	MKLEPADLO					+ V2UC14
			Appr		P6700 Framing - Cell 2V01, KF1	Scale 1:10		Document type: ELU	Project nr: 22-16152
Modification	Date	Name	Original		Replacement of	Replaced by			Page 2 / 1630

0	1	2	3	4	5	6	7	8	9

PLACE UL508A STICKER INSIDE DOOR
LOG SERIAL NUMBER IN LOG BOOK.

PLACE WIRE COLOR KEY INSIDE DOOR.

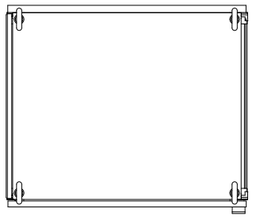

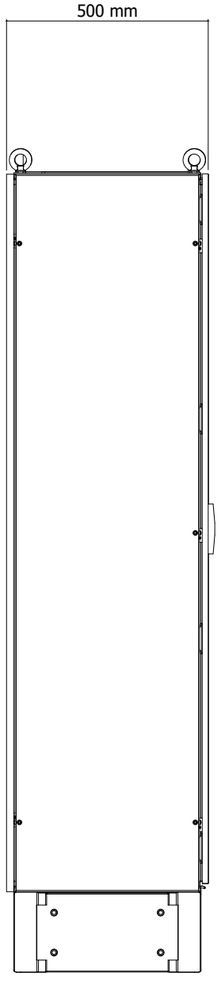

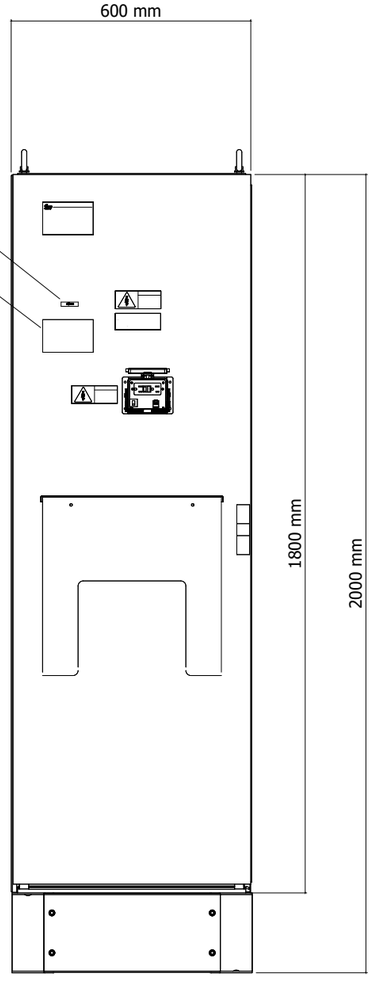

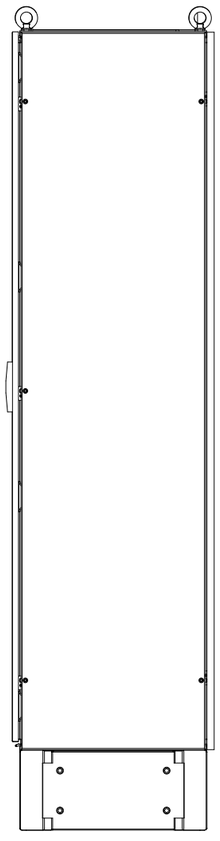

=V2UC14+.UC14/2

2

			Date	1/24/2023	Volvo Trucks North America	Valiant TMS	Layout UC15 RIO External View	Drawing name: =2V01&EFS-EL_KF1	= V2UC15
			Ed.	MKLEPADLO					+ V2UC15
			Appr		P6700 Framing - Cell 2V01, KF1			Document type: ELU	Project nr: 22-16152
Modification	Date	Name	Original		Replacement of / Replaced by	Scale 1:15			Page 1 / 1630

0	1	2	3	4	5	6	7	8	9

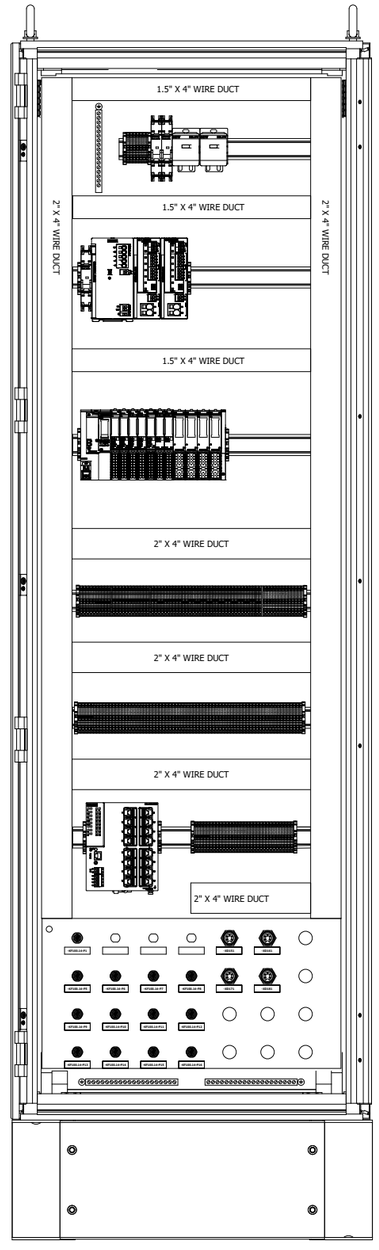

1

=V2UC81+.UC81/1

			Date	1/24/2023	Volvo Trucks North America	Valiant TMS	Layout UC15 RIO Internal Controls View	Drawing name: =2V01&EFS-EL_KF1	= V2UC15
			Ed.	MKLEPADLO					+ V2UC15
			Appr		P6700 Framing - Cell 2V01, KF1	Scale 1:10		Document type: ELU	Project nr: 22-16152
Modification	Date	Name	Original		Replacement of	Replaced by			Page 2 / 1630

0	1	2	3	4	5	6	7	8	9

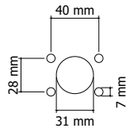

DETAIL 'D'
Rotary Disconnect

DETAIL 'C'
3/4" Cord Grip

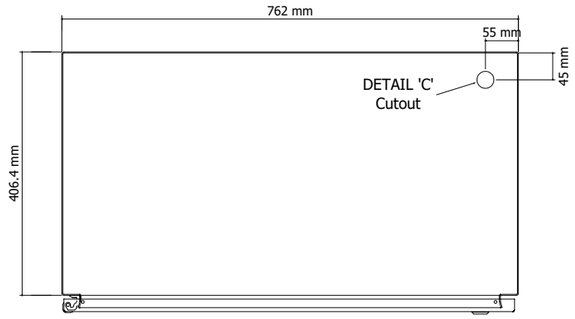

TOP VIEW

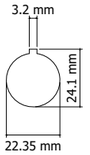

DETAIL 'A'
7/8" Receptacle

DETAIL 'B'
M12 Profinet Receptacle

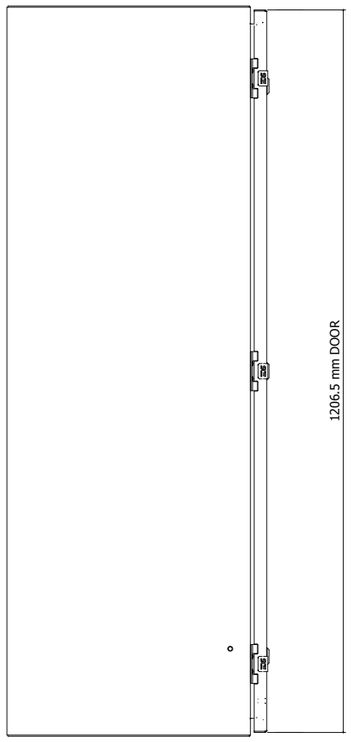

LEFT SIDE VIEW

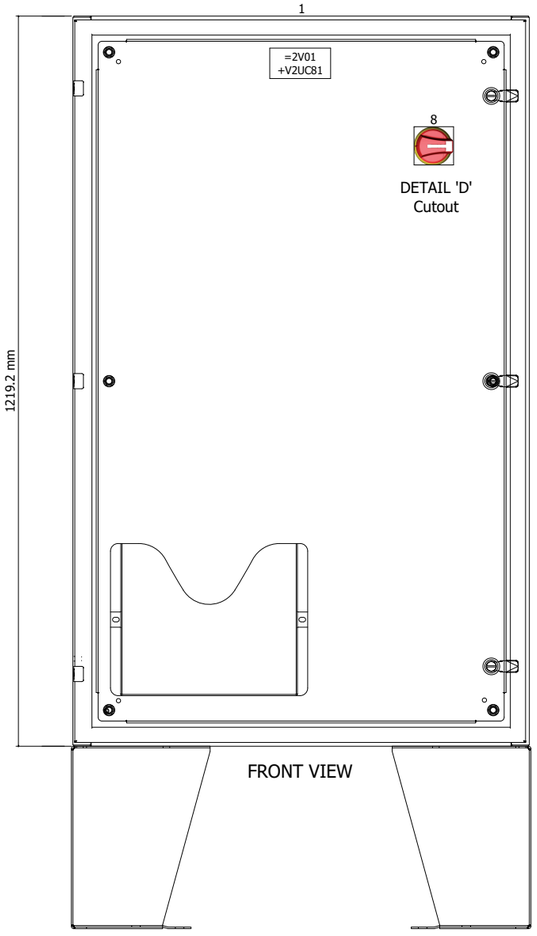

FRONT VIEW

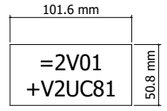

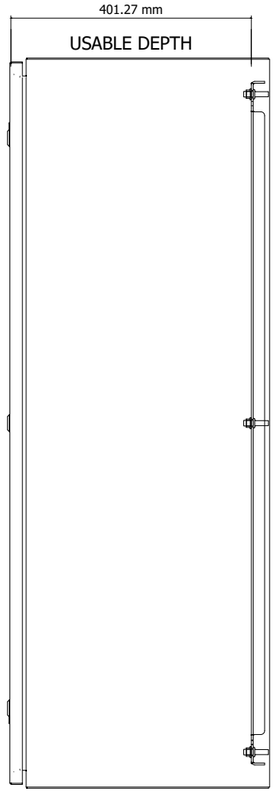

RIGHT SIDE VIEW

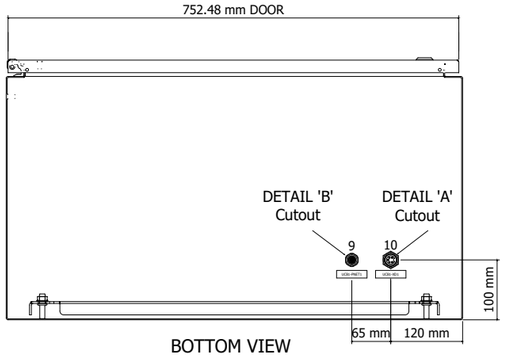

BOTTOM VIEW

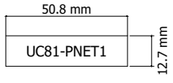

UC81-XD1

Enclosure panel shall be finished in RAL 7035 Light Grey paint.

=V2UC15+.UC15/2

2

			Date	1/24/2023	Volvo Trucks North America	Valiant TMS	Layout UC81 Servo Panel External View	Drawing name: =2V01&EFS-EL_KF1	= V2UC81
			Ed.	MKLEPADLO					+ V2UC81
			Appr		P6700 Framing - Cell 2V01, KF1	Scale 1:10		Document type: ELU	Project nr: 22-16152
Modification	Date	Name	Original		Replacement of	Replaced by			Page 1 / 1630

0	1	2	3	4	5	6	7	8	9

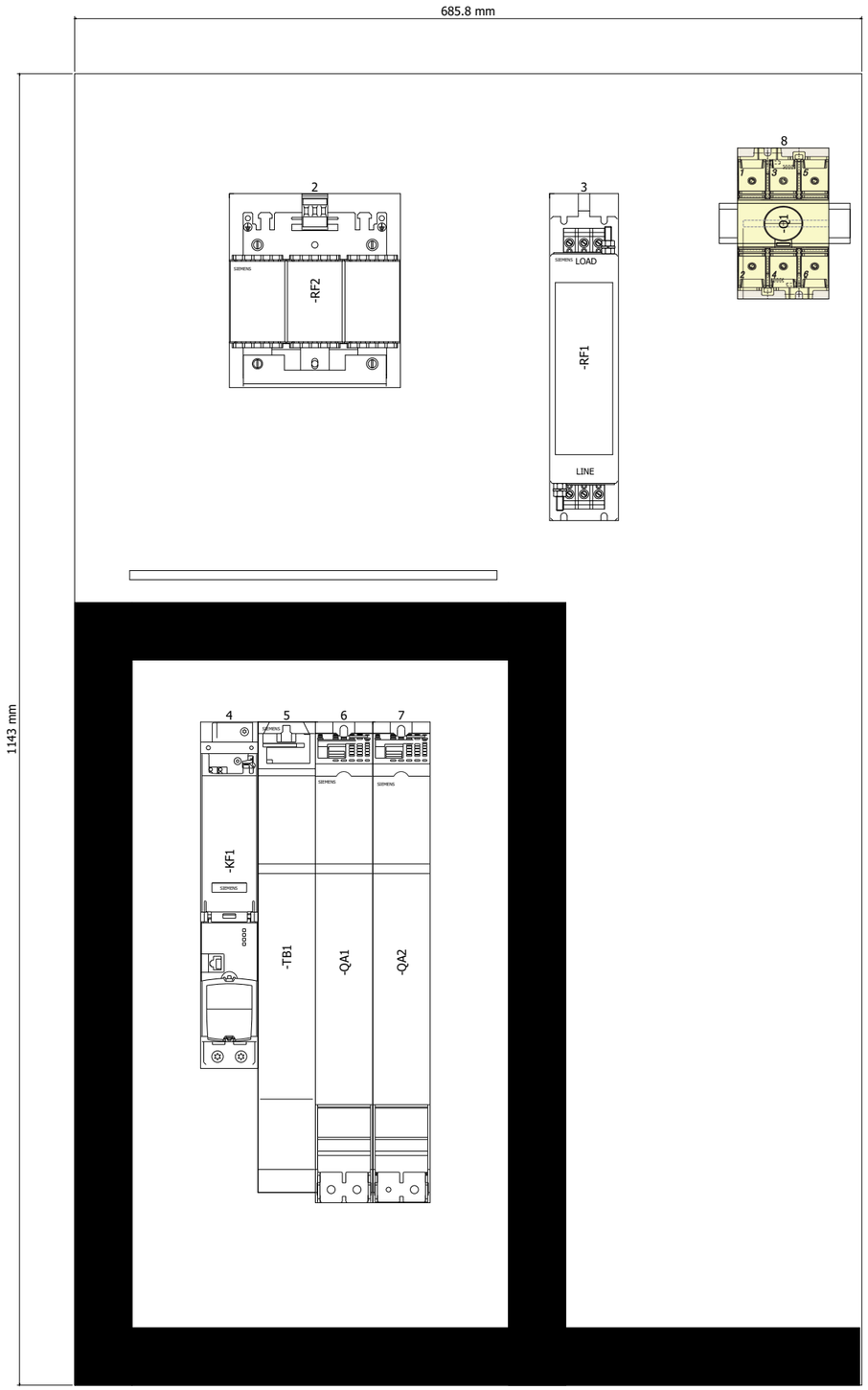

1

&EMA=KH0+KH0/1

			Date	1/24/2023	Volvo Trucks North America	Valiant TMS	Layout UC81 Servo Panel Internal View	Drawing name: =2V01&EFS-EL_KF1	= V2UC81
			Ed.	MKLEPADLO					+ V2UC81
			Appr		P6700 Framing - Cell 2V01, KF1			Document type: ELU	Project nr: 22-16152
Modification	Date	Name	Original		Replacement of / Replaced by	Scale 1:5			Page 2 / 1630

Cable diagram

F09_002_VLU

Cable name -W1			cable type NEBS-L1G4-K-5-LE4					
remark			no. of conductors 4			cross-section 26		cable length 5
function text	Page / column	Target designation from	Connection point	conductor	Target designation to	Connection point	Page / column	function text
				BN				
				BK				
				WH				
				BU				

&ELU=V2UC81+V2UC81/2

=KH3+KH3/1

			Date	1/24/2023	Volvo Trucks North America	Valiant TMS	Cable diagram =KH0+KH0-W1	Drawing name: =2V01&EFS-EL_KF1	= KH0
			Ed.	MKLEPADLO					+ KH0
			Appr		P6700 Framing - Cell 2V01, KF1			Document type: EMA / Project nr: 22-16152	Page 1
Modification	Date	Name	Original		Replacement of / Replaced by	Scale 1:1			1630

Cable diagram

F09_002_VLU

Cable name	-W1		cable type	TPE				
remark	Air supply		no. of conductors	4	cross-section	18	cable length	20

function text	Page / column	Target designation from	Connection point	conductor	Target designation to	Connection point	Page / column	function text
	&EFS=V1WC4+V1UC11/5.1	=V1WC4+V1UC11-XD13	5:2	BN	-BF1	1	&EFS/1.5	
	&EFS=V1WC4+V1UC11/5.1	=V1WC4+V1UC11-XD10	6:2	BU	-BF1	3	&EFS/1.6	
	&EFS/1.6				-BF1	2	&EFS/1.6	
	&EFS/1.6	=V1KF1+V1UC11-KF11.14	7:2		-BF1	4	&EFS/1.6	

			Date	1/24/2023	Volvo Trucks North America	Valiant TMS	Cable diagram =KH3+KH3-W1	Drawing name: =2V01&EFS-EL_KF1	= KH3
			Ed.	MKLEPADLO					+ KH3
			Appr		P6700 Framing - Cell 2V01, KF1			Document type: EMA	Project nr: 22-16152
Modification	Date	Name	Original		Replacement of / Replaced by	Scale 1:1			Page 1 / 1630

Cable diagram

F09_002_VLU

Cable name	-W2		cable type	TPE				
remark	Air supply		no. of conductors	4	cross-section	18	cable length	20

function text	Page / column	Target designation from	Connection point	conductor	Target designation to	Connection point	Page / column	function text
	&EFS=V1WC4+V1UC11/5.1	=V1WC4+V1UC11-XD13	5:3	BN	-BF2	1	&EFS/2.5	
	&EFS=V1WC4+V1UC11/5.1	=V1WC4+V1UC11-XD10	6:3	BU	-BF2	3	&EFS/2.6	
	&EFS/2.6				-BF2	2	&EFS/2.6	
	&EFS/2.6	=V1KF1+V1UC11-KF11.14	8:2		-BF2	4	&EFS/2.6	

			Date	1/24/2023	Volvo Trucks North America	Valiant TMS	Cable diagram =KH3+KH3-W2	Drawing name: =2V01&EFS-EL_KF1	= KH3	
			Ed.	MKLEPADLO					+ KH3	
			Appr		P6700 Framing - Cell 2V01, KF1			Document type: EMA	Project nr: 22-16152	Page 2
Modification	Date	Name	Original		Replacement of / Replaced by	Scale 1:1				1630

Cable diagram

F09_002_VLU

Cable name -W1			cable type TPE					
remark			no. of conductors 4			cross-section 18		cable length 0.5
function text	Page / column	Target designation from	Connection point	conductor	Target designation to	Connection point	Page / column	function text
	&EFS/1.0	-XG1/2	P1:1		=V1AR11UQ41KF1-KF1.13-X1	1	&EFS=V1AR11UQ41KF1/4.0	
	&EFS/1.1	-XG1/2	P1:3		=V1AR11UQ41KF1-KF1.13-X1	3	&EFS=V1AR11UQ41KF1/4.1	
	&EFS/1.1	-XG1/2	P1:4		=V1AR11UQ41KF1-KF1.13-X1	4	&EFS=V1AR11UQ41KF1/4.1	
	&EFS/1.1	-XG1/2	P1:2		=V1AR11UQ41KF1-KF1.13-X1	2	&EFS=V1AR11UQ41KF1/4.0	

			Date	1/24/2023	Volvo Trucks North America	Valiant TMS	Cable diagram =V1AR11UQ41BG0+V1AR11UQ41-W1	Drawing name: =2V01&EFS-EL_KF1	= V1AR11UQ41BG0
			Ed.	MKLEPADLO					+ V1AR11UQ41
			Appr		P6700 Framing - Cell 2V01, KF1	Scale 1:1		Document type: EMA / Project nr: 22-16152	Page 1 / 1630
Modification	Date	Name	Original		Replacement of / Replaced by				

Cable diagram

F09_002_VLU

Cable name -W1.1			cable type TPE					
remark			no. of conductors 4			cross-section 18		cable length 4
function text	Page / column	Target designation from	Connection point	conductor	Target designation to	Connection point	Page / column	function text
	&EFS/1.0	-BG01	1		-XG1/2	J1:1	&EFS/1.0	
	&EFS/1.0	-BG01	4		-XG1/2	J1:4	&EFS/1.1	
	&EFS/1.1	-BG01	3		-XG1/2	J1:3	&EFS/1.1	

1 3

			Date	1/24/2023	Volvo Trucks North America	Valiant TMS	Cable diagram	Drawing name: =2V01&EFS-EL_KF1	= V1AR11UQ41BG0
			Ed.	MKLEPADLO			=V1AR11UQ41BG0+V1AR11UQ41-W1.1		+ V1AR11UQ41
			Appr		P6700 Framing - Cell 2V01, KF1			Document type: EMA / Project nr: 22-16152	Page 2 / 1630
Modification	Date	Name	Original		Replacement of / Replaced by	Scale 1:1			

Cable diagram

F09_002_VLU

Cable name -W1.2			cable type TPE					
remark			no. of conductors 4			cross-section 18		cable length 2
function text	Page / column	Target designation from	Connection point	conductor	Target designation to	Connection point	Page / column	function text
	&EFS/1.1	-BG02	1		-XG1/2	J2:1	&EFS/1.1	
	&EFS/1.1	-BG02	4		-XG1/2	J2:4	&EFS/1.2	
	&EFS/1.2	-BG02	3		-XG1/2	J2:3	&EFS/1.2	

			Date	1/24/2023	Volvo Trucks North America	Valiant TMS	Cable diagram =V1AR11UQ41BG0+V1AR11UQ41-W1.2	Drawing name: =2V01&EFS-EL_KF1	= V1AR11UQ41BG0
			Ed.	MKLEPADLO					+ V1AR11UQ41
			Appr		P6700 Framing - Cell 2V01, KF1	Scale 1:1		Document type: EMA	Project nr: 22-16152
Modification	Date	Name	Original		Replacement of / Replaced by				Page 3 / 1630

Cable diagram

F09_002_VLU

Cable name -W1			cable type TPU					
remark			no. of conductors 5			cross-section 16		cable length 2
function text	Page / column	Target designation from	Connection point	conductor	Target designation to	Connection point	Page / column	function text
	&EFS/2.2	-KF1-X20	5		-R3.CP/CS	C4	&EFS/1.3	
	&EFS/2.1	-KF1-X20	1		-R3.CP/CS	C5	&EFS/1.3	
	&EFS/2.1	-KF1-X20	3		-R3.CP/CS	PE	&EFS/1.3	
	&EFS/2.2	-KF1-X20	4		-R3.CP/CS	C6	&EFS/1.3	
	&EFS/2.1	-KF1-X20	2		-R3.CP/CS	C7	&EFS/1.4	

			Date	1/24/2023	Volvo Trucks North America	Valiant TMS	Cable diagram =V1AR11UQ41KF1+V1AR11UQ41-W1	Drawing name: =2V01&EFS-EL_KF1	= V1AR11UQ41KF1
			Ed.	MKLEPADLO					+ V1AR11UQ41
			Appr		P6700 Framing - Cell 2V01, KF1			Document type: EMA	Project nr: 22-16152
Modification	Date	Name	Original		Replacement of / Replaced by	Scale 1:1			Page 1 / 1630

Cable diagram

F09_002_VLU

Cable name -WF1			cable type PROFINET Cable					
remark			no. of conductors 4			cross-section 22		cable length
function text	Page / column	Target designation from	Connection point	conductor	Target designation to	Connection point	Page / column	function text
	&EFS/2.3	-KF1-TP1			-R3.CP/CS	R3.PROFINET	&EFS/1.5	

			Date	1/24/2023	Volvo Trucks North America	Valiant TMS	Cable diagram =V1AR11UQ41KF1+V1AR11UQ41-WF1	Drawing name: =2V01&EFS-EL_KF1	= V1AR11UQ41KF1
			Ed.	MKLEPADLO					+ V1AR11UQ41
			Appr		P6700 Framing - Cell 2V01, KF1	Scale 1:1		Document type: EMA	Project nr: 22-16152
Modification	Date	Name	Original		Replacement of	Replaced by			Page 2 / 1630

Cable diagram

F09_002_VLU

Cable name -W1			cable type TPE					
remark			no. of conductors 4			cross-section 18		cable length 3
function text	Page / column	Target designation from	Connection point	conductor	Target designation to	Connection point	Page / column	function text
	&EFS=V1AR11UQ41KF1	=**V1AR11UQ41KF1**+V1AR11UQ41-KF1	1.11-X1		-BGS/R	1	&EFS=V1AR11UQ41UQ1	+V1AR11UQ41UQ1/1.0
	&EFS=V1AR11UQ41KF1	=**V1AR11UQ41KF1**+V1AR11UQ41-KF2	1.11-X1		-BGS/R	2	&EFS=V1AR11UQ41UQ1	+V1AR11UQ41UQ1/1.0
	&EFS=V1AR11UQ41KF1	=**V1AR11UQ41KF1**+V1AR11UQ41-KF3	1.11-X1		-BGS/R	3	&EFS=V1AR11UQ41UQ1	+V1AR11UQ41UQ1/1.1
	&EFS=V1AR11UQ41KF1	=**V1AR11UQ41KF1**+V1AR11UQ41-KF4	1.11-X1		-BGS/R	4	&EFS=V1AR11UQ41UQ1	+V1AR11UQ41UQ1/1.1

=V1AR11UQ41KF1+V1AR11UQ41/2

=V1AR11UQ41UQ1.2+.AR11UQ41UQ1.2/1

			Date	1/24/2023	Volvo Trucks North America	Valiant TMS	Cable diagram =V1AR11UQ41UQ1.1+V1AR11UQ41UQ1.1-W1	Drawing name: =2V01&EFS-EL_KF1	= V1AR11UQ41UQ1.1
			Ed.	MKLEPADLO					+ V1AR11UQ41UQ1.1
			Appr		P6700 Framing - Cell 2V01, KF1	Scale 1:1		Document type: EMA	Project nr: 22-16152
Modification	Date	Name	Original		Replacement of	Replaced by			Page 1 / 1630

Cable diagram

F09_002_VLU

Cable name -W1			cable type TPE					
remark			no. of conductors 4			cross-section 18		cable length 3
function text	Page / column	Target designation from	Connection point	conductor	Target designation to	Connection point	Page / column	function text
	&EFS=V1AR11UQ41KF1	=**V1AR11UQ41/KF1**+V1AR11UQ41-KF1	1		1.11-X2 -BGS/R	1	&EFS=V1AR11UQ41UQ1+V1AR11UQ41UQ1/1.2	
	&EFS=V1AR11UQ41KF1	=**V1AR11UQ41/KF1**+V1AR11UQ41-KF1	2		1.11-X2 -BGS/R	2	&EFS=V1AR11UQ41UQ1+V1AR11UQ41UQ1/1.2	
	&EFS=V1AR11UQ41KF1	=**V1AR11UQ41/KF1**+V1AR11UQ41-KF1	3		1.11-X2 -BGS/R	3	&EFS=V1AR11UQ41UQ1+V1AR11UQ41UQ1/1.2	
	&EFS=V1AR11UQ41KF1	=**V1AR11UQ41/KF1**+V1AR11UQ41-KF1	4		1.11-X2 -BGS/R	4	&EFS=V1AR11UQ41UQ1+V1AR11UQ41UQ1/1.2	

=V1AR11UQ41UQ1.1+.AR11UQ41UQ1.1/1

=V1AR11UQ41UQ2.1+.AR11UQ41UQ2.1/1

			Date	1/24/2023	Volvo Trucks North America	Valiant TMS	Cable diagram =V1AR11UQ41UQ1.2+V1AR11UQ41UQ1.2-W1	Drawing name: =2V01&EFS-EL_KF1	= V1AR11UQ41UQ1.2
			Ed.	MKLEPADLO					+ V1AR11UQ41UQ1.2
			Appr		P6700 Framing - Cell 2V01, KF1	Scale 1:1		Document type: EMA	Project nr: 22-16152
Modification	Date	Name	Original		Replacement of	Replaced by			Page 1 / 1630

Cable diagram

F09_002_VLU

Cable name -W1			cable type TPE					
remark			no. of conductors 4			cross-section 18		cable length 2
function text	Page / column	Target designation from	Connection point	conductor	Target designation to	Connection point	Page / column	function text
	&EFS=V1AR11UQ41KF1	=**V1AR11UQ41UQ2**.1+V1AR11UQ41-KF1	1.11-X3		-BGS/R	1	&EFS=V1AR11UQ41UQ2+V1AR11UQ41UQ2/1.0	
	&EFS=V1AR11UQ41KF1	=**V1AR11UQ41UQ2**.1+V1AR11UQ41-KF2	1.11-X3		-BGS/R	2	&EFS=V1AR11UQ41UQ2+V1AR11UQ41UQ2/1.0	
	&EFS=V1AR11UQ41KF1	=**V1AR11UQ41UQ2**.1+V1AR11UQ41-KF3	1.11-X3		-BGS/R	3	&EFS=V1AR11UQ41UQ2+V1AR11UQ41UQ2/1.1	
	&EFS=V1AR11UQ41KF1	=**V1AR11UQ41UQ2**.1+V1AR11UQ41-KF4	1.11-X3		-BGS/R	4	&EFS=V1AR11UQ41UQ2+V1AR11UQ41UQ2/1.1	

			Date	1/24/2023	Volvo Trucks North America	Valiant TMS	Cable diagram =V1AR11UQ41UQ2.1+V1AR11UQ41UQ2.1-W1	Drawing name: =2V01&EFS-EL_KF1	= V1AR11UQ41UQ2.1
			Ed.	MKLEPADLO					+ V1AR11UQ41UQ2.1
			Appr		P6700 Framing - Cell 2V01, KF1	Scale 1:1		Document type: EMA	Project nr: 22-16152
Modification	Date	Name	Original		Replacement of	Replaced by			Page 1 / 1630

Cable diagram

F09_002_VLU

Cable name	-W1	cable type	TPE		
remark		no. of conductors	4	cross-section 18	cable length 2

function text	Page / column	Target designation from	Connection point	conductor	Target designation to	Connection point	Page / column	function text
	&EFS=V1AR11UQ41KF1+V1AR11UQ41KF1	**=V1AR11UQ41/K2.1**+V1AR11UQ41-KF1	1.11-X4		-BGS/R	1	&EFS=V1AR11UQ41UQ2+V1AR11UQ41UQ2/1.2	
	&EFS=V1AR11UQ41KF1+V1AR11UQ41KF1	**=V1AR11UQ41/K2.1**+V1AR11UQ41-KF2	1.11-X4		-BGS/R	2	&EFS=V1AR11UQ41UQ2+V1AR11UQ41UQ2/1.2	
	&EFS=V1AR11UQ41KF1+V1AR11UQ41KF1	**=V1AR11UQ41/K2.1**+V1AR11UQ41-KF3	1.11-X4		-BGS/R	3	&EFS=V1AR11UQ41UQ2+V1AR11UQ41UQ2/1.2	
	&EFS=V1AR11UQ41KF1+V1AR11UQ41KF1	**=V1AR11UQ41/K2.1**+V1AR11UQ41-KF4	1.11-X4		-BGS/R	4	&EFS=V1AR11UQ41UQ2+V1AR11UQ41UQ2/1.2	

=V1AR11UQ41UQ2.1+.AR11UQ41UQ2.1/1

=V1AR11UQ41UQ3.1+.AR11UQ41UQ3.1/1

			Date	1/24/2023	Volvo Trucks North America	Valiant TMS	Cable diagram =V1AR11UQ41UQ2.2+V1AR11UQ41UQ2.2-W1	Drawing name: =2V01&EFS-EL_KF1	= V1AR11UQ41UQ2.2 + V1AR11UQ41UQ2.2
			Ed.	MKLEPADLO	P6700 Framing - Cell 2V01, KF1				
			Appr					Document type: EMA	Project nr: 22-16152
Modification	Date	Name	Original		Replacement of / Replaced by	Scale 1:1			Page 1 / 1630

Cable diagram

F09_002_VLU

Cable name	-W1	cable type	TPE		
remark		no. of conductors	4	cross-section 18	cable length 1

function text	Page / column	Target designation from	Connection point	conductor	Target designation to	Connection point	Page / column	function text
	&EFS=V1AR11UQ41KF1+V1AR11UQ41KF1	=V1AR11UQ41/2.5+V1AR11UQ41-KF1	1.11-X5		-BGS/R	1	&EFS=V1AR11UQ41UQ3+V1AR11UQ41UQ3/1.0	
	&EFS=V1AR11UQ41KF1+V1AR11UQ41KF1	=V1AR11UQ41/2.5+V1AR11UQ41-KF2	1.11-X5		-BGS/R	2	&EFS=V1AR11UQ41UQ3+V1AR11UQ41UQ3/1.0	
	&EFS=V1AR11UQ41KF1+V1AR11UQ41KF1	=V1AR11UQ41/2.5+V1AR11UQ41-KF3	1.11-X5		-BGS/R	3	&EFS=V1AR11UQ41UQ3+V1AR11UQ41UQ3/1.1	
	&EFS=V1AR11UQ41KF1+V1AR11UQ41KF1	=V1AR11UQ41/2.5+V1AR11UQ41-KF4	1.11-X5		-BGS/R	4	&EFS=V1AR11UQ41UQ3+V1AR11UQ41UQ3/1.1	

=V1AR11UQ41UQ2.2+.AR11UQ41UQ2.2/1

=V1AR11UQ41UQ3.2+.AR11UQ41UQ3.2/1

			Date	1/24/2023	Volvo Trucks North America	Valiant TMS	Cable diagram =V1AR11UQ41UQ3.1+V1AR11UQ41UQ3.1-W1	Drawing name: =2V01&EFS-EL_KF1	= V1AR11UQ41UQ3.1 + V1AR11UQ41UQ3.1
			Ed.	MKLEPADLO	P6700 Framing - Cell 2V01, KF1				
			Appr					Document type: EMA	Project nr: 22-16152
Modification	Date	Name	Original		Replacement of / Replaced by	Scale 1:1			Page 1 / 1630

Cable diagram

F09_002_VLU

Cable name	-W1	cable type	TPE		
remark		no. of conductors	4	cross-section 18	cable length 1

function text	Page / column	Target designation from	Connection point	conductor	Target designation to	Connection point	Page / column	function text
	&EFS=V1AR11UQ41KF1+V1AR11UQ41KF1.1	**=V1AR11UQ41KF1**+V1AR11UQ41-KF1.11-X6	1		-BGS/R	1	&EFS=V1AR11UQ41UQ3+V1AR11UQ41UQ3/1.2	
	&EFS=V1AR11UQ41KF1+V1AR11UQ41KF1.1	**=V1AR11UQ41KF1**+V1AR11UQ41-KF1.11-X6	2		-BGS/R	2	&EFS=V1AR11UQ41UQ3+V1AR11UQ41UQ3/1.2	
	&EFS=V1AR11UQ41KF1+V1AR11UQ41KF1.1	**=V1AR11UQ41KF1**+V1AR11UQ41-KF1.11-X6	3		-BGS/R	3	&EFS=V1AR11UQ41UQ3+V1AR11UQ41UQ3/1.2	
	&EFS=V1AR11UQ41KF1+V1AR11UQ41KF1.1	**=V1AR11UQ41KF1**+V1AR11UQ41-KF1.11-X6	4		-BGS/R	4	&EFS=V1AR11UQ41UQ3+V1AR11UQ41UQ3/1.2	

=V1AR11UQ41UQ3.1+.AR11UQ41UQ3.1/1

=V1AR11UQ41UQ4.1+.AR11UQ41UQ4.1/1

			Date	1/24/2023	Volvo Trucks North America	Valiant TMS	Cable diagram =V1AR11UQ41UQ3.2+V1AR11UQ41UQ3.2-W1	Drawing name: =2V01&EFS-EL_KF1	= V1AR11UQ41UQ3.2 + V1AR11UQ41UQ3.2
			Ed.	MKLEPADLO	P6700 Framing - Cell 2V01, KF1				
			Appr					Document type: EMA	Project nr: 22-16152
Modification	Date	Name	Original		Replacement of / Replaced by	Scale 1:1			Page 1 / 1630

Cable diagram

F09_002_VLU

Cable name -W1			cable type TPE					
remark			no. of conductors 4			cross-section 18		cable length 2
function text	Page / column	Target designation from	Connection point	conductor	Target designation to	Connection point	Page / column	function text
	&EFS=V1AR11UQ41KF1	=**V1AR11UQ41UQ4.2**+V1AR11UQ41-KF1	1.11-X7		-BGS/R	1	&EFS=V1AR11UQ41UQ4+V1AR11UQ41UQ4/1.0	
	&EFS=V1AR11UQ41KF1	=**V1AR11UQ41UQ4.2**+V1AR11UQ41-KF2	1.11-X7		-BGS/R	2	&EFS=V1AR11UQ41UQ4+V1AR11UQ41UQ4/1.0	
	&EFS=V1AR11UQ41KF1	=**V1AR11UQ41UQ4.2**+V1AR11UQ41-KF3	1.11-X7		-BGS/R	3	&EFS=V1AR11UQ41UQ4+V1AR11UQ41UQ4/1.1	
	&EFS=V1AR11UQ41KF1	=**V1AR11UQ41UQ4.2**+V1AR11UQ41-KF4	1.11-X7		-BGS/R	4	&EFS=V1AR11UQ41UQ4+V1AR11UQ41UQ4/1.1	

=V1AR11UQ41UQ3.2+.AR11UQ41UQ3.2/1

=V1AR11UQ41UQ4.2+.AR11UQ41UQ4.2/1

			Date	1/24/2023	Volvo Trucks North America	Valiant TMS	Cable diagram =V1AR11UQ41UQ4.1+V1AR11UQ41UQ4.1-W1	Drawing name: =2V01&EFS-EL_KF1	= V1AR11UQ41UQ4.1
			Ed.	MKLEPADLO					+ V1AR11UQ41UQ4.1
			Appr		P6700 Framing - Cell 2V01, KF1	Scale 1:1		Document type: EMA	Project nr: 22-16152
Modification	Date	Name	Original		Replacement of / Replaced by				Page 1 / 1630

Cable diagram

F09_002_VLU

Cable name -W1			cable type TPE					
remark			no. of conductors 4			cross-section 18		cable length 2
function text	Page / column	Target designation from	Connection point	conductor	Target designation to	Connection point	Page / column	function text
	&EFS=V1AR11UQ41KF1	=**V1AR11UQ41/KF1**+V1AR11UQ41-KF1	1.11-X8		-BGS/R	1	&EFS=V1AR11UQ41UQ4+V1AR11UQ41UQ4/1.2	
	&EFS=V1AR11UQ41KF1	=**V1AR11UQ41/KF1**+V1AR11UQ41-KF2	1.11-X8		-BGS/R	2	&EFS=V1AR11UQ41UQ4+V1AR11UQ41UQ4/1.2	
	&EFS=V1AR11UQ41KF1	=**V1AR11UQ41/KF1**+V1AR11UQ41-KF3	1.11-X8		-BGS/R	3	&EFS=V1AR11UQ41UQ4+V1AR11UQ41UQ4/1.2	
	&EFS=V1AR11UQ41KF1	=**V1AR11UQ41/KF1**+V1AR11UQ41-KF4	1.11-X8		-BGS/R	4	&EFS=V1AR11UQ41UQ4+V1AR11UQ41UQ4/1.2	

			Date	1/24/2023	Volvo Trucks North America	Valiant TMS	Cable diagram =V1AR11UQ41UQ4.2+V1AR11UQ41UQ4.2-W1	Drawing name: =2V01&EFS-EL_KF1	= V1AR11UQ41UQ4.2
			Ed.	MKLEPADLO					+ V1AR11UQ41UQ4.2
			Appr		P6700 Framing - Cell 2V01, KF1	Scale 1:1		Document type: EMA	Project nr: 22-16152
Modification	Date	Name	Original		Replacement of / Replaced by				Page 1 / 1630

Cable diagram

F09_002_VLU

Cable name -W1			cable type TPE					
remark			no. of conductors 4			cross-section 18		cable length 2
function text	Page / column	Target designation from	Connection point	conductor	Target designation to	Connection point	Page / column	function text
	&EFS=V1AR11UQ41KF1	=**V1AR11UQ41KF1**+V1AR11UQ41-KF1	1.12-X1		-BGS/R	1	&EFS=V1AR11UQ41UQ5+V1AR11UQ41UQ5/1.0	
	&EFS=V1AR11UQ41KF1	=**V1AR11UQ41KF1**+V1AR11UQ41-KF2	1.12-X1		-BGS/R	2	&EFS=V1AR11UQ41UQ5+V1AR11UQ41UQ5/1.0	
	&EFS=V1AR11UQ41KF1	=**V1AR11UQ41KF1**+V1AR11UQ41-KF3	1.12-X1		-BGS/R	3	&EFS=V1AR11UQ41UQ5+V1AR11UQ41UQ5/1.1	
	&EFS=V1AR11UQ41KF1	=**V1AR11UQ41KF1**+V1AR11UQ41-KF4	1.12-X1		-BGS/R	4	&EFS=V1AR11UQ41UQ5+V1AR11UQ41UQ5/1.1	

			Date	1/24/2023	Volvo Trucks North America	Valiant TMS	Cable diagram =V1AR11UQ41UQ5.1+V1AR11UQ41UQ5.1-W1	Drawing name: =2V01&EFS-EL_KF1	= V1AR11UQ41UQ5.1
			Ed.	MKLEPADLO					+ V1AR11UQ41UQ5.1
			Appr		P6700 Framing - Cell 2V01, KF1	Scale 1:1		Document type: EMA	Project nr: 22-16152
Modification	Date	Name	Original		Replacement of	Replaced by			Page 1 / 1630

Cable diagram

F09_002_VLU

Cable name -W1			cable type TPE					
remark			no. of conductors 4			cross-section 18		cable length 2
function text	Page / column	Target designation from	Connection point	conductor	Target designation to	Connection point	Page / column	function text
	&EFS=V1AR11UQ41KF1	=**V1AR11UQ41/K3.1**+V1AR11UQ41-KF1	1.12-X2		-BGS/R	1	&EFS=V1AR11UQ41UQ5+V1AR11UQ41UQ5/1.2	
	&EFS=V1AR11UQ41KF1	=**V1AR11UQ41/K3.2**+V1AR11UQ41-KF2	1.12-X2		-BGS/R	2	&EFS=V1AR11UQ41UQ5+V1AR11UQ41UQ5/1.2	
	&EFS=V1AR11UQ41KF1	=**V1AR11UQ41/K3.2**+V1AR11UQ41-KF3	1.12-X2		-BGS/R	3	&EFS=V1AR11UQ41UQ5+V1AR11UQ41UQ5/1.2	
	&EFS=V1AR11UQ41KF1	=**V1AR11UQ41/K3.2**+V1AR11UQ41-KF4	1.12-X2		-BGS/R	4	&EFS=V1AR11UQ41UQ5+V1AR11UQ41UQ5/1.2	

=V1AR11UQ41UQ5.1+.AR11UQ41UQ5.1/1

=V1AR11UQ41UQ6.1+.AR11UQ41UQ6.1/1

			Date	1/24/2023	Volvo Trucks North America	Valiant TMS	Cable diagram =V1AR11UQ41UQ5.2+V1AR11UQ41UQ5.2-W1	Drawing name: =2V01&EFS-EL_KF1	= V1AR11UQ41UQ5.2
			Ed.	MKLEPADLO					+ V1AR11UQ41UQ5.2
			Appr		P6700 Framing - Cell 2V01, KF1			Document type: EMA	Project nr: 22-16152
Modification	Date	Name	Original		Replacement of / Replaced by	Scale 1:1			Page 1 / 1630

Cable diagram

F09_002_VLU

Cable name -W1			cable type TPE					
remark			no. of conductors 4			cross-section 18		cable length 1
function text	Page / column	Target designation from	Connection point	conductor	Target designation to	Connection point	Page / column	function text
	&EFS=V1AR11UQ41KF1	=**V1AR11UQ41KF1**+V1AR11UQ41-KF1	1.12-X3		-BGS/R	1	&EFS=V1AR11UQ41UQ6+V1AR11UQ41UQ6/1.0	
	&EFS=V1AR11UQ41KF1	=**V1AR11UQ41KF1**+V1AR11UQ41-KF2	1.12-X3		-BGS/R	4	&EFS=V1AR11UQ41UQ6+V1AR11UQ41UQ6/1.1	
	&EFS=V1AR11UQ41KF1	=**V1AR11UQ41KF1**+V1AR11UQ41-KF3	1.12-X3		-BGS/R	3	&EFS=V1AR11UQ41UQ6+V1AR11UQ41UQ6/1.0	

=V1AR11UQ41UQ5.2+.AR11UQ41UQ5.2/1

=V1AR11UQ41UQ7.1+.AR11UQ41UQ7.1/1

			Date	1/24/2023	Volvo Trucks North America	Valiant TMS	Cable diagram =V1AR11UQ41UQ6.1+V1AR11UQ41UQ6.1-W1	Drawing name: =2V01&EFS-EL_KF1	= V1AR11UQ41UQ6.1
			Ed.	MKLEPADLO					+ V1AR11UQ41UQ6.1
			Appr		P6700 Framing - Cell 2V01, KF1			Document type: EMA	Project nr: 22-16152
Modification	Date	Name	Original		Replacement of	Replaced by	Scale 1:1		Page 1 / 1630

Cable diagram

F09_002_VLU

Cable name -W1			cable type TPE					
remark			no. of conductors 4			cross-section 18		cable length 1
function text	Page / column	Target designation from	Connection point	conductor	Target designation to	Connection point	Page / column	function text
	&EFS=V1AR11UQ41KF1	=**V1AR11UQ41KF1**+V1AR11UQ41-KF1	1.12-X4		-BGS/R	1	&EFS=V1AR11UQ41UQ7+V1AR11UQ41UQ7/1.0	
	&EFS=V1AR11UQ41KF1	=**V1AR11UQ41KF1**+V1AR11UQ41-KF2	1.12-X4		-BGS/R	4	&EFS=V1AR11UQ41UQ7+V1AR11UQ41UQ7/1.1	
	&EFS=V1AR11UQ41KF1	=**V1AR11UQ41KF1**+V1AR11UQ41-KF3	1.12-X4		-BGS/R	3	&EFS=V1AR11UQ41UQ7+V1AR11UQ41UQ7/1.0	

			Date	1/24/2023	Volvo Trucks North America	Valiant TMS	Cable diagram =V1AR11UQ41UQ7.1+V1AR11UQ41UQ7.1-W1	Drawing name: =2V01&EFS-EL_KF1	= V1AR11UQ41UQ7.1
			Ed.	MKLEPADLO					+ V1AR11UQ41UQ7.1
			Appr		P6700 Framing - Cell 2V01, KF1	Scale 1:1		Document type: EMA	Project nr: 22-16152
Modification	Date	Name	Original		Replacement of	Replaced by			Page 1 / 1630

Cable diagram

F09_002_VLU

Cable name -W1			cable type TPE					
remark			no. of conductors 4			cross-section 18		cable length 1
function text	Page / column	Target designation from	Connection point	conductor	Target designation to	Connection point	Page / column	function text
	&EFS=V1AR11UQ41KF1	=**V1AR11UQ41KF1**+V1AR11UQ41-KF1	1.12-X5		-BGS/R	1	&EFS=V1AR11UQ41UQ8+V1AR11UQ41UQ8/1.0	
	&EFS=V1AR11UQ41KF1	=**V1AR11UQ41KF1**+V1AR11UQ41-KF2	1.12-X5		-BGS/R	4	&EFS=V1AR11UQ41UQ8+V1AR11UQ41UQ8/1.1	
	&EFS=V1AR11UQ41KF1	=**V1AR11UQ41KF1**+V1AR11UQ41-KF3	1.12-X5		-BGS/R	3	&EFS=V1AR11UQ41UQ8+V1AR11UQ41UQ8/1.0	

			Date	1/24/2023	Volvo Trucks North America	Valiant TMS	Cable diagram =V1AR11UQ41UQ8.1+V1AR11UQ41UQ8.1-W1	Drawing name: =2V01&EFS-EL_KF1	= V1AR11UQ41UQ8.1
			Ed.	MKLEPADLO					+ V1AR11UQ41UQ8.1
			Appr		P6700 Framing - Cell 2V01, KF1	Scale 1:1		Document type: EMA	Project nr: 22-16152
Modification	Date	Name	Original		Replacement of	Replaced by			Page 1 / 1630

Cable diagram

F09_002_VLU

Cable name -W1			cable type TPE					
remark			no. of conductors 4			cross-section 18		cable length 1
function text	Page / column	Target designation from	Connection point	conductor	Target designation to	Connection point	Page / column	function text
	&EFS=V1AR11UQ41KF1	=**V1AR11UQ41KF1**+V1AR11UQ41-KF1	1.12-X6		-BGS/R	1	&EFS=V1AR11UQ41UQ9+V1AR11UQ41UQ9/1.0	
	&EFS=V1AR11UQ41KF1	=**V1AR11UQ41KF1**+V1AR11UQ41-KF2	1.12-X6		-BGS/R	4	&EFS=V1AR11UQ41UQ9+V1AR11UQ41UQ9/1.1	
	&EFS=V1AR11UQ41KF1	=**V1AR11UQ41KF1**+V1AR11UQ41-KF3	1.12-X6		-BGS/R	3	&EFS=V1AR11UQ41UQ9+V1AR11UQ41UQ9/1.0	

			Date	1/24/2023	Volvo Trucks North America	Valiant TMS	Cable diagram =V1AR11UQ41UQ9.1+V1AR11UQ41UQ9.1-W1	Drawing name: =2V01&EFS-EL_KF1	= V1AR11UQ41UQ9.1
			Ed.	MKLEPADLO					+ V1AR11UQ41UQ9.1
			Appr		P6700 Framing - Cell 2V01, KF1	Scale 1:1		Document type: EMA	Project nr: 22-16152
Modification	Date	Name	Original		Replacement of	Replaced by			Page 1 / 1630

Cable diagram

F09_002_VLU

Cable name -W1			cable type TC-ER					
remark			no. of conductors 4			cross-section 10		cable length 20
function text	Page / column	Target designation from	Connection point	conductor	Target designation to	Connection point	Page / column	function text
	&EFS=V1WC2+.UC12/11.1	=V1AR11+UC12-FC1	2		-Q1	1	&EFS/1.3	
	&EFS=V1WC2+.UC12/11.1	=V1AR11+UC12-FC1	4		-Q1	3	&EFS/1.3	
	&EFS=V1WC2+.UC12/11.1	=V1AR11+UC12-FC1	6		-Q1	5	&EFS/1.3	
Power Distribution =V1AR11	&EFS=V1WC2+.UC12/11.2		PE		-PE		&EFS/1.4	

			Date	1/24/2023	Volvo Trucks North America	Valiant TMS	Cable diagram =V1AR11WC1+V1AR11UC01-W1	Drawing name: =2V01&EFS-EL_KF1	= V1AR11WC1
			Ed.	MKLEPADLO					+ V1AR11UC01
			Appr		P6700 Framing - Cell 2V01, KF1			Document type: EMA	Project nr: 22-16152
Modification	Date	Name	Original		Replacement of / Replaced by	Scale 1:1			Page 1 / 1630

Cable diagram

F09_002_VLU

Cable name -W1			cable type TC-ER					
remark			no. of conductors 4			cross-section 10		cable length 15
function text	Page / column	Target designation from	Connection point	conductor	Target designation to	Connection point	Page / column	function text
	&EFS=V1WC2+.UC11/11.1	=V1AR21+UC11-FC1	2		-Q1	1	&EFS/1.3	
	&EFS=V1WC2+.UC11/11.1	=V1AR21+UC11-FC1	4		-Q1	3	&EFS/1.3	
	&EFS=V1WC2+.UC11/11.1	=V1AR21+UC11-FC1	6		-Q1	5	&EFS/1.3	
Power Distribution =V1AR21	&EFS=V1WC2+.UC11/11.2		PE		-PE		&EFS/1.4	

=V1AR11WC1+.AR11UC01/1

=V1AR31UQ41BG0+.AR31UQ41/1

			Date	1/24/2023	Volvo Trucks North America	Valiant TMS	Cable diagram =V1AR21WC1+V1AR21UC01-W1	Drawing name: =2V01&EFS-EL_KF1	= V1AR21WC1
			Ed.	MKLEPADLO					+ V1AR21UC01
			Appr		P6700 Framing - Cell 2V01, KF1			Document type: EMA	Project nr: 22-16152
Modification	Date	Name	Original		Replacement of / Replaced by	Scale 1:1			Page 1 / 1630

Cable diagram

F09_002_VLU

Cable name -W1			cable type TPE					
remark			no. of conductors 4			cross-section 18		cable length 0.5
function text	Page / column	Target designation from	Connection point	conductor	Target designation to	Connection point	Page / column	function text
	&EFS/1.0	-XG1/2	P1:1		=V1AR31UQ41KF1-KF1.12-X1	1	&EFS=V1AR31UQ41KF1/3.0	
	&EFS/1.1	-XG1/2	P1:3		=V1AR31UQ41KF1-KF1.12-X1	3	&EFS=V1AR31UQ41KF1/3.1	
	&EFS/1.1	-XG1/2	P1:4		=V1AR31UQ41KF1-KF1.12-X1	4	&EFS=V1AR31UQ41KF1/3.1	
	&EFS/1.1	-XG1/2	P1:2		=V1AR31UQ41KF1-KF1.12-X1	2	&EFS=V1AR31UQ41KF1/3.0	

			Date	1/24/2023	Volvo Trucks North America	Valiant TMS	Cable diagram =V1AR31UQ41BG0+V1AR31UQ41-W1	Drawing name: =2V01&EFS-EL_KF1	= V1AR31UQ41BG0
			Ed.	MKLEPADLO					+ V1AR31UQ41
			Appr		P6700 Framing - Cell 2V01, KF1			Document type: EMA	Project nr: 22-16152
Modification	Date	Name	Original		Replacement of / Replaced by	Scale 1:1			Page 1 / 1630

Cable diagram

F09_002_VLU

Cable name -W1.1			cable type TPE					
remark			no. of conductors 4			cross-section 18		cable length 1
function text	Page / column	Target designation from	Connection point	conductor	Target designation to	Connection point	Page / column	function text
	&EFS/1.0	-BG01	1		-XG1/2	J1:1	&EFS/1.0	
	&EFS/1.0	-BG01	4		-XG1/2	J1:4	&EFS/1.1	
	&EFS/1.1	-BG01	3		-XG1/2	J1:3	&EFS/1.1	

			Date	1/24/2023	Volvo Trucks North America	Valiant TMS	Cable diagram =V1AR31UQ41BG0+V1AR31UQ41-W1.1	Drawing name: =2V01&EFS-EL_KF1	= V1AR31UQ41BG0
			Ed.	MKLEPADLO					+ V1AR31UQ41
			Appr		P6700 Framing - Cell 2V01, KF1			Document type: EMA	Project nr: 22-16152
Modification	Date	Name	Original		Replacement of / Replaced by	Scale 1:1			Page 2 / 1630

Cable diagram

F09_002_VLU

Cable name -W1.2			cable type TPE					
remark			no. of conductors 4			cross-section 18		cable length 2
function text	Page / column	Target designation from	Connection point	conductor	Target designation to	Connection point	Page / column	function text
	&EFS/1.1	-BG02	1		-XG1/2	J2:1	&EFS/1.1	
	&EFS/1.1	-BG02	4		-XG1/2	J2:4	&EFS/1.2	
	&EFS/1.2	-BG02	3		-XG1/2	J2:3	&EFS/1.2	

			Date	1/24/2023	Volvo Trucks North America	Valiant TMS	Cable diagram =V1AR31UQ41BG0+V1AR31UQ41-W1.2	Drawing name: =2V01&EFS-EL_KF1	= V1AR31UQ41BG0
			Ed.	MKLEPADLO					+ V1AR31UQ41
			Appr		P6700 Framing - Cell 2V01, KF1			Document type: EMA	Project nr: 22-16152
Modification	Date	Name	Original		Replacement of / Replaced by	Scale 1:1			Page 3 / 1630

Cable diagram

F09_002_VLU

Cable name -W2			cable type TPE					
remark			no. of conductors 4			cross-section 18		cable length 0.5
function text	Page / column	Target designation from	Connection point	conductor	Target designation to	Connection point	Page / column	function text
	&EFS/1.3	-XG3/4	P1:1		=V1AR31UQ41KF1-KF1.12-X2	1	&EFS=V1AR31UQ41KF1/3.1	
	&EFS/1.3	-XG3/4	P1:3		=V1AR31UQ41KF1-KF1.12-X2	3	&EFS=V1AR31UQ41KF1/3.2	
	&EFS/1.4	-XG3/4	P1:4		=V1AR31UQ41KF1-KF1.12-X2	4	&EFS=V1AR31UQ41KF1/3.2	
	&EFS/1.4	-XG3/4	P1:2		=V1AR31UQ41KF1-KF1.12-X2	2	&EFS=V1AR31UQ41KF1/3.2	

3 5

			Date	1/24/2023	Volvo Trucks North America	Valiant TMS	Cable diagram =V1AR31UQ41BG0+V1AR31UQ41-W2	Drawing name: =2V01&EFS-EL_KF1	= V1AR31UQ41BG0
			Ed.	MKLEPADLO					+ V1AR31UQ41
			Appr		P6700 Framing - Cell 2V01, KF1			Document type: EMA	Project nr: 22-16152
Modification	Date	Name	Original		Replacement of / Replaced by	Scale 1:1			Page 4 / 1630

Cable diagram

F09_002_VLU

Cable name -W2.1			cable type TPE					
remark			no. of conductors 4			cross-section 18		cable length 1
function text	Page / column	Target designation from	Connection point	conductor	Target designation to	Connection point	Page / column	function text
	&EFS/1.3	-BG03	1		-XG3/4	J1:1	&EFS/1.3	
	&EFS/1.3	-BG03	4		-XG3/4	J1:4	&EFS/1.4	
	&EFS/1.3	-BG03	3		-XG3/4	J1:3	&EFS/1.3	

			Date	1/24/2023	Volvo Trucks North America	Valiant TMS	Cable diagram =V1AR31UQ41BG0+V1AR31UQ41-W2.1	Drawing name: =2V01&EFS-EL_KF1	= V1AR31UQ41BG0
			Ed.	MKLEPADLO					+ V1AR31UQ41
			Appr		P6700 Framing - Cell 2V01, KF1			Document type: EMA	Project nr: 22-16152
Modification	Date	Name	Original		Replacement of / Replaced by	Scale 1:1			Page 5 / 1630

Cable diagram

F09_002_VLU

Cable name -W2.2			cable type TPE					
remark			no. of conductors 4			cross-section 18		cable length 2
function text	Page / column	Target designation from	Connection point	conductor	Target designation to	Connection point	Page / column	function text
	&EFS/1.4	-BG04	1		-XG3/4	J2:1	&EFS/1.4	
	&EFS/1.4	-BG04	4		-XG3/4	J2:4	&EFS/1.5	
	&EFS/1.4	-BG04	3		-XG3/4	J2:3	&EFS/1.4	

			Date	1/24/2023	Volvo Trucks North America		Valiant TMS	Cable diagram	Drawing name: =2V01&EFS-EL_KF1	= V1AR31UQ41BG0	
			Ed.	MKLEPADLO				=V1AR31UQ41BG0+V1AR31UQ41-W2.2		+ V1AR31UQ41	
			Appr		P6700 Framing - Cell 2V01, KF1				Document type: EMA	Project nr: 22-16152	Page 6
Modification	Date	Name	Original		Replacement of	Replaced by	Scale 1:1				1630

Cable diagram

F09_002_VLU

Cable name -W3			cable type TPE					
remark			no. of conductors 4			cross-section 18		cable length 3
function text	Page / column	Target designation from	Connection point	conductor	Target designation to	Connection point	Page / column	function text
	&EFS/1.6	-BG05	1		=V1AR31UQ41KF1-KF1.12-X3	1	&EFS=V1AR31UQ41KF1/3.3	
	&EFS/1.6	-BG05	4		=V1AR31UQ41KF1-KF1.12-X3	4	&EFS=V1AR31UQ41KF1/3.3	
	&EFS/1.6	-BG05	3		=V1AR31UQ41KF1-KF1.12-X3	3	&EFS=V1AR31UQ41KF1/3.3	

			Date	1/24/2023	Volvo Trucks North America	Valiant TMS	Cable diagram =V1AR31UQ41BG0+V1AR31UQ41-W3	Drawing name: =2V01&EFS-EL_KF1	= V1AR31UQ41BG0
			Ed.	MKLEPADLO					+ V1AR31UQ41
			Appr		P6700 Framing - Cell 2V01, KF1			Document type: EMA	Project nr: 22-16152
Modification	Date	Name	Original		Replacement of / Replaced by	Scale 1:1			Page 7 / 1630

Cable diagram

F09_002_VLU

Cable name -W1			cable type TPU					
remark			no. of conductors 5			cross-section 16		cable length 2
function text	Page / column	Target designation from	Connection point	conductor	Target designation to	Connection point	Page / column	function text
	&EFS/2.2	-KF1-X20	5		-R3.CP/CS	C4	&EFS/1.3	
	&EFS/2.1	-KF1-X20	1		-R3.CP/CS	C5	&EFS/1.3	
	&EFS/2.1	-KF1-X20	3		-R3.CP/CS	PE	&EFS/1.3	
	&EFS/2.2	-KF1-X20	4		-R3.CP/CS	C6	&EFS/1.3	
	&EFS/2.1	-KF1-X20	2		-R3.CP/CS	C7	&EFS/1.4	

			Date	1/24/2023	Volvo Trucks North America	Valiant TMS	Cable diagram =V1AR31UQ41KF1+V1AR31UQ41-W1	Drawing name: =2V01&EFS-EL_KF1	= V1AR31UQ41KF1
			Ed.	MKLEPADLO					+ V1AR31UQ41
			Appr		P6700 Framing - Cell 2V01, KF1			Document type: EMA	Project nr: 22-16152
Modification	Date	Name	Original		Replacement of / Replaced by	Scale 1:1			Page 1 / 1630

Cable diagram

F09_002_VLU

Cable name -WF1			cable type PROFINET Cable					
remark			no. of conductors 4			cross-section 22		cable length
function text	Page / column	Target designation from	Connection point	conductor	Target designation to	Connection point	Page / column	function text
	&EFS/2.3	-KF1-TP1			-R3.CP/CS	R3.PROFINET	&EFS/1.5	

			Date	1/24/2023	Volvo Trucks North America	Valiant TMS	Cable diagram =V1AR31UQ41KF1+V1AR31UQ41-WF1	Drawing name: =2V01&EFS-EL_KF1	= V1AR31UQ41KF1
			Ed.	MKLEPADLO					+ V1AR31UQ41
			Appr		P6700 Framing - Cell 2V01, KF1	Scale 1:1		Document type: EMA	Project nr: 22-16152
Modification	Date	Name	Original		Replacement of	Replaced by			Page 2 / 1630

Cable diagram

F09_002_VLU

Cable name -W1			cable type TPE					
remark			no. of conductors 4			cross-section 18		cable length 3
function text	Page / column	Target designation from	Connection point	conductor	Target designation to	Connection point	Page / column	function text
	&EFS=V1AR31UQ41KF1	=**V1AR31UQ41KF1**+V1AR31UQ41-KF1	1.11-X1		-BGS/R	1	&EFS=V1AR31UQ41UQ1	=V1AR31UQ41UQ1+V1AR31UQ41UQ1/1.0
	&EFS=V1AR31UQ41KF1	=**V1AR31UQ41KF1**+V1AR31UQ41-KF2	1.11-X1		-BGS/R	2	&EFS=V1AR31UQ41UQ1	=V1AR31UQ41UQ1+V1AR31UQ41UQ1/1.0
	&EFS=V1AR31UQ41KF1	=**V1AR31UQ41KF1**+V1AR31UQ41-KF3	1.11-X1		-BGS/R	3	&EFS=V1AR31UQ41UQ1	=V1AR31UQ41UQ1+V1AR31UQ41UQ1/1.1
	&EFS=V1AR31UQ41KF1	=**V1AR31UQ41KF1**+V1AR31UQ41-KF4	1.11-X1		-BGS/R	4	&EFS=V1AR31UQ41UQ1	=V1AR31UQ41UQ1+V1AR31UQ41UQ1/1.1

			Date	1/24/2023	Volvo Trucks North America	Valiant TMS	Cable diagram =V1AR31UQ41UQ1.1+V1AR31UQ41UQ1.1-W1	Drawing name: =2V01&EFS-EL_KF1	= V1AR31UQ41UQ1.1
			Ed.	MKLEPADLO					+ V1AR31UQ41UQ1.1
			Appr		P6700 Framing - Cell 2V01, KF1	Scale 1:1		Document type: EMA	Project nr: 22-16152
Modification	Date	Name	Original		Replacement of / Replaced by				Page 1 / 1630

Cable diagram

F09_002_VLU

Cable name -W1			cable type TPE					
remark			no. of conductors 4			cross-section 18		cable length 3
function text	Page / column	Target designation from	Connection point	conductor	Target designation to	Connection point	Page / column	function text
	&EFS=V1AR31UQ41KF1	=**V1AR31UQ41/KF1.1**+V1AR31UQ41-KF1	1		1.11-X2 -BGS/R	1	&EFS=V1AR31UQ41UQ1+V1AR31UQ41UQ1/1.2	
	&EFS=V1AR31UQ41KF1	=**V1AR31UQ41/KF1.2**+V1AR31UQ41-KF1	2		1.11-X2 -BGS/R	2	&EFS=V1AR31UQ41UQ1+V1AR31UQ41UQ1/1.2	
	&EFS=V1AR31UQ41KF1	=**V1AR31UQ41/KF1.2**+V1AR31UQ41-KF1	3		1.11-X2 -BGS/R	3	&EFS=V1AR31UQ41UQ1+V1AR31UQ41UQ1/1.2	
	&EFS=V1AR31UQ41KF1	=**V1AR31UQ41/KF1.2**+V1AR31UQ41-KF1	4		1.11-X2 -BGS/R	4	&EFS=V1AR31UQ41UQ1+V1AR31UQ41UQ1/1.2	

=V1AR31UQ41UQ1.1+.AR31UQ41UQ1.1/1

=V1AR31UQ41UQ1.3+.AR31UQ41UQ1.3/1

			Date	1/24/2023	Volvo Trucks North America	Valiant TMS	Cable diagram =V1AR31UQ41UQ1.2+V1AR31UQ41UQ1.2-W1	Drawing name: =2V01&EFS-EL_KF1	= V1AR31UQ41UQ1.2
			Ed.	MKLEPADLO					+ V1AR31UQ41UQ1.2
			Appr		P6700 Framing - Cell 2V01, KF1			Document type: EMA	Project nr: 22-16152
Modification	Date	Name	Original		Replacement of / Replaced by	Scale 1:1			Page 1 / 1630

Cable diagram

F09_002_VLU

Cable name -W1			cable type TPE					
remark			no. of conductors 4			cross-section 18		cable length 3
function text	Page / column	Target designation from	Connection point	conductor	Target designation to	Connection point	Page / column	function text
	&EFS=V1AR31UQ41KF1	=**V1AR31UQ41/KF1**+V1AR31UQ41-KF1	1		1.11-X3 -BGS/R	1	&EFS=V1AR31UQ41UQ1+V1AR31UQ41UQ1/1.4	
	&EFS=V1AR31UQ41KF1	=**V1AR31UQ41/KF1**+V1AR31UQ41-KF2	2		1.11-X3 -BGS/R	2	&EFS=V1AR31UQ41UQ1+V1AR31UQ41UQ1/1.4	
	&EFS=V1AR31UQ41KF1	=**V1AR31UQ41/KF1**+V1AR31UQ41-KF3	3		1.11-X3 -BGS/R	3	&EFS=V1AR31UQ41UQ1+V1AR31UQ41UQ1/1.4	
	&EFS=V1AR31UQ41KF1	=**V1AR31UQ41/KF1**+V1AR31UQ41-KF4	4		1.11-X3 -BGS/R	4	&EFS=V1AR31UQ41UQ1+V1AR31UQ41UQ1/1.4	

			Date	1/24/2023	Volvo Trucks North America	Valiant TMS	Cable diagram =V1AR31UQ41UQ1.3+V1AR31UQ41UQ1.3-W1	Drawing name: =2V01&EFS-EL_KF1	= V1AR31UQ41UQ1.3
			Ed.	MKLEPADLO					+ V1AR31UQ41UQ1.3
			Appr		P6700 Framing - Cell 2V01, KF1	Scale 1:1		Document type: EMA / Project nr: 22-16152	Page 1 / 1630
Modification	Date	Name	Original		Replacement of / Replaced by				

Cable diagram

F09_002_VLU

Cable name -W1			cable type TPE					
remark			no. of conductors 4			cross-section 18		cable length 0.5
function text	Page / column	Target designation from	Connection point	conductor	Target designation to	Connection point	Page / column	function text
	&EFS=V1AR31XQ41KF1+V1AR31XQ41/KF1	=V1AR31XQ41/KF1+V1AR31XQ41-KF1	1.11-X1		-XG1/2	P1:1	&EFS=V1AR31XQ41UQ1+V1AR31XQ41UQ1/1.0	
	&EFS=V1AR31XQ41KF1+V1AR31XQ41/KF1	=V1AR31XQ41/KF1+V1AR31XQ41-KF2	1.11-X1		-XG1/2	P1:2	&EFS=V1AR31XQ41UQ1+V1AR31XQ41UQ1/1.1	
	&EFS=V1AR31XQ41KF1+V1AR31XQ41/KF1	=V1AR31XQ41/KF1+V1AR31XQ41-KF3	1.11-X1		-XG1/2	P1:3	&EFS=V1AR31XQ41UQ1+V1AR31XQ41UQ1/1.1	
	&EFS=V1AR31XQ41KF1+V1AR31XQ41/KF1	=V1AR31XQ41/KF1+V1AR31XQ41-KF4	1.11-X1		-XG1/2	P1:4	&EFS=V1AR31XQ41UQ1+V1AR31XQ41UQ1/1.1	

			Date	1/24/2023	Volvo Trucks North America	Valiant TMS	Cable diagram =V1AR31XQ41UQ1.1+V1AR31XQ41UQ1.1-W1	Drawing name: =2V01&EFS-EL_KF1	= V1AR31XQ41UQ1.1
			Ed.	MKLEPADLO					+ V1AR31XQ41UQ1.1
			Appr		P6700 Framing - Cell 2V01, KF1			Document type: EMA / Project nr: 22-16152	Page 1
Modification	Date	Name	Original		Replacement of / Replaced by	Scale 1:1			1630

Cable diagram

F09_002_VLU

Cable name -W1.1			cable type TPE					
remark			no. of conductors 4			cross-section 18		cable length 0.5
function text	Page / column	Target designation from	Connection point	conductor	Target designation to	Connection point	Page / column	function text
	&EFS=V1AR31XQ41UQ1-BGR	-V1AR31XQ41UQ1/1.0	1		-XG1/2	J1:1	&EFS=V1AR31XQ41UQ1+V1AR31XQ41UQ1/1.0	
	&EFS=V1AR31XQ41UQ1-BGR	-V1AR31XQ41UQ1/1.0	4		-XG1/2	J1:4	&EFS=V1AR31XQ41UQ1+V1AR31XQ41UQ1/1.1	
	&EFS=V1AR31XQ41UQ1-BGR	-V1AR31XQ41UQ1/1.1	3		-XG1/2	J1:3	&EFS=V1AR31XQ41UQ1+V1AR31XQ41UQ1/1.1	

1 3

			Date	1/24/2023	Volvo Trucks North America	Valiant TMS	Cable diagram =V1AR31XQ41UQ1.1+V1AR31XQ41UQ1.1-W1.1	Drawing name: =2V01&EFS-EL_KF1	= V1AR31XQ41UQ1.1
			Ed.	MKLEPADLO					+ V1AR31XQ41UQ1.1
			Appr		P6700 Framing - Cell 2V01, KF1			Document type: EMA	Project nr: 22-16152
Modification	Date	Name	Original		Replacement of / Replaced by	Scale 1:1			Page 2 / 1630

Cable diagram

F09_002_VLU

Cable name -W1.2			cable type TPE					
remark			no. of conductors 4			cross-section 18		cable length 0.5
function text	Page / column	Target designation from	Connection point	conductor	Target designation to	Connection point	Page / column	function text
	&EFS=V1AR31XQ41UQ1-BG0	-V1AR31XQ41UQ1/1.1	1		-XG1/2	J2:1	&EFS=V1AR31XQ41UQ1+V1AR31XQ41UQ1/1.1	
	&EFS=V1AR31XQ41UQ1-BG0	-V1AR31XQ41UQ1/1.1	4		-XG1/2	J2:4	&EFS=V1AR31XQ41UQ1+V1AR31XQ41UQ1/1.2	
	&EFS=V1AR31XQ41UQ1-BG0	-V1AR31XQ41UQ1/1.2	3		-XG1/2	J2:3	&EFS=V1AR31XQ41UQ1+V1AR31XQ41UQ1/1.2	

			Date	1/24/2023	Volvo Trucks North America	Valiant TMS	Cable diagram =V1AR31XQ41UQ1.1+V1AR31XQ41UQ1.1-W1.2	Drawing name: =2V01&EFS-EL_KF1	= V1AR31XQ41UQ1.1
			Ed.	MKLEPADLO					+ V1AR31XQ41UQ1.1
			Appr		P6700 Framing - Cell 2V01, KF1	Scale 1:1		Document type: EMA	Project nr: 22-16152
Modification	Date	Name	Original		Replacement of	Replaced by			Page 3 / 1630

Cable diagram

F09_002_VLU

Cable name -W1			cable type TPE					
remark			no. of conductors 4			cross-section 18		cable length 0.5
function text	Page / column	Target designation from	Connection point	conductor	Target designation to	Connection point	Page / column	function text
	&EFS/1.0	-XG1/2	P1:1		=V1AR41UQ41KF1-KF1.13-X1	1	&EFS=V1AR41UQ41KF1/4.0	
	&EFS/1.1	-XG1/2	P1:3		=V1AR41UQ41KF1-KF1.13-X1	3	&EFS=V1AR41UQ41KF1/4.1	
	&EFS/1.1	-XG1/2	P1:4		=V1AR41UQ41KF1-KF1.13-X1	4	&EFS=V1AR41UQ41KF1/4.1	
	&EFS/1.1	-XG1/2	P1:2		=V1AR41UQ41KF1-KF1.13-X1	2	&EFS=V1AR41UQ41KF1/4.0	

			Date	1/24/2023	Volvo Trucks North America	Valiant TMS	Cable diagram =V1AR41UQ41BG0+V1AR41UQ41-W1	Drawing name: =2V01&EFS-EL_KF1	= V1AR41UQ41BG0
			Ed.	MKLEPADLO					+ V1AR41UQ41
			Appr		P6700 Framing - Cell 2V01, KF1			Document type: EMA	Project nr: 22-16152 Page 1
Modification	Date	Name	Original		Replacement of / Replaced by	Scale 1:1			1630

Cable diagram

F09_002_VLU

Cable name -W1.1			cable type TPE					
remark			no. of conductors 4			cross-section 18		cable length 2
function text	Page / column	Target designation from	Connection point	conductor	Target designation to	Connection point	Page / column	function text
	&EFS/1.0	-BG01	1		-XG1/2	J1:1	&EFS/1.0	
	&EFS/1.0	-BG01	4		-XG1/2	J1:4	&EFS/1.1	
	&EFS/1.1	-BG01	3		-XG1/2	J1:3	&EFS/1.1	

			Date	1/24/2023	Volvo Trucks North America	Valiant TMS	Cable diagram =V1AR41UQ41BG0+V1AR41UQ41-W1.1	Drawing name: =2V01&EFS-EL_KF1	= V1AR41UQ41BG0
			Ed.	MKLEPADLO					+ V1AR41UQ41
			Appr		P6700 Framing - Cell 2V01, KF1			Document type: EMA	Project nr: 22-16152
Modification	Date	Name	Original		Replacement of / Replaced by	Scale 1:1			Page 2 / 1630

Cable diagram

F09_002_VLU

Cable name -W1.2			cable type TPE					
remark			no. of conductors 4			cross-section 18		cable length 2
function text	Page / column	Target designation from	Connection point	conductor	Target designation to	Connection point	Page / column	function text
	&EFS/1.1	-BG02	1		-XG1/2	J2:1	&EFS/1.1	
	&EFS/1.1	-BG02	4		-XG1/2	J2:4	&EFS/1.2	
	&EFS/1.2	-BG02	3		-XG1/2	J2:3	&EFS/1.2	

			Date	1/24/2023	Volvo Trucks North America	Valiant TMS	Cable diagram =V1AR41UQ41BG0+V1AR41UQ41-W1.2	Drawing name: =2V01&EFS-EL_KF1	= V1AR41UQ41BG0
			Ed.	MKLEPADLO					+ V1AR41UQ41
			Appr		P6700 Framing - Cell 2V01, KF1			Document type: EMA	Project nr: 22-16152
Modification	Date	Name	Original		Replacement of / Replaced by	Scale 1:1			Page 3 / 1630

Cable diagram

F09_002_VLU

Cable name -W1			cable type TPU					
remark			no. of conductors 5			cross-section 16		cable length 2
function text	Page / column	Target designation from	Connection point	conductor	Target designation to	Connection point	Page / column	function text
	&EFS/2.2	-KF1-X20	5		-R3.CP/CS	C4	&EFS/1.3	
	&EFS/2.1	-KF1-X20	1		-R3.CP/CS	C5	&EFS/1.3	
	&EFS/2.1	-KF1-X20	3		-R3.CP/CS	PE	&EFS/1.3	
	&EFS/2.2	-KF1-X20	4		-R3.CP/CS	C6	&EFS/1.3	
	&EFS/2.1	-KF1-X20	2		-R3.CP/CS	C7	&EFS/1.4	

			Date	1/24/2023	Volvo Trucks North America	Valiant TMS	Cable diagram =V1AR41UQ41KF1+V1AR41UQ41-W1	Drawing name: =2V01&EFS-EL_KF1	= V1AR41UQ41KF1
			Ed.	MKLEPADLO					+ V1AR41UQ41
			Appr		P6700 Framing - Cell 2V01, KF1			Document type: EMA	Project nr: 22-16152
Modification	Date	Name	Original		Replacement of / Replaced by	Scale 1:1			Page 1 / 1630

Cable diagram

F09_002_VLU

Cable name -WF1			cable type PROFINET Cable					
remark			no. of conductors 4			cross-section 22		cable length
function text	Page / column	Target designation from	Connection point	conductor	Target designation to	Connection point	Page / column	function text
	&EFS/2.3	-KF1-TP1			-R3.CP/CS	R3.PROFINET	&EFS/1.5	

			Date	1/24/2023	Volvo Trucks North America	Valiant TMS	Cable diagram =V1AR41UQ41KF1+V1AR41UQ41-WF1	Drawing name: =2V01&EFS-EL_KF1	= V1AR41UQ41KF1
			Ed.	MKLEPADLO					+ V1AR41UQ41
			Appr		P6700 Framing - Cell 2V01, KF1	Scale 1:1		Document type: EMA	Project nr: 22-16152
Modification	Date	Name	Original		Replacement of	Replaced by			Page 2 / 1630

Cable diagram

F09_002_VLU

Cable name -W1			cable type TPE					
remark			no. of conductors 4			cross-section 18		cable length 4
function text	Page / column	Target designation from	Connection point	conductor	Target designation to	Connection point	Page / column	function text
	&EFS=V1AR41UQ41KF1	=**V1AR41UQ41/K2**+V1AR41UQ41-KF1	1.0		1.11-X1	-BGS/R	1	&EFS=V1AR41UQ41UQ1+V1AR41UQ41UQ1/1.0
	&EFS=V1AR41UQ41KF1	=**V1AR41UQ41/K2**+V1AR41UQ41-KF2	1.0		1.11-X1	-BGS/R	2	&EFS=V1AR41UQ41UQ1+V1AR41UQ41UQ1/1.0
	&EFS=V1AR41UQ41KF1	=**V1AR41UQ41/K2**+V1AR41UQ41-KF3	1.1		1.11-X1	-BGS/R	3	&EFS=V1AR41UQ41UQ1+V1AR41UQ41UQ1/1.1
	&EFS=V1AR41UQ41KF1	=**V1AR41UQ41/K2**+V1AR41UQ41-KF4	1.1		1.11-X1	-BGS/R	4	&EFS=V1AR41UQ41UQ1+V1AR41UQ41UQ1/1.1

Cable diagram

F09_002_VLU

Cable name -W1			cable type TPE					
remark			no. of conductors 4			cross-section 18		cable length 4
function text	Page / column	Target designation from	Connection point	conductor	Target designation to	Connection point	Page / column	function text
	&EFS=V1AR41UQ41KF1	=**V1AR41UQ41/K2.1**+V1AR41UQ41-KF1	1.11-X2		-BGS/R	1	&EFS=V1AR41UQ41UQ1+V1AR41UQ41UQ1/1.2	
	&EFS=V1AR41UQ41KF1	=**V1AR41UQ41/K2.2**+V1AR41UQ41-KF2	1.11-X2		-BGS/R	2	&EFS=V1AR41UQ41UQ1+V1AR41UQ41UQ1/1.2	
	&EFS=V1AR41UQ41KF1	=**V1AR41UQ41/K2.3**+V1AR41UQ41-KF3	1.11-X2		-BGS/R	3	&EFS=V1AR41UQ41UQ1+V1AR41UQ41UQ1/1.2	
	&EFS=V1AR41UQ41KF1	=**V1AR41UQ41/K2.4**+V1AR41UQ41-KF4	1.11-X2		-BGS/R	4	&EFS=V1AR41UQ41UQ1+V1AR41UQ41UQ1/1.2	

=V1AR41UQ41UQ1.1+.AR41UQ41UQ1.1/1

=V1AR41UQ41UQ2.1+.AR41UQ41UQ2.1/1

			Date	1/24/2023	Volvo Trucks North America	Valiant TMS	Cable diagram =V1AR41UQ41UQ1.2+V1AR41UQ41UQ1.2-W1	Drawing name: =2V01&EFS-EL_KF1	= V1AR41UQ41UQ1.2
			Ed.	MKLEPADLO					+ V1AR41UQ41UQ1.2
			Appr		P6700 Framing - Cell 2V01, KF1	Scale 1:1		Document type: EMA	Project nr: 22-16152
Modification	Date	Name	Original		Replacement of / Replaced by				Page 1 / 1630

Cable diagram

F09_002_VLU

Cable name -W1			cable type TPE					
remark			no. of conductors 4			cross-section 18		cable length 2
function text	Page / column	Target designation from	Connection point	conductor	Target designation to	Connection point	Page / column	function text
	&EFS=V1AR41UQ41KF1	=**V1AR41UQ41UQ2.1**+V1AR41UQ41-KF1	1.11-X3		-BGS/R	1	&EFS=V1AR41UQ41UQ2+V1AR41UQ41UQ2/1.0	
	&EFS=V1AR41UQ41KF1	=**V1AR41UQ41UQ2.1**+V1AR41UQ41-KF2	1.11-X3		-BGS/R	2	&EFS=V1AR41UQ41UQ2+V1AR41UQ41UQ2/1.0	
	&EFS=V1AR41UQ41KF1	=**V1AR41UQ41UQ2.1**+V1AR41UQ41-KF3	1.11-X3		-BGS/R	3	&EFS=V1AR41UQ41UQ2+V1AR41UQ41UQ2/1.1	
	&EFS=V1AR41UQ41KF1	=**V1AR41UQ41UQ2.1**+V1AR41UQ41-KF4	1.11-X3		-BGS/R	4	&EFS=V1AR41UQ41UQ2+V1AR41UQ41UQ2/1.1	

			Date	1/24/2023	Volvo Trucks North America	Valiant TMS	Cable diagram =V1AR41UQ41UQ2.1+V1AR41UQ41UQ2.1-W1	Drawing name: =2V01&EFS-EL_KF1	= V1AR41UQ41UQ2.1
			Ed.	MKLEPADLO					+ V1AR41UQ41UQ2.1
			Appr		P6700 Framing - Cell 2V01, KF1	Scale 1:1		Document type: EMA	Project nr: 22-16152
Modification	Date	Name	Original		Replacement of / Replaced by				Page 1 / 1630

Cable diagram

F09_002_VLU

Cable name -W1			cable type TPE					
remark			no. of conductors 4			cross-section 18		cable length 4
function text	Page / column	Target designation from	Connection point	conductor	Target designation to	Connection point	Page / column	function text
	&EFS=V1AR41UQ41KF1	=V1AR41UQ41/KF1 +V1AR41UQ41-KF1	1.11-X4		-BGS/R	1	&EFS=V1AR41UQ41UQ2+V1AR41UQ41UQ2/1.2	
	&EFS=V1AR41UQ41KF1	=V1AR41UQ41/KF1 +V1AR41UQ41-KF2	1.11-X4		-BGS/R	2	&EFS=V1AR41UQ41UQ2+V1AR41UQ41UQ2/1.2	
	&EFS=V1AR41UQ41KF1	=V1AR41UQ41/KF1 +V1AR41UQ41-KF3	1.11-X4		-BGS/R	3	&EFS=V1AR41UQ41UQ2+V1AR41UQ41UQ2/1.2	
	&EFS=V1AR41UQ41KF1	=V1AR41UQ41/KF1 +V1AR41UQ41-KF4	1.11-X4		-BGS/R	4	&EFS=V1AR41UQ41UQ2+V1AR41UQ41UQ2/1.2	

			Date	1/24/2023	Volvo Trucks North America	Valiant TMS	Cable diagram =V1AR41UQ41UQ2.2+V1AR41UQ41UQ2.2-W1	Drawing name: =2V01&EFS-EL_KF1	= V1AR41UQ41UQ2.2
			Ed.	MKLEPADLO					+ V1AR41UQ41UQ2.2
			Appr		P6700 Framing - Cell 2V01, KF1			Document type: EMA	Project nr: 22-16152
Modification	Date	Name	Original		Replacement of / Replaced by	Scale 1:1			Page 1 / 1630

Cable diagram

F09_002_VLU

Cable name -W1			cable type TPE					
remark			no. of conductors 4			cross-section 18		cable length 4
function text	Page / column	Target designation from	Connection point	conductor	Target designation to	Connection point	Page / column	function text
	&EFS=V1AR41UQ41KF1	=**V1AR41UQ41/K2.5**+V1AR41UQ41-KF1	1.11-X5		-BGS/R	1	&EFS=V1AR41UQ41UQ2+V1AR41UQ41UQ2/1.4	
	&EFS=V1AR41UQ41KF1	=**V1AR41UQ41/K2.5**+V1AR41UQ41-KF2	1.11-X5		-BGS/R	2	&EFS=V1AR41UQ41UQ2+V1AR41UQ41UQ2/1.4	
	&EFS=V1AR41UQ41KF1	=**V1AR41UQ41/K2.5**+V1AR41UQ41-KF3	1.11-X5		-BGS/R	3	&EFS=V1AR41UQ41UQ2+V1AR41UQ41UQ2/1.4	
	&EFS=V1AR41UQ41KF1	=**V1AR41UQ41/K2.5**+V1AR41UQ41-KF4	1.11-X5		-BGS/R	4	&EFS=V1AR41UQ41UQ2+V1AR41UQ41UQ2/1.4	

			Date	1/24/2023	Volvo Trucks North America	Valiant TMS	Cable diagram =V1AR41UQ41UQ2.3+V1AR41UQ41UQ2.3-W1	Drawing name: =2V01&EFS-EL_KF1	= V1AR41UQ41UQ2.3
			Ed.	MKLEPADLO					+ V1AR41UQ41UQ2.3
			Appr		P6700 Framing - Cell 2V01, KF1	Scale 1:1		Document type: EMA / Project nr: 22-16152	Page 1 / 1630
Modification	Date	Name	Original		Replacement of / Replaced by				

Cable diagram

F09_002_VLU

Cable name -W1			cable type TPE					
remark			no. of conductors 4			cross-section 18		cable length 4
function text	Page / column	Target designation from	Connection point	conductor	Target designation to	Connection point	Page / column	function text
	&EFS=V1AR41UQ41KF1	=**V1AR41UQ41UQ2.6**+V1AR41UQ41-KF1	1.11-X6		-BGS/R	1	&EFS=V1AR41UQ41UQ2+V1AR41UQ41UQ2/1.5	
	&EFS=V1AR41UQ41KF1	=**V1AR41UQ41UQ2.6**+V1AR41UQ41-KF2	1.11-X6		-BGS/R	2	&EFS=V1AR41UQ41UQ2+V1AR41UQ41UQ2/1.5	
	&EFS=V1AR41UQ41KF1	=**V1AR41UQ41UQ2.6**+V1AR41UQ41-KF3	1.11-X6		-BGS/R	3	&EFS=V1AR41UQ41UQ2+V1AR41UQ41UQ2/1.5	
	&EFS=V1AR41UQ41KF1	=**V1AR41UQ41UQ2.7**+V1AR41UQ41-KF4	1.11-X6		-BGS/R	4	&EFS=V1AR41UQ41UQ2+V1AR41UQ41UQ2/1.5	

			Date	1/24/2023	Volvo Trucks North America	Valiant TMS	Cable diagram =V1AR41UQ41UQ2.4+V1AR41UQ41UQ2.4-W1	Drawing name: =2V01&EFS-EL_KF1	= V1AR41UQ41UQ2.4
			Ed.	MKLEPADLO					+ V1AR41UQ41UQ2.4
			Appr		P6700 Framing - Cell 2V01, KF1	Scale 1:1		Document type: EMA	Project nr: 22-16152
Modification	Date	Name	Original		Replacement of / Replaced by				Page 1 / 1630

Cable diagram

F09_002_VLU

Cable name -W1			cable type TPE					
remark			no. of conductors 4			cross-section 18		cable length 2
function text	Page / column	Target designation from	Connection point	conductor	Target designation to	Connection point	Page / column	function text
	&EFS=V1AR41UQ41KF1	=**V1AR41UQ41/KF1**+V1AR41UQ41-KF1	1.11-X7		-BGS/R	1	&EFS=V1AR41UQ41UQ2+V1AR41UQ41UQ2/1.7	
	&EFS=V1AR41UQ41KF1	=**V1AR41UQ41/KF1**+V1AR41UQ41-KF2	1.11-X7		-BGS/R	2	&EFS=V1AR41UQ41UQ2+V1AR41UQ41UQ2/1.7	
	&EFS=V1AR41UQ41KF1	=**V1AR41UQ41/KF1**+V1AR41UQ41-KF3	1.11-X7		-BGS/R	3	&EFS=V1AR41UQ41UQ2+V1AR41UQ41UQ2/1.7	
	&EFS=V1AR41UQ41KF1	=**V1AR41UQ41/KF1**+V1AR41UQ41-KF4	1.11-X7		-BGS/R	4	&EFS=V1AR41UQ41UQ2+V1AR41UQ41UQ2/1.7	

=V1AR41UQ41UQ2.4+.AR41UQ41UQ2.4/1

=V1AR41UQ41UQ3.1+.AR41UQ41UQ3.1/1

			Date	1/24/2023	Volvo Trucks North America	Valiant TMS	Cable diagram =V1AR41UQ41UQ2.5+V1AR41UQ41UQ2.5-W1	Drawing name: =2V01&EFS-EL_KF1	= V1AR41UQ41UQ2.5
			Ed.	MKLEPADLO					+ V1AR41UQ41UQ2.5
			Appr		P6700 Framing - Cell 2V01, KF1	Scale 1:1		Document type: EMA	Project nr: 22-16152
Modification	Date	Name	Original		Replacement of	Replaced by			Page 1 / 1630

Cable diagram

F09_002_VLU

Cable name -W1			cable type TPE					
remark			no. of conductors 4			cross-section 18		cable length 4
function text	Page / column	Target designation from	Connection point	conductor	Target designation to	Connection point	Page / column	function text
	&EFS=V1AR41UQ41KF1	=**V1AR41UQ41/KF1**+V1AR41UQ41-KF1	1.11-X8		-BGS/R	1	&EFS=V1AR41UQ41UQ3+V1AR41UQ41UQ3/1.0	
	&EFS=V1AR41UQ41KF1	=**V1AR41UQ41/KF1**+V1AR41UQ41-KF2	1.11-X8		-BGS/R	2	&EFS=V1AR41UQ41UQ3+V1AR41UQ41UQ3/1.0	
	&EFS=V1AR41UQ41KF1	=**V1AR41UQ41/KF1**+V1AR41UQ41-KF3	1.11-X8		-BGS/R	3	&EFS=V1AR41UQ41UQ3+V1AR41UQ41UQ3/1.1	
	&EFS=V1AR41UQ41KF1	=**V1AR41UQ41/KF1**+V1AR41UQ41-KF4	1.11-X8		-BGS/R	4	&EFS=V1AR41UQ41UQ3+V1AR41UQ41UQ3/1.1	

=V1AR41UQ41UQ2.5+.AR41UQ41UQ2.5/1

=V1AR41UQ41UQ3.2+.AR41UQ41UQ3.2/1

Cable diagram

F09_002_VLU

Cable name -W1			cable type TPE					
remark			no. of conductors 4			cross-section 18		cable length 2
function text	Page / column	Target designation from	Connection point	conductor	Target designation to	Connection point	Page / column	function text
	&EFS=V1AR41UQ41KF1	=**V1AR41UQ41/K3.0**+V1AR41UQ41-KF1	1.12-X1		-BGS/R	1	&EFS=V1AR41UQ41UQ3+V1AR41UQ41UQ3/1.2	
	&EFS=V1AR41UQ41KF1	=**V1AR41UQ41/K3.0**+V1AR41UQ41-KF2	1.12-X1		-BGS/R	2	&EFS=V1AR41UQ41UQ3+V1AR41UQ41UQ3/1.2	
	&EFS=V1AR41UQ41KF1	=**V1AR41UQ41/K3.1**+V1AR41UQ41-KF3	1.12-X1		-BGS/R	3	&EFS=V1AR41UQ41UQ3+V1AR41UQ41UQ3/1.2	
	&EFS=V1AR41UQ41KF1	=**V1AR41UQ41/K3.1**+V1AR41UQ41-KF4	1.12-X1		-BGS/R	4	&EFS=V1AR41UQ41UQ3+V1AR41UQ41UQ3/1.2	

Cable diagram

F09_002_VLU

Cable name -W1			cable type TPE					
remark			no. of conductors 4			cross-section 18		cable length 4
function text	Page / column	Target designation from	Connection point	conductor	Target designation to	Connection point	Page / column	function text
	&EFS=V1AR41UQ41KF1	=**V1AR41UQ41UQ3.1**+V1AR41UQ41-KF1	1.12-X2		-BGS/R	1	&EFS=V1AR41UQ41UQ4+V1AR41UQ41UQ4/1.0	
	&EFS=V1AR41UQ41KF1	=**V1AR41UQ41UQ3.2**+V1AR41UQ41-KF2	1.12-X2		-BGS/R	2	&EFS=V1AR41UQ41UQ4+V1AR41UQ41UQ4/1.0	
	&EFS=V1AR41UQ41KF1	=**V1AR41UQ41UQ3.2**+V1AR41UQ41-KF3	1.12-X2		-BGS/R	3	&EFS=V1AR41UQ41UQ4+V1AR41UQ41UQ4/1.1	
	&EFS=V1AR41UQ41KF1	=**V1AR41UQ41UQ3.2**+V1AR41UQ41-KF4	1.12-X2		-BGS/R	4	&EFS=V1AR41UQ41UQ4+V1AR41UQ41UQ4/1.1	

=V1AR41UQ41UQ3.2+.AR41UQ41UQ3.2/1

=V1AR41UQ41UQ4.2+.AR41UQ41UQ4.2/1

			Date	1/24/2023	Volvo Trucks North America	Valiant TMS	Cable diagram =V1AR41UQ41UQ4.1+V1AR41UQ41UQ4.1-W1	Drawing name: =2V01&EFS-EL_KF1	= V1AR41UQ41UQ4.1
			Ed.	MKLEPADLO					+ V1AR41UQ41UQ4.1
			Appr		P6700 Framing - Cell 2V01, KF1			Document type: EMA	Project nr: 22-16152
Modification	Date	Name	Original		Replacement of / Replaced by	Scale 1:1			Page 1 / 1630

Cable diagram

F09_002_VLU

Cable name -W1			cable type TPE					
remark			no. of conductors 4			cross-section 18		cable length 4
function text	Page / column	Target designation from	Connection point	conductor	Target designation to	Connection point	Page / column	function text
	&EFS=V1AR41UQ41KF1	=**V1AR41UQ41UQ4.1**+V1AR41UQ41-KF1	1.12-X3		-BGS/R	1	&EFS=V1AR41UQ41UQ4+V1AR41UQ41UQ4/1.2	
	&EFS=V1AR41UQ41KF1	=**V1AR41UQ41UQ4.1**+V1AR41UQ41-KF2	1.12-X3		-BGS/R	2	&EFS=V1AR41UQ41UQ4+V1AR41UQ41UQ4/1.2	
	&EFS=V1AR41UQ41KF1	=**V1AR41UQ41UQ4.1**+V1AR41UQ41-KF3	1.12-X3		-BGS/R	3	&EFS=V1AR41UQ41UQ4+V1AR41UQ41UQ4/1.2	
	&EFS=V1AR41UQ41KF1	=**V1AR41UQ41UQ4.1**+V1AR41UQ41-KF4	1.12-X3		-BGS/R	4	&EFS=V1AR41UQ41UQ4+V1AR41UQ41UQ4/1.2	

=V1AR41UQ41UQ4.1+.AR41UQ41UQ4.1/1

=V1UL1KF2+.UL1/1

			Date	1/24/2023	Volvo Trucks North America	Valiant TMS	Cable diagram =V1AR41UQ41UQ4.2+V1AR41UQ41UQ4.2-W1	Drawing name: =2V01&EFS-EL_KF1	= V1AR41UQ41UQ4.2
			Ed.	MKLEPADLO					+ V1AR41UQ41UQ4.2
			Appr		P6700 Framing - Cell 2V01, KF1			Document type: EMA	Project nr: 22-16152
Modification	Date	Name	Original		Replacement of / Replaced by	Scale 1:1			Page 1 / 1630

Cable diagram

F09_002_VLU

Cable name -W2			cable type TPU					
remark			no. of conductors 5			cross-section 16		cable length 3
function text	Page / column	Target designation from	Connection point	conductor	Target designation to	Connection point	Page / column	function text
	&EFS=V1UL1KF1/1.2	=V1UL1KF1-KF1.11	POWER OUT:4		-KF2.11	POWER IN:4	&EFS/1.1	
	&EFS=V1UL1KF1/1.2	=V1UL1KF1-KF1.11	POWER OUT:5		-KF2.11	POWER IN:5	&EFS/1.1	
	&EFS=V1UL1KF1/1.3	=V1UL1KF1-KF1.11	POWER OUT:1		-KF2.11	POWER IN:1	&EFS/1.1	
	&EFS=V1UL1KF1/1.3	=V1UL1KF1-KF1.11	POWER OUT:2		-KF2.11	POWER IN:2	&EFS/1.1	
	&EFS=V1UL1KF1/1.3	=V1UL1KF1-KF1.11	POWER OUT:3		-KF2.11	POWER IN:3	&EFS/1.1	

Cable diagram

F09_002_VLU

Cable name -W1			cable type TPE					
remark			no. of conductors 4			cross-section 18		cable length 3
function text	Page / column	Target designation from	Connection point	conductor	Target designation to	Connection point	Page / column	function text
	&EFS=V1UL1KF1+V1UL1/1.11	=V1UL1KF1+V1UL1-KF1.11	X0:1		-BGS/R	1	&EFS=V1UL1UQ1+V1UL1UQ1/1.0	
Common Pin Clamp 1 (RESET)	&EFS=V1UL1KF1+V1UL1/1.11	=V1UL1KF1+V1UL1-KF1.11	X0:4		-BGS/R	4	&EFS=V1UL1UQ1+V1UL1UQ1/1.1	
	&EFS=V1UL1KF1+V1UL1/1.11	=V1UL1KF1+V1UL1-KF1.11	X0:3		-BGS/R	3	&EFS=V1UL1UQ1+V1UL1UQ1/1.1	
Common Pin Clamp 1 (SET)	&EFS=V1UL1KF1+V1UL1/1.11	=V1UL1KF1+V1UL1-KF1.11	X0:2		-BGS/R	2	&EFS=V1UL1UQ1+V1UL1UQ1/1.0	

=V1UL1KF2+V1UL1/1

=V1UL1UQ1.2+.UL1UQ1.2/1

			Date	1/24/2023	Volvo Trucks North America	Valiant TMS	Cable diagram =V1UL1UQ1.1+V1UL1UQ1.1-W1	Drawing name: =2V01&EFS-EL_KF1	= V1UL1UQ1.1
			Ed.	MKLEPADLO					+ V1UL1UQ1.1
			Appr		P6700 Framing - Cell 2V01, KF1			Document type: EMA	Project nr: 22-16152
Modification	Date	Name	Original		Replacement of / Replaced by	Scale 1:1			Page 1 / 1630

Cable diagram

F09_002_VLU

Cable name -W1			cable type TPE					
remark			no. of conductors 4			cross-section 18		cable length 3
function text	Page / column	Target designation from	Connection point	conductor	Target designation to	Connection point	Page / column	function text
	&EFS=V1UL1KF1+V1UL1-W1.2	=V1UL1KF1+V1UL1-KF1.11	X1:1		-BGS/R	1	&EFS=V1UL1UQ1+V1UL1UQ1/1.2	
Common Pin Clamp 1 (RESET)	&EFS=V1UL1KF1+V1UL1-W1.2	=V1UL1KF1+V1UL1-KF1.11	X1:4		-BGS/R	4	&EFS=V1UL1UQ1+V1UL1UQ1/1.2	
	&EFS=V1UL1KF1+V1UL1-W1.2	=V1UL1KF1+V1UL1-KF1.11	X1:3		-BGS/R	3	&EFS=V1UL1UQ1+V1UL1UQ1/1.2	
Common Pin Clamp 1 (SET)	&EFS=V1UL1KF1+V1UL1-W1.2	=V1UL1KF1+V1UL1-KF1.11	X1:2		-BGS/R	2	&EFS=V1UL1UQ1+V1UL1UQ1/1.2	

			Date	1/24/2023	Volvo Trucks North America	Valiant TMS	Cable diagram =V1UL1UQ1.2+V1UL1UQ1.2-W1	Drawing name: =2V01&EFS-EL_KF1	= V1UL1UQ1.2
			Ed.	MKLEPADLO					+ V1UL1UQ1.2
			Appr		P6700 Framing - Cell 2V01, KF1			Document type: EMA	Project nr: 22-16152
Modification	Date	Name	Original		Replacement of / Replaced by	Scale 1:1			Page 1 / 1630

Cable diagram

F09_002_VLU

Cable name -W1			cable type TPE					
remark			no. of conductors 4			cross-section 18		cable length 3
function text	Page / column	Target designation from	Connection point	conductor	Target designation to	Connection point	Page / column	function text
	&EFS=V1UL1KF2+V1UL1-W1	=V1UL1KF2+V1UL1-KF2.11	X0:1		-BGS/R	1	&EFS=V1UL1UQ1+V1UL1UQ1/1.4	
Common Pin Clamp 1 (RESET)	&EFS=V1UL1KF2+V1UL1-W1	=V1UL1KF2+V1UL1-KF2.11	X0:4		-BGS/R	4	&EFS=V1UL1UQ1+V1UL1UQ1/1.4	
	&EFS=V1UL1KF2+V1UL1-W1	=V1UL1KF2+V1UL1-KF2.11	X0:3		-BGS/R	3	&EFS=V1UL1UQ1+V1UL1UQ1/1.4	
Common Pin Clamp 1 (SET)	&EFS=V1UL1KF2+V1UL1-W1	=V1UL1KF2+V1UL1-KF2.11	X0:2		-BGS/R	2	&EFS=V1UL1UQ1+V1UL1UQ1/1.4	

=V1UL1UQ1.2+.UL1UQ1.2/1

=V1UL1UQ1.4+.UL1UQ1.4/1

			Date	1/24/2023	Volvo Trucks North America	Valiant TMS	Cable diagram =V1UL1UQ1.3+V1UL1UQ1.3-W1	Drawing name: =2V01&EFS-EL_KF1	= V1UL1UQ1.3
			Ed.	MKLEPADLO					+ V1UL1UQ1.3
			Appr		P6700 Framing - Cell 2V01, KF1			Document type: EMA	Project nr: 22-16152
Modification	Date	Name	Original		Replacement of / Replaced by	Scale 1:1			Page 1 / 1630

Cable diagram

F09_002_VLU

Cable name -W1			cable type TPE					
remark			no. of conductors 4			cross-section 18		cable length 3
function text	Page / column	Target designation from	Connection point	conductor	Target designation to	Connection point	Page / column	function text
	&EFS=V1UL1KF2+V1UL1-KF2.12	=V1UL1KF2+V1UL1-KF2.11	X1:1		-BGS/R	1	&EFS=V1UL1UQ1+V1UL1UQ1/1.5	
Common Pin Clamp 1 (RESET)	&EFS=V1UL1KF2+V1UL1-KF2.12	=V1UL1KF2+V1UL1-KF2.11	X1:4		-BGS/R	4	&EFS=V1UL1UQ1+V1UL1UQ1/1.5	
	&EFS=V1UL1KF2+V1UL1-KF2.12	=V1UL1KF2+V1UL1-KF2.11	X1:3		-BGS/R	3	&EFS=V1UL1UQ1+V1UL1UQ1/1.5	
Common Pin Clamp 1 (SET)	&EFS=V1UL1KF2+V1UL1-KF2.12	=V1UL1KF2+V1UL1-KF2.11	X1:2		-BGS/R	2	&EFS=V1UL1UQ1+V1UL1UQ1/1.5	

=V1UL1UQ1.3+.UL1UQ1.3/1

=V1UL1UQ2.1+.UL1UQ2.1/1

			Date	1/24/2023	Volvo Trucks North America	Valiant TMS	Cable diagram =V1UL1UQ1.4+V1UL1UQ1.4-W1	Drawing name: =2V01&EFS-EL_KF1	= V1UL1UQ1.4
			Ed.	MKLEPADLO					+ V1UL1UQ1.4
			Appr		P6700 Framing - Cell 2V01, KF1			Document type: EMA	Project nr: 22-16152
Modification	Date	Name	Original		Replacement of / Replaced by	Scale 1:1			Page 1 / 1630

Cable diagram

F09_002_VLU

Cable name -W1			cable type TPE					
remark			no. of conductors 4			cross-section 18		cable length 1
function text	Page / column	Target designation from	Connection point	conductor	Target designation to	Connection point	Page / column	function text
	&EFS=V1UL1KF1+V1UL1-KF1.13	=V1UL1KF1+V1UL1-KF1.11	X2:1		-BGS/R	1	&EFS=V1UL1UQ2+V1UL1UQ2/1.0	
Common Pin Clamp 2 (RESET)	&EFS=V1UL1KF1+V1UL1-KF1.13	=V1UL1KF1+V1UL1-KF1.11	X2:4		-BGS/R	4	&EFS=V1UL1UQ2+V1UL1UQ2/1.1	
	&EFS=V1UL1KF1+V1UL1-KF1.13	=V1UL1KF1+V1UL1-KF1.11	X2:3		-BGS/R	3	&EFS=V1UL1UQ2+V1UL1UQ2/1.1	
Common Pin Clamp 2 (SET)	&EFS=V1UL1KF1+V1UL1-KF1.13	=V1UL1KF1+V1UL1-KF1.11	X2:2		-BGS/R	2	&EFS=V1UL1UQ2+V1UL1UQ2/1.0	

=V1UL1UQ1.4+.UL1UQ1.4/1

=V1UL1UQ2.2+.UL1UQ2.2/1

			Date	1/24/2023	Volvo Trucks North America	Valiant TMS	Cable diagram =V1UL1UQ2.1+V1UL1UQ2.1-W1	Drawing name: =2V01&EFS-EL_KF1	= V1UL1UQ2.1
			Ed.	MKLEPADLO					+ V1UL1UQ2.1
			Appr		P6700 Framing - Cell 2V01, KF1			Document type: EMA	Project nr: 22-16152
Modification	Date	Name	Original		Replacement of	Replaced by	Scale 1:1		Page 1 / 1630

Cable diagram

F09_002_VLU

Cable name -W1			cable type TPE					
remark			no. of conductors 4			cross-section 18		cable length 1
function text	Page / column	Target designation from	Connection point	conductor	Target designation to	Connection point	Page / column	function text
	&EFS=V1UL1KF2+V1UL1-KF2.11/13	=V1UL1KF2+V1UL1-KF2.11	X2:1		-BGS/R	1	&EFS=V1UL1UQ2+V1UL1UQ2/1.2	
Common Pin Clamp 2 (RESET)	&EFS=V1UL1KF2+V1UL1-KF2.11/13	=V1UL1KF2+V1UL1-KF2.11	X2:4		-BGS/R	4	&EFS=V1UL1UQ2+V1UL1UQ2/1.2	
	&EFS=V1UL1KF2+V1UL1-KF2.11/13	=V1UL1KF2+V1UL1-KF2.11	X2:3		-BGS/R	3	&EFS=V1UL1UQ2+V1UL1UQ2/1.2	
Common Pin Clamp 2 (SET)	&EFS=V1UL1KF2+V1UL1-KF2.11/13	=V1UL1KF2+V1UL1-KF2.11	X2:2		-BGS/R	2	&EFS=V1UL1UQ2+V1UL1UQ2/1.2	

=V1UL1UQ2.1+.UL1UQ2.1/1

=V1UL1UQ3.1+.UL1UQ3.1/1

			Date	1/24/2023	Volvo Trucks North America	Valiant TMS	Cable diagram =V1UL1UQ2.2+V1UL1UQ2.2-W1	Drawing name: =2V01&EFS-EL_KF1	= V1UL1UQ2.2
			Ed.	MKLEPADLO					+ V1UL1UQ2.2
			Appr		P6700 Framing - Cell 2V01, KF1			Document type: EMA	Project nr: 22-16152
Modification	Date	Name	Original		Replacement of / Replaced by	Scale 1:1			Page 1 / 1630

Cable diagram

F09_002_VLU

Cable name -W1			cable type TPE					
remark			no. of conductors 4			cross-section 18		cable length 4
function text	Page / column	Target designation from	Connection point	conductor	Target designation to	Connection point	Page / column	function text
	&EFS=V1UL1KF1+V1UL1-KF1.14	=V1UL1KF1+V1UL1-KF1.11	X3:1		-BGS/R	1	&EFS=V1UL1UQ3+V1UL1UQ3/1.0	
Common Pin Clamp 3 (RESET)	&EFS=V1UL1KF1+V1UL1-KF1.14	=V1UL1KF1+V1UL1-KF1.11	X3:4		-BGS/R	4	&EFS=V1UL1UQ3+V1UL1UQ3/1.1	
	&EFS=V1UL1KF1+V1UL1-KF1.14	=V1UL1KF1+V1UL1-KF1.11	X3:3		-BGS/R	3	&EFS=V1UL1UQ3+V1UL1UQ3/1.1	
Common Pin Clamp 3 (SET)	&EFS=V1UL1KF1+V1UL1-KF1.14	=V1UL1KF1+V1UL1-KF1.11	X3:2		-BGS/R	2	&EFS=V1UL1UQ3+V1UL1UQ3/1.0	

=V1UL1UQ2.2+.UL1UQ2.2/1

=V1UL1UQ3.2+.UL1UQ3.2/1

			Date	1/24/2023	Volvo Trucks North America	Valiant TMS	Cable diagram =V1UL1UQ3.1+V1UL1UQ3.1-W1	Drawing name: =2V01&EFS-EL_KF1	= V1UL1UQ3.1
			Ed.	MKLEPADLO					+ V1UL1UQ3.1
			Appr		P6700 Framing - Cell 2V01, KF1			Document type: EMA	Project nr: 22-16152
Modification	Date	Name	Original		Replacement of / Replaced by	Scale 1:1			Page 1 / 1630

Cable diagram

F09_002_VLU

Cable name -W1			cable type TPE					
remark			no. of conductors 4			cross-section 18		cable length 4
function text	Page / column	Target designation from	Connection point	conductor	Target designation to	Connection point	Page / column	function text
	&EFS=V1UL1KF2+V1UL1-W1	=V1UL1KF2+V1UL1-KF2.11	X3:1		-BGS/R	1	&EFS=V1UL1UQ3+V1UL1UQ3/1.2	
Common Pin Clamp 3 (RESET)	&EFS=V1UL1KF2+V1UL1-W1	=V1UL1KF2+V1UL1-KF2.11	X3:4		-BGS/R	4	&EFS=V1UL1UQ3+V1UL1UQ3/1.2	
	&EFS=V1UL1KF2+V1UL1-W1	=V1UL1KF2+V1UL1-KF2.11	X3:3		-BGS/R	3	&EFS=V1UL1UQ3+V1UL1UQ3/1.2	
Common Pin Clamp 3 (SET)	&EFS=V1UL1KF2+V1UL1-W1	=V1UL1KF2+V1UL1-KF2.11	X3:2		-BGS/R	2	&EFS=V1UL1UQ3+V1UL1UQ3/1.2	

=V1UL1UQ3.1+.UL1UQ3.1/1

=V1UL1UQ4.1+.UL1UQ4.1/1

			Date	1/24/2023	Volvo Trucks North America	Valiant TMS	Cable diagram =V1UL1UQ3.2+V1UL1UQ3.2-W1	Drawing name: =2V01&EFS-EL_KF1	= V1UL1UQ3.2
			Ed.	MKLEPADLO					+ V1UL1UQ3.2
			Appr		P6700 Framing - Cell 2V01, KF1			Document type: EMA	Project nr: 22-16152
Modification	Date	Name	Original		Replacement of	Replaced by	Scale 1:1		Page 1 / 1630

Cable diagram

F09_002_VLU

Cable name -W1			cable type TPE					
remark			no. of conductors 4			cross-section 18		cable length 1
function text	Page / column	Target designation from	Connection point	conductor	Target designation to	Connection point	Page / column	function text
	&EFS=V1UL1KF1+V1UL1-W1/1.5	=V1UL1KF1+V1UL1-KF1.11	X4:1		-BGS/R	1	&EFS=V1UL1UQ4+V1UL1UQ4/1.0	
L150 Model Guided Slide (RESET)	&EFS=V1UL1KF1+V1UL1-W1/1.5	=V1UL1KF1+V1UL1-KF1.11	X4:4		-BGS/R	4	&EFS=V1UL1UQ4+V1UL1UQ4/1.1	
	&EFS=V1UL1KF1+V1UL1-W1/1.5	=V1UL1KF1+V1UL1-KF1.11	X4:3		-BGS/R	3	&EFS=V1UL1UQ4+V1UL1UQ4/1.1	
L150 Model Guided Slide (SET)	&EFS=V1UL1KF1+V1UL1-W1/1.5	=V1UL1KF1+V1UL1-KF1.11	X4:2		-BGS/R	2	&EFS=V1UL1UQ4+V1UL1UQ4/1.0	

			Date	1/24/2023	Volvo Trucks North America	Valiant TMS	Cable diagram =V1UL1UQ4.1+V1UL1UQ4.1-W1	Drawing name: =2V01&EFS-EL_KF1 = V1UL1UQ4.1 + V1UL1UQ4.1
			Ed.	MKLEPADLO				
			Appr		P6700 Framing - Cell 2V01, KF1	Scale 1:1		Document type: EMA / Project nr: 22-16152 / Page 1 / 1630
Modification	Date	Name	Original		Replacement of / Replaced by			

Cable diagram

F09_002_VLU

Cable name -W1			cable type TPE					
remark			no. of conductors 4			cross-section 18		cable length 1
function text	Page / column	Target designation from	Connection point	conductor	Target designation to	Connection point	Page / column	function text
	&EFS=V1UL1KF2+V1UL1-W1/1.5	=V1UL1KF2+V1UL1-KF2.11	X4:1		-BGS/R	1	&EFS=V1UL1UQ4+V1UL1UQ4/1.2	
L150 Model Guided Slide (RESET)	&EFS=V1UL1KF2+V1UL1-W1/1.5	=V1UL1KF2+V1UL1-KF2.11	X4:4		-BGS/R	4	&EFS=V1UL1UQ4+V1UL1UQ4/1.2	
	&EFS=V1UL1KF2+V1UL1-W1/1.5	=V1UL1KF2+V1UL1-KF2.11	X4:3		-BGS/R	3	&EFS=V1UL1UQ4+V1UL1UQ4/1.2	
L150 Model Guided Slide (SET)	&EFS=V1UL1KF2+V1UL1-W1/1.5	=V1UL1KF2+V1UL1-KF2.11	X4:2		-BGS/R	2	&EFS=V1UL1UQ4+V1UL1UQ4/1.2	

=V1UL1UQ4.1+.UL1UQ4.1/1

=V1UQ31BG0+.UQ31/1

			Date	1/24/2023	Volvo Trucks North America	Valiant TMS	Cable diagram =V1UL1UQ4.2+V1UL1UQ4.2-W1	Drawing name: =2V01&EFS-EL_KF1
			Ed.	MKLEPADLO				= V1UL1UQ4.2
			Appr		P6700 Framing - Cell 2V01, KF1			+ V1UL1UQ4.2
Modification	Date	Name	Original		Replacement of / Replaced by	Scale 1:1		Document type: EMA / Project nr: 22-16152 / Page 1 / 1630

Cable diagram

F09_002_VLU

Cable name -W1			cable type TPE					
remark			no. of conductors 4			cross-section 18		cable length 8
function text	Page / column	Target designation from	Connection point	conductor	Target designation to	Connection point	Page / column	function text
	&EFS/1.0	-BG01	1		=V1UQ31KF1-KF1.11-X7	1	&EFS=V1UQ31KF1/1.7	
	&EFS/1.0	-BG01	4		=V1UQ31KF1-KF1.11-X7	4	&EFS=V1UQ31KF1/1.8	
	&EFS/1.1	-BG01	3		=V1UQ31KF1-KF1.11-X7	3	&EFS=V1UQ31KF1/1.8	

Cable diagram

F09_002_VLU

Cable name -W2			cable type TPE					
remark			no. of conductors 4			cross-section 18		cable length 10
function text	Page / column	Target designation from	Connection point	conductor	Target designation to	Connection point	Page / column	function text
	&EFS/1.3	-BG02	1		=V1UQ31KF1-KF1.11-X8	1	&EFS=V1UQ31KF1/1.8	
	&EFS/1.3	-BG02	4		=V1UQ31KF1-KF1.11-X8	4	&EFS=V1UQ31KF1/1.9	
	&EFS/1.3	-BG02	3		=V1UQ31KF1-KF1.11-X8	3	&EFS=V1UQ31KF1/1.9	

			Date	1/24/2023	Volvo Trucks North America	Valiant TMS	Cable diagram =V1UQ31BG0+V1UQ31-W2	Drawing name: =2V01&EFS-EL_KF1	= V1UQ31BG0
			Ed.	MKLEPADLO					+ V1UQ31
			Appr		P6700 Framing - Cell 2V01, KF1			Document type: EMA	Project nr: 22-16152
Modification	Date	Name	Original		Replacement of / Replaced by	Scale 1:1			Page 2 / 1630

Cable diagram

F09_002_VLU

Cable name -W1			cable type TPE					
remark			no. of conductors 4			cross-section 18		cable length 8
function text	Page / column	Target designation from	Connection point	conductor	Target designation to	Connection point	Page / column	function text
	&EFS=V1UQ31KF1+V1UQ31/1.0	=V1UQ31KF1+V1UQ31-KF1.1	1-X1 1		-BGS/R	1	&EFS=V1UQ31UQ1+V1UQ31UQ1/1.0	
	&EFS=V1UQ31KF1+V1UQ31/1.0	=V1UQ31KF1+V1UQ31-KF1.1	1-X1 2		-BGS/R	2	&EFS=V1UQ31UQ1+V1UQ31UQ1/1.0	
	&EFS=V1UQ31KF1+V1UQ31/1.1	=V1UQ31KF1+V1UQ31-KF1.1	1-X1 3		-BGS/R	3	&EFS=V1UQ31UQ1+V1UQ31UQ1/1.1	
	&EFS=V1UQ31KF1+V1UQ31/1.1	=V1UQ31KF1+V1UQ31-KF1.1	1-X1 4		-BGS/R	4	&EFS=V1UQ31UQ1+V1UQ31UQ1/1.1	

Cable diagram

F09_002_VLU

Cable name -W1			cable type TPE					
remark			no. of conductors 4			cross-section 18		cable length 10
function text	Page / column	Target designation from	Connection point	conductor	Target designation to	Connection point	Page / column	function text
	&EFS=V1UQ31KF1+V1UQ31UQ1	=V1UQ31KF1+V1UQ31-KF1.1	1-X2 1		-BGS/R	1	&EFS=V1UQ31UQ1+V1UQ31UQ1/1.2	
	&EFS=V1UQ31KF1+V1UQ31UQ1	=V1UQ31KF1+V1UQ31-KF1.1	1-X2 2		-BGS/R	2	&EFS=V1UQ31UQ1+V1UQ31UQ1/1.2	
	&EFS=V1UQ31KF1+V1UQ31UQ1	=V1UQ31KF1+V1UQ31-KF1.1	1-X2 3		-BGS/R	3	&EFS=V1UQ31UQ1+V1UQ31UQ1/1.2	
	&EFS=V1UQ31KF1+V1UQ31UQ1	=V1UQ31KF1+V1UQ31-KF1.1	1-X2 4		-BGS/R	4	&EFS=V1UQ31UQ1+V1UQ31UQ1/1.2	

			Date	1/24/2023	Volvo Trucks North America	Valiant TMS	Cable diagram =V1UQ31UQ1.2+V1UQ31UQ1.2-W1	Drawing name: =2V01&EFS-EL_KF1	= V1UQ31UQ1.2
			Ed.	MKLEPADLO					+ V1UQ31UQ1.2
			Appr		P6700 Framing - Cell 2V01, KF1			Document type: EMA	Project nr: 22-16152
Modification	Date	Name	Original		Replacement of / Replaced by	Scale 1:1			Page 1 / 1630

Cable diagram

F09_002_VLU

Cable name -W1			cable type TPE					
remark			no. of conductors 4			cross-section 18		cable length 8
function text	Page / column	Target designation from	Connection point	conductor	Target designation to	Connection point	Page / column	function text
	&EFS=V1UQ31KF1+V1UQ31	=V1UQ31KF1+V1UQ31-KF1.1	1-X3 1		-BGS/R	1	&EFS=V1UQ31UQ1+V1UQ31UQ1/1.4	
	&EFS=V1UQ31KF1+V1UQ31	=V1UQ31KF1+V1UQ31-KF1.1	1-X3 2		-BGS/R	2	&EFS=V1UQ31UQ1+V1UQ31UQ1/1.4	
	&EFS=V1UQ31KF1+V1UQ31	=V1UQ31KF1+V1UQ31-KF1.1	1-X3 3		-BGS/R	3	&EFS=V1UQ31UQ1+V1UQ31UQ1/1.4	
	&EFS=V1UQ31KF1+V1UQ31	=V1UQ31KF1+V1UQ31-KF1.1	1-X3 4		-BGS/R	4	&EFS=V1UQ31UQ1+V1UQ31UQ1/1.4	

			Date	1/24/2023	Volvo Trucks North America	Valiant TMS	Cable diagram =V1UQ31UQ1.3+V1UQ31UQ1.3-W1	Drawing name: =2V01&EFS-EL_KF1	= V1UQ31UQ1.3
			Ed.	MKLEPADLO					+ V1UQ31UQ1.3
			Appr		P6700 Framing - Cell 2V01, KF1			Document type: EMA	Project nr: 22-16152
Modification	Date	Name	Original		Replacement of / Replaced by	Scale 1:1			Page 1 / 1630

Cable diagram

F09_002_VLU

Cable name -W1			cable type TPE					
remark			no. of conductors 4			cross-section 18		cable length 10
function text	Page / column	Target designation from	Connection point	conductor	Target designation to	Connection point	Page / column	function text
	&EFS=V1UQ31KF1+V1UQ31UQ1	-V1UQ31KF1+V1UQ31-KF1.1	1-X4 1		-BGS/R	1	&EFS=V1UQ31UQ1+V1UQ31UQ1/1.5	
	&EFS=V1UQ31KF1+V1UQ31UQ1	-V1UQ31KF1+V1UQ31-KF1.1	1-X4 2		-BGS/R	2	&EFS=V1UQ31UQ1+V1UQ31UQ1/1.5	
	&EFS=V1UQ31KF1+V1UQ31UQ1	-V1UQ31KF1+V1UQ31-KF1.1	1-X4 3		-BGS/R	3	&EFS=V1UQ31UQ1+V1UQ31UQ1/1.5	
	&EFS=V1UQ31KF1+V1UQ31UQ1	-V1UQ31KF1+V1UQ31-KF1.1	1-X4 4		-BGS/R	4	&EFS=V1UQ31UQ1+V1UQ31UQ1/1.5	

			Date	1/24/2023	Volvo Trucks North America	Valiant TMS	Cable diagram =V1UQ31UQ1.4+V1UQ31UQ1.4-W1	Drawing name: =2V01&EFS-EL_KF1	= V1UQ31UQ1.4
			Ed.	MKLEPADLO					+ V1UQ31UQ1.4
			Appr		P6700 Framing - Cell 2V01, KF1			Document type: EMA	Project nr: 22-16152
Modification	Date	Name	Original		Replacement of / Replaced by	Scale 1:1			Page 1 / 1630

Cable diagram

F09_002_VLU

Cable name -W1			cable type TPE					
remark			no. of conductors 4			cross-section 18		cable length 8
function text	Page / column	Target designation from	Connection point	conductor	Target designation to	Connection point	Page / column	function text
	&EFS=V1UQ31KF1+V1UQ31UQ2	=V1UQ31KF1+V1UQ31-KF1.1	1-X5 1		-BGS/R	1	&EFS=V1UQ31UQ2+V1UQ31UQ2/1.0	
	&EFS=V1UQ31KF1+V1UQ31UQ2	=V1UQ31KF1+V1UQ31-KF1.1	1-X5 2		-BGS/R	2	&EFS=V1UQ31UQ2+V1UQ31UQ2/1.0	
	&EFS=V1UQ31KF1+V1UQ31UQ2	=V1UQ31KF1+V1UQ31-KF1.1	1-X5 3		-BGS/R	3	&EFS=V1UQ31UQ2+V1UQ31UQ2/1.1	
	&EFS=V1UQ31KF1+V1UQ31UQ2	=V1UQ31KF1+V1UQ31-KF1.1	1-X5 4		-BGS/R	4	&EFS=V1UQ31UQ2+V1UQ31UQ2/1.1	

			Date	1/24/2023	Volvo Trucks North America	Valiant TMS	Cable diagram =V1UQ31UQ2.1+V1UQ31UQ2.1-W1	Drawing name: =2V01&EFS-EL_KF1	= V1UQ31UQ2.1
			Ed.	MKLEPADLO					+ V1UQ31UQ2.1
			Appr		P6700 Framing - Cell 2V01, KF1			Document type: EMA	Project nr: 22-16152
Modification	Date	Name	Original		Replacement of / Replaced by	Scale 1:1			Page 1 / 1630

Cable diagram

F09_002_VLU

Cable name -W1			cable type TPE					
remark			no. of conductors 4			cross-section 18		cable length 10
function text	Page / column	Target designation from	Connection point	conductor	Target designation to	Connection point	Page / column	function text
	&EFS=V1UQ31KF1+V1UQ31UQ2	=V1UQ31KF1+V1UQ31-KF1.1	1-X6 1		-BGS/R	1	&EFS=V1UQ31UQ2+V1UQ31UQ2/1.2	
	&EFS=V1UQ31KF1+V1UQ31UQ2	=V1UQ31KF1+V1UQ31-KF1.1	1-X6 2		-BGS/R	2	&EFS=V1UQ31UQ2+V1UQ31UQ2/1.2	
	&EFS=V1UQ31KF1+V1UQ31UQ2	=V1UQ31KF1+V1UQ31-KF1.1	1-X6 3		-BGS/R	3	&EFS=V1UQ31UQ2+V1UQ31UQ2/1.2	
	&EFS=V1UQ31KF1+V1UQ31UQ2	=V1UQ31KF1+V1UQ31-KF1.1	1-X6 4		-BGS/R	4	&EFS=V1UQ31UQ2+V1UQ31UQ2/1.2	

			Date	1/24/2023	Volvo Trucks North America	Valiant TMS	Cable diagram =V1UQ31UQ2.2+V1UQ31UQ2.2-W1	Drawing name: =2V01&EFS-EL_KF1	= V1UQ31UQ2.2
			Ed.	MKLEPADLO					+ V1UQ31UQ2.2
			Appr		P6700 Framing - Cell 2V01, KF1			Document type: EMA	Project nr: 22-16152
Modification	Date	Name	Original		Replacement of / Replaced by	Scale 1:1			Page 1 / 1630

Cable diagram

F09_002_VLU

Cable name -W1			cable type TPE					
remark			no. of conductors 4			cross-section 18		cable length 1
function text	Page / column	Target designation from	Connection point	conductor	Target designation to	Connection point	Page / column	function text
	&EFS/1.0	-BG01	1		=V1UQ51KF1-KF1.11	X0:1	&EFS=V1UQ51KF1/1.1	
	&EFS/1.0	-BG01	4		=V1UQ51KF1-KF1.11	X0:4	&EFS=V1UQ51KF1/1.1	Common Part Present
	&EFS/1.1	-BG01	3		=V1UQ51KF1-KF1.11	X0:3	&EFS=V1UQ51KF1/1.1	

Cable diagram

F09_002_VLU

Cable name -W2			cable type TPE					
remark			no. of conductors 4			cross-section 18		cable length 3
function text	Page / column	Target designation from	Connection point	conductor	Target designation to	Connection point	Page / column	function text
	&EFS/1.3	-BG02	1		=V1UQ51KF1-KF1.11	X1:1	&EFS=V1UQ51KF1/1.2	
	&EFS/1.3	-BG02	4		=V1UQ51KF1-KF1.11	X1:4	&EFS=V1UQ51KF1/1.2	Common Part Present
	&EFS/1.3	-BG02	3		=V1UQ51KF1-KF1.11	X1:3	&EFS=V1UQ51KF1/1.2	

			Date	1/24/2023	Volvo Trucks North America	Valiant TMS	Cable diagram =V1UQ51BG0+V1UQ51-W2	Drawing name: =2V01&EFS-EL_KF1	= V1UQ51BG0
			Ed.	MKLEPADLO					+ V1UQ51
			Appr		P6700 Framing - Cell 2V01, KF1			Document type: EMA	Project nr: 22-16152
Modification	Date	Name	Original		Replacement of / Replaced by	Scale 1:1			Page 2 / 1630

Cable diagram

F09_002_VLU

Cable name -W1			cable type TPE					
remark			no. of conductors 4			cross-section 18		cable length 3
function text	Page / column	Target designation from	Connection point	conductor	Target designation to	Connection point	Page / column	function text
	&EFS/1.0	-BG01	1		=V1UQ53KF1-KF1.12-X1	1	&EFS=V1UQ53KF1/2.0	
	&EFS/1.0	-BG01	4		=V1UQ53KF1-KF1.12-X1	4	&EFS=V1UQ53KF1/2.1	
	&EFS/1.1	-BG01	3		=V1UQ53KF1-KF1.12-X1	3	&EFS=V1UQ53KF1/2.1	

			Date	1/24/2023	Volvo Trucks North America	Valiant TMS	Cable diagram =V1UQ53BG0+V1UQ53-W1	Drawing name: =2V01&EFS-EL_KF1	= V1UQ53BG0
			Ed.	MKLEPADLO					+ V1UQ53
			Appr		P6700 Framing - Cell 2V01, KF1			Document type: EMA / Project nr: 22-16152	Page 1
Modification	Date	Name	Original		Replacement of / Replaced by	Scale 1:1			1630

Cable diagram

F09_002_VLU

Cable name -W2			cable type TPE					
remark			no. of conductors 4			cross-section 18		cable length 3
function text	Page / column	Target designation from	Connection point	conductor	Target designation to	Connection point	Page / column	function text
	&EFS/1.3	-XG2/3	P1:1		=V1UQ53KF1-KF1.12-X2	1	&EFS=V1UQ53KF1/2.1	
	&EFS/1.3	-XG2/3	P1:3		=V1UQ53KF1-KF1.12-X2	3	&EFS=V1UQ53KF1/2.2	
	&EFS/1.3	-XG2/3	P1:4		=V1UQ53KF1-KF1.12-X2	4	&EFS=V1UQ53KF1/2.2	
	&EFS/1.4	-XG2/3	P1:2		=V1UQ53KF1-KF1.12-X2	2	&EFS=V1UQ53KF1/2.2	

1 3

			Date	1/24/2023	Volvo Trucks North America	Valiant TMS	Cable diagram =V1UQ53BG0+V1UQ53-W2	Drawing name: =2V01&EFS-EL_KF1	= V1UQ53BG0
			Ed.	MKLEPADLO					+ V1UQ53
			Appr		P6700 Framing - Cell 2V01, KF1			Document type: EMA	Project nr: 22-16152
Modification	Date	Name	Original		Replacement of / Replaced by	Scale 1:1			Page 2 / 1630

Cable diagram

F09_002_VLU

Cable name -W2.1			cable type TPE					
remark			no. of conductors 4			cross-section 18		cable length 0.5
function text	Page / column	Target designation from	Connection point	conductor	Target designation to	Connection point	Page / column	function text
	&EFS/1.3	-BG02	1		-XG2/3	J1:1	&EFS/1.3	
	&EFS/1.3	-BG02	4		-XG2/3	J1:4	&EFS/1.3	
	&EFS/1.3	-BG02	3		-XG2/3	J1:3	&EFS/1.3	

			Date	1/24/2023	Volvo Trucks North America		Valiant TMS	Cable diagram =V1UQ53BG0+V1UQ53-W2.1	Drawing name: =2V01&EFS-EL_KF1	= V1UQ53BG0
			Ed.	MKLEPADLO						+ V1UQ53
			Appr		P6700 Framing - Cell 2V01, KF1				Document type: EMA	Project nr: 22-16152
Modification	Date	Name	Original		Replacement of	Replaced by	Scale 1:1			Page 3 / 1630

Cable diagram

F09_002_VLU

Cable name -W2.2			cable type TPE					
remark			no. of conductors 4			cross-section 18		cable length 0.5
function text	Page / column	Target designation from	Connection point	conductor	Target designation to	Connection point	Page / column	function text
	&EFS/1.4	-BG03	1		-XG2/3	J2:1	&EFS/1.4	
	&EFS/1.4	-BG03	4		-XG2/3	J2:4	&EFS/1.4	
	&EFS/1.4	-BG03	3		-XG2/3	J2:3	&EFS/1.4	

			Date	1/24/2023	Volvo Trucks North America	Valiant TMS	Cable diagram =V1UQ53BG0+V1UQ53-W2.2	Drawing name: =2V01&EFS-EL_KF1	= V1UQ53BG0
			Ed.	MKLEPADLO					+ V1UQ53
			Appr		P6700 Framing - Cell 2V01, KF1			Document type: EMA	Project nr: 22-16152
Modification	Date	Name	Original		Replacement of / Replaced by	Scale 1:1			Page 4 / 1630

Cable diagram

F09_002_VLU

Cable name -W3			cable type TPE					
remark			no. of conductors 4			cross-section 18		cable length 3
function text	Page / column	Target designation from	Connection point	conductor	Target designation to	Connection point	Page / column	function text
	&EFS/1.6	-XG4/5	P1:1		=V1UQ53KF1-KF1.12-X3	1	&EFS=V1UQ53KF1/2.3	
	&EFS/1.6	-XG4/5	P1:3		=V1UQ53KF1-KF1.12-X3	3	&EFS=V1UQ53KF1/2.3	
	&EFS/1.6	-XG4/5	P1:4		=V1UQ53KF1-KF1.12-X3	4	&EFS=V1UQ53KF1/2.3	
	&EFS/1.6	-XG4/5	P1:2		=V1UQ53KF1-KF1.12-X3	2	&EFS=V1UQ53KF1/2.3	

			Date	1/24/2023	Volvo Trucks North America	Valiant TMS	Cable diagram =V1UQ53BG0+V1UQ53-W3	Drawing name: =2V01&EFS-EL_KF1	= V1UQ53BG0
			Ed.	MKLEPADLO					+ V1UQ53
			Appr		P6700 Framing - Cell 2V01, KF1			Document type: EMA	Project nr: 22-16152
Modification	Date	Name	Original		Replacement of / Replaced by	Scale 1:1			Page 5 / 1630

Cable diagram

F09_002_VLU

Cable name -W3.1			cable type TPE					
remark			no. of conductors 4			cross-section 18		cable length 0.5
function text	Page / column	Target designation from	Connection point	conductor	Target designation to	Connection point	Page / column	function text
	&EFS/1.6	-BG04	1		-XG4/5	J1:1	&EFS/1.6	
	&EFS/1.6	-BG04	4		-XG4/5	J1:4	&EFS/1.6	
	&EFS/1.6	-BG04	3		-XG4/5	J1:3	&EFS/1.6	

			Date	1/24/2023	Volvo Trucks North America	Valiant TMS	Cable diagram =V1UQ53BG0+V1UQ53-W3.1	Drawing name: =2V01&EFS-EL_KF1	= V1UQ53BG0
			Ed.	MKLEPADLO					+ V1UQ53
			Appr		P6700 Framing - Cell 2V01, KF1			Document type: EMA	Project nr: 22-16152
Modification	Date	Name	Original		Replacement of / Replaced by	Scale 1:1			Page 6 / 1630

Cable diagram

F09_002_VLU

Cable name -W3.2			cable type TPE					
remark			no. of conductors 4			cross-section 18		cable length 0.5
function text	Page / column	Target designation from	Connection point	conductor	Target designation to	Connection point	Page / column	function text
	&EFS/1.7	-BG05	1		-XG4/5	J2:1	&EFS/1.7	
	&EFS/1.7	-BG05	4		-XG4/5	J2:4	&EFS/1.7	
	&EFS/1.7	-BG05	3		-XG4/5	J2:3	&EFS/1.7	

			Date	1/24/2023	Volvo Trucks North America	Valiant TMS	Cable diagram =V1UQ53BG0+V1UQ53-W3.2	Drawing name: =2V01&EFS-EL_KF1	= V1UQ53BG0
			Ed.	MKLEPADLO					+ V1UQ53
			Appr		P6700 Framing - Cell 2V01, KF1			Document type: EMA	Project nr: 22-16152
Modification	Date	Name	Original		Replacement of / Replaced by	Scale 1:1			Page 7 / 1630

Cable diagram

F09_002_VLU

Cable name -W4			cable type TPE					
remark			no. of conductors 4			cross-section 18		cable length 4
function text	Page / column	Target designation from	Connection point	conductor	Target designation to	Connection point	Page / column	function text
	&EFS/2.0	-XG6/7	P1:1		=V1UQ53KF1-KF1.12-X4	1	&EFS=V1UQ53KF1/2.4	
	&EFS/2.1	-XG6/7	P1:3		=V1UQ53KF1-KF1.12-X4	3	&EFS=V1UQ53KF1/2.4	
	&EFS/2.1	-XG6/7	P1:4		=V1UQ53KF1-KF1.12-X4	4	&EFS=V1UQ53KF1/2.4	
	&EFS/2.1	-XG6/7	P1:2		=V1UQ53KF1-KF1.12-X4	2	&EFS=V1UQ53KF1/2.4	

			Date	1/24/2023	Volvo Trucks North America	Valiant TMS	Cable diagram =V1UQ53BG0+V1UQ53-W4	Drawing name: =2V01&EFS-EL_KF1	= V1UQ53BG0
			Ed.	MKLEPADLO					+ V1UQ53
			Appr		P6700 Framing - Cell 2V01, KF1			Document type: EMA	Project nr: 22-16152
Modification	Date	Name	Original		Replacement of / Replaced by	Scale 1:1			Page 8 / 1630

Cable diagram

F09_002_VLU

Cable name -W4.1			cable type TPE					
remark			no. of conductors 4			cross-section 18		cable length 0.5
function text	Page / column	Target designation from	Connection point	conductor	Target designation to	Connection point	Page / column	function text
	&EFS/2.0	-BG06	1		-XG6/7	J1:1	&EFS/2.0	
	&EFS/2.0	-BG06	4		-XG6/7	J1:4	&EFS/2.1	
	&EFS/2.1	-BG06	3		-XG6/7	J1:3	&EFS/2.1	

			Date	1/24/2023	Volvo Trucks North America		Valiant TMS	Cable diagram =V1UQ53BG0+V1UQ53-W4.1	Drawing name: =2V01&EFS-EL_KF1	= V1UQ53BG0
			Ed.	MKLEPADLO						+ V1UQ53
			Appr		P6700 Framing - Cell 2V01, KF1				Document type: EMA	Project nr: 22-16152 Page 9
Modification	Date	Name	Original		Replacement of	Replaced by	Scale 1:1			1630

Cable diagram

F09_002_VLU

Cable name -W4.2			cable type TPE					
remark			no. of conductors 4			cross-section 18		cable length 0.5
function text	Page / column	Target designation from	Connection point	conductor	Target designation to	Connection point	Page / column	function text
	&EFS/2.1	-BG07	1		-XG6/7	J2:1	&EFS/2.1	
	&EFS/2.1	-BG07	4		-XG6/7	J2:4	&EFS/2.2	
	&EFS/2.2	-BG07	3		-XG6/7	J2:3	&EFS/2.2	

			Date	1/24/2023	Volvo Trucks North America		Valiant TMS	Cable diagram =V1UQ53BG0+V1UQ53-W4.2	Drawing name: =2V01&EFS-EL_KF1	= V1UQ53BG0
			Ed.	MKLEPADLO						+ V1UQ53
			Appr		P6700 Framing - Cell 2V01, KF1				Document type: EMA	Project nr: 22-16152
Modification	Date	Name	Original		Replacement of	Replaced by	Scale 1:1			Page 10 / 1630

Cable diagram

F09_002_VLU

Cable name -W5			cable type TPE					
remark			no. of conductors 4			cross-section 18		cable length 4
function text	Page / column	Target designation from	Connection point	conductor	Target designation to	Connection point	Page / column	function text
	&EFS/2.3	-XG8/9	P1:1		=V1UQ53KF1-KF1.12-X5	1	&EFS=V1UQ53KF1/2.5	
	&EFS/2.3	-XG8/9	P1:3		=V1UQ53KF1-KF1.12-X5	3	&EFS=V1UQ53KF1/2.5	
	&EFS/2.3	-XG8/9	P1:4		=V1UQ53KF1-KF1.12-X5	4	&EFS=V1UQ53KF1/2.5	
	&EFS/2.4	-XG8/9	P1:2		=V1UQ53KF1-KF1.12-X5	2	&EFS=V1UQ53KF1/2.5	

			Date	1/24/2023	Volvo Trucks North America	Valiant TMS	Cable diagram =V1UQ53BG0+V1UQ53-W5	Drawing name: =2V01&EFS-EL_KF1	= V1UQ53BG0
			Ed.	MKLEPADLO					+ V1UQ53
			Appr		P6700 Framing - Cell 2V01, KF1			Document type: EMA	Project nr: 22-16152 Page 11
Modification	Date	Name	Original		Replacement of / Replaced by	Scale 1:1			1630

Cable diagram

F09_002_VLU

Cable name -W5.1			cable type TPE					
remark			no. of conductors 4			cross-section 18		cable length 0.5
function text	Page / column	Target designation from	Connection point	conductor	Target designation to	Connection point	Page / column	function text
	&EFS/2.3	-BG08	1		-XG8/9	J1:1	&EFS/2.3	
	&EFS/2.3	-BG08	4		-XG8/9	J1:4	&EFS/2.3	
	&EFS/2.3	-BG08	3		-XG8/9	J1:3	&EFS/2.3	

			Date	1/24/2023	Volvo Trucks North America	Valiant TMS	Cable diagram =V1UQ53BG0+V1UQ53-W5.1	Drawing name: =2V01&EFS-EL_KF1	= V1UQ53BG0
			Ed.	MKLEPADLO					+ V1UQ53
			Appr		P6700 Framing - Cell 2V01, KF1			Document type: EMA / Project nr: 22-16152	Page 12
Modification	Date	Name	Original		Replacement of / Replaced by	Scale 1:1			1630

Cable diagram

F09_002_VLU

Cable name -W5.2			cable type TPE					
remark			no. of conductors 4			cross-section 18		cable length 0.5
function text	Page / column	Target designation from	Connection point	conductor	Target designation to	Connection point	Page / column	function text
	&EFS/2.4	-BG09	1		-XG8/9	J2:1	&EFS/2.4	
	&EFS/2.4	-BG09	4		-XG8/9	J2:4	&EFS/2.4	
	&EFS/2.4	-BG09	3		-XG8/9	J2:3	&EFS/2.4	

			Date	1/24/2023	Volvo Trucks North America	Valiant TMS	Cable diagram =V1UQ53BG0+V1UQ53-W5.2	Drawing name: =2V01&EFS-EL_KF1	= V1UQ53BG0
			Ed.	MKLEPADLO					+ V1UQ53
			Appr		P6700 Framing - Cell 2V01, KF1			Document type: EMA	Project nr: 22-16152
Modification	Date	Name	Original		Replacement of / Replaced by	Scale 1:1			Page 13 / 1630

Cable diagram

F09_002_VLU

Cable name -W1			cable type TPE					
remark			no. of conductors 4			cross-section 18		cable length 3
function text	Page / column	Target designation from	Connection point	conductor	Target designation to	Connection point	Page / column	function text
	&EFS=V1UQ53KF1+V1UQ53/1.1	-V1UQ53KF1+V1UQ53-KF1.1	1-X1 1		-XGR/S	P1:1	&EFS=V1UQ53UQ5+V1UQ53UQ5/1.1	
	&EFS=V1UQ53KF1+V1UQ53/1.1	-V1UQ53KF1+V1UQ53-KF1.1	1-X1 2		-XGR/S	P1:2	&EFS=V1UQ53UQ5+V1UQ53UQ5/1.1	
	&EFS=V1UQ53KF1+V1UQ53/1.1	-V1UQ53KF1+V1UQ53-KF1.1	1-X1 3		-XGR/S	P1:3	&EFS=V1UQ53UQ5+V1UQ53UQ5/1.1	
	&EFS=V1UQ53KF1+V1UQ53/1.1	-V1UQ53KF1+V1UQ53-KF1.1	1-X1 4		-XGR/S	P1:4	&EFS=V1UQ53UQ5+V1UQ53UQ5/1.1	

			Date	1/24/2023	Volvo Trucks North America	Valiant TMS	Cable diagram =V1UQ53UQ5.1+V1UQ53UQ5.1-W1	Drawing name: =2V01&EFS-EL_KF1	= V1UQ53UQ5.1
			Ed.	MKLEPADLO					+ V1UQ53UQ5.1
			Appr		P6700 Framing - Cell 2V01, KF1	Scale 1:1		Document type: EMA	Project nr: 22-16152
Modification	Date	Name	Original		Replacement of	Replaced by			Page 1 / 1630

Cable diagram

F09_002_VLU

Cable name -W1.1			cable type TPE					
remark			no. of conductors 4			cross-section 18		cable length 0.5
function text	Page / column	Target designation from	Connection point	conductor	Target designation to	Connection point	Page / column	function text
	&EFS=V1UQ53UQ5+V1UQ53UQ5/1.1	-XGR/S	1		-XGR/S	J1:1	&EFS=V1UQ53UQ5+V1UQ53UQ5/1.1	
	&EFS=V1UQ53UQ5+V1UQ53UQ5/1.1	-XGR/S	4		-XGR/S	J1:4	&EFS=V1UQ53UQ5+V1UQ53UQ5/1.1	
	&EFS=V1UQ53UQ5+V1UQ53UQ5/1.1	-XGR/S	3		-XGR/S	J1:3	&EFS=V1UQ53UQ5+V1UQ53UQ5/1.1	

1 3

			Date	1/24/2023	Volvo Trucks North America	Valiant TMS	Cable diagram =V1UQ53UQ5.1+V1UQ53UQ5.1-W1.1	Drawing name: =2V01&EFS-EL_KF1	= V1UQ53UQ5.1
			Ed.	MKLEPADLO					+ V1UQ53UQ5.1
			Appr		P6700 Framing - Cell 2V01, KF1			Document type: EMA	Project nr: 22-16152
Modification	Date	Name	Original		Replacement of / Replaced by	Scale 1:1			Page 2 / 1630

Cable diagram

F09_002_VLU

Cable name -W1.2			cable type TPE					
remark			no. of conductors 4			cross-section 18		cable length 0.5
function text	Page / column	Target designation from	Connection point	conductor	Target designation to	Connection point	Page / column	function text
	&EFS=V1UQ53UQ5+V1UQ53UQ5/1.2	-XGS	1		-XGR/S	J2:1	&EFS=V1UQ53UQ5+V1UQ53UQ5/1.2	
	&EFS=V1UQ53UQ5+V1UQ53UQ5/1.2	-XGS	4		-XGR/S	J2:4	&EFS=V1UQ53UQ5+V1UQ53UQ5/1.2	
	&EFS=V1UQ53UQ5+V1UQ53UQ5/1.2	-XGS	3		-XGR/S	J2:3	&EFS=V1UQ53UQ5+V1UQ53UQ5/1.2	

			Date	1/24/2023	Volvo Trucks North America	Valiant TMS	Cable diagram =V1UQ53UQ5.1+V1UQ53UQ5.1-W1.2	Drawing name: =2V01&EFS-EL_KF1	= V1UQ53UQ5.1
			Ed.	MKLEPADLO					+ V1UQ53UQ5.1
			Appr		P6700 Framing - Cell 2V01, KF1			Document type: EMA	Project nr: 22-16152
Modification	Date	Name	Original		Replacement of / Replaced by	Scale 1:1			Page 3 / 1630

Cable diagram

F09_002_VLU

Cable name -GND1			cable type RK					
remark			no. of conductors 1			cross-section 6		cable length
function text	Page / column	Target designation from	Connection point	conductor	Target designation to	Connection point	Page / column	function text
480VAC TN-S 3 PHASE 60Hz Fed from: ..... short circuit protection: ..... Over current: ..... cable type: 4/0 AWG IkMax =.....kA IkMin = ...kA Z: ..... mΩ.	&EFS/1.3	-GND			-PE	PE	&EFS/1.3	480VAC TN-S 3 PHASE 60Hz Fed from: ..... short circuit protection: ..... Over current: ..... cable type: 4/0 AWG IkMax =.....kA IkMin = ...kA Z: ..... mΩ.

=V1UQ53UQ5.1+.UQ53UQ5.1/3

+.UC12/1

			Date	1/24/2023	Volvo Trucks North America	Valiant TMS	Cable diagram =V1WC1+V1UC11-GND1	Drawing name: =2V01&EFS-EL_KF1	= V1WC1
			Ed.	MKLEPADLO					+ V1UC11
			Appr		P6700 Framing - Cell 2V01, KF1			Document type: EMA	Project nr: 22-16152
Modification	Date	Name	Original		Replacement of / Replaced by	Scale 1:1			Page 1 / 1630

Cable diagram

F09_002_VLU

Cable name -GND1			cable type RK					
remark			no. of conductors 1			cross-section 6		cable length
function text	Page / column	Target designation from	Connection point	conductor	Target designation to	Connection point	Page / column	function text
480VAC TN-S 3 PHASE 60Hz Fed from: ..... short circuit protection: ..... Over current: ..... cable type: 4/0 AWG IkMax =.....kA IkMin = ...kA Z: ..... mΩ.	&EFS/1.3	-GND			-PE	PE	&EFS/1.3	480VAC TN-S 3 PHASE 60Hz Fed from: ..... short circuit protection: ..... Over current: ..... cable type: 4/0 AWG IkMax =.....kA IkMin = ...kA Z: ..... mΩ.

+.UC11/1

=V2AR31UQ41BG0+V2AR31UQ41/1

			Date	1/24/2023	Volvo Trucks North America	Valiant TMS	Cable diagram =V1WC1+V1UC12-GND1	Drawing name: =2V01&EFS-EL_KF1	= V1WC1
			Ed.	MKLEPADLO					+ V1UC12
			Appr		P6700 Framing - Cell 2V01, KF1			Document type: EMA	Project nr: 22-16152
Modification	Date	Name	Original		Replacement of / Replaced by	Scale 1:1			Page 1 / 1630

Cable diagram

F09_002_VLU

Cable name -W1			cable type TPE					
remark			no. of conductors 4			cross-section 18		cable length 2
function text	Page / column	Target designation from	Connection point	conductor	Target designation to	Connection point	Page / column	function text
	&EFS/1.0	-XG1/2	P1:1		=V2AR31UQ41KF1-KF1.13-X1	1	&EFS=V2AR31UQ41KF1/4.0	
	&EFS/1.1	-XG1/2	P1:3		=V2AR31UQ41KF1-KF1.13-X1	3	&EFS=V2AR31UQ41KF1/4.1	
	&EFS/1.1	-XG1/2	P1:4		=V2AR31UQ41KF1-KF1.13-X1	4	&EFS=V2AR31UQ41KF1/4.1	
	&EFS/1.1	-XG1/2	P1:2		=V2AR31UQ41KF1-KF1.13-X1	2	&EFS=V2AR31UQ41KF1/4.0	

			Date	1/24/2023	Volvo Trucks North America	Valiant TMS	Cable diagram =V2AR31UQ41BG0+V2AR31UQ41-W1	Drawing name: =2V01&EFS-EL_KF1	= V2AR31UQ41BG0
			Ed.	MKLEPADLO					+ V2AR31UQ41
			Appr		P6700 Framing - Cell 2V01, KF1	Scale 1:1		Document type: EMA	Project nr: 22-16152 Page 1
Modification	Date	Name	Original		Replacement of / Replaced by				1630

Cable diagram

F09_002_VLU

Cable name -W1.1			cable type TPE					
remark			no. of conductors 4			cross-section 18		cable length 1
function text	Page / column	Target designation from	Connection point	conductor	Target designation to	Connection point	Page / column	function text
	&EFS/1.0	-BG01	1		-XG1/2	J1:1	&EFS/1.0	
	&EFS/1.0	-BG01	4		-XG1/2	J1:4	&EFS/1.1	
	&EFS/1.1	-BG01	3		-XG1/2	J1:3	&EFS/1.1	

			Date	1/24/2023	Volvo Trucks North America	Valiant TMS	Cable diagram =V2AR31UQ41BG0+V2AR31UQ41-W1.1	Drawing name: =2V01&EFS-EL_KF1	= V2AR31UQ41BG0
			Ed.	MKLEPADLO					+ V2AR31UQ41
			Appr		P6700 Framing - Cell 2V01, KF1			Document type: EMA	Project nr: 22-16152
Modification	Date	Name	Original		Replacement of / Replaced by	Scale 1:1			Page 2 / 1630

Cable diagram

F09_002_VLU

Cable name -W1.2			cable type TPE					
remark			no. of conductors 4			cross-section 18		cable length 0.5
function text	Page / column	Target designation from	Connection point	conductor	Target designation to	Connection point	Page / column	function text
	&EFS/1.1	-BG02	1		-XG1/2	J2:1	&EFS/1.1	
	&EFS/1.1	-BG02	4		-XG1/2	J2:4	&EFS/1.2	
	&EFS/1.2	-BG02	3		-XG1/2	J2:3	&EFS/1.2	

			Date	1/24/2023	Volvo Trucks North America	Valiant TMS	Cable diagram =V2AR31UQ41BG0+V2AR31UQ41-W1.2	Drawing name: =2V01&EFS-EL_KF1	= V2AR31UQ41BG0
			Ed.	MKLEPADLO					+ V2AR31UQ41
			Appr		P6700 Framing - Cell 2V01, KF1			Document type: EMA / Project nr: 22-16152	Page 3
Modification	Date	Name	Original		Replacement of / Replaced by	Scale 1:1			1630

Cable diagram

F09_002_VLU

Cable name -W2			cable type TPE					
remark			no. of conductors 4			cross-section 18		cable length 2
function text	Page / column	Target designation from	Connection point	conductor	Target designation to	Connection point	Page / column	function text
	&EFS/1.3	-XG3/4	P1:1		=V2AR31UQ41KF1-KF1.13-X2	1	&EFS=V2AR31UQ41KF1/4.1	
	&EFS/1.3	-XG3/4	P1:3		=V2AR31UQ41KF1-KF1.13-X2	3	&EFS=V2AR31UQ41KF1/4.2	
	&EFS/1.4	-XG3/4	P1:4		=V2AR31UQ41KF1-KF1.13-X2	4	&EFS=V2AR31UQ41KF1/4.2	
	&EFS/1.4	-XG3/4	P1:2		=V2AR31UQ41KF1-KF1.13-X2	2	&EFS=V2AR31UQ41KF1/4.2	

3 5

			Date	1/24/2023	Volvo Trucks North America	Valiant TMS	Cable diagram =V2AR31UQ41BG0+V2AR31UQ41-W2	Drawing name: =2V01&EFS-EL_KF1	= V2AR31UQ41BG0
			Ed.	MKLEPADLO					+ V2AR31UQ41
			Appr		P6700 Framing - Cell 2V01, KF1			Document type: EMA	Project nr: 22-16152
Modification	Date	Name	Original		Replacement of / Replaced by	Scale 1:1			Page 4 / 1630

Cable diagram

F09_002_VLU

Cable name -W2.1			cable type TPE					
remark			no. of conductors 4			cross-section 18		cable length 1
function text	Page / column	Target designation from	Connection point	conductor	Target designation to	Connection point	Page / column	function text
	&EFS/1.3	-BG03	1		-XG3/4	J1:1	&EFS/1.3	
	&EFS/1.3	-BG03	4		-XG3/4	J1:4	&EFS/1.4	
	&EFS/1.3	-BG03	3		-XG3/4	J1:3	&EFS/1.3	

			Date	1/24/2023	Volvo Trucks North America	Valiant TMS	Cable diagram =V2AR31UQ41BG0+V2AR31UQ41-W2.1	Drawing name: =2V01&EFS-EL_KF1	= V2AR31UQ41BG0
			Ed.	MKLEPADLO					+ V2AR31UQ41
			Appr		P6700 Framing - Cell 2V01, KF1			Document type: EMA	Project nr: 22-16152
Modification	Date	Name	Original		Replacement of / Replaced by	Scale 1:1			Page 5 / 1630

Cable diagram

F09_002_VLU

Cable name -W2.2			cable type TPE					
remark			no. of conductors 4			cross-section 18		cable length 0.5
function text	Page / column	Target designation from	Connection point	conductor	Target designation to	Connection point	Page / column	function text
	&EFS/1.4	-BG04	1		-XG3/4	J2:1	&EFS/1.4	
	&EFS/1.4	-BG04	4		-XG3/4	J2:4	&EFS/1.5	
	&EFS/1.4	-BG04	3		-XG3/4	J2:3	&EFS/1.4	

			Date	1/24/2023	Volvo Trucks North America		Valiant TMS	Cable diagram	Drawing name: =2V01&EFS-EL_KF1	= V2AR31UQ41BG0
			Ed.	MKLEPADLO				=V2AR31UQ41BG0+V2AR31UQ41-W2.2		+ V2AR31UQ41
			Appr		P6700 Framing - Cell 2V01, KF1				Document type: EMA	Project nr: 22-16152
Modification	Date	Name	Original		Replacement of	Replaced by	Scale 1:1			Page 6 / 1630

Cable diagram

F09_002_VLU

Cable name -W3			cable type TPE					
remark			no. of conductors 4			cross-section 18		cable length 2
function text	Page / column	Target designation from	Connection point	conductor	Target designation to	Connection point	Page / column	function text
	&EFS/1.6	-BG05	1		=V2AR31UQ41KF1-KF1.13-X3	1	&EFS=V2AR31UQ41KF1/4.3	
	&EFS/1.6	-BG05	4		=V2AR31UQ41KF1-KF1.13-X3	4	&EFS=V2AR31UQ41KF1/4.3	
	&EFS/1.6	-BG05	3		=V2AR31UQ41KF1-KF1.13-X3	3	&EFS=V2AR31UQ41KF1/4.3	

			Date	1/24/2023	Volvo Trucks North America	Valiant TMS	Cable diagram =V2AR31UQ41BG0+V2AR31UQ41-W3	Drawing name: =2V01&EFS-EL_KF1	= V2AR31UQ41BG0
			Ed.	MKLEPADLO					+ V2AR31UQ41
			Appr		P6700 Framing - Cell 2V01, KF1	Scale 1:1		Document type: EMA / Project nr: 22-16152	Page 7 / 1630
Modification	Date	Name	Original		Replacement of / Replaced by				

Cable diagram

F09_002_VLU

Cable name -W1			cable type TPU					
remark			no. of conductors 5			cross-section 16		cable length 2
function text	Page / column	Target designation from	Connection point	conductor	Target designation to	Connection point	Page / column	function text
	&EFS/2.2	-KF1-X20	5		-R3.CP/CS	C4	&EFS/1.3	
	&EFS/2.1	-KF1-X20	1		-R3.CP/CS	C5	&EFS/1.3	
	&EFS/2.1	-KF1-X20	3		-R3.CP/CS	PE	&EFS/1.3	
	&EFS/2.2	-KF1-X20	4		-R3.CP/CS	C6	&EFS/1.3	
	&EFS/2.1	-KF1-X20	2		-R3.CP/CS	C7	&EFS/1.4	

			Date	1/24/2023	Volvo Trucks North America	Valiant TMS	Cable diagram =V2AR31UQ41KF1+V2AR31UQ41-W1	Drawing name: =2V01&EFS-EL_KF1	= V2AR31UQ41KF1
			Ed.	MKLEPADLO					+ V2AR31UQ41
			Appr		P6700 Framing - Cell 2V01, KF1			Document type: EMA	Project nr: 22-16152
Modification	Date	Name	Original		Replacement of / Replaced by	Scale 1:1			Page 1 / 1630

Cable diagram

F09_002_VLU

Cable name -WF1			cable type PROFINET Cable					
remark			no. of conductors 4			cross-section 22		cable length
function text	Page / column	Target designation from	Connection point	conductor	Target designation to	Connection point	Page / column	function text
	&EFS/2.3	-KF1-TP1			-R3.CP/CS	R3.PROFINET	&EFS/1.5	

			Date	1/24/2023	Volvo Trucks North America	Valiant TMS	Cable diagram =V2AR31UQ41KF1+V2AR31UQ41-WF1	Drawing name: =2V01&EFS-EL_KF1	= V2AR31UQ41KF1
			Ed.	MKLEPADLO					+ V2AR31UQ41
			Appr		P6700 Framing - Cell 2V01, KF1			Document type: EMA	Project nr: 22-16152
Modification	Date	Name	Original		Replacement of / Replaced by	Scale 1:1			Page 2 / 1630

Cable diagram

F09_002_VLU

Cable name -W1			cable type TPE					
remark			no. of conductors 4			cross-section 18		cable length 3
function text	Page / column	Target designation from	Connection point	conductor	Target designation to	Connection point	Page / column	function text
	&EFS=V2AR31UQ41KF1	=**V2AR31UQ41KF1**+V2AR31UQ41-KF1	1.11-X1		-BGS/R	1	&EFS=V2AR31UQ41UQ1+V2AR31UQ41UQ1/1.0	
	&EFS=V2AR31UQ41KF1	=**V2AR31UQ41KF1**+V2AR31UQ41-KF2	1.11-X1		-BGS/R	2	&EFS=V2AR31UQ41UQ1+V2AR31UQ41UQ1/1.0	
	&EFS=V2AR31UQ41KF1	=**V2AR31UQ41KF1**+V2AR31UQ41-KF3	1.11-X1		-BGS/R	3	&EFS=V2AR31UQ41UQ1+V2AR31UQ41UQ1/1.1	
	&EFS=V2AR31UQ41KF1	=**V2AR31UQ41KF1**+V2AR31UQ41-KF4	1.11-X1		-BGS/R	4	&EFS=V2AR31UQ41UQ1+V2AR31UQ41UQ1/1.1	

=V2AR31UQ41KF1+V2AR31UQ41/2

=V2AR31UQ41UQ2.1+.AR31UQ41UQ2.1/1

			Date	1/24/2023	Volvo Trucks North America	Valiant TMS	Cable diagram =V2AR31UQ41UQ1.1+V2AR31UQ41UQ1.1-W1	Drawing name: =2V01&EFS-EL_KF1	= V2AR31UQ41UQ1.1
			Ed.	MKLEPADLO					+ V2AR31UQ41UQ1.1
			Appr		P6700 Framing - Cell 2V01, KF1			Document type: EMA	Project nr: 22-16152
Modification	Date	Name	Original		Replacement of / Replaced by	Scale 1:1			Page 1 / 1630

Cable diagram

F09_002_VLU

Cable name -W1			cable type TPE					
remark			no. of conductors 4			cross-section 18		cable length 3
function text	Page / column	Target designation from	Connection point	conductor	Target designation to	Connection point	Page / column	function text
	&EFS=V2AR31UQ41KF1+V2AR31UQ41KF1.1	=V2AR31UQ41/KF1+V2AR31UQ41-KF1.11-X2	1		-BGS/R	1	&EFS=V2AR31UQ41UQ2+V2AR31UQ41UQ2/1.0	
	&EFS=V2AR31UQ41KF1+V2AR31UQ41KF1.1	=V2AR31UQ41/KF1+V2AR31UQ41-KF1.11-X2	2		-BGS/R	2	&EFS=V2AR31UQ41UQ2+V2AR31UQ41UQ2/1.0	
	&EFS=V2AR31UQ41KF1+V2AR31UQ41KF1.1	=V2AR31UQ41/KF1+V2AR31UQ41-KF1.11-X2	3		-BGS/R	3	&EFS=V2AR31UQ41UQ2+V2AR31UQ41UQ2/1.1	
	&EFS=V2AR31UQ41KF1+V2AR31UQ41KF1.1	=V2AR31UQ41/KF1+V2AR31UQ41-KF1.11-X2	4		-BGS/R	4	&EFS=V2AR31UQ41UQ2+V2AR31UQ41UQ2/1.1	

=V2AR31UQ41UQ1.1+.AR31UQ41UQ1.1/1

=V2AR31UQ41UQ2.2+.AR31UQ41UQ2.2/1

			Date	1/24/2023	Volvo Trucks North America	Valiant TMS	Cable diagram =V2AR31UQ41UQ2.1+V2AR31UQ41UQ2.1-W1	Drawing name: =2V01&EFS-EL_KF1	= V2AR31UQ41UQ2.1 + V2AR31UQ41UQ2.1
			Ed.	MKLEPADLO	P6700 Framing - Cell 2V01, KF1				
			Appr					Document type: EMA	Project nr: 22-16152
Modification	Date	Name	Original		Replacement of / Replaced by	Scale 1:1			Page 1 / 1630

Cable diagram

F09_002_VLU

Cable name -W1			cable type TPE					
remark			no. of conductors 4			cross-section 18		cable length 2
function text	Page / column	Target designation from	Connection point	conductor	Target designation to	Connection point	Page / column	function text
	&EFS=V2AR31UQ41KF1	=**V2AR31UQ41KF1**+V2AR31UQ41-KF1	1		1.11-X3	-BGS/R	1	&EFS=V2AR31UQ41UQ2+V2AR31UQ41UQ2/1.2
	&EFS=V2AR31UQ41KF1	=**V2AR31UQ41KF1**+V2AR31UQ41-KF1	2		1.11-X3	-BGS/R	2	&EFS=V2AR31UQ41UQ2+V2AR31UQ41UQ2/1.2
	&EFS=V2AR31UQ41KF1	=**V2AR31UQ41KF1**+V2AR31UQ41-KF1	3		1.11-X3	-BGS/R	3	&EFS=V2AR31UQ41UQ2+V2AR31UQ41UQ2/1.2
	&EFS=V2AR31UQ41KF1	=**V2AR31UQ41KF1**+V2AR31UQ41-KF1	4		1.11-X3	-BGS/R	4	&EFS=V2AR31UQ41UQ2+V2AR31UQ41UQ2/1.2

=V2AR31UQ41UQ2.1+.AR31UQ41UQ2.1/1

=V2AR31UQ41UQ2.3+.AR31UQ41UQ2.3/1

			Date	1/24/2023	Volvo Trucks North America	Valiant TMS	Cable diagram =V2AR31UQ41UQ2.2+V2AR31UQ41UQ2.2-W1	Drawing name: =2V01&EFS-EL_KF1	= V2AR31UQ41UQ2.2
			Ed.	MKLEPADLO					+ V2AR31UQ41UQ2.2
			Appr		P6700 Framing - Cell 2V01, KF1	Scale 1:1		Document type: EMA	Project nr: 22-16152
Modification	Date	Name	Original		Replacement of / Replaced by				Page 1 / 1630

Cable diagram

F09_002_VLU

Cable name -W1			cable type TPE					
remark			no. of conductors 4			cross-section 18		cable length 1
function text	Page / column	Target designation from	Connection point	conductor	Target designation to	Connection point	Page / column	function text
	&EFS=V2AR31UQ41KF1	=V2AR31UQ41/K2.1+V2AR31UQ41-KF1	1.11-X4		-BGS/R	1	&EFS=V2AR31UQ41UQ2+V2AR31UQ41UQ2/1.4	
	&EFS=V2AR31UQ41KF1	=V2AR31UQ41/K2.1+V2AR31UQ41-KF2	1.11-X4		-BGS/R	2	&EFS=V2AR31UQ41UQ2+V2AR31UQ41UQ2/1.4	
	&EFS=V2AR31UQ41KF1	=V2AR31UQ41/K2.1+V2AR31UQ41-KF3	1.11-X4		-BGS/R	3	&EFS=V2AR31UQ41UQ2+V2AR31UQ41UQ2/1.4	
	&EFS=V2AR31UQ41KF1	=V2AR31UQ41/K2.1+V2AR31UQ41-KF4	1.11-X4		-BGS/R	4	&EFS=V2AR31UQ41UQ2+V2AR31UQ41UQ2/1.4	

=V2AR31UQ41UQ2.2+.AR31UQ41UQ2.2/1

=V2AR31UQ41UQ2.4+.AR31UQ41UQ2.4/1

			Date	1/24/2023	Volvo Trucks North America	Valiant TMS	Cable diagram =V2AR31UQ41UQ2.3+V2AR31UQ41UQ2.3-W1	Drawing name: =2V01&EFS-EL_KF1	= V2AR31UQ41UQ2.3
			Ed.	MKLEPADLO					+ V2AR31UQ41UQ2.3
			Appr		P6700 Framing - Cell 2V01, KF1	Scale 1:1		Document type: EMA	Project nr: 22-16152
Modification	Date	Name	Original		Replacement of / Replaced by				Page 1 / 1630

Cable diagram

F09_002_VLU

Cable name -W1			cable type TPE					
remark			no. of conductors 4			cross-section 18		cable length 2
function text	Page / column	Target designation from	Connection point	conductor	Target designation to	Connection point	Page / column	function text
	&EFS=V2AR31UQ41KF1	=**V2AR31UQ41**/KF1	1		-X5	1	&EFS=V2AR31UQ41UQ2	+V2AR31UQ41UQ2/1.5
	&EFS=V2AR31UQ41KF1	=**V2AR31UQ41**/KF1	2		-X5	2	&EFS=V2AR31UQ41UQ2	+V2AR31UQ41UQ2/1.5
	&EFS=V2AR31UQ41KF1	=**V2AR31UQ41**/KF1	3		-X5	3	&EFS=V2AR31UQ41UQ2	+V2AR31UQ41UQ2/1.5
	&EFS=V2AR31UQ41KF1	=**V2AR31UQ41**/KF1	4		-X5	4	&EFS=V2AR31UQ41UQ2	+V2AR31UQ41UQ2/1.5

=V2AR31UQ41UQ2.3+.AR31UQ41UQ2.3/1

=V2AR31UQ41UQ3.1+.AR31UQ41UQ3.1/1

			Date	1/24/2023	Volvo Trucks North America	Valiant TMS	Cable diagram =V2AR31UQ41UQ2.4+V2AR31UQ41UQ2.4-W1	Drawing name: =2V01&EFS-EL_KF1	= V2AR31UQ41UQ2.4
			Ed.	MKLEPADLO					+ V2AR31UQ41UQ2.4
			Appr		P6700 Framing - Cell 2V01, KF1	Scale 1:1		Document type: EMA	Project nr: 22-16152
Modification	Date	Name	Original		Replacement of / Replaced by				Page 1 / 1630

Cable diagram

F09_002_VLU

Cable name -W1			cable type TPE					
remark			no. of conductors 4			cross-section 18		cable length 2
function text	Page / column	Target designation from	Connection point	conductor	Target designation to	Connection point	Page / column	function text
	&EFS=V2AR31UQ41KF1	=**V2AR31UQ41**/KF1.6+V2AR31UQ41-KF1	1		1.11-X6	-BGS/R	1	&EFS=V2AR31UQ41UQ3+V2AR31UQ41UQ3/1.0
	&EFS=V2AR31UQ41KF1	=**V2AR31UQ41**/KF1.6+V2AR31UQ41-KF1	2		1.11-X6	-BGS/R	2	&EFS=V2AR31UQ41UQ3+V2AR31UQ41UQ3/1.0
	&EFS=V2AR31UQ41KF1	=**V2AR31UQ41**/KF1.6+V2AR31UQ41-KF1	3		1.11-X6	-BGS/R	3	&EFS=V2AR31UQ41UQ3+V2AR31UQ41UQ3/1.1
	&EFS=V2AR31UQ41KF1	=**V2AR31UQ41**/KF1.7+V2AR31UQ41-KF1	4		1.11-X6	-BGS/R	4	&EFS=V2AR31UQ41UQ3+V2AR31UQ41UQ3/1.1

=V2AR31UQ41UQ2.4+.AR31UQ41UQ2.4/1

=V2AR31UQ41UQ3.2+.AR31UQ41UQ3.2/1

			Date	1/24/2023	Volvo Trucks North America	Valiant TMS	Cable diagram =V2AR31UQ41UQ3.1+V2AR31UQ41UQ3.1-W1	Drawing name: =2V01&EFS-EL_KF1	= V2AR31UQ41UQ3.1
			Ed.	MKLEPADLO					+ V2AR31UQ41UQ3.1
			Appr		P6700 Framing - Cell 2V01, KF1	Scale 1:1		Document type: EMA	Project nr: 22-16152
Modification	Date	Name	Original		Replacement of / Replaced by				Page 1 / 1630

Cable diagram

F09_002_VLU

Cable name -W1			cable type TPE					
remark			no. of conductors 4			cross-section 18		cable length 2
function text	Page / column	Target designation from	Connection point	conductor	Target designation to	Connection point	Page / column	function text
	&EFS=V2AR31UQ41KF1+V2AR31UQ41KF1	=V2AR31UQ41/2.7+V2AR31UQ41-KF1	1.11-X7		-BGS/R	1	&EFS=V2AR31UQ41UQ3+V2AR31UQ41UQ3/1.2	
	&EFS=V2AR31UQ41KF1+V2AR31UQ41KF1	=V2AR31UQ41/2.7+V2AR31UQ41-KF1	2.11-X7		-BGS/R	2	&EFS=V2AR31UQ41UQ3+V2AR31UQ41UQ3/1.2	
	&EFS=V2AR31UQ41KF1+V2AR31UQ41KF1	=V2AR31UQ41/2.8+V2AR31UQ41-KF1	3.11-X7		-BGS/R	3	&EFS=V2AR31UQ41UQ3+V2AR31UQ41UQ3/1.2	
	&EFS=V2AR31UQ41KF1+V2AR31UQ41KF1	=V2AR31UQ41/2.8+V2AR31UQ41-KF1	4.11-X7		-BGS/R	4	&EFS=V2AR31UQ41UQ3+V2AR31UQ41UQ3/1.2	

=V2AR31UQ41UQ3.1+.AR31UQ41UQ3.1/1

=V2AR31UQ41UQ3.3+.AR31UQ41UQ3.3/1

			Date	1/24/2023	Volvo Trucks North America	Valiant TMS	Cable diagram =V2AR31UQ41UQ3.2+V2AR31UQ41UQ3.2-W1	Drawing name: =2V01&EFS-EL_KF1	= V2AR31UQ41UQ3.2 + V2AR31UQ41UQ3.2
			Ed.	MKLEPADLO	P6700 Framing - Cell 2V01, KF1				
			Appr					Document type: EMA	Project nr: 22-16152
Modification	Date	Name	Original		Replacement of / Replaced by	Scale 1:1			Page 1 / 1630

Cable diagram

F09_002_VLU

Cable name -W1			cable type TPE					
remark			no. of conductors 4			cross-section 18		cable length 2
function text	Page / column	Target designation from	Connection point	conductor	Target designation to	Connection point	Page / column	function text
	&EFS=V2AR31UQ41KF1	=**V2AR31UQ41/KF1**.8+V2AR31UQ41-KF1	1.11-X8		-BGS/R	1	&EFS=V2AR31UQ41UQ3+V2AR31UQ41UQ3/1.4	
	&EFS=V2AR31UQ41KF1	=**V2AR31UQ41/KF1**.9+V2AR31UQ41-KF1	2.11-X8		-BGS/R	2	&EFS=V2AR31UQ41UQ3+V2AR31UQ41UQ3/1.4	
	&EFS=V2AR31UQ41KF1	=**V2AR31UQ41/KF1**.9+V2AR31UQ41-KF1	3.11-X8		-BGS/R	3	&EFS=V2AR31UQ41UQ3+V2AR31UQ41UQ3/1.4	
	&EFS=V2AR31UQ41KF1	=**V2AR31UQ41/KF1**.9+V2AR31UQ41-KF1	4.11-X8		-BGS/R	4	&EFS=V2AR31UQ41UQ3+V2AR31UQ41UQ3/1.4	

			Date	1/24/2023	Volvo Trucks North America	Valiant TMS	Cable diagram =V2AR31UQ41UQ3.3+V2AR31UQ41UQ3.3-W1	Drawing name: =2V01&EFS-EL_KF1	= V2AR31UQ41UQ3.3
			Ed.	MKLEPADLO					+ V2AR31UQ41UQ3.3
			Appr		P6700 Framing - Cell 2V01, KF1	Scale 1:1		Document type: EMA	Project nr: 22-16152
Modification	Date	Name	Original		Replacement of / Replaced by				Page 1 / 1630

Cable diagram

F09_002_VLU

Cable name -W1			cable type TPE					
remark			no. of conductors 4			cross-section 18		cable length 3
function text	Page / column	Target designation from	Connection point	conductor	Target designation to	Connection point	Page / column	function text
	&EFS=V2AR31UQ41KF1	=**V2AR31UQ41KF1**+V2AR31UQ41-KF1	1.12-X1		-BGS/R	1	&EFS=V2AR31UQ41UQ4	+V2AR31UQ41UQ4/1.0
	&EFS=V2AR31UQ41KF1	=**V2AR31UQ41KF1**+V2AR31UQ41-KF2	1.12-X1		-BGS/R	2	&EFS=V2AR31UQ41UQ4	+V2AR31UQ41UQ4/1.0
	&EFS=V2AR31UQ41KF1	=**V2AR31UQ41KF1**+V2AR31UQ41-KF3	1.12-X1		-BGS/R	3	&EFS=V2AR31UQ41UQ4	+V2AR31UQ41UQ4/1.1
	&EFS=V2AR31UQ41KF1	=**V2AR31UQ41KF1**+V2AR31UQ41-KF4	1.12-X1		-BGS/R	4	&EFS=V2AR31UQ41UQ4	+V2AR31UQ41UQ4/1.1

=V2AR31UQ41UQ3.3+.AR31UQ41UQ3.3/1

=V2AR31UQ41UQ5.1+.AR31UQ41UQ5.1/1

			Date	1/24/2023	Volvo Trucks North America	Valiant TMS	Cable diagram =V2AR31UQ41UQ4.1+V2AR31UQ41UQ4.1-W1	Drawing name: =2V01&EFS-EL_KF1	= V2AR31UQ41UQ4.1
			Ed.	MKLEPADLO					+ V2AR31UQ41UQ4.1
			Appr		P6700 Framing - Cell 2V01, KF1			Document type: EMA	Project nr: 22-16152
Modification	Date	Name	Original		Replacement of / Replaced by	Scale 1:1			Page 1 / 1630

Cable diagram

F09_002_VLU

Cable name -W1			cable type TPE					
remark			no. of conductors 4			cross-section 18		cable length 3
function text	Page / column	Target designation from	Connection point	conductor	Target designation to	Connection point	Page / column	function text
	&EFS=V2AR31UQ41KF1	=**V2AR31UQ41KF1**+V2AR31UQ41-KF1	1.12-X2		-BGS/R	1	&EFS=V2AR31UQ41UQ5+V2AR31UQ41UQ5/1.0	
	&EFS=V2AR31UQ41KF1	=**V2AR31UQ41KF1**+V2AR31UQ41-KF1	2.12-X2		-BGS/R	2	&EFS=V2AR31UQ41UQ5+V2AR31UQ41UQ5/1.0	
	&EFS=V2AR31UQ41KF1	=**V2AR31UQ41KF1**+V2AR31UQ41-KF1	3.12-X2		-BGS/R	3	&EFS=V2AR31UQ41UQ5+V2AR31UQ41UQ5/1.1	
	&EFS=V2AR31UQ41KF1	=**V2AR31UQ41KF1**+V2AR31UQ41-KF1	4.12-X2		-BGS/R	4	&EFS=V2AR31UQ41UQ5+V2AR31UQ41UQ5/1.1	

=V2AR31UQ41UQ4.1+.AR31UQ41UQ4.1/1

=V2AR31UQ41UQ5.2+.AR31UQ41UQ5.2/1

			Date	1/24/2023	Volvo Trucks North America	Valiant TMS	Cable diagram =V2AR31UQ41UQ5.1+V2AR31UQ41UQ5.1-W1	Drawing name: =2V01&EFS-EL_KF1	= V2AR31UQ41UQ5.1
			Ed.	MKLEPADLO					+ V2AR31UQ41UQ5.1
			Appr		P6700 Framing - Cell 2V01, KF1			Document type: EMA	Project nr: 22-16152
Modification	Date	Name	Original		Replacement of	Replaced by	Scale 1:1		Page 1 / 1630

Cable diagram

F09_002_VLU

Cable name -W1			cable type TPE					
remark			no. of conductors 4			cross-section 18		cable length 2
function text	Page / column	Target designation from	Connection point	conductor	Target designation to	Connection point	Page / column	function text
	&EFS=V2AR31UQ41KF1	=**V2AR31UQ41KF1**+V2AR31UQ41-KF1	1		1.12-X3	-BGS/R	1	&EFS=V2AR31UQ41UQ5+V2AR31UQ41UQ5/1.2
	&EFS=V2AR31UQ41KF1	=**V2AR31UQ41KF1**+V2AR31UQ41-KF1	2		1.12-X3	-BGS/R	2	&EFS=V2AR31UQ41UQ5+V2AR31UQ41UQ5/1.2
	&EFS=V2AR31UQ41KF1	=**V2AR31UQ41KF1**+V2AR31UQ41-KF1	3		1.12-X3	-BGS/R	3	&EFS=V2AR31UQ41UQ5+V2AR31UQ41UQ5/1.2
	&EFS=V2AR31UQ41KF1	=**V2AR31UQ41KF1**+V2AR31UQ41-KF1	4		1.12-X3	-BGS/R	4	&EFS=V2AR31UQ41UQ5+V2AR31UQ41UQ5/1.2

			Date	1/24/2023	Volvo Trucks North America	Valiant TMS	Cable diagram =V2AR31UQ41UQ5.2+V2AR31UQ41UQ5.2-W1	Drawing name: =2V01&EFS-EL_KF1	= V2AR31UQ41UQ5.2
			Ed.	MKLEPADLO					+ V2AR31UQ41UQ5.2
			Appr		P6700 Framing - Cell 2V01, KF1	Scale 1:1		Document type: EMA	Project nr: 22-16152
Modification	Date	Name	Original		Replacement of	Replaced by			Page 1 / 1630

Cable diagram

F09_002_VLU

Cable name -W1			cable type TPE					
remark			no. of conductors 4			cross-section 18		cable length 3
function text	Page / column	Target designation from	Connection point	conductor	Target designation to	Connection point	Page / column	function text
	&EFS=V2AR31UQ41KF1	=**V2AR31UQ41KF1**+V2AR31UQ41-KF1	1.12-X4		-BGS/R	1	&EFS=V2AR31UQ41UQ6+V2AR31UQ41UQ6/1.0	
	&EFS=V2AR31UQ41KF1	=**V2AR31UQ41KF1**+V2AR31UQ41-KF1	2.12-X4		-BGS/R	2	&EFS=V2AR31UQ41UQ6+V2AR31UQ41UQ6/1.0	
	&EFS=V2AR31UQ41KF1	=**V2AR31UQ41KF1**+V2AR31UQ41-KF1	3.12-X4		-BGS/R	3	&EFS=V2AR31UQ41UQ6+V2AR31UQ41UQ6/1.1	
	&EFS=V2AR31UQ41KF1	=**V2AR31UQ41KF1**+V2AR31UQ41-KF1	4.12-X4		-BGS/R	4	&EFS=V2AR31UQ41UQ6+V2AR31UQ41UQ6/1.1	

=V2AR31UQ41UQ5.2+.AR31UQ41UQ5.2/1

=V2AR31UQ41UQ7.1+.AR31UQ41UQ7.1/1

			Date	1/24/2023	Volvo Trucks North America	Valiant TMS	Cable diagram =V2AR31UQ41UQ6.1+V2AR31UQ41UQ6.1-W1	Drawing name: =2V01&EFS-EL_KF1	= V2AR31UQ41UQ6.1
			Ed.	MKLEPADLO					+ V2AR31UQ41UQ6.1
			Appr		P6700 Framing - Cell 2V01, KF1			Document type: EMA	Project nr: 22-16152
Modification	Date	Name	Original		Replacement of	Replaced by	Scale 1:1		Page 1 / 1630

Cable diagram

F09_002_VLU

Cable name -W1			cable type TPE					
remark			no. of conductors 4			cross-section 18		cable length 3
function text	Page / column	Target designation from	Connection point	conductor	Target designation to	Connection point	Page / column	function text
	&EFS=V2AR31UQ41KF1	=**V2AR31UQ41KF1**+V2AR31UQ41-KF1	1.12-X5		-BGS/R	1	&EFS=V2AR31UQ41UQ7+V2AR31UQ41UQ7/1.0	
	&EFS=V2AR31UQ41KF1	=**V2AR31UQ41KF1**+V2AR31UQ41-KF1	2.12-X5		-BGS/R	2	&EFS=V2AR31UQ41UQ7+V2AR31UQ41UQ7/1.0	
	&EFS=V2AR31UQ41KF1	=**V2AR31UQ41KF1**+V2AR31UQ41-KF1	3.12-X5		-BGS/R	3	&EFS=V2AR31UQ41UQ7+V2AR31UQ41UQ7/1.1	
	&EFS=V2AR31UQ41KF1	=**V2AR31UQ41KF1**+V2AR31UQ41-KF1	4.12-X5		-BGS/R	4	&EFS=V2AR31UQ41UQ7+V2AR31UQ41UQ7/1.1	

=V2AR31UQ41UQ6.1+.AR31UQ41UQ6.1/1

=V2AR31UQ41UQ7.2+.AR31UQ41UQ7.2/1

			Date	1/24/2023	Volvo Trucks North America	Valiant TMS	Cable diagram =V2AR31UQ41UQ7.1+V2AR31UQ41UQ7.1-W1	Drawing name: =2V01&EFS-EL_KF1	= V2AR31UQ41UQ7.1
			Ed.	MKLEPADLO					+ V2AR31UQ41UQ7.1
			Appr		P6700 Framing - Cell 2V01, KF1	Scale 1:1		Document type: EMA	Project nr: 22-16152
Modification	Date	Name	Original		Replacement of	Replaced by			Page 1 / 1630

Cable diagram

F09_002_VLU

Cable name -W1			cable type TPE					
remark			no. of conductors 4			cross-section 18		cable length 3
function text	Page / column	Target designation from	Connection point	conductor	Target designation to	Connection point	Page / column	function text
	&EFS=V2AR31UQ41KF1	=**V2AR31UQ41/K3.6**+V2AR31UQ41-KF1	1.12-X6		-BGS/R	1	&EFS=V2AR31UQ41UQ7	+V2AR31UQ41UQ7/1.2
	&EFS=V2AR31UQ41KF1	=**V2AR31UQ41/K3.6**+V2AR31UQ41-KF1	2.12-X6		-BGS/R	2	&EFS=V2AR31UQ41UQ7	+V2AR31UQ41UQ7/1.2
	&EFS=V2AR31UQ41KF1	=**V2AR31UQ41/K3.6**+V2AR31UQ41-KF1	3.12-X6		-BGS/R	3	&EFS=V2AR31UQ41UQ7	+V2AR31UQ41UQ7/1.2
	&EFS=V2AR31UQ41KF1	=**V2AR31UQ41/K3.7**+V2AR31UQ41-KF1	4.12-X6		-BGS/R	4	&EFS=V2AR31UQ41UQ7	+V2AR31UQ41UQ7/1.2

=V2AR31UQ41UQ7.1+.AR31UQ41UQ7.1/1

=V2AR31UQ42BG0+.AR31UQ42/1

			Date	1/24/2023	Volvo Trucks North America	Valiant TMS	Cable diagram =V2AR31UQ41UQ7.2+V2AR31UQ41UQ7.2-W1	Drawing name: =2V01&EFS-EL_KF1	= V2AR31UQ41UQ7.2
			Ed.	MKLEPADLO					+ V2AR31UQ41UQ7.2
			Appr		P6700 Framing - Cell 2V01, KF1			Document type: EMA	Project nr: 22-16152
Modification	Date	Name	Original		Replacement of	Replaced by	Scale 1:1		Page 1 / 1630

Cable diagram

F09_002_VLU

Cable name -W1			cable type TPE					
remark			no. of conductors 4			cross-section 18		cable length 0.5
function text	Page / column	Target designation from	Connection point	conductor	Target designation to	Connection point	Page / column	function text
	&EFS/1.0	-XG1/2	P1:1		=V2AR31UQ42KF1-KF1.12-X1	1	&EFS=V2AR31UQ42KF1/3.0	
	&EFS/1.1	-XG1/2	P1:3		=V2AR31UQ42KF1-KF1.12-X1	3	&EFS=V2AR31UQ42KF1/3.1	
	&EFS/1.1	-XG1/2	P1:4		=V2AR31UQ42KF1-KF1.12-X1	4	&EFS=V2AR31UQ42KF1/3.1	
	&EFS/1.1	-XG1/2	P1:2		=V2AR31UQ42KF1-KF1.12-X1	2	&EFS=V2AR31UQ42KF1/3.0	

			Date	1/24/2023	Volvo Trucks North America	Valiant TMS	Cable diagram =V2AR31UQ42BG0+V2AR31UQ42-W1	Drawing name: =2V01&EFS-EL_KF1	= V2AR31UQ42BG0
			Ed.	MKLEPADLO					+ V2AR31UQ42
			Appr		P6700 Framing - Cell 2V01, KF1			Document type: EMA	Project nr: 22-16152 Page 1
Modification	Date	Name	Original		Replacement of / Replaced by	Scale 1:1			1630

Cable diagram

F09_002_VLU

Cable name -W1.1			cable type TPE					
remark			no. of conductors 4			cross-section 18		cable length 2
function text	Page / column	Target designation from	Connection point	conductor	Target designation to	Connection point	Page / column	function text
	&EFS/1.0	-BG01	1		-XG1/2	J1:1	&EFS/1.0	
	&EFS/1.0	-BG01	4		-XG1/2	J1:4	&EFS/1.1	
	&EFS/1.1	-BG01	3		-XG1/2	J1:3	&EFS/1.1	

			Date	1/24/2023	Volvo Trucks North America	Valiant TMS	Cable diagram =V2AR31UQ42BG0+V2AR31UQ42-W1.1	Drawing name: =2V01&EFS-EL_KF1	= V2AR31UQ42BG0
			Ed.	MKLEPADLO					+ V2AR31UQ42
			Appr		P6700 Framing - Cell 2V01, KF1			Document type: EMA	Project nr: 22-16152
Modification	Date	Name	Original		Replacement of / Replaced by	Scale 1:1			Page 2 / 1630

Cable diagram

F09_002_VLU

Cable name -W1.2			cable type TPE					
remark			no. of conductors 4			cross-section 18		cable length 2
function text	Page / column	Target designation from	Connection point	conductor	Target designation to	Connection point	Page / column	function text
	&EFS/1.1	-BG02	1		-XG1/2	J2:1	&EFS/1.1	
	&EFS/1.1	-BG02	4		-XG1/2	J2:4	&EFS/1.2	
	&EFS/1.2	-BG02	3		-XG1/2	J2:3	&EFS/1.2	

			Date	1/24/2023	Volvo Trucks North America	Valiant TMS	Cable diagram =V2AR31UQ42BG0+V2AR31UQ42-W1.2	Drawing name: =2V01&EFS-EL_KF1	= V2AR31UQ42BG0
			Ed.	MKLEPADLO					+ V2AR31UQ42
			Appr		P6700 Framing - Cell 2V01, KF1			Document type: EMA	Project nr: 22-16152
Modification	Date	Name	Original		Replacement of / Replaced by	Scale 1:1			Page 3 / 1630

Cable diagram

F09_002_VLU

Cable name -W2			cable type TPE					
remark			no. of conductors 4			cross-section 18		cable length 0.5
function text	Page / column	Target designation from	Connection point	conductor	Target designation to	Connection point	Page / column	function text
	&EFS/1.3	-XG3/4	P1:1		=V2AR31UQ42KF1-KF1.12-X2	1	&EFS=V2AR31UQ42KF1/3.1	
	&EFS/1.3	-XG3/4	P1:3		=V2AR31UQ42KF1-KF1.12-X2	3	&EFS=V2AR31UQ42KF1/3.2	
	&EFS/1.4	-XG3/4	P1:4		=V2AR31UQ42KF1-KF1.12-X2	4	&EFS=V2AR31UQ42KF1/3.2	
	&EFS/1.4	-XG3/4	P1:2		=V2AR31UQ42KF1-KF1.12-X2	2	&EFS=V2AR31UQ42KF1/3.2	

3 5

			Date	1/24/2023	Volvo Trucks North America	Valiant TMS	Cable diagram =V2AR31UQ42BG0+V2AR31UQ42-W2	Drawing name: =2V01&EFS-EL_KF1	= V2AR31UQ42BG0
			Ed.	MKLEPADLO					+ V2AR31UQ42
			Appr		P6700 Framing - Cell 2V01, KF1			Document type: EMA	Project nr: 22-16152
Modification	Date	Name	Original		Replacement of / Replaced by	Scale 1:1			Page 4 / 1630

Cable diagram

F09_002_VLU

Cable name -W2.1			cable type TPE					
remark			no. of conductors 4			cross-section 18		cable length 2
function text	Page / column	Target designation from	Connection point	conductor	Target designation to	Connection point	Page / column	function text
	&EFS/1.3	-BG03	1		-XG3/4	J1:1	&EFS/1.3	
	&EFS/1.3	-BG03	4		-XG3/4	J1:4	&EFS/1.4	
	&EFS/1.3	-BG03	3		-XG3/4	J1:3	&EFS/1.3	

			Date	1/24/2023	Volvo Trucks North America	Valiant TMS	Cable diagram =V2AR31UQ42BG0+V2AR31UQ42-W2.1	Drawing name: =2V01&EFS-EL_KF1	= V2AR31UQ42BG0
			Ed.	MKLEPADLO					+ V2AR31UQ42
			Appr		P6700 Framing - Cell 2V01, KF1			Document type: EMA	Project nr: 22-16152
Modification	Date	Name	Original		Replacement of / Replaced by	Scale 1:1			Page 5 / 1630

Cable diagram

F09_002_VLU

Cable name -W2.2			cable type TPE					
remark			no. of conductors 4			cross-section 18		cable length 1
function text	Page / column	Target designation from	Connection point	conductor	Target designation to	Connection point	Page / column	function text
	&EFS/1.4	-BG04	1		-XG3/4	J2:1	&EFS/1.4	
	&EFS/1.4	-BG04	4		-XG3/4	J2:4	&EFS/1.5	
	&EFS/1.4	-BG04	3		-XG3/4	J2:3	&EFS/1.4	

			Date	1/24/2023	Volvo Trucks North America		Valiant TMS	Cable diagram =V2AR31UQ42BG0+V2AR31UQ42-W2.2	Drawing name: =2V01&EFS-EL_KF1	= V2AR31UQ42BG0
			Ed.	MKLEPADLO						+ V2AR31UQ42
			Appr		P6700 Framing - Cell 2V01, KF1				Document type: EMA	Project nr: 22-16152
Modification	Date	Name	Original		Replacement of	Replaced by	Scale 1:1			Page 6 / 1630

Cable diagram

F09_002_VLU

Cable name -W3			cable type TPE					
remark			no. of conductors 4			cross-section 18		cable length 2
function text	Page / column	Target designation from	Connection point	conductor	Target designation to	Connection point	Page / column	function text
	&EFS/1.6	-XG5/6	P1:1		=V2AR31UQ42KF1-KF1.12-X3	1	&EFS=V2AR31UQ42KF1/3.3	
	&EFS/1.6	-XG5/6	P1:3		=V2AR31UQ42KF1-KF1.12-X3	3	&EFS=V2AR31UQ42KF1/3.3	
	&EFS/1.6	-XG5/6	P1:4		=V2AR31UQ42KF1-KF1.12-X3	4	&EFS=V2AR31UQ42KF1/3.3	
	&EFS/1.7	-XG5/6	P1:2		=V2AR31UQ42KF1-KF1.12-X3	2	&EFS=V2AR31UQ42KF1/3.3	

6 8

			Date	1/24/2023	Volvo Trucks North America	Valiant TMS	Cable diagram =V2AR31UQ42BG0+V2AR31UQ42-W3	Drawing name: =2V01&EFS-EL_KF1	= V2AR31UQ42BG0
			Ed.	MKLEPADLO					+ V2AR31UQ42
			Appr		P6700 Framing - Cell 2V01, KF1			Document type: EMA	Project nr: 22-16152
Modification	Date	Name	Original		Replacement of / Replaced by	Scale 1:1			Page 7 / 1630

Cable diagram

F09_002_VLU

Cable name -W3.1			cable type TPE					
remark			no. of conductors 4			cross-section 18		cable length 0.5
function text	Page / column	Target designation from	Connection point	conductor	Target designation to	Connection point	Page / column	function text
	&EFS/1.6	-BG05	1		-XG5/6	J1:1	&EFS/1.6	
	&EFS/1.6	-BG05	4		-XG5/6	J1:4	&EFS/1.6	
	&EFS/1.6	-BG05	3		-XG5/6	J1:3	&EFS/1.6	

			Date	1/24/2023	Volvo Trucks North America		Valiant TMS	Cable diagram =V2AR31UQ42BG0+V2AR31UQ42-W3.1	Drawing name: =2V01&EFS-EL_KF1	= V2AR31UQ42BG0
			Ed.	MKLEPADLO						+ V2AR31UQ42
			Appr		P6700 Framing - Cell 2V01, KF1		Scale 1:1		Document type: EMA	Project nr: 22-16152
Modification	Date	Name	Original		Replacement of	Replaced by				Page 8 / 1630

Cable diagram

F09_002_VLU

Cable name -W3.2			cable type TPE					
remark			no. of conductors 4			cross-section 18		cable length 1
function text	Page / column	Target designation from	Connection point	conductor	Target designation to	Connection point	Page / column	function text
	&EFS/1.7	-BG06	1		-XG5/6	J2:1	&EFS/1.7	
	&EFS/1.7	-BG06	4		-XG5/6	J2:4	&EFS/1.7	
	&EFS/1.7	-BG06	3		-XG5/6	J2:3	&EFS/1.7	

			Date	1/24/2023	Volvo Trucks North America	Valiant TMS	Cable diagram =V2AR31UQ42BG0+V2AR31UQ42-W3.2	Drawing name: =2V01&EFS-EL_KF1	= V2AR31UQ42BG0
			Ed.	MKLEPADLO					+ V2AR31UQ42
			Appr		P6700 Framing - Cell 2V01, KF1			Document type: EMA	Project nr: 22-16152
Modification	Date	Name	Original		Replacement of / Replaced by	Scale 1:1			Page 9 / 1630

Cable diagram

F09_002_VLU

Cable name -W1			cable type TPU					
remark			no. of conductors 5			cross-section 16		cable length 2
function text	Page / column	Target designation from	Connection point	conductor	Target designation to	Connection point	Page / column	function text
	&EFS/2.2	-KF1-X20	5		-R3.CP/CS	C4	&EFS/1.3	
	&EFS/2.1	-KF1-X20	1		-R3.CP/CS	C5	&EFS/1.3	
	&EFS/2.1	-KF1-X20	3		-R3.CP/CS	PE	&EFS/1.3	
	&EFS/2.2	-KF1-X20	4		-R3.CP/CS	C6	&EFS/1.3	
	&EFS/2.1	-KF1-X20	2		-R3.CP/CS	C7	&EFS/1.4	

			Date	1/24/2023	Volvo Trucks North America	Valiant TMS	Cable diagram =V2AR31UQ42KF1+V2AR31UQ42-W1	Drawing name: =2V01&EFS-EL_KF1	= V2AR31UQ42KF1
			Ed.	MKLEPADLO					+ V2AR31UQ42
			Appr		P6700 Framing - Cell 2V01, KF1			Document type: EMA	Project nr: 22-16152
Modification	Date	Name	Original		Replacement of / Replaced by	Scale 1:1			Page 1 / 1630

Cable diagram

F09_002_VLU

Cable name -WF1			cable type PROFINET Cable					
remark			no. of conductors 4			cross-section 22		cable length
function text	Page / column	Target designation from	Connection point	conductor	Target designation to	Connection point	Page / column	function text
	&EFS/2.3	-KF1-TP1			-R3.CP/CS	R3.PROFINET	&EFS/1.5	

			Date	1/24/2023	Volvo Trucks North America	Valiant TMS	Cable diagram =V2AR31UQ42KF1+V2AR31UQ42-WF1	Drawing name: =2V01&EFS-EL_KF1	= V2AR31UQ42KF1
			Ed.	MKLEPADLO					+ V2AR31UQ42
			Appr		P6700 Framing - Cell 2V01, KF1			Document type: EMA	Project nr: 22-16152
Modification	Date	Name	Original		Replacement of / Replaced by	Scale 1:1			Page 2 / 1630

Cable diagram

F09_002_VLU

Cable name -W1			cable type TPE					
remark			no. of conductors 4			cross-section 18		cable length 2
function text	Page / column	Target designation from	Connection point	conductor	Target designation to	Connection point	Page / column	function text
	&EFS=V2AR31UQ42KF1	=**V2AR31UQ42KF1**+V2AR31UQ42-KF1	1.11-X1		-BGS/R	1	&EFS=V2AR31UQ42UQ1	+V2AR31UQ42UQ1/1.0
	&EFS=V2AR31UQ42KF1	=**V2AR31UQ42KF1**+V2AR31UQ42-KF2	1.11-X1		-BGS/R	2	&EFS=V2AR31UQ42UQ1	+V2AR31UQ42UQ1/1.0
	&EFS=V2AR31UQ42KF1	=**V2AR31UQ42KF1**+V2AR31UQ42-KF3	1.11-X1		-BGS/R	3	&EFS=V2AR31UQ42UQ1	+V2AR31UQ42UQ1/1.1
	&EFS=V2AR31UQ42KF1	=**V2AR31UQ42KF1**+V2AR31UQ42-KF4	1.11-X1		-BGS/R	4	&EFS=V2AR31UQ42UQ1	+V2AR31UQ42UQ1/1.1

			Date	1/24/2023	Volvo Trucks North America	Valiant TMS	Cable diagram =V2AR31UQ42UQ1.1+V2AR31UQ42UQ1.1-W1	Drawing name: =2V01&EFS-EL_KF1	= V2AR31UQ42UQ1.1
			Ed.	MKLEPADLO					+ V2AR31UQ42UQ1.1
			Appr		P6700 Framing - Cell 2V01, KF1	Scale 1:1		Document type: EMA	Project nr: 22-16152
Modification	Date	Name	Original		Replacement of	Replaced by			Page 1 / 1630

Cable diagram

F09_002_VLU

Cable name -W1			cable type TPE					
remark			no. of conductors 4			cross-section 18		cable length 2
function text	Page / column	Target designation from	Connection point	conductor	Target designation to	Connection point	Page / column	function text
	&EFS=V2AR31UQ42KF1	=**V2AR31UQ42KF1**+V2AR31UQ42-KF1	1.11-X2		-BGS/R	1	&EFS=V2AR31UQ42UQ1	+V2AR31UQ42UQ1/1.2
	&EFS=V2AR31UQ42KF1	=**V2AR31UQ42KF1**+V2AR31UQ42-KF1	2.11-X2		-BGS/R	2	&EFS=V2AR31UQ42UQ1	+V2AR31UQ42UQ1/1.2
	&EFS=V2AR31UQ42KF1	=**V2AR31UQ42KF1**+V2AR31UQ42-KF1	3.11-X2		-BGS/R	3	&EFS=V2AR31UQ42UQ1	+V2AR31UQ42UQ1/1.2
	&EFS=V2AR31UQ42KF1	=**V2AR31UQ42KF1**+V2AR31UQ42-KF1	4.11-X2		-BGS/R	4	&EFS=V2AR31UQ42UQ1	+V2AR31UQ42UQ1/1.2

=V2AR31UQ42UQ1.1+.AR31UQ42UQ1.1/1

=V2AR31UQ42UQ2.1+.AR31UQ42UQ2.1/1

			Date	1/24/2023	Volvo Trucks North America	Valiant TMS	Cable diagram =V2AR31UQ42UQ1.2+V2AR31UQ42UQ1.2-W1	Drawing name: =2V01&EFS-EL_KF1	= V2AR31UQ42UQ1.2
			Ed.	MKLEPADLO					+ V2AR31UQ42UQ1.2
			Appr		P6700 Framing - Cell 2V01, KF1			Document type: EMA	Project nr: 22-16152
Modification	Date	Name	Original		Replacement of / Replaced by	Scale 1:1			Page 1 / 1630

Cable diagram

F09_002_VLU

Cable name -W1			cable type TPE					
remark			no. of conductors 4			cross-section 18		cable length 2
function text	Page / column	Target designation from	Connection point	conductor	Target designation to	Connection point	Page / column	function text
	&EFS=V2AR31UQ42KF1	=V2AR31UQ42KF1+V2AR31UQ42-KF1	1		1.11-X3	-BGS/R	1	&EFS=V2AR31UQ42UQ2+V2AR31UQ42UQ2/1.0
	&EFS=V2AR31UQ42KF1	=V2AR31UQ42KF1+V2AR31UQ42-KF1	2		1.11-X3	-BGS/R	2	&EFS=V2AR31UQ42UQ2+V2AR31UQ42UQ2/1.0
	&EFS=V2AR31UQ42KF1	=V2AR31UQ42KF1+V2AR31UQ42-KF1	3		1.11-X3	-BGS/R	3	&EFS=V2AR31UQ42UQ2+V2AR31UQ42UQ2/1.1
	&EFS=V2AR31UQ42KF1	=V2AR31UQ42KF1+V2AR31UQ42-KF1	4		1.11-X3	-BGS/R	4	&EFS=V2AR31UQ42UQ2+V2AR31UQ42UQ2/1.1

=V2AR31UQ42UQ1.2+.AR31UQ42UQ1.2/1

=V2AR31UQ42UQ2.2+.AR31UQ42UQ2.2/1

			Date	1/24/2023	Volvo Trucks North America	Valiant TMS	Cable diagram =V2AR31UQ42UQ2.1+V2AR31UQ42UQ2.1-W1	Drawing name: =2V01&EFS-EL_KF1	= V2AR31UQ42UQ2.1
			Ed.	MKLEPADLO					+ V2AR31UQ42UQ2.1
			Appr		P6700 Framing - Cell 2V01, KF1			Document type: EMA	Project nr: 22-16152
Modification	Date	Name	Original		Replacement of / Replaced by	Scale 1:1			Page 1 / 1630

Cable diagram

F09_002_VLU

Cable name -W1			cable type TPE					
remark			no. of conductors 4			cross-section 18		cable length 2
function text	Page / column	Target designation from	Connection point	conductor	Target designation to	Connection point	Page / column	function text
	&EFS=V2AR31UQ42KF1	=V2AR31UQ42KF1+V2AR31UQ42-KF1	1.11-X4		-BGS/R	1	&EFS=V2AR31UQ42UQ2+V2AR31UQ42UQ2/1.2	
	&EFS=V2AR31UQ42KF1	=V2AR31UQ42KF1+V2AR31UQ42-KF1	2.11-X4		-BGS/R	2	&EFS=V2AR31UQ42UQ2+V2AR31UQ42UQ2/1.2	
	&EFS=V2AR31UQ42KF1	=V2AR31UQ42KF1+V2AR31UQ42-KF1	3.11-X4		-BGS/R	3	&EFS=V2AR31UQ42UQ2+V2AR31UQ42UQ2/1.2	
	&EFS=V2AR31UQ42KF1	=V2AR31UQ42KF1+V2AR31UQ42-KF1	4.11-X4		-BGS/R	4	&EFS=V2AR31UQ42UQ2+V2AR31UQ42UQ2/1.2	

=V2AR31UQ42UQ2.1+.AR31UQ42UQ2.1/1

=V2AR31UQ42UQ3.1+.AR31UQ42UQ3.1/1

			Date	1/24/2023	Volvo Trucks North America	Valiant TMS	Cable diagram =V2AR31UQ42UQ2.2+V2AR31UQ42UQ2.2-W1	Drawing name: =2V01&EFS-EL_KF1	= V2AR31UQ42UQ2.2
			Ed.	MKLEPADLO					+ V2AR31UQ42UQ2.2
			Appr		P6700 Framing - Cell 2V01, KF1	Scale 1:1		Document type: EMA	Project nr: 22-16152
Modification	Date	Name	Original		Replacement of	Replaced by			Page 1 / 1630

Cable diagram

F09_002_VLU

Cable name	-W1	cable type	TPE		
remark		no. of conductors	4	cross-section 18	cable length 2

function text	Page / column	Target designation from	Connection point	conductor	Target designation to	Connection point	Page / column	function text
	&EFS=V2AR31UQ42KF1+V2AR31UQ42KF1	=V2AR31UQ42/KF1+V2AR31UQ42-KF1	1.11-X5		-BGS/R	1	&EFS=V2AR31UQ42UQ3+V2AR31UQ42UQ3/1.0	
	&EFS=V2AR31UQ42KF1+V2AR31UQ42KF1	=V2AR31UQ42/KF1+V2AR31UQ42-KF1	1.11-X5		-BGS/R	2	&EFS=V2AR31UQ42UQ3+V2AR31UQ42UQ3/1.0	
	&EFS=V2AR31UQ42KF1+V2AR31UQ42KF1	=V2AR31UQ42/KF1+V2AR31UQ42-KF1	1.11-X5		-BGS/R	3	&EFS=V2AR31UQ42UQ3+V2AR31UQ42UQ3/1.1	
	&EFS=V2AR31UQ42KF1+V2AR31UQ42KF1	=V2AR31UQ42/KF1+V2AR31UQ42-KF1	1.11-X5		-BGS/R	4	&EFS=V2AR31UQ42UQ3+V2AR31UQ42UQ3/1.1	

=V2AR31UQ42UQ2.2+.AR31UQ42UQ2.2/1

=V2AR31UQ42UQ3.2+.AR31UQ42UQ3.2/1

			Date	1/24/2023	Volvo Trucks North America	Valiant TMS	Cable diagram =V2AR31UQ42UQ3.1+V2AR31UQ42UQ3.1-W1	Drawing name: =2V01&EFS-EL_KF1	= V2AR31UQ42UQ3.1 + V2AR31UQ42UQ3.1
			Ed.	MKLEPADLO	P6700 Framing - Cell 2V01, KF1				
			Appr					Document type: EMA	Project nr: 22-16152
Modification	Date	Name	Original		Replacement of / Replaced by	Scale 1:1			Page 1 / 1630

Cable diagram

F09_002_VLU

Cable name -W1			cable type TPE					
remark			no. of conductors 4			cross-section 18		cable length 2
function text	Page / column	Target designation from	Connection point	conductor	Target designation to	Connection point	Page / column	function text
	&EFS=V2AR31UQ42KF1	=**V2AR31UQ42**/KF1.6+V2AR31UQ42-KF1	1		1.11-X6 -BGS/R	1	&EFS=V2AR31UQ42UQ3+V2AR31UQ42UQ3/1.2	
	&EFS=V2AR31UQ42KF1	=**V2AR31UQ42**/KF1.6+V2AR31UQ42-KF1	2		1.11-X6 -BGS/R	2	&EFS=V2AR31UQ42UQ3+V2AR31UQ42UQ3/1.2	
	&EFS=V2AR31UQ42KF1	=**V2AR31UQ42**/KF1.6+V2AR31UQ42-KF1	3		1.11-X6 -BGS/R	3	&EFS=V2AR31UQ42UQ3+V2AR31UQ42UQ3/1.2	
	&EFS=V2AR31UQ42KF1	=**V2AR31UQ42**/KF1.7+V2AR31UQ42-KF1	4		1.11-X6 -BGS/R	4	&EFS=V2AR31UQ42UQ3+V2AR31UQ42UQ3/1.2	

=V2AR31UQ42UQ3.1+.AR31UQ42UQ3.1/1

=V2AR31XQ41UQ1.1+.AR31XQ41UQ1.1/1

			Date	1/24/2023	Volvo Trucks North America	Valiant TMS	Cable diagram =V2AR31UQ42UQ3.2+V2AR31UQ42UQ3.2-W1	Drawing name: =2V01&EFS-EL_KF1	= V2AR31UQ42UQ3.2
			Ed.	MKLEPADLO					+ V2AR31UQ42UQ3.2
			Appr		P6700 Framing - Cell 2V01, KF1	Scale 1:1		Document type: EMA	Project nr: 22-16152
Modification	Date	Name	Original		Replacement of / Replaced by				Page 1 / 1630

Cable diagram

F09_002_VLU

Cable name -W1			cable type TPE					
remark			no. of conductors 4			cross-section 18		cable length 0.5
function text	Page / column	Target designation from	Connection point	conductor	Target designation to	Connection point	Page / column	function text
	&EFS=V2AR31XQ41KF1+V2AR31XQ41UQ1	=V2AR31XQ41/KF1+V2AR31XQ41-KF1	1.11-X1		-XG1/2	P1:1	&EFS=V2AR31XQ41UQ1+V2AR31XQ41UQ1/1.0	
	&EFS=V2AR31XQ41KF1+V2AR31XQ41UQ1	=V2AR31XQ41/KF1+V2AR31XQ41-KF1	2.11-X1		-XG1/2	P1:2	&EFS=V2AR31XQ41UQ1+V2AR31XQ41UQ1/1.1	
	&EFS=V2AR31XQ41KF1+V2AR31XQ41UQ1	=V2AR31XQ41/KF1+V2AR31XQ41-KF1	3.11-X1		-XG1/2	P1:3	&EFS=V2AR31XQ41UQ1+V2AR31XQ41UQ1/1.1	
	&EFS=V2AR31XQ41KF1+V2AR31XQ41UQ1	=V2AR31XQ41/KF1+V2AR31XQ41-KF1	4.11-X1		-XG1/2	P1:4	&EFS=V2AR31XQ41UQ1+V2AR31XQ41UQ1/1.1	

			Date	1/24/2023	Volvo Trucks North America	Valiant TMS	Cable diagram =V2AR31XQ41UQ1.1+V2AR31XQ41UQ1.1-W1	Drawing name: =2V01&EFS-EL_KF1	= V2AR31XQ41UQ1.1
			Ed.	MKLEPADLO					+ V2AR31XQ41UQ1.1
			Appr		P6700 Framing - Cell 2V01, KF1			Document type: EMA	Project nr: 22-16152
Modification	Date	Name	Original		Replacement of / Replaced by	Scale 1:1			Page 1 / 1630

Cable diagram

F09_002_VLU

Cable name -W1.1			cable type TPE					
remark			no. of conductors 4			cross-section 18		cable length 0.5
function text	Page / column	Target designation from	Connection point	conductor	Target designation to	Connection point	Page / column	function text
	&EFS=V2AR31XQ41UQ1-W1.1	-XG1/1	1		-V2AR31XQ41UQ1/1.0	J1:1	&EFS=V2AR31XQ41UQ1+V2AR31XQ41UQ1/1.0	
	&EFS=V2AR31XQ41UQ1-W1.1	-XG1/4	4		-V2AR31XQ41UQ1/1.0	J1:4	&EFS=V2AR31XQ41UQ1+V2AR31XQ41UQ1/1.1	
	&EFS=V2AR31XQ41UQ1-W1.1	-XG1/3	3		-V2AR31XQ41UQ1/1.1	J1:3	&EFS=V2AR31XQ41UQ1+V2AR31XQ41UQ1/1.1	

1 3

			Date	1/24/2023	Volvo Trucks North America	Valiant TMS	Cable diagram =V2AR31XQ41UQ1.1+V2AR31XQ41UQ1.1-W1.1	Drawing name: =2V01&EFS-EL_KF1	= V2AR31XQ41UQ1.1
			Ed.	MKLEPADLO					+ V2AR31XQ41UQ1.1
			Appr		P6700 Framing - Cell 2V01, KF1			Document type: EMA / Project nr: 22-16152	Page 2 / 1630
Modification	Date	Name	Original		Replacement of / Replaced by	Scale 1:1			

Cable diagram

F09_002_VLU

Cable name -W1.2			cable type TPE					
remark			no. of conductors 4			cross-section 18		cable length 0.5
function text	Page / column	Target designation from	Connection point	conductor	Target designation to	Connection point	Page / column	function text
	&EFS=V2AR31XQ41UQ1-BG0	=V2AR31XQ41UQ1/1.1	1		-XG1/2	J2:1	&EFS=V2AR31XQ41UQ1+V2AR31XQ41UQ1/1.1	
	&EFS=V2AR31XQ41UQ1-BG0	=V2AR31XQ41UQ1/1.1	4		-XG1/2	J2:4	&EFS=V2AR31XQ41UQ1+V2AR31XQ41UQ1/1.2	
	&EFS=V2AR31XQ41UQ1-BG0	=V2AR31XQ41UQ1/1.2	3		-XG1/2	J2:3	&EFS=V2AR31XQ41UQ1+V2AR31XQ41UQ1/1.2	

			Date	1/24/2023	Volvo Trucks North America	Valiant TMS	Cable diagram =V2AR31XQ41UQ1.1+V2AR31XQ41UQ1.1-W1.2	Drawing name: =2V01&EFS-EL_KF1	= V2AR31XQ41UQ1.1
			Ed.	MKLEPADLO					+ V2AR31XQ41UQ1.1
			Appr		P6700 Framing - Cell 2V01, KF1	Scale 1:1		Document type: EMA	Project nr: 22-16152
Modification	Date	Name	Original		Replacement of	Replaced by			Page 3 / 1630

Cable diagram

F09_002_VLU

Cable name -W1			cable type TPE					
remark			no. of conductors 4			cross-section 18		cable length 2
function text	Page / column	Target designation from	Connection point	conductor	Target designation to	Connection point	Page / column	function text
	&EFS/1.0	-XG1/2	P1:1		=V2AR32UQ41KF1-KF1.13-X1	1	&EFS=V2AR32UQ41KF1/4.0	
	&EFS/1.1	-XG1/2	P1:3		=V2AR32UQ41KF1-KF1.13-X1	3	&EFS=V2AR32UQ41KF1/4.1	
	&EFS/1.1	-XG1/2	P1:4		=V2AR32UQ41KF1-KF1.13-X1	4	&EFS=V2AR32UQ41KF1/4.1	
	&EFS/1.1	-XG1/2	P1:2		=V2AR32UQ41KF1-KF1.13-X1	2	&EFS=V2AR32UQ41KF1/4.0	

			Date	1/24/2023	Volvo Trucks North America	Valiant TMS	Cable diagram =V2AR32UQ41BG0+V2AR32UQ41-W1	Drawing name: =2V01&EFS-EL_KF1	= V2AR32UQ41BG0
			Ed.	MKLEPADLO					+ V2AR32UQ41
			Appr		P6700 Framing - Cell 2V01, KF1			Document type: EMA	Project nr: 22-16152 Page 1
Modification	Date	Name	Original		Replacement of / Replaced by	Scale 1:1			1630

Cable diagram

F09_002_VLU

Cable name -W1.1			cable type TPE					
remark			no. of conductors 4			cross-section 18		cable length 1
function text	Page / column	Target designation from	Connection point	conductor	Target designation to	Connection point	Page / column	function text
	&EFS/1.0	-BG01	1		-XG1/2	J1:1	&EFS/1.0	
	&EFS/1.0	-BG01	4		-XG1/2	J1:4	&EFS/1.1	
	&EFS/1.1	-BG01	3		-XG1/2	J1:3	&EFS/1.1	

			Date	1/24/2023	Volvo Trucks North America	Valiant TMS	Cable diagram =V2AR32UQ41BG0+V2AR32UQ41-W1.1	Drawing name: =2V01&EFS-EL_KF1	= V2AR32UQ41BG0
			Ed.	MKLEPADLO					+ V2AR32UQ41
			Appr		P6700 Framing - Cell 2V01, KF1			Document type: EMA	Project nr: 22-16152
Modification	Date	Name	Original		Replacement of / Replaced by	Scale 1:1			Page 2 / 1630

Cable diagram

F09_002_VLU

Cable name -W1.2			cable type TPE					
remark			no. of conductors 4			cross-section 18		cable length 0.5
function text	Page / column	Target designation from	Connection point	conductor	Target designation to	Connection point	Page / column	function text
	&EFS/1.1	-BG02	1		-XG1/2	J2:1	&EFS/1.1	
	&EFS/1.1	-BG02	4		-XG1/2	J2:4	&EFS/1.2	
	&EFS/1.2	-BG02	3		-XG1/2	J2:3	&EFS/1.2	

			Date	1/24/2023	Volvo Trucks North America	Valiant TMS	Cable diagram =V2AR32UQ41BG0+V2AR32UQ41-W1.2	Drawing name: =2V01&EFS-EL_KF1	= V2AR32UQ41BG0
			Ed.	MKLEPADLO					+ V2AR32UQ41
			Appr		P6700 Framing - Cell 2V01, KF1			Document type: EMA / Project nr: 22-16152	Page 3 / 1630
Modification	Date	Name	Original		Replacement of / Replaced by	Scale 1:1			

Cable diagram

F09_002_VLU

Cable name -W2			cable type TPE					
remark			no. of conductors 4			cross-section 18		cable length 2
function text	Page / column	Target designation from	Connection point	conductor	Target designation to	Connection point	Page / column	function text
	&EFS/1.3	-XG3/4	P1:1		=V2AR32UQ41KF1-KF1.13-X2	1	&EFS=V2AR32UQ41KF1/4.1	
	&EFS/1.3	-XG3/4	P1:3		=V2AR32UQ41KF1-KF1.13-X2	3	&EFS=V2AR32UQ41KF1/4.2	
	&EFS/1.4	-XG3/4	P1:4		=V2AR32UQ41KF1-KF1.13-X2	4	&EFS=V2AR32UQ41KF1/4.2	
	&EFS/1.4	-XG3/4	P1:2		=V2AR32UQ41KF1-KF1.13-X2	2	&EFS=V2AR32UQ41KF1/4.2	

			Date	1/24/2023	Volvo Trucks North America	Valiant TMS	Cable diagram =V2AR32UQ41BG0+V2AR32UQ41-W2	Drawing name: =2V01&EFS-EL_KF1	= V2AR32UQ41BG0
			Ed.	MKLEPADLO					+ V2AR32UQ41
			Appr		P6700 Framing - Cell 2V01, KF1			Document type: EMA	Project nr: 22-16152
Modification	Date	Name	Original		Replacement of / Replaced by	Scale 1:1			Page 4 / 1630

Cable diagram

F09_002_VLU

Cable name -W2.1			cable type TPE					
remark			no. of conductors 4			cross-section 18		cable length 1
function text	Page / column	Target designation from	Connection point	conductor	Target designation to	Connection point	Page / column	function text
	&EFS/1.3	-BG03	1		-XG3/4	J1:1	&EFS/1.3	
	&EFS/1.3	-BG03	4		-XG3/4	J1:4	&EFS/1.4	
	&EFS/1.3	-BG03	3		-XG3/4	J1:3	&EFS/1.3	

			Date	1/24/2023	Volvo Trucks North America	Valiant TMS	Cable diagram =V2AR32UQ41BG0+V2AR32UQ41-W2.1	Drawing name: =2V01&EFS-EL_KF1	= V2AR32UQ41BG0
			Ed.	MKLEPADLO					+ V2AR32UQ41
			Appr		P6700 Framing - Cell 2V01, KF1			Document type: EMA	Project nr: 22-16152
Modification	Date	Name	Original		Replacement of / Replaced by	Scale 1:1			Page 5 / 1630

Cable diagram

F09_002_VLU

Cable name -W2.2			cable type TPE					
remark			no. of conductors 4			cross-section 18		cable length 0.5
function text	Page / column	Target designation from	Connection point	conductor	Target designation to	Connection point	Page / column	function text
	&EFS/1.4	-BG04	1		-XG3/4	J2:1	&EFS/1.4	
	&EFS/1.4	-BG04	4		-XG3/4	J2:4	&EFS/1.5	
	&EFS/1.4	-BG04	3		-XG3/4	J2:3	&EFS/1.4	

			Date	1/24/2023	Volvo Trucks North America		Valiant TMS	Cable diagram =V2AR32UQ41BG0+V2AR32UQ41-W2.2	Drawing name: =2V01&EFS-EL_KF1	= V2AR32UQ41BG0
			Ed.	MKLEPADLO						+ V2AR32UQ41
			Appr		P6700 Framing - Cell 2V01, KF1		Scale 1:1		Document type: EMA	Project nr: 22-16152
Modification	Date	Name	Original		Replacement of	Replaced by				Page 6 / 1630

Cable diagram

F09_002_VLU

Cable name -W3			cable type TPE					
remark			no. of conductors 4			cross-section 18		cable length 2
function text	Page / column	Target designation from	Connection point	conductor	Target designation to	Connection point	Page / column	function text
	&EFS/1.6	-BG05	1		=V2AR32UQ41KF1-KF1.13-X3	1	&EFS=V2AR32UQ41KF1/4.3	
	&EFS/1.6	-BG05	4		=V2AR32UQ41KF1-KF1.13-X3	4	&EFS=V2AR32UQ41KF1/4.3	
	&EFS/1.6	-BG05	3		=V2AR32UQ41KF1-KF1.13-X3	3	&EFS=V2AR32UQ41KF1/4.3	

			Date	1/24/2023	Volvo Trucks North America	Valiant TMS	Cable diagram =V2AR32UQ41BG0+V2AR32UQ41-W3	Drawing name: =2V01&EFS-EL_KF1	= V2AR32UQ41BG0
			Ed.	MKLEPADLO					+ V2AR32UQ41
			Appr		P6700 Framing - Cell 2V01, KF1			Document type: EMA	Project nr: 22-16152
Modification	Date	Name	Original		Replacement of / Replaced by	Scale 1:1			Page 7 / 1630

Cable diagram

F09_002_VLU

Cable name -W1			cable type TPU					
remark			no. of conductors 5			cross-section 16		cable length 2
function text	Page / column	Target designation from	Connection point	conductor	Target designation to	Connection point	Page / column	function text
	&EFS/2.2	-KF1-X20	5		-R3.CP/CS	C4	&EFS/1.3	
	&EFS/2.1	-KF1-X20	1		-R3.CP/CS	C5	&EFS/1.3	
	&EFS/2.1	-KF1-X20	3		-R3.CP/CS	PE	&EFS/1.3	
	&EFS/2.2	-KF1-X20	4		-R3.CP/CS	C6	&EFS/1.3	
	&EFS/2.1	-KF1-X20	2		-R3.CP/CS	C7	&EFS/1.4	

			Date	1/24/2023	Volvo Trucks North America	Valiant TMS	Cable diagram =V2AR32UQ41KF1+V2AR32UQ41-W1	Drawing name: =2V01&EFS-EL_KF1	= V2AR32UQ41KF1
			Ed.	MKLEPADLO					+ V2AR32UQ41
			Appr		P6700 Framing - Cell 2V01, KF1			Document type: EMA	Project nr: 22-16152
Modification	Date	Name	Original		Replacement of / Replaced by	Scale 1:1			Page 1 / 1630

Cable diagram

F09_002_VLU

Cable name -WF1			cable type PROFINET Cable					
remark			no. of conductors 4			cross-section 22		cable length
function text	Page / column	Target designation from	Connection point	conductor	Target designation to	Connection point	Page / column	function text
	&EFS/2.3	-KF1-TP1			-R3.CP/CS	R3.PROFINET	&EFS/1.5	

			Date	1/24/2023	Volvo Trucks North America	Valiant TMS	Cable diagram =V2AR32UQ41KF1+V2AR32UQ41-WF1	Drawing name: =2V01&EFS-EL_KF1	= V2AR32UQ41KF1
			Ed.	MKLEPADLO					+ V2AR32UQ41
			Appr		P6700 Framing - Cell 2V01, KF1	Scale 1:1		Document type: EMA	Project nr: 22-16152
Modification	Date	Name	Original		Replacement of	Replaced by			Page 2 / 1630

Cable diagram

F09_002_VLU

Cable name -W1			cable type TPE					
remark			no. of conductors 4			cross-section 18		cable length 3
function text	Page / column	Target designation from	Connection point	conductor	Target designation to	Connection point	Page / column	function text
	&EFS=V2AR32UQ41KF1	=**V2AR32UQ41KF1**+V2AR32UQ41-KF1	1.0		1.11-X1	-BGS/R	1	&EFS=V2AR32UQ41UQ1+V2AR32UQ41UQ1/1.0
	&EFS=V2AR32UQ41KF1	=**V2AR32UQ41KF1**+V2AR32UQ41-KF1	2.0		1.11-X1	-BGS/R	2	&EFS=V2AR32UQ41UQ1+V2AR32UQ41UQ1/1.0
	&EFS=V2AR32UQ41KF1	=**V2AR32UQ41KF1**+V2AR32UQ41-KF1	3.0		1.11-X1	-BGS/R	3	&EFS=V2AR32UQ41UQ1+V2AR32UQ41UQ1/1.1
	&EFS=V2AR32UQ41KF1	=**V2AR32UQ41KF1**+V2AR32UQ41-KF1	4.0		1.11-X1	-BGS/R	4	&EFS=V2AR32UQ41UQ1+V2AR32UQ41UQ1/1.1

Cable diagram

F09_002_VLU

Cable name -W1			cable type TPE					
remark			no. of conductors 4			cross-section 18		cable length 3
function text	Page / column	Target designation from	Connection point	conductor	Target designation to	Connection point	Page / column	function text
	&EFS=V2AR32UQ41KF1	=**V2AR32UQ41KF1**+V2AR32UQ41-KF1	1.11-X2		-BGS/R	1	&EFS=V2AR32UQ41UQ2	+V2AR32UQ41UQ2/1.0
	&EFS=V2AR32UQ41KF1	=**V2AR32UQ41KF1**+V2AR32UQ41-KF1	2.11-X2		-BGS/R	2	&EFS=V2AR32UQ41UQ2	+V2AR32UQ41UQ2/1.0
	&EFS=V2AR32UQ41KF1	=**V2AR32UQ41KF1**+V2AR32UQ41-KF1	3.11-X2		-BGS/R	3	&EFS=V2AR32UQ41UQ2	+V2AR32UQ41UQ2/1.1
	&EFS=V2AR32UQ41KF1	=**V2AR32UQ41KF1**+V2AR32UQ41-KF1	4.11-X2		-BGS/R	4	&EFS=V2AR32UQ41UQ2	+V2AR32UQ41UQ2/1.1

=V2AR32UQ41UQ1.1+.AR32UQ41UQ1.1/1

=V2AR32UQ41UQ2.2+.AR32UQ41UQ2.2/1

			Date	1/24/2023	Volvo Trucks North America	Valiant TMS	Cable diagram =V2AR32UQ41UQ2.1+V2AR32UQ41UQ2.1-W1	Drawing name: =2V01&EFS-EL_KF1	= V2AR32UQ41UQ2.1
			Ed.	MKLEPADLO					+ V2AR32UQ41UQ2.1
			Appr		P6700 Framing - Cell 2V01, KF1			Document type: EMA	Project nr: 22-16152
Modification	Date	Name	Original		Replacement of / Replaced by	Scale 1:1			Page 1 / 1630

Cable diagram

F09_002_VLU

Cable name -W1			cable type TPE					
remark			no. of conductors 4			cross-section 18		cable length 2
function text	Page / column	Target designation from	Connection point	conductor	Target designation to	Connection point	Page / column	function text
	&EFS=V2AR32UQ41KF1+V2AR32UQ41/2.3+V2AR32UQ41-KF1.11-X3	=V2AR32UQ41/2.3+V2AR32UQ41-KF1.11-X3	1		-BGS/R	1	&EFS=V2AR32UQ41UQ2+V2AR32UQ41UQ2/1.2	
	&EFS=V2AR32UQ41KF1+V2AR32UQ41/2.3+V2AR32UQ41-KF1.11-X3	=V2AR32UQ41/2.3+V2AR32UQ41-KF1.11-X3	2		-BGS/R	2	&EFS=V2AR32UQ41UQ2+V2AR32UQ41UQ2/1.2	
	&EFS=V2AR32UQ41KF1+V2AR32UQ41/2.3+V2AR32UQ41-KF1.11-X3	=V2AR32UQ41/2.3+V2AR32UQ41-KF1.11-X3	3		-BGS/R	3	&EFS=V2AR32UQ41UQ2+V2AR32UQ41UQ2/1.2	
	&EFS=V2AR32UQ41KF1+V2AR32UQ41/2.3+V2AR32UQ41-KF1.11-X3	=V2AR32UQ41/2.3+V2AR32UQ41-KF1.11-X3	4		-BGS/R	4	&EFS=V2AR32UQ41UQ2+V2AR32UQ41UQ2/1.2	

=V2AR32UQ41UQ2.1+.AR32UQ41UQ2.1/1

=V2AR32UQ41UQ2.3+.AR32UQ41UQ2.3/1

			Date	1/24/2023	Volvo Trucks North America	Valiant TMS	Cable diagram =V2AR32UQ41UQ2.2+V2AR32UQ41UQ2.2-W1	Drawing name: =2V01&EFS-EL_KF1	= V2AR32UQ41UQ2.2 + V2AR32UQ41UQ2.2
			Ed.	MKLEPADLO	P6700 Framing - Cell 2V01, KF1				
			Appr					Document type: EMA	Project nr: 22-16152
Modification	Date	Name	Original		Replacement of / Replaced by	Scale 1:1			Page 1 / 1630

Cable diagram

F09_002_VLU

Cable name -W1			cable type TPE					
remark			no. of conductors 4			cross-section 18		cable length 1
function text	Page / column	Target designation from	Connection point	conductor	Target designation to	Connection point	Page / column	function text
	&EFS=V2AR32UQ41KF1	=**V2AR32UQ41**/K2.1+V2AR32UQ41-KF1	1.11-X4		-BGS/R	1	&EFS=V2AR32UQ41UQ2	+V2AR32UQ41UQ2/1.4
	&EFS=V2AR32UQ41KF1	=**V2AR32UQ41**/K2.1+V2AR32UQ41-KF2	1.11-X4		-BGS/R	2	&EFS=V2AR32UQ41UQ2	+V2AR32UQ41UQ2/1.4
	&EFS=V2AR32UQ41KF1	=**V2AR32UQ41**/K2.1+V2AR32UQ41-KF3	1.11-X4		-BGS/R	3	&EFS=V2AR32UQ41UQ2	+V2AR32UQ41UQ2/1.4
	&EFS=V2AR32UQ41KF1	=**V2AR32UQ41**/K2.1+V2AR32UQ41-KF4	1.11-X4		-BGS/R	4	&EFS=V2AR32UQ41UQ2	+V2AR32UQ41UQ2/1.4

=V2AR32UQ41UQ2.2+.AR32UQ41UQ2.2/1

=V2AR32UQ41UQ2.4+.AR32UQ41UQ2.4/1

			Date	1/24/2023	Volvo Trucks North America	Valiant TMS	Cable diagram =V2AR32UQ41UQ2.3+V2AR32UQ41UQ2.3-W1	Drawing name: =2V01&EFS-EL_KF1	= V2AR32UQ41UQ2.3
			Ed.	MKLEPADLO					+ V2AR32UQ41UQ2.3
			Appr		P6700 Framing - Cell 2V01, KF1			Document type: EMA	Project nr: 22-16152
Modification	Date	Name	Original		Replacement of / Replaced by	Scale 1:1			Page 1 / 1630

Cable diagram

F09_002_VLU

Cable name -W1			cable type TPE					
remark			no. of conductors 4			cross-section 18		cable length 2
function text	Page / column	Target designation from	Connection point	conductor	Target designation to	Connection point	Page / column	function text
	&EFS=V2AR32UQ41KF1	=V2AR32UQ41/KF1	1		-W1.11-X5	1	&EFS=V2AR32UQ41UQ2	+V2AR32UQ41UQ2/1.5
	&EFS=V2AR32UQ41KF1	=V2AR32UQ41/KF1	2		-W1.11-X5	2	&EFS=V2AR32UQ41UQ2	+V2AR32UQ41UQ2/1.5
	&EFS=V2AR32UQ41KF1	=V2AR32UQ41/KF1	3		-W1.11-X5	3	&EFS=V2AR32UQ41UQ2	+V2AR32UQ41UQ2/1.5
	&EFS=V2AR32UQ41KF1	=V2AR32UQ41/KF1	4		-W1.11-X5	4	&EFS=V2AR32UQ41UQ2	+V2AR32UQ41UQ2/1.5

=V2AR32UQ41UQ2.3+.AR32UQ41UQ2.3/1

=V2AR32UQ41UQ3.1+.AR32UQ41UQ3.1/1

			Date	1/24/2023	Volvo Trucks North America	Valiant TMS	Cable diagram =V2AR32UQ41UQ2.4+V2AR32UQ41UQ2.4-W1	Drawing name: =2V01&EFS-EL_KF1	= V2AR32UQ41UQ2.4
			Ed.	MKLEPADLO					+ V2AR32UQ41UQ2.4
			Appr		P6700 Framing - Cell 2V01, KF1	Scale 1:1		Document type: EMA	Project nr: 22-16152
Modification	Date	Name	Original		Replacement of / Replaced by				Page 1 / 1630

Cable diagram

F09_002_VLU

Cable name -W1			cable type TPE					
remark			no. of conductors 4			cross-section 18		cable length 2
function text	Page / column	Target designation from	Connection point	conductor	Target designation to	Connection point	Page / column	function text
	&EFS=V2AR32UQ41KF1	=**V2AR32UQ41**/KF1.6+V2AR32UQ41-KF1	1		1.11-X6	1	-BGS/R	&EFS=V2AR32UQ41UQ3+V2AR32UQ41UQ3/1.0
	&EFS=V2AR32UQ41KF1	=**V2AR32UQ41**/KF1.6+V2AR32UQ41-KF1	2		1.11-X6	2	-BGS/R	&EFS=V2AR32UQ41UQ3+V2AR32UQ41UQ3/1.0
	&EFS=V2AR32UQ41KF1	=**V2AR32UQ41**/KF1.6+V2AR32UQ41-KF1	3		1.11-X6	3	-BGS/R	&EFS=V2AR32UQ41UQ3+V2AR32UQ41UQ3/1.1
	&EFS=V2AR32UQ41KF1	=**V2AR32UQ41**/KF1.7+V2AR32UQ41-KF1	4		1.11-X6	4	-BGS/R	&EFS=V2AR32UQ41UQ3+V2AR32UQ41UQ3/1.1

=V2AR32UQ41UQ2.4+.AR32UQ41UQ2.4/1

=V2AR32UQ41UQ3.2+.AR32UQ41UQ3.2/1

			Date	1/24/2023	Volvo Trucks North America	Valiant TMS	Cable diagram =V2AR32UQ41UQ3.1+V2AR32UQ41UQ3.1-W1	Drawing name: =2V01&EFS-EL_KF1	= V2AR32UQ41UQ3.1
			Ed.	MKLEPADLO					+ V2AR32UQ41UQ3.1
			Appr		P6700 Framing - Cell 2V01, KF1	Scale 1:1		Document type: EMA	Project nr: 22-16152
Modification	Date	Name	Original		Replacement of	Replaced by			Page 1 / 1630

Cable diagram

F09_002_VLU

Cable name -W1			cable type TPE					
remark			no. of conductors 4			cross-section 18		cable length 2
function text	Page / column	Target designation from	Connection point	conductor	Target designation to	Connection point	Page / column	function text
	&EFS=V2AR32UQ41KF1+V2AR32UQ41KF1	=V2AR32UQ41/K7.1+V2AR32UQ41-KF1	1.11-X7		-BGS/R	1	&EFS=V2AR32UQ41UQ3+V2AR32UQ41UQ3/1.2	
	&EFS=V2AR32UQ41KF1+V2AR32UQ41KF1	=V2AR32UQ41/K7.1+V2AR32UQ41-KF2	1.11-X7		-BGS/R	2	&EFS=V2AR32UQ41UQ3+V2AR32UQ41UQ3/1.2	
	&EFS=V2AR32UQ41KF1+V2AR32UQ41KF1	=V2AR32UQ41/K7.1+V2AR32UQ41-KF3	1.11-X7		-BGS/R	3	&EFS=V2AR32UQ41UQ3+V2AR32UQ41UQ3/1.2	
	&EFS=V2AR32UQ41KF1+V2AR32UQ41KF1	=V2AR32UQ41/K7.1+V2AR32UQ41-KF4	1.11-X7		-BGS/R	4	&EFS=V2AR32UQ41UQ3+V2AR32UQ41UQ3/1.2	

=V2AR32UQ41UQ3.1+.AR32UQ41UQ3.1/1

=V2AR32UQ41UQ3.3+.AR32UQ41UQ3.3/1

			Date	1/24/2023	Volvo Trucks North America	Valiant TMS	Cable diagram =V2AR32UQ41UQ3.2+V2AR32UQ41UQ3.2-W1	Drawing name: =2V01&EFS-EL_KF1	= V2AR32UQ41UQ3.2 + V2AR32UQ41UQ3.2
			Ed.	MKLEPADLO	P6700 Framing - Cell 2V01, KF1				
			Appr					Document type: EMA	Project nr: 22-16152
Modification	Date	Name	Original		Replacement of / Replaced by	Scale 1:1			Page 1 / 1630

Cable diagram

F09_002_VLU

Cable name -W1			cable type TPE					
remark			no. of conductors 4			cross-section 18		cable length 2
function text	Page / column	Target designation from	Connection point	conductor	Target designation to	Connection point	Page / column	function text
	&EFS=V2AR32UQ41KF1+V2AR32UQ41KF1.8	=V2AR32UQ41KF1+V2AR32UQ41-KF1.11-X8	1		-BGS/R	1	&EFS=V2AR32UQ41UQ3+V2AR32UQ41UQ3/1.4	
	&EFS=V2AR32UQ41KF1+V2AR32UQ41KF1.9	=V2AR32UQ41KF1+V2AR32UQ41-KF1.11-X8	2		-BGS/R	2	&EFS=V2AR32UQ41UQ3+V2AR32UQ41UQ3/1.4	
	&EFS=V2AR32UQ41KF1+V2AR32UQ41KF1.9	=V2AR32UQ41KF1+V2AR32UQ41-KF1.11-X8	3		-BGS/R	3	&EFS=V2AR32UQ41UQ3+V2AR32UQ41UQ3/1.4	
	&EFS=V2AR32UQ41KF1+V2AR32UQ41KF1.9	=V2AR32UQ41KF1+V2AR32UQ41-KF1.11-X8	4		-BGS/R	4	&EFS=V2AR32UQ41UQ3+V2AR32UQ41UQ3/1.4	

=V2AR32UQ41UQ3.2+.AR32UQ41UQ3.2/1

=V2AR32UQ41UQ4.1+.AR32UQ41UQ4.1/1

			Date	1/24/2023	Volvo Trucks North America	Valiant TMS	Cable diagram =V2AR32UQ41UQ3.3+V2AR32UQ41UQ3.3-W1	Drawing name: =2V01&EFS-EL_KF1	= V2AR32UQ41UQ3.3 + V2AR32UQ41UQ3.3
			Ed.	MKLEPADLO	P6700 Framing - Cell 2V01, KF1				
			Appr					Document type: EMA	Project nr: 22-16152
Modification	Date	Name	Original		Replacement of / Replaced by	Scale 1:1			Page 1 / 1630

Cable diagram

F09_002_VLU

Cable name -W1			cable type TPE					
remark			no. of conductors 4			cross-section 18		cable length 3
function text	Page / column	Target designation from	Connection point	conductor	Target designation to	Connection point	Page / column	function text
	&EFS=V2AR32UQ41KF1	=**V2AR32UQ41/K3.0**+V2AR32UQ41-KF1	1.12-X1		-BGS/R	1	&EFS=V2AR32UQ41UQ4	+V2AR32UQ41UQ4/1.0
	&EFS=V2AR32UQ41KF1	=**V2AR32UQ41/K3.0**+V2AR32UQ41-KF2	1.12-X1		-BGS/R	2	&EFS=V2AR32UQ41UQ4	+V2AR32UQ41UQ4/1.0
	&EFS=V2AR32UQ41KF1	=**V2AR32UQ41/K3.1**+V2AR32UQ41-KF3	1.12-X1		-BGS/R	3	&EFS=V2AR32UQ41UQ4	+V2AR32UQ41UQ4/1.1
	&EFS=V2AR32UQ41KF1	=**V2AR32UQ41/K3.1**+V2AR32UQ41-KF4	1.12-X1		-BGS/R	4	&EFS=V2AR32UQ41UQ4	+V2AR32UQ41UQ4/1.1

=V2AR32UQ41UQ3.3+.AR32UQ41UQ3.3/1

=V2AR32UQ41UQ5.1+.AR32UQ41UQ5.1/1

			Date	1/24/2023	Volvo Trucks North America	Valiant TMS	Cable diagram =V2AR32UQ41UQ4.1+V2AR32UQ41UQ4.1-W1	Drawing name: =2V01&EFS-EL_KF1	= V2AR32UQ41UQ4.1
			Ed.	MKLEPADLO					+ V2AR32UQ41UQ4.1
			Appr		P6700 Framing - Cell 2V01, KF1			Document type: EMA	Project nr: 22-16152
Modification	Date	Name	Original		Replacement of	Replaced by	Scale 1:1		Page 1 / 1630

Cable diagram

F09_002_VLU

Cable name -W1			cable type TPE					
remark			no. of conductors 4			cross-section 18		cable length 3
function text	Page / column	Target designation from	Connection point	conductor	Target designation to	Connection point	Page / column	function text
	&EFS=V2AR32UQ41KF1	=**V2AR32UQ41KF1**+V2AR32UQ41-KF1	1.12-X2		-BGS/R	1	&EFS=V2AR32UQ41UQ5+V2AR32UQ41UQ5/1.0	
	&EFS=V2AR32UQ41KF1	=**V2AR32UQ41KF1**+V2AR32UQ41-KF1	2.12-X2		-BGS/R	2	&EFS=V2AR32UQ41UQ5+V2AR32UQ41UQ5/1.0	
	&EFS=V2AR32UQ41KF1	=**V2AR32UQ41KF1**+V2AR32UQ41-KF1	3.12-X2		-BGS/R	3	&EFS=V2AR32UQ41UQ5+V2AR32UQ41UQ5/1.1	
	&EFS=V2AR32UQ41KF1	=**V2AR32UQ41KF1**+V2AR32UQ41-KF1	4.12-X2		-BGS/R	4	&EFS=V2AR32UQ41UQ5+V2AR32UQ41UQ5/1.1	

=V2AR32UQ41UQ4.1+.AR32UQ41UQ4.1/1

=V2AR32UQ41UQ5.2+.AR32UQ41UQ5.2/1

			Date	1/24/2023	Volvo Trucks North America	Valiant TMS	Cable diagram =V2AR32UQ41UQ5.1+V2AR32UQ41UQ5.1-W1	Drawing name: =2V01&EFS-EL_KF1	= V2AR32UQ41UQ5.1
			Ed.	MKLEPADLO					+ V2AR32UQ41UQ5.1
			Appr		P6700 Framing - Cell 2V01, KF1	Scale 1:1		Document type: EMA	Project nr: 22-16152
Modification	Date	Name	Original		Replacement of / Replaced by				Page 1 / 1630

Cable diagram

F09_002_VLU

Cable name -W1			cable type TPE					
remark			no. of conductors 4			cross-section 18		cable length 2
function text	Page / column	Target designation from	Connection point	conductor	Target designation to	Connection point	Page / column	function text
	&EFS=V2AR32UQ41KF1	=**V2AR32UQ41KF1**+V2AR32UQ41-KF1	1.12-X3		-BGS/R	1	&EFS=V2AR32UQ41UQ5	+V2AR32UQ41UQ5/1.2
	&EFS=V2AR32UQ41KF1	=**V2AR32UQ41KF1**+V2AR32UQ41-KF1	2.12-X3		-BGS/R	2	&EFS=V2AR32UQ41UQ5	+V2AR32UQ41UQ5/1.2
	&EFS=V2AR32UQ41KF1	=**V2AR32UQ41KF1**+V2AR32UQ41-KF1	3.12-X3		-BGS/R	3	&EFS=V2AR32UQ41UQ5	+V2AR32UQ41UQ5/1.2
	&EFS=V2AR32UQ41KF1	=**V2AR32UQ41KF1**+V2AR32UQ41-KF1	4.12-X3		-BGS/R	4	&EFS=V2AR32UQ41UQ5	+V2AR32UQ41UQ5/1.2

=V2AR32UQ41UQ5.1+.AR32UQ41UQ5.1/1

=V2AR32UQ41UQ6.1+.AR32UQ41UQ6.1/1

			Date	1/24/2023	Volvo Trucks North America	Valiant TMS	Cable diagram =V2AR32UQ41UQ5.2+V2AR32UQ41UQ5.2-W1	Drawing name: =2V01&EFS-EL_KF1	= V2AR32UQ41UQ5.2
			Ed.	MKLEPADLO					+ V2AR32UQ41UQ5.2
			Appr		P6700 Framing - Cell 2V01, KF1			Document type: EMA	Project nr: 22-16152
Modification	Date	Name	Original		Replacement of / Replaced by	Scale 1:1			Page 1 / 1630

Cable diagram

F09_002_VLU

Cable name -W1			cable type TPE					
remark			no. of conductors 4			cross-section 18		cable length 3
function text	Page / column	Target designation from	Connection point	conductor	Target designation to	Connection point	Page / column	function text
	&EFS=V2AR32UQ41KF1	=**V2AR32UQ41KF1**+V2AR32UQ41-KF1	1.12-X4		-BGS/R	1	&EFS=V2AR32UQ41UQ6	+V2AR32UQ41UQ6/1.0
	&EFS=V2AR32UQ41KF1	=**V2AR32UQ41KF1**+V2AR32UQ41-KF1	2.12-X4		-BGS/R	2	&EFS=V2AR32UQ41UQ6	+V2AR32UQ41UQ6/1.0
	&EFS=V2AR32UQ41KF1	=**V2AR32UQ41KF1**+V2AR32UQ41-KF1	3.12-X4		-BGS/R	3	&EFS=V2AR32UQ41UQ6	+V2AR32UQ41UQ6/1.1
	&EFS=V2AR32UQ41KF1	=**V2AR32UQ41KF1**+V2AR32UQ41-KF1	4.12-X4		-BGS/R	4	&EFS=V2AR32UQ41UQ6	+V2AR32UQ41UQ6/1.1

=V2AR32UQ41UQ5.2+.AR32UQ41UQ5.2/1

=V2AR32UQ41UQ7.1+.AR32UQ41UQ7.1/1

			Date	1/24/2023	Volvo Trucks North America	Valiant TMS	Cable diagram =V2AR32UQ41UQ6.1+V2AR32UQ41UQ6.1-W1	Drawing name: =2V01&EFS-EL_KF1	= V2AR32UQ41UQ6.1
			Ed.	MKLEPADLO					+ V2AR32UQ41UQ6.1
			Appr		P6700 Framing - Cell 2V01, KF1			Document type: EMA	Project nr: 22-16152
Modification	Date	Name	Original		Replacement of / Replaced by	Scale 1:1			Page 1 / 1630

Cable diagram

F09_002_VLU

Cable name -W1			cable type TPE					
remark			no. of conductors 4			cross-section 18		cable length 3
function text	Page / column	Target designation from	Connection point	conductor	Target designation to	Connection point	Page / column	function text
	&EFS=V2AR32UQ41KF1	=V2AR32UQ41KF1-X5:1 +V2AR32UQ41-KF1	1.12-X5		-BGS/R	1	&EFS=V2AR32UQ41UQ7	+V2AR32UQ41UQ7/1.0
	&EFS=V2AR32UQ41KF1	=V2AR32UQ41KF1-X5:2 +V2AR32UQ41-KF1	2.12-X5		-BGS/R	2	&EFS=V2AR32UQ41UQ7	+V2AR32UQ41UQ7/1.0
	&EFS=V2AR32UQ41KF1	=V2AR32UQ41KF1-X5:3 +V2AR32UQ41-KF1	3.12-X5		-BGS/R	3	&EFS=V2AR32UQ41UQ7	+V2AR32UQ41UQ7/1.1
	&EFS=V2AR32UQ41KF1	=V2AR32UQ41KF1-X5:4 +V2AR32UQ41-KF1	4.12-X5		-BGS/R	4	&EFS=V2AR32UQ41UQ7	+V2AR32UQ41UQ7/1.1

			Date	1/24/2023	Volvo Trucks North America	Valiant TMS	Cable diagram =V2AR32UQ41UQ7.1+V2AR32UQ41UQ7.1-W1	Drawing name: =2V01&EFS-EL_KF1	= V2AR32UQ41UQ7.1
			Ed.	MKLEPADLO					+ V2AR32UQ41UQ7.1
			Appr		P6700 Framing - Cell 2V01, KF1	Scale 1:1		Document type: EMA	Project nr: 22-16152
Modification	Date	Name	Original		Replacement of / Replaced by				Page 1 / 1630

Cable diagram

F09_002_VLU

Cable name -W1			cable type TPE					
remark			no. of conductors 4			cross-section 18		cable length 3
function text	Page / column	Target designation from	Connection point	conductor	Target designation to	Connection point	Page / column	function text
	&EFS=V2AR32UQ41KF1	=**V2AR32UQ41KF1**+V2AR32UQ41-KF1	1.12-X6		-BGS/R	1	&EFS=V2AR32UQ41UQ7	+V2AR32UQ41UQ7/1.2
	&EFS=V2AR32UQ41KF1	=**V2AR32UQ41KF1**+V2AR32UQ41-KF1	2.12-X6		-BGS/R	2	&EFS=V2AR32UQ41UQ7	+V2AR32UQ41UQ7/1.2
	&EFS=V2AR32UQ41KF1	=**V2AR32UQ41KF1**+V2AR32UQ41-KF1	3.12-X6		-BGS/R	3	&EFS=V2AR32UQ41UQ7	+V2AR32UQ41UQ7/1.2
	&EFS=V2AR32UQ41KF1	=**V2AR32UQ41KF1**+V2AR32UQ41-KF1	4.12-X6		-BGS/R	4	&EFS=V2AR32UQ41UQ7	+V2AR32UQ41UQ7/1.2

Cable diagram

F09_002_VLU

Cable name -W1			cable type TPE					
remark			no. of conductors 4			cross-section 18		cable length 1
function text	Page / column	Target designation from	Connection point	conductor	Target designation to	Connection point	Page / column	function text
	&EFS/1.0	-XG1/2	P1:1		=V2AR32UQ42KF1-KF1.12-X1	1	&EFS=V2AR32UQ42KF1/3.0	
	&EFS/1.1	-XG1/2	P1:3		=V2AR32UQ42KF1-KF1.12-X1	3	&EFS=V2AR32UQ42KF1/3.1	
	&EFS/1.1	-XG1/2	P1:4		=V2AR32UQ42KF1-KF1.12-X1	4	&EFS=V2AR32UQ42KF1/3.1	
	&EFS/1.1	-XG1/2	P1:2		=V2AR32UQ42KF1-KF1.12-X1	2	&EFS=V2AR32UQ42KF1/3.0	

			Date	1/24/2023	Volvo Trucks North America	Valiant TMS	Cable diagram =V2AR32UQ42BG0+V2AR32UQ42-W1	Drawing name: =2V01&EFS-EL_KF1	= V2AR32UQ42BG0
			Ed.	MKLEPADLO					+ V2AR32UQ42
			Appr		P6700 Framing - Cell 2V01, KF1			Document type: EMA	Project nr: 22-16152 Page 1
Modification	Date	Name	Original		Replacement of / Replaced by	Scale 1:1			1630

Cable diagram

F09_002_VLU

Cable name -W1.1			cable type TPE					
remark			no. of conductors 4			cross-section 18		cable length 0.5
function text	Page / column	Target designation from	Connection point	conductor	Target designation to	Connection point	Page / column	function text
	&EFS/1.0	-BG01	1		-XG1/2	J1:1	&EFS/1.0	
	&EFS/1.0	-BG01	4		-XG1/2	J1:4	&EFS/1.1	
	&EFS/1.1	-BG01	3		-XG1/2	J1:3	&EFS/1.1	

			Date	1/24/2023	Volvo Trucks North America	Valiant TMS	Cable diagram =V2AR32UQ42BG0+V2AR32UQ42-W1.1	Drawing name: =2V01&EFS-EL_KF1	= V2AR32UQ42BG0
			Ed.	MKLEPADLO					+ V2AR32UQ42
			Appr		P6700 Framing - Cell 2V01, KF1			Document type: EMA	Project nr: 22-16152
Modification	Date	Name	Original		Replacement of / Replaced by	Scale 1:1			Page 2 / 1630

Cable diagram

F09_002_VLU

Cable name -W1.2			cable type TPE					
remark			no. of conductors 4			cross-section 18		cable length 0.5
function text	Page / column	Target designation from	Connection point	conductor	Target designation to	Connection point	Page / column	function text
	&EFS/1.1	-BG03	1		-XG1/2	J2:1	&EFS/1.1	
	&EFS/1.1	-BG03	4		-XG1/2	J2:4	&EFS/1.2	
	&EFS/1.2	-BG03	3		-XG1/2	J2:3	&EFS/1.2	

			Date	1/24/2023	Volvo Trucks North America	Valiant TMS	Cable diagram =V2AR32UQ42BG0+V2AR32UQ42-W1.2	Drawing name: =2V01&EFS-EL_KF1	= V2AR32UQ42BG0
			Ed.	MKLEPADLO					+ V2AR32UQ42
			Appr		P6700 Framing - Cell 2V01, KF1			Document type: EMA	Project nr: 22-16152 Page 3
Modification	Date	Name	Original		Replacement of / Replaced by	Scale 1:1			1630

Cable diagram

F09_002_VLU

Cable name -W2			cable type TPE					
remark			no. of conductors 4			cross-section 18		cable length 2
function text	Page / column	Target designation from	Connection point	conductor	Target designation to	Connection point	Page / column	function text
	&EFS/1.3	-XG3/4	P1:1		=V2AR32UQ42KF1-KF1.12-X2	1	&EFS=V2AR32UQ42KF1/3.1	
	&EFS/1.3	-XG3/4	P1:3		=V2AR32UQ42KF1-KF1.12-X2	3	&EFS=V2AR32UQ42KF1/3.2	
	&EFS/1.4	-XG3/4	P1:4		=V2AR32UQ42KF1-KF1.12-X2	4	&EFS=V2AR32UQ42KF1/3.2	
	&EFS/1.4	-XG3/4	P1:2		=V2AR32UQ42KF1-KF1.12-X2	2	&EFS=V2AR32UQ42KF1/3.2	

			Date	1/24/2023	Volvo Trucks North America	Valiant TMS	Cable diagram =V2AR32UQ42BG0+V2AR32UQ42-W2	Drawing name: =2V01&EFS-EL_KF1	= V2AR32UQ42BG0
			Ed.	MKLEPADLO					+ V2AR32UQ42
			Appr		P6700 Framing - Cell 2V01, KF1			Document type: EMA	Project nr: 22-16152
Modification	Date	Name	Original		Replacement of / Replaced by	Scale 1:1			Page 4 / 1630

Cable diagram

F09_002_VLU

Cable name -W2.1			cable type TPE					
remark			no. of conductors 4			cross-section 18		cable length 0.5
function text	Page / column	Target designation from	Connection point	conductor	Target designation to	Connection point	Page / column	function text
	&EFS/1.3	-BG02	1		-XG3/4	J1:1	&EFS/1.3	
	&EFS/1.3	-BG02	4		-XG3/4	J1:4	&EFS/1.4	
	&EFS/1.3	-BG02	3		-XG3/4	J1:3	&EFS/1.3	

			Date	1/24/2023	Volvo Trucks North America	Valiant TMS	Cable diagram	Drawing name: =2V01&EFS-EL_KF1	= V2AR32UQ42BG0
			Ed.	MKLEPADLO			=V2AR32UQ42BG0+V2AR32UQ42-W2.1		+ V2AR32UQ42
			Appr		P6700 Framing - Cell 2V01, KF1			Document type: EMA	Project nr: 22-16152
Modification	Date	Name	Original		Replacement of / Replaced by	Scale 1:1			Page 5 / 1630

Cable diagram

F09_002_VLU

Cable name -W2.2			cable type TPE					
remark			no. of conductors 4			cross-section 18		cable length 0.5
function text	Page / column	Target designation from	Connection point	conductor	Target designation to	Connection point	Page / column	function text
	&EFS/1.4	-BG05	1		-XG3/4	J2:1	&EFS/1.4	
	&EFS/1.4	-BG05	4		-XG3/4	J2:4	&EFS/1.5	
	&EFS/1.4	-BG05	3		-XG3/4	J2:3	&EFS/1.4	

			Date	1/24/2023	Volvo Trucks North America	Valiant TMS	Cable diagram =V2AR32UQ42BG0+V2AR32UQ42-W2.2	Drawing name: =2V01&EFS-EL_KF1	= V2AR32UQ42BG0
			Ed.	MKLEPADLO					+ V2AR32UQ42
			Appr		P6700 Framing - Cell 2V01, KF1	Scale 1:1		Document type: EMA	Project nr: 22-16152
Modification	Date	Name	Original		Replacement of / Replaced by				Page 6 / 1630

Cable diagram

F09_002_VLU

Cable name -W3			cable type TPE					
remark			no. of conductors 4			cross-section 18		cable length 1
function text	Page / column	Target designation from	Connection point	conductor	Target designation to	Connection point	Page / column	function text
	&EFS/1.6	-BG04	1		=V2AR32UQ42KF1-KF1.12-X3	1	&EFS=V2AR32UQ42KF1/3.3	
	&EFS/1.6	-BG04	4		=V2AR32UQ42KF1-KF1.12-X3	4	&EFS=V2AR32UQ42KF1/3.3	
	&EFS/1.6	-BG04	3		=V2AR32UQ42KF1-KF1.12-X3	3	&EFS=V2AR32UQ42KF1/3.3	

			Date	1/24/2023	Volvo Trucks North America	Valiant TMS	Cable diagram =V2AR32UQ42BG0+V2AR32UQ42-W3	Drawing name: =2V01&EFS-EL_KF1	= V2AR32UQ42BG0
			Ed.	MKLEPADLO					+ V2AR32UQ42
			Appr		P6700 Framing - Cell 2V01, KF1			Document type: EMA	Project nr: 22-16152
Modification	Date	Name	Original		Replacement of / Replaced by	Scale 1:1			Page 7 / 1630

Cable diagram

F09_002_VLU

Cable name -W1			cable type TPU					
remark			no. of conductors 5			cross-section 16		cable length 2
function text	Page / column	Target designation from	Connection point	conductor	Target designation to	Connection point	Page / column	function text
	&EFS/2.2	-KF1-X20	5		-R3.CP/CS	C4	&EFS/1.3	
	&EFS/2.1	-KF1-X20	1		-R3.CP/CS	C5	&EFS/1.3	
	&EFS/2.1	-KF1-X20	3		-R3.CP/CS	PE	&EFS/1.3	
	&EFS/2.2	-KF1-X20	4		-R3.CP/CS	C6	&EFS/1.3	
	&EFS/2.1	-KF1-X20	2		-R3.CP/CS	C7	&EFS/1.4	

			Date	1/24/2023	Volvo Trucks North America	Valiant TMS	Cable diagram =V2AR32UQ42KF1+V2AR32UQ42-W1	Drawing name: =2V01&EFS-EL_KF1	= V2AR32UQ42KF1
			Ed.	MKLEPADLO					+ V2AR32UQ42
			Appr		P6700 Framing - Cell 2V01, KF1			Document type: EMA / Project nr: 22-16152	Page 1
Modification	Date	Name	Original		Replacement of / Replaced by	Scale 1:1			1630

Cable diagram

F09_002_VLU

Cable name -WF1			cable type PROFINET Cable					
remark			no. of conductors 4			cross-section 22		cable length
function text	Page / column	Target designation from	Connection point	conductor	Target designation to	Connection point	Page / column	function text
	&EFS/2.3	-KF1-TP1			-R3.CP/CS	R3.PROFINET	&EFS/1.5	

			Date	1/24/2023	Volvo Trucks North America	Valiant TMS	Cable diagram =V2AR32UQ42KF1+V2AR32UQ42-WF1	Drawing name: =2V01&EFS-EL_KF1	= V2AR32UQ42KF1
			Ed.	MKLEPADLO					+ V2AR32UQ42
			Appr		P6700 Framing - Cell 2V01, KF1			Document type: EMA	Project nr: 22-16152
Modification	Date	Name	Original		Replacement of / Replaced by	Scale 1:1			Page 2 / 1630

Cable diagram

F09_002_VLU

Cable name -W1			cable type TPE					
remark			no. of conductors 4			cross-section 18		cable length 2
function text	Page / column	Target designation from	Connection point	conductor	Target designation to	Connection point	Page / column	function text
	&EFS=V2AR32UQ42KF1	=**V2AR32UQ42KF1**+V2AR32UQ42-KF1	1.11-X1		-BGS/R	1	&EFS=V2AR32UQ42UQ1	+V2AR32UQ42UQ1/1.0
	&EFS=V2AR32UQ42KF1	=**V2AR32UQ42KF1**+V2AR32UQ42-KF1	2.11-X1		-BGS/R	2	&EFS=V2AR32UQ42UQ1	+V2AR32UQ42UQ1/1.0
	&EFS=V2AR32UQ42KF1	=**V2AR32UQ42KF1**+V2AR32UQ42-KF1	3.11-X1		-BGS/R	3	&EFS=V2AR32UQ42UQ1	+V2AR32UQ42UQ1/1.1
	&EFS=V2AR32UQ42KF1	=**V2AR32UQ42KF1**+V2AR32UQ42-KF1	4.11-X1		-BGS/R	4	&EFS=V2AR32UQ42UQ1	+V2AR32UQ42UQ1/1.1

			Date	1/24/2023	Volvo Trucks North America	Valiant TMS	Cable diagram =V2AR32UQ42UQ1.1+V2AR32UQ42UQ1.1-W1	Drawing name: =2V01&EFS-EL_KF1	= V2AR32UQ42UQ1.1
			Ed.	MKLEPADLO					+ V2AR32UQ42UQ1.1
			Appr		P6700 Framing - Cell 2V01, KF1	Scale 1:1		Document type: EMA	Project nr: 22-16152
Modification	Date	Name	Original		Replacement of	Replaced by			Page 1 / 1630

Cable diagram

F09_002_VLU

Cable name -W1			cable type TPE					
remark			no. of conductors 4			cross-section 18		cable length 2
function text	Page / column	Target designation from	Connection point	conductor	Target designation to	Connection point	Page / column	function text
	&EFS=V2AR32UQ42KF1	=**V2AR32UQ42KF1**+V2AR32UQ42-KF1	1.11-X2		-BGS/R	1	&EFS=V2AR32UQ42UQ1	+V2AR32UQ42UQ1/1.2
	&EFS=V2AR32UQ42KF1	=**V2AR32UQ42KF1**+V2AR32UQ42-KF1	2.11-X2		-BGS/R	2	&EFS=V2AR32UQ42UQ1	+V2AR32UQ42UQ1/1.2
	&EFS=V2AR32UQ42KF1	=**V2AR32UQ42KF1**+V2AR32UQ42-KF1	3.11-X2		-BGS/R	3	&EFS=V2AR32UQ42UQ1	+V2AR32UQ42UQ1/1.2
	&EFS=V2AR32UQ42KF1	=**V2AR32UQ42KF1**+V2AR32UQ42-KF1	4.11-X2		-BGS/R	4	&EFS=V2AR32UQ42UQ1	+V2AR32UQ42UQ1/1.2

=V2AR32UQ42UQ1.1+.AR32UQ42UQ1.1/1

=V2AR32UQ42UQ2.1+.AR32UQ42UQ2.1/1

			Date	1/24/2023	Volvo Trucks North America	Valiant TMS	Cable diagram =V2AR32UQ42UQ1.2+V2AR32UQ42UQ1.2-W1	Drawing name: =2V01&EFS-EL_KF1	= V2AR32UQ42UQ1.2
			Ed.	MKLEPADLO					+ V2AR32UQ42UQ1.2
			Appr		P6700 Framing - Cell 2V01, KF1			Document type: EMA	Project nr: 22-16152
Modification	Date	Name	Original		Replacement of / Replaced by	Scale 1:1			Page 1 / 1630

Cable diagram

F09_002_VLU

Cable name -W1			cable type TPE					
remark			no. of conductors 4			cross-section 18		cable length 2
function text	Page / column	Target designation from	Connection point	conductor	Target designation to	Connection point	Page / column	function text
	&EFS=V2AR32UQ42KF1	=V2AR32UQ42KF1+V2AR32UQ42-KF1	1		1.11-X3	1	-BGS/R	&EFS=V2AR32UQ42UQ2+V2AR32UQ42UQ2/1.0
	&EFS=V2AR32UQ42KF1	=V2AR32UQ42KF1+V2AR32UQ42-KF1	2		1.11-X3	2	-BGS/R	&EFS=V2AR32UQ42UQ2+V2AR32UQ42UQ2/1.0
	&EFS=V2AR32UQ42KF1	=V2AR32UQ42KF1+V2AR32UQ42-KF1	3		1.11-X3	3	-BGS/R	&EFS=V2AR32UQ42UQ2+V2AR32UQ42UQ2/1.1
	&EFS=V2AR32UQ42KF1	=V2AR32UQ42KF1+V2AR32UQ42-KF1	4		1.11-X3	4	-BGS/R	&EFS=V2AR32UQ42UQ2+V2AR32UQ42UQ2/1.1

=V2AR32UQ42UQ1.2+.AR32UQ42UQ1.2/1

=V2AR32UQ42UQ2.2+.AR32UQ42UQ2.2/1

			Date	1/24/2023	Volvo Trucks North America	Valiant TMS	Cable diagram =V2AR32UQ42UQ2.1+V2AR32UQ42UQ2.1-W1	Drawing name: =2V01&EFS-EL_KF1	= V2AR32UQ42UQ2.1
			Ed.	MKLEPADLO					+ V2AR32UQ42UQ2.1
			Appr		P6700 Framing - Cell 2V01, KF1			Document type: EMA	Project nr: 22-16152
Modification	Date	Name	Original		Replacement of / Replaced by	Scale 1:1			Page 1 / 1630

Cable diagram

F09_002_VLU

Cable name -W1			cable type TPE					
remark			no. of conductors 4			cross-section 18		cable length 2
function text	Page / column	Target designation from	Connection point	conductor	Target designation to	Connection point	Page / column	function text
	&EFS=V2AR32UQ42KF1	=V2AR32UQ42KF1+V2AR32UQ42-KF1	1.11-X4		-BGS/R	1	&EFS=V2AR32UQ42UQ2+V2AR32UQ42UQ2/1.2	
	&EFS=V2AR32UQ42KF1	=V2AR32UQ42KF1+V2AR32UQ42-KF1	2.11-X4		-BGS/R	2	&EFS=V2AR32UQ42UQ2+V2AR32UQ42UQ2/1.2	
	&EFS=V2AR32UQ42KF1	=V2AR32UQ42KF1+V2AR32UQ42-KF1	3.11-X4		-BGS/R	3	&EFS=V2AR32UQ42UQ2+V2AR32UQ42UQ2/1.2	
	&EFS=V2AR32UQ42KF1	=V2AR32UQ42KF1+V2AR32UQ42-KF1	4.11-X4		-BGS/R	4	&EFS=V2AR32UQ42UQ2+V2AR32UQ42UQ2/1.2	

=V2AR32UQ42UQ2.1+.AR32UQ42UQ2.1/1

=V2AR32XQ41UQ1.1+.AR32XQ41UQ1.1/1

			Date	1/24/2023	Volvo Trucks North America	Valiant TMS	Cable diagram =V2AR32UQ42UQ2.2+V2AR32UQ42UQ2.2-W1	Drawing name: =2V01&EFS-EL_KF1	= V2AR32UQ42UQ2.2
			Ed.	MKLEPADLO					+ V2AR32UQ42UQ2.2
			Appr		P6700 Framing - Cell 2V01, KF1			Document type: EMA	Project nr: 22-16152
Modification	Date	Name	Original		Replacement of / Replaced by	Scale 1:1			Page 1 / 1630

Cable diagram

F09_002_VLU

Cable name -W1			cable type TPE					
remark			no. of conductors 4			cross-section 18		cable length 0.5
function text	Page / column	Target designation from	Connection point	conductor	Target designation to	Connection point	Page / column	function text
	&EFS=V2AR32XQ41KF1+V2AR32XQ41KF1	=V2AR32XQ41KF1+V2AR32XQ41-KF1	1.11-X1		-XG1/2	P1:1	&EFS=V2AR32XQ41UQ1+V2AR32XQ41UQ1/1.0	
	&EFS=V2AR32XQ41KF1+V2AR32XQ41KF1	=V2AR32XQ41KF1+V2AR32XQ41-KF1	2.11-X1		-XG1/2	P1:2	&EFS=V2AR32XQ41UQ1+V2AR32XQ41UQ1/1.1	
	&EFS=V2AR32XQ41KF1+V2AR32XQ41KF1	=V2AR32XQ41KF1+V2AR32XQ41-KF1	3.11-X1		-XG1/2	P1:3	&EFS=V2AR32XQ41UQ1+V2AR32XQ41UQ1/1.1	
	&EFS=V2AR32XQ41KF1+V2AR32XQ41KF1	=V2AR32XQ41KF1+V2AR32XQ41-KF1	4.11-X1		-XG1/2	P1:4	&EFS=V2AR32XQ41UQ1+V2AR32XQ41UQ1/1.1	

=V2AR32UQ42UQ2.2+.AR32UQ42UQ2.2/1

			Date	1/24/2023	Volvo Trucks North America	Valiant TMS	Cable diagram =V2AR32XQ41UQ1.1+V2AR32XQ41UQ1.1-W1	Drawing name: =2V01&EFS-EL_KF1	= V2AR32XQ41UQ1.1
			Ed.	MKLEPADLO					+ V2AR32XQ41UQ1.1
			Appr		P6700 Framing - Cell 2V01, KF1			Document type: EMA	Project nr: 22-16152
Modification	Date	Name	Original		Replacement of / Replaced by	Scale 1:1			Page 1 / 1630

Cable diagram

F09_002_VLU

Cable name -W1.1			cable type TPE					
remark			no. of conductors 4			cross-section 18		cable length 0.5
function text	Page / column	Target designation from	Connection point	conductor	Target designation to	Connection point	Page / column	function text
	&EFS=V2AR32XQ41UQ1-W1.1	-XG1/1	1		-V2AR32XQ41UQ1/1.0	J1:1	&EFS=V2AR32XQ41UQ1+V2AR32XQ41UQ1/1.0	
	&EFS=V2AR32XQ41UQ1-W1.1	-XG1/2	4		-V2AR32XQ41UQ1/1.0	J1:4	&EFS=V2AR32XQ41UQ1+V2AR32XQ41UQ1/1.1	
	&EFS=V2AR32XQ41UQ1-W1.1	-XG1/3	3		-V2AR32XQ41UQ1/1.1	J1:3	&EFS=V2AR32XQ41UQ1+V2AR32XQ41UQ1/1.1	

1 3

			Date	1/24/2023	Volvo Trucks North America		Valiant TMS	Cable diagram =V2AR32XQ41UQ1.1+V2AR32XQ41UQ1.1-W1.1	Drawing name: =2V01&EFS-EL_KF1	= V2AR32XQ41UQ1.1
			Ed.	MKLEPADLO						+ V2AR32XQ41UQ1.1
			Appr		P6700 Framing - Cell 2V01, KF1		Scale 1:1		Document type: EMA	Project nr: 22-16152
Modification	Date	Name	Original		Replacement of	Replaced by				Page 2 / 1630

Cable diagram

F09_002_VLU

Cable name -W1.2			cable type TPE					
remark			no. of conductors 4			cross-section 18		cable length 0.5
function text	Page / column	Target designation from	Connection point	conductor	Target designation to	Connection point	Page / column	function text
	&EFS=V2AR32XQ41UQ1-BG0	=V2AR32XQ41UQ1/1.1	1		-XG1/2	J2:1	&EFS=V2AR32XQ41UQ1+V2AR32XQ41UQ1/1.1	
	&EFS=V2AR32XQ41UQ1-BG0	=V2AR32XQ41UQ1/1.1	4		-XG1/2	J2:4	&EFS=V2AR32XQ41UQ1+V2AR32XQ41UQ1/1.2	
	&EFS=V2AR32XQ41UQ1-BG0	=V2AR32XQ41UQ1/1.2	3		-XG1/2	J2:3	&EFS=V2AR32XQ41UQ1+V2AR32XQ41UQ1/1.2	

			Date	1/24/2023	Volvo Trucks North America	Valiant TMS	Cable diagram =V2AR32XQ41UQ1.1+V2AR32XQ41UQ1.1-W1.2	Drawing name: =2V01&EFS-EL_KF1	= V2AR32XQ41UQ1.1
			Ed.	MKLEPADLO					+ V2AR32XQ41UQ1.1
			Appr		P6700 Framing - Cell 2V01, KF1	Scale 1:1		Document type: EMA / Project nr: 22-16152	Page 3 / 1630
Modification	Date	Name	Original		Replacement of / Replaced by				

Cable diagram

F09_002_VLU

Cable name -W1			cable type TPE					
remark			no. of conductors 4			cross-section 18		cable length 0.5
function text	Page / column	Target designation from	Connection point	conductor	Target designation to	Connection point	Page / column	function text
	&EFS/1.0	-XG1/2	P1:1		=V2AR41UQ41KF1-KF1.13-X5	1	&EFS=V2AR41UQ41KF1/4.5	
	&EFS/1.1	-XG1/2	P1:3		=V2AR41UQ41KF1-KF1.13-X5	3	&EFS=V2AR41UQ41KF1/4.5	
	&EFS/1.1	-XG1/2	P1:4		=V2AR41UQ41KF1-KF1.13-X5	4	&EFS=V2AR41UQ41KF1/4.5	
	&EFS/1.1	-XG1/2	P1:2		=V2AR41UQ41KF1-KF1.13-X5	2	&EFS=V2AR41UQ41KF1/4.5	

=V2AR32XQ41UQ1.1+.AR32XQ41UQ1.1/3

			Date	1/24/2023	Volvo Trucks North America	Valiant TMS	Cable diagram =V2AR41UQ41BG0+V2AR41UQ41-W1	Drawing name: =2V01&EFS-EL_KF1	= V2AR41UQ41BG0
			Ed.	MKLEPADLO					+ V2AR41UQ41
			Appr		P6700 Framing - Cell 2V01, KF1			Document type: EMA	Project nr: 22-16152
Modification	Date	Name	Original		Replacement of / Replaced by	Scale 1:1			Page 1 / 1630

Cable diagram

F09_002_VLU

Cable name -W1.1			cable type TPE					
remark			no. of conductors 4			cross-section 18		cable length 2
function text	Page / column	Target designation from	Connection point	conductor	Target designation to	Connection point	Page / column	function text
	&EFS/1.0	-BG01	1		-XG1/2	J1:1	&EFS/1.0	
	&EFS/1.0	-BG01	4		-XG1/2	J1:4	&EFS/1.1	
	&EFS/1.1	-BG01	3		-XG1/2	J1:3	&EFS/1.1	

			Date	1/24/2023	Volvo Trucks North America	Valiant TMS	Cable diagram =V2AR41UQ41BG0+V2AR41UQ41-W1.1	Drawing name: =2V01&EFS-EL_KF1	= V2AR41UQ41BG0
			Ed.	MKLEPADLO					+ V2AR41UQ41
			Appr		P6700 Framing - Cell 2V01, KF1			Document type: EMA	Project nr: 22-16152
Modification	Date	Name	Original		Replacement of / Replaced by	Scale 1:1			Page 2 / 1630

Cable diagram

F09_002_VLU

Cable name -W1.2			cable type TPE					
remark			no. of conductors 4			cross-section 18		cable length 2
function text	Page / column	Target designation from	Connection point	conductor	Target designation to	Connection point	Page / column	function text
	&EFS/1.1	-BG02	1		-XG1/2	J2:1	&EFS/1.1	
	&EFS/1.1	-BG02	4		-XG1/2	J2:4	&EFS/1.2	
	&EFS/1.2	-BG02	3		-XG1/2	J2:3	&EFS/1.2	

			Date	1/24/2023	Volvo Trucks North America	Valiant TMS	Cable diagram =V2AR41UQ41BG0+V2AR41UQ41-W1.2	Drawing name: =2V01&EFS-EL_KF1	= V2AR41UQ41BG0
			Ed.	MKLEPADLO					+ V2AR41UQ41
			Appr		P6700 Framing - Cell 2V01, KF1			Document type: EMA	Project nr: 22-16152
Modification	Date	Name	Original		Replacement of / Replaced by	Scale 1:1			Page 3 / 1630

Cable diagram

F09_002_VLU

Cable name -W1			cable type TPU					
remark			no. of conductors 5			cross-section 16		cable length 2
function text	Page / column	Target designation from	Connection point	conductor	Target designation to	Connection point	Page / column	function text
	&EFS/2.2	-KF1-X20	5		-R3.CP/CS	C4	&EFS/1.3	
	&EFS/2.1	-KF1-X20	1		-R3.CP/CS	C5	&EFS/1.3	
	&EFS/2.1	-KF1-X20	3		-R3.CP/CS	PE	&EFS/1.3	
	&EFS/2.2	-KF1-X20	4		-R3.CP/CS	C6	&EFS/1.3	
	&EFS/2.1	-KF1-X20	2		-R3.CP/CS	C7	&EFS/1.4	

			Date	1/24/2023	Volvo Trucks North America	Valiant TMS	Cable diagram =V2AR41UQ41KF1+V2AR41UQ41-W1	Drawing name: =2V01&EFS-EL_KF1	= V2AR41UQ41KF1
			Ed.	MKLEPADLO					+ V2AR41UQ41
			Appr		P6700 Framing - Cell 2V01, KF1			Document type: EMA	Project nr: 22-16152
Modification	Date	Name	Original		Replacement of / Replaced by	Scale 1:1			Page 1 / 1630

Cable diagram

F09_002_VLU

Cable name -WF1			cable type PROFINET Cable					
remark			no. of conductors 4			cross-section 22		cable length
function text	Page / column	Target designation from	Connection point	conductor	Target designation to	Connection point	Page / column	function text
	&EFS/2.3	-KF1-TP1			-R3.CP/CS	R3.PROFINET	&EFS/1.5	

			Date	1/24/2023	Volvo Trucks North America	Valiant TMS	Cable diagram =V2AR41UQ41KF1+V2AR41UQ41-WF1	Drawing name: =2V01&EFS-EL_KF1	= V2AR41UQ41KF1
			Ed.	MKLEPADLO					+ V2AR41UQ41
			Appr		P6700 Framing - Cell 2V01, KF1			Document type: EMA	Project nr: 22-16152
Modification	Date	Name	Original		Replacement of / Replaced by	Scale 1:1			Page 2 / 1630

Cable diagram

F09_002_VLU

Cable name -W1			cable type TPE					
remark			no. of conductors 4			cross-section 18		cable length 3
function text	Page / column	Target designation from	Connection point	conductor	Target designation to	Connection point	Page / column	function text
	&EFS=V2AR41UQ41KF1	=**V2AR41UQ41KF1**+V2AR41UQ41-KF1	1.11-X1		-BGS/R	1	&EFS=V2AR41UQ41UQ1	=V2AR41UQ41UQ1/1.0
	&EFS=V2AR41UQ41KF1	=**V2AR41UQ41KF1**+V2AR41UQ41-KF2	1.11-X1		-BGS/R	2	&EFS=V2AR41UQ41UQ1	=V2AR41UQ41UQ1/1.0
	&EFS=V2AR41UQ41KF1	=**V2AR41UQ41KF1**+V2AR41UQ41-KF3	1.11-X1		-BGS/R	3	&EFS=V2AR41UQ41UQ1	=V2AR41UQ41UQ1/1.1
	&EFS=V2AR41UQ41KF1	=**V2AR41UQ41KF1**+V2AR41UQ41-KF4	1.11-X1		-BGS/R	4	&EFS=V2AR41UQ41UQ1	=V2AR41UQ41UQ1/1.1

			Date	1/24/2023	Volvo Trucks North America	Valiant TMS	Cable diagram =V2AR41UQ41UQ1.1+V2AR41UQ41UQ1.1-W1	Drawing name: =2V01&EFS-EL_KF1	= V2AR41UQ41UQ1.1
			Ed.	MKLEPADLO					+ V2AR41UQ41UQ1.1
			Appr		P6700 Framing - Cell 2V01, KF1			Document type: EMA	Project nr: 22-16152
Modification	Date	Name	Original		Replacement of / Replaced by	Scale 1:1			Page 1 / 1630

Cable diagram

F09_002_VLU

Cable name -W1			cable type TPE					
remark			no. of conductors 4			cross-section 18		cable length 3
function text	Page / column	Target designation from	Connection point	conductor	Target designation to	Connection point	Page / column	function text
	&EFS=V2AR41UQ41KF1	=**V2AR41UQ41/KF1.1**+V2AR41UQ41-KF1	1.11-X2		-BGS/R	1	&EFS=V2AR41UQ41UQ1+V2AR41UQ41UQ1/1.2	
	&EFS=V2AR41UQ41KF1	=**V2AR41UQ41/KF1.2**+V2AR41UQ41-KF2	1.11-X2		-BGS/R	2	&EFS=V2AR41UQ41UQ1+V2AR41UQ41UQ1/1.2	
	&EFS=V2AR41UQ41KF1	=**V2AR41UQ41/KF1.2**+V2AR41UQ41-KF3	1.11-X2		-BGS/R	3	&EFS=V2AR41UQ41UQ1+V2AR41UQ41UQ1/1.2	
	&EFS=V2AR41UQ41KF1	=**V2AR41UQ41/KF1.2**+V2AR41UQ41-KF4	1.11-X2		-BGS/R	4	&EFS=V2AR41UQ41UQ1+V2AR41UQ41UQ1/1.2	

=V2AR41UQ41UQ1.1+.AR41UQ41UQ1.1/1

=V2AR41UQ41UQ1.3+.AR41UQ41UQ1.3/1

			Date	1/24/2023	Volvo Trucks North America	Valiant TMS	Cable diagram =V2AR41UQ41UQ1.2+V2AR41UQ41UQ1.2-W1	Drawing name: =2V01&EFS-EL_KF1	= V2AR41UQ41UQ1.2
			Ed.	MKLEPADLO					+ V2AR41UQ41UQ1.2
			Appr		P6700 Framing - Cell 2V01, KF1	Scale 1:1		Document type: EMA	Project nr: 22-16152
Modification	Date	Name	Original		Replacement of	Replaced by			Page 1 / 1630

Cable diagram

F09_002_VLU

Cable name -W1			cable type TPE					
remark			no. of conductors 4			cross-section 18		cable length 3
function text	Page / column	Target designation from	Connection point	conductor	Target designation to	Connection point	Page / column	function text
	&EFS=V2AR41UQ41KF1	=**V2AR41UQ41/KF1**.1+V2AR41UQ41-KF1	1		1.11-X3 -BGS/R	1	&EFS=V2AR41UQ41UQ1+V2AR41UQ41UQ1/1.4	
	&EFS=V2AR41UQ41KF1	=**V2AR41UQ41/KF1**.2+V2AR41UQ41-KF1	2		1.11-X3 -BGS/R	2	&EFS=V2AR41UQ41UQ1+V2AR41UQ41UQ1/1.4	
	&EFS=V2AR41UQ41KF1	=**V2AR41UQ41/KF1**.3+V2AR41UQ41-KF1	3		1.11-X3 -BGS/R	3	&EFS=V2AR41UQ41UQ1+V2AR41UQ41UQ1/1.4	
	&EFS=V2AR41UQ41KF1	=**V2AR41UQ41/KF1**.4+V2AR41UQ41-KF1	4		1.11-X3 -BGS/R	4	&EFS=V2AR41UQ41UQ1+V2AR41UQ41UQ1/1.4	

=V2AR41UQ41UQ1.2+.AR41UQ41UQ1.2/1

=V2AR41UQ41UQ1.4+.AR41UQ41UQ1.4/1

			Date	1/24/2023	Volvo Trucks North America	Valiant TMS	Cable diagram =V2AR41UQ41UQ1.3+V2AR41UQ41UQ1.3-W1	Drawing name: =2V01&EFS-EL_KF1	= V2AR41UQ41UQ1.3
			Ed.	MKLEPADLO					+ V2AR41UQ41UQ1.3
			Appr		P6700 Framing - Cell 2V01, KF1			Document type: EMA	Project nr: 22-16152
Modification	Date	Name	Original		Replacement of / Replaced by	Scale 1:1			Page 1 / 1630

Cable diagram

F09_002_VLU

Cable name -W1			cable type TPE					
remark			no. of conductors 4			cross-section 18		cable length 3
function text	Page / column	Target designation from	Connection point	conductor	Target designation to	Connection point	Page / column	function text
	&EFS=V2AR41UQ41KF1	=**V2AR41UQ41**/KF1.11-X4	1		-BGS/R	1	&EFS=V2AR41UQ41UQ1+V2AR41UQ41UQ1/1.5	
	&EFS=V2AR41UQ41KF1	=**V2AR41UQ41**/KF1.11-X4	2		-BGS/R	2	&EFS=V2AR41UQ41UQ1+V2AR41UQ41UQ1/1.5	
	&EFS=V2AR41UQ41KF1	=**V2AR41UQ41**/KF1.11-X4	3		-BGS/R	3	&EFS=V2AR41UQ41UQ1+V2AR41UQ41UQ1/1.5	
	&EFS=V2AR41UQ41KF1	=**V2AR41UQ41**/KF1.11-X4	4		-BGS/R	4	&EFS=V2AR41UQ41UQ1+V2AR41UQ41UQ1/1.5	

=V2AR41UQ41UQ1.3+.AR41UQ41UQ1.3/1

=V2AR41UQ41UQ2.1+.AR41UQ41UQ2.1/1

			Date	1/24/2023	Volvo Trucks North America	Valiant TMS	Cable diagram =V2AR41UQ41UQ1.4+V2AR41UQ41UQ1.4-W1	Drawing name: =2V01&EFS-EL_KF1	= V2AR41UQ41UQ1.4
			Ed.	MKLEPADLO					+ V2AR41UQ41UQ1.4
			Appr		P6700 Framing - Cell 2V01, KF1			Document type: EMA	Project nr: 22-16152
Modification	Date	Name	Original		Replacement of / Replaced by	Scale 1:1			Page 1 / 1630

Cable diagram

F09_002_VLU

Cable name	-W1	cable type	TPE		
remark		no. of conductors	4	cross-section 18	cable length 4

function text	Page / column	Target designation from	Connection point	conductor	Target designation to	Connection point	Page / column	function text
	&EFS=V2AR41UQ41KF1+V2AR41UQ41KF1	=V2AR41UQ41/2.5+V2AR41UQ41-KF1	1.11-X5		-BGS/R	1	&EFS=V2AR41UQ41UQ2+V2AR41UQ41UQ2/1.0	
	&EFS=V2AR41UQ41KF1+V2AR41UQ41KF1	=V2AR41UQ41/2.5+V2AR41UQ41-KF2	1.11-X5		-BGS/R	2	&EFS=V2AR41UQ41UQ2+V2AR41UQ41UQ2/1.0	
	&EFS=V2AR41UQ41KF1+V2AR41UQ41KF1	=V2AR41UQ41/2.5+V2AR41UQ41-KF3	1.11-X5		-BGS/R	3	&EFS=V2AR41UQ41UQ2+V2AR41UQ41UQ2/1.1	
	&EFS=V2AR41UQ41KF1+V2AR41UQ41KF1	=V2AR41UQ41/2.5+V2AR41UQ41-KF4	1.11-X5		-BGS/R	4	&EFS=V2AR41UQ41UQ2+V2AR41UQ41UQ2/1.1	

=V2AR41UQ41UQ1.4+.AR41UQ41UQ1.4/1

=V2AR41UQ41UQ2.2+.AR41UQ41UQ2.2/1

			Date	1/24/2023	Volvo Trucks North America	Valiant TMS	Cable diagram =V2AR41UQ41UQ2.1+V2AR41UQ41UQ2.1-W1	Drawing name: =2V01&EFS-EL_KF1	= V2AR41UQ41UQ2.1 + V2AR41UQ41UQ2.1
			Ed.	MKLEPADLO	P6700 Framing - Cell 2V01, KF1				
			Appr					Document type: EMA	Project nr: 22-16152
Modification	Date	Name	Original		Replacement of / Replaced by	Scale 1:1			Page 1 / 1630

Cable diagram

F09_002_VLU

Cable name -W1			cable type TPE					
remark			no. of conductors 4			cross-section 18		cable length 4
function text	Page / column	Target designation from	Connection point	conductor	Target designation to	Connection point	Page / column	function text
	&EFS=V2AR41UQ41KF1	=**V2AR41UQ41**/K2.6+V2AR41UQ41-KF1	1.11-X6		-BGS/R	1	&EFS=V2AR41UQ41UQ2+V2AR41UQ41UQ2/1.2	
	&EFS=V2AR41UQ41KF1	=**V2AR41UQ41**/K2.6+V2AR41UQ41-KF2	1.11-X6		-BGS/R	2	&EFS=V2AR41UQ41UQ2+V2AR41UQ41UQ2/1.2	
	&EFS=V2AR41UQ41KF1	=**V2AR41UQ41**/K2.6+V2AR41UQ41-KF3	1.11-X6		-BGS/R	3	&EFS=V2AR41UQ41UQ2+V2AR41UQ41UQ2/1.2	
	&EFS=V2AR41UQ41KF1	=**V2AR41UQ41**/K2.7+V2AR41UQ41-KF4	1.11-X6		-BGS/R	4	&EFS=V2AR41UQ41UQ2+V2AR41UQ41UQ2/1.2	

=V2AR41UQ41UQ2.1+.AR41UQ41UQ2.1/1

=V2AR41UQ41UQ3.1+.AR41UQ41UQ3.1/1

			Date	1/24/2023	Volvo Trucks North America	Valiant TMS	Cable diagram =V2AR41UQ41UQ2.2+V2AR41UQ41UQ2.2-W1	Drawing name: =2V01&EFS-EL_KF1	= V2AR41UQ41UQ2.2
			Ed.	MKLEPADLO					+ V2AR41UQ41UQ2.2
			Appr		P6700 Framing - Cell 2V01, KF1	Scale 1:1		Document type: EMA	Project nr: 22-16152
Modification	Date	Name	Original		Replacement of	Replaced by			Page 1 / 1630

Cable diagram

F09_002_VLU

Cable name -W1			cable type TPE					
remark			no. of conductors 4			cross-section 18		cable length 2
function text	Page / column	Target designation from	Connection point	conductor	Target designation to	Connection point	Page / column	function text
	&EFS=V2AR41UQ41KF1	=**V2AR41UQ41UQ2.2**+V2AR41UQ41-KF1	1.11-X7		-BGS/R	1	&EFS=V2AR41UQ41UQ3+V2AR41UQ41UQ3/1.0	
	&EFS=V2AR41UQ41KF1	=**V2AR41UQ41UQ2.2**+V2AR41UQ41-KF2	1.11-X7		-BGS/R	2	&EFS=V2AR41UQ41UQ3+V2AR41UQ41UQ3/1.0	
	&EFS=V2AR41UQ41KF1	=**V2AR41UQ41UQ2.2**+V2AR41UQ41-KF3	1.11-X7		-BGS/R	3	&EFS=V2AR41UQ41UQ3+V2AR41UQ41UQ3/1.1	
	&EFS=V2AR41UQ41KF1	=**V2AR41UQ41UQ2.2**+V2AR41UQ41-KF4	1.11-X7		-BGS/R	4	&EFS=V2AR41UQ41UQ3+V2AR41UQ41UQ3/1.1	

=V2AR41UQ41UQ2.2+.AR41UQ41UQ2.2/1

=V2AR41UQ41UQ3.2+.AR41UQ41UQ3.2/1

Cable diagram

F09_002_VLU

Cable name -W1			cable type TPE					
remark			no. of conductors 4			cross-section 18		cable length 2
function text	Page / column	Target designation from	Connection point	conductor	Target designation to	Connection point	Page / column	function text
	&EFS=V2AR41UQ41KF1	=**V2AR41UQ41/KF1**+V2AR41UQ41-KF1	1.11-X8		-BGS/R	1	&EFS=V2AR41UQ41UQ3+V2AR41UQ41UQ3/1.2	
	&EFS=V2AR41UQ41KF1	=**V2AR41UQ41/KF1**+V2AR41UQ41-KF2	1.11-X8		-BGS/R	2	&EFS=V2AR41UQ41UQ3+V2AR41UQ41UQ3/1.2	
	&EFS=V2AR41UQ41KF1	=**V2AR41UQ41/KF1**+V2AR41UQ41-KF3	1.11-X8		-BGS/R	3	&EFS=V2AR41UQ41UQ3+V2AR41UQ41UQ3/1.2	
	&EFS=V2AR41UQ41KF1	=**V2AR41UQ41/KF1**+V2AR41UQ41-KF4	1.11-X8		-BGS/R	4	&EFS=V2AR41UQ41UQ3+V2AR41UQ41UQ3/1.2	

=V2AR41UQ41UQ3.1+.AR41UQ41UQ3.1/1

=V2AR41UQ41UQ4.1+.AR41UQ41UQ4.1/1

			Date	1/24/2023	Volvo Trucks North America	Valiant TMS	Cable diagram =V2AR41UQ41UQ3.2+V2AR41UQ41UQ3.2-W1	Drawing name: =2V01&EFS-EL_KF1	= V2AR41UQ41UQ3.2
			Ed.	MKLEPADLO					+ V2AR41UQ41UQ3.2
			Appr		P6700 Framing - Cell 2V01, KF1	Scale 1:1		Document type: EMA / Project nr: 22-16152	Page 1 / 1630
Modification	Date	Name	Original		Replacement of / Replaced by				

Cable diagram

F09_002_VLU

Cable name -W1			cable type TPE					
remark			no. of conductors 4			cross-section 18		cable length 4
function text	Page / column	Target designation from	Connection point	conductor	Target designation to	Connection point	Page / column	function text
	&EFS=V2AR41UQ41KF1	=**V2AR41UQ41/K3.0**+V2AR41UQ41-KF1	1.12-X1		-BGS/R	1	&EFS=V2AR41UQ41UQ4+V2AR41UQ41UQ4/1.0	
	&EFS=V2AR41UQ41KF1	=**V2AR41UQ41/K3.0**+V2AR41UQ41-KF2	1.12-X1		-BGS/R	2	&EFS=V2AR41UQ41UQ4+V2AR41UQ41UQ4/1.0	
	&EFS=V2AR41UQ41KF1	=**V2AR41UQ41/K3.1**+V2AR41UQ41-KF3	1.12-X1		-BGS/R	3	&EFS=V2AR41UQ41UQ4+V2AR41UQ41UQ4/1.1	
	&EFS=V2AR41UQ41KF1	=**V2AR41UQ41/K3.1**+V2AR41UQ41-KF4	1.12-X1		-BGS/R	4	&EFS=V2AR41UQ41UQ4+V2AR41UQ41UQ4/1.1	

=V2AR41UQ41UQ3.2+.AR41UQ41UQ3.2/1

=V2AR41UQ41UQ4.2+.AR41UQ41UQ4.2/1

			Date	1/24/2023	Volvo Trucks North America	Valiant TMS	Cable diagram =V2AR41UQ41UQ4.1+V2AR41UQ41UQ4.1-W1	Drawing name: =2V01&EFS-EL_KF1	= V2AR41UQ41UQ4.1
			Ed.	MKLEPADLO					+ V2AR41UQ41UQ4.1
			Appr		P6700 Framing - Cell 2V01, KF1			Document type: EMA	Project nr: 22-16152
Modification	Date	Name	Original		Replacement of / Replaced by	Scale 1:1			Page 1 / 1630

Cable diagram

F09_002_VLU

Cable name -W1			cable type TPE					
remark			no. of conductors 4			cross-section 18		cable length 4
function text	Page / column	Target designation from	Connection point	conductor	Target designation to	Connection point	Page / column	function text
	&EFS=V2AR41UQ41KF1	=**V2AR41UQ41/K3.1**+V2AR41UQ41-KF1	1.12-X2		-BGS/R	1	&EFS=V2AR41UQ41UQ4+V2AR41UQ41UQ4/1.2	
	&EFS=V2AR41UQ41KF1	=**V2AR41UQ41/K3.2**+V2AR41UQ41-KF2	1.12-X2		-BGS/R	2	&EFS=V2AR41UQ41UQ4+V2AR41UQ41UQ4/1.2	
	&EFS=V2AR41UQ41KF1	=**V2AR41UQ41/K3.3**+V2AR41UQ41-KF3	1.12-X2		-BGS/R	3	&EFS=V2AR41UQ41UQ4+V2AR41UQ41UQ4/1.2	
	&EFS=V2AR41UQ41KF1	=**V2AR41UQ41/K3.4**+V2AR41UQ41-KF4	1.12-X2		-BGS/R	4	&EFS=V2AR41UQ41UQ4+V2AR41UQ41UQ4/1.2	

=V2AR41UQ41UQ4.1+.AR41UQ41UQ4.1/1

=V2AR41UQ41UQ4.3+.AR41UQ41UQ4.3/1

			Date	1/24/2023	Volvo Trucks North America	Valiant TMS	Cable diagram =V2AR41UQ41UQ4.2+V2AR41UQ41UQ4.2-W1	Drawing name: =2V01&EFS-EL_KF1	= V2AR41UQ41UQ4.2
			Ed.	MKLEPADLO					+ V2AR41UQ41UQ4.2
			Appr		P6700 Framing - Cell 2V01, KF1	Scale 1:1		Document type: EMA	Project nr: 22-16152
Modification	Date	Name	Original		Replacement of / Replaced by				Page 1 / 1630

Cable diagram

F09_002_VLU

Cable name -W1			cable type TPE					
remark			no. of conductors 4			cross-section 18		cable length 2
function text	Page / column	Target designation from	Connection point	conductor	Target designation to	Connection point	Page / column	function text
	&EFS=V2AR41UQ41KF1	=**V2AR41UQ41/KF1**+V2AR41UQ41-KF1	1		1.12-X3		-BGS/R	1	&EFS=V2AR41UQ41UQ4+V2AR41UQ41UQ4/1.4
	&EFS=V2AR41UQ41KF1	=**V2AR41UQ41/KF1**+V2AR41UQ41-KF1	2		1.12-X3		-BGS/R	2	&EFS=V2AR41UQ41UQ4+V2AR41UQ41UQ4/1.4
	&EFS=V2AR41UQ41KF1	=**V2AR41UQ41/KF1**+V2AR41UQ41-KF1	3		1.12-X3		-BGS/R	3	&EFS=V2AR41UQ41UQ4+V2AR41UQ41UQ4/1.4
	&EFS=V2AR41UQ41KF1	=**V2AR41UQ41/KF1**+V2AR41UQ41-KF1	4		1.12-X3		-BGS/R	4	&EFS=V2AR41UQ41UQ4+V2AR41UQ41UQ4/1.4

			Date	1/24/2023	Volvo Trucks North America	Valiant TMS	Cable diagram =V2AR41UQ41UQ4.3+V2AR41UQ41UQ4.3-W1	Drawing name: =2V01&EFS-EL_KF1	= V2AR41UQ41UQ4.3
			Ed.	MKLEPADLO					+ V2AR41UQ41UQ4.3
			Appr		P6700 Framing - Cell 2V01, KF1	Scale 1:1		Document type: EMA	Project nr: 22-16152
Modification	Date	Name	Original		Replacement of / Replaced by				Page 1 / 1630

Cable diagram

F09_002_VLU

Cable name -W1			cable type TPE					
remark			no. of conductors 4			cross-section 18		cable length 2
function text	Page / column	Target designation from	Connection point	conductor	Target designation to	Connection point	Page / column	function text
	&EFS=V2AR41UQ41KF1	=**V2AR41UQ41/K3.1**+V2AR41UQ41-KF1	1.12-X4		-BGS/R	1	&EFS=V2AR41UQ41UQ4+V2AR41UQ41UQ4/1.5	
	&EFS=V2AR41UQ41KF1	=**V2AR41UQ41/K3.1**+V2AR41UQ41-KF2	1.12-X4		-BGS/R	2	&EFS=V2AR41UQ41UQ4+V2AR41UQ41UQ4/1.5	
	&EFS=V2AR41UQ41KF1	=**V2AR41UQ41/K3.1**+V2AR41UQ41-KF3	1.12-X4		-BGS/R	3	&EFS=V2AR41UQ41UQ4+V2AR41UQ41UQ4/1.5	
	&EFS=V2AR41UQ41KF1	=**V2AR41UQ41/K3.1**+V2AR41UQ41-KF4	1.12-X4		-BGS/R	4	&EFS=V2AR41UQ41UQ4+V2AR41UQ41UQ4/1.5	

=V2AR41UQ41UQ4.3+.AR41UQ41UQ4.3/1

=V2AR41UQ41UQ5.1+.AR41UQ41UQ5.1/1

			Date	1/24/2023	Volvo Trucks North America	Valiant TMS	Cable diagram =V2AR41UQ41UQ4.4+V2AR41UQ41UQ4.4-W1	Drawing name: =2V01&EFS-EL_KF1	= V2AR41UQ41UQ4.4
			Ed.	MKLEPADLO					+ V2AR41UQ41UQ4.4
			Appr		P6700 Framing - Cell 2V01, KF1	Scale 1:1		Document type: EMA	Project nr: 22-16152
Modification	Date	Name	Original		Replacement of / Replaced by				Page 1 / 1630

Cable diagram

F09_002_VLU

Cable name -W1			cable type TPE					
remark			no. of conductors 4			cross-section 18		cable length 4
function text	Page / column	Target designation from	Connection point	conductor	Target designation to	Connection point	Page / column	function text
	&EFS=V2AR41UQ41KF1	=**V2AR41UQ41/K3.5**+V2AR41UQ41-KF1	1.12-X5		-BGS/R	1	&EFS=V2AR41UQ41UQ5+V2AR41UQ41UQ5/1.0	
	&EFS=V2AR41UQ41KF1	=**V2AR41UQ41/K3.5**+V2AR41UQ41-KF2	1.12-X5		-BGS/R	2	&EFS=V2AR41UQ41UQ5+V2AR41UQ41UQ5/1.0	
	&EFS=V2AR41UQ41KF1	=**V2AR41UQ41/K3.5**+V2AR41UQ41-KF3	1.12-X5		-BGS/R	3	&EFS=V2AR41UQ41UQ5+V2AR41UQ41UQ5/1.1	
	&EFS=V2AR41UQ41KF1	=**V2AR41UQ41/K3.5**+V2AR41UQ41-KF4	1.12-X5		-BGS/R	4	&EFS=V2AR41UQ41UQ5+V2AR41UQ41UQ5/1.1	

=V2AR41UQ41UQ4.4+.AR41UQ41UQ4.4/1

=V2AR41UQ41UQ5.2+.AR41UQ41UQ5.2/1

			Date	1/24/2023	Volvo Trucks North America	Valiant TMS	Cable diagram =V2AR41UQ41UQ5.1+V2AR41UQ41UQ5.1-W1	Drawing name: =2V01&EFS-EL_KF1	= V2AR41UQ41UQ5.1
			Ed.	MKLEPADLO					+ V2AR41UQ41UQ5.1
			Appr		P6700 Framing - Cell 2V01, KF1			Document type: EMA	Project nr: 22-16152
Modification	Date	Name	Original		Replacement of / Replaced by	Scale 1:1			Page 1 / 1630

Cable diagram

F09_002_VLU

Cable name -W1			cable type TPE					
remark			no. of conductors 4			cross-section 18		cable length 4
function text	Page / column	Target designation from	Connection point	conductor	Target designation to	Connection point	Page / column	function text
	&EFS=V2AR41UQ41KF1	=**V2AR41UQ41/K3.6**+V2AR41UQ41-KF1	1.12-X6		-BGS/R	1	&EFS=V2AR41UQ41UQ5+V2AR41UQ41UQ5/1.2	
	&EFS=V2AR41UQ41KF1	=**V2AR41UQ41/K3.6**+V2AR41UQ41-KF2	1.12-X6		-BGS/R	2	&EFS=V2AR41UQ41UQ5+V2AR41UQ41UQ5/1.2	
	&EFS=V2AR41UQ41KF1	=**V2AR41UQ41/K3.6**+V2AR41UQ41-KF3	1.12-X6		-BGS/R	3	&EFS=V2AR41UQ41UQ5+V2AR41UQ41UQ5/1.2	
	&EFS=V2AR41UQ41KF1	=**V2AR41UQ41/K3.7**+V2AR41UQ41-KF4	1.12-X6		-BGS/R	4	&EFS=V2AR41UQ41UQ5+V2AR41UQ41UQ5/1.2	

=V2AR41UQ41UQ5.1+.AR41UQ41UQ5.1/1

=V2AR41UQ41UQ6.1+.AR41UQ41UQ6.1/1

			Date	1/24/2023	Volvo Trucks North America	Valiant TMS	Cable diagram =V2AR41UQ41UQ5.2+V2AR41UQ41UQ5.2-W1	Drawing name: =2V01&EFS-EL_KF1	= V2AR41UQ41UQ5.2
			Ed.	MKLEPADLO					+ V2AR41UQ41UQ5.2
			Appr		P6700 Framing - Cell 2V01, KF1			Document type: EMA	Project nr: 22-16152
Modification	Date	Name	Original		Replacement of / Replaced by	Scale 1:1			Page 1 / 1630

Cable diagram

F09_002_VLU

Cable name -W1			cable type TPE					
remark			no. of conductors 4			cross-section 18		cable length 1
function text	Page / column	Target designation from	Connection point	conductor	Target designation to	Connection point	Page / column	function text
	&EFS=V2AR41UQ41KF1	=**V2AR41UQ41UQ5.2**+V2AR41UQ41-KF1	1.12-X7		-BGS/R	1	&EFS=V2AR41UQ41UQ6+V2AR41UQ41UQ6/1.0	
	&EFS=V2AR41UQ41KF1	=**V2AR41UQ41UQ5.2**+V2AR41UQ41-KF2	1.12-X7		-BGS/R	4	&EFS=V2AR41UQ41UQ6+V2AR41UQ41UQ6/1.1	
	&EFS=V2AR41UQ41KF1	=**V2AR41UQ41UQ5.2**+V2AR41UQ41-KF3	1.12-X7		-BGS/R	3	&EFS=V2AR41UQ41UQ6+V2AR41UQ41UQ6/1.0	

=V2AR41UQ41UQ5.2+.AR41UQ41UQ5.2/1

=V2AR41UQ41UQ7.1+.AR41UQ41UQ7.1/1

			Date	1/24/2023	Volvo Trucks North America	Valiant TMS	Cable diagram =V2AR41UQ41UQ6.1+V2AR41UQ41UQ6.1-W1	Drawing name: =2V01&EFS-EL_KF1	= V2AR41UQ41UQ6.1
			Ed.	MKLEPADLO					+ V2AR41UQ41UQ6.1
			Appr		P6700 Framing - Cell 2V01, KF1			Document type: EMA	Project nr: 22-16152
Modification	Date	Name	Original		Replacement of / Replaced by	Scale 1:1			Page 1 / 1630

Cable diagram

F09_002_VLU

Cable name -W1			cable type TPE					
remark			no. of conductors 4			cross-section 18		cable length 2
function text	Page / column	Target designation from	Connection point	conductor	Target designation to	Connection point	Page / column	function text
	&EFS=V2AR41UQ41KF1	=**V2AR41UQ41/K3.8**+V2AR41UQ41-KF1	1.12-X8		-BGS/R	1	&EFS=V2AR41UQ41UQ7+V2AR41UQ41UQ7/1.0	
	&EFS=V2AR41UQ41KF1	=**V2AR41UQ41/K3.9**+V2AR41UQ41-KF2	1.12-X8		-BGS/R	2	&EFS=V2AR41UQ41UQ7+V2AR41UQ41UQ7/1.0	
	&EFS=V2AR41UQ41KF1	=**V2AR41UQ41/K3.9**+V2AR41UQ41-KF3	1.12-X8		-BGS/R	3	&EFS=V2AR41UQ41UQ7+V2AR41UQ41UQ7/1.1	
	&EFS=V2AR41UQ41KF1	=**V2AR41UQ41/K3.9**+V2AR41UQ41-KF4	1.12-X8		-BGS/R	4	&EFS=V2AR41UQ41UQ7+V2AR41UQ41UQ7/1.1	

			Date	1/24/2023	Volvo Trucks North America	Valiant TMS	Cable diagram =V2AR41UQ41UQ7.1+V2AR41UQ41UQ7.1-W1	Drawing name: =2V01&EFS-EL_KF1	= V2AR41UQ41UQ7.1
			Ed.	MKLEPADLO					+ V2AR41UQ41UQ7.1
			Appr		P6700 Framing - Cell 2V01, KF1			Document type: EMA	Project nr: 22-16152
Modification	Date	Name	Original		Replacement of / Replaced by	Scale 1:1			Page 1 / 1630

Cable diagram

F09_002_VLU

Cable name -W1			cable type TPE					
remark			no. of conductors 4			cross-section 18		cable length 2
function text	Page / column	Target designation from	Connection point	conductor	Target designation to	Connection point	Page / column	function text
	&EFS=V2AR41UQ41KF1	=**V2AR41UQ41/KF1**+V2AR41UQ41-KF1	1.13-X1		-BGS/R	1	&EFS=V2AR41UQ41UQ7+V2AR41UQ41UQ7/1.2	
	&EFS=V2AR41UQ41KF1	=**V2AR41UQ41/KF1**+V2AR41UQ41-KF2	1.13-X1		-BGS/R	2	&EFS=V2AR41UQ41UQ7+V2AR41UQ41UQ7/1.2	
	&EFS=V2AR41UQ41KF1	=**V2AR41UQ41/KF1**+V2AR41UQ41-KF3	1.13-X1		-BGS/R	3	&EFS=V2AR41UQ41UQ7+V2AR41UQ41UQ7/1.2	
	&EFS=V2AR41UQ41KF1	=**V2AR41UQ41/KF1**+V2AR41UQ41-KF4	1.13-X1		-BGS/R	4	&EFS=V2AR41UQ41UQ7+V2AR41UQ41UQ7/1.2	

			Date	1/24/2023	Volvo Trucks North America	Valiant TMS	Cable diagram =V2AR41UQ41UQ7.2+V2AR41UQ41UQ7.2-W1	Drawing name: =2V01&EFS-EL_KF1	= V2AR41UQ41UQ7.2
			Ed.	MKLEPADLO					+ V2AR41UQ41UQ7.2
			Appr		P6700 Framing - Cell 2V01, KF1	Scale 1:1		Document type: EMA / Project nr: 22-16152	Page 1 / 1630
Modification	Date	Name	Original		Replacement of / Replaced by				

Cable diagram

F09_002_VLU

Cable name -W1			cable type TPE					
remark			no. of conductors 4			cross-section 18		cable length 1
function text	Page / column	Target designation from	Connection point	conductor	Target designation to	Connection point	Page / column	function text
	&EFS=V2AR41UQ41KF1	=V2AR41UQ41/KF1 +V2AR41UQ41-KF1	1.13-X2		-BGS/R	1	&EFS=V2AR41UQ41UQ8+V2AR41UQ41UQ8/1.0	
	&EFS=V2AR41UQ41KF1	=V2AR41UQ41/KF1 +V2AR41UQ41-KF2	1.13-X2		-BGS/R	4	&EFS=V2AR41UQ41UQ8+V2AR41UQ41UQ8/1.1	
	&EFS=V2AR41UQ41KF1	=V2AR41UQ41/KF1 +V2AR41UQ41-KF3	1.13-X2		-BGS/R	3	&EFS=V2AR41UQ41UQ8+V2AR41UQ41UQ8/1.0	

Cable diagram

F09_002_VLU

Cable name -W1			cable type TPE					
remark			no. of conductors 4			cross-section 18		cable length 0.5
function text	Page / column	Target designation from	Connection point	conductor	Target designation to	Connection point	Page / column	function text
	&EFS/1.0	-XG1/2	P1:1		=V2AR42UQ41KF1-KF1.12-X1	1	&EFS=V2AR42UQ41KF1/3.0	
	&EFS/1.1	-XG1/2	P1:3		=V2AR42UQ41KF1-KF1.12-X1	3	&EFS=V2AR42UQ41KF1/3.1	
	&EFS/1.1	-XG1/2	P1:4		=V2AR42UQ41KF1-KF1.12-X1	4	&EFS=V2AR42UQ41KF1/3.1	
	&EFS/1.1	-XG1/2	P1:2		=V2AR42UQ41KF1-KF1.12-X1	2	&EFS=V2AR42UQ41KF1/3.0	

			Date	1/24/2023	Volvo Trucks North America	Valiant TMS	Cable diagram =V2AR42UQ41BG0+V2AR42UQ41-W1	Drawing name: =2V01&EFS-EL_KF1	= V2AR42UQ41BG0
			Ed.	MKLEPADLO					+ V2AR42UQ41
			Appr		P6700 Framing - Cell 2V01, KF1			Document type: EMA	Project nr: 22-16152 Page 1
Modification	Date	Name	Original		Replacement of / Replaced by	Scale 1:1			1630

Cable diagram

F09_002_VLU

Cable name -W1.1			cable type TPE					
remark			no. of conductors 4			cross-section 18		cable length 2
function text	Page / column	Target designation from	Connection point	conductor	Target designation to	Connection point	Page / column	function text
	&EFS/1.0	-BG01	1		-XG1/2	J1:1	&EFS/1.0	
	&EFS/1.0	-BG01	4		-XG1/2	J1:4	&EFS/1.1	
	&EFS/1.1	-BG01	3		-XG1/2	J1:3	&EFS/1.1	

			Date	1/24/2023	Volvo Trucks North America	Valiant TMS	Cable diagram =V2AR42UQ41BG0+V2AR42UQ41-W1.1	Drawing name: =2V01&EFS-EL_KF1	= V2AR42UQ41BG0
			Ed.	MKLEPADLO					+ V2AR42UQ41
			Appr		P6700 Framing - Cell 2V01, KF1			Document type: EMA	Project nr: 22-16152
Modification	Date	Name	Original		Replacement of / Replaced by	Scale 1:1			Page 2 / 1630

Cable diagram

F09_002_VLU

Cable name -W1.2			cable type TPE					
remark			no. of conductors 4			cross-section 18		cable length 4
function text	Page / column	Target designation from	Connection point	conductor	Target designation to	Connection point	Page / column	function text
	&EFS/1.1	-BG02	1		-XG1/2	J2:1	&EFS/1.1	
	&EFS/1.1	-BG02	4		-XG1/2	J2:4	&EFS/1.2	
	&EFS/1.2	-BG02	3		-XG1/2	J2:3	&EFS/1.2	

			Date	1/24/2023	Volvo Trucks North America	Valiant TMS	Cable diagram =V2AR42UQ41BG0+V2AR42UQ41-W1.2	Drawing name: =2V01&EFS-EL_KF1	= V2AR42UQ41BG0
			Ed.	MKLEPADLO					+ V2AR42UQ41
			Appr		P6700 Framing - Cell 2V01, KF1			Document type: EMA	Project nr: 22-16152
Modification	Date	Name	Original		Replacement of / Replaced by	Scale 1:1			Page 3 / 1630

Cable diagram

F09_002_VLU

Cable name -W1			cable type TPU					
remark			no. of conductors 5			cross-section 16		cable length 2
function text	Page / column	Target designation from	Connection point	conductor	Target designation to	Connection point	Page / column	function text
	&EFS/2.2	-KF1-X20	5		-R3.CP/CS	C4	&EFS/1.3	
	&EFS/2.1	-KF1-X20	1		-R3.CP/CS	C5	&EFS/1.3	
	&EFS/2.1	-KF1-X20	3		-R3.CP/CS	PE	&EFS/1.3	
	&EFS/2.2	-KF1-X20	4		-R3.CP/CS	C6	&EFS/1.3	
	&EFS/2.1	-KF1-X20	2		-R3.CP/CS	C7	&EFS/1.4	

			Date	1/24/2023	Volvo Trucks North America	Valiant TMS	Cable diagram =V2AR42UQ41KF1+V2AR42UQ41-W1	Drawing name: =2V01&EFS-EL_KF1	= V2AR42UQ41KF1
			Ed.	MKLEPADLO					+ V2AR42UQ41
			Appr		P6700 Framing - Cell 2V01, KF1			Document type: EMA	Project nr: 22-16152
Modification	Date	Name	Original		Replacement of / Replaced by	Scale 1:1			Page 1 / 1630

Cable diagram

F09_002_VLU

Cable name -WF1			cable type PROFINET Cable					
remark			no. of conductors 4			cross-section 22		cable length
function text	Page / column	Target designation from	Connection point	conductor	Target designation to	Connection point	Page / column	function text
	&EFS/2.3	-KF1-TP1			-R3.CP/CS	R3.PROFINET	&EFS/1.5	

			Date	1/24/2023	Volvo Trucks North America	Valiant TMS	Cable diagram =V2AR42UQ41KF1+V2AR42UQ41-WF1	Drawing name: =2V01&EFS-EL_KF1	= V2AR42UQ41KF1
			Ed.	MKLEPADLO					+ V2AR42UQ41
			Appr		P6700 Framing - Cell 2V01, KF1			Document type: EMA	Project nr: 22-16152
Modification	Date	Name	Original		Replacement of / Replaced by	Scale 1:1			Page 2 / 1630

Cable diagram

F09_002_VLU

Cable name -W1			cable type TPE					
remark			no. of conductors 4			cross-section 18		cable length 2
function text	Page / column	Target designation from	Connection point	conductor	Target designation to	Connection point	Page / column	function text
	&EFS=V2AR42UQ41KF1	=**V2AR42UQ41KF1**+V2AR42UQ41-KF1	1.11-X1		-BGS/R	1	&EFS=V2AR42UQ41UQ1	+V2AR42UQ41UQ1/1.0
	&EFS=V2AR42UQ41KF1	=**V2AR42UQ41KF1**+V2AR42UQ41-KF2	1.11-X1		-BGS/R	2	&EFS=V2AR42UQ41UQ1	+V2AR42UQ41UQ1/1.0
	&EFS=V2AR42UQ41KF1	=**V2AR42UQ41KF1**+V2AR42UQ41-KF3	1.11-X1		-BGS/R	3	&EFS=V2AR42UQ41UQ1	+V2AR42UQ41UQ1/1.1
	&EFS=V2AR42UQ41KF1	=**V2AR42UQ41KF1**+V2AR42UQ41-KF4	1.11-X1		-BGS/R	4	&EFS=V2AR42UQ41UQ1	+V2AR42UQ41UQ1/1.1

			Date	1/24/2023	Volvo Trucks North America	Valiant TMS	Cable diagram =V2AR42UQ41UQ1.1+V2AR42UQ41UQ1.1-W1	Drawing name: =2V01&EFS-EL_KF1	= V2AR42UQ41UQ1.1
			Ed.	MKLEPADLO					+ V2AR42UQ41UQ1.1
			Appr		P6700 Framing - Cell 2V01, KF1	Scale 1:1		Document type: EMA	Project nr: 22-16152
Modification	Date	Name	Original		Replacement of	Replaced by			Page 1 / 1630

Cable diagram

F09_002_VLU

Cable name -W1			cable type TPE					
remark			no. of conductors 4			cross-section 18		cable length 4
function text	Page / column	Target designation from	Connection point	conductor	Target designation to	Connection point	Page / column	function text
	&EFS=V2AR42UQ41KF1	=**V2AR42UQ41/K2.1**+V2AR42UQ41-KF1	1.11-X2		-BGS/R	1	&EFS=V2AR42UQ41UQ1	+V2AR42UQ41UQ1/1.2
	&EFS=V2AR42UQ41KF1	=**V2AR42UQ41/K2.2**+V2AR42UQ41-KF1	1.11-X2		-BGS/R	2	&EFS=V2AR42UQ41UQ1	+V2AR42UQ41UQ1/1.2
	&EFS=V2AR42UQ41KF1	=**V2AR42UQ41/K2.3**+V2AR42UQ41-KF1	1.11-X2		-BGS/R	3	&EFS=V2AR42UQ41UQ1	+V2AR42UQ41UQ1/1.2
	&EFS=V2AR42UQ41KF1	=**V2AR42UQ41/K2.4**+V2AR42UQ41-KF1	1.11-X2		-BGS/R	4	&EFS=V2AR42UQ41UQ1	+V2AR42UQ41UQ1/1.2

			Date	1/24/2023	Volvo Trucks North America	Valiant TMS	Cable diagram =V2AR42UQ41UQ1.2+V2AR42UQ41UQ1.2-W1	Drawing name: =2V01&EFS-EL_KF1	= V2AR42UQ41UQ1.2
			Ed.	MKLEPADLO					+ V2AR42UQ41UQ1.2
			Appr		P6700 Framing - Cell 2V01, KF1	Scale 1:1		Document type: EMA	Project nr: 22-16152
Modification	Date	Name	Original		Replacement of	Replaced by			Page 1 / 1630

Cable diagram

F09_002_VLU

Cable name -W1			cable type TPE					
remark			no. of conductors 4			cross-section 18		cable length 2
function text	Page / column	Target designation from	Connection point	conductor	Target designation to	Connection point	Page / column	function text
	&EFS=V2AR42UQ41KF1	=**V2AR42UQ41KF1**+V2AR42UQ41UQ1.3	1		1.11-X3	-BGS/R	1	&EFS=V2AR42UQ41UQ1+V2AR42UQ41UQ1/1.4
	&EFS=V2AR42UQ41KF1	=**V2AR42UQ41KF1**+V2AR42UQ41UQ1.3	2		1.11-X3	-BGS/R	2	&EFS=V2AR42UQ41UQ1+V2AR42UQ41UQ1/1.4
	&EFS=V2AR42UQ41KF1	=**V2AR42UQ41KF1**+V2AR42UQ41UQ1.3	3		1.11-X3	-BGS/R	3	&EFS=V2AR42UQ41UQ1+V2AR42UQ41UQ1/1.4
	&EFS=V2AR42UQ41KF1	=**V2AR42UQ41KF1**+V2AR42UQ41UQ1.3	4		1.11-X3	-BGS/R	4	&EFS=V2AR42UQ41UQ1+V2AR42UQ41UQ1/1.4

=V2AR42UQ41UQ1.2+.AR42UQ41UQ1.2/1

=V2AR42UQ41UQ1.4+.AR42UQ41UQ1.4/1

			Date	1/24/2023	Volvo Trucks North America	Valiant TMS	Cable diagram =V2AR42UQ41UQ1.3+V2AR42UQ41UQ1.3-W1	Drawing name: =2V01&EFS-EL_KF1	= V2AR42UQ41UQ1.3
			Ed.	MKLEPADLO					+ V2AR42UQ41UQ1.3
			Appr		P6700 Framing - Cell 2V01, KF1	Scale 1:1		Document type: EMA	Project nr: 22-16152
Modification	Date	Name	Original		Replacement of	Replaced by			Page 1 / 1630

Cable diagram

F09_002_VLU

Cable name -W1			cable type TPE					
remark			no. of conductors 4			cross-section 18		cable length 4
function text	Page / column	Target designation from	Connection point	conductor	Target designation to	Connection point	Page / column	function text
	&EFS=V2AR42UQ41KF1	=**V2AR42UQ41**/KF1+V2AR42UQ41-KF1	1.11-X4		-BGS/R	1	&EFS=V2AR42UQ41UQ1	+V2AR42UQ41UQ1/1.5
	&EFS=V2AR42UQ41KF1	=**V2AR42UQ41**/KF1+V2AR42UQ41-KF2	1.11-X4		-BGS/R	2	&EFS=V2AR42UQ41UQ1	+V2AR42UQ41UQ1/1.5
	&EFS=V2AR42UQ41KF1	=**V2AR42UQ41**/KF1+V2AR42UQ41-KF3	1.11-X4		-BGS/R	3	&EFS=V2AR42UQ41UQ1	+V2AR42UQ41UQ1/1.5
	&EFS=V2AR42UQ41KF1	=**V2AR42UQ41**/KF1+V2AR42UQ41-KF4	1.11-X4		-BGS/R	4	&EFS=V2AR42UQ41UQ1	+V2AR42UQ41UQ1/1.5

			Date	1/24/2023	Volvo Trucks North America	Valiant TMS	Cable diagram =V2AR42UQ41UQ1.4+V2AR42UQ41UQ1.4-W1	Drawing name: =2V01&EFS-EL_KF1	= V2AR42UQ41UQ1.4
			Ed.	MKLEPADLO					+ V2AR42UQ41UQ1.4
			Appr		P6700 Framing - Cell 2V01, KF1			Document type: EMA	Project nr: 22-16152
Modification	Date	Name	Original		Replacement of / Replaced by	Scale 1:1			Page 1 / 1630

Cable diagram

F09_002_VLU

Cable name -W1			cable type TPE					
remark			no. of conductors 4			cross-section 18		cable length 0.5
function text	Page / column	Target designation from	Connection point	conductor	Target designation to	Connection point	Page / column	function text
	&EFS/1.0	-XG1/2	P1:1		=V2AR42UQ42KF1-KF1.12-X1	1	&EFS=V2AR42UQ42KF1/3.0	
	&EFS/1.1	-XG1/2	P1:3		=V2AR42UQ42KF1-KF1.12-X1	3	&EFS=V2AR42UQ42KF1/3.1	
	&EFS/1.1	-XG1/2	P1:4		=V2AR42UQ42KF1-KF1.12-X1	4	&EFS=V2AR42UQ42KF1/3.1	
	&EFS/1.1	-XG1/2	P1:2		=V2AR42UQ42KF1-KF1.12-X1	2	&EFS=V2AR42UQ42KF1/3.0	

=V2AR42UQ41UQ1.4+.AR42UQ41UQ1.4/1

			Date	1/24/2023	Volvo Trucks North America		Valiant TMS	Cable diagram =V2AR42UQ42BG0+V2AR42UQ42-W1	Drawing name: =2V01&EFS-EL_KF1	= V2AR42UQ42BG0
			Ed.	MKLEPADLO						+ V2AR42UQ42
			Appr		P6700 Framing - Cell 2V01, KF1				Document type: EMA	Project nr: 22-16152
Modification	Date	Name	Original		Replacement of	Replaced by	Scale 1:1			Page 1 / 1630

Cable diagram

F09_002_VLU

Cable name -W1.1			cable type TPE					
remark			no. of conductors 4			cross-section 18		cable length 1
function text	Page / column	Target designation from	Connection point	conductor	Target designation to	Connection point	Page / column	function text
	&EFS/1.0	-BG01	1		-XG1/2	J1:1	&EFS/1.0	
	&EFS/1.0	-BG01	4		-XG1/2	J1:4	&EFS/1.1	
	&EFS/1.1	-BG01	3		-XG1/2	J1:3	&EFS/1.1	

			Date	1/24/2023	Volvo Trucks North America	Valiant TMS	Cable diagram =V2AR42UQ42BG0+V2AR42UQ42-W1.1	Drawing name: =2V01&EFS-EL_KF1	= V2AR42UQ42BG0
			Ed.	MKLEPADLO					+ V2AR42UQ42
			Appr		P6700 Framing - Cell 2V01, KF1			Document type: EMA	Project nr: 22-16152
Modification	Date	Name	Original		Replacement of / Replaced by	Scale 1:1			Page 2 / 1630

Cable diagram

F09_002_VLU

Cable name -W1.2			cable type TPE					
remark			no. of conductors 4			cross-section 18		cable length 2
function text	Page / column	Target designation from	Connection point	conductor	Target designation to	Connection point	Page / column	function text
	&EFS/1.1	-BG02	1		-XG1/2	J2:1	&EFS/1.1	
	&EFS/1.1	-BG02	4		-XG1/2	J2:4	&EFS/1.2	
	&EFS/1.2	-BG02	3		-XG1/2	J2:3	&EFS/1.2	

			Date	1/24/2023	Volvo Trucks North America	Valiant TMS	Cable diagram =V2AR42UQ42BG0+V2AR42UQ42-W1.2	Drawing name: =2V01&EFS-EL_KF1	= V2AR42UQ42BG0
			Ed.	MKLEPADLO					+ V2AR42UQ42
			Appr		P6700 Framing - Cell 2V01, KF1			Document type: EMA	Project nr: 22-16152
Modification	Date	Name	Original		Replacement of / Replaced by	Scale 1:1			Page 3 / 1630

Cable diagram

F09_002_VLU

Cable name -W1			cable type TPU					
remark			no. of conductors 5			cross-section 16		cable length 2
function text	Page / column	Target designation from	Connection point	conductor	Target designation to	Connection point	Page / column	function text
	&EFS/2.2	-KF1-X20	5		-R3.CP/CS	C4	&EFS/1.3	
	&EFS/2.1	-KF1-X20	1		-R3.CP/CS	C5	&EFS/1.3	
	&EFS/2.1	-KF1-X20	3		-R3.CP/CS	PE	&EFS/1.3	
	&EFS/2.2	-KF1-X20	4		-R3.CP/CS	C6	&EFS/1.3	
	&EFS/2.1	-KF1-X20	2		-R3.CP/CS	C7	&EFS/1.4	

			Date	1/24/2023	Volvo Trucks North America	Valiant TMS	Cable diagram =V2AR42UQ42KF1+V2AR42UQ42-W1	Drawing name: =2V01&EFS-EL_KF1	= V2AR42UQ42KF1
			Ed.	MKLEPADLO					+ V2AR42UQ42
			Appr		P6700 Framing - Cell 2V01, KF1			Document type: EMA	Project nr: 22-16152
Modification	Date	Name	Original		Replacement of / Replaced by	Scale 1:1			Page 1 / 1630

Cable diagram

F09_002_VLU

Cable name -WF1			cable type PROFINET Cable					
remark			no. of conductors 4			cross-section 22		cable length
function text	Page / column	Target designation from	Connection point	conductor	Target designation to	Connection point	Page / column	function text
	&EFS/2.3	-KF1-TP1			-R3.CP/CS	R3.PROFINET	&EFS/1.5	

			Date	1/24/2023	Volvo Trucks North America	Valiant TMS	Cable diagram =V2AR42UQ42KF1+V2AR42UQ42-WF1	Drawing name: =2V01&EFS-EL_KF1	= V2AR42UQ42KF1
			Ed.	MKLEPADLO					+ V2AR42UQ42
			Appr		P6700 Framing - Cell 2V01, KF1	Scale 1:1		Document type: EMA	Project nr: 22-16152
Modification	Date	Name	Original		Replacement of	Replaced by			Page 2 / 1630

Cable diagram

F09_002_VLU

Cable name -W1			cable type TPE					
remark			no. of conductors 4			cross-section 18		cable length 1
function text	Page / column	Target designation from	Connection point	conductor	Target designation to	Connection point	Page / column	function text
	&EFS=V2AR42UQ42KF1	=**V2AR42UQ42KF1**+V2AR42UQ42-KF1	1.11-X1		-BGS/R	1	&EFS=V2AR42UQ42UQ1	=V2AR42UQ42UQ1+V2AR42UQ42UQ1/1.0
	&EFS=V2AR42UQ42KF1	=**V2AR42UQ42KF1**+V2AR42UQ42-KF2	1.11-X1		-BGS/R	2	&EFS=V2AR42UQ42UQ1	=V2AR42UQ42UQ1+V2AR42UQ42UQ1/1.0
	&EFS=V2AR42UQ42KF1	=**V2AR42UQ42KF1**+V2AR42UQ42-KF3	1.11-X1		-BGS/R	3	&EFS=V2AR42UQ42UQ1	=V2AR42UQ42UQ1+V2AR42UQ42UQ1/1.1
	&EFS=V2AR42UQ42KF1	=**V2AR42UQ42KF1**+V2AR42UQ42-KF4	1.11-X1		-BGS/R	4	&EFS=V2AR42UQ42UQ1	=V2AR42UQ42UQ1+V2AR42UQ42UQ1/1.1

			Date	1/24/2023	Volvo Trucks North America	Valiant TMS	Cable diagram =V2AR42UQ42UQ1.1+V2AR42UQ42UQ1.1-W1	Drawing name: =2V01&EFS-EL_KF1	= V2AR42UQ42UQ1.1
			Ed.	MKLEPADLO					+ V2AR42UQ42UQ1.1
			Appr		P6700 Framing - Cell 2V01, KF1			Document type: EMA	Project nr: 22-16152
Modification	Date	Name	Original		Replacement of / Replaced by	Scale 1:1			Page 1 / 1630

Cable diagram

F09_002_VLU

Cable name -W1			cable type TPE					
remark			no. of conductors 4			cross-section 18		cable length 2
function text	Page / column	Target designation from	Connection point	conductor	Target designation to	Connection point	Page / column	function text
	&EFS=V2AR42UQ42KF1	=V2AR42UQ42KF1+V2AR42UQ42-KF1	1		1.11-X2	-BGS/R	1	&EFS=V2AR42UQ42UQ1+V2AR42UQ42UQ1/1.2
	&EFS=V2AR42UQ42KF1	=V2AR42UQ42KF1+V2AR42UQ42-KF1	2		1.11-X2	-BGS/R	2	&EFS=V2AR42UQ42UQ1+V2AR42UQ42UQ1/1.2
	&EFS=V2AR42UQ42KF1	=V2AR42UQ42KF1+V2AR42UQ42-KF1	3		1.11-X2	-BGS/R	3	&EFS=V2AR42UQ42UQ1+V2AR42UQ42UQ1/1.2
	&EFS=V2AR42UQ42KF1	=V2AR42UQ42KF1+V2AR42UQ42-KF1	4		1.11-X2	-BGS/R	4	&EFS=V2AR42UQ42UQ1+V2AR42UQ42UQ1/1.2

=V2AR42UQ42UQ1.1+.AR42UQ42UQ1.1/1

=V2AR42UQ42UQ1.3+.AR42UQ42UQ1.3/1

			Date	1/24/2023	Volvo Trucks North America	Valiant TMS	Cable diagram =V2AR42UQ42UQ1.2+V2AR42UQ42UQ1.2-W1	Drawing name: =2V01&EFS-EL_KF1	= V2AR42UQ42UQ1.2
			Ed.	MKLEPADLO					+ V2AR42UQ42UQ1.2
			Appr		P6700 Framing - Cell 2V01, KF1			Document type: EMA	Project nr: 22-16152
Modification	Date	Name	Original		Replacement of / Replaced by	Scale 1:1			Page 1 / 1630

Cable diagram

F09_002_VLU

Cable name -W1			cable type TPE					
remark			no. of conductors 4			cross-section 18		cable length 1
function text	Page / column	Target designation from	Connection point	conductor	Target designation to	Connection point	Page / column	function text
	&EFS=V2AR42UQ42KF1	=**V2AR42UQ42KF1**/K2.3+V2AR42UQ42-KF1	1		1.11-X3	1	-BGS/R	&EFS=V2AR42UQ42UQ1+V2AR42UQ42UQ1/1.4
	&EFS=V2AR42UQ42KF1	=**V2AR42UQ42KF1**/K2.3+V2AR42UQ42-KF1	2		1.11-X3	2	-BGS/R	&EFS=V2AR42UQ42UQ1+V2AR42UQ42UQ1/1.4
	&EFS=V2AR42UQ42KF1	=**V2AR42UQ42KF1**/K2.3+V2AR42UQ42-KF1	3		1.11-X3	3	-BGS/R	&EFS=V2AR42UQ42UQ1+V2AR42UQ42UQ1/1.4
	&EFS=V2AR42UQ42KF1	=**V2AR42UQ42KF1**/K2.3+V2AR42UQ42-KF1	4		1.11-X3	4	-BGS/R	&EFS=V2AR42UQ42UQ1+V2AR42UQ42UQ1/1.4

=V2AR42UQ42UQ1.2+.AR42UQ42UQ1.2/1

=V2AR42UQ42UQ1.4+.AR42UQ42UQ1.4/1

			Date	1/24/2023	Volvo Trucks North America	Valiant TMS	Cable diagram =V2AR42UQ42UQ1.3+V2AR42UQ42UQ1.3-W1	Drawing name: =2V01&EFS-EL_KF1	= V2AR42UQ42UQ1.3
			Ed.	MKLEPADLO					+ V2AR42UQ42UQ1.3
			Appr		P6700 Framing - Cell 2V01, KF1	Scale 1:1		Document type: EMA	Project nr: 22-16152
Modification	Date	Name	Original		Replacement of	Replaced by			Page 1 / 1630

Cable diagram

F09_002_VLU

Cable name -W1			cable type TPE					
remark			no. of conductors 4			cross-section 18		cable length 2
function text	Page / column	Target designation from	Connection point	conductor	Target designation to	Connection point	Page / column	function text
	&EFS=V2AR42UQ42KF1	=V2AR42UQ42KF1+V2AR42UQ42-KF1	1.11-X4		-BGS/R	1	&EFS=V2AR42UQ42UQ1	+V2AR42UQ42UQ1/1.5
	&EFS=V2AR42UQ42KF1	=V2AR42UQ42KF1+V2AR42UQ42-KF1	2.11-X4		-BGS/R	2	&EFS=V2AR42UQ42UQ1	+V2AR42UQ42UQ1/1.5
	&EFS=V2AR42UQ42KF1	=V2AR42UQ42KF1+V2AR42UQ42-KF1	3.11-X4		-BGS/R	3	&EFS=V2AR42UQ42UQ1	+V2AR42UQ42UQ1/1.5
	&EFS=V2AR42UQ42KF1	=V2AR42UQ42KF1+V2AR42UQ42-KF1	4.11-X4		-BGS/R	4	&EFS=V2AR42UQ42UQ1	+V2AR42UQ42UQ1/1.5

=V2AR42UQ42UQ1.3+.AR42UQ42UQ1.3/1

=V2AR42UQ42UQ1.5+.AR42UQ42UQ1.5/1

			Date	1/24/2023	Volvo Trucks North America	Valiant TMS	Cable diagram =V2AR42UQ42UQ1.4+V2AR42UQ42UQ1.4-W1	Drawing name: =2V01&EFS-EL_KF1	= V2AR42UQ42UQ1.4
			Ed.	MKLEPADLO					+ V2AR42UQ42UQ1.4
			Appr		P6700 Framing - Cell 2V01, KF1			Document type: EMA	Project nr: 22-16152
Modification	Date	Name	Original		Replacement of / Replaced by	Scale 1:1			Page 1 / 1630

Cable diagram

F09_002_VLU

Cable name -W1			cable type TPE					
remark			no. of conductors 4			cross-section 18		cable length 1
function text	Page / column	Target designation from	Connection point	conductor	Target designation to	Connection point	Page / column	function text
	&EFS=V2AR42UQ42KF1	=**V2AR42UQ42KF1**+V2AR42UQ42-KF1	1.11-X5		-BGS/R	1	&EFS=V2AR42UQ42UQ1	+V2AR42UQ42UQ1/1.7
	&EFS=V2AR42UQ42KF1	=**V2AR42UQ42KF1**+V2AR42UQ42-KF1	2.11-X5		-BGS/R	2	&EFS=V2AR42UQ42UQ1	+V2AR42UQ42UQ1/1.7
	&EFS=V2AR42UQ42KF1	=**V2AR42UQ42KF1**+V2AR42UQ42-KF1	3.11-X5		-BGS/R	3	&EFS=V2AR42UQ42UQ1	+V2AR42UQ42UQ1/1.7
	&EFS=V2AR42UQ42KF1	=**V2AR42UQ42KF1**+V2AR42UQ42-KF1	4.11-X5		-BGS/R	4	&EFS=V2AR42UQ42UQ1	+V2AR42UQ42UQ1/1.7

			Date	1/24/2023	Volvo Trucks North America	Valiant TMS	Cable diagram =V2AR42UQ42UQ1.5+V2AR42UQ42UQ1.5-W1	Drawing name: =2V01&EFS-EL_KF1	= V2AR42UQ42UQ1.5
			Ed.	MKLEPADLO					+ V2AR42UQ42UQ1.5
			Appr		P6700 Framing - Cell 2V01, KF1			Document type: EMA	Project nr: 22-16152
Modification	Date	Name	Original		Replacement of / Replaced by	Scale 1:1			Page 1 / 1630

Cable diagram

F09_002_VLU

Cable name -W1			cable type TPE					
remark			no. of conductors 4			cross-section 18		cable length 0.5
function text	Page / column	Target designation from	Connection point	conductor	Target designation to	Connection point	Page / column	function text
	&EFS/1.0	-XG1/2	P1:1		=V2AR43UQ41KF1-KF1.13-X1	1	&EFS=V2AR43UQ41KF1/4.0	
	&EFS/1.1	-XG1/2	P1:3		=V2AR43UQ41KF1-KF1.13-X1	3	&EFS=V2AR43UQ41KF1/4.1	
	&EFS/1.1	-XG1/2	P1:4		=V2AR43UQ41KF1-KF1.13-X1	4	&EFS=V2AR43UQ41KF1/4.1	
	&EFS/1.1	-XG1/2	P1:2		=V2AR43UQ41KF1-KF1.13-X1	2	&EFS=V2AR43UQ41KF1/4.0	

			Date	1/24/2023	Volvo Trucks North America	Valiant TMS	Cable diagram =V2AR43UQ41BG0+V2AR43UQ41-W1	Drawing name: =2V01&EFS-EL_KF1	= V2AR43UQ41BG0
			Ed.	MKLEPADLO					+ V2AR43UQ41
			Appr		P6700 Framing - Cell 2V01, KF1			Document type: EMA	Project nr: 22-16152
Modification	Date	Name	Original		Replacement of / Replaced by	Scale 1:1			Page 1 / 1630

Cable diagram

F09_002_VLU

Cable name -W1.1			cable type TPE					
remark			no. of conductors 4			cross-section 18		cable length 2
function text	Page / column	Target designation from	Connection point	conductor	Target designation to	Connection point	Page / column	function text
	&EFS/1.0	-BG01	1		-XG1/2	J1:1	&EFS/1.0	
	&EFS/1.0	-BG01	4		-XG1/2	J1:4	&EFS/1.1	
	&EFS/1.1	-BG01	3		-XG1/2	J1:3	&EFS/1.1	

			Date	1/24/2023	Volvo Trucks North America	Valiant TMS	Cable diagram =V2AR43UQ41BG0+V2AR43UQ41-W1.1	Drawing name: =2V01&EFS-EL_KF1	= V2AR43UQ41BG0
			Ed.	MKLEPADLO					+ V2AR43UQ41
			Appr		P6700 Framing - Cell 2V01, KF1	Scale 1:1		Document type: EMA / Project nr: 22-16152	Page 2 / 1630
Modification	Date	Name	Original		Replacement of / Replaced by				

Cable diagram

F09_002_VLU

Cable name -W1.2			cable type TPE					
remark			no. of conductors 4			cross-section 18		cable length 2
function text	Page / column	Target designation from	Connection point	conductor	Target designation to	Connection point	Page / column	function text
	&EFS/1.1	-BG02	1		-XG1/2	J2:1	&EFS/1.1	
	&EFS/1.1	-BG02	4		-XG1/2	J2:4	&EFS/1.2	
	&EFS/1.2	-BG02	3		-XG1/2	J2:3	&EFS/1.2	

			Date	1/24/2023	Volvo Trucks North America	Valiant TMS	Cable diagram =V2AR43UQ41BG0+V2AR43UQ41-W1.2	Drawing name: =2V01&EFS-EL_KF1	= V2AR43UQ41BG0
			Ed.	MKLEPADLO					+ V2AR43UQ41
			Appr		P6700 Framing - Cell 2V01, KF1	Scale 1:1		Document type: EMA / Project nr: 22-16152	Page 3 / 1630
Modification	Date	Name	Original		Replacement of / Replaced by				

Cable diagram

F09_002_VLU

Cable name -W1			cable type TPU					
remark			no. of conductors 5			cross-section 16		cable length 2
function text	Page / column	Target designation from	Connection point	conductor	Target designation to	Connection point	Page / column	function text
	&EFS/2.2	-KF1-X20	5		-R3.CP/CS	C4	&EFS/1.3	
	&EFS/2.1	-KF1-X20	1		-R3.CP/CS	C5	&EFS/1.3	
	&EFS/2.1	-KF1-X20	3		-R3.CP/CS	PE	&EFS/1.3	
	&EFS/2.2	-KF1-X20	4		-R3.CP/CS	C6	&EFS/1.3	
	&EFS/2.1	-KF1-X20	2		-R3.CP/CS	C7	&EFS/1.4	

			Date	1/24/2023	Volvo Trucks North America	Valiant TMS	Cable diagram =V2AR43UQ41KF1+V2AR43UQ41-W1	Drawing name: =2V01&EFS-EL_KF1	= V2AR43UQ41KF1
			Ed.	MKLEPADLO					+ V2AR43UQ41
			Appr		P6700 Framing - Cell 2V01, KF1			Document type: EMA	Project nr: 22-16152
Modification	Date	Name	Original		Replacement of / Replaced by	Scale 1:1			Page 1 / 1630

Cable diagram

F09_002_VLU

Cable name -WF1			cable type PROFINET Cable					
remark			no. of conductors 4			cross-section 22		cable length
function text	Page / column	Target designation from	Connection point	conductor	Target designation to	Connection point	Page / column	function text
	&EFS/2.3	-KF1-TP1			-R3.CP/CS	R3.PROFINET	&EFS/1.5	

			Date	1/24/2023	Volvo Trucks North America	Valiant TMS	Cable diagram =V2AR43UQ41KF1+V2AR43UQ41-WF1	Drawing name: =2V01&EFS-EL_KF1	= V2AR43UQ41KF1
			Ed.	MKLEPADLO					+ V2AR43UQ41
			Appr		P6700 Framing - Cell 2V01, KF1			Document type: EMA	Project nr: 22-16152
Modification	Date	Name	Original		Replacement of / Replaced by	Scale 1:1			Page 2 / 1630

Cable diagram

F09_002_VLU

Cable name -W1			cable type TPE					
remark			no. of conductors 4			cross-section 18		cable length 1
function text	Page / column	Target designation from	Connection point	conductor	Target designation to	Connection point	Page / column	function text
	&EFS=V2AR43UQ41KF1	=**V2AR43UQ41KF1**+V2AR43UQ41-KF1	1.11-X1		-BGS/R	1	&EFS=V2AR43UQ41UQ1	+V2AR43UQ41UQ1/1.0
	&EFS=V2AR43UQ41KF1	=**V2AR43UQ41KF1**+V2AR43UQ41-KF2	1.11-X1		-BGS/R	2	&EFS=V2AR43UQ41UQ1	+V2AR43UQ41UQ1/1.0
	&EFS=V2AR43UQ41KF1	=**V2AR43UQ41KF1**+V2AR43UQ41-KF3	1.11-X1		-BGS/R	3	&EFS=V2AR43UQ41UQ1	+V2AR43UQ41UQ1/1.1
	&EFS=V2AR43UQ41KF1	=**V2AR43UQ41KF1**+V2AR43UQ41-KF4	1.11-X1		-BGS/R	4	&EFS=V2AR43UQ41UQ1	+V2AR43UQ41UQ1/1.1

Cable diagram

F09_002_VLU

Cable name -W1			cable type TPE					
remark			no. of conductors 4			cross-section 18		cable length 1
function text	Page / column	Target designation from	Connection point	conductor	Target designation to	Connection point	Page / column	function text
	&EFS=V2AR43UQ41KF1	=**V2AR43UQ41KF1**+V2AR43UQ41-KF1	1.11-X2		-BGS/R	1	&EFS=V2AR43UQ41UQ1	+V2AR43UQ41UQ1/1.2
	&EFS=V2AR43UQ41KF1	=**V2AR43UQ41KF1**+V2AR43UQ41-KF1	2.11-X2		-BGS/R	2	&EFS=V2AR43UQ41UQ1	+V2AR43UQ41UQ1/1.2
	&EFS=V2AR43UQ41KF1	=**V2AR43UQ41KF1**+V2AR43UQ41-KF1	3.11-X2		-BGS/R	3	&EFS=V2AR43UQ41UQ1	+V2AR43UQ41UQ1/1.2
	&EFS=V2AR43UQ41KF1	=**V2AR43UQ41KF1**+V2AR43UQ41-KF1	4.11-X2		-BGS/R	4	&EFS=V2AR43UQ41UQ1	+V2AR43UQ41UQ1/1.2

=V2AR43UQ41UQ1.1+.AR43UQ41UQ1.1/1

=V2AR43UQ41UQ2.1+.AR43UQ41UQ2.1/1

			Date	1/24/2023	Volvo Trucks North America	Valiant TMS	Cable diagram =V2AR43UQ41UQ1.2+V2AR43UQ41UQ1.2-W1	Drawing name: =2V01&EFS-EL_KF1	= V2AR43UQ41UQ1.2
			Ed.	MKLEPADLO					+ V2AR43UQ41UQ1.2
			Appr		P6700 Framing - Cell 2V01, KF1			Document type: EMA	Project nr: 22-16152
Modification	Date	Name	Original		Replacement of / Replaced by	Scale 1:1			Page 1 / 1630

Cable diagram

F09_002_VLU

Cable name -W1			cable type TPE					
remark			no. of conductors 4			cross-section 18		cable length 1
function text	Page / column	Target designation from	Connection point	conductor	Target designation to	Connection point	Page / column	function text
	&EFS=V2AR43UQ41KF1	=**V2AR43UQ41/KF1**+V2AR43UQ41-KF1	1		1.11-X3	1	-BGS/R	&EFS=V2AR43UQ41UQ2+V2AR43UQ41UQ2/1.0
	&EFS=V2AR43UQ41KF1	=**V2AR43UQ41/KF1**+V2AR43UQ41-KF2	2		1.11-X3	2	-BGS/R	&EFS=V2AR43UQ41UQ2+V2AR43UQ41UQ2/1.0
	&EFS=V2AR43UQ41KF1	=**V2AR43UQ41/KF1**+V2AR43UQ41-KF3	3		1.11-X3	3	-BGS/R	&EFS=V2AR43UQ41UQ2+V2AR43UQ41UQ2/1.1
	&EFS=V2AR43UQ41KF1	=**V2AR43UQ41/KF1**+V2AR43UQ41-KF4	4		1.11-X3	4	-BGS/R	&EFS=V2AR43UQ41UQ2+V2AR43UQ41UQ2/1.1

=V2AR43UQ41UQ1.2+.AR43UQ41UQ1.2/1

=V2AR43UQ41UQ2.2+.AR43UQ41UQ2.2/1

			Date	1/24/2023	Volvo Trucks North America	Valiant TMS	Cable diagram =V2AR43UQ41UQ2.1+V2AR43UQ41UQ2.1-W1	Drawing name: =2V01&EFS-EL_KF1	= V2AR43UQ41UQ2.1
			Ed.	MKLEPADLO					+ V2AR43UQ41UQ2.1
			Appr		P6700 Framing - Cell 2V01, KF1			Document type: EMA	Project nr: 22-16152
Modification	Date	Name	Original		Replacement of / Replaced by	Scale 1:1			Page 1 / 1630

Cable diagram

F09_002_VLU

Cable name -W1			cable type TPE					
remark			no. of conductors 4			cross-section 18		cable length 1
function text	Page / column	Target designation from	Connection point	conductor	Target designation to	Connection point	Page / column	function text
	&EFS=V2AR43UQ41KF1	=V2AR43UQ41/K2.1+V2AR43UQ41-KF1	1.11-X4		-BGS/R	1	&EFS=V2AR43UQ41UQ2+V2AR43UQ41UQ2/1.2	
	&EFS=V2AR43UQ41KF1	=V2AR43UQ41/K2.1+V2AR43UQ41-KF2	1.11-X4		-BGS/R	2	&EFS=V2AR43UQ41UQ2+V2AR43UQ41UQ2/1.2	
	&EFS=V2AR43UQ41KF1	=V2AR43UQ41/K2.1+V2AR43UQ41-KF3	1.11-X4		-BGS/R	3	&EFS=V2AR43UQ41UQ2+V2AR43UQ41UQ2/1.2	
	&EFS=V2AR43UQ41KF1	=V2AR43UQ41/K2.1+V2AR43UQ41-KF4	1.11-X4		-BGS/R	4	&EFS=V2AR43UQ41UQ2+V2AR43UQ41UQ2/1.2	

=V2AR43UQ41UQ2.1+.AR43UQ41UQ2.1/1

=V2AR43UQ41UQ2.3+.AR43UQ41UQ2.3/1

			Date	1/24/2023	Volvo Trucks North America	Valiant TMS	Cable diagram =V2AR43UQ41UQ2.2+V2AR43UQ41UQ2.2-W1	Drawing name: =2V01&EFS-EL_KF1	= V2AR43UQ41UQ2.2
			Ed.	MKLEPADLO					+ V2AR43UQ41UQ2.2
			Appr		P6700 Framing - Cell 2V01, KF1			Document type: EMA	Project nr: 22-16152
Modification	Date	Name	Original		Replacement of / Replaced by	Scale 1:1			Page 1 / 1630

Cable diagram

F09_002_VLU

Cable name -W1			cable type TPE					
remark			no. of conductors 4			cross-section 18		cable length 2
function text	Page / column	Target designation from	Connection point	conductor	Target designation to	Connection point	Page / column	function text
	&EFS=V2AR43UQ41KF1	=V2AR43UQ41/K2.5+V2AR43UQ41-KF1	1.11-X5		-BGS/R	1	&EFS=V2AR43UQ41UQ2+V2AR43UQ41UQ2/1.4	
	&EFS=V2AR43UQ41KF1	=V2AR43UQ41/K2.5+V2AR43UQ41-KF2	1.11-X5		-BGS/R	2	&EFS=V2AR43UQ41UQ2+V2AR43UQ41UQ2/1.4	
	&EFS=V2AR43UQ41KF1	=V2AR43UQ41/K2.5+V2AR43UQ41-KF3	1.11-X5		-BGS/R	3	&EFS=V2AR43UQ41UQ2+V2AR43UQ41UQ2/1.4	
	&EFS=V2AR43UQ41KF1	=V2AR43UQ41/K2.5+V2AR43UQ41-KF4	1.11-X5		-BGS/R	4	&EFS=V2AR43UQ41UQ2+V2AR43UQ41UQ2/1.4	

=V2AR43UQ41UQ2.2+.AR43UQ41UQ2.2/1

=V2AR43UQ41UQ3.1+.AR43UQ41UQ3.1/1

			Date	1/24/2023	Volvo Trucks North America	Valiant TMS	Cable diagram =V2AR43UQ41UQ2.3+V2AR43UQ41UQ2.3-W1	Drawing name: =2V01&EFS-EL_KF1	= V2AR43UQ41UQ2.3
			Ed.	MKLEPADLO					+ V2AR43UQ41UQ2.3
			Appr		P6700 Framing - Cell 2V01, KF1			Document type: EMA	Project nr: 22-16152
Modification	Date	Name	Original		Replacement of / Replaced by	Scale 1:1			Page 1 / 1630

Cable diagram

F09_002_VLU

Cable name -W1			cable type TPE					
remark			no. of conductors 4			cross-section 18		cable length 1
function text	Page / column	Target designation from	Connection point	conductor	Target designation to	Connection point	Page / column	function text
	&EFS=V2AR43UQ41KF1	=**V2AR43UQ41/KF1**.1+V2AR43UQ41-KF1	1		1.11-X6	1	-BGS/R	&EFS=V2AR43UQ41UQ3+V2AR43UQ41UQ3/1.0
	&EFS=V2AR43UQ41KF1	=**V2AR43UQ41/KF1**.2+V2AR43UQ41-KF1	2		1.11-X6	4	-BGS/R	&EFS=V2AR43UQ41UQ3+V2AR43UQ41UQ3/1.1
	&EFS=V2AR43UQ41KF1	=**V2AR43UQ41/KF1**.3+V2AR43UQ41-KF1	3		1.11-X6	3	-BGS/R	&EFS=V2AR43UQ41UQ3+V2AR43UQ41UQ3/1.0

=V2AR43UQ41UQ2.3+.AR43UQ41UQ2.3/1

=V2AR43UQ41UQ4.1+.AR43UQ41UQ4.1/1

			Date	1/24/2023	Volvo Trucks North America	Valiant TMS	Cable diagram =V2AR43UQ41UQ3.1+V2AR43UQ41UQ3.1-W1	Drawing name: =2V01&EFS-EL_KF1	= V2AR43UQ41UQ3.1
			Ed.	MKLEPADLO					+ V2AR43UQ41UQ3.1
			Appr		P6700 Framing - Cell 2V01, KF1			Document type: EMA	Project nr: 22-16152
Modification	Date	Name	Original		Replacement of / Replaced by	Scale 1:1			Page 1 / 1630

Cable diagram

F09_002_VLU

Cable name -W1			cable type TPE					
remark			no. of conductors 4			cross-section 18		cable length 1
function text	Page / column	Target designation from	Connection point	conductor	Target designation to	Connection point	Page / column	function text
	&EFS=V2AR43UQ41KF1+V2AR43UQ41KF1	=V2AR43UQ41/2.7+V2AR43UQ41-KF1	1.11-X7		-BGS/R	1	&EFS=V2AR43UQ41UQ4+V2AR43UQ41UQ4/1.0	
	&EFS=V2AR43UQ41KF1+V2AR43UQ41KF1	=V2AR43UQ41/2.7+V2AR43UQ41-KF2	1.11-X7		-BGS/R	2	&EFS=V2AR43UQ41UQ4+V2AR43UQ41UQ4/1.0	
	&EFS=V2AR43UQ41KF1+V2AR43UQ41KF1	=V2AR43UQ41/2.8+V2AR43UQ41-KF3	1.11-X7		-BGS/R	3	&EFS=V2AR43UQ41UQ4+V2AR43UQ41UQ4/1.1	
	&EFS=V2AR43UQ41KF1+V2AR43UQ41KF1	=V2AR43UQ41/2.8+V2AR43UQ41-KF4	1.11-X7		-BGS/R	4	&EFS=V2AR43UQ41UQ4+V2AR43UQ41UQ4/1.1	

=V2AR43UQ41UQ3.1+.AR43UQ41UQ3.1/1

=V2AR43UQ41UQ4.2+.AR43UQ41UQ4.2/1

			Date	1/24/2023	Volvo Trucks North America	Valiant TMS	Cable diagram =V2AR43UQ41UQ4.1+V2AR43UQ41UQ4.1-W1	Drawing name: =2V01&EFS-EL_KF1	= V2AR43UQ41UQ4.1 + V2AR43UQ41UQ4.1
			Ed.	MKLEPADLO	P6700 Framing - Cell 2V01, KF1				
			Appr					Document type: EMA	Project nr: 22-16152
Modification	Date	Name	Original		Replacement of / Replaced by	Scale 1:1			Page 1 / 1630

Cable diagram

F09_002_VLU

Cable name	-W1	cable type	TPE		
remark		no. of conductors	4	cross-section 18	cable length 2

function text	Page / column	Target designation from	Connection point	conductor	Target designation to	Connection point	Page / column	function text
	&EFS=V2AR43UQ41KF1+V2AR43UQ41/2.8	=V2AR43UQ41KF1+V2AR43UQ41-KF1.11-X8	1		-BGS/R	1	&EFS=V2AR43UQ41UQ4+V2AR43UQ41UQ4/1.2	
	&EFS=V2AR43UQ41KF1+V2AR43UQ41/2.9	=V2AR43UQ41KF1+V2AR43UQ41-KF1.11-X8	2		-BGS/R	2	&EFS=V2AR43UQ41UQ4+V2AR43UQ41UQ4/1.2	
	&EFS=V2AR43UQ41KF1+V2AR43UQ41/2.9	=V2AR43UQ41KF1+V2AR43UQ41-KF1.11-X8	3		-BGS/R	3	&EFS=V2AR43UQ41UQ4+V2AR43UQ41UQ4/1.2	
	&EFS=V2AR43UQ41KF1+V2AR43UQ41/2.9	=V2AR43UQ41KF1+V2AR43UQ41-KF1.11-X8	4		-BGS/R	4	&EFS=V2AR43UQ41UQ4+V2AR43UQ41UQ4/1.2	

=V2AR43UQ41UQ4.1+.AR43UQ41UQ4.1/1

=V2AR43UQ41UQ4.3+.AR43UQ41UQ4.3/1

			Date	1/24/2023	Volvo Trucks North America	Valiant TMS	Cable diagram =V2AR43UQ41UQ4.2+V2AR43UQ41UQ4.2-W1	Drawing name: =2V01&EFS-EL_KF1	= V2AR43UQ41UQ4.2 + V2AR43UQ41UQ4.2
			Ed.	MKLEPADLO	P6700 Framing - Cell 2V01, KF1				
			Appr					Document type: EMA	Project nr: 22-16152
Modification	Date	Name	Original		Replacement of / Replaced by	Scale 1:1			Page 1 / 1630

Cable diagram

F09_002_VLU

Cable name -W1			cable type TPE					
remark			no. of conductors 4			cross-section 18		cable length 1
function text	Page / column	Target designation from	Connection point	conductor	Target designation to	Connection point	Page / column	function text
	&EFS=V2AR43UQ41KF1	=**V2AR43UQ41KF1**+V2AR43UQ41-KF1	1.12-X1		-BGS/R	1	&EFS=V2AR43UQ41UQ4	+V2AR43UQ41UQ4/1.4
	&EFS=V2AR43UQ41KF1	=**V2AR43UQ41KF1**+V2AR43UQ41-KF2	1.12-X1		-BGS/R	2	&EFS=V2AR43UQ41UQ4	+V2AR43UQ41UQ4/1.4
	&EFS=V2AR43UQ41KF1	=**V2AR43UQ41KF1**+V2AR43UQ41-KF3	1.12-X1		-BGS/R	3	&EFS=V2AR43UQ41UQ4	+V2AR43UQ41UQ4/1.4
	&EFS=V2AR43UQ41KF1	=**V2AR43UQ41KF1**+V2AR43UQ41-KF4	1.12-X1		-BGS/R	4	&EFS=V2AR43UQ41UQ4	+V2AR43UQ41UQ4/1.4

=V2AR43UQ41UQ4.2+.AR43UQ41UQ4.2/1

=V2AR43UQ42BG0+.AR43UQ42/1

			Date	1/24/2023	Volvo Trucks North America	Valiant TMS	Cable diagram =V2AR43UQ41UQ4.3+V2AR43UQ41UQ4.3-W1	Drawing name: =2V01&EFS-EL_KF1	= V2AR43UQ41UQ4.3
			Ed.	MKLEPADLO					+ V2AR43UQ41UQ4.3
			Appr		P6700 Framing - Cell 2V01, KF1			Document type: EMA	Project nr: 22-16152
Modification	Date	Name	Original		Replacement of / Replaced by	Scale 1:1			Page 1 / 1630

Cable diagram

F09_002_VLU

Cable name -W1			cable type TPE					
remark			no. of conductors 4			cross-section 18		cable length 0.5
function text	Page / column	Target designation from	Connection point	conductor	Target designation to	Connection point	Page / column	function text
	&EFS/1.0	-XG1/2	P1:1		=V2AR43UQ42KF1-KF1.13-X5	1	&EFS=V2AR43UQ42KF1/4.5	
	&EFS/1.1	-XG1/2	P1:3		=V2AR43UQ42KF1-KF1.13-X5	3	&EFS=V2AR43UQ42KF1/4.5	
	&EFS/1.1	-XG1/2	P1:4		=V2AR43UQ42KF1-KF1.13-X5	4	&EFS=V2AR43UQ42KF1/4.5	
	&EFS/1.1	-XG1/2	P1:2		=V2AR43UQ42KF1-KF1.13-X5	2	&EFS=V2AR43UQ42KF1/4.5	

			Date	1/24/2023	Volvo Trucks North America	Valiant TMS	Cable diagram =V2AR43UQ42BG0+V2AR43UQ42-W1	Drawing name: =2V01&EFS-EL_KF1	= V2AR43UQ42BG0
			Ed.	MKLEPADLO					+ V2AR43UQ42
			Appr		P6700 Framing - Cell 2V01, KF1			Document type: EMA	Project nr: 22-16152
Modification	Date	Name	Original		Replacement of / Replaced by	Scale 1:1			Page 1 / 1630

Cable diagram

F09_002_VLU

Cable name -W1.1			cable type TPE					
remark			no. of conductors 4			cross-section 18		cable length 3
function text	Page / column	Target designation from	Connection point	conductor	Target designation to	Connection point	Page / column	function text
	&EFS/1.0	-BG01	1		-XG1/2	J1:1	&EFS/1.0	
	&EFS/1.0	-BG01	4		-XG1/2	J1:4	&EFS/1.1	
	&EFS/1.1	-BG01	3		-XG1/2	J1:3	&EFS/1.1	

			Date	1/24/2023	Volvo Trucks North America	Valiant TMS	Cable diagram =V2AR43UQ42BG0+V2AR43UQ42-W1.1	Drawing name: =2V01&EFS-EL_KF1	= V2AR43UQ42BG0
			Ed.	MKLEPADLO					+ V2AR43UQ42
			Appr		P6700 Framing - Cell 2V01, KF1			Document type: EMA	Project nr: 22-16152
Modification	Date	Name	Original		Replacement of / Replaced by	Scale 1:1			Page 2 / 1630

Cable diagram

F09_002_VLU

Cable name -W1.2			cable type TPE					
remark			no. of conductors 4			cross-section 18		cable length 3
function text	Page / column	Target designation from	Connection point	conductor	Target designation to	Connection point	Page / column	function text
	&EFS/1.1	-BG02	1		-XG1/2	J2:1	&EFS/1.1	
	&EFS/1.1	-BG02	4		-XG1/2	J2:4	&EFS/1.2	
	&EFS/1.2	-BG02	3		-XG1/2	J2:3	&EFS/1.2	

			Date	1/24/2023	Volvo Trucks North America	Valiant TMS	Cable diagram =V2AR43UQ42BG0+V2AR43UQ42-W1.2	Drawing name: =2V01&EFS-EL_KF1	= V2AR43UQ42BG0
			Ed.	MKLEPADLO					+ V2AR43UQ42
			Appr		P6700 Framing - Cell 2V01, KF1			Document type: EMA	Project nr: 22-16152
Modification	Date	Name	Original		Replacement of / Replaced by	Scale 1:1			Page 3 / 1630

Cable diagram

F09_002_VLU

Cable name -W2			cable type TPE					
remark			no. of conductors 4			cross-section 18		cable length 4
function text	Page / column	Target designation from	Connection point	conductor	Target designation to	Connection point	Page / column	function text
	&EFS/1.4	-BG03	1		=V2AR43UQ42KF1-KF1.13-X6	1	&EFS=V2AR43UQ42KF1/4.6	
	&EFS/1.4	-BG03	4		=V2AR43UQ42KF1-KF1.13-X6	4	&EFS=V2AR43UQ42KF1/4.7	
	&EFS/1.4	-BG03	3		=V2AR43UQ42KF1-KF1.13-X6	3	&EFS=V2AR43UQ42KF1/4.6	

			Date	1/24/2023	Volvo Trucks North America	Valiant TMS	Cable diagram =V2AR43UQ42BG0+V2AR43UQ42-W2	Drawing name: =2V01&EFS-EL_KF1	= V2AR43UQ42BG0
			Ed.	MKLEPADLO					+ V2AR43UQ42
			Appr		P6700 Framing - Cell 2V01, KF1	Scale 1:1		Document type: EMA / Project nr: 22-16152	Page 4 / 1630
Modification	Date	Name	Original		Replacement of / Replaced by				

Cable diagram

F09_002_VLU

Cable name -W1			cable type TPU					
remark			no. of conductors 5			cross-section 16		cable length 2
function text	Page / column	Target designation from	Connection point	conductor	Target designation to	Connection point	Page / column	function text
	&EFS/2.2	-KF1-X20	5		-R3.CP/CS	C4	&EFS/1.3	
	&EFS/2.1	-KF1-X20	1		-R3.CP/CS	C5	&EFS/1.3	
	&EFS/2.1	-KF1-X20	3		-R3.CP/CS	PE	&EFS/1.3	
	&EFS/2.2	-KF1-X20	4		-R3.CP/CS	C6	&EFS/1.3	
	&EFS/2.1	-KF1-X20	2		-R3.CP/CS	C7	&EFS/1.4	

			Date	1/24/2023	Volvo Trucks North America	Valiant TMS	Cable diagram =V2AR43UQ42KF1+V2AR43UQ42-W1	Drawing name: =2V01&EFS-EL_KF1	= V2AR43UQ42KF1
			Ed.	MKLEPADLO					+ V2AR43UQ42
			Appr		P6700 Framing - Cell 2V01, KF1			Document type: EMA	Project nr: 22-16152
Modification	Date	Name	Original		Replacement of / Replaced by	Scale 1:1			Page 1 / 1630

Cable diagram

F09_002_VLU

Cable name -WF1			cable type PROFINET Cable					
remark			no. of conductors 4			cross-section 22		cable length
function text	Page / column	Target designation from	Connection point	conductor	Target designation to	Connection point	Page / column	function text
	&EFS/2.3	-KF1-TP1			-R3.CP/CS	R3.PROFINET	&EFS/1.5	

			Date	1/24/2023	Volvo Trucks North America	Valiant TMS	Cable diagram =V2AR43UQ42KF1+V2AR43UQ42-WF1	Drawing name: =2V01&EFS-EL_KF1	= V2AR43UQ42KF1
			Ed.	MKLEPADLO					+ V2AR43UQ42
			Appr		P6700 Framing - Cell 2V01, KF1	Scale 1:1		Document type: EMA	Project nr: 22-16152
Modification	Date	Name	Original		Replacement of	Replaced by			Page 2 / 1630

Cable diagram

F09_002_VLU

Cable name -W1			cable type TPE					
remark			no. of conductors 4			cross-section 18		cable length 3
function text	Page / column	Target designation from	Connection point	conductor	Target designation to	Connection point	Page / column	function text
	&EFS=V2AR43UQ42KF1	=**V2AR43UQ42KF1**+V2AR43UQ42-KF1	1.11-X1		-BGS/R	1	&EFS=V2AR43UQ42UQ1	+V2AR43UQ42UQ1/1.0
	&EFS=V2AR43UQ42KF1	=**V2AR43UQ42KF1**+V2AR43UQ42-KF2	1.11-X1		-BGS/R	2	&EFS=V2AR43UQ42UQ1	+V2AR43UQ42UQ1/1.0
	&EFS=V2AR43UQ42KF1	=**V2AR43UQ42KF1**+V2AR43UQ42-KF3	1.11-X1		-BGS/R	3	&EFS=V2AR43UQ42UQ1	+V2AR43UQ42UQ1/1.1
	&EFS=V2AR43UQ42KF1	=**V2AR43UQ42KF1**+V2AR43UQ42-KF4	1.11-X1		-BGS/R	4	&EFS=V2AR43UQ42UQ1	+V2AR43UQ42UQ1/1.1

=V2AR43UQ42KF1+V2AR43UQ42/2

=V2AR43UQ42UQ2.1+.AR43UQ42UQ2.1/1

			Date	1/24/2023	Volvo Trucks North America	Valiant TMS	Cable diagram =V2AR43UQ42UQ1.1+V2AR43UQ42UQ1.1-W1	Drawing name: =2V01&EFS-EL_KF1	= V2AR43UQ42UQ1.1
			Ed.	MKLEPADLO					+ V2AR43UQ42UQ1.1
			Appr		P6700 Framing - Cell 2V01, KF1			Document type: EMA	Project nr: 22-16152
Modification	Date	Name	Original		Replacement of / Replaced by	Scale 1:1			Page 1 / 1630

Cable diagram

F09_002_VLU

Cable name -W1			cable type TPE					
remark			no. of conductors 4			cross-section 18		cable length 3
function text	Page / column	Target designation from	Connection point	conductor	Target designation to	Connection point	Page / column	function text
	&EFS=V2AR43UQ42KF1	=**V2AR43UQ42KF1**+V2AR43UQ42-KF1	1.11-X2		-BGS/R	1	&EFS=V2AR43UQ42UQ2+V2AR43UQ42UQ2/1.0	
	&EFS=V2AR43UQ42KF1	=**V2AR43UQ42KF1**+V2AR43UQ42-KF1	2.11-X2		-BGS/R	2	&EFS=V2AR43UQ42UQ2+V2AR43UQ42UQ2/1.0	
	&EFS=V2AR43UQ42KF1	=**V2AR43UQ42KF1**+V2AR43UQ42-KF1	3.11-X2		-BGS/R	3	&EFS=V2AR43UQ42UQ2+V2AR43UQ42UQ2/1.1	
	&EFS=V2AR43UQ42KF1	=**V2AR43UQ42KF1**+V2AR43UQ42-KF1	4.11-X2		-BGS/R	4	&EFS=V2AR43UQ42UQ2+V2AR43UQ42UQ2/1.1	

=V2AR43UQ42UQ1.1+.AR43UQ42UQ1.1/1

=V2AR43UQ42UQ2.2+.AR43UQ42UQ2.2/1

			Date	1/24/2023	Volvo Trucks North America	Valiant TMS	Cable diagram =V2AR43UQ42UQ2.1+V2AR43UQ42UQ2.1-W1	Drawing name: =2V01&EFS-EL_KF1	= V2AR43UQ42UQ2.1
			Ed.	MKLEPADLO					+ V2AR43UQ42UQ2.1
			Appr		P6700 Framing - Cell 2V01, KF1	Scale 1:1		Document type: EMA	Project nr: 22-16152
Modification	Date	Name	Original		Replacement of / Replaced by				Page 1 / 1630

Cable diagram

F09_002_VLU

Cable name -W1			cable type TPE					
remark			no. of conductors 4			cross-section 18		cable length 3
function text	Page / column	Target designation from	Connection point	conductor	Target designation to	Connection point	Page / column	function text
	&EFS=V2AR43UQ42KF1	=**V2AR43UQ42KF1**/K2.3+V2AR43UQ42-KF1	1.11-X3		-BGS/R	1	&EFS=V2AR43UQ42UQ2+V2AR43UQ42UQ2/1.2	
	&EFS=V2AR43UQ42KF1	=**V2AR43UQ42KF1**/K2.3+V2AR43UQ42-KF1	2.11-X3		-BGS/R	2	&EFS=V2AR43UQ42UQ2+V2AR43UQ42UQ2/1.2	
	&EFS=V2AR43UQ42KF1	=**V2AR43UQ42KF1**/K2.3+V2AR43UQ42-KF1	3.11-X3		-BGS/R	3	&EFS=V2AR43UQ42UQ2+V2AR43UQ42UQ2/1.2	
	&EFS=V2AR43UQ42KF1	=**V2AR43UQ42KF1**/K2.3+V2AR43UQ42-KF1	4.11-X3		-BGS/R	4	&EFS=V2AR43UQ42UQ2+V2AR43UQ42UQ2/1.2	

=V2AR43UQ42UQ2.1+.AR43UQ42UQ2.1/1

=V2AR43UQ42UQ3.1+.AR43UQ42UQ3.1/1

			Date	1/24/2023	Volvo Trucks North America	Valiant TMS	Cable diagram =V2AR43UQ42UQ2.2+V2AR43UQ42UQ2.2-W1	Drawing name: =2V01&EFS-EL_KF1	= V2AR43UQ42UQ2.2	
			Ed.	MKLEPADLO					+ V2AR43UQ42UQ2.2	
			Appr		P6700 Framing - Cell 2V01, KF1			Document type: EMA	Project nr: 22-16152	Page 1
Modification	Date	Name	Original		Replacement of / Replaced by	Scale 1:1				1630

Cable diagram

F09_002_VLU

Cable name -W1			cable type TPE					
remark			no. of conductors 4			cross-section 18		cable length 1
function text	Page / column	Target designation from	Connection point	conductor	Target designation to	Connection point	Page / column	function text
	&EFS=V2AR43UQ42KF1	=V2AR43UQ42KF1+V2AR43UQ42-KF1	1.11-X4		-BGS/R	1	&EFS=V2AR43UQ42UQ3+V2AR43UQ42UQ3/1.0	
	&EFS=V2AR43UQ42KF1	=V2AR43UQ42KF1+V2AR43UQ42-KF1	2.11-X4		-BGS/R	4	&EFS=V2AR43UQ42UQ3+V2AR43UQ42UQ3/1.1	
	&EFS=V2AR43UQ42KF1	=V2AR43UQ42KF1+V2AR43UQ42-KF1	3.11-X4		-BGS/R	3	&EFS=V2AR43UQ42UQ3+V2AR43UQ42UQ3/1.0	

=V2AR43UQ42UQ2.2+.AR43UQ42UQ2.2/1

=V2AR43UQ42UQ4.1+.AR43UQ42UQ4.1/1

			Date	1/24/2023	Volvo Trucks North America	Valiant TMS	Cable diagram =V2AR43UQ42UQ3.1+V2AR43UQ42UQ3.1-W1	Drawing name: =2V01&EFS-EL_KF1	= V2AR43UQ42UQ3.1
			Ed.	MKLEPADLO					+ V2AR43UQ42UQ3.1
			Appr		P6700 Framing - Cell 2V01, KF1			Document type: EMA	Project nr: 22-16152
Modification	Date	Name	Original		Replacement of	Replaced by	Scale 1:1		Page 1 / 1630

Cable diagram

F09_002_VLU

Cable name -W1			cable type TPE					
remark			no. of conductors 4			cross-section 18		cable length 1
function text	Page / column	Target designation from	Connection point	conductor	Target designation to	Connection point	Page / column	function text
	&EFS=V2AR43UQ42KF1+V2AR43UQ42KF1	=V2AR43UQ42/K1.5+V2AR43UQ42-KF1	1.11-X5		-BGS/R	1	&EFS=V2AR43UQ42UQ4+V2AR43UQ42UQ4/1.0	
	&EFS=V2AR43UQ42KF1+V2AR43UQ42KF1	=V2AR43UQ42/K1.5+V2AR43UQ42-KF2	1.11-X5		-BGS/R	2	&EFS=V2AR43UQ42UQ4+V2AR43UQ42UQ4/1.0	
	&EFS=V2AR43UQ42KF1+V2AR43UQ42KF1	=V2AR43UQ42/K1.5+V2AR43UQ42-KF3	1.11-X5		-BGS/R	3	&EFS=V2AR43UQ42UQ4+V2AR43UQ42UQ4/1.1	
	&EFS=V2AR43UQ42KF1+V2AR43UQ42KF1	=V2AR43UQ42/K1.5+V2AR43UQ42-KF4	1.11-X5		-BGS/R	4	&EFS=V2AR43UQ42UQ4+V2AR43UQ42UQ4/1.1	

=V2AR43UQ42UQ3.1+.AR43UQ42UQ3.1/1

=V2AR43UQ42UQ4.2+.AR43UQ42UQ4.2/1

			Date	1/24/2023	Volvo Trucks North America	Valiant TMS	Cable diagram =V2AR43UQ42UQ4.1+V2AR43UQ42UQ4.1-W1	Drawing name: =2V01&EFS-EL_KF1	= V2AR43UQ42UQ4.1 + V2AR43UQ42UQ4.1
			Ed.	MKLEPADLO	P6700 Framing - Cell 2V01, KF1				
			Appr					Document type: EMA	Project nr: 22-16152
Modification	Date	Name	Original		Replacement of / Replaced by	Scale 1:1			Page 1 / 1630

Cable diagram

F09_002_VLU

Cable name -W1			cable type TPE					
remark			no. of conductors 4			cross-section 18		cable length 1
function text	Page / column	Target designation from	Connection point	conductor	Target designation to	Connection point	Page / column	function text
	&EFS=V2AR43UQ42KF1	=**V2AR43UQ42KF1**+V2AR43UQ42-KF1	1		1.11-X6	1	-BGS/R	&EFS=V2AR43UQ42UQ4+V2AR43UQ42UQ4/1.2
	&EFS=V2AR43UQ42KF1	=**V2AR43UQ42KF1**+V2AR43UQ42-KF1	2		1.11-X6	2	-BGS/R	&EFS=V2AR43UQ42UQ4+V2AR43UQ42UQ4/1.2
	&EFS=V2AR43UQ42KF1	=**V2AR43UQ42KF1**+V2AR43UQ42-KF1	3		1.11-X6	3	-BGS/R	&EFS=V2AR43UQ42UQ4+V2AR43UQ42UQ4/1.2
	&EFS=V2AR43UQ42KF1	=**V2AR43UQ42KF1**+V2AR43UQ42-KF1	4		1.11-X6	4	-BGS/R	&EFS=V2AR43UQ42UQ4+V2AR43UQ42UQ4/1.2

=V2AR43UQ42UQ4.1+.AR43UQ42UQ4.1/1

=V2AR43UQ42UQ5.1+.AR43UQ42UQ5.1/1

			Date	1/24/2023	Volvo Trucks North America	Valiant TMS	Cable diagram =V2AR43UQ42UQ4.2+V2AR43UQ42UQ4.2-W1	Drawing name: =2V01&EFS-EL_KF1	= V2AR43UQ42UQ4.2
			Ed.	MKLEPADLO					+ V2AR43UQ42UQ4.2
			Appr		P6700 Framing - Cell 2V01, KF1			Document type: EMA	Project nr: 22-16152
Modification	Date	Name	Original		Replacement of / Replaced by	Scale 1:1			Page 1 / 1630

Cable diagram

F09_002_VLU

Cable name -W1			cable type TPE					
remark			no. of conductors 4			cross-section 18		cable length 2
function text	Page / column	Target designation from	Connection point	conductor	Target designation to	Connection point	Page / column	function text
	&EFS=V2AR43UQ42KF1	=**V2AR43UQ42KF1**+V2AR43UQ42-KF1	1		1.11-X7	1	-BGS/R	&EFS=V2AR43UQ42UQ5+V2AR43UQ42UQ5/1.0
	&EFS=V2AR43UQ42KF1	=**V2AR43UQ42KF1**+V2AR43UQ42-KF1	2		1.11-X7	2	-BGS/R	&EFS=V2AR43UQ42UQ5+V2AR43UQ42UQ5/1.0
	&EFS=V2AR43UQ42KF1	=**V2AR43UQ42KF1**+V2AR43UQ42-KF1	3		1.11-X7	3	-BGS/R	&EFS=V2AR43UQ42UQ5+V2AR43UQ42UQ5/1.1
	&EFS=V2AR43UQ42KF1	=**V2AR43UQ42KF1**+V2AR43UQ42-KF1	4		1.11-X7	4	-BGS/R	&EFS=V2AR43UQ42UQ5+V2AR43UQ42UQ5/1.1

=V2AR43UQ42UQ4.2+.AR43UQ42UQ4.2/1

=V2AR43UQ42UQ5.2+.AR43UQ42UQ5.2/1

			Date	1/24/2023	Volvo Trucks North America	Valiant TMS	Cable diagram =V2AR43UQ42UQ5.1+V2AR43UQ42UQ5.1-W1	Drawing name: =2V01&EFS-EL_KF1	= V2AR43UQ42UQ5.1
			Ed.	MKLEPADLO					+ V2AR43UQ42UQ5.1
			Appr		P6700 Framing - Cell 2V01, KF1			Document type: EMA	Project nr: 22-16152
Modification	Date	Name	Original		Replacement of	Replaced by	Scale 1:1		Page 1 / 1630

Cable diagram

F09_002_VLU

Cable name -W1			cable type TPE					
remark			no. of conductors 4			cross-section 18		cable length 2
function text	Page / column	Target designation from	Connection point	conductor	Target designation to	Connection point	Page / column	function text
	&EFS=V2AR43UQ42KF1	=**V2AR43UQ42KF1**-X2:8+V2AR43UQ42-KF1	1.11-X8		-BGS/R	1	&EFS=V2AR43UQ42UQ5+V2AR43UQ42UQ5/1.2	
	&EFS=V2AR43UQ42KF1	=**V2AR43UQ42KF1**-X2:9+V2AR43UQ42-KF1	2.11-X8		-BGS/R	2	&EFS=V2AR43UQ42UQ5+V2AR43UQ42UQ5/1.2	
	&EFS=V2AR43UQ42KF1	=**V2AR43UQ42KF1**-X2:9+V2AR43UQ42-KF1	3.11-X8		-BGS/R	3	&EFS=V2AR43UQ42UQ5+V2AR43UQ42UQ5/1.2	
	&EFS=V2AR43UQ42KF1	=**V2AR43UQ42KF1**-X2:9+V2AR43UQ42-KF1	4.11-X8		-BGS/R	4	&EFS=V2AR43UQ42UQ5+V2AR43UQ42UQ5/1.2	

=V2AR43UQ42UQ5.1+.AR43UQ42UQ5.1/1

=V2AR43UQ42UQ6.1+.AR43UQ42UQ6.1/1

			Date	1/24/2023	Volvo Trucks North America	Valiant TMS	Cable diagram =V2AR43UQ42UQ5.2+V2AR43UQ42UQ5.2-W1	Drawing name: =2V01&EFS-EL_KF1	= V2AR43UQ42UQ5.2
			Ed.	MKLEPADLO					+ V2AR43UQ42UQ5.2
			Appr		P6700 Framing - Cell 2V01, KF1	Scale 1:1		Document type: EMA	Project nr: 22-16152
Modification	Date	Name	Original		Replacement of	Replaced by			Page 1 / 1630

Cable diagram

F09_002_VLU

Cable name -W1			cable type TPE					
remark			no. of conductors 4			cross-section 18		cable length 2
function text	Page / column	Target designation from	Connection point	conductor	Target designation to	Connection point	Page / column	function text
	&EFS=V2AR43UQ42KF1	=**V2AR43UQ42KF1**+V2AR43UQ42-KF1	1.12-X1		-BGS/R	1	&EFS=V2AR43UQ42UQ6+V2AR43UQ42UQ6/1.0	
	&EFS=V2AR43UQ42KF1	=**V2AR43UQ42KF1**+V2AR43UQ42-KF1	2.12-X1		-BGS/R	2	&EFS=V2AR43UQ42UQ6+V2AR43UQ42UQ6/1.0	
	&EFS=V2AR43UQ42KF1	=**V2AR43UQ42KF1**+V2AR43UQ42-KF1	3.12-X1		-BGS/R	3	&EFS=V2AR43UQ42UQ6+V2AR43UQ42UQ6/1.1	
	&EFS=V2AR43UQ42KF1	=**V2AR43UQ42KF1**+V2AR43UQ42-KF1	4.12-X1		-BGS/R	4	&EFS=V2AR43UQ42UQ6+V2AR43UQ42UQ6/1.1	

=V2AR43UQ42UQ5.2+.AR43UQ42UQ5.2/1

=V2AR43UQ42UQ6.2+.AR43UQ42UQ6.2/1

			Date	1/24/2023	Volvo Trucks North America	Valiant TMS	Cable diagram =V2AR43UQ42UQ6.1+V2AR43UQ42UQ6.1-W1	Drawing name: =2V01&EFS-EL_KF1	= V2AR43UQ42UQ6.1
			Ed.	MKLEPADLO					+ V2AR43UQ42UQ6.1
			Appr		P6700 Framing - Cell 2V01, KF1	Scale 1:1		Document type: EMA	Project nr: 22-16152
Modification	Date	Name	Original		Replacement of	Replaced by			Page 1 / 1630

Cable diagram

F09_002_VLU

Cable name -W1			cable type TPE					
remark			no. of conductors 4			cross-section 18		cable length 2
function text	Page / column	Target designation from	Connection point	conductor	Target designation to	Connection point	Page / column	function text
	&EFS=V2AR43UQ42KF1	=**V2AR43UQ42KF1**+V2AR43UQ42-KF1	1.12-X2		-BGS/R	1	&EFS=V2AR43UQ42UQ6+V2AR43UQ42UQ6/1.2	
	&EFS=V2AR43UQ42KF1	=**V2AR43UQ42KF1**+V2AR43UQ42-KF1	2.12-X2		-BGS/R	2	&EFS=V2AR43UQ42UQ6+V2AR43UQ42UQ6/1.2	
	&EFS=V2AR43UQ42KF1	=**V2AR43UQ42KF1**+V2AR43UQ42-KF1	3.12-X2		-BGS/R	3	&EFS=V2AR43UQ42UQ6+V2AR43UQ42UQ6/1.2	
	&EFS=V2AR43UQ42KF1	=**V2AR43UQ42KF1**+V2AR43UQ42-KF1	4.12-X2		-BGS/R	4	&EFS=V2AR43UQ42UQ6+V2AR43UQ42UQ6/1.2	

=V2AR43UQ42UQ6.1+.AR43UQ42UQ6.1/1

=V2AR43UQ42UQ6.3+.AR43UQ42UQ6.3/1

			Date	1/24/2023	Volvo Trucks North America	Valiant TMS	Cable diagram =V2AR43UQ42UQ6.2+V2AR43UQ42UQ6.2-W1	Drawing name: =2V01&EFS-EL_KF1	= V2AR43UQ42UQ6.2
			Ed.	MKLEPADLO					+ V2AR43UQ42UQ6.2
			Appr		P6700 Framing - Cell 2V01, KF1	Scale 1:1		Document type: EMA	Project nr: 22-16152
Modification	Date	Name	Original		Replacement of / Replaced by				Page 1 / 1630

Cable diagram

F09_002_VLU

Cable name -W1			cable type TPE					
remark			no. of conductors 4			cross-section 18		cable length 2
function text	Page / column	Target designation from	Connection point	conductor	Target designation to	Connection point	Page / column	function text
	&EFS=V2AR43UQ42KF1	=**V2AR43UQ42KF1**+V2AR43UQ42-KF1	1.12-X3		-BGS/R	1	&EFS=V2AR43UQ42UQ6+V2AR43UQ42UQ6/1.4	
	&EFS=V2AR43UQ42KF1	=**V2AR43UQ42KF1**+V2AR43UQ42-KF1	2.12-X3		-BGS/R	2	&EFS=V2AR43UQ42UQ6+V2AR43UQ42UQ6/1.4	
	&EFS=V2AR43UQ42KF1	=**V2AR43UQ42KF1**+V2AR43UQ42-KF1	3.12-X3		-BGS/R	3	&EFS=V2AR43UQ42UQ6+V2AR43UQ42UQ6/1.4	
	&EFS=V2AR43UQ42KF1	=**V2AR43UQ42KF1**+V2AR43UQ42-KF1	4.12-X3		-BGS/R	4	&EFS=V2AR43UQ42UQ6+V2AR43UQ42UQ6/1.4	

=V2AR43UQ42UQ6.2+.AR43UQ42UQ6.2/1

=V2AR43UQ42UQ7.1+.AR43UQ42UQ7.1/1

			Date	1/24/2023	Volvo Trucks North America	Valiant TMS	Cable diagram =V2AR43UQ42UQ6.3+V2AR43UQ42UQ6.3-W1	Drawing name: =2V01&EFS-EL_KF1	= V2AR43UQ42UQ6.3
			Ed.	MKLEPADLO					+ V2AR43UQ42UQ6.3
			Appr		P6700 Framing - Cell 2V01, KF1	Scale 1:1		Document type: EMA	Project nr: 22-16152
Modification	Date	Name	Original		Replacement of	Replaced by			Page 1 / 1630

Cable diagram

F09_002_VLU

Cable name -W1			cable type TPE					
remark			no. of conductors 4			cross-section 18		cable length 3
function text	Page / column	Target designation from	Connection point	conductor	Target designation to	Connection point	Page / column	function text
	&EFS=V2AR43UQ42KF1	=**V2AR43UQ42KF1**+V2AR43UQ42-KF1	1.12-X4		-BGS/R	1	&EFS=V2AR43UQ42UQ7+V2AR43UQ42UQ7/1.0	
	&EFS=V2AR43UQ42KF1	=**V2AR43UQ42KF1**+V2AR43UQ42-KF1	2.12-X4		-BGS/R	2	&EFS=V2AR43UQ42UQ7+V2AR43UQ42UQ7/1.0	
	&EFS=V2AR43UQ42KF1	=**V2AR43UQ42KF1**+V2AR43UQ42-KF1	3.12-X4		-BGS/R	3	&EFS=V2AR43UQ42UQ7+V2AR43UQ42UQ7/1.1	
	&EFS=V2AR43UQ42KF1	=**V2AR43UQ42KF1**+V2AR43UQ42-KF1	4.12-X4		-BGS/R	4	&EFS=V2AR43UQ42UQ7+V2AR43UQ42UQ7/1.1	

=V2AR43UQ42UQ6.3+.AR43UQ42UQ6.3/1

=V2AR43UQ42UQ7.2+.AR43UQ42UQ7.2/1

			Date	1/24/2023	Volvo Trucks North America		Valiant TMS	Cable diagram =V2AR43UQ42UQ7.1+V2AR43UQ42UQ7.1-W1	Drawing name: =2V01&EFS-EL_KF1	= V2AR43UQ42UQ7.1
			Ed.	MKLEPADLO						+ V2AR43UQ42UQ7.1
			Appr		P6700 Framing - Cell 2V01, KF1				Document type: EMA	Project nr: 22-16152
Modification	Date	Name	Original		Replacement of	Replaced by	Scale 1:1			Page 1 / 1630

Cable diagram

F09_002_VLU

Cable name -W1			cable type TPE					
remark			no. of conductors 4			cross-section 18		cable length 3
function text	Page / column	Target designation from	Connection point	conductor	Target designation to	Connection point	Page / column	function text
	&EFS=V2AR43UQ42KF1	=**V2AR43UQ42KF1**+V2AR43UQ42-KF1	1.12-X5		-BGS/R	1	&EFS=V2AR43UQ42UQ7+V2AR43UQ42UQ7/1.2	
	&EFS=V2AR43UQ42KF1	=**V2AR43UQ42KF1**+V2AR43UQ42-KF1	2.12-X5		-BGS/R	2	&EFS=V2AR43UQ42UQ7+V2AR43UQ42UQ7/1.2	
	&EFS=V2AR43UQ42KF1	=**V2AR43UQ42KF1**+V2AR43UQ42-KF1	3.12-X5		-BGS/R	3	&EFS=V2AR43UQ42UQ7+V2AR43UQ42UQ7/1.2	
	&EFS=V2AR43UQ42KF1	=**V2AR43UQ42KF1**+V2AR43UQ42-KF1	4.12-X5		-BGS/R	4	&EFS=V2AR43UQ42UQ7+V2AR43UQ42UQ7/1.2	

=V2AR43UQ42UQ7.1+.AR43UQ42UQ7.1/1

=V2AR43UQ42UQ8.1+.AR43UQ42UQ8.1/1

			Date	1/24/2023	Volvo Trucks North America	Valiant TMS	Cable diagram =V2AR43UQ42UQ7.2+V2AR43UQ42UQ7.2-W1	Drawing name: =2V01&EFS-EL_KF1	= V2AR43UQ42UQ7.2
			Ed.	MKLEPADLO					+ V2AR43UQ42UQ7.2
			Appr		P6700 Framing - Cell 2V01, KF1	Scale 1:1		Document type: EMA	Project nr: 22-16152
Modification	Date	Name	Original		Replacement of	Replaced by			Page 1 / 1630

Cable diagram

F09_002_VLU

Cable name -W1			cable type TPE					
remark			no. of conductors 4			cross-section 18		cable length 1
function text	Page / column	Target designation from	Connection point	conductor	Target designation to	Connection point	Page / column	function text
	&EFS=V2AR43UQ42KF1	=**V2AR43UQ42KF1**+V2AR43UQ42-KF1	1.12-X6		-BGS/R	1	&EFS=V2AR43UQ42UQ8+V2AR43UQ42UQ8/1.0	
	&EFS=V2AR43UQ42KF1	=**V2AR43UQ42KF1**+V2AR43UQ42-KF1	2.12-X6		-BGS/R	2	&EFS=V2AR43UQ42UQ8+V2AR43UQ42UQ8/1.0	
	&EFS=V2AR43UQ42KF1	=**V2AR43UQ42KF1**+V2AR43UQ42-KF1	3.12-X6		-BGS/R	3	&EFS=V2AR43UQ42UQ8+V2AR43UQ42UQ8/1.1	
	&EFS=V2AR43UQ42KF1	=**V2AR43UQ42KF1**+V2AR43UQ42-KF1	4.12-X6		-BGS/R	4	&EFS=V2AR43UQ42UQ8+V2AR43UQ42UQ8/1.1	

=V2AR43UQ42UQ7.2+.AR43UQ42UQ7.2/1

=V2AR43UQ42UQ8.2+.AR43UQ42UQ8.2/1

			Date	1/24/2023	Volvo Trucks North America	Valiant TMS	Cable diagram =V2AR43UQ42UQ8.1+V2AR43UQ42UQ8.1-W1	Drawing name: =2V01&EFS-EL_KF1	= V2AR43UQ42UQ8.1
			Ed.	MKLEPADLO					+ V2AR43UQ42UQ8.1
			Appr		P6700 Framing - Cell 2V01, KF1			Document type: EMA	Project nr: 22-16152
Modification	Date	Name	Original		Replacement of	Replaced by	Scale 1:1		Page 1 / 1630

Cable diagram

F09_002_VLU

Cable name -W1			cable type TPE					
remark			no. of conductors 4			cross-section 18		cable length 1
function text	Page / column	Target designation from	Connection point	conductor	Target designation to	Connection point	Page / column	function text
	&EFS=V2AR43UQ42KF1	=**V2AR43UQ42KF1**+V2AR43UQ42-KF1	1.12-X7		-BGS/R	1	&EFS=V2AR43UQ42UQ8+V2AR43UQ42UQ8/1.2	
	&EFS=V2AR43UQ42KF1	=**V2AR43UQ42KF1**+V2AR43UQ42-KF1	2.12-X7		-BGS/R	2	&EFS=V2AR43UQ42UQ8+V2AR43UQ42UQ8/1.2	
	&EFS=V2AR43UQ42KF1	=**V2AR43UQ42KF1**+V2AR43UQ42-KF1	3.12-X7		-BGS/R	3	&EFS=V2AR43UQ42UQ8+V2AR43UQ42UQ8/1.2	
	&EFS=V2AR43UQ42KF1	=**V2AR43UQ42KF1**+V2AR43UQ42-KF1	4.12-X7		-BGS/R	4	&EFS=V2AR43UQ42UQ8+V2AR43UQ42UQ8/1.2	

=V2AR43UQ42UQ8.1+.AR43UQ42UQ8.1/1

=V2AR43UQ42UQ9.1+.AR43UQ42UQ9.1/1

			Date	1/24/2023	Volvo Trucks North America	Valiant TMS	Cable diagram =V2AR43UQ42UQ8.2+V2AR43UQ42UQ8.2-W1	Drawing name: =2V01&EFS-EL_KF1	= V2AR43UQ42UQ8.2
			Ed.	MKLEPADLO					+ V2AR43UQ42UQ8.2
			Appr		P6700 Framing - Cell 2V01, KF1	Scale 1:1		Document type: EMA	Project nr: 22-16152
Modification	Date	Name	Original		Replacement of	Replaced by			Page 1 / 1630

Cable diagram

F09_002_VLU

Cable name -W1			cable type TPE					
remark			no. of conductors 4			cross-section 18		cable length 4
function text	Page / column	Target designation from	Connection point	conductor	Target designation to	Connection point	Page / column	function text
	&EFS=V2AR43UQ42KF1	=**V2AR43UQ42KF1**+V2AR43UQ42-KF1	1.12-X8		-BGS/R	1	&EFS=V2AR43UQ42UQ9	+V2AR43UQ42UQ9/1.0
	&EFS=V2AR43UQ42KF1	=**V2AR43UQ42KF1**+V2AR43UQ42-KF1	2.12-X8		-BGS/R	2	&EFS=V2AR43UQ42UQ9	+V2AR43UQ42UQ9/1.0
	&EFS=V2AR43UQ42KF1	=**V2AR43UQ42KF1**+V2AR43UQ42-KF1	3.12-X8		-BGS/R	3	&EFS=V2AR43UQ42UQ9	+V2AR43UQ42UQ9/1.1
	&EFS=V2AR43UQ42KF1	=**V2AR43UQ42KF1**+V2AR43UQ42-KF1	4.12-X8		-BGS/R	4	&EFS=V2AR43UQ42UQ9	+V2AR43UQ42UQ9/1.1

=V2AR43UQ42UQ8.2+.AR43UQ42UQ8.2/1

=V2AR43UQ42UQ9.2+.AR43UQ42UQ9.2/1

			Date	1/24/2023	Volvo Trucks North America	Valiant TMS	Cable diagram =V2AR43UQ42UQ9.1+V2AR43UQ42UQ9.1-W1	Drawing name: =2V01&EFS-EL_KF1	= V2AR43UQ42UQ9.1
			Ed.	MKLEPADLO					+ V2AR43UQ42UQ9.1
			Appr		P6700 Framing - Cell 2V01, KF1			Document type: EMA	Project nr: 22-16152
Modification	Date	Name	Original		Replacement of / Replaced by	Scale 1:1			Page 1 / 1630

Cable diagram

F09_002_VLU

Cable name -W1			cable type TPE					
remark			no. of conductors 4			cross-section 18		cable length 4
function text	Page / column	Target designation from	Connection point	conductor	Target designation to	Connection point	Page / column	function text
	&EFS=V2AR43UQ42KF1	=**V2AR43UQ42KF1**+V2AR43UQ42-KF1	1.13-X1		-BGS/R	1	&EFS=V2AR43UQ42UQ9+V2AR43UQ42UQ9/1.2	
	&EFS=V2AR43UQ42KF1	=**V2AR43UQ42KF1**+V2AR43UQ42-KF2	1.13-X1		-BGS/R	2	&EFS=V2AR43UQ42UQ9+V2AR43UQ42UQ9/1.2	
	&EFS=V2AR43UQ42KF1	=**V2AR43UQ42KF1**+V2AR43UQ42-KF3	1.13-X1		-BGS/R	3	&EFS=V2AR43UQ42UQ9+V2AR43UQ42UQ9/1.2	
	&EFS=V2AR43UQ42KF1	=**V2AR43UQ42KF1**+V2AR43UQ42-KF4	1.13-X1		-BGS/R	4	&EFS=V2AR43UQ42UQ9+V2AR43UQ42UQ9/1.2	

			Date	1/24/2023	Volvo Trucks North America	Valiant TMS	Cable diagram =V2AR43UQ42UQ9.2+V2AR43UQ42UQ9.2-W1	Drawing name: =2V01&EFS-EL_KF1	= V2AR43UQ42UQ9.2
			Ed.	MKLEPADLO					+ V2AR43UQ42UQ9.2
			Appr		P6700 Framing - Cell 2V01, KF1			Document type: EMA	Project nr: 22-16152
Modification	Date	Name	Original		Replacement of / Replaced by	Scale 1:1			Page 1 / 1630

Cable diagram

F09_002_VLU

Cable name -W1			cable type TPE					
remark			no. of conductors 4			cross-section 18		cable length 0.5
function text	Page / column	Target designation from	Connection point	conductor	Target designation to	Connection point	Page / column	function text
	&EFS/1.0	-XG1/2	P1:1		=V2AR43UQ43KF1-KF1.13-X1	1	&EFS=V2AR43UQ43KF1/4.0	
	&EFS/1.1	-XG1/2	P1:3		=V2AR43UQ43KF1-KF1.13-X1	3	&EFS=V2AR43UQ43KF1/4.1	
	&EFS/1.1	-XG1/2	P1:4		=V2AR43UQ43KF1-KF1.13-X1	4	&EFS=V2AR43UQ43KF1/4.1	
	&EFS/1.1	-XG1/2	P1:2		=V2AR43UQ43KF1-KF1.13-X1	2	&EFS=V2AR43UQ43KF1/4.0	

			Date	1/24/2023	Volvo Trucks North America	Valiant TMS	Cable diagram =V2AR43UQ43BG0+V2AR43UQ43-W1	Drawing name: =2V01&EFS-EL_KF1	= V2AR43UQ43BG0
			Ed.	MKLEPADLO					+ V2AR43UQ43
			Appr		P6700 Framing - Cell 2V01, KF1			Document type: EMA	Project nr: 22-16152
Modification	Date	Name	Original		Replacement of / Replaced by	Scale 1:1			Page 1 / 1630

Cable diagram

F09_002_VLU

Cable name -W1.1			cable type TPE					
remark			no. of conductors 4			cross-section 18		cable length 2
function text	Page / column	Target designation from	Connection point	conductor	Target designation to	Connection point	Page / column	function text
	&EFS/1.0	-BG01	1		-XG1/2	J1:1	&EFS/1.0	
	&EFS/1.0	-BG01	4		-XG1/2	J1:4	&EFS/1.1	
	&EFS/1.1	-BG01	3		-XG1/2	J1:3	&EFS/1.1	

			Date	1/24/2023	Volvo Trucks North America	Valiant TMS	Cable diagram =V2AR43UQ43BG0+V2AR43UQ43-W1.1	Drawing name: =2V01&EFS-EL_KF1	= V2AR43UQ43BG0
			Ed.	MKLEPADLO					+ V2AR43UQ43
			Appr		P6700 Framing - Cell 2V01, KF1			Document type: EMA	Project nr: 22-16152
Modification	Date	Name	Original		Replacement of / Replaced by	Scale 1:1			Page 2 / 1630

Cable diagram

F09_002_VLU

Cable name -W1.2			cable type TPE					
remark			no. of conductors 4			cross-section 18		cable length 2
function text	Page / column	Target designation from	Connection point	conductor	Target designation to	Connection point	Page / column	function text
	&EFS/1.1	-BG02	1		-XG1/2	J2:1	&EFS/1.1	
	&EFS/1.1	-BG02	4		-XG1/2	J2:4	&EFS/1.2	
	&EFS/1.2	-BG02	3		-XG1/2	J2:3	&EFS/1.2	

			Date	1/24/2023	Volvo Trucks North America	Valiant TMS	Cable diagram =V2AR43UQ43BG0+V2AR43UQ43-W1.2	Drawing name: =2V01&EFS-EL_KF1	= V2AR43UQ43BG0
			Ed.	MKLEPADLO					+ V2AR43UQ43
			Appr		P6700 Framing - Cell 2V01, KF1	Scale 1:1		Document type: EMA	Project nr: 22-16152
Modification	Date	Name	Original		Replacement of / Replaced by				Page 3 / 1630

Cable diagram

F09_002_VLU

Cable name -W1			cable type TPU					
remark			no. of conductors 5			cross-section 16		cable length 2
function text	Page / column	Target designation from	Connection point	conductor	Target designation to	Connection point	Page / column	function text
	&EFS/2.2	-KF1-X20	5		-R3.CP/CS	C4	&EFS/1.3	
	&EFS/2.1	-KF1-X20	1		-R3.CP/CS	C5	&EFS/1.3	
	&EFS/2.1	-KF1-X20	3		-R3.CP/CS	PE	&EFS/1.3	
	&EFS/2.2	-KF1-X20	4		-R3.CP/CS	C6	&EFS/1.3	
	&EFS/2.1	-KF1-X20	2		-R3.CP/CS	C7	&EFS/1.4	

			Date	1/24/2023	Volvo Trucks North America	Valiant TMS	Cable diagram =V2AR43UQ43KF1+V2AR43UQ43-W1	Drawing name: =2V01&EFS-EL_KF1	= V2AR43UQ43KF1
			Ed.	MKLEPADLO					+ V2AR43UQ43
			Appr		P6700 Framing - Cell 2V01, KF1			Document type: EMA	Project nr: 22-16152
Modification	Date	Name	Original		Replacement of / Replaced by	Scale 1:1			Page 1 / 1630

Cable diagram

F09_002_VLU

Cable name -WF1			cable type PROFINET Cable					
remark			no. of conductors 4			cross-section 22		cable length
function text	Page / column	Target designation from	Connection point	conductor	Target designation to	Connection point	Page / column	function text
	&EFS/2.3	-KF1-TP1			-R3.CP/CS	R3.PROFINET	&EFS/1.5	

			Date	1/24/2023	Volvo Trucks North America	Valiant TMS	Cable diagram =V2AR43UQ43KF1+V2AR43UQ43-WF1	Drawing name: =2V01&EFS-EL_KF1	= V2AR43UQ43KF1
			Ed.	MKLEPADLO					+ V2AR43UQ43
			Appr		P6700 Framing - Cell 2V01, KF1			Document type: EMA	Project nr: 22-16152
Modification	Date	Name	Original		Replacement of / Replaced by	Scale 1:1			Page 2 / 1630

Cable diagram

F09_002_VLU

Cable name -W1			cable type TPE					
remark			no. of conductors 4			cross-section 18		cable length 2
function text	Page / column	Target designation from	Connection point	conductor	Target designation to	Connection point	Page / column	function text
	&EFS=V2AR43UQ43KF1	=**V2AR43UQ43/K2.0**+V2AR43UQ43-KF1	1.11-X1		-BGS/R	1	&EFS=V2AR43UQ43UQ1+V2AR43UQ43UQ1/1.0	
	&EFS=V2AR43UQ43KF1	=**V2AR43UQ43/K2.0**+V2AR43UQ43-KF2	1.11-X1		-BGS/R	2	&EFS=V2AR43UQ43UQ1+V2AR43UQ43UQ1/1.0	
	&EFS=V2AR43UQ43KF1	=**V2AR43UQ43/K2.1**+V2AR43UQ43-KF3	1.11-X1		-BGS/R	3	&EFS=V2AR43UQ43UQ1+V2AR43UQ43UQ1/1.1	
	&EFS=V2AR43UQ43KF1	=**V2AR43UQ43/K2.1**+V2AR43UQ43-KF4	1.11-X1		-BGS/R	4	&EFS=V2AR43UQ43UQ1+V2AR43UQ43UQ1/1.1	

=V2AR43UQ43KF1+V2AR43UQ43/2

=V2AR43UQ43UQ2.1+.AR43UQ43UQ2.1/1

			Date	1/24/2023	Volvo Trucks North America	Valiant TMS	Cable diagram =V2AR43UQ43UQ1.1+V2AR43UQ43UQ1.1-W1	Drawing name: =2V01&EFS-EL_KF1	= V2AR43UQ43UQ1.1
			Ed.	MKLEPADLO					+ V2AR43UQ43UQ1.1
			Appr		P6700 Framing - Cell 2V01, KF1	Scale 1:1		Document type: EMA	Project nr: 22-16152
Modification	Date	Name	Original		Replacement of	Replaced by			Page 1 / 1630

Cable diagram

F09_002_VLU

Cable name -W1			cable type TPE					
remark			no. of conductors 4			cross-section 18		cable length 1
function text	Page / column	Target designation from	Connection point	conductor	Target designation to	Connection point	Page / column	function text
	&EFS=V2AR43UQ43KF1	=**V2AR43UQ43/K2.1**+V2AR43UQ43-KF1	1.11-X2		-BGS/R	1	&EFS=V2AR43UQ43UQ2+V2AR43UQ43UQ2/1.0	
	&EFS=V2AR43UQ43KF1	=**V2AR43UQ43/K2.2**+V2AR43UQ43-KF1	2.11-X2		-BGS/R	2	&EFS=V2AR43UQ43UQ2+V2AR43UQ43UQ2/1.0	
	&EFS=V2AR43UQ43KF1	=**V2AR43UQ43/K2.3**+V2AR43UQ43-KF1	3.11-X2		-BGS/R	3	&EFS=V2AR43UQ43UQ2+V2AR43UQ43UQ2/1.1	
	&EFS=V2AR43UQ43KF1	=**V2AR43UQ43/K2.4**+V2AR43UQ43-KF1	4.11-X2		-BGS/R	4	&EFS=V2AR43UQ43UQ2+V2AR43UQ43UQ2/1.1	

			Date	1/24/2023	Volvo Trucks North America	Valiant TMS	Cable diagram =V2AR43UQ43UQ2.1+V2AR43UQ43UQ2.1-W1	Drawing name: =2V01&EFS-EL_KF1	= V2AR43UQ43UQ2.1
			Ed.	MKLEPADLO					+ V2AR43UQ43UQ2.1
			Appr		P6700 Framing - Cell 2V01, KF1	Scale 1:1		Document type: EMA	Project nr: 22-16152
Modification	Date	Name	Original		Replacement of / Replaced by				Page 1 / 1630

Cable diagram

F09_002_VLU

Cable name -W1			cable type TPE					
remark			no. of conductors 4			cross-section 18		cable length 1
function text	Page / column	Target designation from	Connection point	conductor	Target designation to	Connection point	Page / column	function text
	&EFS=V2AR43UQ43KF1	=**V2AR43UQ43UQ2.1**+V2AR43UQ43-KF1	1		1.11-X3		-BGS/R	1	&EFS=V2AR43UQ43UQ2+V2AR43UQ43UQ2/1.2
	&EFS=V2AR43UQ43KF1	=**V2AR43UQ43UQ2.1**+V2AR43UQ43-KF1	2		1.11-X3		-BGS/R	2	&EFS=V2AR43UQ43UQ2+V2AR43UQ43UQ2/1.2
	&EFS=V2AR43UQ43KF1	=**V2AR43UQ43UQ2.1**+V2AR43UQ43-KF1	3		1.11-X3		-BGS/R	3	&EFS=V2AR43UQ43UQ2+V2AR43UQ43UQ2/1.2
	&EFS=V2AR43UQ43KF1	=**V2AR43UQ43UQ2.1**+V2AR43UQ43-KF1	4		1.11-X3		-BGS/R	4	&EFS=V2AR43UQ43UQ2+V2AR43UQ43UQ2/1.2

=V2AR43UQ43UQ2.1+.AR43UQ43UQ2.1/1

=V2AR43UQ43UQ2.3+.AR43UQ43UQ2.3/1

			Date	1/24/2023	Volvo Trucks North America	Valiant TMS	Cable diagram =V2AR43UQ43UQ2.2+V2AR43UQ43UQ2.2-W1	Drawing name: =2V01&EFS-EL_KF1	= V2AR43UQ43UQ2.2
			Ed.	MKLEPADLO					+ V2AR43UQ43UQ2.2
			Appr		P6700 Framing - Cell 2V01, KF1	Scale 1:1		Document type: EMA	Project nr: 22-16152
Modification	Date	Name	Original		Replacement of	Replaced by			Page 1 / 1630

Cable diagram

F09_002_VLU

Cable name -W1			cable type TPE					
remark			no. of conductors 4			cross-section 18		cable length 2
function text	Page / column	Target designation from	Connection point	conductor	Target designation to	Connection point	Page / column	function text
	&EFS=V2AR43UQ43KF1	=V2AR43UQ43KF1+V2AR43UQ43-KF1	1.11-X4		-BGS/R	1	&EFS=V2AR43UQ43UQ2+V2AR43UQ43UQ2/1.4	
	&EFS=V2AR43UQ43KF1	=V2AR43UQ43KF1+V2AR43UQ43-KF2	1.11-X4		-BGS/R	2	&EFS=V2AR43UQ43UQ2+V2AR43UQ43UQ2/1.4	
	&EFS=V2AR43UQ43KF1	=V2AR43UQ43KF1+V2AR43UQ43-KF3	1.11-X4		-BGS/R	3	&EFS=V2AR43UQ43UQ2+V2AR43UQ43UQ2/1.4	
	&EFS=V2AR43UQ43KF1	=V2AR43UQ43KF1+V2AR43UQ43-KF4	1.11-X4		-BGS/R	4	&EFS=V2AR43UQ43UQ2+V2AR43UQ43UQ2/1.4	

=V2AR43UQ43UQ2.2+.AR43UQ43UQ2.2/1

=V2AR43UQ43UQ3.1+.AR43UQ43UQ3.1/1

			Date	1/24/2023	Volvo Trucks North America	Valiant TMS	Cable diagram =V2AR43UQ43UQ2.3+V2AR43UQ43UQ2.3-W1	Drawing name: =2V01&EFS-EL_KF1	= V2AR43UQ43UQ2.3
			Ed.	MKLEPADLO					+ V2AR43UQ43UQ2.3
			Appr		P6700 Framing - Cell 2V01, KF1	Scale 1:1		Document type: EMA	Project nr: 22-16152
Modification	Date	Name	Original		Replacement of	Replaced by			Page 1 / 1630

Cable diagram

F09_002_VLU

Cable name -W1			cable type TPE					
remark			no. of conductors 4			cross-section 18		cable length 1
function text	Page / column	Target designation from	Connection point	conductor	Target designation to	Connection point	Page / column	function text
	&EFS=V2AR43UQ43KF1	=**V2AR43UQ43/K2.5**+V2AR43UQ43-KF1	1.11-X5		-BGS/R	1	&EFS=V2AR43UQ43UQ3+V2AR43UQ43UQ3/1.0	
	&EFS=V2AR43UQ43KF1	=**V2AR43UQ43/K2.5**+V2AR43UQ43-KF1	2.11-X5		-BGS/R	4	&EFS=V2AR43UQ43UQ3+V2AR43UQ43UQ3/1.1	
	&EFS=V2AR43UQ43KF1	=**V2AR43UQ43/K2.5**+V2AR43UQ43-KF1	3.11-X5		-BGS/R	3	&EFS=V2AR43UQ43UQ3+V2AR43UQ43UQ3/1.0	

			Date	1/24/2023	Volvo Trucks North America	Valiant TMS	Cable diagram =V2AR43UQ43UQ3.1+V2AR43UQ43UQ3.1-W1	Drawing name: =2V01&EFS-EL_KF1	= V2AR43UQ43UQ3.1
			Ed.	MKLEPADLO					+ V2AR43UQ43UQ3.1
			Appr		P6700 Framing - Cell 2V01, KF1	Scale 1:1		Document type: EMA	Project nr: 22-16152
Modification	Date	Name	Original		Replacement of / Replaced by				Page 1 / 1630

Cable diagram

F09_002_VLU

Cable name -W1			cable type TPE					
remark			no. of conductors 4			cross-section 18		cable length 3
function text	Page / column	Target designation from	Connection point	conductor	Target designation to	Connection point	Page / column	function text
	&EFS=V2AR43UQ43KF1	=V2AR43UQ43/K2.6+V2AR43UQ43-KF1	1.11-X6		-BGS/R	1	&EFS=V2AR43UQ43UQ4+V2AR43UQ43UQ4/1.0	
	&EFS=V2AR43UQ43KF1	=V2AR43UQ43/K2.6+V2AR43UQ43-KF1	2.11-X6		-BGS/R	2	&EFS=V2AR43UQ43UQ4+V2AR43UQ43UQ4/1.0	
	&EFS=V2AR43UQ43KF1	=V2AR43UQ43/K2.6+V2AR43UQ43-KF1	3.11-X6		-BGS/R	3	&EFS=V2AR43UQ43UQ4+V2AR43UQ43UQ4/1.1	
	&EFS=V2AR43UQ43KF1	=V2AR43UQ43/K2.7+V2AR43UQ43-KF1	4.11-X6		-BGS/R	4	&EFS=V2AR43UQ43UQ4+V2AR43UQ43UQ4/1.1	

=V2AR43UQ43UQ3.1+.AR43UQ43UQ3.1/1

=V2AR43UQ43UQ4.2+.AR43UQ43UQ4.2/1

			Date	1/24/2023	Volvo Trucks North America	Valiant TMS	Cable diagram =V2AR43UQ43UQ4.1+V2AR43UQ43UQ4.1-W1	Drawing name: =2V01&EFS-EL_KF1	= V2AR43UQ43UQ4.1
			Ed.	MKLEPADLO					+ V2AR43UQ43UQ4.1
			Appr		P6700 Framing - Cell 2V01, KF1	Scale 1:1		Document type: EMA	Project nr: 22-16152
Modification	Date	Name	Original		Replacement of	Replaced by			Page 1 / 1630

Cable diagram

F09_002_VLU

Cable name -W1			cable type TPE					
remark			no. of conductors 4			cross-section 18		cable length 1
function text	Page / column	Target designation from	Connection point	conductor	Target designation to	Connection point	Page / column	function text
	&EFS=V2AR43UQ43KF1	=**V2AR43UQ43UQ4.1**+V2AR43UQ43-KF1	1		1.11-X7	-BGS/R	1	&EFS=V2AR43UQ43UQ4+V2AR43UQ43UQ4/1.2
	&EFS=V2AR43UQ43KF1	=**V2AR43UQ43UQ4.1**+V2AR43UQ43-KF1	2		1.11-X7	-BGS/R	2	&EFS=V2AR43UQ43UQ4+V2AR43UQ43UQ4/1.2
	&EFS=V2AR43UQ43KF1	=**V2AR43UQ43UQ4.1**+V2AR43UQ43-KF1	3		1.11-X7	-BGS/R	3	&EFS=V2AR43UQ43UQ4+V2AR43UQ43UQ4/1.2
	&EFS=V2AR43UQ43KF1	=**V2AR43UQ43UQ4.1**+V2AR43UQ43-KF1	4		1.11-X7	-BGS/R	4	&EFS=V2AR43UQ43UQ4+V2AR43UQ43UQ4/1.2

=V2AR43UQ43UQ4.1+.AR43UQ43UQ4.1/1

=V2AR43UQ43UQ4.3+.AR43UQ43UQ4.3/1

			Date	1/24/2023	Volvo Trucks North America	Valiant TMS	Cable diagram =V2AR43UQ43UQ4.2+V2AR43UQ43UQ4.2-W1	Drawing name: =2V01&EFS-EL_KF1	= V2AR43UQ43UQ4.2
			Ed.	MKLEPADLO					+ V2AR43UQ43UQ4.2
			Appr		P6700 Framing - Cell 2V01, KF1	Scale 1:1		Document type: EMA	Project nr: 22-16152
Modification	Date	Name	Original		Replacement of	Replaced by			Page 1 / 1630

Cable diagram

F09_002_VLU

Cable name -W1			cable type TPE					
remark			no. of conductors 4			cross-section 18		cable length 2
function text	Page / column	Target designation from	Connection point	conductor	Target designation to	Connection point	Page / column	function text
	&EFS=V2AR43UQ43KF1	=V2AR43UQ43/K2.8+V2AR43UQ43-KF1	1.11-X8		-BGS/R	1	&EFS=V2AR43UQ43UQ4+V2AR43UQ43UQ4/1.4	
	&EFS=V2AR43UQ43KF1	=V2AR43UQ43/K2.9+V2AR43UQ43-KF1	2.11-X8		-BGS/R	2	&EFS=V2AR43UQ43UQ4+V2AR43UQ43UQ4/1.4	
	&EFS=V2AR43UQ43KF1	=V2AR43UQ43/K2.9+V2AR43UQ43-KF1	3.11-X8		-BGS/R	3	&EFS=V2AR43UQ43UQ4+V2AR43UQ43UQ4/1.4	
	&EFS=V2AR43UQ43KF1	=V2AR43UQ43/K2.9+V2AR43UQ43-KF1	4.11-X8		-BGS/R	4	&EFS=V2AR43UQ43UQ4+V2AR43UQ43UQ4/1.4	

=V2AR43UQ43UQ4.2+.AR43UQ43UQ4.2/1

=V2AR43UQ43UQ4.4+.AR43UQ43UQ4.4/1

			Date	1/24/2023	Volvo Trucks North America	Valiant TMS	Cable diagram =V2AR43UQ43UQ4.3+V2AR43UQ43UQ4.3-W1	Drawing name: =2V01&EFS-EL_KF1	= V2AR43UQ43UQ4.3
			Ed.	MKLEPADLO					+ V2AR43UQ43UQ4.3
			Appr		P6700 Framing - Cell 2V01, KF1	Scale 1:1		Document type: EMA	Project nr: 22-16152
Modification	Date	Name	Original		Replacement of	Replaced by			Page 1 / 1630

Cable diagram

F09_002_VLU

Cable name -W1			cable type TPE					
remark			no. of conductors 4			cross-section 18		cable length 2
function text	Page / column	Target designation from	Connection point	conductor	Target designation to	Connection point	Page / column	function text
	&EFS=V2AR43UQ43KF1	=**V2AR43UQ43KF1**+V2AR43UQ43-KF1	1.12-X1		-BGS/R	1	&EFS=V2AR43UQ43UQ4+V2AR43UQ43UQ4/1.5	
	&EFS=V2AR43UQ43KF1	=**V2AR43UQ43KF1**+V2AR43UQ43-KF2	1.12-X1		-BGS/R	2	&EFS=V2AR43UQ43UQ4+V2AR43UQ43UQ4/1.5	
	&EFS=V2AR43UQ43KF1	=**V2AR43UQ43KF1**+V2AR43UQ43-KF3	1.12-X1		-BGS/R	3	&EFS=V2AR43UQ43UQ4+V2AR43UQ43UQ4/1.5	
	&EFS=V2AR43UQ43KF1	=**V2AR43UQ43KF1**+V2AR43UQ43-KF4	1.12-X1		-BGS/R	4	&EFS=V2AR43UQ43UQ4+V2AR43UQ43UQ4/1.5	

=V2AR43UQ43UQ4.3+.AR43UQ43UQ4.3/1

=V2AR43UQ43UQ4.5+.AR43UQ43UQ4.5/1

			Date	1/24/2023	Volvo Trucks North America	Valiant TMS	Cable diagram =V2AR43UQ43UQ4.4+V2AR43UQ43UQ4.4-W1	Drawing name: =2V01&EFS-EL_KF1	= V2AR43UQ43UQ4.4
			Ed.	MKLEPADLO					+ V2AR43UQ43UQ4.4
			Appr		P6700 Framing - Cell 2V01, KF1	Scale 1:1		Document type: EMA	Project nr: 22-16152
Modification	Date	Name	Original		Replacement of / Replaced by				Page 1 / 1630

Cable diagram

F09_002_VLU

Cable name -W1			cable type TPE					
remark			no. of conductors 4			cross-section 18		cable length 3
function text	Page / column	Target designation from	Connection point	conductor	Target designation to	Connection point	Page / column	function text
	&EFS=V2AR43UQ43KF1	=**V2AR43UQ43KF1**+V2AR43UQ43-KF1	1.12-X2		-BGS/R	1	&EFS=V2AR43UQ43UQ4+V2AR43UQ43UQ4/1.7	
	&EFS=V2AR43UQ43KF1	=**V2AR43UQ43KF1**+V2AR43UQ43-KF1	2.12-X2		-BGS/R	2	&EFS=V2AR43UQ43UQ4+V2AR43UQ43UQ4/1.7	
	&EFS=V2AR43UQ43KF1	=**V2AR43UQ43KF1**+V2AR43UQ43-KF1	3.12-X2		-BGS/R	3	&EFS=V2AR43UQ43UQ4+V2AR43UQ43UQ4/1.7	
	&EFS=V2AR43UQ43KF1	=**V2AR43UQ43KF1**+V2AR43UQ43-KF1	4.12-X2		-BGS/R	4	&EFS=V2AR43UQ43UQ4+V2AR43UQ43UQ4/1.7	

=V2AR43UQ43UQ4.4+.AR43UQ43UQ4.4/1

=V2AR44UQ41BG0+.AR44UQ41/1

			Date	1/24/2023	Volvo Trucks North America	Valiant TMS	Cable diagram =V2AR43UQ43UQ4.5+V2AR43UQ43UQ4.5-W1	Drawing name: =2V01&EFS-EL_KF1	= V2AR43UQ43UQ4.5
			Ed.	MKLEPADLO					+ V2AR43UQ43UQ4.5
			Appr		P6700 Framing - Cell 2V01, KF1	Scale 1:1		Document type: EMA	Project nr: 22-16152
Modification	Date	Name	Original		Replacement of / Replaced by				Page 1 / 1630

Cable diagram

F09_002_VLU

Cable name -W1			cable type TPE					
remark			no. of conductors 4			cross-section 18		cable length 0.5
function text	Page / column	Target designation from	Connection point	conductor	Target designation to	Connection point	Page / column	function text
	&EFS/1.0	-XG1/2	P1:1		=V2AR44UQ41KF1-KF1.13-X1	1	&EFS=V2AR44UQ41KF1/4.0	
	&EFS/1.1	-XG1/2	P1:3		=V2AR44UQ41KF1-KF1.13-X1	3	&EFS=V2AR44UQ41KF1/4.1	
	&EFS/1.1	-XG1/2	P1:4		=V2AR44UQ41KF1-KF1.13-X1	4	&EFS=V2AR44UQ41KF1/4.1	
	&EFS/1.1	-XG1/2	P1:2		=V2AR44UQ41KF1-KF1.13-X1	2	&EFS=V2AR44UQ41KF1/4.0	

			Date	1/24/2023	Volvo Trucks North America	Valiant TMS	Cable diagram =V2AR44UQ41BG0+V2AR44UQ41-W1	Drawing name: =2V01&EFS-EL_KF1	= V2AR44UQ41BG0
			Ed.	MKLEPADLO					+ V2AR44UQ41
			Appr		P6700 Framing - Cell 2V01, KF1			Document type: EMA	Project nr: 22-16152
Modification	Date	Name	Original		Replacement of / Replaced by	Scale 1:1			Page 1 / 1630

Cable diagram

F09_002_VLU

Cable name -W1.1			cable type TPE					
remark			no. of conductors 4			cross-section 18		cable length 2
function text	Page / column	Target designation from	Connection point	conductor	Target designation to	Connection point	Page / column	function text
	&EFS/1.0	-BG01	1		-XG1/2	J1:1	&EFS/1.0	
	&EFS/1.0	-BG01	4		-XG1/2	J1:4	&EFS/1.1	
	&EFS/1.1	-BG01	3		-XG1/2	J1:3	&EFS/1.1	

			Date	1/24/2023	Volvo Trucks North America	Valiant TMS	Cable diagram =V2AR44UQ41BG0+V2AR44UQ41-W1.1	Drawing name: =2V01&EFS-EL_KF1	= V2AR44UQ41BG0
			Ed.	MKLEPADLO					+ V2AR44UQ41
			Appr		P6700 Framing - Cell 2V01, KF1			Document type: EMA	Project nr: 22-16152
Modification	Date	Name	Original		Replacement of / Replaced by	Scale 1:1			Page 2 / 1630

Cable diagram

F09_002_VLU

Cable name -W1.2			cable type TPE					
remark			no. of conductors 4			cross-section 18		cable length 2
function text	Page / column	Target designation from	Connection point	conductor	Target designation to	Connection point	Page / column	function text
	&EFS/1.1	-BG02	1		-XG1/2	J2:1	&EFS/1.1	
	&EFS/1.1	-BG02	4		-XG1/2	J2:4	&EFS/1.2	
	&EFS/1.2	-BG02	3		-XG1/2	J2:3	&EFS/1.2	

			Date	1/24/2023	Volvo Trucks North America	Valiant TMS	Cable diagram =V2AR44UQ41BG0+V2AR44UQ41-W1.2	Drawing name: =2V01&EFS-EL_KF1	= V2AR44UQ41BG0
			Ed.	MKLEPADLO					+ V2AR44UQ41
			Appr		P6700 Framing - Cell 2V01, KF1	Scale 1:1		Document type: EMA / Project nr: 22-16152	Page 3 / 1630
Modification	Date	Name	Original		Replacement of / Replaced by				

Cable diagram

F09_002_VLU

Cable name -W1			cable type TPU					
remark			no. of conductors 5			cross-section 16		cable length 2
function text	Page / column	Target designation from	Connection point	conductor	Target designation to	Connection point	Page / column	function text
	&EFS/2.2	-KF1-X20	5		-R3.CP/CS	C4	&EFS/1.3	
	&EFS/2.1	-KF1-X20	1		-R3.CP/CS	C5	&EFS/1.3	
	&EFS/2.1	-KF1-X20	3		-R3.CP/CS	PE	&EFS/1.3	
	&EFS/2.2	-KF1-X20	4		-R3.CP/CS	C6	&EFS/1.3	
	&EFS/2.1	-KF1-X20	2		-R3.CP/CS	C7	&EFS/1.4	

			Date	1/24/2023	Volvo Trucks North America	Valiant TMS	Cable diagram =V2AR44UQ41KF1+V2AR44UQ41-W1	Drawing name: =2V01&EFS-EL_KF1	= V2AR44UQ41KF1
			Ed.	MKLEPADLO					+ V2AR44UQ41
			Appr		P6700 Framing - Cell 2V01, KF1			Document type: EMA	Project nr: 22-16152
Modification	Date	Name	Original		Replacement of / Replaced by	Scale 1:1			Page 1 / 1630

Cable diagram

F09_002_VLU

Cable name -WF1			cable type PROFINET Cable					
remark			no. of conductors 4			cross-section 22		cable length
function text	Page / column	Target designation from	Connection point	conductor	Target designation to	Connection point	Page / column	function text
	&EFS/2.3	-KF1-TP1			-R3.CP/CS	R3.PROFINET	&EFS/1.5	

			Date	1/24/2023	Volvo Trucks North America	Valiant TMS	Cable diagram =V2AR44UQ41KF1+V2AR44UQ41-WF1	Drawing name: =2V01&EFS-EL_KF1	= V2AR44UQ41KF1
			Ed.	MKLEPADLO					+ V2AR44UQ41
			Appr		P6700 Framing - Cell 2V01, KF1			Document type: EMA	Project nr: 22-16152
Modification	Date	Name	Original		Replacement of / Replaced by	Scale 1:1			Page 2 / 1630

Cable diagram

F09_002_VLU

Cable name -W1			cable type TPE					
remark			no. of conductors 4			cross-section 18		cable length 1
function text	Page / column	Target designation from	Connection point	conductor	Target designation to	Connection point	Page / column	function text
	&EFS=V2AR44UQ41KF1	=**V2AR44UQ41KF1**+V2AR44UQ41-KF1	1.11-X1		-BGS/R	1	&EFS=V2AR44UQ41UQ1	+V2AR44UQ41UQ1/1.0
	&EFS=V2AR44UQ41KF1	=**V2AR44UQ41KF1**+V2AR44UQ41-KF2	1.11-X1		-BGS/R	2	&EFS=V2AR44UQ41UQ1	+V2AR44UQ41UQ1/1.0
	&EFS=V2AR44UQ41KF1	=**V2AR44UQ41KF1**+V2AR44UQ41-KF3	1.11-X1		-BGS/R	3	&EFS=V2AR44UQ41UQ1	+V2AR44UQ41UQ1/1.1
	&EFS=V2AR44UQ41KF1	=**V2AR44UQ41KF1**+V2AR44UQ41-KF4	1.11-X1		-BGS/R	4	&EFS=V2AR44UQ41UQ1	+V2AR44UQ41UQ1/1.1

			Date	1/24/2023	Volvo Trucks North America	Valiant TMS	Cable diagram =V2AR44UQ41UQ1.1+V2AR44UQ41UQ1.1-W1	Drawing name: =2V01&EFS-EL_KF1	= V2AR44UQ41UQ1.1
			Ed.	MKLEPADLO					+ V2AR44UQ41UQ1.1
			Appr		P6700 Framing - Cell 2V01, KF1			Document type: EMA	Project nr: 22-16152
Modification	Date	Name	Original		Replacement of / Replaced by	Scale 1:1			Page 1 / 1630

Cable diagram

F09_002_VLU

Cable name -W1			cable type TPE					
remark			no. of conductors 4			cross-section 18		cable length 1
function text	Page / column	Target designation from	Connection point	conductor	Target designation to	Connection point	Page / column	function text
	&EFS=V2AR44UQ41KF1	=**V2AR44UQ41**/KF1.1+V2AR44UQ41-KF1	1.11-X2		-BGS/R	1	&EFS=V2AR44UQ41UQ1	+V2AR44UQ41UQ1/1.2
	&EFS=V2AR44UQ41KF1	=**V2AR44UQ41**/KF1.2+V2AR44UQ41-KF2	1.11-X2		-BGS/R	2	&EFS=V2AR44UQ41UQ1	+V2AR44UQ41UQ1/1.2
	&EFS=V2AR44UQ41KF1	=**V2AR44UQ41**/KF1.2+V2AR44UQ41-KF3	1.11-X2		-BGS/R	3	&EFS=V2AR44UQ41UQ1	+V2AR44UQ41UQ1/1.2
	&EFS=V2AR44UQ41KF1	=**V2AR44UQ41**/KF1.2+V2AR44UQ41-KF4	1.11-X2		-BGS/R	4	&EFS=V2AR44UQ41UQ1	+V2AR44UQ41UQ1/1.2

=V2AR44UQ41UQ1.1+.AR44UQ41UQ1.1/1

=V2AR44UQ41UQ2.1+.AR44UQ41UQ2.1/1

			Date	1/24/2023	Volvo Trucks North America	Valiant TMS	Cable diagram =V2AR44UQ41UQ1.2+V2AR44UQ41UQ1.2-W1	Drawing name: =2V01&EFS-EL_KF1	= V2AR44UQ41UQ1.2
			Ed.	MKLEPADLO					+ V2AR44UQ41UQ1.2
			Appr		P6700 Framing - Cell 2V01, KF1			Document type: EMA	Project nr: 22-16152
Modification	Date	Name	Original		Replacement of	Replaced by	Scale 1:1		Page 1 / 1630

Cable diagram

F09_002_VLU

Cable name	-W1	cable type	TPE		
remark		no. of conductors	4	cross-section 18	cable length 1

function text	Page / column	Target designation from	Connection point	conductor	Target designation to	Connection point	Page / column	function text
	&EFS=V2AR44UQ41KF1+V2AR44UQ41KF1	=V2AR44UQ41/2.1+V2AR44UQ41-KF1	1.11-X3		-BGS/R	1	&EFS=V2AR44UQ41UQ2+V2AR44UQ41UQ2/1.0	
	&EFS=V2AR44UQ41KF1+V2AR44UQ41KF1	=V2AR44UQ41/2.1+V2AR44UQ41-KF1	1.11-X3		-BGS/R	2	&EFS=V2AR44UQ41UQ2+V2AR44UQ41UQ2/1.0	
	&EFS=V2AR44UQ41KF1+V2AR44UQ41KF1	=V2AR44UQ41/2.1+V2AR44UQ41-KF1	1.11-X3		-BGS/R	3	&EFS=V2AR44UQ41UQ2+V2AR44UQ41UQ2/1.1	
	&EFS=V2AR44UQ41KF1+V2AR44UQ41KF1	=V2AR44UQ41/2.1+V2AR44UQ41-KF1	1.11-X3		-BGS/R	4	&EFS=V2AR44UQ41UQ2+V2AR44UQ41UQ2/1.1	

=V2AR44UQ41UQ1.2+.AR44UQ41UQ1.2/1

=V2AR44UQ41UQ2.2+.AR44UQ41UQ2.2/1

			Date	1/24/2023	Volvo Trucks North America	Valiant TMS	Cable diagram =V2AR44UQ41UQ2.1+V2AR44UQ41UQ2.1-W1	Drawing name: =2V01&EFS-EL_KF1	= V2AR44UQ41UQ2.1 + V2AR44UQ41UQ2.1
			Ed.	MKLEPADLO	P6700 Framing - Cell 2V01, KF1				
			Appr					Document type: EMA	Project nr: 22-16152
Modification	Date	Name	Original		Replacement of / Replaced by	Scale 1:1			Page 1 / 1630

Cable diagram

F09_002_VLU

Cable name -W1			cable type TPE					
remark			no. of conductors 4			cross-section 18		cable length 1
function text	Page / column	Target designation from	Connection point	conductor	Target designation to	Connection point	Page / column	function text
	&EFS=V2AR44UQ41KF1+V2AR44UQ41KF1	=V2AR44UQ41/2.1+V2AR44UQ41-KF1	1.11-X4		-BGS/R	1	&EFS=V2AR44UQ41UQ2+V2AR44UQ41UQ2/1.2	
	&EFS=V2AR44UQ41KF1+V2AR44UQ41KF1	=V2AR44UQ41/2.1+V2AR44UQ41-KF2	1.11-X4		-BGS/R	2	&EFS=V2AR44UQ41UQ2+V2AR44UQ41UQ2/1.2	
	&EFS=V2AR44UQ41KF1+V2AR44UQ41KF1	=V2AR44UQ41/2.1+V2AR44UQ41-KF3	1.11-X4		-BGS/R	3	&EFS=V2AR44UQ41UQ2+V2AR44UQ41UQ2/1.2	
	&EFS=V2AR44UQ41KF1+V2AR44UQ41KF1	=V2AR44UQ41/2.1+V2AR44UQ41-KF4	1.11-X4		-BGS/R	4	&EFS=V2AR44UQ41UQ2+V2AR44UQ41UQ2/1.2	

=V2AR44UQ41UQ2.1+.AR44UQ41UQ2.1/1

=V2AR44UQ41UQ2.3+.AR44UQ41UQ2.3/1

			Date	1/24/2023	Volvo Trucks North America	Valiant TMS	Cable diagram =V2AR44UQ41UQ2.2+V2AR44UQ41UQ2.2-W1	Drawing name: =2V01&EFS-EL_KF1	= V2AR44UQ41UQ2.2 + V2AR44UQ41UQ2.2
			Ed.	MKLEPADLO	P6700 Framing - Cell 2V01, KF1				
			Appr					Document type: EMA	Project nr: 22-16152
Modification	Date	Name	Original		Replacement of / Replaced by	Scale 1:1			Page 1 / 1630

Cable diagram

F09_002_VLU

Cable name -W1			cable type TPE					
remark			no. of conductors 4			cross-section 18		cable length 2
function text	Page / column	Target designation from	Connection point	conductor	Target designation to	Connection point	Page / column	function text
	&EFS=V2AR44UQ41KF1	=V2AR44UQ41/K2.5+V2AR44UQ41-KF1	1.11-X5		-BGS/R	1	&EFS=V2AR44UQ41UQ2+V2AR44UQ41UQ2/1.4	
	&EFS=V2AR44UQ41KF1	=V2AR44UQ41/K2.5+V2AR44UQ41-KF2	1.11-X5		-BGS/R	2	&EFS=V2AR44UQ41UQ2+V2AR44UQ41UQ2/1.4	
	&EFS=V2AR44UQ41KF1	=V2AR44UQ41/K2.5+V2AR44UQ41-KF3	1.11-X5		-BGS/R	3	&EFS=V2AR44UQ41UQ2+V2AR44UQ41UQ2/1.4	
	&EFS=V2AR44UQ41KF1	=V2AR44UQ41/K2.5+V2AR44UQ41-KF4	1.11-X5		-BGS/R	4	&EFS=V2AR44UQ41UQ2+V2AR44UQ41UQ2/1.4	

=V2AR44UQ41UQ2.2+.AR44UQ41UQ2.2/1

=V2AR44UQ41UQ3.1+.AR44UQ41UQ3.1/1

			Date	1/24/2023	Volvo Trucks North America	Valiant TMS	Cable diagram =V2AR44UQ41UQ2.3+V2AR44UQ41UQ2.3-W1	Drawing name: =2V01&EFS-EL_KF1	= V2AR44UQ41UQ2.3
			Ed.	MKLEPADLO					+ V2AR44UQ41UQ2.3
			Appr		P6700 Framing - Cell 2V01, KF1	Scale 1:1		Document type: EMA	Project nr: 22-16152
Modification	Date	Name	Original		Replacement of / Replaced by				Page 1 / 1630

Cable diagram

F09_002_VLU

Cable name -W1			cable type TPE					
remark			no. of conductors 4			cross-section 18		cable length 1
function text	Page / column	Target designation from	Connection point	conductor	Target designation to	Connection point	Page / column	function text
	&EFS=V2AR44UQ41KF1	=**V2AR44UQ41KF1**+V2AR44UQ41-KF1	1.11-X6		-BGS/R	1	&EFS=V2AR44UQ41UQ3+V2AR44UQ41UQ3/1.0	
	&EFS=V2AR44UQ41KF1	=**V2AR44UQ41KF1**+V2AR44UQ41-KF1	2.11-X6		-BGS/R	4	&EFS=V2AR44UQ41UQ3+V2AR44UQ41UQ3/1.1	
	&EFS=V2AR44UQ41KF1	=**V2AR44UQ41KF1**+V2AR44UQ41-KF1	3.11-X6		-BGS/R	3	&EFS=V2AR44UQ41UQ3+V2AR44UQ41UQ3/1.0	

=V2AR44UQ41UQ2.3+.AR44UQ41UQ2.3/1

=V2AR44UQ41UQ4.1+.AR44UQ41UQ4.1/1

			Date	1/24/2023	Volvo Trucks North America		Valiant TMS	Cable diagram =V2AR44UQ41UQ3.1+V2AR44UQ41UQ3.1-W1	Drawing name: =2V01&EFS-EL_KF1	= V2AR44UQ41UQ3.1
			Ed.	MKLEPADLO						+ V2AR44UQ41UQ3.1
			Appr		P6700 Framing - Cell 2V01, KF1		Scale 1:1		Document type: EMA	Project nr: 22-16152
Modification	Date	Name	Original		Replacement of	Replaced by				Page 1 / 1630

Cable diagram

F09_002_VLU

Cable name -W1			cable type TPE					
remark			no. of conductors 4			cross-section 18		cable length 1
function text	Page / column	Target designation from	Connection point	conductor	Target designation to	Connection point	Page / column	function text
	&EFS=V2AR44UQ41KF1	=V2AR44UQ41/KF1.7+V2AR44UQ41-KF1	1		1.11-X7 -BGS/R	1	&EFS=V2AR44UQ41UQ4+V2AR44UQ41UQ4/1.0	
	&EFS=V2AR44UQ41KF1	=V2AR44UQ41/KF1.7+V2AR44UQ41-KF1	2		1.11-X7 -BGS/R	2	&EFS=V2AR44UQ41UQ4+V2AR44UQ41UQ4/1.0	
	&EFS=V2AR44UQ41KF1	=V2AR44UQ41/KF1.8+V2AR44UQ41-KF1	3		1.11-X7 -BGS/R	3	&EFS=V2AR44UQ41UQ4+V2AR44UQ41UQ4/1.1	
	&EFS=V2AR44UQ41KF1	=V2AR44UQ41/KF1.8+V2AR44UQ41-KF1	4		1.11-X7 -BGS/R	4	&EFS=V2AR44UQ41UQ4+V2AR44UQ41UQ4/1.1	

			Date	1/24/2023	Volvo Trucks North America	Valiant TMS	Cable diagram =V2AR44UQ41UQ4.1+V2AR44UQ41UQ4.1-W1	Drawing name: =2V01&EFS-EL_KF1	= V2AR44UQ41UQ4.1
			Ed.	MKLEPADLO					+ V2AR44UQ41UQ4.1
			Appr		P6700 Framing - Cell 2V01, KF1	Scale 1:1		Document type: EMA	Project nr: 22-16152
Modification	Date	Name	Original		Replacement of / Replaced by				Page 1 / 1630

Cable diagram

F09_002_VLU

Cable name -W1			cable type TPE					
remark			no. of conductors 4			cross-section 18		cable length 2
function text	Page / column	Target designation from	Connection point	conductor	Target designation to	Connection point	Page / column	function text
	&EFS=V2AR44UQ41KF1	=**V2AR44UQ41**/KF1.8+V2AR44UQ41-KF1	1		1.11-X8	-BGS/R	1	&EFS=V2AR44UQ41UQ4+V2AR44UQ41UQ4/1.2
	&EFS=V2AR44UQ41KF1	=**V2AR44UQ41**/KF1.9+V2AR44UQ41-KF1	2		1.11-X8	-BGS/R	2	&EFS=V2AR44UQ41UQ4+V2AR44UQ41UQ4/1.2
	&EFS=V2AR44UQ41KF1	=**V2AR44UQ41**/KF1.9+V2AR44UQ41-KF1	3		1.11-X8	-BGS/R	3	&EFS=V2AR44UQ41UQ4+V2AR44UQ41UQ4/1.2
	&EFS=V2AR44UQ41KF1	=**V2AR44UQ41**/KF1.9+V2AR44UQ41-KF1	4		1.11-X8	-BGS/R	4	&EFS=V2AR44UQ41UQ4+V2AR44UQ41UQ4/1.2

=V2AR44UQ41UQ4.1+.AR44UQ41UQ4.1/1

=V2AR44UQ41UQ4.3+.AR44UQ41UQ4.3/1

			Date	1/24/2023	Volvo Trucks North America	Valiant TMS	Cable diagram =V2AR44UQ41UQ4.2+V2AR44UQ41UQ4.2-W1	Drawing name: =2V01&EFS-EL_KF1	= V2AR44UQ41UQ4.2
			Ed.	MKLEPADLO					+ V2AR44UQ41UQ4.2
			Appr		P6700 Framing - Cell 2V01, KF1	Scale 1:1		Document type: EMA	Project nr: 22-16152
Modification	Date	Name	Original		Replacement of	Replaced by			Page 1 / 1630

Cable diagram

F09_002_VLU

Cable name -W1			cable type TPE					
remark			no. of conductors 4			cross-section 18		cable length 1
function text	Page / column	Target designation from	Connection point	conductor	Target designation to	Connection point	Page / column	function text
	&EFS=V2AR44UQ41KF1	=**V2AR44UQ41/K3.0**+V2AR44UQ41-KF1	1.12-X1		-BGS/R	1	&EFS=V2AR44UQ41UQ4+V2AR44UQ41UQ4/1.4	
	&EFS=V2AR44UQ41KF1	=**V2AR44UQ41/K3.0**+V2AR44UQ41-KF2	1.12-X1		-BGS/R	2	&EFS=V2AR44UQ41UQ4+V2AR44UQ41UQ4/1.4	
	&EFS=V2AR44UQ41KF1	=**V2AR44UQ41/K3.1**+V2AR44UQ41-KF3	1.12-X1		-BGS/R	3	&EFS=V2AR44UQ41UQ4+V2AR44UQ41UQ4/1.4	
	&EFS=V2AR44UQ41KF1	=**V2AR44UQ41/K3.1**+V2AR44UQ41-KF4	1.12-X1		-BGS/R	4	&EFS=V2AR44UQ41UQ4+V2AR44UQ41UQ4/1.4	

=V2AR44UQ41UQ4.2+.AR44UQ41UQ4.2/1

=V2AR44UQ42BG0+.AR44UQ42/1

			Date	1/24/2023	Volvo Trucks North America	Valiant TMS	Cable diagram =V2AR44UQ41UQ4.3+V2AR44UQ41UQ4.3-W1	Drawing name: =2V01&EFS-EL_KF1	= V2AR44UQ41UQ4.3
			Ed.	MKLEPADLO					+ V2AR44UQ41UQ4.3
			Appr		P6700 Framing - Cell 2V01, KF1			Document type: EMA	Project nr: 22-16152
Modification	Date	Name	Original		Replacement of / Replaced by	Scale 1:1			Page 1 / 1630

Cable diagram

F09_002_VLU

Cable name -W1			cable type TPE					
remark			no. of conductors 4			cross-section 18		cable length 0.5
function text	Page / column	Target designation from	Connection point	conductor	Target designation to	Connection point	Page / column	function text
	&EFS/1.0	-XG1/2	P1:1		=V2AR44UQ42KF1-KF1.13-X5	1	&EFS=V2AR44UQ42KF1/4.5	
	&EFS/1.1	-XG1/2	P1:3		=V2AR44UQ42KF1-KF1.13-X5	3	&EFS=V2AR44UQ42KF1/4.5	
	&EFS/1.1	-XG1/2	P1:4		=V2AR44UQ42KF1-KF1.13-X5	4	&EFS=V2AR44UQ42KF1/4.5	
	&EFS/1.1	-XG1/2	P1:2		=V2AR44UQ42KF1-KF1.13-X5	2	&EFS=V2AR44UQ42KF1/4.5	

			Date	1/24/2023	Volvo Trucks North America	Valiant TMS	Cable diagram =V2AR44UQ42BG0+V2AR44UQ42-W1	Drawing name: =2V01&EFS-EL_KF1	= V2AR44UQ42BG0
			Ed.	MKLEPADLO					+ V2AR44UQ42
			Appr		P6700 Framing - Cell 2V01, KF1			Document type: EMA	Project nr: 22-16152
Modification	Date	Name	Original		Replacement of / Replaced by	Scale 1:1			Page 1 / 1630

Cable diagram

F09_002_VLU

Cable name -W1.1			cable type TPE					
remark			no. of conductors 4			cross-section 18		cable length 3
function text	Page / column	Target designation from	Connection point	conductor	Target designation to	Connection point	Page / column	function text
	&EFS/1.0	-BG01	1		-XG1/2	J1:1	&EFS/1.0	
	&EFS/1.0	-BG01	4		-XG1/2	J1:4	&EFS/1.1	
	&EFS/1.1	-BG01	3		-XG1/2	J1:3	&EFS/1.1	

			Date	1/24/2023	Volvo Trucks North America	Valiant TMS	Cable diagram =V2AR44UQ42BG0+V2AR44UQ42-W1.1	Drawing name: =2V01&EFS-EL_KF1	= V2AR44UQ42BG0
			Ed.	MKLEPADLO					+ V2AR44UQ42
			Appr		P6700 Framing - Cell 2V01, KF1			Document type: EMA	Project nr: 22-16152
Modification	Date	Name	Original		Replacement of / Replaced by	Scale 1:1			Page 2 / 1630

Cable diagram

F09_002_VLU

Cable name -W1.2			cable type TPE					
remark			no. of conductors 4			cross-section 18		cable length 3
function text	Page / column	Target designation from	Connection point	conductor	Target designation to	Connection point	Page / column	function text
	&EFS/1.1	-BG02	1		-XG1/2	J2:1	&EFS/1.1	
	&EFS/1.1	-BG02	4		-XG1/2	J2:4	&EFS/1.2	
	&EFS/1.2	-BG02	3		-XG1/2	J2:3	&EFS/1.2	

			Date	1/24/2023	Volvo Trucks North America	Valiant TMS	Cable diagram =V2AR44UQ42BG0+V2AR44UQ42-W1.2	Drawing name: =2V01&EFS-EL_KF1	= V2AR44UQ42BG0
			Ed.	MKLEPADLO					+ V2AR44UQ42
			Appr		P6700 Framing - Cell 2V01, KF1			Document type: EMA / Project nr: 22-16152	Page 3 / 1630
Modification	Date	Name	Original		Replacement of / Replaced by	Scale 1:1			

Cable diagram

F09_002_VLU

Cable name -W2			cable type TPE					
remark			no. of conductors 4			cross-section 18		cable length 4
function text	Page / column	Target designation from	Connection point	conductor	Target designation to	Connection point	Page / column	function text
	&EFS/1.4	-BG03	1		=V2AR44UQ42KF1-KF1.13-X6	1	&EFS=V2AR44UQ42KF1/4.6	
	&EFS/1.4	-BG03	4		=V2AR44UQ42KF1-KF1.13-X6	4	&EFS=V2AR44UQ42KF1/4.7	
	&EFS/1.4	-BG03	3		=V2AR44UQ42KF1-KF1.13-X6	3	&EFS=V2AR44UQ42KF1/4.6	

			Date	1/24/2023	Volvo Trucks North America	Valiant TMS	Cable diagram =V2AR44UQ42BG0+V2AR44UQ42-W2	Drawing name: =2V01&EFS-EL_KF1	= V2AR44UQ42BG0
			Ed.	MKLEPADLO					+ V2AR44UQ42
			Appr		P6700 Framing - Cell 2V01, KF1	Scale 1:1		Document type: EMA / Project nr: 22-16152	Page 4 / 1630
Modification	Date	Name	Original		Replacement of / Replaced by				

Cable diagram

F09_002_VLU

Cable name -W1			cable type TPU					
remark			no. of conductors 5			cross-section 16		cable length 2
function text	Page / column	Target designation from	Connection point	conductor	Target designation to	Connection point	Page / column	function text
	&EFS/2.2	-KF1-X20	5		-R3.CP/CS	C4	&EFS/1.3	
	&EFS/2.1	-KF1-X20	1		-R3.CP/CS	C5	&EFS/1.3	
	&EFS/2.1	-KF1-X20	3		-R3.CP/CS	PE	&EFS/1.3	
	&EFS/2.2	-KF1-X20	4		-R3.CP/CS	C6	&EFS/1.3	
	&EFS/2.1	-KF1-X20	2		-R3.CP/CS	C7	&EFS/1.4	

			Date	1/24/2023	Volvo Trucks North America	Valiant TMS	Cable diagram =V2AR44UQ42KF1+V2AR44UQ42-W1	Drawing name: =2V01&EFS-EL_KF1	= V2AR44UQ42KF1
			Ed.	MKLEPADLO					+ V2AR44UQ42
			Appr		P6700 Framing - Cell 2V01, KF1			Document type: EMA	Project nr: 22-16152
Modification	Date	Name	Original		Replacement of / Replaced by	Scale 1:1			Page 1 / 1630

Cable diagram

F09_002_VLU

Cable name -WF1			cable type PROFINET Cable					
remark			no. of conductors 4			cross-section 22		cable length
function text	Page / column	Target designation from	Connection point	conductor	Target designation to	Connection point	Page / column	function text
	&EFS/2.3	-KF1-TP1			-R3.CP/CS	R3.PROFINET	&EFS/1.5	

			Date	1/24/2023	Volvo Trucks North America	Valiant TMS	Cable diagram =V2AR44UQ42KF1+V2AR44UQ42-WF1	Drawing name: =2V01&EFS-EL_KF1	= V2AR44UQ42KF1
			Ed.	MKLEPADLO					+ V2AR44UQ42
			Appr		P6700 Framing - Cell 2V01, KF1			Document type: EMA	Project nr: 22-16152
Modification	Date	Name	Original		Replacement of / Replaced by	Scale 1:1			Page 2 / 1630

Cable diagram

F09_002_VLU

Cable name -W1			cable type TPE					
remark			no. of conductors 4			cross-section 18		cable length 3
function text	Page / column	Target designation from	Connection point	conductor	Target designation to	Connection point	Page / column	function text
	&EFS=V2AR44UQ42KF1	=V2AR44UQ42KF1+V2AR44UQ42-KF1	1.11-X1		-BGS/R	1	&EFS=V2AR44UQ42UQ1	=V2AR44UQ42UQ1+V2AR44UQ42UQ1/1.0
	&EFS=V2AR44UQ42KF1	=V2AR44UQ42KF1+V2AR44UQ42-KF2	1.11-X1		-BGS/R	2	&EFS=V2AR44UQ42UQ1	=V2AR44UQ42UQ1+V2AR44UQ42UQ1/1.0
	&EFS=V2AR44UQ42KF1	=V2AR44UQ42KF1+V2AR44UQ42-KF3	1.11-X1		-BGS/R	3	&EFS=V2AR44UQ42UQ1	=V2AR44UQ42UQ1+V2AR44UQ42UQ1/1.1
	&EFS=V2AR44UQ42KF1	=V2AR44UQ42KF1+V2AR44UQ42-KF4	1.11-X1		-BGS/R	4	&EFS=V2AR44UQ42UQ1	=V2AR44UQ42UQ1+V2AR44UQ42UQ1/1.1

=V2AR44UQ42KF1+V2AR44UQ42/2

=V2AR44UQ42UQ2.1+.AR44UQ42UQ2.1/1

			Date	1/24/2023	Volvo Trucks North America	Valiant TMS	Cable diagram =V2AR44UQ42UQ1.1+V2AR44UQ42UQ1.1-W1	Drawing name: =2V01&EFS-EL_KF1	= V2AR44UQ42UQ1.1
			Ed.	MKLEPADLO					+ V2AR44UQ42UQ1.1
			Appr		P6700 Framing - Cell 2V01, KF1	Scale 1:1		Document type: EMA	Project nr: 22-16152
Modification	Date	Name	Original		Replacement of	Replaced by			Page 1 / 1630

Cable diagram

F09_002_VLU

Cable name -W1			cable type TPE					
remark			no. of conductors 4			cross-section 18		cable length 3
function text	Page / column	Target designation from	Connection point	conductor	Target designation to	Connection point	Page / column	function text
	&EFS=V2AR44UQ42KF1	=V2AR44UQ42KF1+V2AR44UQ42-KF1	1.11-X2		-BGS/R	1	&EFS=V2AR44UQ42UQ2+V2AR44UQ42UQ2/1.0	
	&EFS=V2AR44UQ42KF1	=V2AR44UQ42KF1+V2AR44UQ42-KF1	2.11-X2		-BGS/R	2	&EFS=V2AR44UQ42UQ2+V2AR44UQ42UQ2/1.0	
	&EFS=V2AR44UQ42KF1	=V2AR44UQ42KF1+V2AR44UQ42-KF1	3.11-X2		-BGS/R	3	&EFS=V2AR44UQ42UQ2+V2AR44UQ42UQ2/1.1	
	&EFS=V2AR44UQ42KF1	=V2AR44UQ42KF1+V2AR44UQ42-KF1	4.11-X2		-BGS/R	4	&EFS=V2AR44UQ42UQ2+V2AR44UQ42UQ2/1.1	

=V2AR44UQ42UQ1.1+.AR44UQ42UQ1.1/1

=V2AR44UQ42UQ2.2+.AR44UQ42UQ2.2/1

			Date	1/24/2023	Volvo Trucks North America	Valiant TMS	Cable diagram =V2AR44UQ42UQ2.1+V2AR44UQ42UQ2.1-W1	Drawing name: =2V01&EFS-EL_KF1	= V2AR44UQ42UQ2.1
			Ed.	MKLEPADLO					+ V2AR44UQ42UQ2.1
			Appr		P6700 Framing - Cell 2V01, KF1	Scale 1:1		Document type: EMA	Project nr: 22-16152
Modification	Date	Name	Original		Replacement of	Replaced by			Page 1 / 1630

Cable diagram

F09_002_VLU

Cable name -W1			cable type TPE					
remark			no. of conductors 4			cross-section 18		cable length 3
function text	Page / column	Target designation from	Connection point	conductor	Target designation to	Connection point	Page / column	function text
	&EFS=V2AR44UQ42KF1	=V2AR44UQ42KF1+V2AR44UQ42-KF1	1		1.11-X3	-BGS/R	1	&EFS=V2AR44UQ42UQ2+V2AR44UQ42UQ2/1.2
	&EFS=V2AR44UQ42KF1	=V2AR44UQ42KF1+V2AR44UQ42-KF1	2		1.11-X3	-BGS/R	2	&EFS=V2AR44UQ42UQ2+V2AR44UQ42UQ2/1.2
	&EFS=V2AR44UQ42KF1	=V2AR44UQ42KF1+V2AR44UQ42-KF1	3		1.11-X3	-BGS/R	3	&EFS=V2AR44UQ42UQ2+V2AR44UQ42UQ2/1.2
	&EFS=V2AR44UQ42KF1	=V2AR44UQ42KF1+V2AR44UQ42-KF1	4		1.11-X3	-BGS/R	4	&EFS=V2AR44UQ42UQ2+V2AR44UQ42UQ2/1.2

=V2AR44UQ42UQ2.1+.AR44UQ42UQ2.1/1

=V2AR44UQ42UQ3.1+.AR44UQ42UQ3.1/1

			Date	1/24/2023	Volvo Trucks North America	Valiant TMS	Cable diagram =V2AR44UQ42UQ2.2+V2AR44UQ42UQ2.2-W1	Drawing name: =2V01&EFS-EL_KF1	= V2AR44UQ42UQ2.2
			Ed.	MKLEPADLO					+ V2AR44UQ42UQ2.2
			Appr		P6700 Framing - Cell 2V01, KF1			Document type: EMA	Project nr: 22-16152
Modification	Date	Name	Original		Replacement of / Replaced by	Scale 1:1			Page 1 / 1630

Cable diagram

F09_002_VLU

Cable name -W1			cable type TPE					
remark			no. of conductors 4			cross-section 18		cable length 1
function text	Page / column	Target designation from	Connection point	conductor	Target designation to	Connection point	Page / column	function text
	&EFS=V2AR44UQ42KF1	=V2AR44UQ42KF1+V2AR44UQ42-KF1	1.11-X4		-BGS/R	1	&EFS=V2AR44UQ42UQ3+V2AR44UQ42UQ3/1.0	
	&EFS=V2AR44UQ42KF1	=V2AR44UQ42KF1+V2AR44UQ42-KF1	1.11-X4		-BGS/R	4	&EFS=V2AR44UQ42UQ3+V2AR44UQ42UQ3/1.1	
	&EFS=V2AR44UQ42KF1	=V2AR44UQ42KF1+V2AR44UQ42-KF1	1.11-X4		-BGS/R	3	&EFS=V2AR44UQ42UQ3+V2AR44UQ42UQ3/1.0	

=V2AR44UQ42UQ2.2+.AR44UQ42UQ2.2/1

=V2AR44UQ42UQ4.1+.AR44UQ42UQ4.1/1

			Date	1/24/2023	Volvo Trucks North America	Valiant TMS	Cable diagram =V2AR44UQ42UQ3.1+V2AR44UQ42UQ3.1-W1	Drawing name: =2V01&EFS-EL_KF1	= V2AR44UQ42UQ3.1
			Ed.	MKLEPADLO					+ V2AR44UQ42UQ3.1
			Appr		P6700 Framing - Cell 2V01, KF1	Scale 1:1		Document type: EMA	Project nr: 22-16152
Modification	Date	Name	Original		Replacement of / Replaced by				Page 1 / 1630

Cable diagram

F09_002_VLU

Cable name -W1			cable type TPE					
remark			no. of conductors 4			cross-section 18		cable length 1
function text	Page / column	Target designation from	Connection point	conductor	Target designation to	Connection point	Page / column	function text
	&EFS=V2AR44UQ42KF1	=V2AR44UQ42KF1-X5+V2AR44UQ42-KF1	1.11-X5		-BGS/R	1	&EFS=V2AR44UQ42UQ4+V2AR44UQ42UQ4/1.0	
	&EFS=V2AR44UQ42KF1	=V2AR44UQ42KF1-X5+V2AR44UQ42-KF2	1.11-X5		-BGS/R	2	&EFS=V2AR44UQ42UQ4+V2AR44UQ42UQ4/1.0	
	&EFS=V2AR44UQ42KF1	=V2AR44UQ42KF1-X5+V2AR44UQ42-KF3	1.11-X5		-BGS/R	3	&EFS=V2AR44UQ42UQ4+V2AR44UQ42UQ4/1.1	
	&EFS=V2AR44UQ42KF1	=V2AR44UQ42KF1-X5+V2AR44UQ42-KF4	1.11-X5		-BGS/R	4	&EFS=V2AR44UQ42UQ4+V2AR44UQ42UQ4/1.1	

=V2AR44UQ42UQ3.1+.AR44UQ42UQ3.1/1

=V2AR44UQ42UQ4.2+.AR44UQ42UQ4.2/1

			Date	1/24/2023	Volvo Trucks North America		Valiant TMS	Cable diagram =V2AR44UQ42UQ4.1+V2AR44UQ42UQ4.1-W1	Drawing name: =2V01&EFS-EL_KF1	= V2AR44UQ42UQ4.1
			Ed.	MKLEPADLO						+ V2AR44UQ42UQ4.1
			Appr		P6700 Framing - Cell 2V01, KF1		Scale 1:1		Document type: EMA	Project nr: 22-16152
Modification	Date	Name	Original		Replacement of	Replaced by				Page 1 / 1630

Cable diagram

F09_002_VLU

Cable name -W1			cable type TPE					
remark			no. of conductors 4			cross-section 18		cable length 1
function text	Page / column	Target designation from	Connection point	conductor	Target designation to	Connection point	Page / column	function text
	&EFS=V2AR44UQ42KF1	=V2AR44UQ42KF1.6+V2AR44UQ42-KF1	1		1.11-X6	1	&EFS=V2AR44UQ42UQ4+V2AR44UQ42UQ4/1.2	
	&EFS=V2AR44UQ42KF1	=V2AR44UQ42KF1.6+V2AR44UQ42-KF1	2		1.11-X6	2	&EFS=V2AR44UQ42UQ4+V2AR44UQ42UQ4/1.2	
	&EFS=V2AR44UQ42KF1	=V2AR44UQ42KF1.6+V2AR44UQ42-KF1	3		1.11-X6	3	&EFS=V2AR44UQ42UQ4+V2AR44UQ42UQ4/1.2	
	&EFS=V2AR44UQ42KF1	=V2AR44UQ42KF1.7+V2AR44UQ42-KF1	4		1.11-X6	4	&EFS=V2AR44UQ42UQ4+V2AR44UQ42UQ4/1.2	

=V2AR44UQ42UQ4.1+.AR44UQ42UQ4.1/1

=V2AR44UQ42UQ5.1+.AR44UQ42UQ5.1/1

			Date	1/24/2023	Volvo Trucks North America	Valiant TMS	Cable diagram =V2AR44UQ42UQ4.2+V2AR44UQ42UQ4.2-W1	Drawing name: =2V01&EFS-EL_KF1	= V2AR44UQ42UQ4.2
			Ed.	MKLEPADLO					+ V2AR44UQ42UQ4.2
			Appr		P6700 Framing - Cell 2V01, KF1	Scale 1:1		Document type: EMA	Project nr: 22-16152
Modification	Date	Name	Original		Replacement of / Replaced by				Page 1 / 1630

Cable diagram

F09_002_VLU

Cable name -W1			cable type TPE					
remark			no. of conductors 4			cross-section 18		cable length 2
function text	Page / column	Target designation from	Connection point	conductor	Target designation to	Connection point	Page / column	function text
	&EFS=V2AR44UQ42KF1	=V2AR44UQ42KF1.7+V2AR44UQ42-KF1	1		1.11-X7 -BGS/R	1	&EFS=V2AR44UQ42UQ5+V2AR44UQ42UQ5/1.0	
	&EFS=V2AR44UQ42KF1	=V2AR44UQ42KF1.7+V2AR44UQ42-KF1	2		1.11-X7 -BGS/R	2	&EFS=V2AR44UQ42UQ5+V2AR44UQ42UQ5/1.0	
	&EFS=V2AR44UQ42KF1	=V2AR44UQ42KF1.8+V2AR44UQ42-KF1	3		1.11-X7 -BGS/R	3	&EFS=V2AR44UQ42UQ5+V2AR44UQ42UQ5/1.1	
	&EFS=V2AR44UQ42KF1	=V2AR44UQ42KF1.8+V2AR44UQ42-KF1	4		1.11-X7 -BGS/R	4	&EFS=V2AR44UQ42UQ5+V2AR44UQ42UQ5/1.1	

=V2AR44UQ42UQ4.2+.AR44UQ42UQ4.2/1

=V2AR44UQ42UQ5.2+.AR44UQ42UQ5.2/1

			Date	1/24/2023	Volvo Trucks North America	Valiant TMS	Cable diagram =V2AR44UQ42UQ5.1+V2AR44UQ42UQ5.1-W1	Drawing name: =2V01&EFS-EL_KF1	= V2AR44UQ42UQ5.1
			Ed.	MKLEPADLO					+ V2AR44UQ42UQ5.1
			Appr		P6700 Framing - Cell 2V01, KF1	Scale 1:1		Document type: EMA	Project nr: 22-16152
Modification	Date	Name	Original		Replacement of / Replaced by				Page 1 / 1630

Cable diagram

F09_002_VLU

Cable name -W1			cable type TPE					
remark			no. of conductors 4			cross-section 18		cable length 2
function text	Page / column	Target designation from	Connection point	conductor	Target designation to	Connection point	Page / column	function text
	&EFS=V2AR44UQ42KF1+V2AR44UQ42KF1	=V2AR44UQ42KF1+V2AR44UQ42-KF1.11-X8	1		-BGS/R	1	&EFS=V2AR44UQ42UQ5+V2AR44UQ42UQ5/1.2	
	&EFS=V2AR44UQ42KF1+V2AR44UQ42KF1	=V2AR44UQ42KF1+V2AR44UQ42-KF1.11-X8	2		-BGS/R	2	&EFS=V2AR44UQ42UQ5+V2AR44UQ42UQ5/1.2	
	&EFS=V2AR44UQ42KF1+V2AR44UQ42KF1	=V2AR44UQ42KF1+V2AR44UQ42-KF1.11-X8	3		-BGS/R	3	&EFS=V2AR44UQ42UQ5+V2AR44UQ42UQ5/1.2	
	&EFS=V2AR44UQ42KF1+V2AR44UQ42KF1	=V2AR44UQ42KF1+V2AR44UQ42-KF1.11-X8	4		-BGS/R	4	&EFS=V2AR44UQ42UQ5+V2AR44UQ42UQ5/1.2	

=V2AR44UQ42UQ5.1+.AR44UQ42UQ5.1/1

=V2AR44UQ42UQ6.1+.AR44UQ42UQ6.1/1

			Date	1/24/2023	Volvo Trucks North America	Valiant TMS	Cable diagram =V2AR44UQ42UQ5.2+V2AR44UQ42UQ5.2-W1	Drawing name: =2V01&EFS-EL_KF1	= V2AR44UQ42UQ5.2 + V2AR44UQ42UQ5.2
			Ed.	MKLEPADLO	P6700 Framing - Cell 2V01, KF1				
			Appr					Document type: EMA	Project nr: 22-16152
Modification	Date	Name	Original		Replacement of / Replaced by	Scale 1:1			Page 1 / 1630

Cable diagram

F09_002_VLU

Cable name -W1			cable type TPE					
remark			no. of conductors 4			cross-section 18		cable length 2
function text	Page / column	Target designation from	Connection point	conductor	Target designation to	Connection point	Page / column	function text
	&EFS=V2AR44UQ42KF1	=**V2AR44UQ42KF1**+V2AR44UQ42-KF1	1.12-X1		-BGS/R	1	&EFS=V2AR44UQ42UQ6	+V2AR44UQ42UQ6/1.0
	&EFS=V2AR44UQ42KF1	=**V2AR44UQ42KF1**+V2AR44UQ42-KF1	2.12-X1		-BGS/R	2	&EFS=V2AR44UQ42UQ6	+V2AR44UQ42UQ6/1.0
	&EFS=V2AR44UQ42KF1	=**V2AR44UQ42KF1**+V2AR44UQ42-KF1	3.12-X1		-BGS/R	3	&EFS=V2AR44UQ42UQ6	+V2AR44UQ42UQ6/1.1
	&EFS=V2AR44UQ42KF1	=**V2AR44UQ42KF1**+V2AR44UQ42-KF1	4.12-X1		-BGS/R	4	&EFS=V2AR44UQ42UQ6	+V2AR44UQ42UQ6/1.1

=V2AR44UQ42UQ5.2+.AR44UQ42UQ5.2/1

=V2AR44UQ42UQ6.2+.AR44UQ42UQ6.2/1

			Date	1/24/2023	Volvo Trucks North America	Valiant TMS	Cable diagram =V2AR44UQ42UQ6.1+V2AR44UQ42UQ6.1-W1	Drawing name: =2V01&EFS-EL_KF1	= V2AR44UQ42UQ6.1
			Ed.	MKLEPADLO					+ V2AR44UQ42UQ6.1
			Appr		P6700 Framing - Cell 2V01, KF1	Scale 1:1		Document type: EMA	Project nr: 22-16152
Modification	Date	Name	Original		Replacement of	Replaced by			Page 1 / 1630

Cable diagram

F09_002_VLU

Cable name -W1			cable type TPE					
remark			no. of conductors 4			cross-section 18		cable length 2
function text	Page / column	Target designation from	Connection point	conductor	Target designation to	Connection point	Page / column	function text
	&EFS=V2AR44UQ42KF1	=**V2AR44UQ42KF1**+V2AR44UQ42-KF1	1.12-X2		-BGS/R	1	&EFS=V2AR44UQ42UQ6	+V2AR44UQ42UQ6/1.2
	&EFS=V2AR44UQ42KF1	=**V2AR44UQ42KF1**+V2AR44UQ42-KF1	2.12-X2		-BGS/R	2	&EFS=V2AR44UQ42UQ6	+V2AR44UQ42UQ6/1.2
	&EFS=V2AR44UQ42KF1	=**V2AR44UQ42KF1**+V2AR44UQ42-KF1	3.12-X2		-BGS/R	3	&EFS=V2AR44UQ42UQ6	+V2AR44UQ42UQ6/1.2
	&EFS=V2AR44UQ42KF1	=**V2AR44UQ42KF1**+V2AR44UQ42-KF1	4.12-X2		-BGS/R	4	&EFS=V2AR44UQ42UQ6	+V2AR44UQ42UQ6/1.2

=V2AR44UQ42UQ6.1+.AR44UQ42UQ6.1/1

=V2AR44UQ42UQ6.3+.AR44UQ42UQ6.3/1

			Date	1/24/2023	Volvo Trucks North America	Valiant TMS	Cable diagram =V2AR44UQ42UQ6.2+V2AR44UQ42UQ6.2-W1	Drawing name: =2V01&EFS-EL_KF1	= V2AR44UQ42UQ6.2
			Ed.	MKLEPADLO					+ V2AR44UQ42UQ6.2
			Appr		P6700 Framing - Cell 2V01, KF1	Scale 1:1		Document type: EMA	Project nr: 22-16152
Modification	Date	Name	Original		Replacement of	Replaced by			Page 1 / 1630

Cable diagram

F09_002_VLU

Cable name -W1			cable type TPE					
remark			no. of conductors 4			cross-section 18		cable length 2
function text	Page / column	Target designation from	Connection point	conductor	Target designation to	Connection point	Page / column	function text
	&EFS=V2AR44UQ42KF1	=**V2AR44UQ42KF1**+V2AR44UQ42-KF1	1.12-X3		-BGS/R	1	&EFS=V2AR44UQ42UQ6	+V2AR44UQ42UQ6/1.4
	&EFS=V2AR44UQ42KF1	=**V2AR44UQ42KF1**+V2AR44UQ42-KF1	2.12-X3		-BGS/R	2	&EFS=V2AR44UQ42UQ6	+V2AR44UQ42UQ6/1.4
	&EFS=V2AR44UQ42KF1	=**V2AR44UQ42KF1**+V2AR44UQ42-KF1	3.12-X3		-BGS/R	3	&EFS=V2AR44UQ42UQ6	+V2AR44UQ42UQ6/1.4
	&EFS=V2AR44UQ42KF1	=**V2AR44UQ42KF1**+V2AR44UQ42-KF1	4.12-X3		-BGS/R	4	&EFS=V2AR44UQ42UQ6	+V2AR44UQ42UQ6/1.4

=V2AR44UQ42UQ6.2+.AR44UQ42UQ6.2/1

=V2AR44UQ42UQ7.1+.AR44UQ42UQ7.1/1

			Date	1/24/2023	Volvo Trucks North America	Valiant TMS	Cable diagram =V2AR44UQ42UQ6.3+V2AR44UQ42UQ6.3-W1	Drawing name: =2V01&EFS-EL_KF1	= V2AR44UQ42UQ6.3
			Ed.	MKLEPADLO					+ V2AR44UQ42UQ6.3
			Appr		P6700 Framing - Cell 2V01, KF1	Scale 1:1		Document type: EMA	Project nr: 22-16152
Modification	Date	Name	Original		Replacement of / Replaced by				Page 1 / 1630

Cable diagram

F09_002_VLU

Cable name -W1			cable type TPE					
remark			no. of conductors 4			cross-section 18		cable length 3
function text	Page / column	Target designation from	Connection point	conductor	Target designation to	Connection point	Page / column	function text
	&EFS=V2AR44UQ42KF1	=V2AR44UQ42KF1+V2AR44UQ42-KF1	1.12-X4		-BGS/R	1	&EFS=V2AR44UQ42UQ7+V2AR44UQ42UQ7/1.0	
	&EFS=V2AR44UQ42KF1	=V2AR44UQ42KF1+V2AR44UQ42-KF1	2.12-X4		-BGS/R	2	&EFS=V2AR44UQ42UQ7+V2AR44UQ42UQ7/1.0	
	&EFS=V2AR44UQ42KF1	=V2AR44UQ42KF1+V2AR44UQ42-KF1	3.12-X4		-BGS/R	3	&EFS=V2AR44UQ42UQ7+V2AR44UQ42UQ7/1.1	
	&EFS=V2AR44UQ42KF1	=V2AR44UQ42KF1+V2AR44UQ42-KF1	4.12-X4		-BGS/R	4	&EFS=V2AR44UQ42UQ7+V2AR44UQ42UQ7/1.1	

=V2AR44UQ42UQ6.3+.AR44UQ42UQ6.3/1

=V2AR44UQ42UQ7.2+.AR44UQ42UQ7.2/1

			Date	1/24/2023	Volvo Trucks North America	Valiant TMS	Cable diagram =V2AR44UQ42UQ7.1+V2AR44UQ42UQ7.1-W1	Drawing name: =2V01&EFS-EL_KF1	= V2AR44UQ42UQ7.1
			Ed.	MKLEPADLO					+ V2AR44UQ42UQ7.1
			Appr		P6700 Framing - Cell 2V01, KF1	Scale 1:1		Document type: EMA	Project nr: 22-16152
Modification	Date	Name	Original		Replacement of / Replaced by				Page 1 / 1630

Cable diagram

F09_002_VLU

Cable name -W1			cable type TPE					
remark			no. of conductors 4			cross-section 18		cable length 3
function text	Page / column	Target designation from	Connection point	conductor	Target designation to	Connection point	Page / column	function text
	&EFS=V2AR44UQ42KF1	=V2AR44UQ42KF1+V2AR44UQ42-KF1	1.12-X5		-BGS/R	1	&EFS=V2AR44UQ42UQ7	+V2AR44UQ42UQ7/1.2
	&EFS=V2AR44UQ42KF1	=V2AR44UQ42KF1+V2AR44UQ42-KF1	2.12-X5		-BGS/R	2	&EFS=V2AR44UQ42UQ7	+V2AR44UQ42UQ7/1.2
	&EFS=V2AR44UQ42KF1	=V2AR44UQ42KF1+V2AR44UQ42-KF1	3.12-X5		-BGS/R	3	&EFS=V2AR44UQ42UQ7	+V2AR44UQ42UQ7/1.2
	&EFS=V2AR44UQ42KF1	=V2AR44UQ42KF1+V2AR44UQ42-KF1	4.12-X5		-BGS/R	4	&EFS=V2AR44UQ42UQ7	+V2AR44UQ42UQ7/1.2

=V2AR44UQ42UQ7.1+.AR44UQ42UQ7.1/1

=V2AR44UQ42UQ8.1+.AR44UQ42UQ8.1/1

			Date	1/24/2023	Volvo Trucks North America	Valiant TMS	Cable diagram =V2AR44UQ42UQ7.2+V2AR44UQ42UQ7.2-W1	Drawing name: =2V01&EFS-EL_KF1	= V2AR44UQ42UQ7.2
			Ed.	MKLEPADLO					+ V2AR44UQ42UQ7.2
			Appr		P6700 Framing - Cell 2V01, KF1	Scale 1:1		Document type: EMA	Project nr: 22-16152
Modification	Date	Name	Original		Replacement of / Replaced by				Page 1 / 1630

Cable diagram

F09_002_VLU

Cable name -W1			cable type TPE					
remark			no. of conductors 4			cross-section 18		cable length 1
function text	Page / column	Target designation from	Connection point	conductor	Target designation to	Connection point	Page / column	function text
	&EFS=V2AR44UQ42KF1	=**V2AR44UQ42KF1**+V2AR44UQ42-KF1	1.12-X6		-BGS/R	1	&EFS=V2AR44UQ42UQ8+V2AR44UQ42UQ8/1.0	
	&EFS=V2AR44UQ42KF1	=**V2AR44UQ42KF1**+V2AR44UQ42-KF1	2.12-X6		-BGS/R	2	&EFS=V2AR44UQ42UQ8+V2AR44UQ42UQ8/1.0	
	&EFS=V2AR44UQ42KF1	=**V2AR44UQ42KF1**+V2AR44UQ42-KF1	3.12-X6		-BGS/R	3	&EFS=V2AR44UQ42UQ8+V2AR44UQ42UQ8/1.1	
	&EFS=V2AR44UQ42KF1	=**V2AR44UQ42KF1**+V2AR44UQ42-KF1	4.12-X6		-BGS/R	4	&EFS=V2AR44UQ42UQ8+V2AR44UQ42UQ8/1.1	

=V2AR44UQ42UQ7.2+.AR44UQ42UQ7.2/1

=V2AR44UQ42UQ8.2+.AR44UQ42UQ8.2/1

			Date	1/24/2023	Volvo Trucks North America	Valiant TMS	Cable diagram =V2AR44UQ42UQ8.1+V2AR44UQ42UQ8.1-W1	Drawing name: =2V01&EFS-EL_KF1	= V2AR44UQ42UQ8.1
			Ed.	MKLEPADLO					+ V2AR44UQ42UQ8.1
			Appr		P6700 Framing - Cell 2V01, KF1	Scale 1:1		Document type: EMA	Project nr: 22-16152
Modification	Date	Name	Original		Replacement of / Replaced by				Page 1 / 1630

Cable diagram

F09_002_VLU

Cable name -W1			cable type TPE					
remark			no. of conductors 4			cross-section 18		cable length 1
function text	Page / column	Target designation from	Connection point	conductor	Target designation to	Connection point	Page / column	function text
	&EFS=V2AR44UQ42KF1	=V2AR44UQ42KF1-X7:1+V2AR44UQ42-KF1	1.12-X7		-BGS/R	1	&EFS=V2AR44UQ42UQ8+V2AR44UQ42UQ8/1.2	
	&EFS=V2AR44UQ42KF1	=V2AR44UQ42KF1-X7:2+V2AR44UQ42-KF1	2.12-X7		-BGS/R	2	&EFS=V2AR44UQ42UQ8+V2AR44UQ42UQ8/1.2	
	&EFS=V2AR44UQ42KF1	=V2AR44UQ42KF1-X7:3+V2AR44UQ42-KF1	3.12-X7		-BGS/R	3	&EFS=V2AR44UQ42UQ8+V2AR44UQ42UQ8/1.2	
	&EFS=V2AR44UQ42KF1	=V2AR44UQ42KF1-X7:4+V2AR44UQ42-KF1	4.12-X7		-BGS/R	4	&EFS=V2AR44UQ42UQ8+V2AR44UQ42UQ8/1.2	

=V2AR44UQ42UQ8.1+.AR44UQ42UQ8.1/1

=V2AR44UQ42UQ9.1+.AR44UQ42UQ9.1/1

			Date	1/24/2023	Volvo Trucks North America	Valiant TMS	Cable diagram =V2AR44UQ42UQ8.2+V2AR44UQ42UQ8.2-W1	Drawing name: =2V01&EFS-EL_KF1	= V2AR44UQ42UQ8.2
			Ed.	MKLEPADLO					+ V2AR44UQ42UQ8.2
			Appr		P6700 Framing - Cell 2V01, KF1	Scale 1:1		Document type: EMA	Project nr: 22-16152
Modification	Date	Name	Original		Replacement of	Replaced by			Page 1 / 1630

Cable diagram

F09_002_VLU

Cable name -W1			cable type TPE					
remark			no. of conductors 4			cross-section 18		cable length 4
function text	Page / column	Target designation from	Connection point	conductor	Target designation to	Connection point	Page / column	function text
	&EFS=V2AR44UQ42KF1+V2AR44UQ42KF1.8	=V2AR44UQ42KF1+V2AR44UQ42-KF1.12-X8	1		-BGS/R	1	&EFS=V2AR44UQ42UQ9+V2AR44UQ42UQ9/1.0	
	&EFS=V2AR44UQ42KF1+V2AR44UQ42KF1.9	=V2AR44UQ42KF1+V2AR44UQ42-KF1.12-X8	2		-BGS/R	2	&EFS=V2AR44UQ42UQ9+V2AR44UQ42UQ9/1.0	
	&EFS=V2AR44UQ42KF1+V2AR44UQ42KF1.9	=V2AR44UQ42KF1+V2AR44UQ42-KF1.12-X8	3		-BGS/R	3	&EFS=V2AR44UQ42UQ9+V2AR44UQ42UQ9/1.1	
	&EFS=V2AR44UQ42KF1+V2AR44UQ42KF1.9	=V2AR44UQ42KF1+V2AR44UQ42-KF1.12-X8	4		-BGS/R	4	&EFS=V2AR44UQ42UQ9+V2AR44UQ42UQ9/1.1	

=V2AR44UQ42UQ8.2+.AR44UQ42UQ8.2/1

=V2AR44UQ42UQ9.2+.AR44UQ42UQ9.2/1

			Date	1/24/2023	Volvo Trucks North America	Valiant TMS	Cable diagram =V2AR44UQ42UQ9.1+V2AR44UQ42UQ9.1-W1	Drawing name: =2V01&EFS-EL_KF1	= V2AR44UQ42UQ9.1 + V2AR44UQ42UQ9.1
			Ed.	MKLEPADLO	P6700 Framing - Cell 2V01, KF1				
			Appr					Document type: EMA	Project nr: 22-16152
Modification	Date	Name	Original		Replacement of / Replaced by	Scale 1:1			Page 1 / 1630

Cable diagram

F09_002_VLU

Cable name -W1			cable type TPE					
remark			no. of conductors 4			cross-section 18		cable length 4
function text	Page / column	Target designation from	Connection point	conductor	Target designation to	Connection point	Page / column	function text
	&EFS=V2AR44UQ42KF1	=**V2AR44UQ42**/KF1+V2AR44UQ42-KF1	1		1.13-X1	1	-BGS/R	&EFS=V2AR44UQ42UQ9+V2AR44UQ42UQ9/1.2
	&EFS=V2AR44UQ42KF1	=**V2AR44UQ42**/KF1+V2AR44UQ42-KF2	2		1.13-X1	2	-BGS/R	&EFS=V2AR44UQ42UQ9+V2AR44UQ42UQ9/1.2
	&EFS=V2AR44UQ42KF1	=**V2AR44UQ42**/KF1+V2AR44UQ42-KF3	3		1.13-X1	3	-BGS/R	&EFS=V2AR44UQ42UQ9+V2AR44UQ42UQ9/1.2
	&EFS=V2AR44UQ42KF1	=**V2AR44UQ42**/KF1+V2AR44UQ42-KF4	4		1.13-X1	4	-BGS/R	&EFS=V2AR44UQ42UQ9+V2AR44UQ42UQ9/1.2

			Date	1/24/2023	Volvo Trucks North America	Valiant TMS	Cable diagram =V2AR44UQ42UQ9.2+V2AR44UQ42UQ9.2-W1	Drawing name: =2V01&EFS-EL_KF1	= V2AR44UQ42UQ9.2
			Ed.	MKLEPADLO					+ V2AR44UQ42UQ9.2
			Appr		P6700 Framing - Cell 2V01, KF1			Document type: EMA	Project nr: 22-16152
Modification	Date	Name	Original		Replacement of / Replaced by	Scale 1:1			Page 1 / 1630

Cable diagram

F09_002_VLU

Cable name -W1			cable type TPE					
remark			no. of conductors 4			cross-section 18		cable length 0.5
function text	Page / column	Target designation from	Connection point	conductor	Target designation to	Connection point	Page / column	function text
	&EFS/1.0	-XG1/2	P1:1		=V2AR44UQ43KF1-KF1.13-X1	1	&EFS=V2AR44UQ43KF1/4.0	
	&EFS/1.1	-XG1/2	P1:3		=V2AR44UQ43KF1-KF1.13-X1	3	&EFS=V2AR44UQ43KF1/4.1	
	&EFS/1.1	-XG1/2	P1:4		=V2AR44UQ43KF1-KF1.13-X1	4	&EFS=V2AR44UQ43KF1/4.1	
	&EFS/1.1	-XG1/2	P1:2		=V2AR44UQ43KF1-KF1.13-X1	2	&EFS=V2AR44UQ43KF1/4.0	

			Date	1/24/2023	Volvo Trucks North America	Valiant TMS	Cable diagram =V2AR44UQ43BG0+V2AR44UQ43-W1	Drawing name: =2V01&EFS-EL_KF1	= V2AR44UQ43BG0
			Ed.	MKLEPADLO					+ V2AR44UQ43
			Appr		P6700 Framing - Cell 2V01, KF1			Document type: EMA	Project nr: 22-16152 Page 1
Modification	Date	Name	Original		Replacement of / Replaced by	Scale 1:1			1630

Cable diagram

F09_002_VLU

Cable name -W1.1			cable type TPE					
remark			no. of conductors 4			cross-section 18		cable length 2
function text	Page / column	Target designation from	Connection point	conductor	Target designation to	Connection point	Page / column	function text
	&EFS/1.0	-BG01	1		-XG1/2	J1:1	&EFS/1.0	
	&EFS/1.0	-BG01	4		-XG1/2	J1:4	&EFS/1.1	
	&EFS/1.1	-BG01	3		-XG1/2	J1:3	&EFS/1.1	

			Date	1/24/2023	Volvo Trucks North America	Valiant TMS	Cable diagram =V2AR44UQ43BG0+V2AR44UQ43-W1.1	Drawing name: =2V01&EFS-EL_KF1	= V2AR44UQ43BG0
			Ed.	MKLEPADLO					+ V2AR44UQ43
			Appr		P6700 Framing - Cell 2V01, KF1			Document type: EMA	Project nr: 22-16152
Modification	Date	Name	Original		Replacement of / Replaced by	Scale 1:1			Page 2 / 1630

Cable diagram

F09_002_VLU

Cable name -W1.2			cable type TPE					
remark			no. of conductors 4			cross-section 18		cable length 2
function text	Page / column	Target designation from	Connection point	conductor	Target designation to	Connection point	Page / column	function text
	&EFS/1.1	-BG02	1		-XG1/2	J2:1	&EFS/1.1	
	&EFS/1.1	-BG02	4		-XG1/2	J2:4	&EFS/1.2	
	&EFS/1.2	-BG02	3		-XG1/2	J2:3	&EFS/1.2	

			Date	1/24/2023	Volvo Trucks North America	Valiant TMS	Cable diagram =V2AR44UQ43BG0+V2AR44UQ43-W1.2	Drawing name: =2V01&EFS-EL_KF1	= V2AR44UQ43BG0
			Ed.	MKLEPADLO					+ V2AR44UQ43
			Appr		P6700 Framing - Cell 2V01, KF1			Document type: EMA	Project nr: 22-16152
Modification	Date	Name	Original		Replacement of / Replaced by	Scale 1:1			Page 3 / 1630

Cable diagram

F09_002_VLU

Cable name -W1			cable type TPU					
remark			no. of conductors 5			cross-section 16		cable length 2
function text	Page / column	Target designation from	Connection point	conductor	Target designation to	Connection point	Page / column	function text
	&EFS/2.2	-KF1-X20	5		-R3.CP/CS	C4	&EFS/1.3	
	&EFS/2.1	-KF1-X20	1		-R3.CP/CS	C5	&EFS/1.3	
	&EFS/2.1	-KF1-X20	3		-R3.CP/CS	PE	&EFS/1.3	
	&EFS/2.2	-KF1-X20	4		-R3.CP/CS	C6	&EFS/1.3	
	&EFS/2.1	-KF1-X20	2		-R3.CP/CS	C7	&EFS/1.4	

			Date	1/24/2023	Volvo Trucks North America	Valiant TMS	Cable diagram =V2AR44UQ43KF1+V2AR44UQ43-W1	Drawing name: =2V01&EFS-EL_KF1	= V2AR44UQ43KF1
			Ed.	MKLEPADLO					+ V2AR44UQ43
			Appr		P6700 Framing - Cell 2V01, KF1			Document type: EMA	Project nr: 22-16152
Modification	Date	Name	Original		Replacement of / Replaced by	Scale 1:1			Page 1 / 1630

Cable diagram

F09_002_VLU

Cable name -WF1			cable type PROFINET Cable					
remark			no. of conductors 4			cross-section 22		cable length
function text	Page / column	Target designation from	Connection point	conductor	Target designation to	Connection point	Page / column	function text
	&EFS/2.3	-KF1-TP1			-R3.CP/CS	R3.PROFINET	&EFS/1.5	

			Date	1/24/2023	Volvo Trucks North America	Valiant TMS	Cable diagram =V2AR44UQ43KF1+V2AR44UQ43-WF1	Drawing name: =2V01&EFS-EL_KF1	= V2AR44UQ43KF1
			Ed.	MKLEPADLO					+ V2AR44UQ43
			Appr		P6700 Framing - Cell 2V01, KF1	Scale 1:1		Document type: EMA / Project nr: 22-16152	Page 2 / 1630
Modification	Date	Name	Original		Replacement of / Replaced by				

Cable diagram

F09_002_VLU

Cable name -W1			cable type TPE					
remark			no. of conductors 4			cross-section 18		cable length 2
function text	Page / column	Target designation from	Connection point	conductor	Target designation to	Connection point	Page / column	function text
	&EFS=V2AR44UQ43KF1	=**V2AR44UQ43/K2.0**+V2AR44UQ43-KF1	1.11-X1		-BGS/R	1	&EFS=V2AR44UQ43UQ1	=V2AR44UQ43UQ1+V2AR44UQ43UQ1/1.0
	&EFS=V2AR44UQ43KF1	=**V2AR44UQ43/K2.0**+V2AR44UQ43-KF2	1.11-X1		-BGS/R	2	&EFS=V2AR44UQ43UQ1	=V2AR44UQ43UQ1+V2AR44UQ43UQ1/1.0
	&EFS=V2AR44UQ43KF1	=**V2AR44UQ43/K2.1**+V2AR44UQ43-KF3	1.11-X1		-BGS/R	3	&EFS=V2AR44UQ43UQ1	=V2AR44UQ43UQ1+V2AR44UQ43UQ1/1.1
	&EFS=V2AR44UQ43KF1	=**V2AR44UQ43/K2.1**+V2AR44UQ43-KF4	1.11-X1		-BGS/R	4	&EFS=V2AR44UQ43UQ1	=V2AR44UQ43UQ1+V2AR44UQ43UQ1/1.1

			Date	1/24/2023	Volvo Trucks North America	Valiant TMS	Cable diagram =V2AR44UQ43UQ1.1+V2AR44UQ43UQ1.1-W1	Drawing name: =2V01&EFS-EL_KF1	= V2AR44UQ43UQ1.1
			Ed.	MKLEPADLO					+ V2AR44UQ43UQ1.1
			Appr		P6700 Framing - Cell 2V01, KF1			Document type: EMA	Project nr: 22-16152
Modification	Date	Name	Original		Replacement of / Replaced by	Scale 1:1			Page 1 / 1630

Cable diagram

F09_002_VLU

Cable name -W1			cable type TPE					
remark			no. of conductors 4			cross-section 18		cable length 1
function text	Page / column	Target designation from	Connection point	conductor	Target designation to	Connection point	Page / column	function text
	&EFS=V2AR44UQ43KF1	=V2AR44UQ43KF1	1		-BGS/R	1	&EFS=V2AR44UQ43UQ2	+V2AR44UQ43UQ2/1.0
	&EFS=V2AR44UQ43KF1	=V2AR44UQ43KF1	2		-BGS/R	2	&EFS=V2AR44UQ43UQ2	+V2AR44UQ43UQ2/1.0
	&EFS=V2AR44UQ43KF1	=V2AR44UQ43KF1	3		-BGS/R	3	&EFS=V2AR44UQ43UQ2	+V2AR44UQ43UQ2/1.1
	&EFS=V2AR44UQ43KF1	=V2AR44UQ43KF1	4		-BGS/R	4	&EFS=V2AR44UQ43UQ2	+V2AR44UQ43UQ2/1.1

			Date	1/24/2023	Volvo Trucks North America	Valiant TMS	Cable diagram =V2AR44UQ43UQ2.1+V2AR44UQ43UQ2.1-W1	Drawing name: =2V01&EFS-EL_KF1	= V2AR44UQ43UQ2.1
			Ed.	MKLEPADLO					+ V2AR44UQ43UQ2.1
			Appr		P6700 Framing - Cell 2V01, KF1	Scale 1:1		Document type: EMA	Project nr: 22-16152
Modification	Date	Name	Original		Replacement of	Replaced by			Page 1 / 1630

Cable diagram

F09_002_VLU

Cable name -W1			cable type TPE					
remark			no. of conductors 4			cross-section 18		cable length 1
function text	Page / column	Target designation from	Connection point	conductor	Target designation to	Connection point	Page / column	function text
	&EFS=V2AR44UQ43KF1	=V2AR44UQ43KF1+V2AR44UQ43-KF1	1		1.11-X3	1	-BGS/R	&EFS=V2AR44UQ43UQ2+V2AR44UQ43UQ2/1.2
	&EFS=V2AR44UQ43KF1	=V2AR44UQ43KF1+V2AR44UQ43-KF1	2		1.11-X3	2	-BGS/R	&EFS=V2AR44UQ43UQ2+V2AR44UQ43UQ2/1.2
	&EFS=V2AR44UQ43KF1	=V2AR44UQ43KF1+V2AR44UQ43-KF1	3		1.11-X3	3	-BGS/R	&EFS=V2AR44UQ43UQ2+V2AR44UQ43UQ2/1.2
	&EFS=V2AR44UQ43KF1	=V2AR44UQ43KF1+V2AR44UQ43-KF1	4		1.11-X3	4	-BGS/R	&EFS=V2AR44UQ43UQ2+V2AR44UQ43UQ2/1.2

=V2AR44UQ43UQ2.1+.AR44UQ43UQ2.1/1

=V2AR44UQ43UQ2.3+.AR44UQ43UQ2.3/1

			Date	1/24/2023	Volvo Trucks North America	Valiant TMS	Cable diagram =V2AR44UQ43UQ2.2+V2AR44UQ43UQ2.2-W1	Drawing name: =2V01&EFS-EL_KF1	= V2AR44UQ43UQ2.2
			Ed.	MKLEPADLO					+ V2AR44UQ43UQ2.2
			Appr		P6700 Framing - Cell 2V01, KF1	Scale 1:1		Document type: EMA	Project nr: 22-16152
Modification	Date	Name	Original		Replacement of	Replaced by			Page 1 / 1630

Cable diagram

F09_002_VLU

Cable name -W1			cable type TPE					
remark			no. of conductors 4			cross-section 18		cable length 2
function text	Page / column	Target designation from	Connection point	conductor	Target designation to	Connection point	Page / column	function text
	&EFS=V2AR44UQ43KF1+V2AR44UQ43KF1	=V2AR44UQ43/2.1+V2AR44UQ43-KF1	1.11-X4		-BGS/R	1	&EFS=V2AR44UQ43UQ2+V2AR44UQ43UQ2/1.4	
	&EFS=V2AR44UQ43KF1+V2AR44UQ43KF1	=V2AR44UQ43/2.1+V2AR44UQ43-KF2	1.11-X4		-BGS/R	2	&EFS=V2AR44UQ43UQ2+V2AR44UQ43UQ2/1.4	
	&EFS=V2AR44UQ43KF1+V2AR44UQ43KF1	=V2AR44UQ43/2.1+V2AR44UQ43-KF3	1.11-X4		-BGS/R	3	&EFS=V2AR44UQ43UQ2+V2AR44UQ43UQ2/1.4	
	&EFS=V2AR44UQ43KF1+V2AR44UQ43KF1	=V2AR44UQ43/2.1+V2AR44UQ43-KF4	1.11-X4		-BGS/R	4	&EFS=V2AR44UQ43UQ2+V2AR44UQ43UQ2/1.4	

=V2AR44UQ43UQ2.2+.AR44UQ43UQ2.2/1

=V2AR44UQ43UQ3.1+.AR44UQ43UQ3.1/1

			Date	1/24/2023	Volvo Trucks North America	Valiant TMS	Cable diagram =V2AR44UQ43UQ2.3+V2AR44UQ43UQ2.3-W1	Drawing name: =2V01&EFS-EL_KF1	= V2AR44UQ43UQ2.3 + V2AR44UQ43UQ2.3
			Ed.	MKLEPADLO	P6700 Framing - Cell 2V01, KF1				
			Appr					Document type: EMA	Project nr: 22-16152
Modification	Date	Name	Original		Replacement of / Replaced by	Scale 1:1			Page 1 / 1630

Cable diagram

F09_002_VLU

Cable name -W1			cable type TPE					
remark			no. of conductors 4			cross-section 18		cable length 1
function text	Page / column	Target designation from	Connection point	conductor	Target designation to	Connection point	Page / column	function text
	&EFS=V2AR44UQ43KF1	=V2AR44UQ43KF1+V2AR44UQ43-KF1	1		1.11-X5	1	-BGS/R	&EFS=V2AR44UQ43UQ3+V2AR44UQ43UQ3/1.0
	&EFS=V2AR44UQ43KF1	=V2AR44UQ43KF1+V2AR44UQ43-KF1	2		1.11-X5	4	-BGS/R	&EFS=V2AR44UQ43UQ3+V2AR44UQ43UQ3/1.1
	&EFS=V2AR44UQ43KF1	=V2AR44UQ43KF1+V2AR44UQ43-KF1	3		1.11-X5	3	-BGS/R	&EFS=V2AR44UQ43UQ3+V2AR44UQ43UQ3/1.0

=V2AR44UQ43UQ2.3+.AR44UQ43UQ2.3/1

=V2AR44UQ43UQ4.1+.AR44UQ43UQ4.1/1

			Date	1/24/2023	Volvo Trucks North America	Valiant TMS	Cable diagram =V2AR44UQ43UQ3.1+V2AR44UQ43UQ3.1-W1	Drawing name: =2V01&EFS-EL_KF1	= V2AR44UQ43UQ3.1
			Ed.	MKLEPADLO					+ V2AR44UQ43UQ3.1
			Appr		P6700 Framing - Cell 2V01, KF1			Document type: EMA	Project nr: 22-16152
Modification	Date	Name	Original		Replacement of	Replaced by	Scale 1:1		Page 1 / 1630

Cable diagram

F09_002_VLU

Cable name -W1			cable type TPE					
remark			no. of conductors 4			cross-section 18		cable length 3
function text	Page / column	Target designation from	Connection point	conductor	Target designation to	Connection point	Page / column	function text
	&EFS=V2AR44UQ43KF1	=V2AR44UQ43/K2.6+V2AR44UQ43-KF1	1		1.11-X6		-BGS/R	1	&EFS=V2AR44UQ43UQ4+V2AR44UQ43UQ4/1.0
	&EFS=V2AR44UQ43KF1	=V2AR44UQ43/K2.6+V2AR44UQ43-KF1	2		1.11-X6		-BGS/R	2	&EFS=V2AR44UQ43UQ4+V2AR44UQ43UQ4/1.0
	&EFS=V2AR44UQ43KF1	=V2AR44UQ43/K2.6+V2AR44UQ43-KF1	3		1.11-X6		-BGS/R	3	&EFS=V2AR44UQ43UQ4+V2AR44UQ43UQ4/1.1
	&EFS=V2AR44UQ43KF1	=V2AR44UQ43/K2.7+V2AR44UQ43-KF1	4		1.11-X6		-BGS/R	4	&EFS=V2AR44UQ43UQ4+V2AR44UQ43UQ4/1.1

=V2AR44UQ43UQ3.1+.AR44UQ43UQ3.1/1

=V2AR44UQ43UQ4.2+.AR44UQ43UQ4.2/1

			Date	1/24/2023	Volvo Trucks North America	Valiant TMS	Cable diagram =V2AR44UQ43UQ4.1+V2AR44UQ43UQ4.1-W1	Drawing name: =2V01&EFS-EL_KF1	= V2AR44UQ43UQ4.1
			Ed.	MKLEPADLO					+ V2AR44UQ43UQ4.1
			Appr		P6700 Framing - Cell 2V01, KF1	Scale 1:1		Document type: EMA	Project nr: 22-16152
Modification	Date	Name	Original		Replacement of	Replaced by			Page 1 / 1630

Cable diagram

F09_002_VLU

Cable name -W1			cable type TPE					
remark			no. of conductors 4			cross-section 18		cable length 1
function text	Page / column	Target designation from	Connection point	conductor	Target designation to	Connection point	Page / column	function text
	&EFS=V2AR44UQ43KF1	=V2AR44UQ43/K2.7+V2AR44UQ43-KF1	1		1.11-X7		-BGS/R	1	&EFS=V2AR44UQ43UQ4+V2AR44UQ43UQ4/1.2
	&EFS=V2AR44UQ43KF1	=V2AR44UQ43/K2.7+V2AR44UQ43-KF1	2		1.11-X7		-BGS/R	2	&EFS=V2AR44UQ43UQ4+V2AR44UQ43UQ4/1.2
	&EFS=V2AR44UQ43KF1	=V2AR44UQ43/K2.8+V2AR44UQ43-KF1	3		1.11-X7		-BGS/R	3	&EFS=V2AR44UQ43UQ4+V2AR44UQ43UQ4/1.2
	&EFS=V2AR44UQ43KF1	=V2AR44UQ43/K2.8+V2AR44UQ43-KF1	4		1.11-X7		-BGS/R	4	&EFS=V2AR44UQ43UQ4+V2AR44UQ43UQ4/1.2

			Date	1/24/2023	Volvo Trucks North America	Valiant TMS	Cable diagram =V2AR44UQ43UQ4.2+V2AR44UQ43UQ4.2-W1	Drawing name: =2V01&EFS-EL_KF1	= V2AR44UQ43UQ4.2
			Ed.	MKLEPADLO					+ V2AR44UQ43UQ4.2
			Appr		P6700 Framing - Cell 2V01, KF1	Scale 1:1		Document type: EMA	Project nr: 22-16152
Modification	Date	Name	Original		Replacement of	Replaced by			Page 1 / 1630

Cable diagram

F09_002_VLU

Cable name -W1			cable type TPE					
remark			no. of conductors 4			cross-section 18		cable length 2
function text	Page / column	Target designation from	Connection point	conductor	Target designation to	Connection point	Page / column	function text
	&EFS=V2AR44UQ43KF1	=V2AR44UQ43/K2.8+V2AR44UQ43-KF1	1.11-X8		-BGS/R	1	&EFS=V2AR44UQ43UQ4+V2AR44UQ43UQ4/1.4	
	&EFS=V2AR44UQ43KF1	=V2AR44UQ43/K2.9+V2AR44UQ43-KF1	2.11-X8		-BGS/R	2	&EFS=V2AR44UQ43UQ4+V2AR44UQ43UQ4/1.4	
	&EFS=V2AR44UQ43KF1	=V2AR44UQ43/K2.9+V2AR44UQ43-KF1	3.11-X8		-BGS/R	3	&EFS=V2AR44UQ43UQ4+V2AR44UQ43UQ4/1.4	
	&EFS=V2AR44UQ43KF1	=V2AR44UQ43/K2.9+V2AR44UQ43-KF1	4.11-X8		-BGS/R	4	&EFS=V2AR44UQ43UQ4+V2AR44UQ43UQ4/1.4	

=V2AR44UQ43UQ4.2+.AR44UQ43UQ4.2/1

=V2AR44UQ43UQ4.4+.AR44UQ43UQ4.4/1

			Date	1/24/2023	Volvo Trucks North America	Valiant TMS	Cable diagram =V2AR44UQ43UQ4.3+V2AR44UQ43UQ4.3-W1	Drawing name: =2V01&EFS-EL_KF1	= V2AR44UQ43UQ4.3
			Ed.	MKLEPADLO					+ V2AR44UQ43UQ4.3
			Appr		P6700 Framing - Cell 2V01, KF1			Document type: EMA	Project nr: 22-16152
Modification	Date	Name	Original		Replacement of	Replaced by	Scale 1:1		Page 1 / 1630

Cable diagram

F09_002_VLU

Cable name -W1			cable type TPE					
remark			no. of conductors 4			cross-section 18		cable length 2
function text	Page / column	Target designation from	Connection point	conductor	Target designation to	Connection point	Page / column	function text
	&EFS=V2AR44UQ43KF1	=**V2AR44UQ43KF1**+V2AR44UQ43-KF1	1.12-X1		-BGS/R	1	&EFS=V2AR44UQ43UQ4+V2AR44UQ43UQ4/1.5	
	&EFS=V2AR44UQ43KF1	=**V2AR44UQ43KF1**+V2AR44UQ43-KF2	1.12-X1		-BGS/R	2	&EFS=V2AR44UQ43UQ4+V2AR44UQ43UQ4/1.5	
	&EFS=V2AR44UQ43KF1	=**V2AR44UQ43KF1**+V2AR44UQ43-KF3	1.12-X1		-BGS/R	3	&EFS=V2AR44UQ43UQ4+V2AR44UQ43UQ4/1.5	
	&EFS=V2AR44UQ43KF1	=**V2AR44UQ43KF1**+V2AR44UQ43-KF4	1.12-X1		-BGS/R	4	&EFS=V2AR44UQ43UQ4+V2AR44UQ43UQ4/1.5	

=V2AR44UQ43UQ4.3+.AR44UQ43UQ4.3/1

=V2AR44UQ43UQ4.5+.AR44UQ43UQ4.5/1

			Date	1/24/2023	Volvo Trucks North America		Valiant TMS	Cable diagram	Drawing name: =2V01&EFS-EL_KF1	= V2AR44UQ43UQ4.4
			Ed.	MKLEPADLO				=V2AR44UQ43UQ4.4+V2AR44UQ43UQ4.4-W1		+ V2AR44UQ43UQ4.4
			Appr		P6700 Framing - Cell 2V01, KF1				Document type: EMA	Project nr: 22-16152
Modification	Date	Name	Original		Replacement of	Replaced by	Scale 1:1			Page 1 / 1630

Cable diagram

F09_002_VLU

Cable name -W1			cable type TPE					
remark			no. of conductors 4			cross-section 18		cable length 3
function text	Page / column	Target designation from	Connection point	conductor	Target designation to	Connection point	Page / column	function text
	&EFS=V2AR44UQ43KF1	=**V2AR44UQ43KF1**+V2AR44UQ43-KF1	1.12-X2		-BGS/R	1	&EFS=V2AR44UQ43UQ4+V2AR44UQ43UQ4/1.7	
	&EFS=V2AR44UQ43KF1	=**V2AR44UQ43KF1**+V2AR44UQ43-KF1	2.12-X2		-BGS/R	2	&EFS=V2AR44UQ43UQ4+V2AR44UQ43UQ4/1.7	
	&EFS=V2AR44UQ43KF1	=**V2AR44UQ43KF1**+V2AR44UQ43-KF1	3.12-X2		-BGS/R	3	&EFS=V2AR44UQ43UQ4+V2AR44UQ43UQ4/1.7	
	&EFS=V2AR44UQ43KF1	=**V2AR44UQ43KF1**+V2AR44UQ43-KF1	4.12-X2		-BGS/R	4	&EFS=V2AR44UQ43UQ4+V2AR44UQ43UQ4/1.7	

=V2AR44UQ43UQ4.4+.AR44UQ43UQ4.4/1

=V2UQ31BG0+.UQ31/1

			Date	1/24/2023	Volvo Trucks North America	Valiant TMS	Cable diagram =V2AR44UQ43UQ4.5+V2AR44UQ43UQ4.5-W1	Drawing name: =2V01&EFS-EL_KF1	= V2AR44UQ43UQ4.5
			Ed.	MKLEPADLO					+ V2AR44UQ43UQ4.5
			Appr		P6700 Framing - Cell 2V01, KF1	Scale 1:1		Document type: EMA	Project nr: 22-16152
Modification	Date	Name	Original		Replacement of	Replaced by			Page 1 / 1630

Cable diagram

F09_002_VLU

Cable name -W1			cable type TPE					
remark			no. of conductors 4			cross-section 18		cable length 0.5
function text	Page / column	Target designation from	Connection point	conductor	Target designation to	Connection point	Page / column	function text
	&EFS/1.0	-XG1/2	P1:1		=V2UQ31KF1-KF1.12-X6	1	&EFS=V2UQ31KF1/2.6	
	&EFS/1.1	-XG1/2	P1:3		=V2UQ31KF1-KF1.12-X6	3	&EFS=V2UQ31KF1/2.6	
	&EFS/1.1	-XG1/2	P1:4		=V2UQ31KF1-KF1.12-X6	4	&EFS=V2UQ31KF1/2.7	
	&EFS/1.1	-XG1/2	P1:2		=V2UQ31KF1-KF1.12-X6	2	&EFS=V2UQ31KF1/2.6	

			Date	1/24/2023	Volvo Trucks North America	Valiant TMS	Cable diagram =V2UQ31BG0+V2UQ31-W1	Drawing name: =2V01&EFS-EL_KF1	= V2UQ31BG0
			Ed.	MKLEPADLO					+ V2UQ31
			Appr		P6700 Framing - Cell 2V01, KF1			Document type: EMA	Project nr: 22-16152
Modification	Date	Name	Original		Replacement of / Replaced by	Scale 1:1			Page 1 / 1630

Cable diagram

F09_002_VLU

Cable name -W1.1			cable type TPE					
remark			no. of conductors 4			cross-section 18		cable length 2
function text	Page / column	Target designation from	Connection point	conductor	Target designation to	Connection point	Page / column	function text
	&EFS/1.0	-BG01	1		-XG1/2	J1:1	&EFS/1.0	
	&EFS/1.0	-BG01	4		-XG1/2	J1:4	&EFS/1.1	
	&EFS/1.1	-BG01	3		-XG1/2	J1:3	&EFS/1.1	

Cable diagram

F09_002_VLU

Cable name -W1.2			cable type TPE					
remark			no. of conductors 4			cross-section 18		cable length 5
function text	Page / column	Target designation from	Connection point	conductor	Target designation to	Connection point	Page / column	function text
	&EFS/1.1	-BG02	1		-XG1/2	J2:1	&EFS/1.1	
	&EFS/1.1	-BG02	4		-XG1/2	J2:4	&EFS/1.2	
	&EFS/1.2	-BG02	3		-XG1/2	J2:3	&EFS/1.2	

			Date	1/24/2023	Volvo Trucks North America	Valiant TMS	Cable diagram =V2UQ31BG0+V2UQ31-W1.2	Drawing name: =2V01&EFS-EL_KF1	= V2UQ31BG0
			Ed.	MKLEPADLO					+ V2UQ31
			Appr		P6700 Framing - Cell 2V01, KF1			Document type: EMA	Project nr: 22-16152
Modification	Date	Name	Original		Replacement of / Replaced by	Scale 1:1			Page 3 / 1630

Cable diagram

F09_002_VLU

Cable name -W2			cable type TPE					
remark			no. of conductors 4			cross-section 18		cable length 0.5
function text	Page / column	Target designation from	Connection point	conductor	Target designation to	Connection point	Page / column	function text
	&EFS/1.3	-XG3/4	P1:1		=V2UQ31KF1-KF1.12-X7	1	&EFS=V2UQ31KF1/2.7	
	&EFS/1.3	-XG3/4	P1:3		=V2UQ31KF1-KF1.12-X7	3	&EFS=V2UQ31KF1/2.8	
	&EFS/1.4	-XG3/4	P1:4		=V2UQ31KF1-KF1.12-X7	4	&EFS=V2UQ31KF1/2.8	
	&EFS/1.4	-XG3/4	P1:2		=V2UQ31KF1-KF1.12-X7	2	&EFS=V2UQ31KF1/2.7	

			Date	1/24/2023	Volvo Trucks North America	Valiant TMS	Cable diagram =V2UQ31BG0+V2UQ31-W2	Drawing name: =2V01&EFS-EL_KF1	= V2UQ31BG0
			Ed.	MKLEPADLO					+ V2UQ31
			Appr		P6700 Framing - Cell 2V01, KF1			Document type: EMA	Project nr: 22-16152
Modification	Date	Name	Original		Replacement of / Replaced by	Scale 1:1			Page 4 / 1630

Cable diagram

F09_002_VLU

Cable name -W2.1			cable type TPE					
remark			no. of conductors 4			cross-section 18		cable length 8
function text	Page / column	Target designation from	Connection point	conductor	Target designation to	Connection point	Page / column	function text
	&EFS/1.3	-BG03	1		-XG3/4	J1:1	&EFS/1.3	
	&EFS/1.3	-BG03	4		-XG3/4	J1:4	&EFS/1.4	
	&EFS/1.3	-BG03	3		-XG3/4	J1:3	&EFS/1.3	

			Date	1/24/2023	Volvo Trucks North America		Valiant TMS	Cable diagram =V2UQ31BG0+V2UQ31-W2.1	Drawing name: =2V01&EFS-EL_KF1	= V2UQ31BG0	
			Ed.	MKLEPADLO						+ V2UQ31	
			Appr		P6700 Framing - Cell 2V01, KF1				Document type: EMA	Project nr: 22-16152	Page 5 / 1630
Modification	Date	Name	Original		Replacement of	Replaced by	Scale 1:1				

Cable diagram

F09_002_VLU

Cable name -W2.2			cable type TPE					
remark			no. of conductors 4			cross-section 18		cable length 8
function text	Page / column	Target designation from	Connection point	conductor	Target designation to	Connection point	Page / column	function text
	&EFS/1.4	-BG04	1		-XG3/4	J2:1	&EFS/1.4	
	&EFS/1.4	-BG04	4		-XG3/4	J2:4	&EFS/1.5	
	&EFS/1.4	-BG04	3		-XG3/4	J2:3	&EFS/1.4	

			Date	1/24/2023	Volvo Trucks North America		Valiant TMS	Cable diagram =V2UQ31BG0+V2UQ31-W2.2	Drawing name: =2V01&EFS-EL_KF1	= V2UQ31BG0	
			Ed.	MKLEPADLO						+ V2UQ31	
			Appr		P6700 Framing - Cell 2V01, KF1				Document type: EMA	Project nr: 22-16152	Page 6 / 1630
Modification	Date	Name	Original		Replacement of	Replaced by	Scale 1:1				

Cable diagram

F09_002_VLU

Cable name -W3			cable type TPE					
remark			no. of conductors 4			cross-section 18		cable length 0.5
function text	Page / column	Target designation from	Connection point	conductor	Target designation to	Connection point	Page / column	function text
	&EFS/1.6	-XG5/6	P1:1		=V2UQ31KF2-KF2.12-X6	1	&EFS=V2UQ31KF2/2.6	
	&EFS/1.6	-XG5/6	P1:3		=V2UQ31KF2-KF2.12-X6	3	&EFS=V2UQ31KF2/2.6	
	&EFS/1.7	-XG5/6	P1:4		=V2UQ31KF2-KF2.12-X6	4	&EFS=V2UQ31KF2/2.7	
	&EFS/1.7	-XG5/6	P1:2		=V2UQ31KF2-KF2.12-X6	2	&EFS=V2UQ31KF2/2.6	

6 8

			Date	1/24/2023	Volvo Trucks North America	Valiant TMS	Cable diagram =V2UQ31BG0+V2UQ31-W3	Drawing name: =2V01&EFS-EL_KF1	= V2UQ31BG0
			Ed.	MKLEPADLO					+ V2UQ31
			Appr		P6700 Framing - Cell 2V01, KF1			Document type: EMA	Project nr: 22-16152
Modification	Date	Name	Original		Replacement of / Replaced by	Scale 1:1			Page 7 / 1630

Cable diagram

F09_002_VLU

Cable name -W3.1			cable type TPE					
remark			no. of conductors 4			cross-section 18		cable length 1
function text	Page / column	Target designation from	Connection point	conductor	Target designation to	Connection point	Page / column	function text
	&EFS/1.6	-BG05	1		-XG5/6	J1:1	&EFS/1.6	
	&EFS/1.6	-BG05	4		-XG5/6	J1:4	&EFS/1.7	
	&EFS/1.6	-BG05	3		-XG5/6	J1:3	&EFS/1.6	

			Date	1/24/2023	Volvo Trucks North America	Valiant TMS	Cable diagram =V2UQ31BG0+V2UQ31-W3.1	Drawing name: =2V01&EFS-EL_KF1	= V2UQ31BG0
			Ed.	MKLEPADLO					+ V2UQ31
			Appr		P6700 Framing - Cell 2V01, KF1			Document type: EMA	Project nr: 22-16152
Modification	Date	Name	Original		Replacement of	Replaced by	Scale 1:1		Page 8 / 1630

Cable diagram

F09_002_VLU

Cable name -W3.2			cable type TPE					
remark			no. of conductors 4			cross-section 18		cable length 3
function text	Page / column	Target designation from	Connection point	conductor	Target designation to	Connection point	Page / column	function text
	&EFS/1.7	-BG06	1		-XG5/6	J2:1	&EFS/1.7	
	&EFS/1.7	-BG06	4		-XG5/6	J2:4	&EFS/1.8	
	&EFS/1.7	-BG06	3		-XG5/6	J2:3	&EFS/1.7	

			Date	1/24/2023	Volvo Trucks North America	Valiant TMS	Cable diagram =V2UQ31BG0+V2UQ31-W3.2	Drawing name: =2V01&EFS-EL_KF1	= V2UQ31BG0
			Ed.	MKLEPADLO					+ V2UQ31
			Appr		P6700 Framing - Cell 2V01, KF1			Document type: EMA	Project nr: 22-16152
Modification	Date	Name	Original		Replacement of / Replaced by	Scale 1:1			Page 9 / 1630

Cable diagram

F09_002_VLU

Cable name -W4			cable type TPE					
remark			no. of conductors 4			cross-section 18		cable length 0.5
function text	Page / column	Target designation from	Connection point	conductor	Target designation to	Connection point	Page / column	function text
	&EFS/2.0	-XG7/8	P1:1		=V2UQ31KF2-KF2.12-X7	1	&EFS=V2UQ31KF2/2.7	
	&EFS/2.1	-XG7/8	P1:3		=V2UQ31KF2-KF2.12-X7	3	&EFS=V2UQ31KF2/2.8	
	&EFS/2.1	-XG7/8	P1:4		=V2UQ31KF2-KF2.12-X7	4	&EFS=V2UQ31KF2/2.8	
	&EFS/2.1	-XG7/8	P1:2		=V2UQ31KF2-KF2.12-X7	2	&EFS=V2UQ31KF2/2.7	

			Date	1/24/2023	Volvo Trucks North America	Valiant TMS	Cable diagram =V2UQ31BG0+V2UQ31-W4	Drawing name: =2V01&EFS-EL_KF1	= V2UQ31BG0
			Ed.	MKLEPADLO					+ V2UQ31
			Appr		P6700 Framing - Cell 2V01, KF1			Document type: EMA	Project nr: 22-16152
Modification	Date	Name	Original		Replacement of / Replaced by	Scale 1:1			Page 10 / 1630

Cable diagram

F09_002_VLU

Cable name -W4.1			cable type TPE					
remark			no. of conductors 4			cross-section 18		cable length
function text	Page / column	Target designation from	Connection point	conductor	Target designation to	Connection point	Page / column	function text
	&EFS/2.0	-BG07	1		-XG7/8	J1:1	&EFS/2.0	
	&EFS/2.0	-BG07	4		-XG7/8	J1:4	&EFS/2.1	
	&EFS/2.1	-BG07	3		-XG7/8	J1:3	&EFS/2.1	

			Date	1/24/2023	Volvo Trucks North America	Valiant TMS	Cable diagram =V2UQ31BG0+V2UQ31-W4.1	Drawing name: =2V01&EFS-EL_KF1	= V2UQ31BG0
			Ed.	MKLEPADLO					+ V2UQ31
			Appr		P6700 Framing - Cell 2V01, KF1			Document type: EMA	Project nr: 22-16152
Modification	Date	Name	Original		Replacement of / Replaced by	Scale 1:1			Page 11 / 1630

Cable diagram

F09_002_VLU

Cable name -W4.2			cable type TPE					
remark			no. of conductors 4			cross-section 18		cable length
function text	Page / column	Target designation from	Connection point	conductor	Target designation to	Connection point	Page / column	function text
	&EFS/2.1	-BG08	1		-XG7/8	J2:1	&EFS/2.1	
	&EFS/2.1	-BG08	4		-XG7/8	J2:4	&EFS/2.2	
	&EFS/2.2	-BG08	3		-XG7/8	J2:3	&EFS/2.2	

			Date	1/24/2023	Volvo Trucks North America	Valiant TMS	Cable diagram =V2UQ31BG0+V2UQ31-W4.2	Drawing name: =2V01&EFS-EL_KF1	= V2UQ31BG0
			Ed.	MKLEPADLO					+ V2UQ31
			Appr		P6700 Framing - Cell 2V01, KF1			Document type: EMA	Project nr: 22-16152
Modification	Date	Name	Original		Replacement of / Replaced by	Scale 1:1			Page 12 / 1630

Cable diagram

F09_002_VLU

Cable name -W1.1			cable type TPU					
remark			no. of conductors 5			cross-section 16		cable length 1
function text	Page / column	Target designation from	Connection point	conductor	Target designation to	Connection point	Page / column	function text
	&EFS/1.1	-KF1-X20	1		=V2UQ31WC4-XG51	J1:1	&EFS=V2UQ31WC4/1.4	
	&EFS/1.1	-KF1-X20	2		=V2UQ31WC4-XG51	J1:2	&EFS=V2UQ31WC4/1.4	
	&EFS/1.1	-KF1-X20	3		=V2UQ31WC4-XG51	J1:3	&EFS=V2UQ31WC4/1.5	
	&EFS/1.2	-KF1-X20	4		=V2UQ31WC4-XG51	J1:4	&EFS=V2UQ31WC4/1.5	
	&EFS/1.2	-KF1-X20	5		=V2UQ31WC4-XG51	J1:5	&EFS=V2UQ31WC4/1.5	

			Date	1/24/2023	Volvo Trucks North America	Valiant TMS	Cable diagram =V2UQ31KF1+V2UQ31-W1.1	Drawing name: =2V01&EFS-EL_KF1	= V2UQ31KF1
			Ed.	MKLEPADLO					+ V2UQ31
			Appr		P6700 Framing - Cell 2V01, KF1			Document type: EMA	Project nr: 22-16152
Modification	Date	Name	Original		Replacement of / Replaced by	Scale 1:1			Page 1 / 1630

Cable diagram

F09_002_VLU

Cable name -W1.2			cable type TPU					
remark			no. of conductors 5			cross-section 16		cable length 10
function text	Page / column	Target designation from	Connection point	conductor	Target designation to	Connection point	Page / column	function text
	&EFS/1.1	-KF2-X20	1		=V2UQ31WC4-XG51	J2:1	&EFS=V2UQ31WC4/1.5	
	&EFS/1.1	-KF2-X20	2		=V2UQ31WC4-XG51	J2:2	&EFS=V2UQ31WC4/1.5	
	&EFS/1.1	-KF2-X20	3		=V2UQ31WC4-XG51	J2:3	&EFS=V2UQ31WC4/1.6	
	&EFS/1.2	-KF2-X20	5		=V2UQ31WC4-XG51	J2:4	&EFS=V2UQ31WC4/1.6	

			Date	1/24/2023	Volvo Trucks North America	Valiant TMS	Cable diagram =V2UQ31KF2+V2UQ31-W1.2	Drawing name: =2V01&EFS-EL_KF1	= V2UQ31KF2
			Ed.	MKLEPADLO					+ V2UQ31
			Appr		P6700 Framing - Cell 2V01, KF1			Document type: EMA	Project nr: 22-16152
Modification	Date	Name	Original		Replacement of / Replaced by	Scale 1:1			Page 1 / 1630

Cable diagram

F09_002_VLU

Cable name -WF2			cable type PROFINET Cable					
remark			no. of conductors 4			cross-section 22		cable length
function text	Page / column	Target designation from	Connection point	conductor	Target designation to	Connection point	Page / column	function text
	&EFS=V2UQ31KF1/1.4	=V2UQ31KF1-KF1-TP2			-KF2-TP1		&EFS/1.3	

			Date	1/24/2023	Volvo Trucks North America	Valiant TMS	Cable diagram =V2UQ31KF2+V2UQ31-WF2	Drawing name: =2V01&EFS-EL_KF1	= V2UQ31KF2
			Ed.	MKLEPADLO					+ V2UQ31
			Appr		P6700 Framing - Cell 2V01, KF1			Document type: EMA	Project nr: 22-16152
Modification	Date	Name	Original		Replacement of / Replaced by	Scale 1:1			Page 2 / 1630

Cable diagram

F09_002_VLU

Cable name -W1			cable type TPE					
remark			no. of conductors 4			cross-section 18		cable length 3
function text	Page / column	Target designation from	Connection point	conductor	Target designation to	Connection point	Page / column	function text
	&EFS=V2UQ31KF1+V2UQ31UQ1/1.0	=V2UQ31KF1+V2UQ31-KF1.1	1-X1 1		-BGS/R	1	&EFS=V2UQ31UQ1+V2UQ31UQ1/1.0	
	&EFS=V2UQ31KF1+V2UQ31UQ1/1.0	=V2UQ31KF1+V2UQ31-KF1.1	1-X1 2		-BGS/R	2	&EFS=V2UQ31UQ1+V2UQ31UQ1/1.0	
	&EFS=V2UQ31KF1+V2UQ31UQ1/1.1	=V2UQ31KF1+V2UQ31-KF1.1	1-X1 3		-BGS/R	3	&EFS=V2UQ31UQ1+V2UQ31UQ1/1.1	
	&EFS=V2UQ31KF1+V2UQ31UQ1/1.1	=V2UQ31KF1+V2UQ31-KF1.1	1-X1 4		-BGS/R	4	&EFS=V2UQ31UQ1+V2UQ31UQ1/1.1	

Cable diagram

F09_002_VLU

Cable name -W1			cable type TPE					
remark			no. of conductors 4			cross-section 18		cable length 8
function text	Page / column	Target designation from	Connection point	conductor	Target designation to	Connection point	Page / column	function text
	&EFS=V2UQ31KF1+V2UQ31UQ1/1.1	=V2UQ31KF1+V2UQ31-KF1.1	1-X2 1		-BGS/R	1	&EFS=V2UQ31UQ1+V2UQ31UQ1/1.2	
	&EFS=V2UQ31KF1+V2UQ31UQ1/1.1	=V2UQ31KF1+V2UQ31-KF1.1	1-X2 2		-BGS/R	2	&EFS=V2UQ31UQ1+V2UQ31UQ1/1.2	
	&EFS=V2UQ31KF1+V2UQ31UQ1/1.1	=V2UQ31KF1+V2UQ31-KF1.1	1-X2 3		-BGS/R	3	&EFS=V2UQ31UQ1+V2UQ31UQ1/1.2	
	&EFS=V2UQ31KF1+V2UQ31UQ1/1.1	=V2UQ31KF1+V2UQ31-KF1.1	1-X2 4		-BGS/R	4	&EFS=V2UQ31UQ1+V2UQ31UQ1/1.2	

			Date	1/24/2023	Volvo Trucks North America	Valiant TMS	Cable diagram =V2UQ31UQ1.2+V2UQ31UQ1.2-W1	Drawing name: =2V01&EFS-EL_KF1	= V2UQ31UQ1.2
			Ed.	MKLEPADLO					+ V2UQ31UQ1.2
			Appr		P6700 Framing - Cell 2V01, KF1			Document type: EMA	Project nr: 22-16152
Modification	Date	Name	Original		Replacement of / Replaced by	Scale 1:1			Page 1 / 1630

Cable diagram

F09_002_VLU

Cable name -W1			cable type TPE					
remark			no. of conductors 4			cross-section 18		cable length 8
function text	Page / column	Target designation from	Connection point	conductor	Target designation to	Connection point	Page / column	function text
	&EFS=V2UQ31KF1+V2UQ31UQ1/1.1	=V2UQ31KF1+V2UQ31-KF1.1	1-X3 1		-BGS/R	1	&EFS=V2UQ31UQ1+V2UQ31UQ1/1.4	
	&EFS=V2UQ31KF1+V2UQ31UQ1/1.2	=V2UQ31KF1+V2UQ31-KF1.1	1-X3 2		-BGS/R	2	&EFS=V2UQ31UQ1+V2UQ31UQ1/1.4	
	&EFS=V2UQ31KF1+V2UQ31UQ1/1.3	=V2UQ31KF1+V2UQ31-KF1.1	1-X3 3		-BGS/R	3	&EFS=V2UQ31UQ1+V2UQ31UQ1/1.4	
	&EFS=V2UQ31KF1+V2UQ31UQ1/1.4	=V2UQ31KF1+V2UQ31-KF1.1	1-X3 4		-BGS/R	4	&EFS=V2UQ31UQ1+V2UQ31UQ1/1.4	

=V2UQ31UQ1.2+.UQ31UQ1.2/1

=V2UQ31UQ2.1+.UQ31UQ2.1/1

			Date	1/24/2023	Volvo Trucks North America	Valiant TMS	Cable diagram =V2UQ31UQ1.3+V2UQ31UQ1.3-W1	Drawing name: =2V01&EFS-EL_KF1	= V2UQ31UQ1.3
			Ed.	MKLEPADLO					+ V2UQ31UQ1.3
			Appr		P6700 Framing - Cell 2V01, KF1			Document type: EMA	Project nr: 22-16152
Modification	Date	Name	Original		Replacement of / Replaced by	Scale 1:1			Page 1 / 1630

Cable diagram

F09_002_VLU

Cable name -W1			cable type TPE					
remark			no. of conductors 4			cross-section 18		cable length 8
function text	Page / column	Target designation from	Connection point	conductor	Target designation to	Connection point	Page / column	function text
	&EFS=V2UQ31KF1+V2UQ31UQ2	-W1/1.1	=V2UQ31KF1+V2UQ31-KF1.1	1-X4 1		-BGS/R	1	&EFS=V2UQ31UQ2+V2UQ31UQ2/1.0
	&EFS=V2UQ31KF1+V2UQ31UQ2	-W1/1.1	=V2UQ31KF1+V2UQ31-KF1.1	1-X4 2		-BGS/R	2	&EFS=V2UQ31UQ2+V2UQ31UQ2/1.0
	&EFS=V2UQ31KF1+V2UQ31UQ2	-W1/1.1	=V2UQ31KF1+V2UQ31-KF1.1	1-X4 3		-BGS/R	3	&EFS=V2UQ31UQ2+V2UQ31UQ2/1.1
	&EFS=V2UQ31KF1+V2UQ31UQ2	-W1/1.1	=V2UQ31KF1+V2UQ31-KF1.1	1-X4 4		-BGS/R	4	&EFS=V2UQ31UQ2+V2UQ31UQ2/1.1

=V2UQ31UQ1.3+.UQ31UQ1.3/1

=V2UQ31UQ3.1+.UQ31UQ3.1/1

			Date	1/24/2023	Volvo Trucks North America	Valiant TMS	Cable diagram =V2UQ31UQ2.1+V2UQ31UQ2.1-W1	Drawing name: =2V01&EFS-EL_KF1	= V2UQ31UQ2.1
			Ed.	MKLEPADLO					+ V2UQ31UQ2.1
			Appr		P6700 Framing - Cell 2V01, KF1			Document type: EMA	Project nr: 22-16152
Modification	Date	Name	Original		Replacement of / Replaced by	Scale 1:1			Page 1 / 1630

Cable diagram

F09_002_VLU

Cable name -W1			cable type TPE					
remark			no. of conductors 4			cross-section 18		cable length 8
function text	Page / column	Target designation from	Connection point	conductor	Target designation to	Connection point	Page / column	function text
	&EFS=V2UQ31KF1+V2UQ31UQ3	-V2UQ31KF1+V2UQ31-KF1.1	1-X5 1		-BGS/R	1	&EFS=V2UQ31UQ3+V2UQ31UQ3/1.0	
	&EFS=V2UQ31KF1+V2UQ31UQ3	-V2UQ31KF1+V2UQ31-KF1.1	1-X5 2		-BGS/R	2	&EFS=V2UQ31UQ3+V2UQ31UQ3/1.0	
	&EFS=V2UQ31KF1+V2UQ31UQ3	-V2UQ31KF1+V2UQ31-KF1.1	1-X5 3		-BGS/R	3	&EFS=V2UQ31UQ3+V2UQ31UQ3/1.1	
	&EFS=V2UQ31KF1+V2UQ31UQ3	-V2UQ31KF1+V2UQ31-KF1.1	1-X5 4		-BGS/R	4	&EFS=V2UQ31UQ3+V2UQ31UQ3/1.1	

			Date	1/24/2023	Volvo Trucks North America	Valiant TMS	Cable diagram =V2UQ31UQ3.1+V2UQ31UQ3.1-W1	Drawing name: =2V01&EFS-EL_KF1	= V2UQ31UQ3.1
			Ed.	MKLEPADLO					+ V2UQ31UQ3.1
			Appr		P6700 Framing - Cell 2V01, KF1			Document type: EMA	Project nr: 22-16152
Modification	Date	Name	Original		Replacement of / Replaced by	Scale 1:1			Page 1 / 1630

Cable diagram

F09_002_VLU

Cable name -W1			cable type TPE					
remark			no. of conductors 4			cross-section 18		cable length 10
function text	Page / column	Target designation from	Connection point	conductor	Target designation to	Connection point	Page / column	function text
	&EFS=V2UQ31KF1+V2UQ31UQ3	-V2UQ31KF1+V2UQ31-KF1.1	1-X6 1		-BGS/R	1	&EFS=V2UQ31UQ4+V2UQ31UQ4/1.0	
	&EFS=V2UQ31KF1+V2UQ31UQ3	-V2UQ31KF1+V2UQ31-KF1.1	1-X6 2		-BGS/R	2	&EFS=V2UQ31UQ4+V2UQ31UQ4/1.0	
	&EFS=V2UQ31KF1+V2UQ31UQ3	-V2UQ31KF1+V2UQ31-KF1.1	1-X6 3		-BGS/R	3	&EFS=V2UQ31UQ4+V2UQ31UQ4/1.1	
	&EFS=V2UQ31KF1+V2UQ31UQ3	-V2UQ31KF1+V2UQ31-KF1.1	1-X6 4		-BGS/R	4	&EFS=V2UQ31UQ4+V2UQ31UQ4/1.1	

=V2UQ31UQ3.1+.UQ31UQ3.1/1

=V2UQ31UQ5.1+.UQ31UQ5.1/1

			Date	1/24/2023	Volvo Trucks North America	Valiant TMS	Cable diagram =V2UQ31UQ4.1+V2UQ31UQ4.1-W1	Drawing name: =2V01&EFS-EL_KF1	= V2UQ31UQ4.1
			Ed.	MKLEPADLO					+ V2UQ31UQ4.1
			Appr		P6700 Framing - Cell 2V01, KF1			Document type: EMA	Project nr: 22-16152
Modification	Date	Name	Original		Replacement of / Replaced by	Scale 1:1			Page 1 / 1630

Cable diagram

F09_002_VLU

Cable name -W1			cable type TPE					
remark			no. of conductors 4			cross-section 18		cable length 10
function text	Page / column	Target designation from	Connection point	conductor	Target designation to	Connection point	Page / column	function text
	&EFS=V2UQ31KF1+V2UQ31UQ7	=V2UQ31KF1+V2UQ31-KF1.1	1-X7 1		-BGS/R	1	&EFS=V2UQ31UQ5+V2UQ31UQ5/1.0	
	&EFS=V2UQ31KF1+V2UQ31UQ7	=V2UQ31KF1+V2UQ31-KF1.1	1-X7 2		-BGS/R	2	&EFS=V2UQ31UQ5+V2UQ31UQ5/1.0	
	&EFS=V2UQ31KF1+V2UQ31UQ8	=V2UQ31KF1+V2UQ31-KF1.1	1-X7 3		-BGS/R	3	&EFS=V2UQ31UQ5+V2UQ31UQ5/1.1	
	&EFS=V2UQ31KF1+V2UQ31UQ8	=V2UQ31KF1+V2UQ31-KF1.1	1-X7 4		-BGS/R	4	&EFS=V2UQ31UQ5+V2UQ31UQ5/1.1	

			Date	1/24/2023	Volvo Trucks North America	Valiant TMS	Cable diagram =V2UQ31UQ5.1+V2UQ31UQ5.1-W1	Drawing name: =2V01&EFS-EL_KF1	= V2UQ31UQ5.1
			Ed.	MKLEPADLO					+ V2UQ31UQ5.1
			Appr		P6700 Framing - Cell 2V01, KF1			Document type: EMA	Project nr: 22-16152
Modification	Date	Name	Original		Replacement of / Replaced by	Scale 1:1			Page 1 / 1630

Cable diagram

F09_002_VLU

Cable name -W1			cable type TPE					
remark			no. of conductors 4			cross-section 18		cable length 10
function text	Page / column	Target designation from	Connection point	conductor	Target designation to	Connection point	Page / column	function text
	&EFS=V2UQ31KF1+V2UQ31UQ8/1.0	=V2UQ31KF1+V2UQ31-KF1.1	1-X8 1		-BGS/R	1	&EFS=V2UQ31UQ6+V2UQ31UQ6/1.0	
	&EFS=V2UQ31KF1+V2UQ31UQ9/1.0	=V2UQ31KF1+V2UQ31-KF1.1	1-X8 2		-BGS/R	2	&EFS=V2UQ31UQ6+V2UQ31UQ6/1.0	
	&EFS=V2UQ31KF1+V2UQ31UQ9/1.1	=V2UQ31KF1+V2UQ31-KF1.1	1-X8 3		-BGS/R	3	&EFS=V2UQ31UQ6+V2UQ31UQ6/1.1	
	&EFS=V2UQ31KF1+V2UQ31UQ9/1.1	=V2UQ31KF1+V2UQ31-KF1.1	1-X8 4		-BGS/R	4	&EFS=V2UQ31UQ6+V2UQ31UQ6/1.1	

			Date	1/24/2023	Volvo Trucks North America	Valiant TMS	Cable diagram =V2UQ31UQ6.1+V2UQ31UQ6.1-W1	Drawing name: =2V01&EFS-EL_KF1	= V2UQ31UQ6.1
			Ed.	MKLEPADLO					+ V2UQ31UQ6.1
			Appr		P6700 Framing - Cell 2V01, KF1			Document type: EMA	Project nr: 22-16152
Modification	Date	Name	Original		Replacement of / Replaced by	Scale 1:1			Page 1 / 1630

Cable diagram

F09_002_VLU

Cable name -W1			cable type TPE					
remark			no. of conductors 4			cross-section 18		cable length 8
function text	Page / column	Target designation from	Connection point	conductor	Target designation to	Connection point	Page / column	function text
	&EFS=V2UQ31KF1+V2UQ31	=V2UQ31KF1+V2UQ31-KF1.1	2-X1 1		-BGS/R	1	&EFS=V2UQ31UQ7+V2UQ31UQ7/1.0	
	&EFS=V2UQ31KF1+V2UQ31	=V2UQ31KF1+V2UQ31-KF1.1	2-X1 2		-BGS/R	2	&EFS=V2UQ31UQ7+V2UQ31UQ7/1.0	
	&EFS=V2UQ31KF1+V2UQ31	=V2UQ31KF1+V2UQ31-KF1.1	2-X1 3		-BGS/R	3	&EFS=V2UQ31UQ7+V2UQ31UQ7/1.1	
	&EFS=V2UQ31KF1+V2UQ31	=V2UQ31KF1+V2UQ31-KF1.1	2-X1 4		-BGS/R	4	&EFS=V2UQ31UQ7+V2UQ31UQ7/1.1	

			Date	1/24/2023	Volvo Trucks North America	Valiant TMS	Cable diagram =V2UQ31UQ7.1+V2UQ31UQ7.1-W1	Drawing name: =2V01&EFS-EL_KF1	= V2UQ31UQ7.1
			Ed.	MKLEPADLO					+ V2UQ31UQ7.1
			Appr		P6700 Framing - Cell 2V01, KF1			Document type: EMA	Project nr: 22-16152
Modification	Date	Name	Original		Replacement of / Replaced by	Scale 1:1			Page 1 / 1630

Cable diagram

F09_002_VLU

Cable name -W1			cable type TPE					
remark			no. of conductors 4			cross-section 18		cable length 12
function text	Page / column	Target designation from	Connection point	conductor	Target designation to	Connection point	Page / column	function text
	&EFS=V2UQ31KF1+V2UQ31UQ8/2.0	=V2UQ31KF1+V2UQ31-KF1.1	2-X2 1		-BGS/R	1	&EFS=V2UQ31UQ8+V2UQ31UQ8/1.0	
	&EFS=V2UQ31KF1+V2UQ31UQ8/2.0	=V2UQ31KF1+V2UQ31-KF1.1	2-X2 2		-BGS/R	2	&EFS=V2UQ31UQ8+V2UQ31UQ8/1.0	
	&EFS=V2UQ31KF1+V2UQ31UQ8/2.0	=V2UQ31KF1+V2UQ31-KF1.1	2-X2 3		-BGS/R	3	&EFS=V2UQ31UQ8+V2UQ31UQ8/1.1	
	&EFS=V2UQ31KF1+V2UQ31UQ8/2.0	=V2UQ31KF1+V2UQ31-KF1.1	2-X2 4		-BGS/R	4	&EFS=V2UQ31UQ8+V2UQ31UQ8/1.1	

			Date	1/24/2023	Volvo Trucks North America	Valiant TMS	Cable diagram =V2UQ31UQ8.1+V2UQ31UQ8.1-W1	Drawing name: =2V01&EFS-EL_KF1	= V2UQ31UQ8.1
			Ed.	MKLEPADLO					+ V2UQ31UQ8.1
			Appr		P6700 Framing - Cell 2V01, KF1			Document type: EMA	Project nr: 22-16152
Modification	Date	Name	Original		Replacement of / Replaced by	Scale 1:1			Page 1 / 1630

Cable diagram

F09_002_VLU

Cable name -W1			cable type TPE					
remark			no. of conductors 4			cross-section 18		cable length 12
function text	Page / column	Target designation from	Connection point	conductor	Target designation to	Connection point	Page / column	function text
	&EFS=V2UQ31KF1+V2UQ31UQ9/2.0	=V2UQ31KF1+V2UQ31-KF1.1	2-X3 1		-BGS/R	1	&EFS=V2UQ31UQ9+V2UQ31UQ9/1.0	
	&EFS=V2UQ31KF1+V2UQ31UQ9/2.0	=V2UQ31KF1+V2UQ31-KF1.1	2-X3 2		-BGS/R	2	&EFS=V2UQ31UQ9+V2UQ31UQ9/1.0	
	&EFS=V2UQ31KF1+V2UQ31UQ9/2.0	=V2UQ31KF1+V2UQ31-KF1.1	2-X3 3		-BGS/R	3	&EFS=V2UQ31UQ9+V2UQ31UQ9/1.1	
	&EFS=V2UQ31KF1+V2UQ31UQ9/2.0	=V2UQ31KF1+V2UQ31-KF1.1	2-X3 4		-BGS/R	4	&EFS=V2UQ31UQ9+V2UQ31UQ9/1.1	

			Date	1/24/2023	Volvo Trucks North America	Valiant TMS	Cable diagram =V2UQ31UQ9.1+V2UQ31UQ9.1-W1	Drawing name: =2V01&EFS-EL_KF1	= V2UQ31UQ9.1
			Ed.	MKLEPADLO					+ V2UQ31UQ9.1
			Appr		P6700 Framing - Cell 2V01, KF1			Document type: EMA	Project nr: 22-16152
Modification	Date	Name	Original		Replacement of / Replaced by	Scale 1:1			Page 1 / 1630

Cable diagram

F09_002_VLU

Cable name -W1			cable type TPE					
remark			no. of conductors 4			cross-section 18		cable length 3
function text	Page / column	Target designation from	Connection point	conductor	Target designation to	Connection point	Page / column	function text
	&EFS=V2UQ31KF2+V2UQ31UQ3	=V2UQ31KF2+V2UQ31-KF2.1	1-X1 1		-BGS/R	1	&EFS=V2UQ31UQ10+V2UQ31UQ10/1.0	
	&EFS=V2UQ31KF2+V2UQ31UQ3	=V2UQ31KF2+V2UQ31-KF2.1	1-X1 2		-BGS/R	2	&EFS=V2UQ31UQ10+V2UQ31UQ10/1.0	
	&EFS=V2UQ31KF2+V2UQ31UQ3	=V2UQ31KF2+V2UQ31-KF2.1	1-X1 3		-BGS/R	3	&EFS=V2UQ31UQ10+V2UQ31UQ10/1.1	
	&EFS=V2UQ31KF2+V2UQ31UQ3	=V2UQ31KF2+V2UQ31-KF2.1	1-X1 4		-BGS/R	4	&EFS=V2UQ31UQ10+V2UQ31UQ10/1.1	

=V2UQ31UQ9.1+.UQ31UQ9.1/1

=V2UQ31UQ10.2+.UQ31UQ10.2/1

			Date	1/24/2023	Volvo Trucks North America	Valiant TMS	Cable diagram =V2UQ31UQ10.1+V2UQ31UQ10.1-W1	Drawing name: =2V01&EFS-EL_KF1	= V2UQ31UQ10.1
			Ed.	MKLEPADLO					+ V2UQ31UQ10.1
			Appr		P6700 Framing - Cell 2V01, KF1	Scale 1:1		Document type: EMA	Project nr: 22-16152
Modification	Date	Name	Original		Replacement of	Replaced by			Page 1 / 1630

Cable diagram

F09_002_VLU

Cable name -W1			cable type TPE					
remark			no. of conductors 4			cross-section 18		cable length 8
function text	Page / column	Target designation from	Connection point	conductor	Target designation to	Connection point	Page / column	function text
	&EFS=V2UQ31KF2+V2UQ31UQ1	=V2UQ31KF2+V2UQ31-KF2.1	1		-X2 1	1	&EFS=V2UQ31UQ10+V2UQ31UQ10/1.2	
	&EFS=V2UQ31KF2+V2UQ31UQ1	=V2UQ31KF2+V2UQ31-KF2.1	2		-X2 2	2	&EFS=V2UQ31UQ10+V2UQ31UQ10/1.2	
	&EFS=V2UQ31KF2+V2UQ31UQ1	=V2UQ31KF2+V2UQ31-KF2.1	3		-X2 3	3	&EFS=V2UQ31UQ10+V2UQ31UQ10/1.2	
	&EFS=V2UQ31KF2+V2UQ31UQ1	=V2UQ31KF2+V2UQ31-KF2.1	4		-X2 4	4	&EFS=V2UQ31UQ10+V2UQ31UQ10/1.2	

			Date	1/24/2023	Volvo Trucks North America	Valiant TMS	Cable diagram =V2UQ31UQ10.2+V2UQ31UQ10.2-W1	Drawing name: =2V01&EFS-EL_KF1	= V2UQ31UQ10.2
			Ed.	MKLEPADLO					+ V2UQ31UQ10.2
			Appr		P6700 Framing - Cell 2V01, KF1			Document type: EMA	Project nr: 22-16152
Modification	Date	Name	Original		Replacement of / Replaced by	Scale 1:1			Page 1 / 1630

Cable diagram

F09_002_VLU

Cable name -W1			cable type TPE					
remark			no. of conductors 4			cross-section 18		cable length 8
function text	Page / column	Target designation from	Connection point	conductor	Target designation to	Connection point	Page / column	function text
	&EFS=V2UQ31KF2+V2UQ31UQ3	=V2UQ31KF2+V2UQ31-KF2.1	1-X3 1		-BGS/R	1	&EFS=V2UQ31UQ10+V2UQ31UQ10/1.4	
	&EFS=V2UQ31KF2+V2UQ31UQ3	=V2UQ31KF2+V2UQ31-KF2.1	1-X3 2		-BGS/R	2	&EFS=V2UQ31UQ10+V2UQ31UQ10/1.4	
	&EFS=V2UQ31KF2+V2UQ31UQ3	=V2UQ31KF2+V2UQ31-KF2.1	1-X3 3		-BGS/R	3	&EFS=V2UQ31UQ10+V2UQ31UQ10/1.4	
	&EFS=V2UQ31KF2+V2UQ31UQ3	=V2UQ31KF2+V2UQ31-KF2.1	1-X3 4		-BGS/R	4	&EFS=V2UQ31UQ10+V2UQ31UQ10/1.4	

=V2UQ31UQ10.2+.UQ31UQ10.2/1

=V2UQ31UQ11.1+.UQ31UQ11.1/1

			Date	1/24/2023	Volvo Trucks North America	Valiant TMS	Cable diagram =V2UQ31UQ10.3+V2UQ31UQ10.3-W1	Drawing name: =2V01&EFS-EL_KF1	= V2UQ31UQ10.3
			Ed.	MKLEPADLO					+ V2UQ31UQ10.3
			Appr		P6700 Framing - Cell 2V01, KF1	Scale 1:1		Document type: EMA / Project nr: 22-16152	Page 1 / 1630
Modification	Date	Name	Original		Replacement of / Replaced by				

Cable diagram

F09_002_VLU

Cable name -W1			cable type TPE					
remark			no. of conductors 4			cross-section 18		cable length 8
function text	Page / column	Target designation from	Connection point	conductor	Target designation to	Connection point	Page / column	function text
	&EFS=V2UQ31KF2+V2UQ31UQ11	=V2UQ31KF2+V2UQ31-KF2.11	-X4 1		-BGS/R	1	&EFS=V2UQ31UQ11+V2UQ31UQ11/1.0	
	&EFS=V2UQ31KF2+V2UQ31UQ11	=V2UQ31KF2+V2UQ31-KF2.11	-X4 2		-BGS/R	2	&EFS=V2UQ31UQ11+V2UQ31UQ11/1.0	
	&EFS=V2UQ31KF2+V2UQ31UQ11	=V2UQ31KF2+V2UQ31-KF2.11	-X4 3		-BGS/R	3	&EFS=V2UQ31UQ11+V2UQ31UQ11/1.1	
	&EFS=V2UQ31KF2+V2UQ31UQ11	=V2UQ31KF2+V2UQ31-KF2.11	-X4 4		-BGS/R	4	&EFS=V2UQ31UQ11+V2UQ31UQ11/1.1	

=V2UQ31UQ10.3+.UQ31UQ10.3/1

=V2UQ31UQ12.1+.UQ31UQ12.1/1

			Date	1/24/2023	Volvo Trucks North America	Valiant TMS	Cable diagram =V2UQ31UQ11.1+V2UQ31UQ11.1-W1	Drawing name: =2V01&EFS-EL_KF1	= V2UQ31UQ11.1
			Ed.	MKLEPADLO					+ V2UQ31UQ11.1
			Appr		P6700 Framing - Cell 2V01, KF1			Document type: EMA	Project nr: 22-16152
Modification	Date	Name	Original		Replacement of / Replaced by	Scale 1:1			Page 1 / 1630

Cable diagram

F09_002_VLU

Cable name -W1			cable type TPE					
remark			no. of conductors 4			cross-section 18		cable length 8
function text	Page / column	Target designation from	Connection point	conductor	Target designation to	Connection point	Page / column	function text
	&EFS=V2UQ31KF2+V2UQ31UQ1	-W1/1	=V2UQ31KF2+V2UQ31-KF2.1	1	-X5	-BGS/R	1	&EFS=V2UQ31UQ12+V2UQ31UQ12/1.0
	&EFS=V2UQ31KF2+V2UQ31UQ1	-W1/2	=V2UQ31KF2+V2UQ31-KF2.1	2	-X5	-BGS/R	2	&EFS=V2UQ31UQ12+V2UQ31UQ12/1.0
	&EFS=V2UQ31KF2+V2UQ31UQ1	-W1/3	=V2UQ31KF2+V2UQ31-KF2.1	3	-X5	-BGS/R	3	&EFS=V2UQ31UQ12+V2UQ31UQ12/1.1
	&EFS=V2UQ31KF2+V2UQ31UQ1	-W1/4	=V2UQ31KF2+V2UQ31-KF2.1	4	-X5	-BGS/R	4	&EFS=V2UQ31UQ12+V2UQ31UQ12/1.1

			Date	1/24/2023	Volvo Trucks North America	Valiant TMS	Cable diagram =V2UQ31UQ12.1+V2UQ31UQ12.1-W1	Drawing name: =2V01&EFS-EL_KF1	= V2UQ31UQ12.1
			Ed.	MKLEPADLO					+ V2UQ31UQ12.1
			Appr		P6700 Framing - Cell 2V01, KF1			Document type: EMA	Project nr: 22-16152
Modification	Date	Name	Original		Replacement of / Replaced by	Scale 1:1			Page 1 / 1630

Cable diagram

F09_002_VLU

Cable name -W1			cable type TPE					
remark			no. of conductors 4			cross-section 18		cable length 10
function text	Page / column	Target designation from	Connection point	conductor	Target designation to	Connection point	Page / column	function text
	&EFS=V2UQ31KF2+V2UQ31UQ1	=V2UQ31KF2+V2UQ31-KF2.1	1-X6 1		-BGS/R	1	&EFS=V2UQ31UQ13+V2UQ31UQ13/1.0	
	&EFS=V2UQ31KF2+V2UQ31UQ1	=V2UQ31KF2+V2UQ31-KF2.1	1-X6 2		-BGS/R	2	&EFS=V2UQ31UQ13+V2UQ31UQ13/1.0	
	&EFS=V2UQ31KF2+V2UQ31UQ1	=V2UQ31KF2+V2UQ31-KF2.1	1-X6 3		-BGS/R	3	&EFS=V2UQ31UQ13+V2UQ31UQ13/1.1	
	&EFS=V2UQ31KF2+V2UQ31UQ1	=V2UQ31KF2+V2UQ31-KF2.1	1-X6 4		-BGS/R	4	&EFS=V2UQ31UQ13+V2UQ31UQ13/1.1	

=V2UQ31UQ12.1+.UQ31UQ12.1/1

=V2UQ31UQ14.1+.UQ31UQ14.1/1

			Date	1/24/2023	Volvo Trucks North America	Valiant TMS	Cable diagram =V2UQ31UQ13.1+V2UQ31UQ13.1-W1	Drawing name: =2V01&EFS-EL_KF1	= V2UQ31UQ13.1
			Ed.	MKLEPADLO					+ V2UQ31UQ13.1
			Appr		P6700 Framing - Cell 2V01, KF1			Document type: EMA	Project nr: 22-16152
Modification	Date	Name	Original		Replacement of / Replaced by	Scale 1:1			Page 1 / 1630

Cable diagram

F09_002_VLU

Cable name -W1			cable type TPE					
remark			no. of conductors 4			cross-section 18		cable length 10
function text	Page / column	Target designation from	Connection point	conductor	Target designation to	Connection point	Page / column	function text
	&EFS=V2UQ31KF2+V2UQ31/1.7	=V2UQ31KF2+V2UQ31-KF2.1	1-X7 1		-BGS/R	1	&EFS=V2UQ31UQ14+V2UQ31UQ14/1.0	
	&EFS=V2UQ31KF2+V2UQ31/1.7	=V2UQ31KF2+V2UQ31-KF2.1	1-X7 2		-BGS/R	2	&EFS=V2UQ31UQ14+V2UQ31UQ14/1.0	
	&EFS=V2UQ31KF2+V2UQ31/1.8	=V2UQ31KF2+V2UQ31-KF2.1	1-X7 3		-BGS/R	3	&EFS=V2UQ31UQ14+V2UQ31UQ14/1.1	
	&EFS=V2UQ31KF2+V2UQ31/1.8	=V2UQ31KF2+V2UQ31-KF2.1	1-X7 4		-BGS/R	4	&EFS=V2UQ31UQ14+V2UQ31UQ14/1.1	

Cable diagram

F09_002_VLU

Cable name -W1			cable type TPE					
remark			no. of conductors 4			cross-section 18		cable length 10
function text	Page / column	Target designation from	Connection point	conductor	Target designation to	Connection point	Page / column	function text
	&EFS=V2UQ31KF2+V2UQ31UQ8	=V2UQ31KF2+V2UQ31-KF2.1	1-X8 1		-BGS/R	1	&EFS=V2UQ31UQ15+V2UQ31UQ15/1.0	
	&EFS=V2UQ31KF2+V2UQ31UQ9	=V2UQ31KF2+V2UQ31-KF2.1	1-X8 2		-BGS/R	2	&EFS=V2UQ31UQ15+V2UQ31UQ15/1.0	
	&EFS=V2UQ31KF2+V2UQ31UQ9	=V2UQ31KF2+V2UQ31-KF2.1	1-X8 3		-BGS/R	3	&EFS=V2UQ31UQ15+V2UQ31UQ15/1.1	
	&EFS=V2UQ31KF2+V2UQ31UQ9	=V2UQ31KF2+V2UQ31-KF2.1	1-X8 4		-BGS/R	4	&EFS=V2UQ31UQ15+V2UQ31UQ15/1.1	

			Date	1/24/2023	Volvo Trucks North America	Valiant TMS	Cable diagram =V2UQ31UQ15.1+V2UQ31UQ15.1-W1	Drawing name: =2V01&EFS-EL_KF1	= V2UQ31UQ15.1
			Ed.	MKLEPADLO					+ V2UQ31UQ15.1
			Appr		P6700 Framing - Cell 2V01, KF1			Document type: EMA	Project nr: 22-16152
Modification	Date	Name	Original		Replacement of / Replaced by	Scale 1:1			Page 1 / 1630

Cable diagram

F09_002_VLU

Cable name	-W1	cable type	TPE		
remark		no. of conductors	4	cross-section 18	cable length 8

function text	Page / column	Target designation from	Connection point	conductor	Target designation to	Connection point	Page / column	function text
	&EFS=V2UQ31KF2+V2UQ31UQ1	=V2UQ31KF2+V2UQ31-KF2.12-X1	1		-BGS/R	1	&EFS=V2UQ31UQ16+V2UQ31UQ16/1.0	
	&EFS=V2UQ31KF2+V2UQ31UQ1	=V2UQ31KF2+V2UQ31-KF2.12-X1	2		-BGS/R	2	&EFS=V2UQ31UQ16+V2UQ31UQ16/1.0	
	&EFS=V2UQ31KF2+V2UQ31UQ1	=V2UQ31KF2+V2UQ31-KF2.12-X1	3		-BGS/R	3	&EFS=V2UQ31UQ16+V2UQ31UQ16/1.1	
	&EFS=V2UQ31KF2+V2UQ31UQ1	=V2UQ31KF2+V2UQ31-KF2.12-X1	4		-BGS/R	4	&EFS=V2UQ31UQ16+V2UQ31UQ16/1.1	

=V2UQ31UQ15.1+.UQ31UQ15.1/1

=V2UQ31UQ17.1+.UQ31UQ17.1/1

			Date	1/24/2023	Volvo Trucks North America	Valiant TMS	Cable diagram =V2UQ31UQ16.1+V2UQ31UQ16.1-W1	Drawing name: =2V01&EFS-EL_KF1	= V2UQ31UQ16.1 + V2UQ31UQ16.1
			Ed.	MKLEPADLO	P6700 Framing - Cell 2V01, KF1				
			Appr					Document type: EMA	Project nr: 22-16152
Modification	Date	Name	Original		Replacement of / Replaced by	Scale 1:1			Page 1 / 1630

Cable diagram

F09_002_VLU

Cable name -W1			cable type TPE					
remark			no. of conductors 4			cross-section 18		cable length 12
function text	Page / column	Target designation from	Connection point	conductor	Target designation to	Connection point	Page / column	function text
	&EFS=V2UQ31KF2+V2UQ31UQ1	=V2UQ31KF2+V2UQ31-KF2.1	2-X2 1		-BGS/R	1	&EFS=V2UQ31UQ17+V2UQ31UQ17/1.0	
	&EFS=V2UQ31KF2+V2UQ31UQ2	=V2UQ31KF2+V2UQ31-KF2.1	2-X2 2		-BGS/R	2	&EFS=V2UQ31UQ17+V2UQ31UQ17/1.0	
	&EFS=V2UQ31KF2+V2UQ31UQ3	=V2UQ31KF2+V2UQ31-KF2.1	2-X2 3		-BGS/R	3	&EFS=V2UQ31UQ17+V2UQ31UQ17/1.1	
	&EFS=V2UQ31KF2+V2UQ31UQ4	=V2UQ31KF2+V2UQ31-KF2.1	2-X2 4		-BGS/R	4	&EFS=V2UQ31UQ17+V2UQ31UQ17/1.1	

=V2UQ31UQ16.1+.UQ31UQ16.1/1

=V2UQ31UQ18.1+.UQ31UQ18.1/1

			Date	1/24/2023	Volvo Trucks North America	Valiant TMS	Cable diagram =V2UQ31UQ17.1+V2UQ31UQ17.1-W1	Drawing name: =2V01&EFS-EL_KF1	= V2UQ31UQ17.1
			Ed.	MKLEPADLO					+ V2UQ31UQ17.1
			Appr		P6700 Framing - Cell 2V01, KF1			Document type: EMA	Project nr: 22-16152
Modification	Date	Name	Original		Replacement of / Replaced by	Scale 1:1			Page 1 / 1630

Cable diagram

F09_002_VLU

Cable name -W1			cable type TPE					
remark			no. of conductors 4			cross-section 18		cable length 12
function text	Page / column	Target designation from	Connection point	conductor	Target designation to	Connection point	Page / column	function text
	&EFS=V2UQ31KF2+V2UQ31UQ2	=V2UQ31KF2+V2UQ31-KF2.1	2-X3 1		-BGS/R	1	&EFS=V2UQ31UQ18+V2UQ31UQ18/1.0	
	&EFS=V2UQ31KF2+V2UQ31UQ2	=V2UQ31KF2+V2UQ31-KF2.1	2-X3 2		-BGS/R	2	&EFS=V2UQ31UQ18+V2UQ31UQ18/1.0	
	&EFS=V2UQ31KF2+V2UQ31UQ2	=V2UQ31KF2+V2UQ31-KF2.1	2-X3 3		-BGS/R	3	&EFS=V2UQ31UQ18+V2UQ31UQ18/1.1	
	&EFS=V2UQ31KF2+V2UQ31UQ2	=V2UQ31KF2+V2UQ31-KF2.1	2-X3 4		-BGS/R	4	&EFS=V2UQ31UQ18+V2UQ31UQ18/1.1	

			Date	1/24/2023	Volvo Trucks North America	Valiant TMS	Cable diagram =V2UQ31UQ18.1+V2UQ31UQ18.1-W1	Drawing name: =2V01&EFS-EL_KF1	= V2UQ31UQ18.1
			Ed.	MKLEPADLO					+ V2UQ31UQ18.1
			Appr		P6700 Framing - Cell 2V01, KF1			Document type: EMA	Project nr: 22-16152
Modification	Date	Name	Original		Replacement of / Replaced by	Scale 1:1			Page 1 / 1630

Cable diagram

F09_002_VLU

Cable name -W1			cable type TPE					
remark			no. of conductors 4			cross-section 18		cable length 2
function text	Page / column	Target designation from	Connection point	conductor	Target designation to	Connection point	Page / column	function text
	&EFS/1.0	-BG01	1		=V2UQ51KF1-KF1.11	X0:1	&EFS=V2UQ51KF1/1.1	
	&EFS/1.0	-BG01	4		=V2UQ51KF1-KF1.11	X0:4	&EFS=V2UQ51KF1/1.1	Common Part Present
	&EFS/1.1	-BG01	3		=V2UQ51KF1-KF1.11	X0:3	&EFS=V2UQ51KF1/1.1	

Cable diagram

F09_002_VLU

Cable name -W2			cable type TPE					
remark			no. of conductors 4			cross-section 18		cable length 3
function text	Page / column	Target designation from	Connection point	conductor	Target designation to	Connection point	Page / column	function text
	&EFS/1.3	-BG02	1		=V2UQ51KF1-KF1.11	X1:1	&EFS=V2UQ51KF1/1.2	
	&EFS/1.3	-BG02	4		=V2UQ51KF1-KF1.11	X1:4	&EFS=V2UQ51KF1/1.2	Common Part Present
	&EFS/1.3	-BG02	3		=V2UQ51KF1-KF1.11	X1:3	&EFS=V2UQ51KF1/1.2	

			Date	1/24/2023	Volvo Trucks North America	Valiant TMS	Cable diagram =V2UQ51BG0+V2UQ51-W2	Drawing name: =2V01&EFS-EL_KF1	= V2UQ51BG0
			Ed.	MKLEPADLO					+ V2UQ51
			Appr		P6700 Framing - Cell 2V01, KF1			Document type: EMA	Project nr: 22-16152
Modification	Date	Name	Original		Replacement of / Replaced by	Scale 1:1			Page 2 / 1630

Cable diagram

F09_002_VLU

Cable name -W1			cable type TPE					
remark			no. of conductors 4			cross-section 18		cable length 2
function text	Page / column	Target designation from	Connection point	conductor	Target designation to	Connection point	Page / column	function text
	&EFS/1.0	-BG01	1		=V2UQ52KF1-KF1.11	X0:1	&EFS=V2UQ52KF1/1.1	
	&EFS/1.0	-BG01	4		=V2UQ52KF1-KF1.11	X0:4	&EFS=V2UQ52KF1/1.1	Common Part Present
	&EFS/1.1	-BG01	3		=V2UQ52KF1-KF1.11	X0:3	&EFS=V2UQ52KF1/1.1	

			Date	1/24/2023	Volvo Trucks North America	Valiant TMS	Cable diagram =V2UQ52BG0+V2UQ52-W1	Drawing name: =2V01&EFS-EL_KF1	= V2UQ52BG0
			Ed.	MKLEPADLO					+ V2UQ52
			Appr		P6700 Framing - Cell 2V01, KF1			Document type: EMA	Project nr: 22-16152
Modification	Date	Name	Original		Replacement of / Replaced by	Scale 1:1			Page 1 / 1630

Cable diagram

F09_002_VLU

Cable name -W2			cable type TPE					
remark			no. of conductors 4			cross-section 18		cable length 3
function text	Page / column	Target designation from	Connection point	conductor	Target designation to	Connection point	Page / column	function text
	&EFS/1.3	-BG02	1		=V2UQ52KF1-KF1.11	X1:1	&EFS=V2UQ52KF1/1.2	
	&EFS/1.3	-BG02	4		=V2UQ52KF1-KF1.11	X1:4	&EFS=V2UQ52KF1/1.2	Common Part Present
	&EFS/1.3	-BG02	3		=V2UQ52KF1-KF1.11	X1:3	&EFS=V2UQ52KF1/1.2	

			Date	1/24/2023	Volvo Trucks North America	Valiant TMS	Cable diagram =V2UQ52BG0+V2UQ52-W2	Drawing name: =2V01&EFS-EL_KF1	= V2UQ52BG0
			Ed.	MKLEPADLO					+ V2UQ52
			Appr		P6700 Framing - Cell 2V01, KF1			Document type: EMA	Project nr: 22-16152
Modification	Date	Name	Original		Replacement of / Replaced by	Scale 1:1			Page 2 / 1630

Cable diagram

F09_002_VLU

Cable name -W1			cable type TPE					
remark			no. of conductors 4			cross-section 18		cable length 2
function text	Page / column	Target designation from	Connection point	conductor	Target designation to	Connection point	Page / column	function text
	&EFS/1.0	-BG01	1		=V2UQ53KF1-KF1.11	X0:1	&EFS=V2UQ53KF1/1.1	
	&EFS/1.0	-BG01	4		=V2UQ53KF1-KF1.11	X0:4	&EFS=V2UQ53KF1/1.1	Common Part Present
	&EFS/1.1	-BG01	3		=V2UQ53KF1-KF1.11	X0:3	&EFS=V2UQ53KF1/1.1	

			Date	1/24/2023	Volvo Trucks North America	Valiant TMS	Cable diagram =V2UQ53BG0+V2UQ53-W1	Drawing name: =2V01&EFS-EL_KF1	= V2UQ53BG0
			Ed.	MKLEPADLO					+ V2UQ53
			Appr		P6700 Framing - Cell 2V01, KF1			Document type: EMA	Project nr: 22-16152
Modification	Date	Name	Original		Replacement of / Replaced by	Scale 1:1			Page 1 / 1630

Cable diagram

F09_002_VLU

Cable name -W2			cable type TPE					
remark			no. of conductors 4			cross-section 18		cable length 3
function text	Page / column	Target designation from	Connection point	conductor	Target designation to	Connection point	Page / column	function text
	&EFS/1.3	-BG02	1		=V2UQ53KF1-KF1.11	X1:1	&EFS=V2UQ53KF1/1.2	
	&EFS/1.3	-BG02	4		=V2UQ53KF1-KF1.11	X1:4	&EFS=V2UQ53KF1/1.2	Common Part Present
	&EFS/1.3	-BG02	3		=V2UQ53KF1-KF1.11	X1:3	&EFS=V2UQ53KF1/1.2	

			Date	1/24/2023	Volvo Trucks North America	Valiant TMS	Cable diagram =V2UQ53BG0+V2UQ53-W2	Drawing name: =2V01&EFS-EL_KF1	= V2UQ53BG0
			Ed.	MKLEPADLO					+ V2UQ53
			Appr		P6700 Framing - Cell 2V01, KF1			Document type: EMA	Project nr: 22-16152
Modification	Date	Name	Original		Replacement of / Replaced by	Scale 1:1			Page 2 / 1630

Cable diagram

F09_002_VLU

Cable name -W1			cable type TPE					
remark			no. of conductors 4			cross-section 18		cable length 2
function text	Page / column	Target designation from	Connection point	conductor	Target designation to	Connection point	Page / column	function text
	&EFS/1.0	-BG01	1		=V2UQ54KF1-KF1.11	X0:1	&EFS=V2UQ54KF1/1.1	
	&EFS/1.0	-BG01	4		=V2UQ54KF1-KF1.11	X0:4	&EFS=V2UQ54KF1/1.1	Common Part Present
	&EFS/1.1	-BG01	3		=V2UQ54KF1-KF1.11	X0:3	&EFS=V2UQ54KF1/1.1	

			Date	1/24/2023	Volvo Trucks North America	Valiant TMS	Cable diagram =V2UQ54BG0+V2UQ54-W1	Drawing name: =2V01&EFS-EL_KF1	= V2UQ54BG0
			Ed.	MKLEPADLO					+ V2UQ54
			Appr		P6700 Framing - Cell 2V01, KF1	Scale 1:1		Document type: EMA	Project nr: 22-16152
Modification	Date	Name	Original		Replacement of	Replaced by			Page 1 / 1630

Cable diagram

F09_002_VLU

Cable name -W2			cable type TPE					
remark			no. of conductors 4			cross-section 18		cable length 3
function text	Page / column	Target designation from	Connection point	conductor	Target designation to	Connection point	Page / column	function text
	&EFS/1.3	-BG02	1		=V2UQ54KF1-KF1.11	X1:1	&EFS=V2UQ54KF1/1.2	
	&EFS/1.3	-BG02	4		=V2UQ54KF1-KF1.11	X1:4	&EFS=V2UQ54KF1/1.2	Common Part Present
	&EFS/1.3	-BG02	3		=V2UQ54KF1-KF1.11	X1:3	&EFS=V2UQ54KF1/1.2	

			Date	1/24/2023	Volvo Trucks North America	Valiant TMS	Cable diagram =V2UQ54BG0+V2UQ54-W2	Drawing name: =2V01&EFS-EL_KF1	= V2UQ54BG0
			Ed.	MKLEPADLO					+ V2UQ54
			Appr		P6700 Framing - Cell 2V01, KF1			Document type: EMA	Project nr: 22-16152
Modification	Date	Name	Original		Replacement of / Replaced by	Scale 1:1			Page 2 / 1630

Cable overview

F10_001_Cable

Cable name	Source (from)	Target (to)	cable type	all conductors	Conductors used	Cross-section [mm]	Length [m]	remark
=V1GL13WC1-W2	=V1GL13+V1GL13UC01-TA1	=V1GL13WC1+V1GL13UC01-Q1		4	4	14	2	
=V1GL13WC1-W3				8	0	14	15	
=V1GL14WC1-W2	=V1GL14+V1GL14UC01-TA1	=V1GL14WC1+V1GL14UC01-Q1		4	4	14	2	
=V1GL14WC1-W3				8	0	14	15	
=V1GM11GM1WC1-W2				8	0	14	15	
=V1GM11GM1WC1-W4	=V1GM11GM1+V1GM11UC01-TA1	=V1GM11GM1WC1+V1GM11UC01-XG1		4	4	14	2	
=V1GM11GM2WC1-W2	=V1GM11GM2WC1+V1GM11UC01-Q1	=V1GM11GM2WC1+V1GM11UC01-XG1		4	4	14	2	
=V1GM11GM2WC1-W3				8	0	14	15	
=V1GM11GM2WC1-W4	=V1GM11GM2+V1GM11UC01-TA1	=V1GM11GM2WC1+V1GM11UC01-XG1		4	4	14	2	
=V1GM11WL1WC1-W3				8	0	14	15	
=V1WL2WL1WC1-W2	=V1WL2WL1+V1WL2UC01-TA1	=V1WL2WL1WC1+V1WL2UC01-Q1		4	4	14	2	
=V1WL2WL1WC1-W3				8	0	14	15	
=V1WL3GM1WC1-W2				8	0	14	15	
=V1WL3WL1WC1-W2	=V1WL3WL1WC1+V1WL3UC01-Q1	=V1WL3WL1WC1+V1WL3UC01-XG1		4	4	14	2	
=V1WL3WL1WC1-W3				8	0	14	15	
=V1WL3WL1WC1-W4	=V1WL3WL1+V1WL3UC01-TA1	=V1WL3WL1WC1+V1WL3UC01-XG1		4	4	14	2	
=V2GL15WC1-W2	=V2GL15+V2GL15UC01-TA1	=V2GL15WC1+V2GL15UC01-Q1		4	4	14	2	
=V2GL15WC1-W3				8	0	14	15	
=V2GL16WC1-W2	=V2GL16+V2GL16UC01-TA1	=V2GL16WC1+V2GL16UC01-Q1		4	4	14	2	
=V2GL16WC1-W3				8	0	14	15	
=V2GL17WC1-W2	=V2GL17+V2GL17UC01-TA1	=V2GL17WC1+V2GL17UC01-Q1		4	4	14	2	
=V2GL17WC1-W3				8	0	14	15	
=V2GL18WC1-W2	=V2GL18+V2GL18UC01-TA1	=V2GL18WC1+V2GL18UC01-Q1		4	4	14	2	
=V2GL18WC1-W3				8	0	14	15	
=V2WL1WL1WC1-W2	=V2WL1WL1+V2WL1UC01-TA1	=V2WL1WL1WC1+V2WL1UC01-Q1		4	4	14	2	
=V2WL1WL1WC1-W3				8	0	14	15	
=V2WL2GM1WC1-W2				8	0	14	15	
=V2WL2WL1WC1-W2	=V2WL2WL1WC1+V2WL2UC01-Q1	=V2WL2WL1WC1+V2WL2UC01-XG1		4	4	14	2	
=V2WL2WL1WC1-W3				8	0	14	15	
=V2WL2WL1WC1-W4	=V2WL2WL1+V2WL2UC01-TA1	=V2WL2WL1WC1+V2WL2UC01-XG1		4	4	14	2	
=V2WL3WL1WC1-W2	=V2WL3WL1+V2WL3UC01-TA1	=V2WL3WL1WC1+V2WL3UC01-Q1		4	4	14	2	
=V2WL3WL1WC1-W3				8	0	14	15	
=V2WL4WL1WC1-W2	=V2WL4WL1+V2WL4UC01-TA1	=V2WL4WL1WC1+V2WL4UC01-Q1		4	4	14	2	
=V2WL4WL1WC1-W3				8	0	14	15	
=V1GL13KF2-W3	=V1GL13KF2+V1GL13KF2-BZ02	=V1GL13KF2+V1GL13KF2-KF2.12	CBL	4	1	16	5	
=V1SF0SF1-W1	=V1KF1+V1UC11-KF11.14	=V1SF0SF1+V1UC71-SF1	CBL	8	8	24	30	
	=V1WC4+V1UC11-XD13							
	=V1KF1+V1UC11-KF11.32							
	=V1WC4+V1UC11-XD10							
=V2WC2-KF1-M1			DRIVE-CLiQ Cable	1	0		30	
=V2WC2-KF1-M2			DRIVE-CLiQ Cable	1	0		30	
=V2WC2-KF1-QA1	=V2KF1+V2UC81-KF1	=V2WC2+V2UC81-QA1	DRIVE-CLiQ Cable	1	0		0.21	
=V2WC2-QA1-M1	=V2WC2+V2UC81-M1	=V2WC2+V2UC81-QA1	MOTION-CONNECT Cable	3	0		30	
=V2WC2-QA1-M2	=V2WC2+V2UC81-M2	=V2WC2+V2UC81-QA1	MOTION-CONNECT Cable	3	0		30	
=V1GM11WL1WC1-W1	=V1GM11GM1WC1+V1GM11UC01-XG1	=V1GM11WL1+V1GM11UC01-TA1	NEBM-M12G8-E-1.5-Q5-LE6	4	4	14	2	

Cable overview

F10_001_Cable

Cable name	Source (from)	Target (to)	cable type	all conductors	Conductors used	Cross-section [mm]	Length [m]	remark
=V1WL3GM1WC1-W1	=V1WL3GM1+V1WL3UC01-TA1	=V1WL3WL1WC1+V1WL3UC01-XG1	NEBM-M12G8-E-1.5-Q5-LE6	4	4	14	2	
=V2WL2GM1WC1-W1	=V2WL2GM1+V2WL2UC01-TA1	=V2WL2WL1WC1+V2WL2UC01-XG1	NEBM-M12G8-E-1.5-Q5-LE6	4	4	14	2	
=KH0-W1			NEBS-L1G4-K-5-LE4	4	0	26	5	
=KF0KF1-KF1.31-P2	=KF0KF1+UC31-KF1.31-X1	=KF0KF1+UC31-KF31	PROFINET Cable	4	0	22		
=KF0KF1-KF100-P1	=KF0KF1+UC31-KF100.31	=KF0KF1+UC31-KF99.31	PROFINET Cable	4	1	22		
=KF0KF1-KF100.31-P2	=KF0KF1+UC31-KF1.31-X2	=KF0KF1+UC31-KF100.31	PROFINET Cable	4	0	22		
=KF0KF1-KF100.31-P3	=KF0KF1+UC31-KF1.31-X1	=KF0KF1+UC31-KF100.31	PROFINET Cable	4	0	22		
=KF0KF1-KF100.31-P4	=KF0KF1+UC31-KF100.31	=KF0KF1+UC31-PC1	PROFINET Cable	4	0	22		
=KF0KF1-KF100.31-P5	=KF0KF1+UC31-KF100.31	=KF0KF1+UC31-PC1	PROFINET Cable	4	0	22		
=KF0KF1-KF100.31-P6	=KF0KF1+UC31-KF100.31-P6	=KF0KF1+UC31-KF100.31	PROFINET Cable	4	1	22		
=KF0KF1-KF100.31-P7	=KF0KF1+UC31-KF100.31-P7	=KF0KF1+UC31-KF100.31	PROFINET Cable	4	1	22		
=KF0KF1-KF100.31-P8	=KF0KF1+UC31-KF100.31-P8	=KF0KF1+UC31-KF100.31	PROFINET Cable	4	1	22		
=KF0KF1-KF100.31-P9	=KF0KF1+UC31-KF100.31-P9	=KF0KF1+UC31-XG2	PROFINET Cable	4	1	22		
		=KF0KF1+UC31-KF100.31						
=KF0KF1-KF100.31-P10	=KF0KF1+UC31-KF100.31-P10	=KF0KF1+UC31-KF100.31	PROFINET Cable	4	1	22		
=KF0KF1-KF100.31-P11	=KF0KF1+UC31-KF100.31-P11	=KF0KF1+UC31-KF100.31	PROFINET Cable	4	1	22		
=KF0KF1-KF100.31-P12	=KF0KF1+UC31-KF100.31-P12	=KF0KF1+UC31-KF100.31	PROFINET Cable	4	1	22		
=KF0KF1-KF100.31-P13	=KF0KF1+UC31-KF100.31-P13	=KF0KF1+UC31-KF100.31	PROFINET Cable	4	1	22		
=KF0KF1-KF100.31-P14	=KF0KF1+UC31-KF100.31-P14	=KF0KF1+UC31-KF100.31	PROFINET Cable	4	1	22		
=KF0KF1-KF100.31-P15	=KF0KF1+UC31-KF100.31-P15	=KF0KF1+UC31-KF100.31	PROFINET Cable	4	1	22		
=KF0KF1-KF100.31-P16	=KF0KF1+UC31-KF100.31-P16	=KF0KF1+UC31-KF98.31	PROFINET Cable	4	1	22		
		=KF0KF1+UC31-KF100.31						
=KF0KF1-WF1	=KF0KF1+UC31-KF99.31	=KF0KF1+UC31-xx	PROFINET Cable	4	0	22		
=V1AR11KF1-KF100.12-P5	=V1AR11KF1+V1AR11UC01-XPN-X2	=V1KF1+V1UC12-KF100.12-P5	PROFINET Cable	4	1	22		
=V1AR11UQ41KF1-WF1	=V1AR11UQ41KF1+V1AR11UQ41-KF1-TP1	=V1AR11UQ41KF1+V1AR11UQ41-R3.CP/CS	PROFINET Cable	4	1	22		
=V1AR21KF1-KF100.11-P5	=V1AR21KF1+V1AR21UC01-XPN-X2	=V1KF1+V1UC11-KF100.11-P5	PROFINET Cable	4	1	22		
=V1AR31KF1-KF100.12-P6	=V1AR31KF1+V1AR31UC01-XPN-X2	=V1KF1+V1UC12-KF100.12-P6	PROFINET Cable	4	1	22		
=V1AR31UQ41KF1-WF1	=V1AR31UQ41KF1+V1AR31UQ41-KF1-TP1	=V1AR31UQ41KF1+V1AR31UQ41-R3.CP/CS	PROFINET Cable	4	1	22		
=V1AR31XQ41KF1-KF1			PROFINET Cable	4	0	22		
=V1AR41KF1-KF100.12-P7	=V1AR41KF1+V1AR41UC01-XPN-X2	=V1KF1+V1UC12-KF100.12-P7	PROFINET Cable	4	1	22		
=V1AR41UQ41KF1-WF1	=V1AR41UQ41KF1+V1AR41UQ41-KF1-TP1	=V1AR41UQ41KF1+V1AR41UQ41-R3.CP/CS	PROFINET Cable	4	1	22		
=V1FQ1-KF100.11-P15	=V1FQ1+V1FQ1BG1-BG1-X3	=V1FQ1+V1FQ1BG2-BG2-X4	PROFINET Cable	4	0	22		
=V1FQ1-KF100.12-P15	=V1FQ1+V1FQ1BG6-BG6-X3	=V1FQ1+V1FQ1BG7-BG7-X4	PROFINET Cable	4	0	22		
=V1GL13KF2-KF100.12-P12			PROFINET Cable	4	0	22		
=V1GL13KF2-WF1	=V1GL13KF2+V1GL13KF2-KF2.12	=V1GL13UQ51KF2+V1GL13UQ51-KF2-TP2	PROFINET Cable	4	1	22		
=V1GL13UQ51KF2-WF1			PROFINET Cable	4	0	22		
=V1GL14KF2-KF100.12-P13			PROFINET Cable	4	0	22		
=V1GL14UQ51KF2-WF1			PROFINET Cable	4	0	22		
=V1KF1-KF100.11-P1	=V1KF1+V1UC11-KF100.11-P1	=V1KF1+V1UC11-KF100.11	PROFINET Cable	4	1	22		
=V1KF1-KF100.11-P4	=V1KF1+V1UC11-KF100.11-P4	=V1KF1+V1UC11-KF100.11	PROFINET Cable	4	1	22		
=V1KF1-KF100.11-P5	=V1KF1+V1UC11-KF100.11-P5	=V1KF1+V1UC11-KF100.11	PROFINET Cable	4	1	22		
=V1KF1-KF100.11-P6	=V1KF1+V1UC11-KF100.11-P6	=V1KF1+V1UC11-KF100.11	PROFINET Cable	4	1	22		
=V1KF1-KF100.11-P7	=V1KF1+V1UC11-KF100.11-P7	=V1KF1+V1UC11-KF100.11	PROFINET Cable	4	1	22		
=V1KF1-KF100.11-P8	=V1KF1+V1UC11-KF100.11-P8	=V1KF1+V1UC11-KF100.11	PROFINET Cable	4	1	22		
=V1KF1-KF100.11-P9	=V1KF1+V1UC11-KF100.11-P9	=V1KF1+V1UC11-KF100.11	PROFINET Cable	4	1	22		
=V1KF1-KF100.11-P10	=V1KF1+V1UC11-KF100.11-P10	=V1KF1+V1UC11-KF100.11	PROFINET Cable	4	1	22		

1 3

			Date	1/24/2023	Volvo Trucks North America	Valiant TMS	Cable overview	Drawing name: =2V01&EFS-EL_KF1	=
			Ed.	MKLEPADLO					+
			Appr		P6700 Framing - Cell 2V01, KF1			Document type: EMC	Project nr: 22-16152
Modification	Date	Name	Original		Replacement of	Replaced by	Scale 1:1		Page 2 / 1630

Cable overview

F10_001_Cable

Cable name	Source (from)	Target (to)	cable type	all conductors	Conductors used	Cross-section [mm]	Length [m]	remark
=V1KF1-KF100.11-P11	=V1KF1+V1UC11-KF100.11-P11	=V1KF1+V1UC11-KF100.11	PROFINET Cable	4	1	22		
=V1KF1-KF100.11-P12	=V1KF1+V1UC11-KF100.11-P12	=V1KF1+V1UC11-KF100.11	PROFINET Cable	4	1	22		
=V1KF1-KF100.11-P13	=V1KF1+V1UC11-KF100.11-P13	=V1KF1+V1UC11-KF100.11	PROFINET Cable	4	1	22		
=V1KF1-KF100.11-P14	=V1KF1+V1UC11-KF100.11-P14	=V1KF1+V1UC11-KF100.11	PROFINET Cable	4	1	22		
=V1KF1-KF100.11-P15	=V1KF1+V1UC11-KF100.11-P15	=V1FQ1+V1FQ1BG2-BG2-X3	PROFINET Cable	4	1	22		
		=V1KF1+V1UC11-KF100.11						
=V1KF1-KF100.11-P16	=V1KF1+V1UC11-KF100.11-P16	=V2FQ1+V2FQ1BG3-BG3-X3	PROFINET Cable	4	1	22		
		=V1KF1+V1UC11-KF100.11						
=V1KF1-KF100.11-P3	=V1KF1+V1UC11-KF100.11	=V1KF1+V1UC11-KF11	PROFINET Cable	4	0	22		
=V1KF1-KF100.31-P6	=KF0KF1+UC31-KF100.31-P6	=V1KF1+V1UC11-KF100.11-P1	PROFINET Cable	4	0	22		
=V1KF1-KF100.12-P1	=V1KF1+V1UC12-KF100.12-P1	=V1KF1+V1UC12-KF100.12	PROFINET Cable	4	1	22		
=V1KF1-KF100.12-P4	=V1KF1+V1UC12-KF100.12-P4	=V1KF1+V1UC12-KF100.12	PROFINET Cable	4	1	22		
=V1KF1-KF100.12-P5	=V1KF1+V1UC12-KF100.12-P5	=V1KF1+V1UC12-KF100.12	PROFINET Cable	4	1	22		
=V1KF1-KF100.12-P6	=V1KF1+V1UC12-KF100.12-P6	=V1KF1+V1UC12-KF100.12	PROFINET Cable	4	1	22		
=V1KF1-KF100.12-P7	=V1KF1+V1UC12-KF100.12-P7	=V1KF1+V1UC12-KF100.12	PROFINET Cable	4	1	22		
=V1KF1-KF100.12-P8	=V1KF1+V1UC12-KF100.12-P8	=V1KF1+V1UC12-KF100.12	PROFINET Cable	4	1	22		
=V1KF1-KF100.12-P9	=V1KF1+V1UC12-KF100.12-P9	=V1KF1+V1UC12-KF100.12	PROFINET Cable	4	1	22		
=V1KF1-KF100.12-P10	=V1KF1+V1UC12-KF100.12-P10	=V1KF1+V1UC12-KF100.12	PROFINET Cable	4	1	22		
=V1KF1-KF100.12-P11	=V1KF1+V1UC12-KF100.12-P11	=V1KF1+V1UC12-KF100.12	PROFINET Cable	4	1	22		
=V1KF1-KF100.12-P12	=V1KF1+V1UC12-KF100.12-P12	=V1KF1+V1UC12-KF100.12	PROFINET Cable	4	1	22		
=V1KF1-KF100.12-P13	=V1KF1+V1UC12-KF100.12-P13	=V1KF1+V1UC12-KF100.12	PROFINET Cable	4	1	22		
=V1KF1-KF100.12-P14	=V1KF1+V1UC12-KF100.12-P14	=V1KF1+V1UC12-KF100.12	PROFINET Cable	4	1	22		
=V1KF1-KF100.12-P15	=V1KF1+V1UC12-KF100.12-P15	=V1FQ1+V1FQ1BG7-BG7-X3	PROFINET Cable	4	1	22		
		=V1KF1+V1UC12-KF100.12						
=V1KF1-KF100.12-P16	=V1KF1+V1UC12-KF100.12-P16	=V2FQ1+V2FQ1BG8-BG8-X3	PROFINET Cable	4	1	22		
		=V1KF1+V1UC12-KF100.12						
=V1KF1-KF100.12-P3	=V1KF1+V1UC12-KF100.12	=V1KF1+V1UC12-KF12	PROFINET Cable	4	0	22		
=V1KF1-KF100.31-P7	=KF0KF1+UC31-KF100.31-P7	=V1KF1+V1UC12-KF100.12-P1	PROFINET Cable	4	0	22		
=V1KF1-KF100.11-P15	=V1KF1+V1UC32-PNET1	=V1FQ1+V1FQ1BG1-BG1-X4	PROFINET Cable	4	1	22		
=V1KF1-PNET1	=V1KF1+V1UC32-PNET1	=V1KF1+V1UC32-KF32	PROFINET Cable	4	0	22		
=V1SF0PG1-KF32-P2	=V1KF1+V1UC32-KF32	=V1SF0PG1+V1UC32-PG1	PROFINET Cable	4	0	22		
=V1SF0PG2-KF100.11-P13	=V1KF1+V1UC11-KF100.11-P13	=V1SF0PG2+V1UC51-PNET1	PROFINET Cable	4	1	22		
=V1SF0PG2-PNET1	=V1SF0PG2+V1UC51-PNET1	=V1SF0PG2+V1UC51-PG1	PROFINET Cable	4	0	22		
=V1U20U01KF1-KF100.11-P12	=V1KF1+V1UC11-KF100.11-P12	=V1U20U01KF1+V1U20U01-KF1.11	PROFINET Cable	4	0	22		
=V1UL1KF1-WF1			PROFINET Cable	4	0	22		
=V1UL1KF2-WF2	=V1UL1KF1+V1UL1-KF1.11	=V1UL1KF2+V1UL1-KF2.11	PROFINET Cable	4	0	22		
=V1UQ31KF1-KF100.11-P9	=V1KF1+V1UC11-KF100.11-P9	=V1UQ31KF1+V1UQ31-KF1-TP1	PROFINET Cable	4	0	22		
=V1UQ51KF1-KF100.12-P11	=V1KF1+V1UC12-KF100.12-P11	=V1UQ51KF1+V1UQ51-KF1.11	PROFINET Cable	4	0	22		
=V1UQ53KF1-KF100.11-P12	=V1U20U01KF1+V1U20U01-KF1.11	=V1UQ53KF1+V1UQ53-KF1-TP1	PROFINET Cable	4	0	22		
=V1WC1-KF100.11-P2	=V1KF1+V1UC11-KF100.11	=V1WC1+V1UC11-KF1.2	PROFINET Cable	4	1	22		
=V1WC1-KF100.12-P2	=V1KF1+V1UC12-KF100.12	=V1WC1+V1UC12-KF1.2	PROFINET Cable	4	1	22		
=V1WL2WL1KF1-KF100.12-P14			PROFINET Cable	4	0	22		
=V1WL3GM1KF1-WF1	=V1WL3GM1KF1+V1WL3KF1-KF1.11	=V1WL3WL1KF1+V1WL3KF1-KF1.11	PROFINET Cable	4	0	22		
=V1WL3WL1KF1-WF1	=V1WL2WL1KF1+V1WL2KF1-KF1.11	=V1WL3WL1KF1+V1WL3KF1-KF1.11	PROFINET Cable	4	0	22		
=V2AR21KF1-KF100.14-P5	=V2AR21KF1+V2AR21UC01-XPN-X2	=V2KF1+V2UC14-KF100.14-P5	PROFINET Cable	4	1	22		
=V2AR22KF1-KF100.15-P5	=V2AR22KF1+V2AR22UC01-XPN-X2	=V2KF1+V2UC15-KF100.15-P5	PROFINET Cable	4	1	22		

			Date	1/24/2023	Volvo Trucks North America	Valiant TMS	Cable overview	Drawing name: =2V01&EFS-EL_KF1	=
			Ed.	MKLEPADLO					+
			Appr		P6700 Framing - Cell 2V01, KF1	Scale 1:1		Document type: EMC	Project nr: 22-16152
Modification	Date	Name	Original		Replacement of	Replaced by			Page 3 / 1630

Cable overview

F10_001_Cable

Cable name	Source (from)	Target (to)	cable type	all conductors	Conductors used	Cross-section [mm]	Length [m]	remark
=V2AR23KF1-KF100.14-P6	=V2AR23KF1+V2AR23UC01-XPN-X2	=V2KF1+V2UC14-KF100.14-P6	PROFINET Cable	4	1	22		
=V2AR24KF1-KF100.15-P6	=V2AR24KF1+V2AR24UC01-XPN-X2	=V2KF1+V2UC15-KF100.15-P6	PROFINET Cable	4	1	22		
=V2AR31KF1-KF100.11-P6	=V1KF1+V1UC11-KF100.11-P6	=V2AR31KF1+V2AR31UC01-XPN-X2	PROFINET Cable	4	1	22		
=V2AR31UQ41KF1-WF1	=V2AR31UQ41KF1+V2AR31UQ41-KF1-TP1	=V2AR31UQ41KF1+V2AR31UQ41-R3.CP/CS	PROFINET Cable	4	1	22		
=V2AR31UQ42KF1-WF1	=V2AR31UQ42KF1+V2AR31UQ42-KF1-TP1	=V2AR31UQ42KF1+V2AR31UQ42-R3.CP/CS	PROFINET Cable	4	1	22		
=V2AR31XQ41KF1-KF1			PROFINET Cable	4	0	22		
=V2AR32KF1-KF100.15-P7	=V2AR32KF1+V2AR32UC01-XPN-X2	=V2KF1+V2UC15-KF100.15-P7	PROFINET Cable	4	1	22		
=V2AR32UQ41KF1-WF1	=V2AR32UQ41KF1+V2AR32UQ41-KF1-TP1	=V2AR32UQ41KF1+V2AR32UQ41-R3.CP/CS	PROFINET Cable	4	1	22		
=V2AR32UQ42KF1-WF1	=V2AR32UQ42KF1+V2AR32UQ42-KF1-TP1	=V2AR32UQ42KF1+V2AR32UQ42-R3.CP/CS	PROFINET Cable	4	1	22		
=V2AR32XQ41KF1-KF1			PROFINET Cable	4	0	22		
=V2AR41KF1-KF100.11-P7	=V1KF1+V1UC11-KF100.11-P7	=V2AR41KF1+V2AR41UC01-XPN-X2	PROFINET Cable	4	1	22		
=V2AR41UQ41KF1-WF1	=V2AR41UQ41KF1+V2AR41UQ41-KF1-TP1	=V2AR41UQ41KF1+V2AR41UQ41-R3.CP/CS	PROFINET Cable	4	1	22		
=V2AR42KF1-KF100.15-P8	=V2AR42KF1+V2AR42UC01-XPN-X2	=V2KF1+V2UC15-KF100.15-P8	PROFINET Cable	4	1	22		
=V2AR42UQ41KF1-WF1	=V2AR42UQ41KF1+V2AR42UQ41-KF1-TP1	=V2AR42UQ41KF1+V2AR42UQ41-R3.CP/CS	PROFINET Cable	4	1	22		
=V2AR42UQ42KF1-WF1	=V2AR42UQ42KF1+V2AR42UQ42-KF1-TP1	=V2AR42UQ42KF1+V2AR42UQ42-R3.CP/CS	PROFINET Cable	4	1	22		
=V2AR43KF1-KF100.14-P7	=V2AR43KF1+V2AR43UC01-XPN-X2	=V2KF1+V2UC14-KF100.14-P7	PROFINET Cable	4	1	22		
=V2AR43UQ41KF1-WF1	=V2AR43UQ41KF1+V2AR43UQ41-KF1-TP1	=V2AR43UQ41KF1+V2AR43UQ41-R3.CP/CS	PROFINET Cable	4	1	22		
=V2AR43UQ42KF1-WF1	=V2AR43UQ42KF1+V2AR43UQ42-KF1-TP1	=V2AR43UQ42KF1+V2AR43UQ42-R3.CP/CS	PROFINET Cable	4	1	22		
=V2AR43UQ43KF1-WF1	=V2AR43UQ43KF1+V2AR43UQ43-KF1-TP1	=V2AR43UQ43KF1+V2AR43UQ43-R3.CP/CS	PROFINET Cable	4	1	22		
=V2AR44KF1-KF100.15-P9	=V2AR44KF1+V2AR44UC01-XPN-X2	=V2KF1+V2UC15-KF100.15-P9	PROFINET Cable	4	1	22		
=V2AR44UQ41KF1-WF1	=V2AR44UQ41KF1+V2AR44UQ41-KF1-TP1	=V2AR44UQ41KF1+V2AR44UQ41-R3.CP/CS	PROFINET Cable	4	1	22		
=V2AR44UQ42KF1-WF1	=V2AR44UQ42KF1+V2AR44UQ42-KF1-TP1	=V2AR44UQ42KF1+V2AR44UQ42-R3.CP/CS	PROFINET Cable	4	1	22		
=V2AR44UQ43KF1-WF1	=V2AR44UQ43KF1+V2AR44UQ43-KF1-TP1	=V2AR44UQ43KF1+V2AR44UQ43-R3.CP/CS	PROFINET Cable	4	1	22		
=V2FQ1-KF100.11-P16	=V2FQ1+V2FQ1BG3-BG3-X4	=V2FQ1+V2FQ1BG4-BG4-X3	PROFINET Cable	4	0	22		
=V2FQ1-KF100.12-P16	=V2FQ1+V2FQ1BG8-BG8-X4	=V2FQ1+V2FQ1BG9-BG9-X3	PROFINET Cable	4	0	22		
	=V2FQ1+V2FQ1BG9-BG9-X4	=V2FQ1+V2FQ1BG10-BG10-X3						
	=V2FQ1+V2FQ1BG10-BG10-X4	=V2FQ1+V2FQ1BG11-BG11-X3						
=V2GL15KF2-KF100.15-P14			PROFINET Cable	4	0	22		
=V2GL15UQ51KF2-WF1			PROFINET Cable	4	0	22		
=V2GL16KF2-KF100.14-P14			PROFINET Cable	4	0	22		
=V2GL16UQ51KF2-WF1			PROFINET Cable	4	0	22		
=V2GL17KF2-KF100.15-P15			PROFINET Cable	4	0	22		
=V2GL17UQ51KF2-WF1			PROFINET Cable	4	0	22		
=V2GL18KF2-KF100.14-P15			PROFINET Cable	4	0	22		
=V2GL18UQ51KF2-WF1			PROFINET Cable	4	0	22		
=V2KF1-KF100.14-P1	=V2KF1+V2UC14-KF100.14-P1	=V2KF1+V2UC14-KF100.14	PROFINET Cable	4	1	22		
=V2KF1-KF100.14-P3	=V2KF1+V2UC14-KF100.14	=V2KF1+V2UC14-KF14	PROFINET Cable	4	0	22		
=V2KF1-KF100.14-P4	=V2KF1+V2UC14-KF100.14-P4	=V2KF1+V2UC14-KF100.14	PROFINET Cable	4	1	22		
=V2KF1-KF100.14-P5	=V2KF1+V2UC14-KF100.14-P5	=V2KF1+V2UC14-KF100.14	PROFINET Cable	4	1	22		
=V2KF1-KF100.14-P6	=V2KF1+V2UC14-KF100.14-P6	=V2KF1+V2UC14-KF100.14	PROFINET Cable	4	1	22		
=V2KF1-KF100.14-P7	=V2KF1+V2UC14-KF100.14-P7	=V2KF1+V2UC14-KF100.14	PROFINET Cable	4	1	22		
=V2KF1-KF100.14-P8	=V2KF1+V2UC14-KF100.14-P8	=V2KF1+V2UC14-KF100.14	PROFINET Cable	4	1	22		
=V2KF1-KF100.14-P9	=V2KF1+V2UC14-KF100.14-P9	=V2KF1+V2UC14-KF100.14	PROFINET Cable	4	1	22		
=V2KF1-KF100.14-P10	=V2KF1+V2UC14-KF100.14-P10	=V2KF1+V2UC14-KF100.14	PROFINET Cable	4	1	22		
=V2KF1-KF100.14-P11	=V2KF1+V2UC14-KF100.14-P11	=V2KF1+V2UC14-KF100.14	PROFINET Cable	4	1	22		
=V2KF1-KF100.14-P12	=V2KF1+V2UC14-KF100.14-P12	=V2KF1+V2UC14-KF100.14	PROFINET Cable	4	1	22		

			Date	1/24/2023	Volvo Trucks North America	Valiant TMS	Cable overview	Drawing name: =2V01&EFS-EL_KF1	=
			Ed.	MKLEPADLO					+
			Appr		P6700 Framing - Cell 2V01, KF1			Document type: EMC	Project nr: 22-16152
Modification	Date	Name	Original		Replacement of	Replaced by	Scale 1:1		Page 4 / 1630

Cable overview

F10_001_Cable

Cable name	Source (from)	Target (to)	cable type	all conductors	Conductors used	Cross-section [mm]	Length [m]	remark
=V2KF1-KF100.14-P13	=V2KF1+V2UC14-KF100.14-P13	=V2KF1+V2UC14-KF100.14	PROFINET Cable	4	1	22		
=V2KF1-KF100.14-P14	=V2KF1+V2UC14-KF100.14-P14	=V2KF1+V2UC14-KF100.14	PROFINET Cable	4	1	22		
=V2KF1-KF100.14-P15	=V2KF1+V2UC14-KF100.14-P15	=V2KF1+V2UC14-KF100.14	PROFINET Cable	4	1	22		
=V2KF1-KF100.14-P16	=V2KF1+V2UC14-KF100.14-P16	=V2FQ1+V2FQ1BG5-BG5-X3	PROFINET Cable	4	1	22		
		=V2KF1+V2UC14-KF100.14						
=V2KF1-KF100.31-P10	=KF0KF1+UC31-KF100.31-P10	=V2KF1+V2UC14-KF100.14-P1	PROFINET Cable	4	0	22		
=V2KF1-KF100.15-P1	=V2KF1+V2UC15-KF100.15-P1	=V2KF1+V2UC15-KF100.15	PROFINET Cable	4	1	22		
=V2KF1-KF100.15-P3	=V2KF1+V2UC15-KF100.15	=V2KF1+V2UC15-KF15	PROFINET Cable	4	0	22		
=V2KF1-KF100.15-P4	=V2KF1+V2UC15-KF100.15-P4	=V2KF1+V2UC15-KF100.15	PROFINET Cable	4	1	22		
=V2KF1-KF100.15-P5	=V2KF1+V2UC15-KF100.15-P5	=V2KF1+V2UC15-KF100.15	PROFINET Cable	4	1	22		
=V2KF1-KF100.15-P6	=V2KF1+V2UC15-KF100.15-P6	=V2KF1+V2UC15-KF100.15	PROFINET Cable	4	1	22		
=V2KF1-KF100.15-P7	=V2KF1+V2UC15-KF100.15-P7	=V2KF1+V2UC15-KF100.15	PROFINET Cable	4	1	22		
=V2KF1-KF100.15-P8	=V2KF1+V2UC15-KF100.15-P8	=V2KF1+V2UC15-KF100.15	PROFINET Cable	4	1	22		
=V2KF1-KF100.15-P9	=V2KF1+V2UC15-KF100.15-P9	=V2KF1+V2UC15-KF100.15	PROFINET Cable	4	1	22		
=V2KF1-KF100.15-P10	=V2KF1+V2UC15-KF100.15-P10	=V2KF1+V2UC15-KF100.15	PROFINET Cable	4	1	22		
=V2KF1-KF100.15-P11	=V2KF1+V2UC15-KF100.15-P11	=V2KF1+V2UC15-KF100.15	PROFINET Cable	4	1	22		
=V2KF1-KF100.15-P12	=V2KF1+V2UC15-KF100.15-P12	=V2KF1+V2UC15-KF100.15	PROFINET Cable	4	1	22		
=V2KF1-KF100.15-P13	=V2KF1+V2UC15-KF100.15-P13	=V2KF1+V2UC15-KF100.15	PROFINET Cable	4	1	22		
=V2KF1-KF100.15-P14	=V2KF1+V2UC15-KF100.15-P14	=V2KF1+V2UC15-KF100.15	PROFINET Cable	4	1	22		
=V2KF1-KF100.15-P15	=V2KF1+V2UC15-KF100.15-P15	=V2KF1+V2UC15-KF100.15	PROFINET Cable	4	1	22		
=V2KF1-KF100.15-P16	=V2KF1+V2UC15-KF100.15-P16	=V2FQ1+V2FQ1BG12-BG12-X3	PROFINET Cable	4	1	22		
		=V2KF1+V2UC15-KF100.15						
=V2KF1-KF100.31-P11	=KF0KF1+UC31-KF100.31-P11	=V2KF1+V2UC15-KF100.15-P1	PROFINET Cable	4	0	22		
=V2KF1-KF100.14-P16	=V2KF1+V2UC32-PNET1	=V2FQ1+V2FQ1BG5-BG5-X4	PROFINET Cable	4	1	22		
=V2KF1-PNET1	=V2KF1+V2UC32-PNET1	=V2KF1+V2UC32-KF32	PROFINET Cable	4	0	22		
=V2KF1-KF100.14-P12	=V2KF1+V2UC14-KF100.14-P12	=V2KF1+V2UC33-PNET1	PROFINET Cable	4	1	22		
=V2KF1-PNET1	=V2KF1+V2UC33-PNET1	=V2KF1+V2UC33-KF33	PROFINET Cable	4	0	22		
=V2KF1-KF100.14-P11	=V2KF1+V2UC14-KF100.14-P11	=V2KF1+V2UC81-PNET1	PROFINET Cable	4	1	22		
=V2KF1-PNET1	=V2KF1+V2UC81-PNET1	=V2KF1+V2UC81-KF1	PROFINET Cable	4	0	22		
=V2SF0PG1-KF32-P2	=V2KF1+V2UC32-KF32	=V2SF0PG1+V2UC32-PG1	PROFINET Cable	4	0	22		
=V2SF0PG2-KF33-P2	=V2KF1+V2UC33-KF33	=V2SF0PG2+V2UC33-PG1	PROFINET Cable	4	0	22		
=V2UQ31KF1-KF100.11-P10	=V1KF1+V1UC11-KF100.11-P10	=V2UQ31KF1+V2UQ31-KF1-TP1	PROFINET Cable	4	0	22		
=V2UQ31KF2-WF2	=V2UQ31KF1+V2UQ31-KF1-TP2	=V2UQ31KF2+V2UQ31-KF2-TP1	PROFINET Cable	4	1	22		
=V2UQ51KF1-KF100.11-P11	=V1KF1+V1UC11-KF100.11-P11	=V2UQ51KF1+V2UQ51-KF1.11	PROFINET Cable	4	0	22		
=V2UQ52KF1-KF100.15-P13	=V2KF1+V2UC15-KF100.15-P13	=V2UQ52KF1+V2UQ52-KF1.11	PROFINET Cable	4	0	22		
=V2UQ53KF1-KF100.14-P13	=V2KF1+V2UC14-KF100.14-P13	=V2UQ53KF1+V2UQ53-KF1.11	PROFINET Cable	4	0	22		
=V2UQ54KF1-WF1	=V2UQ52KF1+V2UQ52-KF1.11	=V2UQ54KF1+V2UQ54-KF1.11	PROFINET Cable	4	0	22		
=V2WL1WL1KF1-WF1	=V1WL3GM1KF1+V1WL3KF1-KF1.11	=V2WL1WL1KF1+V2WL1KF1-KF1.11	PROFINET Cable	4	0	22		
=V2WL2GM1KF1-WF1	=V2WL2GM1KF1+V2WL2KF1-KF1.11	=V2WL2WL1KF1+V2WL2KF1-KF1.11	PROFINET Cable	4	0	22		
=V2WL2WL1KF1-KF100.11-P14			PROFINET Cable	4	0	22		
=V2WL3WL1KF1-WF1	=V2WL2GM1KF1+V2WL2KF1-KF1.11	=V2WL3WL1KF1+V2WL3KF1-KF1.11	PROFINET Cable	4	0	22		
=V2WL4WL1KF1-WF1	=V2WL3WL1KF1+V2WL3KF1-KF1.11	=V2WL4WL1KF1+V2WL4KF1-KF1.11	PROFINET Cable	4	0	22		
=V1GL13KF2-W1.2	=V1GL13KF2+V1GL13KF2-KF2.12	=V1WC4+V1UC12-XG51	PUR	5	3	16	35	
=V2WC1-GND1	=WC1+V2UC161-WC1	=V2WC1+V2UC161-GND	RK	1	0	2		
=V2WC1-GND1	=WC1+V2UC162-WC1	=V2WC1+V2UC162-GND	RK	1	0	2		
=V2WC1-GND1	=WC1+V2UC163-WC1	=V2WC1+V2UC163-GND	RK	1	0	2		

			Date	1/24/2023	Volvo Trucks North America	Valiant TMS	Cable overview	Drawing name: =2V01&EFS-EL_KF1	=
			Ed.	MKLEPADLO					+
			Appr		P6700 Framing - Cell 2V01, KF1			Document type: EMC	Project nr: 22-16152
Modification	Date	Name	Original		Replacement of	Replaced by	Scale 1:1		Page 5 / 1630

Cable overview

F10_001_Cable

Cable name	Source (from)	Target (to)	cable type	all conductors	Conductors used	Cross-section [mm]	Length [m]	remark
=V1WC1-GND1	=V1WC1+V1UC11-GND	=V1WC1+V1UC11-PE	RK	1	1	6		
=V1WC1-GND1	=V1WC1+V1UC12-GND	=V1WC1+V1UC12-PE	RK	1	1	6		
=V2AR21XQ11WC1-W1	=V2AR21XQ11WC1+V2AR21XQ11UC01-XG1	=V2WC2+V2UC161-XG1	TC-ER	4	4	2	7.62	Max.
		=V2WC2+V2UC161-XG2						
=V2AR22XQ11WC1-W1	=V2AR22XQ11WC1+V2AR22XQ11UC01-XG1	=V2WC2+V2UC163-XG1	TC-ER	4	4	2	7.62	Max.
		=V2WC2+V2UC163-XG2						
=V2AR23XQ11WC1-W1	=V2AR23XQ11WC1+V2AR23XQ11UC01-XG1	=V2WC2+V2UC161-XG1	TC-ER	4	4	2	7.62	Max.
		=V2WC2+V2UC161-XG2						
=V2AR24XQ11WC1-W1	=V2AR24XQ11WC1+V2AR24XQ11UC01-XG1	=V2WC2+V2UC163-XG1	TC-ER	4	4	2	7.62	Max.
		=V2WC2+V2UC163-XG2						
=V2AR42XQ11WC1-W1	=V2AR42XQ11WC1+V2AR42XQ11UC01-XG1	=V2WC2+V2UC162-XG1	TC-ER	4	4	2	7.62	Max.
		=V2WC2+V2UC162-XG2						
=V2AR44XQ11WC1-W1	=V2AR44XQ11WC1+V2AR44XQ11UC01-XG1	=V2WC2+V2UC162-XG1	TC-ER	4	4	2	7.62	Max.
		=V2WC2+V2UC162-XG2						
=V1AR31XQ41WC1-W1		=V1AR31XQ41WC1+V1AR31XQ41UC01-XD0	TC-ER	4	4	6	25	
	=V1AR31XQ41+V1UC12-FC1							
=V1GM11GM1WC1-W1	=V1GM11GM1WC1+V1GM11UC01-XG1	=V1GM11GM2WC1+V1GM11UC01-XG1	TC-ER	4	4	6	40	
=V1GM11GM2WC1-W1		=V1GM11GM2WC1+V1GM11UC01-Q1	TC-ER	4	4	6	40	
	=V1GM11+V1UC11-FC1							
=V2AR31XQ41WC1-W1		=V2AR31XQ41WC1+V2AR31XQ41UC01-XD0	TC-ER	4	4	6	24	
	=V2AR31XQ41+V1UC11-FC1							
=V2AR32XQ41WC1-W1		=V2AR32XQ41WC1+V2AR32XQ41UC01-XD0	TC-ER	4	4	6	50	
	=V2AR32XQ41+V1UC12-FC1							
=V2WC1-W1		=V2WC1+V2UC81-GND	TC-ER	4	4	8	40	
	=V2UC81+V1UC11-FC1	=V2WC1+V2UC81-Q1						
=KF0WC3-W1	=KF0WC3+UC31-XD1	=V1WC3+V1UC11-XD1	TC-ER	3	3	10	25	
		=V1WC3+V1UC11-PE						
=V1AR11WC1-W1		=V1AR11WC1+V1AR11UC01-PE	TC-ER	4	4	10	20	
	=V1AR11+V1UC12-FC1	=V1AR11WC1+V1AR11UC01-Q1						
=V1AR21WC1-W1		=V1AR21WC1+V1AR21UC01-PE	TC-ER	4	4	10	15	
	=V1AR21+V1UC11-FC1	=V1AR21WC1+V1AR21UC01-Q1						
=V1AR31WC1-W1		=V1AR31WC1+V1AR31UC01-PE	TC-ER	4	4	10	20	
	=V1AR31+V1UC12-FC1	=V1AR31WC1+V1AR31UC01-Q1						
=V1AR41WC1-W1		=V1AR41WC1+V1AR41UC01-PE	TC-ER	4	4	10	10	
	=V1AR41+V1UC12-FC1	=V1AR41WC1+V1AR41UC01-Q1						
=V1GL13WC1-W1		=V1GL13WC1+V1GL13UC01-Q1	TC-ER	4	4	10	30	
	=V1GL13+V1UC12-FC1							
=V1GL14WC1-W1		=V1GL14WC1+V1GL14UC01-Q1	TC-ER	4	4	10	30	
	=V1GL14+V1UC12-FC1							
=V1WL2WL1WC1-W1		=V1WL2WL1WC1+V1WL2UC01-Q1	TC-ER	4	4	10	35	
	=V1WL2+V1UC12-FC1							
=V1WL3WL1WC1-W1		=V1WL3WL1WC1+V1WL3UC01-Q1	TC-ER	4	4	10	35	
	=V1WL3+V1UC12-FC1							
=V2AR21WC1-W1		=V2AR21WC1+V2AR21UC01-PE	TC-ER	4	4	10	45	
	=V2AR21+V1UC11-FC1	=V2AR21WC1+V2AR21UC01-Q1						
=V2AR22WC1-W1		=V2AR22WC1+V2AR22UC01-PE	TC-ER	4	4	10	55	

Cable overview

F10_001_Cable

Cable name	Source (from)	Target (to)	cable type	all conductors	Conductors used	Cross-section [mm]	Length [m]	remark
	=V2AR22+V1UC12-FC1	=V2AR22WC1+V2AR22UC01-Q1						
=V2AR23WC1-W1		=V2AR23WC1+V2AR23UC01-PE	TC-ER	4	4	10	45	
	=V2AR23+V1UC11-FC1	=V2AR23WC1+V2AR23UC01-Q1						
=V2AR24WC1-W1		=V2AR24WC1+V2AR24UC01-PE	TC-ER	4	4	10	55	
	=V2AR24+V1UC12-FC1	=V2AR24WC1+V2AR24UC01-Q1						
=V2AR31WC1-W1		=V2AR31WC1+V2AR31UC01-PE	TC-ER	4	4	10	25	
	=V2AR31+V1UC11-FC1	=V2AR31WC1+V2AR31UC01-Q1						
=V2AR32WC1-W1		=V2AR32WC1+V2AR32UC01-PE	TC-ER	4	4	10	50	
	=V2AR32+V1UC12-FC1	=V2AR32WC1+V2AR32UC01-Q1						
=V2AR41WC1-W1		=V2AR41WC1+V2AR41UC01-PE	TC-ER	4	4	10	25	
	=V2AR41+V1UC11-FC1	=V2AR41WC1+V2AR41UC01-Q1						
=V2AR42WC1-W1		=V2AR42WC1+V2AR42UC01-PE	TC-ER	4	4	10	40	
	=V2AR42+V1UC12-FC1	=V2AR42WC1+V2AR42UC01-Q1						
=V2AR43WC1-W1		=V2AR43WC1+V2AR43UC01-PE	TC-ER	4	4	10	40	
	=V2AR43+V1UC11-FC1	=V2AR43WC1+V2AR43UC01-Q1						
=V2AR44WC1-W1		=V2AR44WC1+V2AR44UC01-PE	TC-ER	4	4	10	50	
	=V2AR44+V1UC12-FC1	=V2AR44WC1+V2AR44UC01-Q1						
=V2GL15WC1-W1		=V2GL15WC1+V2GL15UC01-Q1	TC-ER	4	4	10	40	
	=V2GL15+V1UC12-FC1							
=V2GL16WC1-W1		=V2GL16WC1+V2GL16UC01-Q1	TC-ER	4	4	10	30	
	=V2GL16+V1UC11-FC1							
=V2GL17WC1-W1		=V2GL17WC1+V2GL17UC01-Q1	TC-ER	4	4	10	50	
	=V2GL17+V1UC12-FC1							
=V2GL18WC1-W1		=V2GL18WC1+V2GL18UC01-Q1	TC-ER	4	4	10	40	
	=V2GL18+V1UC11-FC1							
=V2WC3-W1	=V1WC3+V1UC11-XD2	=V2WC3+V2UC14-XD1	TC-ER	3	3	10	25	
	=V1WC3+V1UC11-PE							
=V2WC3-W1	=V1WC3+V1UC12-XD2	=V2WC3+V2UC15-XD1	TC-ER	3	3	10	25	
	=V1WC3+V1UC12-PE							
=V2WL1WL1WC1-W1		=V2WL1WL1WC1+V2WL1UC01-Q1	TC-ER	4	4	10	35	
	=V2WL1+V1UC12-FC1							
=V2WL2WL1WC1-W1		=V2WL2WL1WC1+V2WL2UC01-Q1	TC-ER	4	4	10	35	
	=V2WL2+V1UC12-FC1							
=V2WL3WL1WC1-W1		=V2WL3WL1WC1+V2WL3UC01-Q1	TC-ER	4	4	10	35	
	=V2WL3+V1UC12-FC1							
=V2WL4WL1WC1-W1		=V2WL4WL1WC1+V2WL4UC01-Q1	TC-ER	4	4	10	35	
	=V2WL4+V1UC12-FC1							
=KH0-W2	=V1KF1+V1UC12-KF12.14	=KH0+KH0-BP2	TPE	4	4	18	20	Air supply
	=V1WC4+V1UC12-XD10							
	=V1WC4+V1UC12-XD13							
=KH0-W3	=V1KF1+V1UC11-KF11.14	=KH0+KH0-BP3	TPE	4	4	18	20	Air supply
	=V1WC4+V1UC11-XD10							
	=V1WC4+V1UC11-XD13							
=KH0-W4	=V1KF1+V1UC11-KF11.14	=KH0+KH0-BP4	TPE	4	4	18	10	Air supply

			Date	1/24/2023	Volvo Trucks North America	Valiant TMS	Cable overview	Drawing name: =2V01&EFS-EL_KF1	=
			Ed.	MKLEPADLO					+
			Appr		P6700 Framing - Cell 2V01, KF1			Document type: EMC	Project nr: 22-16152
Modification	Date	Name	Original		Replacement of	Replaced by	Scale 1:1		Page 7 / 1630

Cable overview

F10_001_Cable

Cable name	Source (from)	Target (to)	cable type	all conductors	Conductors used	Cross-section [mm]	Length [m]	remark
	=V1WC4+V1UC11-XD10							
	=V1WC4+V1UC11-XD13							
=KH0-W5	=V1KF1+V1UC12-KF12.14	=KH0+KH0-BP5	TPE	4	4	18	20	Air supply
	=V1WC4+V1UC12-XD10							
	=V1WC4+V1UC12-XD13							
=KH0-W6	=V1KF1+V1UC12-KF12.14	=KH0+KH0-BP6	TPE	4	4	18	20	Air supply
	=V1WC4+V1UC12-XD10							
	=V1WC4+V1UC12-XD13							
=KH0-W7	=V2KF1+V2UC15-KF15.12	=KH0+KH0-BP7	TPE	4	4	18	20	Air supply
	=V2WC4+V2UC15-XD10							
	=V2WC4+V2UC15-XD15							
=KH0-W8	=V2KF1+V2UC14-KF14.12	=KH0+KH0-BP8	TPE	4	4	18	20	Air supply
	=V2WC4+V2UC14-XD10							
	=V2WC4+V2UC14-XD15							
=KH0-W9	=V2KF1+V2UC15-KF15.12	=KH0+KH0-BP9	TPE	4	4	18	20	Air supply
	=V2WC4+V2UC15-XD10							
	=V2WC4+V2UC15-XD15							
=KH0-W10	=V2KF1+V2UC14-KF14.12	=KH0+KH0-BP10	TPE	4	4	18	20	Air supply
	=V2WC4+V2UC14-XD10							
	=V2WC4+V2UC14-XD15							
=KH3-W1	=V1KF1+V1UC11-KF11.14	=KH3+KH3-BF1	TPE	4	4	18	20	Air supply
	=V1WC4+V1UC11-XD10							
	=V1WC4+V1UC11-XD13							
=KH3-W2	=V1KF1+V1UC11-KF11.14	=KH3+KH3-BF2	TPE	4	4	18	20	Air supply
	=V1WC4+V1UC11-XD10							
	=V1WC4+V1UC11-XD13							
=V1AR11UQ41BG0-W1	=V1AR11UQ41BG0+V1AR11UQ41-XG1/2	=V1AR11UQ41KF1+V1AR11UQ41-KF1.13-X1	TPE	4	4	18	0.5	
=V1AR11UQ41BG0-W1.1	=V1AR11UQ41BG0+V1AR11UQ41-BG01	=V1AR11UQ41BG0+V1AR11UQ41-XG1/2	TPE	4	3	18	4	
=V1AR11UQ41BG0-W1.2	=V1AR11UQ41BG0+V1AR11UQ41-BG02	=V1AR11UQ41BG0+V1AR11UQ41-XG1/2	TPE	4	3	18	2	
=V1AR11UQ41UQ1.1-W1	=V1AR11UQ41KF1+V1AR11UQ41-KF1.11-X1	=V1AR11UQ41UQ1.1+V1AR11UQ41UQ1.1-BGS/R	TPE	4	4	18	3	
=V1AR11UQ41UQ1.2-W1	=V1AR11UQ41KF1+V1AR11UQ41-KF1.11-X2	=V1AR11UQ41UQ1.2+V1AR11UQ41UQ1.2-BGS/R	TPE	4	4	18	3	
=V1AR11UQ41UQ2.1-W1	=V1AR11UQ41KF1+V1AR11UQ41-KF1.11-X3	=V1AR11UQ41UQ2.1+V1AR11UQ41UQ2.1-BGS/R	TPE	4	4	18	2	
=V1AR11UQ41UQ2.2-W1	=V1AR11UQ41KF1+V1AR11UQ41-KF1.11-X4	=V1AR11UQ41UQ2.2+V1AR11UQ41UQ2.2-BGS/R	TPE	4	4	18	2	
=V1AR11UQ41UQ3.1-W1	=V1AR11UQ41KF1+V1AR11UQ41-KF1.11-X5	=V1AR11UQ41UQ3.1+V1AR11UQ41UQ3.1-BGS/R	TPE	4	4	18	1	
=V1AR11UQ41UQ3.2-W1	=V1AR11UQ41KF1+V1AR11UQ41-KF1.11-X6	=V1AR11UQ41UQ3.2+V1AR11UQ41UQ3.2-BGS/R	TPE	4	4	18	1	
=V1AR11UQ41UQ4.1-W1	=V1AR11UQ41KF1+V1AR11UQ41-KF1.11-X7	=V1AR11UQ41UQ4.1+V1AR11UQ41UQ4.1-BGS/R	TPE	4	4	18	2	
=V1AR11UQ41UQ4.2-W1	=V1AR11UQ41KF1+V1AR11UQ41-KF1.11-X8	=V1AR11UQ41UQ4.2+V1AR11UQ41UQ4.2-BGS/R	TPE	4	4	18	2	

			Date	1/24/2023	Volvo Trucks North America	Valiant TMS	Cable overview	Drawing name: =2V01&EFS-EL_KF1	=
			Ed.	MKLEPADLO					+
			Appr		P6700 Framing - Cell 2V01, KF1			Document type: EMC	Project nr: 22-16152
Modification	Date	Name	Original		Replacement of	Replaced by	Scale 1:1		Page 8 / 1630

Cable overview

F10_001_Cable

Cable name	Source (from)	Target (to)	cable type	all conductors	Conductors used	Cross-section [mm]	Length [m]	remark
=V1AR11UQ41UQ5.1-W1	=V1AR11UQ41KF1+V1AR11UQ41-KF1.12-X1	=V1AR11UQ41UQ5.1+V1AR11UQ41UQ5.1-BGS/R	TPE	4	4	18	2	
=V1AR11UQ41UQ5.2-W1	=V1AR11UQ41KF1+V1AR11UQ41-KF1.12-X2	=V1AR11UQ41UQ5.2+V1AR11UQ41UQ5.2-BGS/R	TPE	4	4	18	2	
=V1AR11UQ41UQ6.1-W1	=V1AR11UQ41KF1+V1AR11UQ41-KF1.12-X3	=V1AR11UQ41UQ6.1+V1AR11UQ41UQ6.1-BGS/R	TPE	4	3	18	1	
=V1AR11UQ41UQ7.1-W1	=V1AR11UQ41KF1+V1AR11UQ41-KF1.12-X4	=V1AR11UQ41UQ7.1+V1AR11UQ41UQ7.1-BGS/R	TPE	4	3	18	1	
=V1AR11UQ41UQ8.1-W1	=V1AR11UQ41KF1+V1AR11UQ41-KF1.12-X5	=V1AR11UQ41UQ8.1+V1AR11UQ41UQ8.1-BGS/R	TPE	4	3	18	1	
=V1AR11UQ41UQ9.1-W1	=V1AR11UQ41KF1+V1AR11UQ41-KF1.12-X6	=V1AR11UQ41UQ9.1+V1AR11UQ41UQ9.1-BGS/R	TPE	4	3	18	1	
=V1AR31UQ41BG0-W1	=V1AR31UQ41BG0+V1AR31UQ41-XG1/2	=V1AR31UQ41KF1+V1AR31UQ41-KF1.12-X1	TPE	4	4	18	0.5	
=V1AR31UQ41BG0-W1.1	=V1AR31UQ41BG0+V1AR31UQ41-BG01	=V1AR31UQ41BG0+V1AR31UQ41-XG1/2	TPE	4	3	18	1	
=V1AR31UQ41BG0-W1.2	=V1AR31UQ41BG0+V1AR31UQ41-BG02	=V1AR31UQ41BG0+V1AR31UQ41-XG1/2	TPE	4	3	18	2	
=V1AR31UQ41BG0-W2	=V1AR31UQ41BG0+V1AR31UQ41-XG3/4	=V1AR31UQ41KF1+V1AR31UQ41-KF1.12-X2	TPE	4	4	18	0.5	
=V1AR31UQ41BG0-W2.1	=V1AR31UQ41BG0+V1AR31UQ41-BG03	=V1AR31UQ41BG0+V1AR31UQ41-XG3/4	TPE	4	3	18	1	
=V1AR31UQ41BG0-W2.2	=V1AR31UQ41BG0+V1AR31UQ41-BG04	=V1AR31UQ41BG0+V1AR31UQ41-XG3/4	TPE	4	3	18	2	
=V1AR31UQ41BG0-W3	=V1AR31UQ41BG0+V1AR31UQ41-BG05	=V1AR31UQ41KF1+V1AR31UQ41-KF1.12-X3	TPE	4	3	18	3	
=V1AR31UQ41UQ1.1-W1	=V1AR31UQ41KF1+V1AR31UQ41-KF1.11-X1	=V1AR31UQ41UQ1.1+V1AR31UQ41UQ1.1-BGS/R	TPE	4	4	18	3	
=V1AR31UQ41UQ1.2-W1	=V1AR31UQ41KF1+V1AR31UQ41-KF1.11-X2	=V1AR31UQ41UQ1.2+V1AR31UQ41UQ1.2-BGS/R	TPE	4	4	18	3	
=V1AR31UQ41UQ1.3-W1	=V1AR31UQ41KF1+V1AR31UQ41-KF1.11-X3	=V1AR31UQ41UQ1.3+V1AR31UQ41UQ1.3-BGS/R	TPE	4	4	18	3	
=V1AR31XQ41UQ1.1-W1	=V1AR31XQ41KF1+V1AR31XQ41-KF1.11-X1	=V1AR31XQ41UQ1.1+V1AR31XQ41UQ1.1-XG1/2	TPE	4	4	18	0.5	
=V1AR31XQ41UQ1.1-W1.1	=V1AR31XQ41UQ1.1+V1AR31XQ41UQ1.1-BGR	=V1AR31XQ41UQ1.1+V1AR31XQ41UQ1.1-XG1/2	TPE	4	3	18	0.5	
=V1AR31XQ41UQ1.1-W1.2	=V1AR31XQ41UQ1.1+V1AR31XQ41UQ1.1-BGS	=V1AR31XQ41UQ1.1+V1AR31XQ41UQ1.1-XG1/2	TPE	4	3	18	0.5	
=V1AR41UQ41BG0-W1	=V1AR41UQ41BG0+V1AR41UQ41-XG1/2	=V1AR41UQ41KF1+V1AR41UQ41-KF1.13-X1	TPE	4	4	18	0.5	
=V1AR41UQ41BG0-W1.1	=V1AR41UQ41BG0+V1AR41UQ41-BG01	=V1AR41UQ41BG0+V1AR41UQ41-XG1/2	TPE	4	3	18	2	
=V1AR41UQ41BG0-W1.2	=V1AR41UQ41BG0+V1AR41UQ41-BG02	=V1AR41UQ41BG0+V1AR41UQ41-XG1/2	TPE	4	3	18	2	
=V1AR41UQ41UQ1.1-W1	=V1AR41UQ41KF1+V1AR41UQ41-KF1.11-X1	=V1AR41UQ41UQ1.1+V1AR41UQ41UQ1.1-BGS/R	TPE	4	4	18	4	
=V1AR41UQ41UQ1.2-W1	=V1AR41UQ41KF1+V1AR41UQ41-KF1.11-X2	=V1AR41UQ41UQ1.2+V1AR41UQ41UQ1.2-BGS/R	TPE	4	4	18	4	
=V1AR41UQ41UQ2.1-W1	=V1AR41UQ41KF1+V1AR41UQ41-KF1.11-X3	=V1AR41UQ41UQ2.1+V1AR41UQ41UQ2.1-BGS/R	TPE	4	4	18	2	
=V1AR41UQ41UQ2.2-W1	=V1AR41UQ41KF1+V1AR41UQ41-KF1.11-X4	=V1AR41UQ41UQ2.2+V1AR41UQ41UQ2.2-BGS/R	TPE	4	4	18	4	
=V1AR41UQ41UQ2.3-W1	=V1AR41UQ41KF1+V1AR41UQ41-KF1.11-X5	=V1AR41UQ41UQ2.3+V1AR41UQ41UQ2.3-BGS/R	TPE	4	4	18	4	
=V1AR41UQ41UQ2.4-W1	=V1AR41UQ41KF1+V1AR41UQ41-KF1.11-X6	=V1AR41UQ41UQ2.4+V1AR41UQ41UQ2.4-BGS/R	TPE	4	4	18	4	
=V1AR41UQ41UQ2.5-W1	=V1AR41UQ41KF1+V1AR41UQ41-KF1.11-X7	=V1AR41UQ41UQ2.5+V1AR41UQ41UQ2.5-BGS/R	TPE	4	4	18	2	
=V1AR41UQ41UQ3.1-W1	=V1AR41UQ41KF1+V1AR41UQ41-KF1.11-X8	=V1AR41UQ41UQ3.1+V1AR41UQ41UQ3.1-BGS/R	TPE	4	4	18	4	
=V1AR41UQ41UQ3.2-W1	=V1AR41UQ41KF1+V1AR41UQ41-KF1.12-X1	=V1AR41UQ41UQ3.2+V1AR41UQ41UQ3.2-BGS/R	TPE	4	4	18	2	
=V1AR41UQ41UQ4.1-W1	=V1AR41UQ41KF1+V1AR41UQ41-KF1.12-X2	=V1AR41UQ41UQ4.1+V1AR41UQ41UQ4.1-BGS/R	TPE	4	4	18	4	
=V1AR41UQ41UQ4.2-W1	=V1AR41UQ41KF1+V1AR41UQ41-KF1.12-X3	=V1AR41UQ41UQ4.2+V1AR41UQ41UQ4.2-BGS/R	TPE	4	4	18	4	
=V1FQ1-W11R	=V1KF1+V1UC12-KF12.31	=V1FQ1+V1FQ1-BR11-R	TPE	4	4	18	35	
	=V1WC4+V1UC12-XD10							
	=V1WC4+V1UC12-XD13							
=V1FQ1-W11T	=V1WC4+V1UC12-XD10	=V1FQ1+V1FQ1-BR11-T	TPE	4	4	18	40	
	=V1WC4+V1UC12-XD13							
=V1FQ1-W12R	=V1KF1+V1UC11-KF11.31	=V1FQ1+V1FQ1-BR12-R	TPE	4	4	18	20	
	=V1WC4+V1UC11-XD10							
	=V1WC4+V1UC11-XD13							
=V1FQ1-W12T	=V1WC4+V1UC11-XD10	=V1FQ1+V1FQ1-BR12-T	TPE	4	4	18	25	
	=V1WC4+V1UC11-XD13							
=V1FQ1-W14R	=V1KF1+V1UC11-KF11.31	=V1FQ1+V1FQ1-BR14-R	TPE	4	4	18	15	

			Date	1/24/2023	Volvo Trucks North America	Valiant TMS	Cable overview	Drawing name: =2V01&EFS-EL_KF1	=
			Ed.	MKLEPADLO					+
			Appr		P6700 Framing - Cell 2V01, KF1			Document type: EMC	Project nr: 22-16152
Modification	Date	Name	Original		Replacement of / Replaced by	Scale 1:1			Page 9 / 1630

Cable overview

F10_001_Cable

Cable name	Source (from)	Target (to)	cable type	all conductors	Conductors used	Cross-section [mm]	Length [m]	remark
	=V1WC4+V1UC11-XD10							
	=V1WC4+V1UC11-XD13							
=V1FQ1-W14T	=V1WC4+V1UC11-XD10	=V1FQ1+V1FQ1-BR14-T	TPE	4	4	18	20	
	=V1WC4+V1UC11-XD13							
=V1GL13UQ51BG0-W6	=V1GL13UQ51BG0+V1GL13UQ51-BG10	=V1GL13UQ51KF2+V1GL13UQ51-KF2.12-X1	TPE	4	3	18	1	
=V1GL13UQ51BG0-W7	=V1GL13UQ51BG0+V1GL13UQ51-XG11/13	=V1GL13UQ51KF2+V1GL13UQ51-KF2.12-X2	TPE	4	4	18	3	
=V1GL13UQ51BG0-W7.1	=V1GL13UQ51BG0+V1GL13UQ51-BG11	=V1GL13UQ51BG0+V1GL13UQ51-XG11/13	TPE	4	3	18	1	
=V1GL13UQ51BG0-W7.2	=V1GL13UQ51BG0+V1GL13UQ51-BG13	=V1GL13UQ51BG0+V1GL13UQ51-XG11/13	TPE	4	3	18	1	
=V1GL13UQ51BG0-W8	=V1GL13UQ51BG0+V1GL13UQ51-XG14/18	=V1GL13UQ51KF2+V1GL13UQ51-KF2.12-X3	TPE	4	4	18	3	
=V1GL13UQ51BG0-W8.1	=V1GL13UQ51BG0+V1GL13UQ51-BG14	=V1GL13UQ51BG0+V1GL13UQ51-XG14/18	TPE	4	3	18	1	
=V1GL13UQ51BG0-W8.2	=V1GL13UQ51BG0+V1GL13UQ51-BG18	=V1GL13UQ51BG0+V1GL13UQ51-XG14/18	TPE	4	3	18	3	
=V1GL13UQ51BG0-W9	=V1GL13UQ51BG0+V1GL13UQ51-XG15/16	=V1GL13UQ51KF2+V1GL13UQ51-KF2.12-X4	TPE	4	4	18	3	
=V1GL13UQ51BG0-W9.1	=V1GL13UQ51BG0+V1GL13UQ51-BG15	=V1GL13UQ51BG0+V1GL13UQ51-XG15/16	TPE	4	3	18	1	
=V1GL13UQ51BG0-W9.2	=V1GL13UQ51BG0+V1GL13UQ51-BG16	=V1GL13UQ51BG0+V1GL13UQ51-XG15/16	TPE	4	3	18	1	
=V1GL13UQ51BG0-W10	=V1GL13UQ51BG0+V1GL13UQ51-XG19/20	=V1GL13UQ51KF2+V1GL13UQ51-KF2.12-X5	TPE	4	4	18	3	
=V1GL13UQ51BG0-W10.1	=V1GL13UQ51BG0+V1GL13UQ51-BG19	=V1GL13UQ51BG0+V1GL13UQ51-XG19/20	TPE	4	3	18	1	
=V1GL13UQ51BG0-W10.2	=V1GL13UQ51BG0+V1GL13UQ51-BG20	=V1GL13UQ51BG0+V1GL13UQ51-XG19/20	TPE	4	3	18	1	
=V1GL13UQ51BG0-W11	=V1GL13UQ51BG0+V1GL13UQ51-BG12	=V1GL13UQ51KF2+V1GL13UQ51-KF2.12-X6	TPE	4	4	18	1	
=V1GL13UQ51UQ5.1-W1	=V1GL13UQ51KF2+V1GL13UQ51-KF2.11-X1	=V1GL13UQ51UQ5.1+V1GL13UQ51UQ5.1-XGR/S	TPE	4	4	18	4	
=V1GL13UQ51UQ5.1-W1.1	=V1GL13UQ51UQ5.1+V1GL13UQ51UQ5.1-BGR	=V1GL13UQ51UQ5.1+V1GL13UQ51UQ5.1-XGR/S	TPE	4	3	18	0.5	
=V1GL13UQ51UQ5.1-W1.2	=V1GL13UQ51UQ5.1+V1GL13UQ51UQ5.1-BGS	=V1GL13UQ51UQ5.1+V1GL13UQ51UQ5.1-XGR/S	TPE	4	3	18	0.5	
=V1GL13UQ51UQ6.1-W1	=V1GL13UQ51KF2+V1GL13UQ51-KF2.11-X2	=V1GL13UQ51UQ6.1+V1GL13UQ51UQ6.1-XGR/S	TPE	4	4	18	4	
=V1GL13UQ51UQ6.1-W1.1	=V1GL13UQ51UQ6.1+V1GL13UQ51UQ6.1-BGR	=V1GL13UQ51UQ6.1+V1GL13UQ51UQ6.1-XGR/S	TPE	4	3	18	0.5	
=V1GL13UQ51UQ6.1-W1.2	=V1GL13UQ51UQ6.1+V1GL13UQ51UQ6.1-BGS	=V1GL13UQ51UQ6.1+V1GL13UQ51UQ6.1-XGR/S	TPE	4	3	18	0.5	
=V1GL13UQ51UQ7.1-W1	=V1GL13UQ51KF2+V1GL13UQ51-KF2.11-X3	=V1GL13UQ51UQ7.1+V1GL13UQ51UQ7.1-XGR/S	TPE	4	4	18	4	
=V1GL13UQ51UQ7.1-W1.1	=V1GL13UQ51UQ7.1+V1GL13UQ51UQ7.1-BGR	=V1GL13UQ51UQ7.1+V1GL13UQ51UQ7.1-XGR/S	TPE	4	3	18	0.5	
=V1GL13UQ51UQ7.1-W1.2	=V1GL13UQ51UQ7.1+V1GL13UQ51UQ7.1-BGS	=V1GL13UQ51UQ7.1+V1GL13UQ51UQ7.1-XGR/S	TPE	4	3	18	0.5	
=V1GL14UQ51BG0-W5	=V1GL14UQ51BG0+V1GL14UQ51-BG05	=V1GL14UQ51KF2+V1GL14UQ51-KF2.12-X1	TPE	4	3	18	1	
=V1GL14UQ51BG0-W6	=V1GL14UQ51BG0+V1GL14UQ51-XG6/17	=V1GL14UQ51KF2+V1GL14UQ51-KF2.12-X2	TPE	4	4	18	3	
=V1GL14UQ51BG0-W6.1	=V1GL14UQ51BG0+V1GL14UQ51-BG06	=V1GL14UQ51BG0+V1GL14UQ51-XG6/17	TPE	4	3	18	1	
=V1GL14UQ51BG0-W6.2	=V1GL14UQ51BG0+V1GL14UQ51-BG17	=V1GL14UQ51BG0+V1GL14UQ51-XG6/17	TPE	4	3	18	1	
=V1GL14UQ51BG0-W7	=V1GL14UQ51BG0+V1GL14UQ51-XG7/12	=V1GL14UQ51KF2+V1GL14UQ51-KF2.12-X3	TPE	4	4	18	3	
=V1GL14UQ51BG0-W7.1	=V1GL14UQ51BG0+V1GL14UQ51-BG07	=V1GL14UQ51BG0+V1GL14UQ51-XG7/12	TPE	4	3	18	1	
=V1GL14UQ51BG0-W7.2	=V1GL14UQ51BG0+V1GL14UQ51-BG12	=V1GL14UQ51BG0+V1GL14UQ51-XG7/12	TPE	4	3	18	1	
=V1GL14UQ51BG0-W8	=V1GL14UQ51BG0+V1GL14UQ51-XG8/9	=V1GL14UQ51KF2+V1GL14UQ51-KF2.12-X4	TPE	4	4	18	1	
=V1GL14UQ51BG0-W8.1	=V1GL14UQ51BG0+V1GL14UQ51-BG08	=V1GL14UQ51BG0+V1GL14UQ51-XG8/9	TPE	4	3	18	2	
=V1GL14UQ51BG0-W8.2	=V1GL14UQ51BG0+V1GL14UQ51-BG09	=V1GL14UQ51BG0+V1GL14UQ51-XG8/9	TPE	4	3	18	2	
=V1GL14UQ51BG0-W9	=V1GL14UQ51BG0+V1GL14UQ51-XG13/14	=V1GL14UQ51KF2+V1GL14UQ51-KF2.12-X5	TPE	4	4	18	3	
=V1GL14UQ51BG0-W9.1	=V1GL14UQ51BG0+V1GL14UQ51-BG13	=V1GL14UQ51BG0+V1GL14UQ51-XG13/14	TPE	4	3	18	1	
=V1GL14UQ51BG0-W9.2	=V1GL14UQ51BG0+V1GL14UQ51-BG14	=V1GL14UQ51BG0+V1GL14UQ51-XG13/14	TPE	4	3	18	1	
=V1GL14UQ51BG0-W10	=V1GL14UQ51BG0+V1GL14UQ51-BG15	=V1GL14UQ51KF2+V1GL14UQ51-KF2.12-X6	TPE	4	4	18	3	
=V1GL14UQ51UQ3.1-W1	=V1GL14UQ51KF2+V1GL14UQ51-KF2.11-X1	=V1GL14UQ51UQ3.1+V1GL14UQ51UQ3.1-XGR/S	TPE	4	4	18	4	
=V1GL14UQ51UQ3.1-W1.1	=V1GL14UQ51UQ3.1+V1GL14UQ51UQ3.1-BGR	=V1GL14UQ51UQ3.1+V1GL14UQ51UQ3.1-XGR/S	TPE	4	3	18	0.5	
=V1GL14UQ51UQ3.1-W1.2	=V1GL14UQ51UQ3.1+V1GL14UQ51UQ3.1-BGS	=V1GL14UQ51UQ3.1+V1GL14UQ51UQ3.1-XGR/S	TPE	4	3	18	0.5	
=V1GL14UQ51UQ4.1-W1	=V1GL14UQ51KF2+V1GL14UQ51-KF2.11-X2	=V1GL14UQ51UQ4.1+V1GL14UQ51UQ4.1-XGR/S	TPE	4	4	18	4	

			Date	1/24/2023	Volvo Trucks North America	Valiant TMS	Cable overview	Drawing name: =2V01&EFS-EL_KF1	=
			Ed.	MKLEPADLO					+
			Appr		P6700 Framing - Cell 2V01, KF1			Document type: EMC	Project nr: 22-16152
Modification	Date	Name	Original		Replacement of	Replaced by	Scale 1:1		Page 10 / 1630

Cable overview

F10_001_Cable

Cable name	Source (from)	Target (to)	cable type	all conductors	Conductors used	Cross-section [mm]	Length [m]	remark
=V1GL14UQ51UQ4.1-W1.1	=V1GL14UQ51UQ4.1+V1GL14UQ51UQ4.1-BGR	=V1GL14UQ51UQ4.1+V1GL14UQ51UQ4.1-XGR/S	TPE	4	3	18	0.5	
=V1GL14UQ51UQ4.1-W1.2	=V1GL14UQ51UQ4.1+V1GL14UQ51UQ4.1-BGS	=V1GL14UQ51UQ4.1+V1GL14UQ51UQ4.1-XGR/S	TPE	4	3	18	0.5	
=V1GL14UQ51UQ5.1-W1	=V1GL14UQ51KF2+V1GL14UQ51-KF2.11-X3	=V1GL14UQ51UQ5.1+V1GL14UQ51UQ5.1-XGR/S	TPE	4	4	18	4	
=V1GL14UQ51UQ5.1-W1.1	=V1GL14UQ51UQ5.1+V1GL14UQ51UQ5.1-BGR	=V1GL14UQ51UQ5.1+V1GL14UQ51UQ5.1-XGR/S	TPE	4	3	18	0.5	
=V1GL14UQ51UQ5.1-W1.2	=V1GL14UQ51UQ5.1+V1GL14UQ51UQ5.1-BGS	=V1GL14UQ51UQ5.1+V1GL14UQ51UQ5.1-XGR/S	TPE	4	3	18	0.5	
=V1U20FQ1-W1	=V1KF1+V1UC11-KF11.31	=V1U20FQ1+V1U20-BG01	TPE	4	4	18	35	
=V1U20U01PF1-W1.1	=V1U20U01KF1+V1U20U01-KF1.11	=V1U20U01PF1+V1U20U01-PF1-Branch1	TPE	4	4	18	5	
=V1U20U01PF1-W1.2	=V1U20U01KF1+V1U20U01-KF1.11	=V1U20U01PF1+V1U20U01-PF1-Branch2	TPE	4	4	18	5	
=V1UL1UQ1.1-W1	=V1UL1KF1+V1UL1-KF1.11	=V1UL1UQ1.1+V1UL1UQ1.1-BGS/R	TPE	4	4	18	3	
=V1UL1UQ1.2-W1	=V1UL1KF1+V1UL1-KF1.11	=V1UL1UQ1.2+V1UL1UQ1.2-BGS/R	TPE	4	4	18	3	
=V1UL1UQ1.3-W1	=V1UL1KF2+V1UL1-KF2.11	=V1UL1UQ1.3+V1UL1UQ1.3-BGS/R	TPE	4	4	18	3	
=V1UL1UQ1.4-W1	=V1UL1KF2+V1UL1-KF2.11	=V1UL1UQ1.4+V1UL1UQ1.4-BGS/R	TPE	4	4	18	3	
=V1UL1UQ2.1-W1	=V1UL1KF1+V1UL1-KF1.11	=V1UL1UQ2.1+V1UL1UQ2.1-BGS/R	TPE	4	4	18	1	
=V1UL1UQ2.2-W1	=V1UL1KF2+V1UL1-KF2.11	=V1UL1UQ2.2+V1UL1UQ2.2-BGS/R	TPE	4	4	18	1	
=V1UL1UQ3.1-W1	=V1UL1KF1+V1UL1-KF1.11	=V1UL1UQ3.1+V1UL1UQ3.1-BGS/R	TPE	4	4	18	4	
=V1UL1UQ3.2-W1	=V1UL1KF2+V1UL1-KF2.11	=V1UL1UQ3.2+V1UL1UQ3.2-BGS/R	TPE	4	4	18	4	
=V1UL1UQ4.1-W1	=V1UL1KF1+V1UL1-KF1.11	=V1UL1UQ4.1+V1UL1UQ4.1-BGS/R	TPE	4	4	18	1	
=V1UL1UQ4.2-W1	=V1UL1KF2+V1UL1-KF2.11	=V1UL1UQ4.2+V1UL1UQ4.2-BGS/R	TPE	4	4	18	1	
=V1UQ31BG0-W1	=V1UQ31BG0+V1UQ31-BG01	=V1UQ31KF1+V1UQ31-KF1.11-X7	TPE	4	3	18	8	
=V1UQ31BG0-W2	=V1UQ31BG0+V1UQ31-BG02	=V1UQ31KF1+V1UQ31-KF1.11-X8	TPE	4	3	18	10	
=V1UQ31UQ1.1-W1	=V1UQ31KF1+V1UQ31-KF1.11-X1	=V1UQ31UQ1.1+V1UQ31UQ1.1-BGS/R	TPE	4	4	18	8	
=V1UQ31UQ1.2-W1	=V1UQ31KF1+V1UQ31-KF1.11-X2	=V1UQ31UQ1.2+V1UQ31UQ1.2-BGS/R	TPE	4	4	18	10	
=V1UQ31UQ1.3-W1	=V1UQ31KF1+V1UQ31-KF1.11-X3	=V1UQ31UQ1.3+V1UQ31UQ1.3-BGS/R	TPE	4	4	18	8	
=V1UQ31UQ1.4-W1	=V1UQ31KF1+V1UQ31-KF1.11-X4	=V1UQ31UQ1.4+V1UQ31UQ1.4-BGS/R	TPE	4	4	18	10	
=V1UQ31UQ2.1-W1	=V1UQ31KF1+V1UQ31-KF1.11-X5	=V1UQ31UQ2.1+V1UQ31UQ2.1-BGS/R	TPE	4	4	18	8	
=V1UQ31UQ2.2-W1	=V1UQ31KF1+V1UQ31-KF1.11-X6	=V1UQ31UQ2.2+V1UQ31UQ2.2-BGS/R	TPE	4	4	18	10	
=V1UQ51BG0-W1	=V1UQ51BG0+V1UQ51-BG01	=V1UQ51KF1+V1UQ51-KF1.11	TPE	4	3	18	1	
=V1UQ51BG0-W2	=V1UQ51BG0+V1UQ51-BG02	=V1UQ51KF1+V1UQ51-KF1.11	TPE	4	3	18	3	
=V1UQ53BG0-W1	=V1UQ53BG0+V1UQ53-BG01	=V1UQ53KF1+V1UQ53-KF1.12-X1	TPE	4	3	18	3	
=V1UQ53BG0-W2	=V1UQ53BG0+V1UQ53-XG2/3	=V1UQ53KF1+V1UQ53-KF1.12-X2	TPE	4	4	18	3	
=V1UQ53BG0-W2.1	=V1UQ53BG0+V1UQ53-BG02	=V1UQ53BG0+V1UQ53-XG2/3	TPE	4	3	18	0.5	
=V1UQ53BG0-W2.2	=V1UQ53BG0+V1UQ53-BG03	=V1UQ53BG0+V1UQ53-XG2/3	TPE	4	3	18	0.5	
=V1UQ53BG0-W3	=V1UQ53BG0+V1UQ53-XG4/5	=V1UQ53KF1+V1UQ53-KF1.12-X3	TPE	4	4	18	3	
=V1UQ53BG0-W3.1	=V1UQ53BG0+V1UQ53-BG04	=V1UQ53BG0+V1UQ53-XG4/5	TPE	4	3	18	0.5	
=V1UQ53BG0-W3.2	=V1UQ53BG0+V1UQ53-BG05	=V1UQ53BG0+V1UQ53-XG4/5	TPE	4	3	18	0.5	
=V1UQ53BG0-W4	=V1UQ53BG0+V1UQ53-XG6/7	=V1UQ53KF1+V1UQ53-KF1.12-X4	TPE	4	4	18	4	
=V1UQ53BG0-W4.1	=V1UQ53BG0+V1UQ53-BG06	=V1UQ53BG0+V1UQ53-XG6/7	TPE	4	3	18	0.5	
=V1UQ53BG0-W4.2	=V1UQ53BG0+V1UQ53-BG07	=V1UQ53BG0+V1UQ53-XG6/7	TPE	4	3	18	0.5	
=V1UQ53BG0-W5	=V1UQ53BG0+V1UQ53-XG8/9	=V1UQ53KF1+V1UQ53-KF1.12-X5	TPE	4	4	18	4	
=V1UQ53BG0-W5.1	=V1UQ53BG0+V1UQ53-BG08	=V1UQ53BG0+V1UQ53-XG8/9	TPE	4	3	18	0.5	
=V1UQ53BG0-W5.2	=V1UQ53BG0+V1UQ53-BG09	=V1UQ53BG0+V1UQ53-XG8/9	TPE	4	3	18	0.5	
=V1UQ53UQ5.1-W1	=V1UQ53KF1+V1UQ53-KF1.11-X1	=V1UQ53UQ5.1+V1UQ53UQ5.1-XGR/S	TPE	4	4	18	3	
=V1UQ53UQ5.1-W1.1	=V1UQ53UQ5.1+V1UQ53UQ5.1-BGR	=V1UQ53UQ5.1+V1UQ53UQ5.1-XGR/S	TPE	4	3	18	0.5	
=V1UQ53UQ5.1-W1.2	=V1UQ53UQ5.1+V1UQ53UQ5.1-BGS	=V1UQ53UQ5.1+V1UQ53UQ5.1-XGR/S	TPE	4	3	18	0.5	
=V2AR31UQ41BG0-W1	=V2AR31UQ41BG0+V2AR31UQ41-XG1/2	=V2AR31UQ41KF1+V2AR31UQ41-KF1.13-X1	TPE	4	4	18	2	
=V2AR31UQ41BG0-W1.1	=V2AR31UQ41BG0+V2AR31UQ41-BG01	=V2AR31UQ41BG0+V2AR31UQ41-XG1/2	TPE	4	3	18	1	

			Date	1/24/2023	Volvo Trucks North America	Valiant TMS	Cable overview	Drawing name: =2V01&EFS-EL_KF1	=
			Ed.	MKLEPADLO					+
			Appr		P6700 Framing - Cell 2V01, KF1			Document type: EMC	Project nr: 22-16152
Modification	Date	Name	Original		Replacement of	Replaced by	Scale 1:1		Page 11 / 1630

Cable overview

F10_001_Cable

Cable name	Source (from)	Target (to)	cable type	all conductors	Conductors used	Cross-section [mm]	Length [m]	remark
=V2AR31UQ41BG0-W1.2	=V2AR31UQ41BG0+V2AR31UQ41-BG02	=V2AR31UQ41BG0+V2AR31UQ41-XG1/2	TPE	4	3	18	0.5	
=V2AR31UQ41BG0-W2	=V2AR31UQ41BG0+V2AR31UQ41-XG3/4	=V2AR31UQ41KF1+V2AR31UQ41-KF1.13-X2	TPE	4	4	18	2	
=V2AR31UQ41BG0-W2.1	=V2AR31UQ41BG0+V2AR31UQ41-BG03	=V2AR31UQ41BG0+V2AR31UQ41-XG3/4	TPE	4	3	18	1	
=V2AR31UQ41BG0-W2.2	=V2AR31UQ41BG0+V2AR31UQ41-BG04	=V2AR31UQ41BG0+V2AR31UQ41-XG3/4	TPE	4	3	18	0.5	
=V2AR31UQ41BG0-W3	=V2AR31UQ41BG0+V2AR31UQ41-BG05	=V2AR31UQ41KF1+V2AR31UQ41-KF1.13-X3	TPE	4	3	18	2	
=V2AR31UQ41UQ1.1-W1	=V2AR31UQ41KF1+V2AR31UQ41-KF1.11-X1	=V2AR31UQ41UQ1.1+V2AR31UQ41UQ1.1-BGS/R	TPE	4	4	18	3	
=V2AR31UQ41UQ2.1-W1	=V2AR31UQ41KF1+V2AR31UQ41-KF1.11-X2	=V2AR31UQ41UQ2.1+V2AR31UQ41UQ2.1-BGS/R	TPE	4	4	18	3	
=V2AR31UQ41UQ2.2-W1	=V2AR31UQ41KF1+V2AR31UQ41-KF1.11-X3	=V2AR31UQ41UQ2.2+V2AR31UQ41UQ2.2-BGS/R	TPE	4	4	18	2	
=V2AR31UQ41UQ2.3-W1	=V2AR31UQ41KF1+V2AR31UQ41-KF1.11-X4	=V2AR31UQ41UQ2.3+V2AR31UQ41UQ2.3-BGS/R	TPE	4	4	18	1	
=V2AR31UQ41UQ2.4-W1	=V2AR31UQ41KF1+V2AR31UQ41-KF1.11-X5	=V2AR31UQ41UQ2.4+V2AR31UQ41UQ2.4-BGS/R	TPE	4	4	18	2	
=V2AR31UQ41UQ3.1-W1	=V2AR31UQ41KF1+V2AR31UQ41-KF1.11-X6	=V2AR31UQ41UQ3.1+V2AR31UQ41UQ3.1-BGS/R	TPE	4	4	18	2	
=V2AR31UQ41UQ3.2-W1	=V2AR31UQ41KF1+V2AR31UQ41-KF1.11-X7	=V2AR31UQ41UQ3.2+V2AR31UQ41UQ3.2-BGS/R	TPE	4	4	18	2	
=V2AR31UQ41UQ3.3-W1	=V2AR31UQ41KF1+V2AR31UQ41-KF1.11-X8	=V2AR31UQ41UQ3.3+V2AR31UQ41UQ3.3-BGS/R	TPE	4	4	18	2	
=V2AR31UQ41UQ4.1-W1	=V2AR31UQ41KF1+V2AR31UQ41-KF1.12-X1	=V2AR31UQ41UQ4.1+V2AR31UQ41UQ4.1-BGS/R	TPE	4	4	18	3	
=V2AR31UQ41UQ5.1-W1	=V2AR31UQ41KF1+V2AR31UQ41-KF1.12-X2	=V2AR31UQ41UQ5.1+V2AR31UQ41UQ5.1-BGS/R	TPE	4	4	18	3	
=V2AR31UQ41UQ5.2-W1	=V2AR31UQ41KF1+V2AR31UQ41-KF1.12-X3	=V2AR31UQ41UQ5.2+V2AR31UQ41UQ5.2-BGS/R	TPE	4	4	18	2	
=V2AR31UQ41UQ6.1-W1	=V2AR31UQ41KF1+V2AR31UQ41-KF1.12-X4	=V2AR31UQ41UQ6.1+V2AR31UQ41UQ6.1-BGS/R	TPE	4	4	18	3	
=V2AR31UQ41UQ7.1-W1	=V2AR31UQ41KF1+V2AR31UQ41-KF1.12-X5	=V2AR31UQ41UQ7.1+V2AR31UQ41UQ7.1-BGS/R	TPE	4	4	18	3	
=V2AR31UQ41UQ7.2-W1	=V2AR31UQ41KF1+V2AR31UQ41-KF1.12-X6	=V2AR31UQ41UQ7.2+V2AR31UQ41UQ7.2-BGS/R	TPE	4	4	18	3	
=V2AR31UQ42BG0-W1	=V2AR31UQ42BG0+V2AR31UQ42-XG1/2	=V2AR31UQ42KF1+V2AR31UQ42-KF1.12-X1	TPE	4	4	18	0.5	
=V2AR31UQ42BG0-W1.1	=V2AR31UQ42BG0+V2AR31UQ42-BG01	=V2AR31UQ42BG0+V2AR31UQ42-XG1/2	TPE	4	3	18	2	
=V2AR31UQ42BG0-W1.2	=V2AR31UQ42BG0+V2AR31UQ42-BG02	=V2AR31UQ42BG0+V2AR31UQ42-XG1/2	TPE	4	3	18	2	
=V2AR31UQ42BG0-W2	=V2AR31UQ42BG0+V2AR31UQ42-XG3/4	=V2AR31UQ42KF1+V2AR31UQ42-KF1.12-X2	TPE	4	4	18	0.5	
=V2AR31UQ42BG0-W2.1	=V2AR31UQ42BG0+V2AR31UQ42-BG03	=V2AR31UQ42BG0+V2AR31UQ42-XG3/4	TPE	4	3	18	2	
=V2AR31UQ42BG0-W2.2	=V2AR31UQ42BG0+V2AR31UQ42-BG04	=V2AR31UQ42BG0+V2AR31UQ42-XG3/4	TPE	4	3	18	1	
=V2AR31UQ42BG0-W3	=V2AR31UQ42BG0+V2AR31UQ42-XG5/6	=V2AR31UQ42KF1+V2AR31UQ42-KF1.12-X3	TPE	4	4	18	2	
=V2AR31UQ42BG0-W3.1	=V2AR31UQ42BG0+V2AR31UQ42-BG05	=V2AR31UQ42BG0+V2AR31UQ42-XG5/6	TPE	4	3	18	0.5	
=V2AR31UQ42BG0-W3.2	=V2AR31UQ42BG0+V2AR31UQ42-BG06	=V2AR31UQ42BG0+V2AR31UQ42-XG5/6	TPE	4	3	18	1	
=V2AR31UQ42UQ1.1-W1	=V2AR31UQ42KF1+V2AR31UQ42-KF1.11-X1	=V2AR31UQ42UQ1.1+V2AR31UQ42UQ1.1-BGS/R	TPE	4	4	18	2	
=V2AR31UQ42UQ1.2-W1	=V2AR31UQ42KF1+V2AR31UQ42-KF1.11-X2	=V2AR31UQ42UQ1.2+V2AR31UQ42UQ1.2-BGS/R	TPE	4	4	18	2	
=V2AR31UQ42UQ2.1-W1	=V2AR31UQ42KF1+V2AR31UQ42-KF1.11-X3	=V2AR31UQ42UQ2.1+V2AR31UQ42UQ2.1-BGS/R	TPE	4	4	18	2	
=V2AR31UQ42UQ2.2-W1	=V2AR31UQ42KF1+V2AR31UQ42-KF1.11-X4	=V2AR31UQ42UQ2.2+V2AR31UQ42UQ2.2-BGS/R	TPE	4	4	18	2	
=V2AR31UQ42UQ3.1-W1	=V2AR31UQ42KF1+V2AR31UQ42-KF1.11-X5	=V2AR31UQ42UQ3.1+V2AR31UQ42UQ3.1-BGS/R	TPE	4	4	18	2	
=V2AR31UQ42UQ3.2-W1	=V2AR31UQ42KF1+V2AR31UQ42-KF1.11-X6	=V2AR31UQ42UQ3.2+V2AR31UQ42UQ3.2-BGS/R	TPE	4	4	18	2	
=V2AR31XQ41UQ1.1-W1	=V2AR31XQ41KF1+V2AR31XQ41-KF1.11-X1	=V2AR31XQ41UQ1.1+V2AR31XQ41UQ1.1-XG1/2	TPE	4	4	18	0.5	
=V2AR31XQ41UQ1.1-W1.1	=V2AR31XQ41UQ1.1+V2AR31XQ41UQ1.1-BGR	=V2AR31XQ41UQ1.1+V2AR31XQ41UQ1.1-XG1/2	TPE	4	3	18	0.5	
=V2AR31XQ41UQ1.1-W1.2	=V2AR31XQ41UQ1.1+V2AR31XQ41UQ1.1-BGS	=V2AR31XQ41UQ1.1+V2AR31XQ41UQ1.1-XG1/2	TPE	4	3	18	0.5	
=V2AR32UQ41BG0-W1	=V2AR32UQ41BG0+V2AR32UQ41-XG1/2	=V2AR32UQ41KF1+V2AR32UQ41-KF1.13-X1	TPE	4	4	18	2	
=V2AR32UQ41BG0-W1.1	=V2AR32UQ41BG0+V2AR32UQ41-BG01	=V2AR32UQ41BG0+V2AR32UQ41-XG1/2	TPE	4	3	18	1	
=V2AR32UQ41BG0-W1.2	=V2AR32UQ41BG0+V2AR32UQ41-BG02	=V2AR32UQ41BG0+V2AR32UQ41-XG1/2	TPE	4	3	18	0.5	
=V2AR32UQ41BG0-W2	=V2AR32UQ41BG0+V2AR32UQ41-XG3/4	=V2AR32UQ41KF1+V2AR32UQ41-KF1.13-X2	TPE	4	4	18	2	
=V2AR32UQ41BG0-W2.1	=V2AR32UQ41BG0+V2AR32UQ41-BG03	=V2AR32UQ41BG0+V2AR32UQ41-XG3/4	TPE	4	3	18	1	
=V2AR32UQ41BG0-W2.2	=V2AR32UQ41BG0+V2AR32UQ41-BG04	=V2AR32UQ41BG0+V2AR32UQ41-XG3/4	TPE	4	3	18	0.5	
=V2AR32UQ41BG0-W3	=V2AR32UQ41BG0+V2AR32UQ41-BG05	=V2AR32UQ41KF1+V2AR32UQ41-KF1.13-X3	TPE	4	3	18	2	
=V2AR32UQ41UQ1.1-W1	=V2AR32UQ41KF1+V2AR32UQ41-KF1.11-X1	=V2AR32UQ41UQ1.1+V2AR32UQ41UQ1.1-BGS/R	TPE	4	4	18	3	
=V2AR32UQ41UQ2.1-W1	=V2AR32UQ41KF1+V2AR32UQ41-KF1.11-X2	=V2AR32UQ41UQ2.1+V2AR32UQ41UQ2.1-BGS/R	TPE	4	4	18	3	

			Date	1/24/2023	Volvo Trucks North America	Valiant TMS	Cable overview	Drawing name: =2V01&EFS-EL_KF1	=
			Ed.	MKLEPADLO					+
			Appr		P6700 Framing - Cell 2V01, KF1			Document type: EMC	Project nr: 22-16152
Modification	Date	Name	Original		Replacement of	Replaced by	Scale 1:1		Page 12 / 1630

Cable overview

F10_001_Cable

Cable name	Source (from)	Target (to)	cable type	all conductors	Conductors used	Cross-section [mm]	Length [m]	remark
=V2AR32UQ41UQ2.2-W1	=V2AR32UQ41KF1+V2AR32UQ41-KF1.11-X3	=V2AR32UQ41UQ2.2+V2AR32UQ41UQ2.2-BGS/R	TPE	4	4	18	2	
=V2AR32UQ41UQ2.3-W1	=V2AR32UQ41KF1+V2AR32UQ41-KF1.11-X4	=V2AR32UQ41UQ2.3+V2AR32UQ41UQ2.3-BGS/R	TPE	4	4	18	1	
=V2AR32UQ41UQ2.4-W1	=V2AR32UQ41KF1+V2AR32UQ41-KF1.11-X5	=V2AR32UQ41UQ2.4+V2AR32UQ41UQ2.4-BGS/R	TPE	4	4	18	2	
=V2AR32UQ41UQ3.1-W1	=V2AR32UQ41KF1+V2AR32UQ41-KF1.11-X6	=V2AR32UQ41UQ3.1+V2AR32UQ41UQ3.1-BGS/R	TPE	4	4	18	2	
=V2AR32UQ41UQ3.2-W1	=V2AR32UQ41KF1+V2AR32UQ41-KF1.11-X7	=V2AR32UQ41UQ3.2+V2AR32UQ41UQ3.2-BGS/R	TPE	4	4	18	2	
=V2AR32UQ41UQ3.3-W1	=V2AR32UQ41KF1+V2AR32UQ41-KF1.11-X8	=V2AR32UQ41UQ3.3+V2AR32UQ41UQ3.3-BGS/R	TPE	4	4	18	2	
=V2AR32UQ41UQ4.1-W1	=V2AR32UQ41KF1+V2AR32UQ41-KF1.12-X1	=V2AR32UQ41UQ4.1+V2AR32UQ41UQ4.1-BGS/R	TPE	4	4	18	3	
=V2AR32UQ41UQ5.1-W1	=V2AR32UQ41KF1+V2AR32UQ41-KF1.12-X2	=V2AR32UQ41UQ5.1+V2AR32UQ41UQ5.1-BGS/R	TPE	4	4	18	3	
=V2AR32UQ41UQ5.2-W1	=V2AR32UQ41KF1+V2AR32UQ41-KF1.12-X3	=V2AR32UQ41UQ5.2+V2AR32UQ41UQ5.2-BGS/R	TPE	4	4	18	2	
=V2AR32UQ41UQ6.1-W1	=V2AR32UQ41KF1+V2AR32UQ41-KF1.12-X4	=V2AR32UQ41UQ6.1+V2AR32UQ41UQ6.1-BGS/R	TPE	4	4	18	3	
=V2AR32UQ41UQ7.1-W1	=V2AR32UQ41KF1+V2AR32UQ41-KF1.12-X5	=V2AR32UQ41UQ7.1+V2AR32UQ41UQ7.1-BGS/R	TPE	4	4	18	3	
=V2AR32UQ41UQ7.2-W1	=V2AR32UQ41KF1+V2AR32UQ41-KF1.12-X6	=V2AR32UQ41UQ7.2+V2AR32UQ41UQ7.2-BGS/R	TPE	4	4	18	3	
=V2AR32UQ42BG0-W1	=V2AR32UQ42BG0+V2AR32UQ42-XG1/2	=V2AR32UQ42KF1+V2AR32UQ42-KF1.12-X1	TPE	4	4	18	1	
=V2AR32UQ42BG0-W1.1	=V2AR32UQ42BG0+V2AR32UQ42-BG01	=V2AR32UQ42BG0+V2AR32UQ42-XG1/2	TPE	4	3	18	0.5	
=V2AR32UQ42BG0-W1.2	=V2AR32UQ42BG0+V2AR32UQ42-BG03	=V2AR32UQ42BG0+V2AR32UQ42-XG1/2	TPE	4	3	18	0.5	
=V2AR32UQ42BG0-W2	=V2AR32UQ42BG0+V2AR32UQ42-XG3/4	=V2AR32UQ42KF1+V2AR32UQ42-KF1.12-X2	TPE	4	4	18	2	
=V2AR32UQ42BG0-W2.1	=V2AR32UQ42BG0+V2AR32UQ42-BG02	=V2AR32UQ42BG0+V2AR32UQ42-XG3/4	TPE	4	3	18	0.5	
=V2AR32UQ42BG0-W2.2	=V2AR32UQ42BG0+V2AR32UQ42-BG05	=V2AR32UQ42BG0+V2AR32UQ42-XG3/4	TPE	4	3	18	0.5	
=V2AR32UQ42BG0-W3	=V2AR32UQ42BG0+V2AR32UQ42-BG04	=V2AR32UQ42KF1+V2AR32UQ42-KF1.12-X3	TPE	4	3	18	1	
=V2AR32UQ42UQ1.1-W1	=V2AR32UQ42KF1+V2AR32UQ42-KF1.11-X1	=V2AR32UQ42UQ1.1+V2AR32UQ42UQ1.1-BGS/R	TPE	4	4	18	2	
=V2AR32UQ42UQ1.2-W1	=V2AR32UQ42KF1+V2AR32UQ42-KF1.11-X2	=V2AR32UQ42UQ1.2+V2AR32UQ42UQ1.2-BGS/R	TPE	4	4	18	2	
=V2AR32UQ42UQ2.1-W1	=V2AR32UQ42KF1+V2AR32UQ42-KF1.11-X3	=V2AR32UQ42UQ2.1+V2AR32UQ42UQ2.1-BGS/R	TPE	4	4	18	2	
=V2AR32UQ42UQ2.2-W1	=V2AR32UQ42KF1+V2AR32UQ42-KF1.11-X4	=V2AR32UQ42UQ2.2+V2AR32UQ42UQ2.2-BGS/R	TPE	4	4	18	2	
=V2AR32XQ41UQ1.1-W1	=V2AR32XQ41KF1+V2AR32XQ41-KF1.11-X1	=V2AR32XQ41UQ1.1+V2AR32XQ41UQ1.1-XG1/2	TPE	4	4	18	0.5	
=V2AR32XQ41UQ1.1-W1.1	=V2AR32XQ41UQ1.1+V2AR32XQ41UQ1.1-BGR	=V2AR32XQ41UQ1.1+V2AR32XQ41UQ1.1-XG1/2	TPE	4	3	18	0.5	
=V2AR32XQ41UQ1.1-W1.2	=V2AR32XQ41UQ1.1+V2AR32XQ41UQ1.1-BGS	=V2AR32XQ41UQ1.1+V2AR32XQ41UQ1.1-XG1/2	TPE	4	3	18	0.5	
=V2AR41UQ41BG0-W1	=V2AR41UQ41BG0+V2AR41UQ41-XG1/2	=V2AR41UQ41KF1+V2AR41UQ41-KF1.13-X5	TPE	4	4	18	0.5	
=V2AR41UQ41BG0-W1.1	=V2AR41UQ41BG0+V2AR41UQ41-BG01	=V2AR41UQ41BG0+V2AR41UQ41-XG1/2	TPE	4	3	18	2	
=V2AR41UQ41BG0-W1.2	=V2AR41UQ41BG0+V2AR41UQ41-BG02	=V2AR41UQ41BG0+V2AR41UQ41-XG1/2	TPE	4	3	18	2	
=V2AR41UQ41UQ1.1-W1	=V2AR41UQ41KF1+V2AR41UQ41-KF1.11-X1	=V2AR41UQ41UQ1.1+V2AR41UQ41UQ1.1-BGS/R	TPE	4	4	18	3	
=V2AR41UQ41UQ1.2-W1	=V2AR41UQ41KF1+V2AR41UQ41-KF1.11-X2	=V2AR41UQ41UQ1.2+V2AR41UQ41UQ1.2-BGS/R	TPE	4	4	18	3	
=V2AR41UQ41UQ1.3-W1	=V2AR41UQ41KF1+V2AR41UQ41-KF1.11-X3	=V2AR41UQ41UQ1.3+V2AR41UQ41UQ1.3-BGS/R	TPE	4	4	18	3	
=V2AR41UQ41UQ1.4-W1	=V2AR41UQ41KF1+V2AR41UQ41-KF1.11-X4	=V2AR41UQ41UQ1.4+V2AR41UQ41UQ1.4-BGS/R	TPE	4	4	18	3	
=V2AR41UQ41UQ2.1-W1	=V2AR41UQ41KF1+V2AR41UQ41-KF1.11-X5	=V2AR41UQ41UQ2.1+V2AR41UQ41UQ2.1-BGS/R	TPE	4	4	18	4	
=V2AR41UQ41UQ2.2-W1	=V2AR41UQ41KF1+V2AR41UQ41-KF1.11-X6	=V2AR41UQ41UQ2.2+V2AR41UQ41UQ2.2-BGS/R	TPE	4	4	18	4	
=V2AR41UQ41UQ3.1-W1	=V2AR41UQ41KF1+V2AR41UQ41-KF1.11-X7	=V2AR41UQ41UQ3.1+V2AR41UQ41UQ3.1-BGS/R	TPE	4	4	18	2	
=V2AR41UQ41UQ3.2-W1	=V2AR41UQ41KF1+V2AR41UQ41-KF1.11-X8	=V2AR41UQ41UQ3.2+V2AR41UQ41UQ3.2-BGS/R	TPE	4	4	18	2	
=V2AR41UQ41UQ4.1-W1	=V2AR41UQ41KF1+V2AR41UQ41-KF1.12-X1	=V2AR41UQ41UQ4.1+V2AR41UQ41UQ4.1-BGS/R	TPE	4	4	18	4	
=V2AR41UQ41UQ4.2-W1	=V2AR41UQ41KF1+V2AR41UQ41-KF1.12-X2	=V2AR41UQ41UQ4.2+V2AR41UQ41UQ4.2-BGS/R	TPE	4	4	18	4	
=V2AR41UQ41UQ4.3-W1	=V2AR41UQ41KF1+V2AR41UQ41-KF1.12-X3	=V2AR41UQ41UQ4.3+V2AR41UQ41UQ4.3-BGS/R	TPE	4	4	18	2	
=V2AR41UQ41UQ4.4-W1	=V2AR41UQ41KF1+V2AR41UQ41-KF1.12-X4	=V2AR41UQ41UQ4.4+V2AR41UQ41UQ4.4-BGS/R	TPE	4	4	18	2	
=V2AR41UQ41UQ5.1-W1	=V2AR41UQ41KF1+V2AR41UQ41-KF1.12-X5	=V2AR41UQ41UQ5.1+V2AR41UQ41UQ5.1-BGS/R	TPE	4	4	18	4	
=V2AR41UQ41UQ5.2-W1	=V2AR41UQ41KF1+V2AR41UQ41-KF1.12-X6	=V2AR41UQ41UQ5.2+V2AR41UQ41UQ5.2-BGS/R	TPE	4	4	18	4	
=V2AR41UQ41UQ6.1-W1	=V2AR41UQ41KF1+V2AR41UQ41-KF1.12-X7	=V2AR41UQ41UQ6.1+V2AR41UQ41UQ6.1-BGS/R	TPE	4	3	18	1	
=V2AR41UQ41UQ7.1-W1	=V2AR41UQ41KF1+V2AR41UQ41-KF1.12-X8	=V2AR41UQ41UQ7.1+V2AR41UQ41UQ7.1-BGS/R	TPE	4	4	18	2	
=V2AR41UQ41UQ7.2-W1	=V2AR41UQ41KF1+V2AR41UQ41-KF1.13-X1	=V2AR41UQ41UQ7.2+V2AR41UQ41UQ7.2-BGS/R	TPE	4	4	18	2	

			Date	1/24/2023	Volvo Trucks North America	Valiant TMS	Cable overview	Drawing name: =2V01&EFS-EL_KF1	=
			Ed.	MKLEPADLO					+
			Appr		P6700 Framing - Cell 2V01, KF1			Document type: EMC	Project nr: 22-16152
Modification	Date	Name	Original		Replacement of	Replaced by	Scale 1:1		Page 13 / 1630

Cable overview

F10_001_Cable

Cable name	Source (from)	Target (to)	cable type	all conductors	Conductors used	Cross-section [mm]	Length [m]	remark
=V2AR41UQ41UQ8.1-W1	=V2AR41UQ41KF1+V2AR41UQ41-KF1.13-X2	=V2AR41UQ41UQ8.1+V2AR41UQ41UQ8.1-BGS/R	TPE	4	3	18	1	
=V2AR42UQ41BG0-W1	=V2AR42UQ41BG0+V2AR42UQ41-XG1/2	=V2AR42UQ41KF1+V2AR42UQ41-KF1.12-X1	TPE	4	4	18	0.5	
=V2AR42UQ41BG0-W1.1	=V2AR42UQ41BG0+V2AR42UQ41-BG01	=V2AR42UQ41BG0+V2AR42UQ41-XG1/2	TPE	4	3	18	2	
=V2AR42UQ41BG0-W1.2	=V2AR42UQ41BG0+V2AR42UQ41-BG02	=V2AR42UQ41BG0+V2AR42UQ41-XG1/2	TPE	4	3	18	4	
=V2AR42UQ41UQ1.1-W1	=V2AR42UQ41KF1+V2AR42UQ41-KF1.11-X1	=V2AR42UQ41UQ1.1+V2AR42UQ41UQ1.1-BGS/R	TPE	4	4	18	2	
=V2AR42UQ41UQ1.2-W1	=V2AR42UQ41KF1+V2AR42UQ41-KF1.11-X2	=V2AR42UQ41UQ1.2+V2AR42UQ41UQ1.2-BGS/R	TPE	4	4	18	4	
=V2AR42UQ41UQ1.3-W1	=V2AR42UQ41KF1+V2AR42UQ41-KF1.11-X3	=V2AR42UQ41UQ1.3+V2AR42UQ41UQ1.3-BGS/R	TPE	4	4	18	2	
=V2AR42UQ41UQ1.4-W1	=V2AR42UQ41KF1+V2AR42UQ41-KF1.11-X4	=V2AR42UQ41UQ1.4+V2AR42UQ41UQ1.4-BGS/R	TPE	4	4	18	4	
=V2AR42UQ42BG0-W1	=V2AR42UQ42BG0+V2AR42UQ42-XG1/2	=V2AR42UQ42KF1+V2AR42UQ42-KF1.12-X1	TPE	4	4	18	0.5	
=V2AR42UQ42BG0-W1.1	=V2AR42UQ42BG0+V2AR42UQ42-BG01	=V2AR42UQ42BG0+V2AR42UQ42-XG1/2	TPE	4	3	18	1	
=V2AR42UQ42BG0-W1.2	=V2AR42UQ42BG0+V2AR42UQ42-BG02	=V2AR42UQ42BG0+V2AR42UQ42-XG1/2	TPE	4	3	18	2	
=V2AR42UQ42UQ1.1-W1	=V2AR42UQ42KF1+V2AR42UQ42-KF1.11-X1	=V2AR42UQ42UQ1.1+V2AR42UQ42UQ1.1-BGS/R	TPE	4	4	18	1	
=V2AR42UQ42UQ1.2-W1	=V2AR42UQ42KF1+V2AR42UQ42-KF1.11-X2	=V2AR42UQ42UQ1.2+V2AR42UQ42UQ1.2-BGS/R	TPE	4	4	18	2	
=V2AR42UQ42UQ1.3-W1	=V2AR42UQ42KF1+V2AR42UQ42-KF1.11-X3	=V2AR42UQ42UQ1.3+V2AR42UQ42UQ1.3-BGS/R	TPE	4	4	18	1	
=V2AR42UQ42UQ1.4-W1	=V2AR42UQ42KF1+V2AR42UQ42-KF1.11-X4	=V2AR42UQ42UQ1.4+V2AR42UQ42UQ1.4-BGS/R	TPE	4	4	18	2	
=V2AR42UQ42UQ1.5-W1	=V2AR42UQ42KF1+V2AR42UQ42-KF1.11-X5	=V2AR42UQ42UQ1.5+V2AR42UQ42UQ1.5-BGS/R	TPE	4	4	18	1	
=V2AR43UQ41BG0-W1	=V2AR43UQ41BG0+V2AR43UQ41-XG1/2	=V2AR43UQ41KF1+V2AR43UQ41-KF1.13-X1	TPE	4	4	18	0.5	
=V2AR43UQ41BG0-W1.1	=V2AR43UQ41BG0+V2AR43UQ41-BG01	=V2AR43UQ41BG0+V2AR43UQ41-XG1/2	TPE	4	3	18	2	
=V2AR43UQ41BG0-W1.2	=V2AR43UQ41BG0+V2AR43UQ41-BG02	=V2AR43UQ41BG0+V2AR43UQ41-XG1/2	TPE	4	3	18	2	
=V2AR43UQ41UQ1.1-W1	=V2AR43UQ41KF1+V2AR43UQ41-KF1.11-X1	=V2AR43UQ41UQ1.1+V2AR43UQ41UQ1.1-BGS/R	TPE	4	4	18	1	
=V2AR43UQ41UQ1.2-W1	=V2AR43UQ41KF1+V2AR43UQ41-KF1.11-X2	=V2AR43UQ41UQ1.2+V2AR43UQ41UQ1.2-BGS/R	TPE	4	4	18	1	
=V2AR43UQ41UQ2.1-W1	=V2AR43UQ41KF1+V2AR43UQ41-KF1.11-X3	=V2AR43UQ41UQ2.1+V2AR43UQ41UQ2.1-BGS/R	TPE	4	4	18	1	
=V2AR43UQ41UQ2.2-W1	=V2AR43UQ41KF1+V2AR43UQ41-KF1.11-X4	=V2AR43UQ41UQ2.2+V2AR43UQ41UQ2.2-BGS/R	TPE	4	4	18	1	
=V2AR43UQ41UQ2.3-W1	=V2AR43UQ41KF1+V2AR43UQ41-KF1.11-X5	=V2AR43UQ41UQ2.3+V2AR43UQ41UQ2.3-BGS/R	TPE	4	4	18	2	
=V2AR43UQ41UQ3.1-W1	=V2AR43UQ41KF1+V2AR43UQ41-KF1.11-X6	=V2AR43UQ41UQ3.1+V2AR43UQ41UQ3.1-BGS/R	TPE	4	3	18	1	
=V2AR43UQ41UQ4.1-W1	=V2AR43UQ41KF1+V2AR43UQ41-KF1.11-X7	=V2AR43UQ41UQ4.1+V2AR43UQ41UQ4.1-BGS/R	TPE	4	4	18	1	
=V2AR43UQ41UQ4.2-W1	=V2AR43UQ41KF1+V2AR43UQ41-KF1.11-X8	=V2AR43UQ41UQ4.2+V2AR43UQ41UQ4.2-BGS/R	TPE	4	4	18	2	
=V2AR43UQ41UQ4.3-W1	=V2AR43UQ41KF1+V2AR43UQ41-KF1.12-X1	=V2AR43UQ41UQ4.3+V2AR43UQ41UQ4.3-BGS/R	TPE	4	4	18	1	
=V2AR43UQ42BG0-W1	=V2AR43UQ42BG0+V2AR43UQ42-XG1/2	=V2AR43UQ42KF1+V2AR43UQ42-KF1.13-X5	TPE	4	4	18	0.5	
=V2AR43UQ42BG0-W1.1	=V2AR43UQ42BG0+V2AR43UQ42-BG01	=V2AR43UQ42BG0+V2AR43UQ42-XG1/2	TPE	4	3	18	3	
=V2AR43UQ42BG0-W1.2	=V2AR43UQ42BG0+V2AR43UQ42-BG02	=V2AR43UQ42BG0+V2AR43UQ42-XG1/2	TPE	4	3	18	3	
=V2AR43UQ42BG0-W2	=V2AR43UQ42BG0+V2AR43UQ42-BG03	=V2AR43UQ42KF1+V2AR43UQ42-KF1.13-X6	TPE	4	3	18	4	
=V2AR43UQ42UQ1.1-W1	=V2AR43UQ42KF1+V2AR43UQ42-KF1.11-X1	=V2AR43UQ42UQ1.1+V2AR43UQ42UQ1.1-BGS/R	TPE	4	4	18	3	
=V2AR43UQ42UQ2.1-W1	=V2AR43UQ42KF1+V2AR43UQ42-KF1.11-X2	=V2AR43UQ42UQ2.1+V2AR43UQ42UQ2.1-BGS/R	TPE	4	4	18	3	
=V2AR43UQ42UQ2.2-W1	=V2AR43UQ42KF1+V2AR43UQ42-KF1.11-X3	=V2AR43UQ42UQ2.2+V2AR43UQ42UQ2.2-BGS/R	TPE	4	4	18	3	
=V2AR43UQ42UQ3.1-W1	=V2AR43UQ42KF1+V2AR43UQ42-KF1.11-X4	=V2AR43UQ42UQ3.1+V2AR43UQ42UQ3.1-BGS/R	TPE	4	3	18	1	
=V2AR43UQ42UQ4.1-W1	=V2AR43UQ42KF1+V2AR43UQ42-KF1.11-X5	=V2AR43UQ42UQ4.1+V2AR43UQ42UQ4.1-BGS/R	TPE	4	4	18	1	
=V2AR43UQ42UQ4.2-W1	=V2AR43UQ42KF1+V2AR43UQ42-KF1.11-X6	=V2AR43UQ42UQ4.2+V2AR43UQ42UQ4.2-BGS/R	TPE	4	4	18	1	
=V2AR43UQ42UQ5.1-W1	=V2AR43UQ42KF1+V2AR43UQ42-KF1.11-X7	=V2AR43UQ42UQ5.1+V2AR43UQ42UQ5.1-BGS/R	TPE	4	4	18	2	
=V2AR43UQ42UQ5.2-W1	=V2AR43UQ42KF1+V2AR43UQ42-KF1.11-X8	=V2AR43UQ42UQ5.2+V2AR43UQ42UQ5.2-BGS/R	TPE	4	4	18	2	
=V2AR43UQ42UQ6.1-W1	=V2AR43UQ42KF1+V2AR43UQ42-KF1.12-X1	=V2AR43UQ42UQ6.1+V2AR43UQ42UQ6.1-BGS/R	TPE	4	4	18	2	
=V2AR43UQ42UQ6.2-W1	=V2AR43UQ42KF1+V2AR43UQ42-KF1.12-X2	=V2AR43UQ42UQ6.2+V2AR43UQ42UQ6.2-BGS/R	TPE	4	4	18	2	
=V2AR43UQ42UQ6.3-W1	=V2AR43UQ42KF1+V2AR43UQ42-KF1.12-X3	=V2AR43UQ42UQ6.3+V2AR43UQ42UQ6.3-BGS/R	TPE	4	4	18	2	
=V2AR43UQ42UQ7.1-W1	=V2AR43UQ42KF1+V2AR43UQ42-KF1.12-X4	=V2AR43UQ42UQ7.1+V2AR43UQ42UQ7.1-BGS/R	TPE	4	4	18	3	
=V2AR43UQ42UQ7.2-W1	=V2AR43UQ42KF1+V2AR43UQ42-KF1.12-X5	=V2AR43UQ42UQ7.2+V2AR43UQ42UQ7.2-BGS/R	TPE	4	4	18	3	
=V2AR43UQ42UQ8.1-W1	=V2AR43UQ42KF1+V2AR43UQ42-KF1.12-X6	=V2AR43UQ42UQ8.1+V2AR43UQ42UQ8.1-BGS/R	TPE	4	4	18	1	

			Date	1/24/2023	Volvo Trucks North America	Valiant TMS	Cable overview	Drawing name: =2V01&EFS-EL_KF1	=
			Ed.	MKLEPADLO					+
			Appr		P6700 Framing - Cell 2V01, KF1			Document type: EMC	Project nr: 22-16152
Modification	Date	Name	Original		Replacement of	Replaced by	Scale 1:1		Page 14 / 1630

Cable overview

F10_001_Cable

Cable name	Source (from)	Target (to)	cable type	all conductors	Conductors used	Cross-section [mm]	Length [m]	remark
=V2AR43UQ42UQ8.2-W1	=V2AR43UQ42KF1+V2AR43UQ42-KF1.12-X7	=V2AR43UQ42UQ8.2+V2AR43UQ42UQ8.2-BGS/R	TPE	4	4	18	1	
=V2AR43UQ42UQ9.1-W1	=V2AR43UQ42KF1+V2AR43UQ42-KF1.12-X8	=V2AR43UQ42UQ9.1+V2AR43UQ42UQ9.1-BGS/R	TPE	4	4	18	4	
=V2AR43UQ42UQ9.2-W1	=V2AR43UQ42KF1+V2AR43UQ42-KF1.13-X1	=V2AR43UQ42UQ9.2+V2AR43UQ42UQ9.2-BGS/R	TPE	4	4	18	4	
=V2AR43UQ43BG0-W1	=V2AR43UQ43BG0+V2AR43UQ43-XG1/2	=V2AR43UQ43KF1+V2AR43UQ43-KF1.13-X1	TPE	4	4	18	0.5	
=V2AR43UQ43BG0-W1.1	=V2AR43UQ43BG0+V2AR43UQ43-BG01	=V2AR43UQ43BG0+V2AR43UQ43-XG1/2	TPE	4	3	18	2	
=V2AR43UQ43BG0-W1.2	=V2AR43UQ43BG0+V2AR43UQ43-BG02	=V2AR43UQ43BG0+V2AR43UQ43-XG1/2	TPE	4	3	18	2	
=V2AR43UQ43UQ1.1-W1	=V2AR43UQ43KF1+V2AR43UQ43-KF1.11-X1	=V2AR43UQ43UQ1.1+V2AR43UQ43UQ1.1-BGS/R	TPE	4	4	18	2	
=V2AR43UQ43UQ2.1-W1	=V2AR43UQ43KF1+V2AR43UQ43-KF1.11-X2	=V2AR43UQ43UQ2.1+V2AR43UQ43UQ2.1-BGS/R	TPE	4	4	18	1	
=V2AR43UQ43UQ2.2-W1	=V2AR43UQ43KF1+V2AR43UQ43-KF1.11-X3	=V2AR43UQ43UQ2.2+V2AR43UQ43UQ2.2-BGS/R	TPE	4	4	18	1	
=V2AR43UQ43UQ2.3-W1	=V2AR43UQ43KF1+V2AR43UQ43-KF1.11-X4	=V2AR43UQ43UQ2.3+V2AR43UQ43UQ2.3-BGS/R	TPE	4	4	18	2	
=V2AR43UQ43UQ3.1-W1	=V2AR43UQ43KF1+V2AR43UQ43-KF1.11-X5	=V2AR43UQ43UQ3.1+V2AR43UQ43UQ3.1-BGS/R	TPE	4	3	18	1	
=V2AR43UQ43UQ4.1-W1	=V2AR43UQ43KF1+V2AR43UQ43-KF1.11-X6	=V2AR43UQ43UQ4.1+V2AR43UQ43UQ4.1-BGS/R	TPE	4	4	18	3	
=V2AR43UQ43UQ4.2-W1	=V2AR43UQ43KF1+V2AR43UQ43-KF1.11-X7	=V2AR43UQ43UQ4.2+V2AR43UQ43UQ4.2-BGS/R	TPE	4	4	18	1	
=V2AR43UQ43UQ4.3-W1	=V2AR43UQ43KF1+V2AR43UQ43-KF1.11-X8	=V2AR43UQ43UQ4.3+V2AR43UQ43UQ4.3-BGS/R	TPE	4	4	18	2	
=V2AR43UQ43UQ4.4-W1	=V2AR43UQ43KF1+V2AR43UQ43-KF1.12-X1	=V2AR43UQ43UQ4.4+V2AR43UQ43UQ4.4-BGS/R	TPE	4	4	18	2	
=V2AR43UQ43UQ4.5-W1	=V2AR43UQ43KF1+V2AR43UQ43-KF1.12-X2	=V2AR43UQ43UQ4.5+V2AR43UQ43UQ4.5-BGS/R	TPE	4	4	18	3	
=V2AR44UQ41BG0-W1	=V2AR44UQ41BG0+V2AR44UQ41-XG1/2	=V2AR44UQ41KF1+V2AR44UQ41-KF1.13-X1	TPE	4	4	18	0.5	
=V2AR44UQ41BG0-W1.1	=V2AR44UQ41BG0+V2AR44UQ41-BG01	=V2AR44UQ41BG0+V2AR44UQ41-XG1/2	TPE	4	3	18	2	
=V2AR44UQ41BG0-W1.2	=V2AR44UQ41BG0+V2AR44UQ41-BG02	=V2AR44UQ41BG0+V2AR44UQ41-XG1/2	TPE	4	3	18	2	
=V2AR44UQ41UQ1.1-W1	=V2AR44UQ41KF1+V2AR44UQ41-KF1.11-X1	=V2AR44UQ41UQ1.1+V2AR44UQ41UQ1.1-BGS/R	TPE	4	4	18	1	
=V2AR44UQ41UQ1.2-W1	=V2AR44UQ41KF1+V2AR44UQ41-KF1.11-X2	=V2AR44UQ41UQ1.2+V2AR44UQ41UQ1.2-BGS/R	TPE	4	4	18	1	
=V2AR44UQ41UQ2.1-W1	=V2AR44UQ41KF1+V2AR44UQ41-KF1.11-X3	=V2AR44UQ41UQ2.1+V2AR44UQ41UQ2.1-BGS/R	TPE	4	4	18	1	
=V2AR44UQ41UQ2.2-W1	=V2AR44UQ41KF1+V2AR44UQ41-KF1.11-X4	=V2AR44UQ41UQ2.2+V2AR44UQ41UQ2.2-BGS/R	TPE	4	4	18	1	
=V2AR44UQ41UQ2.3-W1	=V2AR44UQ41KF1+V2AR44UQ41-KF1.11-X5	=V2AR44UQ41UQ2.3+V2AR44UQ41UQ2.3-BGS/R	TPE	4	4	18	2	
=V2AR44UQ41UQ2.2-W1	=V2AR44UQ41KF1+V2AR44UQ41-KF1.11-X4	=V2AR44UQ41UQ2.2+V2AR44UQ41UQ2.2-BGS/R	TPE	4	4	18	1	
=V2AR44UQ41UQ2.3-W1	=V2AR44UQ41KF1+V2AR44UQ41-KF1.11-X5	=V2AR44UQ41UQ2.3+V2AR44UQ41UQ2.3-BGS/R	TPE	4	4	18	2	
=V2AR44UQ41UQ3.1-W1	=V2AR44UQ41KF1+V2AR44UQ41-KF1.11-X6	=V2AR44UQ41UQ3.1+V2AR44UQ41UQ3.1-BGS/R	TPE	4	3	18	1	
=V2AR44UQ41UQ4.1-W1	=V2AR44UQ41KF1+V2AR44UQ41-KF1.11-X7	=V2AR44UQ41UQ4.1+V2AR44UQ41UQ4.1-BGS/R	TPE	4	4	18	1	
=V2AR44UQ41UQ4.2-W1	=V2AR44UQ41KF1+V2AR44UQ41-KF1.11-X8	=V2AR44UQ41UQ4.2+V2AR44UQ41UQ4.2-BGS/R	TPE	4	4	18	2	
=V2AR44UQ41UQ4.3-W1	=V2AR44UQ41KF1+V2AR44UQ41-KF1.12-X1	=V2AR44UQ41UQ4.3+V2AR44UQ41UQ4.3-BGS/R	TPE	4	4	18	1	
=V2AR44UQ42BG0-W1	=V2AR44UQ42BG0+V2AR44UQ42-XG1/2	=V2AR44UQ42KF1+V2AR44UQ42-KF1.13-X5	TPE	4	4	18	0.5	
=V2AR44UQ42BG0-W1.1	=V2AR44UQ42BG0+V2AR44UQ42-BG01	=V2AR44UQ42BG0+V2AR44UQ42-XG1/2	TPE	4	3	18	3	
=V2AR44UQ42BG0-W1.2	=V2AR44UQ42BG0+V2AR44UQ42-BG02	=V2AR44UQ42BG0+V2AR44UQ42-XG1/2	TPE	4	3	18	3	
=V2AR44UQ42BG0-W2	=V2AR44UQ42BG0+V2AR44UQ42-BG03	=V2AR44UQ42KF1+V2AR44UQ42-KF1.13-X6	TPE	4	3	18	4	
=V2AR44UQ42UQ1.1-W1	=V2AR44UQ42KF1+V2AR44UQ42-KF1.11-X1	=V2AR44UQ42UQ1.1+V2AR44UQ42UQ1.1-BGS/R	TPE	4	4	18	3	
=V2AR44UQ42UQ2.1-W1	=V2AR44UQ42KF1+V2AR44UQ42-KF1.11-X2	=V2AR44UQ42UQ2.1+V2AR44UQ42UQ2.1-BGS/R	TPE	4	4	18	3	
=V2AR44UQ42UQ2.2-W1	=V2AR44UQ42KF1+V2AR44UQ42-KF1.11-X3	=V2AR44UQ42UQ2.2+V2AR44UQ42UQ2.2-BGS/R	TPE	4	4	18	3	
=V2AR44UQ42UQ3.1-W1	=V2AR44UQ42KF1+V2AR44UQ42-KF1.11-X4	=V2AR44UQ42UQ3.1+V2AR44UQ42UQ3.1-BGS/R	TPE	4	3	18	1	
=V2AR44UQ42UQ4.1-W1	=V2AR44UQ42KF1+V2AR44UQ42-KF1.11-X5	=V2AR44UQ42UQ4.1+V2AR44UQ42UQ4.1-BGS/R	TPE	4	4	18	1	
=V2AR44UQ42UQ4.2-W1	=V2AR44UQ42KF1+V2AR44UQ42-KF1.11-X6	=V2AR44UQ42UQ4.2+V2AR44UQ42UQ4.2-BGS/R	TPE	4	4	18	1	
=V2AR44UQ42UQ5.1-W1	=V2AR44UQ42KF1+V2AR44UQ42-KF1.11-X7	=V2AR44UQ42UQ5.1+V2AR44UQ42UQ5.1-BGS/R	TPE	4	4	18	2	
=V2AR44UQ42UQ5.2-W1	=V2AR44UQ42KF1+V2AR44UQ42-KF1.11-X8	=V2AR44UQ42UQ5.2+V2AR44UQ42UQ5.2-BGS/R	TPE	4	4	18	2	
=V2AR44UQ42UQ6.1-W1	=V2AR44UQ42KF1+V2AR44UQ42-KF1.12-X1	=V2AR44UQ42UQ6.1+V2AR44UQ42UQ6.1-BGS/R	TPE	4	4	18	2	
=V2AR44UQ42UQ6.2-W1	=V2AR44UQ42KF1+V2AR44UQ42-KF1.12-X2	=V2AR44UQ42UQ6.2+V2AR44UQ42UQ6.2-BGS/R	TPE	4	4	18	2	
=V2AR44UQ42UQ6.3-W1	=V2AR44UQ42KF1+V2AR44UQ42-KF1.12-X3	=V2AR44UQ42UQ6.3+V2AR44UQ42UQ6.3-BGS/R	TPE	4	4	18	2	
=V2AR44UQ42UQ7.1-W1	=V2AR44UQ42KF1+V2AR44UQ42-KF1.12-X4	=V2AR44UQ42UQ7.1+V2AR44UQ42UQ7.1-BGS/R	TPE	4	4	18	3	
=V2AR44UQ42UQ7.2-W1	=V2AR44UQ42KF1+V2AR44UQ42-KF1.12-X5	=V2AR44UQ42UQ7.2+V2AR44UQ42UQ7.2-BGS/R	TPE	4	4	18	3	
=V2AR44UQ42UQ8.1-W1	=V2AR44UQ42KF1+V2AR44UQ42-KF1.12-X6	=V2AR44UQ42UQ8.1+V2AR44UQ42UQ8.1-BGS/R	TPE	4	4	18	1	

			Date	1/24/2023	Volvo Trucks North America	Valiant TMS	Cable overview	Drawing name: =2V01&EFS-EL_KF1	=
			Ed.	MKLEPADLO					+
			Appr		P6700 Framing - Cell 2V01, KF1			Document type: EMC	Project nr: 22-16152
Modification	Date	Name	Original		Replacement of	Replaced by	Scale 1:1		Page 15 / 1630

Cable overview

F10_001_Cable

Cable name	Source (from)	Target (to)	cable type	all conductors	Conductors used	Cross-section [mm]	Length [m]	remark
=V2AR44UQ42UQ8.2-W1	=V2AR44UQ42KF1+V2AR44UQ42-KF1.12-X7	=V2AR44UQ42UQ8.2+V2AR44UQ42UQ8.2-BGS/R	TPE	4	4	18	1	
=V2AR44UQ42UQ9.1-W1	=V2AR44UQ42KF1+V2AR44UQ42-KF1.12-X8	=V2AR44UQ42UQ9.1+V2AR44UQ42UQ9.1-BGS/R	TPE	4	4	18	4	
=V2AR44UQ42UQ9.2-W1	=V2AR44UQ42KF1+V2AR44UQ42-KF1.13-X1	=V2AR44UQ42UQ9.2+V2AR44UQ42UQ9.2-BGS/R	TPE	4	4	18	4	
=V2AR44UQ43BG0-W1	=V2AR44UQ43BG0+V2AR44UQ43-XG1/2	=V2AR44UQ43KF1+V2AR44UQ43-KF1.13-X1	TPE	4	4	18	0.5	
=V2AR44UQ43BG0-W1.1	=V2AR44UQ43BG0+V2AR44UQ43-BG01	=V2AR44UQ43BG0+V2AR44UQ43-XG1/2	TPE	4	3	18	2	
=V2AR44UQ43BG0-W1.2	=V2AR44UQ43BG0+V2AR44UQ43-BG02	=V2AR44UQ43BG0+V2AR44UQ43-XG1/2	TPE	4	3	18	2	
=V2AR44UQ43UQ1.1-W1	=V2AR44UQ43KF1+V2AR44UQ43-KF1.11-X1	=V2AR44UQ43UQ1.1+V2AR44UQ43UQ1.1-BGS/R	TPE	4	4	18	2	
=V2AR44UQ43UQ2.1-W1	=V2AR44UQ43KF1+V2AR44UQ43-KF1.11-X2	=V2AR44UQ43UQ2.1+V2AR44UQ43UQ2.1-BGS/R	TPE	4	4	18	1	
=V2AR44UQ43UQ2.2-W1	=V2AR44UQ43KF1+V2AR44UQ43-KF1.11-X3	=V2AR44UQ43UQ2.2+V2AR44UQ43UQ2.2-BGS/R	TPE	4	4	18	1	
=V2AR44UQ43UQ2.3-W1	=V2AR44UQ43KF1+V2AR44UQ43-KF1.11-X4	=V2AR44UQ43UQ2.3+V2AR44UQ43UQ2.3-BGS/R	TPE	4	4	18	2	
=V2AR44UQ43UQ3.1-W1	=V2AR44UQ43KF1+V2AR44UQ43-KF1.11-X5	=V2AR44UQ43UQ3.1+V2AR44UQ43UQ3.1-BGS/R	TPE	4	3	18	1	
=V2AR44UQ43UQ4.1-W1	=V2AR44UQ43KF1+V2AR44UQ43-KF1.11-X6	=V2AR44UQ43UQ4.1+V2AR44UQ43UQ4.1-BGS/R	TPE	4	4	18	3	
=V2AR44UQ43UQ4.2-W1	=V2AR44UQ43KF1+V2AR44UQ43-KF1.11-X7	=V2AR44UQ43UQ4.2+V2AR44UQ43UQ4.2-BGS/R	TPE	4	4	18	1	
=V2AR44UQ43UQ4.3-W1	=V2AR44UQ43KF1+V2AR44UQ43-KF1.11-X8	=V2AR44UQ43UQ4.3+V2AR44UQ43UQ4.3-BGS/R	TPE	4	4	18	2	
=V2AR44UQ43UQ4.4-W1	=V2AR44UQ43KF1+V2AR44UQ43-KF1.12-X1	=V2AR44UQ43UQ4.4+V2AR44UQ43UQ4.4-BGS/R	TPE	4	4	18	2	
=V2AR44UQ43UQ4.5-W1	=V2AR44UQ43KF1+V2AR44UQ43-KF1.12-X2	=V2AR44UQ43UQ4.5+V2AR44UQ43UQ4.5-BGS/R	TPE	4	4	18	3	
=V2FQ1-W15R	=V2KF1+V2UC15-KF15.31	=V2FQ1+V2FQ1-BR15-R	TPE	4	4	18	30	
	=V2WC4+V2UC15-XD10							
	=V2WC4+V2UC15-XD15							
=V2FQ1-W15T	=V2WC4+V2UC15-XD10	=V2FQ1+V2FQ1-BR15-T	TPE	4	4	18	35	
	=V2WC4+V2UC15-XD15							
=V2GL15UQ51BG0-W5	=V2GL15UQ51BG0+V2GL15UQ51-BG05	=V2GL15UQ51KF2+V2GL15UQ51-KF2.12-X1	TPE	4	3	18	1	
=V2GL15UQ51BG0-W6	=V2GL15UQ51BG0+V2GL15UQ51-XG6/17	=V2GL15UQ51KF2+V2GL15UQ51-KF2.12-X2	TPE	4	4	18	3	
=V2GL15UQ51BG0-W6.1	=V2GL15UQ51BG0+V2GL15UQ51-BG06	=V2GL15UQ51BG0+V2GL15UQ51-XG6/17	TPE	4	3	18	1	
=V2GL15UQ51BG0-W6.2	=V2GL15UQ51BG0+V2GL15UQ51-BG17	=V2GL15UQ51BG0+V2GL15UQ51-XG6/17	TPE	4	3	18	1	
=V2GL15UQ51BG0-W7	=V2GL15UQ51BG0+V2GL15UQ51-XG7/12	=V2GL15UQ51KF2+V2GL15UQ51-KF2.12-X3	TPE	4	4	18	3	
=V2GL15UQ51BG0-W7.1	=V2GL15UQ51BG0+V2GL15UQ51-BG07	=V2GL15UQ51BG0+V2GL15UQ51-XG7/12	TPE	4	3	18	1	
=V2GL15UQ51BG0-W7.2	=V2GL15UQ51BG0+V2GL15UQ51-BG12	=V2GL15UQ51BG0+V2GL15UQ51-XG7/12	TPE	4	3	18	1	
=V2GL15UQ51BG0-W8	=V2GL15UQ51BG0+V2GL15UQ51-XG8/9	=V2GL15UQ51KF2+V2GL15UQ51-KF2.12-X4	TPE	4	4	18	1	
=V2GL15UQ51BG0-W8.1	=V2GL15UQ51BG0+V2GL15UQ51-BG08	=V2GL15UQ51BG0+V2GL15UQ51-XG8/9	TPE	4	3	18	2	
=V2GL15UQ51BG0-W8.2	=V2GL15UQ51BG0+V2GL15UQ51-BG09	=V2GL15UQ51BG0+V2GL15UQ51-XG8/9	TPE	4	3	18	2	
=V2GL15UQ51BG0-W9	=V2GL15UQ51BG0+V2GL15UQ51-XG13/14	=V2GL15UQ51KF2+V2GL15UQ51-KF2.12-X5	TPE	4	4	18	3	
=V2GL15UQ51BG0-W9.1	=V2GL15UQ51BG0+V2GL15UQ51-BG13	=V2GL15UQ51BG0+V2GL15UQ51-XG13/14	TPE	4	3	18	1	
=V2GL15UQ51BG0-W9.2	=V2GL15UQ51BG0+V2GL15UQ51-BG14	=V2GL15UQ51BG0+V2GL15UQ51-XG13/14	TPE	4	3	18	1	
=V2GL15UQ51BG0-W10	=V2GL15UQ51BG0+V2GL15UQ51-BG15	=V2GL15UQ51KF2+V2GL15UQ51-KF2.12-X6	TPE	4	4	18	3	
=V2GL15UQ51UQ3.1-W1	=V2GL15UQ51KF2+V2GL15UQ51-KF2.11-X1	=V2GL15UQ51UQ3.1+V2GL15UQ51UQ3.1-XGR/S	TPE	4	4	18	4	
=V2GL15UQ51UQ3.1-W1.1	=V2GL15UQ51UQ3.1+V2GL15UQ51UQ3.1-BGR	=V2GL15UQ51UQ3.1+V2GL15UQ51UQ3.1-XGR/S	TPE	4	3	18	0.5	
=V2GL15UQ51UQ3.1-W1.2	=V2GL15UQ51UQ3.1+V2GL15UQ51UQ3.1-BGS	=V2GL15UQ51UQ3.1+V2GL15UQ51UQ3.1-XGR/S	TPE	4	3	18	0.5	
=V2GL15UQ51UQ4.1-W1	=V2GL15UQ51KF2+V2GL15UQ51-KF2.11-X2	=V2GL15UQ51UQ4.1+V2GL15UQ51UQ4.1-XGR/S	TPE	4	4	18	4	
=V2GL15UQ51UQ4.1-W1.1	=V2GL15UQ51UQ4.1+V2GL15UQ51UQ4.1-BGR	=V2GL15UQ51UQ4.1+V2GL15UQ51UQ4.1-XGR/S	TPE	4	3	18	0.5	
=V2GL15UQ51UQ4.1-W1.2	=V2GL15UQ51UQ4.1+V2GL15UQ51UQ4.1-BGS	=V2GL15UQ51UQ4.1+V2GL15UQ51UQ4.1-XGR/S	TPE	4	3	18	0.5	
=V2GL15UQ51UQ5.1-W1	=V2GL15UQ51KF2+V2GL15UQ51-KF2.11-X3	=V2GL15UQ51UQ5.1+V2GL15UQ51UQ5.1-XGR/S	TPE	4	4	18	4	
=V2GL15UQ51UQ5.1-W1.1	=V2GL15UQ51UQ5.1+V2GL15UQ51UQ5.1-BGR	=V2GL15UQ51UQ5.1+V2GL15UQ51UQ5.1-XGR/S	TPE	4	3	18	0.5	
=V2GL15UQ51UQ5.1-W1.2	=V2GL15UQ51UQ5.1+V2GL15UQ51UQ5.1-BGS	=V2GL15UQ51UQ5.1+V2GL15UQ51UQ5.1-XGR/S	TPE	4	3	18	0.5	
=V2GL16UQ51BG0-W5	=V2GL16UQ51BG0+V2GL16UQ51-BG05	=V2GL16UQ51KF2+V2GL16UQ51-KF2.12-X1	TPE	4	3	18	1	

			Date	1/24/2023	Volvo Trucks North America	Valiant TMS	Cable overview	Drawing name: =2V01&EFS-EL_KF1	=
			Ed.	MKLEPADLO					+
			Appr		P6700 Framing - Cell 2V01, KF1			Document type: EMC	Project nr: 22-16152
Modification	Date	Name	Original		Replacement of	Replaced by	Scale 1:1		Page 16 / 1630

Cable overview

F10_001_Cable

Cable name	Source (from)	Target (to)	cable type	all conductors	Conductors used	Cross-section [mm]	Length [m]	remark
=V2GL16UQ51BG0-W6	=V2GL16UQ51BG0+V2GL16UQ51-XG6/17	=V2GL16UQ51KF2+V2GL16UQ51-KF2.12-X2	TPE	4	4	18	3	
=V2GL16UQ51BG0-W6.1	=V2GL16UQ51BG0+V2GL16UQ51-BG06	=V2GL16UQ51BG0+V2GL16UQ51-XG6/17	TPE	4	3	18	1	
=V2GL16UQ51BG0-W6.2	=V2GL16UQ51BG0+V2GL16UQ51-BG17	=V2GL16UQ51BG0+V2GL16UQ51-XG6/17	TPE	4	3	18	1	
=V2GL16UQ51BG0-W7	=V2GL16UQ51BG0+V2GL16UQ51-XG7/12	=V2GL16UQ51KF2+V2GL16UQ51-KF2.12-X3	TPE	4	4	18	3	
=V2GL16UQ51BG0-W7.1	=V2GL16UQ51BG0+V2GL16UQ51-BG07	=V2GL16UQ51BG0+V2GL16UQ51-XG7/12	TPE	4	3	18	1	
=V2GL16UQ51BG0-W7.2	=V2GL16UQ51BG0+V2GL16UQ51-BG12	=V2GL16UQ51BG0+V2GL16UQ51-XG7/12	TPE	4	3	18	1	
=V2GL16UQ51BG0-W8	=V2GL16UQ51BG0+V2GL16UQ51-XG8/9	=V2GL16UQ51KF2+V2GL16UQ51-KF2.12-X4	TPE	4	4	18	1	
=V2GL16UQ51BG0-W8.1	=V2GL16UQ51BG0+V2GL16UQ51-BG08	=V2GL16UQ51BG0+V2GL16UQ51-XG8/9	TPE	4	3	18	2	
=V2GL16UQ51BG0-W8.2	=V2GL16UQ51BG0+V2GL16UQ51-BG09	=V2GL16UQ51BG0+V2GL16UQ51-XG8/9	TPE	4	3	18	2	
=V2GL16UQ51BG0-W9	=V2GL16UQ51BG0+V2GL16UQ51-XG13/14	=V2GL16UQ51KF2+V2GL16UQ51-KF2.12-X5	TPE	4	4	18	3	
=V2GL16UQ51BG0-W9.1	=V2GL16UQ51BG0+V2GL16UQ51-BG13	=V2GL16UQ51BG0+V2GL16UQ51-XG13/14	TPE	4	3	18	1	
=V2GL16UQ51BG0-W9.2	=V2GL16UQ51BG0+V2GL16UQ51-BG14	=V2GL16UQ51BG0+V2GL16UQ51-XG13/14	TPE	4	3	18	1	
=V2GL16UQ51BG0-W10	=V2GL16UQ51BG0+V2GL16UQ51-BG15	=V2GL16UQ51KF2+V2GL16UQ51-KF2.12-X6	TPE	4	4	18	3	
=V2GL16UQ51UQ3.1-W1	=V2GL16UQ51KF2+V2GL16UQ51-KF2.11-X1	=V2GL16UQ51UQ3.1+V2GL16UQ51UQ3.1-XGR/S	TPE	4	4	18	4	
=V2GL16UQ51UQ3.1-W1.1	=V2GL16UQ51UQ3.1+V2GL16UQ51UQ3.1-BGR	=V2GL16UQ51UQ3.1+V2GL16UQ51UQ3.1-XGR/S	TPE	4	3	18	0.5	
=V2GL16UQ51UQ3.1-W1.2	=V2GL16UQ51UQ3.1+V2GL16UQ51UQ3.1-BGS	=V2GL16UQ51UQ3.1+V2GL16UQ51UQ3.1-XGR/S	TPE	4	3	18	0.5	
=V2GL16UQ51UQ4.1-W1	=V2GL16UQ51KF2+V2GL16UQ51-KF2.11-X2	=V2GL16UQ51UQ4.1+V2GL16UQ51UQ4.1-XGR/S	TPE	4	4	18	4	
=V2GL16UQ51UQ4.1-W1.1	=V2GL16UQ51UQ4.1+V2GL16UQ51UQ4.1-BGR	=V2GL16UQ51UQ4.1+V2GL16UQ51UQ4.1-XGR/S	TPE	4	3	18	0.5	
=V2GL16UQ51UQ4.1-W1.2	=V2GL16UQ51UQ4.1+V2GL16UQ51UQ4.1-BGS	=V2GL16UQ51UQ4.1+V2GL16UQ51UQ4.1-XGR/S	TPE	4	3	18	0.5	
=V2GL16UQ51UQ5.1-W1	=V2GL16UQ51KF2+V2GL16UQ51-KF2.11-X3	=V2GL16UQ51UQ5.1+V2GL16UQ51UQ5.1-XGR/S	TPE	4	4	18	4	
=V2GL16UQ51UQ5.1-W1.1	=V2GL16UQ51UQ5.1+V2GL16UQ51UQ5.1-BGR	=V2GL16UQ51UQ5.1+V2GL16UQ51UQ5.1-XGR/S	TPE	4	3	18	0.5	
=V2GL16UQ51UQ5.1-W1.2	=V2GL16UQ51UQ5.1+V2GL16UQ51UQ5.1-BGS	=V2GL16UQ51UQ5.1+V2GL16UQ51UQ5.1-XGR/S	TPE	4	3	18	0.5	
=V2GL17UQ51BG0-W5	=V2GL17UQ51BG0+V2GL17UQ51-BG05	=V2GL17UQ51KF2+V2GL17UQ51-KF2.12-X1	TPE	4	3	18	1	
=V2GL17UQ51BG0-W6	=V2GL17UQ51BG0+V2GL17UQ51-XG6/17	=V2GL17UQ51KF2+V2GL17UQ51-KF2.12-X2	TPE	4	4	18	3	
=V2GL17UQ51BG0-W6.1	=V2GL17UQ51BG0+V2GL17UQ51-BG06	=V2GL17UQ51BG0+V2GL17UQ51-XG6/17	TPE	4	3	18	1	
=V2GL17UQ51BG0-W6.2	=V2GL17UQ51BG0+V2GL17UQ51-BG17	=V2GL17UQ51BG0+V2GL17UQ51-XG6/17	TPE	4	3	18	1	
=V2GL17UQ51BG0-W7	=V2GL17UQ51BG0+V2GL17UQ51-XG7/12	=V2GL17UQ51KF2+V2GL17UQ51-KF2.12-X3	TPE	4	4	18	3	
=V2GL17UQ51BG0-W7.1	=V2GL17UQ51BG0+V2GL17UQ51-BG07	=V2GL17UQ51BG0+V2GL17UQ51-XG7/12	TPE	4	3	18	1	
=V2GL17UQ51BG0-W7.2	=V2GL17UQ51BG0+V2GL17UQ51-BG12	=V2GL17UQ51BG0+V2GL17UQ51-XG7/12	TPE	4	3	18	1	
=V2GL17UQ51BG0-W8	=V2GL17UQ51BG0+V2GL17UQ51-XG8/9	=V2GL17UQ51KF2+V2GL17UQ51-KF2.12-X4	TPE	4	4	18	1	
=V2GL17UQ51BG0-W8.1	=V2GL17UQ51BG0+V2GL17UQ51-BG08	=V2GL17UQ51BG0+V2GL17UQ51-XG8/9	TPE	4	3	18	2	
=V2GL17UQ51BG0-W8.2	=V2GL17UQ51BG0+V2GL17UQ51-BG09	=V2GL17UQ51BG0+V2GL17UQ51-XG8/9	TPE	4	3	18	2	
=V2GL17UQ51BG0-W9	=V2GL17UQ51BG0+V2GL17UQ51-XG13/14	=V2GL17UQ51KF2+V2GL17UQ51-KF2.12-X5	TPE	4	4	18	3	
=V2GL17UQ51BG0-W9.1	=V2GL17UQ51BG0+V2GL17UQ51-BG13	=V2GL17UQ51BG0+V2GL17UQ51-XG13/14	TPE	4	3	18	1	
=V2GL17UQ51BG0-W9.2	=V2GL17UQ51BG0+V2GL17UQ51-BG14	=V2GL17UQ51BG0+V2GL17UQ51-XG13/14	TPE	4	3	18	1	
=V2GL17UQ51BG0-W10	=V2GL17UQ51BG0+V2GL17UQ51-BG15	=V2GL17UQ51KF2+V2GL17UQ51-KF2.12-X6	TPE	4	4	18	3	
=V2GL17UQ51UQ3.1-W1	=V2GL17UQ51KF2+V2GL17UQ51-KF2.11-X1	=V2GL17UQ51UQ3.1+V2GL17UQ51UQ3.1-XGR/S	TPE	4	4	18	4	
=V2GL17UQ51UQ3.1-W1.1	=V2GL17UQ51UQ3.1+V2GL17UQ51UQ3.1-BGR	=V2GL17UQ51UQ3.1+V2GL17UQ51UQ3.1-XGR/S	TPE	4	3	18	0.5	
=V2GL17UQ51UQ3.1-W1.2	=V2GL17UQ51UQ3.1+V2GL17UQ51UQ3.1-BGS	=V2GL17UQ51UQ3.1+V2GL17UQ51UQ3.1-XGR/S	TPE	4	3	18	0.5	
=V2GL17UQ51UQ4.1-W1	=V2GL17UQ51KF2+V2GL17UQ51-KF2.11-X2	=V2GL17UQ51UQ4.1+V2GL17UQ51UQ4.1-XGR/S	TPE	4	4	18	4	
=V2GL17UQ51UQ4.1-W1.1	=V2GL17UQ51UQ4.1+V2GL17UQ51UQ4.1-BGR	=V2GL17UQ51UQ4.1+V2GL17UQ51UQ4.1-XGR/S	TPE	4	3	18	0.5	
=V2GL17UQ51UQ4.1-W1.2	=V2GL17UQ51UQ4.1+V2GL17UQ51UQ4.1-BGS	=V2GL17UQ51UQ4.1+V2GL17UQ51UQ4.1-XGR/S	TPE	4	3	18	0.5	
=V2GL17UQ51UQ5.1-W1	=V2GL17UQ51KF2+V2GL17UQ51-KF2.11-X3	=V2GL17UQ51UQ5.1+V2GL17UQ51UQ5.1-XGR/S	TPE	4	4	18	4	
=V2GL17UQ51UQ5.1-W1.1	=V2GL17UQ51UQ5.1+V2GL17UQ51UQ5.1-BGR	=V2GL17UQ51UQ5.1+V2GL17UQ51UQ5.1-XGR/S	TPE	4	3	18	0.5	
=V2GL17UQ51UQ5.1-W1.2	=V2GL17UQ51UQ5.1+V2GL17UQ51UQ5.1-BGS	=V2GL17UQ51UQ5.1+V2GL17UQ51UQ5.1-XGR/S	TPE	4	3	18	0.5	
=V2GL18UQ51BG0-W5	=V2GL18UQ51BG0+V2GL18UQ51-BG05	=V2GL18UQ51KF2+V2GL18UQ51-KF2.12-X1	TPE	4	3	18	1	

			Date	1/24/2023	Volvo Trucks North America	Valiant TMS	Cable overview	Drawing name: =2V01&EFS-EL_KF1	=
			Ed.	MKLEPADLO					+
			Appr		P6700 Framing - Cell 2V01, KF1			Document type: EMC	Project nr: 22-16152
Modification	Date	Name	Original		Replacement of	Replaced by	Scale 1:1		Page 17 / 1630

Cable overview

F10_001_Cable

Cable name	Source (from)	Target (to)	cable type	all conductors	Conductors used	Cross-section [mm]	Length [m]	remark
=V2GL18UQ51BG0-W6	=V2GL18UQ51BG0+V2GL18UQ51-XG6/17	=V2GL18UQ51KF2+V2GL18UQ51-KF2.12-X2	TPE	4	4	18	3	
=V2GL18UQ51BG0-W6.1	=V2GL18UQ51BG0+V2GL18UQ51-BG06	=V2GL18UQ51BG0+V2GL18UQ51-XG6/17	TPE	4	3	18	1	
=V2GL18UQ51BG0-W6.2	=V2GL18UQ51BG0+V2GL18UQ51-BG17	=V2GL18UQ51BG0+V2GL18UQ51-XG6/17	TPE	4	3	18	1	
=V2GL18UQ51BG0-W7	=V2GL18UQ51BG0+V2GL18UQ51-XG7/12	=V2GL18UQ51KF2+V2GL18UQ51-KF2.12-X3	TPE	4	4	18	3	
=V2GL18UQ51BG0-W7.1	=V2GL18UQ51BG0+V2GL18UQ51-BG07	=V2GL18UQ51BG0+V2GL18UQ51-XG7/12	TPE	4	3	18	1	
=V2GL18UQ51BG0-W7.2	=V2GL18UQ51BG0+V2GL18UQ51-BG12	=V2GL18UQ51BG0+V2GL18UQ51-XG7/12	TPE	4	3	18	1	
=V2GL18UQ51BG0-W8	=V2GL18UQ51BG0+V2GL18UQ51-XG8/9	=V2GL18UQ51KF2+V2GL18UQ51-KF2.12-X4	TPE	4	4	18	1	
=V2GL18UQ51BG0-W8.1	=V2GL18UQ51BG0+V2GL18UQ51-BG08	=V2GL18UQ51BG0+V2GL18UQ51-XG8/9	TPE	4	3	18	2	
=V2GL18UQ51BG0-W8.2	=V2GL18UQ51BG0+V2GL18UQ51-BG09	=V2GL18UQ51BG0+V2GL18UQ51-XG8/9	TPE	4	3	18	2	
=V2GL18UQ51BG0-W9	=V2GL18UQ51BG0+V2GL18UQ51-XG13/14	=V2GL18UQ51KF2+V2GL18UQ51-KF2.12-X5	TPE	4	4	18	3	
=V2GL18UQ51BG0-W9.1	=V2GL18UQ51BG0+V2GL18UQ51-BG13	=V2GL18UQ51BG0+V2GL18UQ51-XG13/14	TPE	4	3	18	1	
=V2GL18UQ51BG0-W9.2	=V2GL18UQ51BG0+V2GL18UQ51-BG14	=V2GL18UQ51BG0+V2GL18UQ51-XG13/14	TPE	4	3	18	1	
=V2GL18UQ51BG0-W10	=V2GL18UQ51BG0+V2GL18UQ51-BG15	=V2GL18UQ51KF2+V2GL18UQ51-KF2.12-X6	TPE	4	4	18	3	
=V2GL18UQ51UQ3.1-W1	=V2GL18UQ51KF2+V2GL18UQ51-KF2.11-X1	=V2GL18UQ51UQ3.1+V2GL18UQ51UQ3.1-XGR/S	TPE	4	4	18	4	
=V2GL18UQ51UQ3.1-W1.1	=V2GL18UQ51UQ3.1+V2GL18UQ51UQ3.1-BGR	=V2GL18UQ51UQ3.1+V2GL18UQ51UQ3.1-XGR/S	TPE	4	3	18	0.5	
=V2GL18UQ51UQ3.1-W1.2	=V2GL18UQ51UQ3.1+V2GL18UQ51UQ3.1-BGS	=V2GL18UQ51UQ3.1+V2GL18UQ51UQ3.1-XGR/S	TPE	4	3	18	0.5	
=V2GL18UQ51UQ4.1-W1	=V2GL18UQ51KF2+V2GL18UQ51-KF2.11-X2	=V2GL18UQ51UQ4.1+V2GL18UQ51UQ4.1-XGR/S	TPE	4	4	18	4	
=V2GL18UQ51UQ4.1-W1.1	=V2GL18UQ51UQ4.1+V2GL18UQ51UQ4.1-BGR	=V2GL18UQ51UQ4.1+V2GL18UQ51UQ4.1-XGR/S	TPE	4	3	18	0.5	
=V2GL18UQ51UQ4.1-W1.2	=V2GL18UQ51UQ4.1+V2GL18UQ51UQ4.1-BGS	=V2GL18UQ51UQ4.1+V2GL18UQ51UQ4.1-XGR/S	TPE	4	3	18	0.5	
=V2GL18UQ51UQ5.1-W1	=V2GL18UQ51KF2+V2GL18UQ51-KF2.11-X3	=V2GL18UQ51UQ5.1+V2GL18UQ51UQ5.1-XGR/S	TPE	4	4	18	4	
=V2GL18UQ51UQ5.1-W1.1	=V2GL18UQ51UQ5.1+V2GL18UQ51UQ5.1-BGR	=V2GL18UQ51UQ5.1+V2GL18UQ51UQ5.1-XGR/S	TPE	4	3	18	0.5	
=V2GL18UQ51UQ5.1-W1.2	=V2GL18UQ51UQ5.1+V2GL18UQ51UQ5.1-BGS	=V2GL18UQ51UQ5.1+V2GL18UQ51UQ5.1-XGR/S	TPE	4	3	18	0.5	
=V2UQ31BG0-W1	=V2UQ31BG0+V2UQ31-XG1/2	=V2UQ31KF1+V2UQ31-KF1.12-X6	TPE	4	4	18	0.5	
=V2UQ31BG0-W1.1	=V2UQ31BG0+V2UQ31-BG01	=V2UQ31BG0+V2UQ31-XG1/2	TPE	4	3	18	2	
=V2UQ31BG0-W1.2	=V2UQ31BG0+V2UQ31-BG02	=V2UQ31BG0+V2UQ31-XG1/2	TPE	4	3	18	5	
=V2UQ31BG0-W2	=V2UQ31BG0+V2UQ31-XG3/4	=V2UQ31KF1+V2UQ31-KF1.12-X7	TPE	4	4	18	0.5	
=V2UQ31BG0-W2.1	=V2UQ31BG0+V2UQ31-BG03	=V2UQ31BG0+V2UQ31-XG3/4	TPE	4	3	18	8	
=V2UQ31BG0-W2.2	=V2UQ31BG0+V2UQ31-BG04	=V2UQ31BG0+V2UQ31-XG3/4	TPE	4	3	18	8	
=V2UQ31BG0-W3	=V2UQ31BG0+V2UQ31-XG5/6	=V2UQ31KF2+V2UQ31-KF2.12-X6	TPE	4	4	18	0.5	
=V2UQ31BG0-W3.1	=V2UQ31BG0+V2UQ31-BG05	=V2UQ31BG0+V2UQ31-XG5/6	TPE	4	3	18	1	
=V2UQ31BG0-W3.2	=V2UQ31BG0+V2UQ31-BG06	=V2UQ31BG0+V2UQ31-XG5/6	TPE	4	3	18	3	
=V2UQ31BG0-W4	=V2UQ31BG0+V2UQ31-XG7/8	=V2UQ31KF2+V2UQ31-KF2.12-X7	TPE	4	4	18	0.5	
=V2UQ31BG0-W4.1	=V2UQ31BG0+V2UQ31-BG07	=V2UQ31BG0+V2UQ31-XG7/8	TPE	4	3	18		
=V2UQ31BG0-W4.2	=V2UQ31BG0+V2UQ31-BG08	=V2UQ31BG0+V2UQ31-XG7/8	TPE	4	3	18		
=V2UQ31UQ1.1-W1	=V2UQ31KF1+V2UQ31-KF1.11-X1	=V2UQ31UQ1.1+V2UQ31UQ1.1-BGS/R	TPE	4	4	18	3	
=V2UQ31UQ1.2-W1	=V2UQ31KF1+V2UQ31-KF1.11-X2	=V2UQ31UQ1.2+V2UQ31UQ1.2-BGS/R	TPE	4	4	18	8	
=V2UQ31UQ1.3-W1	=V2UQ31KF1+V2UQ31-KF1.11-X3	=V2UQ31UQ1.3+V2UQ31UQ1.3-BGS/R	TPE	4	4	18	8	
=V2UQ31UQ2.1-W1	=V2UQ31KF1+V2UQ31-KF1.11-X4	=V2UQ31UQ2.1+V2UQ31UQ2.1-BGS/R	TPE	4	4	18	8	
=V2UQ31UQ3.1-W1	=V2UQ31KF1+V2UQ31-KF1.11-X5	=V2UQ31UQ3.1+V2UQ31UQ3.1-BGS/R	TPE	4	4	18	8	
=V2UQ31UQ4.1-W1	=V2UQ31KF1+V2UQ31-KF1.11-X6	=V2UQ31UQ4.1+V2UQ31UQ4.1-BGS/R	TPE	4	4	18	10	
=V2UQ31UQ5.1-W1	=V2UQ31KF1+V2UQ31-KF1.11-X7	=V2UQ31UQ5.1+V2UQ31UQ5.1-BGS/R	TPE	4	4	18	10	
=V2UQ31UQ6.1-W1	=V2UQ31KF1+V2UQ31-KF1.11-X8	=V2UQ31UQ6.1+V2UQ31UQ6.1-BGS/R	TPE	4	4	18	10	
=V2UQ31UQ7.1-W1	=V2UQ31KF1+V2UQ31-KF1.12-X1	=V2UQ31UQ7.1+V2UQ31UQ7.1-BGS/R	TPE	4	4	18	8	
=V2UQ31UQ8.1-W1	=V2UQ31KF1+V2UQ31-KF1.12-X2	=V2UQ31UQ8.1+V2UQ31UQ8.1-BGS/R	TPE	4	4	18	12	
=V2UQ31UQ9.1-W1	=V2UQ31KF1+V2UQ31-KF1.12-X3	=V2UQ31UQ9.1+V2UQ31UQ9.1-BGS/R	TPE	4	4	18	12	
=V2UQ31UQ10.1-W1	=V2UQ31KF2+V2UQ31-KF2.11-X1	=V2UQ31UQ10.1+V2UQ31UQ10.1-BGS/R	TPE	4	4	18	3	

			Date	1/24/2023	Volvo Trucks North America	Valiant TMS	Cable overview	Drawing name: =2V01&EFS-EL_KF1	=
			Ed.	MKLEPADLO					+
			Appr		P6700 Framing - Cell 2V01, KF1			Document type: EMC	Project nr: 22-16152
Modification	Date	Name	Original		Replacement of / Replaced by	Scale 1:1			Page 18 / 1630

Cable overview

F10_001_Cable

Cable name	Source (from)	Target (to)	cable type	all conductors	Conductors used	Cross-section [mm]	Length [m]	remark
=V2UQ31UQ10.2-W1	=V2UQ31KF2+V2UQ31-KF2.11-X2	=V2UQ31UQ10.2+V2UQ31UQ10.2-BGS/R	TPE	4	4	18	8	
=V2UQ31UQ10.3-W1	=V2UQ31KF2+V2UQ31-KF2.11-X3	=V2UQ31UQ10.3+V2UQ31UQ10.3-BGS/R	TPE	4	4	18	8	
=V2UQ31UQ11.1-W1	=V2UQ31KF2+V2UQ31-KF2.11-X4	=V2UQ31UQ11.1+V2UQ31UQ11.1-BGS/R	TPE	4	4	18	8	
=V2UQ31UQ12.1-W1	=V2UQ31KF2+V2UQ31-KF2.11-X5	=V2UQ31UQ12.1+V2UQ31UQ12.1-BGS/R	TPE	4	4	18	8	
=V2UQ31UQ13.1-W1	=V2UQ31KF2+V2UQ31-KF2.11-X6	=V2UQ31UQ13.1+V2UQ31UQ13.1-BGS/R	TPE	4	4	18	10	
=V2UQ31UQ14.1-W1	=V2UQ31KF2+V2UQ31-KF2.11-X7	=V2UQ31UQ14.1+V2UQ31UQ14.1-BGS/R	TPE	4	4	18	10	
=V2UQ31UQ15.1-W1	=V2UQ31KF2+V2UQ31-KF2.11-X8	=V2UQ31UQ15.1+V2UQ31UQ15.1-BGS/R	TPE	4	4	18	10	
=V2UQ31UQ16.1-W1	=V2UQ31KF2+V2UQ31-KF2.12-X1	=V2UQ31UQ16.1+V2UQ31UQ16.1-BGS/R	TPE	4	4	18	8	
=V2UQ31UQ17.1-W1	=V2UQ31KF2+V2UQ31-KF2.12-X2	=V2UQ31UQ17.1+V2UQ31UQ17.1-BGS/R	TPE	4	4	18	12	
=V2UQ31UQ18.1-W1	=V2UQ31KF2+V2UQ31-KF2.12-X3	=V2UQ31UQ18.1+V2UQ31UQ18.1-BGS/R	TPE	4	4	18	12	
=V2UQ51BG0-W1	=V2UQ51BG0+V2UQ51-BG01	=V2UQ51KF1+V2UQ51-KF1.11	TPE	4	3	18	2	
=V2UQ51BG0-W2	=V2UQ51BG0+V2UQ51-BG02	=V2UQ51KF1+V2UQ51-KF1.11	TPE	4	3	18	3	
=V2UQ52BG0-W1	=V2UQ52BG0+V2UQ52-BG01	=V2UQ52KF1+V2UQ52-KF1.11	TPE	4	3	18	2	
=V2UQ52BG0-W2	=V2UQ52BG0+V2UQ52-BG02	=V2UQ52KF1+V2UQ52-KF1.11	TPE	4	3	18	3	
=V2UQ53BG0-W1	=V2UQ53BG0+V2UQ53-BG01	=V2UQ53KF1+V2UQ53-KF1.11	TPE	4	3	18	2	
=V2UQ53BG0-W2	=V2UQ53BG0+V2UQ53-BG02	=V2UQ53KF1+V2UQ53-KF1.11	TPE	4	3	18	3	
=V2UQ54BG0-W1	=V2UQ54BG0+V2UQ54-BG01	=V2UQ54KF1+V2UQ54-KF1.11	TPE	4	3	18	2	
=V2UQ54BG0-W2	=V2UQ54BG0+V2UQ54-BG02	=V2UQ54KF1+V2UQ54-KF1.11	TPE	4	3	18	3	
=V1FQ1-W13R	=V1FQ1+V1FQ1-BR12-R	=V1FQ1+V1FQ1-BR13-R	TPE	8	8	22	0.61	
=V1FQ1-W13T	=V1FQ1+V1FQ1-BR12-T	=V1FQ1+V1FQ1-BR13-T	TPE	8	8	22	0.61	
=V1AR11UQ41KF1-W1	=V1AR11UQ41KF1+V1AR11UQ41-KF1-X20	=V1AR11UQ41KF1+V1AR11UQ41-R3.CP/CS	TPU	5	5	16	2	
=V1AR31UQ41KF1-W1	=V1AR31UQ41KF1+V1AR31UQ41-KF1-X20	=V1AR31UQ41KF1+V1AR31UQ41-R3.CP/CS	TPU	5	5	16	2	
=V1AR31XQ41KF1-W1.1	=V1AR31XQ41KF1+V1AR31XQ41-KF1-X20	=V1AR31XQ41WC4+V1AR31XQ41UC01-XG51	TPU	5	5	16	1	
=V1AR31XQ41WC4-W1	=V1WC4+V1UC12-XD181	=V1AR31XQ41WC4+V1AR31XQ41UC01-XG51	TPU	5	5	16	25	
=V1AR41UQ41KF1-W1	=V1AR41UQ41KF1+V1AR41UQ41-KF1-X20	=V1AR41UQ41KF1+V1AR41UQ41-R3.CP/CS	TPU	5	5	16	2	
=V1FQ1-W1	=V1FQ1+V1FQ1BG1-BG1-X1	=V1FQ1+V1FQ1BG2-BG2-X2	TPU	5	5	16	30	
=V1FQ1-W2			TPU	5	0	16	12	
=V1FQ1-W4			TPU	5	0	16	20	
=V1FQ1-W6	=V1FQ1+V1FQ1BG6-BG6-X1	=V1FQ1+V1FQ1BG7-BG7-X2	TPU	5	5	16	20	
=V1GL13KF2-W1	=V1WC4+V1UC12-XD161	=V1GL13KF2+V1GL13KF2-KF2.11	TPU	5	4	16	40	
=V1GL13UQ51KF2-W1	=V1GL13KF2+V1GL13KF2-KF2.11	=V1GL13UQ51KF2+V1GL13UQ51-KF2-X20	TPU	5	4	16	5	
=V1GL14KF2-W1	=V1WC4+V1UC12-XD171	=V1GL14KF2+V1GL14KF2-KF2.11	TPU	5	4	16	30	
=V1GL14UQ51KF2-W1	=V1GL14KF2+V1GL14KF2-KF2.11	=V1GL14UQ51KF2+V1GL14UQ51-KF2-X20	TPU	5	4	16	5	
=V1PZ1PF1-W1			TPU	10	0	16	20	
=V1SF0PG2-W1	=V1SF0PG2+V1UC51-XD1	=V1WC4+V1UC11-XD81	TPU	5	4	16	25	
=V1U20U01KF1-W1	=V1WC4+V1UC11-XD181	=V1U20U01KF1+V1U20U01-KF1.11	TPU	5	4	16	30	
=V1UL1KF1-W1			TPU	5	0	16	2	
=V1UL1KF2-W2	=V1UL1KF1+V1UL1-KF1.11	=V1UL1KF2+V1UL1-KF2.11	TPU	5	5	16	3	
=V1UQ31KF1-W1	=V1WC4+V1UC11-XD151	=V1UQ31KF1+V1UQ31-KF1-X20	TPU	5	5	16	20	
=V1UQ51KF1-W1.1	=V1UQ51KF1+V1UQ51-KF1.11	=V1WC4+V1UC12-XG51	TPU	5	4	16	20	
=V1UQ53KF1-W1	=V1U20U01KF1+V1U20U01-KF1.11	=V1UQ53KF1+V1UQ53-KF1-X20	TPU	5	4	16	20	
=V1WC4-W1	=V1WC4+V1UC11-XD61	=V1WC4+V1UC11-XG51	TPU	5	5	16	20	
=V1WC4-W1	=V1WC4+V1UC12-XD151	=V1WC4+V1UC12-XG51	TPU	5	5	16	5	
=V1WC4-W1			TPU	5	0	16	10	
=V1WL2WL1KF1-W1	=V1WC4+V1UC12-XD81	=V1WL2WL1KF1+V1WL2KF1-KF1.11	TPU	5	4	16	20	
=V1WL3GM1KF1-W1	=V1WL3GM1KF1+V1WL3KF1-KF1.11	=V1WL3WL1KF1+V1WL3KF1-KF1.11	TPU	5	5	16	5	

			Date	1/24/2023	Volvo Trucks North America	Valiant TMS	Cable overview	Drawing name: =2V01&EFS-EL_KF1	=
			Ed.	MKLEPADLO					+
			Appr		P6700 Framing - Cell 2V01, KF1			Document type: EMC	Project nr: 22-16152
Modification	Date	Name	Original		Replacement of	Replaced by	Scale 1:1		Page 19 / 1630

Cable overview

F10_001_Cable

Cable name	Source (from)	Target (to)	cable type	all conductors	Conductors used	Cross-section [mm]	Length [m]	remark
=V1WL3WL1KF1-W1	=V1WL2WL1KF1+V1WL2KF1-KF1.11	=V1WL3WL1KF1+V1WL3KF1-KF1.11	TPU	5	5	16	15	
=V2AR31UQ41KF1-W1	=V2AR31UQ41KF1+V2AR31UQ41-KF1-X20	=V2AR31UQ41KF1+V2AR31UQ41-R3.CP/CS	TPU	5	5	16	2	
=V2AR31UQ42KF1-W1	=V2AR31UQ42KF1+V2AR31UQ42-KF1-X20	=V2AR31UQ42KF1+V2AR31UQ42-R3.CP/CS	TPU	5	5	16	2	
=V2AR31XQ41KF1-W1.2	=V2AR31XQ41KF1+V2AR31XQ41-KF1-X20	=V2WC4+V2UC14-XG51	TPU	5	5	16	20	
=V2AR32UQ41KF1-W1	=V2AR32UQ41KF1+V2AR32UQ41-KF1-X20	=V2AR32UQ41KF1+V2AR32UQ41-R3.CP/CS	TPU	5	5	16	2	
=V2AR32UQ42KF1-W1	=V2AR32UQ42KF1+V2AR32UQ42-KF1-X20	=V2AR32UQ42KF1+V2AR32UQ42-R3.CP/CS	TPU	5	5	16	2	
=V2AR32XQ41KF1-W1	=V1AR31XQ41WC4+V1AR31XQ41UC01-XG51	=V2AR32XQ41KF1+V2AR32XQ41-KF1-X20	TPU	5	5	16	30	
=V2AR41UQ41KF1-W1	=V2AR41UQ41KF1+V2AR41UQ41-KF1-X20	=V2AR41UQ41KF1+V2AR41UQ41-R3.CP/CS	TPU	5	5	16	2	
=V2AR42UQ41KF1-W1	=V2AR42UQ41KF1+V2AR42UQ41-KF1-X20	=V2AR42UQ41KF1+V2AR42UQ41-R3.CP/CS	TPU	5	5	16	2	
=V2AR42UQ42KF1-W1	=V2AR42UQ42KF1+V2AR42UQ42-KF1-X20	=V2AR42UQ42KF1+V2AR42UQ42-R3.CP/CS	TPU	5	5	16	2	
=V2AR43UQ41KF1-W1	=V2AR43UQ41KF1+V2AR43UQ41-KF1-X20	=V2AR43UQ41KF1+V2AR43UQ41-R3.CP/CS	TPU	5	5	16	2	
=V2AR43UQ42KF1-W1	=V2AR43UQ42KF1+V2AR43UQ42-KF1-X20	=V2AR43UQ42KF1+V2AR43UQ42-R3.CP/CS	TPU	5	5	16	2	
=V2AR43UQ43KF1-W1	=V2AR43UQ43KF1+V2AR43UQ43-KF1-X20	=V2AR43UQ43KF1+V2AR43UQ43-R3.CP/CS	TPU	5	5	16	2	
=V2AR44UQ41KF1-W1	=V2AR44UQ41KF1+V2AR44UQ41-KF1-X20	=V2AR44UQ41KF1+V2AR44UQ41-R3.CP/CS	TPU	5	5	16	2	
=V2AR44UQ42KF1-W1	=V2AR44UQ42KF1+V2AR44UQ42-KF1-X20	=V2AR44UQ42KF1+V2AR44UQ42-R3.CP/CS	TPU	5	5	16	2	
=V2AR44UQ43KF1-W1	=V2AR44UQ43KF1+V2AR44UQ43-KF1-X20	=V2AR44UQ43KF1+V2AR44UQ43-R3.CP/CS	TPU	5	5	16	2	
=V2FQ1-W3			TPU	5	0	16	3	
=V2FQ1-W4	=V2FQ1+V2FQ1BG3-BG3-X2	=V2FQ1+V2FQ1BG4-BG4-X1	TPU	5	5	16	10	
=V2FQ1-W5			TPU	5	0	16	15	
=V2FQ1-W8			TPU	5	0	16	15	
=V2FQ1-W9	=V2FQ1+V2FQ1BG8-BG8-X2	=V2FQ1+V2FQ1BG9-BG9-X1	TPU	5	5	16	15	
=V2FQ1-W10	=V2FQ1+V2FQ1BG9-BG9-X2	=V2FQ1+V2FQ1BG10-BG10-X1	TPU	5	5	16	20	
=V2FQ1-W11	=V2FQ1+V2FQ1BG10-BG10-X2	=V2FQ1+V2FQ1BG11-BG11-X1	TPU	5	5	16	20	
=V2FQ1-W12			TPU	5	0	16	20	
=V2GL15KF2-W1	=V2WC4+V2UC15-XD161	=V2GL15KF2+V2GL15KF2-KF2.11	TPU	5	4	16	25	
=V2GL15UQ51KF2-W1	=V2GL15KF2+V2GL15KF2-KF2.11	=V2GL15UQ51KF2+V2GL15UQ51-KF2-X20	TPU	5	4	16	5	
=V2GL16KF2-W1	=V2WC4+V2UC14-XD161	=V2GL16KF2+V2GL16KF2-KF2.11	TPU	5	4	16	25	
=V2GL16UQ51KF2-W1	=V2GL16KF2+V2GL16KF2-KF2.11	=V2GL16UQ51KF2+V2GL16UQ51-KF2-X20	TPU	5	4	16	5	
=V2GL17KF2-W1	=V2WC4+V2UC15-XD171	=V2GL17KF2+V2GL17KF2-KF2.11	TPU	5	4	16	20	
=V2GL17UQ51KF2-W1	=V2GL17KF2+V2GL17KF2-KF2.11	=V2GL17UQ51KF2+V2GL17UQ51-KF2-X20	TPU	5	4	16	5	
=V2GL18KF2-W1	=V2WC4+V2UC14-XD171	=V2GL18KF2+V2GL18KF2-KF2.11	TPU	5	4	16	20	
=V2GL18UQ51KF2-W1	=V2GL18KF2+V2GL18KF2-KF2.11	=V2GL18UQ51KF2+V2GL18UQ51-KF2-X20	TPU	5	4	16	5	
=V2PZ1PF1-W1			TPU	10	0	16	15	
=V2UQ31KF1-W1.1	=V2UQ31KF1+V2UQ31-KF1-X20	=V2UQ31WC4+V2UQ31-XG51	TPU	5	5	16	1	
=V2UQ31KF2-W1.2	=V2UQ31KF2+V2UQ31-KF2-X20	=V2UQ31WC4+V2UQ31-XG51	TPU	5	4	16	10	
=V2UQ31WC4-W1	=V1WC4+V1UC11-XD161	=V2UQ31WC4+V2UQ31-XG51	TPU	5	5	16	30	
=V2UQ51KF1-W1	=V1WC4+V1UC11-XD171	=V2UQ51KF1+V2UQ51-KF1.11	TPU	5	4	16	15	
=V2UQ52KF1-W1	=V2WC4+V2UC15-XD151	=V2UQ52KF1+V2UQ52-KF1.11	TPU	5	4	16	15	
=V2UQ53KF1-W1	=V2UQ53KF1+V2UQ53-KF1.11	=V2WC4+V2UC14-XG51	TPU	5	4	16	15	
=V2UQ54KF1-W1	=V2UQ52KF1+V2UQ52-KF1.11	=V2UQ54KF1+V2UQ54-KF1.11	TPU	5	5	16	25	
=V2WC4-W1	=V2WC4+V2UC14-XD151	=V2WC4+V2UC14-XG51	TPU	5	5	16	5	
=V2WC4-W1			TPU	5	0	16	5	
=V2WC4-W1	=V2WC4+V2UC33-XD1	=V1WC4+V1UC11-XG51	TPU	5	4	16	1	
=V2WC4-W1			TPU	5	0	16	20	
=V2WL1WL1KF1-W1	=V1WL3GM1KF1+V1WL3KF1-KF1.11	=V2WL1WL1KF1+V2WL1KF1-KF1.11	TPU	5	5	16	15	
=V2WL2GM1KF1-W1	=V2WL2GM1KF1+V2WL2KF1-KF1.11	=V2WL2WL1KF1+V2WL2KF1-KF1.11	TPU	5	5	16	5	

			Date	1/24/2023	Volvo Trucks North America	Valiant TMS	Cable overview	Drawing name: =2V01&EFS-EL_KF1	=
			Ed.	MKLEPADLO					+
			Appr		P6700 Framing - Cell 2V01, KF1			Document type: EMC	Project nr: 22-16152
Modification	Date	Name	Original		Replacement of	Replaced by	Scale 1:1		Page 20 / 1630

Cable overview

F10_001_Cable

Cable name	Source (from)	Target (to)	cable type	all conductors	Conductors used	Cross-section [mm]	Length [m]	remark
=V2WL2WL1KF1-W1	=V1WC4+V1UC11-XD71	=V2WL2WL1KF1+V2WL2KF1-KF1.11	TPU	5	4	16	30	
=V2WL3WL1KF1-W1	=V2WL2GM1KF1+V2WL2KF1-KF1.11	=V2WL3WL1KF1+V2WL3KF1-KF1.11	TPU	5	5	16	15	
=V2WL4WL1KF1-W1	=V2WL3WL1KF1+V2WL3KF1-KF1.11	=V2WL4WL1KF1+V2WL4KF1-KF1.11	TPU	5	5	16	15	

			Date	1/24/2023	Volvo Trucks North America	Valiant TMS	Cable overview	Drawing name: =2V01&EFS-EL_KF1	=
			Ed.	MKLEPADLO					+
			Appr		P6700 Framing - Cell 2V01, KF1			Document type: EMC	Project nr: 22-16152
Modification	Date	Name	Original		Replacement of	Replaced by	Scale 1:1		Page 21 / 1630

Parts list

F01_001

Device tag	Quantity	Designation	Type number	Supplier	Part number
	12	Mounting rail EN 50 022 (35x7,5)	TS 35_7,5		TS 35_7,5

&EMC/21

+KH0/1

			Date	1/24/2023	Volvo Trucks North America	Valiant TMS	Parts list : TS 35_7,5 - TS 35_7,5	Drawing name: =2V01&EFS-EL_KF1	=
			Ed.	MKLEPADLO					+
			Appr		P6700 Framing - Cell 2V01, KF1	Scale 1:1		Document type: EPB	Project nr: 22-16152	Page 1 / 1630
Modification	Date	Name	Original		Replacement of / Replaced by				

Parts list

F01_001

Device tag	Quantity	Designation	Type number	Supplier	Part number
=KH0-W1-XD2	1	MALE 5-PIN M12 FIELD ATTACHABLE CONNECTOR	BS 8251-0/PG9	TURCK	TUR.BS 8251-0/PG9

+/1

+UC31/1

			Date	1/24/2023	Volvo Trucks North America	Valiant TMS	Parts list : TUR.BS 8251-0/PG9 - TUR.BS 8251-0/PG9	Drawing name: =2V01&EFS-EL_KF1	=	
			Ed.	MKLEPADLO					+ KH0	
			Appr		P6700 Framing - Cell 2V01, KF1	Scale 1:1		Document type: EPB	Project nr: 22-16152	Page 1 / 1630
Modification	Date	Name	Original		Replacement of / Replaced by					

Parts list

F01_001

Device tag	Quantity	Designation	Type number	Supplier	Part number
=KF0-M1	1	Ground bar kit, 5 positions.	ECGB5	SIE	US2.ECGB5
=KF0-M1	1	Wiring Duct Covers, PVC	C1.5LG6	PANDUIT	PAN.C1.5LG6
=KF0-M1	1	Wiring Duct Covers, PVC	C1LG6	PAN	PAN.C1LG6
=KF0-M1	1	Wide Slotted Wiring Duct, PVC	G1.5X4LG6	PAN	PAN.G1.5X4LG6
=KF0-M1	1	Wide Slotted Wiring Duct, PVC	G1X4LG6	PAN	PAN.G1X4LG6
=KF0-M1	1	STAND.SECTIONAL RAIL 35MM, LENGTH 483MM	6ES5710-8MA11	Siemens AG	SIE.6ES5710-8MA11
=KF0-UC31	1	PC PC enclosure system, WHD: 800x1600x600 mm, Sheet steel	PC.5386050	RIT	RIT.5386050
=KF0-UC31	1	VX Partial mounting plate, for VX: 700x700 mm	VX.8617580	RIT	RIT.8617580
=KF0-UC31	1	Base/plinth corner piece with base/plinth trim panels, front and rear,	VX.8640003		RIT.8640003
=KF0-UC31	1	Base/plinth trim panels, side, sheet steel, optimised design, 100 mm	VX.8640033		RIT.8640033
=KF0-UC91	1	Pushbutton Enclosure, Type 12, 4PB, 22.5mm holes, 10.00Hx3.25Wx2.75D, Gray, Steel	E4PBG	HOFFMAN	HOF.E4PBG
=KF0-UC91	1	Hol-Sealers Hole Seal, 1.22" diameter, Gray, Steel	ASPBG	HOFFMAN	ASPBG
=KF0-UC92	1	Pushbutton Enclosure, Type 12, 4PB, 22.5mm holes, 10.00Hx3.25Wx2.75D, Gray, Steel	E4PBG	HOFFMAN	HOF.E4PBG
=KF0-UC92	1	LEGEND PLATET KTC15-1005	KTC15-1005		ABB.1SFA616915R1005
=KF0-UC92	1	Hol-Sealers Hole Seal, 1.22" diameter, Gray, Steel	ASPBG	HOFFMAN	ASPBG
=KF0KF1-KF1.31	1	CPU 1517F-3 PN/DP, 3MB PROG., 8MB DATA	6ES7517-3FP00-0AB0	SIE	SIE.6ES7517-3FP00-0AB0
=KF0KF1-KF1.31	1	SIMATIC S7 MEMORY CARD, 2 GB	6ES7954-8LP03-0AA0	SIE	SIE.6ES7954-8LP03-0AA0
=KF0KF1-KF1.31	1	MOUNTING RAIL 245MM (9.6")	6ES7590-1AC40-0AA0	SIE	SIE.6ES7590-1AC40-0AA0
=KF0KF1-KF31	1				SIE.6ES7155-6AA01-0BN0_subassembly
=KF0KF1-KF31	1	ET200SP, SERVERMODULE	6ES7193-6PA00-0AA0		SIE.6ES7193-6PA00-0AA0
=KF0KF1-KF31.11	1	ET 200SP, DI 16x 24V DC ST, PU 1	6ES7131-6BH01-0BA0	SIE	SIE.6ES7131-6BH01-0BA0
=KF0KF1-KF31.11	1	Bas Modul Vit	6ES7193-6BP00-0DA0	SIE	SIE.6ES7193-6BP00-0DA0
=KF0KF1-KF31.21	1	ET 200SP, DQ 16x 24V DC/0,5A ST, PU 1	6ES7132-6BH01-0BA0	SIE	SIE.6ES7132-6BH01-0BA0
=KF0KF1-KF31.21	1	Bas Modul Vit	6ES7193-6BP00-0DA0	SIE	SIE.6ES7193-6BP00-0DA0
=KF0KF1-KF31.31	1	ET 200SP, El-Mod., F-DI 8x24VDC HF	6ES7136-6BA01-0CA0	SIE	SIE.6ES7136-6BA01-0CA0
=KF0KF1-KF31.31	1	Bas Modul Vit	6ES7193-6BP00-0DA0	SIE	SIE.6ES7193-6BP00-0DA0
=KF0KF1-KF98.31	1	SIMATIC PN/PN Coupler	6ES7158-3AD10-0XA0	SIE	SIE.6ES7158-3AD10-0XA0
=KF0KF1-KF98.31	2	BA 2XRJ45	6ES7193-6AR00-0AA0		SIE.6ES7193-6AR00-0AA0
=KF0KF1-KF98.31	2	5 pcs. PROFINET strain relief	6ES7193-6RA00-1AN0	SIE	SIE.6ES7193-6RA00-1AN0
=KF0KF1-KF98.31-K1	1	BA 2XFC	6ES7193-6AF00-0AA0	SIE	SIE.6ES7193-6AF00-0AA0
=KF0KF1-KF98.31-K2	1	BA 2XFC	6ES7193-6AF00-0AA0	SIE	SIE.6ES7193-6AF00-0AA0
=KF0KF1-KF99.31	1	SCALANCE S615	6GK5615-0AA00-2AA2	SIE	SIE.6GK5615-0AA00-2AA2
=KF0KF1-KF100.31	1	SCALANCE XC216	6GK5216-0BA00-2AC2	SIE	SIE.6GK5216-0BA00-2AC2
=KF0KF1-KF100.31-P6	1	Profinet cable - RJ45 plug to M12 Female receptacle; 1m long	RJ45S FKSDED 423-1M	TURCK	TUR.RJ45S FKSDED 423-1M
=KF0KF1-KF100.31-P7	1	Profinet cable - RJ45 plug to M12 Female receptacle; 1m long	RJ45S FKSDED 423-1M	TURCK	TUR.RJ45S FKSDED 423-1M
=KF0KF1-KF100.31-P8	1	Profinet cable - RJ45 plug to M12 Female receptacle; 1m long	RJ45S FKSDED 423-1M	TURCK	TUR.RJ45S FKSDED 423-1M
=KF0KF1-KF100.31-P9	1	Profinet cable - RJ45 plug to M12 Female receptacle; 1m long	RJ45S FKSDED 423-1M	TURCK	TUR.RJ45S FKSDED 423-1M
=KF0KF1-KF100.31-P10	1	Profinet cable - RJ45 plug to M12 Female receptacle; 1m long	RJ45S FKSDED 423-1M	TURCK	TUR.RJ45S FKSDED 423-1M
=KF0KF1-KF100.31-P11	1	Profinet cable - RJ45 plug to M12 Female receptacle; 1m long	RJ45S FKSDED 423-1M	TURCK	TUR.RJ45S FKSDED 423-1M
=KF0KF1-KF100.31-P12	1	Profinet cable - RJ45 plug to M12 Female receptacle; 1m long	RJ45S FKSDED 423-1M	TURCK	TUR.RJ45S FKSDED 423-1M
=KF0KF1-KF100.31-P13	1	Profinet cable - RJ45 plug to M12 Female receptacle; 1m long	RJ45S FKSDED 423-1M	TURCK	TUR.RJ45S FKSDED 423-1M
=KF0KF1-KF100.31-P14	1	Profinet cable - RJ45 plug to M12 Female receptacle; 1m long	RJ45S FKSDED 423-1M	TURCK	TUR.RJ45S FKSDED 423-1M
=KF0KF1-KF100.31-P15	1	Profinet cable - RJ45 plug to M12 Female receptacle; 1m long	RJ45S FKSDED 423-1M	TURCK	TUR.RJ45S FKSDED 423-1M
=KF0KF1-KF100.31-P16	1	Profinet cable - RJ45 plug to M12 Female receptacle; 1m long	RJ45S FKSDED 423-1M	TURCK	TUR.RJ45S FKSDED 423-1M
=KF0KF1-XG1	1				4000-73000-0180000
=KF0KF1-XG2	1				4000-73000-0180000
=KF0PZ1-PF1	1	Signaling column connection element for pipe mounting incl. end cover and seal	8WD4408-0AA	SIE	SIE.8WD4408-0AA
=KF0PZ1-PF1	1	Tube with foot, tube length 100 mm, accessory for signaling columns 8WD44, D=70 mm	8WD4308-0DA	SIEMENS	SIE.8WD4308-0DA
=KF0PZ1-PF1	1	Signaling column multifunctional siren element different sounds can be set 24 V	8WD4420-0EA2		SIE.8WD4420-0EA2
=KF0PZ1-PF1	1	Signaling column continuous light element LED red, 24 V AC/DC	8WD4420-5AB	SIE	SIE.8WD4420-5AB
=KF0PZ1-PF1	1	Signaling column continuous light element LED green, 24 V AC/DC	8WD4420-5AC	SIE	SIE.8WD4420-5AC
=KF0WC3-FC1	1	Miniature Circuit Breaker - SU200 M - 1P - C - 10 A	SU201M-C10	ABB	ABB.2CDS271337R0104
=KF0WC3-FC1	1	S2C-H6RU - Auxiliary Contact	S2C-H6RU	ABB	ABB.2CDS200914R0001
=KF0WC3-FC2	1	Miniature Circuit Breaker - SU200 M - 1P - C - 10 A	SU201M-C10	ABB	ABB.2CDS271337R0104
=KF0WC3-FC2	1	S2C-H6RU - Auxiliary Contact	S2C-H6RU	ABB	ABB.2CDS200914R0001
=KF0WC4-FC11	1	4 CHANNELS, SELECTIVITY MODULE 3-10A / CHANNEL	6EP1961-2BA41	SIE	SIE.6EP1961-2BA41

			Date	1/24/2023	Volvo Trucks North America	Valiant TMS	Parts list : US2.ECGB5 - SIE.6EP1961-2BA41	Drawing name: =2V01&EFS-EL_KF1	= + UC31
			Ed.	MKLEPADLO					
			Appr		P6700 Framing - Cell 2V01, KF1	Scale 1:1		Document type: EPB	Project nr: 22-16152
Modification	Date	Name	Original		Replacement of	Replaced by			Page 1 / 1630

Parts list

F01_001

Device tag	Quantity	Designation	Type number	Supplier	Part number
=KF0WC4-GA1	1	SITOP UPS1600 10A ETHERNET/ PROFINET UNINTERRUPTIBLE POWER SUPPLY	6EP4134-3AB00-2AY0	SIE	SIE.6EP4134-3AB00-2AY0
=KF0WC4-GB1	1	SITOP UPS1100	6EP4134-0GB00-0AY0	SIE	SIE.6EP4134-0GB00-0AY0
=KF0WC4-TA1	1	SITOP PSU6200 1ph 24 V/20 A	6EP3336-7SB00-3AX0		SIE.6EP3336-7SB00-3AX0

			Date	1/24/2023	Volvo Trucks North America	Valiant TMS	Parts list : SIE.6EP4134-3AB00-2AY0 - SIE.6EP3336-7SB00-3AX0	Drawing name: =2V01&EFS-EL_KF1	=
			Ed.	MKLEPADLO					+ UC31
			Appr		P6700 Framing - Cell 2V01, KF1			Document type: EPB	Project nr: 22-16152
Modification	Date	Name	Original		Replacement of / Replaced by	Scale 1:1			Page 2 / 1630

Parts list

F01_001

Device tag	Quantity	Designation	Type number	Supplier	Part number
=KF0FQ0-SF1	1	EMERGENCY STOP CE4T-10R-02	CE4T-10R-02	ABB	ABB.1SFA619550R1051
=KF0FQ0-SF1	1	LEGEND PLATET KTC15-1005	KTC15-1005		ABB.1SFA616915R1005
=KF0SF1-SF5	1	PUSHBUTTON CP1-10G-20	CP1-10G-20	ABB	ABB.1SFA619100R1022
=KF0SF1-SF6	1	PUSHBUTTON CP1-10Y-20	CP1-10Y-20	ABB	ABB.1SFA619100R1023

+UC31/2

+.UC92/1

			Date	1/24/2023	Volvo Trucks North America	Valiant TMS	Parts list : ABB.1SFA619550R1051 - ABB.1SFA619100R1023	Drawing name: =2V01&EFS-EL_KF1	=	
			Ed.	MKLEPADLO					+ UC31UC91	
			Appr		P6700 Framing - Cell 2V01, KF1	Scale 1:1		Document type: EPB	Project nr: 22-16152	Page 1 / 1630
Modification	Date	Name	Original		Replacement of	Replaced by				

Parts list

F01_001

Device tag	Quantity	Designation	Type number	Supplier	Part number
=KF0SF1-SF1/PF1	1	PUSHBUTTON CP1-11R-10 24V AC/DC	CP1-11R-10	ABB	ABB.1SFA619100R1111
=KF0SF1-SF2	1	PUSHBUTTON CP1-10B-20	CP1-10B-20	ABB	ABB.1SFA619100R1026
=KF0SF1-SF3/PF3	1	PUSHBUTTON CP1-11C-10	CP1-11C-10	ABB	ABB.1SFA619100R1118
=KF0SF1-SF4	1	SELECTOR SWITCH C2SS1-10B-10	C2SS1-10B-10	ABB	ABB.1SFA619200R1016

+.UC91/1

+UC32/1

			Date	1/24/2023	Volvo Trucks North America	Valiant TMS	Parts list : ABB.1SFA619100R1111 - ABB.1SFA619200R1016	Drawing name: =2V01&EFS-EL_KF1	=	
			Ed.	MKLEPADLO					+ UC31UC92	
			Appr		P6700 Framing - Cell 2V01, KF1	Scale 1:1		Document type: EPB	Project nr: 22-16152	Page 1 / 1630
Modification	Date	Name	Original		Replacement of / Replaced by					

Parts list

F01_001

Device tag	Quantity	Designation	Type number	Supplier	Part number
=FQ0V1SF1S01-SF1	1	EMERGENCY STOP CE4T-10R-02	CE4T-10R-02	ABB	ABB.1SFA619550R1051
=FQ0V1SF1S01-SF1	1	LEGEND PLATET KTC15-1005	KTC15-1005		ABB.1SFA616915R1005
=FQ0V2SF1S01-SF1	1	EMERGENCY STOP CE4T-10R-02	CE4T-10R-02	ABB	ABB.1SFA619550R1051
=FQ0V2SF1S01-SF1	1	LEGEND PLATET KTC15-1005	KTC15-1005		ABB.1SFA616915R1005

+UC31UC92/1

+UC33/1

			Date	1/24/2023	Volvo Trucks North America	Valiant TMS	Parts list : ABB.1SFA619550R1051 - ABB.1SFA616915R1005	Drawing name: =2V01&EFS-EL_KF1	= + UC32
			Ed.	MKLEPADLO					
			Appr		P6700 Framing - Cell 2V01, KF1	Scale 1:1		Document type: EPB	Project nr: 22-16152
Modification	Date	Name	Original		Replacement of	Replaced by			Page 1 / 1630

Parts list

F01_001

Device tag	Quantity	Designation	Type number	Supplier	Part number
=FQ0V2SF1S01-SF1	1	EMERGENCY STOP CE4T-10R-02	CE4T-10R-02	ABB	ABB.1SFA619550R1051
=FQ0V2SF2S01-SF1	1	EMERGENCY STOP CE4T-10R-02	CE4T-10R-02	ABB	ABB.1SFA619550R1051
=FQ0V2SF2S01-SF1	1	LEGEND PLATET KTC15-1005	KTC15-1005		ABB.1SFA616915R1005

+UC32/1

+V1AR11UQ41/1

			Date	1/24/2023	Volvo Trucks North America	Valiant TMS	Parts list : ABB.1SFA619550R1051 - ABB.1SFA616915R1005	Drawing name: =2V01&EFS-EL_KF1	= + UC33
			Ed.	MKLEPADLO					
			Appr		P6700 Framing - Cell 2V01, KF1	Scale 1:1		Document type: EPB	Project nr: 22-16152
Modification	Date	Name	Original		Replacement of / Replaced by				Page 1 / 1630

Parts list

F01_001

Device tag	Quantity	Designation	Type number	Supplier	Part number
=V1AR11UQ41BG0-BG01	1	Inductive sensor With WeldGuard™ coating	NI50U-CK40-AP6X2-H1141/S1590 W/BS4	TURCK	TUR.NI50U-CK40-AP6X2-H1141/S1590 W/BS4
=V1AR11UQ41BG0-BG02	1	Inductive sensor With WeldGuard™ coating	NI50U-CK40-AP6X2-H1141/S1590 W/BS4	TURCK	TUR.NI50U-CK40-AP6X2-H1141/S1590 W/BS4
=V1AR11UQ41BG0-XG1/2	1	Y splitter	U2-30676	TURCK	TUR.VB2-FSM 4.4/2FKM 4/S3450
=V1AR11UQ41KF1-KF1	0	Bus node	CPX-FB33	FESTO	FES.548755
=V1AR11UQ41KF1-KF1	0	Interlinking block	CPX-M-GE-EV-S-7/8-5POL	FES	FES.550208
=V1AR11UQ41KF1-KF1.11	0	Manifold block	CPX-M-AB-8-M12X2-5POL	FES	FES.549335
=V1AR11UQ41KF1-KF1.12	0	Manifold block	CPX-M-AB-8-M12X2-5POL	FES	FES.549335
=V1AR11UQ41KF1-KF1.13	0	Manifold block	CPX-M-AB-8-M12X2-5POL	FES	FES.549335

+UC33/1

+.AR11UQ41UQ1.1/1

			Date	1/24/2023	Volvo Trucks North America	Valiant TMS	Parts list : TUR.NI50U-CK40-AP6X2-H1141/S1590 W/BS4 - FES.549335	Drawing name: =2V01&EFS-EL_KF1	=	
			Ed.	MKLEPADLO					+ V1AR11UQ41	
			Appr		P6700 Framing - Cell 2V01, KF1	Scale 1:1		Document type: EPB	Project nr: 22-16152	Page 1 / 1630
Modification	Date	Name	Original		Replacement of	Replaced by				

Parts list

F01_001

Device tag	Quantity	Designation	Type number	Supplier	Part number
=V1AR11UQ41UQ1.1-BGS/R	1	Inductive sensor Monitoring Kit for Power Clamps	1324638	TUNKERS	TUN.1324638

+V1AR11UQ41/1

+.AR11UQ41UQ1.2/1

			Date	1/24/2023	Volvo Trucks North America	Valiant TMS	Parts list : TUN.1324638 - TUN.1324638	Drawing name: =2V01&EFS-EL_KF1	= + V1AR11UQ41UQ1.1
			Ed.	MKLEPADLO					
			Appr		P6700 Framing - Cell 2V01, KF1	Scale 1:1		Document type: EPB / Project nr: 22-16152	Page 1 / 1630
Modification	Date	Name	Original		Replacement of / Replaced by				

Parts list

F01_001

Device tag	Quantity	Designation	Type number	Supplier	Part number
=V1AR11UQ41UQ1.2-BGS/R	1	Inductive sensor Monitoring Kit for Power Clamps	1324638	TUNKERS	TUN.1324638

+.AR11UQ41UQ1.1/1

+.AR11UQ41UQ2.1/1

			Date	1/24/2023	Volvo Trucks North America	Valiant TMS	Parts list : TUN.1324638 - TUN.1324638	Drawing name: =2V01&EFS-EL_KF1	= + V1AR11UQ41UQ1.2
			Ed.	MKLEPADLO					
			Appr		P6700 Framing - Cell 2V01, KF1	Scale 1:1		Document type: EPB / Project nr: 22-16152	Page 1 / 1630
Modification	Date	Name	Original		Replacement of / Replaced by				

Parts list

F01_001

Device tag	Quantity	Designation	Type number	Supplier	Part number
=V1AR11UQ41UQ2.1-BGS/R	1	Inductive sensor Monitoring Kit for Power Clamps	1324638	TUNKERS	TUN.1324638

+.AR11UQ41UQ1.2/1

+.AR11UQ41UQ2.2/1

Parts list

F01_001

Device tag	Quantity	Designation	Type number	Supplier	Part number
=V1AR11UQ41UQ2.2-BGS/R	1	Inductive sensor Monitoring Kit for Power Clamps	1324638	TUNKERS	TUN.1324638

+.AR11UQ41UQ2.1/1

+.AR11UQ41UQ3.1/1

			Date	1/24/2023	Volvo Trucks North America	Valiant TMS	Parts list : TUN.1324638 - TUN.1324638	Drawing name: =2V01&EFS-EL_KF1	= + V1AR11UQ41UQ2.2
			Ed.	MKLEPADLO					
			Appr		P6700 Framing - Cell 2V01, KF1	Scale 1:1		Document type: EPB / Project nr: 22-16152	Page 1 / 1630
Modification	Date	Name	Original		Replacement of / Replaced by				

Parts list

F01_001

Device tag	Quantity	Designation	Type number	Supplier	Part number
=V1AR11UQ41UQ3.1-BGS/R	1	Inductive sensor Monitoring Kit for Power Clamps	1324638	TUNKERS	TUN.1324638

+.AR11UQ41UQ2.2/1

+.AR11UQ41UQ3.2/1

			Date	1/24/2023	Volvo Trucks North America	Valiant TMS	Parts list : TUN.1324638 - TUN.1324638	Drawing name: =2V01&EFS-EL_KF1	= + V1AR11UQ41UQ3.1
			Ed.	MKLEPADLO					
			Appr		P6700 Framing - Cell 2V01, KF1	Scale 1:1		Document type: EPB / Project nr: 22-16152	Page 1 / 1630
Modification	Date	Name	Original		Replacement of / Replaced by				

Parts list

F01_001

Device tag	Quantity	Designation	Type number	Supplier	Part number
=V1AR11UQ41UQ3.2-BGS/R	1	Inductive sensor Monitoring Kit for Power Clamps	1324638	TUNKERS	TUN.1324638

+.AR11UQ41UQ3.1/1

+.AR11UQ41UQ4.1/1

			Date	1/24/2023	Volvo Trucks North America	Valiant TMS	Parts list : TUN.1324638 - TUN.1324638	Drawing name: =2V01&EFS-EL_KF1	= + V1AR11UQ41UQ3.2
			Ed.	MKLEPADLO					
			Appr		P6700 Framing - Cell 2V01, KF1	Scale 1:1		Document type: EPB / Project nr: 22-16152	Page 1 / 1630
Modification	Date	Name	Original		Replacement of / Replaced by				

Parts list

F01_001

Device tag	Quantity	Designation	Type number	Supplier	Part number
=V1AR11UQ41UQ4.1-BGS/R	1	Inductive sensor Monitoring Kit for Power Clamps	1324638	TUNKERS	TUN.1324638

+.AR11UQ41UQ3.2/1

+.AR11UQ41UQ4.2/1

Parts list

F01_001

Device tag	Quantity	Designation	Type number	Supplier	Part number
=V1AR11UQ41UQ4.2-BGS/R	1	Inductive sensor Monitoring Kit for Power Clamps	1324638	TUNKERS	TUN.1324638

+.AR11UQ41UQ4.1/1

+.AR11UQ41UQ5.1/1

			Date	1/24/2023	Volvo Trucks North America	Valiant TMS	Parts list : TUN.1324638 - TUN.1324638	Drawing name: =2V01&EFS-EL_KF1	= + V1AR11UQ41UQ4.2
			Ed.	MKLEPADLO					
			Appr		P6700 Framing - Cell 2V01, KF1	Scale 1:1		Document type: EPB / Project nr: 22-16152	Page 1 / 1630
Modification	Date	Name	Original		Replacement of / Replaced by				

Parts list

F01_001

Device tag	Quantity	Designation	Type number	Supplier	Part number
=V1AR11UQ41UQ5.1-BGS/R	1	Inductive sensor Monitoring Kit for Power Clamps	1324638	TUNKERS	TUN.1324638

+.AR11UQ41UQ4.2/1

+.AR11UQ41UQ5.2/1

			Date	1/24/2023	Volvo Trucks North America	Valiant TMS	Parts list : TUN.1324638 - TUN.1324638	Drawing name: =2V01&EFS-EL_KF1	= + V1AR11UQ41UQ5.1
			Ed.	MKLEPADLO					
			Appr		P6700 Framing - Cell 2V01, KF1	Scale 1:1		Document type: EPB / Project nr: 22-16152	Page 1 / 1630
Modification	Date	Name	Original		Replacement of / Replaced by				

Parts list

F01_001

Device tag	Quantity	Designation	Type number	Supplier	Part number
=V1AR11UQ41UQ5.2-BGS/R	1	Inductive sensor Monitoring Kit for Power Clamps	1324638	TUNKERS	TUN.1324638

+.AR11UQ41UQ5.1/1

+.AR11UQ41UQ6.1/1

			Date	1/24/2023	Volvo Trucks North America	Valiant TMS	Parts list : TUN.1324638 - TUN.1324638	Drawing name: =2V01&EFS-EL_KF1	= + V1AR11UQ41UQ5.2
			Ed.	MKLEPADLO					
			Appr		P6700 Framing - Cell 2V01, KF1	Scale 1:1		Document type: EPB / Project nr: 22-16152	Page 1 / 1630
Modification	Date	Name	Original		Replacement of / Replaced by				

Parts list

F01_001

Device tag	Quantity	Designation	Type number	Supplier	Part number
=V1AR11UQ41UQ6.1-BGS/R	1	Pressure sensor with display	PN-010-RER14-QFRKG/US/ /V	IFM	IFM.PN7094

+.AR11UQ41UQ5.2/1

+.AR11UQ41UQ7.1/1

			Date	1/24/2023	Volvo Trucks North America	Valiant TMS	Parts list : IFM.PN7094 - IFM.PN7094	Drawing name: =2V01&EFS-EL_KF1	=	
			Ed.	MKLEPADLO					+ V1AR11UQ41UQ6.1	
			Appr		P6700 Framing - Cell 2V01, KF1			Document type: EPB	Project nr: 22-16152	Page 1
Modification	Date	Name	Original		Replacement of / Replaced by	Scale 1:1				1630

Parts list

F01_001

Device tag	Quantity	Designation	Type number	Supplier	Part number
=V1AR11UQ41UQ7.1-BGS/R	1	Pressure sensor with display	PN-010-RER14-QFRKG/US/ /V	IFM	IFM.PN7094

+.AR11UQ41UQ6.1/1

+.AR11UQ41UQ8.1/1

			Date	1/24/2023	Volvo Trucks North America	Valiant TMS	Parts list : IFM.PN7094 - IFM.PN7094	Drawing name: =2V01&EFS-EL_KF1	=	
			Ed.	MKLEPADLO					+ V1AR11UQ41UQ7.1	
			Appr		P6700 Framing - Cell 2V01, KF1	Scale 1:1		Document type: EPB	Project nr: 22-16152	Page 1 / 1630
Modification	Date	Name	Original		Replacement of / Replaced by					

Parts list

F01_001

Device tag	Quantity	Designation	Type number	Supplier	Part number
=V1AR11UQ41UQ8.1-BGS/R	1	Pressure sensor with display	PN-010-RER14-QFRKG/US/ /V	IFM	IFM.PN7094

+.AR11UQ41UQ7.1/1

+.AR11UQ41UQ9.1/1

			Date	1/24/2023	Volvo Trucks North America	Valiant TMS	Parts list : IFM.PN7094 - IFM.PN7094	Drawing name: =2V01&EFS-EL_KF1	=	
			Ed.	MKLEPADLO					+ V1AR11UQ41UQ8.1	
			Appr		P6700 Framing - Cell 2V01, KF1	Scale 1:1		Document type: EPB	Project nr: 22-16152	Page 1 / 1630
Modification	Date	Name	Original		Replacement of / Replaced by					

Parts list

F01_001

Device tag	Quantity	Designation	Type number	Supplier	Part number
=V1AR11UQ41UQ9.1-BGS/R	1	Pressure sensor with display	PN-010-RER14-QFRKG/US/ /V	IFM	IFM.PN7094

+.AR11UQ41UQ8.1/1

+.AR21XQ11UC01/1

			Date	1/24/2023	Volvo Trucks North America	Valiant TMS	Parts list : IFM.PN7094 - IFM.PN7094	Drawing name: =2V01&EFS-EL_KF1	=	
			Ed.	MKLEPADLO					+ V1AR11UQ41UQ9.1	
			Appr		P6700 Framing - Cell 2V01, KF1	Scale 1:1		Document type: EPB	Project nr: 22-16152	Page 1 / 1630
Modification	Date	Name	Original		Replacement of	Replaced by				

Parts list

F01_001

Device tag	Quantity	Designation	Type number	Supplier	Part number
=V1AR21XQ11WC1-XG1	1	Surface socket-outlet	416RS6	ABB	ABB.2CMA193115R1000
=WC1-WC1	1	Golvskåp TS 8 sidskåp	TS8	RIT	RIT.SETS8205SID5
=WC1-WC1	1	TS Trim panel, sides, H: 100 mm, for W: 500 mm, RAL 7022, sheet steel	TS.8601050	RIT	RIT.8601050
=WC1-WC1	1	TS Base/plinth component, rear, H: 100 mm, for W: 1200 mm, RAL 7022, sheet steel	TS.8601200	RIT	RIT.8601200
=WC1-WC1	1	TS Side panel, screw-fastened, for TS, TS IT, for WD: 2000x500 mm, Sheet steel	TS.8105235	RIT	RIT.8105235
=WC1-WC1	1	PS Wiring plan pockets, for TS, CM, SE, PC, TP pedestal, sheet steel	TS.4115000	RIT	RIT.4115000

+.AR11UQ41UQ9.1/1

+.AR31UQ41/1

			Date	1/24/2023	Volvo Trucks North America	Valiant TMS	Parts list : ABB.2CMA193115R1000 - RIT.4115000	Drawing name: =2V01&EFS-EL_KF1	=
			Ed.	MKLEPADLO					+ V1AR21XQ11UC01
			Appr		P6700 Framing - Cell 2V01, KF1			Document type: EPB	Project nr: 22-16152
Modification	Date	Name	Original		Replacement of / Replaced by	Scale 1:1			Page 1 / 1630

Parts list

F01_001

Device tag	Quantity	Designation	Type number	Supplier	Part number
=V1AR31UQ41BG0-BG01	1	Inductive sensor With WeldGuard™ coating	NI50U-CK40-AP6X2-H1141/S1590 W/BS4	TURCK	TUR.NI50U-CK40-AP6X2-H1141/S1590 W/BS4
=V1AR31UQ41BG0-BG02	1	Inductive sensor With WeldGuard™ coating	NI50U-CK40-AP6X2-H1141/S1590 W/BS4	TURCK	TUR.NI50U-CK40-AP6X2-H1141/S1590 W/BS4
=V1AR31UQ41BG0-BG03	1	Discrete Q4X: Proximity Mode	Q4XTKLAF600-Q8	BANNER	BAN.Q4XTKLAF600-Q8
=V1AR31UQ41BG0-BG04	1	Discrete Q4X: Proximity Mode	Q4XTKLAF600-Q8	BANNER	BAN.Q4XTKLAF600-Q8
=V1AR31UQ41BG0-BG05	1	Discrete Q4X: Proximity Mode	Q4XTKLAF600-Q8	BANNER	BAN.Q4XTKLAF600-Q8
=V1AR31UQ41BG0-XG1/2	1	Y splitter	U2-30676	TURCK	TUR.VB2-FSM 4.4/2FKM 4/S3450
=V1AR31UQ41BG0-XG3/4	1	Y splitter	U2-30676	TURCK	TUR.VB2-FSM 4.4/2FKM 4/S3450
=V1AR31UQ41KF1-KF1	0	Bus node	CPX-FB33	FESTO	FES.548755
=V1AR31UQ41KF1-KF1	0	Interlinking block	CPX-M-GE-EV-S-7/8-5POL	FES	FES.550208
=V1AR31UQ41KF1-KF1.11	0	Manifold block	CPX-M-AB-8-M12X2-5POL	FES	FES.549335
=V1AR31UQ41KF1-KF1.12	0	Manifold block	CPX-M-AB-8-M12X2-5POL	FES	FES.549335

+.AR21XQ11UC01/1

+.AR31UQ41UQ1.1/1

			Date	1/24/2023	Volvo Trucks North America	Valiant TMS	Parts list : TUR.NI50U-CK40-AP6X2-H1141/S1590 W/BS4 - FES.549335	Drawing name: =2V01&EFS-EL_KF1	=	
			Ed.	MKLEPADLO					+ V1AR31UQ41	
			Appr		P6700 Framing - Cell 2V01, KF1	Scale 1:1		Document type: EPB	Project nr: 22-16152	Page 1 / 1630
Modification	Date	Name	Original		Replacement of	Replaced by				

Parts list

F01_001

Device tag	Quantity	Designation	Type number	Supplier	Part number
=V1AR31UQ41UQ1.1-BGS/R	1	Inductive sensor Monitoring Kit for Power Clamps	1324638	TUNKERS	TUN.1324638

+V1AR31UQ41/1

+.AR31UQ41UQ1.2/1

			Date	1/24/2023	Volvo Trucks North America	Valiant TMS	Parts list : TUN.1324638 - TUN.1324638	Drawing name: =2V01&EFS-EL_KF1	= + V1AR31UQ41UQ1.1
			Ed.	MKLEPADLO					
			Appr		P6700 Framing - Cell 2V01, KF1	Scale 1:1		Document type: EPB / Project nr: 22-16152	Page 1 / 1630
Modification	Date	Name	Original		Replacement of / Replaced by				

Parts list

F01_001

Device tag	Quantity	Designation	Type number	Supplier	Part number
=V1AR31UQ41UQ1.2-BGS/R	1	Inductive sensor Monitoring Kit for Power Clamps	1324638	TUNKERS	TUN.1324638

+.AR31UQ41UQ1.1/1

+.AR31UQ41UQ1.3/1

Parts list

F01_001

Device tag	Quantity	Designation	Type number	Supplier	Part number
=V1AR31UQ41UQ1.3-BGS/R	1	Inductive sensor Monitoring Kit for Power Clamps	1324638	TUNKERS	TUN.1324638

+.AR31UQ41UQ1.2/1

+.AR31XQ41/1

			Date	1/24/2023	Volvo Trucks North America	Valiant TMS	Parts list : TUN.1324638 - TUN.1324638	Drawing name: =2V01&EFS-EL_KF1	= + V1AR31UQ41UQ1.3
			Ed.	MKLEPADLO					
			Appr		P6700 Framing - Cell 2V01, KF1	Scale 1:1		Document type: EPB / Project nr: 22-16152	Page 1 / 1630
Modification	Date	Name	Original		Replacement of / Replaced by				

Parts list

F01_001

Device tag	Quantity	Designation	Type number	Supplier	Part number
=V1AR31XQ41KF1-KF1	0	Bus node	CPX-FB33	FESTO	FES.548755
=V1AR31XQ41KF1-KF1	0	Interlinking block	CPX-M-GE-EV-S-7/8-5POL	FES	FES.550208
=V1AR31XQ41KF1-KF1.11	0	Manifold block	CPX-M-AB-8-M12X2-5POL	FES	FES.549335

+.AR31UQ41UQ1.3/1

+.AR31XQ41UC01/1

			Date	1/24/2023	Volvo Trucks North America	Valiant TMS	Parts list : FES.548755 - FES.549335	Drawing name: =2V01&EFS-EL_KF1	=
			Ed.	MKLEPADLO					+ V1AR31XQ41
			Appr		P6700 Framing - Cell 2V01, KF1	Scale 1:1		Document type: EPB	Project nr: 22-16152
Modification	Date	Name	Original		Replacement of	Replaced by			Page 1 / 1630

Parts list

F01_001

Device tag	Quantity	Designation	Type number	Supplier	Part number
=V1AR31XQ41WC4-XG51	1	TEE, 5-PIN MINI, STANDARD KEYWAY	U2109-9	TURCK	TUR.RSM-2RKM 50

+V1AR31XQ41/1

+.AR31XQ41UQ1.1/1

			Date	1/24/2023	Volvo Trucks North America	Valiant TMS	Parts list : TUR.RSM-2RKM 50 - TUR.RSM-2RKM 50	Drawing name: =2V01&EFS-EL_KF1	=
			Ed.	MKLEPADLO					+ V1AR31XQ41UC01
			Appr		P6700 Framing - Cell 2V01, KF1	Scale 1:1		Document type: EPB	Project nr: 22-16152
Modification	Date	Name	Original		Replacement of	Replaced by			Page 1 / 1630

Parts list

F01_001

Device tag	Quantity	Designation	Type number	Supplier	Part number
=V1AR31XQ41UQ1.1-BGR	1	Inductive sensor	BI20U-CA40-AP6X2-H1141/S1590 W/BS2.0	Turck	TUR.1627205
=V1AR31XQ41UQ1.1-BGS	1	Inductive sensor	BI20U-CA40-AP6X2-H1141/S1590 W/BS2.0	Turck	TUR.1627205
=V1AR31XQ41UQ1.1-XG1/2	1	Y splitter	U2-30676	TURCK	TUR.VB2-FSM 4.4/2FKM 4/S3450

+.AR31XQ41UC01/1

+.AR41UQ41/1

			Date	1/24/2023	Volvo Trucks North America	Valiant TMS	Parts list : TUR.1627205 - TUR.VB2-FSM 4.4/2FKM 4/S3450	Drawing name: =2V01&EFS-EL_KF1	= + V1AR31XQ41UQ1.1
			Ed.	MKLEPADLO					
			Appr		P6700 Framing - Cell 2V01, KF1	Scale 1:1		Document type: EPB	Project nr: 22-16152
Modification	Date	Name	Original		Replacement of	Replaced by			Page 1 / 1630

Parts list

F01_001

Device tag	Quantity	Designation	Type number	Supplier	Part number
=V1AR41UQ41BG0-BG01	1	Inductive sensor With WeldGuard™ coating	NI50U-CK40-AP6X2-H1141/S1590 W/BS4	TURCK	TUR.NI50U-CK40-AP6X2-H1141/S1590 W/BS4
=V1AR41UQ41BG0-BG02	1	Inductive sensor With WeldGuard™ coating	NI50U-CK40-AP6X2-H1141/S1590 W/BS4	TURCK	TUR.NI50U-CK40-AP6X2-H1141/S1590 W/BS4
=V1AR41UQ41BG0-XG1/2	1	Y splitter	U2-30676	TURCK	TUR.VB2-FSM 4.4/2FKM 4/S3450
=V1AR41UQ41KF1-KF1	0	Bus node	CPX-FB33	FESTO	FES.548755
=V1AR41UQ41KF1-KF1	0	Interlinking block	CPX-M-GE-EV-S-7/8-5POL	FES	FES.550208
=V1AR41UQ41KF1-KF1.11	0	Manifold block	CPX-M-AB-8-M12X2-5POL	FES	FES.549335
=V1AR41UQ41KF1-KF1.12	0	Manifold block	CPX-M-AB-8-M12X2-5POL	FES	FES.549335
=V1AR41UQ41KF1-KF1.13	0	Manifold block	CPX-M-AB-8-M12X2-5POL	FES	FES.549335

+.AR31XQ41UQ1.1/1

+.AR41UQ41UQ1.1/1

			Date	1/24/2023	Volvo Trucks North America	Valiant TMS	Parts list : TUR.NI50U-CK40-AP6X2-H1141/S1590 W/BS4 - FES.549335	Drawing name: =2V01&EFS-EL_KF1	= + V1AR41UQ41
			Ed.	MKLEPADLO					
			Appr		P6700 Framing - Cell 2V01, KF1	Scale 1:1		Document type: EPB	Project nr: 22-16152
Modification	Date	Name	Original		Replacement of / Replaced by				Page 1 / 1630

Parts list

F01_001

Device tag	Quantity	Designation	Type number	Supplier	Part number
=V1AR41UQ41UQ1.1-BGS/R	1	Inductive sensor Monitoring Kit for Power Clamps	WWS001A	WELKER	WEL.WWS001A

+V1AR41UQ41/1

+.AR41UQ41UQ1.2/1

			Date	1/24/2023	Volvo Trucks North America	Valiant TMS	Parts list : WEL.WWS001A - WEL.WWS001A	Drawing name: =2V01&EFS-EL_KF1	= + V1AR41UQ41UQ1.1
			Ed.	MKLEPADLO					
			Appr		P6700 Framing - Cell 2V01, KF1	Scale 1:1		Document type: EPB / Project nr: 22-16152	Page 1 / 1630
Modification	Date	Name	Original		Replacement of / Replaced by				

Parts list

F01_001

Device tag	Quantity	Designation	Type number	Supplier	Part number
=V1AR41UQ41UQ1.2-BGS/R	1	Inductive sensor Monitoring Kit for Power Clamps	WWS001A	WELKER	WEL.WWS001A

+.AR41UQ41UQ1.1/1

+.AR41UQ41UQ2.1/1

			Date	1/24/2023	Volvo Trucks North America	Valiant TMS	Parts list : WEL.WWS001A - WEL.WWS001A	Drawing name: =2V01&EFS-EL_KF1	=	
			Ed.	MKLEPADLO					+ V1AR41UQ41UQ1.2	
			Appr		P6700 Framing - Cell 2V01, KF1	Scale 1:1		Document type: EPB	Project nr: 22-16152	Page 1
Modification	Date	Name	Original		Replacement of / Replaced by					1630

Parts list

F01_001

Device tag	Quantity	Designation	Type number	Supplier	Part number
=V1AR41UQ41UQ2.1-BGS/R	1	Inductive sensor Monitoring Kit for Power Clamps	1324644	TUNKERS	TUN.1324644

+.AR41UQ41UQ1.2/1

+.AR41UQ41UQ2.2/1

			Date	1/24/2023	Volvo Trucks North America	Valiant TMS	Parts list : TUN.1324644 - TUN.1324644	Drawing name: =2V01&EFS-EL_KF1	= + V1AR41UQ41UQ2.1
			Ed.	MKLEPADLO					
			Appr		P6700 Framing - Cell 2V01, KF1	Scale 1:1		Document type: EPB	Project nr: 22-16152
Modification	Date	Name	Original		Replacement of	Replaced by			Page 1 / 1630

Parts list

F01_001

Device tag	Quantity	Designation	Type number	Supplier	Part number
=V1AR41UQ41UQ2.2-BGS/R	1	Inductive sensor Monitoring Kit for Power Clamps	1324644	TUNKERS	TUN.1324644

+.AR41UQ41UQ2.1/1

+.AR41UQ41UQ2.3/1

			Date	1/24/2023	Volvo Trucks North America	Valiant TMS	Parts list : TUN.1324644 - TUN.1324644	Drawing name: =2V01&EFS-EL_KF1	= + V1AR41UQ41UQ2.2
			Ed.	MKLEPADLO					
			Appr		P6700 Framing - Cell 2V01, KF1	Scale 1:1		Document type: EPB / Project nr: 22-16152	Page 1 / 1630
Modification	Date	Name	Original		Replacement of / Replaced by				

Parts list

F01_001

Device tag	Quantity	Designation	Type number	Supplier	Part number
=V1AR41UQ41UQ2.3-BGS/R	1	Inductive sensor Monitoring Kit for Power Clamps	1324644	TUNKERS	TUN.1324644

+.AR41UQ41UQ2.2/1

+.AR41UQ41UQ2.4/1

			Date	1/24/2023	Volvo Trucks North America	Valiant TMS	Parts list : TUN.1324644 - TUN.1324644	Drawing name: =2V01&EFS-EL_KF1	= + V1AR41UQ41UQ2.3
			Ed.	MKLEPADLO					
			Appr		P6700 Framing - Cell 2V01, KF1	Scale 1:1		Document type: EPB / Project nr: 22-16152	Page 1 / 1630
Modification	Date	Name	Original		Replacement of / Replaced by				

Parts list

F01_001

Device tag	Quantity	Designation	Type number	Supplier	Part number
=V1AR41UQ41UQ2.4-BGS/R	1	Inductive sensor Monitoring Kit for Power Clamps	1324638	TUNKERS	TUN.1324638

+.AR41UQ41UQ2.3/1

+.AR41UQ41UQ2.5/1

Parts list

F01_001

Device tag	Quantity	Designation	Type number	Supplier	Part number
=V1AR41UQ41UQ2.5-BGS/R	1	Inductive sensor Monitoring Kit for Power Clamps	1324638	TUNKERS	TUN.1324638

+.AR41UQ41UQ2.4/1

+.AR41UQ41UQ3.1/1

			Date	1/24/2023	Volvo Trucks North America	Valiant TMS	Parts list : TUN.1324638 - TUN.1324638	Drawing name: =2V01&EFS-EL_KF1	=	
			Ed.	MKLEPADLO					+ V1AR41UQ41UQ2.5	
			Appr		P6700 Framing - Cell 2V01, KF1	Scale 1:1		Document type: EPB	Project nr: 22-16152	Page 1 / 1630
Modification	Date	Name	Original		Replacement of / Replaced by					

Parts list

F01_001

Device tag	Quantity	Designation	Type number	Supplier	Part number
=V1AR41UQ41UQ3.1-BGS/R	1	Inductive sensor Monitoring Kit for Power Clamps	1324638	TUNKERS	TUN.1324638

+.AR41UQ41UQ2.5/1

+.AR41UQ41UQ3.2/1

			Date	1/24/2023	Volvo Trucks North America	Valiant TMS	Parts list : TUN.1324638 - TUN.1324638	Drawing name: =2V01&EFS-EL_KF1	= + V1AR41UQ41UQ3.1
			Ed.	MKLEPADLO					
			Appr		P6700 Framing - Cell 2V01, KF1	Scale 1:1		Document type: EPB	Project nr: 22-16152
Modification	Date	Name	Original		Replacement of / Replaced by				Page 1 / 1630

Parts list

F01_001

Device tag	Quantity	Designation	Type number	Supplier	Part number
=V1AR41UQ41UQ3.2-BGS/R	1	Inductive sensor Monitoring Kit for Power Clamps	1324638	TUNKERS	TUN.1324638

+.AR41UQ41UQ3.1/1

+.AR41UQ41UQ4.1/1

			Date	1/24/2023	Volvo Trucks North America	Valiant TMS	Parts list : TUN.1324638 - TUN.1324638	Drawing name: =2V01&EFS-EL_KF1	= + V1AR41UQ41UQ3.2
			Ed.	MKLEPADLO					
			Appr		P6700 Framing - Cell 2V01, KF1	Scale 1:1		Document type: EPB / Project nr: 22-16152	Page 1 / 1630
Modification	Date	Name	Original		Replacement of / Replaced by				

Parts list

F01_001

Device tag	Quantity	Designation	Type number	Supplier	Part number
=V1AR41UQ41UQ4.1-BGS/R	1	Inductive sensor Monitoring Kit for Power Clamps	L3	WELKER	WEL.L3

+.AR41UQ41UQ3.2/1

+.AR41UQ41UQ4.2/1

			Date	1/24/2023	Volvo Trucks North America	Valiant TMS	Parts list : WEL.L3 - WEL.L3	Drawing name: =2V01&EFS-EL_KF1	= + V1AR41UQ41UQ4.1
			Ed.	MKLEPADLO					
			Appr		P6700 Framing - Cell 2V01, KF1	Scale 1:1		Document type: EPB / Project nr: 22-16152	Page 1 / 1630
Modification	Date	Name	Original		Replacement of / Replaced by				

Parts list

F01_001

Device tag	Quantity	Designation	Type number	Supplier	Part number
=V1AR41UQ41UQ4.2-BGS/R	1	Inductive sensor Monitoring Kit for Power Clamps	L3	WELKER	WEL.L3

+.AR41UQ41UQ4.1/1

+.AR41XQ11UC01/1

			Date	1/24/2023	Volvo Trucks North America	Valiant TMS	Parts list : WEL.L3 - WEL.L3	Drawing name: =2V01&EFS-EL_KF1	= + V1AR41UQ41UQ4.2
			Ed.	MKLEPADLO					
			Appr		P6700 Framing - Cell 2V01, KF1	Scale 1:1		Document type: EPB / Project nr: 22-16152	Page 1 / 1630
Modification	Date	Name	Original		Replacement of / Replaced by				

Parts list

F01_001

Device tag	Quantity	Designation	Type number	Supplier	Part number
=V1AR41XQ11WC1-XG1	1	Surface socket-outlet	416RS6	ABB	ABB.2CMA193115R1000
=WC1-WC1	1	Golvskåp TS 8 sidskåp	TS8	RIT	RIT.SETS8205SID5
=WC1-WC1	1	TS Trim panel, sides, H: 100 mm, for W: 500 mm, RAL 7022, sheet steel	TS.8601050	RIT	RIT.8601050
=WC1-WC1	1	TS Base/plinth component, rear, H: 100 mm, for W: 1200 mm, RAL 7022, sheet steel	TS.8601200	RIT	RIT.8601200
=WC1-WC1	1	TS Side panel, screw-fastened, for TS, TS IT, for WD: 2000x500 mm, Sheet steel	TS.8105235	RIT	RIT.8105235
=WC1-WC1	1	PS Wiring plan pockets, for TS, CM, SE, PC, TP pedestal, sheet steel	TS.4115000	RIT	RIT.4115000

+.AR41UQ41UQ4.2/1

+.FQ1/1

			Date	1/24/2023	Volvo Trucks North America	Valiant TMS	Parts list : ABB.2CMA193115R1000 - RIT.4115000	Drawing name: =2V01&EFS-EL_KF1	= + V1AR41XQ11UC01
			Ed.	MKLEPADLO					
			Appr		P6700 Framing - Cell 2V01, KF1	Scale 1:1		Document type: EPB	Project nr: 22-16152
Modification	Date	Name	Original		Replacement of / Replaced by				Page 1 / 1630

Parts list

F01_001

Device tag	Quantity	Designation	Type number	Supplier	Part number
=V1FQ1-BR11	1	EZ-Screen System	SLSCP30-1200P44NT	BANNER	BAN.SLSCP30-1200P44NT
=V1FQ1-BR12	1	EZ-Screen System	SLSCP30-1200P44NT	BANNER	BAN.SLSCP30-1200P44NT
=V1FQ1-BR13	1	EZ-Screen System	SLSCP30-1200P88	BANNER	BAN.SLSCP30-1200P88
=V1FQ1-BR13	1	Mounting kit	VC03031	VALIANT	VAL.VC03031
=V1FQ1-BR14	1	EZ-Screen System	SLSCP30-1200P44NT	BANNER	BAN.SLSCP30-1200P44NT

+.AR41XQ11UC01/1

+.FQ1BG1/1

			Date	1/24/2023	Volvo Trucks North America	Valiant TMS	Parts list : BAN.SLSCP30-1200P44NT - BAN.SLSCP30-1200P44NT	Drawing name: =2V01&EFS-EL_KF1	=
			Ed.	MKLEPADLO					+ V1FQ1
			Appr		P6700 Framing - Cell 2V01, KF1	Scale 1:1		Document type: EPB	Project nr: 22-16152
Modification	Date	Name	Original		Replacement of / Replaced by				Page 1 / 1630

Parts list

F01_001

Device tag	Quantity	Designation	Type number	Supplier	Part number
=V1FQ1-BG1	1	SWITCH	MGB-L2B-PNA-R-121859	EUCHNER	EUC.MGB-L2B-PNA-R-121859
=V1FQ1-BG1	1	HANDLE	MGB-H-AA1A2-R-106049	EUCHNER	EUC.MGB-H-AA1A2-R-106049
=V1FQ1-BG1	1	MOUNTING PLATE	MGB-A-MOUNTINGPLATE-H-109491	EUCHNER	EUC.MGB-A-MOUNTINGPLATE-H-109491
=V1FQ1-BG1	1	ESCAPE RELEASE	MGB-E-A2-106051	EUCHNER	EUC.MGB-E-A2-106051

+V1FQ1/1

+.FQ1BG2/1

			Date	1/24/2023	Volvo Trucks North America	Valiant TMS	Parts list : EUC.MGB-L2B-PNA-R-121859 - EUC.MGB-E-A2-106051	Drawing name: =2V01&EFS-EL_KF1	=
			Ed.	MKLEPADLO					+ V1FQ1BG1
			Appr		P6700 Framing - Cell 2V01, KF1	Scale 1:1		Document type: EPB	Project nr: 22-16152
Modification	Date	Name	Original		Replacement of	Replaced by			Page 1 / 1630

Parts list

F01_001

Device tag	Quantity	Designation	Type number	Supplier	Part number
=V1FQ1-BG2	1	SWITCH	MGB-L2B-PNA-R-121859	EUCHNER	EUC.MGB-L2B-PNA-R-121859
=V1FQ1-BG2	1	HANDLE	MGB-H-AA1A2-R-106049	EUCHNER	EUC.MGB-H-AA1A2-R-106049
=V1FQ1-BG2	1	MOUNTING PLATE	MGB-A-MOUNTINGPLATE-H-109491	EUCHNER	EUC.MGB-A-MOUNTINGPLATE-H-109491
=V1FQ1-BG2	1	ESCAPE RELEASE	MGB-E-A2-106051	EUCHNER	EUC.MGB-E-A2-106051

+.FQ1BG1/1

+.FQ1BG6/1

			Date	1/24/2023	Volvo Trucks North America	Valiant TMS	Parts list : EUC.MGB-L2B-PNA-R-121859 - EUC.MGB-E-A2-106051	Drawing name: =2V01&EFS-EL_KF1	=
			Ed.	MKLEPADLO					+ V1FQ1BG2
			Appr		P6700 Framing - Cell 2V01, KF1	Scale 1:1		Document type: EPB	Project nr: 22-16152
Modification	Date	Name	Original		Replacement of	Replaced by			Page 1 / 1630

Parts list

F01_001

Device tag	Quantity	Designation	Type number	Supplier	Part number
=V1FQ1-BG6	1	SWITCH	MGB-L2B-PNA-L-121863	EUCHNER	EUC.MGB-L2B-PNA-L-121863
=V1FQ1-BG6	1	HANDLE	MGB-H-AA1A2-L-106221	EUCHNER	EUC.MGB-H-AA1A2-L-106221
=V1FQ1-BG6	1	MOUNTING PLATE	MGB-A-MOUNTINGPLATE-H-109491	EUCHNER	EUC.MGB-A-MOUNTINGPLATE-H-109491
=V1FQ1-BG6	1	ESCAPE RELEASE	MGB-E-A2-106051	EUCHNER	EUC.MGB-E-A2-106051

+.FQ1BG2/1

+.FQ1BG7/1

			Date	1/24/2023	Volvo Trucks North America	Valiant TMS	Parts list : EUC.MGB-L2B-PNA-L-121863 - EUC.MGB-E-A2-106051	Drawing name: =2V01&EFS-EL_KF1	=
			Ed.	MKLEPADLO					+ V1FQ1BG6
			Appr		P6700 Framing - Cell 2V01, KF1	Scale 1:1		Document type: EPB	Project nr: 22-16152
Modification	Date	Name	Original		Replacement of	Replaced by			Page 1 / 1630

Parts list

F01_001

Device tag	Quantity	Designation	Type number	Supplier	Part number
=V1FQ1-BG7	1	SWITCH	MGB-L2B-PNA-R-121859	EUCHNER	EUC.MGB-L2B-PNA-R-121859
=V1FQ1-BG7	1	HANDLE	MGB-H-AA1A2-R-106049	EUCHNER	EUC.MGB-H-AA1A2-R-106049
=V1FQ1-BG7	1	MOUNTING PLATE	MGB-A-MOUNTINGPLATE-H-109491	EUCHNER	EUC.MGB-A-MOUNTINGPLATE-H-109491
=V1FQ1-BG7	1	ESCAPE RELEASE	MGB-E-A2-106051	EUCHNER	EUC.MGB-E-A2-106051

+.FQ1BG6/1

+.GL13KF2/1

			Date	1/24/2023	Volvo Trucks North America	Valiant TMS	Parts list : EUC.MGB-L2B-PNA-R-121859 - EUC.MGB-E-A2-106051	Drawing name: =2V01&EFS-EL_KF1	=
			Ed.	MKLEPADLO					+ V1FQ1BG7
			Appr		P6700 Framing - Cell 2V01, KF1	Scale 1:1		Document type: EPB	Project nr: 22-16152
Modification	Date	Name	Original		Replacement of	Replaced by			Page 1 / 1630

Parts list

F01_001

Device tag	Quantity	Designation	Type number	Supplier	Part number
=V1GL13KF2-BZ02	1	RF340R (GEN2)	6GT2801-2BA10	SIE	SIE.6GT2801-2BA10
=V1GL13KF2-KF2.11	1	SINAMICS G120D CONTROL UNIT CU240D-2 PN-F	6SL3544-0FB21-1FA0	SIEMENS	SIE.6SL3544-0FB21-1FA0
=V1GL13KF2-KF2.12	1	SIMATIC RF185C	6GT2002-0JE10		SIE.6GT2002-0JE10

+.FQ1BG7/1

+.GL13UC01/1

			Date	1/24/2023	Volvo Trucks North America	Valiant TMS	Parts list : SIE.6GT2801-2BA10 - SIE.6GT2002-0JE10	Drawing name: =2V01&EFS-EL_KF1	=
			Ed.	MKLEPADLO					+ V1GL13KF2
			Appr		P6700 Framing - Cell 2V01, KF1	Scale 1:1		Document type: EPB	Project nr: 22-16152
Modification	Date	Name	Original		Replacement of	Replaced by			Page 1 / 1630

Parts list

F01_001

Device tag	Quantity	Designation	Type number	Supplier	Part number
=V1GL13-TA1	1	SINAMICS G120D POWER MODULE PM250D 0,75KW	6SL3525-0PE17-5AA1	SIEMENS	SIE.6SL3525-0PE17-5AA1
=V1GL13WC1-Q1	1	DISCONNECT	EM3BMHANQ4SDCG10	E-M	EM.EM3BMHANQ4SDCG10

+.GL13KF2/1

+.GL13UQ51/1

			Date	1/24/2023	Volvo Trucks North America		Valiant TMS	Parts list : SIE.6SL3525-0PE17-5AA1 - EM.EM3BMHANQ4SDCG10	Drawing name: =2V01&EFS-EL_KF1	= + V1GL13UC01	
			Ed.	MKLEPADLO							
			Appr		P6700 Framing - Cell 2V01, KF1		Scale 1:1		Document type: EPB	Project nr: 22-16152	Page 1 / 1630
Modification	Date	Name	Original		Replacement of	Replaced by					

Parts list

F01_001

Device tag	Quantity	Designation	Type number	Supplier	Part number
=V1GL13UQ51BG0-BG10	1	Inductive sensor	BI8U-MT18M-AP6X2-H1141/S1589	TURCK	TUR.1644741
=V1GL13UQ51BG0-BG11	1	Inductive sensor	BI8U-MT18M-AP6X2-H1141/S1589	TURCK	TUR.1644741
=V1GL13UQ51BG0-BG12	1	NEMA Limit Switch - NEMA Type 4 & 13 Oiltight Construction	802T-AP	A-B	A-B.802T-AP
=V1GL13UQ51BG0-BG13	1	Discrete Q60: Proximity Mode	Q60BB6AFV1000QPMA	BANNER	BAN.71959
=V1GL13UQ51BG0-BG14	1	Inductive sensor	BI8U-MT18M-AP6X2-H1141/S1589	TURCK	TUR.1644741
=V1GL13UQ51BG0-BG15	1	Inductive sensor	BI8U-MT18M-AP6X2-H1141/S1589	TURCK	TUR.1644741
=V1GL13UQ51BG0-BG16	1	Inductive sensor	BI8U-MT18M-AP6X2-H1141/S1589	TURCK	TUR.1644741
=V1GL13UQ51BG0-BG18	1	Inductive sensor	BI8U-MT18M-AP6X2-H1141/S1589	TURCK	TUR.1644741
=V1GL13UQ51BG0-BG19	1	Inductive sensor	BI8U-MT18M-AP6X2-H1141/S1589	TURCK	TUR.1644741
=V1GL13UQ51BG0-BG20	1	Inductive sensor	BI8U-MT18M-AP6X2-H1141/S1589	TURCK	TUR.1644741
=V1GL13UQ51BG0-XG11/13	1	Y splitter	U2-30676	TURCK	TUR.VB2-FSM 4.4/2FKM 4/S3450
=V1GL13UQ51BG0-XG14/18	1	Y splitter	U2-30676	TURCK	TUR.VB2-FSM 4.4/2FKM 4/S3450
=V1GL13UQ51BG0-XG15/16	1	Y splitter	U2-30676	TURCK	TUR.VB2-FSM 4.4/2FKM 4/S3450
=V1GL13UQ51BG0-XG19/20	1	Y splitter	U2-30676	TURCK	TUR.VB2-FSM 4.4/2FKM 4/S3450
=V1GL13UQ51KF2-KF2	0	Bus node	CPX-FB33	FESTO	FES.548755
=V1GL13UQ51KF2-KF2	0	Interlinking block	CPX-M-GE-EV-S-7/8-5POL	FES	FES.550208
=V1GL13UQ51KF2-KF2.11	0	Manifold block	CPX-M-AB-8-M12X2-5POL	FES	FES.549335
=V1GL13UQ51KF2-KF2.12	0	Manifold block	CPX-M-AB-8-M12X2-5POL	FES	FES.549335
=V1GL13UQ51KF2-KF2.13	0	Manifold block	CPX-M-AB-8-M12X2-5POL	FES	FES.549335
=V1GL13UQ51KF2-KF2.14	0	Manifold block	CPX-M-AB-8-M12X2-5POL	FES	FES.549335

Parts list

F01_001

Device tag	Quantity	Designation	Type number	Supplier	Part number
=V1GL13UQ51UQ5.1-BGR	1	Inductive sensor	BI8U-MT18M-AP6X2-H1141/S1589		TUR.16447411
=V1GL13UQ51UQ5.1-BGS	1	Inductive sensor	BI8U-MT18M-AP6X2-H1141/S1589		TUR.16447411
=V1GL13UQ51UQ5.1-XGR/S	1	Y splitter	U2-30676	TURCK	TUR.VB2-FSM 4.4/2FKM 4/S3450

+V1GL13UQ51/1

+.GL13UQ51UQ6.1/1

			Date	1/24/2023	Volvo Trucks North America	Valiant TMS	Parts list : TUR.16447411 - TUR.VB2-FSM 4.4/2FKM 4/S3450	Drawing name: =2V01&EFS-EL_KF1	= + V1GL13UQ51UQ5.1
			Ed.	MKLEPADLO					
			Appr		P6700 Framing - Cell 2V01, KF1	Scale 1:1		Document type: EPB	Project nr: 22-16152
Modification	Date	Name	Original		Replacement of	Replaced by			Page 1 / 1630

Parts list

F01_001

Device tag	Quantity	Designation	Type number	Supplier	Part number
=V1GL13UQ51UQ6.1-BGR	1	Inductive sensor	BI8U-MT18M-AP6X2-H1141/S1589		TUR.16447411
=V1GL13UQ51UQ6.1-BGS	1	Inductive sensor	BI8U-MT18M-AP6X2-H1141/S1589		TUR.16447411
=V1GL13UQ51UQ6.1-XGR/S	1	Y splitter	U2-30676	TURCK	TUR.VB2-FSM 4.4/2FKM 4/S3450

+.GL13UQ51UQ5.1/1

+.GL13UQ51UQ7.1/1

			Date	1/24/2023	Volvo Trucks North America	Valiant TMS	Parts list : TUR.16447411 - TUR.VB2-FSM 4.4/2FKM 4/S3450	Drawing name: =2V01&EFS-EL_KF1	= + V1GL13UQ51UQ6.1
			Ed.	MKLEPADLO					
			Appr		P6700 Framing - Cell 2V01, KF1	Scale 1:1		Document type: EPB	Project nr: 22-16152
Modification	Date	Name	Original		Replacement of	Replaced by			Page 1 / 1630

Parts list

F01_001

Device tag	Quantity	Designation	Type number	Supplier	Part number
=V1GL13UQ51UQ7.1-BGR	1	Inductive sensor	BI8U-MT18M-AP6X2-H1141/S1589		TUR.16447411
=V1GL13UQ51UQ7.1-BGS	1	Inductive sensor	BI8U-MT18M-AP6X2-H1141/S1589		TUR.16447411
=V1GL13UQ51UQ7.1-XGR/S	1	Y splitter	U2-30676	TURCK	TUR.VB2-FSM 4.4/2FKM 4/S3450

+.GL13UQ51UQ6.1/1

+.GL14KF2/1

			Date	1/24/2023	Volvo Trucks North America	Valiant TMS	Parts list : TUR.16447411 - TUR.VB2-FSM 4.4/2FKM 4/S3450	Drawing name: =2V01&EFS-EL_KF1	= + V1GL13UQ51UQ7.1
			Ed.	MKLEPADLO					
			Appr		P6700 Framing - Cell 2V01, KF1	Scale 1:1		Document type: EPB	Project nr: 22-16152
Modification	Date	Name	Original		Replacement of	Replaced by			Page 1 / 1630

Parts list

F01_001

Device tag	Quantity	Designation	Type number	Supplier	Part number
=V1GL14KF2-KF2.11	1	SINAMICS G120D CONTROL UNIT CU240D-2 PN-F	6SL3544-0FB21-1FA0	SIEMENS	SIE.6SL3544-0FB21-1FA0

+.GL13UQ51UQ7.1/1

+.GL14UC01/1

			Date	1/24/2023	Volvo Trucks North America	Valiant TMS	Parts list : SIE.6SL3544-0FB21-1FA0 - SIE.6SL3544-0FB21-1FA0	Drawing name: =2V01&EFS-EL_KF1	=	
			Ed.	MKLEPADLO					+ V1GL14KF2	
			Appr		P6700 Framing - Cell 2V01, KF1	Scale 1:1		Document type: EPB	Project nr: 22-16152	Page 1
Modification	Date	Name	Original		Replacement of	Replaced by				1630

Parts list

F01_001

Device tag	Quantity	Designation	Type number	Supplier	Part number
=V1GL14-TA1	1	SINAMICS G120D POWER MODULE PM250D 0,75KW	6SL3525-0PE17-5AA1	SIEMENS	SIE.6SL3525-0PE17-5AA1
=V1GL14WC1-Q1	1	DISCONNECT	EM3BMHANQ4SDCG10	E-M	EM.EM3BMHANQ4SDCG10

+.GL14KF2/1

+.GL14UQ51/1

			Date	1/24/2023	Volvo Trucks North America	Valiant TMS	Parts list : SIE.6SL3525-0PE17-5AA1 - EM.EM3BMHANQ4SDCG10	Drawing name: =2V01&EFS-EL_KF1	=	
			Ed.	MKLEPADLO					+ V1GL14UC01	
			Appr		P6700 Framing - Cell 2V01, KF1	Scale 1:1		Document type: EPB	Project nr: 22-16152	Page 1 / 1630
Modification	Date	Name	Original		Replacement of	Replaced by				

Parts list

F01_001

Device tag	Quantity	Designation	Type number	Supplier	Part number
=V1GL14UQ51BG0-BG05	1	Inductive sensor	BI8U-MT18M-AP6X2-H1141/S1589	TURCK	TUR.1644741
=V1GL14UQ51BG0-BG06	1	Inductive sensor	BI8U-MT18M-AP6X2-H1141/S1589	TURCK	TUR.1644741
=V1GL14UQ51BG0-BG07	1	Inductive sensor	BI8U-MT18M-AP6X2-H1141/S1589	TURCK	TUR.1644741
=V1GL14UQ51BG0-BG08	1	Inductive sensor	BI8U-MT18M-AP6X2-H1141/S1589	TURCK	TUR.1644741
=V1GL14UQ51BG0-BG09	1	Inductive sensor	BI8U-MT18M-AP6X2-H1141/S1589	TURCK	TUR.1644741
=V1GL14UQ51BG0-BG12	1	Inductive sensor	BI8U-MT18M-AP6X2-H1141/S1589	TURCK	TUR.1644741
=V1GL14UQ51BG0-BG13	1	Inductive sensor	BI8U-MT18M-AP6X2-H1141/S1589	TURCK	TUR.1644741
=V1GL14UQ51BG0-BG14	1	Inductive sensor	BI8U-MT18M-AP6X2-H1141/S1589	TURCK	TUR.1644741
=V1GL14UQ51BG0-BG15	1	NEMA Limit Switch - NEMA Type 4 & 13 Oiltight Construction	802T-AP	A-B	A-B.802T-AP
=V1GL14UQ51BG0-BG17	1	Discrete Q60: Proximity Mode	Q60BB6AFV1000QPMA	BANNER	BAN.71959
=V1GL14UQ51BG0-XG6/17	1	Y splitter	U2-30676	TURCK	TUR.VB2-FSM 4.4/2FKM 4/S3450
=V1GL14UQ51BG0-XG7/12	1	Y splitter	U2-30676	TURCK	TUR.VB2-FSM 4.4/2FKM 4/S3450
=V1GL14UQ51BG0-XG8/9	1	Y splitter	U2-30676	TURCK	TUR.VB2-FSM 4.4/2FKM 4/S3450
=V1GL14UQ51BG0-XG13/14	1	Y splitter	U2-30676	TURCK	TUR.VB2-FSM 4.4/2FKM 4/S3450
=V1GL14UQ51KF2-KF2	0	Bus node	CPX-FB33	FESTO	FES.548755
=V1GL14UQ51KF2-KF2	0	Interlinking block	CPX-M-GE-EV-S-7/8-5POL	FES	FES.550208
=V1GL14UQ51KF2-KF2.11	0	Manifold block	CPX-M-AB-8-M12X2-5POL	FES	FES.549335
=V1GL14UQ51KF2-KF2.12	0	Manifold block	CPX-M-AB-8-M12X2-5POL	FES	FES.549335
=V1GL14UQ51KF2-KF2.13	0	Manifold block	CPX-M-AB-8-M12X2-5POL	FES	FES.549335

			Date	1/24/2023	Volvo Trucks North America	Valiant TMS	Parts list : TUR.1644741 - FES.549335	Drawing name: =2V01&EFS-EL_KF1	=		
			Ed.	MKLEPADLO					+ V1GL14UQ51		
			Appr		P6700 Framing - Cell 2V01, KF1	Scale 1:1		Document type: EPB	Project nr: 22-16152	Page	1
Modification	Date	Name	Original		Replacement of	Replaced by					1630

Parts list

F01_001

Device tag	Quantity	Designation	Type number	Supplier	Part number
=V1GL14UQ51UQ3.1-BGR	1	Inductive sensor	BI8U-MT18M-AP6X2-H1141/S1589		TUR.16447411
=V1GL14UQ51UQ3.1-BGS	1	Inductive sensor	BI8U-MT18M-AP6X2-H1141/S1589		TUR.16447411
=V1GL14UQ51UQ3.1-XGR/S	1	Y splitter	U2-30676	TURCK	TUR.VB2-FSM 4.4/2FKM 4/S3450

+V1GL14UQ51/1

+.GL14UQ51UQ4.1/1

			Date	1/24/2023	Volvo Trucks North America	Valiant TMS	Parts list : TUR.16447411 - TUR.VB2-FSM 4.4/2FKM 4/S3450	Drawing name: =2V01&EFS-EL_KF1	= + V1GL14UQ51UQ3.1
			Ed.	MKLEPADLO					
			Appr		P6700 Framing - Cell 2V01, KF1	Scale 1:1		Document type: EPB	Project nr: 22-16152
Modification	Date	Name	Original		Replacement of	Replaced by			Page 1 / 1630

Parts list

F01_001

Device tag	Quantity	Designation	Type number	Supplier	Part number
=V1GL14UQ51UQ4.1-BGR	1	Inductive sensor	BI8U-MT18M-AP6X2-H1141/S1589		TUR.16447411
=V1GL14UQ51UQ4.1-BGS	1	Inductive sensor	BI8U-MT18M-AP6X2-H1141/S1589		TUR.16447411
=V1GL14UQ51UQ4.1-XGR/S	1	Y splitter	U2-30676	TURCK	TUR.VB2-FSM 4.4/2FKM 4/S3450

+.GL14UQ51UQ3.1/1

+.GL14UQ51UQ5.1/1

			Date	1/24/2023	Volvo Trucks North America	Valiant TMS	Parts list : TUR.16447411 - TUR.VB2-FSM 4.4/2FKM 4/S3450	Drawing name: =2V01&EFS-EL_KF1	=	
			Ed.	MKLEPADLO					+ V1GL14UQ51UQ4.1	
			Appr		P6700 Framing - Cell 2V01, KF1	Scale 1:1		Document type: EPB	Project nr: 22-16152	Page 1 / 1630
Modification	Date	Name	Original		Replacement of / Replaced by					

Parts list

F01_001

Device tag	Quantity	Designation	Type number	Supplier	Part number
=V1GL14UQ51UQ5.1-BGR	1	Inductive sensor	BI8U-MT18M-AP6X2-H1141/S1589		TUR.16447411
=V1GL14UQ51UQ5.1-BGS	1	Inductive sensor	BI8U-MT18M-AP6X2-H1141/S1589		TUR.16447411
=V1GL14UQ51UQ5.1-XGR/S	1	Y splitter	U2-30676	TURCK	TUR.VB2-FSM 4.4/2FKM 4/S3450

+.GL14UQ51UQ4.1/1

+.GM11UC01/1

			Date	1/24/2023	Volvo Trucks North America	Valiant TMS	Parts list : TUR.16447411 - TUR.VB2-FSM 4.4/2FKM 4/S3450	Drawing name: =2V01&EFS-EL_KF1	= + V1GL14UQ51UQ5.1
			Ed.	MKLEPADLO					
			Appr		P6700 Framing - Cell 2V01, KF1	Scale 1:1		Document type: EPB	Project nr: 22-16152
Modification	Date	Name	Original		Replacement of	Replaced by			Page 1 / 1630

Parts list

F01_001

Device tag	Quantity	Designation	Type number	Supplier	Part number
=V1GM11GM1-TA1	1	SINAMICS G120D POWER MODULE PM250D 0,75KW	6SL3525-0PE17-5AA1	SIEMENS	SIE.6SL3525-0PE17-5AA1
=V1GM11GM1WC1-XG1	1	POWER TEE	EM3BMHANQ4CG1012	E-M	E-M.EM3BMHANQ4CG1012
=V1GM11GM2-TA1	1	SINAMICS PM250D-IP65-FSC-A-400V 7,5 KW	6SL3525-0PE27-5AA1	SIE	SIE.6SL3525-0PE27-5AA1
=V1GM11GM2WC1-Q1	1	DISCONNECT	EM3BMHANQ4SDCG10	E-M	EM.EM3BMHANQ4SDCG10
=V1GM11GM2WC1-XG1	1	POWER TEE	EM3BMHANQ4CG1012	E-M	E-M.EM3BMHANQ4CG1012
=V1GM11WL1-TA1	1	SINAMICS PM250D-IP65-FSB-A-400V 3 KW	6SL3525-0PE23-0AA1	SIE	SIE.6SL3525-0PE23-0AA1

+.GL14UQ51UQ5.1/1

+.U20/1

			Date	1/24/2023	Volvo Trucks North America	Valiant TMS	Parts list : SIE.6SL3525-0PE17-5AA1 - SIE.6SL3525-0PE23-0AA1	Drawing name: =2V01&EFS-EL_KF1	=	
			Ed.	MKLEPADLO					+ V1GM11UC01	
			Appr		P6700 Framing - Cell 2V01, KF1	Scale 1:1		Document type: EPB	Project nr: 22-16152	Page 1 / 1630
Modification	Date	Name	Original		Replacement of	Replaced by				

Parts list

F01_001

Device tag	Quantity	Designation	Type number	Supplier	Part number
=V1U20FQ1-BG01	1	NEMA Limit Switch - NEMA Type 4 & 13 Oiltight Construction	802T-AMP	A-B	A-B.802T-AMP

+.GM11UC01/1

+.U20U01/1

			Date	1/24/2023	Volvo Trucks North America	Valiant TMS	Parts list : A-B.802T-AMP - A-B.802T-AMP	Drawing name: =2V01&EFS-EL_KF1	=	
			Ed.	MKLEPADLO					+ V1U20	
			Appr		P6700 Framing - Cell 2V01, KF1	Scale 1:1		Document type: EPB	Project nr: 22-16152	Page 1 / 1630
Modification	Date	Name	Original		Replacement of / Replaced by					

Parts list

F01_001

Device tag	Quantity	Designation	Type number	Supplier	Part number
=V1U20U01KF1-KF1.11	1	MVK-MPNIO DI8 DO8 FSU	MVK-MPNIO DI8 DO8 FSU	MURR	MURR.55339
=V1U20U01PF1-PF1	1	K50L Series Daylight Visible Indicators	K50L2RGB7QP	BANNER	BAN.805371
=V1U20U01PF1-PF1	1	Mounting kit	SMB30A	BANNER	BAN.32723

+V1U20/1

+.UC11/1

			Date	1/24/2023	Volvo Trucks North America	Valiant TMS	Parts list : MURR.55339 - BAN.32723	Drawing name: =2V01&EFS-EL_KF1	= + V1U20U01	
			Ed.	MKLEPADLO						
			Appr		P6700 Framing - Cell 2V01, KF1			Document type: EPB	Project nr: 22-16152	Page 1 / 1630
Modification	Date	Name	Original		Replacement of / Replaced by	Scale 1:1				

Parts list

F01_001

Device tag	Quantity	Designation	Type number	Supplier	Part number
=V1AR21-FC1	1		EMPD3FBCB-025A-M	Electro-Matic	EMPD3FBCB-025A-M
=V1GM11-FC1	1		EMPD3FBCB-050A-M	Electro-Matic	EMPD3FBCB-050A-M
=V1KF1-KF11	1				SIE.6ES7155-6AA01-0BN0_subassembly
=V1KF1-KF11	1	ET200SP, SERVERMODULE	6ES7193-6PA00-0AA0		SIE.6ES7193-6PA00-0AA0
=V1KF1-KF11.11	1	ET 200SP, DI 16x 24V DC ST, PU 1	6ES7131-6BH01-0BA0	SIE	SIE.6ES7131-6BH01-0BA0
=V1KF1-KF11.11	1	Bas Modul Vit	6ES7193-6BP00-0DA0	SIE	SIE.6ES7193-6BP00-0DA0
=V1KF1-KF11.12	1	ET 200SP, DI 16x 24V DC ST, PU 1	6ES7131-6BH01-0BA0	SIE	SIE.6ES7131-6BH01-0BA0
=V1KF1-KF11.12	1	SIMATIC ET 200SP, BASEUNIT,BRIDGED TO LEFT	6ES7193-6BP00-0BA0	SIE	SIE.6ES7193-6BP00-0BA0
=V1KF1-KF11.13	1	ET 200SP, DI 16x 24V DC ST, PU 1	6ES7131-6BH01-0BA0	SIE	SIE.6ES7131-6BH01-0BA0
=V1KF1-KF11.13	1	SIMATIC ET 200SP, BASEUNIT,BRIDGED TO LEFT	6ES7193-6BP00-0BA0	SIE	SIE.6ES7193-6BP00-0BA0
=V1KF1-KF11.14	1	ET 200SP, DI 16x 24V DC ST, PU 1	6ES7131-6BH01-0BA0	SIE	SIE.6ES7131-6BH01-0BA0
=V1KF1-KF11.14	1	SIMATIC ET 200SP, BASEUNIT,BRIDGED TO LEFT	6ES7193-6BP00-0BA0	SIE	SIE.6ES7193-6BP00-0BA0
=V1KF1-KF11.21	1	ET 200SP, DQ 16x 24V DC/0,5A ST, PU 1	6ES7132-6BH01-0BA0	SIE	SIE.6ES7132-6BH01-0BA0
=V1KF1-KF11.21	1	Bas Modul Vit	6ES7193-6BP00-0DA0	SIE	SIE.6ES7193-6BP00-0DA0
=V1KF1-KF11.31	1	F-DI 8X24V DC HF	6ES7136-6BA00-0CA0	SIE	SIE.6ES7136-6BA00-0CA0
=V1KF1-KF11.31	1	SIMATIC ET 200SP, BASEUNIT,BRIDGED TO LEFT	6ES7193-6BP00-0BA0	SIE	SIE.6ES7193-6BP00-0BA0
=V1KF1-KF11.32	1	F-DI 8X24V DC HF	6ES7136-6BA00-0CA0	SIE	SIE.6ES7136-6BA00-0CA0
=V1KF1-KF11.32	1	SIMATIC ET 200SP, BASEUNIT,BRIDGED TO LEFT	6ES7193-6BP00-0BA0	SIE	SIE.6ES7193-6BP00-0BA0
=V1KF1-KF11.41	1	F-DQ 4X24V DC/2A PM HF	6ES7136-6DB00-0CA0	SIEMENS	SIE.6ES7136-6DB00-0CA0
=V1KF1-KF11.41	1	SIMATIC ET 200SP, BASEUNIT,BRIDGED TO LEFT	6ES7193-6BP00-0BA0	SIE	SIE.6ES7193-6BP00-0BA0
=V1KF1-KF11.42	1	F-DQ 4X24V DC/2A PM HF	6ES7136-6DB00-0CA0	SIEMENS	SIE.6ES7136-6DB00-0CA0
=V1KF1-KF11.42	1	SIMATIC ET 200SP, BASEUNIT,BRIDGED TO LEFT	6ES7193-6BP00-0BA0	SIE	SIE.6ES7193-6BP00-0BA0
=V1KF1-KF11.51	1	ET 200SP, F-RQ 1x24VDC/24..230VAC/5A ST	6ES7136-6RA00-0BF0		SIE.6ES7136-6RA00-0BF0
=V1KF1-KF11.51	1	BASEUNIT TYPE F0, BU20-P8+A4+0B	6ES7193-6BP20-0BF0	SIE	SIE.6ES7193-6BP20-0BF0
=V1KF1-KF11.52	1	ET 200SP, F-RQ 1x24VDC/24..230VAC/5A ST	6ES7136-6RA00-0BF0		SIE.6ES7136-6RA00-0BF0
=V1KF1-KF11.52	1	BASEUNIT TYPE F0, BU20-P8+A4+0B	6ES7193-6BP20-0BF0	SIE	SIE.6ES7193-6BP20-0BF0
=V1KF1-KF11.53	1	ET 200SP, F-RQ 1x24VDC/24..230VAC/5A ST	6ES7136-6RA00-0BF0		SIE.6ES7136-6RA00-0BF0
=V1KF1-KF11.53	1	BASEUNIT TYPE F0, BU20-P8+A4+0B	6ES7193-6BP20-0BF0	SIE	SIE.6ES7193-6BP20-0BF0
=V1KF1-KF11.54	1	ET 200SP, F-RQ 1x24VDC/24..230VAC/5A ST	6ES7136-6RA00-0BF0		SIE.6ES7136-6RA00-0BF0
=V1KF1-KF11.54	1	BASEUNIT TYPE F0, BU20-P8+A4+0B	6ES7193-6BP20-0BF0	SIE	SIE.6ES7193-6BP20-0BF0
=V1KF1-KF100.11	1	SCALANCE XC216	6GK5216-0BA00-2AC2	SIE	SIE.6GK5216-0BA00-2AC2
=V1WC1-FC1	1	MCCB_UL_FS125_15A_3P_65KA_TM_ FTFM	3VA5195-6ED31-0AA0	SIE	SIE.3VA5195-6ED31-0AA0
=V1WC1-KF1.1	1	BREAKER DATA SERVER, COM100	3VA9977-0TA20	SIE	SIE.3VA9977-0TA20
=V1WC1-KF1.2	1	Switched Ethernet PROFINET Module V3	7KM9300-0AE02-0AA0		SIE.7KM9300-0AE02-0AA0
=V1WC1-QB1	1	MCCB_UL_FS250_250A_3P_65KA_ETU8_LSI	3VA6225-6KP31-0AA0	SIE	SIE.3VA6225-6KP31-0AA0
=V1WC1-QB1-KF1	1	COMMUNICATION MODULE COM060	3VA9177-0TB10	SIE	SIE.3VA9177-0TB10
=V1WC1-TA1	1	Transformer	PTN102-3K	POWERTRAN	PTN102-3K
=V1WC2-A3	1	Multi-Environment Voltage Indicator and Safe-Test Point Combination Unit with Vertical Flange Mounting Label			GT.R-3W2MT-LMF
=V1WC2-FC1	1	MCCB_UL_FS125_20A_3P_65KA_TM_ FTFM	3VA5120-6ED31-0AA0	SIE	SIE.3VA5120-6ED31-0AA0
=V1WC2-FC1	1	SENTRON auxiliary switch Accessories for 3VA circuit breakers	3VA9978-0AA12	SIE	SIE.3VA9978-0AA12
=V1WC2-TA2	1	Transformer	PTN102-7.5K	POWERTRAN	PTN102-7.5K
=V1WC3-FC2	1	CIRCUIT BREAKER 240V 14KA, 1-POLE, C, 20A, D=70MM	5SJ4120-7HG41	SIE	SIE.5SJ4120-7HG41
=V1WC3-FC2	1	AUXILARY SWITCH 1NO1NC UL489	5ST3010-0HG	SIE	SIE.5ST3010-0HG
=V1WC3-FC3	1	CIRCUIT BREAKER 240V 14KA, 1-POLE, C, 10A, D=70MM	5SJ4110-7HG41	SIE	SIE.5SJ4110-7HG41
=V1WC3-FC3	1	AUXILARY SWITCH 1NO1NC UL489	5ST3010-0HG	SIE	SIE.5ST3010-0HG
=V1WC3-FC4	1	CIRCUIT BREAKER 240V 14KA, 1-POLE, C, 3A, D=70MM	5SJ4103-7HG41	SIE	SIE.5SJ4103-7HG41
=V1WC3-FC4	1	AUXILARY SWITCH 1NO1NC UL489	5ST3010-0HG	SIE	SIE.5ST3010-0HG
=V1WC3-FC5	1	CIRCUIT BREAKER 240V 14KA, 1-POLE, C, 16A, D=70MM	5SJ4116-7HG41	SIE	SIE.5SJ4116-7HG41
=V1WC3-FC6	1	CIRCUIT BREAKER 240V 14KA, 1-POLE, C, 16A, D=70MM	5SJ4116-7HG41	SIE	SIE.5SJ4116-7HG41
=V1WC3-FC6	1	AUXILARY SWITCH 1NO1NC UL489	5ST3010-0HG	SIE	SIE.5ST3010-0HG
=V1WC3-FC7	1	CIRCUIT BREAKER 240V 14KA, 1-POLE, C, 16A, D=70MM	5SJ4116-7HG41	SIE	SIE.5SJ4116-7HG41
=V1WC3-FC7	1	AUXILARY SWITCH 1NO1NC UL489	5ST3010-0HG	SIE	SIE.5ST3010-0HG
=V1WC3-FC8	1	CIRCUIT BREAKER 240V 14KA, 1-POLE, C, 16A, D=70MM	5SJ4116-7HG41	SIE	SIE.5SJ4116-7HG41
=V1WC3-FC8	1	AUXILARY SWITCH 1NO1NC UL489	5ST3010-0HG	SIE	SIE.5ST3010-0HG
=V1WC3-FC9	1	CIRCUIT BREAKER 240V 14KA, 1-POLE, C, 6A, D=70MM	5SJ4106-7HG41	SIE	SIE.5SJ4106-7HG41
=V1WC3-FC9	1	AUXILARY SWITCH 1NO1NC UL489	5ST3010-0HG	SIE	SIE.5ST3010-0HG

Parts list

F01_001

Device tag	Quantity	Designation	Type number	Supplier	Part number
=V1WC3-FC10	1	CIRCUIT BREAKER 240V 14KA, 1-POLE, C, 16A, D=70MM	5SJ4116-7HG41	SIE	SIE.5SJ4116-7HG41
=V1WC3-XG1	2	DBL175 Series Distribution Block	1SNL317510R0000	ENTRELEC	1SNL317510R0000
=V1WC3-XG2	2	DBL175 Series Distribution Block	1SNL317510R0000	ENTRELEC	1SNL317510R0000
=V1WC3-XG3	1	Panel Interface Connector with USB Type A/F to USB Type A/M [Qty: 2]; Category 5e RJ45 Pass-Through; Housing; UL Type 4; Duplex Outlet; 5 Amp Circuit Breaker	GT_N.P-P11#2R2-K3RD5		GT_N.P-P11#2R2-K3RD5
=V1WC4-FC11	1	SITOP SEL1200 8 x 10A	6EP4438-7FB00-3DX0		SIE.6EP4438-7FB00-3DX0
=V1WC4-FC12	1	SITOP SEL1200 8 x 10A	6EP4438-7FB00-3DX0		SIE.6EP4438-7FB00-3DX0
=V1WC4-TA1	1	SITOP PSU6200 1ph 24 V/20 A	6EP3336-7SB00-3AX0		SIE.6EP3336-7SB00-3AX0
=V1WC4-TA2	1	SITOP PSU6200 1ph 24 V/20 A	6EP3336-7SB00-3AX0		SIE.6EP3336-7SB00-3AX0
=V1WC4-XG51	1	TEE, 5-PIN MINI, STANDARD KEYWAY	U2109-9	TURCK	TUR.RSM-2RKM 50
=V2AR21-FC1	1		EMPD3FBCB-025A-M	Electro-Matic	EMPD3FBCB-025A-M
=V2AR23-FC1	1		EMPD3FBCB-025A-M	Electro-Matic	EMPD3FBCB-025A-M
=V2AR31-FC1	1		EMPD3FBCB-025A-M	Electro-Matic	EMPD3FBCB-025A-M
=V2AR31XQ41-FC1	1		EMPD3FBCB-060A-M	Electro-Matic	EMPD3FBCB-060A-M
=V2AR41-FC1	1		EMPD3FBCB-025A-M	Electro-Matic	EMPD3FBCB-025A-M
=V2AR43-FC1	1		EMPD3FBCB-025A-M	Electro-Matic	EMPD3FBCB-025A-M
=V2GL16-FC1	1		EMPD3FBCB-005A-M	Electro-Matic	EMPD3FBCB-005A-M
=V2GL18-FC1	1		EMPD3FBCB-005A-M	Electro-Matic	EMPD3FBCB-005A-M
=V2UC81-FC1	1		EMPD3FBCB-020A-M	Electro-Matic	EMPD3FBCB-020A-M
=WC1-WC1	1	Golvskåp TS 8 sidskåp	TS8	RIT	RIT.SETS8205SID5
=WC1-WC1	1	TS Trim panel, sides, H: 100 mm, for W: 500 mm, RAL 7022, sheet steel	TS.8601050	RIT	RIT.8601050
=WC1-WC1	1	TS Base/plinth component, rear, H: 100 mm, for W: 1200 mm, RAL 7022, sheet steel	TS.8601200	RIT	RIT.8601200
=WC1-WC1	1	TS Side panel, screw-fastened, for TS, TS IT, for WD: 2000x500 mm, Sheet steel	TS.8105235	RIT	RIT.8105235
=WC1-WC1	1	PS Wiring plan pockets, for TS, CM, SE, PC, TP pedestal, sheet steel	TS.4115000	RIT	RIT.4115000

			Date	1/24/2023	Volvo Trucks North America	Valiant TMS	Parts list : SIE.5SJ4116-7HG41 - RIT.4115000	Drawing name: =2V01&EFS-EL_KF1	=	
			Ed.	MKLEPADLO					+ V1UC11	
			Appr		P6700 Framing - Cell 2V01, KF1			Document type: EPB	Project nr: 22-16152	Page 2
Modification	Date	Name	Original		Replacement of / Replaced by	Scale 1:1				1630

Parts list

F01_001

Device tag	Quantity	Designation	Type number	Supplier	Part number
=V1AR11-FC1	1		EMPD3FBCB-025A-M	Electro-Matic	EMPD3FBCB-025A-M
=V1AR31-FC1	1		EMPD3FBCB-025A-M	Electro-Matic	EMPD3FBCB-025A-M
=V1AR31XQ41-FC1	1		EMPD3FBCB-060A-M	Electro-Matic	EMPD3FBCB-060A-M
=V1AR41-FC1	1		EMPD3FBCB-025A-M	Electro-Matic	EMPD3FBCB-025A-M
=V1GL13-FC1	1		EMPD3FBCB-005A-M	Electro-Matic	EMPD3FBCB-005A-M
=V1GL14-FC1	1		EMPD3FBCB-005A-M	Electro-Matic	EMPD3FBCB-005A-M
=V1KF1-KF12	1				SIE.6ES7155-6AA01-0BN0_subassembly
=V1KF1-KF12	1	ET200SP, SERVERMODULE	6ES7193-6PA00-0AA0		SIE.6ES7193-6PA00-0AA0
=V1KF1-KF12.11	1	ET 200SP, DI 16x 24V DC ST, PU 1	6ES7131-6BH01-0BA0	SIE	SIE.6ES7131-6BH01-0BA0
=V1KF1-KF12.11	1	Bas Modul Vit	6ES7193-6BP00-0DA0	SIE	SIE.6ES7193-6BP00-0DA0
=V1KF1-KF12.12	1	ET 200SP, DI 16x 24V DC ST, PU 1	6ES7131-6BH01-0BA0	SIE	SIE.6ES7131-6BH01-0BA0
=V1KF1-KF12.12	1	SIMATIC ET 200SP, BASEUNIT,BRIDGED TO LEFT	6ES7193-6BP00-0BA0	SIE	SIE.6ES7193-6BP00-0BA0
=V1KF1-KF12.13	1	ET 200SP, DI 16x 24V DC ST, PU 1	6ES7131-6BH01-0BA0	SIE	SIE.6ES7131-6BH01-0BA0
=V1KF1-KF12.13	1	SIMATIC ET 200SP, BASEUNIT,BRIDGED TO LEFT	6ES7193-6BP00-0BA0	SIE	SIE.6ES7193-6BP00-0BA0
=V1KF1-KF12.14	1	ET 200SP, DI 16x 24V DC ST, PU 1	6ES7131-6BH01-0BA0	SIE	SIE.6ES7131-6BH01-0BA0
=V1KF1-KF12.14	1	SIMATIC ET 200SP, BASEUNIT,BRIDGED TO LEFT	6ES7193-6BP00-0BA0	SIE	SIE.6ES7193-6BP00-0BA0
=V1KF1-KF12.21	1	ET 200SP, DQ 16x 24V DC/0,5A ST, PU 1	6ES7132-6BH01-0BA0	SIE	SIE.6ES7132-6BH01-0BA0
=V1KF1-KF12.21	1	Bas Modul Vit	6ES7193-6BP00-0DA0	SIE	SIE.6ES7193-6BP00-0DA0
=V1KF1-KF12.31	1	F-DI 8X24V DC HF	6ES7136-6BA00-0CA0	SIE	SIE.6ES7136-6BA00-0CA0
=V1KF1-KF12.31	1	SIMATIC ET 200SP, BASEUNIT,BRIDGED TO LEFT	6ES7193-6BP00-0BA0	SIE	SIE.6ES7193-6BP00-0BA0
=V1KF1-KF12.32	1	F-DI 8X24V DC HF	6ES7136-6BA00-0CA0	SIE	SIE.6ES7136-6BA00-0CA0
=V1KF1-KF12.32	1	SIMATIC ET 200SP, BASEUNIT,BRIDGED TO LEFT	6ES7193-6BP00-0BA0	SIE	SIE.6ES7193-6BP00-0BA0
=V1KF1-KF12.41	1	F-DQ 4X24V DC/2A PM HF	6ES7136-6DB00-0CA0	SIEMENS	SIE.6ES7136-6DB00-0CA0
=V1KF1-KF12.41	1	SIMATIC ET 200SP, BASEUNIT,BRIDGED TO LEFT	6ES7193-6BP00-0BA0	SIE	SIE.6ES7193-6BP00-0BA0
=V1KF1-KF12.42	1	F-DQ 4X24V DC/2A PM HF	6ES7136-6DB00-0CA0	SIEMENS	SIE.6ES7136-6DB00-0CA0
=V1KF1-KF12.42	1	SIMATIC ET 200SP, BASEUNIT,BRIDGED TO LEFT	6ES7193-6BP00-0BA0	SIE	SIE.6ES7193-6BP00-0BA0
=V1KF1-KF12.51	1	ET 200SP, F-RQ 1x24VDC/24..230VAC/5A ST	6ES7136-6RA00-0BF0		SIE.6ES7136-6RA00-0BF0
=V1KF1-KF12.51	1	BASEUNIT TYPE F0, BU20-P8+A4+0B	6ES7193-6BP20-0BF0	SIE	SIE.6ES7193-6BP20-0BF0
=V1KF1-KF12.51	1	ET 200SP, F-RQ 1x24VDC/24..230VAC/5A ST	6ES7136-6RA00-0BF0		SIE.6ES7136-6RA00-0BF0
=V1KF1-KF12.51	1	BASEUNIT TYPE F0, BU20-P8+A4+0B	6ES7193-6BP20-0BF0	SIE	SIE.6ES7193-6BP20-0BF0
=V1KF1-KF12.52	1	ET 200SP, F-RQ 1x24VDC/24..230VAC/5A ST	6ES7136-6RA00-0BF0		SIE.6ES7136-6RA00-0BF0
=V1KF1-KF12.52	1	BASEUNIT TYPE F0, BU20-P8+A4+0B	6ES7193-6BP20-0BF0	SIE	SIE.6ES7193-6BP20-0BF0
=V1KF1-KF12.53	1	ET 200SP, F-RQ 1x24VDC/24..230VAC/5A ST	6ES7136-6RA00-0BF0		SIE.6ES7136-6RA00-0BF0
=V1KF1-KF12.53	1	BASEUNIT TYPE F0, BU20-P8+A4+0B	6ES7193-6BP20-0BF0	SIE	SIE.6ES7193-6BP20-0BF0
=V1KF1-KF12.54	1	ET 200SP, F-RQ 1x24VDC/24..230VAC/5A ST	6ES7136-6RA00-0BF0		SIE.6ES7136-6RA00-0BF0
=V1KF1-KF12.54	1	BASEUNIT TYPE F0, BU20-P8+A4+0B	6ES7193-6BP20-0BF0	SIE	SIE.6ES7193-6BP20-0BF0
=V1KF1-KF100.12	1	SCALANCE XC216	6GK5216-0BA00-2AC2	SIE	SIE.6GK5216-0BA00-2AC2
=V1WC1-FC1	1	MCCB_UL_FS125_15A_3P_65KA_TM_ FTFM	3VA5195-6ED31-0AA0	SIE	SIE.3VA5195-6ED31-0AA0
=V1WC1-KF1.1	1	BREAKER DATA SERVER, COM100	3VA9977-0TA20	SIE	SIE.3VA9977-0TA20
=V1WC1-KF1.2	1	Switched Ethernet PROFINET Module V3	7KM9300-0AE02-0AA0		SIE.7KM9300-0AE02-0AA0
=V1WC1-QB1	1	MCCB_UL_FS400_400A_3P_65KA_ETU8_LSI	3VA6340-6KP31-0AA0	SIE	SIE.3VA6340-6KP31-0AA0
=V1WC1-QB1-KF1	1	COMMUNICATION MODULE COM060	3VA9177-0TB10	SIE	SIE.3VA9177-0TB10
=V1WC1-TA1	1	Transformer	PTN102-3K	POWERTRAN	PTN102-3K
=V1WC2-A3	1	Multi-Environment Voltage Indicator and Safe-Test Point Combination Unit with Vertical Flange Mounting Label	R-3W2MT-LMF		GT.R-3W2MT-LMF
=V1WC2-FC1	1	MCCB_UL_FS125_20A_3P_65KA_TM_ FTFM	3VA5120-6ED31-0AA0	SIE	SIE.3VA5120-6ED31-0AA0
=V1WC2-FC1	1	SENTRON auxiliary switch Accessories for 3VA circuit breakers	3VA9978-0AA12	SIE	SIE.3VA9978-0AA12
=V1WC2-TA2	1	Transformer	PTN102-7.5K	POWERTRAN	PTN102-7.5K
=V1WC3-FC2	1	CIRCUIT BREAKER 240V 14KA, 1-POLE, C, 20A, D=70MM	5SJ4120-7HG41	SIE	SIE.5SJ4120-7HG41
=V1WC3-FC2	1	AUXILARY SWITCH 1NO1NC UL489	5ST3010-0HG	SIE	SIE.5ST3010-0HG
=V1WC3-FC3	1	CIRCUIT BREAKER 240V 14KA, 1-POLE, C, 10A, D=70MM	5SJ4110-7HG41	SIE	SIE.5SJ4110-7HG41
=V1WC3-FC3	1	AUXILARY SWITCH 1NO1NC UL489	5ST3010-0HG	SIE	SIE.5ST3010-0HG
=V1WC3-FC4	1	CIRCUIT BREAKER 240V 14KA, 1-POLE, C, 3A, D=70MM	5SJ4103-7HG41	SIE	SIE.5SJ4103-7HG41
=V1WC3-FC4	1	AUXILARY SWITCH 1NO1NC UL489	5ST3010-0HG	SIE	SIE.5ST3010-0HG
=V1WC3-FC5	1	CIRCUIT BREAKER 240V 14KA, 1-POLE, C, 16A, D=70MM	5SJ4116-7HG41	SIE	SIE.5SJ4116-7HG41
=V1WC3-FC6	1	CIRCUIT BREAKER 240V 14KA, 1-POLE, C, 16A, D=70MM	5SJ4116-7HG41	SIE	SIE.5SJ4116-7HG41
=V1WC3-FC6	1	AUXILARY SWITCH 1NO1NC UL489	5ST3010-0HG	SIE	SIE.5ST3010-0HG
=V1WC3-FC7	1	CIRCUIT BREAKER 240V 14KA, 1-POLE, C, 16A, D=70MM	5SJ4116-7HG41	SIE	SIE.5SJ4116-7HG41
=V1WC3-FC7	1	AUXILARY SWITCH 1NO1NC UL489	5ST3010-0HG	SIE	SIE.5ST3010-0HG

			Date	1/24/2023	Volvo Trucks North America	Valiant TMS	Parts list : EMPD3FBCB-025A-M - SIE.5ST3010-0HG	Drawing name: =2V01&EFS-EL_KF1	= + V1UC12
			Ed.	MKLEPADLO					
			Appr		P6700 Framing - Cell 2V01, KF1	Scale 1:1		Document type: EPB	Project nr: 22-16152
Modification	Date	Name	Original		Replacement of	Replaced by			Page 1 / 1630

Parts list

F01_001

Device tag	Quantity	Designation	Type number	Supplier	Part number
=V1WC3-FC8	1	CIRCUIT BREAKER 240V 14KA, 1-POLE, C, 16A, D=70MM	5SJ4116-7HG41	SIE	SIE.5SJ4116-7HG41
=V1WC3-FC8	1	AUXILARY SWITCH 1NO1NC UL489	5ST3010-0HG	SIE	SIE.5ST3010-0HG
=V1WC3-FC9	1	CIRCUIT BREAKER 240V 14KA, 1-POLE, C, 6A, D=70MM	5SJ4106-7HG41	SIE	SIE.5SJ4106-7HG41
=V1WC3-FC9	1	AUXILARY SWITCH 1NO1NC UL489	5ST3010-0HG	SIE	SIE.5ST3010-0HG
=V1WC3-FC10	1	CIRCUIT BREAKER 240V 14KA, 1-POLE, C, 16A, D=70MM	5SJ4116-7HG41	SIE	SIE.5SJ4116-7HG41
=V1WC3-XG1	2	DBL175 Series Distribution Block	1SNL317510R0000	ENTRELEC	1SNL317510R0000
=V1WC3-XG2	2	DBL175 Series Distribution Block	1SNL317510R0000	ENTRELEC	1SNL317510R0000
=V1WC3-XG3	1	Panel Interface Connector with USB Type A/F to USB Type A/M [Qty: 2]; Category 5e RJ45 Feed-Through; Housing; UL Type 4; Duplex Outlet; 5 Amp Circuit Breaker	GT_N.P-P11#2R2-K3RD5		GT_N.P-P11#2R2-K3RD5
=V1WC4-FC11	1	SITOP SEL1200 8 x 10A	6EP4438-7FB00-3DX0		SIE.6EP4438-7FB00-3DX0
=V1WC4-FC12	1	SITOP SEL1200 8 x 10A	6EP4438-7FB00-3DX0		SIE.6EP4438-7FB00-3DX0
=V1WC4-TA1	1	SITOP PSU6200 1ph 24 V/20 A	6EP3336-7SB00-3AX0		SIE.6EP3336-7SB00-3AX0
=V1WC4-TA2	1	SITOP PSU6200 1ph 24 V/20 A	6EP3336-7SB00-3AX0		SIE.6EP3336-7SB00-3AX0
=V1WC4-XD51.1	1	5 PIN MINI FIELD ATTACHABLE, FEMALE, STRAIGHT	BS 4151-0/9	TURCK	TUR.BS 4151-0/9
=V1WC4-XG51	1	TEE, 5-PIN MINI, STANDARD KEYWAY	U2109-9	TURCK	TUR.RSM-2RKM 50
=V1WL2-FC1	1		EMPD3FBCB-015A-M	Electro-Matic	EMPD3FBCB-015A-M
=V1WL3-FC1	1		EMPD3FBCB-020A-M	Electro-Matic	EMPD3FBCB-020A-M
=V2AR22-FC1	1		EMPD3FBCB-025A-M	Electro-Matic	EMPD3FBCB-025A-M
=V2AR24-FC1	1		EMPD3FBCB-025A-M	Electro-Matic	EMPD3FBCB-025A-M
=V2AR32-FC1	1		EMPD3FBCB-025A-M	Electro-Matic	EMPD3FBCB-025A-M
=V2AR32XQ41-FC1	1		EMPD3FBCB-060A-M	Electro-Matic	EMPD3FBCB-060A-M
=V2AR42-FC1	1		EMPD3FBCB-025A-M	Electro-Matic	EMPD3FBCB-025A-M
=V2AR44-FC1	1		EMPD3FBCB-025A-M	Electro-Matic	EMPD3FBCB-025A-M
=V2GL15-FC1	1		EMPD3FBCB-005A-M	Electro-Matic	EMPD3FBCB-005A-M
=V2GL17-FC1	1		EMPD3FBCB-005A-M	Electro-Matic	EMPD3FBCB-005A-M
=V2WL1-FC1	1		EMPD3FBCB-015A-M	Electro-Matic	EMPD3FBCB-015A-M
=V2WL2-FC1	1		EMPD3FBCB-020A-M	Electro-Matic	EMPD3FBCB-020A-M
=V2WL3-FC1	1		EMPD3FBCB-015A-M	Electro-Matic	EMPD3FBCB-015A-M
=V2WL4-FC1	1		EMPD3FBCB-015A-M	Electro-Matic	EMPD3FBCB-015A-M
=WC1-WC1	1	Golvskåp TS 8 sidskåp	TS8	RIT	RIT.SETS8205SID5
=WC1-WC1	1	TS Trim panel, sides, H: 100 mm, for W: 500 mm, RAL 7022, sheet steel	TS.8601050	RIT	RIT.8601050
=WC1-WC1	1	TS Base/plinth component, rear, H: 100 mm, for W: 1200 mm, RAL 7022, sheet steel	TS.8601200	RIT	RIT.8601200
=WC1-WC1	1	TS Side panel, screw-fastened, for TS, TS IT, for WD: 2000x500 mm, Sheet steel	TS.8105235	RIT	RIT.8105235
=WC1-WC1	1	PS Wiring plan pockets, for TS, CM, SE, PC, TP pedestal, sheet steel	TS.4115000	RIT	RIT.4115000

1

+.UC32/1

			Date	1/24/2023	Volvo Trucks North America	Valiant TMS	Parts list : SIE.5SJ4116-7HG41 - RIT.4115000	Drawing name: =2V01&EFS-EL_KF1	=	
			Ed.	MKLEPADLO					+ V1UC12	
			Appr		P6700 Framing - Cell 2V01, KF1	Scale 1:1		Document type: EPB	Project nr: 22-16152	Page 2 / 1630
Modification	Date	Name	Original		Replacement of	Replaced by				

Parts list

F01_001

Device tag	Quantity	Designation	Type number	Supplier	Part number
=V1KF1-KF32	1				SIE.6ES7155-6AA01-0BN0_subassembly
=V1KF1-KF32	1	ET200SP, SERVERMODULE	6ES7193-6PA00-0AA0		SIE.6ES7193-6PA00-0AA0
=V1KF1-KF32.11	1	ET 200SP, DI 16x 24V DC ST, PU 1	6ES7131-6BH01-0BA0	SIE	SIE.6ES7131-6BH01-0BA0
=V1KF1-KF32.11	1	Bas Modul Vit	6ES7193-6BP00-0DA0	SIE	SIE.6ES7193-6BP00-0DA0
=V1KF1-KF32.21	1	ET 200SP, DQ 16x 24V DC/0,5A ST, PU 1	6ES7132-6BH01-0BA0	SIE	SIE.6ES7132-6BH01-0BA0
=V1KF1-KF32.21	1	Bas Modul Vit	6ES7193-6BP00-0DA0	SIE	SIE.6ES7193-6BP00-0DA0
=V1KF1-KF32.31	1	ET 200SP, El-Mod., F-DI 8x24VDC HF	6ES7136-6BA01-0CA0	SIE	SIE.6ES7136-6BA01-0CA0
=V1KF1-KF32.31	1	Bas Modul Vit	6ES7193-6BP00-0DA0	SIE	SIE.6ES7193-6BP00-0DA0
=V1KF1-PNET1	1	Profinet cable - RJ45 plug to M12 Female receptacle; 1m long	RJ45S FKSDED 423-1M	TURCK	TUR.RJ45S FKSDED 423-1M
=V1SF0PG1-M1	1	Ground bar kit, 5 positions.	ECGB5	SIE	US2.ECGB5
=V1SF0PG1-M1	1	Wiring Duct Covers, PVC	C1.5LG6	PANDUIT	PAN.C1.5LG6
=V1SF0PG1-M1	1	Wiring Duct Covers, PVC	C1LG6	PAN	PAN.C1LG6
=V1SF0PG1-M1	1	Wide Slotted Wiring Duct, PVC	G1.5X4LG6	PAN	PAN.G1.5X4LG6
=V1SF0PG1-M1	1	Wide Slotted Wiring Duct, PVC	G1X4LG6	PAN	PAN.G1X4LG6
=V1SF0PG1-PG1	1	SIMATIC HMI TP1500 COMFORT	6AV2124-0QC02-0AX1	SIE	SIE.6AV2124-0QC02-0AX1
=V1SF0PG1-PG1	1	SIMATIC HMI SD MEMORY CARD 2 GB	6AV2181-8XP00-0AX0	SIE	SIE.6AV2181-8XP00-0AX0
=V1SF0PG1-SF1	1	PUSHBUTTON CP1-10G-20	CP1-10G-20	ABB	ABB.1SFA619100R1022
=V1SF0PG1-SF2	1	PUSHBUTTON CP1-10Y-20	CP1-10Y-20	ABB	ABB.1SFA619100R1023
=V1SF0PG1-SF3/PF3	1	PUSHBUTTON CP1-11C-10	CP1-11C-10	ABB	ABB.1SFA619100R1118
=V1SF0PG1-UC01	1	Compact enclosure AX	AX.6315450	RIT	RIT.6315450
=V1SF0PG1-UC01	1	Pedestal, open	CP.6106500	RIT	RIT.6106500
=V1SF0PG1-UC01	1	Coupling CP 60	CP.6206300	RIT	RIT.6206300
=V1SF0PG1-UC01	1	Accessory bag, for AX	AX.5051300	RIT	RIT.5051300
=V1SF0PG1-UC01	1	Mounting plate, for AX	AX.5051375	RIT	RIT.5051375
=V1WC4-FC1	1	Miniature Circuit Breaker MCBs - S200UDC - Number of Poles 1 - Tripping characteristic K	S201UDC-K5	ABB	ABB.2CDS271517R0357
=V1WC4-FC1	1	S2C-H6RU - Auxiliary Contact	S2C-H6RU	ABB	ABB.2CDS200914R0001
=V1WC4-FC2	1	Miniature Circuit Breaker MCBs - S200UDC - Number of Poles 1 - Tripping characteristic K	S201UDC-K5	ABB	ABB.2CDS271517R0357
=V1WC4-FC2	1	S2C-H6RU - Auxiliary Contact	S2C-H6RU	ABB	ABB.2CDS200914R0001
=V1WC4-XD1	1	RECEPTACLE MINI 5P MALE 1M	RSF 50-1M/NPT	TURCK	TUR.RSF 50-1M/NPT

+.UC12/2

+.UC51/1

			Date	1/24/2023	Volvo Trucks North America	Valiant TMS	Parts list : SIE.6ES7155-6AA01-0BN0_subassembly - TUR.RSF 50-1M/NPT	Drawing name: =2V01&EFS-EL_KF1	= + V1UC32	
			Ed.	MKLEPADLO						
			Appr		P6700 Framing - Cell 2V01, KF1	Scale 1:1		Document type: EPB	Project nr: 22-16152	Page 1 / 1630
Modification	Date	Name	Original		Replacement of	Replaced by				

Parts list

F01_001

Device tag	Quantity	Designation	Type number	Supplier	Part number
=V1SF0PG2-PG1	1	SIMATIC HMI TP700 COMFORT	6AV2124-0GC01-0AX0	SIE	SIE.6AV2124-0GC01-0AX0
=V1SF0PG2-PG1	1	SIMATIC HMI SD MEMORY CARD 2 GB	6AV2181-8XP00-0AX0	SIE	SIE.6AV2181-8XP00-0AX0
=V1SF0PG2-PNET1	1	Profinet cable - RJ45 plug to M12 Female receptacle; 0.5m long	RJ45S FKSDED 423-0.5M	TURCK	TUR.RJ45S FKSDED 423-0.5M
=V1SF0PG2-UC01	1	Compact enclosure AX	AX.6315150	RIT	RIT.6315150
=V1SF0PG2-UC01	1	Accessory bag, for AX	AX.5051300	RIT	RIT.5051300
=V1SF0PG2-UC01	1	Mounting plate, for AX	AX.5051368	RIT	RIT.5051368
=V1SF0PG2-XD1	1	RECEPTACLE MINI 5P MALE 1M	RSF 50-1M/NPT	TURCK	TUR.RSF 50-1M/NPT

+.UC32/1

+.UC61/1

			Date	1/24/2023	Volvo Trucks North America	Valiant TMS	Parts list : SIE.6AV2124-0GC01-0AX0 - TUR.RSF 50-1M/NPT	Drawing name: =2V01&EFS-EL_KF1	=	
			Ed.	MKLEPADLO					+ V1UC51	
			Appr		P6700 Framing - Cell 2V01, KF1	Scale 1:1		Document type: EPB	Project nr: 22-16152	Page 1 / 1630
Modification	Date	Name	Original		Replacement of	Replaced by				

Parts list

F01_001

Device tag	Quantity	Designation	Type number	Supplier	Part number
=V1PZ1PF1-PF1	1	Signaling column connection element for pipe mounting incl. end cover and seal	8WD4408-0AA	SIE	SIE.8WD4408-0AA
=V1PZ1PF1-PF1	1	Tube with foot, tube length 100 mm, accessory for signaling columns 8WD44, D=70 mm	8WD4308-0DA	SIEMENS	SIE.8WD4308-0DA
=V1PZ1PF1-PF1	1	Signaling column multifunctional siren element different sounds can be set 24 V	8WD4420-0EA2		SIE.8WD4420-0EA2
=V1PZ1PF1-PF1	1	Signaling column continuous light element LED red, 24 V AC/DC	8WD4420-5AB	SIE	SIE.8WD4420-5AB
=V1PZ1PF1-PF1	1	Signaling column continuous light element LED green, 24 V AC/DC	8WD4420-5AC	SIE	SIE.8WD4420-5AC
=V1PZ1PF1-PF1	1	Signaling column continuous light element LED yellow, 24 V AC/DC	8WD4420-5AD	SIE	SIE.8WD4420-5AD
=V1PZ1PF1-PF1	1	Signaling column continuous light element LED blue, 24 V AC/DC	8WD4420-5AF	SIE	SIE.8WD4420-5AF
=V1PZ1PF1-UC01	1	Small enclosures KX	KX.1574000		RIT.1574000
=V1PZ1PF1-XD1	1	RECEPTACLE 1-1/8" MINIFAST 10P MALE 2M	RSF 106-2M/14.5/NPT/CS16486	TURCK	TUR.RSF 106-2M/14.5/NPT/CS16486

+.UC51/1

+.UC71/1

			Date	1/24/2023	Volvo Trucks North America	Valiant TMS	Parts list : SIE.8WD4408-0AA - TUR.RSF 106-2M/14.5/NPT/CS16486	Drawing name: =2V01&EFS-EL_KF1	= + V1UC61
			Ed.	MKLEPADLO					
			Appr		P6700 Framing - Cell 2V01, KF1	Scale 1:1		Document type: EPB	Project nr: 22-16152
Modification	Date	Name	Original		Replacement of / Replaced by				Page 1 / 1630

Parts list

F01_001

Device tag	Quantity	Designation	Type number	Supplier	Part number
=V1SF0SF1-SF1	1	Push-to-Stop, Twist-to-Release Electro-Mechanical Push Buttons	SSA-EBM Series	BANNER	BAN.SSA-EBM-12EB1Q8OTBB

+.UC61/1

+.UL1/1

			Date	1/24/2023	Volvo Trucks North America	Valiant TMS	Parts list : BAN.SSA-EBM-12EB1Q8OTBB - BAN.SSA-EBM-12EB1Q8OTBB	Drawing name: =2V01&EFS-EL_KF1	=	
			Ed.	MKLEPADLO					+ V1UC71	
			Appr		P6700 Framing - Cell 2V01, KF1	Scale 1:1		Document type: EPB	Project nr: 22-16152	Page 1 / 1630
Modification	Date	Name	Original		Replacement of	Replaced by				

Parts list

F01_001

Device tag	Quantity	Designation	Type number	Supplier	Part number
=V1UL1KF1-KF1.11	1	MVK-MPNIO DIO16 IRT 7/8" 5pin	MVK-MPNIO DI16	MURR	MURR.55530
=V1UL1KF2-KF2.11	1	MVK-MPNIO DIO16 IRT 7/8" 5pin	MVK-MPNIO DI16	MURR	MURR.55530

+.UC71/1

+.UL1UQ1.1/1

			Date	1/24/2023	Volvo Trucks North America	Valiant TMS	Parts list : MURR.55530 - MURR.55530	Drawing name: =2V01&EFS-EL_KF1	= + V1UL1
			Ed.	MKLEPADLO					
			Appr		P6700 Framing - Cell 2V01, KF1			Document type: EPB / Project nr: 22-16152	Page 1 / 1630
Modification	Date	Name	Original		Replacement of / Replaced by	Scale 1:1			

Parts list

F01_001

Device tag	Quantity	Designation	Type number	Supplier	Part number
=V1UL1UQ1.1-BGS/R	1	Inductive sensor Monitoring Kit for Underbody Clamps	284395	P+F	P+F.284395

+V1UL1/1

+.UL1UQ1.2/1

			Date	1/24/2023	Volvo Trucks North America	Valiant TMS	Parts list : P+F.284395 - P+F.284395	Drawing name: =2V01&EFS-EL_KF1	= + V1UL1UQ1.1
			Ed.	MKLEPADLO					
			Appr		P6700 Framing - Cell 2V01, KF1	Scale 1:1		Document type: EPB / Project nr: 22-16152	Page 1 / 1630
Modification	Date	Name	Original		Replacement of / Replaced by				

Parts list

F01_001

Device tag	Quantity	Designation	Type number	Supplier	Part number
=V1UL1UQ1.2-BGS/R	1	Inductive sensor Monitoring Kit for Power Clamps	1324638	TUNKERS	TUN.1324638

+.UL1UQ1.1/1

+.UL1UQ1.3/1

			Date	1/24/2023	Volvo Trucks North America	Valiant TMS	Parts list : TUN.1324638 - TUN.1324638	Drawing name: =2V01&EFS-EL_KF1	=
			Ed.	MKLEPADLO					+ V1UL1UQ1.2
			Appr		P6700 Framing - Cell 2V01, KF1	Scale 1:1		Document type: EPB	Project nr: 22-16152
Modification	Date	Name	Original		Replacement of	Replaced by			Page 1 / 1630

Parts list

F01_001

Device tag	Quantity	Designation	Type number	Supplier	Part number
=V1UL1UQ1.3-BGS/R	1	Inductive sensor Monitoring Kit for Power Clamps	1324638	TUNKERS	TUN.1324638

+.UL1UQ1.2/1

+.UL1UQ1.4/1

			Date	1/24/2023	Volvo Trucks North America	Valiant TMS	Parts list : TUN.1324638 - TUN.1324638	Drawing name: =2V01&EFS-EL_KF1	=
			Ed.	MKLEPADLO					+ V1UL1UQ1.3
			Appr		P6700 Framing - Cell 2V01, KF1	Scale 1:1		Document type: EPB	Project nr: 22-16152
Modification	Date	Name	Original		Replacement of	Replaced by			Page 1 / 1630

Parts list

F01_001

Device tag	Quantity	Designation	Type number	Supplier	Part number
=V1UL1UQ1.4-BGS/R	1	Inductive sensor Monitoring Kit for Underbody Clamps	284395	P+F	P+F.284395

+.UL1UQ1.3/1

+.UL1UQ2.1/1

			Date	1/24/2023	Volvo Trucks North America	Valiant TMS	Parts list : P+F.284395 - P+F.284395	Drawing name: =2V01&EFS-EL_KF1	=	
			Ed.	MKLEPADLO					+ V1UL1UQ1.4	
			Appr		P6700 Framing - Cell 2V01, KF1	Scale 1:1		Document type: EPB	Project nr: 22-16152	Page 1 / 1630
Modification	Date	Name	Original		Replacement of / Replaced by					

Parts list

F01_001

Device tag	Quantity	Designation	Type number	Supplier	Part number
=V1UL1UQ2.1-BGS/R	1	Inductive sensor Monitoring Kit for Underbody Clamps	284395	P+F	P+F.284395

+.UL1UQ1.4/1

+.UL1UQ2.2/1

			Date	1/24/2023	Volvo Trucks North America	Valiant TMS	Parts list : P+F.284395 - P+F.284395	Drawing name: =2V01&EFS-EL_KF1	= + V1UL1UQ2.1
			Ed.	MKLEPADLO					
			Appr		P6700 Framing - Cell 2V01, KF1	Scale 1:1		Document type: EPB / Project nr: 22-16152	Page 1 / 1630
Modification	Date	Name	Original		Replacement of / Replaced by				

Parts list

F01_001

Device tag	Quantity	Designation	Type number	Supplier	Part number
=V1UL1UQ2.2-BGS/R	1	Inductive sensor Monitoring Kit for Underbody Clamps	284395	P+F	P+F.284395

+.UL1UQ2.1/1

+.UL1UQ3.1/1

			Date	1/24/2023	Volvo Trucks North America	Valiant TMS	Parts list : P+F.284395 - P+F.284395	Drawing name: =2V01&EFS-EL_KF1	=
			Ed.	MKLEPADLO					+ V1UL1UQ2.2
			Appr		P6700 Framing - Cell 2V01, KF1	Scale 1:1		Document type: EPB	Project nr: 22-16152
Modification	Date	Name	Original		Replacement of	Replaced by			Page 1 / 1630

Parts list

F01_001

Device tag	Quantity	Designation	Type number	Supplier	Part number
=V1UL1UQ3.1-BGS/R	1	Inductive sensor Monitoring Kit for Underbody Clamps	284395	P+F	P+F.284395

+.UL1UQ2.2/1

+.UL1UQ3.2/1

Parts list

F01_001

Device tag	Quantity	Designation	Type number	Supplier	Part number
=V1UL1UQ3.2-BGS/R	1	Inductive sensor Monitoring Kit for Underbody Clamps	284395	P+F	P+F.284395

+.UL1UQ3.1/1

+.UL1UQ4.1/1

			Date	1/24/2023	Volvo Trucks North America	Valiant TMS	Parts list : P+F.284395 - P+F.284395	Drawing name: =2V01&EFS-EL_KF1	=	
			Ed.	MKLEPADLO					+ V1UL1UQ3.2	
			Appr		P6700 Framing - Cell 2V01, KF1	Scale 1:1		Document type: EPB	Project nr: 22-16152	Page 1 / 1630
Modification	Date	Name	Original		Replacement of	Replaced by				

Parts list

F01_001

Device tag	Quantity	Designation	Type number	Supplier	Part number
=V1UL1UQ4.1-BGS/R	1	Inductive sensor Monitoring Kit for Power Clamps	L3	WELKER	WEL.L3

+.UL1UQ3.2/1

+.UL1UQ4.2/1

			Date	1/24/2023	Volvo Trucks North America	Valiant TMS	Parts list : WEL.L3 - WEL.L3	Drawing name: =2V01&EFS-EL_KF1	=
			Ed.	MKLEPADLO					+ V1UL1UQ4.1
			Appr		P6700 Framing - Cell 2V01, KF1	Scale 1:1		Document type: EPB	Project nr: 22-16152
Modification	Date	Name	Original		Replacement of / Replaced by				Page 1 / 1630

Parts list

F01_001

Device tag	Quantity	Designation	Type number	Supplier	Part number
=V1UL1UQ4.2-BGS/R	1	Inductive sensor Monitoring Kit for Power Clamps	L3	WELKER	WEL.L3

+.UL1UQ4.1/1

+.UQ31/1

Parts list

F01_001

Device tag	Quantity	Designation	Type number	Supplier	Part number
=V1UQ31BG0-BG01	1	Inductive sensor With WeldGuard™ coating	BI20U-CA40-AP6X2-H1141/S1590W/BS2.0	TURCK	TUR.BI20U-CA40-AP6X2-H1141/S1590W/BS2.0
=V1UQ31BG0-BG02	1	Inductive sensor With WeldGuard™ coating	BI20U-CA40-AP6X2-H1141/S1590W/BS2.0	TURCK	TUR.BI20U-CA40-AP6X2-H1141/S1590W/BS2.0
=V1UQ31KF1-KF1	0	Bus node	CPX-FB33	FESTO	FES.548755
=V1UQ31KF1-KF1	0	Interlinking block	CPX-M-GE-EV-S-7/8-5POL	FES	FES.550208
=V1UQ31KF1-KF1.11	0	Manifold block	CPX-M-AB-8-M12X2-5POL	FES	FES.549335

+.UL1UQ4.2/1

+.UQ31UQ1.1/1

			Date	1/24/2023	Volvo Trucks North America	Valiant TMS	Parts list : TUR.BI20U-CA40-AP6X2-H1141/S1590W/BS2.0 - FES.549335	Drawing name: =2V01&EFS-EL_KF1	= + V1UQ31
			Ed.	MKLEPADLO					
			Appr		P6700 Framing - Cell 2V01, KF1	Scale 1:1		Document type: EPB	Project nr: 22-16152
Modification	Date	Name	Original		Replacement of / Replaced by				Page 1 / 1630

Parts list

F01_001

Device tag	Quantity	Designation	Type number	Supplier	Part number
=V1UQ31UQ1.1-BGS/R	1	Inductive sensor Monitoring Kit for Power Clamps	1324644	TUNKERS	TUN.1324644

+V1UQ31/1

+.UQ31UQ1.2/1

			Date	1/24/2023	Volvo Trucks North America	Valiant TMS	Parts list : TUN.1324644 - TUN.1324644	Drawing name: =2V01&EFS-EL_KF1	=
			Ed.	MKLEPADLO					+ V1UQ31UQ1.1
			Appr		P6700 Framing - Cell 2V01, KF1	Scale 1:1		Document type: EPB	Project nr: 22-16152
Modification	Date	Name	Original		Replacement of	Replaced by			Page 1 / 1630

Parts list

F01_001

Device tag	Quantity	Designation	Type number	Supplier	Part number
=V1UQ31UQ1.2-BGS/R	1	Inductive sensor Monitoring Kit for Power Clamps	1324644	TUNKERS	TUN.1324644

+.UQ31UQ1.1/1

+.UQ31UQ1.3/1

Parts list

F01_001

Device tag	Quantity	Designation	Type number	Supplier	Part number
=V1UQ31UQ1.3-BGS/R	1	Inductive sensor Monitoring Kit for Power Clamps	1324644	TUNKERS	TUN.1324644

+.UQ31UQ1.2/1

+.UQ31UQ1.4/1

			Date	1/24/2023	Volvo Trucks North America	Valiant TMS	Parts list : TUN.1324644 - TUN.1324644	Drawing name: =2V01&EFS-EL_KF1	= + V1UQ31UQ1.3
			Ed.	MKLEPADLO					
			Appr		P6700 Framing - Cell 2V01, KF1	Scale 1:1		Document type: EPB / Project nr: 22-16152	Page 1 / 1630
Modification	Date	Name	Original		Replacement of / Replaced by				

Parts list

F01_001

Device tag	Quantity	Designation	Type number	Supplier	Part number
=V1UQ31UQ1.4-BGS/R	1	Inductive sensor Monitoring Kit for Power Clamps	1324644	TUNKERS	TUN.1324644

+.UQ31UQ1.3/1

+.UQ31UQ2.1/1

			Date	1/24/2023	Volvo Trucks North America	Valiant TMS	Parts list : TUN.1324644 - TUN.1324644	Drawing name: =2V01&EFS-EL_KF1	= + V1UQ31UQ1.4
			Ed.	MKLEPADLO					
			Appr		P6700 Framing - Cell 2V01, KF1	Scale 1:1		Document type: EPB / Project nr: 22-16152	Page 1 / 1630
Modification	Date	Name	Original		Replacement of / Replaced by				

Parts list

F01_001

Device tag	Quantity	Designation	Type number	Supplier	Part number
=V1UQ31UQ2.1-BGS/R	1	Inductive sensor Monitoring Kit for Power Clamps	1324644	TUNKERS	TUN.1324644

+.UQ31UQ1.4/1

+.UQ31UQ2.2/1

Parts list

F01_001

Device tag	Quantity	Designation	Type number	Supplier	Part number
=V1UQ31UQ2.2-BGS/R	1	Inductive sensor Monitoring Kit for Power Clamps	1324644	TUNKERS	TUN.1324644

+.UQ31UQ2.1/1

+.UQ51/1

Parts list

F01_001

Device tag	Quantity	Designation	Type number	Supplier	Part number
=V1UQ51BG0-BG01	1	Inductive sensor With WeldGuard™ coating	BI20U-CA40-AP6X2-H1141/S1590W/BS2.0	TURCK	TUR.BI20U-CA40-AP6X2-H1141/S1590W/BS2.0
=V1UQ51BG0-BG02	1	Inductive sensor With WeldGuard™ coating	BI20U-CA40-AP6X2-H1141/S1590W/BS2.0	TURCK	TUR.BI20U-CA40-AP6X2-H1141/S1590W/BS2.0
=V1UQ51KF1-KF1.11	1	MVK-MPNIO DIO16 IRT 7/8" 5pin	MVK-MPNIO DI16	MURR	MURR.55530

+.UQ31UQ2.2/1

+.UQ53/1

			Date	1/24/2023	Volvo Trucks North America	Valiant TMS	Parts list : TUR.BI20U-CA40-AP6X2-H1141/S1590W/BS2.0 - MURR.55530	Drawing name: =2V01&EFS-EL_KF1	= + V1UQ51
			Ed.	MKLEPADLO					
			Appr		P6700 Framing - Cell 2V01, KF1	Scale 1:1		Document type: EPB	Project nr: 22-16152
Modification	Date	Name	Original		Replacement of / Replaced by				Page 1 / 1630

Parts list

F01_001

Device tag	Quantity	Designation	Type number	Supplier	Part number
=V1UQ53BG0-BG01	1	Q45 Series Fixed-Field Sensor	Q45VR3LPQPMA2D	BANNER	BAN.73260
=V1UQ53BG0-BG02	1	Inductive sensor	NI30U-MT30-AP6X-H1141	TURCK	TUR.1646633
=V1UQ53BG0-BG03	1	Inductive sensor	NI30U-MT30-AP6X-H1141	TURCK	TUR.1646633
=V1UQ53BG0-BG04	1	Inductive sensor	NI30U-MT30-AP6X-H1141	TURCK	TUR.1646633
=V1UQ53BG0-BG05	1	Inductive sensor	NI30U-MT30-AP6X-H1141	TURCK	TUR.1646633
=V1UQ53BG0-BG06	1	Inductive sensor	NI30U-MT30-AP6X-H1141	TURCK	TUR.1646633
=V1UQ53BG0-BG07	1	Inductive sensor	NI30U-MT30-AP6X-H1141	TURCK	TUR.1646633
=V1UQ53BG0-BG08	1	Inductive sensor	NI30U-MT30-AP6X-H1141	TURCK	TUR.1646633
=V1UQ53BG0-BG09	1	Inductive sensor	NI30U-MT30-AP6X-H1141	TURCK	TUR.1646633
=V1UQ53BG0-XG2/3	1	Y splitter	U2-30676	TURCK	TUR.VB2-FSM 4.4/2FKM 4/S3450
=V1UQ53BG0-XG4/5	1	Y splitter	U2-30676	TURCK	TUR.VB2-FSM 4.4/2FKM 4/S3450
=V1UQ53BG0-XG6/7	1	Y splitter	U2-30676	TURCK	TUR.VB2-FSM 4.4/2FKM 4/S3450
=V1UQ53BG0-XG8/9	1	Y splitter	U2-30676	TURCK	TUR.VB2-FSM 4.4/2FKM 4/S3450
=V1UQ53KF1-KF1	0	Bus node	CPX-FB33	FESTO	FES.548755
=V1UQ53KF1-KF1	0	Interlinking block	CPX-M-GE-EV-S-7/8-5POL	FES	FES.550208
=V1UQ53KF1-KF1.11	0	Manifold block	CPX-M-AB-8-M12X2-5POL	FES	FES.549335
=V1UQ53KF1-KF1.12	0	Manifold block	CPX-M-AB-8-M12X2-5POL	FES	FES.549335

+.UQ51/1

+.UQ53UQ5.1/1

			Date	1/24/2023	Volvo Trucks North America	Valiant TMS	Parts list : BAN.73260 - FES.549335	Drawing name: =2V01&EFS-EL_KF1	=	
			Ed.	MKLEPADLO					+ V1UQ53	
			Appr		P6700 Framing - Cell 2V01, KF1	Scale 1:1		Document type: EPB	Project nr: 22-16152	Page 1 / 1630
Modification	Date	Name	Original		Replacement of	Replaced by				

Parts list

F01_001

Device tag	Quantity	Designation	Type number	Supplier	Part number
=V1UQ53UQ5.1-BGR	1	Inductive sensor	BI4U-MT12E-AP6X2-H1141/S1589	TURCK	TUR.1644797
=V1UQ53UQ5.1-BGS	1	Inductive sensor	BI4U-MT12E-AP6X2-H1141/S1589	TURCK	TUR.1644797
=V1UQ53UQ5.1-XGR/S	1	Y splitter	U2-30676	TURCK	TUR.VB2-FSM 4.4/2FKM 4/S3450

+V1UQ53/1

+.WL2KF1/1

			Date	1/24/2023	Volvo Trucks North America	Valiant TMS	Parts list : TUR.1644797 - TUR.VB2-FSM 4.4/2FKM 4/S3450	Drawing name: =2V01&EFS-EL_KF1	= + V1UQ53UQ5.1
			Ed.	MKLEPADLO					
			Appr		P6700 Framing - Cell 2V01, KF1	Scale 1:1		Document type: EPB / Project nr: 22-16152	Page 1 / 1630
Modification	Date	Name	Original		Replacement of / Replaced by				

Parts list

F01_001

Device tag	Quantity	Designation	Type number	Supplier	Part number
=V1WL2WL1KF1-KF1.11	1	SINAMICS G120D CONTROL UNIT CU250D-2 PN-F	6SL3546-0FB21-1FA0	SIE	SIE.6SL3546-0FB21-1FA0

+.UQ53UQ5.1/1

+.WL2UC01/1

			Date	1/24/2023	Volvo Trucks North America	Valiant TMS	Parts list : SIE.6SL3546-0FB21-1FA0 - SIE.6SL3546-0FB21-1FA0	Drawing name: =2V01&EFS-EL_KF1	=	
			Ed.	MKLEPADLO					+ V1WL2KF1	
			Appr		P6700 Framing - Cell 2V01, KF1	Scale 1:1		Document type: EPB	Project nr: 22-16152	Page 1 / 1630
Modification	Date	Name	Original		Replacement of	Replaced by				

Parts list

F01_001

Device tag	Quantity	Designation	Type number	Supplier	Part number
=V1WL2WL1-TA1	1	SINAMICS PM250D-IP65-FSB-A-400V 3 KW	6SL3525-0PE23-0AA1	SIE	SIE.6SL3525-0PE23-0AA1
=V1WL2WL1WC1-Q1	1	DISCONNECT	EM3BMHANQ4SDCG10	E-M	EM.EM3BMHANQ4SDCG10

+.WL2KF1/1

+.WL3KF1/1

			Date	1/24/2023	Volvo Trucks North America	Valiant TMS	Parts list : SIE.6SL3525-0PE23-0AA1 - EM.EM3BMHANQ4SDCG10	Drawing name: =2V01&EFS-EL_KF1	=	
			Ed.	MKLEPADLO					+ V1WL2UC01	
			Appr		P6700 Framing - Cell 2V01, KF1	Scale 1:1		Document type: EPB	Project nr: 22-16152	Page 1 / 1630
Modification	Date	Name	Original		Replacement of	Replaced by				

Parts list

F01_001

Device tag	Quantity	Designation	Type number	Supplier	Part number
=V1WL3GM1KF1-KF1.11	1	SINAMICS G120D CONTROL UNIT CU240D-2 PN-F	6SL3544-0FB21-1FA0	SIEMENS	SIE.6SL3544-0FB21-1FA0
=V1WL3WL1KF1-KF1.11	1	SINAMICS G120D CONTROL UNIT CU250D-2 PN-F	6SL3546-0FB21-1FA0	SIE	SIE.6SL3546-0FB21-1FA0

+.WL2UC01/1

+.WL3UC01/1

			Date	1/24/2023	Volvo Trucks North America	Valiant TMS	Parts list : SIE.6SL3544-0FB21-1FA0 - SIE.6SL3546-0FB21-1FA0	Drawing name: =2V01&EFS-EL_KF1	=	
			Ed.	MKLEPADLO					+ V1WL3KF1	
			Appr		P6700 Framing - Cell 2V01, KF1	Scale 1:1		Document type: EPB	Project nr: 22-16152	Page 1
Modification	Date	Name	Original		Replacement of	Replaced by				1630

Parts list

F01_001

Device tag	Quantity	Designation	Type number	Supplier	Part number
=V1WL3GM1-TA1	1	SINAMICS PM250D-IP65-FSC-A-400V 5,5 KW	6SL3525-0PE25-5AA1	SIE	SIE.6SL3525-0PE25-5AA1
=V1WL3WL1-TA1	1	SINAMICS PM250D-IP65-FSB-A-400V 3 KW	6SL3525-0PE23-0AA1	SIE	SIE.6SL3525-0PE23-0AA1
=V1WL3WL1WC1-Q1	1	DISCONNECT	EM3BMHANQ4SDCG10	E-M	EM.EM3BMHANQ4SDCG10
=V1WL3WL1WC1-XG1	1	POWER TEE	EM3BMHANQ4CG1012	E-M	E-M.EM3BMHANQ4CG1012

+.WL3KF1/1

+V2AR21XQ11UC01/1

			Date	1/24/2023	Volvo Trucks North America	Valiant TMS	Parts list : SIE.6SL3525-0PE25-5AA1 - E-M.EM3BMHANQ4CG1012	Drawing name: =2V01&EFS-EL_KF1	=
			Ed.	MKLEPADLO					+ V1WL3UC01
			Appr		P6700 Framing - Cell 2V01, KF1	Scale 1:1		Document type: EPB	Project nr: 22-16152
Modification	Date	Name	Original		Replacement of	Replaced by			Page 1 / 1630

Parts list

F01_001

Device tag	Quantity	Designation	Type number	Supplier	Part number
=V2AR21XQ11WC1-XG1	1	Surface socket-outlet	416RS6	ABB	ABB.2CMA193115R1000

+V1WL3UC01/1

+.AR22XQ11UC01/1

			Date	1/24/2023	Volvo Trucks North America	Valiant TMS	Parts list : ABB.2CMA193115R1000 - ABB.2CMA193115R1000	Drawing name: =2V01&EFS-EL_KF1	= + V2AR21XQ11UC01
			Ed.	MKLEPADLO					
			Appr		P6700 Framing - Cell 2V01, KF1	Scale 1:1		Document type: EPB / Project nr: 22-16152	Page 1 / 1630
Modification	Date	Name	Original		Replacement of / Replaced by				

Parts list

F01_001

Device tag	Quantity	Designation	Type number	Supplier	Part number
=V2AR22XQ11WC1-XG1	1	Surface socket-outlet	416RS6	ABB	ABB.2CMA193115R1000

+.AR21XQ11UC01/1

+.AR23XQ11UC01/1

			Date	1/24/2023	Volvo Trucks North America	Valiant TMS	Parts list : ABB.2CMA193115R1000 - ABB.2CMA193115R1000	Drawing name: =2V01&EFS-EL_KF1	= + V2AR22XQ11UC01
			Ed.	MKLEPADLO					
			Appr		P6700 Framing - Cell 2V01, KF1	Scale 1:1		Document type: EPB / Project nr: 22-16152	Page 1 / 1630
Modification	Date	Name	Original		Replacement of / Replaced by				

Parts list

F01_001

Device tag	Quantity	Designation	Type number	Supplier	Part number
=V2AR23XQ11WC1-XG1	1	Surface socket-outlet	416RS6	ABB	ABB.2CMA193115R1000

+.AR22XQ11UC01/1

+.AR24XQ11UC01/1

			Date	1/24/2023	Volvo Trucks North America	Valiant TMS	Parts list : ABB.2CMA193115R1000 - ABB.2CMA193115R1000	Drawing name: =2V01&EFS-EL_KF1	= + V2AR23XQ11UC01
			Ed.	MKLEPADLO					
			Appr		P6700 Framing - Cell 2V01, KF1	Scale 1:1		Document type: EPB / Project nr: 22-16152	Page 1 / 1630
Modification	Date	Name	Original		Replacement of / Replaced by				

Parts list

F01_001

Device tag	Quantity	Designation	Type number	Supplier	Part number
=V2AR24XQ11WC1-XG1	1	Surface socket-outlet	416RS6	ABB	ABB.2CMA193115R1000

+.AR23XQ11UC01/1

+.AR31UQ41/1

			Date	1/24/2023	Volvo Trucks North America	Valiant TMS	Parts list : ABB.2CMA193115R1000 - ABB.2CMA193115R1000	Drawing name: =2V01&EFS-EL_KF1	= + V2AR24XQ11UC01
			Ed.	MKLEPADLO					
			Appr		P6700 Framing - Cell 2V01, KF1	Scale 1:1		Document type: EPB / Project nr: 22-16152	Page 1 / 1630
Modification	Date	Name	Original		Replacement of / Replaced by				

Parts list

F01_001

Device tag	Quantity	Designation	Type number	Supplier	Part number
=V2AR31UQ41BG0-BG01	1	Inductive sensor With WeldGuard™ coating	NI50U-CK40-AP6X2-H1141/S1590 W/BS4	TURCK	TUR.NI50U-CK40-AP6X2-H1141/S1590 W/BS4
=V2AR31UQ41BG0-BG02	1	Inductive sensor With WeldGuard™ coating	NI50U-CK40-AP6X2-H1141/S1590 W/BS4	TURCK	TUR.NI50U-CK40-AP6X2-H1141/S1590 W/BS4
=V2AR31UQ41BG0-BG03	1	Discrete Q4X: Proximity Mode	Q4XTKLAF600-Q8	BANNER	BAN.Q4XTKLAF600-Q8
=V2AR31UQ41BG0-BG04	1	Discrete Q4X: Proximity Mode	Q4XTKLAF600-Q8	BANNER	BAN.Q4XTKLAF600-Q8
=V2AR31UQ41BG0-BG05	1	Discrete Q4X: Proximity Mode	Q4XTKLAF600-Q8	BANNER	BAN.Q4XTKLAF600-Q8
=V2AR31UQ41BG0-XG1/2	1	Y splitter	U2-30676	TURCK	TUR.VB2-FSM 4.4/2FKM 4/S3450
=V2AR31UQ41BG0-XG3/4	1	Y splitter	U2-30676	TURCK	TUR.VB2-FSM 4.4/2FKM 4/S3450
=V2AR31UQ41KF1-KF1	0	Bus node	CPX-FB33	FESTO	FES.548755
=V2AR31UQ41KF1-KF1	0	Interlinking block	CPX-M-GE-EV-S-7/8-5POL	FES	FES.550208
=V2AR31UQ41KF1-KF1.11	0	Manifold block	CPX-M-AB-8-M12X2-5POL	FES	FES.549335
=V2AR31UQ41KF1-KF1.12	0	Manifold block	CPX-M-AB-8-M12X2-5POL	FES	FES.549335
=V2AR31UQ41KF1-KF1.13	0	Manifold block	CPX-M-AB-8-M12X2-5POL	FES	FES.549335

+.AR24XQ11UC01/1

+.AR31UQ41UQ1.1/1

			Date	1/24/2023	Volvo Trucks North America	Valiant TMS	Parts list : TUR.NI50U-CK40-AP6X2-H1141/S1590 W/BS4 - FES.549335	Drawing name: =2V01&EFS-EL_KF1	=	
			Ed.	MKLEPADLO					+ V2AR31UQ41	
			Appr		P6700 Framing - Cell 2V01, KF1	Scale 1:1		Document type: EPB	Project nr: 22-16152	Page 1 / 1630
Modification	Date	Name	Original		Replacement of	Replaced by				

Parts list

F01_001

Device tag	Quantity	Designation	Type number	Supplier	Part number
=V2AR31UQ41UQ1.1-BGS/R	1	Inductive sensor Monitoring Kit for Power Clamps	L3	WELKER	WEL.L3

+V2AR31UQ41/1

+.AR31UQ41UQ2.1/1

			Date	1/24/2023	Volvo Trucks North America	Valiant TMS	Parts list : WEL.L3 - WEL.L3	Drawing name: =2V01&EFS-EL_KF1	= + V2AR31UQ41UQ1.1
			Ed.	MKLEPADLO					
			Appr		P6700 Framing - Cell 2V01, KF1	Scale 1:1		Document type: EPB / Project nr: 22-16152	Page 1 / 1630
Modification	Date	Name	Original		Replacement of / Replaced by				

Parts list

F01_001

Device tag	Quantity	Designation	Type number	Supplier	Part number
=V2AR31UQ41UQ2.1-BGS/R	1	Inductive sensor Monitoring Kit for Power Clamps	1324638	TUNKERS	TUN.1324638

+.AR31UQ41UQ1.1/1

+.AR31UQ41UQ2.2/1

Parts list

F01_001

Device tag	Quantity	Designation	Type number	Supplier	Part number
=V2AR31UQ41UQ2.2-BGS/R	1	Inductive sensor Monitoring Kit for Power Clamps	1324638	TUNKERS	TUN.1324638

+.AR31UQ41UQ2.1/1

+.AR31UQ41UQ2.3/1

Parts list

F01_001

Device tag	Quantity	Designation	Type number	Supplier	Part number
=V2AR31UQ41UQ2.3-BGS/R	1	Inductive sensor Monitoring Kit for Power Clamps	1324638	TUNKERS	TUN.1324638

+.AR31UQ41UQ2.2/1

+.AR31UQ41UQ2.4/1

Parts list

F01_001

Device tag	Quantity	Designation	Type number	Supplier	Part number
=V2AR31UQ41UQ2.4-BGS/R	1	Inductive sensor Monitoring Kit for Power Clamps	1324638	TUNKERS	TUN.1324638

+.AR31UQ41UQ2.3/1

+.AR31UQ41UQ3.1/1

Parts list

F01_001

Device tag	Quantity	Designation	Type number	Supplier	Part number
=V2AR31UQ41UQ3.1-BGS/R	1	Inductive sensor Monitoring Kit for Power Clamps	1324638	TUNKERS	TUN.1324638

+.AR31UQ41UQ2.4/1

+.AR31UQ41UQ3.2/1

Parts list

F01_001

Device tag	Quantity	Designation	Type number	Supplier	Part number
=V2AR31UQ41UQ3.2-BGS/R	1	Inductive sensor Monitoring Kit for Power Clamps	1324638	TUNKERS	TUN.1324638

+.AR31UQ41UQ3.1/1

+.AR31UQ41UQ3.3/1

			Date	1/24/2023	Volvo Trucks North America	Valiant TMS	Parts list : TUN.1324638 - TUN.1324638	Drawing name: =2V01&EFS-EL_KF1	=	
			Ed.	MKLEPADLO					+ V2AR31UQ41UQ3.2	
			Appr		P6700 Framing - Cell 2V01, KF1	Scale 1:1		Document type: EPB	Project nr: 22-16152	Page 1 / 1630
Modification	Date	Name	Original		Replacement of	Replaced by				

Parts list

F01_001

Device tag	Quantity	Designation	Type number	Supplier	Part number
=V2AR31UQ41UQ3.3-BGS/R	1	Inductive sensor Monitoring Kit for Power Clamps	1324638	TUNKERS	TUN.1324638

+.AR31UQ41UQ3.2/1

+.AR31UQ41UQ4.1/1

Parts list

F01_001

Device tag	Quantity	Designation	Type number	Supplier	Part number
=V2AR31UQ41UQ4.1-BGS/R	1	Inductive sensor Monitoring Kit for Power Clamps	WWS001A	WELKER	WEL.WWS001A

+.AR31UQ41UQ3.3/1

+.AR31UQ41UQ5.1/1

Parts list

F01_001

Device tag	Quantity	Designation	Type number	Supplier	Part number
=V2AR31UQ41UQ5.1-BGS/R	1	Inductive sensor Monitoring Kit for Power Clamps	1324638	TUNKERS	TUN.1324638

+.AR31UQ41UQ4.1/1

+.AR31UQ41UQ5.2/1

			Date	1/24/2023	Volvo Trucks North America	Valiant TMS	Parts list : TUN.1324638 - TUN.1324638	Drawing name: =2V01&EFS-EL_KF1	= + V2AR31UQ41UQ5.1
			Ed.	MKLEPADLO					
			Appr		P6700 Framing - Cell 2V01, KF1	Scale 1:1		Document type: EPB / Project nr: 22-16152	Page 1 / 1630
Modification	Date	Name	Original		Replacement of / Replaced by				

Parts list

F01_001

Device tag	Quantity	Designation	Type number	Supplier	Part number
=V2AR31UQ41UQ5.2-BGS/R	1	Inductive sensor Monitoring Kit for Power Clamps	1324638	TUNKERS	TUN.1324638

+.AR31UQ41UQ5.1/1

+.AR31UQ41UQ6.1/1

			Date	1/24/2023	Volvo Trucks North America	Valiant TMS	Parts list : TUN.1324638 - TUN.1324638	Drawing name: =2V01&EFS-EL_KF1	= + V2AR31UQ41UQ5.2
			Ed.	MKLEPADLO					
			Appr		P6700 Framing - Cell 2V01, KF1	Scale 1:1		Document type: EPB / Project nr: 22-16152	Page 1 / 1630
Modification	Date	Name	Original		Replacement of / Replaced by				

Parts list

F01_001

Device tag	Quantity	Designation	Type number	Supplier	Part number
=V2AR31UQ41UQ6.1-BGS/R	1	Inductive sensor Monitoring Kit for Power Clamps	WWS001A	WELKER	WEL.WWS001A

+.AR31UQ41UQ5.2/1

+.AR31UQ41UQ7.1/1

			Date	1/24/2023	Volvo Trucks North America	Valiant TMS	Parts list : WEL.WWS001A - WEL.WWS001A	Drawing name: =2V01&EFS-EL_KF1	=	
			Ed.	MKLEPADLO					+ V2AR31UQ41UQ6.1	
			Appr		P6700 Framing - Cell 2V01, KF1	Scale 1:1		Document type: EPB	Project nr: 22-16152	Page 1 / 1630
Modification	Date	Name	Original		Replacement of / Replaced by					

Parts list

F01_001

Device tag	Quantity	Designation	Type number	Supplier	Part number
=V2AR31UQ41UQ7.1-BGS/R	1	Inductive sensor Monitoring Kit for Power Clamps	1324638	TUNKERS	TUN.1324638

+.AR31UQ41UQ6.1/1

+.AR31UQ41UQ7.2/1

Parts list

F01_001

Device tag	Quantity	Designation	Type number	Supplier	Part number
=V2AR31UQ41UQ7.2-BGS/R	1	Inductive sensor Monitoring Kit for Power Clamps	1324638	TUNKERS	TUN.1324638

+.AR31UQ41UQ7.1/1

+.AR31UQ42/1

Parts list

F01_001

Device tag	Quantity	Designation	Type number	Supplier	Part number
=V2AR31UQ42BG0-BG01	1	Inductive sensor With WeldGuard™ coating	NI50U-CK40-AP6X2-H1141/S1590 W/BS4	TURCK	TUR.NI50U-CK40-AP6X2-H1141/S1590 W/BS4
=V2AR31UQ42BG0-BG02	1	Inductive sensor With WeldGuard™ coating	NI50U-CK40-AP6X2-H1141/S1590 W/BS4	TURCK	TUR.NI50U-CK40-AP6X2-H1141/S1590 W/BS4
=V2AR31UQ42BG0-BG03	1	Discrete Q4X: Proximity Mode	Q4XTKLAF600-Q8	BANNER	BAN.Q4XTKLAF600-Q8
=V2AR31UQ42BG0-BG04	1	Discrete Q4X: Proximity Mode	Q4XTKLAF600-Q8	BANNER	BAN.Q4XTKLAF600-Q8
=V2AR31UQ42BG0-BG05	1	Discrete Q4X: Proximity Mode	Q4XTKLAF600-Q8	BANNER	BAN.Q4XTKLAF600-Q8
=V2AR31UQ42BG0-BG06	1	Discrete Q4X: Proximity Mode	Q4XTKLAF600-Q8	BANNER	BAN.Q4XTKLAF600-Q8
=V2AR31UQ42BG0-XG1/2	1	Y splitter	U2-30676	TURCK	TUR.VB2-FSM 4.4/2FKM 4/S3450
=V2AR31UQ42BG0-XG3/4	1	Y splitter	U2-30676	TURCK	TUR.VB2-FSM 4.4/2FKM 4/S3450
=V2AR31UQ42BG0-XG5/6	1	Y splitter	U2-30676	TURCK	TUR.VB2-FSM 4.4/2FKM 4/S3450
=V2AR31UQ42KF1-KF1	0	Bus node	CPX-FB33	FESTO	FES.548755
=V2AR31UQ42KF1-KF1	0	Interlinking block	CPX-M-GE-EV-S-7/8-5POL	FES	FES.550208
=V2AR31UQ42KF1-KF1.11	0	Manifold block	CPX-M-AB-8-M12X2-5POL	FES	FES.549335
=V2AR31UQ42KF1-KF1.12	0	Manifold block	CPX-M-AB-8-M12X2-5POL	FES	FES.549335
=V2AR31UQ42KF1-KF1.13	0	Manifold block	CPX-M-AB-8-M12X2-5POL	FES	FES.549335

+.AR31UQ41UQ7.2/1

+.AR31UQ42UQ1.1/1

			Date	1/24/2023	Volvo Trucks North America	Valiant TMS	Parts list : TUR.NI50U-CK40-AP6X2-H1141/S1590 W/BS4 - FES.549335	Drawing name: =2V01&EFS-EL_KF1	= + V2AR31UQ42
			Ed.	MKLEPADLO					
			Appr		P6700 Framing - Cell 2V01, KF1			Document type: EPB	Project nr: 22-16152
Modification	Date	Name	Original		Replacement of / Replaced by	Scale 1:1			Page 1 / 1630

Parts list

F01_001

Device tag	Quantity	Designation	Type number	Supplier	Part number
=V2AR31UQ42UQ1.1-BGS/R	1	Inductive sensor Monitoring Kit for Power Clamps	1324638	TUNKERS	TUN.1324638

+V2AR31UQ42/1

+.AR31UQ42UQ1.2/1

			Date	1/24/2023	Volvo Trucks North America	Valiant TMS	Parts list : TUN.1324638 - TUN.1324638	Drawing name: =2V01&EFS-EL_KF1	= + V2AR31UQ42UQ1.1
			Ed.	MKLEPADLO					
			Appr		P6700 Framing - Cell 2V01, KF1	Scale 1:1		Document type: EPB / Project nr: 22-16152	Page 1 / 1630
Modification	Date	Name	Original		Replacement of / Replaced by				

Parts list

F01_001

Device tag	Quantity	Designation	Type number	Supplier	Part number
=V2AR31UQ42UQ1.2-BGS/R	1	Inductive sensor Monitoring Kit for Power Clamps	1324638	TUNKERS	TUN.1324638

+.AR31UQ42UQ1.1/1

+.AR31UQ42UQ2.1/1

			Date	1/24/2023	Volvo Trucks North America	Valiant TMS	Parts list : TUN.1324638 - TUN.1324638	Drawing name: =2V01&EFS-EL_KF1	= + V2AR31UQ42UQ1.2
			Ed.	MKLEPADLO					
			Appr		P6700 Framing - Cell 2V01, KF1	Scale 1:1		Document type: EPB / Project nr: 22-16152	Page 1 / 1630
Modification	Date	Name	Original		Replacement of / Replaced by				

Parts list

F01_001

Device tag	Quantity	Designation	Type number	Supplier	Part number
=V2AR31UQ42UQ2.1-BGS/R	1	Inductive sensor Monitoring Kit for Power Clamps	1324638	TUNKERS	TUN.1324638

+.AR31UQ42UQ1.2/1

+.AR31UQ42UQ2.2/1

Parts list

F01_001

Device tag	Quantity	Designation	Type number	Supplier	Part number
=V2AR31UQ42UQ2.2-BGS/R	1	Inductive sensor Monitoring Kit for Power Clamps	1324638	TUNKERS	TUN.1324638

+.AR31UQ42UQ2.1/1

+.AR31UQ42UQ3.1/1

			Date	1/24/2023	Volvo Trucks North America	Valiant TMS	Parts list : TUN.1324638 - TUN.1324638	Drawing name: =2V01&EFS-EL_KF1	=	
			Ed.	MKLEPADLO					+ V2AR31UQ42UQ2.2	
			Appr		P6700 Framing - Cell 2V01, KF1	Scale 1:1		Document type: EPB	Project nr: 22-16152	Page 1 / 1630
Modification	Date	Name	Original		Replacement of	Replaced by				

Parts list

F01_001

Device tag	Quantity	Designation	Type number	Supplier	Part number
=V2AR31UQ42UQ3.1-BGS/R	1	Inductive sensor Monitoring Kit for Power Clamps	1324638	TUNKERS	TUN.1324638

+.AR31UQ42UQ2.2/1

+.AR31UQ42UQ3.2/1

			Date	1/24/2023	Volvo Trucks North America	Valiant TMS	Parts list : TUN.1324638 - TUN.1324638	Drawing name: =2V01&EFS-EL_KF1	=	
			Ed.	MKLEPADLO					+ V2AR31UQ42UQ3.1	
			Appr		P6700 Framing - Cell 2V01, KF1	Scale 1:1		Document type: EPB	Project nr: 22-16152	Page 1 / 1630
Modification	Date	Name	Original		Replacement of / Replaced by					

Parts list

F01_001

Device tag	Quantity	Designation	Type number	Supplier	Part number
=V2AR31UQ42UQ3.2-BGS/R	1	Inductive sensor Monitoring Kit for Power Clamps	1324638	TUNKERS	TUN.1324638

+.AR31UQ42UQ3.1/1

+.AR31XQ41/1

			Date	1/24/2023	Volvo Trucks North America	Valiant TMS	Parts list : TUN.1324638 - TUN.1324638	Drawing name: =2V01&EFS-EL_KF1	= + V2AR31UQ42UQ3.2
			Ed.	MKLEPADLO					
			Appr		P6700 Framing - Cell 2V01, KF1	Scale 1:1		Document type: EPB / Project nr: 22-16152	Page 1 / 1630
Modification	Date	Name	Original		Replacement of / Replaced by				

Parts list

F01_001

Device tag	Quantity	Designation	Type number	Supplier	Part number
=V2AR31XQ41KF1-KF1	0	Bus node	CPX-FB33	FESTO	FES.548755
=V2AR31XQ41KF1-KF1	0	Interlinking block	CPX-M-GE-EV-S-7/8-5POL	FES	FES.550208
=V2AR31XQ41KF1-KF1.11	0	Manifold block	CPX-M-AB-8-M12X2-5POL	FES	FES.549335

+.AR31UQ42UQ3.2/1

+.AR31XQ41UQ1.1/1

			Date	1/24/2023	Volvo Trucks North America	Valiant TMS	Parts list : FES.548755 - FES.549335	Drawing name: =2V01&EFS-EL_KF1	=	
			Ed.	MKLEPADLO					+ V2AR31XQ41	
			Appr		P6700 Framing - Cell 2V01, KF1	Scale 1:1		Document type: EPB	Project nr: 22-16152	Page 1 / 1630
Modification	Date	Name	Original		Replacement of / Replaced by					

Parts list

F01_001

Device tag	Quantity	Designation	Type number	Supplier	Part number
=V2AR31XQ41UQ1.1-BGR	1	Inductive sensor	BI20U-CA40-AP6X2-H1141/S1590 W/BS2.0	Turck	TUR.1627205
=V2AR31XQ41UQ1.1-BGS	1	Inductive sensor	BI20U-CA40-AP6X2-H1141/S1590 W/BS2.0	Turck	TUR.1627205
=V2AR31XQ41UQ1.1-XG1/2	1	Y splitter	U2-30676	TURCK	TUR.VB2-FSM 4.4/2FKM 4/S3450

+V2AR31XQ41/1

+.AR32UQ41/1

			Date	1/24/2023	Volvo Trucks North America	Valiant TMS	Parts list : TUR.1627205 - TUR.VB2-FSM 4.4/2FKM 4/S3450	Drawing name: =2V01&EFS-EL_KF1	= + V2AR31XQ41UQ1.1
			Ed.	MKLEPADLO					
			Appr		P6700 Framing - Cell 2V01, KF1	Scale 1:1		Document type: EPB	Project nr: 22-16152
Modification	Date	Name	Original		Replacement of	Replaced by			Page 1 / 1630

Parts list

F01_001

Device tag	Quantity	Designation	Type number	Supplier	Part number
=V2AR32UQ41BG0-BG01	1	Inductive sensor With WeldGuard™ coating	NI50U-CK40-AP6X2-H1141/S1590 W/BS4	TURCK	TUR.NI50U-CK40-AP6X2-H1141/S1590 W/BS4
=V2AR32UQ41BG0-BG02	1	Inductive sensor With WeldGuard™ coating	NI50U-CK40-AP6X2-H1141/S1590 W/BS4	TURCK	TUR.NI50U-CK40-AP6X2-H1141/S1590 W/BS4
=V2AR32UQ41BG0-BG03	1	Discrete Q4X: Proximity Mode	Q4XTKLAF600-Q8	BANNER	BAN.Q4XTKLAF600-Q8
=V2AR32UQ41BG0-BG04	1	Discrete Q4X: Proximity Mode	Q4XTKLAF600-Q8	BANNER	BAN.Q4XTKLAF600-Q8
=V2AR32UQ41BG0-BG05	1	Discrete Q4X: Proximity Mode	Q4XTKLAF600-Q8	BANNER	BAN.Q4XTKLAF600-Q8
=V2AR32UQ41BG0-XG1/2	1	Y splitter	U2-30676	TURCK	TUR.VB2-FSM 4.4/2FKM 4/S3450
=V2AR32UQ41BG0-XG3/4	1	Y splitter	U2-30676	TURCK	TUR.VB2-FSM 4.4/2FKM 4/S3450
=V2AR32UQ41KF1-KF1	0	Bus node	CPX-FB33	FESTO	FES.548755
=V2AR32UQ41KF1-KF1	0	Interlinking block	CPX-M-GE-EV-S-7/8-5POL	FES	FES.550208
=V2AR32UQ41KF1-KF1.11	0	Manifold block	CPX-M-AB-8-M12X2-5POL	FES	FES.549335
=V2AR32UQ41KF1-KF1.12	0	Manifold block	CPX-M-AB-8-M12X2-5POL	FES	FES.549335
=V2AR32UQ41KF1-KF1.13	0	Manifold block	CPX-M-AB-8-M12X2-5POL	FES	FES.549335

+.AR31XQ41UQ1.1/1

+.AR32UQ41UQ1.1/1

			Date	1/24/2023	Volvo Trucks North America	Valiant TMS	Parts list : TUR.NI50U-CK40-AP6X2-H1141/S1590 W/BS4 - FES.549335	Drawing name: =2V01&EFS-EL_KF1	= + V2AR32UQ41
			Ed.	MKLEPADLO					
			Appr		P6700 Framing - Cell 2V01, KF1	Scale 1:1		Document type: EPB	Project nr: 22-16152
Modification	Date	Name	Original		Replacement of / Replaced by				Page 1 / 1630

Parts list

F01_001

Device tag	Quantity	Designation	Type number	Supplier	Part number
=V2AR32UQ41UQ1.1-BGS/R	1	Inductive sensor Monitoring Kit for Power Clamps	L3	WELKER	WEL.L3

+V2AR32UQ41/1

+.AR32UQ41UQ2.1/1

			Date	1/24/2023	Volvo Trucks North America	Valiant TMS	Parts list : WEL.L3 - WEL.L3	Drawing name: =2V01&EFS-EL_KF1	= + V2AR32UQ41UQ1.1
			Ed.	MKLEPADLO					
			Appr		P6700 Framing - Cell 2V01, KF1	Scale 1:1		Document type: EPB / Project nr: 22-16152	Page 1 / 1630
Modification	Date	Name	Original		Replacement of / Replaced by				

Parts list

F01_001

Device tag	Quantity	Designation	Type number	Supplier	Part number
=V2AR32UQ41UQ2.1-BGS/R	1	Inductive sensor Monitoring Kit for Power Clamps	1324638	TUNKERS	TUN.1324638

+.AR32UQ41UQ1.1/1

+.AR32UQ41UQ2.2/1

			Date	1/24/2023	Volvo Trucks North America	Valiant TMS	Parts list : TUN.1324638 - TUN.1324638	Drawing name: =2V01&EFS-EL_KF1	= + V2AR32UQ41UQ2.1
			Ed.	MKLEPADLO					
			Appr		P6700 Framing - Cell 2V01, KF1	Scale 1:1		Document type: EPB / Project nr: 22-16152	Page 1 / 1630
Modification	Date	Name	Original		Replacement of / Replaced by				

Parts list

F01_001

Device tag	Quantity	Designation	Type number	Supplier	Part number
=V2AR32UQ41UQ2.2-BGS/R	1	Inductive sensor Monitoring Kit for Power Clamps	1324638	TUNKERS	TUN.1324638

+.AR32UQ41UQ2.1/1

+.AR32UQ41UQ2.3/1

			Date	1/24/2023	Volvo Trucks North America	Valiant TMS	Parts list : TUN.1324638 - TUN.1324638	Drawing name: =2V01&EFS-EL_KF1	= + V2AR32UQ41UQ2.2
			Ed.	MKLEPADLO					
			Appr		P6700 Framing - Cell 2V01, KF1	Scale 1:1		Document type: EPB / Project nr: 22-16152	Page 1 / 1630
Modification	Date	Name	Original		Replacement of / Replaced by				

Parts list

F01_001

Device tag	Quantity	Designation	Type number	Supplier	Part number
=V2AR32UQ41UQ2.3-BGS/R	1	Inductive sensor Monitoring Kit for Power Clamps	1324638	TUNKERS	TUN.1324638

			Date	1/24/2023	Volvo Trucks North America	Valiant TMS	Parts list : TUN.1324638 - TUN.1324638	Drawing name: =2V01&EFS-EL_KF1	=	
			Ed.	MKLEPADLO					+ V2AR32UQ41UQ2.3	
			Appr		P6700 Framing - Cell 2V01, KF1	Scale 1:1		Document type: EPB	Project nr: 22-16152	Page 1 / 1630
Modification	Date	Name	Original		Replacement of / Replaced by					

Parts list

F01_001

Device tag	Quantity	Designation	Type number	Supplier	Part number
=V2AR32UQ41UQ2.4-BGS/R	1	Inductive sensor Monitoring Kit for Power Clamps	1324638	TUNKERS	TUN.1324638

+.AR32UQ41UQ2.3/1

+.AR32UQ41UQ3.1/1

			Date	1/24/2023	Volvo Trucks North America	Valiant TMS	Parts list : TUN.1324638 - TUN.1324638	Drawing name: =2V01&EFS-EL_KF1	= + V2AR32UQ41UQ2.4
			Ed.	MKLEPADLO					
			Appr		P6700 Framing - Cell 2V01, KF1	Scale 1:1		Document type: EPB / Project nr: 22-16152	Page 1 / 1630
Modification	Date	Name	Original		Replacement of / Replaced by				

Parts list

F01_001

Device tag	Quantity	Designation	Type number	Supplier	Part number
=V2AR32UQ41UQ3.1-BGS/R	1	Inductive sensor Monitoring Kit for Power Clamps	1324638	TUNKERS	TUN.1324638

+.AR32UQ41UQ2.4/1

+.AR32UQ41UQ3.2/1

			Date	1/24/2023	Volvo Trucks North America	Valiant TMS	Parts list : TUN.1324638 - TUN.1324638	Drawing name: =2V01&EFS-EL_KF1	= + V2AR32UQ41UQ3.1
			Ed.	MKLEPADLO					
			Appr		P6700 Framing - Cell 2V01, KF1	Scale 1:1		Document type: EPB / Project nr: 22-16152	Page 1 / 1630
Modification	Date	Name	Original		Replacement of / Replaced by				

Parts list

F01_001

Device tag	Quantity	Designation	Type number	Supplier	Part number
=V2AR32UQ41UQ3.2-BGS/R	1	Inductive sensor Monitoring Kit for Power Clamps	1324638	TUNKERS	TUN.1324638

+.AR32UQ41UQ3.1/1

+.AR32UQ41UQ3.3/1

Parts list

F01_001

Device tag	Quantity	Designation	Type number	Supplier	Part number
=V2AR32UQ41UQ3.3-BGS/R	1	Inductive sensor Monitoring Kit for Power Clamps	1324638	TUNKERS	TUN.1324638

+.AR32UQ41UQ3.2/1

+.AR32UQ41UQ4.1/1

			Date	1/24/2023	Volvo Trucks North America	Valiant TMS	Parts list : TUN.1324638 - TUN.1324638	Drawing name: =2V01&EFS-EL_KF1	= + V2AR32UQ41UQ3.3
			Ed.	MKLEPADLO					
			Appr		P6700 Framing - Cell 2V01, KF1	Scale 1:1		Document type: EPB / Project nr: 22-16152	Page 1 / 1630
Modification	Date	Name	Original		Replacement of / Replaced by				

Parts list

F01_001

Device tag	Quantity	Designation	Type number	Supplier	Part number
=V2AR32UQ41UQ4.1-BGS/R	1	Inductive sensor Monitoring Kit for Power Clamps	WWS001A	WELKER	WEL.WWS001A

+.AR32UQ41UQ3.3/1

+.AR32UQ41UQ5.1/1

Parts list

F01_001

Device tag	Quantity	Designation	Type number	Supplier	Part number
=V2AR32UQ41UQ5.1-BGS/R	1	Inductive sensor Monitoring Kit for Power Clamps	1324638	TUNKERS	TUN.1324638

+.AR32UQ41UQ4.1/1

+.AR32UQ41UQ5.2/1

			Date	1/24/2023	Volvo Trucks North America	Valiant TMS	Parts list : TUN.1324638 - TUN.1324638	Drawing name: =2V01&EFS-EL_KF1	= + V2AR32UQ41UQ5.1
			Ed.	MKLEPADLO					
			Appr		P6700 Framing - Cell 2V01, KF1	Scale 1:1		Document type: EPB / Project nr: 22-16152	Page 1 / 1630
Modification	Date	Name	Original		Replacement of / Replaced by				

Parts list

F01_001

Device tag	Quantity	Designation	Type number	Supplier	Part number
=V2AR32UQ41UQ5.2-BGS/R	1	Inductive sensor Monitoring Kit for Power Clamps	1324638	TUNKERS	TUN.1324638

+.AR32UQ41UQ5.1/1

+.AR32UQ41UQ6.1/1

			Date	1/24/2023	Volvo Trucks North America	Valiant TMS	Parts list : TUN.1324638 - TUN.1324638	Drawing name: =2V01&EFS-EL_KF1	=	
			Ed.	MKLEPADLO					+ V2AR32UQ41UQ5.2	
			Appr		P6700 Framing - Cell 2V01, KF1	Scale 1:1		Document type: EPB	Project nr: 22-16152	Page 1 / 1630
Modification	Date	Name	Original		Replacement of	Replaced by				

Parts list

F01_001

Device tag	Quantity	Designation	Type number	Supplier	Part number
=V2AR32UQ41UQ6.1-BGS/R	1	Inductive sensor Monitoring Kit for Power Clamps	WWS001A	WELKER	WEL.WWS001A

+.AR32UQ41UQ5.2/1

+.AR32UQ41UQ7.1/1

			Date	1/24/2023	Volvo Trucks North America	Valiant TMS	Parts list : WEL.WWS001A - WEL.WWS001A	Drawing name: =2V01&EFS-EL_KF1	=	
			Ed.	MKLEPADLO					+ V2AR32UQ41UQ6.1	
			Appr		P6700 Framing - Cell 2V01, KF1	Scale 1:1		Document type: EPB	Project nr: 22-16152	Page 1 / 1630
Modification	Date	Name	Original		Replacement of / Replaced by					

Parts list

F01_001

Device tag	Quantity	Designation	Type number	Supplier	Part number
=V2AR32UQ41UQ7.1-BGS/R	1	Inductive sensor Monitoring Kit for Power Clamps	1324638	TUNKERS	TUN.1324638

+.AR32UQ41UQ6.1/1

+.AR32UQ41UQ7.2/1

Parts list

F01_001

Device tag	Quantity	Designation	Type number	Supplier	Part number
=V2AR32UQ41UQ7.2-BGS/R	1	Inductive sensor Monitoring Kit for Power Clamps	1324638	TUNKERS	TUN.1324638

+.AR32UQ41UQ7.1/1

+.AR32UQ42/1

			Date	1/24/2023	Volvo Trucks North America	Valiant TMS	Parts list : TUN.1324638 - TUN.1324638	Drawing name: =2V01&EFS-EL_KF1	= + V2AR32UQ41UQ7.2
			Ed.	MKLEPADLO					
			Appr		P6700 Framing - Cell 2V01, KF1	Scale 1:1		Document type: EPB	Project nr: 22-16152
Modification	Date	Name	Original		Replacement of	Replaced by			Page 1 / 1630

Parts list

F01_001

Device tag	Quantity	Designation	Type number	Supplier	Part number
=V2AR32UQ42BG0-BG01	1	Inductive sensor With WeldGuard™ coating	NI50U-CK40-AP6X2-H1141/S1590 W/BS4	TURCK	TUR.NI50U-CK40-AP6X2-H1141/S1590 W/BS4
=V2AR32UQ42BG0-BG02	1	Inductive sensor With WeldGuard™ coating	NI50U-CK40-AP6X2-H1141/S1590 W/BS4	TURCK	TUR.NI50U-CK40-AP6X2-H1141/S1590 W/BS4
=V2AR32UQ42BG0-BG03	1	Discrete Q4X: Proximity Mode	Q4XTKLAF600-Q8	BANNER	BAN.Q4XTKLAF600-Q8
=V2AR32UQ42BG0-BG04	1	Discrete Q4X: Proximity Mode	Q4XTKLAF600-Q8	BANNER	BAN.Q4XTKLAF600-Q8
=V2AR32UQ42BG0-BG05	1	Discrete Q4X: Proximity Mode	Q4XTKLAF600-Q8	BANNER	BAN.Q4XTKLAF600-Q8
=V2AR32UQ42BG0-XG1/2	1	Y splitter	U2-30676	TURCK	TUR.VB2-FSM 4.4/2FKM 4/S3450
=V2AR32UQ42BG0-XG3/4	1	Y splitter	U2-30676	TURCK	TUR.VB2-FSM 4.4/2FKM 4/S3450
=V2AR32UQ42KF1-KF1	0	Bus node	CPX-FB33	FESTO	FES.548755
=V2AR32UQ42KF1-KF1	0	Interlinking block	CPX-M-GE-EV-S-7/8-5POL	FES	FES.550208
=V2AR32UQ42KF1-KF1.11	0	Manifold block	CPX-M-AB-8-M12X2-5POL	FES	FES.549335
=V2AR32UQ42KF1-KF1.12	0	Manifold block	CPX-M-AB-8-M12X2-5POL	FES	FES.549335

+.AR32UQ41UQ7.2/1

+.AR32UQ42UQ1.1/1

			Date	1/24/2023	Volvo Trucks North America	Valiant TMS	Parts list : TUR.NI50U-CK40-AP6X2-H1141/S1590 W/BS4 - FES.549335	Drawing name: =2V01&EFS-EL_KF1	= + V2AR32UQ42
			Ed.	MKLEPADLO					
			Appr		P6700 Framing - Cell 2V01, KF1	Scale 1:1		Document type: EPB	Project nr: 22-16152
Modification	Date	Name	Original		Replacement of	Replaced by			Page 1 / 1630

Parts list

F01_001

Device tag	Quantity	Designation	Type number	Supplier	Part number
=V2AR32UQ42UQ1.1-BGS/R	1	Inductive sensor Monitoring Kit for Power Clamps	1324638	TUNKERS	TUN.1324638

+V2AR32UQ42/1

+.AR32UQ42UQ1.2/1

			Date	1/24/2023	Volvo Trucks North America	Valiant TMS	Parts list : TUN.1324638 - TUN.1324638	Drawing name: =2V01&EFS-EL_KF1	= + V2AR32UQ42UQ1.1
			Ed.	MKLEPADLO					
			Appr		P6700 Framing - Cell 2V01, KF1	Scale 1:1		Document type: EPB / Project nr: 22-16152	Page 1 / 1630
Modification	Date	Name	Original		Replacement of / Replaced by				

Parts list

F01_001

Device tag	Quantity	Designation	Type number	Supplier	Part number
=V2AR32UQ42UQ1.2-BGS/R	1	Inductive sensor Monitoring Kit for Power Clamps	1324638	TUNKERS	TUN.1324638

+.AR32UQ42UQ1.1/1

+.AR32UQ42UQ2.1/1

			Date	1/24/2023	Volvo Trucks North America	Valiant TMS	Parts list : TUN.1324638 - TUN.1324638	Drawing name: =2V01&EFS-EL_KF1	= + V2AR32UQ42UQ1.2
			Ed.	MKLEPADLO					
			Appr		P6700 Framing - Cell 2V01, KF1	Scale 1:1		Document type: EPB / Project nr: 22-16152	Page 1 / 1630
Modification	Date	Name	Original		Replacement of / Replaced by				

Parts list

F01_001

Device tag	Quantity	Designation	Type number	Supplier	Part number
=V2AR32UQ42UQ2.1-BGS/R	1	Inductive sensor Monitoring Kit for Power Clamps	1324638	TUNKERS	TUN.1324638

+.AR32UQ42UQ1.2/1

+.AR32UQ42UQ2.2/1

Parts list

F01_001

Device tag	Quantity	Designation	Type number	Supplier	Part number
=V2AR32UQ42UQ2.2-BGS/R	1	Inductive sensor Monitoring Kit for Power Clamps	1324638	TUNKERS	TUN.1324638

+.AR32UQ42UQ2.1/1

+.AR32XQ41/1

			Date	1/24/2023	Volvo Trucks North America	Valiant TMS	Parts list : TUN.1324638 - TUN.1324638	Drawing name: =2V01&EFS-EL_KF1	=	
			Ed.	MKLEPADLO					+ V2AR32UQ42UQ2.2	
			Appr		P6700 Framing - Cell 2V01, KF1	Scale 1:1		Document type: EPB	Project nr: 22-16152	Page 1 / 1630
Modification	Date	Name	Original		Replacement of	Replaced by				

Parts list

F01_001

Device tag	Quantity	Designation	Type number	Supplier	Part number
=V2AR32XQ41KF1-KF1	0	Bus node	CPX-FB33	FESTO	FES.548755
=V2AR32XQ41KF1-KF1	0	Interlinking block	CPX-M-GE-EV-S-7/8-5POL	FES	FES.550208
=V2AR32XQ41KF1-KF1.11	0	Manifold block	CPX-M-AB-8-M12X2-5POL	FES	FES.549335

+.AR32UQ42UQ2.2/1

+.AR32XQ41UQ1.1/1

			Date	1/24/2023	Volvo Trucks North America	Valiant TMS	Parts list : FES.548755 - FES.549335	Drawing name: =2V01&EFS-EL_KF1	=	
			Ed.	MKLEPADLO					+ V2AR32XQ41	
			Appr		P6700 Framing - Cell 2V01, KF1	Scale 1:1		Document type: EPB	Project nr: 22-16152	Page 1 / 1630
Modification	Date	Name	Original		Replacement of / Replaced by					

Parts list

F01_001

Device tag	Quantity	Designation	Type number	Supplier	Part number
=V2AR32XQ41UQ1.1-BGR	1	Inductive sensor	BI20U-CA40-AP6X2-H1141/S1590 W/BS2.0	Turck	TUR.1627205
=V2AR32XQ41UQ1.1-BGS	1	Inductive sensor	BI20U-CA40-AP6X2-H1141/S1590 W/BS2.0	Turck	TUR.1627205
=V2AR32XQ41UQ1.1-XG1/2	1	Y splitter	U2-30676	TURCK	TUR.VB2-FSM 4.4/2FKM 4/S3450

+V2AR32XQ41/1

+.AR41UQ41/1

			Date	1/24/2023	Volvo Trucks North America	Valiant TMS	Parts list : TUR.1627205 - TUR.VB2-FSM 4.4/2FKM 4/S3450	Drawing name: =2V01&EFS-EL_KF1	= + V2AR32XQ41UQ1.1
			Ed.	MKLEPADLO					
			Appr		P6700 Framing - Cell 2V01, KF1	Scale 1:1		Document type: EPB	Project nr: 22-16152
Modification	Date	Name	Original		Replacement of	Replaced by			Page 1 / 1630

Parts list

F01_001

Device tag	Quantity	Designation	Type number	Supplier	Part number
=V2AR41UQ41BG0-BG01	1	Inductive sensor With WeldGuard™ coating	NI50U-CK40-AP6X2-H1141/S1590 W/BS4	TURCK	TUR.NI50U-CK40-AP6X2-H1141/S1590 W/BS4
=V2AR41UQ41BG0-BG02	1	Inductive sensor With WeldGuard™ coating	NI50U-CK40-AP6X2-H1141/S1590 W/BS4	TURCK	TUR.NI50U-CK40-AP6X2-H1141/S1590 W/BS4
=V2AR41UQ41BG0-XG1/2	1	Y splitter	U2-30676	TURCK	TUR.VB2-FSM 4.4/2FKM 4/S3450
=V2AR41UQ41KF1-KF1	0	Bus node	CPX-FB33	FESTO	FES.548755
=V2AR41UQ41KF1-KF1	0	Interlinking block	CPX-M-GE-EV-S-7/8-5POL	FES	FES.550208
=V2AR41UQ41KF1-KF1.11	0	Manifold block	CPX-M-AB-8-M12X2-5POL	FES	FES.549335
=V2AR41UQ41KF1-KF1.12	0	Manifold block	CPX-M-AB-8-M12X2-5POL	FES	FES.549335
=V2AR41UQ41KF1-KF1.13	0	Manifold block	CPX-M-AB-8-M12X2-5POL	FES	FES.549335

+.AR32XQ41UQ1.1/1

+.AR41UQ41UQ1.1/1

			Date	1/24/2023	Volvo Trucks North America	Valiant TMS	Parts list : TUR.NI50U-CK40-AP6X2-H1141/S1590 W/BS4 - FES.549335	Drawing name: =2V01&EFS-EL_KF1	= + V2AR41UQ41
			Ed.	MKLEPADLO					
			Appr		P6700 Framing - Cell 2V01, KF1	Scale 1:1		Document type: EPB	Project nr: 22-16152
Modification	Date	Name	Original		Replacement of / Replaced by				Page 1 / 1630

Parts list

F01_001

Device tag	Quantity	Designation	Type number	Supplier	Part number
=V2AR41UQ41UQ1.1-BGS/R	1	Inductive sensor Monitoring Kit for Power Clamps	WWS001A	WELKER	WEL.WWS001A

+V2AR41UQ41/1

+.AR41UQ41UQ1.2/1

			Date	1/24/2023	Volvo Trucks North America	Valiant TMS	Parts list : WEL.WWS001A - WEL.WWS001A	Drawing name: =2V01&EFS-EL_KF1	= + V2AR41UQ41UQ1.1
			Ed.	MKLEPADLO					
			Appr		P6700 Framing - Cell 2V01, KF1	Scale 1:1		Document type: EPB / Project nr: 22-16152	Page 1 / 1630
Modification	Date	Name	Original		Replacement of / Replaced by				

Parts list

F01_001

Device tag	Quantity	Designation	Type number	Supplier	Part number
=V2AR41UQ41UQ1.2-BGS/R	1	Inductive sensor Monitoring Kit for Power Clamps	WWS001A	WELKER	WEL.WWS001A

+.AR41UQ41UQ1.1/1

+.AR41UQ41UQ1.3/1

			Date	1/24/2023	Volvo Trucks North America	Valiant TMS	Parts list : WEL.WWS001A - WEL.WWS001A	Drawing name: =2V01&EFS-EL_KF1	=	
			Ed.	MKLEPADLO					+ V2AR41UQ41UQ1.2	
			Appr		P6700 Framing - Cell 2V01, KF1	Scale 1:1		Document type: EPB	Project nr: 22-16152	Page 1 / 1630
Modification	Date	Name	Original		Replacement of / Replaced by					

Parts list

F01_001

Device tag	Quantity	Designation	Type number	Supplier	Part number
=V2AR41UQ41UQ1.3-BGS/R	1	Inductive sensor Monitoring Kit for Power Clamps	WWS001A	WELKER	WEL.WWS001A

+.AR41UQ41UQ1.2/1

+.AR41UQ41UQ1.4/1

			Date	1/24/2023	Volvo Trucks North America	Valiant TMS	Parts list : WEL.WWS001A - WEL.WWS001A	Drawing name: =2V01&EFS-EL_KF1	= + V2AR41UQ41UQ1.3
			Ed.	MKLEPADLO					
			Appr		P6700 Framing - Cell 2V01, KF1	Scale 1:1		Document type: EPB / Project nr: 22-16152	Page 1 / 1630
Modification	Date	Name	Original		Replacement of / Replaced by				

Parts list

F01_001

Device tag	Quantity	Designation	Type number	Supplier	Part number
=V2AR41UQ41UQ1.4-BGS/R	1	Inductive sensor Monitoring Kit for Power Clamps	WWS001A	WELKER	WEL.WWS001A

+.AR41UQ41UQ1.3/1

+.AR41UQ41UQ2.1/1

			Date	1/24/2023	Volvo Trucks North America	Valiant TMS	Parts list : WEL.WWS001A - WEL.WWS001A	Drawing name: =2V01&EFS-EL_KF1	=	
			Ed.	MKLEPADLO					+ V2AR41UQ41UQ1.4	
			Appr		P6700 Framing - Cell 2V01, KF1	Scale 1:1		Document type: EPB	Project nr: 22-16152	Page 1 / 1630
Modification	Date	Name	Original		Replacement of / Replaced by					

Parts list

F01_001

Device tag	Quantity	Designation	Type number	Supplier	Part number
=V2AR41UQ41UQ2.1-BGS/R	1	Inductive sensor Monitoring Kit for Power Clamps	1324638	TUNKERS	TUN.1324638

+.AR41UQ41UQ1.4/1

+.AR41UQ41UQ2.2/1

			Date	1/24/2023	Volvo Trucks North America	Valiant TMS	Parts list : TUN.1324638 - TUN.1324638	Drawing name: =2V01&EFS-EL_KF1	= + V2AR41UQ41UQ2.1
			Ed.	MKLEPADLO					
			Appr		P6700 Framing - Cell 2V01, KF1	Scale 1:1		Document type: EPB	Project nr: 22-16152
Modification	Date	Name	Original		Replacement of / Replaced by				Page 1 / 1630

Parts list

F01_001

Device tag	Quantity	Designation	Type number	Supplier	Part number
=V2AR41UQ41UQ2.2-BGS/R	1	Inductive sensor Monitoring Kit for Power Clamps	1324638	TUNKERS	TUN.1324638

+.AR41UQ41UQ2.1/1

+.AR41UQ41UQ3.1/1

			Date	1/24/2023	Volvo Trucks North America	Valiant TMS	Parts list : TUN.1324638 - TUN.1324638	Drawing name: =2V01&EFS-EL_KF1	= + V2AR41UQ41UQ2.2
			Ed.	MKLEPADLO					
			Appr		P6700 Framing - Cell 2V01, KF1	Scale 1:1		Document type: EPB / Project nr: 22-16152	Page 1 / 1630
Modification	Date	Name	Original		Replacement of / Replaced by				

Parts list

F01_001

Device tag	Quantity	Designation	Type number	Supplier	Part number
=V2AR41UQ41UQ3.1-BGS/R	1	Inductive sensor Monitoring Kit for Power Clamps	1324638	TUNKERS	TUN.1324638

+.AR41UQ41UQ2.2/1

+.AR41UQ41UQ3.2/1

			Date	1/24/2023	Volvo Trucks North America	Valiant TMS	Parts list : TUN.1324638 - TUN.1324638	Drawing name: =2V01&EFS-EL_KF1	= + V2AR41UQ41UQ3.1
			Ed.	MKLEPADLO					
			Appr		P6700 Framing - Cell 2V01, KF1	Scale 1:1		Document type: EPB / Project nr: 22-16152	Page 1 / 1630
Modification	Date	Name	Original		Replacement of / Replaced by				

Parts list

F01_001

Device tag	Quantity	Designation	Type number	Supplier	Part number
=V2AR41UQ41UQ3.2-BGS/R	1	Inductive sensor Monitoring Kit for Power Clamps	1324638	TUNKERS	TUN.1324638

+.AR41UQ41UQ3.1/1

+.AR41UQ41UQ4.1/1

			Date	1/24/2023	Volvo Trucks North America	Valiant TMS	Parts list : TUN.1324638 - TUN.1324638	Drawing name: =2V01&EFS-EL_KF1	= + V2AR41UQ41UQ3.2
			Ed.	MKLEPADLO					
			Appr		P6700 Framing - Cell 2V01, KF1	Scale 1:1		Document type: EPB / Project nr: 22-16152	Page 1 / 1630
Modification	Date	Name	Original		Replacement of / Replaced by				

Parts list

F01_001

Device tag	Quantity	Designation	Type number	Supplier	Part number
=V2AR41UQ41UQ4.1-BGS/R	1	Inductive sensor Monitoring Kit for Power Clamps	1324638	TUNKERS	TUN.1324638

+.AR41UQ41UQ3.2/1

+.AR41UQ41UQ4.2/1

			Date	1/24/2023	Volvo Trucks North America	Valiant TMS	Parts list : TUN.1324638 - TUN.1324638	Drawing name: =2V01&EFS-EL_KF1	= + V2AR41UQ41UQ4.1
			Ed.	MKLEPADLO					
			Appr		P6700 Framing - Cell 2V01, KF1	Scale 1:1		Document type: EPB	Project nr: 22-16152
Modification	Date	Name	Original		Replacement of / Replaced by				Page 1 / 1630

Parts list

F01_001

Device tag	Quantity	Designation	Type number	Supplier	Part number
=V2AR41UQ41UQ4.2-BGS/R	1	Inductive sensor Monitoring Kit for Power Clamps	1324638	TUNKERS	TUN.1324638

+.AR41UQ41UQ4.1/1

+.AR41UQ41UQ4.3/1

Parts list

F01_001

Device tag	Quantity	Designation	Type number	Supplier	Part number
=V2AR41UQ41UQ4.3-BGS/R	1	Inductive sensor Monitoring Kit for Power Clamps	1324638	TUNKERS	TUN.1324638

+.AR41UQ41UQ4.2/1

+.AR41UQ41UQ4.4/1

Parts list

F01_001

Device tag	Quantity	Designation	Type number	Supplier	Part number
=V2AR41UQ41UQ4.4-BGS/R	1	Inductive sensor Monitoring Kit for Power Clamps	1324638	TUNKERS	TUN.1324638

+.AR41UQ41UQ4.3/1

+.AR41UQ41UQ5.1/1

			Date	1/24/2023	Volvo Trucks North America	Valiant TMS	Parts list : TUN.1324638 - TUN.1324638	Drawing name: =2V01&EFS-EL_KF1	=	
			Ed.	MKLEPADLO					+ V2AR41UQ41UQ4.4	
			Appr		P6700 Framing - Cell 2V01, KF1	Scale 1:1		Document type: EPB	Project nr: 22-16152	Page 1 / 1630
Modification	Date	Name	Original		Replacement of / Replaced by					

Parts list

F01_001

Device tag	Quantity	Designation	Type number	Supplier	Part number
=V2AR41UQ41UQ5.1-BGS/R	1	Inductive sensor Monitoring Kit for Power Clamps	1324644	TUNKERS	TUN.1324644

+.AR41UQ41UQ4.4/1

+.AR41UQ41UQ5.2/1

			Date	1/24/2023	Volvo Trucks North America	Valiant TMS	Parts list : TUN.1324644 - TUN.1324644	Drawing name: =2V01&EFS-EL_KF1	=	
			Ed.	MKLEPADLO					+ V2AR41UQ41UQ5.1	
			Appr		P6700 Framing - Cell 2V01, KF1	Scale 1:1		Document type: EPB	Project nr: 22-16152	Page 1 / 1630
Modification	Date	Name	Original		Replacement of / Replaced by					

Parts list

F01_001

Device tag	Quantity	Designation	Type number	Supplier	Part number
=V2AR41UQ41UQ5.2-BGS/R	1	Inductive sensor Monitoring Kit for Power Clamps	1324644	TUNKERS	TUN.1324644

+.AR41UQ41UQ5.1/1

+.AR41UQ41UQ6.1/1

			Date	1/24/2023	Volvo Trucks North America	Valiant TMS	Parts list : TUN.1324644 - TUN.1324644	Drawing name: =2V01&EFS-EL_KF1	= + V2AR41UQ41UQ5.2
			Ed.	MKLEPADLO					
			Appr		P6700 Framing - Cell 2V01, KF1	Scale 1:1		Document type: EPB / Project nr: 22-16152	Page 1 / 1630
Modification	Date	Name	Original		Replacement of / Replaced by				

Parts list

F01_001

Device tag	Quantity	Designation	Type number	Supplier	Part number
=V2AR41UQ41UQ6.1-BGS/R	1	Pressure sensor with display	PN-010-RER14-QFRKG/US/ /V	IFM	IFM.PN7094

+.AR41UQ41UQ5.2/1

+.AR41UQ41UQ7.1/1

			Date	1/24/2023	Volvo Trucks North America	Valiant TMS	Parts list : IFM.PN7094 - IFM.PN7094	Drawing name: =2V01&EFS-EL_KF1	=	
			Ed.	MKLEPADLO					+ V2AR41UQ41UQ6.1	
			Appr		P6700 Framing - Cell 2V01, KF1	Scale 1:1		Document type: EPB	Project nr: 22-16152	Page 1
Modification	Date	Name	Original		Replacement of / Replaced by					1630

Parts list

F01_001

Device tag	Quantity	Designation	Type number	Supplier	Part number
=V2AR41UQ41UQ7.1-BGS/R	1	Inductive sensor Monitoring Kit for Power Clamps	1324638	TUNKERS	TUN.1324638

+.AR41UQ41UQ6.1/1

+.AR41UQ41UQ7.2/1

			Date	1/24/2023	Volvo Trucks North America	Valiant TMS	Parts list : TUN.1324638 - TUN.1324638	Drawing name: =2V01&EFS-EL_KF1	=	
			Ed.	MKLEPADLO					+ V2AR41UQ41UQ7.1	
			Appr		P6700 Framing - Cell 2V01, KF1	Scale 1:1		Document type: EPB	Project nr: 22-16152	Page 1 / 1630
Modification	Date	Name	Original		Replacement of / Replaced by					

Parts list

F01_001

Device tag	Quantity	Designation	Type number	Supplier	Part number
=V2AR41UQ41UQ7.2-BGS/R	1	Inductive sensor Monitoring Kit for Power Clamps	1324638	TUNKERS	TUN.1324638

+.AR41UQ41UQ7.1/1

+.AR41UQ41UQ8.1/1

			Date	1/24/2023	Volvo Trucks North America	Valiant TMS	Parts list : TUN.1324638 - TUN.1324638	Drawing name: =2V01&EFS-EL_KF1	= + V2AR41UQ41UQ7.2
			Ed.	MKLEPADLO					
			Appr		P6700 Framing - Cell 2V01, KF1	Scale 1:1		Document type: EPB / Project nr: 22-16152	Page 1 / 1630
Modification	Date	Name	Original		Replacement of / Replaced by				

Parts list

F01_001

Device tag	Quantity	Designation	Type number	Supplier	Part number
=V2AR41UQ41UQ8.1-BGS/R	1	Pressure sensor with display	PN-010-RER14-QFRKG/US/ /V	IFM	IFM.PN7094

+.AR41UQ41UQ7.2/1

+.AR41XQ11UC01/1

			Date	1/24/2023	Volvo Trucks North America	Valiant TMS	Parts list : IFM.PN7094 - IFM.PN7094	Drawing name: =2V01&EFS-EL_KF1	=	
			Ed.	MKLEPADLO					+ V2AR41UQ41UQ8.1	
			Appr		P6700 Framing - Cell 2V01, KF1	Scale 1:1		Document type: EPB	Project nr: 22-16152	Page 1 / 1630
Modification	Date	Name	Original		Replacement of	Replaced by				

Parts list

F01_001

Device tag	Quantity	Designation	Type number	Supplier	Part number
=V2AR41XQ11WC1-XG1	1	Surface socket-outlet	416RS6	ABB	ABB.2CMA193115R1000
=WC1-WC1	1	Golvskåp TS 8 sidskåp	TS8	RIT	RIT.SETS8205SID5
=WC1-WC1	1	TS Trim panel, sides, H: 100 mm, for W: 500 mm, RAL 7022, sheet steel	TS.8601050	RIT	RIT.8601050
=WC1-WC1	1	TS Base/plinth component, rear, H: 100 mm, for W: 1200 mm, RAL 7022, sheet steel	TS.8601200	RIT	RIT.8601200
=WC1-WC1	1	TS Side panel, screw-fastened, for TS, TS IT, for WD: 2000x500 mm, Sheet steel	TS.8105235	RIT	RIT.8105235
=WC1-WC1	1	PS Wiring plan pockets, for TS, CM, SE, PC, TP pedestal, sheet steel	TS.4115000	RIT	RIT.4115000

+.AR41UQ41UQ8.1/1

+.AR42UQ41/1

			Date	1/24/2023	Volvo Trucks North America	Valiant TMS	Parts list : ABB.2CMA193115R1000 - RIT.4115000	Drawing name: =2V01&EFS-EL_KF1	=	
			Ed.	MKLEPADLO					+ V2AR41XQ11UC01	
			Appr		P6700 Framing - Cell 2V01, KF1			Document type: EPB	Project nr: 22-16152	Page 1
Modification	Date	Name	Original		Replacement of / Replaced by	Scale 1:1				1630

Parts list

F01_001

Device tag	Quantity	Designation	Type number	Supplier	Part number
=V2AR42UQ41BG0-BG01	1	Inductive sensor With WeldGuard™ coating	NI50U-CK40-AP6X2-H1141/S1590 W/BS4	TURCK	TUR.NI50U-CK40-AP6X2-H1141/S1590 W/BS4
=V2AR42UQ41BG0-BG02	1	Inductive sensor With WeldGuard™ coating	NI50U-CK40-AP6X2-H1141/S1590 W/BS4	TURCK	TUR.NI50U-CK40-AP6X2-H1141/S1590 W/BS4
=V2AR42UQ41BG0-XG1/2	1	Y splitter	U2-30676	TURCK	TUR.VB2-FSM 4.4/2FKM 4/S3450
=V2AR42UQ41KF1-KF1	0	Bus node	CPX-FB33	FESTO	FES.548755
=V2AR42UQ41KF1-KF1	0	Interlinking block	CPX-M-GE-EV-S-7/8-5POL	FES	FES.550208
=V2AR42UQ41KF1-KF1.11	0	Manifold block	CPX-M-AB-8-M12X2-5POL	FES	FES.549335
=V2AR42UQ41KF1-KF1.12	0	Manifold block	CPX-M-AB-8-M12X2-5POL	FES	FES.549335

+.AR41XQ11UC01/1

+.AR42UQ41UQ1.1/1

			Date	1/24/2023	Volvo Trucks North America	Valiant TMS	Parts list : TUR.NI50U-CK40-AP6X2-H1141/S1590 W/BS4 - FES.549335	Drawing name: =2V01&EFS-EL_KF1	=	
			Ed.	MKLEPADLO					+ V2AR42UQ41	
			Appr		P6700 Framing - Cell 2V01, KF1	Scale 1:1		Document type: EPB	Project nr: 22-16152	Page 1 / 1630
Modification	Date	Name	Original		Replacement of	Replaced by				

Parts list

F01_001

Device tag	Quantity	Designation	Type number	Supplier	Part number
=V2AR42UQ41UQ1.1-BGS/R	1	Inductive sensor Monitoring Kit for Power Clamps	1324638	TUNKERS	TUN.1324638

+V2AR42UQ41/1

+.AR42UQ41UQ1.2/1

			Date	1/24/2023	Volvo Trucks North America	Valiant TMS	Parts list : TUN.1324638 - TUN.1324638	Drawing name: =2V01&EFS-EL_KF1	= + V2AR42UQ41UQ1.1
			Ed.	MKLEPADLO					
			Appr		P6700 Framing - Cell 2V01, KF1	Scale 1:1		Document type: EPB / Project nr: 22-16152	Page 1 / 1630
Modification	Date	Name	Original		Replacement of / Replaced by				

Parts list

F01_001

Device tag	Quantity	Designation	Type number	Supplier	Part number
=V2AR42UQ41UQ1.2-BGS/R	1	Inductive sensor Monitoring Kit for Power Clamps	1324638	TUNKERS	TUN.1324638

+.AR42UQ41UQ1.1/1

+.AR42UQ41UQ1.3/1

Parts list

F01_001

Device tag	Quantity	Designation	Type number	Supplier	Part number
=V2AR42UQ41UQ1.3-BGS/R	1	Inductive sensor Monitoring Kit for Power Clamps	1324638	TUNKERS	TUN.1324638

+.AR42UQ41UQ1.2/1

+.AR42UQ41UQ1.4/1

Parts list

F01_001

Device tag	Quantity	Designation	Type number	Supplier	Part number
=V2AR42UQ41UQ1.4-BGS/R	1	Inductive sensor Monitoring Kit for Power Clamps	1324638	TUNKERS	TUN.1324638

+.AR42UQ41UQ1.3/1

+.AR42UQ42/1

Parts list

F01_001

Device tag	Quantity	Designation	Type number	Supplier	Part number
=V2AR42UQ42BG0-BG01	1	Inductive sensor With WeldGuard™ coating	NI50U-CK40-AP6X2-H1141/S1590 W/BS4	TURCK	TUR.NI50U-CK40-AP6X2-H1141/S1590 W/BS4
=V2AR42UQ42BG0-BG02	1	Inductive sensor With WeldGuard™ coating	NI50U-CK40-AP6X2-H1141/S1590 W/BS4	TURCK	TUR.NI50U-CK40-AP6X2-H1141/S1590 W/BS4
=V2AR42UQ42BG0-XG1/2	1	Y splitter	U2-30676	TURCK	TUR.VB2-FSM 4.4/2FKM 4/S3450
=V2AR42UQ42KF1-KF1	0	Bus node	CPX-FB33	FESTO	FES.548755
=V2AR42UQ42KF1-KF1	0	Interlinking block	CPX-M-GE-EV-S-7/8-5POL	FES	FES.550208
=V2AR42UQ42KF1-KF1.11	0	Manifold block	CPX-M-AB-8-M12X2-5POL	FES	FES.549335
=V2AR42UQ42KF1-KF1.12	0	Manifold block	CPX-M-AB-8-M12X2-5POL	FES	FES.549335

+.AR42UQ41UQ1.4/1

+.AR42UQ42UQ1.1/1

			Date	1/24/2023	Volvo Trucks North America	Valiant TMS	Parts list : TUR.NI50U-CK40-AP6X2-H1141/S1590 W/BS4 - FES.549335	Drawing name: =2V01&EFS-EL_KF1	=	
			Ed.	MKLEPADLO					+ V2AR42UQ42	
			Appr		P6700 Framing - Cell 2V01, KF1	Scale 1:1		Document type: EPB	Project nr: 22-16152	Page 1 / 1630
Modification	Date	Name	Original		Replacement of	Replaced by				

Parts list

F01_001

Device tag	Quantity	Designation	Type number	Supplier	Part number
=V2AR42UQ42UQ1.1-BGS/R	1	Inductive sensor Monitoring Kit for Power Clamps	1324638	TUNKERS	TUN.1324638

+V2AR42UQ42/1

+.AR42UQ42UQ1.2/1

			Date	1/24/2023	Volvo Trucks North America	Valiant TMS	Parts list : TUN.1324638 - TUN.1324638	Drawing name: =2V01&EFS-EL_KF1	= + V2AR42UQ42UQ1.1
			Ed.	MKLEPADLO					
			Appr		P6700 Framing - Cell 2V01, KF1	Scale 1:1		Document type: EPB / Project nr: 22-16152	Page 1 / 1630
Modification	Date	Name	Original		Replacement of / Replaced by				

Parts list

F01_001

Device tag	Quantity	Designation	Type number	Supplier	Part number
=V2AR42UQ42UQ1.2-BGS/R	1	Inductive sensor Monitoring Kit for Power Clamps	1324638	TUNKERS	TUN.1324638

+.AR42UQ42UQ1.1/1

+.AR42UQ42UQ1.3/1

			Date	1/24/2023	Volvo Trucks North America	Valiant TMS	Parts list : TUN.1324638 - TUN.1324638	Drawing name: =2V01&EFS-EL_KF1	=	
			Ed.	MKLEPADLO					+ V2AR42UQ42UQ1.2	
			Appr		P6700 Framing - Cell 2V01, KF1	Scale 1:1		Document type: EPB	Project nr: 22-16152	Page 1
Modification	Date	Name	Original		Replacement of / Replaced by					1630

Parts list

F01_001

Device tag	Quantity	Designation	Type number	Supplier	Part number
=V2AR42UQ42UQ1.3-BGS/R	1	Inductive sensor Monitoring Kit for Power Clamps	1324638	TUNKERS	TUN.1324638

+.AR42UQ42UQ1.2/1

+.AR42UQ42UQ1.4/1

Parts list

F01_001

Device tag	Quantity	Designation	Type number	Supplier	Part number
=V2AR42UQ42UQ1.4-BGS/R	1	Inductive sensor Monitoring Kit for Power Clamps	1324638	TUNKERS	TUN.1324638

+.AR42UQ42UQ1.3/1

+.AR42UQ42UQ1.5/1

Parts list

F01_001

Device tag	Quantity	Designation	Type number	Supplier	Part number
=V2AR42UQ42UQ1.5-BGS/R	1	Inductive sensor Monitoring Kit for Power Clamps	1324638	TUNKERS	TUN.1324638

+.AR42UQ42UQ1.4/1

+.AR42XQ11UC01/1

			Date	1/24/2023	Volvo Trucks North America	Valiant TMS	Parts list : TUN.1324638 - TUN.1324638	Drawing name: =2V01&EFS-EL_KF1	=	
			Ed.	MKLEPADLO					+ V2AR42UQ42UQ1.5	
			Appr		P6700 Framing - Cell 2V01, KF1	Scale 1:1		Document type: EPB	Project nr: 22-16152	Page 1 / 1630
Modification	Date	Name	Original		Replacement of / Replaced by					

Parts list

F01_001

Device tag	Quantity	Designation	Type number	Supplier	Part number
=V2AR42XQ11WC1-XG1	1	Surface socket-outlet	416RS6	ABB	ABB.2CMA193115R1000

+.AR42UQ42UQ1.5/1

+.AR43UQ41/1

			Date	1/24/2023	Volvo Trucks North America	Valiant TMS	Parts list : ABB.2CMA193115R1000 - ABB.2CMA193115R1000	Drawing name: =2V01&EFS-EL_KF1	= + V2AR42XQ11UC01
			Ed.	MKLEPADLO					
			Appr		P6700 Framing - Cell 2V01, KF1	Scale 1:1		Document type: EPB / Project nr: 22-16152	Page 1 / 1630
Modification	Date	Name	Original		Replacement of / Replaced by				

Parts list

F01_001

Device tag	Quantity	Designation	Type number	Supplier	Part number
=V2AR43UQ41BG0-BG01	1	Inductive sensor With WeldGuard™ coating	NI50U-CK40-AP6X2-H1141/S1590 W/BS4	TURCK	TUR.NI50U-CK40-AP6X2-H1141/S1590 W/BS4
=V2AR43UQ41BG0-BG02	1	Inductive sensor With WeldGuard™ coating	NI50U-CK40-AP6X2-H1141/S1590 W/BS4	TURCK	TUR.NI50U-CK40-AP6X2-H1141/S1590 W/BS4
=V2AR43UQ41BG0-XG1/2	1	Y splitter	U2-30676	TURCK	TUR.VB2-FSM 4.4/2FKM 4/S3450
=V2AR43UQ41KF1-KF1	0	Bus node	CPX-FB33	FESTO	FES.548755
=V2AR43UQ41KF1-KF1	0	Interlinking block	CPX-M-GE-EV-S-7/8-5POL	FES	FES.550208
=V2AR43UQ41KF1-KF1.11	0	Manifold block	CPX-M-AB-8-M12X2-5POL	FES	FES.549335
=V2AR43UQ41KF1-KF1.12	0	Manifold block	CPX-M-AB-8-M12X2-5POL	FES	FES.549335
=V2AR43UQ41KF1-KF1.13	0	Manifold block	CPX-M-AB-8-M12X2-5POL	FES	FES.549335

+.AR42XQ11UC01/1

+.AR43UQ41UQ1.1/1

			Date	1/24/2023	Volvo Trucks North America	Valiant TMS	Parts list : TUR.NI50U-CK40-AP6X2-H1141/S1590 W/BS4 - FES.549335	Drawing name: =2V01&EFS-EL_KF1	=	
			Ed.	MKLEPADLO					+ V2AR43UQ41	
			Appr		P6700 Framing - Cell 2V01, KF1	Scale 1:1		Document type: EPB	Project nr: 22-16152	Page 1 / 1630
Modification	Date	Name	Original		Replacement of	Replaced by				

Parts list

F01_001

Device tag	Quantity	Designation	Type number	Supplier	Part number
=V2AR43UQ41UQ1.1-BGS/R	1	Inductive sensor Monitoring Kit for Power Clamps	WWS001A	WELKER	WEL.WWS001A

+V2AR43UQ41/1

+.AR43UQ41UQ1.2/1

			Date	1/24/2023	Volvo Trucks North America	Valiant TMS	Parts list : WEL.WWS001A - WEL.WWS001A	Drawing name: =2V01&EFS-EL_KF1	= + V2AR43UQ41UQ1.1
			Ed.	MKLEPADLO					
			Appr		P6700 Framing - Cell 2V01, KF1	Scale 1:1		Document type: EPB / Project nr: 22-16152	Page 1 / 1630
Modification	Date	Name	Original		Replacement of / Replaced by				

Parts list

F01_001

Device tag	Quantity	Designation	Type number	Supplier	Part number
=V2AR43UQ41UQ1.2-BGS/R	1	Inductive sensor Monitoring Kit for Power Clamps	WWS001A	WELKER	WEL.WWS001A

+.AR43UQ41UQ1.1/1

+.AR43UQ41UQ2.1/1

			Date	1/24/2023	Volvo Trucks North America	Valiant TMS	Parts list : WEL.WWS001A - WEL.WWS001A	Drawing name: =2V01&EFS-EL_KF1	= + V2AR43UQ41UQ1.2
			Ed.	MKLEPADLO					
			Appr		P6700 Framing - Cell 2V01, KF1	Scale 1:1		Document type: EPB / Project nr: 22-16152	Page 1 / 1630
Modification	Date	Name	Original		Replacement of / Replaced by				

Parts list

F01_001

Device tag	Quantity	Designation	Type number	Supplier	Part number
=V2AR43UQ41UQ2.1-BGS/R	1	Inductive sensor Monitoring Kit for Power Clamps	1324638	TUNKERS	TUN.1324638

+.AR43UQ41UQ1.2/1

+.AR43UQ41UQ2.2/1

Parts list

F01_001

Device tag	Quantity	Designation	Type number	Supplier	Part number
=V2AR43UQ41UQ2.2-BGS/R	1	Inductive sensor Monitoring Kit for Power Clamps	1324638	TUNKERS	TUN.1324638

+.AR43UQ41UQ2.1/1

+.AR43UQ41UQ2.3/1

Parts list

F01_001

Device tag	Quantity	Designation	Type number	Supplier	Part number
=V2AR43UQ41UQ2.3-BGS/R	1	Inductive sensor Monitoring Kit for Power Clamps	1324638	TUNKERS	TUN.1324638

+.AR43UQ41UQ2.2/1

+.AR43UQ41UQ3.1/1

			Date	1/24/2023	Volvo Trucks North America	Valiant TMS	Parts list : TUN.1324638 - TUN.1324638	Drawing name: =2V01&EFS-EL_KF1	= + V2AR43UQ41UQ2.3
			Ed.	MKLEPADLO					
			Appr		P6700 Framing - Cell 2V01, KF1	Scale 1:1		Document type: EPB / Project nr: 22-16152	Page 1 / 1630
Modification	Date	Name	Original		Replacement of / Replaced by				

Parts list

F01_001

Device tag	Quantity	Designation	Type number	Supplier	Part number
=V2AR43UQ41UQ3.1-BGS/R	1	Pressure sensor with display	PN-010-RER14-QFRKG/US/ /V	IFM	IFM.PN7094

+.AR43UQ41UQ2.3/1

+.AR43UQ41UQ4.1/1

			Date	1/24/2023	Volvo Trucks North America	Valiant TMS	Parts list : IFM.PN7094 - IFM.PN7094	Drawing name: =2V01&EFS-EL_KF1	=	
			Ed.	MKLEPADLO					+ V2AR43UQ41UQ3.1	
			Appr		P6700 Framing - Cell 2V01, KF1	Scale 1:1		Document type: EPB	Project nr: 22-16152	Page 1 / 1630
Modification	Date	Name	Original		Replacement of / Replaced by					

Parts list

F01_001

Device tag	Quantity	Designation	Type number	Supplier	Part number
=V2AR43UQ41UQ4.1-BGS/R	1	Inductive sensor Monitoring Kit for Power Clamps	1324638	TUNKERS	TUN.1324638

+.AR43UQ41UQ3.1/1

+.AR43UQ41UQ4.2/1

Parts list

F01_001

Device tag	Quantity	Designation	Type number	Supplier	Part number
=V2AR43UQ41UQ4.2-BGS/R	1	Inductive sensor Monitoring Kit for Power Clamps	1324638	TUNKERS	TUN.1324638

+.AR43UQ41UQ4.1/1

+.AR43UQ41UQ4.3/1

			Date	1/24/2023	Volvo Trucks North America	Valiant TMS	Parts list : TUN.1324638 - TUN.1324638	Drawing name: =2V01&EFS-EL_KF1	= + V2AR43UQ41UQ4.2
			Ed.	MKLEPADLO					
			Appr		P6700 Framing - Cell 2V01, KF1	Scale 1:1		Document type: EPB / Project nr: 22-16152	Page 1 / 1630
Modification	Date	Name	Original		Replacement of / Replaced by				

Parts list

F01_001

Device tag	Quantity	Designation	Type number	Supplier	Part number
=V2AR43UQ41UQ4.3-BGS/R	1	Inductive sensor Monitoring Kit for Power Clamps	1324638	TUNKERS	TUN.1324638

+.AR43UQ41UQ4.2/1

+.AR43UQ42/1

			Date	1/24/2023	Volvo Trucks North America	Valiant TMS	Parts list : TUN.1324638 - TUN.1324638	Drawing name: =2V01&EFS-EL_KF1	=	
			Ed.	MKLEPADLO					+ V2AR43UQ41UQ4.3	
			Appr		P6700 Framing - Cell 2V01, KF1	Scale 1:1		Document type: EPB	Project nr: 22-16152	Page 1 / 1630
Modification	Date	Name	Original		Replacement of / Replaced by					

Parts list

F01_001

Device tag	Quantity	Designation	Type number	Supplier	Part number
=V2AR43UQ42BG0-BG01	1	Inductive sensor With WeldGuard™ coating	NI50U-CK40-AP6X2-H1141/S1590 W/BS4	TURCK	TUR.NI50U-CK40-AP6X2-H1141/S1590 W/BS4
=V2AR43UQ42BG0-BG02	1	Inductive sensor With WeldGuard™ coating	NI50U-CK40-AP6X2-H1141/S1590 W/BS4	TURCK	TUR.NI50U-CK40-AP6X2-H1141/S1590 W/BS4
=V2AR43UQ42BG0-BG03	1	Inductive sensor With WeldGuard™ coating	NI50U-CK40-AP6X2-H1141/S1590 W/BS4	TURCK	TUR.NI50U-CK40-AP6X2-H1141/S1590 W/BS4
=V2AR43UQ42BG0-XG1/2	1	Y splitter	U2-30676	TURCK	TUR.VB2-FSM 4.4/2FKM 4/S3450
=V2AR43UQ42KF1-KF1	0	Bus node	CPX-FB33	FESTO	FES.548755
=V2AR43UQ42KF1-KF1	0	Interlinking block	CPX-M-GE-EV-S-7/8-5POL	FES	FES.550208
=V2AR43UQ42KF1-KF1.11	0	Manifold block	CPX-M-AB-8-M12X2-5POL	FES	FES.549335
=V2AR43UQ42KF1-KF1.12	0	Manifold block	CPX-M-AB-8-M12X2-5POL	FES	FES.549335
=V2AR43UQ42KF1-KF1.13	0	Manifold block	CPX-M-AB-8-M12X2-5POL	FES	FES.549335

+.AR43UQ41UQ4.3/1

+.AR43UQ42UQ1.1/1

			Date	1/24/2023	Volvo Trucks North America	Valiant TMS	Parts list : TUR.NI50U-CK40-AP6X2-H1141/S1590 W/BS4 - FES.549335	Drawing name: =2V01&EFS-EL_KF1	= + V2AR43UQ42
			Ed.	MKLEPADLO					
			Appr		P6700 Framing - Cell 2V01, KF1	Scale 1:1		Document type: EPB	Project nr: 22-16152
Modification	Date	Name	Original		Replacement of / Replaced by				Page 1 / 1630

Parts list

F01_001

Device tag	Quantity	Designation	Type number	Supplier	Part number
=V2AR43UQ42UQ1.1-BGS/R	1	Inductive sensor Monitoring Kit for Power Clamps	WWS001A	WELKER	WEL.WWS001A

+V2AR43UQ42/1

+.AR43UQ42UQ2.1/1

			Date	1/24/2023	Volvo Trucks North America	Valiant TMS	Parts list : WEL.WWS001A - WEL.WWS001A	Drawing name: =2V01&EFS-EL_KF1	= + V2AR43UQ42UQ1.1
			Ed.	MKLEPADLO					
			Appr		P6700 Framing - Cell 2V01, KF1	Scale 1:1		Document type: EPB / Project nr: 22-16152	Page 1 / 1630
Modification	Date	Name	Original		Replacement of / Replaced by				

Parts list

F01_001

Device tag	Quantity	Designation	Type number	Supplier	Part number
=V2AR43UQ42UQ2.1-BGS/R	1	Inductive sensor Monitoring Kit for Power Clamps	1324644	TUNKERS	TUN.1324644

+.AR43UQ42UQ1.1/1

+.AR43UQ42UQ2.2/1

			Date	1/24/2023	Volvo Trucks North America	Valiant TMS	Parts list : TUN.1324644 - TUN.1324644	Drawing name: =2V01&EFS-EL_KF1	= + V2AR43UQ42UQ2.1
			Ed.	MKLEPADLO					
			Appr		P6700 Framing - Cell 2V01, KF1	Scale 1:1		Document type: EPB / Project nr: 22-16152	Page 1 / 1630
Modification	Date	Name	Original		Replacement of / Replaced by				

Parts list

F01_001

Device tag	Quantity	Designation	Type number	Supplier	Part number
=V2AR43UQ42UQ2.2-BGS/R	1	Inductive sensor Monitoring Kit for Power Clamps	1324644	TUNKERS	TUN.1324644

+.AR43UQ42UQ2.1/1

+.AR43UQ42UQ3.1/1

			Date	1/24/2023	Volvo Trucks North America	Valiant TMS	Parts list : TUN.1324644 - TUN.1324644	Drawing name: =2V01&EFS-EL_KF1	= + V2AR43UQ42UQ2.2
			Ed.	MKLEPADLO					
			Appr		P6700 Framing - Cell 2V01, KF1	Scale 1:1		Document type: EPB / Project nr: 22-16152	Page 1 / 1630
Modification	Date	Name	Original		Replacement of / Replaced by				

Parts list

F01_001

Device tag	Quantity	Designation	Type number	Supplier	Part number
=V2AR43UQ42UQ3.1-BGS/R	1	Pressure sensor with display	PN-010-RER14-QFRKG/US/ /V	IFM	IFM.PN7094

+.AR43UQ42UQ2.2/1

+.AR43UQ42UQ4.1/1

			Date	1/24/2023	Volvo Trucks North America	Valiant TMS	Parts list : IFM.PN7094 - IFM.PN7094	Drawing name: =2V01&EFS-EL_KF1	=	
			Ed.	MKLEPADLO					+ V2AR43UQ42UQ3.1	
			Appr		P6700 Framing - Cell 2V01, KF1	Scale 1:1		Document type: EPB	Project nr: 22-16152	Page 1 / 1630
Modification	Date	Name	Original		Replacement of	Replaced by				

Parts list

F01_001

Device tag	Quantity	Designation	Type number	Supplier	Part number
=V2AR43UQ42UQ4.1-BGS/R	1	Inductive sensor Monitoring Kit for Power Clamps	1324638	TUNKERS	TUN.1324638

+.AR43UQ42UQ3.1/1

+.AR43UQ42UQ4.2/1

			Date	1/24/2023	Volvo Trucks North America	Valiant TMS	Parts list : TUN.1324638 - TUN.1324638	Drawing name: =2V01&EFS-EL_KF1	= + V2AR43UQ42UQ4.1
			Ed.	MKLEPADLO					
			Appr		P6700 Framing - Cell 2V01, KF1	Scale 1:1		Document type: EPB / Project nr: 22-16152	Page 1 / 1630
Modification	Date	Name	Original		Replacement of / Replaced by				

Parts list

F01_001

Device tag	Quantity	Designation	Type number	Supplier	Part number
=V2AR43UQ42UQ4.2-BGS/R	1	Inductive sensor Monitoring Kit for Power Clamps	1324638	TUNKERS	TUN.1324638

+.AR43UQ42UQ4.1/1

+.AR43UQ42UQ5.1/1

			Date	1/24/2023	Volvo Trucks North America	Valiant TMS	Parts list : TUN.1324638 - TUN.1324638	Drawing name: =2V01&EFS-EL_KF1	= + V2AR43UQ42UQ4.2
			Ed.	MKLEPADLO					
			Appr		P6700 Framing - Cell 2V01, KF1	Scale 1:1		Document type: EPB / Project nr: 22-16152	Page 1 / 1630
Modification	Date	Name	Original		Replacement of / Replaced by				

Parts list

F01_001

Device tag	Quantity	Designation	Type number	Supplier	Part number
=V2AR43UQ42UQ5.1-BGS/R	1	Inductive sensor Monitoring Kit for Power Clamps	1324638	TUNKERS	TUN.1324638

+.AR43UQ42UQ4.2/1

+.AR43UQ42UQ5.2/1

			Date	1/24/2023	Volvo Trucks North America	Valiant TMS	Parts list : TUN.1324638 - TUN.1324638	Drawing name: =2V01&EFS-EL_KF1	=	
			Ed.	MKLEPADLO					+ V2AR43UQ42UQ5.1	
			Appr		P6700 Framing - Cell 2V01, KF1	Scale 1:1		Document type: EPB	Project nr: 22-16152	Page 1
Modification	Date	Name	Original		Replacement of / Replaced by					1630

Parts list

F01_001

Device tag	Quantity	Designation	Type number	Supplier	Part number
=V2AR43UQ42UQ5.2-BGS/R	1	Inductive sensor Monitoring Kit for Power Clamps	1324638	TUNKERS	TUN.1324638

+.AR43UQ42UQ5.1/1

+.AR43UQ42UQ6.1/1

			Date	1/24/2023	Volvo Trucks North America	Valiant TMS	Parts list : TUN.1324638 - TUN.1324638	Drawing name: =2V01&EFS-EL_KF1	= + V2AR43UQ42UQ5.2
			Ed.	MKLEPADLO					
			Appr		P6700 Framing - Cell 2V01, KF1	Scale 1:1		Document type: EPB / Project nr: 22-16152	Page 1 / 1630
Modification	Date	Name	Original		Replacement of / Replaced by				

Parts list

F01_001

Device tag	Quantity	Designation	Type number	Supplier	Part number
=V2AR43UQ42UQ6.1-BGS/R	1	Inductive sensor Monitoring Kit for Power Clamps	1324638	TUNKERS	TUN.1324638

+.AR43UQ42UQ5.2/1

+.AR43UQ42UQ6.2/1

Parts list

F01_001

Device tag	Quantity	Designation	Type number	Supplier	Part number
=V2AR43UQ42UQ6.2-BGS/R	1	Inductive sensor Monitoring Kit for Power Clamps	1324638	TUNKERS	TUN.1324638

+.AR43UQ42UQ6.1/1

+.AR43UQ42UQ6.3/1

Parts list

F01_001

Device tag	Quantity	Designation	Type number	Supplier	Part number
=V2AR43UQ42UQ6.3-BGS/R	1	Inductive sensor Monitoring Kit for Power Clamps	1324638	TUNKERS	TUN.1324638

+.AR43UQ42UQ6.2/1

+.AR43UQ42UQ7.1/1

			Date	1/24/2023	Volvo Trucks North America	Valiant TMS	Parts list : TUN.1324638 - TUN.1324638	Drawing name: =2V01&EFS-EL_KF1	= + V2AR43UQ42UQ6.3
			Ed.	MKLEPADLO					
			Appr		P6700 Framing - Cell 2V01, KF1	Scale 1:1		Document type: EPB / Project nr: 22-16152	Page 1 / 1630
Modification	Date	Name	Original		Replacement of / Replaced by				

Parts list

F01_001

Device tag	Quantity	Designation	Type number	Supplier	Part number
=V2AR43UQ42UQ7.1-BGS/R	1	Inductive sensor Monitoring Kit for Power Clamps	1324638	TUNKERS	TUN.1324638

+.AR43UQ42UQ6.3/1

+.AR43UQ42UQ7.2/1

			Date	1/24/2023	Volvo Trucks North America	Valiant TMS	Parts list : TUN.1324638 - TUN.1324638	Drawing name: =2V01&EFS-EL_KF1	=	
			Ed.	MKLEPADLO					+ V2AR43UQ42UQ7.1	
			Appr		P6700 Framing - Cell 2V01, KF1	Scale 1:1		Document type: EPB	Project nr: 22-16152	Page 1 / 1630
Modification	Date	Name	Original		Replacement of / Replaced by					

Parts list

F01_001

Device tag	Quantity	Designation	Type number	Supplier	Part number
=V2AR43UQ42UQ7.2-BGS/R	1	Inductive sensor Monitoring Kit for Power Clamps	1324638	TUNKERS	TUN.1324638

+.AR43UQ42UQ7.1/1

+.AR43UQ42UQ8.1/1

			Date	1/24/2023	Volvo Trucks North America	Valiant TMS	Parts list : TUN.1324638 - TUN.1324638	Drawing name: =2V01&EFS-EL_KF1	= + V2AR43UQ42UQ7.2
			Ed.	MKLEPADLO					
			Appr		P6700 Framing - Cell 2V01, KF1	Scale 1:1		Document type: EPB / Project nr: 22-16152	Page 1 / 1630
Modification	Date	Name	Original		Replacement of / Replaced by				

Parts list

F01_001

Device tag	Quantity	Designation	Type number	Supplier	Part number
=V2AR43UQ42UQ8.1-BGS/R	1	Inductive sensor Monitoring Kit for Power Clamps	1324638	TUNKERS	TUN.1324638

+.AR43UQ42UQ7.2/1

+.AR43UQ42UQ8.2/1

			Date	1/24/2023	Volvo Trucks North America	Valiant TMS	Parts list : TUN.1324638 - TUN.1324638	Drawing name: =2V01&EFS-EL_KF1	=	
			Ed.	MKLEPADLO					+ V2AR43UQ42UQ8.1	
			Appr		P6700 Framing - Cell 2V01, KF1	Scale 1:1		Document type: EPB	Project nr: 22-16152	Page 1
Modification	Date	Name	Original		Replacement of / Replaced by					1630

Parts list

F01_001

Device tag	Quantity	Designation	Type number	Supplier	Part number
=V2AR43UQ42UQ8.2-BGS/R	1	Inductive sensor Monitoring Kit for Power Clamps	1324638	TUNKERS	TUN.1324638

+.AR43UQ42UQ8.1/1

+.AR43UQ42UQ9.1/1

			Date	1/24/2023	Volvo Trucks North America	Valiant TMS	Parts list : TUN.1324638 - TUN.1324638	Drawing name: =2V01&EFS-EL_KF1	= + V2AR43UQ42UQ8.2
			Ed.	MKLEPADLO					
			Appr		P6700 Framing - Cell 2V01, KF1	Scale 1:1		Document type: EPB / Project nr: 22-16152	Page 1 / 1630
Modification	Date	Name	Original		Replacement of / Replaced by				

Parts list

F01_001

Device tag	Quantity	Designation	Type number	Supplier	Part number
=V2AR43UQ42UQ9.1-BGS/R	1	Inductive sensor Monitoring Kit for Power Clamps	1324638	TUNKERS	TUN.1324638

+.AR43UQ42UQ8.2/1

+.AR43UQ42UQ9.2/1

			Date	1/24/2023	Volvo Trucks North America	Valiant TMS	Parts list : TUN.1324638 - TUN.1324638	Drawing name: =2V01&EFS-EL_KF1	= + V2AR43UQ42UQ9.1
			Ed.	MKLEPADLO					
			Appr		P6700 Framing - Cell 2V01, KF1	Scale 1:1		Document type: EPB / Project nr: 22-16152	Page 1 / 1630
Modification	Date	Name	Original		Replacement of / Replaced by				

Parts list

F01_001

Device tag	Quantity	Designation	Type number	Supplier	Part number
=V2AR43UQ42UQ9.2-BGS/R	1	Inductive sensor Monitoring Kit for Power Clamps	1324638	TUNKERS	TUN.1324638

+.AR43UQ42UQ9.1/1

+.AR43UQ43/1

			Date	1/24/2023	Volvo Trucks North America	Valiant TMS	Parts list : TUN.1324638 - TUN.1324638	Drawing name: =2V01&EFS-EL_KF1	= + V2AR43UQ42UQ9.2
			Ed.	MKLEPADLO					
			Appr		P6700 Framing - Cell 2V01, KF1	Scale 1:1		Document type: EPB	Project nr: 22-16152
Modification	Date	Name	Original		Replacement of / Replaced by				Page 1 / 1630

Parts list

F01_001

Device tag	Quantity	Designation	Type number	Supplier	Part number
=V2AR43UQ43BG0-BG01	1	Inductive sensor With WeldGuard™ coating	NI50U-CK40-AP6X2-H1141/S1590 W/BS4	TURCK	TUR.NI50U-CK40-AP6X2-H1141/S1590 W/BS4
=V2AR43UQ43BG0-BG02	1	Inductive sensor With WeldGuard™ coating	NI50U-CK40-AP6X2-H1141/S1590 W/BS4	TURCK	TUR.NI50U-CK40-AP6X2-H1141/S1590 W/BS4
=V2AR43UQ43BG0-XG1/2	1	Y splitter	U2-30676	TURCK	TUR.VB2-FSM 4.4/2FKM 4/S3450
=V2AR43UQ43KF1-KF1	0	Bus node	CPX-FB33	FESTO	FES.548755
=V2AR43UQ43KF1-KF1	0	Interlinking block	CPX-M-GE-EV-S-7/8-5POL	FES	FES.550208
=V2AR43UQ43KF1-KF1.11	0	Manifold block	CPX-M-AB-8-M12X2-5POL	FES	FES.549335
=V2AR43UQ43KF1-KF1.12	0	Manifold block	CPX-M-AB-8-M12X2-5POL	FES	FES.549335
=V2AR43UQ43KF1-KF1.13	0	Manifold block	CPX-M-AB-8-M12X2-5POL	FES	FES.549335

+.AR43UQ42UQ9.2/1

+.AR43UQ43UQ1.1/1

			Date	1/24/2023	Volvo Trucks North America	Valiant TMS	Parts list : TUR.NI50U-CK40-AP6X2-H1141/S1590 W/BS4 - FES.549335	Drawing name: =2V01&EFS-EL_KF1	= + V2AR43UQ43
			Ed.	MKLEPADLO					
			Appr		P6700 Framing - Cell 2V01, KF1	Scale 1:1		Document type: EPB	Project nr: 22-16152
Modification	Date	Name	Original		Replacement of / Replaced by				Page 1 / 1630

Parts list

F01_001

Device tag	Quantity	Designation	Type number	Supplier	Part number
=V2AR43UQ43UQ1.1-BGS/R	1	Inductive sensor Monitoring Kit for Power Clamps	WWS001A	WELKER	WEL.WWS001A

+V2AR43UQ43/1

+.AR43UQ43UQ2.1/1

			Date	1/24/2023	Volvo Trucks North America	Valiant TMS	Parts list : WEL.WWS001A - WEL.WWS001A	Drawing name: =2V01&EFS-EL_KF1	= + V2AR43UQ43UQ1.1
			Ed.	MKLEPADLO					
			Appr		P6700 Framing - Cell 2V01, KF1	Scale 1:1		Document type: EPB / Project nr: 22-16152	Page 1 / 1630
Modification	Date	Name	Original		Replacement of / Replaced by				

Parts list

F01_001

Device tag	Quantity	Designation	Type number	Supplier	Part number
=V2AR43UQ43UQ2.1-BGS/R	1	Inductive sensor Monitoring Kit for Power Clamps	1324638	TUNKERS	TUN.1324638

+.AR43UQ43UQ1.1/1

+.AR43UQ43UQ2.2/1

Parts list

F01_001

Device tag	Quantity	Designation	Type number	Supplier	Part number
=V2AR43UQ43UQ2.2-BGS/R	1	Inductive sensor Monitoring Kit for Power Clamps	1324638	TUNKERS	TUN.1324638

+.AR43UQ43UQ2.1/1

+.AR43UQ43UQ2.3/1

			Date	1/24/2023	Volvo Trucks North America	Valiant TMS	Parts list : TUN.1324638 - TUN.1324638	Drawing name: =2V01&EFS-EL_KF1	=	
			Ed.	MKLEPADLO					+ V2AR43UQ43UQ2.2	
			Appr		P6700 Framing - Cell 2V01, KF1	Scale 1:1		Document type: EPB	Project nr: 22-16152	Page 1 / 1630
Modification	Date	Name	Original		Replacement of / Replaced by					

Parts list

F01_001

Device tag	Quantity	Designation	Type number	Supplier	Part number
=V2AR43UQ43UQ2.3-BGS/R	1	Inductive sensor Monitoring Kit for Power Clamps	1324638	TUNKERS	TUN.1324638

+.AR43UQ43UQ2.2/1

+.AR43UQ43UQ3.1/1

			Date	1/24/2023	Volvo Trucks North America	Valiant TMS	Parts list : TUN.1324638 - TUN.1324638	Drawing name: =2V01&EFS-EL_KF1	= + V2AR43UQ43UQ2.3
			Ed.	MKLEPADLO					
			Appr		P6700 Framing - Cell 2V01, KF1	Scale 1:1		Document type: EPB / Project nr: 22-16152	Page 1 / 1630
Modification	Date	Name	Original		Replacement of / Replaced by				

Parts list

F01_001

Device tag	Quantity	Designation	Type number	Supplier	Part number
=V2AR43UQ43UQ3.1-BGS/R	1	Pressure sensor with display	PN-010-RER14-QFRKG/US/ /V	IFM	IFM.PN7094

+.AR43UQ43UQ2.3/1

+.AR43UQ43UQ4.1/1

			Date	1/24/2023	Volvo Trucks North America		Valiant TMS	Parts list : IFM.PN7094 - IFM.PN7094	Drawing name: =2V01&EFS-EL_KF1	=	
			Ed.	MKLEPADLO						+ V2AR43UQ43UQ3.1	
			Appr		P6700 Framing - Cell 2V01, KF1		Scale 1:1		Document type: EPB	Project nr: 22-16152	Page 1 / 1630
Modification	Date	Name	Original		Replacement of	Replaced by					

Parts list

F01_001

Device tag	Quantity	Designation	Type number	Supplier	Part number
=V2AR43UQ43UQ4.1-BGS/R	1	Inductive sensor Monitoring Kit for Power Clamps	1324638	TUNKERS	TUN.1324638

+.AR43UQ43UQ3.1/1

+.AR43UQ43UQ4.2/1

			Date	1/24/2023	Volvo Trucks North America	Valiant TMS	Parts list : TUN.1324638 - TUN.1324638	Drawing name: =2V01&EFS-EL_KF1	=	
			Ed.	MKLEPADLO					+ V2AR43UQ43UQ4.1	
			Appr		P6700 Framing - Cell 2V01, KF1	Scale 1:1		Document type: EPB	Project nr: 22-16152	Page 1 / 1630
Modification	Date	Name	Original		Replacement of / Replaced by					

Parts list

F01_001

Device tag	Quantity	Designation	Type number	Supplier	Part number
=V2AR43UQ43UQ4.2-BGS/R	1	Inductive sensor Monitoring Kit for Power Clamps	1324638	TUNKERS	TUN.1324638

+.AR43UQ43UQ4.1/1

+.AR43UQ43UQ4.3/1

			Date	1/24/2023	Volvo Trucks North America	Valiant TMS	Parts list : TUN.1324638 - TUN.1324638	Drawing name: =2V01&EFS-EL_KF1	= + V2AR43UQ43UQ4.2
			Ed.	MKLEPADLO					
			Appr		P6700 Framing - Cell 2V01, KF1	Scale 1:1		Document type: EPB / Project nr: 22-16152	Page 1 / 1630
Modification	Date	Name	Original		Replacement of / Replaced by				

Parts list

F01_001

Device tag	Quantity	Designation	Type number	Supplier	Part number
=V2AR43UQ43UQ4.3-BGS/R	1	Inductive sensor Monitoring Kit for Power Clamps	1324638	TUNKERS	TUN.1324638

			Date	1/24/2023	Volvo Trucks North America	Valiant TMS	Parts list : TUN.1324638 - TUN.1324638	Drawing name: =2V01&EFS-EL_KF1	=	
			Ed.	MKLEPADLO					+ V2AR43UQ43UQ4.3	
			Appr		P6700 Framing - Cell 2V01, KF1	Scale 1:1		Document type: EPB	Project nr: 22-16152	Page 1
Modification	Date	Name	Original		Replacement of / Replaced by					1630

Parts list

F01_001

Device tag	Quantity	Designation	Type number	Supplier	Part number
=V2AR43UQ43UQ4.4-BGS/R	1	Inductive sensor Monitoring Kit for Power Clamps	1324638	TUNKERS	TUN.1324638

+.AR43UQ43UQ4.3/1

+.AR43UQ43UQ4.5/1

			Date	1/24/2023	Volvo Trucks North America	Valiant TMS	Parts list : TUN.1324638 - TUN.1324638	Drawing name: =2V01&EFS-EL_KF1	=	
			Ed.	MKLEPADLO					+ V2AR43UQ43UQ4.4	
			Appr		P6700 Framing - Cell 2V01, KF1	Scale 1:1		Document type: EPB	Project nr: 22-16152	Page 1 / 1630
Modification	Date	Name	Original		Replacement of / Replaced by					

Parts list

F01_001

Device tag	Quantity	Designation	Type number	Supplier	Part number
=V2AR43UQ43UQ4.5-BGS/R	1	Inductive sensor Monitoring Kit for Power Clamps	1324638	TUNKERS	TUN.1324638

+.AR43UQ43UQ4.4/1

+.AR43XQ11UC01/1

			Date	1/24/2023	Volvo Trucks North America	Valiant TMS	Parts list : TUN.1324638 - TUN.1324638	Drawing name: =2V01&EFS-EL_KF1	=	
			Ed.	MKLEPADLO					+ V2AR43UQ43UQ4.5	
			Appr		P6700 Framing - Cell 2V01, KF1	Scale 1:1		Document type: EPB	Project nr: 22-16152	Page 1 / 1630
Modification	Date	Name	Original		Replacement of / Replaced by					

Parts list

F01_001

Device tag	Quantity	Designation	Type number	Supplier	Part number
=V2AR43XQ11WC1-XG1	1	Surface socket-outlet	416RS6	ABB	ABB.2CMA193115R1000
=WC1-WC1	1	Golvskåp TS 8 sidskåp	TS8	RIT	RIT.SETS8205SID5
=WC1-WC1	1	TS Trim panel, sides, H: 100 mm, for W: 500 mm, RAL 7022, sheet steel	TS.8601050	RIT	RIT.8601050
=WC1-WC1	1	TS Base/plinth component, rear, H: 100 mm, for W: 1200 mm, RAL 7022, sheet steel	TS.8601200	RIT	RIT.8601200
=WC1-WC1	1	TS Side panel, screw-fastened, for TS, TS IT, for WD: 2000x500 mm, Sheet steel	TS.8105235	RIT	RIT.8105235
=WC1-WC1	1	PS Wiring plan pockets, for TS, CM, SE, PC, TP pedestal, sheet steel	TS.4115000	RIT	RIT.4115000

+.AR43UQ43UQ4.5/1

+.AR44UQ41/1

			Date	1/24/2023	Volvo Trucks North America	Valiant TMS	Parts list : ABB.2CMA193115R1000 - RIT.4115000	Drawing name: =2V01&EFS-EL_KF1	=	
			Ed.	MKLEPADLO					+ V2AR43XQ11UC01	
			Appr		P6700 Framing - Cell 2V01, KF1			Document type: EPB	Project nr: 22-16152	Page 1
Modification	Date	Name	Original		Replacement of / Replaced by	Scale 1:1				1630

Parts list

F01_001

Device tag	Quantity	Designation	Type number	Supplier	Part number
=V2AR44UQ41BG0-BG01	1	Inductive sensor With WeldGuard™ coating	NI50U-CK40-AP6X2-H1141/S1590 W/BS4	TURCK	TUR.NI50U-CK40-AP6X2-H1141/S1590 W/BS4
=V2AR44UQ41BG0-BG02	1	Inductive sensor With WeldGuard™ coating	NI50U-CK40-AP6X2-H1141/S1590 W/BS4	TURCK	TUR.NI50U-CK40-AP6X2-H1141/S1590 W/BS4
=V2AR44UQ41BG0-XG1/2	1	Y splitter	U2-30676	TURCK	TUR.VB2-FSM 4.4/2FKM 4/S3450
=V2AR44UQ41KF1-KF1	0	Bus node	CPX-FB33	FESTO	FES.548755
=V2AR44UQ41KF1-KF1	0	Interlinking block	CPX-M-GE-EV-S-7/8-5POL	FES	FES.550208
=V2AR44UQ41KF1-KF1.11	0	Manifold block	CPX-M-AB-8-M12X2-5POL	FES	FES.549335
=V2AR44UQ41KF1-KF1.12	0	Manifold block	CPX-M-AB-8-M12X2-5POL	FES	FES.549335
=V2AR44UQ41KF1-KF1.13	0	Manifold block	CPX-M-AB-8-M12X2-5POL	FES	FES.549335

+.AR43XQ11UC01/1

+.AR44UQ41UQ1.1/1

			Date	1/24/2023	Volvo Trucks North America	Valiant TMS	Parts list : TUR.NI50U-CK40-AP6X2-H1141/S1590 W/BS4 - FES.549335	Drawing name: =2V01&EFS-EL_KF1	=
			Ed.	MKLEPADLO					+ V2AR44UQ41
			Appr		P6700 Framing - Cell 2V01, KF1	Scale 1:1		Document type: EPB	Project nr: 22-16152
Modification	Date	Name	Original		Replacement of	Replaced by			Page 1 / 1630

Parts list

F01_001

Device tag	Quantity	Designation	Type number	Supplier	Part number
=V2AR44UQ41UQ1.1-BGS/R	1	Inductive sensor Monitoring Kit for Power Clamps	WWS001A	WELKER	WEL.WWS001A

+V2AR44UQ41/1

+.AR44UQ41UQ1.2/1

			Date	1/24/2023	Volvo Trucks North America	Valiant TMS	Parts list : WEL.WWS001A - WEL.WWS001A	Drawing name: =2V01&EFS-EL_KF1	= + V2AR44UQ41UQ1.1
			Ed.	MKLEPADLO					
			Appr		P6700 Framing - Cell 2V01, KF1	Scale 1:1		Document type: EPB / Project nr: 22-16152	Page 1 / 1630
Modification	Date	Name	Original		Replacement of / Replaced by				

Parts list

F01_001

Device tag	Quantity	Designation	Type number	Supplier	Part number
=V2AR44UQ41UQ1.2-BGS/R	1	Inductive sensor Monitoring Kit for Power Clamps	WWS001A	WELKER	WEL.WWS001A

+.AR44UQ41UQ1.1/1

+.AR44UQ41UQ2.1/1

			Date	1/24/2023	Volvo Trucks North America	Valiant TMS	Parts list : WEL.WWS001A - WEL.WWS001A	Drawing name: =2V01&EFS-EL_KF1	= + V2AR44UQ41UQ1.2
			Ed.	MKLEPADLO					
			Appr		P6700 Framing - Cell 2V01, KF1	Scale 1:1		Document type: EPB / Project nr: 22-16152	Page 1 / 1630
Modification	Date	Name	Original		Replacement of / Replaced by				

Parts list

F01_001

Device tag	Quantity	Designation	Type number	Supplier	Part number
=V2AR44UQ41UQ2.1-BGS/R	1	Inductive sensor Monitoring Kit for Power Clamps	1324638	TUNKERS	TUN.1324638

+.AR44UQ41UQ1.2/1

+.AR44UQ41UQ2.2/1

			Date	1/24/2023	Volvo Trucks North America	Valiant TMS	Parts list : TUN.1324638 - TUN.1324638	Drawing name: =2V01&EFS-EL_KF1	= + V2AR44UQ41UQ2.1
			Ed.	MKLEPADLO					
			Appr		P6700 Framing - Cell 2V01, KF1	Scale 1:1		Document type: EPB / Project nr: 22-16152	Page 1 / 1630
Modification	Date	Name	Original		Replacement of / Replaced by				

Parts list

F01_001

Device tag	Quantity	Designation	Type number	Supplier	Part number
=V2AR44UQ41UQ2.2-BGS/R	1	Inductive sensor Monitoring Kit for Power Clamps	1324638	TUNKERS	TUN.1324638

+.AR44UQ41UQ2.1/1

+.AR44UQ41UQ2.3/1

			Date	1/24/2023	Volvo Trucks North America	Valiant TMS	Parts list : TUN.1324638 - TUN.1324638	Drawing name: =2V01&EFS-EL_KF1	= + V2AR44UQ41UQ2.2
			Ed.	MKLEPADLO					
			Appr		P6700 Framing - Cell 2V01, KF1	Scale 1:1		Document type: EPB / Project nr: 22-16152	Page 1 / 1630
Modification	Date	Name	Original		Replacement of / Replaced by				

Parts list

F01_001

Device tag	Quantity	Designation	Type number	Supplier	Part number
=V2AR44UQ41UQ2.3-BGS/R	1	Inductive sensor Monitoring Kit for Power Clamps	1324638	TUNKERS	TUN.1324638

+.AR44UQ41UQ2.2/1

+.AR44UQ41UQ3.1/1

			Date	1/24/2023	Volvo Trucks North America	Valiant TMS	Parts list : TUN.1324638 - TUN.1324638	Drawing name: =2V01&EFS-EL_KF1	= + V2AR44UQ41UQ2.3
			Ed.	MKLEPADLO					
			Appr		P6700 Framing - Cell 2V01, KF1	Scale 1:1		Document type: EPB / Project nr: 22-16152	Page 1 / 1630
Modification	Date	Name	Original		Replacement of / Replaced by				

Parts list

F01_001

Device tag	Quantity	Designation	Type number	Supplier	Part number
=V2AR44UQ41UQ3.1-BGS/R	1	Pressure sensor with display	PN-010-RER14-QFRKG/US/ /V	IFM	IFM.PN7094

+.AR44UQ41UQ2.3/1

+.AR44UQ41UQ4.1/1

			Date	1/24/2023	Volvo Trucks North America	Valiant TMS	Parts list : IFM.PN7094 - IFM.PN7094	Drawing name: =2V01&EFS-EL_KF1	= + V2AR44UQ41UQ3.1
			Ed.	MKLEPADLO					
			Appr		P6700 Framing - Cell 2V01, KF1	Scale 1:1		Document type: EPB / Project nr: 22-16152	Page 1 / 1630
Modification	Date	Name	Original		Replacement of / Replaced by				

Parts list

F01_001

Device tag	Quantity	Designation	Type number	Supplier	Part number
=V2AR44UQ41UQ4.1-BGS/R	1	Inductive sensor Monitoring Kit for Power Clamps	1324638	TUNKERS	TUN.1324638

+.AR44UQ41UQ3.1/1

+.AR44UQ41UQ4.2/1

			Date	1/24/2023	Volvo Trucks North America	Valiant TMS	Parts list : TUN.1324638 - TUN.1324638	Drawing name: =2V01&EFS-EL_KF1	= + V2AR44UQ41UQ4.1
			Ed.	MKLEPADLO					
			Appr		P6700 Framing - Cell 2V01, KF1	Scale 1:1		Document type: EPB / Project nr: 22-16152	Page 1 / 1630
Modification	Date	Name	Original		Replacement of / Replaced by				

Parts list

F01_001

Device tag	Quantity	Designation	Type number	Supplier	Part number
=V2AR44UQ41UQ4.2-BGS/R	1	Inductive sensor Monitoring Kit for Power Clamps	1324638	TUNKERS	TUN.1324638

+.AR44UQ41UQ4.1/1

+.AR44UQ41UQ4.3/1

			Date	1/24/2023	Volvo Trucks North America	Valiant TMS	Parts list : TUN.1324638 - TUN.1324638	Drawing name: =2V01&EFS-EL_KF1	= + V2AR44UQ41UQ4.2
			Ed.	MKLEPADLO					
			Appr		P6700 Framing - Cell 2V01, KF1	Scale 1:1		Document type: EPB / Project nr: 22-16152	Page 1 / 1630
Modification	Date	Name	Original		Replacement of / Replaced by				

Parts list

F01_001

Device tag	Quantity	Designation	Type number	Supplier	Part number
=V2AR44UQ41UQ4.3-BGS/R	1	Inductive sensor Monitoring Kit for Power Clamps	1324638	TUNKERS	TUN.1324638

+.AR44UQ41UQ4.2/1

+.AR44UQ42/1

			Date	1/24/2023	Volvo Trucks North America	Valiant TMS	Parts list : TUN.1324638 - TUN.1324638	Drawing name: =2V01&EFS-EL_KF1	= + V2AR44UQ41UQ4.3
			Ed.	MKLEPADLO					
			Appr		P6700 Framing - Cell 2V01, KF1	Scale 1:1		Document type: EPB	Project nr: 22-16152
Modification	Date	Name	Original		Replacement of / Replaced by				Page 1 / 1630

Parts list

F01_001

Device tag	Quantity	Designation	Type number	Supplier	Part number
=V2AR44UQ42BG0-BG01	1	Inductive sensor With WeldGuard™ coating	NI50U-CK40-AP6X2-H1141/S1590 W/BS4	TURCK	TUR.NI50U-CK40-AP6X2-H1141/S1590 W/BS4
=V2AR44UQ42BG0-BG02	1	Inductive sensor With WeldGuard™ coating	NI50U-CK40-AP6X2-H1141/S1590 W/BS4	TURCK	TUR.NI50U-CK40-AP6X2-H1141/S1590 W/BS4
=V2AR44UQ42BG0-BG03	1	Inductive sensor With WeldGuard™ coating	NI50U-CK40-AP6X2-H1141/S1590 W/BS4	TURCK	TUR.NI50U-CK40-AP6X2-H1141/S1590 W/BS4
=V2AR44UQ42BG0-XG1/2	1	Y splitter	U2-30676	TURCK	TUR.VB2-FSM 4.4/2FKM 4/S3450
=V2AR44UQ42KF1-KF1	0	Bus node	CPX-FB33	FESTO	FES.548755
=V2AR44UQ42KF1-KF1	0	Interlinking block	CPX-M-GE-EV-S-7/8-5POL	FES	FES.550208
=V2AR44UQ42KF1-KF1.11	0	Manifold block	CPX-M-AB-8-M12X2-5POL	FES	FES.549335
=V2AR44UQ42KF1-KF1.12	0	Manifold block	CPX-M-AB-8-M12X2-5POL	FES	FES.549335
=V2AR44UQ42KF1-KF1.13	0	Manifold block	CPX-M-AB-8-M12X2-5POL	FES	FES.549335

+.AR44UQ41UQ4.3/1

+.AR44UQ42UQ1.1/1

			Date	1/24/2023	Volvo Trucks North America	Valiant TMS	Parts list : TUR.NI50U-CK40-AP6X2-H1141/S1590 W/BS4 - FES.549335	Drawing name: =2V01&EFS-EL_KF1	=	
			Ed.	MKLEPADLO					+ V2AR44UQ42	
			Appr		P6700 Framing - Cell 2V01, KF1	Scale 1:1		Document type: EPB	Project nr: 22-16152	Page 1 / 1630
Modification	Date	Name	Original		Replacement of	Replaced by				

Parts list

F01_001

Device tag	Quantity	Designation	Type number	Supplier	Part number
=V2AR44UQ42UQ1.1-BGS/R	1	Inductive sensor Monitoring Kit for Power Clamps	WWS001A	WELKER	WEL.WWS001A

+V2AR44UQ42/1

+.AR44UQ42UQ2.1/1

			Date	1/24/2023	Volvo Trucks North America	Valiant TMS	Parts list : WEL.WWS001A - WEL.WWS001A	Drawing name: =2V01&EFS-EL_KF1	= + V2AR44UQ42UQ1.1
			Ed.	MKLEPADLO					
			Appr		P6700 Framing - Cell 2V01, KF1	Scale 1:1		Document type: EPB / Project nr: 22-16152	Page 1 / 1630
Modification	Date	Name	Original		Replacement of / Replaced by				

Parts list

F01_001

Device tag	Quantity	Designation	Type number	Supplier	Part number
=V2AR44UQ42UQ2.1-BGS/R	1	Inductive sensor Monitoring Kit for Power Clamps	1324644	TUNKERS	TUN.1324644

+.AR44UQ42UQ1.1/1

+.AR44UQ42UQ2.2/1

			Date	1/24/2023	Volvo Trucks North America	Valiant TMS	Parts list : TUN.1324644 - TUN.1324644	Drawing name: =2V01&EFS-EL_KF1	= + V2AR44UQ42UQ2.1
			Ed.	MKLEPADLO					
			Appr		P6700 Framing - Cell 2V01, KF1	Scale 1:1		Document type: EPB	Project nr: 22-16152
Modification	Date	Name	Original		Replacement of	Replaced by			Page 1 / 1630

Parts list

F01_001

Device tag	Quantity	Designation	Type number	Supplier	Part number
=V2AR44UQ42UQ2.2-BGS/R	1	Inductive sensor Monitoring Kit for Power Clamps	1324644	TUNKERS	TUN.1324644

+.AR44UQ42UQ2.1/1

+.AR44UQ42UQ3.1/1

			Date	1/24/2023	Volvo Trucks North America	Valiant TMS	Parts list : TUN.1324644 - TUN.1324644	Drawing name: =2V01&EFS-EL_KF1	= + V2AR44UQ42UQ2.2
			Ed.	MKLEPADLO					
			Appr		P6700 Framing - Cell 2V01, KF1	Scale 1:1		Document type: EPB	Project nr: 22-16152
Modification	Date	Name	Original		Replacement of	Replaced by			Page 1 / 1630

Parts list

F01_001

Device tag	Quantity	Designation	Type number	Supplier	Part number
=V2AR44UQ42UQ3.1-BGS/R	1	Pressure sensor with display	PN-010-RER14-QFRKG/US/ /V	IFM	IFM.PN7094

+.AR44UQ42UQ2.2/1

+.AR44UQ42UQ4.1/1

			Date	1/24/2023	Volvo Trucks North America	Valiant TMS	Parts list : IFM.PN7094 - IFM.PN7094	Drawing name: =2V01&EFS-EL_KF1	=	
			Ed.	MKLEPADLO					+ V2AR44UQ42UQ3.1	
			Appr		P6700 Framing - Cell 2V01, KF1	Scale 1:1		Document type: EPB	Project nr: 22-16152	Page 1 / 1630
Modification	Date	Name	Original		Replacement of	Replaced by				

Parts list

F01_001

Device tag	Quantity	Designation	Type number	Supplier	Part number
=V2AR44UQ42UQ4.1-BGS/R	1	Inductive sensor Monitoring Kit for Power Clamps	1324638	TUNKERS	TUN.1324638

+.AR44UQ42UQ3.1/1

+.AR44UQ42UQ4.2/1

Parts list

F01_001

Device tag	Quantity	Designation	Type number	Supplier	Part number
=V2AR44UQ42UQ4.2-BGS/R	1	Inductive sensor Monitoring Kit for Power Clamps	1324638	TUNKERS	TUN.1324638

+.AR44UQ42UQ4.1/1

+.AR44UQ42UQ5.1/1

			Date	1/24/2023	Volvo Trucks North America	Valiant TMS	Parts list : TUN.1324638 - TUN.1324638	Drawing name: =2V01&EFS-EL_KF1	= + V2AR44UQ42UQ4.2
			Ed.	MKLEPADLO					
			Appr		P6700 Framing - Cell 2V01, KF1	Scale 1:1		Document type: EPB	Project nr: 22-16152
Modification	Date	Name	Original		Replacement of	Replaced by			Page 1 / 1630

Parts list

F01_001

Device tag	Quantity	Designation	Type number	Supplier	Part number
=V2AR44UQ42UQ5.1-BGS/R	1	Inductive sensor Monitoring Kit for Power Clamps	1324638	TUNKERS	TUN.1324638

+.AR44UQ42UQ4.2/1

+.AR44UQ42UQ5.2/1

			Date	1/24/2023	Volvo Trucks North America	Valiant TMS	Parts list : TUN.1324638 - TUN.1324638	Drawing name: =2V01&EFS-EL_KF1	=	
			Ed.	MKLEPADLO					+ V2AR44UQ42UQ5.1	
			Appr		P6700 Framing - Cell 2V01, KF1	Scale 1:1		Document type: EPB	Project nr: 22-16152	Page 1
Modification	Date	Name	Original		Replacement of / Replaced by					1630

Parts list

F01_001

Device tag	Quantity	Designation	Type number	Supplier	Part number
=V2AR44UQ42UQ5.2-BGS/R	1	Inductive sensor Monitoring Kit for Power Clamps	1324638	TUNKERS	TUN.1324638

+.AR44UQ42UQ5.1/1

+.AR44UQ42UQ6.1/1

			Date	1/24/2023	Volvo Trucks North America	Valiant TMS	Parts list : TUN.1324638 - TUN.1324638	Drawing name: =2V01&EFS-EL_KF1	= + V2AR44UQ42UQ5.2
			Ed.	MKLEPADLO					
			Appr		P6700 Framing - Cell 2V01, KF1	Scale 1:1		Document type: EPB / Project nr: 22-16152	Page 1 / 1630
Modification	Date	Name	Original		Replacement of / Replaced by				

Parts list

F01_001

Device tag	Quantity	Designation	Type number	Supplier	Part number
=V2AR44UQ42UQ6.1-BGS/R	1	Inductive sensor Monitoring Kit for Power Clamps	1324638	TUNKERS	TUN.1324638

+.AR44UQ42UQ5.2/1

+.AR44UQ42UQ6.2/1

			Date	1/24/2023	Volvo Trucks North America	Valiant TMS	Parts list : TUN.1324638 - TUN.1324638	Drawing name: =2V01&EFS-EL_KF1	= + V2AR44UQ42UQ6.1
			Ed.	MKLEPADLO					
			Appr		P6700 Framing - Cell 2V01, KF1	Scale 1:1		Document type: EPB / Project nr: 22-16152	Page 1 / 1630
Modification	Date	Name	Original		Replacement of / Replaced by				

Parts list

F01_001

Device tag	Quantity	Designation	Type number	Supplier	Part number
=V2AR44UQ42UQ6.2-BGS/R	1	Inductive sensor Monitoring Kit for Power Clamps	1324638	TUNKERS	TUN.1324638

+.AR44UQ42UQ6.1/1

+.AR44UQ42UQ6.3/1

			Date	1/24/2023	Volvo Trucks North America	Valiant TMS	Parts list : TUN.1324638 - TUN.1324638	Drawing name: =2V01&EFS-EL_KF1	= + V2AR44UQ42UQ6.2
			Ed.	MKLEPADLO					
			Appr		P6700 Framing - Cell 2V01, KF1	Scale 1:1		Document type: EPB / Project nr: 22-16152	Page 1 / 1630
Modification	Date	Name	Original		Replacement of / Replaced by				

Parts list

F01_001

Device tag	Quantity	Designation	Type number	Supplier	Part number
=V2AR44UQ42UQ6.3-BGS/R	1	Inductive sensor Monitoring Kit for Power Clamps	1324638	TUNKERS	TUN.1324638

+.AR44UQ42UQ6.2/1

+.AR44UQ42UQ7.1/1

			Date	1/24/2023	Volvo Trucks North America	Valiant TMS	Parts list : TUN.1324638 - TUN.1324638	Drawing name: =2V01&EFS-EL_KF1	= + V2AR44UQ42UQ6.3
			Ed.	MKLEPADLO					
			Appr		P6700 Framing - Cell 2V01, KF1	Scale 1:1		Document type: EPB / Project nr: 22-16152	Page 1 / 1630
Modification	Date	Name	Original		Replacement of / Replaced by				

Parts list

F01_001

Device tag	Quantity	Designation	Type number	Supplier	Part number
=V2AR44UQ42UQ7.1-BGS/R	1	Inductive sensor Monitoring Kit for Power Clamps	1324638	TUNKERS	TUN.1324638

+.AR44UQ42UQ6.3/1

+.AR44UQ42UQ7.2/1

			Date	1/24/2023	Volvo Trucks North America	Valiant TMS	Parts list : TUN.1324638 - TUN.1324638	Drawing name: =2V01&EFS-EL_KF1	=	
			Ed.	MKLEPADLO					+ V2AR44UQ42UQ7.1	
			Appr		P6700 Framing - Cell 2V01, KF1	Scale 1:1		Document type: EPB	Project nr: 22-16152	Page 1 / 1630
Modification	Date	Name	Original		Replacement of	Replaced by				

Parts list

F01_001

Device tag	Quantity	Designation	Type number	Supplier	Part number
=V2AR44UQ42UQ7.2-BGS/R	1	Inductive sensor Monitoring Kit for Power Clamps	1324638	TUNKERS	TUN.1324638

+.AR44UQ42UQ7.1/1

+.AR44UQ42UQ8.1/1

			Date	1/24/2023	Volvo Trucks North America	Valiant TMS	Parts list : TUN.1324638 - TUN.1324638	Drawing name: =2V01&EFS-EL_KF1	= + V2AR44UQ42UQ7.2
			Ed.	MKLEPADLO					
			Appr		P6700 Framing - Cell 2V01, KF1	Scale 1:1		Document type: EPB / Project nr: 22-16152	Page 1 / 1630
Modification	Date	Name	Original		Replacement of / Replaced by				

Parts list

F01_001

Device tag	Quantity	Designation	Type number	Supplier	Part number
=V2AR44UQ42UQ8.1-BGS/R	1	Inductive sensor Monitoring Kit for Power Clamps	1324638	TUNKERS	TUN.1324638

+.AR44UQ42UQ7.2/1

+.AR44UQ42UQ8.2/1

			Date	1/24/2023	Volvo Trucks North America	Valiant TMS	Parts list : TUN.1324638 - TUN.1324638	Drawing name: =2V01&EFS-EL_KF1	= + V2AR44UQ42UQ8.1
			Ed.	MKLEPADLO					
			Appr		P6700 Framing - Cell 2V01, KF1	Scale 1:1		Document type: EPB	Project nr: 22-16152
Modification	Date	Name	Original		Replacement of	Replaced by			Page 1 / 1630

Parts list

F01_001

Device tag	Quantity	Designation	Type number	Supplier	Part number
=V2AR44UQ42UQ8.2-BGS/R	1	Inductive sensor Monitoring Kit for Power Clamps	1324638	TUNKERS	TUN.1324638

+.AR44UQ42UQ8.1/1

+.AR44UQ42UQ9.1/1

			Date	1/24/2023	Volvo Trucks North America	Valiant TMS	Parts list : TUN.1324638 - TUN.1324638	Drawing name: =2V01&EFS-EL_KF1	= + V2AR44UQ42UQ8.2
			Ed.	MKLEPADLO					
			Appr		P6700 Framing - Cell 2V01, KF1	Scale 1:1		Document type: EPB / Project nr: 22-16152	Page 1 / 1630
Modification	Date	Name	Original		Replacement of / Replaced by				

Parts list

F01_001

Device tag	Quantity	Designation	Type number	Supplier	Part number
=V2AR44UQ42UQ9.1-BGS/R	1	Inductive sensor Monitoring Kit for Power Clamps	1324638	TUNKERS	TUN.1324638

+.AR44UQ42UQ8.2/1

+.AR44UQ42UQ9.2/1

			Date	1/24/2023	Volvo Trucks North America	Valiant TMS	Parts list : TUN.1324638 - TUN.1324638	Drawing name: =2V01&EFS-EL_KF1	=	
			Ed.	MKLEPADLO					+ V2AR44UQ42UQ9.1	
			Appr		P6700 Framing - Cell 2V01, KF1	Scale 1:1		Document type: EPB	Project nr: 22-16152	Page 1
Modification	Date	Name	Original		Replacement of / Replaced by					1630

Parts list

F01_001

Device tag	Quantity	Designation	Type number	Supplier	Part number
=V2AR44UQ42UQ9.2-BGS/R	1	Inductive sensor Monitoring Kit for Power Clamps	1324638	TUNKERS	TUN.1324638

+.AR44UQ42UQ9.1/1

+.AR44UQ43/1

			Date	1/24/2023	Volvo Trucks North America	Valiant TMS	Parts list : TUN.1324638 - TUN.1324638	Drawing name: =2V01&EFS-EL_KF1	=	
			Ed.	MKLEPADLO					+ V2AR44UQ42UQ9.2	
			Appr		P6700 Framing - Cell 2V01, KF1	Scale 1:1		Document type: EPB	Project nr: 22-16152	Page 1 / 1630
Modification	Date	Name	Original		Replacement of	Replaced by				

Parts list

F01_001

Device tag	Quantity	Designation	Type number	Supplier	Part number
=V2AR44UQ43BG0-BG01	1	Inductive sensor With WeldGuard™ coating	NI50U-CK40-AP6X2-H1141/S1590 W/BS4	TURCK	TUR.NI50U-CK40-AP6X2-H1141/S1590 W/BS4
=V2AR44UQ43BG0-BG02	1	Inductive sensor With WeldGuard™ coating	NI50U-CK40-AP6X2-H1141/S1590 W/BS4	TURCK	TUR.NI50U-CK40-AP6X2-H1141/S1590 W/BS4
=V2AR44UQ43BG0-XG1/2	1	Y splitter	U2-30676	TURCK	TUR.VB2-FSM 4.4/2FKM 4/S3450
=V2AR44UQ43KF1-KF1	0	Bus node	CPX-FB33	FESTO	FES.548755
=V2AR44UQ43KF1-KF1	0	Interlinking block	CPX-M-GE-EV-S-7/8-5POL	FES	FES.550208
=V2AR44UQ43KF1-KF1.11	0	Manifold block	CPX-M-AB-8-M12X2-5POL	FES	FES.549335
=V2AR44UQ43KF1-KF1.12	0	Manifold block	CPX-M-AB-8-M12X2-5POL	FES	FES.549335
=V2AR44UQ43KF1-KF1.13	0	Manifold block	CPX-M-AB-8-M12X2-5POL	FES	FES.549335

+.AR44UQ42UQ9.2/1

+.AR44UQ43UQ1.1/1

			Date	1/24/2023	Volvo Trucks North America	Valiant TMS	Parts list : TUR.NI50U-CK40-AP6X2-H1141/S1590 W/BS4 - FES.549335	Drawing name: =2V01&EFS-EL_KF1	= + V2AR44UQ43
			Ed.	MKLEPADLO					
			Appr		P6700 Framing - Cell 2V01, KF1	Scale 1:1		Document type: EPB / Project nr: 22-16152	Page 1 / 1630
Modification	Date	Name	Original		Replacement of / Replaced by				

Parts list

F01_001

Device tag	Quantity	Designation	Type number	Supplier	Part number
=V2AR44UQ43UQ1.1-BGS/R	1	Inductive sensor Monitoring Kit for Power Clamps	WWS001A	WELKER	WEL.WWS001A

+V2AR44UQ43/1

+.AR44UQ43UQ2.1/1

			Date	1/24/2023	Volvo Trucks North America	Valiant TMS	Parts list : WEL.WWS001A - WEL.WWS001A	Drawing name: =2V01&EFS-EL_KF1	= + V2AR44UQ43UQ1.1
			Ed.	MKLEPADLO					
			Appr		P6700 Framing - Cell 2V01, KF1	Scale 1:1		Document type: EPB / Project nr: 22-16152	Page 1 / 1630
Modification	Date	Name	Original		Replacement of / Replaced by				

Parts list

F01_001

Device tag	Quantity	Designation	Type number	Supplier	Part number
=V2AR44UQ43UQ2.1-BGS/R	1	Inductive sensor Monitoring Kit for Power Clamps	1324638	TUNKERS	TUN.1324638

+.AR44UQ43UQ1.1/1

+.AR44UQ43UQ2.2/1

			Date	1/24/2023	Volvo Trucks North America	Valiant TMS	Parts list : TUN.1324638 - TUN.1324638	Drawing name: =2V01&EFS-EL_KF1	= + V2AR44UQ43UQ2.1
			Ed.	MKLEPADLO					
			Appr		P6700 Framing - Cell 2V01, KF1	Scale 1:1		Document type: EPB / Project nr: 22-16152	Page 1 / 1630
Modification	Date	Name	Original		Replacement of / Replaced by				

Parts list

F01_001

Device tag	Quantity	Designation	Type number	Supplier	Part number
=V2AR44UQ43UQ2.2-BGS/R	1	Inductive sensor Monitoring Kit for Power Clamps	1324638	TUNKERS	TUN.1324638

+.AR44UQ43UQ2.1/1

+.AR44UQ43UQ2.3/1

			Date	1/24/2023	Volvo Trucks North America	Valiant TMS	Parts list : TUN.1324638 - TUN.1324638	Drawing name: =2V01&EFS-EL_KF1	= + V2AR44UQ43UQ2.2
			Ed.	MKLEPADLO					
			Appr		P6700 Framing - Cell 2V01, KF1	Scale 1:1		Document type: EPB	Project nr: 22-16152
Modification	Date	Name	Original		Replacement of / Replaced by				Page 1 / 1630

Parts list

F01_001

Device tag	Quantity	Designation	Type number	Supplier	Part number
=V2AR44UQ43UQ2.3-BGS/R	1	Inductive sensor Monitoring Kit for Power Clamps	1324638	TUNKERS	TUN.1324638

+.AR44UQ43UQ2.2/1

+.AR44UQ43UQ3.1/1

			Date	1/24/2023	Volvo Trucks North America	Valiant TMS	Parts list : TUN.1324638 - TUN.1324638	Drawing name: =2V01&EFS-EL_KF1	= + V2AR44UQ43UQ2.3
			Ed.	MKLEPADLO					
			Appr		P6700 Framing - Cell 2V01, KF1	Scale 1:1		Document type: EPB / Project nr: 22-16152	Page 1 / 1630
Modification	Date	Name	Original		Replacement of / Replaced by				

Parts list

F01_001

Device tag	Quantity	Designation	Type number	Supplier	Part number
=V2AR44UQ43UQ3.1-BGS/R	1	Pressure sensor with display	PN-010-RER14-QFRKG/US/ /V	IFM	IFM.PN7094

+.AR44UQ43UQ2.3/1

+.AR44UQ43UQ4.1/1

			Date	1/24/2023	Volvo Trucks North America	Valiant TMS	Parts list : IFM.PN7094 - IFM.PN7094	Drawing name: =2V01&EFS-EL_KF1	=	
			Ed.	MKLEPADLO					+ V2AR44UQ43UQ3.1	
			Appr		P6700 Framing - Cell 2V01, KF1	Scale 1:1		Document type: EPB	Project nr: 22-16152	Page 1 / 1630
Modification	Date	Name	Original		Replacement of	Replaced by				

Parts list

F01_001

Device tag	Quantity	Designation	Type number	Supplier	Part number
=V2AR44UQ43UQ4.1-BGS/R	1	Inductive sensor Monitoring Kit for Power Clamps	1324638	TUNKERS	TUN.1324638

+.AR44UQ43UQ3.1/1

+.AR44UQ43UQ4.2/1

Parts list

F01_001

Device tag	Quantity	Designation	Type number	Supplier	Part number
=V2AR44UQ43UQ4.2-BGS/R	1	Inductive sensor Monitoring Kit for Power Clamps	1324638	TUNKERS	TUN.1324638

+.AR44UQ43UQ4.1/1

+.AR44UQ43UQ4.3/1

			Date	1/24/2023	Volvo Trucks North America	Valiant TMS	Parts list : TUN.1324638 - TUN.1324638	Drawing name: =2V01&EFS-EL_KF1	= + V2AR44UQ43UQ4.2
			Ed.	MKLEPADLO					
			Appr		P6700 Framing - Cell 2V01, KF1	Scale 1:1		Document type: EPB	Project nr: 22-16152
Modification	Date	Name	Original		Replacement of / Replaced by				Page 1 / 1630

Parts list

F01_001

Device tag	Quantity	Designation	Type number	Supplier	Part number
=V2AR44UQ43UQ4.3-BGS/R	1	Inductive sensor Monitoring Kit for Power Clamps	1324638	TUNKERS	TUN.1324638

+.AR44UQ43UQ4.2/1

+.AR44UQ43UQ4.4/1

			Date	1/24/2023	Volvo Trucks North America	Valiant TMS	Parts list : TUN.1324638 - TUN.1324638	Drawing name: =2V01&EFS-EL_KF1	= + V2AR44UQ43UQ4.3
			Ed.	MKLEPADLO					
			Appr		P6700 Framing - Cell 2V01, KF1	Scale 1:1		Document type: EPB / Project nr: 22-16152	Page 1 / 1630
Modification	Date	Name	Original		Replacement of / Replaced by				

Parts list

F01_001

Device tag	Quantity	Designation	Type number	Supplier	Part number
=V2AR44UQ43UQ4.4-BGS/R	1	Inductive sensor Monitoring Kit for Power Clamps	1324638	TUNKERS	TUN.1324638

+.AR44UQ43UQ4.3/1

+.AR44UQ43UQ4.5/1

			Date	1/24/2023	Volvo Trucks North America	Valiant TMS	Parts list : TUN.1324638 - TUN.1324638	Drawing name: =2V01&EFS-EL_KF1	=	
			Ed.	MKLEPADLO					+ V2AR44UQ43UQ4.4	
			Appr		P6700 Framing - Cell 2V01, KF1	Scale 1:1		Document type: EPB	Project nr: 22-16152	Page 1 / 1630
Modification	Date	Name	Original		Replacement of / Replaced by					

Parts list

F01_001

Device tag	Quantity	Designation	Type number	Supplier	Part number
=V2AR44UQ43UQ4.5-BGS/R	1	Inductive sensor Monitoring Kit for Power Clamps	1324638	TUNKERS	TUN.1324638

+.AR44UQ43UQ4.4/1

+.AR44XQ11UC01/1

			Date	1/24/2023	Volvo Trucks North America	Valiant TMS	Parts list : TUN.1324638 - TUN.1324638	Drawing name: =2V01&EFS-EL_KF1	=	
			Ed.	MKLEPADLO					+ V2AR44UQ43UQ4.5	
			Appr		P6700 Framing - Cell 2V01, KF1	Scale 1:1		Document type: EPB	Project nr: 22-16152	Page 1 / 1630
Modification	Date	Name	Original		Replacement of / Replaced by					

Parts list

F01_001

Device tag	Quantity	Designation	Type number	Supplier	Part number
=V2AR44XQ11WC1-XG1	1	Surface socket-outlet	416RS6	ABB	ABB.2CMA193115R1000

+.AR44UQ43UQ4.5/1

+.FQ1/1

			Date	1/24/2023	Volvo Trucks North America	Valiant TMS	Parts list : ABB.2CMA193115R1000 - ABB.2CMA193115R1000	Drawing name: =2V01&EFS-EL_KF1	= + V2AR44XQ11UC01
			Ed.	MKLEPADLO					
			Appr		P6700 Framing - Cell 2V01, KF1	Scale 1:1		Document type: EPB / Project nr: 22-16152	Page 1 / 1630
Modification	Date	Name	Original		Replacement of / Replaced by				

Parts list

F01_001

Device tag	Quantity	Designation	Type number	Supplier	Part number
=V2FQ1-BR15	1	EZ-Screen System	SLSCP30-1200P44NT	BANNER	BAN.SLSCP30-1200P44NT

+.AR44XQ11UC01/1

+.FQ1BG3/1

			Date	1/24/2023	Volvo Trucks North America	Valiant TMS	Parts list : BAN.SLSCP30-1200P44NT - BAN.SLSCP30-1200P44NT	Drawing name: =2V01&EFS-EL_KF1	= + V2FQ1
			Ed.	MKLEPADLO					
			Appr		P6700 Framing - Cell 2V01, KF1	Scale 1:1		Document type: EPB / Project nr: 22-16152	Page 1 / 1630
Modification	Date	Name	Original		Replacement of / Replaced by				

Parts list

F01_001

Device tag	Quantity	Designation	Type number	Supplier	Part number
=V2FQ1-BG3	1	SWITCH	MGB-L2B-PNA-R-121859	EUCHNER	EUC.MGB-L2B-PNA-R-121859
=V2FQ1-BG3	1	HANDLE	MGB-H-AA1A2-R-106049	EUCHNER	EUC.MGB-H-AA1A2-R-106049
=V2FQ1-BG3	1	MOUNTING PLATE	MGB-A-MOUNTINGPLATE-H-109491	EUCHNER	EUC.MGB-A-MOUNTINGPLATE-H-109491
=V2FQ1-BG3	1	ESCAPE RELEASE	MGB-E-A2-106051	EUCHNER	EUC.MGB-E-A2-106051

+V2FQ1/1

+.FQ1BG4/1

			Date	1/24/2023	Volvo Trucks North America	Valiant TMS	Parts list : EUC.MGB-L2B-PNA-R-121859 - EUC.MGB-E-A2-106051	Drawing name: =2V01&EFS-EL_KF1	=
			Ed.	MKLEPADLO					+ V2FQ1BG3
			Appr		P6700 Framing - Cell 2V01, KF1	Scale 1:1		Document type: EPB	Project nr: 22-16152
Modification	Date	Name	Original		Replacement of	Replaced by			Page 1 / 1630

Parts list

F01_001

Device tag	Quantity	Designation	Type number	Supplier	Part number
=V2FQ1-BG4	1	SWITCH	MGB-L2B-PNA-L-121863	EUCHNER	EUC.MGB-L2B-PNA-L-121863
=V2FQ1-BG4	1	HANDLE	MGB-H-AA1A2-L-106221	EUCHNER	EUC.MGB-H-AA1A2-L-106221
=V2FQ1-BG4	1	MOUNTING PLATE	MGB-A-MOUNTINGPLATE-H-109491	EUCHNER	EUC.MGB-A-MOUNTINGPLATE-H-109491
=V2FQ1-BG4	1	ESCAPE RELEASE	MGB-E-A2-106051	EUCHNER	EUC.MGB-E-A2-106051

+.FQ1BG3/1

+.FQ1BG5/1

			Date	1/24/2023	Volvo Trucks North America	Valiant TMS	Parts list : EUC.MGB-L2B-PNA-L-121863 - EUC.MGB-E-A2-106051	Drawing name: =2V01&EFS-EL_KF1	= + V2FQ1BG4
			Ed.	MKLEPADLO					
			Appr		P6700 Framing - Cell 2V01, KF1	Scale 1:1		Document type: EPB / Project nr: 22-16152	Page 1 / 1630
Modification	Date	Name	Original		Replacement of / Replaced by				

Parts list

F01_001

Device tag	Quantity	Designation	Type number	Supplier	Part number
=V2FQ1-BG5	1	SWITCH	MGB-L2B-PNA-R-121859	EUCHNER	EUC.MGB-L2B-PNA-R-121859
=V2FQ1-BG5	1	HANDLE	MGB-H-AA1A2-R-106049	EUCHNER	EUC.MGB-H-AA1A2-R-106049
=V2FQ1-BG5	1	MOUNTING PLATE	MGB-A-MOUNTINGPLATE-H-109491	EUCHNER	EUC.MGB-A-MOUNTINGPLATE-H-109491
=V2FQ1-BG5	1	ESCAPE RELEASE	MGB-E-A2-106051	EUCHNER	EUC.MGB-E-A2-106051

+.FQ1BG4/1

+.FQ1BG8/1

			Date	1/24/2023	Volvo Trucks North America	Valiant TMS	Parts list : EUC.MGB-L2B-PNA-R-121859 - EUC.MGB-E-A2-106051	Drawing name: =2V01&EFS-EL_KF1	= + V2FQ1BG5
			Ed.	MKLEPADLO					
			Appr		P6700 Framing - Cell 2V01, KF1	Scale 1:1		Document type: EPB / Project nr: 22-16152	Page 1 / 1630
Modification	Date	Name	Original		Replacement of / Replaced by				

Parts list

F01_001

Device tag	Quantity	Designation	Type number	Supplier	Part number
=V2FQ1-BG8	1	SWITCH	MGB-L2B-PNA-R-121859	EUCHNER	EUC.MGB-L2B-PNA-R-121859
=V2FQ1-BG8	1	HANDLE	MGB-H-AA1A2-R-106049	EUCHNER	EUC.MGB-H-AA1A2-R-106049
=V2FQ1-BG8	1	MOUNTING PLATE	MGB-A-MOUNTINGPLATE-H-109491	EUCHNER	EUC.MGB-A-MOUNTINGPLATE-H-109491
=V2FQ1-BG8	1	ESCAPE RELEASE	MGB-E-A2-106051	EUCHNER	EUC.MGB-E-A2-106051

+.FQ1BG5/1

+.FQ1BG9/1

			Date	1/24/2023	Volvo Trucks North America	Valiant TMS	Parts list : EUC.MGB-L2B-PNA-R-121859 - EUC.MGB-E-A2-106051	Drawing name: =2V01&EFS-EL_KF1	= + V2FQ1BG8
			Ed.	MKLEPADLO					
			Appr		P6700 Framing - Cell 2V01, KF1	Scale 1:1		Document type: EPB / Project nr: 22-16152	Page 1 / 1630
Modification	Date	Name	Original		Replacement of / Replaced by				

Parts list

F01_001

Device tag	Quantity	Designation	Type number	Supplier	Part number
=V2FQ1-BG9	1	SWITCH	MGB-L2B-PNA-L-121863	EUCHNER	EUC.MGB-L2B-PNA-L-121863
=V2FQ1-BG9	1	HANDLE	MGB-H-AA1A2-L-106221	EUCHNER	EUC.MGB-H-AA1A2-L-106221
=V2FQ1-BG9	1	MOUNTING PLATE	MGB-A-MOUNTINGPLATE-H-109491	EUCHNER	EUC.MGB-A-MOUNTINGPLATE-H-109491
=V2FQ1-BG9	1	ESCAPE RELEASE	MGB-E-A2-106051	EUCHNER	EUC.MGB-E-A2-106051

+.FQ1BG8/1

+.FQ1BG10/1

			Date	1/24/2023	Volvo Trucks North America	Valiant TMS	Parts list : EUC.MGB-L2B-PNA-L-121863 - EUC.MGB-E-A2-106051	Drawing name: =2V01&EFS-EL_KF1	= + V2FQ1BG9
			Ed.	MKLEPADLO					
			Appr		P6700 Framing - Cell 2V01, KF1	Scale 1:1		Document type: EPB / Project nr: 22-16152	Page 1 / 1630
Modification	Date	Name	Original		Replacement of / Replaced by				

Parts list

F01_001

Device tag	Quantity	Designation	Type number	Supplier	Part number
=V2FQ1-BG10	1	SWITCH	MGB-L2B-PNA-L-121863	EUCHNER	EUC.MGB-L2B-PNA-L-121863
=V2FQ1-BG10	1	HANDLE	MGB-H-AA1A2-L-106221	EUCHNER	EUC.MGB-H-AA1A2-L-106221
=V2FQ1-BG10	1	MOUNTING PLATE	MGB-A-MOUNTINGPLATE-H-109491	EUCHNER	EUC.MGB-A-MOUNTINGPLATE-H-109491
=V2FQ1-BG10	1	ESCAPE RELEASE	MGB-E-A2-106051	EUCHNER	EUC.MGB-E-A2-106051

+.FQ1BG9/1

+.FQ1BG11/1

			Date	1/24/2023	Volvo Trucks North America	Valiant TMS	Parts list : EUC.MGB-L2B-PNA-L-121863 - EUC.MGB-E-A2-106051	Drawing name: =2V01&EFS-EL_KF1	=
			Ed.	MKLEPADLO					+ V2FQ1BG10
			Appr		P6700 Framing - Cell 2V01, KF1	Scale 1:1		Document type: EPB	Project nr: 22-16152
Modification	Date	Name	Original		Replacement of / Replaced by				Page 1 / 1630

Parts list

F01_001

Device tag	Quantity	Designation	Type number	Supplier	Part number
=V2FQ1-BG11	1	SWITCH	MGB-L2B-PNA-R-121859	EUCHNER	EUC.MGB-L2B-PNA-R-121859
=V2FQ1-BG11	1	HANDLE	MGB-H-AA1A2-R-106049	EUCHNER	EUC.MGB-H-AA1A2-R-106049
=V2FQ1-BG11	1	MOUNTING PLATE	MGB-A-MOUNTINGPLATE-H-109491	EUCHNER	EUC.MGB-A-MOUNTINGPLATE-H-109491
=V2FQ1-BG11	1	ESCAPE RELEASE	MGB-E-A2-106051	EUCHNER	EUC.MGB-E-A2-106051

+.FQ1BG10/1

+.FQ1BG12/1

			Date	1/24/2023	Volvo Trucks North America	Valiant TMS	Parts list : EUC.MGB-L2B-PNA-R-121859 - EUC.MGB-E-A2-106051	Drawing name: =2V01&EFS-EL_KF1	= + V2FQ1BG11
			Ed.	MKLEPADLO					
			Appr		P6700 Framing - Cell 2V01, KF1	Scale 1:1		Document type: EPB / Project nr: 22-16152	Page 1 / 1630
Modification	Date	Name	Original		Replacement of / Replaced by				

Parts list

F01_001

Device tag	Quantity	Designation	Type number	Supplier	Part number
=V2FQ1-BG12	1	SWITCH	MGB-L2B-PNA-R-121859	EUCHNER	EUC.MGB-L2B-PNA-R-121859
=V2FQ1-BG12	1	HANDLE	MGB-H-AA1A2-R-106049	EUCHNER	EUC.MGB-H-AA1A2-R-106049
=V2FQ1-BG12	1	MOUNTING PLATE	MGB-A-MOUNTINGPLATE-H-109491	EUCHNER	EUC.MGB-A-MOUNTINGPLATE-H-109491
=V2FQ1-BG12	1	ESCAPE RELEASE	MGB-E-A2-106051	EUCHNER	EUC.MGB-E-A2-106051

+.FQ1BG11/1

+.GL15KF2/1

			Date	1/24/2023	Volvo Trucks North America	Valiant TMS	Parts list : EUC.MGB-L2B-PNA-R-121859 - EUC.MGB-E-A2-106051	Drawing name: =2V01&EFS-EL_KF1	=
			Ed.	MKLEPADLO					+ V2FQ1BG12
			Appr		P6700 Framing - Cell 2V01, KF1	Scale 1:1		Document type: EPB	Project nr: 22-16152
Modification	Date	Name	Original		Replacement of	Replaced by			Page 1 / 1630

Parts list

F01_001

Device tag	Quantity	Designation	Type number	Supplier	Part number
=V2GL15KF2-KF2.11	1	SINAMICS G120D CONTROL UNIT CU240D-2 PN-F	6SL3544-0FB21-1FA0	SIEMENS	SIE.6SL3544-0FB21-1FA0

+.FQ1BG12/1

+.GL15UC01/1

			Date	1/24/2023	Volvo Trucks North America	Valiant TMS	Parts list : SIE.6SL3544-0FB21-1FA0 - SIE.6SL3544-0FB21-1FA0	Drawing name: =2V01&EFS-EL_KF1	=	
			Ed.	MKLEPADLO					+ V2GL15KF2	
			Appr		P6700 Framing - Cell 2V01, KF1	Scale 1:1		Document type: EPB	Project nr: 22-16152	Page 1 / 1630
Modification	Date	Name	Original		Replacement of / Replaced by					

Parts list

F01_001

Device tag	Quantity	Designation	Type number	Supplier	Part number
=V2GL15-TA1	1	SINAMICS G120D POWER MODULE PM250D 0,75KW	6SL3525-0PE17-5AA1	SIEMENS	SIE.6SL3525-0PE17-5AA1
=V2GL15WC1-Q1	1	DISCONNECT	EM3BMHANQ4SDCG10	E-M	EM.EM3BMHANQ4SDCG10

+.GL15KF2/1

+.GL15UQ51/1

			Date	1/24/2023	Volvo Trucks North America		Valiant TMS	Parts list : SIE.6SL3525-0PE17-5AA1 - EM.EM3BMHANQ4SDCG10	Drawing name: =2V01&EFS-EL_KF1	= + V2GL15UC01	
			Ed.	MKLEPADLO							
			Appr		P6700 Framing - Cell 2V01, KF1		Scale 1:1		Document type: EPB	Project nr: 22-16152	Page 1 / 1630
Modification	Date	Name	Original		Replacement of	Replaced by					

Parts list

F01_001

Device tag	Quantity	Designation	Type number	Supplier	Part number
=V2GL15UQ51BG0-BG05	1	Inductive sensor	BI8U-MT18M-AP6X2-H1141/S1589	TURCK	TUR.1644741
=V2GL15UQ51BG0-BG06	1	Inductive sensor	BI8U-MT18M-AP6X2-H1141/S1589	TURCK	TUR.1644741
=V2GL15UQ51BG0-BG07	1	Inductive sensor	BI8U-MT18M-AP6X2-H1141/S1589	TURCK	TUR.1644741
=V2GL15UQ51BG0-BG08	1	Inductive sensor	BI8U-MT18M-AP6X2-H1141/S1589	TURCK	TUR.1644741
=V2GL15UQ51BG0-BG09	1	Inductive sensor	BI8U-MT18M-AP6X2-H1141/S1589	TURCK	TUR.1644741
=V2GL15UQ51BG0-BG12	1	Inductive sensor	BI8U-MT18M-AP6X2-H1141/S1589	TURCK	TUR.1644741
=V2GL15UQ51BG0-BG13	1	Inductive sensor	BI8U-MT18M-AP6X2-H1141/S1589	TURCK	TUR.1644741
=V2GL15UQ51BG0-BG14	1	Inductive sensor	BI8U-MT18M-AP6X2-H1141/S1589	TURCK	TUR.1644741
=V2GL15UQ51BG0-BG15	1	NEMA Limit Switch - NEMA Type 4 & 13 Oiltight Construction	802T-AP	A-B	A-B.802T-AP
=V2GL15UQ51BG0-BG17	1	Discrete Q60: Proximity Mode	Q60BB6AFV1000QPMA	BANNER	BAN.71959
=V2GL15UQ51BG0-XG6/17	1	Y splitter	U2-30676	TURCK	TUR.VB2-FSM 4.4/2FKM 4/S3450
=V2GL15UQ51BG0-XG7/12	1	Y splitter	U2-30676	TURCK	TUR.VB2-FSM 4.4/2FKM 4/S3450
=V2GL15UQ51BG0-XG8/9	1	Y splitter	U2-30676	TURCK	TUR.VB2-FSM 4.4/2FKM 4/S3450
=V2GL15UQ51BG0-XG13/14	1	Y splitter	U2-30676	TURCK	TUR.VB2-FSM 4.4/2FKM 4/S3450
=V2GL15UQ51KF2-KF2	0	Bus node	CPX-FB33	FESTO	FES.548755
=V2GL15UQ51KF2-KF2	0	Interlinking block	CPX-M-GE-EV-S-7/8-5POL	FES	FES.550208
=V2GL15UQ51KF2-KF2.11	0	Manifold block	CPX-M-AB-8-M12X2-5POL	FES	FES.549335
=V2GL15UQ51KF2-KF2.12	0	Manifold block	CPX-M-AB-8-M12X2-5POL	FES	FES.549335
=V2GL15UQ51KF2-KF2.13	0	Manifold block	CPX-M-AB-8-M12X2-5POL	FES	FES.549335

+.GL15UC01/1

+.GL15UQ51UQ3.1/1

			Date	1/24/2023	Volvo Trucks North America	Valiant TMS	Parts list : TUR.1644741 - FES.549335	Drawing name: =2V01&EFS-EL_KF1	=		
			Ed.	MKLEPADLO					+ V2GL15UQ51		
			Appr		P6700 Framing - Cell 2V01, KF1	Scale 1:1		Document type: EPB	Project nr: 22-16152	Page	1
Modification	Date	Name	Original		Replacement of	Replaced by					1630

Parts list

F01_001

Device tag	Quantity	Designation	Type number	Supplier	Part number
=V2GL15UQ51UQ3.1-BGR	1	Inductive sensor	BI8U-MT18M-AP6X2-H1141/S1589		TUR.16447411
=V2GL15UQ51UQ3.1-BGS	1	Inductive sensor	BI8U-MT18M-AP6X2-H1141/S1589		TUR.16447411
=V2GL15UQ51UQ3.1-XGR/S	1	Y splitter	U2-30676	TURCK	TUR.VB2-FSM 4.4/2FKM 4/S3450

+V2GL15UQ51/1

+.GL15UQ51UQ4.1/1

			Date	1/24/2023	Volvo Trucks North America	Valiant TMS	Parts list : TUR.16447411 - TUR.VB2-FSM 4.4/2FKM 4/S3450	Drawing name: =2V01&EFS-EL_KF1	=
			Ed.	MKLEPADLO					+ V2GL15UQ51UQ3.1
			Appr		P6700 Framing - Cell 2V01, KF1	Scale 1:1		Document type: EPB	Project nr: 22-16152
Modification	Date	Name	Original		Replacement of	Replaced by			Page 1 / 1630

Parts list

F01_001

Device tag	Quantity	Designation	Type number	Supplier	Part number
=V2GL15UQ51UQ4.1-BGR	1	Inductive sensor	BI8U-MT18M-AP6X2-H1141/S1589		TUR.16447411
=V2GL15UQ51UQ4.1-BGS	1	Inductive sensor	BI8U-MT18M-AP6X2-H1141/S1589		TUR.16447411
=V2GL15UQ51UQ4.1-XGR/S	1	Y splitter	U2-30676	TURCK	TUR.VB2-FSM 4.4/2FKM 4/S3450

+.GL15UQ51UQ3.1/1

+.GL15UQ51UQ5.1/1

			Date	1/24/2023	Volvo Trucks North America	Valiant TMS	Parts list : TUR.16447411 - TUR.VB2-FSM 4.4/2FKM 4/S3450	Drawing name: =2V01&EFS-EL_KF1	= + V2GL15UQ51UQ4.1
			Ed.	MKLEPADLO					
			Appr		P6700 Framing - Cell 2V01, KF1	Scale 1:1		Document type: EPB	Project nr: 22-16152
Modification	Date	Name	Original		Replacement of	Replaced by			Page 1 / 1630

Parts list

F01_001

Device tag	Quantity	Designation	Type number	Supplier	Part number
=V2GL15UQ51UQ5.1-BGR	1	Inductive sensor	BI8U-MT18M-AP6X2-H1141/S1589		TUR.16447411
=V2GL15UQ51UQ5.1-BGS	1	Inductive sensor	BI8U-MT18M-AP6X2-H1141/S1589		TUR.16447411
=V2GL15UQ51UQ5.1-XGR/S	1	Y splitter	U2-30676	TURCK	TUR.VB2-FSM 4.4/2FKM 4/S3450

+.GL15UQ51UQ4.1/1

+.GL16KF2/1

			Date	1/24/2023	Volvo Trucks North America	Valiant TMS	Parts list : TUR.16447411 - TUR.VB2-FSM 4.4/2FKM 4/S3450	Drawing name: =2V01&EFS-EL_KF1	= + V2GL15UQ51UQ5.1
			Ed.	MKLEPADLO					
			Appr		P6700 Framing - Cell 2V01, KF1	Scale 1:1		Document type: EPB	Project nr: 22-16152
Modification	Date	Name	Original		Replacement of	Replaced by			Page 1 / 1630

Parts list

F01_001

Device tag	Quantity	Designation	Type number	Supplier	Part number
=V2GL16KF2-KF2.11	1	SINAMICS G120D CONTROL UNIT CU240D-2 PN-F	6SL3544-0FB21-1FA0	SIEMENS	SIE.6SL3544-0FB21-1FA0

+.GL15UQ51UQ5.1/1

+.GL16UC01/1

			Date	1/24/2023	Volvo Trucks North America	Valiant TMS	Parts list : SIE.6SL3544-0FB21-1FA0 - SIE.6SL3544-0FB21-1FA0	Drawing name: =2V01&EFS-EL_KF1	= + V2GL16KF2
			Ed.	MKLEPADLO					
			Appr		P6700 Framing - Cell 2V01, KF1	Scale 1:1		Document type: EPB / Project nr: 22-16152	Page 1 / 1630
Modification	Date	Name	Original		Replacement of / Replaced by				

Parts list

F01_001

Device tag	Quantity	Designation	Type number	Supplier	Part number
=V2GL16-TA1	1	SINAMICS G120D POWER MODULE PM250D 0,75KW	6SL3525-0PE17-5AA1	SIEMENS	SIE.6SL3525-0PE17-5AA1
=V2GL16WC1-Q1	1	DISCONNECT	EM3BMHANQ4SDCG10	E-M	EM.EM3BMHANQ4SDCG10

+.GL16KF2/1

+.GL16UQ51/1

			Date	1/24/2023	Volvo Trucks North America	Valiant TMS	Parts list : SIE.6SL3525-0PE17-5AA1 - EM.EM3BMHANQ4SDCG10	Drawing name: =2V01&EFS-EL_KF1	= + V2GL16UC01
			Ed.	MKLEPADLO					
			Appr		P6700 Framing - Cell 2V01, KF1	Scale 1:1		Document type: EPB / Project nr: 22-16152	Page 1 / 1630
Modification	Date	Name	Original		Replacement of / Replaced by				

Parts list

F01_001

Device tag	Quantity	Designation	Type number	Supplier	Part number
=V2GL16UQ51BG0-BG05	1	Inductive sensor	BI8U-MT18M-AP6X2-H1141/S1589	TURCK	TUR.1644741
=V2GL16UQ51BG0-BG06	1	Inductive sensor	BI8U-MT18M-AP6X2-H1141/S1589	TURCK	TUR.1644741
=V2GL16UQ51BG0-BG07	1	Inductive sensor	BI8U-MT18M-AP6X2-H1141/S1589	TURCK	TUR.1644741
=V2GL16UQ51BG0-BG08	1	Inductive sensor	BI8U-MT18M-AP6X2-H1141/S1589	TURCK	TUR.1644741
=V2GL16UQ51BG0-BG09	1	Inductive sensor	BI8U-MT18M-AP6X2-H1141/S1589	TURCK	TUR.1644741
=V2GL16UQ51BG0-BG12	1	Inductive sensor	BI8U-MT18M-AP6X2-H1141/S1589	TURCK	TUR.1644741
=V2GL16UQ51BG0-BG13	1	Inductive sensor	BI8U-MT18M-AP6X2-H1141/S1589	TURCK	TUR.1644741
=V2GL16UQ51BG0-BG14	1	Inductive sensor	BI8U-MT18M-AP6X2-H1141/S1589	TURCK	TUR.1644741
=V2GL16UQ51BG0-BG15	1	NEMA Limit Switch - NEMA Type 4 & 13 Oiltight Construction	802T-AP	A-B	A-B.802T-AP
=V2GL16UQ51BG0-BG17	1	Discrete Q60: Proximity Mode	Q60BB6AFV1000QPMA	BANNER	BAN.71959
=V2GL16UQ51BG0-XG6/17	1	Y splitter	U2-30676	TURCK	TUR.VB2-FSM 4.4/2FKM 4/S3450
=V2GL16UQ51BG0-XG7/12	1	Y splitter	U2-30676	TURCK	TUR.VB2-FSM 4.4/2FKM 4/S3450
=V2GL16UQ51BG0-XG8/9	1	Y splitter	U2-30676	TURCK	TUR.VB2-FSM 4.4/2FKM 4/S3450
=V2GL16UQ51BG0-XG13/14	1	Y splitter	U2-30676	TURCK	TUR.VB2-FSM 4.4/2FKM 4/S3450
=V2GL16UQ51KF2-KF2	0	Bus node	CPX-FB33	FESTO	FES.548755
=V2GL16UQ51KF2-KF2	0	Interlinking block	CPX-M-GE-EV-S-7/8-5POL	FES	FES.550208
=V2GL16UQ51KF2-KF2.11	0	Manifold block	CPX-M-AB-8-M12X2-5POL	FES	FES.549335
=V2GL16UQ51KF2-KF2.12	0	Manifold block	CPX-M-AB-8-M12X2-5POL	FES	FES.549335
=V2GL16UQ51KF2-KF2.13	0	Manifold block	CPX-M-AB-8-M12X2-5POL	FES	FES.549335

+.GL16UC01/1

+.GL16UQ51UQ3.1/1

			Date	1/24/2023	Volvo Trucks North America	Valiant TMS	Parts list : TUR.1644741 - FES.549335	Drawing name: =2V01&EFS-EL_KF1	=	
			Ed.	MKLEPADLO					+ V2GL16UQ51	
			Appr		P6700 Framing - Cell 2V01, KF1	Scale 1:1		Document type: EPB	Project nr: 22-16152	Page 1 / 1630
Modification	Date	Name	Original		Replacement of	Replaced by				

Parts list

F01_001

Device tag	Quantity	Designation	Type number	Supplier	Part number
=V2GL16UQ51UQ3.1-BGR	1	Inductive sensor	BI8U-MT18M-AP6X2-H1141/S1589		TUR.16447411
=V2GL16UQ51UQ3.1-BGS	1	Inductive sensor	BI8U-MT18M-AP6X2-H1141/S1589		TUR.16447411
=V2GL16UQ51UQ3.1-XGR/S	1	Y splitter	U2-30676	TURCK	TUR.VB2-FSM 4.4/2FKM 4/S3450

+V2GL16UQ51/1

+.GL16UQ51UQ4.1/1

			Date	1/24/2023	Volvo Trucks North America	Valiant TMS	Parts list : TUR.16447411 - TUR.VB2-FSM 4.4/2FKM 4/S3450	Drawing name: =2V01&EFS-EL_KF1	= + V2GL16UQ51UQ3.1
			Ed.	MKLEPADLO					
			Appr		P6700 Framing - Cell 2V01, KF1	Scale 1:1		Document type: EPB	Project nr: 22-16152
Modification	Date	Name	Original		Replacement of	Replaced by			Page 1 / 1630

Parts list

F01_001

Device tag	Quantity	Designation	Type number	Supplier	Part number
=V2GL16UQ51UQ4.1-BGR	1	Inductive sensor	BI8U-MT18M-AP6X2-H1141/S1589		TUR.16447411
=V2GL16UQ51UQ4.1-BGS	1	Inductive sensor	BI8U-MT18M-AP6X2-H1141/S1589		TUR.16447411
=V2GL16UQ51UQ4.1-XGR/S	1	Y splitter	U2-30676	TURCK	TUR.VB2-FSM 4.4/2FKM 4/S3450

+.GL16UQ51UQ3.1/1

+.GL16UQ51UQ5.1/1

			Date	1/24/2023	Volvo Trucks North America	Valiant TMS	Parts list : TUR.16447411 - TUR.VB2-FSM 4.4/2FKM 4/S3450	Drawing name: =2V01&EFS-EL_KF1	= + V2GL16UQ51UQ4.1
			Ed.	MKLEPADLO					
			Appr		P6700 Framing - Cell 2V01, KF1	Scale 1:1		Document type: EPB	Project nr: 22-16152
Modification	Date	Name	Original		Replacement of	Replaced by			Page 1 / 1630

Parts list

F01_001

Device tag	Quantity	Designation	Type number	Supplier	Part number
=V2GL16UQ51UQ5.1-BGR	1	Inductive sensor	BI8U-MT18M-AP6X2-H1141/S1589		TUR.16447411
=V2GL16UQ51UQ5.1-BGS	1	Inductive sensor	BI8U-MT18M-AP6X2-H1141/S1589		TUR.16447411
=V2GL16UQ51UQ5.1-XGR/S	1	Y splitter	U2-30676	TURCK	TUR.VB2-FSM 4.4/2FKM 4/S3450

+.GL16UQ51UQ4.1/1

+.GL17KF2/1

			Date	1/24/2023	Volvo Trucks North America	Valiant TMS	Parts list : TUR.16447411 - TUR.VB2-FSM 4.4/2FKM 4/S3450	Drawing name: =2V01&EFS-EL_KF1	= + V2GL16UQ51UQ5.1
			Ed.	MKLEPADLO					
			Appr		P6700 Framing - Cell 2V01, KF1	Scale 1:1		Document type: EPB	Project nr: 22-16152
Modification	Date	Name	Original		Replacement of	Replaced by			Page 1 / 1630

Parts list

F01_001

Device tag	Quantity	Designation	Type number	Supplier	Part number
=V2GL17KF2-KF2.11	1	SINAMICS G120D CONTROL UNIT CU240D-2 PN-F	6SL3544-0FB21-1FA0	SIEMENS	SIE.6SL3544-0FB21-1FA0

+.GL16UQ51UQ5.1/1

+.GL17UC01/1

			Date	1/24/2023	Volvo Trucks North America	Valiant TMS	Parts list : SIE.6SL3544-0FB21-1FA0 - SIE.6SL3544-0FB21-1FA0	Drawing name: =2V01&EFS-EL_KF1	=	
			Ed.	MKLEPADLO					+ V2GL17KF2	
			Appr		P6700 Framing - Cell 2V01, KF1	Scale 1:1		Document type: EPB	Project nr: 22-16152	Page 1 / 1630
Modification	Date	Name	Original		Replacement of	Replaced by				

Parts list

F01_001

Device tag	Quantity	Designation	Type number	Supplier	Part number
=V2GL17-TA1	1	SINAMICS G120D POWER MODULE PM250D 0,75KW	6SL3525-0PE17-5AA1	SIEMENS	SIE.6SL3525-0PE17-5AA1
=V2GL17WC1-Q1	1	DISCONNECT	EM3BMHANQ4SDCG10	E-M	EM.EM3BMHANQ4SDCG10

+.GL17KF2/1

+.GL17UQ51/1

			Date	1/24/2023	Volvo Trucks North America	Valiant TMS	Parts list : SIE.6SL3525-0PE17-5AA1 - EM.EM3BMHANQ4SDCG10	Drawing name: =2V01&EFS-EL_KF1	= + V2GL17UC01
			Ed.	MKLEPADLO					
			Appr		P6700 Framing - Cell 2V01, KF1	Scale 1:1		Document type: EPB / Project nr: 22-16152	Page 1 / 1630
Modification	Date	Name	Original		Replacement of / Replaced by				

Parts list

F01_001

Device tag	Quantity	Designation	Type number	Supplier	Part number
=V2GL17UQ51BG0-BG05	1	Inductive sensor	BI8U-MT18M-AP6X2-H1141/S1589	TURCK	TUR.1644741
=V2GL17UQ51BG0-BG06	1	Inductive sensor	BI8U-MT18M-AP6X2-H1141/S1589	TURCK	TUR.1644741
=V2GL17UQ51BG0-BG07	1	Inductive sensor	BI8U-MT18M-AP6X2-H1141/S1589	TURCK	TUR.1644741
=V2GL17UQ51BG0-BG08	1	Inductive sensor	BI8U-MT18M-AP6X2-H1141/S1589	TURCK	TUR.1644741
=V2GL17UQ51BG0-BG09	1	Inductive sensor	BI8U-MT18M-AP6X2-H1141/S1589	TURCK	TUR.1644741
=V2GL17UQ51BG0-BG12	1	Inductive sensor	BI8U-MT18M-AP6X2-H1141/S1589	TURCK	TUR.1644741
=V2GL17UQ51BG0-BG13	1	Inductive sensor	BI8U-MT18M-AP6X2-H1141/S1589	TURCK	TUR.1644741
=V2GL17UQ51BG0-BG14	1	Inductive sensor	BI8U-MT18M-AP6X2-H1141/S1589	TURCK	TUR.1644741
=V2GL17UQ51BG0-BG15	1	NEMA Limit Switch - NEMA Type 4 & 13 Oiltight Construction	802T-AP	A-B	A-B.802T-AP
=V2GL17UQ51BG0-BG17	1	Discrete Q60: Proximity Mode	Q60BB6AFV1000QPMA	BANNER	BAN.71959
=V2GL17UQ51BG0-XG6/17	1	Y splitter	U2-30676	TURCK	TUR.VB2-FSM 4.4/2FKM 4/S3450
=V2GL17UQ51BG0-XG7/12	1	Y splitter	U2-30676	TURCK	TUR.VB2-FSM 4.4/2FKM 4/S3450
=V2GL17UQ51BG0-XG8/9	1	Y splitter	U2-30676	TURCK	TUR.VB2-FSM 4.4/2FKM 4/S3450
=V2GL17UQ51BG0-XG13/14	1	Y splitter	U2-30676	TURCK	TUR.VB2-FSM 4.4/2FKM 4/S3450
=V2GL17UQ51KF2-KF2	0	Bus node	CPX-FB33	FESTO	FES.548755
=V2GL17UQ51KF2-KF2	0	Interlinking block	CPX-M-GE-EV-S-7/8-5POL	FES	FES.550208
=V2GL17UQ51KF2-KF2.11	0	Manifold block	CPX-M-AB-8-M12X2-5POL	FES	FES.549335
=V2GL17UQ51KF2-KF2.12	0	Manifold block	CPX-M-AB-8-M12X2-5POL	FES	FES.549335
=V2GL17UQ51KF2-KF2.13	0	Manifold block	CPX-M-AB-8-M12X2-5POL	FES	FES.549335

			Date	1/24/2023	Volvo Trucks North America	Valiant TMS	Parts list : TUR.1644741 - FES.549335	Drawing name: =2V01&EFS-EL_KF1	=	
			Ed.	MKLEPADLO					+ V2GL17UQ51	
			Appr		P6700 Framing - Cell 2V01, KF1	Scale 1:1		Document type: EPB	Project nr: 22-16152	Page 1 / 1630
Modification	Date	Name	Original		Replacement of	Replaced by				

Parts list

F01_001

Device tag	Quantity	Designation	Type number	Supplier	Part number
=V2GL17UQ51UQ3.1-BGR	1	Inductive sensor	BI8U-MT18M-AP6X2-H1141/S1589		TUR.16447411
=V2GL17UQ51UQ3.1-BGS	1	Inductive sensor	BI8U-MT18M-AP6X2-H1141/S1589		TUR.16447411
=V2GL17UQ51UQ3.1-XGR/S	1	Y splitter	U2-30676	TURCK	TUR.VB2-FSM 4.4/2FKM 4/S3450

+V2GL17UQ51/1

+.GL17UQ51UQ4.1/1

			Date	1/24/2023	Volvo Trucks North America	Valiant TMS	Parts list : TUR.16447411 - TUR.VB2-FSM 4.4/2FKM 4/S3450	Drawing name: =2V01&EFS-EL_KF1	= + V2GL17UQ51UQ3.1
			Ed.	MKLEPADLO					
			Appr		P6700 Framing - Cell 2V01, KF1	Scale 1:1		Document type: EPB	Project nr: 22-16152
Modification	Date	Name	Original		Replacement of	Replaced by			Page 1 / 1630

Parts list

F01_001

Device tag	Quantity	Designation	Type number	Supplier	Part number
=V2GL17UQ51UQ4.1-BGR	1	Inductive sensor	BI8U-MT18M-AP6X2-H1141/S1589		TUR.16447411
=V2GL17UQ51UQ4.1-BGS	1	Inductive sensor	BI8U-MT18M-AP6X2-H1141/S1589		TUR.16447411
=V2GL17UQ51UQ4.1-XGR/S	1	Y splitter	U2-30676	TURCK	TUR.VB2-FSM 4.4/2FKM 4/S3450

+.GL17UQ51UQ3.1/1

+.GL17UQ51UQ5.1/1

			Date	1/24/2023	Volvo Trucks North America	Valiant TMS	Parts list : TUR.16447411 - TUR.VB2-FSM 4.4/2FKM 4/S3450	Drawing name: =2V01&EFS-EL_KF1	=	
			Ed.	MKLEPADLO					+ V2GL17UQ51UQ4.1	
			Appr		P6700 Framing - Cell 2V01, KF1	Scale 1:1		Document type: EPB	Project nr: 22-16152	Page 1 / 1630
Modification	Date	Name	Original		Replacement of	Replaced by				

Parts list

F01_001

Device tag	Quantity	Designation	Type number	Supplier	Part number
=V2GL17UQ51UQ5.1-BGR	1	Inductive sensor	BI8U-MT18M-AP6X2-H1141/S1589		TUR.16447411
=V2GL17UQ51UQ5.1-BGS	1	Inductive sensor	BI8U-MT18M-AP6X2-H1141/S1589		TUR.16447411
=V2GL17UQ51UQ5.1-XGR/S	1	Y splitter	U2-30676	TURCK	TUR.VB2-FSM 4.4/2FKM 4/S3450

+.GL17UQ51UQ4.1/1

+.GL18KF2/1

			Date	1/24/2023	Volvo Trucks North America	Valiant TMS	Parts list : TUR.16447411 - TUR.VB2-FSM 4.4/2FKM 4/S3450	Drawing name: =2V01&EFS-EL_KF1	= + V2GL17UQ51UQ5.1
			Ed.	MKLEPADLO					
			Appr		P6700 Framing - Cell 2V01, KF1	Scale 1:1		Document type: EPB	Project nr: 22-16152
Modification	Date	Name	Original		Replacement of	Replaced by			Page 1 / 1630

Parts list

F01_001

Device tag	Quantity	Designation	Type number	Supplier	Part number
=V2GL18KF2-KF2.11	1	SINAMICS G120D CONTROL UNIT CU240D-2 PN-F	6SL3544-0FB21-1FA0	SIEMENS	SIE.6SL3544-0FB21-1FA0

+.GL17UQ51UQ5.1/1

+.GL18UC01/1

			Date	1/24/2023	Volvo Trucks North America	Valiant TMS	Parts list : SIE.6SL3544-0FB21-1FA0 - SIE.6SL3544-0FB21-1FA0	Drawing name: =2V01&EFS-EL_KF1	=
			Ed.	MKLEPADLO					+ V2GL18KF2
			Appr		P6700 Framing - Cell 2V01, KF1	Scale 1:1		Document type: EPB	Project nr: 22-16152
Modification	Date	Name	Original		Replacement of	Replaced by			Page 1 / 1630

Parts list

F01_001

Device tag	Quantity	Designation	Type number	Supplier	Part number
=V2GL18-TA1	1	SINAMICS G120D POWER MODULE PM250D 0,75KW	6SL3525-0PE17-5AA1	SIEMENS	SIE.6SL3525-0PE17-5AA1
=V2GL18WC1-Q1	1	DISCONNECT	EM3BMHANQ4SDCG10	E-M	EM.EM3BMHANQ4SDCG10

+.GL18KF2/1

+.GL18UQ51/1

			Date	1/24/2023	Volvo Trucks North America	Valiant TMS	Parts list : SIE.6SL3525-0PE17-5AA1 - EM.EM3BMHANQ4SDCG10	Drawing name: =2V01&EFS-EL_KF1	=	
			Ed.	MKLEPADLO					+ V2GL18UC01	
			Appr		P6700 Framing - Cell 2V01, KF1	Scale 1:1		Document type: EPB	Project nr: 22-16152	Page 1 / 1630
Modification	Date	Name	Original		Replacement of	Replaced by				

Parts list

F01_001

Device tag	Quantity	Designation	Type number	Supplier	Part number
=V2GL18UQ51BG0-BG05	1	Inductive sensor	BI8U-MT18M-AP6X2-H1141/S1589	TURCK	TUR.1644741
=V2GL18UQ51BG0-BG06	1	Inductive sensor	BI8U-MT18M-AP6X2-H1141/S1589	TURCK	TUR.1644741
=V2GL18UQ51BG0-BG07	1	Inductive sensor	BI8U-MT18M-AP6X2-H1141/S1589	TURCK	TUR.1644741
=V2GL18UQ51BG0-BG08	1	Inductive sensor	BI8U-MT18M-AP6X2-H1141/S1589	TURCK	TUR.1644741
=V2GL18UQ51BG0-BG09	1	Inductive sensor	BI8U-MT18M-AP6X2-H1141/S1589	TURCK	TUR.1644741
=V2GL18UQ51BG0-BG12	1	Inductive sensor	BI8U-MT18M-AP6X2-H1141/S1589	TURCK	TUR.1644741
=V2GL18UQ51BG0-BG13	1	Inductive sensor	BI8U-MT18M-AP6X2-H1141/S1589	TURCK	TUR.1644741
=V2GL18UQ51BG0-BG14	1	Inductive sensor	BI8U-MT18M-AP6X2-H1141/S1589	TURCK	TUR.1644741
=V2GL18UQ51BG0-BG15	1	NEMA Limit Switch - NEMA Type 4 & 13 Oiltight Construction	802T-AP	A-B	A-B.802T-AP
=V2GL18UQ51BG0-BG17	1	Discrete Q60: Proximity Mode	Q60BB6AFV1000QPMA	BANNER	BAN.71959
=V2GL18UQ51BG0-XG6/17	1	Y splitter	U2-30676	TURCK	TUR.VB2-FSM 4.4/2FKM 4/S3450
=V2GL18UQ51BG0-XG7/12	1	Y splitter	U2-30676	TURCK	TUR.VB2-FSM 4.4/2FKM 4/S3450
=V2GL18UQ51BG0-XG8/9	1	Y splitter	U2-30676	TURCK	TUR.VB2-FSM 4.4/2FKM 4/S3450
=V2GL18UQ51BG0-XG13/14	1	Y splitter	U2-30676	TURCK	TUR.VB2-FSM 4.4/2FKM 4/S3450
=V2GL18UQ51KF2-KF2	0	Bus node	CPX-FB33	FESTO	FES.548755
=V2GL18UQ51KF2-KF2	0	Interlinking block	CPX-M-GE-EV-S-7/8-5POL	FES	FES.550208
=V2GL18UQ51KF2-KF2.11	0	Manifold block	CPX-M-AB-8-M12X2-5POL	FES	FES.549335
=V2GL18UQ51KF2-KF2.12	0	Manifold block	CPX-M-AB-8-M12X2-5POL	FES	FES.549335
=V2GL18UQ51KF2-KF2.13	0	Manifold block	CPX-M-AB-8-M12X2-5POL	FES	FES.549335

+.GL18UC01/1

+.GL18UQ51UQ3.1/1

			Date	1/24/2023	Volvo Trucks North America	Valiant TMS	Parts list : TUR.1644741 - FES.549335	Drawing name: =2V01&EFS-EL_KF1	=	
			Ed.	MKLEPADLO					+ V2GL18UQ51	
			Appr		P6700 Framing - Cell 2V01, KF1			Document type: EPB	Project nr: 22-16152	Page 1
Modification	Date	Name	Original		Replacement of / Replaced by	Scale 1:1				1630

Parts list

F01_001

Device tag	Quantity	Designation	Type number	Supplier	Part number
=V2GL18UQ51UQ3.1-BGR	1	Inductive sensor	BI8U-MT18M-AP6X2-H1141/S1589		TUR.16447411
=V2GL18UQ51UQ3.1-BGS	1	Inductive sensor	BI8U-MT18M-AP6X2-H1141/S1589		TUR.16447411
=V2GL18UQ51UQ3.1-XGR/S	1	Y splitter	U2-30676	TURCK	TUR.VB2-FSM 4.4/2FKM 4/S3450

+V2GL18UQ51/1

+.GL18UQ51UQ4.1/1

			Date	1/24/2023	Volvo Trucks North America	Valiant TMS	Parts list : TUR.16447411 - TUR.VB2-FSM 4.4/2FKM 4/S3450	Drawing name: =2V01&EFS-EL_KF1	= + V2GL18UQ51UQ3.1
			Ed.	MKLEPADLO					
			Appr		P6700 Framing - Cell 2V01, KF1	Scale 1:1		Document type: EPB	Project nr: 22-16152
Modification	Date	Name	Original		Replacement of	Replaced by			Page 1 / 1630

Parts list

F01_001

Device tag	Quantity	Designation	Type number	Supplier	Part number
=V2GL18UQ51UQ4.1-BGR	1	Inductive sensor	BI8U-MT18M-AP6X2-H1141/S1589		TUR.16447411
=V2GL18UQ51UQ4.1-BGS	1	Inductive sensor	BI8U-MT18M-AP6X2-H1141/S1589		TUR.16447411
=V2GL18UQ51UQ4.1-XGR/S	1	Y splitter	U2-30676	TURCK	TUR.VB2-FSM 4.4/2FKM 4/S3450

+.GL18UQ51UQ3.1/1

+.GL18UQ51UQ5.1/1

			Date	1/24/2023	Volvo Trucks North America	Valiant TMS	Parts list : TUR.16447411 - TUR.VB2-FSM 4.4/2FKM 4/S3450	Drawing name: =2V01&EFS-EL_KF1	= + V2GL18UQ51UQ4.1
			Ed.	MKLEPADLO					
			Appr		P6700 Framing - Cell 2V01, KF1	Scale 1:1		Document type: EPB	Project nr: 22-16152
Modification	Date	Name	Original		Replacement of	Replaced by			Page 1 / 1630

Parts list

F01_001

Device tag	Quantity	Designation	Type number	Supplier	Part number
=V2GL18UQ51UQ5.1-BGR	1	Inductive sensor	BI8U-MT18M-AP6X2-H1141/S1589		TUR.16447411
=V2GL18UQ51UQ5.1-BGS	1	Inductive sensor	BI8U-MT18M-AP6X2-H1141/S1589		TUR.16447411
=V2GL18UQ51UQ5.1-XGR/S	1	Y splitter	U2-30676	TURCK	TUR.VB2-FSM 4.4/2FKM 4/S3450

+.GL18UQ51UQ4.1/1

+.UC14/1

			Date	1/24/2023	Volvo Trucks North America	Valiant TMS	Parts list : TUR.16447411 - TUR.VB2-FSM 4.4/2FKM 4/S3450	Drawing name: =2V01&EFS-EL_KF1	= + V2GL18UQ51UQ5.1
			Ed.	MKLEPADLO					
			Appr		P6700 Framing - Cell 2V01, KF1	Scale 1:1		Document type: EPB	Project nr: 22-16152
Modification	Date	Name	Original		Replacement of	Replaced by			Page 1 / 1630

Parts list

F01_001

Device tag	Quantity	Designation	Type number	Supplier	Part number
=V2KF1-KF14	1				SIE.6ES7155-6AA01-0BN0_subassembly
=V2KF1-KF14	1	ET200SP, SERVERMODULE	6ES7193-6PA00-0AA0		SIE.6ES7193-6PA00-0AA0
=V2KF1-KF14.11	1	ET 200SP, DI 16x 24V DC ST, PU 1	6ES7131-6BH01-0BA0	SIE	SIE.6ES7131-6BH01-0BA0
=V2KF1-KF14.11	1	Bas Modul Vit	6ES7193-6BP00-0DA0	SIE	SIE.6ES7193-6BP00-0DA0
=V2KF1-KF14.12	1	ET 200SP, DI 16x 24V DC ST, PU 1	6ES7131-6BH01-0BA0	SIE	SIE.6ES7131-6BH01-0BA0
=V2KF1-KF14.12	1	Bas Modul Vit	6ES7193-6BP00-0DA0	SIE	SIE.6ES7193-6BP00-0DA0
=V2KF1-KF14.21	1	ET 200SP, DQ 16x 24V DC/0,5A ST, PU 1	6ES7132-6BH01-0BA0	SIE	SIE.6ES7132-6BH01-0BA0
=V2KF1-KF14.21	1	Bas Modul Vit	6ES7193-6BP00-0DA0	SIE	SIE.6ES7193-6BP00-0DA0
=V2KF1-KF14.31	1	F-DI 8X24V DC HF	6ES7136-6BA00-0CA0	SIE	SIE.6ES7136-6BA00-0CA0
=V2KF1-KF14.31	1	SIMATIC ET 200SP, BASEUNIT,BRIDGED TO LEFT	6ES7193-6BP00-0BA0	SIE	SIE.6ES7193-6BP00-0BA0
=V2KF1-KF14.32	1	F-DI 8X24V DC HF	6ES7136-6BA00-0CA0	SIE	SIE.6ES7136-6BA00-0CA0
=V2KF1-KF14.32	1	SIMATIC ET 200SP, BASEUNIT,BRIDGED TO LEFT	6ES7193-6BP00-0BA0	SIE	SIE.6ES7193-6BP00-0BA0
=V2KF1-KF14.41	1	F-DQ 4X24V DC/2A PM HF	6ES7136-6DB00-0CA0	SIEMENS	SIE.6ES7136-6DB00-0CA0
=V2KF1-KF14.41	1	SIMATIC ET 200SP, BASEUNIT,BRIDGED TO LEFT	6ES7193-6BP00-0BA0	SIE	SIE.6ES7193-6BP00-0BA0
=V2KF1-KF14.42	1	F-DQ 4X24V DC/2A PM HF	6ES7136-6DB00-0CA0	SIEMENS	SIE.6ES7136-6DB00-0CA0
=V2KF1-KF14.42	1	SIMATIC ET 200SP, BASEUNIT,BRIDGED TO LEFT	6ES7193-6BP00-0BA0	SIE	SIE.6ES7193-6BP00-0BA0
=V2KF1-KF14.51	1	ET 200SP, F-RQ 1x24VDC/24..230VAC/5A ST	6ES7136-6RA00-0BF0		SIE.6ES7136-6RA00-0BF0
=V2KF1-KF14.51	1	BASEUNIT TYPE F0, BU20-P8+A4+0B	6ES7193-6BP20-0BF0	SIE	SIE.6ES7193-6BP20-0BF0
=V2KF1-KF14.52	1	ET 200SP, F-RQ 1x24VDC/24..230VAC/5A ST	6ES7136-6RA00-0BF0		SIE.6ES7136-6RA00-0BF0
=V2KF1-KF14.52	1	BASEUNIT TYPE F0, BU20-P8+A4+0B	6ES7193-6BP20-0BF0	SIE	SIE.6ES7193-6BP20-0BF0
=V2KF1-KF14.53	1	ET 200SP, F-RQ 1x24VDC/24..230VAC/5A ST	6ES7136-6RA00-0BF0		SIE.6ES7136-6RA00-0BF0
=V2KF1-KF14.53	1	BASEUNIT TYPE F0, BU20-P8+A4+0B	6ES7193-6BP20-0BF0	SIE	SIE.6ES7193-6BP20-0BF0
=V2KF1-KF14.54	1	ET 200SP, F-RQ 1x24VDC/24..230VAC/5A ST	6ES7136-6RA00-0BF0		SIE.6ES7136-6RA00-0BF0
=V2KF1-KF14.54	1	BASEUNIT TYPE F0, BU20-P8+A4+0B	6ES7193-6BP20-0BF0	SIE	SIE.6ES7193-6BP20-0BF0
=V2KF1-KF100.14	1	SCALANCE XC216	6GK5216-0BA00-2AC2	SIE	SIE.6GK5216-0BA00-2AC2
=V2KF1-KF100.14	1	C-PLUG	6GK1900-0AB10	SIE	SIE.6GK1900-0AB10
=V2WC3-FC1	1	CIRCUIT BREAKER 240V 14KA, 1-POLE, C, 16A, D=70MM	5SJ4116-7HG41	SIE	SIE.5SJ4116-7HG41
=V2WC3-FC1	1	AUXILARY SWITCH 1NO1NC UL489	5ST3010-0HG	SIE	SIE.5ST3010-0HG
=V2WC3-FC2	1	CIRCUIT BREAKER 240V 14KA, 1-POLE, C, 3A, D=70MM	5SJ4103-7HG41	SIE	SIE.5SJ4103-7HG41
=V2WC3-FC2	1	AUXILARY SWITCH 1NO1NC UL489	5ST3010-0HG	SIE	SIE.5ST3010-0HG
=V2WC3-FC3	1	CIRCUIT BREAKER 240V 14KA, 1-POLE, C, 16A, D=70MM	5SJ4116-7HG41	SIE	SIE.5SJ4116-7HG41
=V2WC3-XG2	1	Panel Interface Connector with USB Type A/F to USB Type A/M [Qty: 2]; Category 5e RJ45 Panel Mount Housing; UL Type 4; Duplex Outlet; 5 Amp Circuit Breaker	RJ45[F]-2P2P-K3RD5		GT_N.P-P11#2R2-K3RD5
=V2WC4-FC11	1	SITOP SEL1200 8 x 10A	6EP4438-7FB00-3DX0		SIE.6EP4438-7FB00-3DX0
=V2WC4-FC12	1	SITOP SEL1200 8 x 10A	6EP4438-7FB00-3DX0		SIE.6EP4438-7FB00-3DX0
=V2WC4-TA1	1	SITOP PSU6200 1ph 24 V/20 A	6EP3336-7SB00-3AX0		SIE.6EP3336-7SB00-3AX0
=V2WC4-XG51	1	TEE, 5-PIN MINI, STANDARD KEYWAY	U2109-9	TURCK	TUR.RSM-2RKM 50

+.GL18UQ51UQ5.1/1

+.UC15/1

			Date	1/24/2023	Volvo Trucks North America	Valiant TMS	Parts list : SIE.6ES7155-6AA01-0BN0_subassembly - TUR.RSM-2RKM 50	Drawing name: =2V01&EFS-EL_KF1	= + V2UC14	
			Ed.	MKLEPADLO						
			Appr		P6700 Framing - Cell 2V01, KF1	Scale 1:1		Document type: EPB	Project nr: 22-16152	Page 1 / 1630
Modification	Date	Name	Original		Replacement of	Replaced by				

Parts list

F01_001

Device tag	Quantity	Designation	Type number	Supplier	Part number
=V2KF1-KF15	1				SIE.6ES7155-6AA01-0BN0_subassembly
=V2KF1-KF15	1	ET200SP, SERVERMODULE	6ES7193-6PA00-0AA0		SIE.6ES7193-6PA00-0AA0
=V2KF1-KF15.11	1	ET 200SP, DI 16x 24V DC ST, PU 1	6ES7131-6BH01-0BA0	SIE	SIE.6ES7131-6BH01-0BA0
=V2KF1-KF15.11	1	Bas Modul Vit	6ES7193-6BP00-0DA0	SIE	SIE.6ES7193-6BP00-0DA0
=V2KF1-KF15.12	1	ET 200SP, DI 16x 24V DC ST, PU 1	6ES7131-6BH01-0BA0	SIE	SIE.6ES7131-6BH01-0BA0
=V2KF1-KF15.12	1	Bas Modul Vit	6ES7193-6BP00-0DA0	SIE	SIE.6ES7193-6BP00-0DA0
=V2KF1-KF15.21	1	ET 200SP, DQ 16x 24V DC/0,5A ST, PU 1	6ES7132-6BH01-0BA0	SIE	SIE.6ES7132-6BH01-0BA0
=V2KF1-KF15.21	1	Bas Modul Vit	6ES7193-6BP00-0DA0	SIE	SIE.6ES7193-6BP00-0DA0
=V2KF1-KF15.31	1	F-DI 8X24V DC HF	6ES7136-6BA00-0CA0	SIE	SIE.6ES7136-6BA00-0CA0
=V2KF1-KF15.31	1	SIMATIC ET 200SP, BASEUNIT,BRIDGED TO LEFT	6ES7193-6BP00-0BA0	SIE	SIE.6ES7193-6BP00-0BA0
=V2KF1-KF15.32	1	F-DI 8X24V DC HF	6ES7136-6BA00-0CA0	SIE	SIE.6ES7136-6BA00-0CA0
=V2KF1-KF15.32	1	SIMATIC ET 200SP, BASEUNIT,BRIDGED TO LEFT	6ES7193-6BP00-0BA0	SIE	SIE.6ES7193-6BP00-0BA0
=V2KF1-KF15.41	1	F-DQ 4X24V DC/2A PM HF	6ES7136-6DB00-0CA0	SIEMENS	SIE.6ES7136-6DB00-0CA0
=V2KF1-KF15.41	1	SIMATIC ET 200SP, BASEUNIT,BRIDGED TO LEFT	6ES7193-6BP00-0BA0	SIE	SIE.6ES7193-6BP00-0BA0
=V2KF1-KF15.42	1	F-DQ 4X24V DC/2A PM HF	6ES7136-6DB00-0CA0	SIEMENS	SIE.6ES7136-6DB00-0CA0
=V2KF1-KF15.42	1	SIMATIC ET 200SP, BASEUNIT,BRIDGED TO LEFT	6ES7193-6BP00-0BA0	SIE	SIE.6ES7193-6BP00-0BA0
=V2KF1-KF15.51	1	ET 200SP, F-RQ 1x24VDC/24..230VAC/5A ST	6ES7136-6RA00-0BF0		SIE.6ES7136-6RA00-0BF0
=V2KF1-KF15.51	1	BASEUNIT TYPE F0, BU20-P8+A4+0B	6ES7193-6BP20-0BF0	SIE	SIE.6ES7193-6BP20-0BF0
=V2KF1-KF15.52	1	ET 200SP, F-RQ 1x24VDC/24..230VAC/5A ST	6ES7136-6RA00-0BF0		SIE.6ES7136-6RA00-0BF0
=V2KF1-KF15.52	1	BASEUNIT TYPE F0, BU20-P8+A4+0B	6ES7193-6BP20-0BF0	SIE	SIE.6ES7193-6BP20-0BF0
=V2KF1-KF15.53	1	ET 200SP, F-RQ 1x24VDC/24..230VAC/5A ST	6ES7136-6RA00-0BF0		SIE.6ES7136-6RA00-0BF0
=V2KF1-KF15.53	1	BASEUNIT TYPE F0, BU20-P8+A4+0B	6ES7193-6BP20-0BF0	SIE	SIE.6ES7193-6BP20-0BF0
=V2KF1-KF15.54	1	ET 200SP, F-RQ 1x24VDC/24..230VAC/5A ST	6ES7136-6RA00-0BF0		SIE.6ES7136-6RA00-0BF0
=V2KF1-KF15.54	1	BASEUNIT TYPE F0, BU20-P8+A4+0B	6ES7193-6BP20-0BF0	SIE	SIE.6ES7193-6BP20-0BF0
=V2KF1-KF100.15	1	SCALANCE XC216	6GK5216-0BA00-2AC2	SIE	SIE.6GK5216-0BA00-2AC2
=V2KF1-KF100.15	1	C-PLUG	6GK1900-0AB10	SIE	SIE.6GK1900-0AB10
=V2WC3-FC1	1	CIRCUIT BREAKER 240V 14KA, 1-POLE, C, 16A, D=70MM	5SJ4116-7HG41	SIE	SIE.5SJ4116-7HG41
=V2WC3-FC1	1	AUXILARY SWITCH 1NO1NC UL489	5ST3010-0HG	SIE	SIE.5ST3010-0HG
=V2WC3-FC2	1	CIRCUIT BREAKER 240V 14KA, 1-POLE, C, 3A, D=70MM	5SJ4103-7HG41	SIE	SIE.5SJ4103-7HG41
=V2WC3-FC2	1	AUXILARY SWITCH 1NO1NC UL489	5ST3010-0HG	SIE	SIE.5ST3010-0HG
=V2WC3-FC3	1	CIRCUIT BREAKER 240V 14KA, 1-POLE, C, 16A, D=70MM	5SJ4116-7HG41	SIE	SIE.5SJ4116-7HG41
=V2WC3-XG2	1	Panel Interface Connector with USB Type A/F to USB Type A/M [Qty: 2]; Category 5e RJ45 Feed-Through; Housing; UL Type 4; Duplex Outlet; 5 Amp Circuit Breaker	GT_N.P-P11#2R2-K3RD5		GT_N.P-P11#2R2-K3RD5
=V2WC4-FC11	1	SITOP SEL1200 8 x 10A	6EP4438-7FB00-3DX0		SIE.6EP4438-7FB00-3DX0
=V2WC4-FC12	1	SITOP SEL1200 8 x 10A	6EP4438-7FB00-3DX0		SIE.6EP4438-7FB00-3DX0
=V2WC4-TA1	1	SITOP PSU6200 1ph 24 V/20 A	6EP3336-7SB00-3AX0		SIE.6EP3336-7SB00-3AX0

+.UC14/1

+.UC32/1

			Date	1/24/2023	Volvo Trucks North America	Valiant TMS	Parts list : SIE.6ES7155-6AA01-0BN0_subassembly - SIE.6EP3336-7SB00-3AX0	Drawing name: =2V01&EFS-EL_KF1	= + V2UC15
			Ed.	MKLEPADLO					
			Appr		P6700 Framing - Cell 2V01, KF1	Scale 1:1		Document type: EPB	Project nr: 22-16152
Modification	Date	Name	Original		Replacement of	Replaced by			Page 1 / 1630

Parts list

F01_001

Device tag	Quantity	Designation	Type number	Supplier	Part number
=V2KF1-KF32	1				SIE.6ES7155-6AA01-0BN0_subassembly
=V2KF1-KF32	1	ET200SP, SERVERMODULE	6ES7193-6PA00-0AA0		SIE.6ES7193-6PA00-0AA0
=V2KF1-KF32.11	1	ET 200SP, DI 16x 24V DC ST, PU 1	6ES7131-6BH01-0BA0	SIE	SIE.6ES7131-6BH01-0BA0
=V2KF1-KF32.11	1	Bas Modul Vit	6ES7193-6BP00-0DA0	SIE	SIE.6ES7193-6BP00-0DA0
=V2KF1-KF32.21	1	ET 200SP, DQ 16x 24V DC/0,5A ST, PU 1	6ES7132-6BH01-0BA0	SIE	SIE.6ES7132-6BH01-0BA0
=V2KF1-KF32.21	1	Bas Modul Vit	6ES7193-6BP00-0DA0	SIE	SIE.6ES7193-6BP00-0DA0
=V2KF1-KF32.31	1	ET 200SP, El-Mod., F-DI 8x24VDC HF	6ES7136-6BA01-0CA0	SIE	SIE.6ES7136-6BA01-0CA0
=V2KF1-KF32.31	1	Bas Modul Vit	6ES7193-6BP00-0DA0	SIE	SIE.6ES7193-6BP00-0DA0
=V2KF1-PNET1	1	Profinet cable - RJ45 plug to M12 Female receptacle; 1m long	RJ45S FKSDED 423-1M	TURCK	TUR.RJ45S FKSDED 423-1M
=V2SF0PG1-M1	1	Ground bar kit, 5 positions.	ECGB5	SIE	US2.ECGB5
=V2SF0PG1-M1	1	Wiring Duct Covers, PVC	C1.5LG6	PANDUIT	PAN.C1.5LG6
=V2SF0PG1-M1	1	Wiring Duct Covers, PVC	C1LG6	PAN	PAN.C1LG6
=V2SF0PG1-M1	1	Wide Slotted Wiring Duct, PVC	G1.5X4LG6	PAN	PAN.G1.5X4LG6
=V2SF0PG1-M1	1	Wide Slotted Wiring Duct, PVC	G1X4LG6	PAN	PAN.G1X4LG6
=V2SF0PG1-PG1	1	SIMATIC HMI TP1500 COMFORT	6AV2124-0QC02-0AX1	SIE	SIE.6AV2124-0QC02-0AX1
=V2SF0PG1-PG1	1	SIMATIC HMI SD MEMORY CARD 2 GB	6AV2181-8XP00-0AX0	SIE	SIE.6AV2181-8XP00-0AX0
=V2SF0PG1-SF1	1	PUSHBUTTON CP1-10G-20	CP1-10G-20	ABB	ABB.1SFA619100R1022
=V2SF0PG1-SF2	1	PUSHBUTTON CP1-10Y-20	CP1-10Y-20	ABB	ABB.1SFA619100R1023
=V2SF0PG1-SF3/PF3	1	PUSHBUTTON CP1-11C-10	CP1-11C-10	ABB	ABB.1SFA619100R1118
=V2SF0PG1-UC01	1	Compact enclosure AX	AX.6315450	RIT	RIT.6315450
=V2SF0PG1-UC01	1	Pedestal, open	CP.6106500	RIT	RIT.6106500
=V2SF0PG1-UC01	1	Coupling CP 60	CP.6206300	RIT	RIT.6206300
=V2SF0PG1-UC01	1	Accessory bag, for AX	AX.5051300	RIT	RIT.5051300
=V2SF0PG1-UC01	1	Mounting plate, for AX	AX.5051375	RIT	RIT.5051375
=V2WC4-FC1	1	Miniature Circuit Breaker MCBs - S200UDC - Number of Poles 1 - Tripping characteristic	S201UDC-K5	ABB	ABB.2CDS271517R0357
=V2WC4-FC1	1	S2C-H6RU - Auxiliary Contact	S2C-H6RU	ABB	ABB.2CDS200914R0001
=V2WC4-FC2	1	Miniature Circuit Breaker MCBs - S200UDC - Number of Poles 1 - Tripping characteristic	S201UDC-K5	ABB	ABB.2CDS271517R0357
=V2WC4-FC2	1	S2C-H6RU - Auxiliary Contact	S2C-H6RU	ABB	ABB.2CDS200914R0001
=V2WC4-XD1	1	RECEPTACLE MINI 5P MALE 1M	RSF 50-1M/NPT	TURCK	TUR.RSF 50-1M/NPT

+.UC15/1

+.UC33/1

			Date	1/24/2023	Volvo Trucks North America	Valiant TMS	Parts list : SIE.6ES7155-6AA01-0BN0_subassembly - TUR.RSF 50-1M/NPT	Drawing name: =2V01&EFS-EL_KF1	= + V2UC32	
			Ed.	MKLEPADLO						
			Appr		P6700 Framing - Cell 2V01, KF1	Scale 1:1		Document type: EPB	Project nr: 22-16152	Page 1 / 1630
Modification	Date	Name	Original		Replacement of	Replaced by				

Parts list

F01_001

Device tag	Quantity	Designation	Type number	Supplier	Part number
=V2KF1-KF33	1				SIE.6ES7155-6AA01-0BN0_subassembly
=V2KF1-KF33	1	ET200SP, SERVERMODULE	6ES7193-6PA00-0AA0		SIE.6ES7193-6PA00-0AA0
=V2KF1-KF33.11	1	ET 200SP, DI 16x 24V DC ST, PU 1	6ES7131-6BH01-0BA0	SIE	SIE.6ES7131-6BH01-0BA0
=V2KF1-KF33.11	1	Bas Modul Vit	6ES7193-6BP00-0DA0	SIE	SIE.6ES7193-6BP00-0DA0
=V2KF1-KF33.21	1	ET 200SP, DQ 16x 24V DC/0,5A ST, PU 1	6ES7132-6BH01-0BA0	SIE	SIE.6ES7132-6BH01-0BA0
=V2KF1-KF33.21	1	Bas Modul Vit	6ES7193-6BP00-0DA0	SIE	SIE.6ES7193-6BP00-0DA0
=V2KF1-KF33.31	1	ET 200SP, El-Mod., F-DI 8x24VDC HF	6ES7136-6BA01-0CA0	SIE	SIE.6ES7136-6BA01-0CA0
=V2KF1-KF33.31	1	Bas Modul Vit	6ES7193-6BP00-0DA0	SIE	SIE.6ES7193-6BP00-0DA0
=V2KF1-PNET1	1	Profinet cable - RJ45 plug to M12 Female receptacle; 1m long	RJ45S FKSDED 423-1M	TURCK	TUR.RJ45S FKSDED 423-1M
=V2SF0PG2-M1	1	Ground bar kit, 5 positions.	ECGB5	SIE	US2.ECGB5
=V2SF0PG2-M1	1	Wiring Duct Covers, PVC	C1.5LG6	PANDUIT	PAN.C1.5LG6
=V2SF0PG2-M1	1	Wiring Duct Covers, PVC	C1LG6	PAN	PAN.C1LG6
=V2SF0PG2-M1	1	Wide Slotted Wiring Duct, PVC	G1.5X4LG6	PAN	PAN.G1.5X4LG6
=V2SF0PG2-M1	1	Wide Slotted Wiring Duct, PVC	G1X4LG6	PAN	PAN.G1X4LG6
=V2SF0PG2-PG1	1	SIMATIC HMI TP1500 COMFORT	6AV2124-0QC02-0AX1	SIE	SIE.6AV2124-0QC02-0AX1
=V2SF0PG2-PG1	1	SIMATIC HMI SD MEMORY CARD 2 GB	6AV2181-8XP00-0AX0	SIE	SIE.6AV2181-8XP00-0AX0
=V2SF0PG2-SF1	1	PUSHBUTTON CP1-10G-20	CP1-10G-20	ABB	ABB.1SFA619100R1022
=V2SF0PG2-SF2	1	PUSHBUTTON CP1-10Y-20	CP1-10Y-20	ABB	ABB.1SFA619100R1023
=V2SF0PG2-SF3/PF3	1	PUSHBUTTON CP1-11C-10	CP1-11C-10	ABB	ABB.1SFA619100R1118
=V2SF0PG2-UC01	1	Compact enclosure AX	AX.6315450	RIT	RIT.6315450
=V2SF0PG2-UC01	1	Pedestal, open	CP.6106500	RIT	RIT.6106500
=V2SF0PG2-UC01	1	Coupling CP 60	CP.6206300	RIT	RIT.6206300
=V2SF0PG2-UC01	1	Accessory bag, for AX	AX.5051300	RIT	RIT.5051300
=V2SF0PG2-UC01	1	Mounting plate, for AX	AX.5051375	RIT	RIT.5051375
=V2WC4-FC1	1	Miniature Circuit Breaker MCBs - S200UDC - Number of Poles 1 - Tripping characteristic K	S201UDC-K5	ABB	ABB.2CDS271517R0357
=V2WC4-FC1	1	S2C-H6RU - Auxiliary Contact	S2C-H6RU	ABB	ABB.2CDS200914R0001
=V2WC4-FC2	1	Miniature Circuit Breaker MCBs - S200UDC - Number of Poles 1 - Tripping characteristic K	S201UDC-K5	ABB	ABB.2CDS271517R0357
=V2WC4-FC2	1	S2C-H6RU - Auxiliary Contact	S2C-H6RU	ABB	ABB.2CDS200914R0001
=V2WC4-XD1	1	RECEPTACLE MINI 5P MALE 1M	RSF 50-1M/NPT	TURCK	TUR.RSF 50-1M/NPT

+.UC32/1

+.UC61/1

			Date	1/24/2023	Volvo Trucks North America	Valiant TMS	Parts list : SIE.6ES7155-6AA01-0BN0_subassembly - TUR.RSF 50-1M/NPT	Drawing name: =2V01&EFS-EL_KF1	=	
			Ed.	MKLEPADLO					+ V2UC33	
			Appr		P6700 Framing - Cell 2V01, KF1	Scale 1:1		Document type: EPB	Project nr: 22-16152	Page 1 / 1630
Modification	Date	Name	Original		Replacement of	Replaced by				

Parts list

F01_001

Device tag	Quantity	Designation	Type number	Supplier	Part number
=V2PZ1PF1-PF1	1	Signaling column connection element for pipe mounting incl. end cover and seal	8WD4408-0AA	SIE	SIE.8WD4408-0AA
=V2PZ1PF1-PF1	1	Tube with foot, tube length 100 mm, accessory for signaling columns 8WD44, D=70 mm	8WD4308-0DA	SIEMENS	SIE.8WD4308-0DA
=V2PZ1PF1-PF1	1	Signaling column multifunctional siren element different sounds can be set 24 V	8WD4420-0EA2		SIE.8WD4420-0EA2
=V2PZ1PF1-PF1	1	Signaling column continuous light element LED red, 24 V AC/DC	8WD4420-5AB	SIE	SIE.8WD4420-5AB
=V2PZ1PF1-PF1	1	Signaling column continuous light element LED green, 24 V AC/DC	8WD4420-5AC	SIE	SIE.8WD4420-5AC
=V2PZ1PF1-PF1	1	Signaling column continuous light element LED yellow, 24 V AC/DC	8WD4420-5AD	SIE	SIE.8WD4420-5AD
=V2PZ1PF1-PF1	1	Signaling column continuous light element LED blue, 24 V AC/DC	8WD4420-5AF	SIE	SIE.8WD4420-5AF
=V2PZ1PF1-UC01	1	Small enclosures KX	KX.1574000		RIT.1574000
=V2PZ1PF1-XD1	1	RECEPTACLE 1-1/8" MINIFAST 10P MALE 2M	RSF 106-2M/14.5/NPT/CS16486	TURCK	TUR.RSF 106-2M/14.5/NPT/CS16486

+.UC33/1

+.UC81/1

			Date	1/24/2023	Volvo Trucks North America	Valiant TMS	Parts list : SIE.8WD4408-0AA - TUR.RSF 106-2M/14.5/NPT/CS16486	Drawing name: =2V01&EFS-EL_KF1	= + V2UC61
			Ed.	MKLEPADLO					
			Appr		P6700 Framing - Cell 2V01, KF1	Scale 1:1		Document type: EPB	Project nr: 22-16152
Modification	Date	Name	Original		Replacement of / Replaced by				Page 1 / 1630

Parts list

F01_001

Device tag	Quantity	Designation	Type number	Supplier	Part number
=V2KF1-KF1	1	SINAMICS S120 CONTROL UNIT CU320-2 PN	6SL3040-1MA01-0AA0	SIEMENS	SIE.6SL3040-1MA01-0AA0
=V2KF1-KF1	1		SERVO, S120, COMPACT FLASH CARD, BASIC, FIRMWARE VERSION 5.2	SIE	SIE.6SL3054-0FC30-1BA0
=V2KF1-PNET1	1	Profinet cable - RJ45 plug to M12 Female receptacle; 3m long	RJ45S FKSDED 423-3M	TURCK	TUR.RJ45S FKSDED 423-3M
=V2KF1-UC01	1	EL Enclosure	48EL3016LPLG		SCE.48EL3016LPLG
=V2KF1-UC01	1	Kit	FK1216LG		SCE.FK1216LG
=V2KF1-UC01	1	Subpanel	48P30GALV		SCE.48P30GALV
=V2KF1-UC01	1	Ground bar kit, 10 positions.	ECGB10	SIE	US2.ECGB10
=V2WC1-Q1	2	Disconnect Switch	CNFS361N	SIE	US2.CNFS361N
=V2WC1-Q1	1	Auxiliary contact module	CNFS1AUX1	SIE	US2.CNFS1AUX1
=V2WC1-Q1	1	Operating shaft	CNFSS54001	SIE	US2.CNFSS54001
=V2WC1-Q1	1	Rotary operating handle	CNFSH5RP121	SIE	US2.CNFSH5RP121
=V2WC1-RF1	1	SINAMICS LINE FILTER FOR 5KW SLM	6SL3000-0HE15-0AA0	SIEMENS	SIE.6SL3000-0HE15-0AA0
=V2WC1-RF2	1	SINAMICS LINE REACTOR FOR 5KW SLM	6SL3000-0CE15-0AA0	SIEMENS	SIE.6SL3000-0CE15-0AA0
=V2WC2-QA1	1	SINAMICS S120 DOUBLE MOMO 3A/3A D-Type	6SL3120-2TE13-0AD0		SIE.6SL3120-2TE13-0AD0
=V2WC2-QA2	1	SINAMICS S120 SINGLE MOMO 3A D-TYPE	6SL3120-1TE13-0AD0	SIE	SIE.6SL3120-1TE13-0AD0
=V2WC2-TB1	1	SINAMICS S120 Smart Line Module 5KW	6SL3130-6AE15-0AB1	SIEMENS	SIE.6SL3130-6AE15-0AB1
=V2WC4-XD1	1	RECEPTACLE MINI 5P MALE 3M	RSF 50-3M/NPT	TURCK	TUR.RSF 50-3M/NPT

+.UC61/1

+.UC161/1

			Date	1/24/2023	Volvo Trucks North America	Valiant TMS	Parts list : SIE.6SL3040-1MA01-0AA0 - TUR.RSF 50-3M/NPT	Drawing name: =2V01&EFS-EL_KF1	=	
			Ed.	MKLEPADLO					+ V2UC81	
			Appr		P6700 Framing - Cell 2V01, KF1	Scale 1:1		Document type: EPB	Project nr: 22-16152	Page 1 / 1630
Modification	Date	Name	Original		Replacement of	Replaced by				

Parts list

F01_001

Device tag	Quantity	Designation	Type number	Supplier	Part number
=V2WC2-XG1	0	3P DISTRIBUTION BLOCK 2 LINE / 6 LOAD	CPB-E2G06-03	SYNDEVCO	CPB-E2G06-03
=V2WC2-XG2	0	3P GROUND BLOCK 2 LINE / 6 LOAD	HCG-E2G06	SYNDEVCO	HCG-E2G06
=WC1-WC1	1	Golvskåp TS 8 sidskåp	TS8	RIT	RIT.SETS8205SID5
=WC1-WC1	1	TS Trim panel, sides, H: 100 mm, for W: 500 mm, RAL 7022, sheet steel	TS.8601050	RIT	RIT.8601050
=WC1-WC1	1	TS Base/plinth component, rear, H: 100 mm, for W: 1200 mm, RAL 7022, sheet steel	TS.8601200	RIT	RIT.8601200
=WC1-WC1	1	TS Side panel, screw-fastened, for TS, TS IT, for WD: 2000x500 mm, Sheet steel	TS.8105235	RIT	RIT.8105235
=WC1-WC1	1	PS Wiring plan pockets, for TS, CM, SE, PC, TP pedestal, sheet steel	TS.4115000	RIT	RIT.4115000

+.UC81/1

+.UC162/1

			Date	1/24/2023	Volvo Trucks North America	Valiant TMS	Parts list : CPB-E2G06-03 - RIT.4115000	Drawing name: =2V01&EFS-EL_KF1	=	
			Ed.	MKLEPADLO					+ V2UC161	
			Appr		P6700 Framing - Cell 2V01, KF1	Scale 1:1		Document type: EPB	Project nr: 22-16152	Page 1
Modification	Date	Name	Original		Replacement of / Replaced by					1630

Parts list

F01_001

Device tag	Quantity	Designation	Type number	Supplier	Part number
=V2WC2-XG1	0	3P DISTRIBUTION BLOCK 2 LINE / 6 LOAD	CPB-E2G06-03	SYNDEVCO	CPB-E2G06-03
=V2WC2-XG2	0	3P GROUND BLOCK 2 LINE / 6 LOAD	HCG-E2G06	SYNDEVCO	HCG-E2G06
=WC1-WC1	1	Golvskåp TS 8 sidskåp	TS8	RIT	RIT.SETS8205SID5
=WC1-WC1	1	TS Trim panel, sides, H: 100 mm, for W: 500 mm, RAL 7022, sheet steel	TS.8601050	RIT	RIT.8601050
=WC1-WC1	1	TS Base/plinth component, rear, H: 100 mm, for W: 1200 mm, RAL 7022, sheet steel	TS.8601200	RIT	RIT.8601200
=WC1-WC1	1	TS Side panel, screw-fastened, for TS, TS IT, for WD: 2000x500 mm, Sheet steel	TS.8105235	RIT	RIT.8105235
=WC1-WC1	1	PS Wiring plan pockets, for TS, CM, SE, PC, TP pedestal, sheet steel	TS.4115000	RIT	RIT.4115000

+.UC161/1

+.UC163/1

			Date	1/24/2023	Volvo Trucks North America	Valiant TMS	Parts list : CPB-E2G06-03 - RIT.4115000	Drawing name: =2V01&EFS-EL_KF1	=	
			Ed.	MKLEPADLO					+ V2UC162	
			Appr		P6700 Framing - Cell 2V01, KF1	Scale 1:1		Document type: EPB	Project nr: 22-16152	Page 1 / 1630
Modification	Date	Name	Original		Replacement of / Replaced by					

Parts list

F01_001

Device tag	Quantity	Designation	Type number	Supplier	Part number
=V2WC2-XG1	0	3P DISTRIBUTION BLOCK 2 LINE / 6 LOAD	CPB-E2G06-03	SYNDEVCO	CPB-E2G06-03
=V2WC2-XG2	0	3P GROUND BLOCK 2 LINE / 6 LOAD	HCG-E2G06	SYNDEVCO	HCG-E2G06
=WC1-WC1	1	Golvskåp TS 8 sidskåp	TS8	RIT	RIT.SETS8205SID5
=WC1-WC1	1	TS Trim panel, sides, H: 100 mm, for W: 500 mm, RAL 7022, sheet steel	TS.8601050	RIT	RIT.8601050
=WC1-WC1	1	TS Base/plinth component, rear, H: 100 mm, for W: 1200 mm, RAL 7022, sheet steel	TS.8601200	RIT	RIT.8601200
=WC1-WC1	1	TS Side panel, screw-fastened, for TS, TS IT, for WD: 2000x500 mm, Sheet steel	TS.8105235	RIT	RIT.8105235
=WC1-WC1	1	PS Wiring plan pockets, for TS, CM, SE, PC, TP pedestal, sheet steel	TS.4115000	RIT	RIT.4115000

+.UC162/1

+.UQ31/1

			Date	1/24/2023	Volvo Trucks North America	Valiant TMS	Parts list : CPB-E2G06-03 - RIT.4115000	Drawing name: =2V01&EFS-EL_KF1	=	
			Ed.	MKLEPADLO					+ V2UC163	
			Appr		P6700 Framing - Cell 2V01, KF1	Scale 1:1		Document type: EPB	Project nr: 22-16152	Page 1 / 1630
Modification	Date	Name	Original		Replacement of / Replaced by					

Parts list

F01_001

Device tag	Quantity	Designation	Type number	Supplier	Part number
=V2UQ31BG0-BG01	1	Inductive sensor With WeldGuard™ coating	BI20U-CA40-AP6X2-H1141/S1590W/BS2.0	TURCK	TUR.BI20U-CA40-AP6X2-H1141/S1590W/BS2.0
=V2UQ31BG0-BG02	1	Inductive sensor With WeldGuard™ coating	BI20U-CA40-AP6X2-H1141/S1590W/BS2.0	TURCK	TUR.BI20U-CA40-AP6X2-H1141/S1590W/BS2.0
=V2UQ31BG0-BG03	1	Inductive sensor With WeldGuard™ coating	NI50U-CK40-AP6X2-H1141/S1590 W/BS4	TURCK	TUR.NI50U-CK40-AP6X2-H1141/S1590 W/BS4
=V2UQ31BG0-BG04	1	Inductive sensor With WeldGuard™ coating	NI50U-CK40-AP6X2-H1141/S1590 W/BS4	TURCK	TUR.NI50U-CK40-AP6X2-H1141/S1590 W/BS4
=V2UQ31BG0-BG05	1	Inductive sensor With WeldGuard™ coating	BI20U-CA40-AP6X2-H1141/S1590W/BS2.0	TURCK	TUR.BI20U-CA40-AP6X2-H1141/S1590W/BS2.0
=V2UQ31BG0-BG06	1	Inductive sensor With WeldGuard™ coating	BI20U-CA40-AP6X2-H1141/S1590W/BS2.0	TURCK	TUR.BI20U-CA40-AP6X2-H1141/S1590W/BS2.0
=V2UQ31BG0-BG07	1	Inductive sensor With WeldGuard™ coating	NI50U-CK40-AP6X2-H1141/S1590 W/BS4	TURCK	TUR.NI50U-CK40-AP6X2-H1141/S1590 W/BS4
=V2UQ31BG0-BG08	1	Inductive sensor With WeldGuard™ coating	NI50U-CK40-AP6X2-H1141/S1590 W/BS4	TURCK	TUR.NI50U-CK40-AP6X2-H1141/S1590 W/BS4
=V2UQ31BG0-XG1/2	1	Y splitter	U2-30676	TURCK	TUR.VB2-FSM 4.4/2FKM 4/S3450
=V2UQ31BG0-XG3/4	1	Y splitter	U2-30676	TURCK	TUR.VB2-FSM 4.4/2FKM 4/S3450
=V2UQ31BG0-XG5/6	1	Y splitter	U2-30676	TURCK	TUR.VB2-FSM 4.4/2FKM 4/S3450
=V2UQ31BG0-XG7/8	1	Y splitter	U2-30676	TURCK	TUR.VB2-FSM 4.4/2FKM 4/S3450
=V2UQ31KF1-KF1	0	Bus node	CPX-FB33	FESTO	FES.548755
=V2UQ31KF1-KF1	0	Interlinking block	CPX-M-GE-EV-S-7/8-5POL	FES	FES.550208
=V2UQ31KF1-KF1.11	0	Manifold block	CPX-M-AB-8-M12X2-5POL	FES	FES.549335
=V2UQ31KF1-KF1.12	0	Manifold block	CPX-M-AB-8-M12X2-5POL	FES	FES.549335
=V2UQ31KF2-KF2	0	Bus node	CPX-FB33	FESTO	FES.548755
=V2UQ31KF2-KF2	0	Interlinking block	CPX-M-GE-EV-S-7/8-5POL	FES	FES.550208
=V2UQ31KF2-KF2.11	0	Manifold block	CPX-M-AB-8-M12X2-5POL	FES	FES.549335
=V2UQ31KF2-KF2.12	0	Manifold block	CPX-M-AB-8-M12X2-5POL	FES	FES.549335
=V2UQ31WC4-XG51	1	TEE, 5-PIN MINI, STANDARD KEYWAY	U2109-9	TURCK	TUR.RSM-2RKM 50

+.UC163/1

+.UQ31UQ1.1/1

			Date	1/24/2023	Volvo Trucks North America	Valiant TMS	Parts list : TUR.BI20U-CA40-AP6X2-H1141/S1590W/BS2.0 - TUR.RSM-2RKM 50	Drawing name: =2V01&EFS-EL_KF1	=
			Ed.	MKLEPADLO					+ V2UQ31
			Appr		P6700 Framing - Cell 2V01, KF1			Document type: EPB	Project nr: 22-16152
Modification	Date	Name	Original		Replacement of	Replaced by	Scale 1:1		Page 1 / 1630

Parts list

F01_001

Device tag	Quantity	Designation	Type number	Supplier	Part number
=V2UQ31UQ1.1-BGS/R	1	Inductive sensor Monitoring Kit for Power Clamps	1324644	TUNKERS	TUN.1324644

+V2UQ31/1

+.UQ31UQ1.2/1

			Date	1/24/2023	Volvo Trucks North America	Valiant TMS	Parts list : TUN.1324644 - TUN.1324644	Drawing name: =2V01&EFS-EL_KF1	=	
			Ed.	MKLEPADLO					+ V2UQ31UQ1.1	
			Appr		P6700 Framing - Cell 2V01, KF1	Scale 1:1		Document type: EPB	Project nr: 22-16152	Page 1 / 1630
Modification	Date	Name	Original		Replacement of / Replaced by					

Parts list

F01_001

Device tag	Quantity	Designation	Type number	Supplier	Part number
=V2UQ31UQ1.2-BGS/R	1	Inductive sensor Monitoring Kit for Power Clamps	1324644	TUNKERS	TUN.1324644

+.UQ31UQ1.1/1

+.UQ31UQ1.3/1

Parts list

F01_001

Device tag	Quantity	Designation	Type number	Supplier	Part number
=V2UQ31UQ1.3-BGS/R	1	Inductive sensor Monitoring Kit for Power Clamps	1324644	TUNKERS	TUN.1324644

+.UQ31UQ1.2/1

+.UQ31UQ2.1/1

			Date	1/24/2023	Volvo Trucks North America	Valiant TMS	Parts list : TUN.1324644 - TUN.1324644	Drawing name: =2V01&EFS-EL_KF1	= + V2UQ31UQ1.3
			Ed.	MKLEPADLO					
			Appr		P6700 Framing - Cell 2V01, KF1	Scale 1:1		Document type: EPB / Project nr: 22-16152	Page 1 / 1630
Modification	Date	Name	Original		Replacement of / Replaced by				

Parts list

F01_001

Device tag	Quantity	Designation	Type number	Supplier	Part number
=V2UQ31UQ2.1-BGS/R	1	Inductive sensor Monitoring Kit for Power Clamps	1324644	TUNKERS	TUN.1324644

+.UQ31UQ1.3/1

+.UQ31UQ3.1/1

Parts list

F01_001

Device tag	Quantity	Designation	Type number	Supplier	Part number
=V2UQ31UQ3.1-BGS/R	1	Inductive sensor Monitoring Kit for Power Clamps	1324644	TUNKERS	TUN.1324644

+.UQ31UQ2.1/1

+.UQ31UQ4.1/1

Parts list

F01_001

Device tag	Quantity	Designation	Type number	Supplier	Part number
=V2UQ31UQ4.1-BGS/R	1	Inductive sensor Monitoring Kit for Power Clamps	1324644	TUNKERS	TUN.1324644

+.UQ31UQ3.1/1

+.UQ31UQ5.1/1

Parts list

F01_001

Device tag	Quantity	Designation	Type number	Supplier	Part number
=V2UQ31UQ5.1-BGS/R	1	Inductive sensor Monitoring Kit for Power Clamps	1324644	TUNKERS	TUN.1324644

+.UQ31UQ4.1/1

+.UQ31UQ6.1/1

Parts list

F01_001

Device tag	Quantity	Designation	Type number	Supplier	Part number
=V2UQ31UQ6.1-BGS/R	1	Inductive sensor Monitoring Kit for Power Clamps	1324644	TUNKERS	TUN.1324644

+.UQ31UQ5.1/1

+.UQ31UQ7.1/1

			Date	1/24/2023	Volvo Trucks North America	Valiant TMS	Parts list : TUN.1324644 - TUN.1324644	Drawing name: =2V01&EFS-EL_KF1	=
			Ed.	MKLEPADLO					+ V2UQ31UQ6.1
			Appr		P6700 Framing - Cell 2V01, KF1	Scale 1:1		Document type: EPB	Project nr: 22-16152
Modification	Date	Name	Original		Replacement of	Replaced by			Page 1 / 1630

Parts list

F01_001

Device tag	Quantity	Designation	Type number	Supplier	Part number
=V2UQ31UQ7.1-BGS/R	1	Inductive sensor Monitoring Kit for Power Clamps	1324644	TUNKERS	TUN.1324644

+.UQ31UQ6.1/1

+.UQ31UQ8.1/1

Parts list

F01_001

Device tag	Quantity	Designation	Type number	Supplier	Part number
=V2UQ31UQ8.1-BGS/R	1	Inductive sensor Monitoring Kit for Power Clamps	1324644	TUNKERS	TUN.1324644

+.UQ31UQ7.1/1

+.UQ31UQ9.1/1

Parts list

F01_001

Device tag	Quantity	Designation	Type number	Supplier	Part number
=V2UQ31UQ9.1-BGS/R	1	Inductive sensor Monitoring Kit for Power Clamps	1324644	TUNKERS	TUN.1324644

+.UQ31UQ8.1/1

+.UQ31UQ10.1/1

Parts list

F01_001

Device tag	Quantity	Designation	Type number	Supplier	Part number
=V2UQ31UQ10.1-BGS/R	1	Inductive sensor Monitoring Kit for Power Clamps	1324644	TUNKERS	TUN.1324644

+.UQ31UQ9.1/1

+.UQ31UQ10.2/1

Parts list

F01_001

Device tag	Quantity	Designation	Type number	Supplier	Part number
=V2UQ31UQ10.2-BGS/R	1	Inductive sensor Monitoring Kit for Power Clamps	1324644	TUNKERS	TUN.1324644

+.UQ31UQ10.1/1

+.UQ31UQ10.3/1

Parts list

F01_001

Device tag	Quantity	Designation	Type number	Supplier	Part number
=V2UQ31UQ10.3-BGS/R	1	Inductive sensor Monitoring Kit for Power Clamps	1324644	TUNKERS	TUN.1324644

+.UQ31UQ10.2/1

+.UQ31UQ11.1/1

			Date	1/24/2023	Volvo Trucks North America	Valiant TMS	Parts list : TUN.1324644 - TUN.1324644	Drawing name: =2V01&EFS-EL_KF1	= + V2UQ31UQ10.3
			Ed.	MKLEPADLO					
			Appr		P6700 Framing - Cell 2V01, KF1	Scale 1:1		Document type: EPB / Project nr: 22-16152	Page 1 / 1630
Modification	Date	Name	Original		Replacement of / Replaced by				

Parts list

F01_001

Device tag	Quantity	Designation	Type number	Supplier	Part number
=V2UQ31UQ11.1-BGS/R	1	Inductive sensor Monitoring Kit for Power Clamps	1324644	TUNKERS	TUN.1324644

+.UQ31UQ10.3/1

+.UQ31UQ12.1/1

Parts list

F01_001

Device tag	Quantity	Designation	Type number	Supplier	Part number
=V2UQ31UQ12.1-BGS/R	1	Inductive sensor Monitoring Kit for Power Clamps	1324644	TUNKERS	TUN.1324644

+.UQ31UQ11.1/1

+.UQ31UQ13.1/1

Parts list

F01_001

Device tag	Quantity	Designation	Type number	Supplier	Part number
=V2UQ31UQ13.1-BGS/R	1	Inductive sensor Monitoring Kit for Power Clamps	1324644	TUNKERS	TUN.1324644

+.UQ31UQ12.1/1

+.UQ31UQ14.1/1

Parts list

F01_001

Device tag	Quantity	Designation	Type number	Supplier	Part number
=V2UQ31UQ14.1-BGS/R	1	Inductive sensor Monitoring Kit for Power Clamps	1324644	TUNKERS	TUN.1324644

+.UQ31UQ13.1/1

+.UQ31UQ15.1/1

Parts list

F01_001

Device tag	Quantity	Designation	Type number	Supplier	Part number
=V2UQ31UQ15.1-BGS/R	1	Inductive sensor Monitoring Kit for Power Clamps	1324644	TUNKERS	TUN.1324644

+.UQ31UQ14.1/1

+.UQ31UQ16.1/1

Parts list

F01_001

Device tag	Quantity	Designation	Type number	Supplier	Part number
=V2UQ31UQ16.1-BGS/R	1	Inductive sensor Monitoring Kit for Power Clamps	1324644	TUNKERS	TUN.1324644

+.UQ31UQ15.1/1

+.UQ31UQ17.1/1

Parts list

F01_001

Device tag	Quantity	Designation	Type number	Supplier	Part number
=V2UQ31UQ17.1-BGS/R	1	Inductive sensor Monitoring Kit for Power Clamps	1324644	TUNKERS	TUN.1324644

+.UQ31UQ16.1/1

+.UQ31UQ18.1/1

Parts list

F01_001

Device tag	Quantity	Designation	Type number	Supplier	Part number
=V2UQ31UQ18.1-BGS/R	1	Inductive sensor Monitoring Kit for Power Clamps	1324644	TUNKERS	TUN.1324644

+.UQ31UQ17.1/1

+.UQ51/1

Parts list

F01_001

Device tag	Quantity	Designation	Type number	Supplier	Part number
=V2UQ51BG0-BG01	1	Inductive sensor With WeldGuard™ coating	BI20U-CA40-AP6X2-H1141/S1590W/BS2.0	TURCK	TUR.BI20U-CA40-AP6X2-H1141/S1590W/BS2.0
=V2UQ51BG0-BG02	1	Inductive sensor With WeldGuard™ coating	BI20U-CA40-AP6X2-H1141/S1590W/BS2.0	TURCK	TUR.BI20U-CA40-AP6X2-H1141/S1590W/BS2.0
=V2UQ51KF1-KF1.11	1	MVK-MPNIO DIO16 IRT 7/8" 5pin	MVK-MPNIO DI16	MURR	MURR.55530

+.UQ31UQ18.1/1

+.UQ52/1

			Date	1/24/2023	Volvo Trucks North America	Valiant TMS	Parts list : TUR.BI20U-CA40-AP6X2-H1141/S1590W/BS2.0 - MURR.55530	Drawing name: =2V01&EFS-EL_KF1	= + V2UQ51
			Ed.	MKLEPADLO					
			Appr		P6700 Framing - Cell 2V01, KF1	Scale 1:1		Document type: EPB	Project nr: 22-16152
Modification	Date	Name	Original		Replacement of / Replaced by				Page 1 / 1630

Parts list

F01_001

Device tag	Quantity	Designation	Type number	Supplier	Part number
=V2UQ52BG0-BG01	1	Inductive sensor With WeldGuard™ coating	BI20U-CA40-AP6X2-H1141/S1590W/BS2.0	TURCK	TUR.BI20U-CA40-AP6X2-H1141/S1590W/BS2.0
=V2UQ52BG0-BG02	1	Inductive sensor With WeldGuard™ coating	BI20U-CA40-AP6X2-H1141/S1590W/BS2.0	TURCK	TUR.BI20U-CA40-AP6X2-H1141/S1590W/BS2.0
=V2UQ52KF1-KF1.11	1	MVK-MPNIO DIO16 IRT 7/8" 5pin	MVK-MPNIO DI16	MURR	MURR.55530

+.UQ51/1

+.UQ53/1

			Date	1/24/2023	Volvo Trucks North America	Valiant TMS	Parts list : TUR.BI20U-CA40-AP6X2-H1141/S1590W/BS2.0 - MURR.55530	Drawing name: =2V01&EFS-EL_KF1	= + V2UQ52
			Ed.	MKLEPADLO					
			Appr		P6700 Framing - Cell 2V01, KF1	Scale 1:1		Document type: EPB	Project nr: 22-16152
Modification	Date	Name	Original		Replacement of / Replaced by				Page 1 / 1630

Parts list

F01_001

Device tag	Quantity	Designation	Type number	Supplier	Part number
=V2UQ53BG0-BG01	1	Inductive sensor With WeldGuard™ coating	BI20U-CA40-AP6X2-H1141/S1590W/BS2.0	TURCK	TUR.BI20U-CA40-AP6X2-H1141/S1590W/BS2.0
=V2UQ53BG0-BG02	1	Inductive sensor With WeldGuard™ coating	BI20U-CA40-AP6X2-H1141/S1590W/BS2.0	TURCK	TUR.BI20U-CA40-AP6X2-H1141/S1590W/BS2.0
=V2UQ53KF1-KF1.11	1	MVK-MPNIO DIO16 IRT 7/8" 5pin	MVK-MPNIO DI16	MURR	MURR.55530

+.UQ52/1

+.UQ54/1

			Date	1/24/2023	Volvo Trucks North America	Valiant TMS	Parts list : TUR.BI20U-CA40-AP6X2-H1141/S1590W/BS2.0 - MURR.55530	Drawing name: =2V01&EFS-EL_KF1	= + V2UQ53
			Ed.	MKLEPADLO					
			Appr		P6700 Framing - Cell 2V01, KF1	Scale 1:1		Document type: EPB	Project nr: 22-16152
Modification	Date	Name	Original		Replacement of / Replaced by				Page 1 / 1630

Parts list

F01_001

Device tag	Quantity	Designation	Type number	Supplier	Part number
=V2UQ54BG0-BG01	1	Inductive sensor With WeldGuard™ coating	BI20U-CA40-AP6X2-H1141/S1590W/BS2.0	TURCK	TUR.BI20U-CA40-AP6X2-H1141/S1590W/BS2.0
=V2UQ54BG0-BG02	1	Inductive sensor With WeldGuard™ coating	BI20U-CA40-AP6X2-H1141/S1590W/BS2.0	TURCK	TUR.BI20U-CA40-AP6X2-H1141/S1590W/BS2.0
=V2UQ54KF1-KF1.11	1	MVK-MPNIO DIO16 IRT 7/8" 5pin	MVK-MPNIO DI16	MURR	MURR.55530

+.UQ53/1

+.WL1KF1/1

			Date	1/24/2023	Volvo Trucks North America	Valiant TMS	Parts list : TUR.BI20U-CA40-AP6X2-H1141/S1590W/BS2.0 - MURR.55530	Drawing name: =2V01&EFS-EL_KF1	=
			Ed.	MKLEPADLO					+ V2UQ54
			Appr		P6700 Framing - Cell 2V01, KF1	Scale 1:1		Document type: EPB	Project nr: 22-16152
Modification	Date	Name	Original		Replacement of	Replaced by			Page 1 / 1630

Parts list

F01_001

Device tag	Quantity	Designation	Type number	Supplier	Part number
=V2WL1WL1KF1-KF1.11	1	SINAMICS G120D CONTROL UNIT CU250D-2 PN-F	6SL3546-0FB21-1FA0	SIE	SIE.6SL3546-0FB21-1FA0

+.UQ54/1

+.WL1UC01/1

			Date	1/24/2023	Volvo Trucks North America	Valiant TMS	Parts list : SIE.6SL3546-0FB21-1FA0 - SIE.6SL3546-0FB21-1FA0	Drawing name: =2V01&EFS-EL_KF1	=	
			Ed.	MKLEPADLO					+ V2WL1KF1	
			Appr		P6700 Framing - Cell 2V01, KF1	Scale 1:1		Document type: EPB	Project nr: 22-16152	Page 1
Modification	Date	Name	Original		Replacement of	Replaced by				1630

Parts list

F01_001

Device tag	Quantity	Designation	Type number	Supplier	Part number
=V2WL1WL1-TA1	1	SINAMICS PM250D-IP65-FSB-A-400V 3 KW	6SL3525-0PE23-0AA1	SIE	SIE.6SL3525-0PE23-0AA1
=V2WL1WL1WC1-Q1	1	DISCONNECT	EM3BMHANQ4SDCG10	E-M	EM.EM3BMHANQ4SDCG10

+.WL1KF1/1

+.WL2KF1/1

			Date	1/24/2023	Volvo Trucks North America	Valiant TMS	Parts list : SIE.6SL3525-0PE23-0AA1 - EM.EM3BMHANQ4SDCG10	Drawing name: =2V01&EFS-EL_KF1	= + V2WL1UC01
			Ed.	MKLEPADLO					
			Appr		P6700 Framing - Cell 2V01, KF1	Scale 1:1		Document type: EPB / Project nr: 22-16152	Page 1 / 1630
Modification	Date	Name	Original		Replacement of / Replaced by				

Parts list

F01_001

Device tag	Quantity	Designation	Type number	Supplier	Part number
=V2WL2GM1KF1-KF1.11	1	SINAMICS G120D CONTROL UNIT CU240D-2 PN-F	6SL3544-0FB21-1FA0	SIEMENS	SIE.6SL3544-0FB21-1FA0
=V2WL2WL1KF1-KF1.11	1	SINAMICS G120D CONTROL UNIT CU250D-2 PN-F	6SL3546-0FB21-1FA0	SIE	SIE.6SL3546-0FB21-1FA0

+.WL1UC01/1

+.WL2UC01/1

			Date	1/24/2023	Volvo Trucks North America	Valiant TMS	Parts list : SIE.6SL3544-0FB21-1FA0 - SIE.6SL3546-0FB21-1FA0	Drawing name: =2V01&EFS-EL_KF1	= + V2WL2KF1	
			Ed.	MKLEPADLO						
			Appr		P6700 Framing - Cell 2V01, KF1	Scale 1:1		Document type: EPB	Project nr: 22-16152	Page 1 / 1630
Modification	Date	Name	Original		Replacement of	Replaced by				

Parts list

F01_001

Device tag	Quantity	Designation	Type number	Supplier	Part number
=V2WL2GM1-TA1	1	SINAMICS PM250D-IP65-FSC-A-400V 5,5 KW	6SL3525-0PE25-5AA1	SIE	SIE.6SL3525-0PE25-5AA1
=V2WL2WL1-TA1	1	SINAMICS PM250D-IP65-FSB-A-400V 3 KW	6SL3525-0PE23-0AA1	SIE	SIE.6SL3525-0PE23-0AA1
=V2WL2WL1WC1-Q1	1	DISCONNECT	EM3BMHANQ4SDCG10	E-M	EM.EM3BMHANQ4SDCG10
=V2WL2WL1WC1-XG1	1	POWER TEE	EM3BMHANQ4CG1012	E-M	E-M.EM3BMHANQ4CG1012

+.WL2KF1/1

+.WL3KF1/1

			Date	1/24/2023	Volvo Trucks North America	Valiant TMS	Parts list : SIE.6SL3525-0PE25-5AA1 - E-M.EM3BMHANQ4CG1012	Drawing name: =2V01&EFS-EL_KF1	=	
			Ed.	MKLEPADLO					+ V2WL2UC01	
			Appr		P6700 Framing - Cell 2V01, KF1	Scale 1:1		Document type: EPB	Project nr: 22-16152	Page 1 / 1630
Modification	Date	Name	Original		Replacement of	Replaced by				

Parts list

F01_001

Device tag	Quantity	Designation	Type number	Supplier	Part number
=V2WL3WL1KF1-KF1.11	1	SINAMICS G120D CONTROL UNIT CU250D-2 PN-F	6SL3546-0FB21-1FA0	SIE	SIE.6SL3546-0FB21-1FA0

+.WL2UC01/1

+.WL3UC01/1

Parts list

F01_001

Device tag	Quantity	Designation	Type number	Supplier	Part number
=V2WL3WL1-TA1	1	SINAMICS PM250D-IP65-FSB-A-400V 3 KW	6SL3525-0PE23-0AA1	SIE	SIE.6SL3525-0PE23-0AA1
=V2WL3WL1WC1-Q1	1	DISCONNECT	EM3BMHANQ4SDCG10	E-M	EM.EM3BMHANQ4SDCG10

+.WL3KF1/1

+.WL4KF1/1

			Date	1/24/2023	Volvo Trucks North America	Valiant TMS	Parts list : SIE.6SL3525-0PE23-0AA1 - EM.EM3BMHANQ4SDCG10	Drawing name: =2V01&EFS-EL_KF1	=	
			Ed.	MKLEPADLO					+ V2WL3UC01	
			Appr		P6700 Framing - Cell 2V01, KF1	Scale 1:1		Document type: EPB	Project nr: 22-16152	Page 1 / 1630
Modification	Date	Name	Original		Replacement of	Replaced by				

Parts list

F01_001

Device tag	Quantity	Designation	Type number	Supplier	Part number
=V2WL4WL1KF1-KF1.11	1	SINAMICS G120D CONTROL UNIT CU250D-2 PN-F	6SL3546-0FB21-1FA0	SIE	SIE.6SL3546-0FB21-1FA0

+.WL3UC01/1

+.WL4UC01/1

			Date	1/24/2023	Volvo Trucks North America	Valiant TMS	Parts list : SIE.6SL3546-0FB21-1FA0 - SIE.6SL3546-0FB21-1FA0	Drawing name: =2V01&EFS-EL_KF1	=	
			Ed.	MKLEPADLO					+ V2WL4KF1	
			Appr		P6700 Framing - Cell 2V01, KF1	Scale 1:1		Document type: EPB	Project nr: 22-16152	Page 1 / 1630
Modification	Date	Name	Original		Replacement of	Replaced by				

Parts list

F01_001

Device tag	Quantity	Designation	Type number	Supplier	Part number
=V2WL4WL1-TA1	1	SINAMICS PM250D-IP65-FSB-A-400V 3 KW	6SL3525-0PE23-0AA1	SIE	SIE.6SL3525-0PE23-0AA1
=V2WL4WL1WC1-Q1	1	DISCONNECT	EM3BMHANQ4SDCG10	E-M	EM.EM3BMHANQ4SDCG10

+.WL4KF1/1

&ETT+/1

			Date	1/24/2023	Volvo Trucks North America		Valiant TMS	Parts list : SIE.6SL3525-0PE23-0AA1 - EM.EM3BMHANQ4SDCG10	Drawing name: =2V01&EFS-EL_KF1	= + V2WL4UC01	
			Ed.	MKLEPADLO							
			Appr		P6700 Framing - Cell 2V01, KF1		Scale 1:1		Document type: EPB	Project nr: 22-16152	Page 1 / 1630
Modification	Date	Name	Original		Replacement of	Replaced by					

Terminal line-up diagram

F12_001

Part number					
Mounting rail			Strip label	End angle rear	End plate
Terminal					
Part number	Type number	Cross-section	Terminal label	Jumper	Cover

=KF0KF1+UC31-PC1

	DVI	

Terminal line-up diagram

F12_001

Part number					
Mounting rail			Strip label	End angle rear	End plate
Terminal					
Part number	Type number	Cross-section	Terminal label	Jumper	Cover

=KF0KF1+UC31-PH1

DVI

1

3

Terminal line-up diagram

F12_001

Part number					
Mounting rail			Strip label	End angle rear	End plate

Terminal					
Part number	Type number	Cross-section	Terminal label	Jumper	Cover
WEI.1608510000	ZDU 2.5	2.5			
WEI.1608740000	ZAP/TW 1				
WEI.9540000000	ZEW 35				
WEI.1608520000	ZDU 2.5 BL	2.5 mm²			
WEI.1608520000	ZDU 2.5 BL	2.5 mm²			

=KF0WC3+UC31-XD1

'	L1	
'	N	
'		
'	PE	
'		

2

4

			Date	1/24/2023	Volvo Trucks North America	Valiant TMS	Terminal line-up diagram =KF0WC3+UC31-XD1	Drawing name: =2V01&EFS-EL_KF1	=
			Ed.	MKLEPADLO					+
			Appr		P6700 Framing - Cell 2V01, KF1			Document type: ETT	Project nr: 22-16152
Modification	Date	Name	Original		Replacement of	Replaced by	Scale 1:1		Page 3 / 1630

Terminal line-up diagram

F12_001

Part number					
Mounting rail			Strip label	End angle rear	End plate

Terminal					
Part number	Type number	Cross-section	Terminal label	Jumper	Cover
WEI.1608510000	ZDU 2.5	2.5			
WEI.1608740000	ZAP/TW 1				
WEI.9540000000	ZEW 35				
WEI.1608520000	ZDU 2.5 BL	2.5 mm²			
WEI.1608520000	ZDU 2.5 BL	2.5 mm²			

=KF0WC3+UC31-XD2

'	1L1	
'	N	
'		
'	PE	
'		

			Date	1/24/2023	Volvo Trucks North America	Valiant TMS	Terminal line-up diagram =KF0WC3+UC31-XD2	Drawing name: =2V01&EFS-EL_KF1	=
			Ed.	MKLEPADLO					+
			Appr		P6700 Framing - Cell 2V01, KF1			Document type: ETT	Project nr: 22-16152
Modification	Date	Name	Original		Replacement of / Replaced by	Scale 1:1			Page 4 / 1630

Terminal line-up diagram

F12_001

Part number					
Mounting rail			Strip label	End angle rear	End plate

Terminal					
Part number	Type number	Cross-section	Terminal label	Jumper	Cover
WEI.8731720000	ZTR 2.5/3AN	2.5			
WEI.1608800000	ZAP/TW 3				
WEI.9540000000	ZEW 35				
WEI.8731720000	ZTR 2.5/3AN	2.5			
WEI.8731720000	ZTR 2.5/3AN	2.5			
WEI.8731720000	ZTR 2.5/3AN	2.5			
WEI.8731720000	ZTR 2.5/3AN	2.5			
WEI.8731720000	ZTR 2.5/3AN	2.5			

=KF0WC4+UC31-XD11

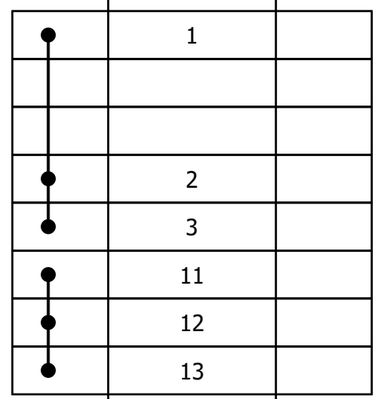

			Date	1/24/2023	Volvo Trucks North America		Valiant TMS	Terminal line-up diagram =KF0WC4+UC31-XD11	Drawing name: =2V01&EFS-EL_KF1	=
			Ed.	MKLEPADLO						+
			Appr		P6700 Framing - Cell 2V01, KF1				Document type: ETT	Project nr: 22-16152
Modification	Date	Name	Original		Replacement of	Replaced by	Scale 1:1			Page 5 / 1630

Terminal line-up diagram

F12_001

Part number					
Mounting rail			Strip label	End angle rear	End plate

Terminal					
Part number	Type number	Cross-section	Terminal label	Jumper	Cover
WEI.8731720000	ZTR 2.5/3AN	2.5			
WEI.1608800000	ZAP/TW 3				
WEI.9540000000	ZEW 35				
WEI.8731720000	ZTR 2.5/3AN	2.5			
WEI.8731720000	ZTR 2.5/3AN	2.5			
WEI.8731720000	ZTR 2.5/3AN	2.5			
WEI.8731720000	ZTR 2.5/3AN	2.5			
WEI.8731720000	ZTR 2.5/3AN	2.5			
WEI.8731720000	ZTR 2.5/3AN	2.5			
WEI.8731720000	ZTR 2.5/3AN	2.5			
WEI.8731720000	ZTR 2.5/3AN	2.5			

=KF0WC4+UC31-XD12

	1	
	2	
	3	
	4	
	11	
	12	
	13	
	14	

5

7

			Date	1/24/2023	Volvo Trucks North America	Valiant TMS	Terminal line-up diagram =KF0WC4+UC31-XD12	Drawing name: =2V01&EFS-EL_KF1	=
			Ed.	MKLEPADLO					+
			Appr		P6700 Framing - Cell 2V01, KF1			Document type: ETT	Project nr: 22-16152
Modification	Date	Name	Original		Replacement of	Replaced by	Scale 1:1		Page 6 / 1630

Terminal line-up diagram

F12_001

Part number					
Mounting rail			Strip label	End angle rear	End plate

Terminal					
Part number	Type number	Cross-section	Terminal label	Jumper	Cover
WEI.8731720000	ZTR 2.5/3AN	2.5			
WEI.1608800000	ZAP/TW 3				
WEI.9540000000	ZEW 35				
WEI.8731720000	ZTR 2.5/3AN	2.5			
WEI.8731720000	ZTR 2.5/3AN	2.5			
WEI.8731720000	ZTR 2.5/3AN	2.5			
WEI.8731720000	ZTR 2.5/3AN	2.5			
WEI.8731720000	ZTR 2.5/3AN	2.5			

=KF0WC4+UC31-XD13

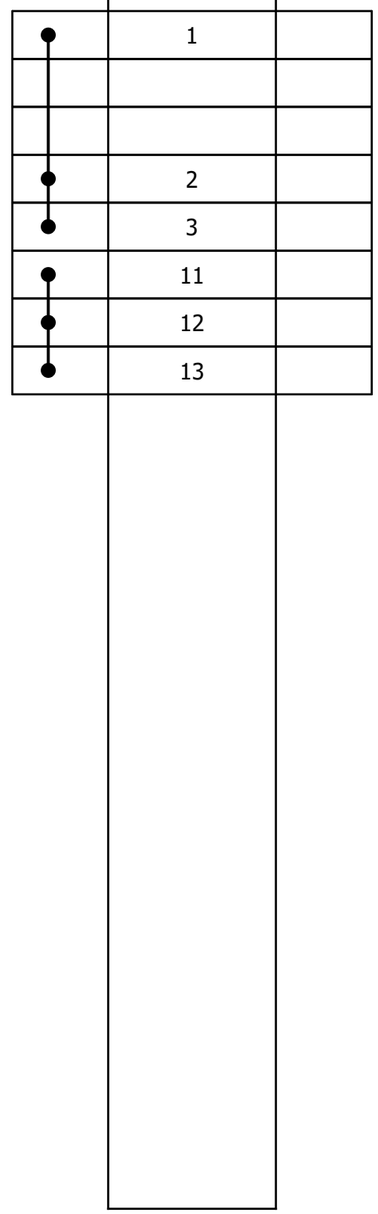

6

8

			Date	1/24/2023	Volvo Trucks North America	Valiant TMS	Terminal line-up diagram =KF0WC4+UC31-XD13	Drawing name: =2V01&EFS-EL_KF1	=
			Ed.	MKLEPADLO					+
			Appr		P6700 Framing - Cell 2V01, KF1			Document type: ETT	Project nr: 22-16152
Modification	Date	Name	Original		Replacement of / Replaced by	Scale 1:1			Page 7 / 1630

Terminal line-up diagram

F12_001

Part number					
Mounting rail			Strip label	End angle rear	End plate

Terminal					
Part number	Type number	Cross-section	Terminal label	Jumper	Cover
WEI.8731720000	ZTR 2.5/3AN	2.5			
WEI.1608800000	ZAP/TW 3				
WEI.9540000000	ZEW 35				
WEI.8731720000	ZTR 2.5/3AN	2.5			
WEI.8731720000	ZTR 2.5/3AN	2.5			
WEI.8731720000	ZTR 2.5/3AN	2.5			
WEI.8731720000	ZTR 2.5/3AN	2.5			
WEI.8731720000	ZTR 2.5/3AN	2.5			
WEI.8731720000	ZTR 2.5/3AN	2.5			
WEI.8731720000	ZTR 2.5/3AN	2.5			
WEI.8731720000	ZTR 2.5/3AN	2.5			

=KF0WC4+UC31-XD14

	1	
	2	
	3	
	4	
	11	
	12	
	13	
	14	

7

9

			Date	1/24/2023	Volvo Trucks North America	Valiant TMS	Terminal line-up diagram =KF0WC4+UC31-XD14	Drawing name: =2V01&EFS-EL_KF1	=
			Ed.	MKLEPADLO					+
			Appr		P6700 Framing - Cell 2V01, KF1			Document type: ETT	Project nr: 22-16152
Modification	Date	Name	Original		Replacement of	Replaced by	Scale 1:1		Page 8 / 1630

Terminal line-up diagram

F12_001

Part number					
Mounting rail			Strip label	End angle rear	End plate
Terminal					
Part number	Type number	Cross-section	Terminal label	Jumper	Cover

=V1WC1+V1UC11-PE

PE

			Date	1/24/2023	Volvo Trucks North America	Valiant TMS	Terminal line-up diagram =V1WC1+V1UC11-PE	Drawing name: =2V01&EFS-EL_KF1	=
			Ed.	MKLEPADLO					+
			Appr		P6700 Framing - Cell 2V01, KF1			Document type: ETT	Project nr: 22-16152
Modification	Date	Name	Original		Replacement of / Replaced by	Scale 1:1			Page 9 / 1630

Terminal line-up diagram

F12_001

Part number					
Mounting rail			Strip label	End angle rear	End plate

Terminal					
Part number	Type number	Cross-section	Terminal label	Jumper	Cover
1SNK705012R0000	ZK2.5-4P	2.5			
1SNK705012R0000	ZK2.5-4P	2.5			
1SNK705012R0000	ZK2.5-4P	2.5			
1SNK705012R0000	ZK2.5-4P	2.5			
1SNK705012R0000	ZK2.5-4P	2.5			
1SNK705012R0000	ZK2.5-4P	2.5			
1SNK705012R0000	ZK2.5-4P	2.5			
1SNK705012R0000	ZK2.5-4P	2.5			
1SNK705012R0000	ZK2.5-4P	2.5			
1SNK705012R0000	ZK2.5-4P	2.5			
1SNK705012R0000	ZK2.5-4P	2.5			
1SNK705012R0000	ZK2.5-4P	2.5			
1SNK705012R0000	ZK2.5-4P	2.5			
1SNK705012R0000	ZK2.5-4P	2.5			
1SNK705012R0000	ZK2.5-4P	2.5			

=V1WC2+V1UC11-XD1

	1	
	2	
	3	
	4	
	5	
	6	
	7	
	8	
	9	
	10	
	11	
	12	
	13	
	14	
	15	
	16	

			Date	1/24/2023	Volvo Trucks North America	Valiant TMS	Terminal line-up diagram =V1WC2+V1UC11-XD1	Drawing name: =2V01&EFS-EL_KF1	=
			Ed.	MKLEPADLO					+
			Appr		P6700 Framing - Cell 2V01, KF1			Document type: ETT	Project nr: 22-16152
Modification	Date	Name	Original		Replacement of	Replaced by	Scale 1:1		Page 10 / 1630

Terminal line-up diagram

F12_001

Part number					
Mounting rail			Strip label	End angle rear	End plate

Terminal					
Part number	Type number	Cross-section	Terminal label	Jumper	Cover
1SNK705012R0000	ZK2.5-4P	2.5			
1SNK705012R0000	ZK2.5-4P	2.5			
1SNK705012R0000	ZK2.5-4P	2.5			
1SNK705012R0000	ZK2.5-4P	2.5			
1SNK705012R0000	ZK2.5-4P	2.5			
1SNK705012R0000	ZK2.5-4P	2.5			
1SNK705012R0000	ZK2.5-4P	2.5			
1SNK705012R0000	ZK2.5-4P	2.5			

=V1WC2+V1UC11-XD2

	1	
	2	
	3	
	4	
	5	
	6	
	7	
	8	

			Date	1/24/2023	Volvo Trucks North America	Valiant TMS	Terminal line-up diagram =V1WC2+V1UC11-XD2	Drawing name: =2V01&EFS-EL_KF1	=
			Ed.	MKLEPADLO					+
			Appr		P6700 Framing - Cell 2V01, KF1			Document type: ETT	Project nr: 22-16152
Modification	Date	Name	Original		Replacement of	Replaced by	Scale 1:1		Page 11 / 1630

Terminal line-up diagram

F12_001

Part number					
Mounting rail			Strip label	End angle rear	End plate

Terminal					
Part number	Type number	Cross-section	Terminal label	Jumper	Cover
1SNK705012R0000	ZK2.5-4P	2.5			
1SNK705012R0000	ZK2.5-4P	2.5			
1SNK705012R0000	ZK2.5-4P	2.5			
1SNK705012R0000	ZK2.5-4P	2.5			
1SNK705012R0000	ZK2.5-4P	2.5			

=V1WC2+V1UC11-XD3

	1	
	2	
	3	
	4	
	5	

11

13

			Date	1/24/2023	Volvo Trucks North America	Valiant TMS	Terminal line-up diagram =V1WC2+V1UC11-XD3	Drawing name: =2V01&EFS-EL_KF1	=
			Ed.	MKLEPADLO					+
			Appr		P6700 Framing - Cell 2V01, KF1			Document type: ETT	Project nr: 22-16152
Modification	Date	Name	Original		Replacement of / Replaced by	Scale 1:1			Page 12 / 1630

Terminal line-up diagram

F12_001

Part number					
Mounting rail			Strip label	End angle rear	End plate
Terminal					
Part number	Type number	Cross-section	Terminal label	Jumper	Cover
1SNK706012R0000	ZK4-4P	4			
1SNK706012R0000	ZK4-4P	4			
1SNK706012R0000	ZK4-4P	4			
1SNK706012R0000	ZK4-4P	4			

=V1WC3+V1UC11-XD1

'	1	
'	2	
'	3	
'	4	

Terminal line-up diagram

F12_001

Part number					
Mounting rail			Strip label	End angle rear	End plate

Terminal					
Part number	Type number	Cross-section	Terminal label	Jumper	Cover
1SNK706012R0000	ZK4-4P	4			
1SNK706012R0000	ZK4-4P	4			
1SNK706012R0000	ZK4-4P	4			
1SNK706012R0000	ZK4-4P	4			
1SNK706012R0000	ZK4-4P	4			
1SNK706012R0000	ZK4-4P	4			
1SNK706012R0000	ZK4-4P	4			
1SNK706012R0000	ZK4-4P	4			

=V1WC3+V1UC11-XD2

'	1	
'	2	
'	3	
'	4	
'	5	
'	6	
'	7	
'	8	

13

15

			Date	1/24/2023	Volvo Trucks North America	Valiant TMS	Terminal line-up diagram =V1WC3+V1UC11-XD2	Drawing name: =2V01&EFS-EL_KF1	=
			Ed.	MKLEPADLO					+
			Appr		P6700 Framing - Cell 2V01, KF1			Document type: ETT	Project nr: 22-16152
Modification	Date	Name	Original		Replacement of	Replaced by	Scale 1:1		Page 14 / 1630

Terminal line-up diagram

F12_001

Part number					
Mounting rail			Strip label	End angle rear	End plate

Terminal					
Part number	Type number	Cross-section	Terminal label	Jumper	Cover
1SNK705012R0000	ZK2.5-4P	2.5			
1SNK705012R0000	ZK2.5-4P	2.5			
1SNK705012R0000	ZK2.5-4P	2.5			
1SNK705012R0000	ZK2.5-4P	2.5			
1SNK705012R0000	ZK2.5-4P	2.5			
1SNK705012R0000	ZK2.5-4P	2.5			
1SNK705012R0000	ZK2.5-4P	2.5			
1SNK705012R0000	ZK2.5-4P	2.5			

=V1WC3+V1UC11-XD3

	1	
	2	
	3	
	4	
	5	
	6	
	7	
	8	

			Date	1/24/2023	Volvo Trucks North America	Valiant TMS	Terminal line-up diagram =V1WC3+V1UC11-XD3	Drawing name: =2V01&EFS-EL_KF1	=
			Ed.	MKLEPADLO					+
			Appr		P6700 Framing - Cell 2V01, KF1			Document type: ETT	Project nr: 22-16152
Modification	Date	Name	Original		Replacement of / Replaced by	Scale 1:1			Page 15 / 1630

Terminal line-up diagram

F12_001

Part number					
Mounting rail			Strip label	End angle rear	End plate
Terminal					
Part number	Type number	Cross-section	Terminal label	Jumper	Cover
1SNK705012R0000	ZK2.5-4P	2.5			
1SNK705012R0000	ZK2.5-4P	2.5			
1SNK705012R0000	ZK2.5-4P	2.5			
1SNK705012R0000	ZK2.5-4P	2.5			

=V1WC4+V1UC11-KF11.14

'	1	
'	2	
'	3	
'	4	

15

17

			Date	1/24/2023	Volvo Trucks North America	Valiant TMS	Terminal line-up diagram =V1WC4+V1UC11-KF11.14	Drawing name: =2V01&EFS-EL_KF1	=
			Ed.	MKLEPADLO					+
			Appr		P6700 Framing - Cell 2V01, KF1			Document type: ETT	Project nr: 22-16152
Modification	Date	Name	Original		Replacement of	Replaced by	Scale 1:1		Page 16 / 1630

Terminal line-up diagram

F12_001

Part number					
Mounting rail			Strip label	End angle rear	End plate
Terminal					
Part number	Type number	Cross-section	Terminal label	Jumper	Cover
1SNK705012R0000	ZK2.5-4P	2.5			

=V1WC4+V1UC11-XD5

1

Terminal line-up diagram

F12_001

Part number					
Mounting rail			Strip label	End angle rear	End plate
Terminal					
Part number	Type number	Cross-section	Terminal label	Jumper	Cover
1SNK705012R0000	ZK2.5-4P	2.5			

=V1WC4+V1UC11-XD6

1

			Date	1/24/2023	Volvo Trucks North America	Valiant TMS	Terminal line-up diagram =V1WC4+V1UC11-XD6	Drawing name: =2V01&EFS-EL_KF1	=
			Ed.	MKLEPADLO					+
			Appr		P6700 Framing - Cell 2V01, KF1			Document type: ETT	Project nr: 22-16152	Page 18
Modification	Date	Name	Original		Replacement of	Replaced by	Scale 1:1		1630

Terminal line-up diagram

F12_001

Part number					
Mounting rail			Strip label	End angle rear	End plate

Terminal					
Part number	Type number	Cross-section	Terminal label	Jumper	Cover
1SNK705012R0000	ZK2.5-4P	2.5			
1SNK705012R0000	ZK2.5-4P	2.5			
1SNK705012R0000	ZK2.5-4P	2.5			
1SNK705012R0000	ZK2.5-4P	2.5			
1SNK705012R0000	ZK2.5-4P	2.5			
1SNK705012R0000	ZK2.5-4P	2.5			
1SNK705012R0000	ZK2.5-4P	2.5			
1SNK705012R0000	ZK2.5-4P	2.5			
1SNK705012R0000	ZK2.5-4P	2.5			
1SNK705012R0000	ZK2.5-4P	2.5			
1SNK705012R0000	ZK2.5-4P	2.5			
1SNK705012R0000	ZK2.5-4P	2.5			
1SNK705012R0000	ZK2.5-4P	2.5			
1SNK705012R0000	ZK2.5-4P	2.5			
1SNK705012R0000	ZK2.5-4P	2.5			

=V1WC4+V1UC11-XD10

	1	
	2	
	3	
	5	
	4	
	6	
	7	
	8	
	9	
	10	
	11	
	12	
	13	
	14	
	15	
	16	

			Date	1/24/2023	Volvo Trucks North America	Valiant TMS	Terminal line-up diagram =V1WC4+V1UC11-XD10	Drawing name: =2V01&EFS-EL_KF1	=
			Ed.	MKLEPADLO					+
			Appr		P6700 Framing - Cell 2V01, KF1			Document type: ETT	Project nr: 22-16152
Modification	Date	Name	Original		Replacement of / Replaced by	Scale 1:1			Page 19 / 1630

Terminal line-up diagram

F12_001

Part number					
Mounting rail			Strip label	End angle rear	End plate
Terminal					
Part number	Type number	Cross-section	Terminal label	Jumper	Cover
1SNK705012R0000	ZK2.5-4P	2.5			

=V1WC4+V1UC11-XD11

1

Modification	Date	Name	Date	1/24/2023	Volvo Trucks North America	Valiant TMS	Terminal line-up diagram =V1WC4+V1UC11-XD11	Drawing name: =2V01&EFS-EL_KF1	=
			Ed.	MKLEPADLO	P6700 Framing - Cell 2V01, KF1	Scale 1:1		Document type: ETT	+
			Appr		Replacement of	Replaced by		Project nr: 22-16152	Page 20
			Original						1630

0	1	2	3	4	5	6	7	8	9

Terminal line-up diagram

F12_001

Part number					
Mounting rail			Strip label	End angle rear	End plate
Terminal					
Part number	Type number	Cross-section	Terminal label	Jumper	Cover
1SNK705012R0000	ZK2.5-4P	2.5			
1SNK705012R0000	ZK2.5-4P	2.5			

			Date	1/24/2023	Volvo Trucks North America	Valiant TMS	Terminal line-up diagram =V1WC4+V1UC11-XD12	Drawing name: =2V01&EFS-EL_KF1	=
			Ed.	MKLEPADLO					+
			Appr		P6700 Framing - Cell 2V01, KF1			Document type: ETT	Project nr: 22-16152
Modification	Date	Name	Original		Replacement of / Replaced by	Scale 1:1		Page 21	1630

Terminal line-up diagram

F12_001

Part number					
Mounting rail			Strip label	End angle rear	End plate

Terminal					
Part number	Type number	Cross-section	Terminal label	Jumper	Cover
1SNK705012R0000	ZK2.5-4P	2.5			
1SNK705012R0000	ZK2.5-4P	2.5			
1SNK705012R0000	ZK2.5-4P	2.5			
1SNK705012R0000	ZK2.5-4P	2.5			
1SNK705012R0000	ZK2.5-4P	2.5			
1SNK705012R0000	ZK2.5-4P	2.5			
1SNK705012R0000	ZK2.5-4P	2.5			
1SNK705012R0000	ZK2.5-4P	2.5			
1SNK705012R0000	ZK2.5-4P	2.5			

=V1WC4+V1UC11-XD13

	1
	2
	3
	4
	5
	6
	7
	8
	9

			Date	1/24/2023	Volvo Trucks North America	Valiant TMS	Terminal line-up diagram =V1WC4+V1UC11-XD13	Drawing name: =2V01&EFS-EL_KF1	=
			Ed.	MKLEPADLO					+
			Appr		P6700 Framing - Cell 2V01, KF1			Document type: ETT	Project nr: 22-16152
Modification	Date	Name	Original		Replacement of / Replaced by	Scale 1:1			Page 22 / 1630

Terminal line-up diagram

F12_001

Part number					
Mounting rail			Strip label	End angle rear	End plate
Terminal					
Part number	Type number	Cross-section	Terminal label	Jumper	Cover
1SNK705012R0000	ZK2.5-4P	2.5			
1SNK705012R0000	ZK2.5-4P	2.5			

			Date	1/24/2023	Volvo Trucks North America	Valiant TMS	Terminal line-up diagram =V1WC4+V1UC11-XD14
			Ed.	MKLEPADLO	P6700 Framing - Cell 2V01, KF1		
			Appr			Scale 1:1	
Modification	Date	Name	Original		Replacement of / Replaced by		

Drawing name: =2V01&EFS-EL_KF1		=	+
Document type: ETT	Project nr: 22-16152		Page 23 / 1630

Terminal line-up diagram

F12_001

Part number					
Mounting rail			Strip label	End angle rear	End plate

Terminal					
Part number	Type number	Cross-section	Terminal label	Jumper	Cover
1SNK705012R0000	ZK2.5-4P	2.5			
1SNK705012R0000	ZK2.5-4P	2.5			
1SNK705012R0000	ZK2.5-4P	2.5			
1SNK705012R0000	ZK2.5-4P	2.5			
1SNK705012R0000	ZK2.5-4P	2.5			
1SNK705012R0000	ZK2.5-4P	2.5			
1SNK705012R0000	ZK2.5-4P	2.5			
1SNK705012R0000	ZK2.5-4P	2.5			

=V1WC4+V1UC11-XD20

	1	
	2	
	3	
	4	
	5	
	6	
	7	
	8	

			Date	1/24/2023	Volvo Trucks North America	Valiant TMS	Terminal line-up diagram =V1WC4+V1UC11-XD20	Drawing name: =2V01&EFS-EL_KF1	=
			Ed.	MKLEPADLO					+
			Appr		P6700 Framing - Cell 2V01, KF1			Document type: ETT	Project nr: 22-16152
Modification	Date	Name	Original		Replacement of	Replaced by	Scale 1:1		Page 24 / 1630

Terminal line-up diagram

F12_001

Part number					
Mounting rail			Strip label	End angle rear	End plate
Terminal					
Part number	Type number	Cross-section	Terminal label	Jumper	Cover
1SNK705012R0000	ZK2.5-4P	2.5			
1SNK705012R0000	ZK2.5-4P	2.5			

Terminal line-up diagram

F12_001

Part number					
Mounting rail			Strip label	End angle rear	End plate
Terminal					
Part number	Type number	Cross-section	Terminal label	Jumper	Cover
1SNK705012R0000	ZK2.5-4P	2.5			
1SNK705012R0000	ZK2.5-4P	2.5			

=V1WC4+V1UC11-XD52

●	1	
●	2	

Terminal line-up diagram

F12_001

Part number					
Mounting rail			Strip label	End angle rear	End plate
Terminal					
Part number	Type number	Cross-section	Terminal label	Jumper	Cover
1SNK705012R0000	ZK2.5-4P	2.5			
1SNK705012R0000	ZK2.5-4P	2.5			

Terminal line-up diagram

F12_001

Part number					
Mounting rail			Strip label	End angle rear	End plate
Terminal					
Part number	Type number	Cross-section	Terminal label	Jumper	Cover
1SNK705012R0000	ZK2.5-4P	2.5			
1SNK705012R0000	ZK2.5-4P	2.5			

Terminal line-up diagram

F12_001

Part number					
Mounting rail			Strip label	End angle rear	End plate
Terminal					
Part number	Type number	Cross-section	Terminal label	Jumper	Cover

=V1WC1+V1UC12-PE

PE

			Date	1/24/2023	Volvo Trucks North America	Valiant TMS	Terminal line-up diagram =V1WC1+V1UC12-PE	Drawing name: =2V01&EFS-EL_KF1	=
			Ed.	MKLEPADLO					+
			Appr		P6700 Framing - Cell 2V01, KF1			Document type: ETT	Project nr: 22-16152	Page 29
Modification	Date	Name	Original		Replacement of / Replaced by	Scale 1:1			1630

Terminal line-up diagram

F12_001

Part number					
Mounting rail			Strip label	End angle rear	End plate

Terminal					
Part number	Type number	Cross-section	Terminal label	Jumper	Cover
1SNK705012R0000	ZK2.5-4P	2.5			
1SNK705012R0000	ZK2.5-4P	2.5			
1SNK705012R0000	ZK2.5-4P	2.5			
1SNK705012R0000	ZK2.5-4P	2.5			
1SNK705012R0000	ZK2.5-4P	2.5			
1SNK705012R0000	ZK2.5-4P	2.5			
1SNK705012R0000	ZK2.5-4P	2.5			
1SNK705012R0000	ZK2.5-4P	2.5			
1SNK705012R0000	ZK2.5-4P	2.5			
1SNK705012R0000	ZK2.5-4P	2.5			
1SNK705012R0000	ZK2.5-4P	2.5			
1SNK705012R0000	ZK2.5-4P	2.5			
1SNK705012R0000	ZK2.5-4P	2.5			
1SNK705012R0000	ZK2.5-4P	2.5			
1SNK705012R0000	ZK2.5-4P	2.5			

=V1WC2+V1UC12-XD1

	1	
	2	
	3	
	4	
	5	
	6	
	7	
	8	
	9	
	10	
	11	
	12	
	13	
	14	
	15	
	16	

29

31

			Date	1/24/2023	Volvo Trucks North America	Valiant TMS	Terminal line-up diagram =V1WC2+V1UC12-XD1	Drawing name: =2V01&EFS-EL_KF1	=
			Ed.	MKLEPADLO					+
			Appr		P6700 Framing - Cell 2V01, KF1			Document type: ETT	Project nr: 22-16152
Modification	Date	Name	Original		Replacement of	Replaced by	Scale 1:1		Page 30 / 1630

Terminal line-up diagram

F12_001

Part number					
Mounting rail			Strip label	End angle rear	End plate

Terminal					
Part number	Type number	Cross-section	Terminal label	Jumper	Cover
1SNK705012R0000	ZK2.5-4P	2.5			
1SNK705012R0000	ZK2.5-4P	2.5			
1SNK705012R0000	ZK2.5-4P	2.5			
1SNK705012R0000	ZK2.5-4P	2.5			
1SNK705012R0000	ZK2.5-4P	2.5			
1SNK705012R0000	ZK2.5-4P	2.5			
1SNK705012R0000	ZK2.5-4P	2.5			
1SNK705012R0000	ZK2.5-4P	2.5			

=V1WC2+V1UC12-XD2

1	
2	
3	
4	
5	
6	
7	
8	

			Date	1/24/2023	Volvo Trucks North America	Valiant TMS	Terminal line-up diagram =V1WC2+V1UC12-XD2	Drawing name: =2V01&EFS-EL_KF1	=
			Ed.	MKLEPADLO					+
			Appr		P6700 Framing - Cell 2V01, KF1			Document type: ETT	Project nr: 22-16152
Modification	Date	Name	Original		Replacement of / Replaced by	Scale 1:1			Page 31 / 1630

Terminal line-up diagram

F12_001

Part number					
Mounting rail			Strip label	End angle rear	End plate
Terminal					
Part number	Type number	Cross-section	Terminal label	Jumper	Cover
1SNK705012R0000	ZK2.5-4P	2.5			
1SNK705012R0000	ZK2.5-4P	2.5			
1SNK705012R0000	ZK2.5-4P	2.5			
1SNK705012R0000	ZK2.5-4P	2.5			
1SNK705012R0000	ZK2.5-4P	2.5			

=V1WC2+V1UC12-XD3

	1	
	2	
	3	
	4	
	5	

			Date	1/24/2023	Volvo Trucks North America	Valiant TMS	Terminal line-up diagram =V1WC2+V1UC12-XD3	Drawing name: =2V01&EFS-EL_KF1	=
			Ed.	MKLEPADLO					+
			Appr		P6700 Framing - Cell 2V01, KF1			Document type: ETT	Project nr: 22-16152
Modification	Date	Name	Original		Replacement of / Replaced by	Scale 1:1			Page 32 / 1630

Terminal line-up diagram

F12_001

Part number					
Mounting rail			Strip label	End angle rear	End plate
Terminal					
Part number	Type number	Cross-section	Terminal label	Jumper	Cover
1SNK706012R0000	ZK4-4P	4			
1SNK706012R0000	ZK4-4P	4			
1SNK706012R0000	ZK4-4P	4			
1SNK706012R0000	ZK4-4P	4			

			Date	1/24/2023	Volvo Trucks North America
			Ed.	MKLEPADLO	
			Appr		P6700 Framing - Cell 2V01, KF1
Modification	Date	Name	Original		Replacement of / Replaced by

Valiant TMS

Scale 1:1

Terminal line-up diagram =V1WC3+V1UC12-XD1

Drawing name: =2V01&EFS-EL_KF1

=

+

Document type: ETT

Project nr: 22-16152

Terminal line-up diagram

F12_001

Part number					
Mounting rail			Strip label	End angle rear	End plate

Terminal					
Part number	Type number	Cross-section	Terminal label	Jumper	Cover
1SNK706012R0000	ZK4-4P	4			
1SNK706012R0000	ZK4-4P	4			
1SNK706012R0000	ZK4-4P	4			
1SNK706012R0000	ZK4-4P	4			
1SNK706012R0000	ZK4-4P	4			
1SNK706012R0000	ZK4-4P	4			
1SNK706012R0000	ZK4-4P	4			
1SNK706012R0000	ZK4-4P	4			

=V1WC3+V1UC12-XD2

'	1	
'	2	
'	3	
'	4	
'	5	
'	6	
'	7	
'	8	

33

35

			Date	1/24/2023	Volvo Trucks North America	Valiant TMS	Terminal line-up diagram =V1WC3+V1UC12-XD2	Drawing name: =2V01&EFS-EL_KF1	=
			Ed.	MKLEPADLO					+
			Appr		P6700 Framing - Cell 2V01, KF1			Document type: ETT	Project nr: 22-16152
Modification	Date	Name	Original		Replacement of / Replaced by	Scale 1:1			Page 34 / 1630

Terminal line-up diagram

F12_001

Part number					
Mounting rail			Strip label	End angle rear	End plate

Terminal					
Part number	Type number	Cross-section	Terminal label	Jumper	Cover
1SNK705012R0000	ZK2.5-4P	2.5			
1SNK705012R0000	ZK2.5-4P	2.5			
1SNK705012R0000	ZK2.5-4P	2.5			
1SNK705012R0000	ZK2.5-4P	2.5			
1SNK705012R0000	ZK2.5-4P	2.5			
1SNK705012R0000	ZK2.5-4P	2.5			
1SNK705012R0000	ZK2.5-4P	2.5			
1SNK705012R0000	ZK2.5-4P	2.5			

=V1WC3+V1UC12-XD3

	1	
	2	
	3	
	4	
	5	
	6	
	7	
	8	

			Date	1/24/2023	Volvo Trucks North America	Valiant TMS	Terminal line-up diagram =V1WC3+V1UC12-XD3	Drawing name: =2V01&EFS-EL_KF1	=
			Ed.	MKLEPADLO					+
			Appr		P6700 Framing - Cell 2V01, KF1			Document type: ETT	Project nr: 22-16152
Modification	Date	Name	Original		Replacement of	Replaced by	Scale 1:1		Page 35 / 1630

Terminal line-up diagram

F12_001

Part number					
Mounting rail			Strip label	End angle rear	End plate
Terminal					
Part number	Type number	Cross-section	Terminal label	Jumper	Cover
1SNK705012R0000	ZK2.5-4P	2.5			
1SNK705012R0000	ZK2.5-4P	2.5			
1SNK705012R0000	ZK2.5-4P	2.5			
1SNK705012R0000	ZK2.5-4P	2.5			

=V1WC4+V1UC12-KF12.14

'	1	
'	2	
'	3	
'	4	

Terminal line-up diagram

F12_001

Part number					
Mounting rail			Strip label	End angle rear	End plate

Terminal					
Part number	Type number	Cross-section	Terminal label	Jumper	Cover
1SNK705012R0000	ZK2.5-4P	2.5			

=V1WC4+V1UC12-XD5

1

			Date	1/24/2023	Volvo Trucks North America		Valiant TMS	Terminal line-up diagram =V1WC4+V1UC12-XD5	Drawing name: =2V01&EFS-EL_KF1	=
			Ed.	MKLEPADLO						+
			Appr		P6700 Framing - Cell 2V01, KF1				Document type: ETT	Project nr: 22-16152	Page 37
Modification	Date	Name	Original		Replacement of	Replaced by	Scale 1:1			1630

Terminal line-up diagram

F12_001

Part number					
Mounting rail			Strip label	End angle rear	End plate
Terminal					
Part number	Type number	Cross-section	Terminal label	Jumper	Cover
1SNK705012R0000	ZK2.5-4P	2.5			

			Date	1/24/2023	Volvo Trucks North America	Valiant TMS	Terminal line-up diagram =V1WC4+V1UC12-XD6	Drawing name: =2V01&EFS-EL_KF1	= / +
			Ed.	MKLEPADLO	P6700 Framing - Cell 2V01, KF1				
			Appr					Document type: ETT	Project nr: 22-16152	Page 38
Modification	Date	Name	Original		Replacement of / Replaced by	Scale 1:1			1630

Terminal line-up diagram

F12_001

Part number					
Mounting rail			Strip label	End angle rear	End plate

Terminal					
Part number	Type number	Cross-section	Terminal label	Jumper	Cover
1SNK705012R0000	ZK2.5-4P	2.5			
1SNK705012R0000	ZK2.5-4P	2.5			
1SNK705012R0000	ZK2.5-4P	2.5			
1SNK705012R0000	ZK2.5-4P	2.5			
1SNK705012R0000	ZK2.5-4P	2.5			
1SNK705012R0000	ZK2.5-4P	2.5			
1SNK705012R0000	ZK2.5-4P	2.5			
1SNK705012R0000	ZK2.5-4P	2.5			
1SNK705012R0000	ZK2.5-4P	2.5			
1SNK705012R0000	ZK2.5-4P	2.5			
1SNK705012R0000	ZK2.5-4P	2.5			
1SNK705012R0000	ZK2.5-4P	2.5			
1SNK705012R0000	ZK2.5-4P	2.5			
1SNK705012R0000	ZK2.5-4P	2.5			
1SNK705012R0000	ZK2.5-4P	2.5			

=V1WC4+V1UC12-XD10

	1	
	2	
	3	
	5	
	4	
	6	
	7	
	8	
	9	
	10	
	11	
	12	
	13	
	14	
	15	
	16	

			Date	1/24/2023	Volvo Trucks North America	Valiant TMS	Terminal line-up diagram =V1WC4+V1UC12-XD10	Drawing name: =2V01&EFS-EL_KF1	=
			Ed.	MKLEPADLO					+
			Appr		P6700 Framing - Cell 2V01, KF1			Document type: ETT	Project nr: 22-16152
Modification	Date	Name	Original		Replacement of / Replaced by	Scale 1:1			Page 39 / 1630

Terminal line-up diagram

F12_001

Part number					
Mounting rail			Strip label	End angle rear	End plate
Terminal					
Part number	Type number	Cross-section	Terminal label	Jumper	Cover
1SNK705012R0000	ZK2.5-4P	2.5			

=V1WC4+V1UC12-XD11

1

			Date	1/24/2023	Volvo Trucks North America	Valiant TMS	Terminal line-up diagram =V1WC4+V1UC12-XD11	Drawing name: =2V01&EFS-EL_KF1	=
			Ed.	MKLEPADLO					+
			Appr		P6700 Framing - Cell 2V01, KF1			Document type: ETT	Project nr: 22-16152	Page 40
Modification	Date	Name	Original		Replacement of / Replaced by	Scale 1:1			1630

Terminal line-up diagram

F12_001

Part number					
Mounting rail			Strip label	End angle rear	End plate
Terminal					
Part number	Type number	Cross-section	Terminal label	Jumper	Cover
1SNK705012R0000	ZK2.5-4P	2.5			
1SNK705012R0000	ZK2.5-4P	2.5			

=V1WC4+V1UC12-XD12

●	1	
●	2	

Terminal line-up diagram

F12_001

Part number					
Mounting rail			Strip label	End angle rear	End plate

Terminal					
Part number	Type number	Cross-section	Terminal label	Jumper	Cover
1SNK705012R0000	ZK2.5-4P	2.5			
1SNK705012R0000	ZK2.5-4P	2.5			
1SNK705012R0000	ZK2.5-4P	2.5			
1SNK705012R0000	ZK2.5-4P	2.5			
1SNK705012R0000	ZK2.5-4P	2.5			
1SNK705012R0000	ZK2.5-4P	2.5			
1SNK705012R0000	ZK2.5-4P	2.5			
1SNK705012R0000	ZK2.5-4P	2.5			
1SNK705012R0000	ZK2.5-4P	2.5			

=V1WC4+V1UC12-XD13

	1
	2
	3
	4
	5
	6
	7
	8
	9

			Date	1/24/2023	Volvo Trucks North America	Valiant TMS	Terminal line-up diagram =V1WC4+V1UC12-XD13	Drawing name: =2V01&EFS-EL_KF1	=
			Ed.	MKLEPADLO					+
			Appr		P6700 Framing - Cell 2V01, KF1			Document type: ETT	Project nr: 22-16152
Modification	Date	Name	Original		Replacement of	Replaced by	Scale 1:1		Page 42 / 1630

Terminal line-up diagram

F12_001

Part number					
Mounting rail			Strip label	End angle rear	End plate

Terminal					
Part number	Type number	Cross-section	Terminal label	Jumper	Cover
1SNK705012R0000	ZK2.5-4P	2.5			
1SNK705012R0000	ZK2.5-4P	2.5			

Terminal line-up diagram

F12_001

Part number					
Mounting rail			Strip label	End angle rear	End plate

Terminal					
Part number	Type number	Cross-section	Terminal label	Jumper	Cover
1SNK705012R0000	ZK2.5-4P	2.5			
1SNK705012R0000	ZK2.5-4P	2.5			
1SNK705012R0000	ZK2.5-4P	2.5			
1SNK705012R0000	ZK2.5-4P	2.5			
1SNK705012R0000	ZK2.5-4P	2.5			
1SNK705012R0000	ZK2.5-4P	2.5			
1SNK705012R0000	ZK2.5-4P	2.5			
1SNK705012R0000	ZK2.5-4P	2.5			

=V1WC4+V1UC12-XD20

1	
2	
3	
4	
5	
6	
7	
8	

			Date	1/24/2023	Volvo Trucks North America	Valiant TMS	Terminal line-up diagram =V1WC4+V1UC12-XD20	Drawing name: =2V01&EFS-EL_KF1	=
			Ed.	MKLEPADLO					+
			Appr		P6700 Framing - Cell 2V01, KF1			Document type: ETT	Project nr: 22-16152
Modification	Date	Name	Original		Replacement of / Replaced by	Scale 1:1			Page 44 / 1630

Terminal line-up diagram

F12_001

Part number					
Mounting rail			Strip label	End angle rear	End plate
Terminal					
Part number	Type number	Cross-section	Terminal label	Jumper	Cover
1SNK705012R0000	ZK2.5-4P	2.5			
1SNK705012R0000	ZK2.5-4P	2.5			

0	1	2	3	4	5	6	7	8	9

Terminal line-up diagram

F12_001

Part number					
Mounting rail			Strip label	End angle rear	End plate
Terminal					
Part number	Type number	Cross-section	Terminal label	Jumper	Cover
1SNK705012R0000	ZK2.5-4P	2.5			
1SNK705012R0000	ZK2.5-4P	2.5			

			Date	1/24/2023	Volvo Trucks North America		Valiant TMS	Terminal line-up diagram =V1WC4+V1UC12-XD52	Drawing name: =2V01&EFS-EL_KF1	=
			Ed.	MKLEPADLO						+
			Appr		P6700 Framing - Cell 2V01, KF1				Document type: ETT	Project nr: 22-16152	Page 46
Modification	Date	Name	Original		Replacement of	Replaced by	Scale 1:1				1630

0	1	2	3	4	5	6	7	8	9

Terminal line-up diagram

F12_001

Part number					
Mounting rail			Strip label	End angle rear	End plate
Terminal					
Part number	Type number	Cross-section	Terminal label	Jumper	Cover
1SNK705012R0000	ZK2.5-4P	2.5			
1SNK705012R0000	ZK2.5-4P	2.5			

46

48

			Date	1/24/2023	Volvo Trucks North America	Valiant TMS	Terminal line-up diagram =V1WC4+V1UC12-XD53
			Ed.	MKLEPADLO	P6700 Framing - Cell 2V01, KF1		
			Appr			Scale 1:1	
Modification	Date	Name	Original		Replacement of / Replaced by		

Terminal line-up diagram

F12_001

Part number					
Mounting rail			Strip label	End angle rear	End plate
Terminal					
Part number	Type number	Cross-section	Terminal label	Jumper	Cover
1SNK705012R0000	ZK2.5-4P	2.5			
1SNK705012R0000	ZK2.5-4P	2.5			

			Date	1/24/2023	Volvo Trucks North America	Valiant TMS	Terminal line-up diagram =V1WC4+V1UC12-XD54
			Ed.	MKLEPADLO			
			Appr		P6700 Framing - Cell 2V01, KF1		
Modification	Date	Name	Original		Replacement of / Replaced by	Scale 1:1	

Drawing name: =2V01&EFS-EL_KF1
=
+
Document type: ETT
Project nr: 22-16152
Page 48
1630

Terminal line-up diagram

F12_001

Part number					
Mounting rail			Strip label	End angle rear	End plate

Terminal					
Part number	Type number	Cross-section	Terminal label	Jumper	Cover
WEI.8731720000	ZTR 2.5/3AN	2.5			
WEI.1608800000	ZAP/TW 3				
WEI.9540000000	ZEW 35				
WEI.8731720000	ZTR 2.5/3AN	2.5			
WEI.8731720000	ZTR 2.5/3AN	2.5			
WEI.8731720000	ZTR 2.5/3AN	2.5			
WEI.8731720000	ZTR 2.5/3AN	2.5			
WEI.8731720000	ZTR 2.5/3AN	2.5			
WEI.8731720000	ZTR 2.5/3AN	2.5			
WEI.8731720000	ZTR 2.5/3AN	2.5			
WEI.8731720000	ZTR 2.5/3AN	2.5			
WEI.8731720000	ZTR 2.5/3AN	2.5			
WEI.8731720000	ZTR 2.5/3AN	2.5			
WEI.8731720000	ZTR 2.5/3AN	2.5			
WEI.8731720000	ZTR 2.5/3AN	2.5			

=V1WC4+V1UC32-XD11

	1	
	2	
	3	
	4	
	5	
	6	
	7	
	11	
	12	
	13	
	14	
	15	
	16	
	17	

			Date	1/24/2023	Volvo Trucks North America	Valiant TMS	Terminal line-up diagram =V1WC4+V1UC32-XD11	Drawing name: =2V01&EFS-EL_KF1	=
			Ed.	MKLEPADLO					+
			Appr		P6700 Framing - Cell 2V01, KF1			Document type: ETT	Project nr: 22-16152
Modification	Date	Name	Original		Replacement of	Replaced by	Scale 1:1		Page 49 / 1630

Terminal line-up diagram

F12_001

Part number					
Mounting rail			Strip label	End angle rear	End plate

Terminal					
Part number	Type number	Cross-section	Terminal label	Jumper	Cover
WEI.1608520000	ZDU 2.5 BL	2.5 mm²			
WEI.1608740000	ZAP/TW 1				
WEI.9540000000	ZEW 35				
WEI.1608520000	ZDU 2.5 BL	2.5 mm²			
WEI.1608520000	ZDU 2.5 BL	2.5 mm²			
WEI.1608520000	ZDU 2.5 BL	2.5 mm²			
WEI.1608520000	ZDU 2.5 BL	2.5 mm²			
WEI.1608520000	ZDU 2.5 BL	2.5 mm²			
WEI.1608520000	ZDU 2.5 BL	2.5 mm²			
WEI.1608520000	ZDU 2.5 BL	2.5 mm²			
WEI.1608520000	ZDU 2.5 BL	2.5 mm²			
WEI.1608520000	ZDU 2.5 BL	2.5 mm²			

=V1PZ1PF1+V1UC61-XD11

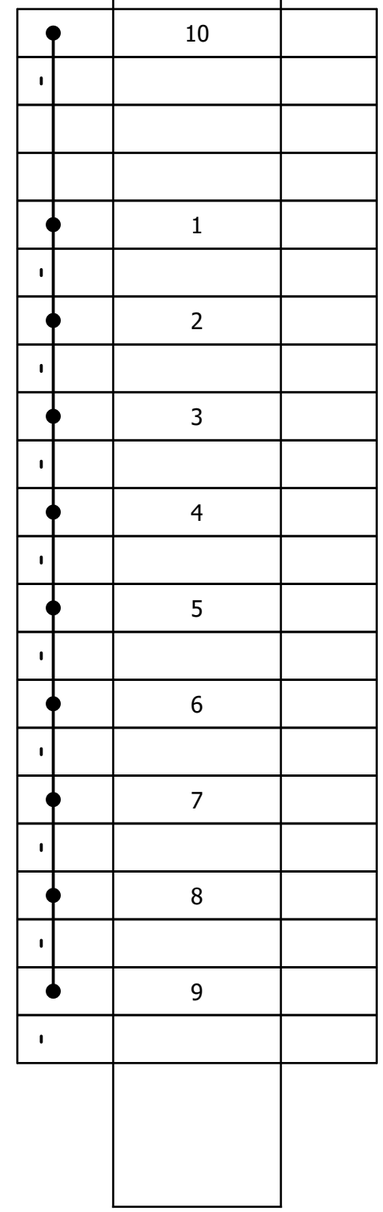

			Date	1/24/2023	Volvo Trucks North America		Valiant TMS	Terminal line-up diagram =V1PZ1PF1+V1UC61-XD11	Drawing name: =2V01&EFS-EL_KF1		=
			Ed.	MKLEPADLO							+
			Appr		P6700 Framing - Cell 2V01, KF1		Scale 1:1		Document type: ETT	Project nr: 22-16152	Page 50 1630
Modification	Date	Name	Original		Replacement of	Replaced by					

Terminal line-up diagram

F12_001

Part number					
Mounting rail			Strip label	End angle rear	End plate

Terminal					
Part number	Type number	Cross-section	Terminal label	Jumper	Cover
WEI.1608510000	ZDU 2.5	2.5			
WEI.1608740000	ZAP/TW 1				
WEI.9540000000	ZEW 35				
WEI.1608520000	ZDU 2.5 BL	2.5 mm²			
WEI.1608520000	ZDU 2.5 BL	2.5 mm²			

=V2WC3+V2UC14-XD1

'	L1	
'	N	
'		
'	PE	
'		

			Date	1/24/2023	Volvo Trucks North America	Valiant TMS	Terminal line-up diagram =V2WC3+V2UC14-XD1	Drawing name: =2V01&EFS-EL_KF1	=
			Ed.	MKLEPADLO					+
			Appr		P6700 Framing - Cell 2V01, KF1			Document type: ETT	Project nr: 22-16152
Modification	Date	Name	Original		Replacement of / Replaced by	Scale 1:1			Page 51 / 1630

Terminal line-up diagram

F12_001

Part number					
Mounting rail			Strip label	End angle rear	End plate
Terminal					
Part number	Type number	Cross-section	Terminal label	Jumper	Cover
WEI.8731720000	ZTR 2.5/3AN	2.5			
WEI.8731720000	ZTR 2.5/3AN	2.5			
WEI.8731720000	ZTR 2.5/3AN	2.5			
WEI.8731720000	ZTR 2.5/3AN	2.5			

=V2WC4+V2UC14-KF14.12

'	1	
'	2	
'	3	
'	4	

Terminal line-up diagram

F12_001

Part number					
Mounting rail			Strip label	End angle rear	End plate
Terminal					
Part number	Type number	Cross-section	Terminal label	Jumper	Cover

=V2WC4+V2UC14-XD5

1

			Date	1/24/2023	Volvo Trucks North America	Valiant TMS	Terminal line-up diagram =V2WC4+V2UC14-XD5	Drawing name: =2V01&EFS-EL_KF1	=
			Ed.	MKLEPADLO					+
			Appr		P6700 Framing - Cell 2V01, KF1			Document type: ETT	Project nr: 22-16152	Page 53
Modification	Date	Name	Original		Replacement of / Replaced by	Scale 1:1				1630

Terminal line-up diagram

F12_001

Part number					
Mounting rail			Strip label	End angle rear	End plate
Terminal					
Part number	Type number	Cross-section	Terminal label	Jumper	Cover

=V2WC4+V2UC14-XD6

'	1	

			Date	1/24/2023	Volvo Trucks North America	Valiant TMS	Terminal line-up diagram =V2WC4+V2UC14-XD6	Drawing name: =2V01&EFS-EL_KF1	=
			Ed.	MKLEPADLO					+
			Appr		P6700 Framing - Cell 2V01, KF1			Document type: ETT	Project nr: 22-16152
Modification	Date	Name	Original		Replacement of / Replaced by	Scale 1:1			Page 54 / 1630

Terminal line-up diagram

F12_001

Part number					
Mounting rail			Strip label	End angle rear	End plate

Terminal					
Part number	Type number	Cross-section	Terminal label	Jumper	Cover
WEI.8731720000	ZTR 2.5/3AN	2.5			
WEI.8731720000	ZTR 2.5/3AN	2.5			
WEI.8731720000	ZTR 2.5/3AN	2.5			
WEI.8731720000	ZTR 2.5/3AN	2.5			
WEI.8731720000	ZTR 2.5/3AN	2.5			
WEI.8731720000	ZTR 2.5/3AN	2.5			
WEI.8731720000	ZTR 2.5/3AN	2.5			
WEI.8731720000	ZTR 2.5/3AN	2.5			
WEI.8731720000	ZTR 2.5/3AN	2.5			
WEI.8731720000	ZTR 2.5/3AN	2.5			
WEI.8731720000	ZTR 2.5/3AN	2.5			
WEI.8731720000	ZTR 2.5/3AN	2.5			
WEI.8731720000	ZTR 2.5/3AN	2.5			
WEI.8731720000	ZTR 2.5/3AN	2.5			
WEI.8731720000	ZTR 2.5/3AN	2.5			
WEI.8731720000	ZTR 2.5/3AN	2.5			
WEI.8731720000	ZTR 2.5/3AN	2.5			
WEI.8731720000	ZTR 2.5/3AN	2.5			
WEI.8731720000	ZTR 2.5/3AN	2.5			
WEI.8731720000	ZTR 2.5/3AN	2.5			

=V2WC4+V2UC14-XD10

	1	
	2	
	4	
	3	
	5	
	6	
	7	
	8	
	9	
	10	
	11	
	12	
	13	
	14	
	15	
	16	
	17	
	18	
	19	
	20	

			Date	1/24/2023	Volvo Trucks North America	Valiant TMS	Terminal line-up diagram =V2WC4+V2UC14-XD10	Drawing name: =2V01&EFS-EL_KF1	=
			Ed.	MKLEPADLO					+
			Appr		P6700 Framing - Cell 2V01, KF1			Document type: ETT	Project nr: 22-16152
Modification	Date	Name	Original		Replacement of	Replaced by	Scale 1:1		Page 55 / 1630

Terminal line-up diagram

F12_001

Part number					
Mounting rail			Strip label	End angle rear	End plate

Terminal					
Part number	Type number	Cross-section	Terminal label	Jumper	Cover
WEI.8731720000	ZTR 2.5/3AN	2.5			

=V2WC4+V2UC14-XD11

'	1	

			Date	1/24/2023	Volvo Trucks North America		Valiant TMS	Terminal line-up diagram =V2WC4+V2UC14-XD11	Drawing name: =2V01&EFS-EL_KF1	=
			Ed.	MKLEPADLO						+
			Appr		P6700 Framing - Cell 2V01, KF1				Document type: ETT	Project nr: 22-16152
Modification	Date	Name	Original		Replacement of	Replaced by	Scale 1:1			Page 56 / 1630

Terminal line-up diagram

F12_001

Part number					
Mounting rail			Strip label	End angle rear	End plate

Terminal					
Part number	Type number	Cross-section	Terminal label	Jumper	Cover
WEI.8731720000	ZTR 2.5/3AN	2.5			
WEI.8731720000	ZTR 2.5/3AN	2.5			

=V2WC4+V2UC14-XD12

	1	
	2	

			Date	1/24/2023	Volvo Trucks North America	Valiant TMS	Terminal line-up diagram =V2WC4+V2UC14-XD12	Drawing name: =2V01&EFS-EL_KF1	=
			Ed.	MKLEPADLO					+
			Appr		P6700 Framing - Cell 2V01, KF1			Document type: ETT	Project nr: 22-16152
Modification	Date	Name	Original		Replacement of / Replaced by	Scale 1:1			Page 57 / 1630

Terminal line-up diagram

F12_001

Part number					
Mounting rail			Strip label	End angle rear	End plate
Terminal					
Part number	Type number	Cross-section	Terminal label	Jumper	Cover
WEI.8731720000	ZTR 2.5/3AN	2.5			
WEI.8731720000	ZTR 2.5/3AN	2.5			

0	1	2	3	4	5	6	7	8	9

Terminal line-up diagram

F12_001

Part number					
Mounting rail			Strip label	End angle rear	End plate
Terminal					
Part number	Type number	Cross-section	Terminal label	Jumper	Cover
WEI.8731720000	ZTR 2.5/3AN	2.5			

=V2WC4+V2UC14-XD14

1

58

60

			Date	1/24/2023	Volvo Trucks North America		Valiant TMS	Terminal line-up diagram =V2WC4+V2UC14-XD14	Drawing name: =2V01&EFS-EL_KF1		=
			Ed.	MKLEPADLO							+
			Appr		P6700 Framing - Cell 2V01, KF1				Document type: ETT	Project nr: 22-16152	Page 59
Modification	Date	Name	Original		Replacement of	Replaced by	Scale 1:1				1630

Terminal line-up diagram

F12_001

Part number					
Mounting rail			Strip label	End angle rear	End plate
Terminal					
Part number	Type number	Cross-section	Terminal label	Jumper	Cover
WEI.8731720000	ZTR 2.5/3AN	2.5			
WEI.8731720000	ZTR 2.5/3AN	2.5			

Terminal line-up diagram

F12_001

Part number					
Mounting rail			Strip label	End angle rear	End plate
Terminal					
Part number	Type number	Cross-section	Terminal label	Jumper	Cover
WEI.8731720000	ZTR 2.5/3AN	2.5			
WEI.8731720000	ZTR 2.5/3AN	2.5			

=V2WC4+V2UC14-XD16

●	1	
●	2	

			Date	1/24/2023	Volvo Trucks North America	Valiant TMS	Terminal line-up diagram =V2WC4+V2UC14-XD16	Drawing name: =2V01&EFS-EL_KF1	=
			Ed.	MKLEPADLO					+
			Appr		P6700 Framing - Cell 2V01, KF1			Document type: ETT	Project nr: 22-16152
Modification	Date	Name	Original		Replacement of / Replaced by	Scale 1:1			Page 61 / 1630

Terminal line-up diagram

F12_001

Part number					
Mounting rail			Strip label	End angle rear	End plate

Terminal					
Part number	Type number	Cross-section	Terminal label	Jumper	Cover
WEI.8731720000	ZTR 2.5/3AN	2.5			
WEI.8731720000	ZTR 2.5/3AN	2.5			

=V2WC4+V2UC14-XD17

	2	
	1	

			Date	1/24/2023	Volvo Trucks North America	Valiant TMS	Terminal line-up diagram =V2WC4+V2UC14-XD17	Drawing name: =2V01&EFS-EL_KF1	=
			Ed.	MKLEPADLO					+
			Appr		P6700 Framing - Cell 2V01, KF1			Document type: ETT	Project nr: 22-16152
Modification	Date	Name	Original		Replacement of / Replaced by	Scale 1:1			Page 62 / 1630

Terminal line-up diagram

F12_001

Part number					
Mounting rail			Strip label	End angle rear	End plate
Terminal					
Part number	Type number	Cross-section	Terminal label	Jumper	Cover
WEI.8731720000	ZTR 2.5/3AN	2.5			

=V2WC4+V2UC14-XD18

1

			Date	1/24/2023	Volvo Trucks North America	Valiant TMS	Terminal line-up diagram =V2WC4+V2UC14-XD18	Drawing name: =2V01&EFS-EL_KF1	=
			Ed.	MKLEPADLO					+
			Appr		P6700 Framing - Cell 2V01, KF1			Document type: ETT	Project nr: 22-16152	Page 63
Modification	Date	Name	Original		Replacement of / Replaced by	Scale 1:1			1630

Terminal line-up diagram

F12_001

Part number					
Mounting rail			Strip label	End angle rear	End plate
Terminal					
Part number	Type number	Cross-section	Terminal label	Jumper	Cover
WEI.8731720000	ZTR 2.5/3AN	2.5			
WEI.8731720000	ZTR 2.5/3AN	2.5			

=V2WC4+V2UC14-XD51

●	1	
●	2	

Terminal line-up diagram

F12_001

Part number					
Mounting rail			Strip label	End angle rear	End plate
Terminal					
Part number	Type number	Cross-section	Terminal label	Jumper	Cover
WEI.8731720000	ZTR 2.5/3AN	2.5			
WEI.8731720000	ZTR 2.5/3AN	2.5			

=V2WC4+V2UC14-XD52

1
2

0	1	2	3	4	5	6	7	8	9

Terminal line-up diagram

F12_001

Part number					
Mounting rail			Strip label	End angle rear	End plate
Terminal					
Part number	Type number	Cross-section	Terminal label	Jumper	Cover
WEI.8731720000	ZTR 2.5/3AN	2.5			
WEI.8731720000	ZTR 2.5/3AN	2.5			

			Date	1/24/2023	Volvo Trucks North America	Valiant TMS	Terminal line-up diagram =V2WC4+V2UC14-XD53
			Ed.	MKLEPADLO			
			Appr		P6700 Framing - Cell 2V01, KF1		
Modification	Date	Name	Original		Replacement of / Replaced by	Scale 1:1	

Drawing name: =2V01&EFS-EL_KF1		=	
		+	
Document type: ETT	Project nr: 22-16152		Page 66 / 1630

Terminal line-up diagram

F12_001

Part number					
Mounting rail			Strip label	End angle rear	End plate
Terminal					
Part number	Type number	Cross-section	Terminal label	Jumper	Cover
WEI.8731720000	ZTR 2.5/3AN	2.5			
WEI.8731720000	ZTR 2.5/3AN	2.5			

=V2WC4+V2UC14-XD54

●	1	
●	2	

Terminal line-up diagram

F12_001

Part number					
Mounting rail			Strip label	End angle rear	End plate

Terminal					
Part number	Type number	Cross-section	Terminal label	Jumper	Cover
WEI.1608510000	ZDU 2.5	2.5			
WEI.1608740000	ZAP/TW 1				
WEI.9540000000	ZEW 35				
WEI.1608520000	ZDU 2.5 BL	2.5 mm²			
WEI.1608520000	ZDU 2.5 BL	2.5 mm²			

=V2WC3+V2UC15-XD1

'	1	
'	2	
'		
'	3	
'		

			Date	1/24/2023	Volvo Trucks North America	Valiant TMS	Terminal line-up diagram =V2WC3+V2UC15-XD1	Drawing name: =2V01&EFS-EL_KF1	=
			Ed.	MKLEPADLO					+
			Appr		P6700 Framing - Cell 2V01, KF1			Document type: ETT	Project nr: 22-16152	Page 68
Modification	Date	Name	Original		Replacement of	Replaced by	Scale 1:1			1630

Terminal line-up diagram

F12_001

Part number					
Mounting rail			Strip label	End angle rear	End plate
Terminal					
Part number	Type number	Cross-section	Terminal label	Jumper	Cover
WEI.8731720000	ZTR 2.5/3AN	2.5			
WEI.8731720000	ZTR 2.5/3AN	2.5			
WEI.8731720000	ZTR 2.5/3AN	2.5			
WEI.8731720000	ZTR 2.5/3AN	2.5			

=V2WC4+V2UC15-KF15.12

'	1	
'	2	
'	3	
'	4	

			Date	1/24/2023	Volvo Trucks North America	Valiant TMS	Terminal line-up diagram =V2WC4+V2UC15-KF15.12	Drawing name: =2V01&EFS-EL_KF1	=
			Ed.	MKLEPADLO					+
			Appr		P6700 Framing - Cell 2V01, KF1			Document type: ETT	Project nr: 22-16152
Modification	Date	Name	Original		Replacement of	Replaced by	Scale 1:1		Page 69 / 1630

Terminal line-up diagram

F12_001

Part number					
Mounting rail			Strip label	End angle rear	End plate
Terminal					
Part number	Type number	Cross-section	Terminal label	Jumper	Cover

=V2WC4+V2UC15-XD5

1

			Date	1/24/2023	Volvo Trucks North America	Valiant TMS	Terminal line-up diagram =V2WC4+V2UC15-XD5	Drawing name: =2V01&EFS-EL_KF1
			Ed.	MKLEPADLO				=
			Appr		P6700 Framing - Cell 2V01, KF1			+
Modification	Date	Name	Original		Replacement of / Replaced by	Scale 1:1		Document type: ETT · Project nr: 22-16152 · Page 70 / 1630

Terminal line-up diagram

F12_001

Part number					
Mounting rail			Strip label	End angle rear	End plate
Terminal					
Part number	Type number	Cross-section	Terminal label	Jumper	Cover

=V2WC4+V2UC15-XD6

1

Terminal line-up diagram

F12_001

Part number					
Mounting rail			Strip label	End angle rear	End plate

Terminal					
Part number	Type number	Cross-section	Terminal label	Jumper	Cover
WEI.8731720000	ZTR 2.5/3AN	2.5			
WEI.8731720000	ZTR 2.5/3AN	2.5			
WEI.8731720000	ZTR 2.5/3AN	2.5			
WEI.8731720000	ZTR 2.5/3AN	2.5			
WEI.8731720000	ZTR 2.5/3AN	2.5			
WEI.8731720000	ZTR 2.5/3AN	2.5			
WEI.8731720000	ZTR 2.5/3AN	2.5			
WEI.8731720000	ZTR 2.5/3AN	2.5			
WEI.8731720000	ZTR 2.5/3AN	2.5			
WEI.8731720000	ZTR 2.5/3AN	2.5			
WEI.8731720000	ZTR 2.5/3AN	2.5			
WEI.8731720000	ZTR 2.5/3AN	2.5			
WEI.8731720000	ZTR 2.5/3AN	2.5			
WEI.8731720000	ZTR 2.5/3AN	2.5			
WEI.8731720000	ZTR 2.5/3AN	2.5			
WEI.8731720000	ZTR 2.5/3AN	2.5			
WEI.8731720000	ZTR 2.5/3AN	2.5			
WEI.8731720000	ZTR 2.5/3AN	2.5			
WEI.8731720000	ZTR 2.5/3AN	2.5			
WEI.8731720000	ZTR 2.5/3AN	2.5			

=V2WC4+V2UC15-XD10

	1	
	2	
	4	
	3	
	5	
	6	
	7	
	8	
	9	
	10	
	11	
	12	
	13	
	14	
	15	
	16	
	17	
	18	
	19	
	20	

			Date	1/24/2023	Volvo Trucks North America	Valiant TMS	Terminal line-up diagram =V2WC4+V2UC15-XD10	Drawing name: =2V01&EFS-EL_KF1	=
			Ed.	MKLEPADLO					+
			Appr		P6700 Framing - Cell 2V01, KF1			Document type: ETT	Project nr: 22-16152	Page 72 / 1630
Modification	Date	Name	Original		Replacement of	Replaced by	Scale 1:1		

Terminal line-up diagram

F12_001

Part number					
Mounting rail			Strip label	End angle rear	End plate
Terminal					
Part number	Type number	Cross-section	Terminal label	Jumper	Cover
WEI.8731720000	ZTR 2.5/3AN	2.5			

=V2WC4+V2UC15-XD11

1

Terminal line-up diagram

F12_001

Part number					
Mounting rail			Strip label	End angle rear	End plate

Terminal					
Part number	Type number	Cross-section	Terminal label	Jumper	Cover
WEI.8731720000	ZTR 2.5/3AN	2.5			
WEI.8731720000	ZTR 2.5/3AN	2.5			

=V2WC4+V2UC15-XD12

	1	
	2	

			Date	1/24/2023	Volvo Trucks North America	Valiant TMS	Terminal line-up diagram =V2WC4+V2UC15-XD12	Drawing name: =2V01&EFS-EL_KF1	=
			Ed.	MKLEPADLO					+
			Appr		P6700 Framing - Cell 2V01, KF1			Document type: ETT	Project nr: 22-16152
Modification	Date	Name	Original		Replacement of / Replaced by	Scale 1:1			Page 74 / 1630

Terminal line-up diagram

F12_001

Part number					
Mounting rail			Strip label	End angle rear	End plate

Terminal					
Part number	Type number	Cross-section	Terminal label	Jumper	Cover
WEI.8731720000	ZTR 2.5/3AN	2.5			
WEI.8731720000	ZTR 2.5/3AN	2.5			

=V2WC4+V2UC15-XD13

	1	
	2	

			Date	1/24/2023	Volvo Trucks North America	Valiant TMS	Terminal line-up diagram =V2WC4+V2UC15-XD13	Drawing name: =2V01&EFS-EL_KF1	=
			Ed.	MKLEPADLO					+
			Appr		P6700 Framing - Cell 2V01, KF1			Document type: ETT	Project nr: 22-16152
Modification	Date	Name	Original		Replacement of / Replaced by	Scale 1:1			Page 75 / 1630

Terminal line-up diagram

F12_001

Part number					
Mounting rail			Strip label	End angle rear	End plate
Terminal					
Part number	Type number	Cross-section	Terminal label	Jumper	Cover
WEI.8731720000	ZTR 2.5/3AN	2.5			

Terminal line-up diagram

F12_001

Part number					
Mounting rail			Strip label	End angle rear	End plate
Terminal					
Part number	Type number	Cross-section	Terminal label	Jumper	Cover
WEI.8731720000	ZTR 2.5/3AN	2.5			
WEI.8731720000	ZTR 2.5/3AN	2.5			

Modification	Date	Name		
			Date	1/24/2023
			Ed.	MKLEPADLO
			Appr	
			Original	

Volo Trucks North America

P6700 Framing - Cell 2V01, KF1

Replacement of | Replaced by

Valiant TMS

Scale 1:1

Terminal line-up diagram =V2WC4+V2UC15-XD15

Drawing name: =2V01&EFS-EL_KF1

=

+

Document type: ETT

Project nr: 22-16152

Terminal line-up diagram

F12_001

Part number					
Mounting rail			Strip label	End angle rear	End plate
Terminal					
Part number	Type number	Cross-section	Terminal label	Jumper	Cover
WEI.8731720000	ZTR 2.5/3AN	2.5			
WEI.8731720000	ZTR 2.5/3AN	2.5			

=V2WC4+V2UC15-XD16

	1	
	2	

			Date	1/24/2023	Volvo Trucks North America	Valiant TMS	Terminal line-up diagram =V2WC4+V2UC15-XD16	Drawing name: =2V01&EFS-EL_KF1	=
			Ed.	MKLEPADLO					+
			Appr		P6700 Framing - Cell 2V01, KF1			Document type: ETT	Project nr: 22-16152
Modification	Date	Name	Original		Replacement of / Replaced by	Scale 1:1			Page 78 / 1630

Terminal line-up diagram

F12_001

Part number					
Mounting rail			Strip label	End angle rear	End plate

Terminal					
Part number	Type number	Cross-section	Terminal label	Jumper	Cover
WEI.8731720000	ZTR 2.5/3AN	2.5			
WEI.8731720000	ZTR 2.5/3AN	2.5			

=V2WC4+V2UC15-XD17

	1	
	2	

78

80

			Date	1/24/2023	Volvo Trucks North America	Valiant TMS	Terminal line-up diagram =V2WC4+V2UC15-XD17	Drawing name: =2V01&EFS-EL_KF1	=
			Ed.	MKLEPADLO					+
			Appr		P6700 Framing - Cell 2V01, KF1			Document type: ETT	Project nr: 22-16152
Modification	Date	Name	Original		Replacement of / Replaced by	Scale 1:1			Page 79 / 1630

Terminal line-up diagram

F12_001

Part number					
Mounting rail			Strip label	End angle rear	End plate
Terminal					
Part number	Type number	Cross-section	Terminal label	Jumper	Cover
WEI.8731720000	ZTR 2.5/3AN	2.5			

=V2WC4+V2UC15-XD18

1

			Date	1/24/2023	Volvo Trucks North America	Valiant TMS	Terminal line-up diagram =V2WC4+V2UC15-XD18
			Ed.	MKLEPADLO			
			Appr		P6700 Framing - Cell 2V01, KF1		
Modification	Date	Name	Original		Replacement of / Replaced by	Scale 1:1	

Drawing name: =2V01&EFS-EL_KF1		=	
		+	
Document type: ETT	Project nr: 22-16152		Page 80
			1630

Terminal line-up diagram

F12_001

Part number					
Mounting rail			Strip label	End angle rear	End plate
Terminal					
Part number	Type number	Cross-section	Terminal label	Jumper	Cover
WEI.8731720000	ZTR 2.5/3AN	2.5			
WEI.8731720000	ZTR 2.5/3AN	2.5			

=V2WC4+V2UC15-XD51

	1	
	2	

			Date	1/24/2023	Volvo Trucks North America	Valiant TMS	Terminal line-up diagram =V2WC4+V2UC15-XD51	Drawing name: =2V01&EFS-EL_KF1	=
			Ed.	MKLEPADLO					+
			Appr		P6700 Framing - Cell 2V01, KF1			Document type: ETT	Project nr: 22-16152
Modification	Date	Name	Original		Replacement of / Replaced by	Scale 1:1			Page 81 / 1630

Terminal line-up diagram

F12_001

Part number					
Mounting rail			Strip label	End angle rear	End plate

Terminal					
Part number	Type number	Cross-section	Terminal label	Jumper	Cover
WEI.8731720000	ZTR 2.5/3AN	2.5			
WEI.8731720000	ZTR 2.5/3AN	2.5			

=V2WC4+V2UC15-XD52

	1	
	2	

81

83

			Date	1/24/2023	Volvo Trucks North America	Valiant TMS	Terminal line-up diagram =V2WC4+V2UC15-XD52	Drawing name: =2V01&EFS-EL_KF1	=
			Ed.	MKLEPADLO					+
			Appr		P6700 Framing - Cell 2V01, KF1			Document type: ETT	Project nr: 22-16152
Modification	Date	Name	Original		Replacement of / Replaced by	Scale 1:1			Page 82 / 1630

Terminal line-up diagram

F12_001

Part number					
Mounting rail			Strip label	End angle rear	End plate

Terminal					
Part number	Type number	Cross-section	Terminal label	Jumper	Cover
WEI.8731720000	ZTR 2.5/3AN	2.5			
WEI.8731720000	ZTR 2.5/3AN	2.5			

=V2WC4+V2UC15-XD53

	1	
	2	

			Date	1/24/2023	Volvo Trucks North America		Valiant TMS	Terminal line-up diagram =V2WC4+V2UC15-XD53	Drawing name: =2V01&EFS-EL_KF1	=
			Ed.	MKLEPADLO						+
			Appr		P6700 Framing - Cell 2V01, KF1				Document type: ETT	Project nr: 22-16152
Modification	Date	Name	Original		Replacement of	Replaced by	Scale 1:1			Page 83 / 1630

Terminal line-up diagram

F12_001

Part number					
Mounting rail			Strip label	End angle rear	End plate

Terminal					
Part number	Type number	Cross-section	Terminal label	Jumper	Cover
WEI.8731720000	ZTR 2.5/3AN	2.5			
WEI.8731720000	ZTR 2.5/3AN	2.5			

=V2WC4+V2UC15-XD54

	1	
	2	

			Date	1/24/2023	Volvo Trucks North America	Valiant TMS	Terminal line-up diagram =V2WC4+V2UC15-XD54	Drawing name: =2V01&EFS-EL_KF1	=
			Ed.	MKLEPADLO					+
			Appr		P6700 Framing - Cell 2V01, KF1			Document type: ETT	Project nr: 22-16152
Modification	Date	Name	Original		Replacement of / Replaced by	Scale 1:1			Page 84 / 1630

Terminal line-up diagram

F12_001

Part number					
Mounting rail			Strip label	End angle rear	End plate

Terminal					
Part number	Type number	Cross-section	Terminal label	Jumper	Cover
WEI.8731720000	ZTR 2.5/3AN	2.5			
WEI.1608800000	ZAP/TW 3				
WEI.9540000000	ZEW 35				
WEI.8731720000	ZTR 2.5/3AN	2.5			
WEI.8731720000	ZTR 2.5/3AN	2.5			
WEI.8731720000	ZTR 2.5/3AN	2.5			
WEI.8731720000	ZTR 2.5/3AN	2.5			
WEI.8731720000	ZTR 2.5/3AN	2.5			
WEI.8731720000	ZTR 2.5/3AN	2.5			
WEI.8731720000	ZTR 2.5/3AN	2.5			
WEI.8731720000	ZTR 2.5/3AN	2.5			
WEI.8731720000	ZTR 2.5/3AN	2.5			
WEI.8731720000	ZTR 2.5/3AN	2.5			
WEI.8731720000	ZTR 2.5/3AN	2.5			

=V2WC4+V2UC32-XD11

	1	
	2	
	3	
	4	
	5	
	6	
	7	
	11	
	12	
	13	
	14	
	15	
	16	
	17	

			Date	1/24/2023	Volvo Trucks North America	Valiant TMS	Terminal line-up diagram =V2WC4+V2UC32-XD11	Drawing name: =2V01&EFS-EL_KF1	=
			Ed.	MKLEPADLO					+
			Appr		P6700 Framing - Cell 2V01, KF1			Document type: ETT	Project nr: 22-16152
Modification	Date	Name	Original		Replacement of	Replaced by	Scale 1:1		Page 85 / 1630

Terminal line-up diagram

F12_001

Part number					
Mounting rail			Strip label	End angle rear	End plate

Terminal					
Part number	Type number	Cross-section	Terminal label	Jumper	Cover
WEI.8731720000	ZTR 2.5/3AN	2.5			
WEI.1608800000	ZAP/TW 3				
WEI.9540000000	ZEW 35				
WEI.8731720000	ZTR 2.5/3AN	2.5			
WEI.8731720000	ZTR 2.5/3AN	2.5			
WEI.8731720000	ZTR 2.5/3AN	2.5			
WEI.8731720000	ZTR 2.5/3AN	2.5			
WEI.8731720000	ZTR 2.5/3AN	2.5			
WEI.8731720000	ZTR 2.5/3AN	2.5			
WEI.8731720000	ZTR 2.5/3AN	2.5			
WEI.8731720000	ZTR 2.5/3AN	2.5			
WEI.8731720000	ZTR 2.5/3AN	2.5			
WEI.8731720000	ZTR 2.5/3AN	2.5			
WEI.8731720000	ZTR 2.5/3AN	2.5			

=V2WC4+V2UC33-XD11

	1	
	2	
	3	
	4	
	5	
	6	
	7	
	11	
	12	
	13	
	14	
	15	
	16	
	17	

			Date	1/24/2023	Volvo Trucks North America	Valiant TMS	Terminal line-up diagram =V2WC4+V2UC33-XD11	Drawing name: =2V01&EFS-EL_KF1	=
			Ed.	MKLEPADLO					+
			Appr		P6700 Framing - Cell 2V01, KF1			Document type: ETT	Project nr: 22-16152
Modification	Date	Name	Original		Replacement of	Replaced by	Scale 1:1		Page 86 / 1630

Terminal line-up diagram

F12_001

Part number					
Mounting rail			Strip label	End angle rear	End plate
Terminal					
Part number	Type number	Cross-section	Terminal label	Jumper	Cover
WEI.1608520000	ZDU 2.5 BL	2.5 mm²			
WEI.1608740000	ZAP/TW 1				
WEI.9540000000	ZEW 35				
WEI.1608520000	ZDU 2.5 BL	2.5 mm²			
WEI.1608520000	ZDU 2.5 BL	2.5 mm²			
WEI.1608520000	ZDU 2.5 BL	2.5 mm²			
WEI.1608520000	ZDU 2.5 BL	2.5 mm²			
WEI.1608520000	ZDU 2.5 BL	2.5 mm²			
WEI.1608520000	ZDU 2.5 BL	2.5 mm²			
WEI.1608520000	ZDU 2.5 BL	2.5 mm²			
WEI.1608520000	ZDU 2.5 BL	2.5 mm²			

=V2PZ1PF1+V2UC61-XD11

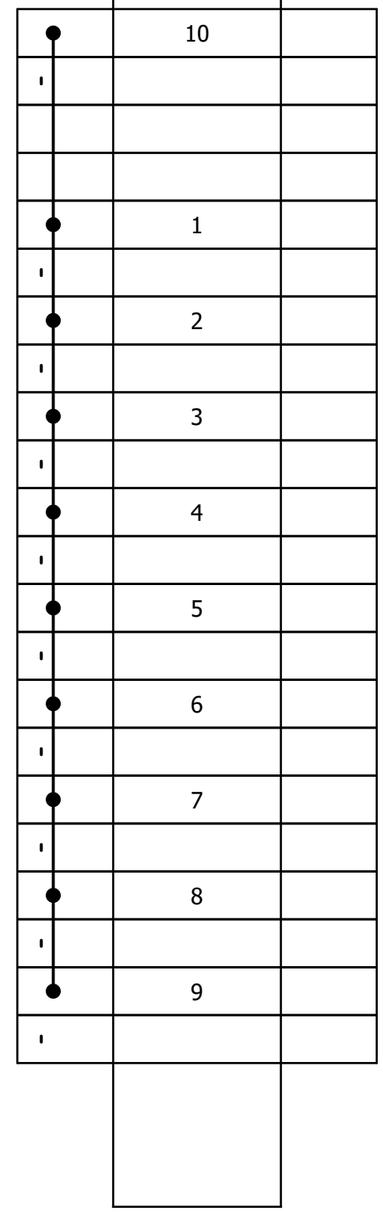

			Date	1/24/2023	Volvo Trucks North America	Valiant TMS	Terminal line-up diagram =V2PZ1PF1+V2UC61-XD11	Drawing name: =2V01&EFS-EL_KF1	=
			Ed.	MKLEPADLO					+
			Appr		P6700 Framing - Cell 2V01, KF1			Document type: ETT	Project nr: 22-16152
Modification	Date	Name	Original		Replacement of	Replaced by	Scale 1:1		Page 87 / 1630

Summarized parts list

F02_001

Order number	Quantity	Description Designation	Type number Part number	Manufacturer Supplier	Unit price	Total price	Pos
	12 Piece	Mounting rail EN 50 022 (35x7,5)	TS 35_7,5 TS 35_7,5		0.00	0.00	
1SFA619550R1051	5 PCE	EMERGENCY STOP CE4T-10R-02	CE4T-10R-02 ABB.1SFA619550R1051	ABB ABB	0.00	0.00	
1SFA616915R1005	5 Piece	LEGEND PLATET KTC15-1005	KTC15-1005 ABB.1SFA616915R1005	ABB	0.00	0.00	
ECGB5	4 Piece	Ground bar kit, 5 positions.	ECGB5 US2.ECGB5	SIE SIE	0.00	0.00	
C1.5LG6	4 ft	Wiring Duct Covers, PVC	C1.5LG6 PAN.C1.5LG6	PANDUIT PANDUIT	0.00	0.00	
C1LG6	4 ft	Wiring Duct Covers, PVC	C1LG6 PAN.C1LG6	PAN PAN	0.00	0.00	
G1.5X4LG6	4 ft	Wide Slotted Wiring Duct, PVC	G1.5X4LG6 PAN.G1.5X4LG6	PAN PAN	0.00	0.00	
G1X4LG6	4 ft	Wide Slotted Wiring Duct, PVC	G1X4LG6 PAN.G1X4LG6	PAN PAN	0.00	0.00	
6ES5710-8MA11	1	STAND.SECTIONAL RAIL 35MM, LENGTH 483MM	6ES5710-8MA11 SIE.6ES5710-8MA11	SIE Siemens AG	0.00	0.00	
	0					0.00	
5386050	1 pc(s).	PC PC enclosure system, WHD: 800x1600x600 mm, Sheet steel	PC.5386050 RIT.5386050	RIT RIT	0.00	0.00	
8617580	1 pc(s).	VX Partial mounting plate, for VX: 700x700 mm	VX.8617580 RIT.8617580	RIT RIT	0.00	0.00	
E4PBG	2 piece	Pushbutton Enclosure, Type 12, 4PB, 22.5mm holes, 10.00Hx3.25Wx2.75D, Gray, Steel	E4PBG HOFFMAN.E4PBG	HOFFMAN HOFFMAN	0.00	0.00	
ASPBG	2 piece	Hol-Sealers Hole Seal, 1.22" diameter, Gray, Steel	ASPBG ASPBG	HOFFMAN HOFFMAN	0.00	0.00	
6ES7517-3FP00-0AB0	1	CPU 1517F-3 PN/DP, 3MB PROG., 8MB DATA	6ES7517-3FP00-0AB0 SIE.6ES7517-3FP00-0AB0	SIE SIE	0.00	0.00	
6ES7590-1AC40-0AA0	1	MOUNTING RAIL 245MM (9.6")	6ES7590-1AC40-0AA0 SIE.6ES7590-1AC40-0AA0	SIE SIE	0.00	0.00	
6ES7155-6AA01-0BN0	8	ET 200SP, IM155-6PN ST INCL. BA 2XRJ45	6ES7155-6AA01-0BN0 SIE.6ES7155-6AA01-0BN0	SIE SIE	0.00	0.00	
6ES7131-6BH01-0BA0	16	ET 200SP, DI 16x 24V DC ST, PU 1	6ES7131-6BH01-0BA0 SIE.6ES7131-6BH01-0BA0	SIE SIE	0.00	0.00	
6ES7193-6BP00-0DA0	20	Bas Modul Vit	6ES7193-6BP00-0DA0 SIE.6ES7193-6BP00-0DA0	SIEMENS SIE	0.00	0.00	

Summarized parts list

F02_001

Order number	Quantity	Description Designation	Type number Part number	Manufacturer Supplier	Unit price	Total price	Pos
6ES7132-6BH01-0BA0	8	ET 200SP, DQ 16x 24V DC/0,5A ST, PU 1	6ES7132-6BH01-0BA0 SIE.6ES7132-6BH01-0BA0	SIE SIE	0.00	0.00	
6ES7136-6BA01-0CA0	4	ET 200SP, El-Mod., F-DI 8x24VDC HF	6ES7136-6BA01-0CA0 SIE.6ES7136-6BA01-0CA0	SIE SIE	0.00	0.00	
6ES7158-3AD10-0XA0	1	SIMATIC PN/PN Coupler	6ES7158-3AD10-0XA0 SIE.6ES7158-3AD10-0XA0	SIE SIE	0.00	0.00	
6ES7193-6RA00-1AN0	2	5 pcs. PROFINET strain relief	6ES7193-6RA00-1AN0 SIE.6ES7193-6RA00-1AN0	SIE SIE	0.00	0.00	
6ES7193-6AF00-0AA0	2	BA 2XFC	6ES7193-6AF00-0AA0 SIE.6ES7193-6AF00-0AA0	SIE SIE	0.00	0.00	
6GK5615-0AA00-2AA2	1	SCALANCE S615	6GK5615-0AA00-2AA2 SIE.6GK5615-0AA00-2AA2	SIE SIE	0.00	0.00	
6GK5216-0BA00-2AC2	5	SCALANCE XC216	6GK5216-0BA00-2AC2 SIE.6GK5216-0BA00-2AC2	SIE SIE	0.00	0.00	
RJ45S FKSDED 423-1M	80	Profinet cable - RJ45 plug to M12 Female receptacle; 1m long	RJ45S FKSDED 423-1M TUR.RJ45S FKSDED 423-1M	TURCK TURCK	0.00	0.00	
	2		4000-73000-0180000		0.00	0.00	
8WD4408-0AA	3 piece	Signaling column connection element for pipe mounting incl. end sleeve and seal	8WD4408-0AA SIE.8WD4408-0AA	SIE SIE	0.00	0.00	
8WD4420-0EA2	3 piece	Signaling column multifunctional siren element different sounds can be set	8WD4420-0EA2 SIE.8WD4420-0EA2	SIE	0.00	0.00	
8WD4420-5AB	3 piece	Signaling column continuous light element LED red, 24 V AC/DC	8WD4420-5AB SIE.8WD4420-5AB	SIE SIE	0.00	0.00	
8WD4420-5AC	3 piece	Signaling column continuous light element LED green, 24 V AC/DC	8WD4420-5AC SIE.8WD4420-5AC	SIE SIE	0.00	0.00	
1SFA619100R1022	4 PCE	PUSHBUTTON CP1-10G-20	CP1-10G-20 ABB.1SFA619100R1022	ABB ABB	0.00	0.00	
1SFA619100R1023	4 PCE	PUSHBUTTON CP1-10Y-20	CP1-10Y-20 ABB.1SFA619100R1023	ABB ABB	0.00	0.00	
1SFA619100R1111	1 PCE	PUSHBUTTON CP1-11R-10 24V AC/DC	CP1-11R-10 ABB.1SFA619100R1111	ABB ABB	0.00	0.00	
1SFA619100R1026	1 PCE	PUSHBUTTON CP1-10B-20	CP1-10B-20 ABB.1SFA619100R1026	ABB ABB	0.00	0.00	
1SFA619100R1118	4 PCE	PUSHBUTTON CP1-11C-10	CP1-11C-10 ABB.1SFA619100R1118	ABB ABB	0.00	0.00	
1SFA619200R1016	1 PCE	SELECTOR SWITCH C2SS1-10B-10	C2SS1-10B-10 ABB.1SFA619200R1016	ABB ABB	0.00	0.00	

Summarized parts list

F02_001

Order number	Quantity	Description Designation	Type number Part number	Manufacturer Supplier	Unit price	Total price	Pos
2CDS271337R0104	2 PCE	Miniature Circuit Breaker - SU200 M - 1P - C - 10 A	SU201M-C10 ABB.2CDS271337R0104	ABB ABB	0.00	0.00	
6EP19612BA41	1	4 CHANNELS, SELECTIVITY MODULE 3-10A / CHANNEL	6EP1961-2BA41 SIE.6EP1961-2BA41	SIE SIE	0.00	0.00	
6EP4134-3AB00-2AY0	1	SITOP UPS1600 10A ETHERNET/ PROFINET UNINTERRUPTIBLE POWER SUPPLY	6EP4134-3AB00-2AY0 SIE.6EP4134-3AB00-2AY0	SIE SIE	0.00	0.00	
6EP4134-0GB00-0AY0	1	SITOP UPS1100	6EP4134-0GB00-0AY0 SIE.6EP4134-0GB00-0AY0	SIE SIE	0.00	0.00	
6EP3336-7SB00-3AX0	7	SITOP PSU6200 1ph 24 V/20 A	6EP3336-7SB00-3AX0 SIE.6EP3336-7SB00-3AX0	SIE	0.00	0.00	
BS 8251-0/PG9	1 piece	MALE 5-PIN M12 FIELD ATTACHABLE CONNECTOR	BS 8251-0/PG9 TUR.BS 8251-0/PG9	TURCK TURCK	0.00	0.00	
EMPD3FBCB-025A-M	14		EMPD3FBCB-025A-M EMPD3FBCB-025A-M	Electro-Matic Electro-Matic	0.00	0.00	
1625891	38 piece	Inductive sensor With WeldGuard™ coating	NI50U-CK40-AP6X2-H1141/S1590 W/BS4 TUR.NI50U-CK40-AP6X2-H1141/S1590 W/BS4	TURCK TURCK	0.00	0.00	
VB2-FSM 4.4/2FKM 4/S3450	76	Y splitter	U2-30676 TUR.VB2-FSM 4.4/2FKM 4/S3450	TURCK TURCK	0.00	0.00	
548755	0 Piece	Bus node	CPX-FB33 FES.548755	FESTO FESTO	0.00	0.00	
550208	0	Interlinking block	CPX-M-GE-EV-S-7/8-5POL FES.550208	FES FES	0.00	0.00	
549335	0	Manifold block	CPX-M-AB-8-M12X2-5POL FES.549335	FES FES	0.00	0.00	
1324638	124 piece	Inductive sensor Monitoring Kit for Power Clamps	1324638 TUN.1324638	TUNKERS TUNKERS	0.00	0.00	
PN7094	12 Piece	Pressure sensor with display	PN-010-RER14-QFRKG/US/ /V IFM.PN7094	IFM IFM	0.00	0.00	
2CMA193115R1000	10	Surface socket-outlet	416RS6 ABB.2CMA193115R1000	ABB ABB	0.00	0.00	
801918	16 piece	Discrete Q4X: Proximity Mode	Q4XTKLAF600-Q8 BAN.Q4XTKLAF600-Q8	BANNER BANNER	0.00	0.00	
EMPD3FBCB-060A-M	3		EMPD3FBCB-060A-M EMPD3FBCB-060A-M	Electro-Matic Electro-Matic	0.00	0.00	
1627205	6 piece	Inductive sensor	BI20U-CA40-AP6X2-H1141/S1590 W/BS2.0 TUR.1627205	TUR Turck	0.00	0.00	
RSM-2RKM 50	5 piece	TEE, 5-PIN MINI, STANDARD KEYWAY	U2109-9 TUR.RSM-2RKM 50	TURCK TURCK	0.00	0.00	

Summarized parts list

F02_001

Order number	Quantity	Description Designation	Type number Part number	Manufacturer Supplier	Unit price	Total price	Pos
WWS001A	18 piece	Inductive sensor Monitoring Kit for Power Clamps	WWS001A WEL.WWS001A	WELKER WELKER	0.00	0.00	
1324644	37 piece	Inductive sensor Monitoring Kit for Power Clamps	1324644 TUN.1324644	TUNKERS TUNKERS	0.00	0.00	
SWITCH L3	6 piece	Inductive sensor Monitoring Kit for Power Clamps	L3 WEL.L3	WELKER WELKER	0.00	0.00	
SLSCP30-1200P44NT	4	EZ-Screen System	SLSCP30-1200P44NT BAN.SLSCP30-1200P44NT	BANNER BANNER	0.00	0.00	
SLSCP30-1200P88	1	EZ-Screen System	SLSCP30-1200P88 BAN.SLSCP30-1200P88	BANNER BANNER	0.00	0.00	
VC03031	1	Mounting kit	VC03031 VAL.VC03031	VALIANT VALIANT	0.00	0.00	
MGB-L2B-PNA-R-121859	8 Piece	SWITCH	MGB-L2B-PNA-R-121859 EUC.MGB-L2B-PNA-R-121859	EUCHNER EUCHNER	0.00	0.00	
MGB-H-AA1A2-R-106049	8 Piece	HANDLE	MGB-H-AA1A2-R-106049 EUC.MGB-H-AA1A2-R-106049	EUCHNER EUCHNER	0.00	0.00	
MGB-A-MOUNTINGPLATE-H-109491	12 Piece	MOUNTING PLATE	MGB-A-MOUNTINGPLATE-H-109491 EUC.MGB-A-MOUNTINGPLATE-H-109491	EUCHNER EUCHNER	0.00	0.00	
MGB-E-A2-106051	12 Piece	ESCAPE RELEASE	MGB-E-A2-106051 EUC.MGB-E-A2-106051	EUCHNER EUCHNER	0.00	0.00	
MGB-L2B-PNA-L-121863	4 Piece	SWITCH	MGB-L2B-PNA-L-121863 EUC.MGB-L2B-PNA-L-121863	EUCHNER EUCHNER	0.00	0.00	
MGB-H-AA1A2-L-106221	4 Piece	HANDLE	MGB-H-AA1A2-L-106221 EUC.MGB-H-AA1A2-L-106221	EUCHNER EUCHNER	0.00	0.00	
6SL3525-0PE17-5AA1	7 ST	SINAMICS G120D POWER MODULE PM250D 0,75KW	6SL3525-0PE17-5AA1 SIE.6SL3525-0PE17-5AA1	SIEMENS SIEMENS	0.00	0.00	
EMPD3FBCB-005A-M	6		EMPD3FBCB-005A-M EMPD3FBCB-005A-M	Electro-Matic Electro-Matic	0.00	0.00	
6GT2801-2BA10	1	RF340R (GEN2)	6GT2801-2BA10 SIE.6GT2801-2BA10	SIE SIE	0.00	0.00	
6SL3544-0FB21-1FA0	8 ST	SINAMICS G120D CONTROL UNIT CU240D-2 PN-F	6SL3544-0FB21-1FA0 SIE.6SL3544-0FB21-1FA0	SIE SIEMENS	0.00	0.00	
6GT2002-0JE10	1	SIMATIC RF185C	6GT2002-0JE10 SIE.6GT2002-0JE10	SIE	0.00	0.00	
1644741	48 piece	Inductive sensor	BI8U-MT18M-AP6X2-H1141/S1589 TUR.1644741	TURCK TURCK	0.00	0.00	
802T-AP	6	NEMA Limit Switch - NEMA Type 4 & 13 Oiltight Construction	802T-AP A-B.802T-AP	A-B A-B	0.00	0.00	

			Date	1/24/2023	Volvo Trucks North America	Valiant TMS	Summarized parts list : WEL.WWS001A - A-B.802T-AP	Drawing name: =2V01&EFS-EL_KF1	=
			Ed.	MKLEPADLO					+
			Appr		P6700 Framing - Cell 2V01, KF1			Document type: EXX	Project nr: 22-16152
Modification	Date	Name	Original		Replacement of / Replaced by	Scale 1:1			Page 4 / 1630

Summarized parts list

F02_001

Order number	Quantity	Description Designation	Type number Part number	Manufacturer Supplier	Unit price	Total price	Pos
71959	6 piece	Discrete Q60: Proximity Mode	Q60BB6AFV1000QPMA BAN.71959	BANNER BANNER	0.00	0.00	
16447411	36 piece	Inductive sensor	BI8U-MT18M-AP6X2-H1141/S1589 TUR.16447411	TUR	0.00	0.00	
EMPD3FBCB-050A-M	1		EMPD3FBCB-050A-M EMPD3FBCB-050A-M	Electro-Matic Electro-Matic	0.00	0.00	
6SL3525-0PE27-5AA1	1 ST	SINAMICS PM250D-IP65-FSC-A-400V 7,5 KW	6SL3525-0PE27-5AA1 SIE.6SL3525-0PE27-5AA1	SIE SIE	0.00	0.00	
6SL3525-0PE23-0AA1	7 ST	SINAMICS PM250D-IP65-FSB-A-400V 3 KW	6SL3525-0PE23-0AA1 SIE.6SL3525-0PE23-0AA1	SIE SIE	0.00	0.00	
6ES7193-6BP00-0BA0	18	SIMATIC ET 200SP, BASEUNIT,BRIDGED TO LEFT	6ES7193-6BP00-0BA0 SIE.6ES7193-6BP00-0BA0	SIEMENS SIE	0.00	0.00	
6ES7136-6BA00-0CA0	8	F-DI 8X24V DC HF	6ES7136-6BA00-0CA0 SIE.6ES7136-6BA00-0CA0	SIEMENS SIE	0.00	0.00	
6ES7136-6DB00-0CA0	8	F-DQ 4X24V DC/2A PM HF	6ES7136-6DB00-0CA0 SIE.6ES7136-6DB00-0CA0	SIEMENS SIEMENS	0.00	0.00	
6ES7136-6RA00-0BF0	16	ET 200SP, F-RQ 1x24VDC/24..230VAC/5A ST	6ES7136-6RA00-0BF0 SIE.6ES7136-6RA00-0BF0	SIE	0.00	0.00	
6ES7193-6BP20-0BF0	16	BASEUNIT TYPE F0, BU20-P8+A4+0B	6ES7193-6BP20-0BF0 SIE.6ES7193-6BP20-0BF0	SIE SIE	0.00	0.00	
8WD4420-5AD	2 piece	Signaling column continuous light element LED yellow, 24 V AC/DC	8WD4420-5AD SIE.8WD4420-5AD	SIE SIE	0.00	0.00	
8WD4420-5AF	2 piece	Signaling column continuous light element LED blue, 24 V AC/DC	8WD4420-5AF SIE.8WD4420-5AF	SIE SIE	0.00	0.00	
1574000	2 piece	Small enclosures KX	KX.1574000 RIT.1574000	RIT	0.00	0.00	
UX11073	2	RECEPTACLE 1-1/8" MINIFAST 10P MALE 2M	RSF 106-2M/14.5/NPT/CS16486 TUR.RSF 106-2M/14.5/NPT/CS16486	TURCK TURCK	0.00	0.00	
6AV2124-0QC02-0AX1	3	SIMATIC HMI TP1500 COMFORT	6AV2124-0QC02-0AX1 SIE.6AV2124-0QC02-0AX1	SIE SIE	0.00	0.00	
6315450	3 piece	Compact enclosure AX	AX.6315450 RIT.6315450	RIT RIT	0.00	0.00	
6106500	3 piece	Pedestal, open	CP.6106500 RIT.6106500	RIT RIT	0.00	0.00	
6206300	3 piece	Coupling CP 60	CP.6206300 RIT.6206300	RIT RIT	0.00	0.00	
5051300	4 pc(s).	Accessory bag, for AX	AX.5051300 RIT.5051300	RIT RIT	0.00	0.00	

			Date	1/24/2023	Volvo Trucks North America	Valiant TMS	Summarized parts list : BAN.71959 - RIT.5051300	Drawing name: =2V01&EFS-EL_KF1	=
			Ed.	MKLEPADLO					+
			Appr		P6700 Framing - Cell 2V01, KF1			Document type: EXX	Project nr: 22-16152
Modification	Date	Name	Original		Replacement of	Replaced by	Scale 1:1		Page 5 / 1630

Summarized parts list

F02_001

Order number	Quantity	Description Designation	Type number Part number	Manufacturer Supplier	Unit price	Total price	Pos
5051375	3 pc(s).	Mounting plate, for AX	AX.5051375 RIT.5051375	RIT RIT	0.00	0.00	
6AV2124-0GC01-0AX0	1	SIMATIC HMI TP700 COMFORT	6AV2124-0GC01-0AX0 SIE.6AV2124-0GC01-0AX0	SIE SIE	0.00	0.00	
RJ45S FKSDED 423-0.5M	2	Profinet cable - RJ45 plug to M12 Female receptacle; 0.5m long	RJ45S FKSDED 423-0.5M TUR.RJ45S FKSDED 423-0.5M	TURCK TURCK	0.00	0.00	
6315150	1 piece	Compact enclosure AX	AX.6315150 RIT.6315150	RIT RIT	0.00	0.00	
5051368	1 pc(s).	Mounting plate, for AX	AX.5051368 RIT.5051368	RIT RIT	0.00	0.00	
RSF 50-1M/NPT	4	RECEPTACLE MINI 5P MALE 1M	RSF 50-1M/NPT TUR.RSF 50-1M/NPT	TURCK TURCK	0.00	0.00	
SSA-EBM-12EB1Q8OTBB	1 piece	Push-to-Stop, Twist-to-Release Electro-Mechanical Push Buttons	SSA-EBM Series BAN.SSA-EBM-12EB1Q8OTBB	BANNER BANNER	0.00	0.00	
802T-AMP	1	NEMA Limit Switch - NEMA Type 4 & 13 Oiltight Construction	802T-AMP A-B.802T-AMP	A-B A-B	0.00	0.00	
55339	1 Piece	MVK-MPNIO DI8 DO8 FSU	MVK-MPNIO DI8 DO8 FSU MURR.55339	MURR MURR	0.00	0.00	
805371	1 piece	K50L Series Daylight Visible Indicators	K50L2RGB7QP BAN.805371	BANNER BANNER	0.00	0.00	
SMB30A	1	Mounting kit	SMB30A BAN.32723	BANNER BANNER	0.00	0.00	
55530	7 Piece	MVK-MPNIO DIO16 IRT 7/8" 5pin	MVK-MPNIO DI16 MURR.55530	MURR MURR	0.00	0.00	
284395	6 piece	Inductive sensor Monitoring Kit for Underbody Clamps	284395 P+F.284395	P+F P+F	0.00	0.00	
1627297	16 piece	Inductive sensor With WeldGuard™ coating	BI20U-CA40-AP6X2-H1141/S1590W/BS2.0 TUR.BI20U-CA40-AP6X2-H1141/S1590W/BS2.0	TURCK TURCK	0.00	0.00	
73260	1 piece	Q45 Series Fixed-Field Sensor	Q45VR3LPQPMA2D BAN.73260	BANNER BANNER	0.00	0.00	
1646633	8 piece	Inductive sensor	NI30U-MT30-AP6X-H1141 TUR.1646633	TURCK TURCK	0.00	0.00	
1644797	2 piece	Inductive sensor	BI4U-MT12E-AP6X2-H1141/S1589 TUR.1644797	TURCK TURCK	0.00	0.00	
3VA5195-6ED31-0AA0	2	MCCB_UL_FS125_15A_3P_65KA_TM_ FTFM	3VA5195-6ED31-0AA0 SIE.3VA5195-6ED31-0AA0	SIE SIE	0.00	0.00	
3VA9977-0TA20	2	BREAKER DATA SERVER, COM100	3VA9977-0TA20 SIE.3VA9977-0TA20	SIE SIE	0.00	0.00	

Summarized parts list

F02_001

Order number	Quantity	Description Designation	Type number Part number	Manufacturer Supplier	Unit price	Total price	Pos
7KM9300-0AE02-0AA0	2 Piece	Switched Ethernet PROFINET Module V3	7KM9300-0AE02-0AA0 SIE.7KM9300-0AE02-0AA0	SIE	0.00	0.00	
3VA6225-6KP31-0AA0	1	MCCB_UL_FS250_250A_3P_65KA_ETU8_LSI	3VA6225-6KP31-0AA0 SIE.3VA6225-6KP31-0AA0	SIE SIE	0.00	0.00	
3VA9177-0TB10	2	COMMUNICATION MODULE COM060	3VA9177-0TB10 SIE.3VA9177-0TB10	SIE SIE	0.00	0.00	
PTN102-3K	2 Piece	Transformer	PTN102-3K PTN102-3K	POWERTRAN POWERTRAN	0.00	0.00	
3VA6340-6KP31-0AA0	1	MCCB_UL_FS400_400A_3P_65KA_ETU8_LSI	3VA6340-6KP31-0AA0 SIE.3VA6340-6KP31-0AA0	SIE SIE	0.00	0.00	
R-3W2MT-LMF	2 piece	Multi-Environment Voltage Indicator and Safe-Test Point Combination R-3W2MT-LMF Vertical/Flange Warning Label	R-3W2MT-LMF GT.R-3W2MT-LMF	GT	0.00	0.00	
3VA5120-6ED31-0AA0	2	MCCB_UL_FS125_20A_3P_65KA_TM_ FTFM	3VA5120-6ED31-0AA0 SIE.3VA5120-6ED31-0AA0	SIE SIE	0.00	0.00	
PTN102-7.5K	2 Piece	Transformer	PTN102-7.5K PTN102-7.5K	POWERTRAN POWERTRAN	0.00	0.00	
5SJ4120-7HG41	2	CIRCUIT BREAKER 240V 14KA, 1-POLE, C, 20A, D=70MM	5SJ4120-7HG41 SIE.5SJ4120-7HG41	SIE SIE	0.00	0.00	
5ST3010-0HG	18	AUXILARY SWITCH 1NO1NC UL489	5ST3010-0HG SIE.5ST3010-0HG	SIE SIE	0.00	0.00	
5SJ4110-7HG41	2	CIRCUIT BREAKER 240V 14KA, 1-POLE, C, 10A, D=70MM	5SJ4110-7HG41 SIE.5SJ4110-7HG41	SIE SIE	0.00	0.00	
5SJ4103-7HG41	4	CIRCUIT BREAKER 240V 14KA, 1-POLE, C, 3A, D=70MM	5SJ4103-7HG41 SIE.5SJ4103-7HG41	SIE SIE	0.00	0.00	
5SJ4116-7HG41	14	CIRCUIT BREAKER 240V 14KA, 1-POLE, C, 16A, D=70MM	5SJ4116-7HG41 SIE.5SJ4116-7HG41	SIE SIE	0.00	0.00	
5SJ4106-7HG41	2	CIRCUIT BREAKER 240V 14KA, 1-POLE, C, 6A, D=70MM	5SJ4106-7HG41 SIE.5SJ4106-7HG41	SIE SIE	0.00	0.00	
1SNL317510R0000	8	DBL175 Series Distribution Block	1SNL317510R0000 1SNL317510R0000	ENTRELEC ENTRELEC	0.00	0.00	
P-P11#2R2-K3RD5	4 piece	Panel Interface Connector with USB Type A/F to USB Type A/M [QTY: 2]; Category 5e RJ45; Panel Mount Housing; UL Type 4; Duplex Outlet; 5 Amp Circuit Breaker	P-P11#2R2-K3RD5 GT_N.P-P11#2R2-K3RD5	GT_N	0.00	0.00	
6EP4438-7FB00-3DX0	8	SITOP SEL1200 8 x 10A	6EP4438-7FB00-3DX0 SIE.6EP4438-7FB00-3DX0	SIE	0.00	0.00	
BS 4151-0/9	1 piece	5 PIN MINI FIELD ATTACHABLE, FEMALE, STRAIGHT	BS 4151-0/9 TUR.BS 4151-0/9	TURCK TURCK	0.00	0.00	
2CDS271517R0357	6 PCE	Miniature Circuit Breaker MCBs - S200UDC - Number of Poles 1 - Tripping Characteristic K	S201UDC-K5 ABB.2CDS271517R0357	ABB ABB	0.00	0.00	

			Date	1/24/2023	Volvo Trucks North America	Valiant TMS	Summarized parts list : SIE.7KM9300-0AE02-0AA0 - ABB.2CDS271517R0357	Drawing name: =2V01&EFS-EL_KF1	=
			Ed.	MKLEPADLO					+
			Appr		P6700 Framing - Cell 2V01, KF1			Document type: EXX	Project nr: 22-16152
Modification	Date	Name	Original		Replacement of	Replaced by	Scale 1:1		Page 7 / 1630

Summarized parts list

F02_001

Order number	Quantity	Description Designation	Type number Part number	Manufacturer Supplier	Unit price	Total price	Pos
EMPD3FBCB-015A-M	4		EMPD3FBCB-015A-M EMPD3FBCB-015A-M	Electro-Matic Electro-Matic	0.00	0.00	
6SL3546-0FB21-1FA0	6 ST	SINAMICS G120D CONTROL UNIT CU250D-2 PN-F	6SL3546-0FB21-1FA0 SIE.6SL3546-0FB21-1FA0	SIE SIE	0.00	0.00	
EMPD3FBCB-020A-M	3		EMPD3FBCB-020A-M EMPD3FBCB-020A-M	Electro-Matic Electro-Matic	0.00	0.00	
6SL3525-0PE25-5AA1	2 ST	SINAMICS PM250D-IP65-FSC-A-400V 5,5 KW	6SL3525-0PE25-5AA1 SIE.6SL3525-0PE25-5AA1	SIE SIE	0.00	0.00	
EM3BMHANQ4SDCG10	1	DISCONNECT	EM3BMHANQ4SDCG10 EM.EM3BMHANQ4SDCG10	E-M E-M	0.00	0.00	
6GK1900-0AB10	2	C-PLUG	6GK1900-0AB10 SIE.6GK1900-0AB10	SIE SIE	0.00	0.00	
6SL3040-1MA01-0AA0	1 ST	SINAMICS S120 CONTROL UNIT CU320-2 PN	6SL3040-1MA01-0AA0 SIE.6SL3040-1MA01-0AA0	SIE SIEMENS	0.00	0.00	
6SL3054-0FC30-1BA0	1 ST		SERVO, S120, COMPACT FLASH CARD, BASIC, FIRMWARE VERSION 5.2 SIE.6SL3054-0FC30-1BA0	SIE SIE	0.00	0.00	
RJ45S FKSDED 423-3M	2	Profinet cable - RJ45 plug to M12 Female receptacle; 3m long	RJ45S FKSDED 423-3M TUR.RJ45S FKSDED 423-3M	TURCK TURCK	0.00	0.00	
48EL3016LPLG	1 piece	EL Enclosure	48EL3016LPLG SCE.48EL3016LPLG	SCE	0.00	0.00	
FK1216LG	1 piece	Kit	FK1216LG SCE.FK1216LG	SCE	0.00	0.00	
ECGB10	1 Piece	Ground bar kit, 10 positions.	ECGB10 US2.ECGB10	SIE SIE	0.00	0.00	
CNFS361N	2	Disconnect Switch	CNFS361N US2.CNFS361N	SIE SIE	0.00	0.00	
CNFS1AUX1	1	Auxiliary contact module	CNFS1AUX1 US2.CNFS1AUX1	SIE SIE	0.00	0.00	
CNFSS54001	1	Operating shaft	CNFSS54001 US2.CNFSS54001	SIE SIE	0.00	0.00	
CNFSH5RP121	1	Rotary operating handle	CNFSH5RP121 US2.CNFSH5RP121	SIE SIE	0.00	0.00	
6SL3000-0HE15-0AA0	1 piece	SINAMICS LINE FILTER FOR 5KW SLM	6SL3000-0HE15-0AA0 SIE.6SL3000-0HE15-0AA0	SIE SIEMENS	0.00	0.00	
6SL3000-0CE15-0AA0	1 ST	SINAMICS LINE REACTOR FOR 5KW SLM	6SL3000-0CE15-0AA0 SIE.6SL3000-0CE15-0AA0	SIE SIEMENS	0.00	0.00	
6SL3120-2TE13-0AD0	1 ST	SINAMICS S120 DOUBLE MOMO 3A/3A D-Type	6SL3120-2TE13-0AD0 SIE.6SL3120-2TE13-0AD0	SIE	0.00	0.00	

			Date	1/24/2023	Volvo Trucks North America	Valiant TMS	Summarized parts list : EMPD3FBCB-015A-M - SIE.6SL3120-2TE13-0AD0	Drawing name: =2V01&EFS-EL_KF1	=
			Ed.	MKLEPADLO					+
			Appr		P6700 Framing - Cell 2V01, KF1			Document type: EXX	Project nr: 22-16152
Modification	Date	Name	Original		Replacement of / Replaced by	Scale 1:1			Page 8 / 1630

Summarized parts list

F02_001

Order number	Quantity	Description Designation	Type number Part number	Manufacturer Supplier	Unit price	Total price	Pos
6SL3120-1TE13-0AD0	1 ST	SINAMICS S120 SINGLE MOMO 3A D-TYPE	6SL3120-1TE13-0AD0 SIE.6SL3120-1TE13-0AD0	SIE SIE	0.00	0.00	
6SL3130-6AE15-0AB1	1 ST	SINAMICS S120 Smart Line Module 5KW	6SL3130-6AE15-0AB1 SIE.6SL3130-6AE15-0AB1	SIE SIEMENS	0.00	0.00	
CPB-E2G06-03	0	3P DISTRIBUTION BLOCK 2 LINE / 6 LOAD	CPB-E2G06-03 CPB-E2G06-03	SYNDEVCO SYNDEVCO	0.00	0.00	
HCG-E2G06	0	3P GROUND BLOCK 2 LINE / 6 LOAD	HCG-E2G06 HCG-E2G06	SYNDEVCO SYNDEVCO	0.00	0.00	
RSF 50-3M/NPT	1	RECEPTACLE MINI 5P MALE 3M	RSF 50-3M/NPT TUR.RSF 50-3M/NPT	TURCK TURCK	0.00	0.00	
SETS8205SID5	9	Golvskåp TS 8 sidskåp	TS8 RIT.SETS8205SID5	RIT RIT	0.00	0.00	

Terminal-strip overview

F14_001

Terminal strip	Terminal strip definition text	Terminals					Graphical page of terminal diagrams
		first	last	Total PE	Total N	Total number	
=KF0KF1+UC31-PC1		DVI		0	0	4	
=KF0KF1+UC31-PH1		DVI	DVI	0	0	1	
=KF0WC3+UC31-XD1		L1	PE	0	0	5	
=KF0WC3+UC31-XD2		1L1	PE	0	0	5	
=KF0WC4+UC31-XD11		1	13	0	0	6	
=KF0WC4+UC31-XD12		1	14	0	0	8	
=KF0WC4+UC31-XD13		1	13	0	0	6	
=KF0WC4+UC31-XD14		1	14	0	0	8	

			Date	1/24/2023	Volvo Trucks North America	Valiant TMS	Terminal-strip overview : =KF0KF1+UC31-PC1 - =KF0WC4+UC31-XD14	Drawing name: =2V01&EFS-EL_KF1	=
			Ed.	MKLEPADLO					+
			Appr		P6700 Framing - Cell 2V01, KF1			Document type: EYY	Project nr: 22-16152
Modification	Date	Name	Original		Replacement of	Replaced by	Scale 1:1		Page 1 / 1630

Terminal-strip overview

F14_001

Terminal strip	Terminal strip definition text	Terminals					Graphical page of terminal diagrams
		first	last	Total PE	Total N	Total number	
=V1WC1+V1UC11-PE		PE	PE	0	0	1	
=V1WC2+V1UC11-XD1		1	16	0	0	16	
=V1WC2+V1UC11-XD2		1	8	0	0	8	
=V1WC2+V1UC11-XD3		1	5	0	0	5	
=V1WC3+V1UC11-XD1		1	4	0	0	4	
=V1WC3+V1UC11-XD2		1	8	0	0	8	
=V1WC3+V1UC11-XD3		1	8	0	0	8	
=V1WC4+V1UC11-KF11.14		1	4	0	0	4	
=V1WC4+V1UC11-XD5		1	1	0	0	1	
=V1WC4+V1UC11-XD6		1	1	0	0	1	
=V1WC4+V1UC11-XD10		1	16	0	0	16	
=V1WC4+V1UC11-XD11		1	1	0	0	1	
=V1WC4+V1UC11-XD12		1	2	0	0	2	
=V1WC4+V1UC11-XD13		1	9	0	0	9	
=V1WC4+V1UC11-XD14		1	2	0	0	2	
=V1WC4+V1UC11-XD20		1	8	0	0	8	
=V1WC4+V1UC11-XD51		1	2	0	0	2	
=V1WC4+V1UC11-XD52		1	2	0	0	2	
=V1WC4+V1UC11-XD53		1	2	0	0	2	
=V1WC4+V1UC11-XD54		1	2	0	0	2	

			Date	1/24/2023	Volvo Trucks North America	Valiant TMS	Terminal-strip overview : =V1WC1+V1UC11-PE - =V1WC4+V1UC11-XD54	Drawing name: =2V01&EFS-EL_KF1	=
			Ed.	MKLEPADLO					+
			Appr		P6700 Framing - Cell 2V01, KF1	Scale 1:1		Document type: EYY	Project nr: 22-16152	Page 2 / 1630
Modification	Date	Name	Original		Replacement of	Replaced by			

Terminal-strip overview

F14_001

Terminal strip	Terminal strip definition text	Terminals					Graphical page of terminal diagrams
		first	last	Total PE	Total N	Total number	
=V1WC1+V1UC12-PE		PE	PE	0	0	1	
=V1WC2+V1UC12-XD1		1	16	0	0	16	
=V1WC2+V1UC12-XD2		1	8	0	0	8	
=V1WC2+V1UC12-XD3		1	5	0	0	5	
=V1WC3+V1UC12-XD1		1	4	0	0	4	
=V1WC3+V1UC12-XD2		1	8	0	0	8	
=V1WC3+V1UC12-XD3		1	8	0	0	8	
=V1WC4+V1UC12-KF12.14		1	4	0	0	4	
=V1WC4+V1UC12-XD5		1	1	0	0	1	
=V1WC4+V1UC12-XD6		1	1	0	0	1	
=V1WC4+V1UC12-XD10		1	16	0	0	16	
=V1WC4+V1UC12-XD11		1	1	0	0	1	
=V1WC4+V1UC12-XD12		1	2	0	0	2	
=V1WC4+V1UC12-XD13		1	9	0	0	9	
=V1WC4+V1UC12-XD14		1	2	0	0	2	
=V1WC4+V1UC12-XD20		1	8	0	0	8	
=V1WC4+V1UC12-XD51		1	2	0	0	2	
=V1WC4+V1UC12-XD52		1	2	0	0	2	
=V1WC4+V1UC12-XD53		1	2	0	0	2	
=V1WC4+V1UC12-XD54		1	2	0	0	2	

			Date	1/24/2023	Volvo Trucks North America	Valiant TMS	Terminal-strip overview : =V1WC1+V1UC12-PE - =V1WC4+V1UC12-XD54	Drawing name: =2V01&EFS-EL_KF1	=
			Ed.	MKLEPADLO					+
			Appr		P6700 Framing - Cell 2V01, KF1	Scale 1:1		Document type: EYY	Project nr: 22-16152	Page 3 / 1630
Modification	Date	Name	Original		Replacement of	Replaced by			

Terminal-strip overview

F14_001

Terminal strip	Terminal strip definition text	Terminals					Graphical page of terminal diagrams
		first	last	Total PE	Total N	Total number	
=V1WC4+V1UC32-XD11		1	17	0	0	14	

			Date	1/24/2023	Volvo Trucks North America	Valiant TMS	Terminal-strip overview : =V1WC4+V1UC32-XD11 - =V1WC4+V1UC32-XD11	Drawing name: =2V01&EFS-EL_KF1	=
			Ed.	MKLEPADLO					+
			Appr		P6700 Framing - Cell 2V01, KF1	Scale 1:1		Document type: EYY	Project nr: 22-16152	Page 4 / 1630
Modification	Date	Name	Original		Replacement of	Replaced by			

Terminal-strip overview

F14_001

Terminal strip	Terminal strip definition text	Terminals					Graphical page of terminal diagrams
		first	last	Total PE	Total N	Total number	
=V1PZ1PF1+V1UC61-XD11		10	9	0	0	20	

			Date	1/24/2023	Volvo Trucks North America	Valiant TMS	Terminal-strip overview : =V1PZ1PF1+V1UC61-XD11 - =V1PZ1PF1+V1UC61-XD11
			Ed.	MKLEPADLO			
			Appr		P6700 Framing - Cell 2V01, KF1	Scale 1:1	
Modification	Date	Name	Original		Replacement of / Replaced by		

Drawing name: =2V01&EFS-EL_KF1	=		
	+		
Document type: EYY	Project nr: 22-16152	Page	5
			1630

Terminal-strip overview

F14_001

Terminal strip	Terminal strip definition text	Terminals					Graphical page of terminal diagrams
		first	last	Total PE	Total N	Total number	
=V2WC3+V2UC14-XD1		L1	PE	0	0	5	
=V2WC4+V2UC14-KF14.12		1	4	0	0	4	
=V2WC4+V2UC14-XD5		1	1	0	0	1	
=V2WC4+V2UC14-XD6		1	1	0	0	1	
=V2WC4+V2UC14-XD10		1	20	0	0	20	
=V2WC4+V2UC14-XD11		1	1	0	0	1	
=V2WC4+V2UC14-XD12		1	2	0	0	2	
=V2WC4+V2UC14-XD13		1	2	0	0	2	
=V2WC4+V2UC14-XD14		1	1	0	0	1	
=V2WC4+V2UC14-XD15		2	1	0	0	2	
=V2WC4+V2UC14-XD16		1	2	0	0	2	
=V2WC4+V2UC14-XD17		2	1	0	0	2	
=V2WC4+V2UC14-XD18		1	1	0	0	1	
=V2WC4+V2UC14-XD51		1	2	0	0	2	
=V2WC4+V2UC14-XD52		1	2	0	0	2	
=V2WC4+V2UC14-XD53		1	2	0	0	2	
=V2WC4+V2UC14-XD54		1	2	0	0	2	

			Date	1/24/2023	Volvo Trucks North America	Valiant TMS	Terminal-strip overview : =V2WC3+V2UC14-XD1 - =V2WC4+V2UC14-XD54	Drawing name: =2V01&EFS-EL_KF1	=	
			Ed.	MKLEPADLO					+	
			Appr		P6700 Framing - Cell 2V01, KF1	Scale 1:1		Document type: EYY	Project nr: 22-16152	Page 6 / 1630
Modification	Date	Name	Original		Replacement of	Replaced by				

Terminal-strip overview

F14_001

Terminal strip	Terminal strip definition text	Terminals					Graphical page of terminal diagrams
		first	last	Total PE	Total N	Total number	
=V2WC3+V2UC15-XD1		1	3	0	0	5	
=V2WC4+V2UC15-KF15.12		1	4	0	0	4	
=V2WC4+V2UC15-XD5		1	1	0	0	1	
=V2WC4+V2UC15-XD6		1	1	0	0	1	
=V2WC4+V2UC15-XD10		1	20	0	0	20	
=V2WC4+V2UC15-XD11		1	1	0	0	1	
=V2WC4+V2UC15-XD12		1	2	0	0	2	
=V2WC4+V2UC15-XD13		1	2	0	0	2	
=V2WC4+V2UC15-XD14		1	1	0	0	1	
=V2WC4+V2UC15-XD15		1	2	0	0	2	
=V2WC4+V2UC15-XD16		1	2	0	0	2	
=V2WC4+V2UC15-XD17		1	2	0	0	2	
=V2WC4+V2UC15-XD18		1	1	0	0	1	
=V2WC4+V2UC15-XD51		1	2	0	0	2	
=V2WC4+V2UC15-XD52		1	2	0	0	2	
=V2WC4+V2UC15-XD53		1	2	0	0	2	
=V2WC4+V2UC15-XD54		1	2	0	0	2	

			Date	1/24/2023	Volvo Trucks North America	Valiant TMS	Terminal-strip overview : =V2WC3+V2UC15-XD1 - =V2WC4+V2UC15-XD54	Drawing name: =2V01&EFS-EL_KF1	=
			Ed.	MKLEPADLO					+
			Appr		P6700 Framing - Cell 2V01, KF1			Document type: EYY	Project nr: 22-16152
Modification	Date	Name	Original		Replacement of	Replaced by	Scale 1:1		Page 7 / 1630

Terminal-strip overview

F14_001

Terminal strip	Terminal strip definition text	Terminals					Graphical page of terminal diagrams
		first	last	Total PE	Total N	Total number	
=V2WC4+V2UC32-XD11		1	17	0	0	14	

			Date	1/24/2023	Volvo Trucks North America	Valiant TMS	Terminal-strip overview : =V2WC4+V2UC32-XD11 - =V2WC4+V2UC32-XD11	Drawing name: =2V01&EFS-EL_KF1	=
			Ed.	MKLEPADLO					+
			Appr		P6700 Framing - Cell 2V01, KF1			Document type: EYY	Project nr: 22-16152
Modification	Date	Name	Original		Replacement of	Replaced by	Scale 1:1		Page 8 / 1630

Terminal-strip overview

F14_001

Terminal strip	Terminal strip definition text	Terminals					Graphical page of terminal diagrams
		first	last	Total PE	Total N	Total number	
=V2WC4+V2UC33-XD11		1	17	0	0	14	

			Date	1/24/2023	Volvo Trucks North America	Valiant TMS	Terminal-strip overview : =V2WC4+V2UC33-XD11 - =V2WC4+V2UC33-XD11	Drawing name: =2V01&EFS-EL_KF1	=
			Ed.	MKLEPADLO					+
			Appr		P6700 Framing - Cell 2V01, KF1	Scale 1:1		Document type: EYY	Project nr: 22-16152	Page 9 / 1630
Modification	Date	Name	Original		Replacement of	Replaced by			

Terminal-strip overview

F14_001

Terminal strip	Terminal strip definition text	Terminals					Graphical page of terminal diagrams
		first	last	Total PE	Total N	Total number	
=V2PZ1PF1+V2UC61-XD11		10	9	0	0	20	

			Date	1/24/2023	Volvo Trucks North America	Valiant TMS	Terminal-strip overview : =V2PZ1PF1+V2UC61-XD11 - =V2PZ1PF1+V2UC61-XD11	Drawing name: =2V01&EFS-EL_KF1	=
			Ed.	MKLEPADLO					+
			Appr		P6700 Framing - Cell 2V01, KF1	Scale 1:1		Document type: EYY	Project nr: 22-16152
Modification	Date	Name	Original		Replacement of / Replaced by				Page 10 / 1630

1	2	3	4	5	6	7	8	9	10

MODIFIED DRAWINGS NOT REVISED IN THE ORIGINAL				DRAWINGS FOR REVISION			REPLACE AFTER REV. BY ORIGINAL		
DATE	SIGN.	DRAWING NR:	SHEET NR:	DATE	SIGN.	REV. AV	DATE	SIGN.	REV.

&EYY/10

2

			Date	1/24/2023	Volvo Trucks North America		Valiant TMS	Amendment page	Drawing name: =2V01&EFS-EL_KF1	=
			Ed.	MKLEPADLO						+
			Appr		P6700 Framing - Cell 2V01, KF1				Document type: EAZ	Project nr: 22-16152	Page 1
Modification	Date	Name	Original		Replacement of	Replaced by	Scale 1:10			1630

1	2	3	4	5	6	7	8	9	10

LATEST REVISION

REV.	DATE	SIGN.	DRAWING NR:	SHEET NR:

1

			Date	1/24/2023	Volvo Trucks North America		Valiant TMS	Amendment page	Drawing name: =2V01&EFS-EL_KF1	=
			Ed.	MKLEPADLO						+
			Appr		P6700 Framing - Cell 2V01, KF1				Document type: EAZ	Project nr: 22-16152	Page 2
Modification	Date	Name	Original		Replacement of	Replaced by	Scale 1:10				1630